GM 5-wire CARGO DOOR DIAGRAM:

If your Unit ONLY has a (-) NEGATIVE TRUNK POP OUTPUT use this DIAGRAM:

Requires (1) of part # 775

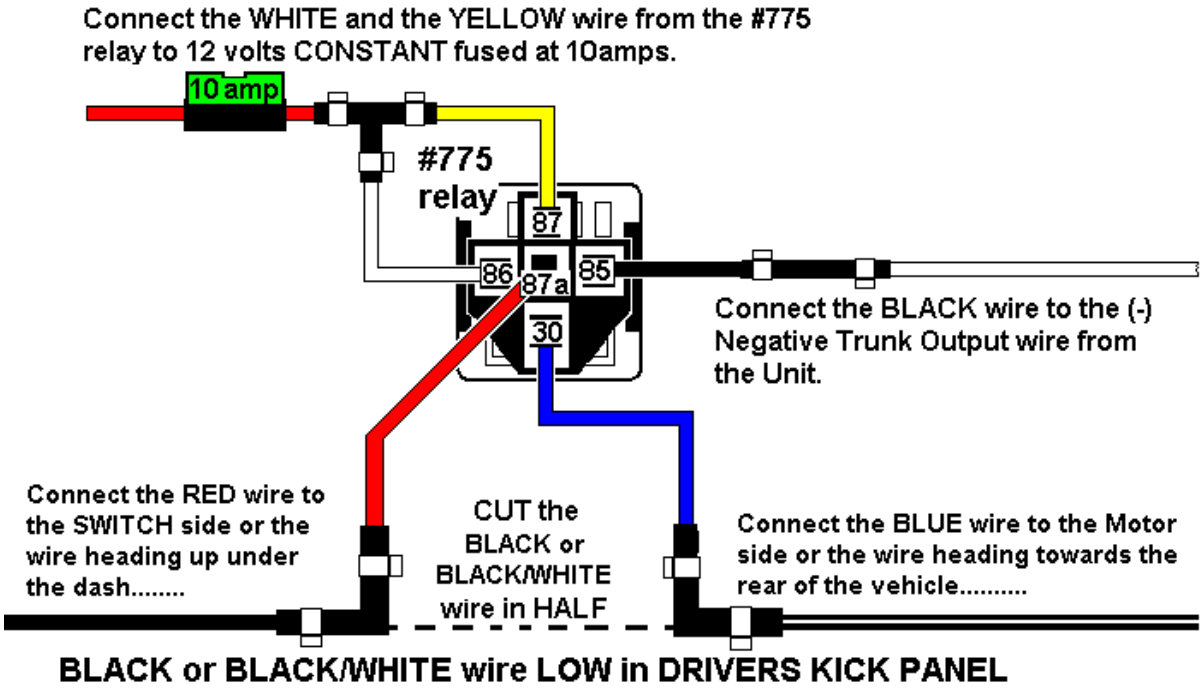
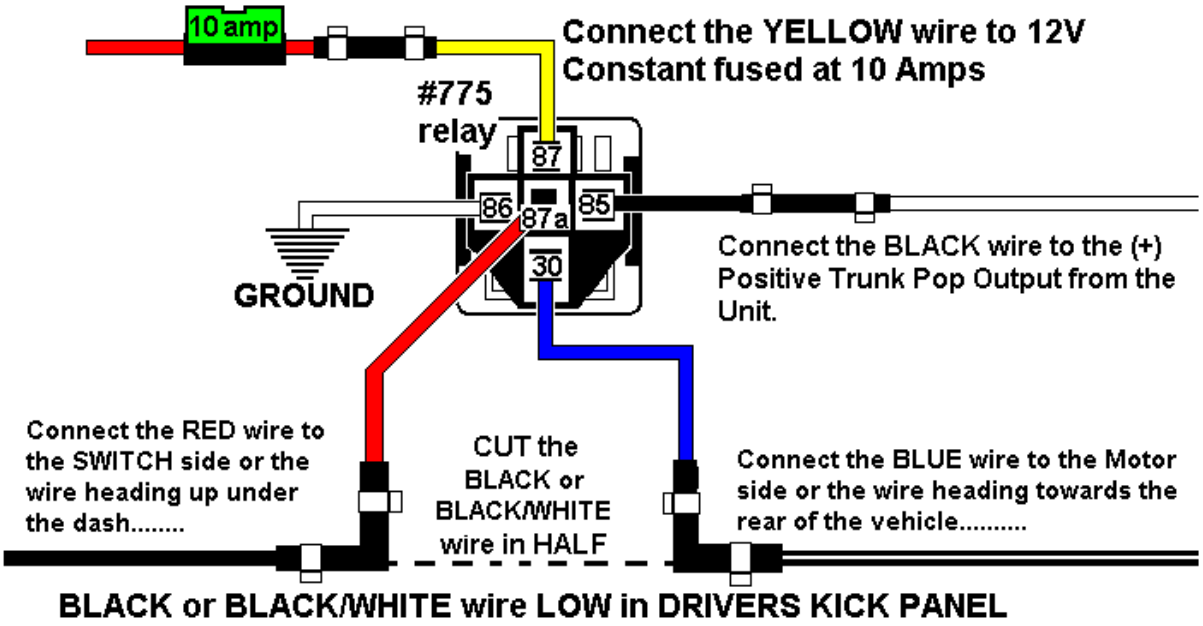
If your Unit ONLY has a (+) POSITIVE TRUNK POP OUTPUT use this DIAGRAM: