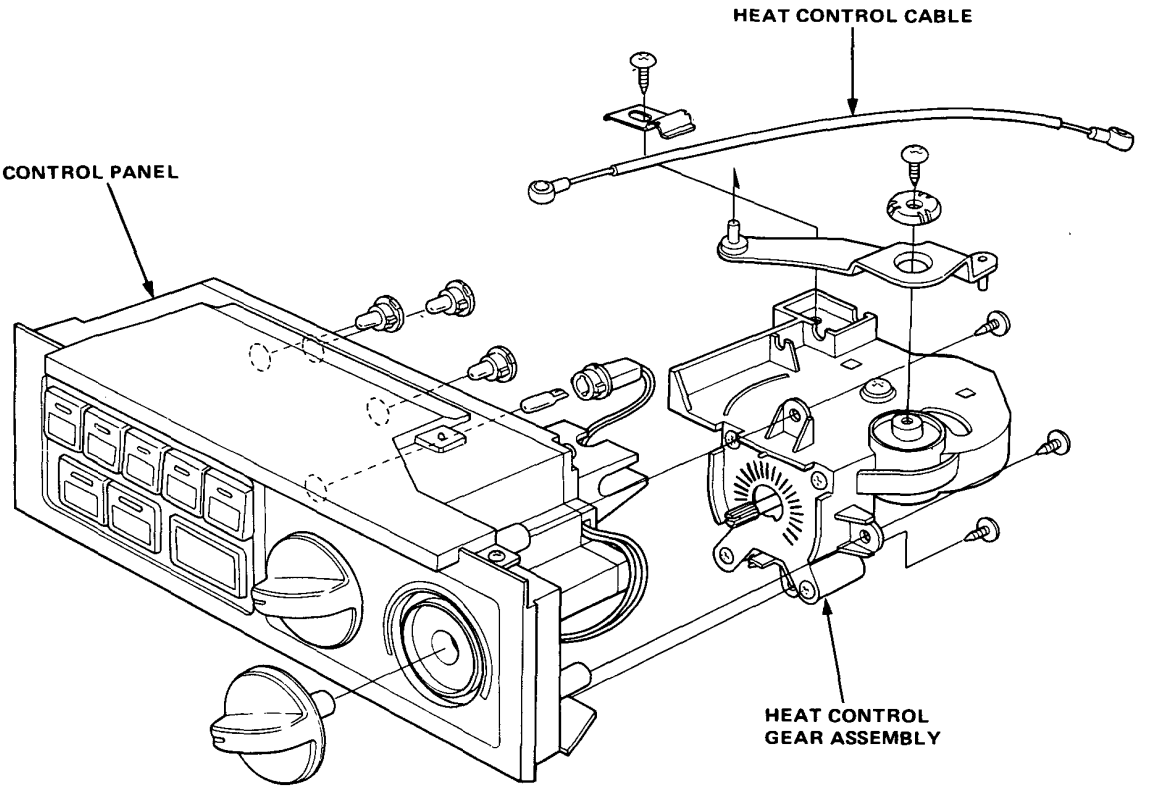
HEAT CONTROL CABLE
CONTROL PANEL
HEAT CONTROL
GEAR ASSEMBLY