(Cont. next page)

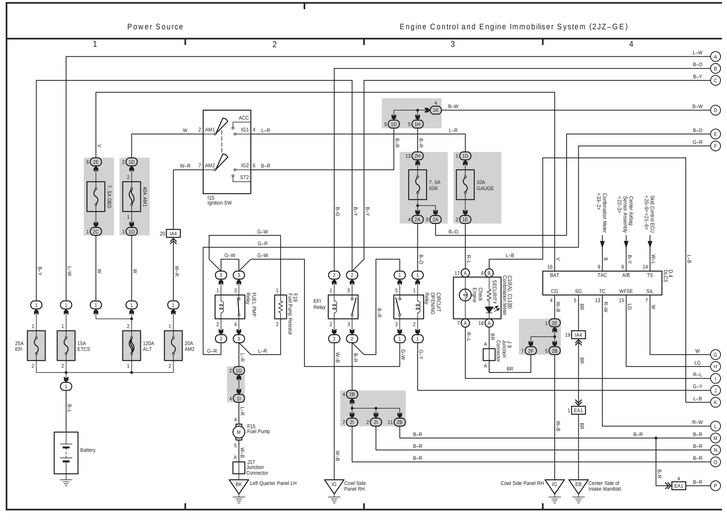
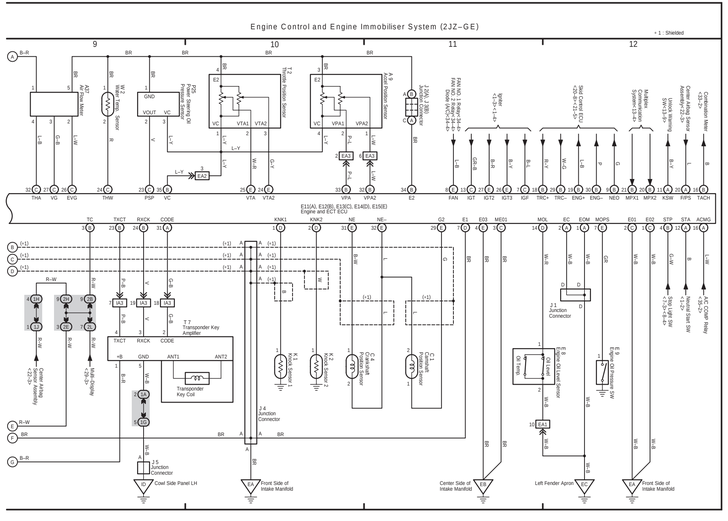
(Cont. next page)