PARTS LOCATION

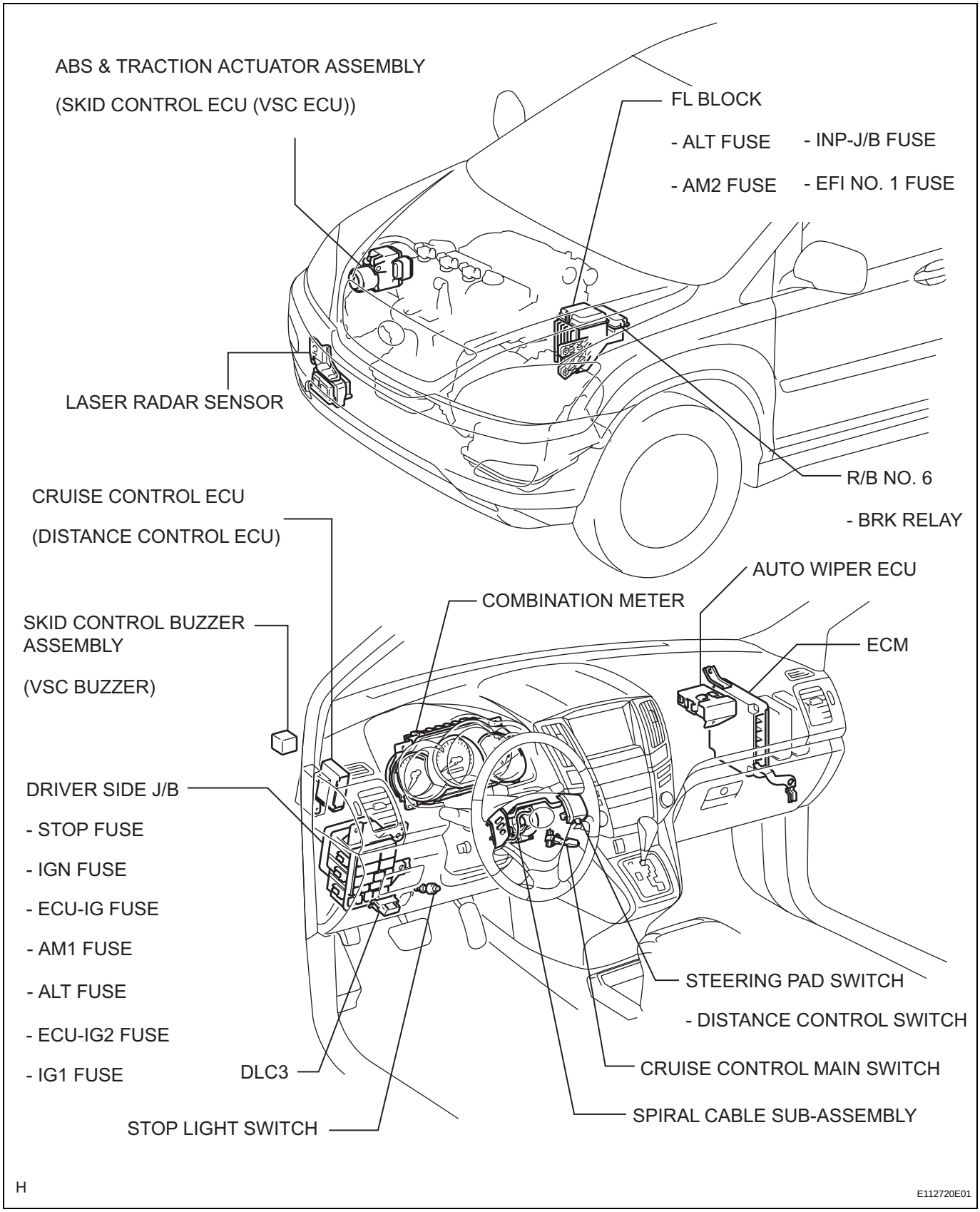

CC

SYSTEM DIAGRAM

Dynamic Laser Cruise Control System:

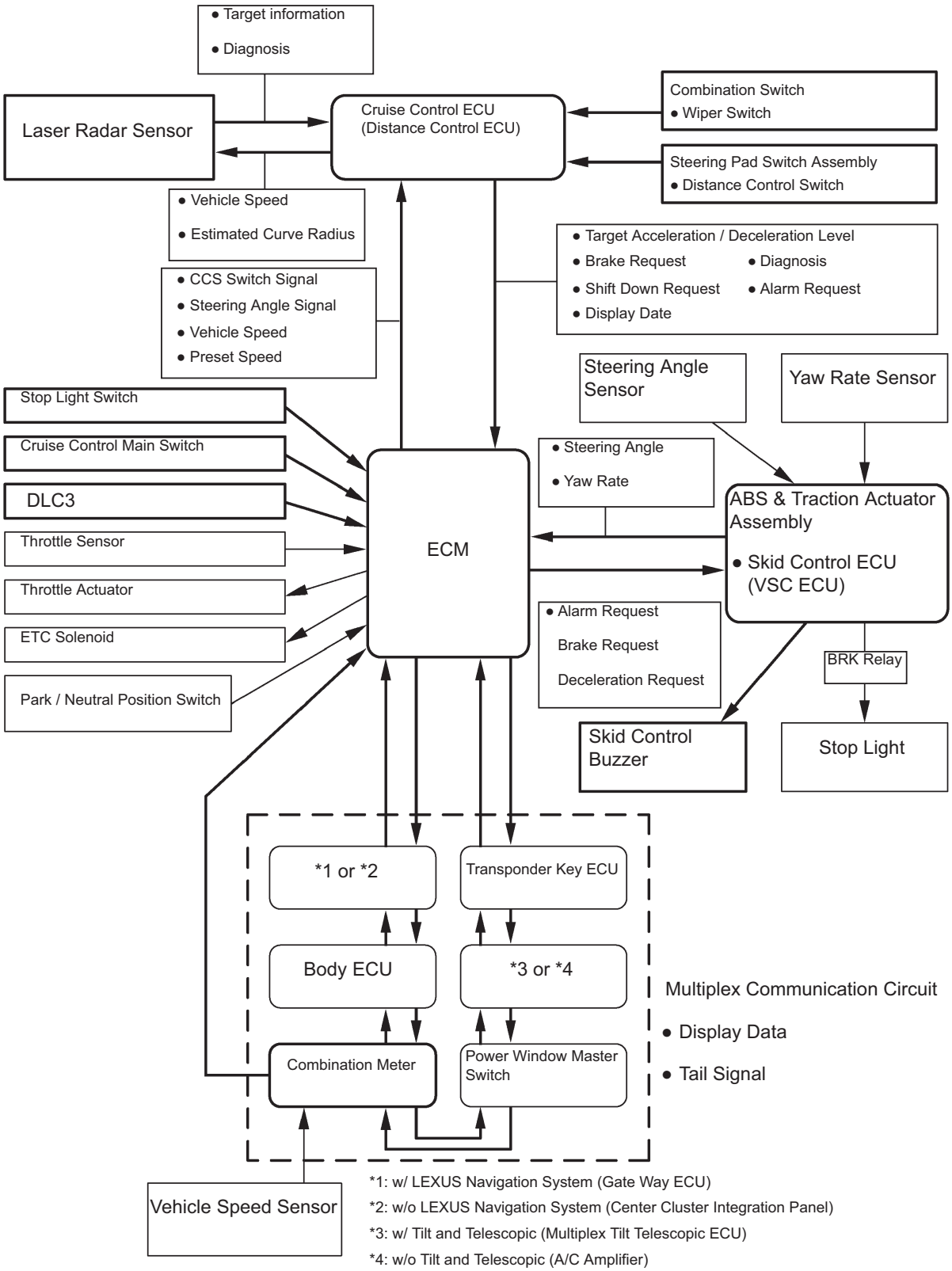

CC