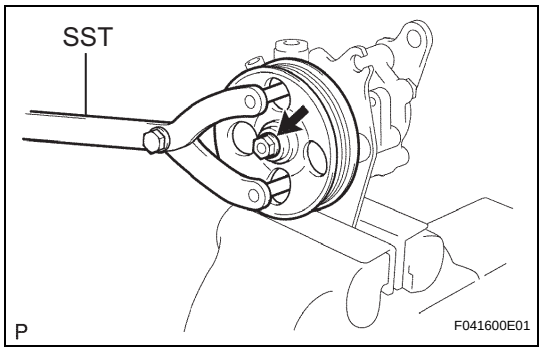

DISASSEMBLY

1. REMOVE VANE PUMP PULLEY

(a) Using SST, keep the vane pump pulley from rotating and loosen the nut.
SST 09960-10010 (09962-01000, 09963-01000)

(b) Remove the nut and the vane pump pulley from the vane pump shaft.

2. REMOVE POWER STEERING SUCTION PORT UNION

(a) Remove the bolt and the suction port union.

(b) Remove the O-ring from the suction port union.

PS

3. REMOVE FLOW CONTROL VALVE

(a) Remove the pressure port union.

(b) Remove the O-ring from the pressure port union.

(c) Remove the flow control valve and the compression spring.

4. REMOVE VANE PUMP BRACKET REAR

(a) Remove the 2 bolts and the vane pump bracket rear from the vane pump assembly.

5. REMOVE VANE PUMP HOUSING REAR

(a) Remove the 4 bolts and the vane pump housing rear from the vane pump housing front.

(b) Remove the gasket.

(c) Remove the 2 O-rings from the vane pump housing rear.

6. REMOVE VANE PUMP SIDE PLATE REAR

(a) Remove the wave washer from the vane pump side plate rear.

(b) Remove the vane pump side plate rear.

7. REMOVE VANE PUMP CAM RING

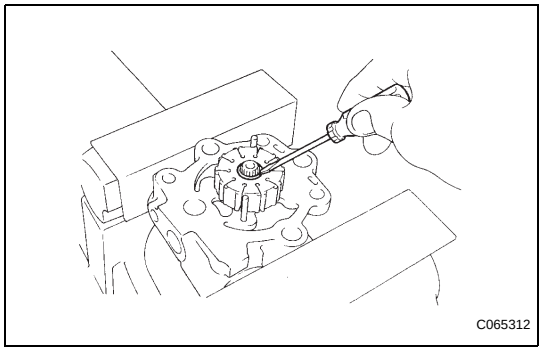

8. REMOVE VANE PUMP SHAFT SNAP RING

(a) Using a screwdriver, remove the vane pump shaft snap ring from the vane pump shaft.

9. REMOVE VANE PUMP ROTOR

(a) Remove the 10 vane pump plates from the vane pump rotor.

(b) Remove the vane pump rotor.

10. REMOVE VANE PUMP SHAFT

11. REMOVE PUMP BRACKET FRONT

(a) Remove the bolt and the pump bracket front from the vane pump housing front.

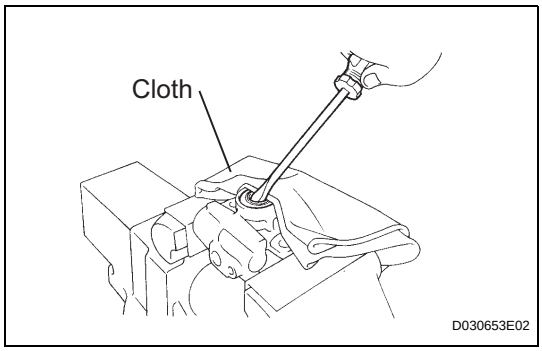

12. REMOVE VANE PUMP HOUSING OIL SEAL

(a) Using a screwdriver, remove the vane pump housing oil seal from the vane pump housing front.
NOTICE:
Be careful not to damage the bushing of the vane pump housing front.

PS

INSPECTION

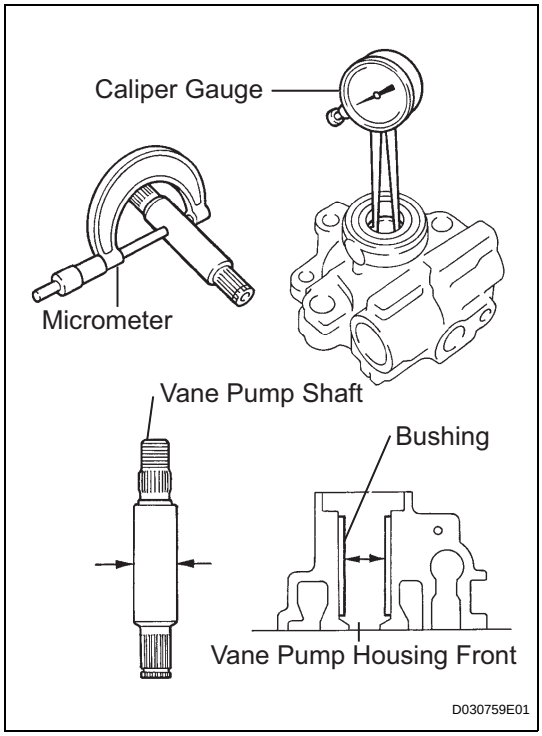

1. INSPECT VANE PUMP SHAFT AND BUSH IN HOUSING FRONT

(a) Using a micrometer and a caliper gauge, measure the oil clearance.
Maximum clearance:
0.07 mm (0.0028 in.)
If clearance exceeds maximum, replace the vane pump assembly.

(b) Check for the strong damage or wear on the bushing of the vane pump housing front and the vane pump shaft.
If necessary, replace the vane pump assembly.

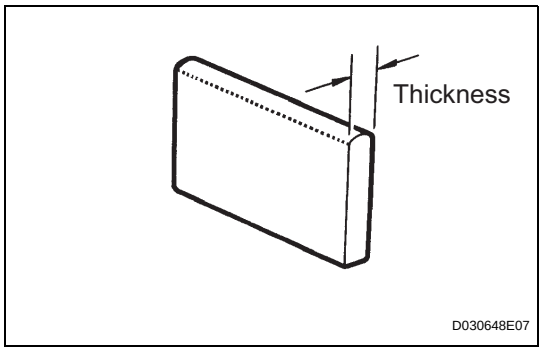

2. INSPECT VANE PUMP ROTOR AND VANE PUMP PLATES

(a) Using a micrometer, measure the thickness of the vane pump plates.
Standard thickness:
1.397 to 1.403 mm (0.0550 to 0.0552 in.)

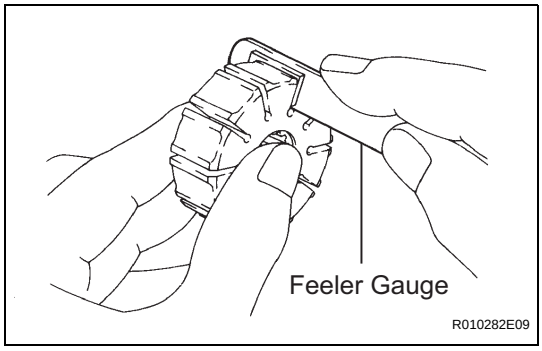

(b) Using a feeler gauge, measure the clearance between the vane pump rotor groove and the vane pump plate.
Maximum clearance:
0.03 mm (0.0012 in.)
If clearance exceeds maximum, replace the vane pump assembly.

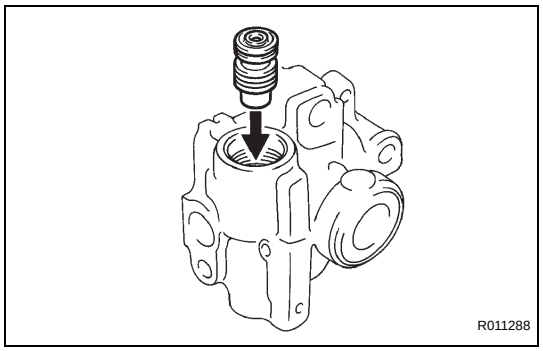

3. INSPECT FLOW CONTROL VALVE

(a) Coat the flow control valve with power steering fluid and check that it falls smoothly into the flow control valve hole by its own weight.
If it lacks smoothness, replace the vane pump assembly.

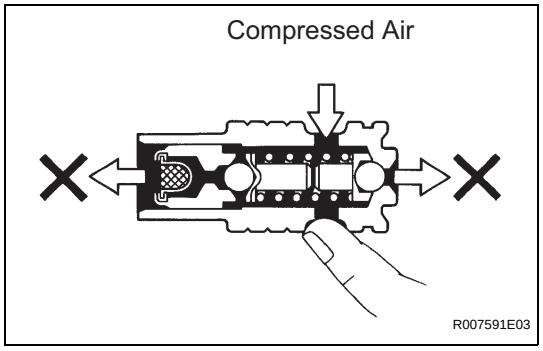

(b) Check the flow control valve for leakage. Close one of the holes and apply compressed air, 392 to 490 kPa (4 to 5 kgf/cm^2, 57 to 71 psi), into the opposite side hole, and confirm that air does not come out from the both end holes.
If air leaks, replace the vane pump assembly.

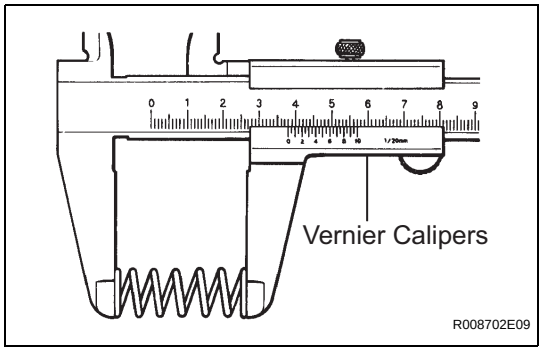

4. INSPECT FLOW CONTROL VALVE COMPRESSION SPRING

(a) Using vernier calipers, measure the free length of the compression spring.
Minimum free length:
32.24 mm (1.2693 in.)
If the length is less than minimum, replace the vane pump assembly.