SLIDING ROOF HOUSING (for Multi-panel Moon Roof)

COMPONENTS

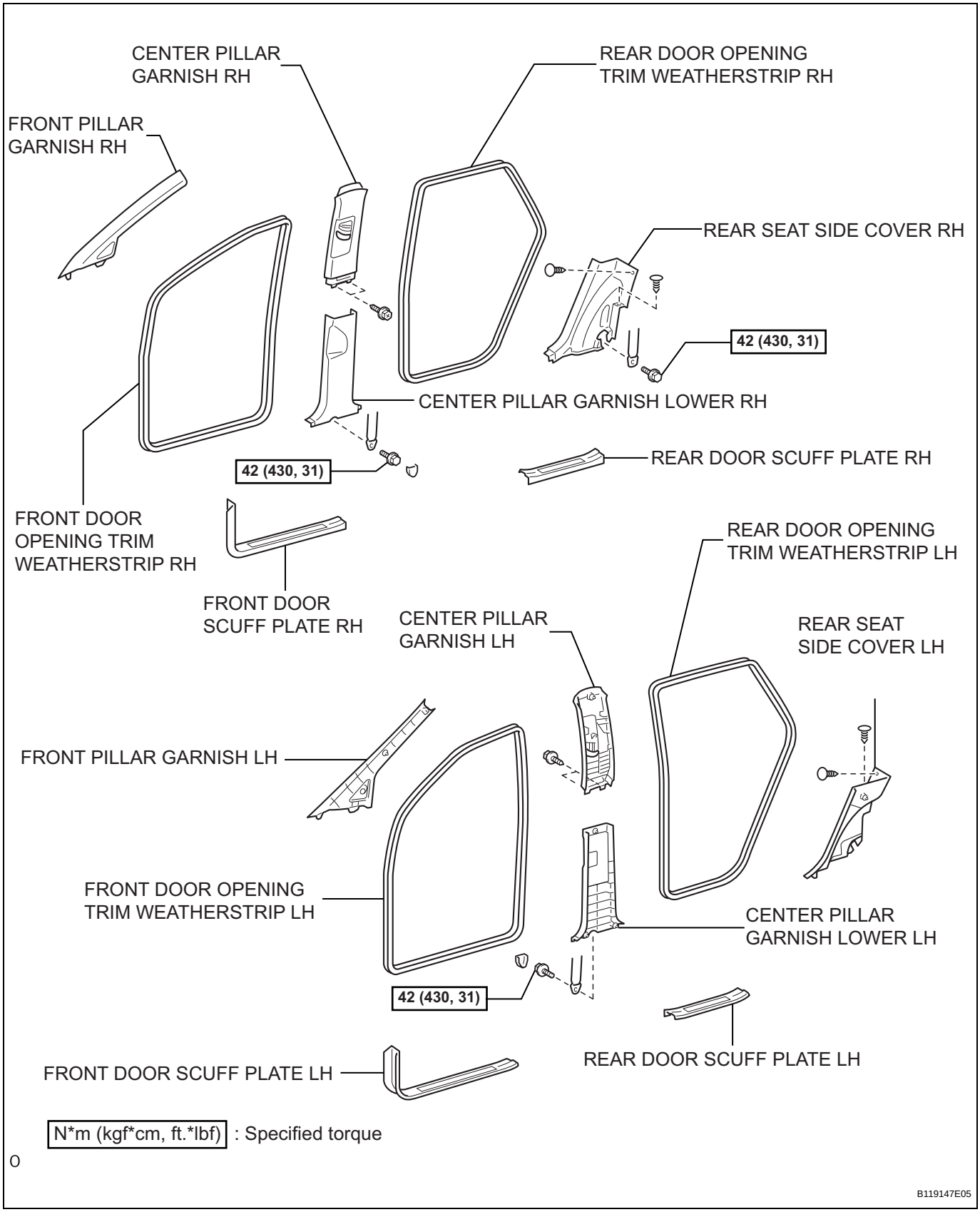

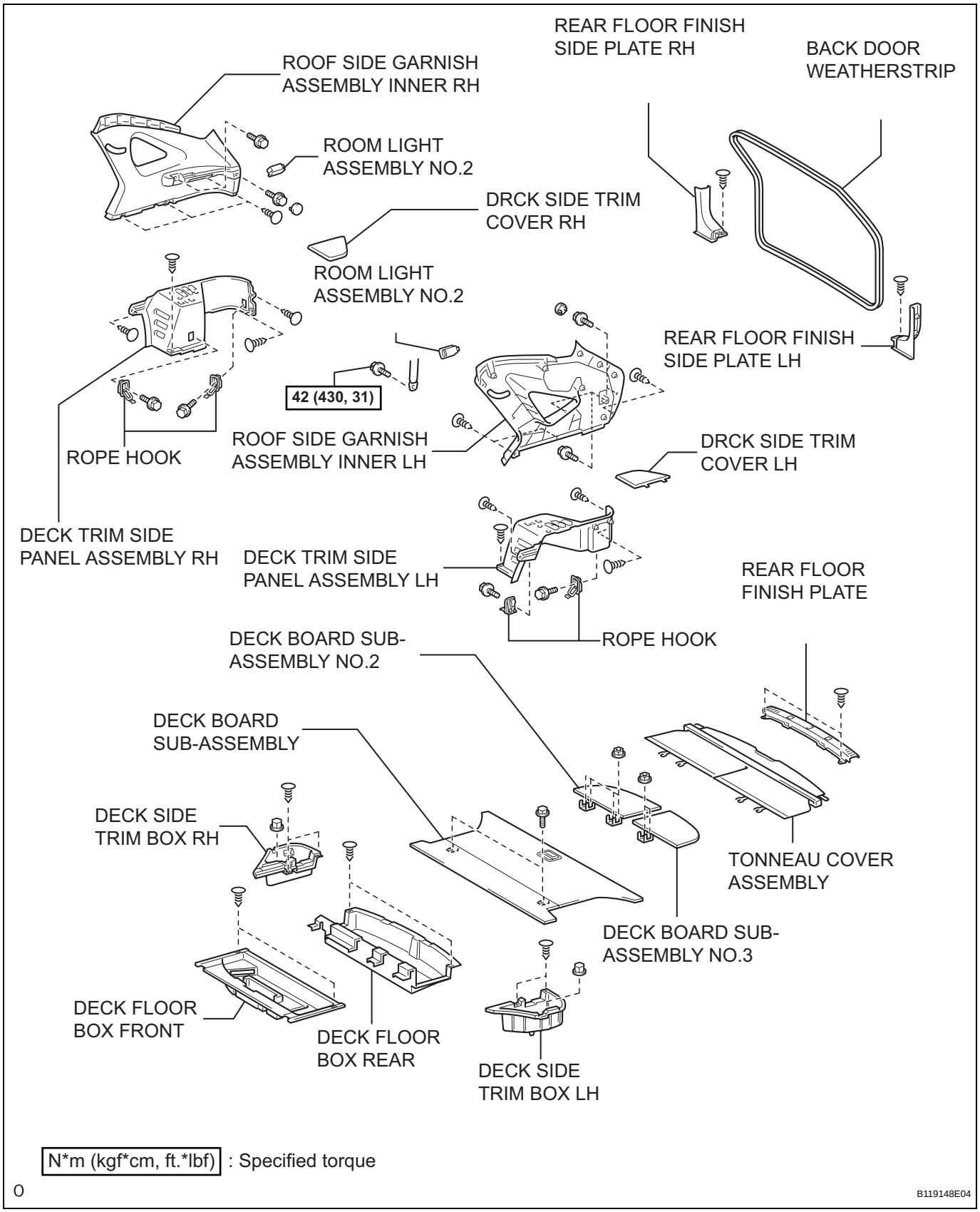
REAR FLOOR FINISH SIDE PLATE RH
BACK DOOR WEATHERSTRIP
ROOF SIDE GARNISH ASSEMBLY INNER RH
ROOM LIGHT ASSEMBLY NO.2
DRCK SIDE TRIM COVER RH
ROOM LIGHT ASSEMBLY NO.2
REAR FLOOR FINISH SIDE PLATE LH
42 (430, 31)
ROOF SIDE GARNISH ASSEMBLY INNER LH
DRCK SIDE TRIM COVER LH
ROPE HOOK
DECK TRIM SIDE PANEL ASSEMBLY RH
DECK TRIM SIDE PANEL ASSEMBLY LH
REAR FLOOR FINISH PLATE
ROPE HOOK
DECK BOARD SUB-ASSEMBLY NO.2
DECK BOARD SUB-ASSEMBLY
DECK SIDE TRIM BOX RH
TONNEAU COVER ASSEMBLY
DECK BOARD SUB-ASSEMBLY NO.3
DECK FLOOR BOX FRONT
DECK FLOOR BOX REAR
DECK SIDE TRIM BOX LH
N*m (kgf*cm, ft.*lbf) : Specified torque
O
B119148E04

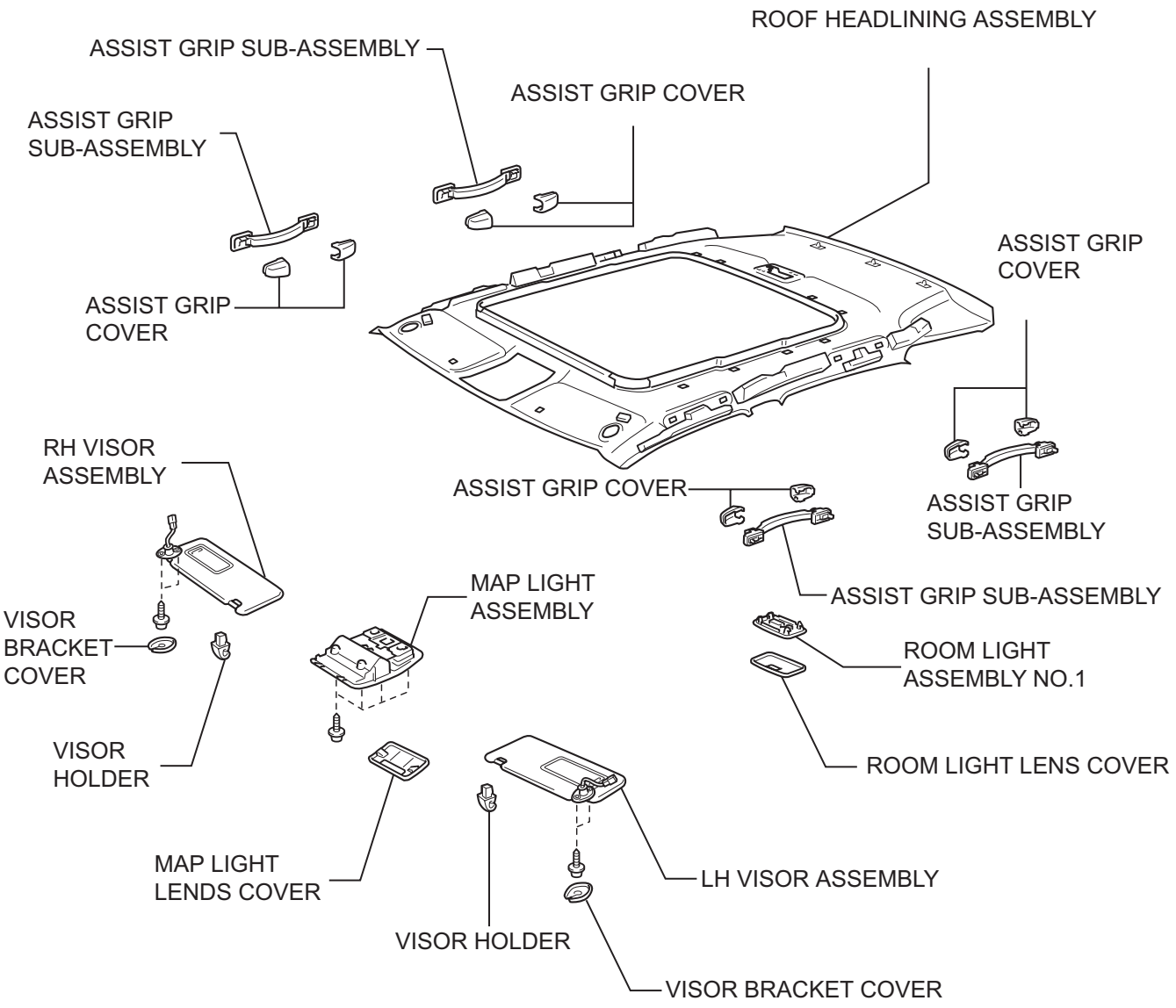

O

B119151E02

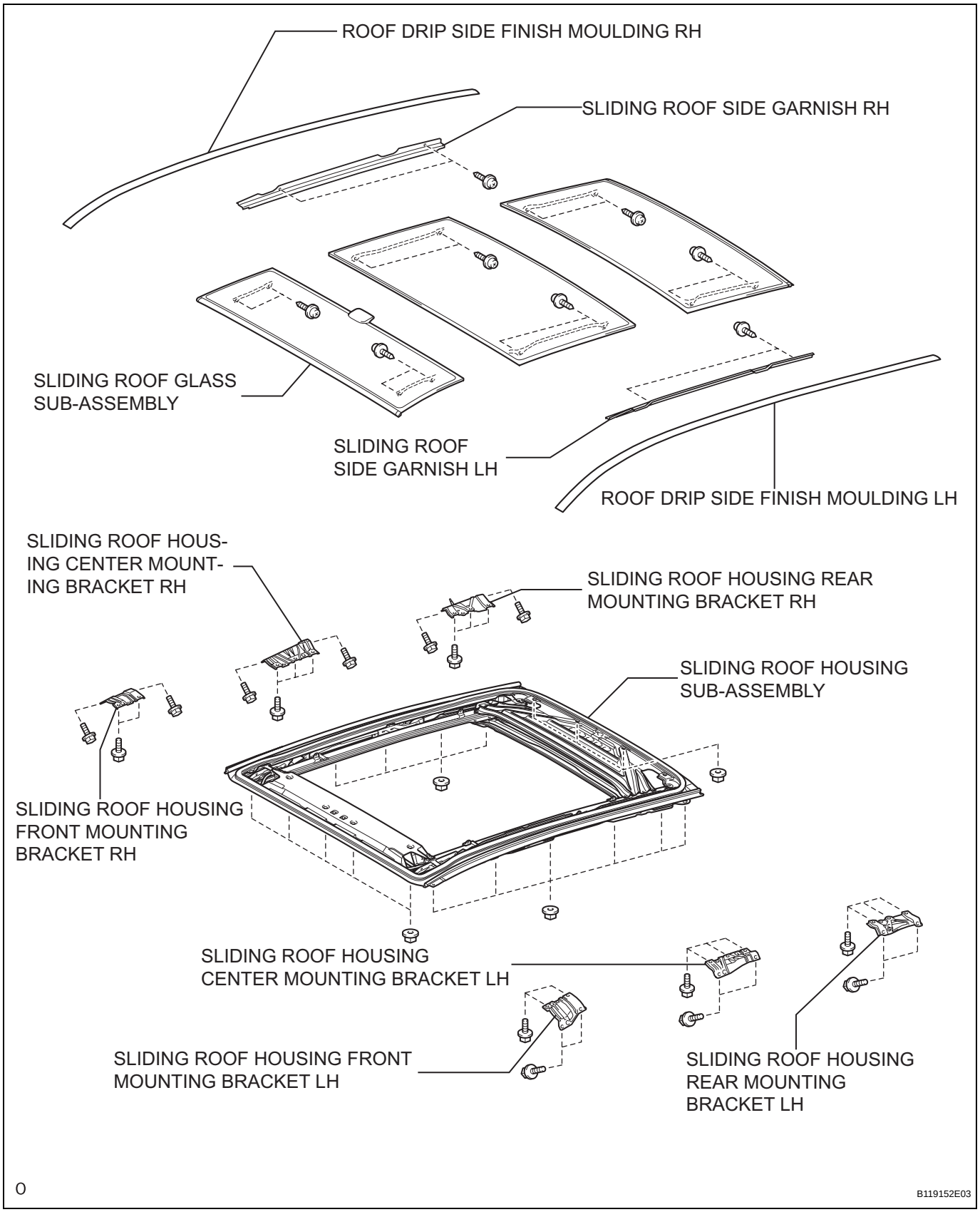
ROOF DRIP SIDE FINISH MOULDING RH
SLIDING ROOF SIDE GARNISH RH
SLIDING ROOF GLASS SUB-ASSEMBLY
SLIDING ROOF SIDE GARNISH LH
ROOF DRIP SIDE FINISH MOULDING LH
SLIDING ROOF HOUSING CENTER MOUNTING BRACKET RH
SLIDING ROOF HOUSING REAR MOUNTING BRACKET RH
SLIDING ROOF HOUSING SUB-ASSEMBLY
SLIDING ROOF HOUSING FRONT MOUNTING BRACKET RH
SLIDING ROOF HOUSING CENTER MOUNTING BRACKET LH
SLIDING ROOF HOUSING FRONT MOUNTING BRACKET LH
SLIDING ROOF HOUSING REAR MOUNTING BRACKET LH
O
B119152E03

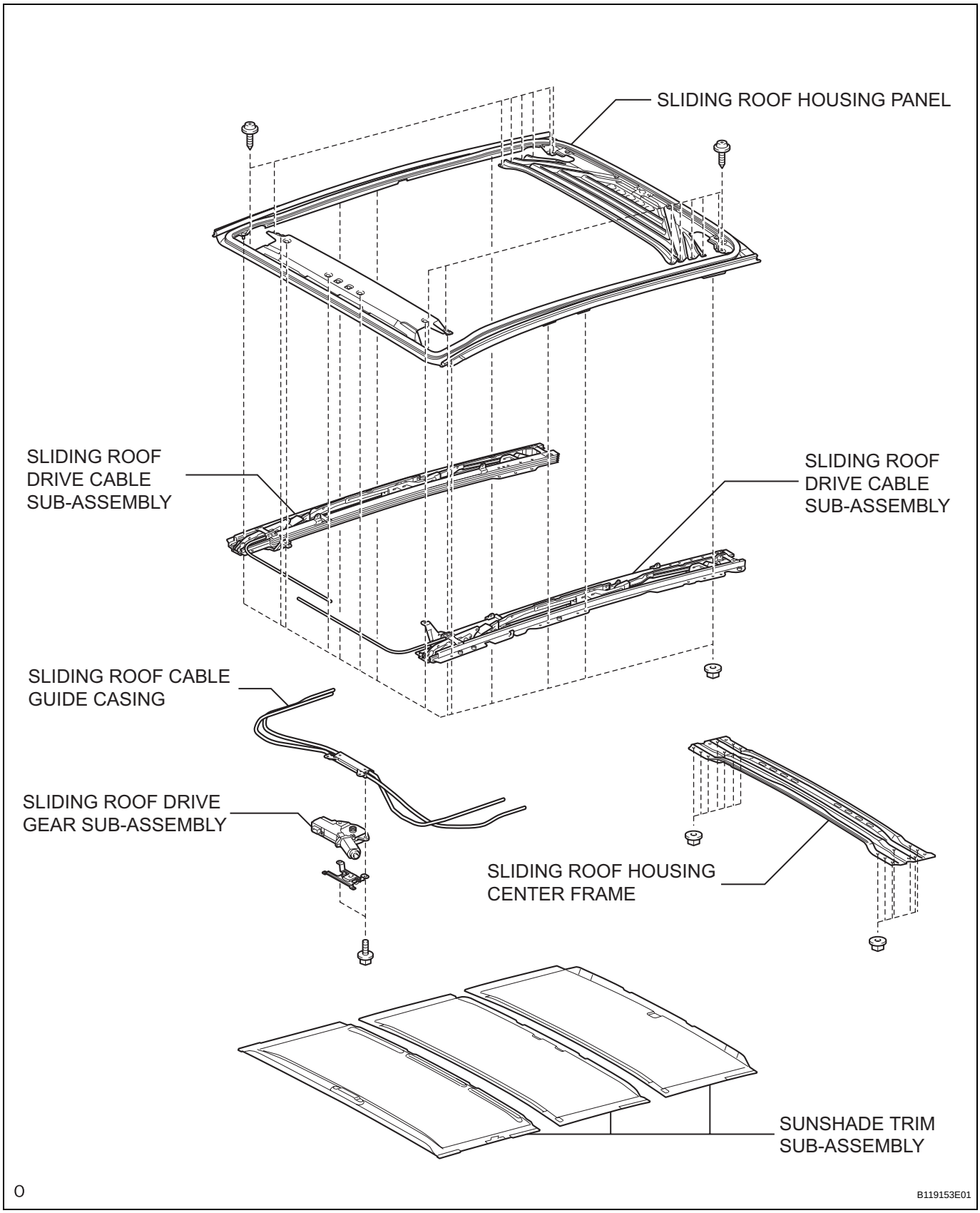
SLIDING ROOF HOUSING PANEL
SLIDING ROOF DRIVE CABLE SUB-ASSEMBLY
SLIDING ROOF DRIVE CABLE SUB-ASSEMBLY
SLIDING ROOF CABLE GUIDE CASING
SLIDING ROOF DRIVE GEAR SUB-ASSEMBLY
SLIDING ROOF HOUSING CENTER FRAME
SUNSHADE TRIM SUB-ASSEMBLY
O
B119153E01