SYSTEM WIRING DIAGRAMS
1.8L, Engine Performance Circuits (3 of 3)
1997 Mitsubishi Mirage
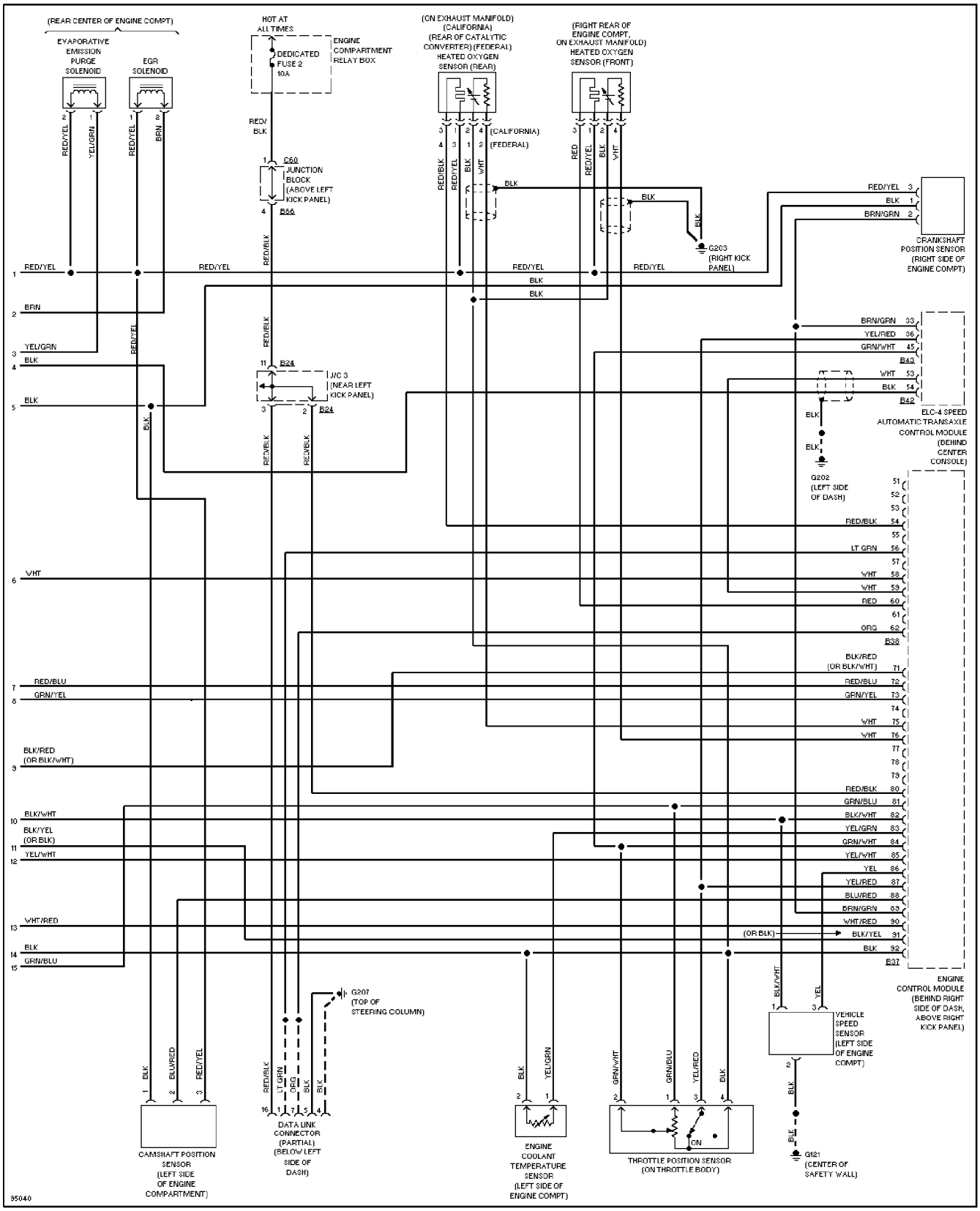
For DIAKOM-AUTO http://www.diakom.ru Taganrog support@diakom.ru (8634)315187
Copyright © 1998 Mitchell Repair Information Company, LLC
Thursday, December 14, 2000 05:06PM