SYSTEM WIRING DIAGRAMS
Radio Circuits, W/ CD Changer
1991 Mitsubishi Galant

For DIAKOM-AUTO http://www.diakom.ru Taganrog support@diakom.ru (8634)315187

Copyright © 1998 Mitchell Repair Information Company, LLC
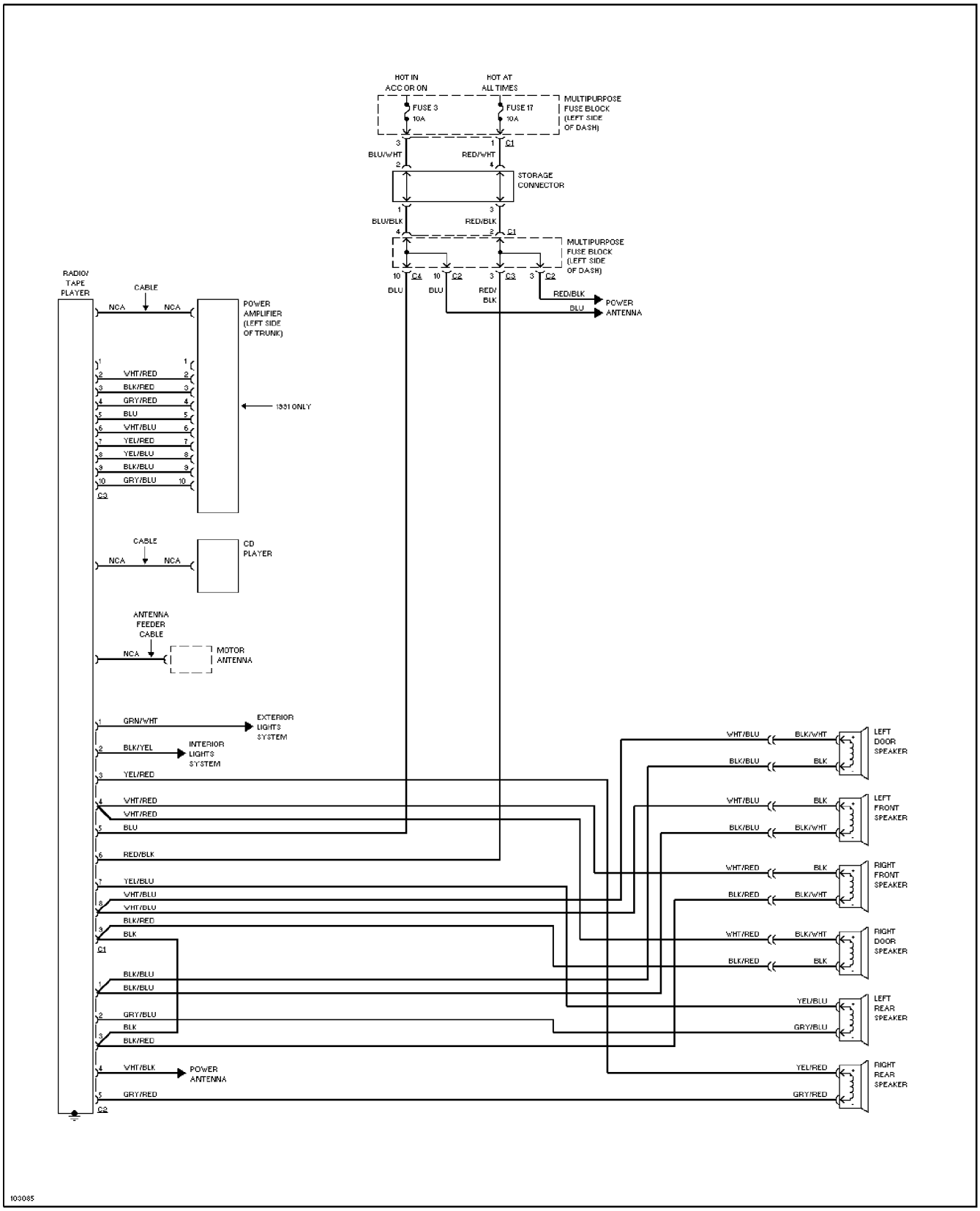
Sunday, December 17, 2000 03:06PM