SYSTEM WIRING DIAGRAMS
Wiper/Washer Circuit, W/O ETACS UNIT

1991 Mitsubishi Galant

For DIAKOM-AUTO http://www.diakom.ru Taganrog support@diakom.ru (8634)315187
Copyright © 1998 Mitchell Repair Information Company, LLC
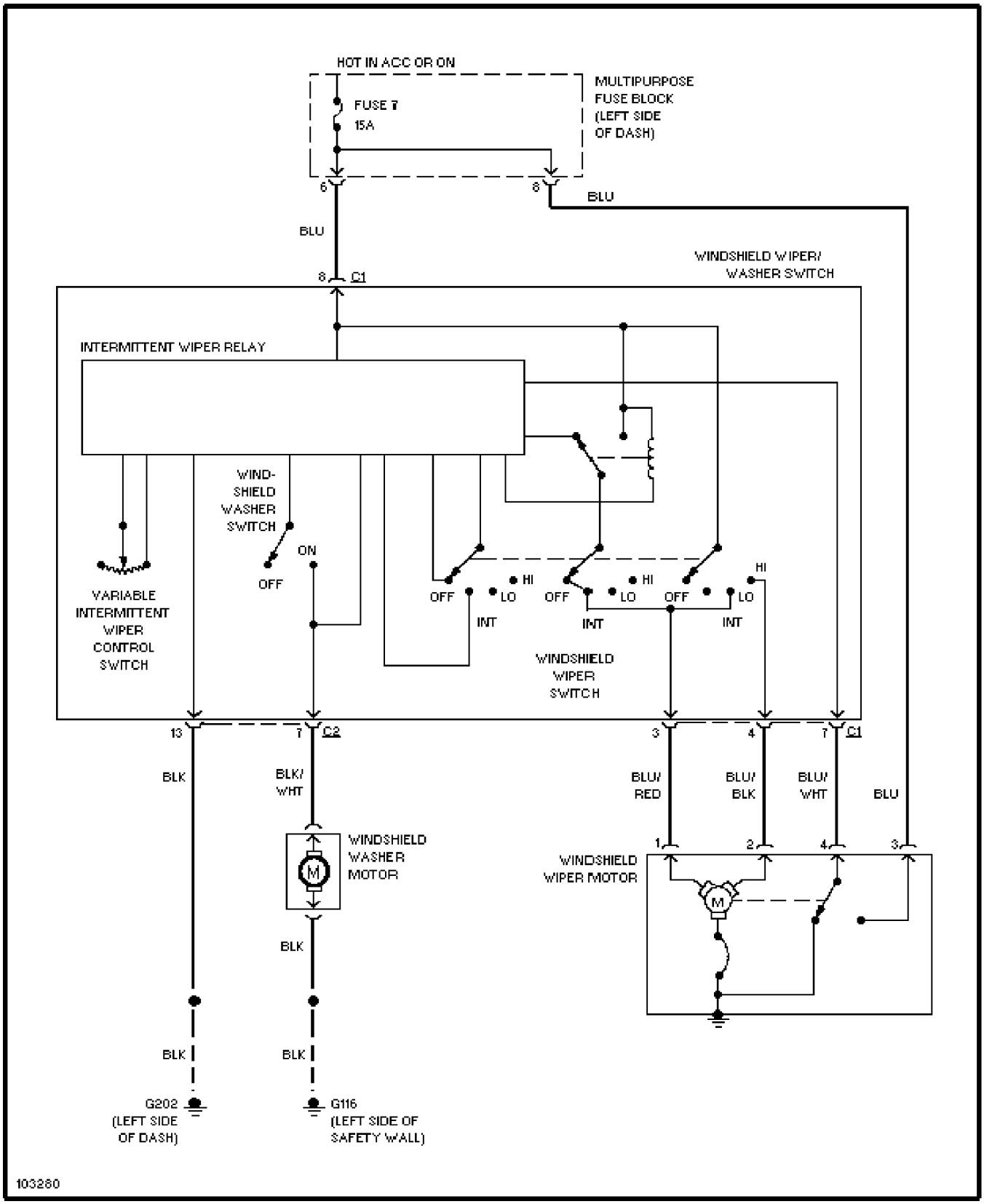
Sunday, December 17, 2000 03:08PM