SYSTEM WIRING DIAGRAMS
Starting Circuit, W/ M/T
1991 Mitsubishi Pickup
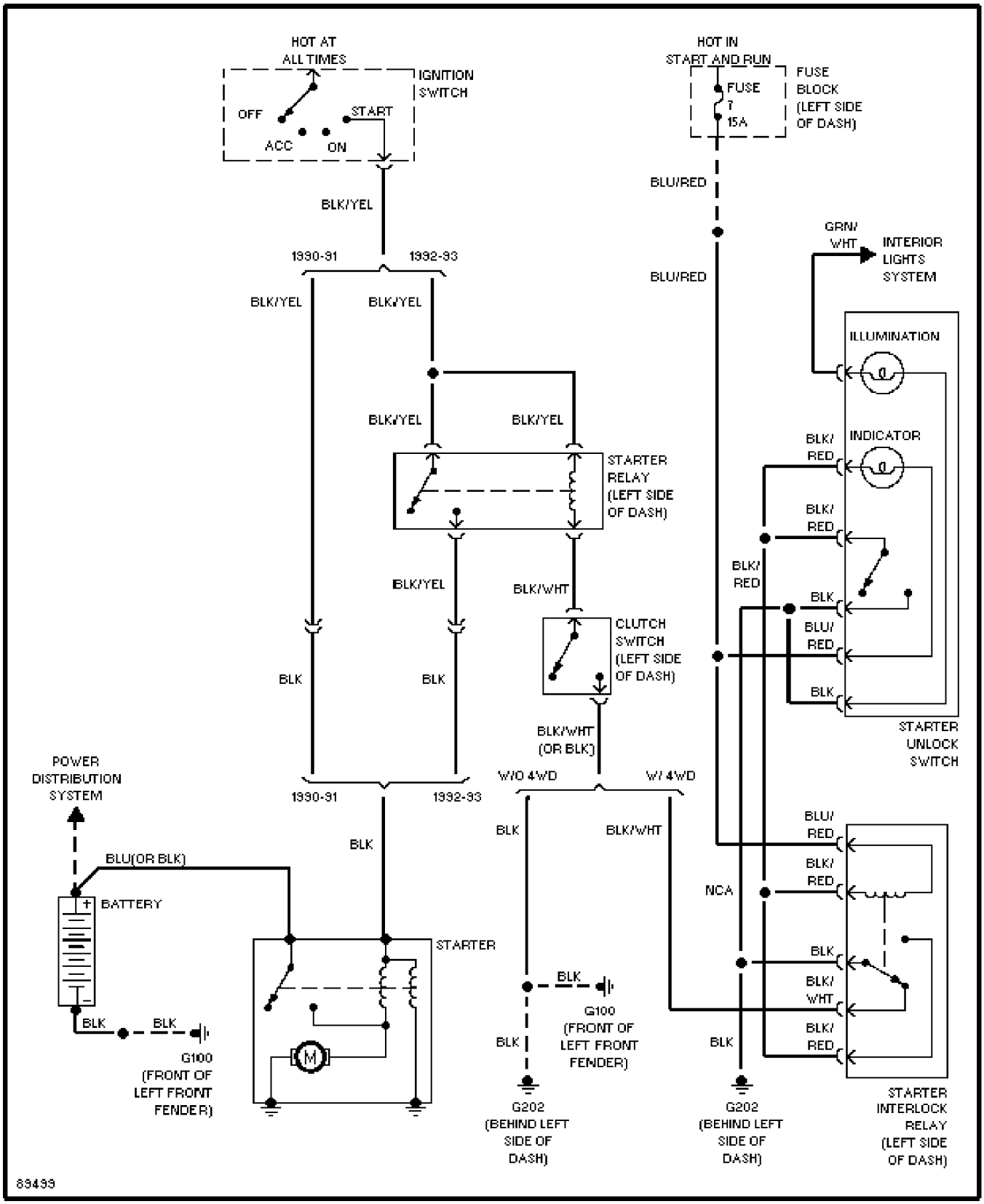
For DIAKOM-AUTO http://www.diakom.ru Taganrog support@diakom.ru (8634)315187
Copyright © 1998 Mitchell Repair Information Company, LLC
Sunday, December 17, 2000 03:41PM