ELECTRICAL SYSTEM

SECTION EL

CONTENTS

CONTENTS (Cont'd)

CONTENTS (Cont'd)

CONTENTS (Cont'd)

Supplemental Restraint System (SRS) "AIR BAG" and "SEAT BELT PRE-TENSIONER"

NHEL0001

The Supplemental Restraint System such as "AIR BAG" and "SEAT BELT PRE-TENSIONER" used along with a seat belt, helps to reduce the risk or severity of injury to the driver and front passenger for certain types of collision. This system includes seat belt switch inputs and dual stage front air bag modules. The SRS system uses the seat belt switches to determine the front air bag deployment, and may only deploy one front air bag, depending on the severity of a collision and whether the front occupants are belted or unbelted. The SRS system composition which is available to INFINITI I35 is as follows (The composition varies according to optional equipment.):

- For a frontal collision
  The Supplemental Restraint System consists of driver air bag module (located in the center of the steering wheel), front passenger air bag module (located on the instrument panel on passenger side), seat belt pre-tensioners, a diagnosis sensor unit, crash zone sensor, warning lamp, wiring harness and spiral cable.
- For a side collision
  The Supplemental Restraint System consists of front side air bag module (located in the outer side of front seat), satellite sensor, diagnosis sensor unit (one of components of air bags for a frontal collision), wiring harness, warning lamp (one of components of air bags for a frontal collision).

Information necessary to service the system safely is included in the **RS section** of this Service Manual.

WARNING:

- **To avoid rendering the SRS inoperative, which could increase the risk of personal injury or death in the event of a collision which would result in air bag inflation, all maintenance should be performed by an authorized INFINITI dealer.**
- **Improper maintenance, including incorrect removal and installation of the SRS, can lead to personal injury caused by unintentional activation of the system. For removal of Spiral Cable and Air Bag Module, see the RS section.**
- **Do not use electrical test equipment on any circuit related to the SRS unless instructed to in this Service Manual. SRS wiring harnesses can be identified by yellow and/or orange harness connector (and by yellow harness protector or yellow insulation tape before the harness connectors).**

Precautions for Trouble Diagnosis

NHEL0311

CAN SYSTEM

NHEL0311S01

- Do not apply voltage of 7.0V or higher to the measurement terminals.
- Use the tester with its open terminal voltage being 7.0V or less.

Precautions for Harness Repair

NHEL0312

CAN SYSTEM

NHEL0312S01

- Solder the repaired parts, and wrap with tape. [Frays of twisted line must be within 110 mm (4.33 in)]

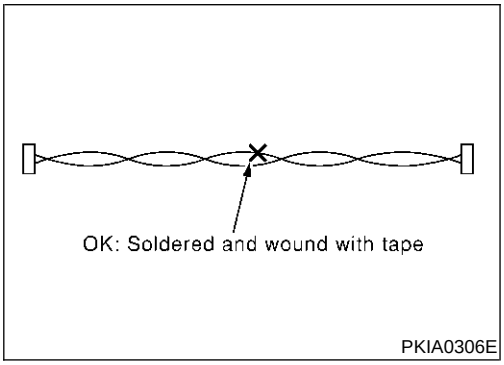

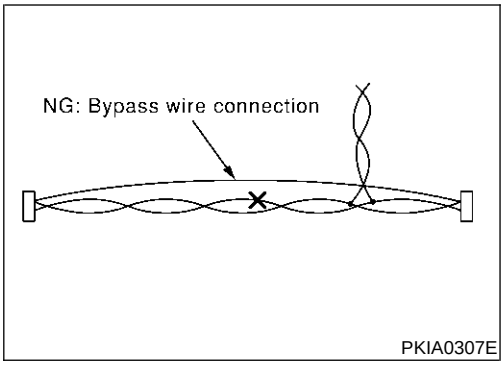

- Do not perform bypass wire connections for the repair parts. (The spliced wire will become separated and the characteristics of twisted line will be lost.)

Wiring Diagrams and Trouble Diagnosis

NHEL0002

When you read wiring diagrams, refer to the following:

- Refer to GI-11, "HOW TO READ WIRING DIAGRAMS"
- Refer to EL-11, "POWER SUPPLY ROUTING" for power distribution circuit

When you perform trouble diagnosis, refer to the following:

- Refer to GI-36, "HOW TO FOLLOW TEST GROUPS IN TROUBLE DIAGNOSES"
- Refer to GI-25, "HOW TO PERFORM EFFICIENT DIAGNOSIS FOR AN ELECTRICAL INCIDENT"

Check for any Service bulletins before servicing the vehicle.

Description

NHEL0003

HARNESS CONNECTOR (TAB-LOCKING TYPE)

NHEL0003S01

- The tab-locking type connectors help prevent accidental looseness or disconnection.
- The tab-locking type connectors are disconnected by pushing or lifting the locking tab(s). Refer to the illustration below.

Refer to the next page for description of the slide-locking type connector.

CAUTION:

Do not pull the harness or wires when disconnecting the connector.

[Example]

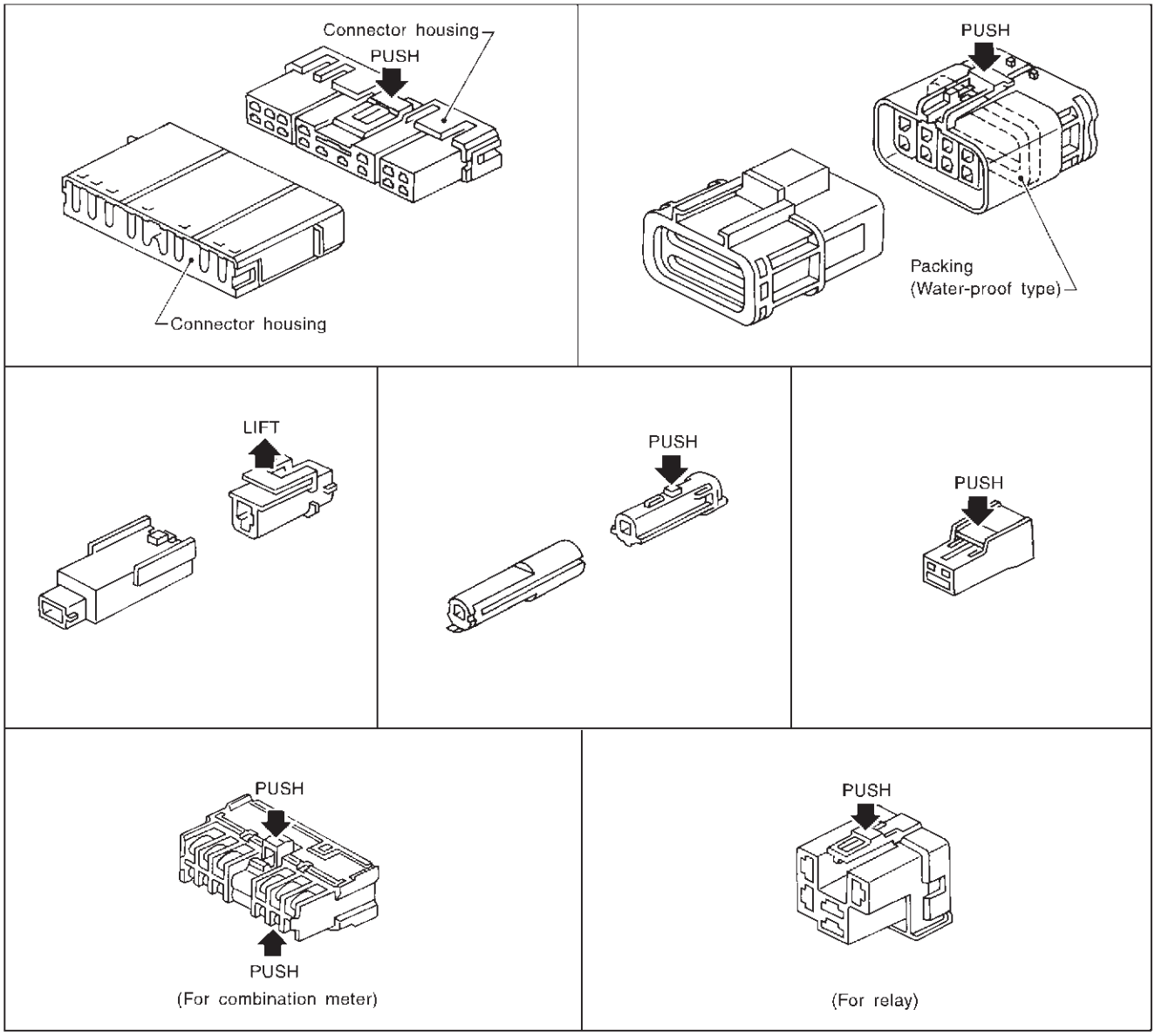

SEL769DA

HARNESS CONNECTOR (SLIDE-LOCKING TYPE)

=NHEL0003S02

- A new style slide-locking type connector is used on certain systems and components, especially those related to OBD.
- The slide-locking type connectors help prevent incomplete locking and accidental looseness or disconnection.
- The slide-locking type connectors are disconnected by pushing or pulling the slider. Refer to the illustration below.

CAUTION:

- **Do not pull the harness or wires when disconnecting the connector.**
- **Be careful not to damage the connector support bracket when disconnecting the connector.**

[Example]

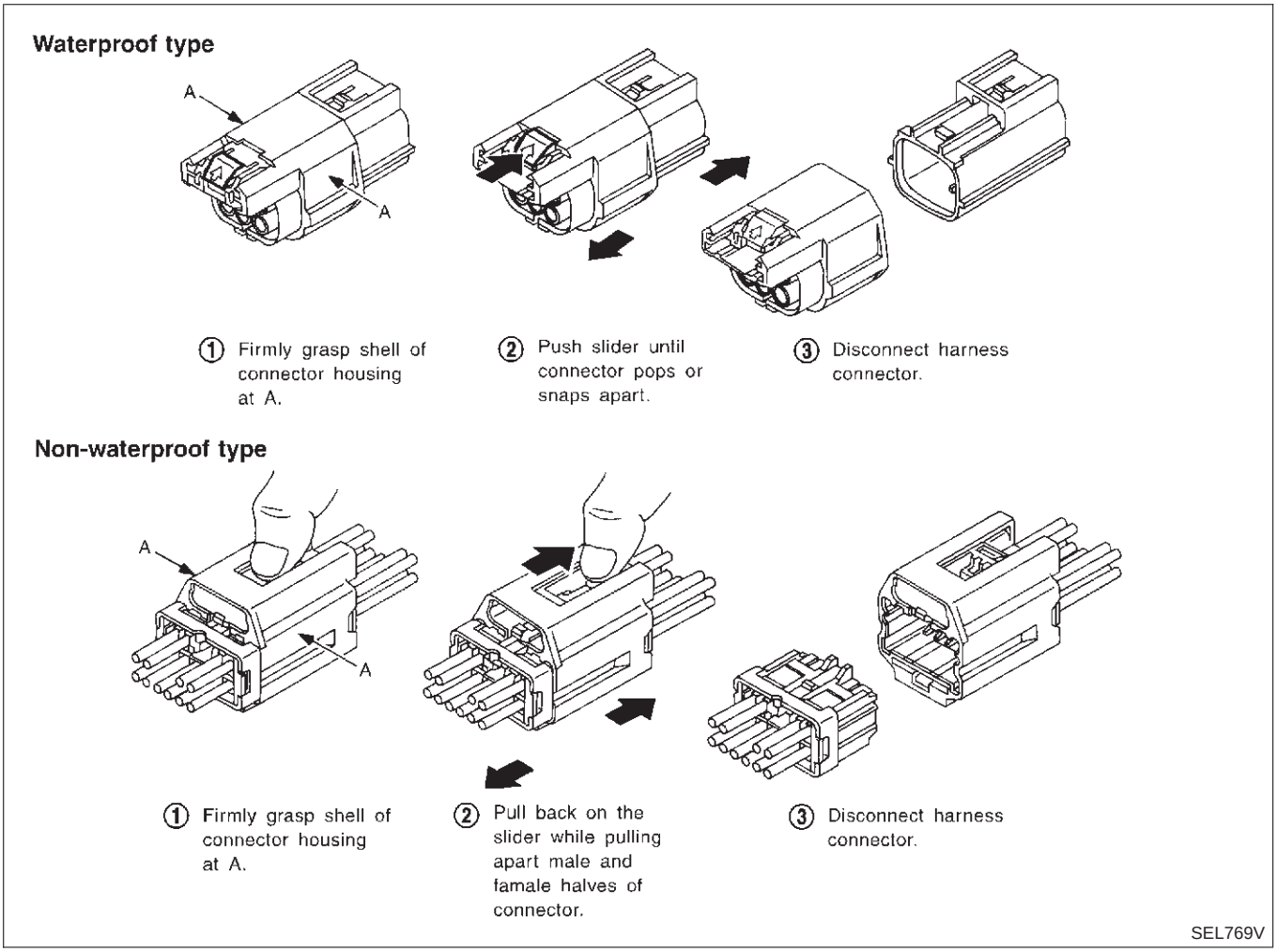

Description

NHEL0004

NORMAL OPEN, NORMAL CLOSED AND MIXED TYPE RELAYS

NHEL0004S01

Relays can mainly be divided into three types: normal open, normal closed and mixed type relays.

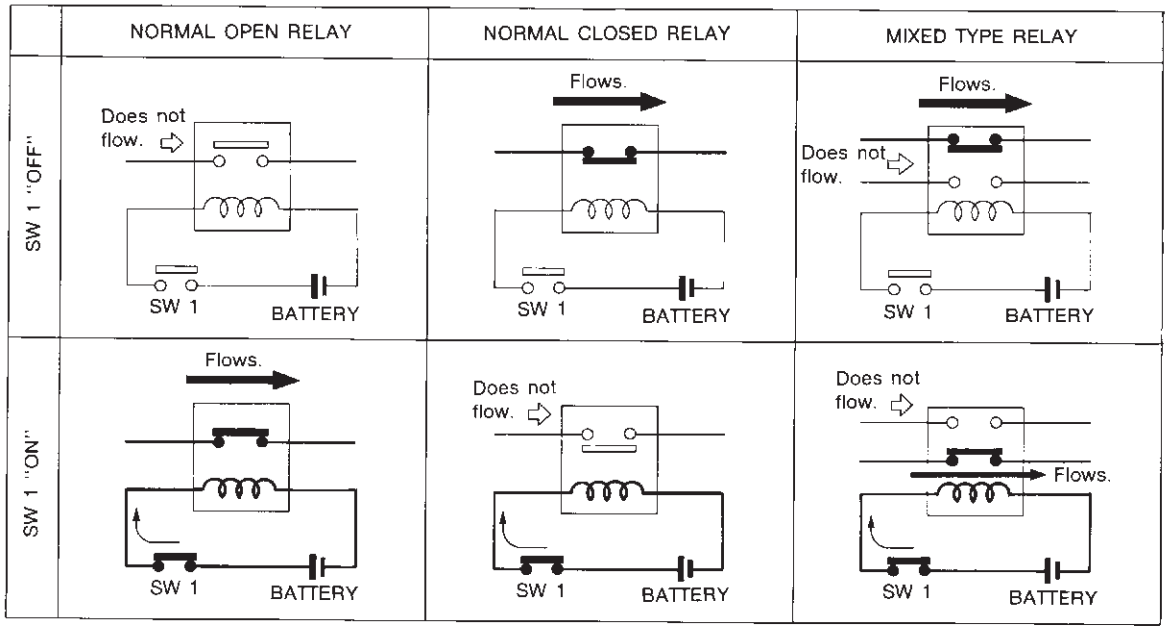

SEL881H

TYPE OF STANDARDIZED RELAYS

NHEL0004S02

1M	1 Make	2M	2 Make
1T	1 Transfer	1M·1B	1 Make 1 Break

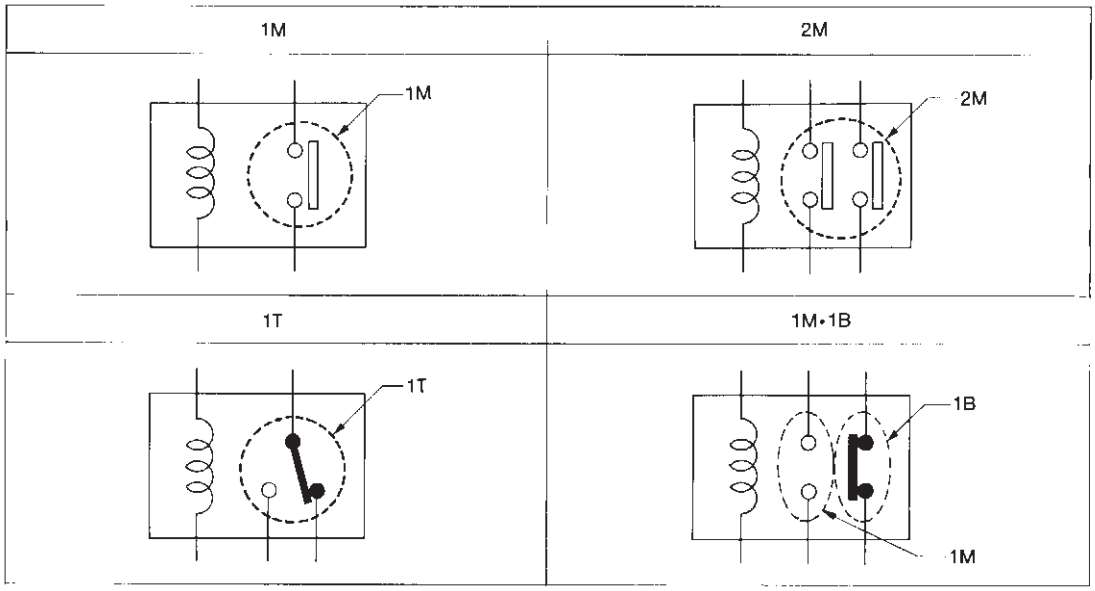

SEL882H

Type	Outer view	Circuit	Connector symbol and connection	Case color
1T	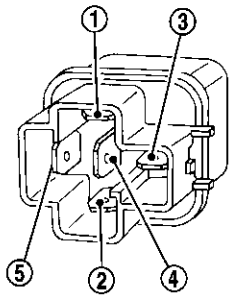	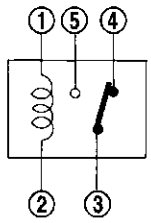	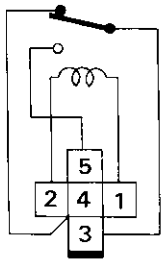	BLACK
2M	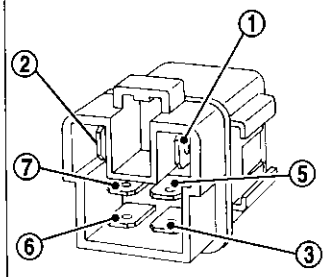	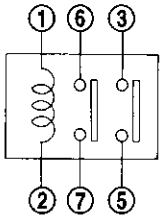	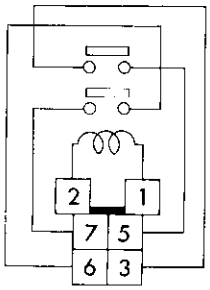	BROWN
1M•1B	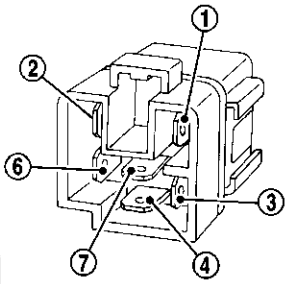	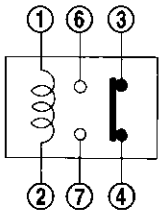	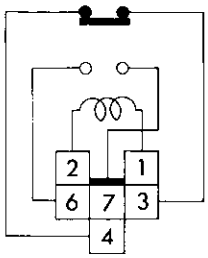	GRAY
1M	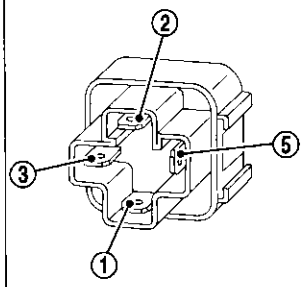	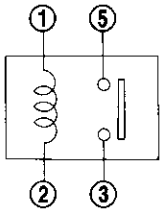	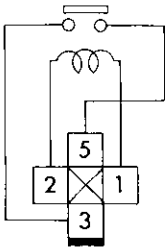	BLUE
	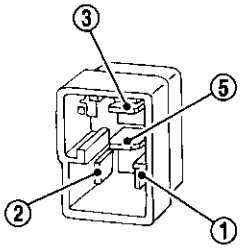		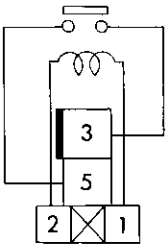	

The arrangement of terminal numbers on the actual relays may differ from those shown above.

SEL188W

Schematic

NHEL0005

For detailed ground distribution information, refer to “GROUND DISTRIBUTION”, EL-20.

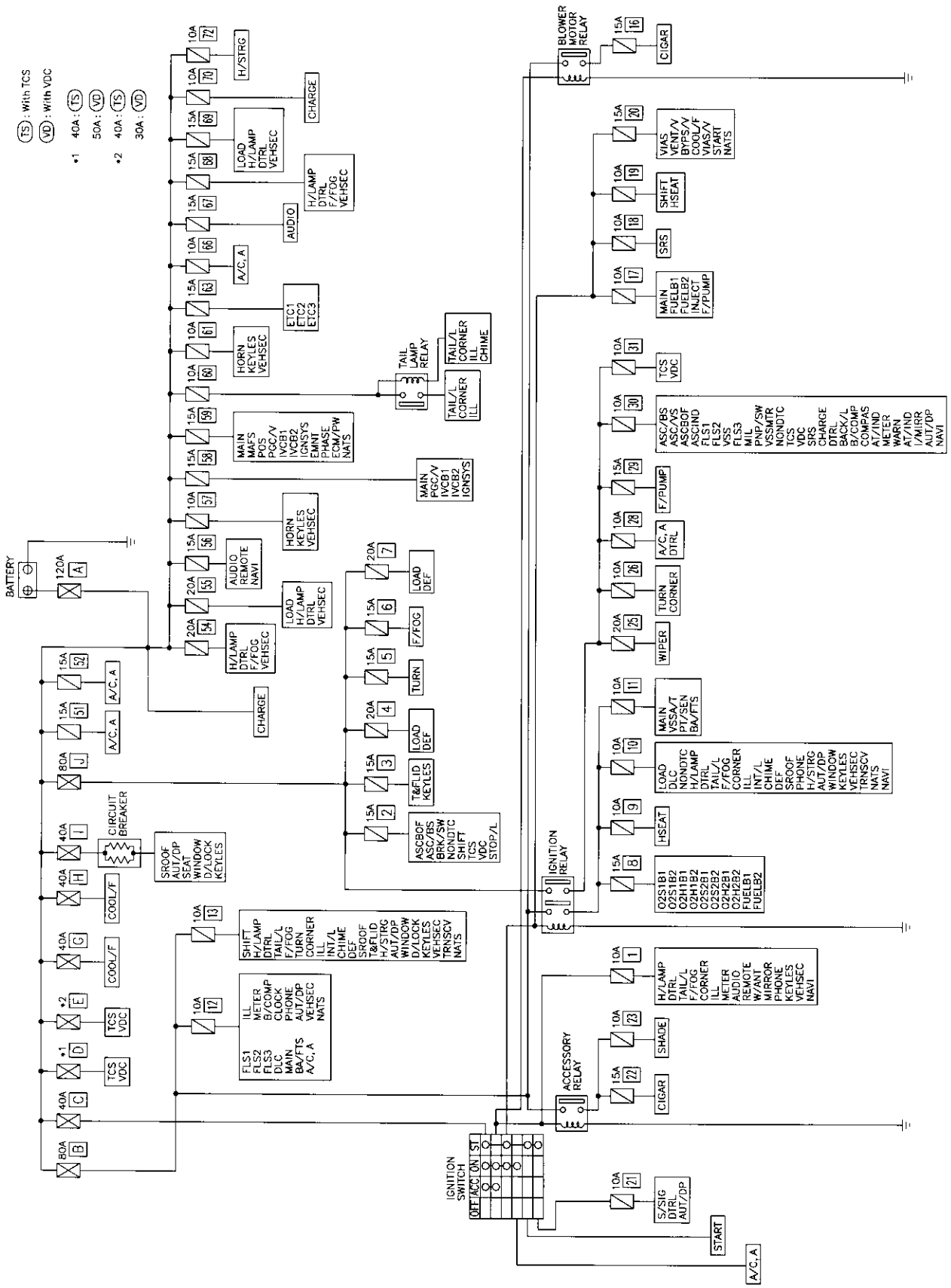

MEL857Q

Wiring Diagram — POWER —

NHEL0006

BATTERY POWER SUPPLY — IGNITION SW. IN ANY POSITION

NHEL0006S01

EL-POWER-01

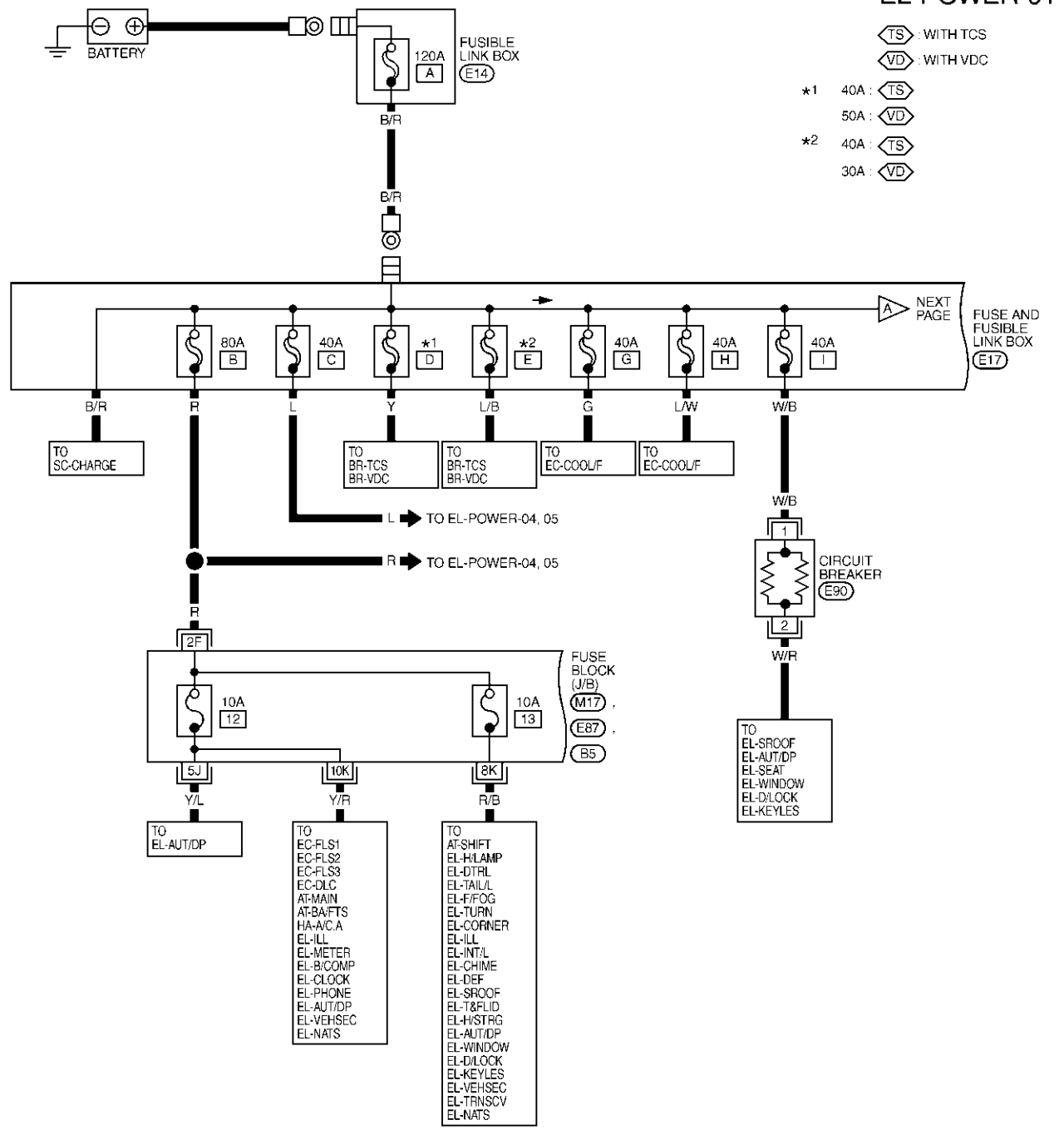

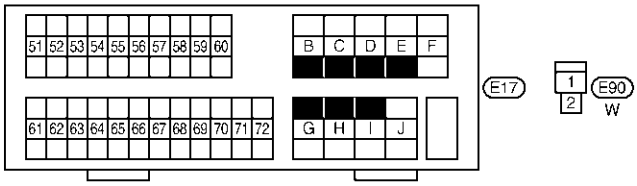

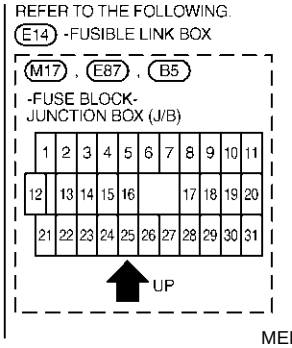

MEL858Q

EL-POWER-02

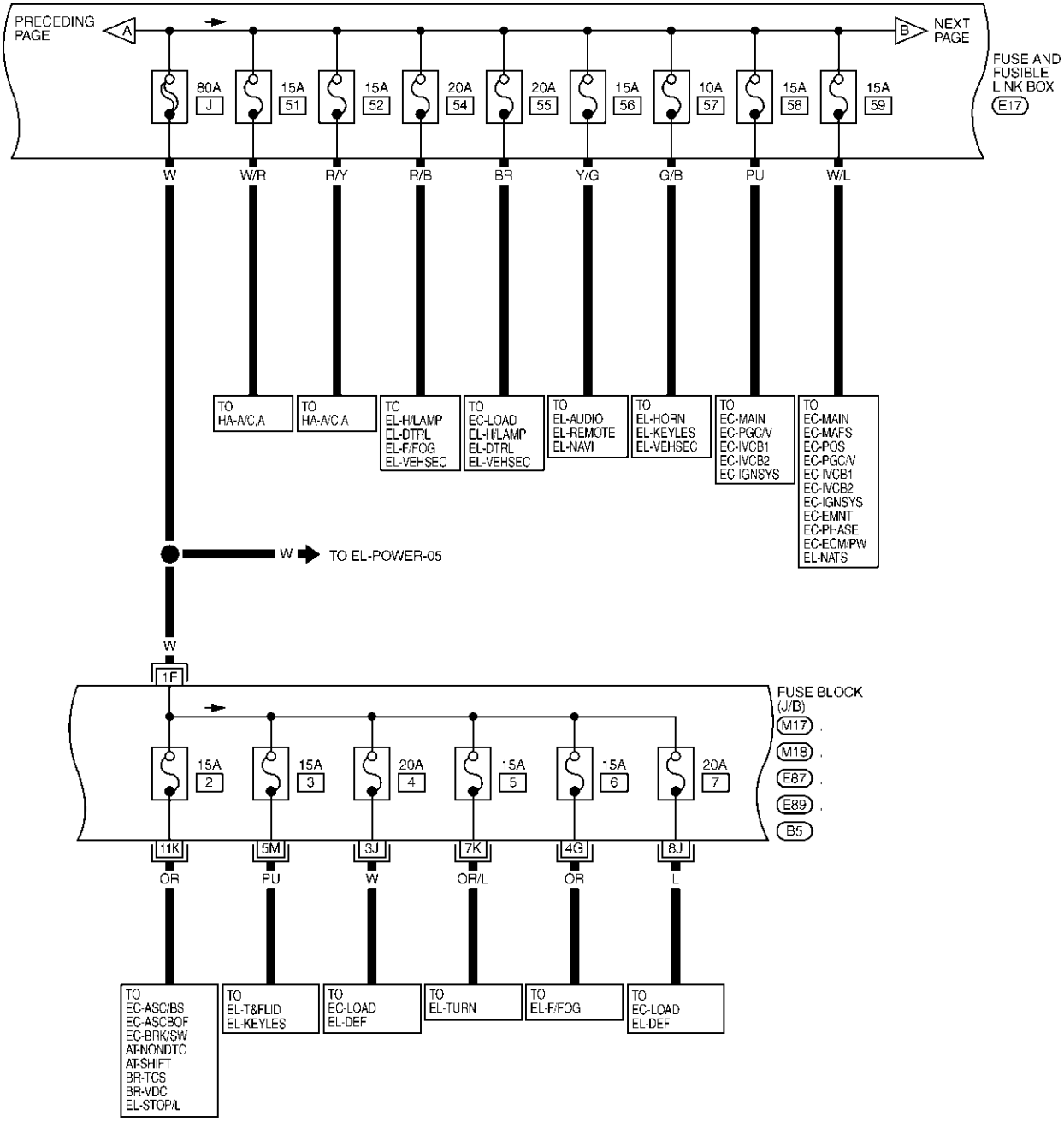
PRECEDING PAGE
A
B
NEXT PAGE
FUSE AND FUSIBLE LINK BOX
E17
80A J
15A 51
15A 52
20A 54
20A 55
15A 56
10A 57
15A 58
15A 59
W
W/R
R/Y
R/B
BR
Y/G
G/B
PU
W/L
TO HA-A/C,A
TO HA-A/C,A
TO EL-H/LAMP EL-DTRL EL-F/FOG EL-VEHSEC
TO EC-LOAD EL-H/LAMP EL-DTRL EL-VEHSEC
TO EL-AUDIO EL-REMOTE EL-NAVI
TO EL-HORN EL-KEYLES EL-VEHSEC
TO EC-MAIN EC-PGC/V EC-IVCB1 EC-IVCB2 EC-IGNSYS
TO EC-MAIN EC-MAFS EC-POS EC-PGC/V EC-IVCB1 EC-IVCB2 EC-IGNSYS EC-EMNT EC-PHASE EC-ECM/PW EL-NATS
W
TO EL-POWER-05
W
1F
FUSE BLOCK (J/B)
M17
M18
E87
E89
B5
15A 2
15A 3
20A 4
15A 5
15A 6
20A 7
11K
5M
3J
7K
4G
8J
OR
PU
W
OR/L
OR
L
TO EC-ASC/BS EC-ASCBOF EC-BRK/SW AT-NONDTC AT-SHIFT BR-TCS BR-VDC EL-STOP/L
TO EL-T&FLID EL-KEYLES
TO EC-LOAD EL-DEF
TO EL-TURN
TO EL-F/FOG
TO EC-LOAD EL-DEF

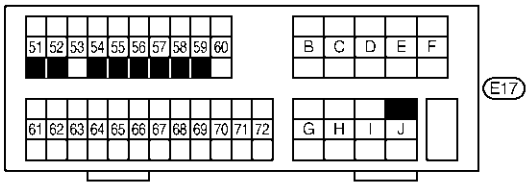
51 52 53 54 55 56 57 58 59 60
B C D E F
61 62 63 64 65 66 67 68 69 70 71 72
G H I J
E17

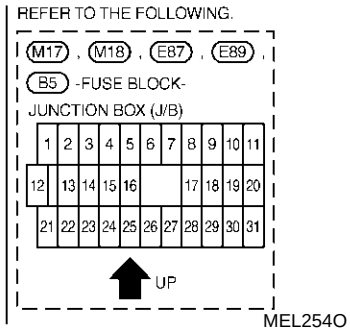
REFER TO THE FOLLOWING.
M17 , M18 , E87 , E89 ,
B5 -FUSE BLOCK-
JUNCTION BOX (J/B)
1 2 3 4 5 6 7 8 9 10 11
12 13 14 15 16 17 18 19 20
21 22 23 24 25 26 27 28 29 30 31
UP
MEL254O

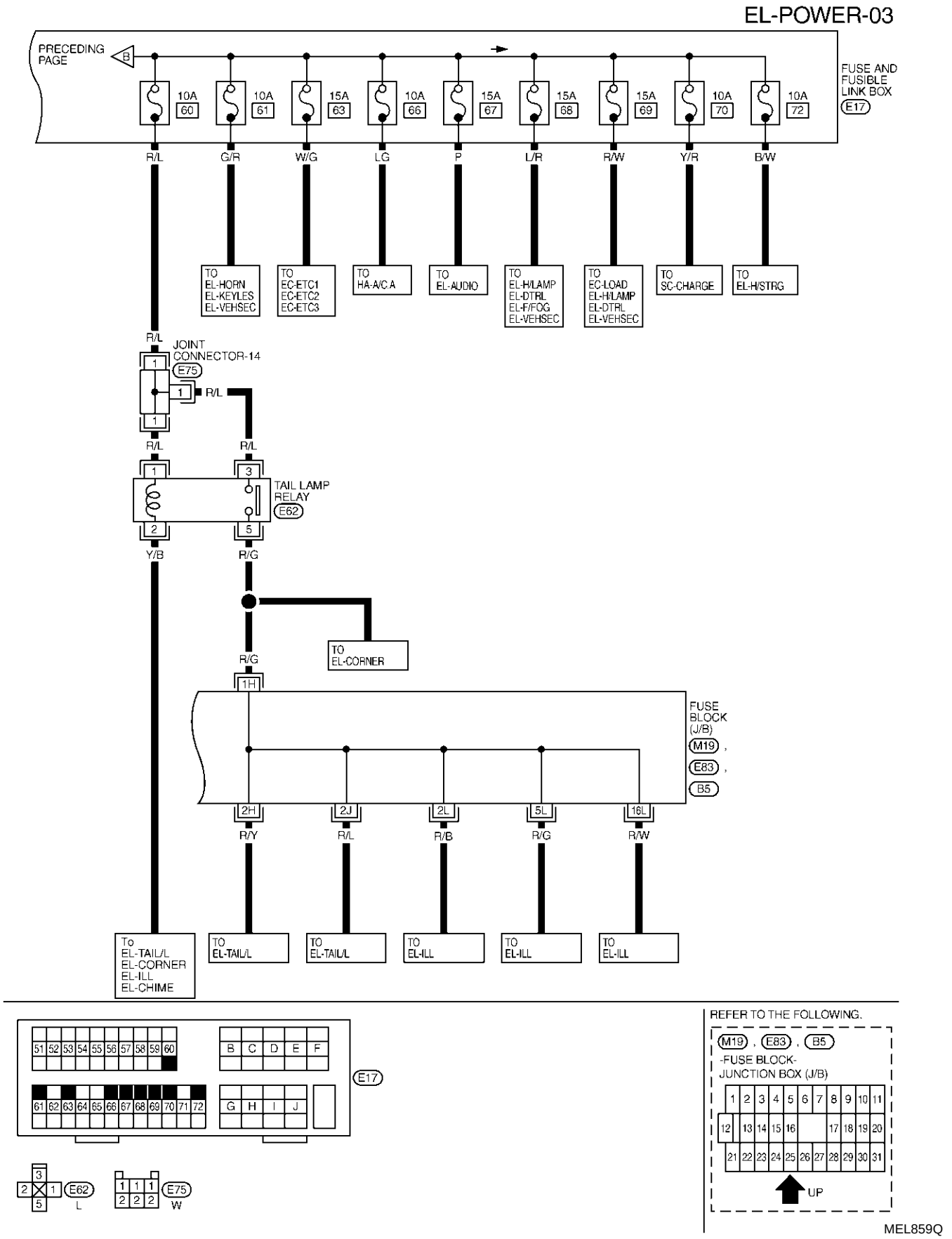
EL-POWER-03
PRECEDING PAGE
B
10A 60
10A 61
15A 63
10A 66
15A 67
15A 68
15A 69
10A 70
10A 72
FUSE AND FUSIBLE LINK BOX
E17
R/L
G/R
W/G
LG
P
L/R
R/W
Y/R
B/W
TO EL-HORN EL-KEYLES EL-VEHSEC
TO EC-ETC1 EC-ETC2 EC-ETC3
TO HA-A/C:A
TO EL-AUDIO
TO EL-H/LAMP EL-DTRL EL-F/FOG EL-VEHSEC
TO EC-LOAD EL-H/LAMP EL-DTRL EL-VEHSEC
TO SC-CHARGE
TO EL-H/STRG
JOINT CONNECTOR-14
E75
TAIL LAMP RELAY
E62
Y/B
R/G
TO EL-CORNER
1H
FUSE BLOCK (J/B)
M19
E83
B5
2H
2J
2L
5L
16L
R/Y
R/L
R/B
R/G
R/W
To EL-TAIL/L EL-CORNER EL-ILL EL-CHIME
TO EL-TAIL/L
TO EL-TAIL/L
TO EL-ILL
TO EL-ILL
TO EL-ILL
E17
REFER TO THE FOLLOWING.
M19 , E83 , B5
-FUSE BLOCK-
JUNCTION BOX (J/B)
UP
E62
L
E75
W
MEL859Q

ACCESSORY POWER SUPPLY — IGNITION SW. IN "ACC" OR "ON"

NHEL0006S02

EL-POWER-04

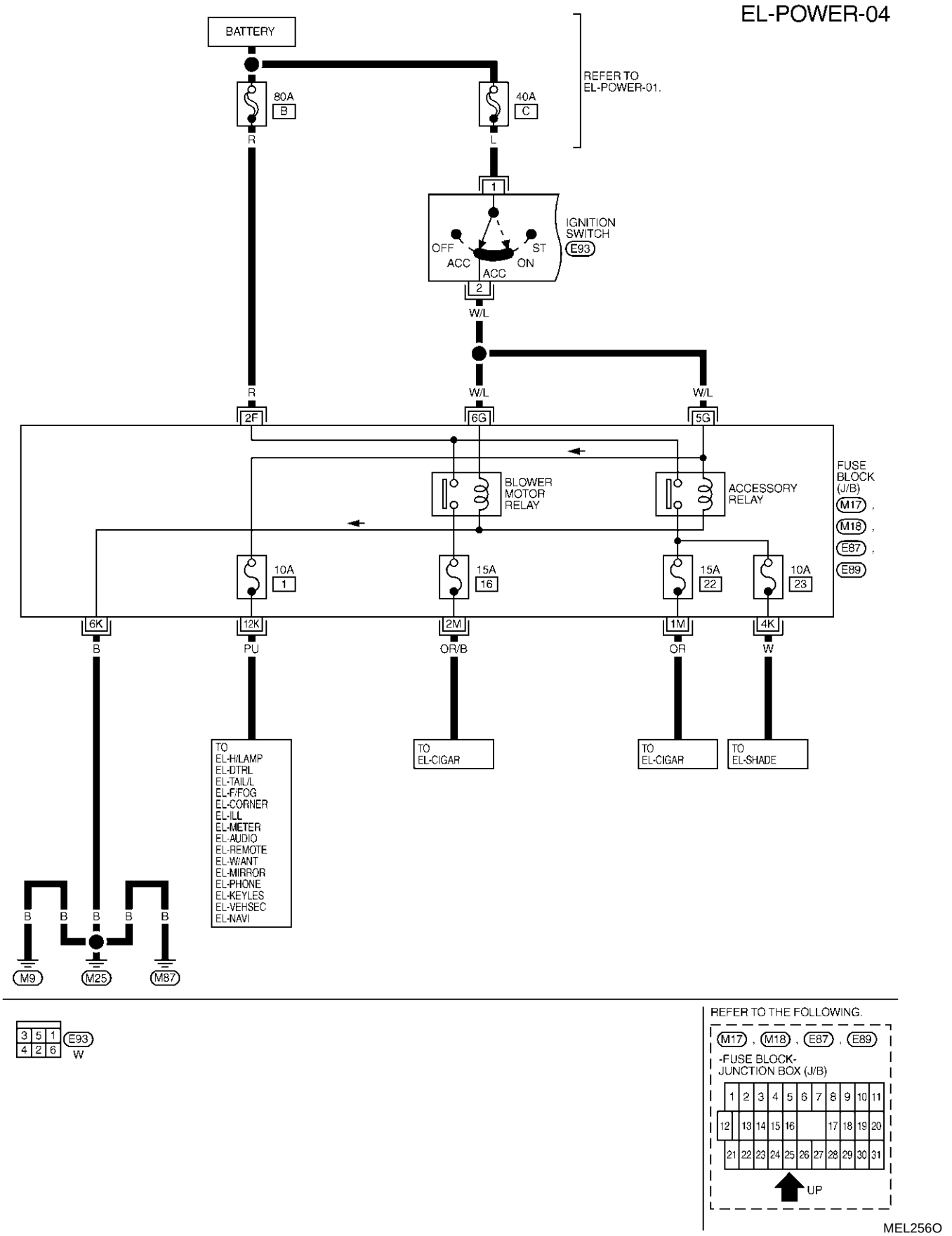

MEL256O

IGNITION POWER SUPPLY — IGNITION SW. IN "ON" AND/OR "START"

NHEL0006S03

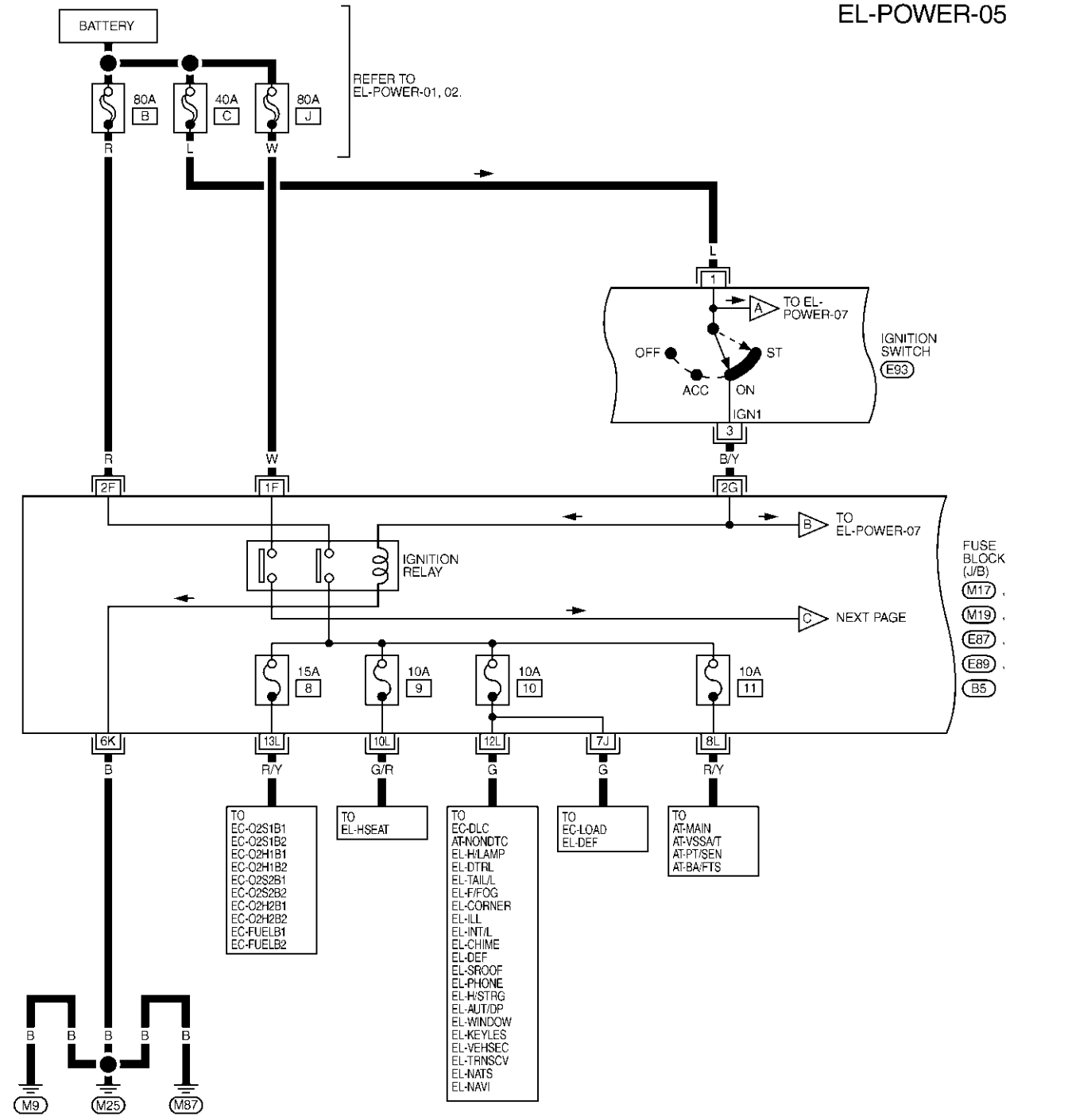

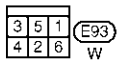

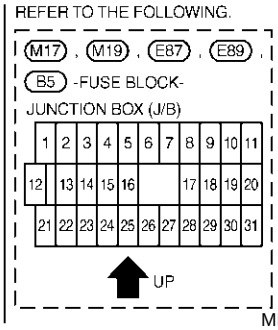

MEL257O

EL-POWER-06

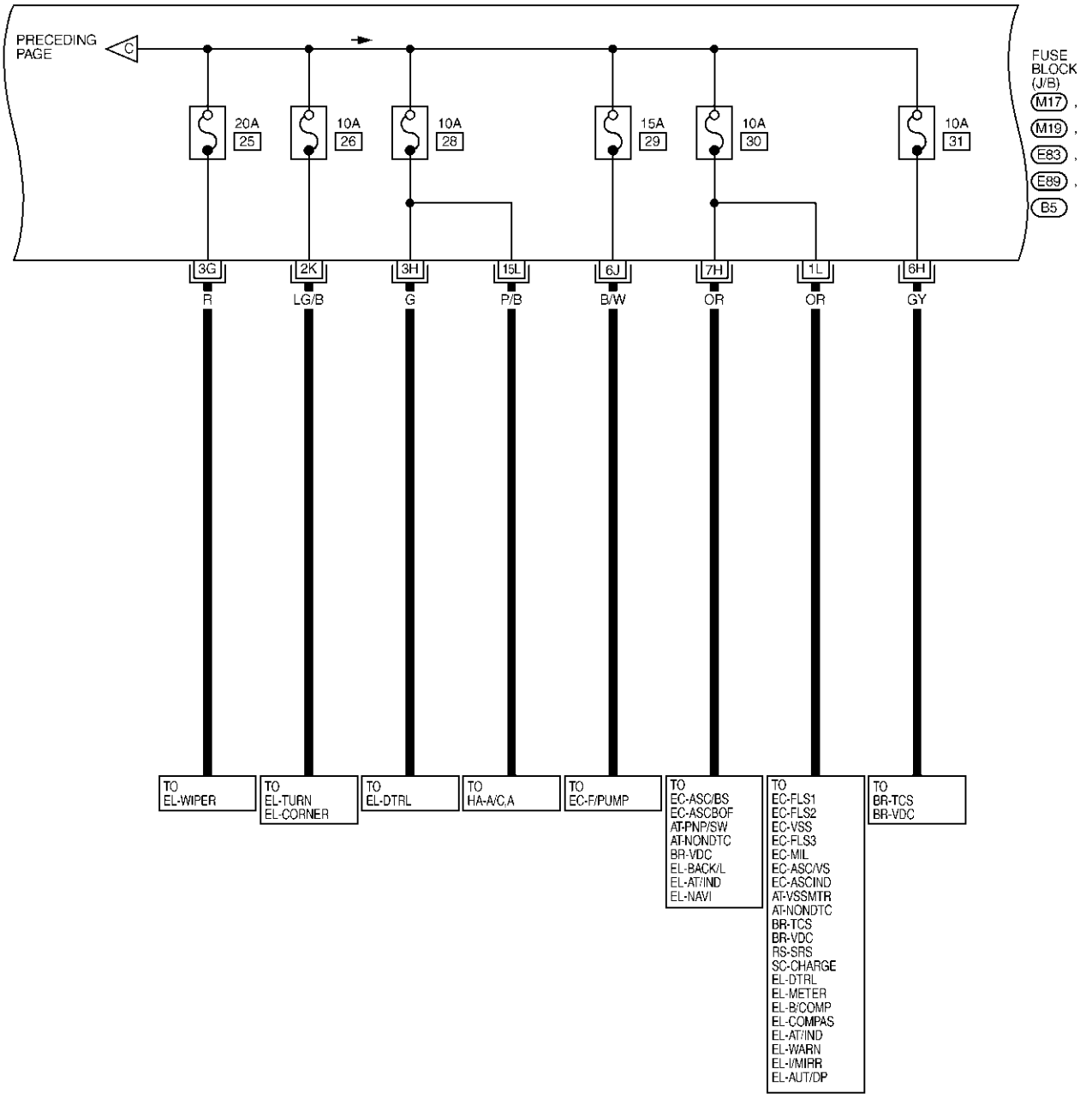

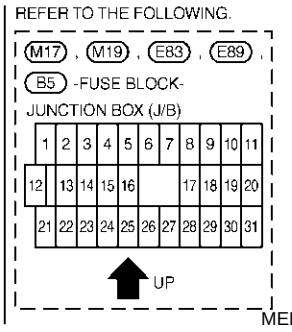

MEL860Q

EL-POWER-07

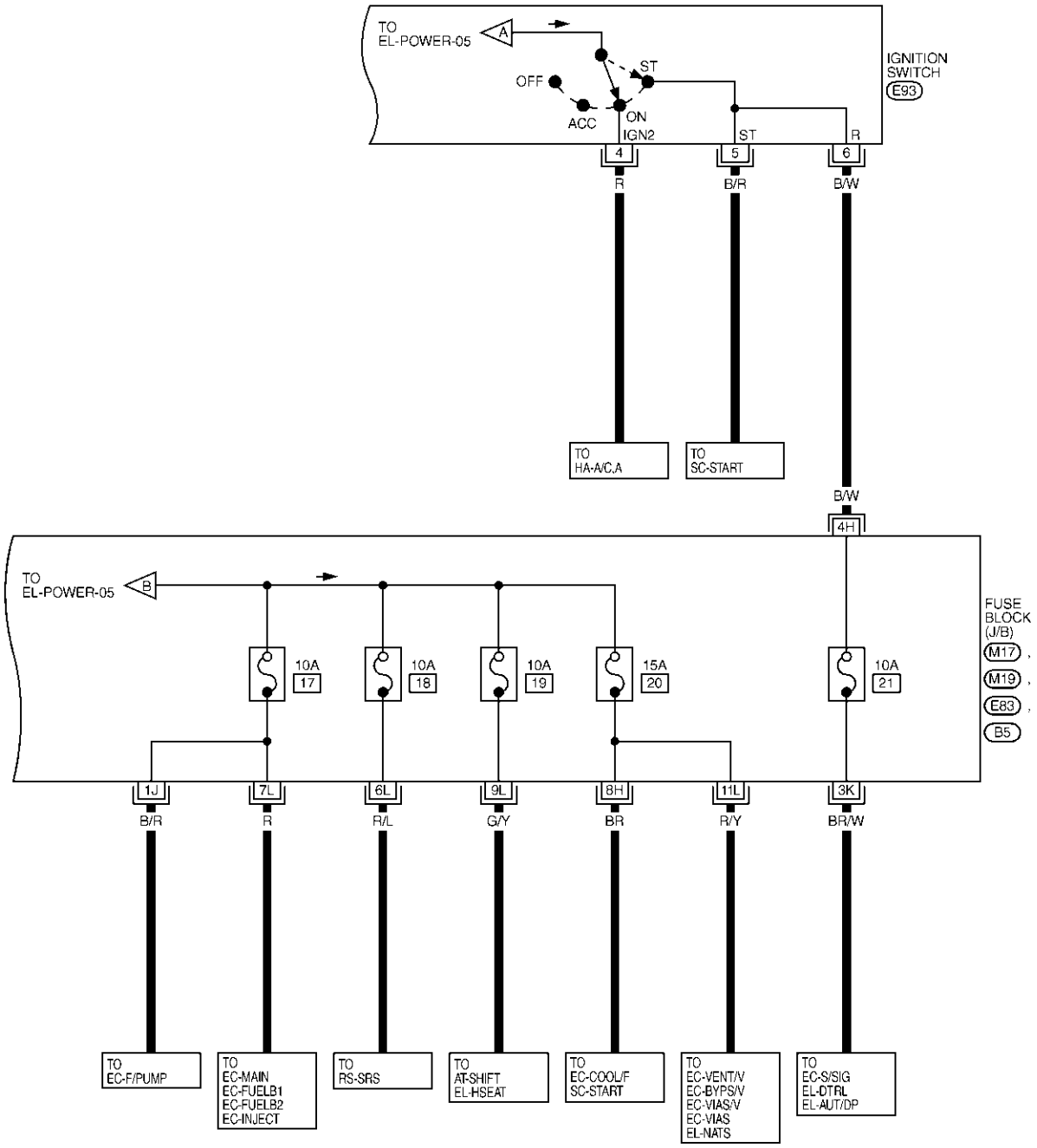

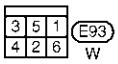

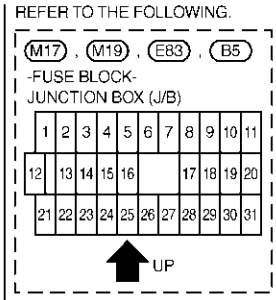

MEL861Q

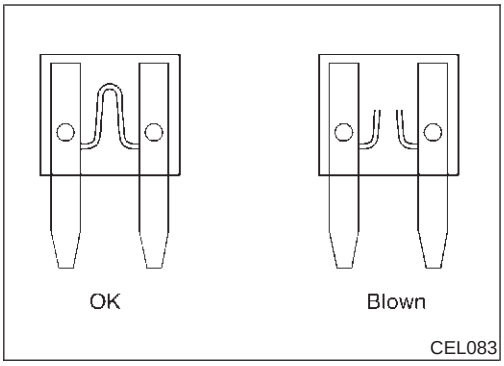

Inspection

NHEL0007

FUSE

NHEL0007S01

- **If fuse is blown, be sure to eliminate cause of problem before installing new fuse.**
- **Use fuse of specified rating. Never use fuse of more than specified rating.**
- **Do not partially install fuse; always insert it into fuse holder properly.**
- **Remove fuse for "ELECTRICAL PARTS (BAT)" if vehicle is not used for a long period of time.**

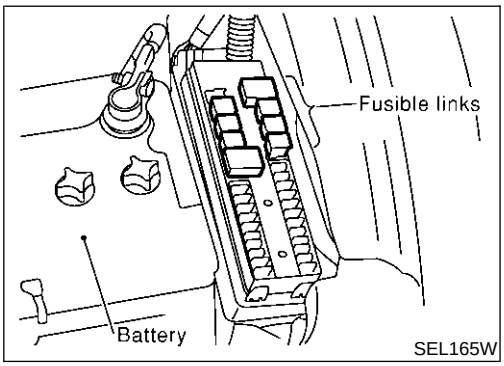

FUSIBLE LINK

NHEL0007S02

A melted fusible link can be detected either by visual inspection or by feeling with finger tip. If its condition is questionable, use circuit tester or test lamp.

CAUTION:

- **If fusible link should melt, it is possible that critical circuit (power supply or large current carrying circuit) is shorted. In such a case, carefully check and eliminate cause of problem.**
- **Never wrap outside of fusible link with vinyl tape. Important: Never let fusible link touch any other wiring harness, vinyl or rubber parts.**

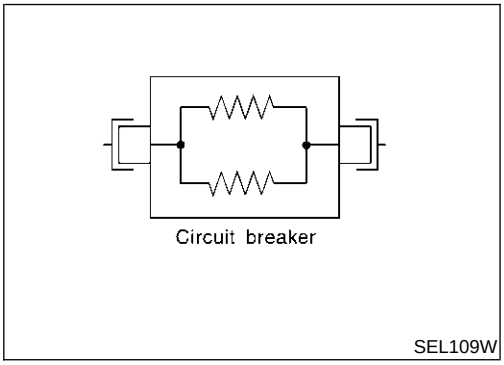

CIRCUIT BREAKER (PTC THERMISTOR TYPE)

NHEL0007S03

The PTC thermistor generates heat in response to current flow. The temperature (and resistance) of the thermistor element varies with current flow. Excessive current flow will cause the element's temperature to rise. When the temperature reaches a specified level, the electrical resistance will rise sharply to control the circuit current.

Reduced current flow will cause the element to cool. Resistance falls accordingly and normal circuit current flow is allowed to resume.

Ground Distribution

NHEL0008

MAIN HARNESS

NHEL0008S01

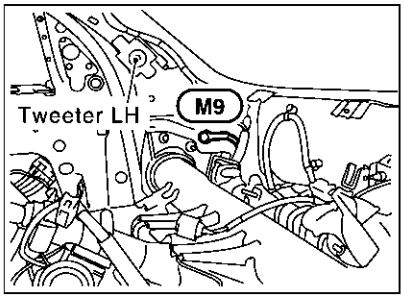

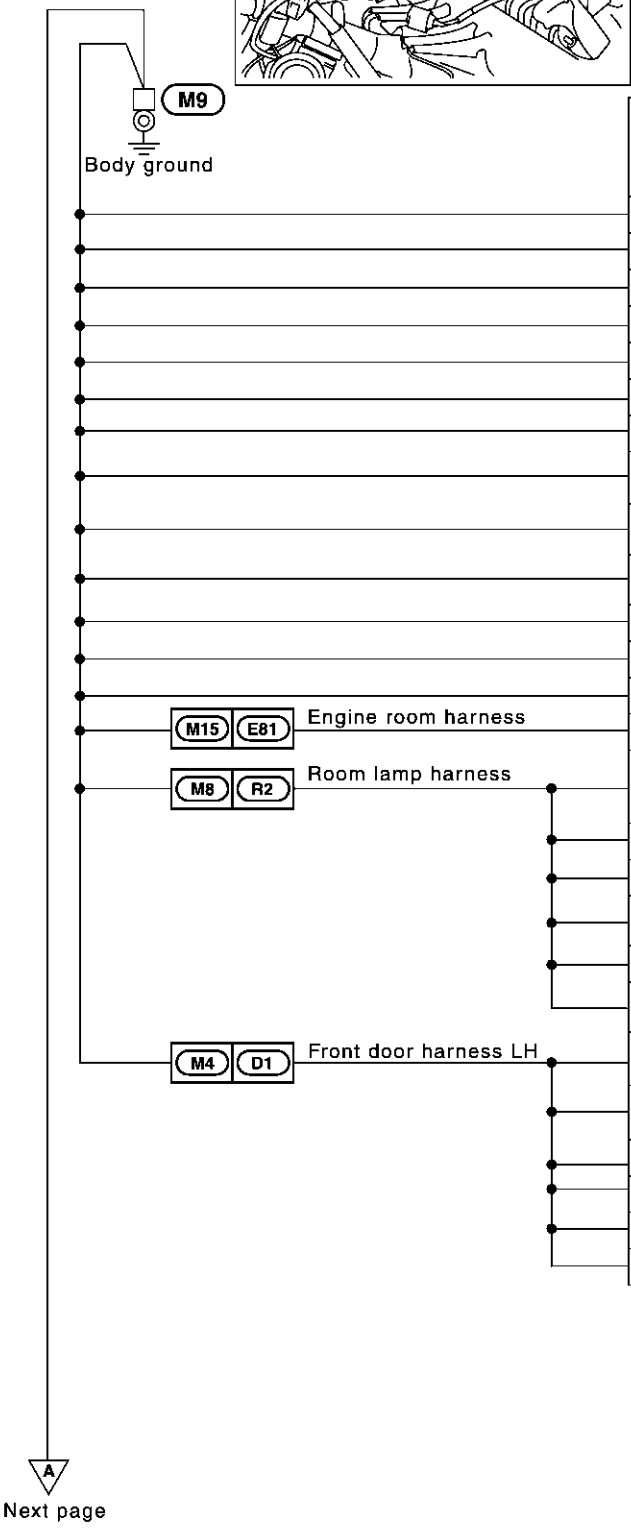

CON-NECTOR NUMBER	CONNECT TO
M20	Power window relay
M24	Door mirror remote control switch
M45	TCS on/off switch (With TCS)
M53	Cigarette lighter
M78	Power socket
M101	Memory seat cancel switch
M145	Smart entrance control unit (Terminal No. 64)
M213	Heated steering switch (With heated steering) (Terminal No. 2)
M213	Heated steering switch (With heated steering) (Terminal No. 5)
M219	Combination switch (Heated steering switch) (With heated steering)
M220	VDC off switch (With VDC)
M225	A/T device (Teminal No. 2)
M225	A/T device (Teminal No. 8)
E55	Ambient sensor
R4	Vanity mirror LH • Illumination • Homelink universal transceiver
R5	Sunroof motor (With sunroof)
R7	Spot lamp (Without sunroof)
R8	Vanity mirror RH • Illumination
R11	Spot lamp (With sunroof)
R15	Auto anti-dazzling inside mirror • compass
D7	Trunk and fuel lid opener switch (Terminal No. 2)
D7	Trunk and fuel lid opener switch (Terminal No. 3)
D8	Front door key cylinder switch LH
D10	Front power window main switch
D11	Door mirror actuator LH
D12	Memory seat switch

MEL877Q

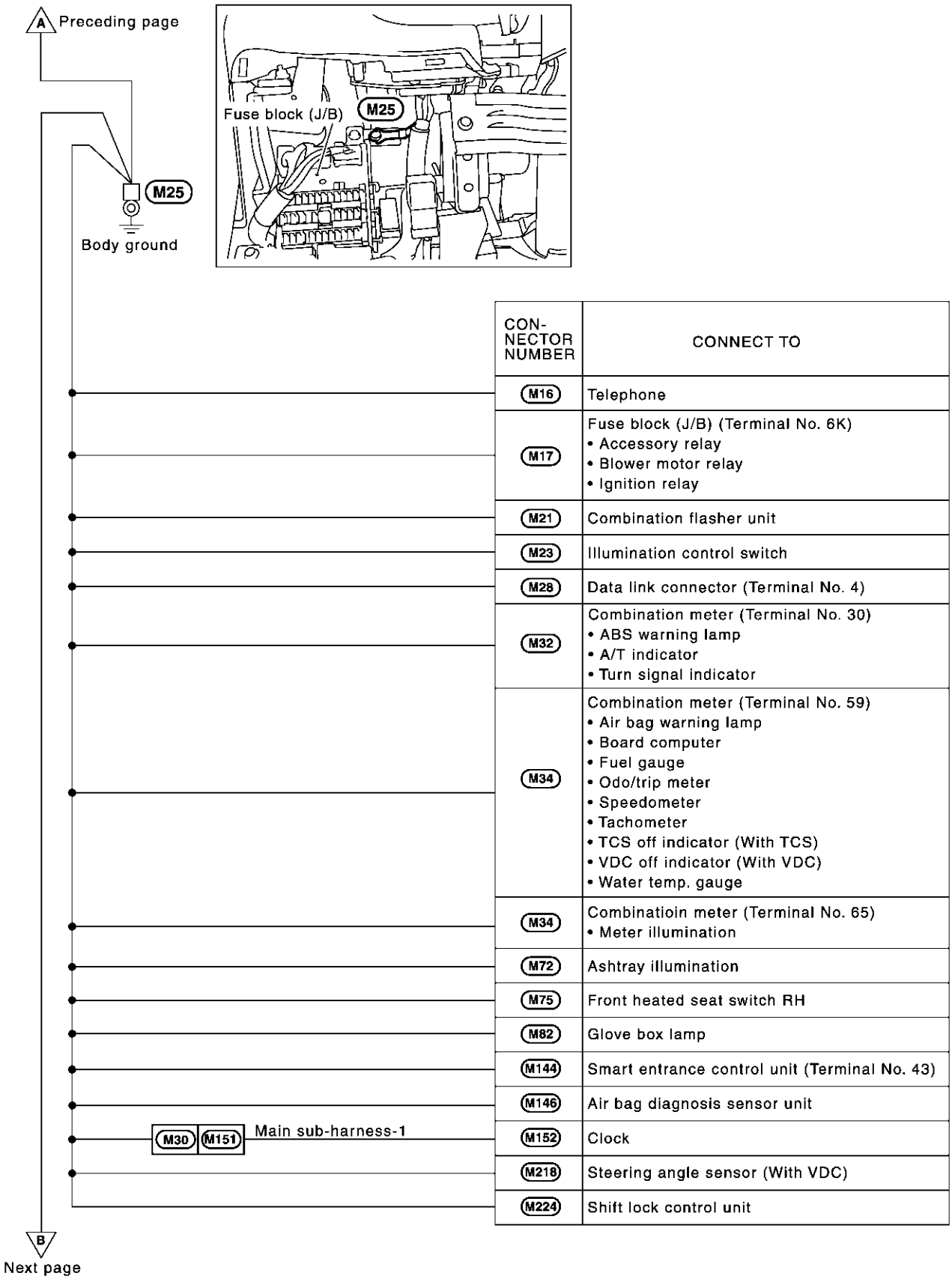

CON-NECTOR NUMBER	CONNECT TO
M16	Telephone
M17	Fuse block (J/B) (Terminal No. 6K) • Accessory relay • Blower motor relay • Ignition relay
M21	Combination flasher unit
M23	Illumination control switch
M28	Data link connector (Terminal No. 4)
M32	Combination meter (Terminal No. 30) • ABS warning lamp • A/T indicator • Turn signal indicator
M34	Combination meter (Terminal No. 59) • Air bag warning lamp • Board computer • Fuel gauge • Odo/trip meter • Speedometer • Tachometer • TCS off indicator (With TCS) • VDC off indicator (With VDC) • Water temp. gauge
M34	Combinatioin meter (Terminal No. 65) • Meter illumination
M72	Ashtray illumination
M75	Front heated seat switch RH
M82	Glove box lamp
M144	Smart entrance control unit (Terminal No. 43)
M146	Air bag diagnosis sensor unit
M152	Clock
M218	Steering angle sensor (With VDC)
M224	Shift lock control unit

MEL878Q

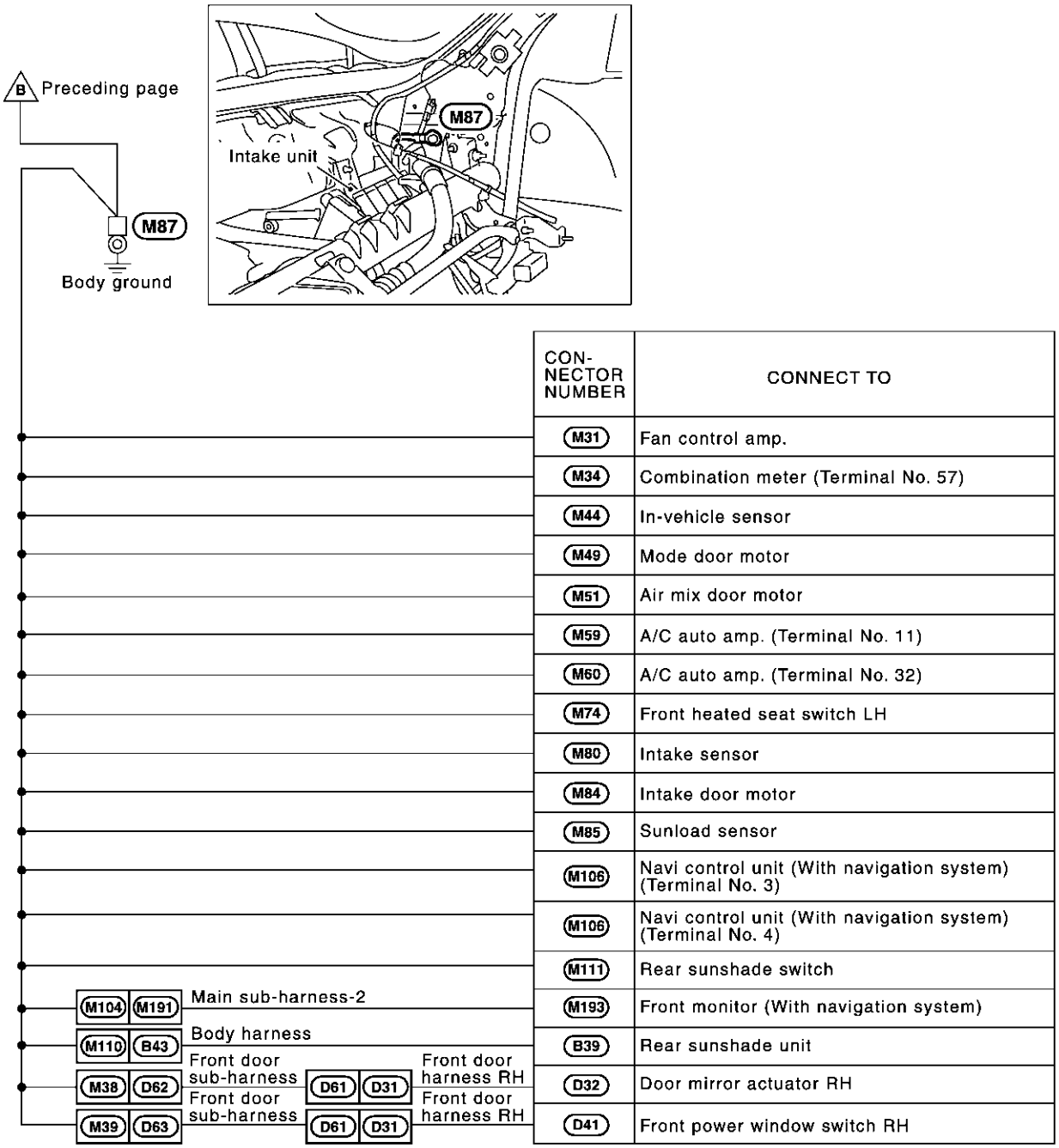

CON-NECTOR NUMBER	CONNECT TO
M31	Fan control amp.
M34	Combination meter (Terminal No. 57)
M44	In-vehicle sensor
M49	Mode door motor
M51	Air mix door motor
M59	A/C auto amp. (Terminal No. 11)
M60	A/C auto amp. (Terminal No. 32)
M74	Front heated seat switch LH
M80	Intake sensor
M84	Intake door motor
M85	Sunload sensor
M106	Navi control unit (With navigation system) (Terminal No. 3)
M106	Navi control unit (With navigation system) (Terminal No. 4)
M111	Rear sunshade switch
M193	Front monitor (With navigation system)
B39	Rear sunshade unit
D32	Door mirror actuator RH
D41	Front power window switch RH

MEL879Q

ENGINE ROOM HARNESS

NHEL0008S02

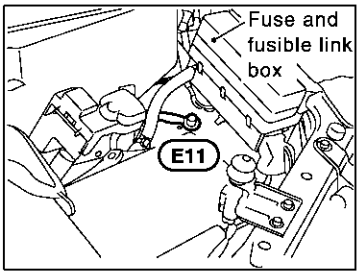

E11

Body ground

CON-NECTOR NUMBER	CONNECT TO
E28	Cooling fan relay-2
E31	Cooling fan relay-3
E38	Cooling fan motor-1
E43	Cooling fan motor-2
E162	ABS/TCS control unit (With TCS) (Terminal No. 16)
E162	ABS/TCS control unit (With TCS) (Terminal No. 19)

J/C-7

E18

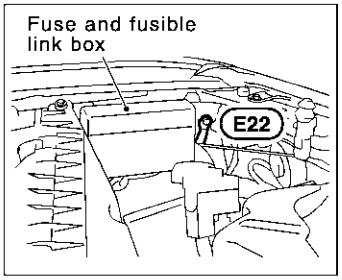

E22

Body ground

E81 M15 Main harness

CON-NECTOR NUMBER	CONNECT TO
M59	A/C auto amp. (For Canada) (Terminal No. 14)
E24	Front turn signal lamp LH
E25	Front fog lamp LH
E63	Vehicle security horn relay-2
E106	Headlamp LH
E109	Parking lamp LH
E116	Cornering lamp LH
E155	Combination switch (Lighting switch) (Terminal No. 5)
E23	Front side marker lamp LH
E78	Front wiper motor
E103	Blower motor relay
E153	Combination switch (Front wiper switch)

J/C-7

E18

C Next page

MEL880Q

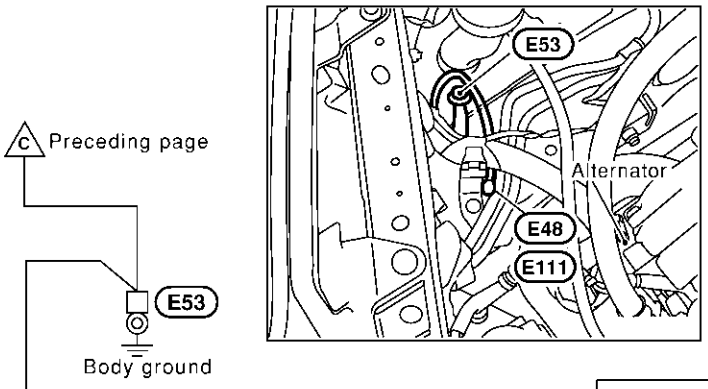

CON-NECTOR NUMBER	CONNECT TO
E1	Brake fluid level switch
E26	Hood switch
E42	Washer level switch
E44	Front fog lamp RH
E45	Front turn signal lamp RH
E49	Front side marker lamp RH
E59	Daytime light control unit (For Canada)
E69	Door mirror defogger relay (With door mirror defogger)
E113	Headlamp RH
E115	Parking lamp RH
E117	Cornering lamp RH
E126	Cornering lamp relay
E155	Combination switch (Lighting switch) (Terminal No. 8)

MEL234O

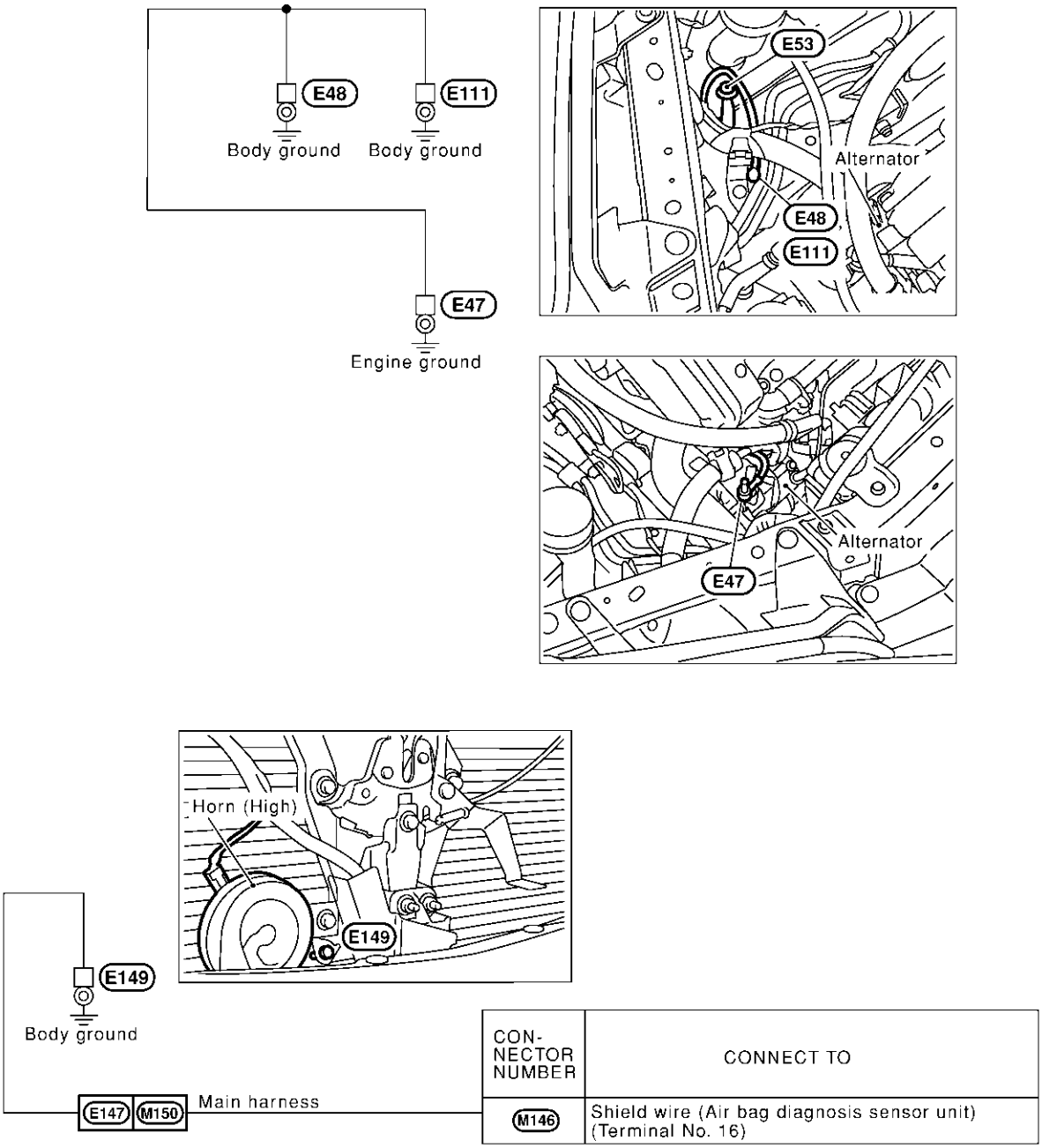

CON-NECTOR NUMBER	CONNECT TO
M146	Shield wire (Air bag diagnosis sensor unit) (Terminal No. 16)

MEL235O

ENGINE CONTROL HARNESS

NHEL0008S03

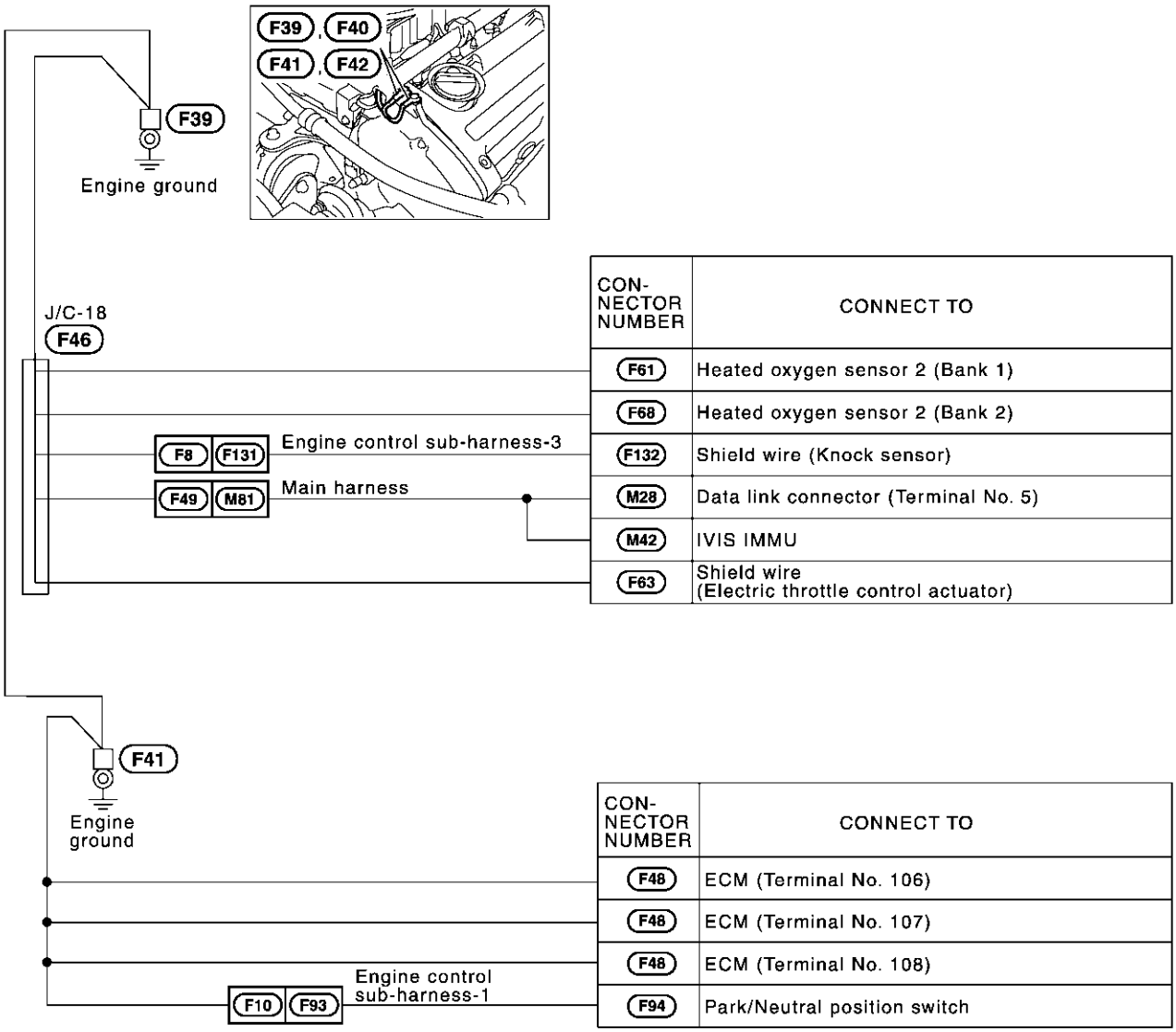

CON-NECTOR NUMBER	CONNECT TO
F61	Heated oxygen sensor 2 (Bank 1)
F68	Heated oxygen sensor 2 (Bank 2)
F132	Shield wire (Knock sensor)
M28	Data link connector (Terminal No. 5)
M42	IVIS IMMU
F63	Shield wire (Electric throttle control actuator)

CON-NECTOR NUMBER	CONNECT TO
F48	ECM (Terminal No. 106)
F48	ECM (Terminal No. 107)
F48	ECM (Terminal No. 108)
F94	Park/Neutral position switch

MEL881Q

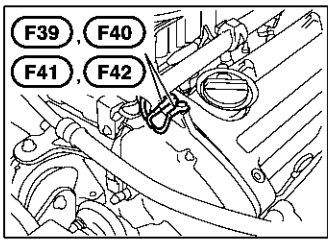

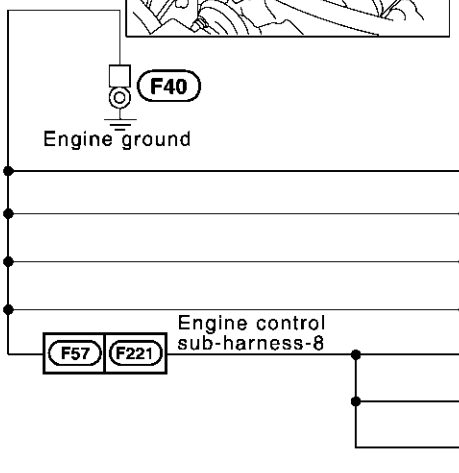

CON-NECTOR NUMBER	CONNECT TO
F30	Ignition coil No. 6
F31	Ignition coil No. 4
F34	Condenser
F35	Ignition coil No. 2
F222	Ignition coil No. 1
F223	Ignition coil No. 3
F224	Ignition coil No. 5

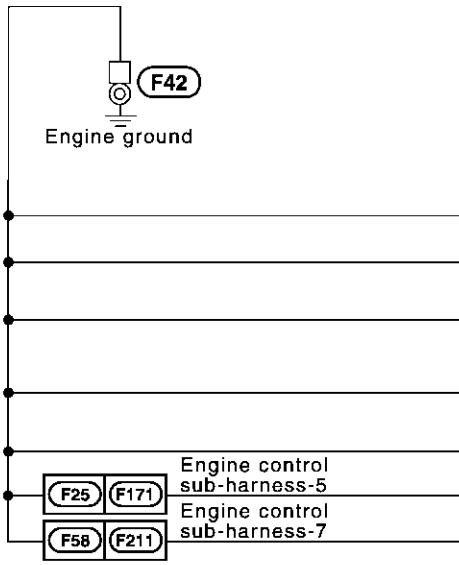

CON-NECTOR NUMBER	CONNECT TO
F48	ECM (Terminal No. 48)
F48	ECM (Terminal No. 57)
F50	TCM (Transmission control module) (Terminal No. 25)
F50	TCM (Transmission control module) (Terminal No. 48)
F64	Camshaft position sensor (Phase) bank 2
F173	Crankshaft position sensor (POS)
F212	Camshaft position sensor (Phase) bank 1

MEL882Q

BODY HARNESS

NHEL0008S04

*1 B12 : OR
B46 : RS
*2 D81 : OH
D87 : HS
*3 B31 : OH
B71 : HS
*4 B7 : TS
B78 : VD

RS : With rear sunshade
OR : Without rear sunshade
HS : With heated seat
OH : Without heated seat
TS : With TCS
VD : With VDC

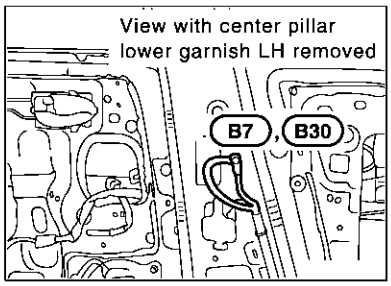

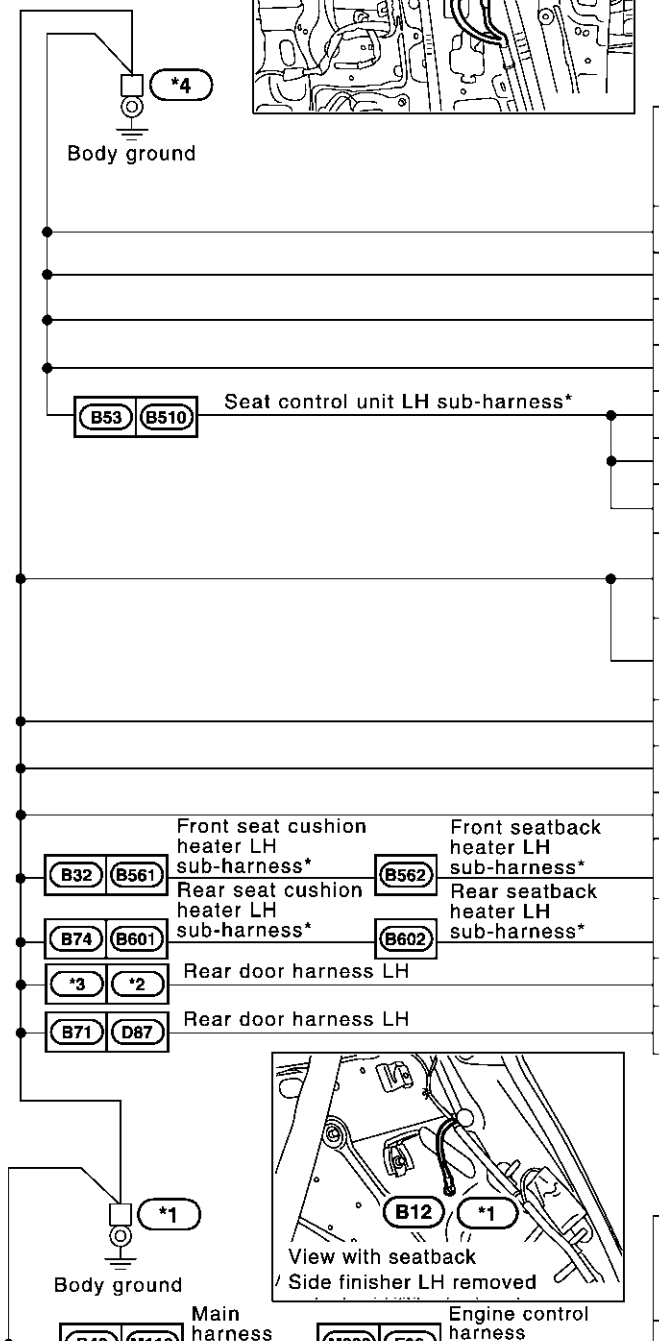

CONNECTOR NUMBER	CONNECT TO
B19	Fuel level sensor unit and fuel pump (With VDC) (Terminal No. 3)
B27	Condenser (With VDC)
B57	VDC/TCS/ABS control unit (With VDC) (Terminal No. 28)
B57	VDC/TCS/ABS control unit (With VDC) (Terminal No. 29)
B512	Seat control unit LH (With VDC) (Terminal No. 33)
B513	Seat control unit LH (Terminal No. 16)
B515	Power seat switch LH (With automatic drive positioner)
B14	High-mounted stop lamp (Without rear air spoiler) (Without rear sunshade)
B49	High-mounted stop lamp (Without rear air spoiler) (With rear sunshade)
B29	Front door switch LH
B34	Seat belt buckle switch LH
B75	CD auto changer (With CD auto changer)
B581	Front seatback heater LH
B681	Rear seatback heater LH
D85	Rear power window switch LH
D88	Rear heated seat switch LH (With heated seat)

CONNECTOR NUMBER	CONNECT TO
F48	ECM (Terminal No. 78)
B19	Fuel level sensor unit and fuel pump (Terminal No. 5)

CONNECTOR NUMBER	CONNECT TO
B39	Shield wire (Rear sunshade unit)

* : This sub-harness is not shown in "Harness Layout", EL section.

MEL883Q

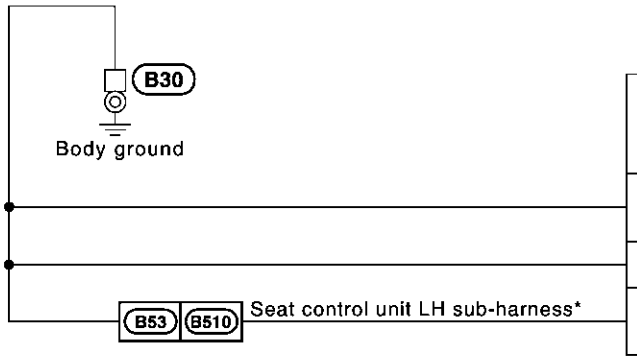

CON-NECTOR NUMBER	CONNECT TO
B19	Fuel level sensor unit and fuel pump (With TCS) (Terminal No. 3)
B27	Condenser (With TCS)
B512	Seat control unit LH (With TCS) (Terminal No. 33)

CON-NECTOR NUMBER	CONNECT TO
B42	Shield wire (Air bag diagnosis sensor unit) (Terminal No. 44)

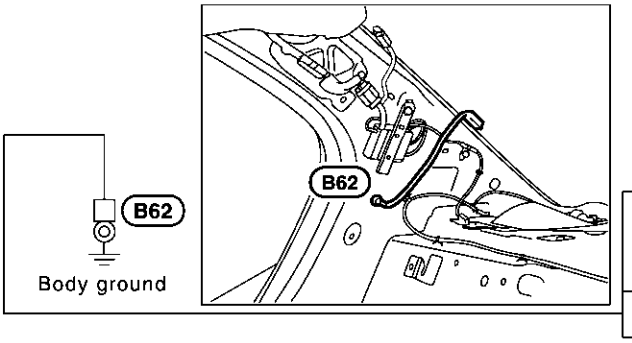

CON-NECTOR NUMBER	CONNECT TO
B61	Rear window defogger (–)

* : This sub-harness is not shown in "Harness Layout", EL section.

MEL884Q

BODY NO. 2 HARNESS

NHEL0008S05

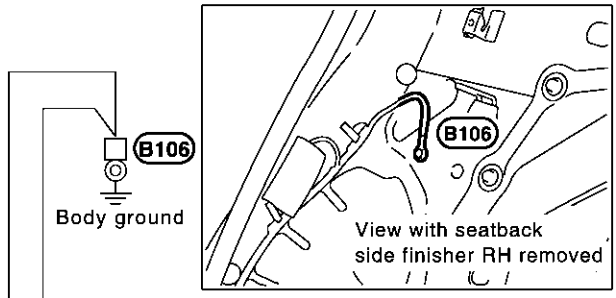

*1 D101 : OH
D107 : HS
*2 B130 : OH
B146 : HS

HS : With heated seat
OH : Without heated seat

CON-NECTOR NUMBER	CONNECT TO
B110	License lamp RH
B111	License lamp LH
B123	Woofer
B124	BOSE speaker amp.
B162	High-mounted stop lamp (With rear air spoiler)
B145	Seat belt buckle switch RH

B109 B161 Body No. 2 sub-harness

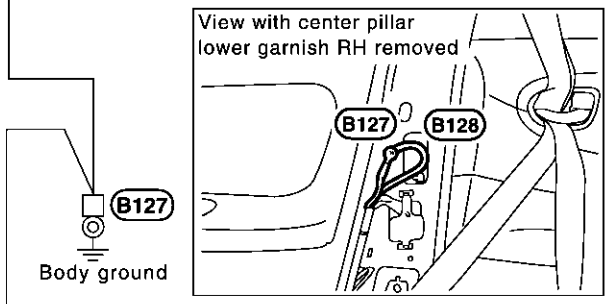

CON-NECTOR NUMBER	CONNECT TO
B129	Front door switch RH
B140	Trunk lid combination lamp RH (For stop and tail)
B141	Trunk lid combination lamp RH (For reverse)
B142	Trunk lid combination lamp LH (For reverse)
B143	Trunk lid combination lamp LH (For stop and tail)
B543	Power seat switch RH
B591	Front seatback heater RH
B691	Rear seatback heater RH
D102	Rear power window switch RH
D108	Rear heated seat switch RH

B137 B541 Power seat switch RH sub-harness*

B136 B571 Front seat cushion heater RH sub-harness* — B572 Front seatback heater RH sub-harness*

B147 B651 Rear seat cushion heater RH sub-harness* — B652 Rear seatback heater RH sub-harness*

*2 *1 Rear door harness RH

B146 D107 Rear door harness RH

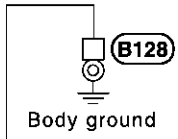

CON-NECTOR NUMBER	CONNECT TO
B135	Shield wire (Air bag diagnosis sensor unit) (Terminal No. 40)

* : This sub-harness is not shown in "Harness Layout", EL section.

MEL885Q

TAIL HARNESS

NHEL0008S06

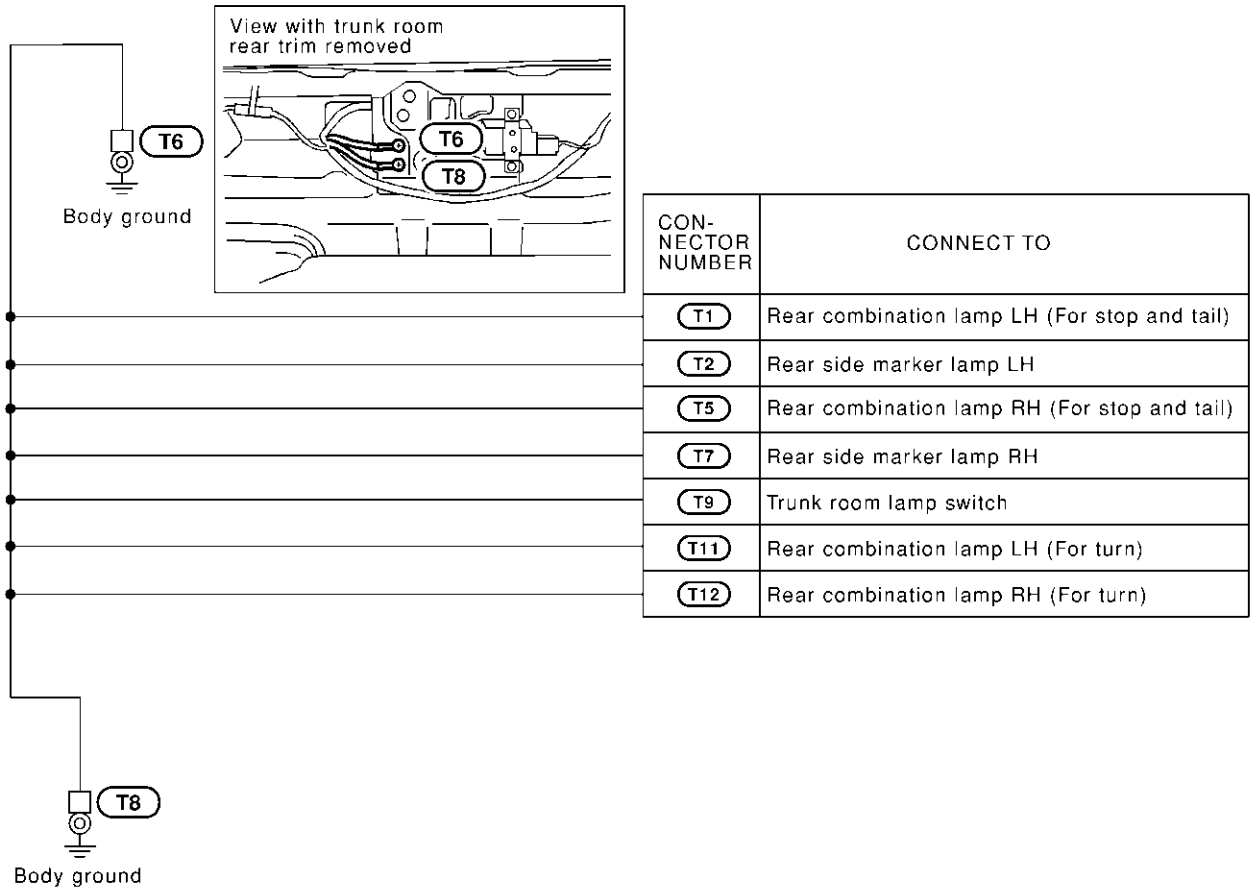

CON-NECTOR NUMBER	CONNECT TO
T1	Rear combination lamp LH (For stop and tail)
T2	Rear side marker lamp LH
T5	Rear combination lamp RH (For stop and tail)
T7	Rear side marker lamp RH
T9	Trunk room lamp switch
T11	Rear combination lamp LH (For turn)
T12	Rear combination lamp RH (For turn)

MEL620K

Check

NHEL0009

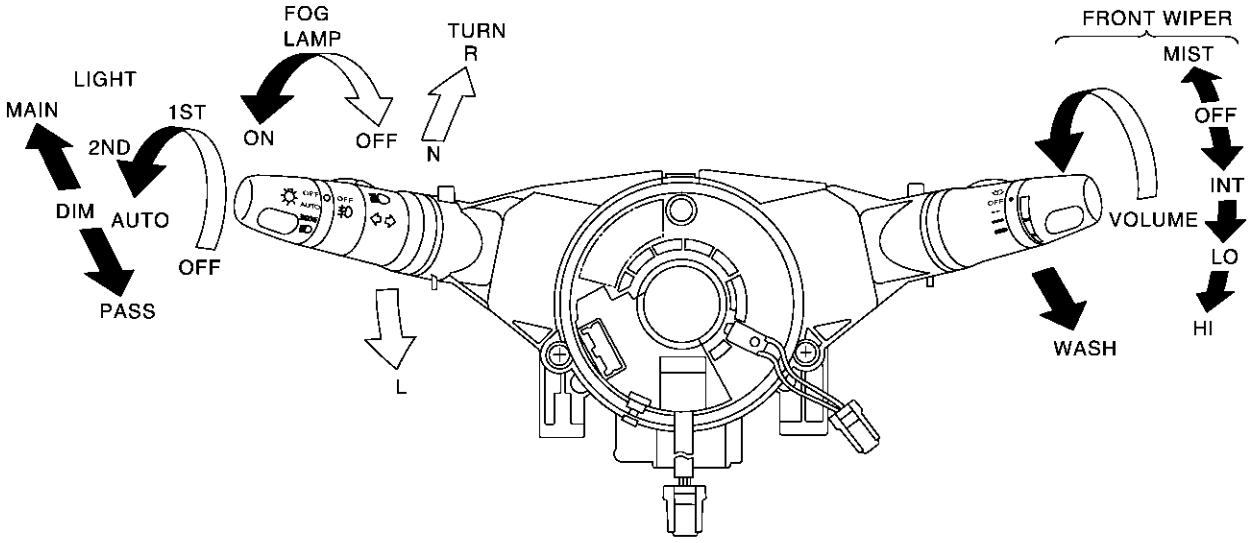

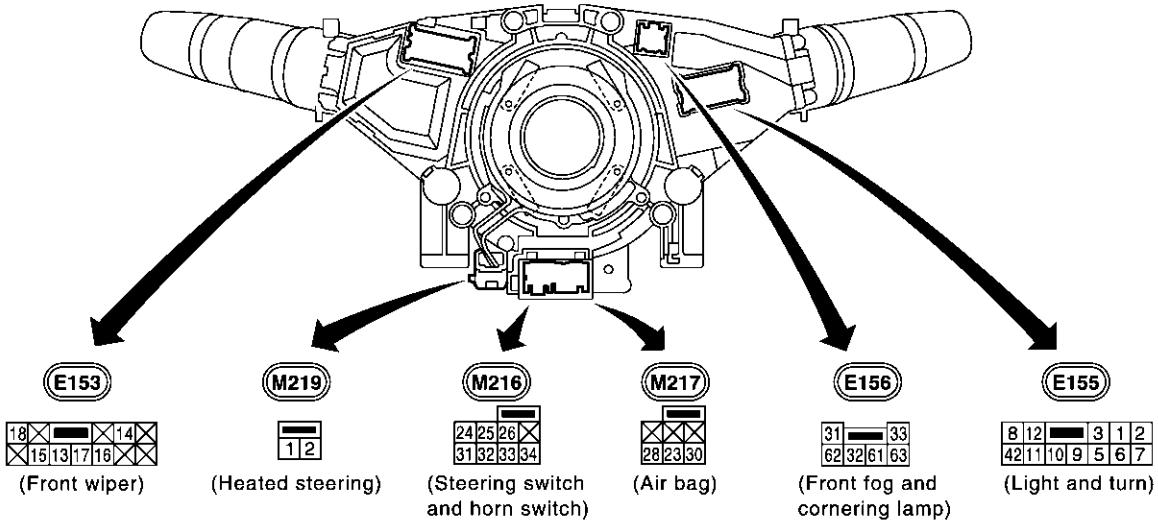

LIGHTING SWITCH

	OFF	AUTO	1ST	2ND
5			○	○
11			○	○
8				○
12				○
42		○		
(8)		○		

	MAIN	DIM	PASS
(5)	○	○	○
7		○	
6	○		○
(8)	○	○	○
10		○	
9	○		○
(12)			○

FRONT WIPER AND WASHER SWITCH

	LO	AUTO STOP	AMP	WASH	HI	EARTH
MIST	○					○
OFF	○	○				
INT	○	○	○			○
LO	○					○
HI					○	○
WASH				○		○

WIPER AMP.

⑭ ⑮ ⑬ ⑯ ⑰ ⑱

VARIABLE INTERMITTENT WIPER VOLUME

FRONT FOG LAMP SWITCH

	OFF	ON
31		○
32		○

CORNERING LAMP SWITCH

	L	N	R
61	○		○
62			○
63	○		

TURN SIGNAL LAMP SWITCH

	L	N	R
1	○		○
2			○
3	○		

MEL874Q

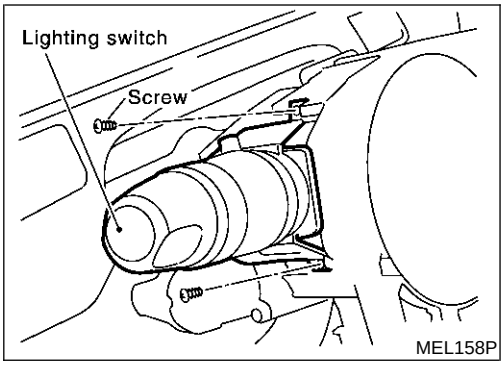

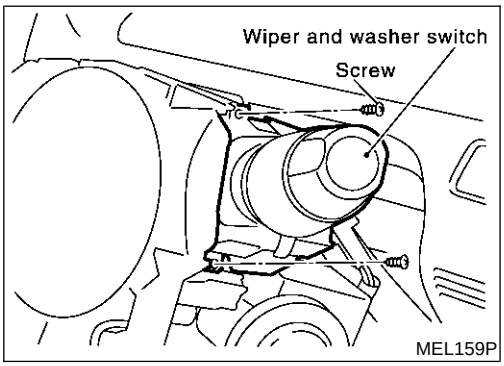

Replacement

NHEL0313

For removal and installation of spiral cable, refer to RS-21, "Installation — Air Bag Module and Spiral Cable".

- Each switch can be replaced without removing spiral cable.

1. Remove the instrument lower panel on driver side.
2. Remove the steering column cover.
3. Remove lighting switch or wiper and washer switch mounting screw.
4. Remove lighting switch or wiper and washer switch from the spiral cable.
5. Disconnect lighting switch or wiper and washer switch connector.

Check

NHEL0011

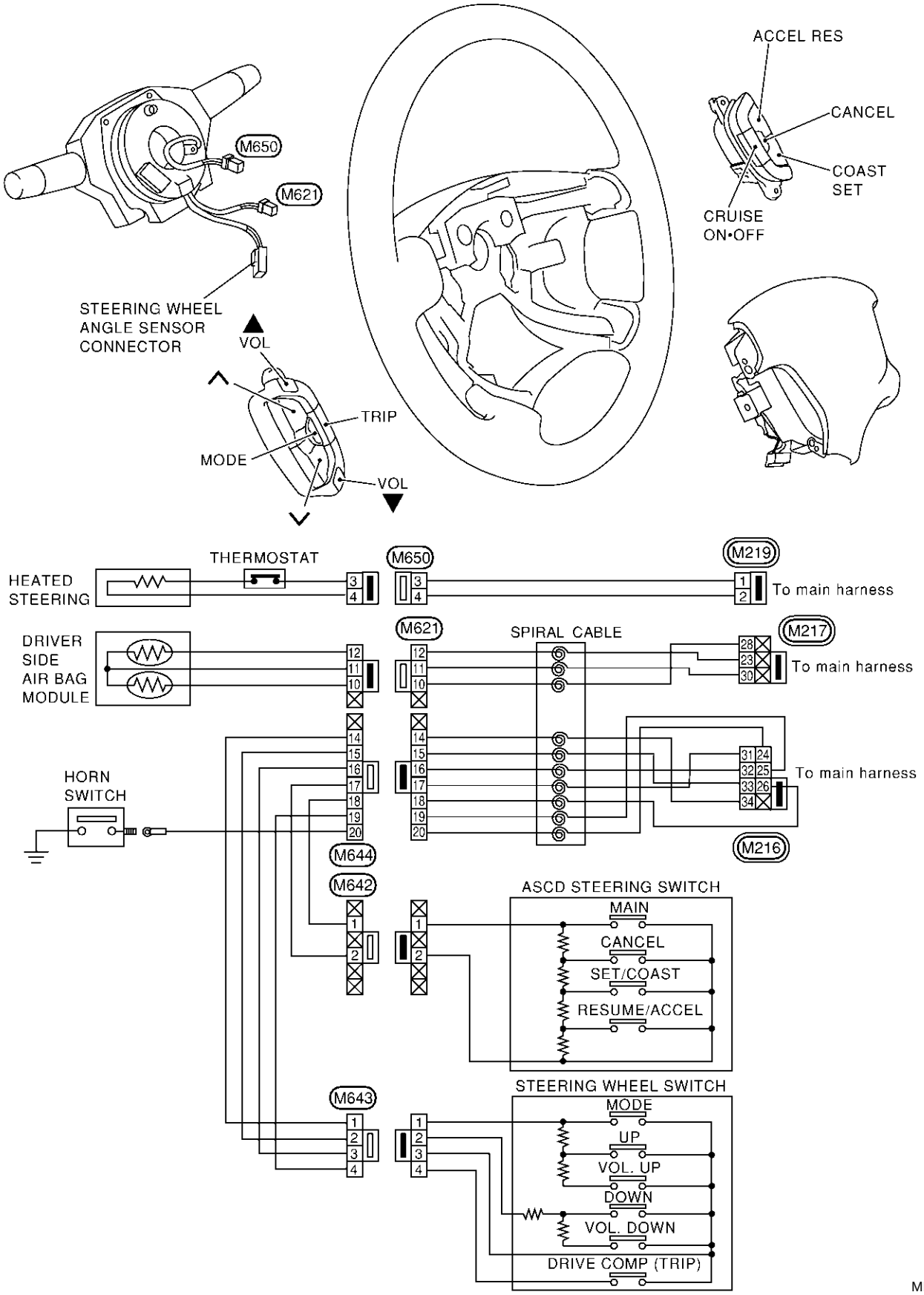

Component Parts and Harness Connector Location

NHEL0314

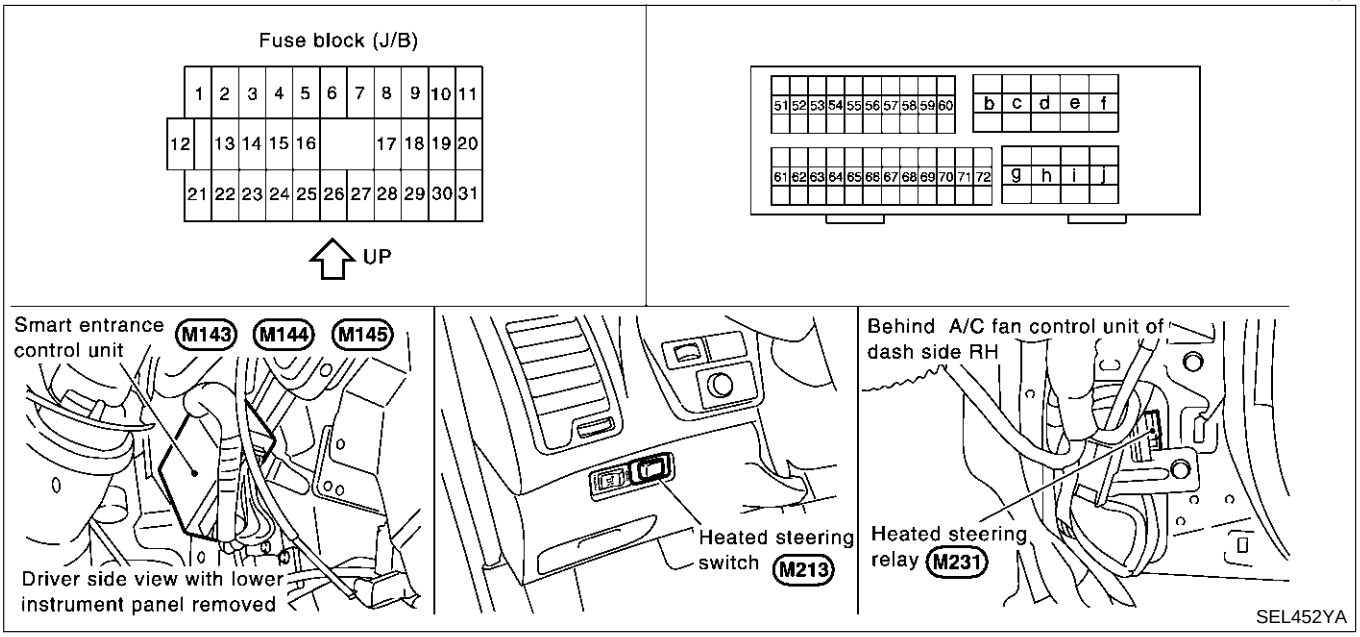

System Description

NHEL0315

The heated steering system is controlled by the smart entrance control unit. The heated steering system operates only for approximately 30 minutes after heated steering switch is turned “ON”.
Then the heated steering system is turned “OFF” when the heated steering switch is turned “ON” again or ignition switch “OFF” within 30 minutes after heated steering system “ON”.
Power is supplied at all times

- to smart entrance control unit terminal 49
- through 10A fuse [No. 13, located in the fuse block (J/B)]
- to heated steering relay terminal 3
- through 10A fuse (No. 72, located in the fuse and fusible link box)

With the ignition switch in the ON or START position, power is supplied.

- through 10A fuse [No. 10, located in the fuse block (J/B)]
- to the heated steering relay terminal 1 and
- to smart entrance control unit terminal 27.

Ground is supplied

- to terminal 2 and 5 of heated steering switch and
- to combination switch (heated steering switch) terminal 2
- through body grounds M9, M25 and M87.

When the heated steering switch is turned ON, ground is supplied

- through terminal 1 of heated steering switch
- to smart entrance control unit terminal 4.

Terminal 40 of the smart entrance control unit then supplies ground to the heated steering relay terminal 2.
With power and ground supplied, the heated steering relay is energized.
Power is supplied

- through terminal 5 of heated steering relay
- to heated steering switch terminal 4 and
- to combination switch (heated steering switch) terminal 1.
- through terminal 3 of combination switch (heated steering switch)
- to the heated steering (thermostat).

Ground is supplied for heated steering

- through heated steering

- to combination switch (heated steering switch) terminal 4.

With power and ground supplied, the heated steering heats.
When the system is activated, the heated steering indicator lamp illuminates in the heated steering switch.

Wiring Diagram — H/STRG —

=NHEL0316

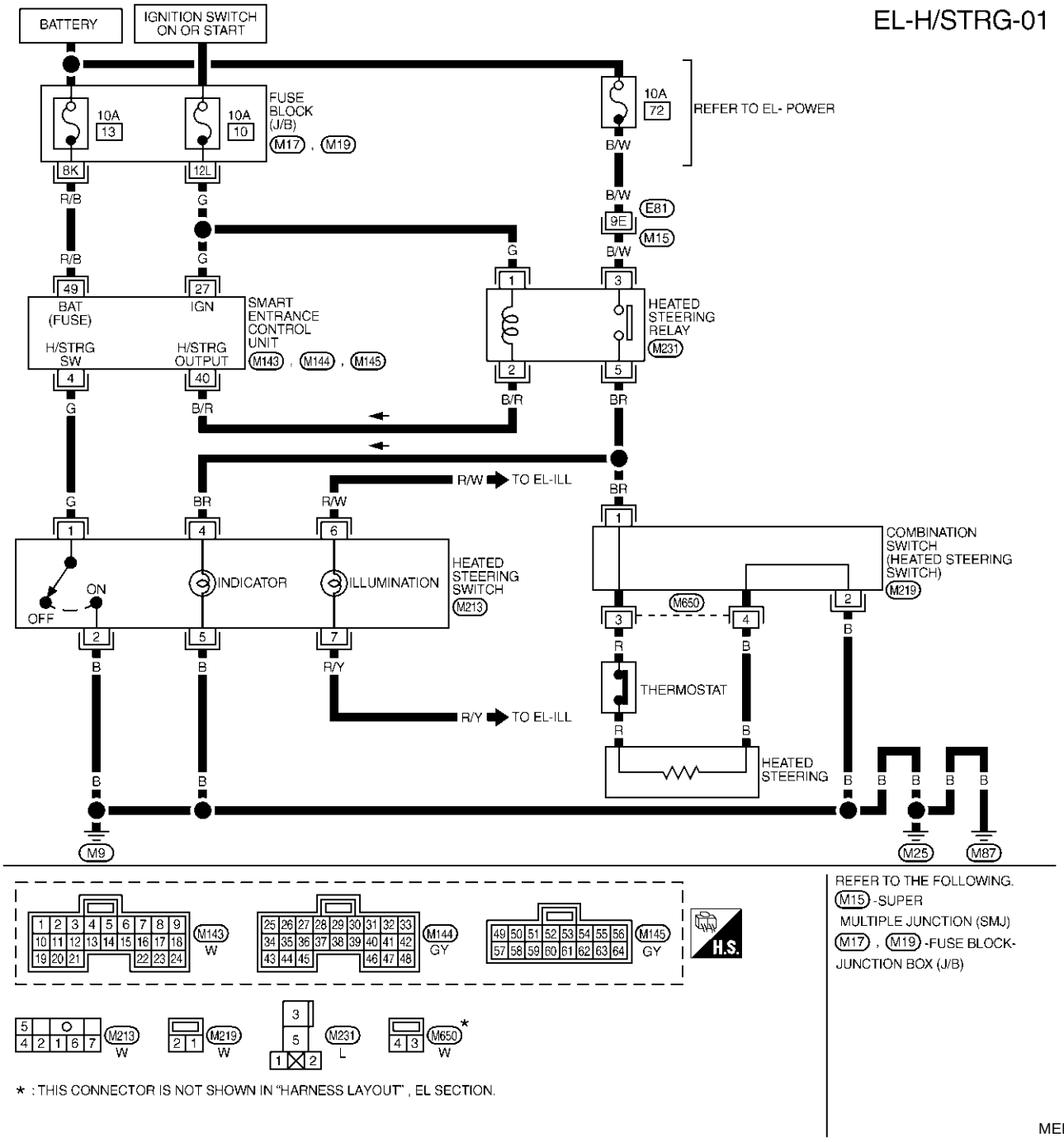

SMART ENTRANCE CONTROL UNIT TERMINALS AND REFERENCE VALUE BETWEEN EACH TERMINAL AND GROUND

TERMINAL	WIRE COLOR	ITEM	CONDITION	DATA (DC)
4	G	HEATED STEERING SWITCH	OFF → ON (ONLY WHEN PUSHED)	5V → 0V
27	G	IGNITION SWITCH (ON)	IGNITION SWITCH IS IN "ON" POSITION	12V
40	B/R	HEATED STEERING RELAY	OFF → ON (IGNITION SWITCH IS IN "ON" POSITION)	12V → 0V
49	R/B	POWER SOURCE (FUSE)	–	12V

SEL478YA

Component Parts and Harness Connector Location

NHEL0252

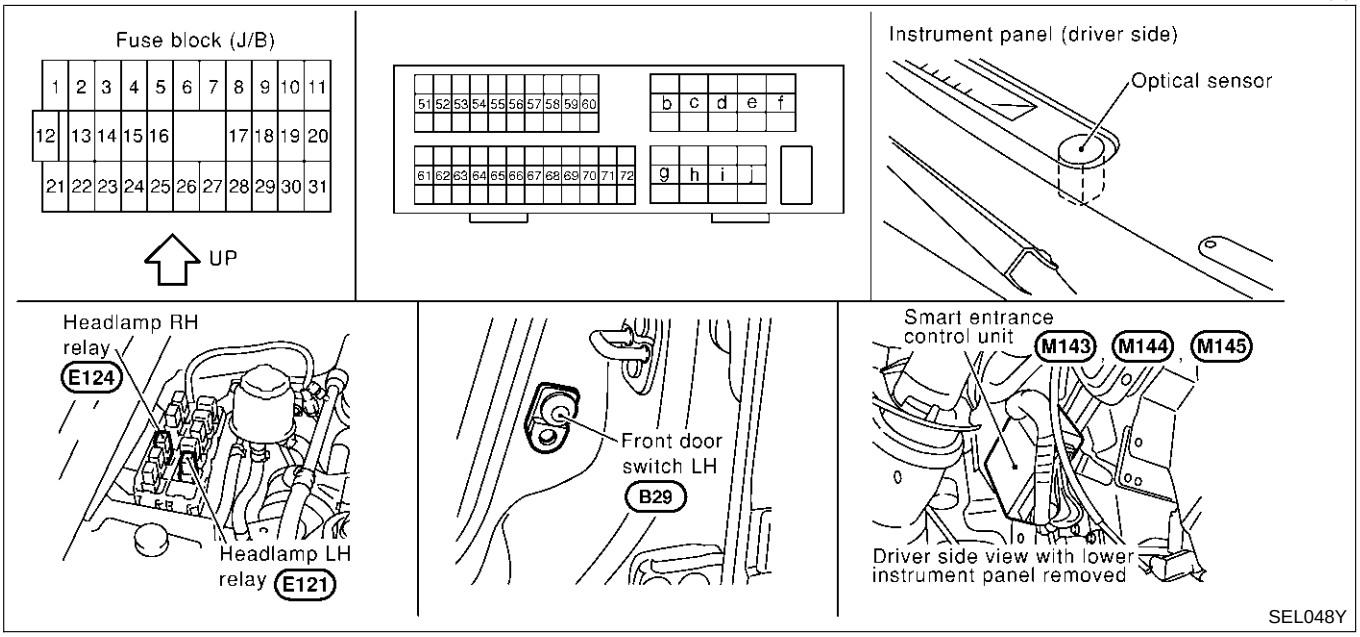

System Description

NHEL0253

The headlamp operation is controlled by the lighting switch which is built into the combination switch and smart entrance control unit. And the exterior lamp battery saver system is controlled by the smart entrance control unit.

OUTLINE

NHEL0253S01

Power is supplied at all times

- to headlamp LH relay terminals 1 and 6
- through 20A fuse (No. 54, located in the fuse and fusible link box), and
- to headlamp LH relay terminal 3
- through 15A fuse (No. 68, located in the fuse and fusible link box), and
- to headlamp RH relay terminals 1 and 6
- through 20A fuse (No. 55, located in the fuse and fusible link box), and
- to headlamp RH relay terminal 3
- through 15A fuse (No. 69, located in the fuse and fusible link box), and
- to smart entrance control unit terminal 49
- through 10A fuse [No. 13, located in the fuse block (J/B)].

When the ignition switch is in the ON or START position, power is supplied

- to smart entrance control unit terminal 27
- through 10A fuse [No. 10, located in the fuse block (J/B)].

When the ignition switch is in the ACC or ON position, power is supplied

- to smart entrance control unit terminal 26
- through 10A fuse [No. 1, located in the fuse block (J/B)].

Ground is supplied

- to smart entrance control unit terminals 43 and 64
- through body grounds M9, M25 and M87.

Power Supply to Low Beam and High Beam

NHEL0253S0101

When lighting switch is in 2ND or PASS position, ground is supplied

- to headlamp LH relay terminal 2 from smart entrance control unit terminal 21
- through smart entrance control unit terminal 22,
- from lighting switch terminal 12, and

- to headlamp RH relay terminal 2 from smart entrance control unit terminal 59
- through smart entrance control unit terminal 60,
- from lighting switch terminal 12.

Headlamp relays (LH and RH) are energized and then power is supplied to headlamps (LH and RH).

LOW BEAM OPERATION

NHEL0253S02

When the lighting switch is turned to the 2ND position and placed in LOW ("B") position, power is supplied

- from terminal 7 of each headlamp relay
- to terminal 3 of each headlamp

Ground is supplied

- to headlamp LH terminal 4
- through body grounds E11, E22 and E53, and
- to headlamp RH terminal 4
- through body grounds E11, E22 and E53.

With power and ground supplied, the headlamp(s) will illuminate.

HIGH BEAM OPERATION/FLASH-TO-PASS OPERATION

NHEL0253S03

When the lighting switch is turned to the 2ND position and placed in HIGH ("A") position or PASS ("C") position, power is supplied

- from terminal 5 of each headlamp relay
- to terminal 1 of each headlamp, and
- to combination meter terminal 26 for the HIGH BEAM indicator.

Ground is supplied

- to headlamp LH terminal 2
- through lighting switch terminals 6 and 5
- through body grounds E11, E22 and E53, and
- to headlamp RH terminal 2
- to combination meter terminal 27 for the HIGH BEAM indicator
- through lighting switch terminals 9 and 8
- through body grounds E11, E22 and E53.

With power and ground supplied, the high beams and the high beam indicator illuminate.

EXTERIOR LAMP BATTERY SAVER CONTROL

NHEL0253S08

While the headlamp is turned ON by "2ND" of lighting switch, the 5 minute timer is activated when the ignition switch is turned from ON (or START) to OFF (ACC OFF).
Continuity between terminals 21 and 22, and between terminals 59 and 60 of smart entrance control unit will be disturbed after 5 minutes, then the headlamps will be turned off.
While the headlamp is turned ON by "AUTO" of lighting switch, the 5 minutes timer is activated when the ignition switch signal changes from ON (or START) to OFF (ACC OFF), and either one of front door switch LH or RH ON signal is input.
The auto light delay off timer is activated as the following:

- When the door switch signal changes from ON to OFF while the timer is activated, the timer in operation is discontinued and the 45 second timer is reset.
- When the door switch signal changes from OFF to ON while the timer is activated, the timer is discontinued and the 45 second timer is reset.
- When the one of four door switch signals changes from OFF to ON while the timer is activated, the timer is discontinued and the 5 minute timer is reset.
- When all the door switch ON signals are input while the timer is activated, the timer is discontinued and the 45 second timer is reset.

Exterior lamp battery saver control mode and auto light delay off timer period can be changed by the function setting of CONSULT-II (EL-47).
When the lighting switch is turned from OFF to 2ND after headlamps are turned to off by the battery saver control, ground is supplied

- to smart entrance control unit terminals 20 and 58 from lighting switch terminal 11, and then,
- to headlamp LH and RH relays terminal 2 from smart entrance control unit terminals 21 and 59,
- through smart entrance control unit terminals 22 and 60 and

- through lighting switch terminal 12.

Then headlamps illuminate again.

AUTO LIGHT OPERATION

NHEL0253S05

The auto light control system has an optical sensor inside it that detects outside brightness.
When lighting switch is in "AUTO" position, ground is supplied

- to smart entrance control unit terminal 23
- from lighting switch terminal 42.

When ignition switch is turn to "ON" or "START" position, outside brightness is darker than prescribed level. Ground is supplied

- to headlamp relay LH and RH terminals 2
- through smart entrance control unit terminals 21, 59 and 43, 64
- through body grounds M9, M25 and M87.

Then both headlamp relays and tail lamp relay are energized, headlamps (low or high) and tail lamps are illuminate according to switch position.
Auto light operation allows headlamps and tail lamps to go off when outside brightness is brighter than prescribed level.

NOTE:
The delay time changes (maximum of 20 seconds) as the outside brightness changes.

For parking license and tail lamps auto operation, refer to "PARKING, LICENSE AND TAIL LAMPS".

VEHICLE SECURITY SYSTEM

NHEL0253S06

The vehicle security system will flash the low beams if the system is triggered. Refer to "VEHICLE SECURITY (THEFT WARNING) SYSTEM" (EL-331).

XENON HEADLAMP

NHEL0253S07

Xenon type headlamp is adopted to the low beam headlamps. Xenon bulbs do not use a filament. Instead, they produce light when a high voltage current is passed between two tungsten electrodes through a mixture of xenon (an inert gas) and certain other metal halides. In addition to added lighting power, electronic control of the power supply gives the headlamps stable quality and tone color.
Following are some of the many advantage of the xenon type headlamp.

- The light produced by the headlamps is white color approximating sunlight that is easy on the eyes.
- Light output is nearly double that of halogen headlamps, affording increased area of illumination.
- The light features a high relative spectral distribution at wavelengths to the human eye is most sensitive, which means that even in the rain, more light is reflected back from the road surface toward the vehicle, for added visibility.
- Power consumption is approximately 25 percent less than halogen headlamps, reducing battery load.

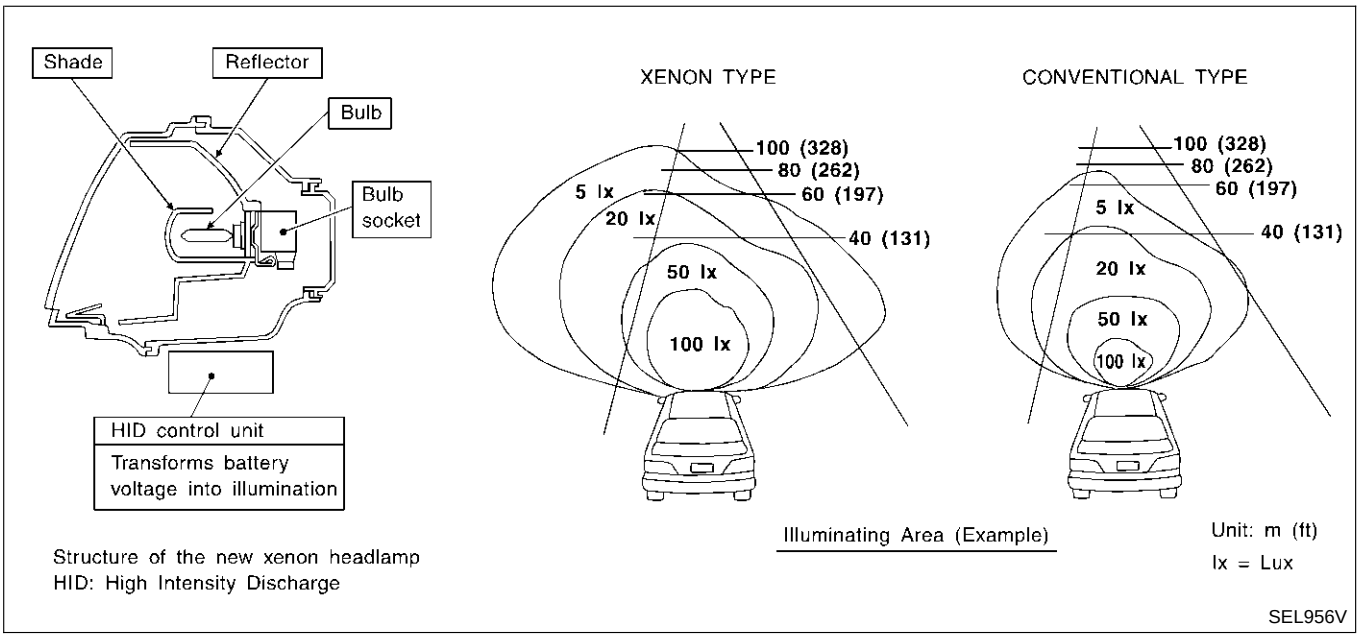

Structure of the new xenon headlamp
HID: High Intensity Discharge

Schematic

NHEL0254

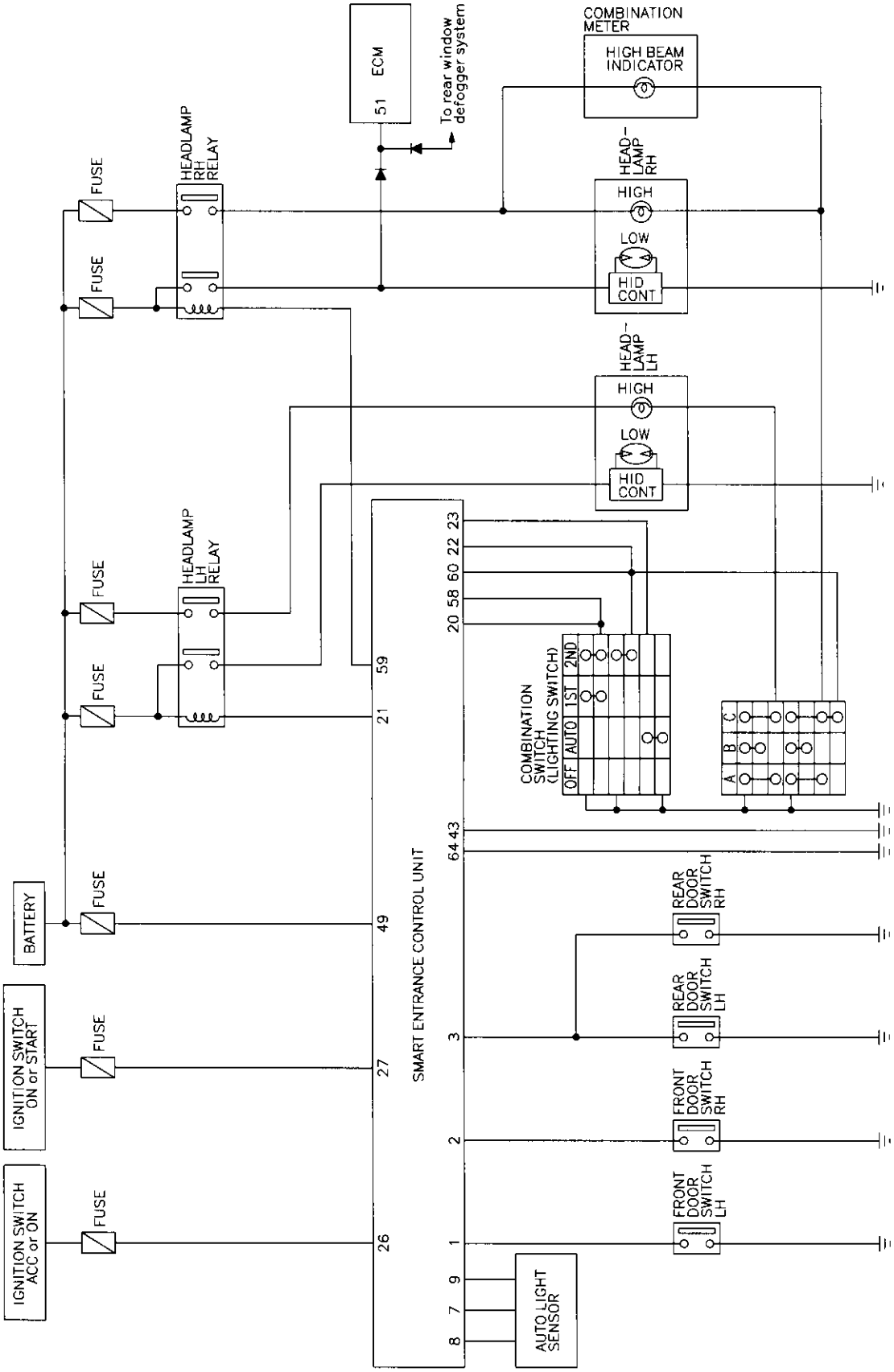

MEL260O

Wiring Diagram — H/LAMP —

NHEL0255

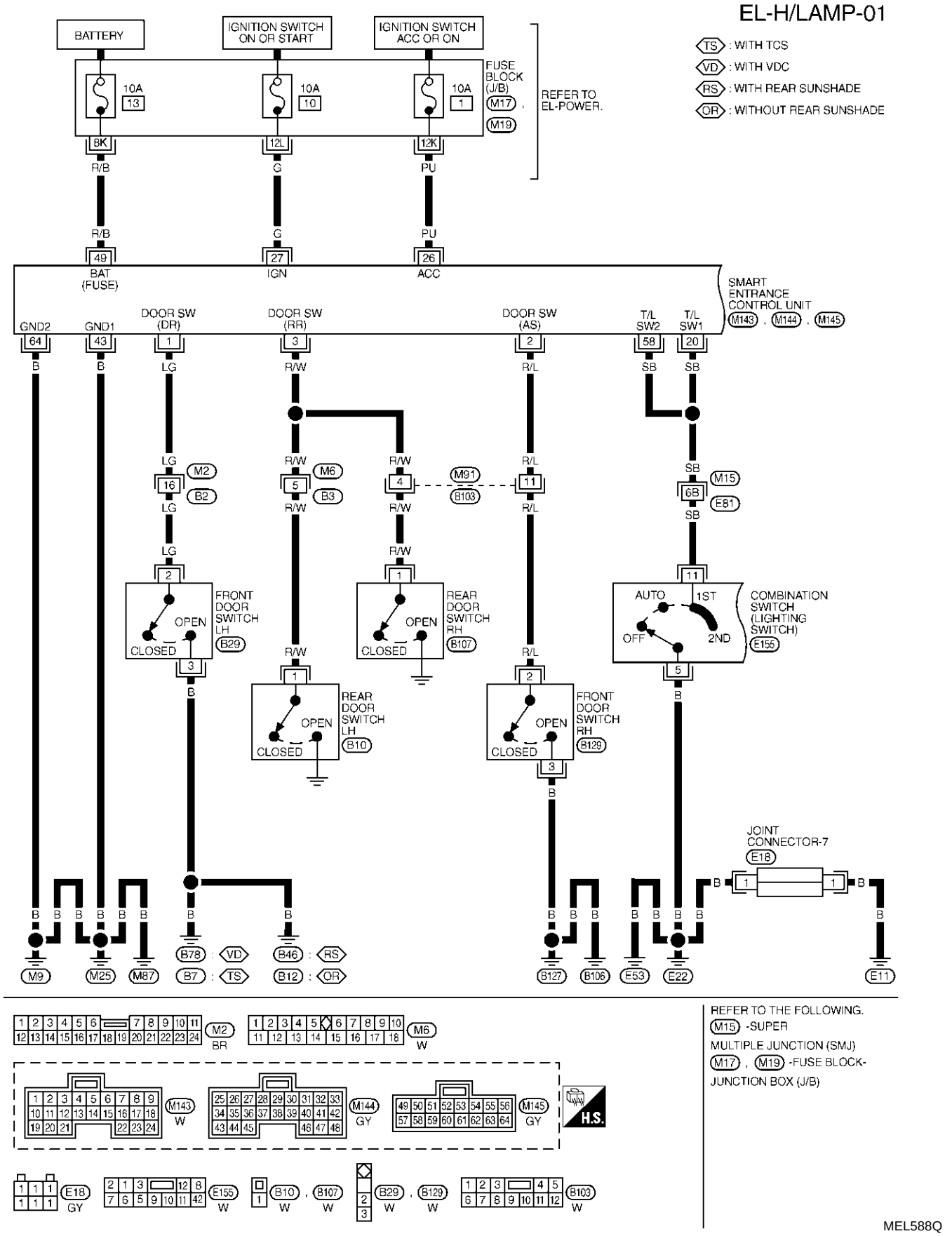

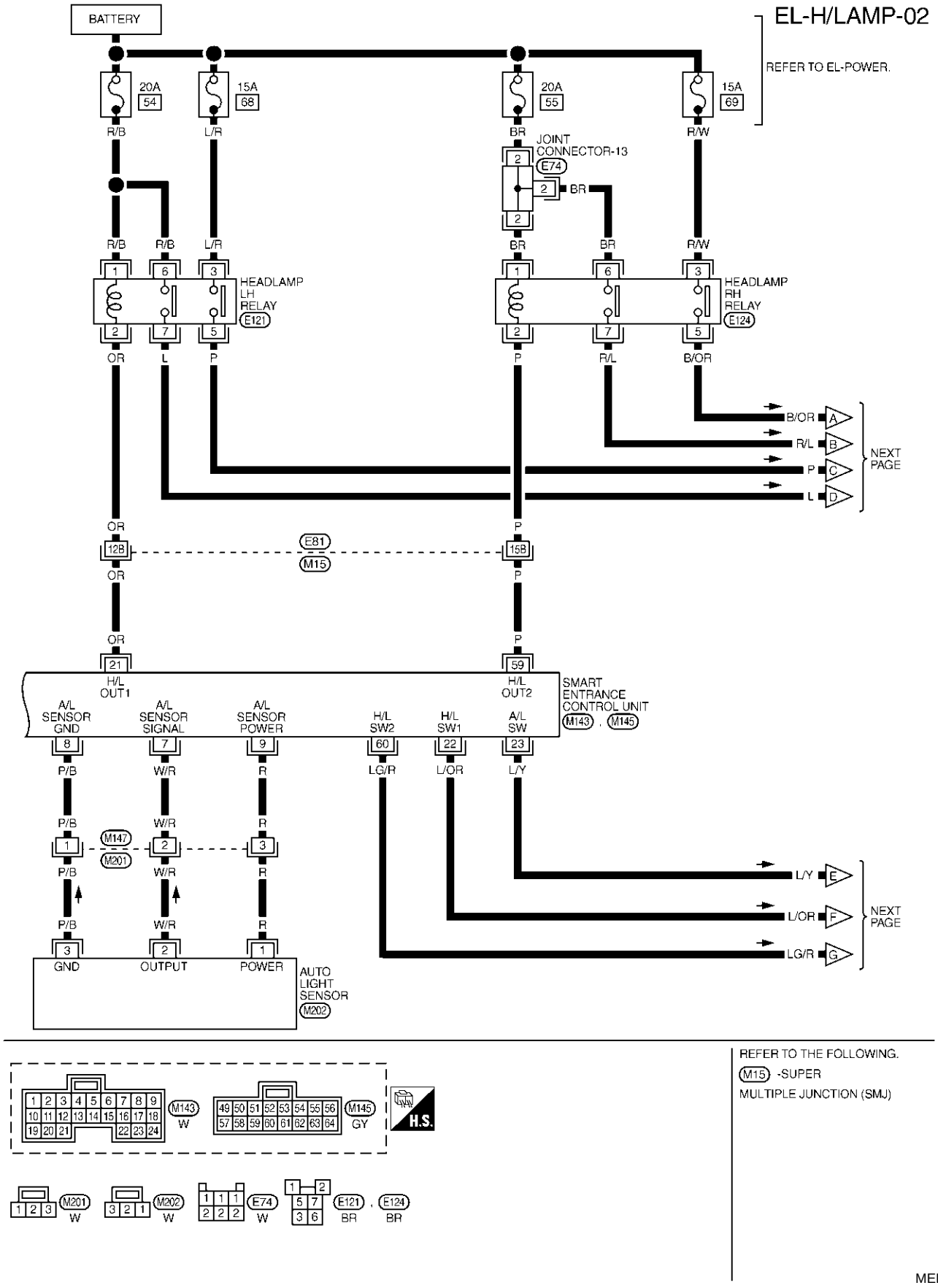
EL-H/LAMP-02
REFER TO EL-POWER.
BATTERY
20A 54
15A 68
20A 55
15A 69
R/B
L/R
BR
R/W
JOINT CONNECTOR-13 E74
HEADLAMP LH RELAY E121
HEADLAMP RH RELAY E124
OR
L
P
R/L
B/OR
NEXT PAGE
E81
M15
12B
15B
H/L OUT1
H/L OUT2
SMART ENTRANCE CONTROL UNIT M143, M145
A/L SENSOR GND
A/L SENSOR SIGNAL
A/L SENSOR POWER
H/L SW2
H/L SW1
A/L SW
P/B
W/R
R
LG/R
L/OR
L/Y
M147
M201
GND
OUTPUT
POWER
AUTO LIGHT SENSOR M202
M143 W
M145 GY
H.S.
M201 W
M202 W
E74 W
E121 BR
E124 BR
REFER TO THE FOLLOWING.
M15 -SUPER MULTIPLE JUNCTION (SMJ)
MEL589Q

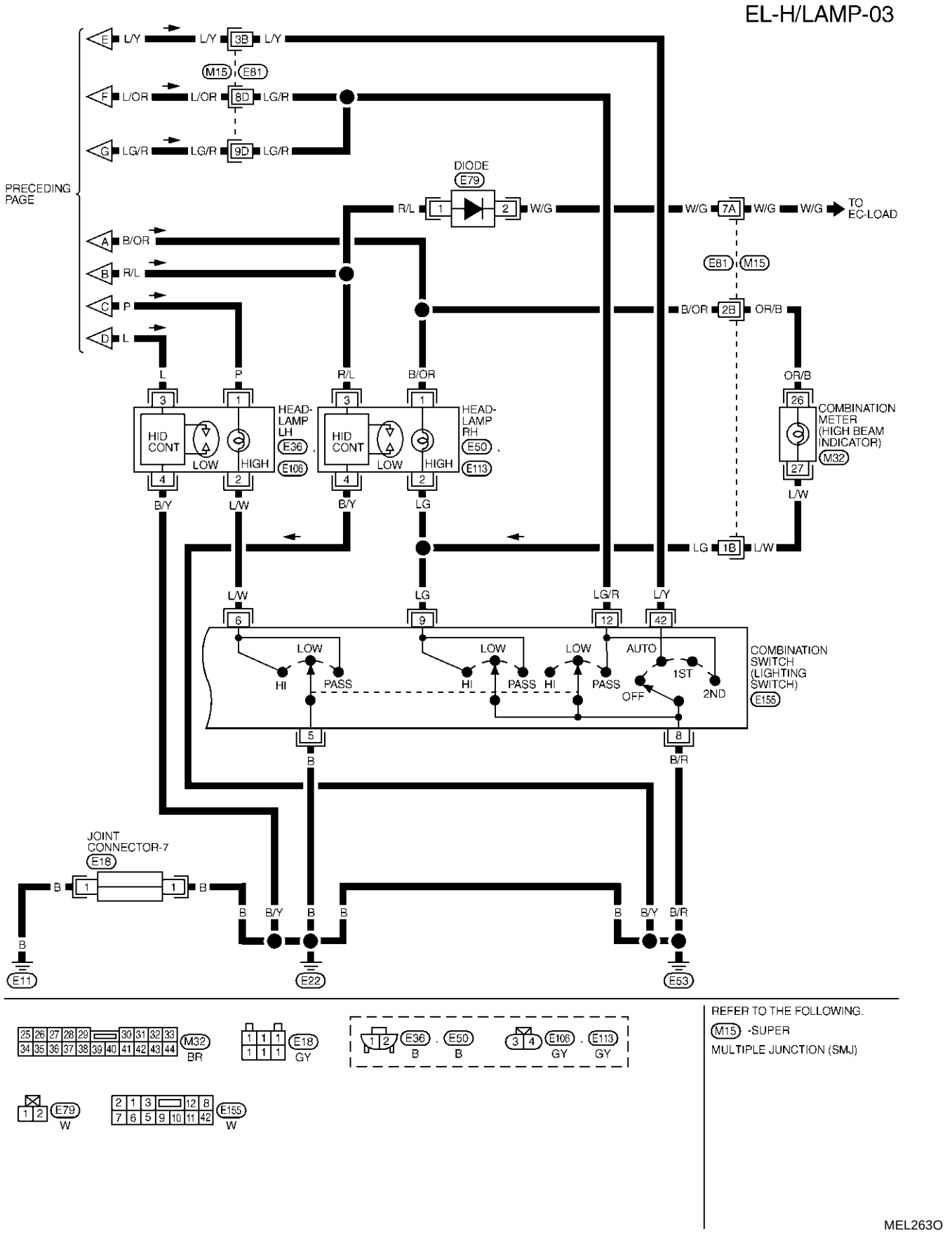
EL-H/LAMP-03
PRECEDING PAGE
DIODE
E79
TO EC-LOAD
HEAD-LAMP LH
E36
E106
HEAD-LAMP RH
E50
E113
HID CONT
LOW
HIGH
COMBINATION METER (HIGH BEAM INDICATOR)
M32
COMBINATION SWITCH (LIGHTING SWITCH)
E155
LOW
HI
PASS
AUTO
1ST
2ND
OFF
JOINT CONNECTOR-7
E18
E11
E22
E53
M15
E81
REFER TO THE FOLLOWING.
M15 -SUPER MULTIPLE JUNCTION (SMJ)
MEL263O

SMART ENTRANCE CONTROL UNIT CONNECTOR

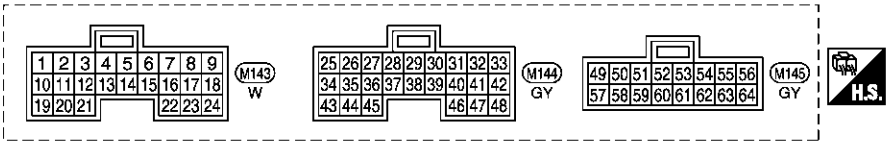

SMART ENTRANCE CONTROL UNIT TERMINALS AND REFERENCE VALUE BETWEEN EACH TERMINAL AND GROUND

TERMINAL	WIRE COLOR	ITEM	CONDITION			DATA (DC)
1	LG	DRIVER DOOR SWITCH	OFF (CLOSED) → ON (OPEN)			12V → 0V
2	R/L	PASSENGER DOOR SWITCH	OFF (CLOSED) → ON (OPEN)			5V → 0V
3	R/W	REAR DOOR SWITCH	OFF (CLOSED) → ON (OPEN)			5V → 0V
7	W/R	AUTO LIGHT SENSOR (SIGNAL)	IGNITION SWITCH "ON" POSITION	LIGHT IS APPLIED TO AUTO LIGHT SENSOR		1 TO 5V
				LIGHT IS NOT APPLIED TO AUTO LIGHT SENSOR		LESS THAN 1V
8	P/B	AUTO LIGHT SENSOR (GND)	–			–
9	R	AUTO LIGHT SENSOR (POWER)	IGNITION SWITCH (OFF → ON)			0V → 5V
20	SB	TAIL LAMP SWITCH	LIGHTING SWITCH (OFF OR AUTO → 1ST OR 2ND POSITION)			12V → 0V
21	OR	HEADLAMP LH RELAY	IGNITION SWITCH (WITH LIGHTING SWITCH 2ND)	ON OR START → OFF	MORE THAN 5 MINUTES	12V
					WITHIN 5 MINUTES	0V
				ON OR START		0V
			HEADLAMPS ILLUMINATE BY AUTO LIGHT CONTROL			0V
22	L/OR	HEADLAMP SWITCH	LIGHTING SWITCH	EXCEPT PASS OR 2ND POSITION		12V
				PASS OR 2ND POSITION		0V
			HEADLAMPS ILLUMINATE BY AUTO LIGHT CONTROL (OPERATE → NOT OPERATE)			10V → 12V
23	L/Y	HEADLAMP SWITCH	IGNITION SWITCH "ON" POSITION	LIGHTING SWITCH (EXCEPT AUTO → AUTO POSITION)		12V → 0V
26	PU	IGNITION SWITCH (ACC)	"ACC" POSITION			12V
27	G	IGNITION SWITCH (ON)	IGNITION SWITCH IS IN "ON" POSITION			12V
43	B	GROUND	–			–
49	R/B	POWER SOURCE (FUSE)	–			12V
58	SB	TAIL LAMP SWITCH	LIGHTING SWITCH (OFF OR AUTO → 1ST OR 2ND POSITION)			12V → 0V
59	P	HEADLAMP RH RELAY	IGNITION SWITCH (WITH LIGHTING SWITCH 2ND)	ON OR START → OFF	MORE THAN 5 MINUTES	12V
					WITHIN 5 MINUTES	0V
				ON OR START		0V
			HEADLAMPS ILLUMINATE BY AUTO LIGHT CONTROL (OPERATE → NOT OPERATE)			LESS THAN 1V → 12V
60	LG/R	HEADLAMP SWITCH	LIGHTING SWITCH	EXCEPT PASS OR 2ND POSITION		12V
				PASS OR 2ND POSITION		0V
			HEADLAMPS ILLUMINATE BY AUTO LIGHT CONTROL (OPERATE → NOT OPERATE)			10V → 12V
64	B	GROUND	–			–

SEL545Y

CONSULT-II Inspection Procedure

NHEL0256

"HEAD LAMP"

NHEL0256S01

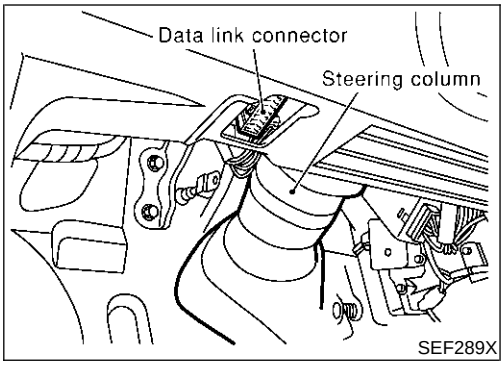

SEF289X

1. Turn ignition switch "OFF".
2. Connect "CONSULT-II" and "CONSULT-II CONVERTER" to the data link connector.

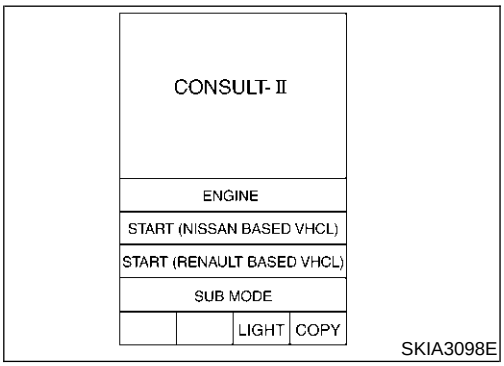

SKIA3098E

3. Turn ignition switch "ON".
4. Touch "START (NISSAN BASED VHCL)".

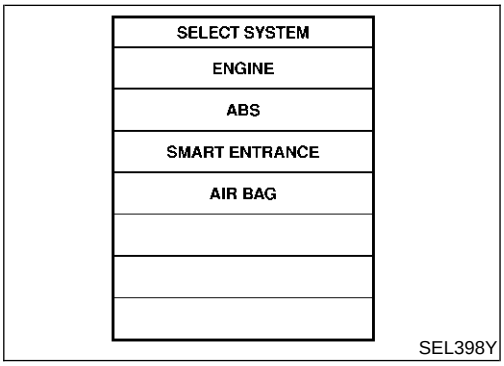

SEL398Y

5. Touch "SMART ENTRANCE".
   If "SMART ENTRANCE" is not indicated, go to GI-42.

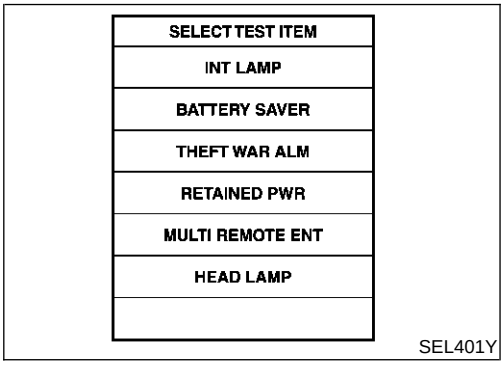

SEL401Y

6. Touch "HEAD LAMP".

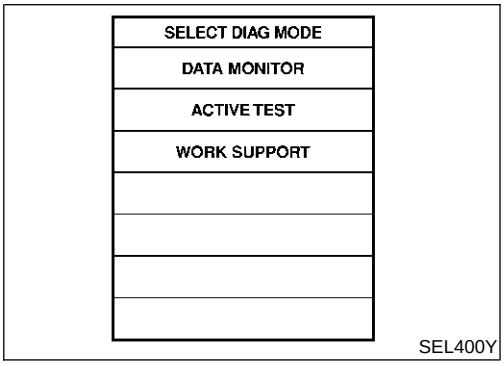

SEL400Y

7. Select diagnosis mode.
   "DATA MONITOR", "ACTIVE TEST" and "WORK SUPPORT" are available.

CONSULT-II Application Items

NHEL0317

"HEAD LAMP"

NHEL0317S01

Data Monitor

NHEL0317S0101

Monitored Item	Description
IGN ON SW	Indicates [ON/OFF] condition of ignition switch in ON position.
ACC ON SW	Indicates [ON/OFF] condition of ignition switch in ACC position.
AUTO LIGT SW	Displays status of the lighting switch as judged from the lighting switch signal. (AUTO position: ON/Other than AUTO position: OFF)
AUTO LIGT SENS	Displays "Illumination outside of the vehicle (close to 5V when light/close to 0V when dark)" as judged from the optical sensor signal.
LIGHT SW 1ST	Displays status of the lighting switch as judged from the lighting switch signal. (1ST or 2ND position: ON/Other than 1ST and 2ND position: OFF)
LIGHT SW 2ND	Displays status of the lighting switch as judged from the lighting switch signal. (2ND position: ON/Other than 2ND position: OFF)
DOOR SW-DR	Indicates [ON/OFF] condition of front door switch LH.
DOOR SW-AS	Indicates [ON/OFF] condition of door switch RH.
DOOR SW-RR	Indicates [ON/OFF] condition of rear door switch.

Active Test

NHEL0317S0102

Test Item	Description
TAIL LAMP	Tail lamp relay can be operated by on-off operation of the tail lamp.
HEAD LAMP	Headlamp relay can be operated by on-off operation of the headlamp.
AUTO LIGHT	Night time dimming signal can be operated by on-off operation.

Work Support

NHEL0317S0103

Work Item	Description
AUTO LIGHT SET	Auto light sensitivity can be changed in this mode. Sensitivity can be adjusted in four modes. ● MODE 1 (Normal)/MODE 2 (Sensitive)/MODE 3 (Desensitized)/MODE 4 (Insensitive)
BATTERY SAVER SET	Exterior lamp battery saver control mode can be changed in this mode. Selects exterior lamp battery saver control mode between two modes. ● MODE 1 (ON)/MODE 2 (OFF)
ILL DELAY SET	Auto light delay off timer period can be changed in this mode. Selects auto light delay off timer period among eight modes. ● MODE 1 (45 sec.)/MODE 2 (OFF)/MODE 3 (30 sec.)/MODE 4 (60 sec.)/ MODE 5 (90 sec.)/ MODE 6 (120 sec.)/MODE 7 (150 sec.)/MODE 8 (180 sec.)

Trouble Diagnoses

NHEL0258

WARNING:

- **The xenon headlamp has a high-tension current generating area. Be extremely careful when removing and installing. Be certain to disconnect the battery negative cable prior to removing or installing.**
- **When the xenon headlamp is lit, do not touch the harness (covered with red or amber insulation), bulb itself or the bulb socket with your bare hands.**
- **Never service a xenon headlamp with wet hands.**
- **When checking body side harness with a circuit tester, be certain to disconnect the harness connector from the xenon headlamp.**
- **When the xenon headlamp is lit, the xenon bulb must be installed in the headlamp housing. (Never turn on xenon headlamp, if the bulb is out of the headlamp housing.)**

CAUTION:

Make sure to install the bulb securely; if the xenon bulb is improperly installed in its socket, high-tension current leaks occur. This may lead to a melted bulb and/or bulb socket.

Symptom	Possible cause	Repair order
Neither headlamp operates.	1. 10A fuse 2. Lighting switch 3. Smart entrance control unit	1. Check 10A fuse [No. 13, located in fuse block (J/B)]. Verify battery positive voltage is present at terminal 49 of smart entrance control unit. 2. Check Lighting switch. 3. Check smart entrance control unit. (EL-368)
LH headlamp (low and high beam) does not operate, but RH headlamp (low and high beam) does operate.	1. 20A fuse 2. Headlamp LH relay 3. Headlamp LH relay circuit 4. Lighting switch circuit 5. Smart entrance control unit	1. Check 20A fuse (No. 54, located in fuse and fusible link box). Verify battery positive voltage is present at terminals 1 and 6 of headlamp LH relay. 2. Check headlamp LH relay. 3. Check harness between headlamp LH relay and smart entrance control unit. 4. Check harness between smart entrance control unit and lighting switch. 5. Check smart entrance control unit. (EL-368)
RH headlamp (low and high beam) does not operate, but LH headlamp (low and high beam) does operate.	1. 20A fuse 2. Headlamp RH relay 3. Headlamp RH relay circuit 4. Lighting switch circuit 5. Smart entrance control unit	1. Check 20A fuse (No. 55, located in fuse and fusible link box). Verify battery positive voltage is present at terminals 1 and 6 of headlamp RH relay. 2. Check headlamp RH relay. 3. Check harness between headlamp RH relay and smart entrance control unit. 4. Check harness between smart entrance control unit and lighting switch. 5. Check smart entrance control unit. (EL-368)
LH high beam does not operate, but LH low beam operates.	1. Bulb 2. 15A fuse 3. Headlamp LH relay 4. Open in the LH high beams circuit 5. Lighting switch 6. Lighting switch ground circuit	1. Check bulb. 2. Check 15A fuse (No. 68, located in fuse and fusible link box). Verify battery positive voltage is present at terminal 3 of headlamp LH relay. 3. Check headlamp LH relay. 4. Check the following. a. Harness between headlamp LH relay terminal 5 and headlamp LH for open circuit b. Harness between headlamp LH and lighting switch for open circuit 5. Check lighting switch. 6. Check harness between lighting switch and ground.
LH low beam does not operate, but LH high beam operates.	1. Headlamp LH relay 2. Open in the LH low beam circuit 3. LH low beam ground circuit 4. Xenon bulb 5. HID control unit	1. Check headlamp LH relay 2. Check harness between headlamp LH relay terminal 7 and headlamp LH for open circuit. 3. Check harness between headlamp LH and ground. 4. Replace the xenon bulb with other side bulb or new one. (If headlamps illuminate correctly, replace the bulb.) 5. Replace the HID control unit with other side control unit or new one. (If headlamps illuminate correctly, replace the control unit.)
RH high beam does not operate, but RH low beam operates.	1. Bulb 2. 15A fuse 3. Headlamp RH relay 4. Open in the RH high beams circuit 5. Lighting switch 6. Lighting switch ground circuit	1. Check bulb. 2. Check 15A fuse (No. 69, located in fuse and fusible link box). Verify battery positive voltage is present at terminal 3 of headlamp RH relay. 3. Check headlamp RH relay. 4. Check the following. a. Harness between headlamp RH relay terminal 5 and headlamp RH for open circuit b. Harness between headlamp RH and lighting switch for open circuit 5. Check lighting switch. 6. Check harness between lighting switch and ground.

Symptom	Possible cause	Repair order
RH low beam does not operate, but RH high beam operates.	1. Headlamp RH relay 2. Open in the RH low beam circuit 3. RH low beam ground circuit 4. Xenon bulb 5. HID control unit	1. Check headlamp RH relay 2. Check harness between headlamp RH relay terminal 7 and headlamp RH for open circuit. 3. Check harness between headlamp RH and ground. 4. Replace the xenon bulb with other side bulb or new one. (If headlamps illuminate correctly, replace the bulb.) 5. Replace the HID control unit with other side control unit or new one. (If headlamps illuminate correctly, replace the control unit.)
High beam indicator does not work.	1. Bulb 2. Open in high beam indicator circuit	1. Check bulb in combination meter. 2. Check the following. a. Harness between headlamp RH relay and combination meter for an open circuit b. Harness between high beam indicator and lighting switch
Exterior lamp battery saver control does not operate properly.	1. Door switch LH or RH circuit 2. Smart entrance control unit	1. Check the following. a. Harness between smart entrance control unit and door switch LH or RH for open or short circuit b. Door switch LH or RH ground circuit c. Door switch LH or RH 2. Check smart entrance control unit. (EL-368)

Bulb Replacement

NHEL0259

CAUTION:

- **After replacing a new xenon bulb, be sure to make aiming adjustments.**
- **Hold only the plastic base when handling the bulb. Never touch the glass envelope.**
- **Do not leave headlamp reflector without bulb for a long period of time. Dust, moisture, smoke, etc. entering headlamp body may affect the performance of the headlamp. Remove headlamp bulb from the headlamp reflector just before a replacement bulb is installed.**

1. Disconnect negative battery cable.
2. Disconnect headlamp connector.
3. Remove headlamp assembly.

WARNING:

Never service a xenon headlamp without disconnecting negative battery cable and with wet hands.

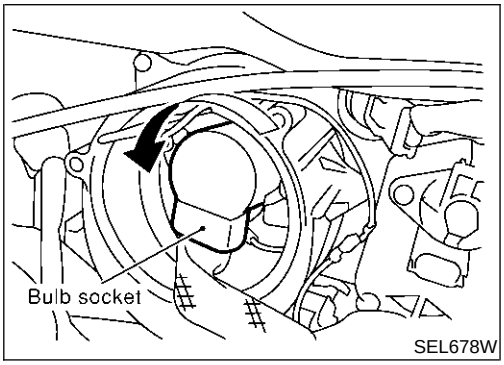

XENON BULB (LOW BEAM)

NHEL0259S01

1. Remove headlamp seal cover by turning it counterclockwise.
2. Turn bulb socket counterclockwise with keep pushing, then remove it.

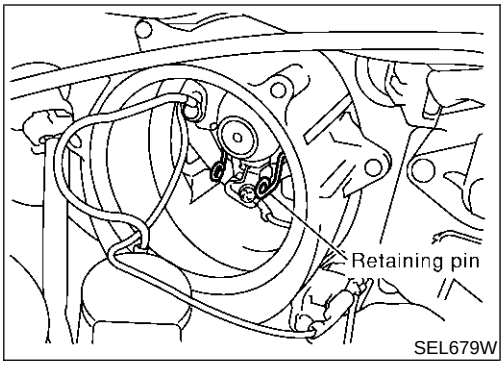

3. Release retaining pin.
4. Remove the xenon bulb.
5. Install in the reverse order of removal.

CAUTION:

- **When disposing of the xenon bulb, do not break it; always dispose of it as is.**
- **Make sure to install the bulb securely; if the xenon bulb is improperly installed in its socket, high-tension current leaks occur. This may lead to a melted bulb and/or bulb socket.**

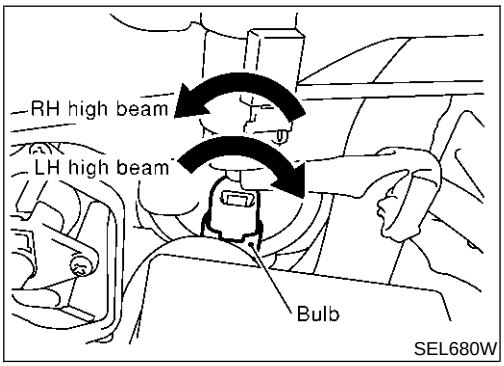

HIGH BEAM

NHEL0259S02

1. Turn the bulb clockwise (LH high beam) or counterclockwise (RH high beam).
2. Remove the bulb.
3. Install in the reverse order of removal.

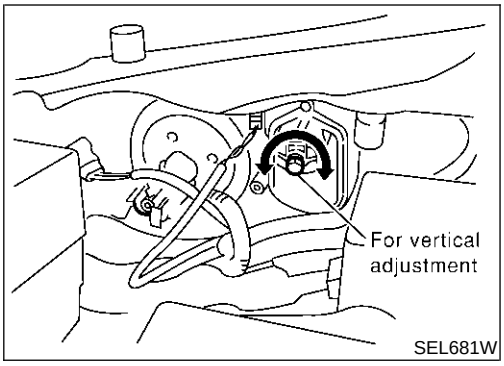

Aiming Adjustment

=NHEL0260

LOW BEAM

NHEL0260S01

1. Turn headlamp low beam on.
2. Use adjusting screw to perform aiming adjustment.

- **First tighten the adjusting screw all the way and then make adjustment by loosening the screw.**

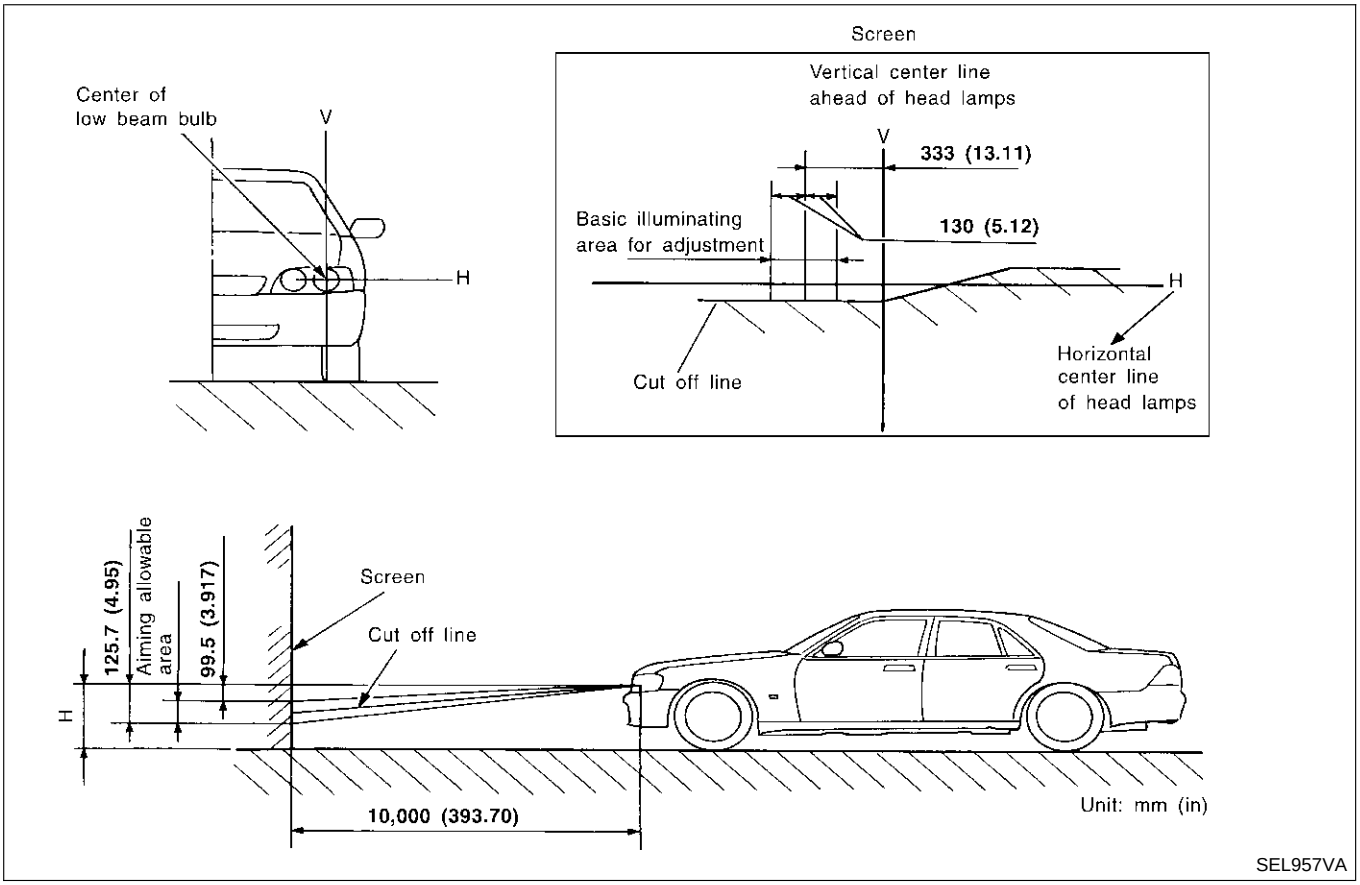

GI
MA
EM
LC
EC
FE
AT
AX
SU
BR
ST
RS
BT
HA
SC
EL
IDX

Component Parts and Harness Connector Location

NHEL0261

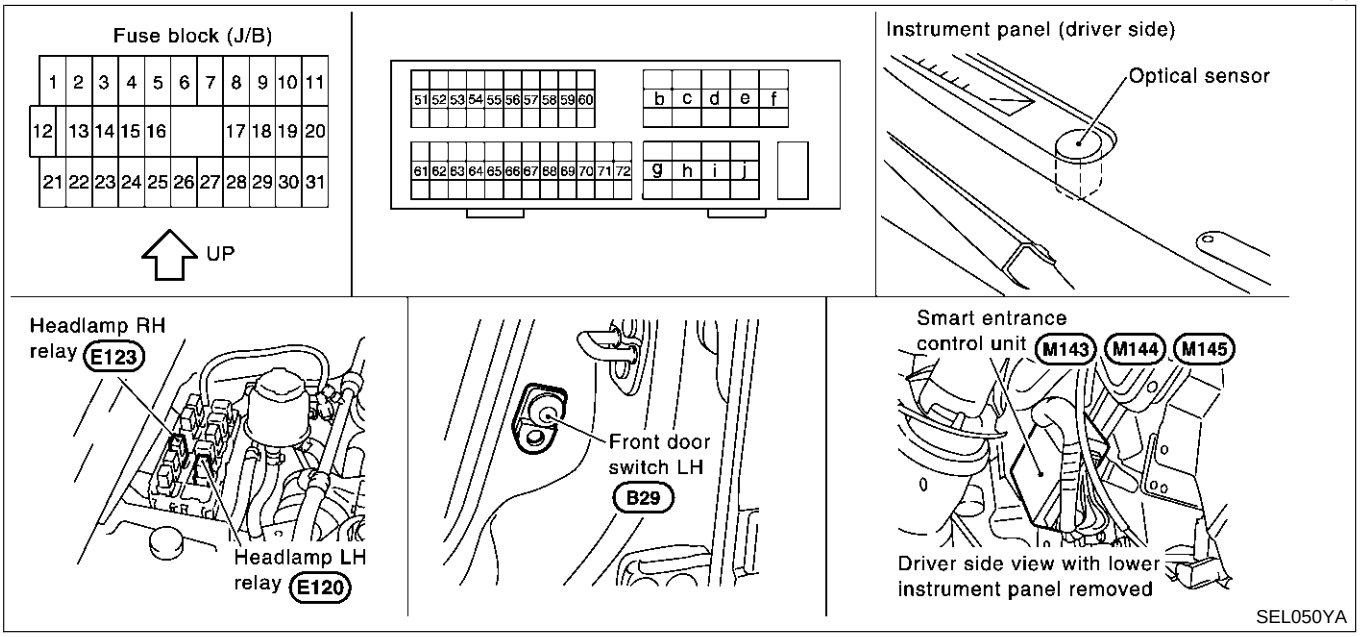

System Description

NHEL0262

The headlamp system for Canada vehicles contains a daytime light control unit that activates the high beam headlamps at approximately half illumination whenever the engine is running. If the parking brake is applied before the engine is started the daytime lights will not be illuminated. The daytime lights will illuminate once the parking brake is released. Thereafter, the daytime lights will continue to operate when the parking brake is applied.

And battery saver system is controlled by the smart entrance control unit.

Power is supplied at all times

- to headlamp LH relay terminals 1 and 6
- through 20A fuse (No. 54, located in the fuse and fusible link box), and
- to headlamp RH relay terminals 1 and 6
- through 20A fuse (No. 55, located in the fuse and fusible link box), and
- to smart entrance control unit terminal 49
- through 10A fuse [No. 13, located in the fuse block (J/B)].

Ground is supplied

- to daytime light control unit terminal 16 and
- to smart entrance control unit terminals 43 and 64

When the ignition switch is in the ON or START position, power is also supplied

- to daytime light control unit terminal 3,
- through 10A fuse [No. 28, located in the fuse block (J/B)], and
- to smart entrance control unit terminal 27
- through 10A fuse [No. 10, located in the fuse block (J/B)].

When the ignition switch is in the ACC or ON position, power is supplied

- to smart entrance control unit terminal 26
- through 10A fuse [No. 1, located in the fuse block (J/B)].

When the ignition switch is in the START position, power is supplied

- to daytime light control unit terminal 2
- through 10A fuse [No. 21, located in the fuse block (J/B)].

HEADLAMP OPERATION

NHEL0262S01

Power Supply to Low Beam and High Beam

NHEL0262S0101

When lighting switch is in 2ND or PASS position, ground is supplied

- to headlamp LH relay terminal 2 from smart entrance control unit terminal 21
- through smart entrance control unit terminal 22
- from lighting switch terminal 12, and
- to headlamp RH relay terminal 2 from smart entrance control unit terminal 59
- through smart entrance control unit terminal 60
- from lighting switch terminal 12.

Headlamp relays (LH and RH) are energized and then power is supplied to headlamps (LH and RH).

Low Beam Operation

NHEL0262S0103

When the lighting switch is turned to 2ND and LOW ("B") positions, ground is supplied

- to terminal 4 of the headlamp LH
- through body grounds E11, E22 and E53.

Ground is also supplied

- to terminal 4 of the headlamp RH
- through body grounds E11, E22 and E53.

With power and ground supplied, the low beam headlamps illuminate.

High Beam Operation/Flash-to-pass Operation

NHEL0262S0104

When the lighting switch is turned to 2ND and HIGH ("A") or PASS ("C") positions, ground is supplied

- to terminal 2 of headlamp LH
- through daytime light control unit terminals 10 and 13, and
- through lighting switch terminals 6 and 5
- through body grounds E11, E22 and E53.

Ground is also supplied

- to terminal 2 of headlamp RH
- through daytime light control unit terminals 9 and 14
- to combination meter terminal 27 for the HIGH BEAM indicator
- through lighting switch terminals 9 and 8
- through body grounds E11, E22 and E53.

With power and ground supplied, the high beam headlamps and HIGH BEAM indicator illuminate.

EXTERIOR LAMP BATTERY SAVER CONTROL

NHEL0262S06

While the headlamp is turned ON by "2ND" of light switch, the 5 minute timer is activated when the ignition switch is turned from ON (or START) to OFF (ACC OFF).
Continuity between terminals 21 and 22, and between terminals 59 and 60 of smart entrance control unit will be disturbed after 5 minutes, then the headlamps will be turned off.
While the headlamp is turned ON by "AUTO" of light switch, the 5 minute timer is activated when the ignition switch signal changes from ON (or START) to OFF (ACC OFF), and either one of front door switch LH or RH ON signal is input.
The auto light delay off timer is activated as the following:

- When the door switch signal changes from ON to OFF while the timer is activated, the timer in operation is discontinued and the 45 second timer is reset.
- When the door switch signal changes from OFF to ON while the timer is activated, the timer is discontinued and the 45 second timer is reset.
- When the one of four door switch signals changes from OFF to ON while the timer is activated, the timer is discontinued and the 5 minute timer is reset.
- When all the door switch ON signals are input while the timer is activated, the timer is discontinued and the 45 second timer is reset.

Exterior lamp battery saver control mode and auto light delay off timer period can be changed by the function setting of CONSULT-II (EL-47).
When the lighting switch is turned from OFF to 2ND after headlamps are turned to off by the battery saver control, ground is supply

- to smart entrance control unit terminals 20 and 58 from lighting switch terminal 11, and then
- to headlamp LH and RH relays terminal 2 from smart entrance control unit terminals 21 and 59
- through smart entrance control unit terminals 22 and 60, and

- through lighting switch terminal 12.

Then headlamps illuminate again.

AUTO LIGHT OPERATION

NHEL0262S03

For auto light operation, refer to "HEADLAMP" (EL-40).

DAYTIME LIGHT OPERATION

NHEL0262S04

With the engine running, the lighting switch in the OFF or 1ST position and parking brake released, power is supplied

- through daytime light control unit terminal 7
- to terminal 1 of headlamp RH
- through daytime light control unit terminal 6
- to terminal 1 of headlamp LH.

Ground is supplied to terminal 2 of each headlamp.

- through daytime light control unit terminals 9 and 10
- through daytime light control unit terminal 16
- through body grounds E11, E22 and E53.

Because the high beam headlamps are now wired in series, they operate at half illumination.

OPERATION

NHEL0262S05

After starting the engine with the lighting switch in the "OFF" or "1ST" position, the headlamp high beam automatically turns on. Lighting switch operations other than the above are the same as conventional light systems.

Engine		With engine stopped									With engine running								
Lighting switch		OFF			1ST			2ND			OFF			1ST			2ND		
		A	B	C	A	B	C	A	B	C	A	B	C	A	B	C	A	B	C
Headlamp	High beam	X	X	O	X	X	O	O	X	O	△*	△*	O	△*	△*	O	O	X	O
	Low beam	X	X	X	X	X	X	X	O	X	X	X	X	X	X	X	X	O	X
Clearance and tail lamp		X	X	X	O	O	O	O	O	O	X	X	X	O	O	O	O	O	O
License and instrument illumination lamp		X	X	X	O	O	O	O	O	O	X	X	X	O	O	O	O	O	O

A: "HIGH BEAM" position
B: "LOW BEAM" position
C: "FLASH TO PASS" position
O : Lamp "ON"
X : Lamp "OFF"
△ : Lamp dims. (Added functions)
*: When starting the engine with the parking brake released, the daytime light will come ON.
When starting the engine with the parking brake pulled, the daytime light won't come ON.

Schematic

NHEL0263

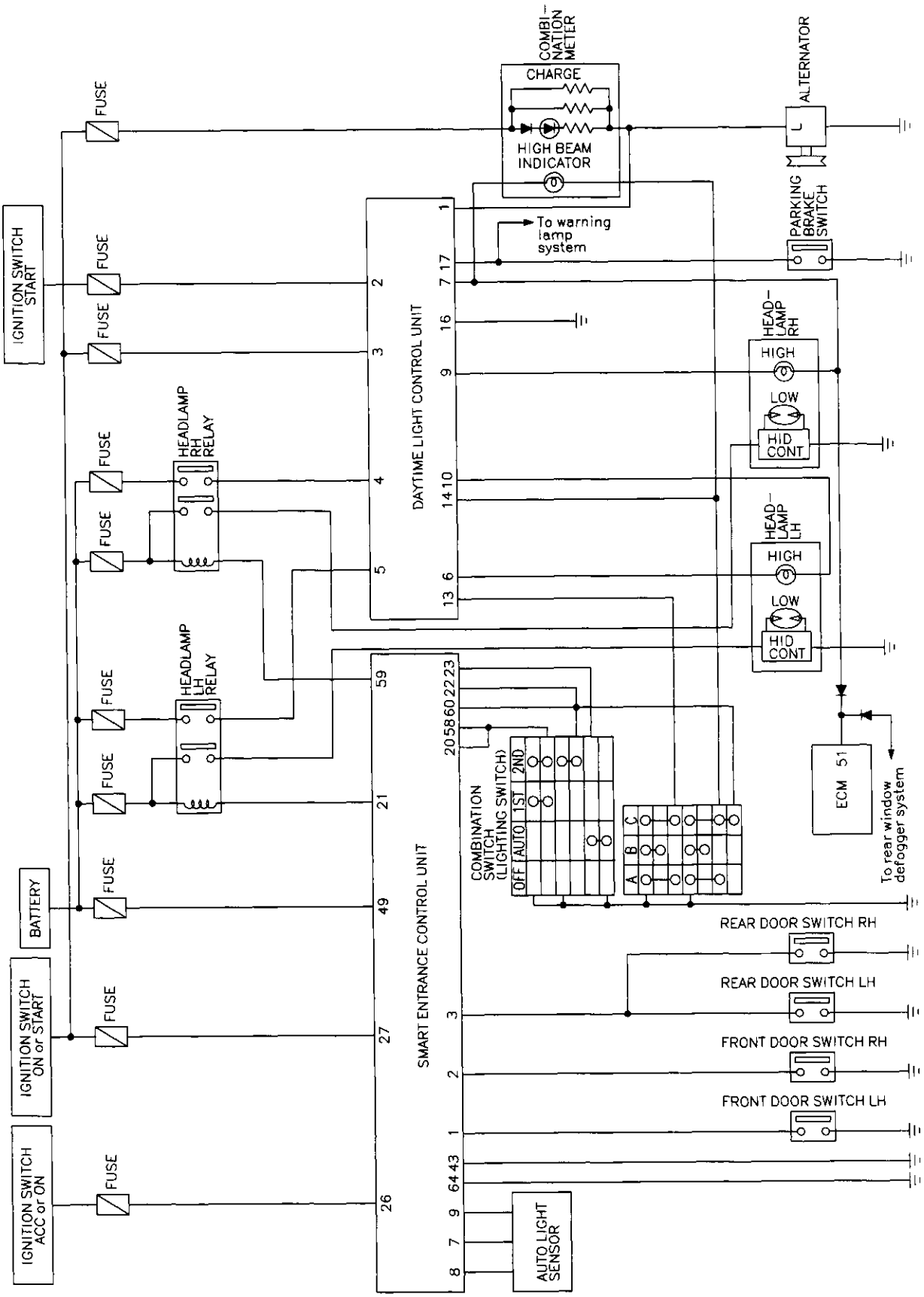

MEL264O

Wiring Diagram — DTRL —

NHEL0264

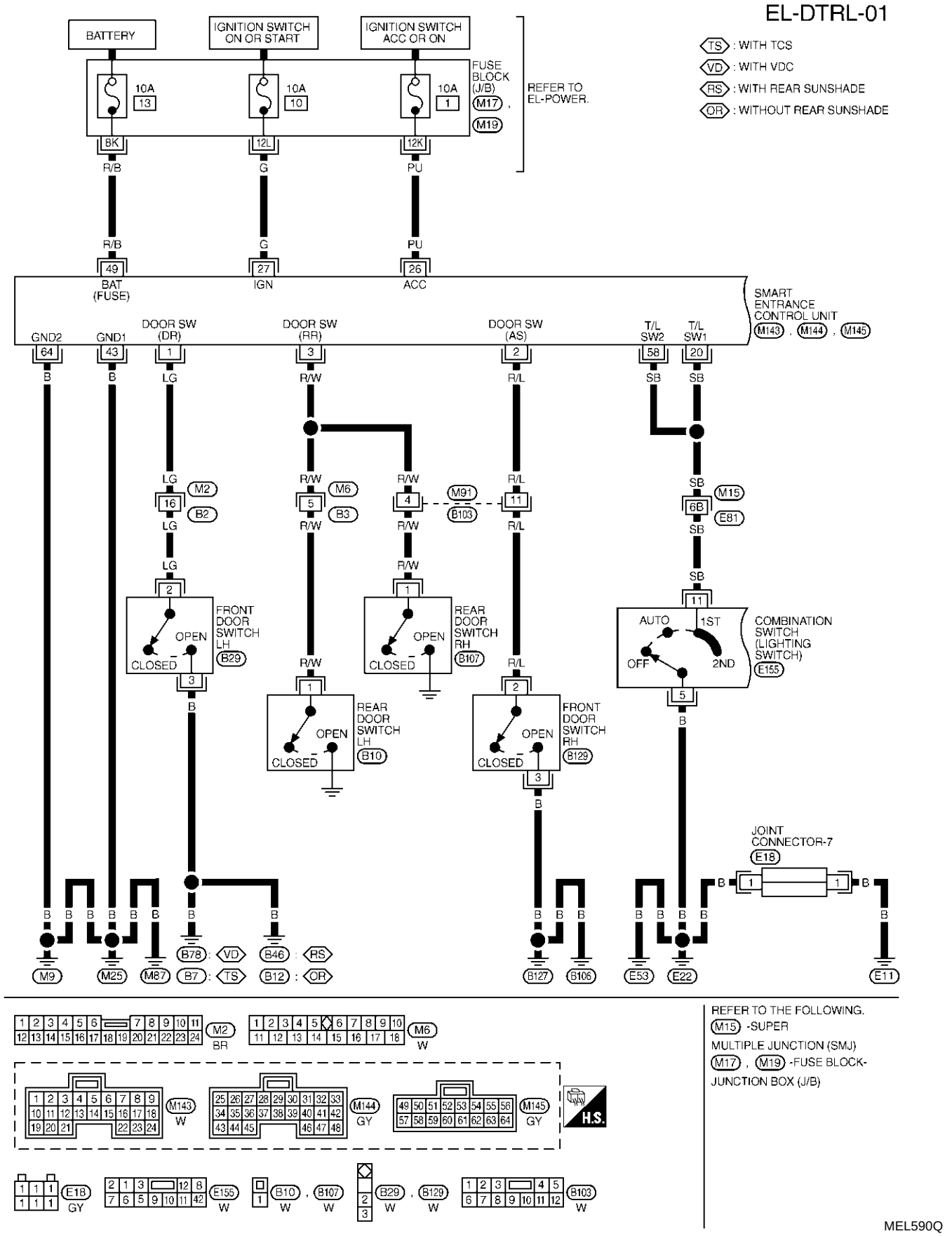

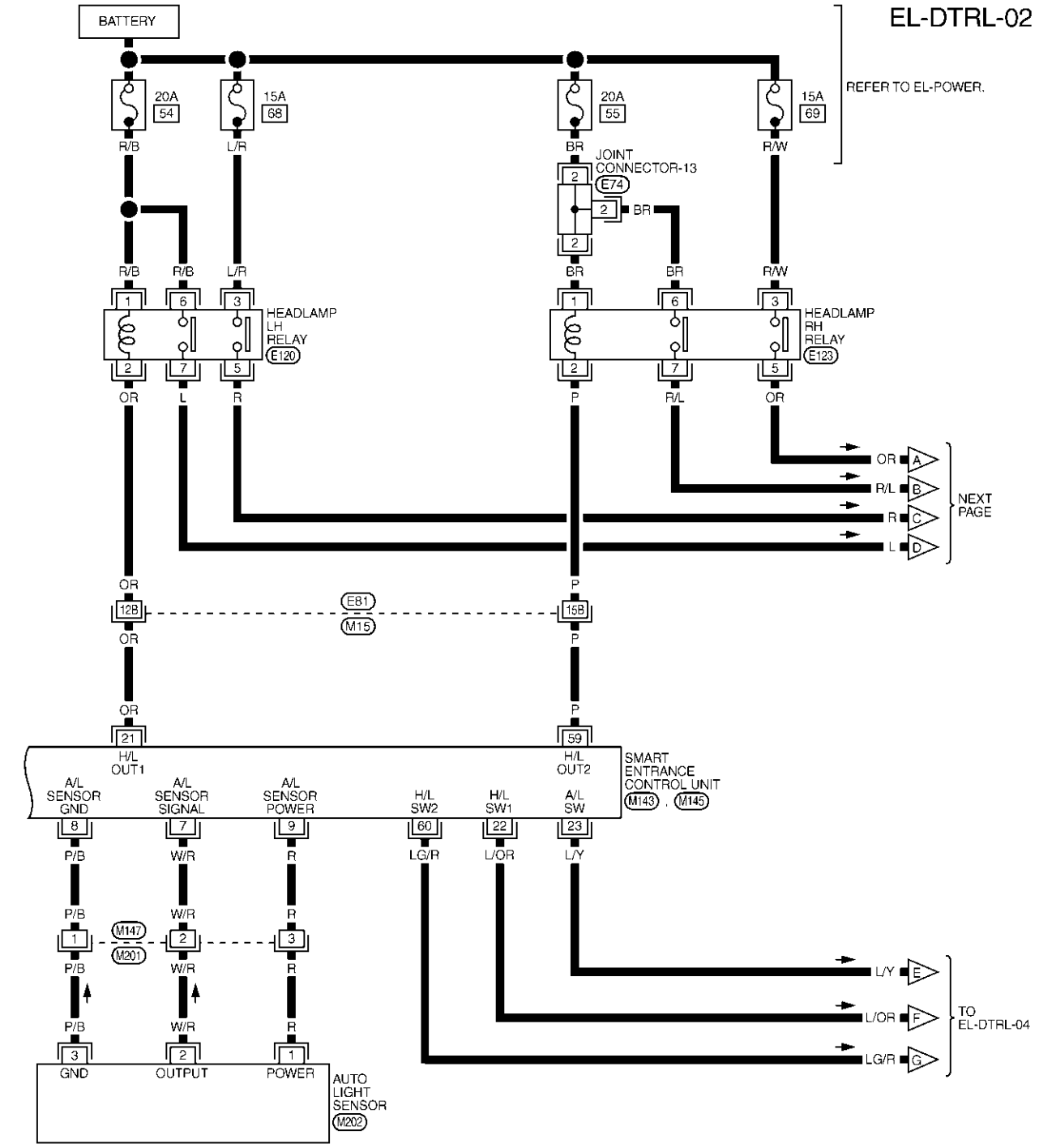

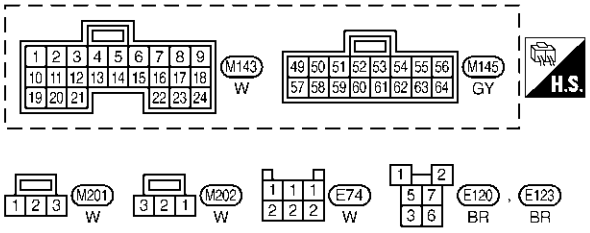

REFER TO THE FOLLOWING.
M15 -SUPER MULTIPLE JUNCTION (SMJ)

MEL591Q

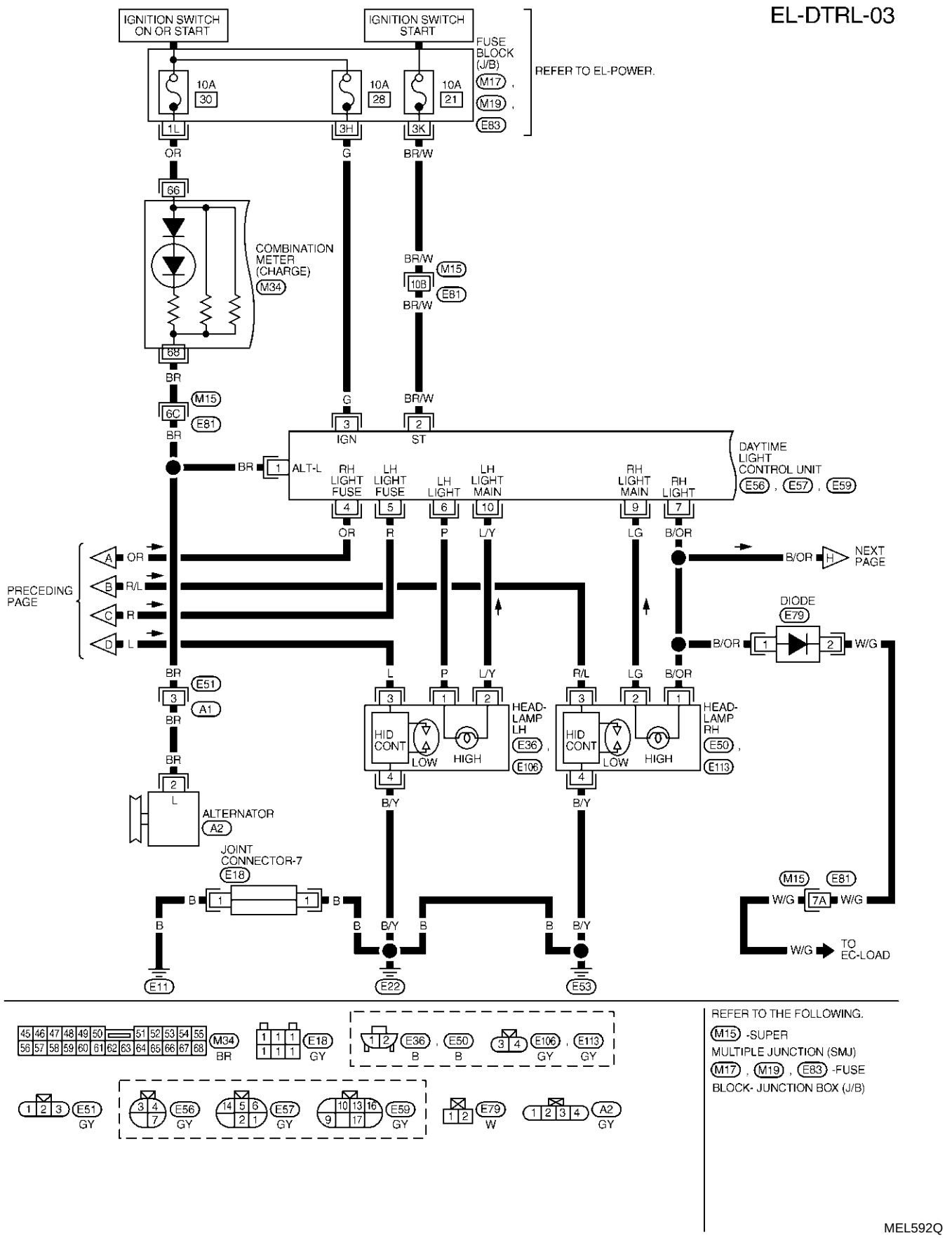
EL-DTRL-03
IGNITION SWITCH ON OR START
IGNITION SWITCH START
FUSE BLOCK (J/B)
M17, M19, E83
REFER TO EL-POWER.
10A 30
10A 28
10A 21
1L
3H
3K
OR
G
BR/W
66
COMBINATION METER (CHARGE)
M34
BR/W
M15
10B
E81
BR/W
68
BR
M15
6C
E81
BR
G
BR/W
3 IGN
2 ST
DAYTIME LIGHT CONTROL UNIT
E56, E57, E59
BR
1 ALT-L
RH LIGHT FUSE
LH LIGHT FUSE
LH LIGHT
LH LIGHT MAIN
RH LIGHT MAIN
RH LIGHT
4
5
6
10
9
7
OR
R
P
L/Y
LG
B/OR
B/OR
H
NEXT PAGE
PRECEDING PAGE
A OR
B R/L
C R
D L
DIODE
E79
B/OR
1
2
W/G
BR
E51
3
A1
BR
L
P
L/Y
R/L
LG
B/OR
HEAD-LAMP LH
E36, E106
HEAD-LAMP RH
E50, E113
HID CONT
LOW
HIGH
B/Y
B/Y
BR
2 L
ALTERNATOR
A2
JOINT CONNECTOR-7
E18
B
1
1
B
B
B/Y
B
B
B/Y
M15
E81
W/G
7A
W/G
W/G
TO EC-LOAD
E11
E22
E53
M34 BR
E18 GY
E36 B
E50 B
E106 GY
E113 GY
E51 GY
E56 GY
E57 GY
E59 GY
E79 W
A2 GY
REFER TO THE FOLLOWING.
M15 -SUPER MULTIPLE JUNCTION (SMJ)
M17, M19, E83 -FUSE BLOCK- JUNCTION BOX (J/B)
MEL592Q

EL-DTRL-04

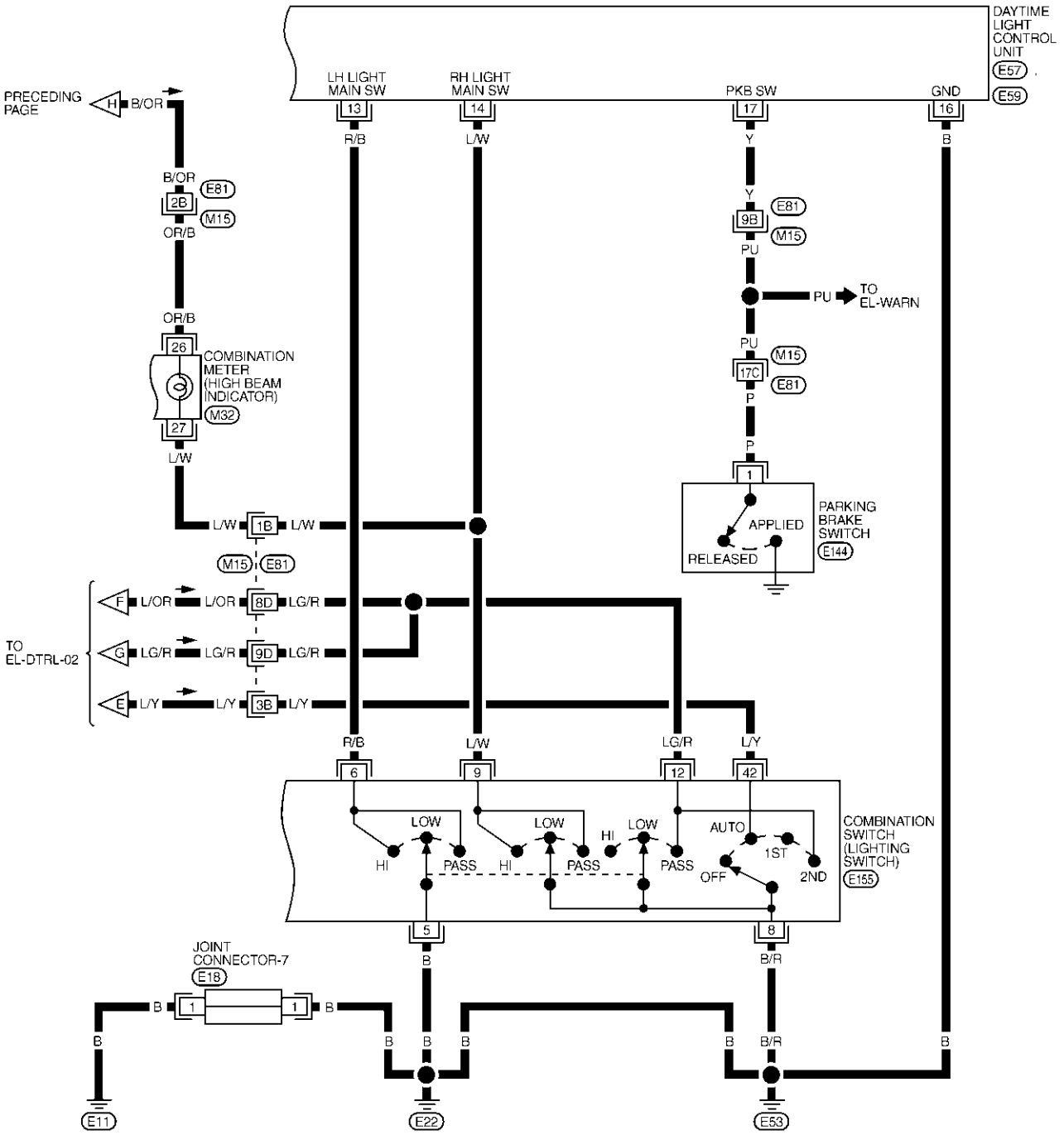

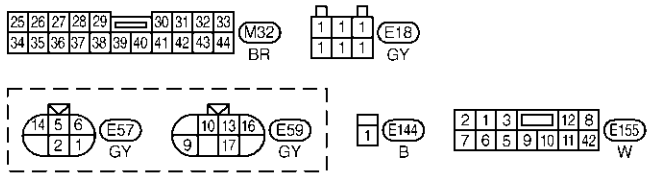

REFER TO THE FOLLOWING.
M15 -SUPER MULTIPLE JUNCTION (SMJ)

MEL593Q

Trouble Diagnoses

NHEL0265

WARNING:

- **The xenon headlamp has a high-tension current generating area. Be extremely careful when removing and installing. Be certain to disconnect the battery negative cable prior to removing or installing.**
- **When the xenon headlamp is lit, do not touch the harness (covered with red or amber insulation), bulb itself or the bulb socket with your bare hands.**
- **Never service a xenon headlamp with wet hands.**
- **When checking body side harness with a circuit tester, be certain to disconnect the harness connector from the xenon headlamp.**
- **When the xenon headlamp is lit, the xenon bulb must be installed in the headlamp housing. (Never turn on xenon headlamp, if the bulb is out of the headlamp housing.)**

CAUTION:

Make sure to install the bulb securely; if the xenon bulb is improperly installed in its socket, high-tension current leaks occur. This may lead to a melted bulb and/or bulb socket.

Symptom	Possible cause	Repair order
Neither headlamp operates.	1. 10A fuse 2. Lighting switch 3. Smart entrance control unit	1. Check 10A fuse [No. 13, located in fuse block (J/B)]. Verify battery positive voltage is present at terminal 49 of smart entrance control unit. 2. Check Lighting switch. 3. Check smart entrance control unit. (EL-368)
LH headlamp (low and high beam) does not operate, but RH headlamp (low and high beam) does operate.	1. 20A fuse 2. Headlamp LH relay 3. Headlamp LH relay circuit 4. Lighting switch circuit 5. Smart entrance control unit	1. Check 20A fuse (No. 54, located in fuse and fusible link box). Verify battery positive voltage is present at terminals 1 and 6 of headlamp LH relay. 2. Check headlamp LH relay. 3. Check harness between headlamp LH relay and smart entrance control unit. 4. Check harness between smart entrance control unit and lighting switch. 5. Check smart entrance control unit. (EL-368)
RH headlamp (low and high beam) does not operate, but LH headlamp (low and high beam) does operate.	1. 20A fuse 2. Headlamp RH relay 3. Headlamp RH relay circuit 4. Lighting switch circuit 5. Smart entrance control unit	1. Check 20A fuse (No. 55, located in fuse and fusible link box). Verify battery positive voltage is present at terminals 1 and 6 of headlamp RH relay. 2. Check headlamp RH relay. 3. Check harness between headlamp RH relay and smart entrance control unit. 4. Check harness between smart entrance control unit and lighting switch. 5. Check smart entrance control unit. (EL-368)
LH high beam does not operate, but LH low beam operates.	1. Bulb 2. 15A fuse 3. Headlamp LH relay 4. Headlamp LH relay circuit 5. Headlamp LH high beams circuit 6. Lighting switch 7. Lighting switch circuit 8. Daytime light control unit	1. Check bulb. 2. Check 15A fuse (No. 68, located in fuse and fusible link box). Verify battery positive voltage is present at terminal 3 of headlamp LH relay. 3. Check headlamp LH relay. 4. Check harness between headlamp LH relay and daytime light control unit. 5. Check harness between headlamp LH and lighting switch. 6. Check lighting switch. 7. Check the following. a. Harness between daytime light control unit and lighting switch b. Harness between lighting switch and ground 8. Check daytime light control unit.

Symptom	Possible cause	Repair order
LH low beam does not operate, but LH high beam operates.	1. Headlamp LH relay 2. Open in the LH low beam circuit 3. LH low beam ground circuit 4. Xenon bulb 5. HID control unit	1. Check headlamp LH relay. 2. Check harness between headlamp LH relay terminal 7 and headlamp LH for open circuit. 3. Check harness between headlamp LH and ground. 4. Replace the xenon bulb with other side bulb or new one. (If headlamps illuminate correctly, replace the bulb.) 5. Replace the HID control unit with other side control unit or new one. (If headlamps illuminate correctly, replace the control unit.)
RH high beam does not operate, but RH low beam operates.	1. Bulb 2. 15A fuse 3. Headlamp RH relay 4. Headlamp RH relay circuit 5. Open in the RH high beams circuit 6. Lighting switch 7. Lighting switch circuit 8. Daytime light control unit	1. Check bulb. 2. Check 15A fuse (No. 69, located in fuse and fusible link box). Verify battery positive voltage is present at terminal 3 of headlamp RH relay. 3. Check headlamp RH relay. 4. Check harness between headlamp RH relay and daytime light control unit. 5. Check harness between headlamp RH and lighting switch. 6. Check lighting switch. 7. Check the following. a. Harness between daytime light control unit and lighting switch b. Harness between lighting switch and ground 8. Check daytime light control unit.
RH low beam does not operate, but RH high beam operates.	1. Headlamp RH relay 2. Open in the RH low beam circuit 3. RH low beam ground circuit 4. Xenon bulb 5. HID control unit	1. Check headlamp RH relay. 2. Check harness between headlamp RH relay terminal 7 and headlamp RH for open circuit. 3. Check harness between headlamp RH and ground. 4. Replace the xenon bulb with other side bulb or new one. (If headlamps illuminate correctly, replace the bulb.) 5. Replace the HID control unit with other side control unit or new one. (If headlamps illuminate correctly, replace the control unit.)
High beam indicator does not work.	1. Bulb 2. Open in high beam indicator circuit	1. Check bulb in combination meter. 2. Check the following. a. Harness between daytime light control unit and combination meter for an open circuit b. Harness between high beam indicator and lighting switch
Exterior lamp battery saver control does not operate properly.	1. Door switch LH or RH circuit 2. Smart entrance control unit	1. Check the following. a. Harness between smart entrance control unit and door switch LH or RH for open or short circuit b. Door switch LH or RH ground circuit c. Door switch LH or RH 2. Check smart entrance control unit. (EL-368)
Daytime light control does not operate properly.	1. Bulb 2. Fuse check 3. Parking brake switch 4. Parking brake switch circuit 5. Daytime light control unit	1. Check bulb. 2. Check the following. a. 10A fuse [No. 28, located in fuse block (J/B)]. Verify battery positive voltage is present at terminal 3 of daytime light control unit. b. 10A fuse [No. 21, located in fuse block (J/B)]. Verify battery positive voltage is present at terminal 2 of daytime light control unit. 3. Check parking brake switch. 4. Check harness between parking brake switch and daytime light control unit. 5. Check daytime light control unit. (EL-62)

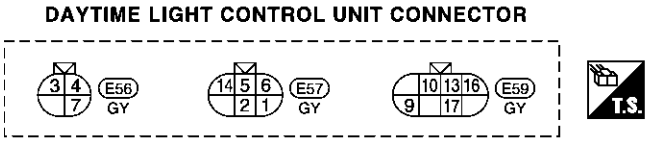

SEL576Y

DAYTIME LIGHT CONTROL UNIT INSPECTION TABLE

NHEL0265S03

Terminal No.	Wire color	Item	Condition		Voltage (Approximate values)
1	BR	Alternator	ON	When turning ignition switch to "ON"	Less than 1V
				When engine is running	Battery voltage
			OFF	When turning ignition switch to "OFF"	Less than 1V
2	BR/W	Start signal	ST	When turning ignition switch to "ST"	Battery voltage
			ON	When turning ignition switch to "ON" from "ST"	Less than 1V
			OFF	When turning ignition switch to "OFF"	Less than 1V
3	G	Power source	ON	When turning ignition switch to "ON"	Battery voltage
			ST	When turning ignition switch to "ST"	Battery voltage
			OFF	When turning ignition switch to "OFF"	Less than 1V
4	OR	Power source	ON	When turning ignition switch to "ON"	Battery voltage
			OFF	When turning ignition switch to "OFF"	Battery voltage
5	R	Power source	ON	When turning ignition switch to "ON"	Battery voltage
			OFF	When turning ignition switch to "OFF"	Battery voltage

Terminal No.	Wire color	Item	Condition		Voltage (Approximate values)
6	P	LH hi beam		When lighting switch is turned to the 2ND position with "HI BEAM" position	Battery voltage
				When releasing parking brake with engine running and turning lighting switch to "OFF" (daytime light operation) **CAUTION:** **Block wheels and ensure selector lever is in N or P position.**	Approx. half battery voltage
7	B/OR	RH hi beam		When lighting switch is turned to the 2ND position with "HI BEAM" position	Battery voltage
				When releasing parking brake with engine running and turning lighting switch to "OFF" (daytime light operation) **CAUTION:** **Block wheels and ensure selector lever is in N or P position.**	Approx. half battery voltage
9	LG	RH hi beam (ground)		When lighting switch is turned to the 2ND position with "HI BEAM" position	Less than 1V
				When releasing parking brake with engine running and turning lighting switch to "OFF" (daytime light operation) **CAUTION:** **Block wheels and ensure selector lever is in N or P position.**	Approx. half battery voltage
10	L/Y	LH hi beam (ground)		When lighting switch is turned to the 2ND position with "HI BEAM" position	Less than 1V
			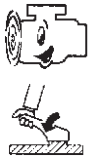	When releasing parking brake with engine running and turning lighting switch to "OFF" (daytime light operation) **CAUTION:** **Block wheels and ensure selector lever is in N or P position.**	Approx. half battery voltage
13 14	R/B L/W	Lighting switch (Hi beam)		When turning lighting switch to "HI BEAM"	Battery voltage
				When turning lighting switch to "FLASH TO PASS"	Battery voltage
16	B	Ground		—	—
17	Y	Parking brake switch		When parking brake is released	Battery voltage
				When parking brake is set	Less than 1.5V

Bulb Replacement

NHEL0266

Refer to "HEADLAMP (FOR USA)" (EL-49).

Aiming Adjustment

NHEL0267

Refer to “HEADLAMP (FOR USA)” (EL-51).

System Description

NHEL0207

The parking, license and tail lamp operation is controlled by the lighting switch which is built into the combination switch and smart entrance control unit. The battery saver system is controlled by the smart entrance control unit.

Power is supplied at all times

- to tail lamp relay terminals 1 and 3
- through 10A fuse (No. 60, located in the fuse and fusible link box), and
- to smart entrance control unit terminal 49
- through 10A fuse [No. 13, located in the fuse block (J/B)].

When ignition switch is in ON or START position, power is supplied

- to smart entrance control unit terminal 27
- through 10A fuse [No. 10, located in the fuse block (J/B)].

When the ignition switch is in the ACC or ON position, power is supplied

- to smart entrance control unit terminal 26
- through 10A fuse [No. 1, located in the fuse block (J/B)].

Ground is supplied to smart entrance control unit terminals 43 and 64.

- through body grounds M9, M25 and M87.

LIGHTING OPERATION BY LIGHTING SWITCH

NHEL0207S01

When lighting switch is in 1ST (or 2ND) position, ground is supplied

- to tail lamp relay terminal 2 from smart entrance control unit terminals 19 and 57
- through smart entrance control unit terminals 20 and 58, and
- through lighting switch and body grounds E11, E22 and E53.

Tail lamp relay is then energized and the parking, license, side marker and tail lamps illuminate.

LIGHTING OPERATION BY AUTO LIGHT CONTROL SYSTEM

NHEL0207S03

When lighting switch is in AUTO position, ground is supplied

- to tail lamp relay terminal 2 from smart entrance control unit terminals 19 and 57
- through smart entrance control unit terminal 23
- through lighting switch and body grounds E11, E22 and E53.

Tail lamp relay is then energized and the parking, license, side marker and tail lamps illuminate.

EXTERIOR LAMP BATTERY SAVER CONTROL

NHEL0207S04

While parking, license, side maker and tail lamps are turned ON by “1ST” or “2ND” of light swith, the 5 minutes timer is activated when the ignition switch is turned from ON (or START) to OFF (ACC OFF).

Continuity between terminals 19 and 20, and between terminals 57 and 58 of smart entrance control unit will be disturbed after 5 minutes, then the headlamps will be turned off.

Then the parking, license, side marker and tail lamps are turned off.

While the headlamp is turned ON by “AUTO” of lighting switch, the 5 minute timer is activated when the ignition switch signal changes from ON (or START) to OFF (ACC OFF), and either one of LH or RH front door switch ON signal is input.

The auto light delay off timer is activated as the following:

- When the door switch signal changes from ON to OFF while the timer is activated, the timer in operation is discontinued and the 45 second timer is reset.
- When the door switch signal changes from OFF to ON while the timer is activated, the timer is discontinued and the 45 second timer is reset.
- When the one of four door switch signals changes from OFF to ON while the timer is activated, the timer is discontinued and the 5 minute timer is reset.
- When all the door switch ON signals are input while the timer is activated, the timer is discontinued and the 45 second timer is reset.

Exterior lamp battery saver control mode and auto light delay off timer period can be changed by the function setting of CONSULT-II (EL-47).

When the lighting switch is turned from OFF to 1ST (or 2ND) after the parking, license, side marker and tail lamps are turned off by the battery saver control, ground is supplied.

- to smart entrance control unit terminals 20 and 58 from lighting switch terminal 11, and
- to tail lamp relay terminal 2 from smart entrance control unit terminals 19 and 57.

Then the parking, license, side marker and tail lamps illuminate again.

Schematic

=NHEL0208

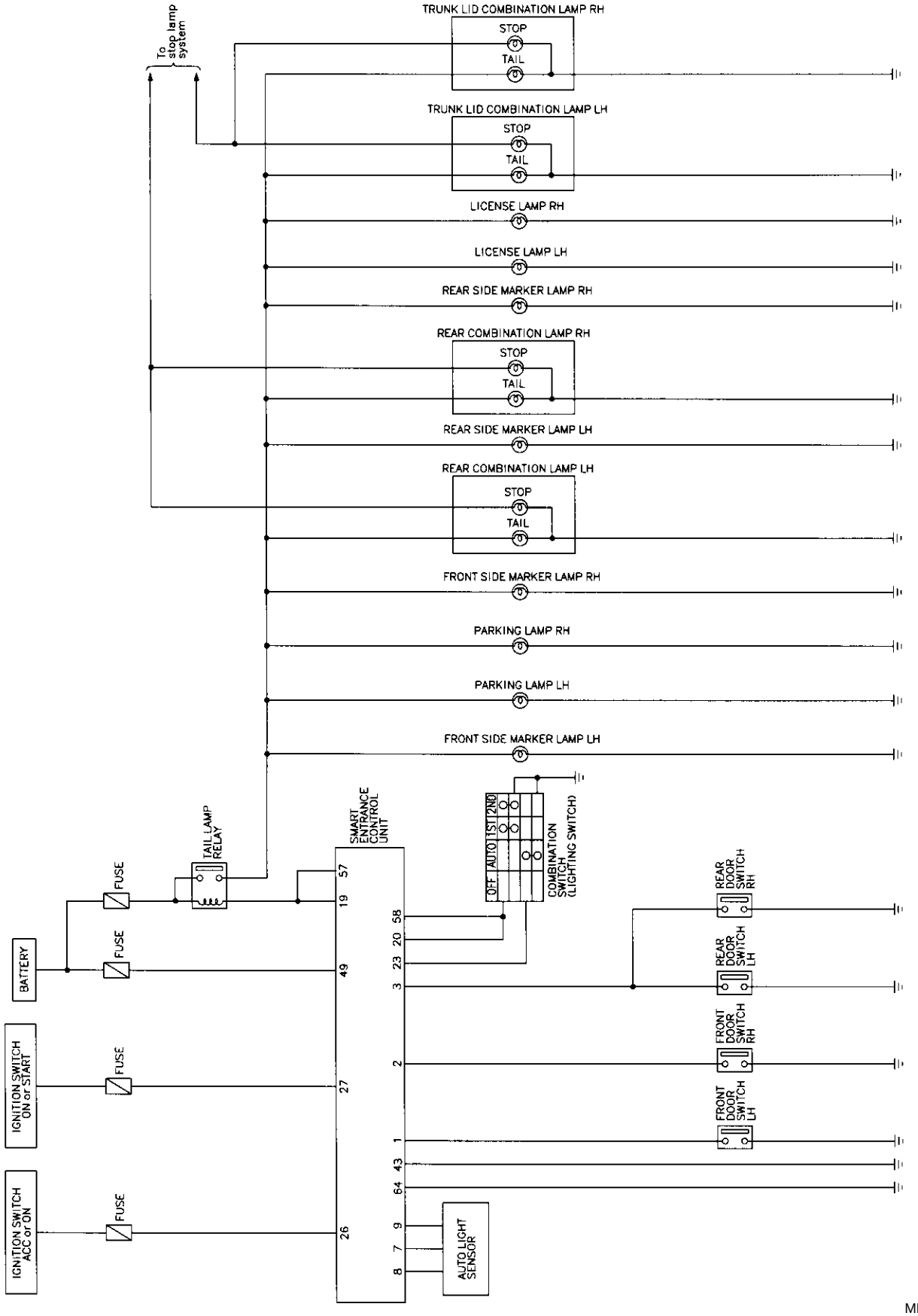

MEL582P

Wiring Diagram — TAIL/L —

NHEL0024

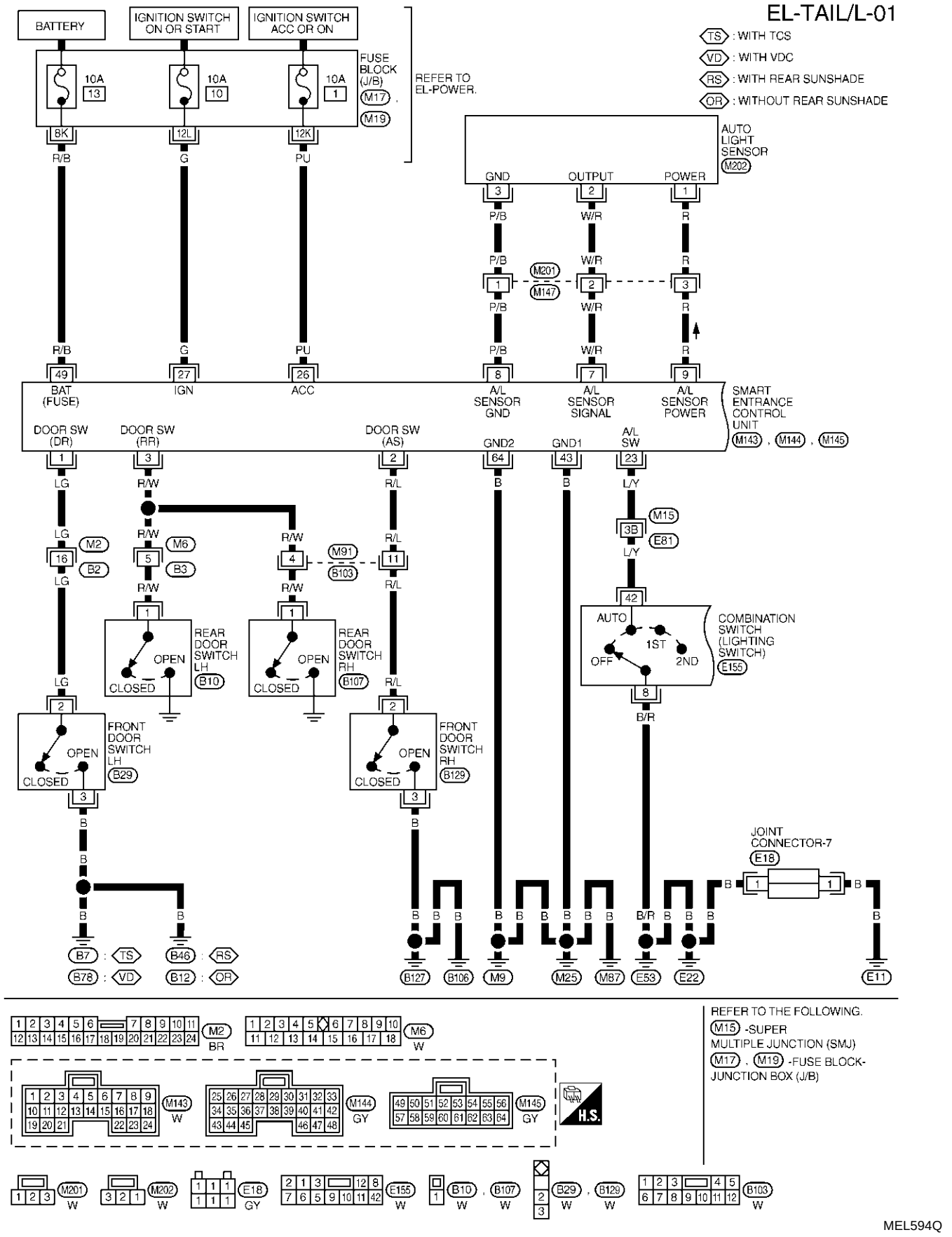

EL-TAIL/L-02

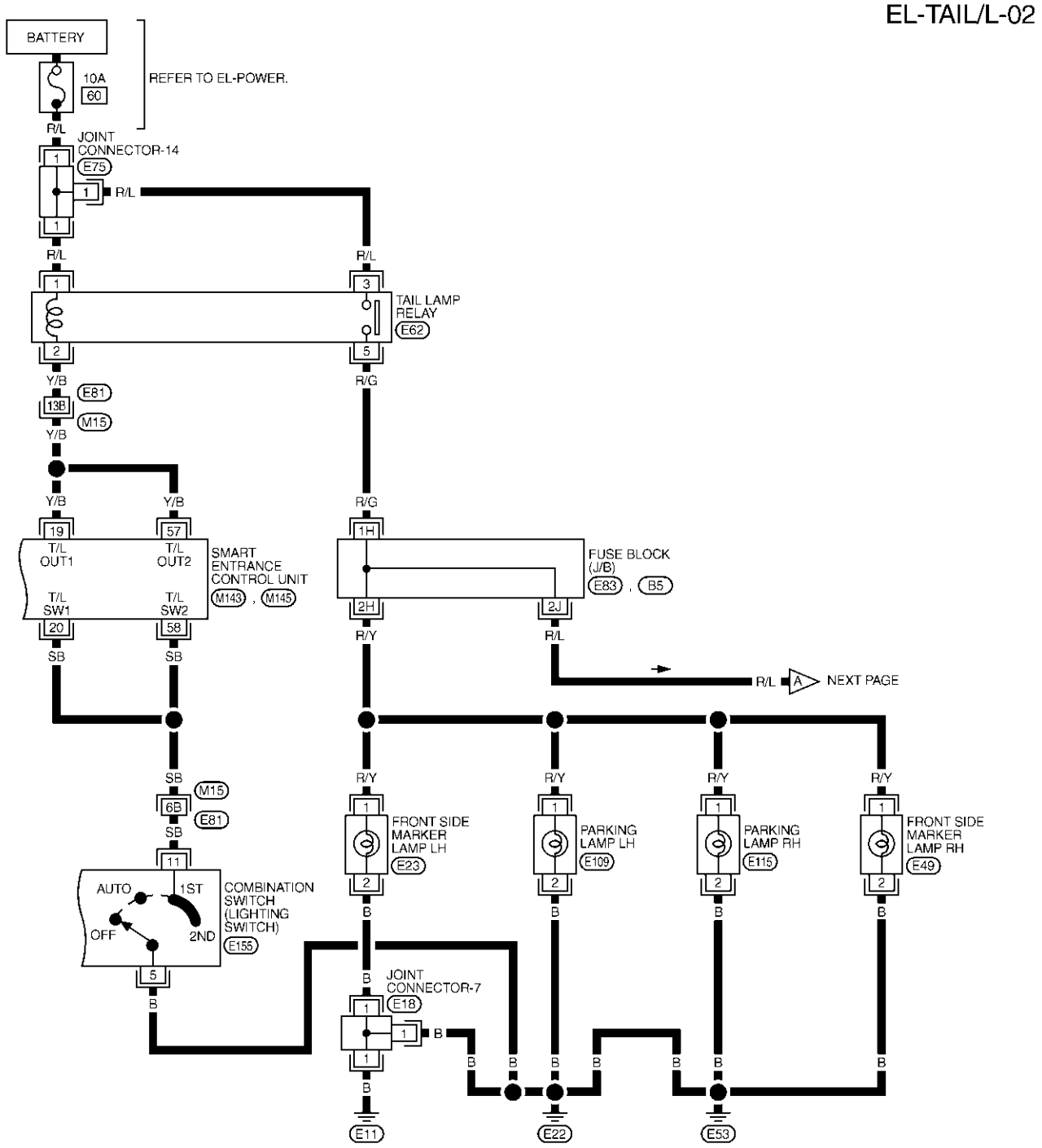

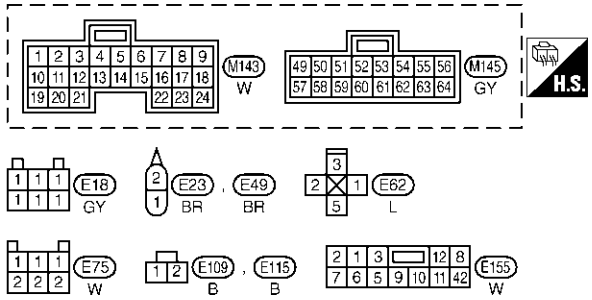

REFER TO THE FOLLOWING.
M15 -SUPER MULTIPLE JUNCTION (SMJ)
E83 , B5 -FUSE BLOCK-JUNCTION BOX (J/B)

MEL270O

EL-TAIL/L-03

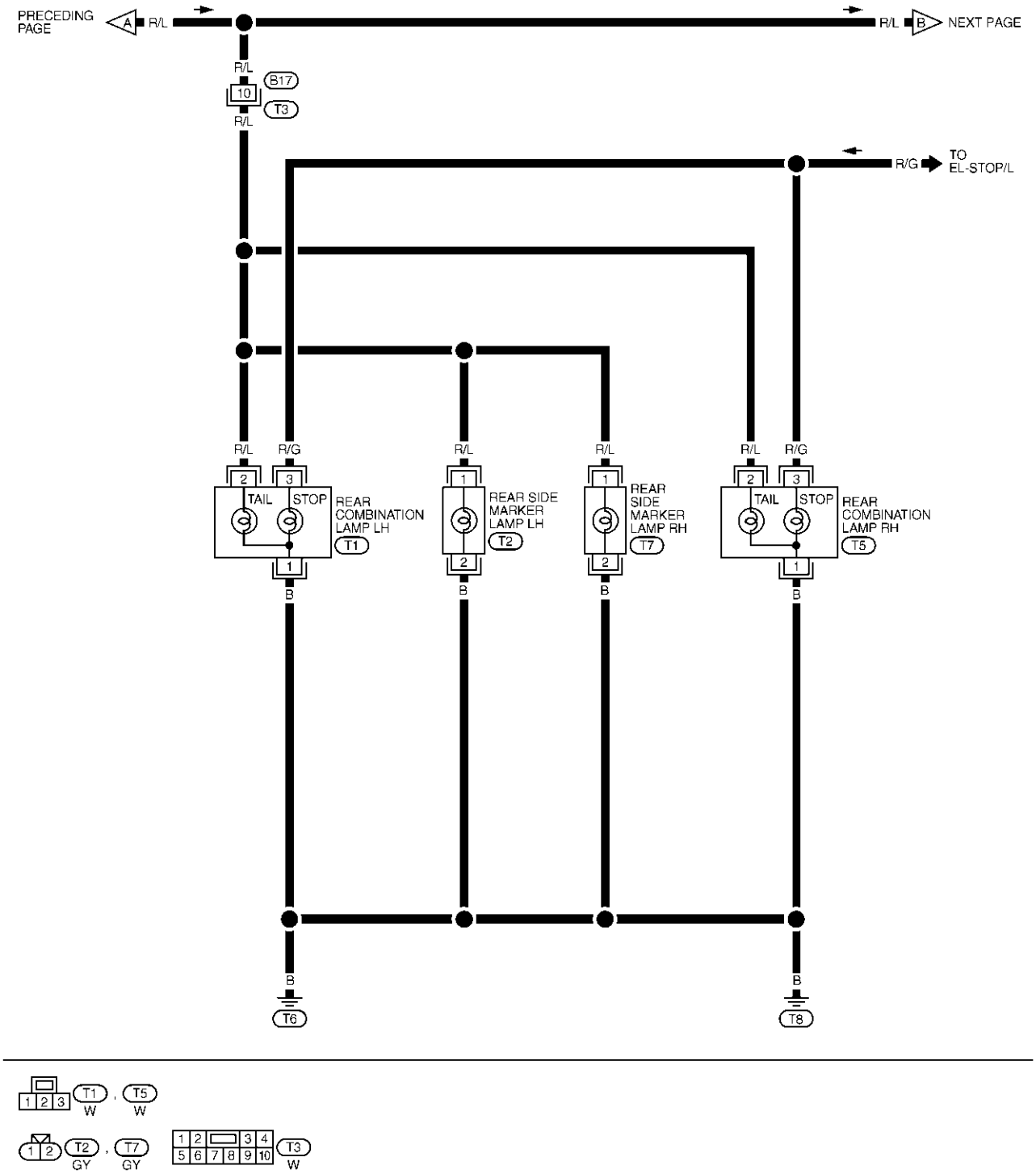

MEL271O

EL-TAIL/L-04

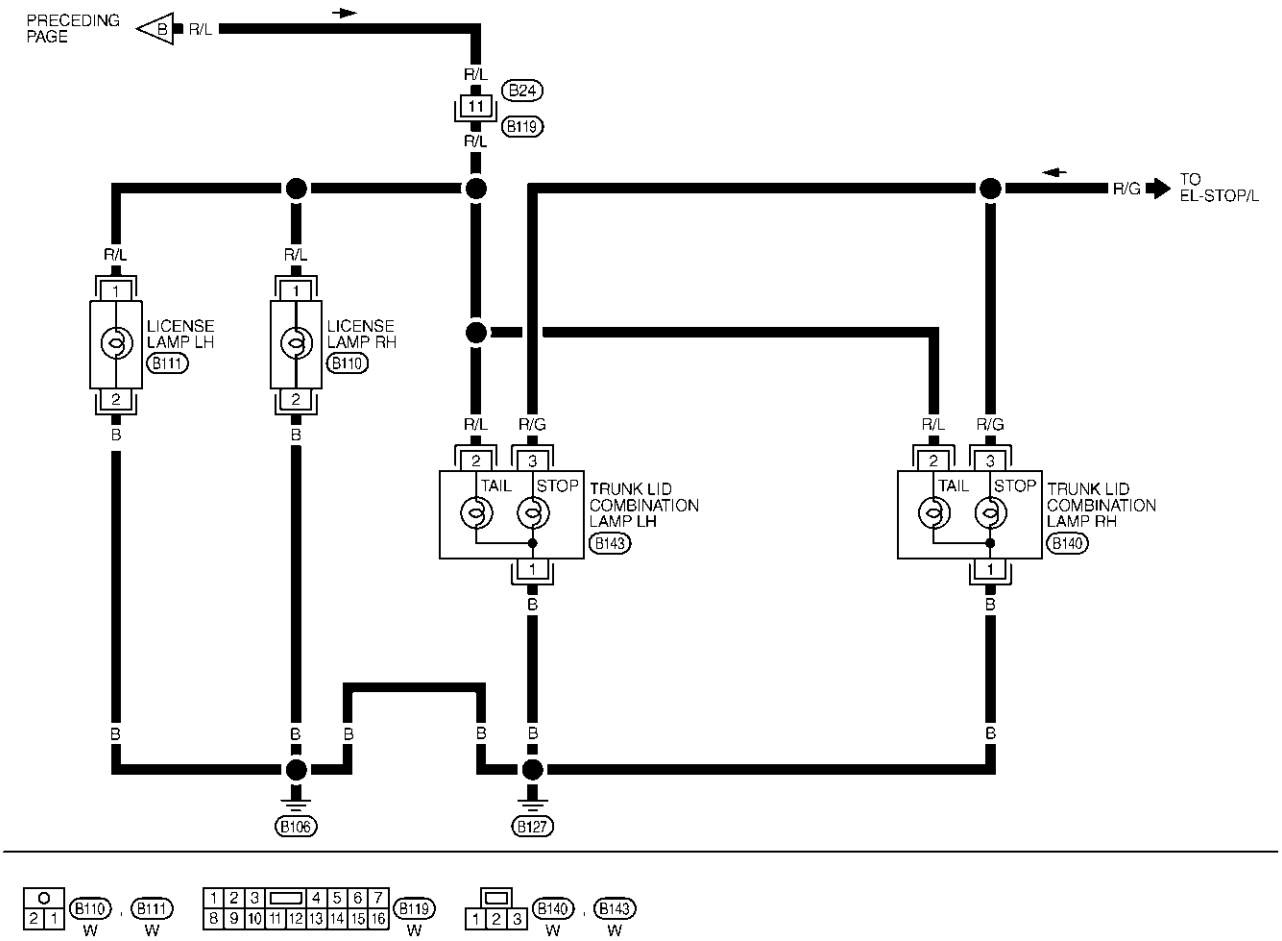

MEL272O

SMART ENTRANCE CONTROL UNIT CONNECTOR

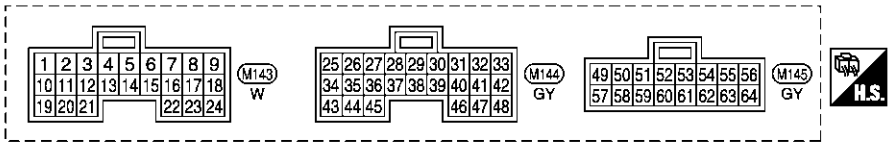

SMART ENTRANCE CONTROL UNIT TERMINALS AND REFERENCE VALUE BETWEEN EACH TERMINAL AND GROUND

TERMINAL	WIRE COLOR	ITEM	CONDITION			DATA (DC)
1	LG	DRIVER DOOR SWITCH	OFF (CLOSED) → ON (OPEN)			12V → 0V
2	R/L	PASSENGER DOOR SWITCH	OFF (CLOSED) → ON (OPEN)			5V → 0V
3	R/W	REAR DOOR SWITCH	OFF (CLOSED) → ON (OPEN)			5V → 0V
7	W/R	AUTO LIGHT SENSOR (SIGNAL)	IGNITION SWITCH "ON" POSITION	LIGHT IS APPLIED TO AUTO LIGHT SENSOR		1 TO 5V
				LIGHT IS NOT APPLIED TO AUTO LIGHT SENSOR		LESS THAN 1V
8	P/B	AUTO LIGHT SENSOR (GND)	–			–
9	R	AUTO LIGHT SENSOR (POWER)	IGNITION SWITCH (OFF → ON)			0V → 5V
19	Y/B	TAIL LAMP RELAY (Out put)	IGNITION SWITCH (WITH LIGHTING SWITCH 1ST OR 2ND)	ON OR START → OFF	MORE THAN 5 MINUTES	12V
					WITHIN 5 MINUTES	0V
				ON OR START		0V
			HEADLAMPS ILLUMINATE BY AUTO LIGHT CONTROL (OPERATE → NOT OPERATE)			LESS THAN 1V → 12V
20	SB	TAIL LAMP SWITCH	LIGHTING SWITCH (OFF OR AUTO → 1ST OR 2ND POSITION)			12V → 0V
23	L/Y	HEADLAMP SWITCH	IGNITION SWITCH "ON" POSITION	LIGHTING SWITCH (EXCEPT AUTO → AUTO POSITION)		12V → 0V
26	PU	IGNITION SWITCH (ACC)	"ACC" POSITION			12V
27	G	IGNITION SWITCH (ON)	IGNITION SWITCH IS IN "ON" POSITION			12V
43	B	GROUND	–			–
49	R/B	POWER SOURCE (FUSE)	–			12V
57	Y/B	TAIL LAMP RELAY	IGNITION SWITCH (WITH LIGHTING SWITCH 1ST OR 2ND)	ON OR START → OFF	MORE THAN 5 MINUTES	12V
					WITHIN 5 MINUTES	0V
				ON OR START		0V
			HEADLAMPS ILLUMINATE BY AUTO LIGHT CONTROL (OPERATE → NOT OPERATE)			LESS THAN 1V → 12V
58	SB	TAIL LAMP SWITCH	LIGHTING SWITCH (OFF OR AUTO → 1ST OR 2ND POSITION)			12V → 0V
64	B	GROUND	–			–

SEL546Y

NOTE:
For CONSULT-II Inspection Procedure, refer to "HEADLAMP (FOR USA)" (EL-46).
For CONSULT-II Application Items, refer to "HEADLAMP (FOR USA)" (EL-47).

Trouble Diagnoses

=NHEL0211

Symptom	Possible cause	Repair order
No lamps operate (including head-lamps).	1. 10A fuse 2. Lighting switch 3. Smart entrance control unit	1. Check 10A fuse [No. 13, located in fuse block (J/B)]. Verify battery positive voltage is present at terminal 49 of smart entrance control unit. 2. Check lighting switch. 3. Check smart entrance control unit. (EL-368)
No parking, side marker, license and tail lamps operate, but head-lamps do operate.	1. 10A fuse 2. Tail lamp relay 3. Tail lamp relay circuit 4. Lighting switch 5. Lighting switch circuit 6. Smart entrance control unit	1. Check 10A fuse (No. 60, located in fuse and fusible link box). Verify battery positive voltage is present at terminals 1 and 3 of tail lamp relay. 2. Check tail lamp relay. 3. Check harness between smart entrance control unit terminals 19 and 57 and tail lamp relay terminal 2. Check harness between tail lamp relay terminal 5 and ground. 4. Check lighting switch. 5. Check harness between lighting switch terminal 11 and smart entrance control unit terminals 20 and 58. Check harness between lighting switch terminal 5 and ground. 6. Check smart entrance control unit. (EL-368)
Exterior lamp battery saver control does not operate properly.	1. Door switch LH or RH circuit 2. Smart entrance control unit	1. Check the following. a. Harness between smart entrance control unit and door switch LH or RH for open or short circuit b. Door switch LH or RH ground circuit c. Door switch LH or RH 2. Check smart entrance control unit. (EL-368)

Wiring Diagram — STOP/L —

NHEL0025

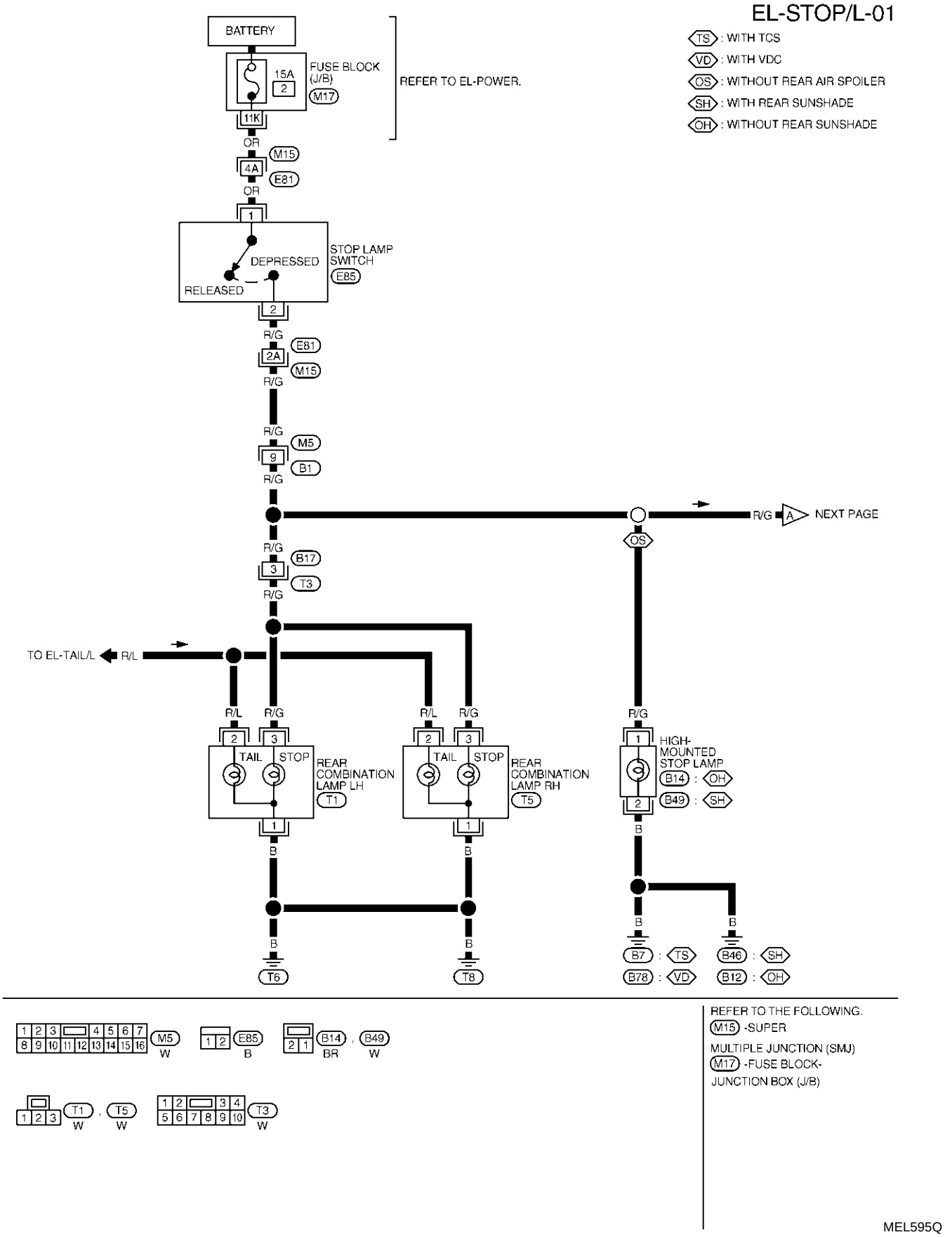

EL-STOP/L-02

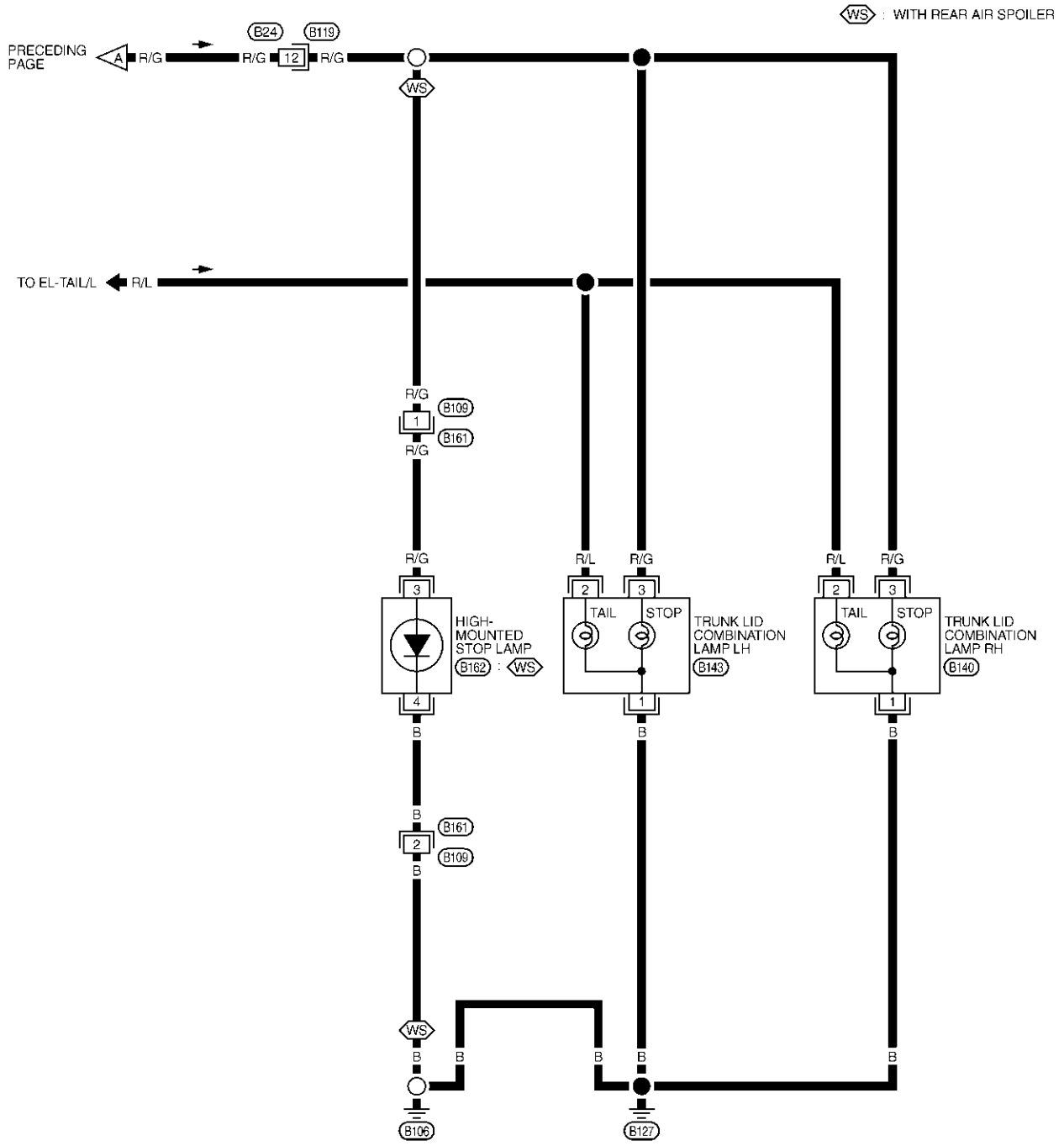

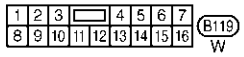

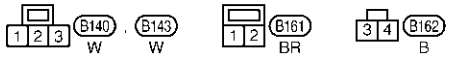

MEL273O

Wiring Diagram — BACK/L —

NHEL0026

EL-BACK/L-01

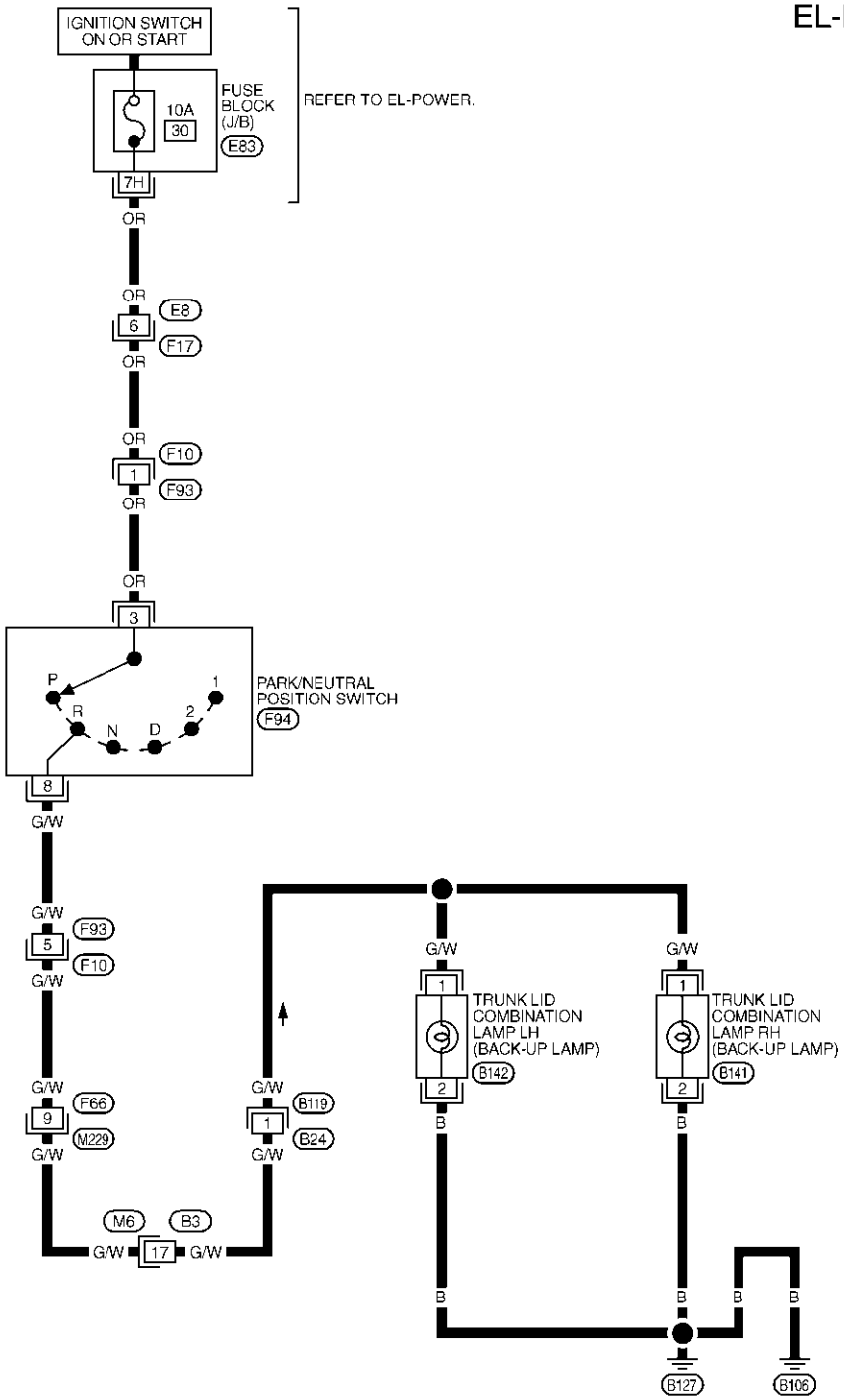

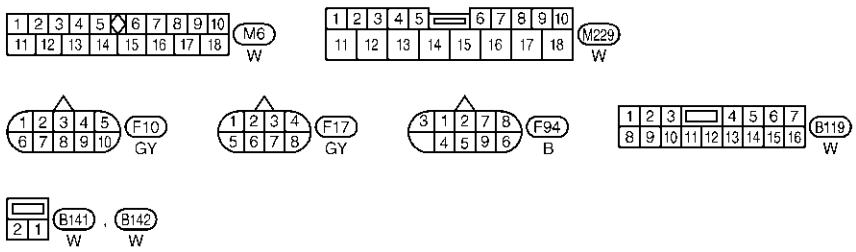

REFER TO THE FOLLOWING.
E83 -FUSE BLOCK-JUNCTION BOX (J/B)

MEL596Q

System Description

NHEL0164

OUTLINE

NHEL0164S01

Power is supplied at all times
- to headlamp LH relay terminal 3
- through 15A fuse (No. 68, located in the fuse and fusible link box),
- to headlamp LH relay terminals 1 and 6
- through 20A fuse (No. 54, located in the fuse and fusible link box), and
- to smart entrance control unit terminal 49
- through 10A fuse [No. 13, located in the fuse block (J/B)], and
- to front fog lamp relay terminal 3
- through 15A fuse [No. 6, located in the fuse block (J/B)].

When ignition switch is in ON or START position, power is supplied
- to smart entrance control unit terminal 27
- through 10A fuse [No. 10, located in the fuse block (J/B)].

When the ignition switch is in the ACC or ON position, power is supplied
- to smart entrance control unit terminal 26
- through 10A fuse [No. 1, located in the fuse block (J/B)].

Ground is supplied to smart entrance control unit terminals 43 and 64.
- through body grounds M9, M25 and M87.

When lighting switch is in 2ND position, ground is supplied
- to headlamp LH relay terminal 2 from smart entrance control unit terminal 21.
- through smart entrance control unit terminal 22, and
- through lighting switch, and body grounds E11, E22 and E53.

Headlamp LH relay is then energized.

FRONT FOG LAMP OPERATION

NHEL0164S02

The front fog lamp switch is built into the combination switch. The lighting switch must be in the 2ND position and LOW (“B”) position for front fog lamp operation.
With the front fog lamp switch in the ON position, ground is supplied
- to front fog lamp relay terminal 2
- through the front fog lamp switch, lighting switch and body grounds E11, E22 and E53.

The front fog lamp relay is energized and power is supplied
- from front fog lamp relay terminal 5
- to terminal 1 of each front fog lamp.

Ground is supplied to terminal 2 of each front fog lamp through body grounds E11, E22 and E53.
With power and ground supplied, the front fog lamps illuminate.

EXTERIOR LAMP BATTERY SAVER CONTROL

NHEL0164S04

Front fog lamps will remain on for a short while after the ignition switch is turned OFF (ACC OFF) from ON (or START).
Continuity between terminals 21 and 60 of smart entrance control unit will be disturbed after 5 minutes, then the headlamps will be turned off.
Then front fog lamps are turned to off.
Exterior lamp battery saver control mode can be changed by the function setting of CONSULT-II (EL-47).
When the lighting switch is turned from OFF to 2ND after front fog lamps are turned off by the battery saver control, ground is supplied
- to smart entrance control unit terminals 20 and 58 from lighting switch terminal 11, and then
- to headlamp LH relay terminal 2 from smart entrance control unit terminal 21
- through smart entrance control unit terminal 60 from lighting switch terminal 12.

Then the front fog lamps illuminate again.

Wiring Diagram — F/FOG —

NHEL0028

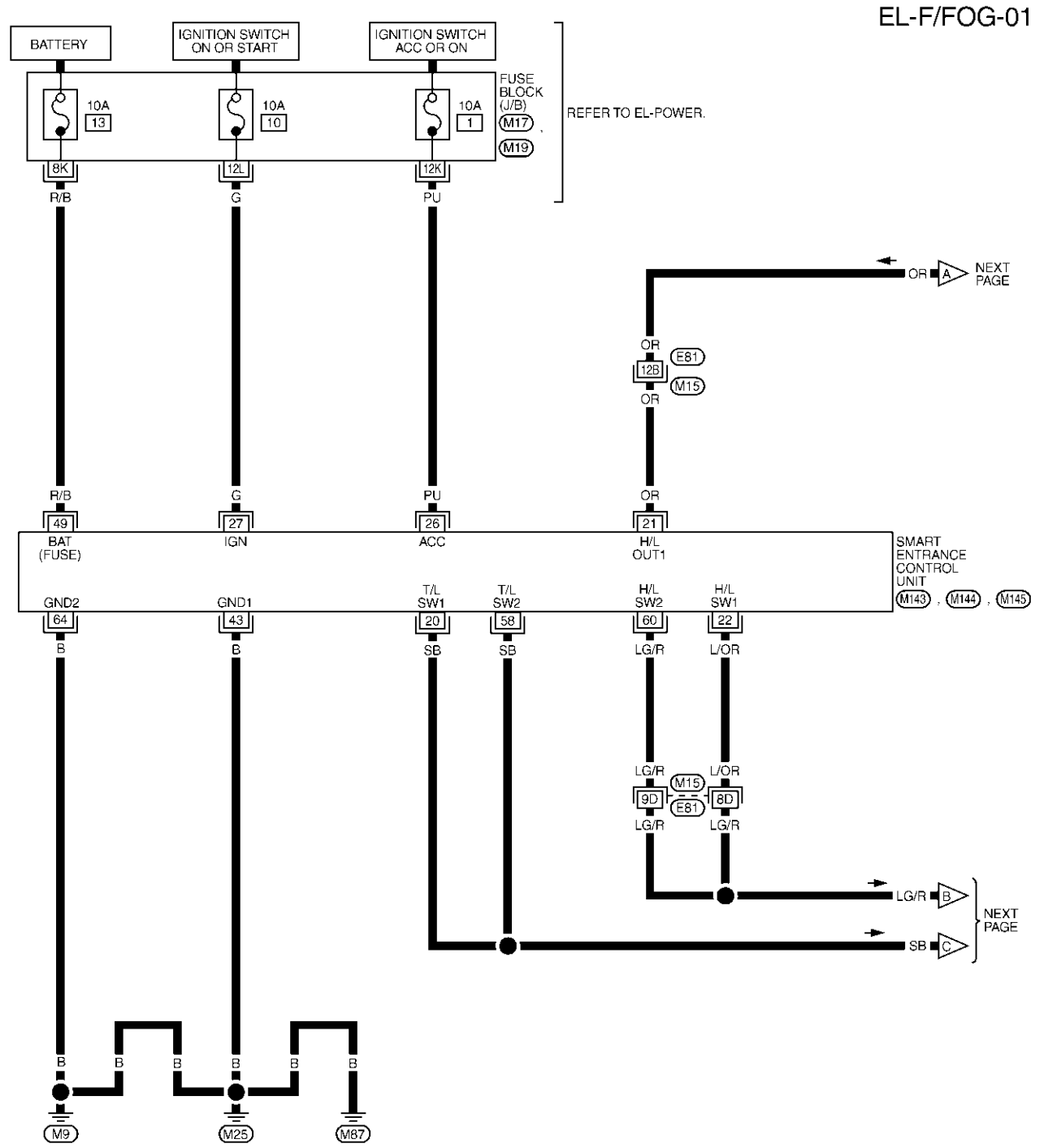

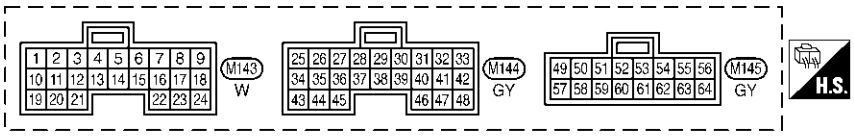

REFER TO THE FOLLOWING.
M15 -SUPER MULTIPLE JUNCTION (SMJ)
M17 , M19 -FUSE BLOCK-JUNCTION BOX (J/B)

MEL597Q

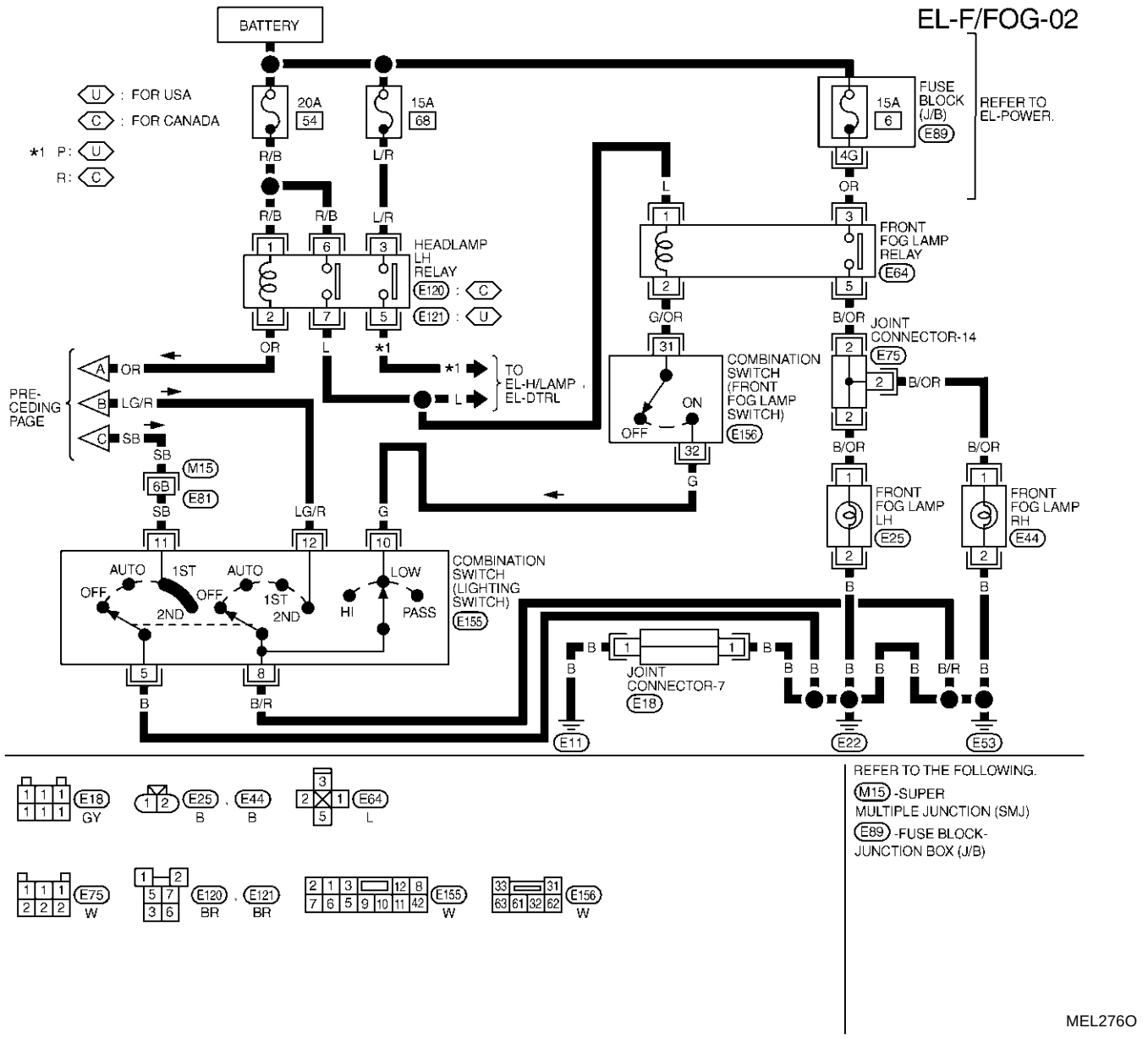
EL-F/FOG-02
BATTERY
U : FOR USA
C : FOR CANADA
*1 P: U
R: C
20A
54
15A
68
R/B
L/R
FUSE BLOCK (J/B)
E89
15A
6
REFER TO EL-POWER.
4G
OR
HEADLAMP LH RELAY
E120 : C
E121 : U
FRONT FOG LAMP RELAY
E64
G/OR
B/OR
JOINT CONNECTOR-14
E75
B/OR
COMBINATION SWITCH (FRONT FOG LAMP SWITCH)
E156
ON
OFF
PRE-CEDING PAGE
LG/R
SB
M15
6B
E81
TO EL-H/LAMP , EL-DTRL
FRONT FOG LAMP LH
E25
FRONT FOG LAMP RH
E44
COMBINATION SWITCH (LIGHTING SWITCH)
E155
AUTO
1ST
OFF
2ND
HI
LOW
PASS
JOINT CONNECTOR-7
E18
E11
E22
E53
E18 GY
E25 , E44 B
E64 L
E75 W
E120 , E121 BR
E155 W
E156 W
REFER TO THE FOLLOWING.
M15 -SUPER MULTIPLE JUNCTION (SMJ)
E89 -FUSE BLOCK-JUNCTION BOX (J/B)
MEL276O

SMART ENTRANCE CONTROL UNIT CONNECTOR

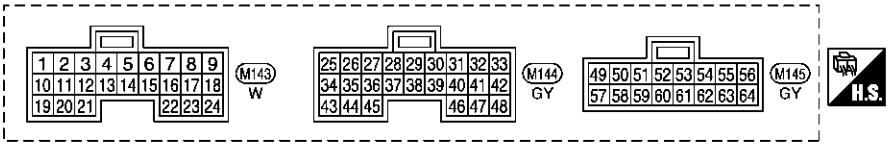

SMART ENTRANCE CONTROL UNIT TERMINALS AND REFERENCE VALUE BETWEEN EACH TERMINAL AND GROUND

TERMINAL	WIRE COLOR	ITEM	CONDITION			DATA (DC)
20	SB	TAIL LAMP SWITCH	LIGHTING SWITCH (OFF OR AUTO → 1ST OR 2ND POSITION)			12V → 0V
21	OR	HEADLAMP LH RELAY	IGNITION SWITCH (WITH LIGHTING SWITCH 2ND)	ON OR START → OFF	MORE THAN 5 MINUTES	12V
					WITHIN 5 MINUTES	0V
				ON OR START		0V
			HEADLAMPS ILLUMINATE BY AUTO LIGHT CONTROL			0V
22	L/OR	HEADLAMP SWITCH	LIGHTING SWITCH	EXCEPT PASS OR 2ND POSITION		12V
				PASS OR 2ND POSITION		0V
			HEADLAMPS ILLUMINATE BY AUTO LIGHT CONTROL (OPERATE → NOT OPERATE)			10V → 12V
26	PU	IGNITION SWITCH (ACC)	"ACC" POSITION			12V
27	G	IGNITION SWITCH (ON)	IGNITION SWITCH IS IN "ON" POSITION			12V
43	B	GROUND	–			–
49	R/B	POWER SOURCE (FUSE)	–			12V
58	SB	TAIL LAMP SWITCH	LIGHTING SWITCH (OFF OR AUTO → 1ST OR 2ND POSITION)			12V → 0V
60	LG/R	HEADLAMP SWITCH	LIGHTING SWITCH	EXCEPT PASS OR 2ND POSITION		12V
				PASS OR 2ND POSITION		0V
			HEADLAMPS ILLUMINATE BY AUTO LIGHT CONTROL (OPERATE → NOT OPERATE)			10V → 12V
64	B	GROUND	–			–

SEL551YA

NOTE:
For CONSULT-II Inspection Procedure, refer to "HEADLAMP (FOR USA)" (EL-46).
For CONSULT-II Application Items, refer to "HEADLAMP (FOR USA)" (EL-47).
Trouble Diagnoses for battery saver control, refer to "HEADLAMP (FOR USA)" (EL-47).

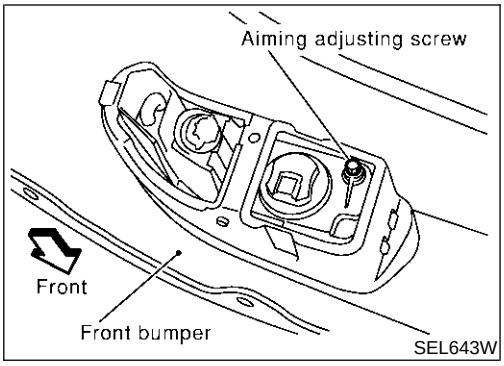

Aiming Adjustment

=NHEL0029

Before performing aiming adjustment, make sure of the following.

1) Keep all tires inflated to correct pressure.
2) Place vehicle on level ground.
3) See that vehicle is unloaded (except for full levels of coolant, engine oil and fuel, and spare tire, jack, and tools). Have the driver or equivalent weight placed in driver's seat.

Adjust aiming in the vertical direction by turning the adjusting screw.

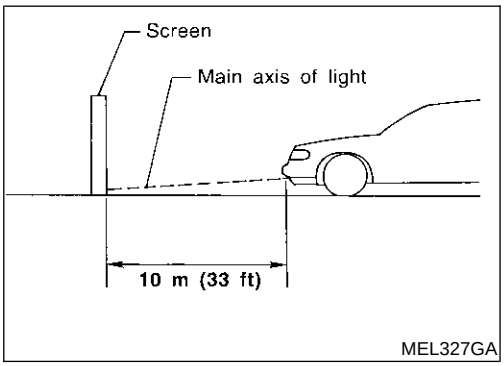

1. Set the distance between the screen and the center of the front fog lamp lens as shown at left.
2. Remove front fog lamp rim. For detail, refer to "BODY END" in BT section.
3. Turn front fog lamps ON.

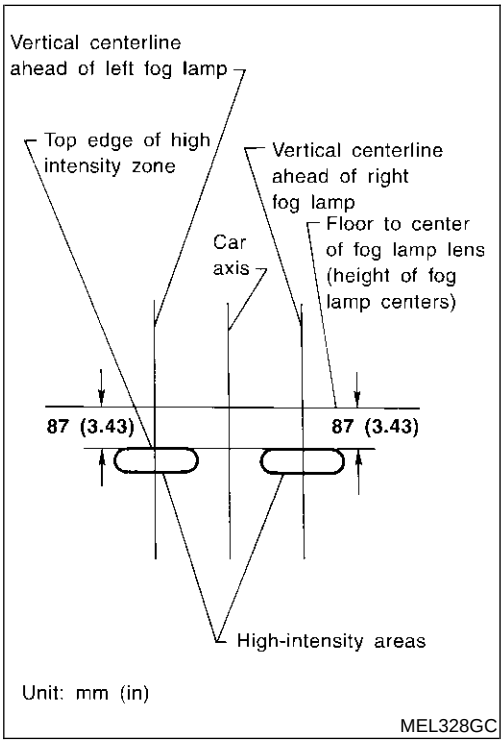

4. Adjust front fog lamps so that the top edge of the high intensity zone is 87 mm (3.43 in) below the height of the front fog lamp centers as shown at left.

- When performing adjustment, if necessary, cover the headlamps and opposite front fog lamp.

System Description

NHEL0030

TURN SIGNAL OPERATION

NHEL0030S01

With the hazard switch in the OFF position and the ignition switch in the ON or START position, power is supplied

- through 10A fuse [No. 26, located in the fuse block (J/B)]
- to hazard switch terminal 2
- through terminal 1 of the hazard switch
- to combination flasher unit terminal 1
- through terminal 3 of the combination flasher unit
- to turn signal switch terminal 1.

Ground is supplied to combination flasher unit terminal 2 through body grounds M9, M25 and M87.

LH Turn

NHEL0030S0101

When the turn signal switch is moved to the LH position, power is supplied from turn signal switch terminal 3 to

- front turn signal lamp LH terminal 1
- combination meter terminal 25
- rear combination lamp LH terminal 1.

Ground is supplied to the front turn signal lamp LH terminal 2 through body grounds E11, E22 and E53.
Ground is supplied to the rear combination lamp LH terminal 2 through body grounds T6 and T8.
Ground is supplied to combination meter terminal 30 through body grounds M9, M25 and M87.
With power and ground supplied, the combination flasher unit controls the flashing of the LH turn signal lamps.

RH Turn

NHEL0030S0102

When the turn signal switch is moved to the RH position, power is supplied from turn signal switch terminal 2 to

- front turn signal lamp RH terminal 1
- combination meter terminal 29
- rear combination lamp RH terminal 1.

Ground is supplied to the front turn signal lamp RH terminal 2 through body grounds E11, E22 and E53.
Ground is supplied to the rear combination lamp RH terminal 2 through body grounds T6 and T8.
Ground is supplied to combination meter terminal 30 through body grounds M9, M25 and M87.
With power and ground supplied, the combination flasher unit controls the flashing of the RH turn signal lamps.

HAZARD LAMP OPERATION

NHEL0030S02

Power is supplied at all times to hazard switch terminal 3 through:

- 15A fuse [No. 5, located in the fuse block (J/B)].

With the hazard switch in the ON position, power is supplied

- through terminal 1 of the hazard switch
- to combination flasher unit terminal 1
- through terminal 3 of the combination flasher unit
- to hazard switch terminal 4.

Ground is supplied to combination flasher unit terminal 2 through body grounds M9, M25 and M87.
Power is supplied through terminal 5 of the hazard switch to

- front turn signal lamp LH terminal 1
- combination meter terminal 25
- rear combination lamp LH terminal 1.

Power is supplied through terminal 6 of the hazard switch to

- front turn signal lamp RH terminal 1
- combination meter terminal 29
- rear combination lamp RH terminal 1.

Ground is supplied to terminal 2 of each front turn signal lamp through body grounds E11, E22 and E53.
Ground is supplied to terminal 2 of each rear combination lamp through body grounds T6 and T8.
Ground is supplied to combination meter terminal 30 through body grounds M9, M25 and M87.
With power and ground supplied, the combination flasher unit controls the flashing of the hazard warning lamps.

REMOTE KEYLESS ENTRY SYSTEM OPERATION

NHEL0030S03

Power is supplied at all times

- to smart entrance control unit terminal 49
- through 10A fuse [No. 13, located in the fuse block (J/B)].

Ground is supplied to smart entrance control unit terminal 43 and 64.

- through body grounds M9, M25 and M87.

Power is supplied to smart entrance control unit terminals 47 and 48, when the multi-remote control system is triggered.
Refer to "REMOTE KEYLESS ENTRY SYSTEM", EL-297.
When smart entrance control unit receives LOCK or UNLOCK signal from keyfob with all doors closed, power is supplied

- through smart entrance control unit terminal 47
- to front turn signal lamp LH terminal 1 and
- to combination meter terminal 25 and
- to rear combination lamp LH terminal 1, and
- through smart entrance control unit terminal 48
- to front turn signal lamp RH terminal 1 and
- to combination meter terminal 29 and
- to rear combination lamp RH terminal 1

Ground is supplied to terminal 2 of each front turn signal lamp through body grounds E11, E22 and E53.
Ground is supplied to terminal 2 of each rear combination lamp through body grounds T6 and T8.
Ground is supplied to combination meter terminal 30 through body grounds M9, M25 and M87.
With power and ground supplied, the smart entrance control unit controls the flashing of the hazard warning lamps.

Wiring Diagram — TURN —

NHEL0032

EL-TURN-01

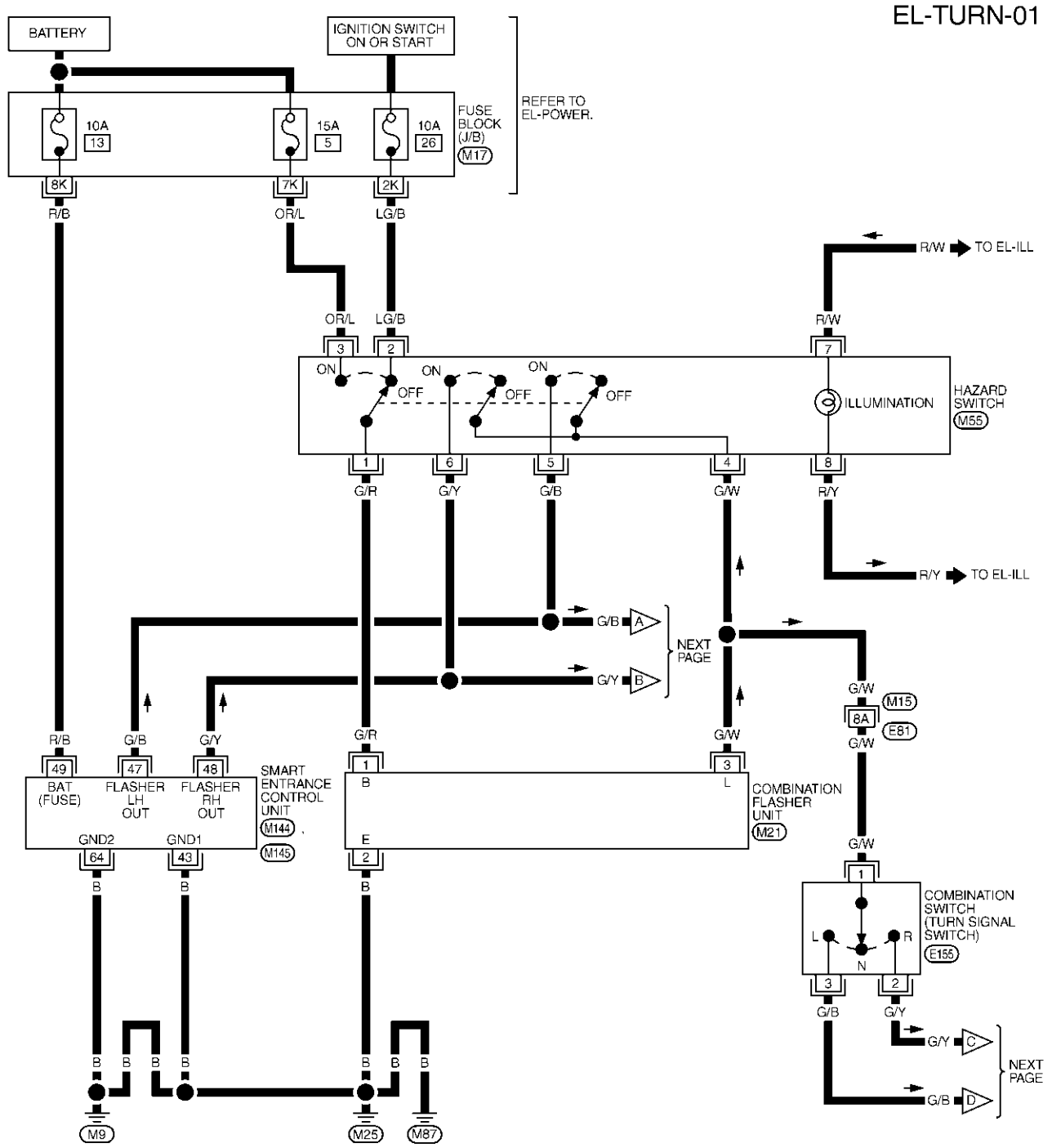

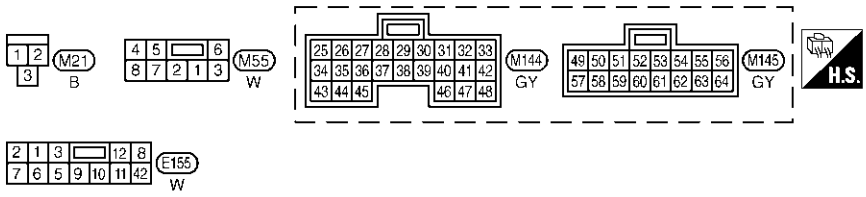

REFER TO THE FOLLOWING.
M15 -SUPER MULTIPLE JUNCTION (SMJ)
M17 -FUSE BLOCK-JUNCTION BOX (J/B)

MEL598Q

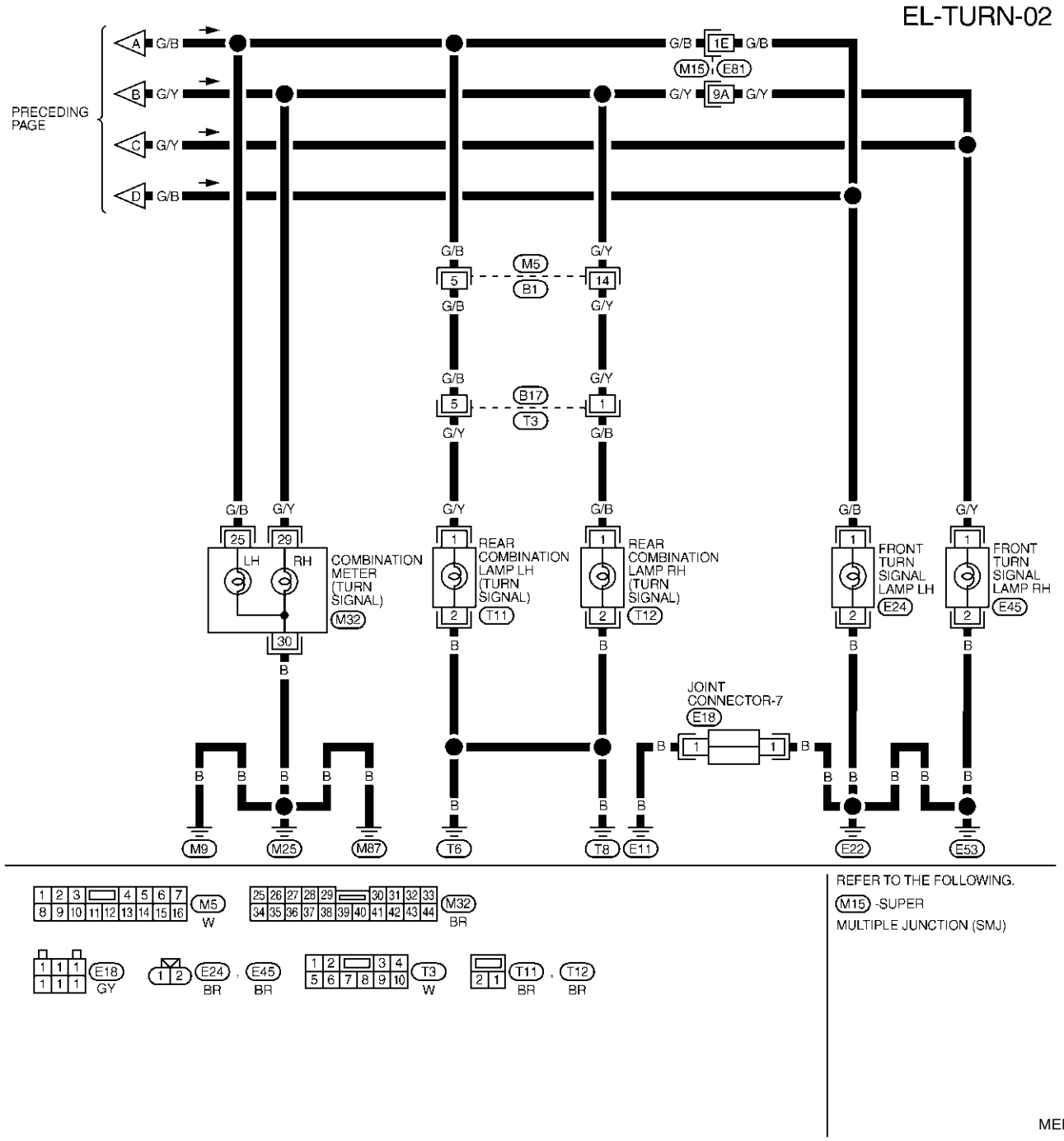

SMART ENTRANCE CONTROL UNIT TERMINALS AND REFERENCE VALUE BETWEEN EACH TERMINAL AND GROUND

TERMINAL	WIRE COLOR	ITEM	CONDITION	DATA (DC)
43	B	GROUND	–	–
47	G/B	LH TURN SIGNAL LAMP	WHEN DOOR LOCK OR UNLOCK IS OPERATED USING KEYFOB (ON → OFF)	12V → 0V
48	G/Y	RH TURN SIGNAL LAMP	WHEN DOOR LOCK OR UNLOCK IS OPERATED USING KEYFOB (ON → OFF)	12V → 0V
49	R/B	POWER SOURCE (FUSE)	–	12V
64	B	GROUND	–	–

SEL392YB

Trouble Diagnoses

NHEL0033

Symptom	Possible cause	Repair order
Turn signal and hazard warning lamps do not operate.	1. Hazard switch 2. Combination flasher unit 3. Open in combination flasher unit circuit	1. Check hazard switch. 2. Refer to combination flasher unit check. 3. Check wiring to combination flasher unit for open circuit.
Turn signal lamps do not operate but hazard warning lamps operate.	1. 10A fuse 2. Hazard switch 3. Turn signal switch 4. Open in turn signal switch circuit	1. Check 10A fuse [No. 26, located in fuse block (J/B)]. Turn ignition switch ON and verify battery positive voltage is present at terminal 2 of hazard switch. 2. Check hazard switch. 3. Check turn signal switch. 4. Check harness between combination flasher unit terminal 3 and turn signal switch terminal 1 for open circuit.
Hazard warning lamps do not operate but turn signal lamps operate.	1. 15A fuse 2. Hazard switch 3. Open in hazard switch circuit	1. Check 15A fuse [No. 5, located in fuse block (J/B)]. Verify battery positive voltage is present at terminal 3 of hazard switch. 2. Check hazard switch. 3. Check harness between combination flasher unit terminal 3 and hazard switch terminal 4 for open circuit.
Front turn signal lamp LH or RH does not operate.	1. Bulb 2. Grounds E11, E22 and E53 3. Front turn signal lamp circuit	1. Check bulb. 2. Check grounds E11, E22 and E53. 3. Check harness between combination switch and front turn signal lamp.
Rear turn signal lamp LH or RH does not operate.	1. Bulb 2. Grounds T6 and T8 3. Rear turn signal lamp circuit.	1. Check bulb. 2. Check grounds T6 and T8. 3. Check harness between combination switch and rear turn signal lamp.
LH and RH turn indicators do not operate.	1. Ground	1. Check grounds M9, M25 and M87.
LH or RH turn indicator does not operate.	1. Bulb 2. Turn indicator circuit	1. Check bulb in combination meter. 2. Check harness between hazard switch and combination meter.

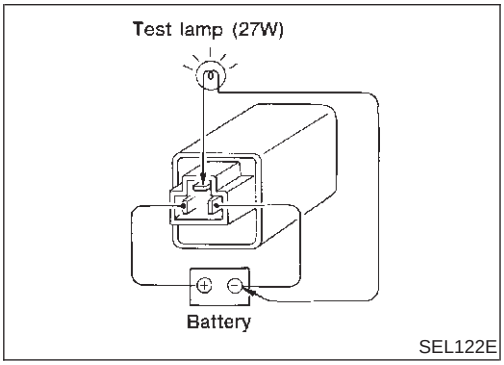

Electrical Components Inspection

NHEL0034

COMBINATION FLASHER UNIT CHECK

NHEL0034S01

- Before checking, ensure that bulbs meet specifications.
- Connect a battery and test lamp to the combination flasher unit, as shown. Combination flasher unit is properly functioning if it blinks when power is supplied to the circuit.

System Description

NHEL0268

The cornering lamp operation is controlled by the lighting switch which is built into the combination switch and smart entrance control unit. The battery saver system is controlled by the smart entrance control unit.
Power is supplied at all times

- to tail lamp relay terminals 1 and 3
- through 10A fuse (No. 60, located in the fuse and fusible link box), and
- to smart entrance control unit terminal 49
- through 10A fuse [No. 13, located in the fuse block (J/B)].

When ignition switch is in ON or START position, power is supplied

- to smart entrance control unit terminal 27
- through 10A fuse [No. 10, located in the fuse block (J/B)].

When the ignition switch is in the ACC or ON position, power is supplied

- to smart entrance control unit terminal 26
- through 10A fuse [No. 1, located in the fuse block (J/B)].

Ground is supplied to smart entrance control unit terminals 43 and 64.

LIGHTING OPERATION BY LIGHTING SWITCH

NHEL0268S01

When lighting switch is 1ST (or 2ND) position, ground is supplied

- to tail lamp relay terminal 2 from smart entrance control unit terminals 19 and 57
- through smart entrance control unit terminals 20 and 58, and
- through lighting switch and body grounds E11, E22 and E53.

Tail lamp relay is then energized.
The lighting switch must be in the 1ST or 2ND position for the cornering lamps to operate.
With the ignition switch in the ON or START position, power is supplied to cornering lamp relay terminal 5

- through 10A fuse [No. 26, located in the fuse block (J/B)].

Power is supplied to cornering lamp relay terminal 1

- through tail lamp relay terminal 5, when the lighting switch in the 1st or 2ND position.

Ground is supplied to cornering lamp relay terminal 2 through body grounds E11, E22 and E53.
With power and ground supplied, the cornering lamp relay is energized.
Power is supplied

- from terminal 3 of the cornering lamp relay
- to cornering lamp switch terminal 61.

RH turn
When the turn signal lever is moved to the RH position, power is supplied

- from terminal 61 of the cornering lamp switch
- through terminal 62 of the cornering lamp switch
- to cornering lamp RH terminal 1.

Ground is supplied to terminal 2 of cornering lamp RH through body grounds E11, E22 and E53.
The RH cornering lamp illuminates until the turn signal lever returns to NEUTRAL position.
LH turn
When the turn signal lever is moved to the LH position, power is supplied

- from terminal 61 of the cornering lamp switch
- through terminal 63 of the cornering lamp switch
- to cornering lamp LH terminal 1.

Ground is supplied to terminal 2 of cornering lamp LH through body grounds E11, E22 and E53.
The LH cornering lamp illuminates until the turn signal lever returns to NEUTRAL position.

EXTERIOR LAMP BATTERY SAVER CONTROL

NHEL0268S02

Cornering lamp will remain on for a short while after the ignition switch is turned ON (or START) from OFF (or ACC).
Continuity between terminals 19 and 20, and between terminals 57 and 58 of smart entrance control unit will be disturbed after 5 minutes, then the headlamps will be turned off.
Then cornering lamp is turned off.
While the headlamp is turned ON by “AUTO” of light switch, the 5 minute timer is activated when the ignition

switch signal changes from ON (or START) to OFF (ACC OFF), and either one of front door switch LH or RH ON signal is input.
The auto light delay off timer is activated as the following:

- When the door switch signal changes from ON to OFF while the timer is activated, the timer in operation is discontinued and the 45 second timer is reset.
- When the door switch signal changes from OFF to ON while the timer is activated, the timer is discontinued and the 45 second timer is reset.
- When the one of four door switch signals changes from OFF to ON while the timer is activated, the timer is discontinued and the 5 minute timer is reset.
- When all the door switch ON signals are input while the timer is activated, the timer is discontinued and the 45 second timer is reset.

Exterior lamp battery saver control mode and auto light delay off timer period can be changed by the function setting of CONSULT-II (EL-47).
When the lighting switch is turned from OFF to 1ST (or 2ND) after cornering lamp is turned off by the battery saver control, ground is supplied

- to smart entrance control unit terminals 20 and 58 from lighting switch terminal 11, and
- to tail lamp relay terminal 2 from smart entrance control unit terminals 19 and 57.

Then cornering lamp illuminates again.

Wiring Diagram — CORNER —

NHEL0270

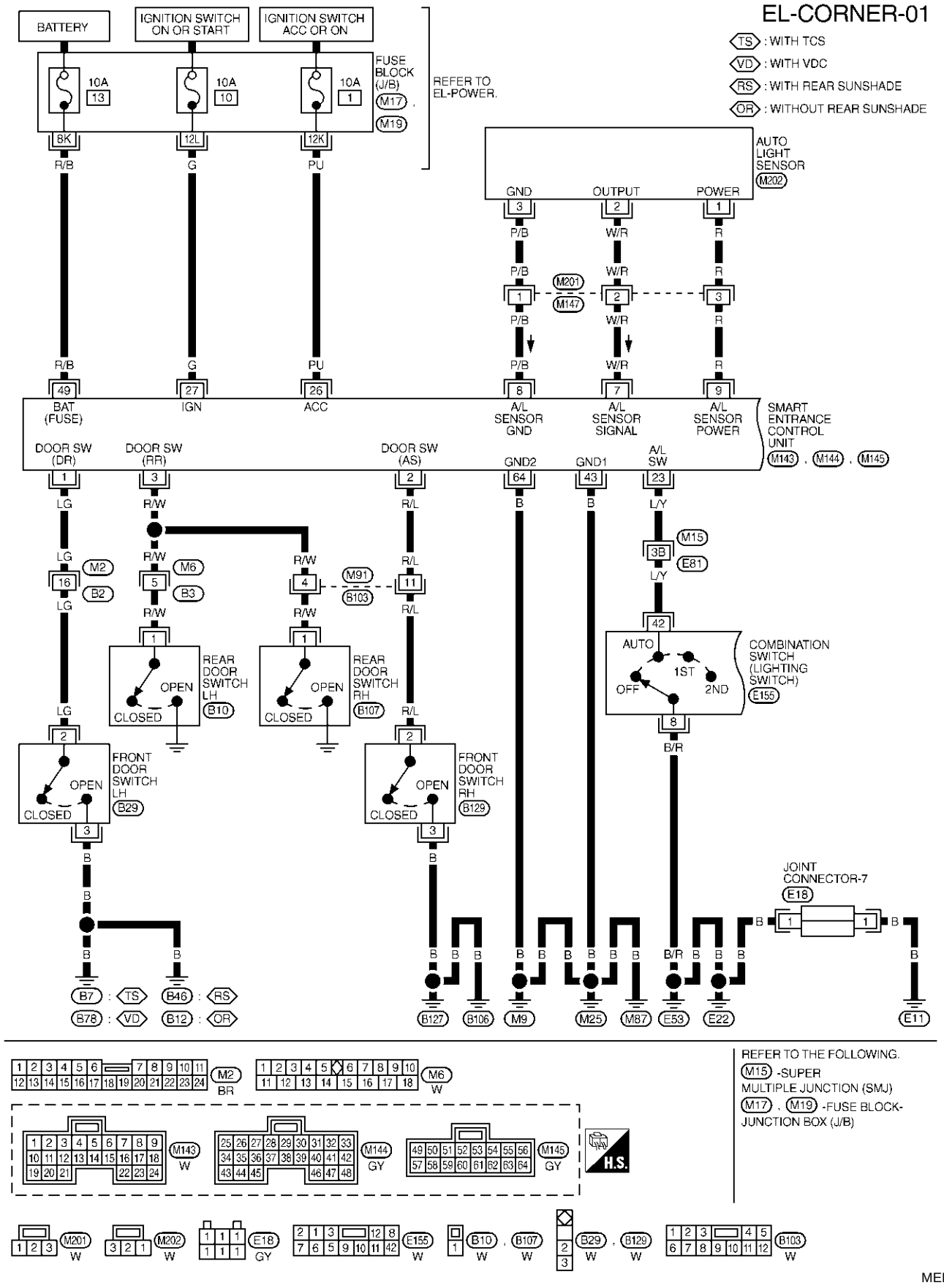

MEL599Q

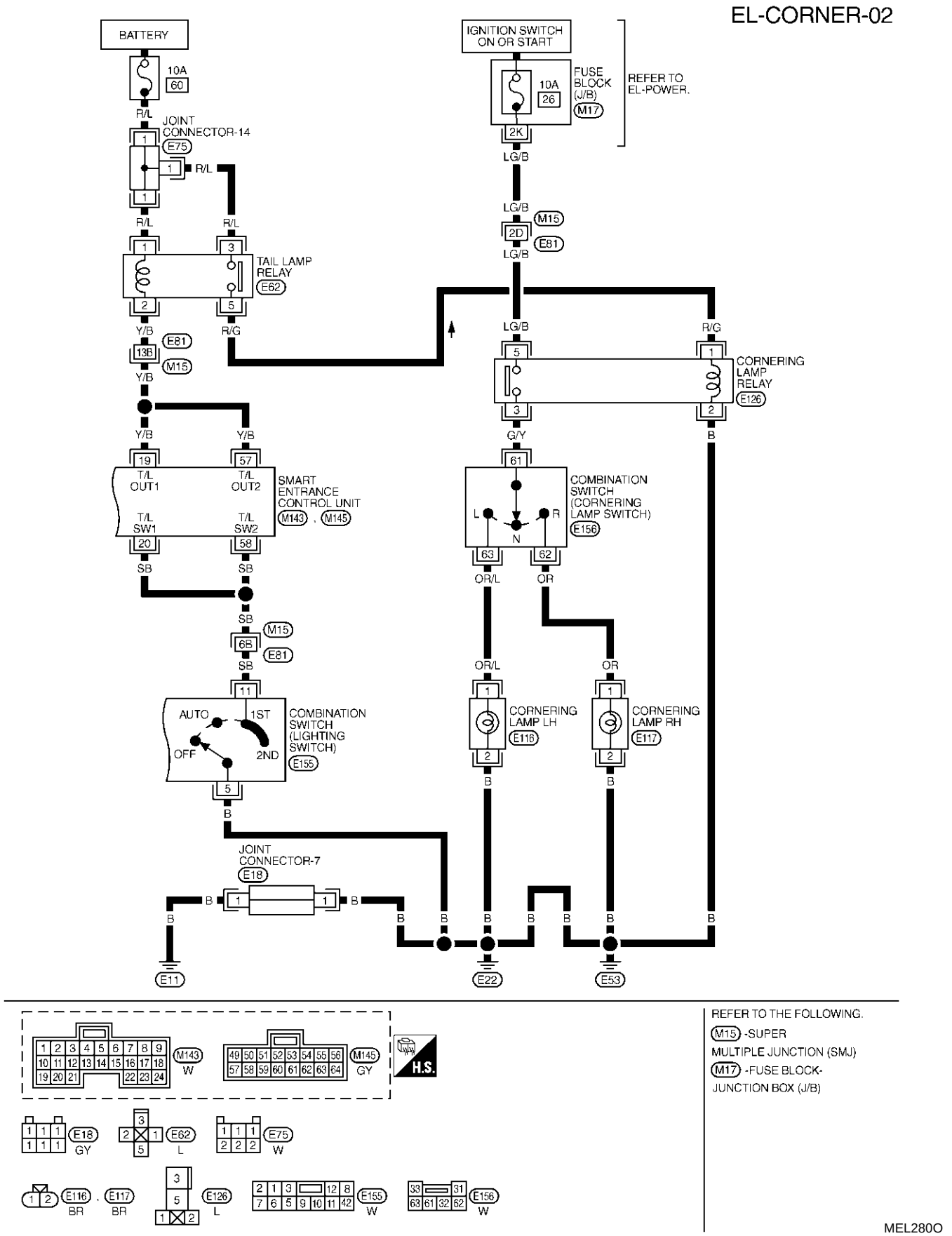
EL-CORNER-02
BATTERY
10A
60
R/L
JOINT CONNECTOR-14
E75
IGNITION SWITCH ON OR START
FUSE BLOCK (J/B)
M17
10A
26
2K
REFER TO EL-POWER.
LG/B
M15
2D
E81
TAIL LAMP RELAY
E62
Y/B
R/G
13B
CORNERING LAMP RELAY
E126
G/Y
B
SMART ENTRANCE CONTROL UNIT
M143
M145
T/L OUT1
T/L OUT2
T/L SW1
T/L SW2
19
57
20
58
SB
COMBINATION SWITCH (CORNERING LAMP SWITCH)
E156
61
63
62
OR/L
OR
6B
COMBINATION SWITCH (LIGHTING SWITCH)
E155
AUTO
1ST
2ND
OFF
11
5
CORNERING LAMP LH
E116
CORNERING LAMP RH
E117
JOINT CONNECTOR-7
E18
E11
E22
E53
M143
W
M145
GY
H.S.
E18
GY
E62
L
E75
W
E116
BR
E117
BR
E126
L
E155
W
E156
W
REFER TO THE FOLLOWING.
M15 -SUPER MULTIPLE JUNCTION (SMJ)
M17 -FUSE BLOCK-JUNCTION BOX (J/B)
MEL280O

SMART ENTRANCE CONTROL UNIT CONNECTOR

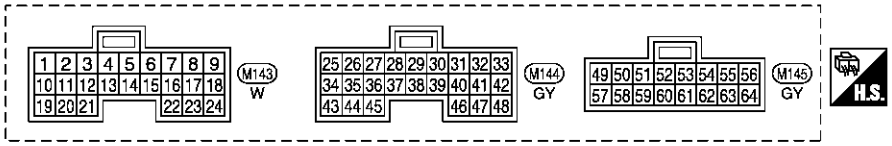

SMART ENTRANCE CONTROL UNIT TERMINALS AND REFERENCE VALUE BETWEEN EACH TERMINAL AND GROUND

TERMINAL	WIRE COLOR	ITEM	CONDITION			DATA (DC)
1	LG	DRIVER DOOR SWITCH	OFF (CLOSED) → ON (OPEN)			12V → 0V
2	R/L	PASSENGER DOOR SWITCH	OFF (CLOSED) → ON (OPEN)			5V → 0V
3	R/W	REAR DOOR SWITCH	OFF (CLOSED) → ON (OPEN)			5V → 0V
7	W/R	AUTO LIGHT SENSOR (SIGNAL)	IGNITION SWITCH ON	LIGHT IS APPLIED TO AUTO LIGHT SENSOR.		1 to 5V
				LIGHT IS NOT APPLIED TO AUTO LIGHT SENSOR.		LESS THAN 1V
8	P/B	AUTO LIGHT SENSOR (GND)	–			–
9	R	AUTO LIGHT SENSOR (POWER)	IGNITION SWITCH (OFF → ON)			0V → 5V
19	Y/B	TAIL LAMP RELAY (OUTPUT)	IGNITION SWITCH (WITH LIGHTING SWITCH 1ST OR 2ND)	ON OR START → OFF	MORE THAN 5 MINUTES	12V
					WITHIN 5 MINUTES	0V
				ON OR START		0V
			HEADLAMPS ILLUMINATE BY AUTO LIGHT CONTROL.			LESS THAN 1V→12V
20	SB	TAIL LAMP SWITCH	LIGHTING SWITCH (OFF OR AUTO → 1ST OR 2ND POSITION)			12V → 0V
23	L/Y	HEADLAMP SWITCH	LIGHTING SWITCH (EXCEPT AUTO → AUTO POSITION)			12V → 0V
26	PU	IGNITION SWITCH (ACC)	"ACC" POSITION			12V
27	G	IGNITION SWITCH (ON)	IGNITION SWITCH IS IN "ON" POSITION			12V
43	B	GROUND	–			–
49	R/B	POWER SOURCE (FUSE)	–			12V
57	Y/B	TAIL LAMP RELAY	IGNITION SWITCH (WITH LIGHTING SWITCH 1ST OR 2ND)	ON OR START → OFF	MORE THAN 5 MINUTES	12V
					WITHIN 5 MINUTES	0V
				ON OR START		0V
			HEADLAMPS ILLUMINATE BY AUTO LIGHT CONTROL.			LESS THAN 1V→12V
58	SB	TAIL LAMP SWITCH	LIGHTING SWITCH (OFF OR AUTO → 1ST OR 2ND POSITION)			12V → 0V
64	B	GROUND	–			–

SEL898Y

NOTE:
For CONSULT-II Inspection Procedure, refer to "HEADLAMP (FOR USA)" (EL-46).
For CONSULT-II Application Items, refer to "HEADLAMP (FOR USA)" (EL-47).
Trouble Diagnoses for exterior lamp battery saver control, refer to "HEADLAMP (FOR USA)" (EL-47).

System Description

NHEL0035

The illumination lamp operation is controlled by the lighting switch which is built into the combination switch and smart entrance control unit. The battery saver system is controlled by smart entrance control unit.
Power is supplied at all times

- to tail lamp relay terminals 1 and 3
- through 10A fuse (No. 60, located in the fuse and fusible link box), and
- to smart entrance control unit terminal 49
- through 10A fuse [No. 13, located in the fuse block (J/B)].

When ignition switch is in ON or START position, power is supplied

- to smart entrance control unit terminal 27
- through 10A fuse [No. 10, located in the fuse block (J/B)], and

When the ignition switch is in ACC or ON position, power is supplied

- to smart entrance control unit terminal 26
- through 10A fuse [No. 1, located in the fuse block (J/B)].

Ground is supplied to smart entrance control unit terminals 43 and 64.

- through body grounds M9, M25 and M87.

LIGHTING OPERATION BY LIGHTING SWITCH

NHEL0035S01

When lighting switch is 1ST (or 2ND) position, ground is supplied

- to tail lamp relay terminal 2 from smart entrance control unit terminals 19 and 57
- through smart entrance control unit terminals 20 and 58, and
- through lighting switch and body grounds E11, E22 and E53.

Tail lamp relay is then energized and illumination lamps illuminate.
The lighting switch must be in the 1ST or 2ND position for illumination.
The illumination control switch that controls the amount of current to the illumination system. As the amount of current increases, the illumination becomes brighter.
The ground for all of the components except for door mirror remote control switch, clock and grove box lamp, ashtray are controlled through terminals 2 and 3 of the illumination control switch and body grounds M9, M25 and M87.

EXTERIOR LAMP BATTERY SAVER CONTROL

NHEL0035S02

Illumination lamps will remain on for a short while after the ignition switch is turned ON (or START) from OFF (or ACC).
Continuity between terminals 19 and 20, and between terminals 57 and 58 of smart entrance control unit will be disturbed after 45 seconds, then the headlamps will be turned off.
Then illumination lamps are turned off.
Exterior lamp battery saver control mode can be changed by the function setting of CONSULT-II (EL-47).
When the lighting switch is turned from OFF to 1ST (or 2ND) after illumination lamps are turned off by the battery saver control, ground is supplied

- to smart entrance control unit terminals 20 and 58 from lighting switch terminal 11, and
- to tail lamp relay terminal 2 from smart entrance control unit terminals 19 and 57.

Then illumination lamps illuminate again.

Schematic

NHEL0036

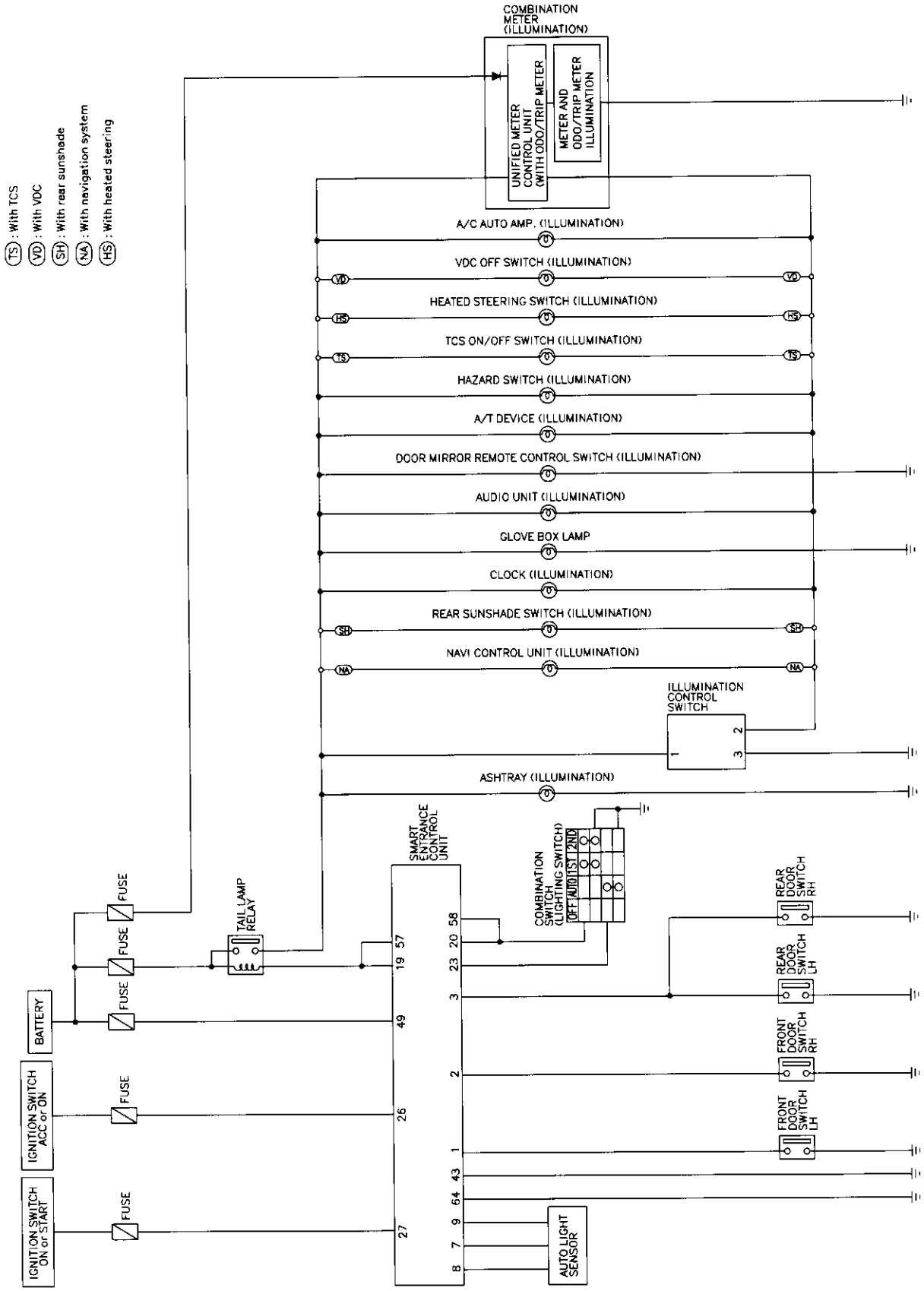

MEL281O

Wiring Diagram — ILL —

NHEL0037

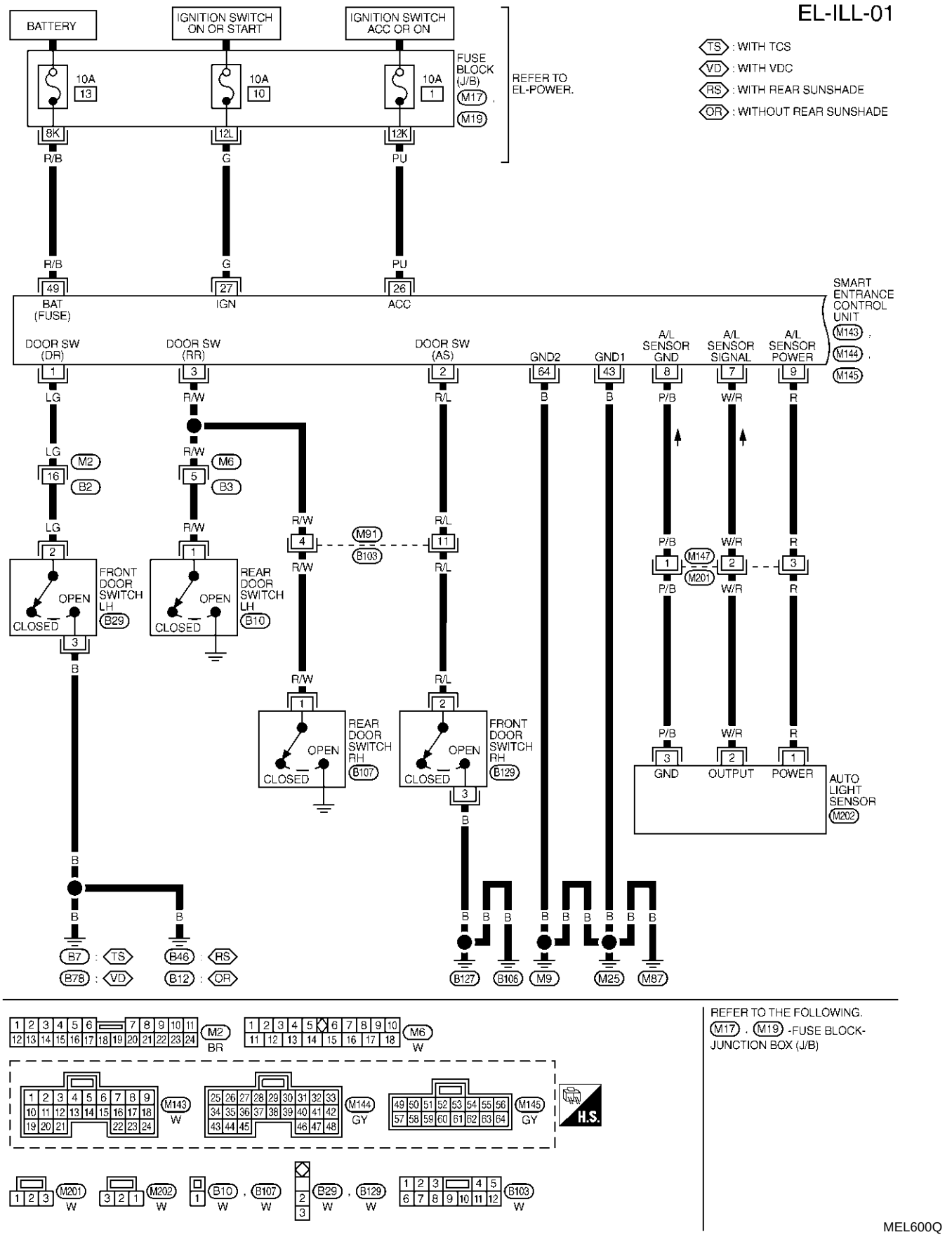

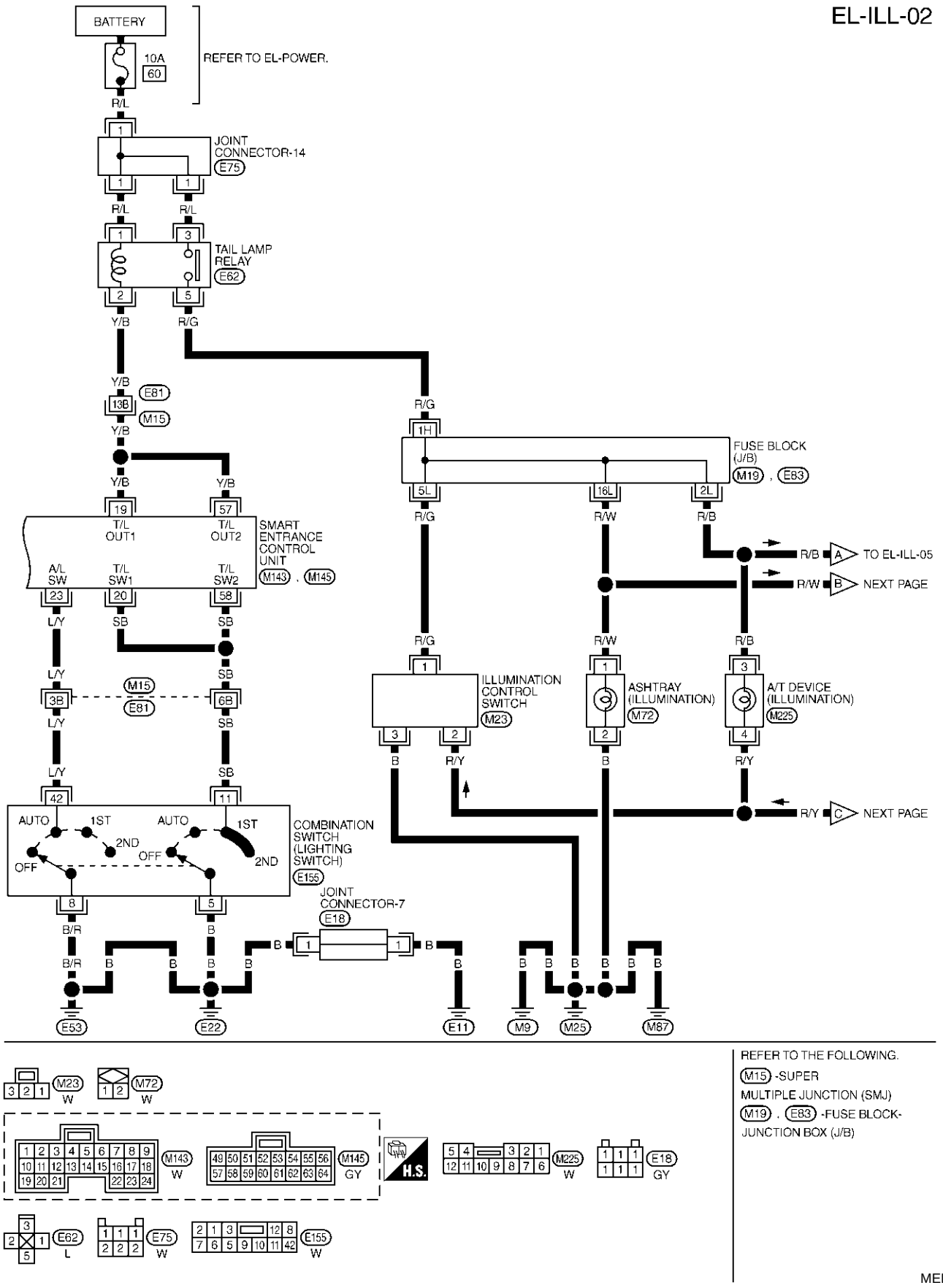
EL-ILL-02
BATTERY
10A
60
REFER TO EL-POWER.
R/L
JOINT CONNECTOR-14
E75
TAIL LAMP RELAY
E62
Y/B
R/G
E81
M15
FUSE BLOCK (J/B)
M19 , E83
R/W
R/B
SMART ENTRANCE CONTROL UNIT
M143 , M145
T/L OUT1
T/L OUT2
A/L SW
T/L SW1
T/L SW2
L/Y
SB
TO EL-ILL-05
NEXT PAGE
ILLUMINATION CONTROL SWITCH
M23
ASHTRAY (ILLUMINATION)
M72
A/T DEVICE (ILLUMINATION)
M225
R/Y
COMBINATION SWITCH (LIGHTING SWITCH)
E155
AUTO
1ST
2ND
OFF
JOINT CONNECTOR-7
E18
B/R
B
E53
E22
E11
M9
M25
M87
REFER TO THE FOLLOWING.
M15 -SUPER MULTIPLE JUNCTION (SMJ)
M19 , E83 -FUSE BLOCK-JUNCTION BOX (J/B)
H.S.
MEL601Q

Wiring Diagram — ILL — (Cont'd)

EL-ILL-03

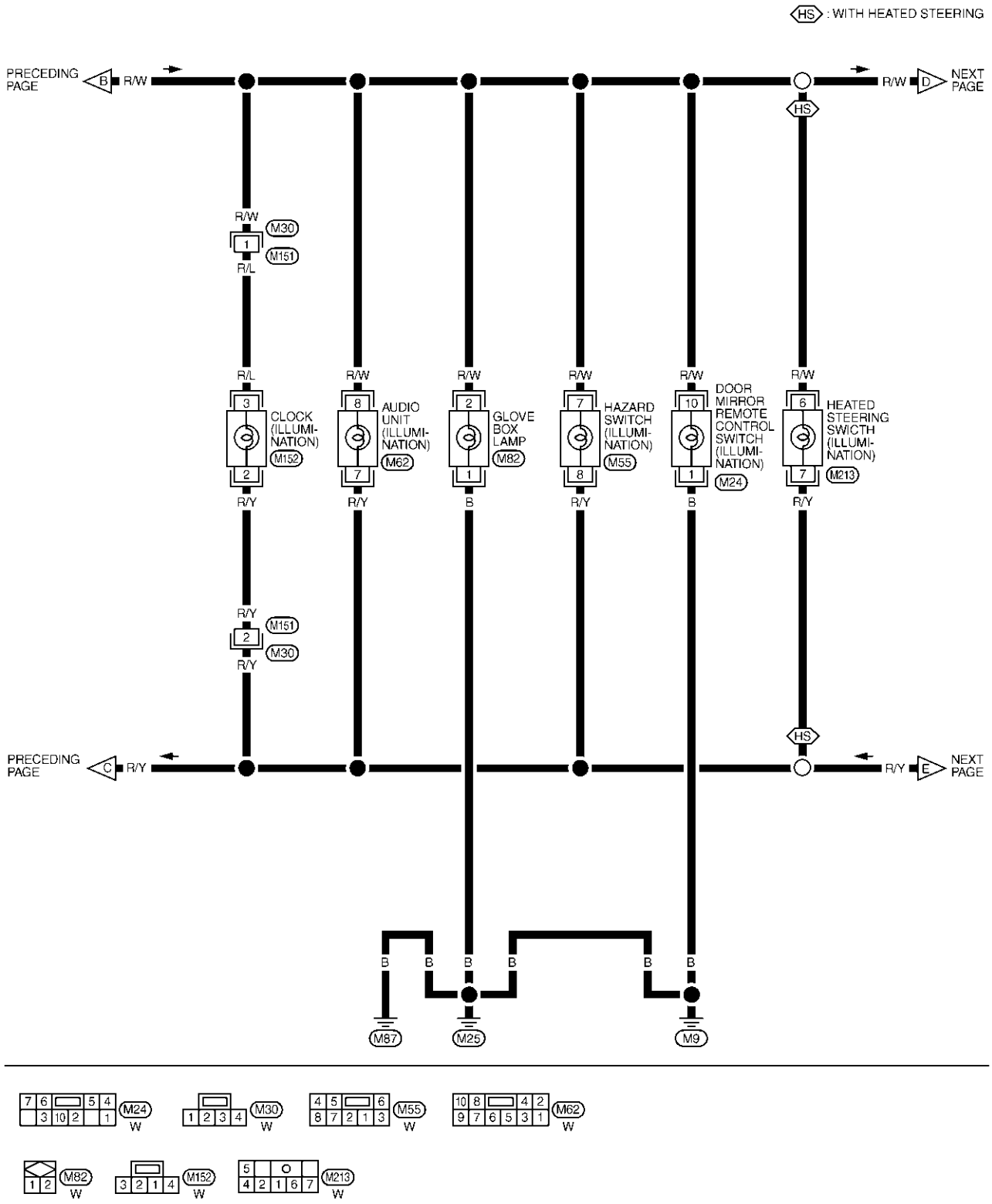

MEL602Q

EL-ILL-04

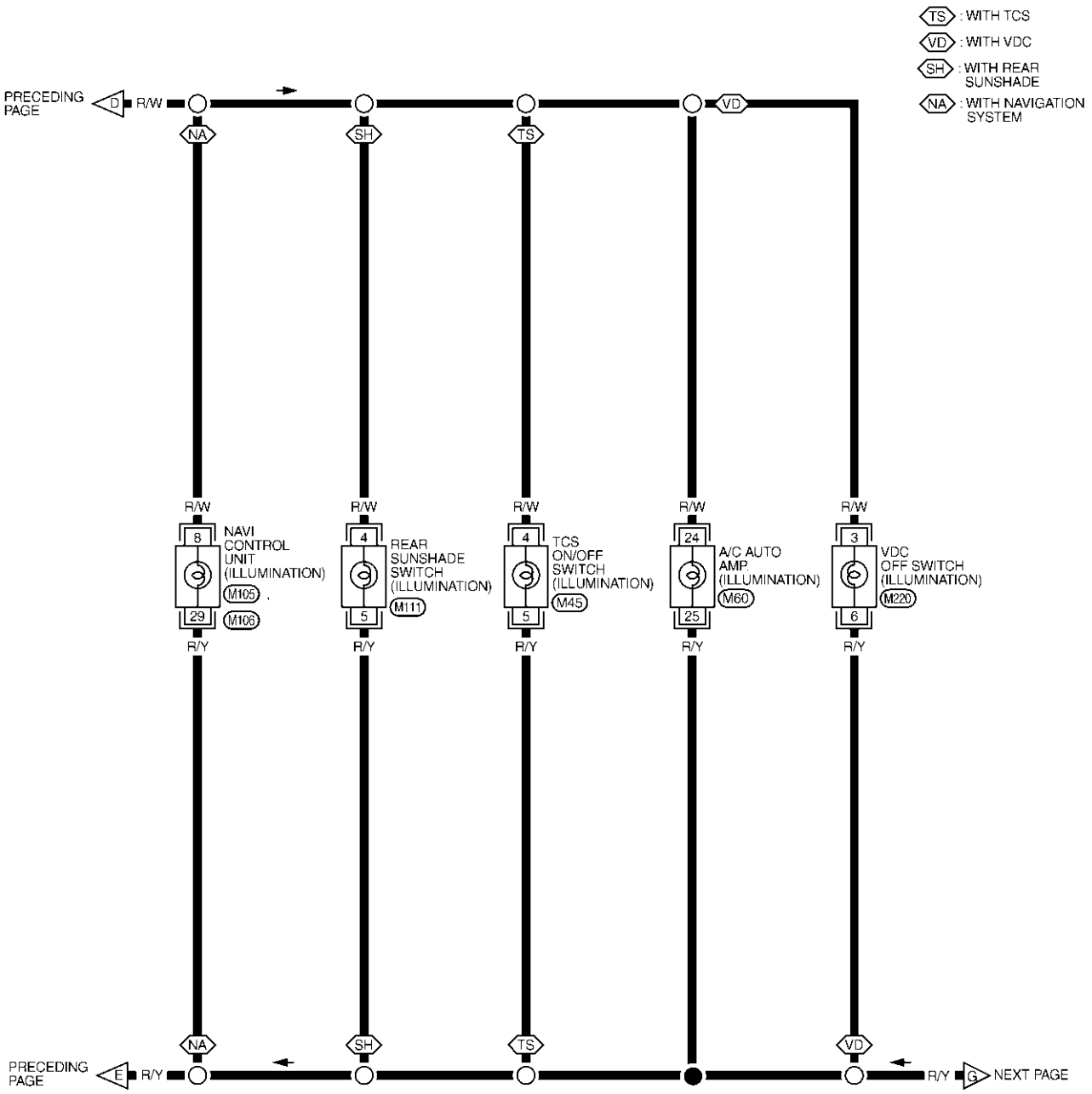

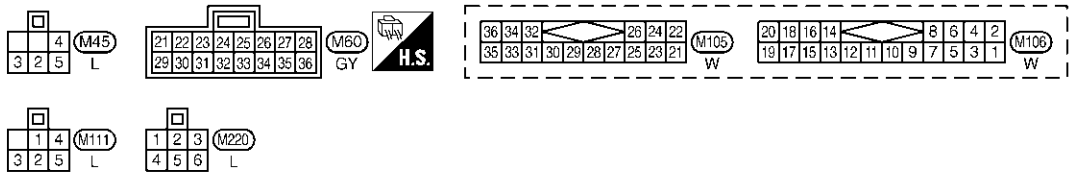

MEL285O

EL-ILL-05

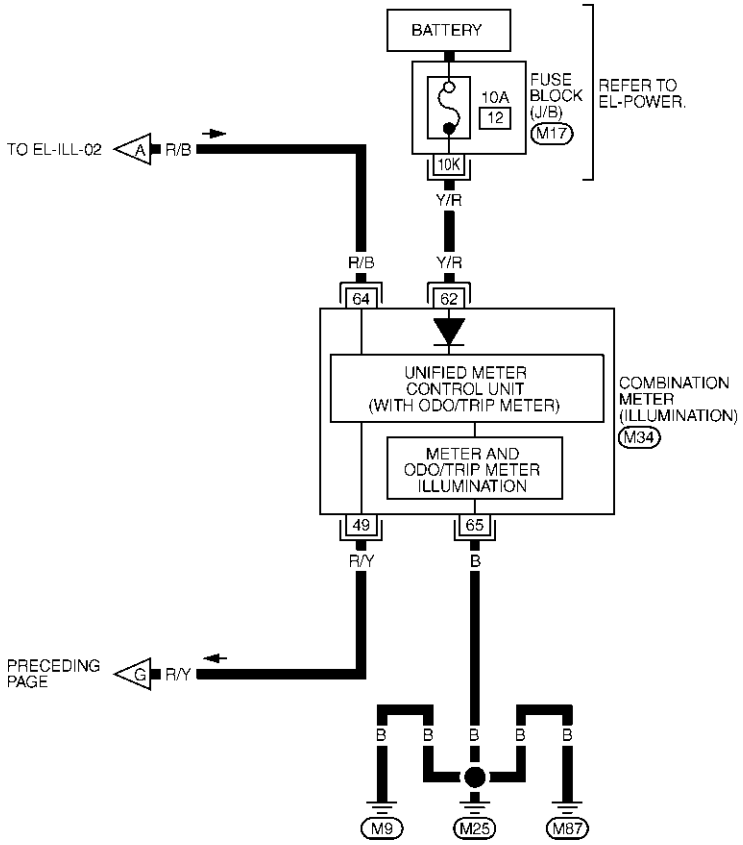

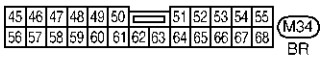

REFER TO THE FOLLOWING.
M17 -FUSE BLOCK-JUNCTION BOX (J/B)

MEL286O

SMART ENTRANCE CONTROL UNIT CONNECTOR

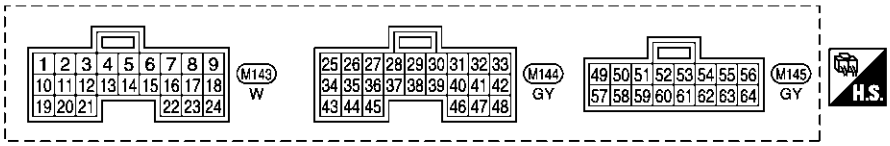

SMART ENTRANCE CONTROL UNIT TERMINALS AND REFERENCE VALUE BETWEEN EACH TERMINAL AND GROUND

TERMINAL	WIRE COLOR	ITEM	CONDITION			DATA (DC)
1	LG	DRIVER DOOR SWITCH	OFF (CLOSED) → ON (OPEN)			12V → 0V
2	R/L	PASSENGER DOOR SWITCH	OFF (CLOSED) → ON (OPEN)			5V → 0V
3	R/W	REAR DOOR SWITCH	OFF (CLOSED) → ON (OPEN)			5V → 0V
7	W/R	AUTO LIGHT SENSOR (SIGNAL)	IGNITION SWITCH "ON" POSITION	LIGHT IS APPLIED TO AUTO LIGHT SENSOR		1 TO 5V
				LIGHT IS NOT APPLIED TO AUTO LIGHT SENSOR		LESS THAN 1V
8	P/B	AUTO LIGHT SENSOR (GND)	–			–
9	R	AUTO LIGHT SENSOR (POWER)	IGNITION SWITCH (OFF → ON)			0V → 5V
19	Y/B	TAIL LAMP RELAY (Out put)	IGNITION SWITCH (WITH LIGHTING SWITCH 1ST OR 2ND)	ON OR START → OFF	MORE THAN 5 MINUTES	12V
					WITHIN 5 MINUTES	0V
				ON OR START		0V
			HEADLAMPS ILLUMINATE BY AUTO LIGHT CONTROL (OPERATE → NOT OPERATE)			LESS THAN 1V → 12V
20	SB	TAIL LAMP SWITCH	LIGHTING SWITCH (OFF OR AUTO → 1ST OR 2ND POSITION)			12V → 0V
23	L/Y	HEADLAMP SWITCH	IGNITION SWITCH "ON" POSITION	LIGHTING SWITCH (EXCEPT AUTO → AUTO POSITION)		12V → 0V
26	PU	IGNITION SWITCH (ACC)	"ACC" POSITION			12V
27	G	IGNITION SWITCH (ON)	IGNITION SWITCH IS IN "ON" POSITION			12V
43	B	GROUND	–			
49	R/B	POWER SOURCE (FUSE)	–			12V
57	Y/B	TAIL LAMP RELAY	IGNITION SWITCH (WITH LIGHTING SWITCH 1ST OR 2ND)	ON OR START → OFF	MORE THAN 5 MINUTES	12V
					WITHIN 5 MINUTES	0V
				ON OR START		0V
			HEADLAMPS ILLUMINATE BY AUTO LIGHT CONTROL (OPERATE → NOT OPERATE)			LESS THAN 1V → 12V
58	SB	TAIL LAMP SWITCH	LIGHTING SWITCH (OFF OR AUTO → 1ST OR 2ND POSITION)			12V → 0V
64	B	GROUND	–			–

SEL548YA

NOTE:
For CONSULT-II Inspection Procedure, refer to "HEADLAMP (FOR USA)" (EL-46).
For CONSULT-II Application Items, refer to "HEADLAMP (FOR USA)" (EL-47).
Trouble Diagnoses for exterior lamp battery saver control, refer to "HEADLAMP (FOR USA)" (EL-47).

System Description

NHEL0165

POWER SUPPLY AND GROUND

NHEL0165S01

Power is supplied at all times:

- through 10A fuse [No. 13, located in the fuse block (J/B)]
- to key switch terminal 3 and
- to smart entrance control unit terminal 49.

When the key is removed from ignition key cylinder, power is interrupted:

- through key switch terminal 4
- to smart entrance control unit terminal 25.

With the ignition switch in the ON or START position, power is supplied:

- through 10A fuse [No. 10, located in the fuse block (J/B)]
- to smart entrance control unit terminal 27.

Ground is supplied:

- to smart entrance control unit terminal 43 and 64
- through body grounds terminals M9, M25 and M87.

When the front driver side door is opened, ground is supplied:

- through body grounds B7 (with TCS) or B78 (with VDC) and B46 (with rear sunshade) or B12 (without rear sunshade)
- to front door switch LH terminal 3
- from front door switch LH terminal 2
- to smart entrance control unit terminal 1.

When the front passenger side door is opened, ground is supplied:

- through body grounds B106 and B127
- to front door switch RH terminal 3
- from front door switch RH terminal 2
- to smart entrance control unit terminal 2.

When any other door (except front door) is opened, ground is supplied to smart entrance control unit terminal 3 in the same manner as the front door switch.
When the front driver side door is unlocked by the central switch, the smart entrance control unit receives a ground signal:

- through body grounds terminals M9, M25 and M87
- to front power window main switch terminal 5 or
- to front power window switch RH terminal 7
- from front power window main switch terminal 8 or
- from front power window switch RH terminal 11
- to smart entrance control unit terminal 33.

When the front driver side door is unlocked by the front door key cylinder switch, the smart entrance control unit receives a ground signal:

- through body grounds terminals M9, M25 and M87
- to front door key cylinder switch LH terminal 2
- from front door key cylinder switch LH terminal 1
- to front power window main switch terminal 19
- from front power window main switch terminal 8
- to smart entrance control unit terminal 33.

When a signal, or combination of signals is received by the smart entrance control unit, ground is supplied:

- through smart entrance control unit terminal 31
- to interior lamp terminal 2.

With power and ground supplied, the interior lamp illuminates.

SWITCH OPERATION

NHEL0165S02

When interior lamp switch is ON, ground is supplied:

- through case grounds of interior lamp

- to interior lamp.

And power is supplied:

- to interior lamp terminal 1
- from smart entrance control unit terminal 50.

When spot lamp (LH and/or RH) is ON, ground is supplied:

- through body grounds M9, M25 and M87
- to spot lamp terminal 2.

And power is supplied:

- to spot lamp terminal 1
- from smart entrance control unit terminal 50.

When vanity mirror illumination (LH and/or RH) is ON, ground is supplied:

- through body grounds M9, M25 and M87
- to vanity mirror illuminations (LH and RH) terminals 2.

And power is supplied:

- to vanity mirror illuminations (LH and RH) terminals 1
- from smart entrance control unit terminal 50.

When rear door switch LH and/or RH is ON (door is opened), the smart entrance control unit receives a ground signal:

- through case ground of the each rear door switch
- from the each rear door switch terminal 1
- to smart entrance control unit terminal 3.
- from smart entrance control unit terminal 32
- to from front step lamp LH and RH terminal 1.

And power is supplied:

- to front step lamp LH and RH terminals 2
- from smart entrance control unit terminal 50.

When front door switch LH and/or RH is ON (door is opened), ground is supplied:

- through body grounds B7 (with TCS) or B78 (with VDC) and B12 (without rear sunshade) or B46 (with rear sunshade), and/or B106 and B127
- to the front door switch (LH and RH) terminal 3
- from the front door switch (LH and RH) terminal 2
- to smart entrance control unit terminal 1 and/or 2
- from smart entrance control unit terminal 32
- to front step lamp LH and RH terminals 1.

And power is supplied:

- to front step lamp LH and RH terminals 2
- from smart entrance control unit terminal 50.

When trunk room lamp switch is ON (trunk lid is opened), ground is supplied:

- through body grounds T6 and T8
- to trunk room lamp switch terminal 2
- from trunk room lamp switch terminal 1
- to trunk room lamp terminal 1

And power is supplied:

- to trunk room lamp terminal 2
- through 10A fuse [No. 13 located in the fuse block (J/B)].

With power and ground supplied, interior lamps turn ON.

INTERIOR LAMP TIMER OPERATION

NHEL0165S03

When interior lamp switch is in the "DOOR" position, the smart entrance control unit keeps the interior lamp illuminated for about 30 seconds when:

- unlock signal is supplied from driver's door lock and unlock switch while all doors are closed and key is out of ignition key cylinder

- unlock signal is supplied from keyfob or door key cylinder while driver's door is locked and all doors are closed
- key is removed from ignition key cylinder while all doors are closed
- driver's door is opened and then closed while key is out of the iginition key cylinder. (However, if the driver's door is closed with the key inserted in the ignition key cylinder after the driver's door is opened with the key removed, the timer is operated.)

The timer is canceled when:

- driver's door is locked,
- driver's door is opened, or
- ignition switch is turned ON.

When driver's door is locked, interior room lamp timer is canceled as described before.
However, ignition key hole illumination remains on for about 30 seconds after driver's door has been locked.

ON-OFF CONTROL

NHEL0165S04

When the driver side door, front passenger door, rear LH or RH door is opened, the interior room lamp turns on while the interior room lamp switch is in the "DOOR" position.
When any door is opened, step lamps turn ON.

INTERIOR LAMP BATTERY SAVER CONTROL

NHEL0165S05

The lamp turns off automatically when interior lamp, step lamp, spot lamp and/or vanity mirror illumination is illuminated with the ignition key is in OFF position, if the lamp remains lit by the door switch open signal or if the lamp switch is in ON position for more than 10 minutes.
After lamps turn OFF by the battery saver system, the lamps illuminate again when:

- driver's door is locked or unlocked,
- door is opened or closed,
- key is removed from ignition key cylinder or inserted in ignition key cylinder

Interior lamp battery saver control period can be changed by the function setting of CONSULT-II (EL-110).

Schematic

NHEL0212

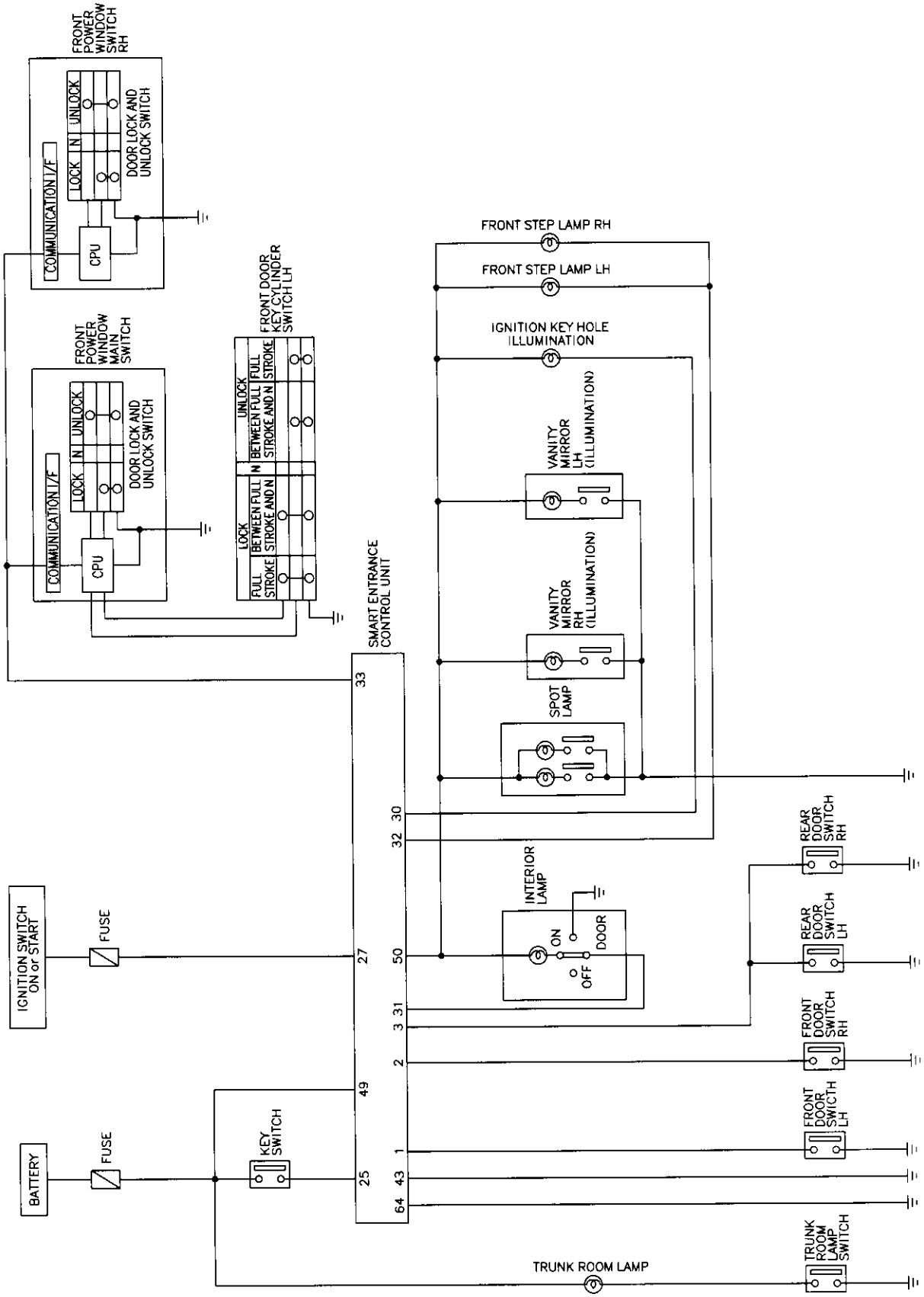

MEL287O

Wiring Diagram — INT/L —

NHEL0163

EL-INT/L-01

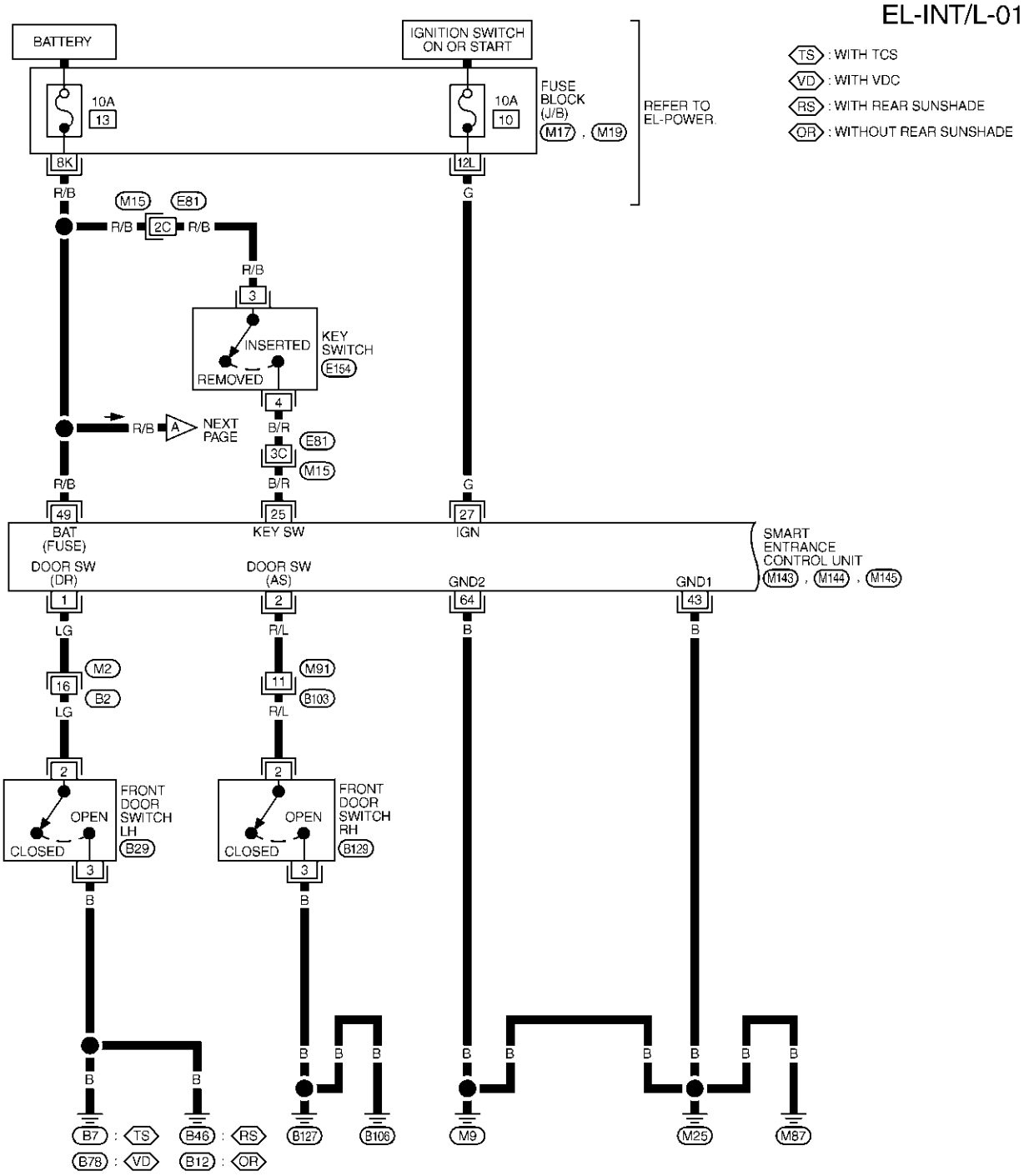

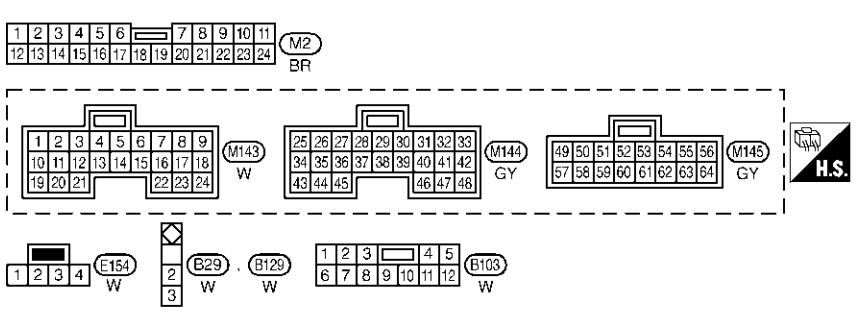

REFER TO THE FOLLOWING.
M15 -SUPER MULTIPLE JUNCTION (SMJ)
M17 , M19 -FUSE BLOCK-JUNCTION BOX (J/B)

MEL603Q

EL-INT/L-02

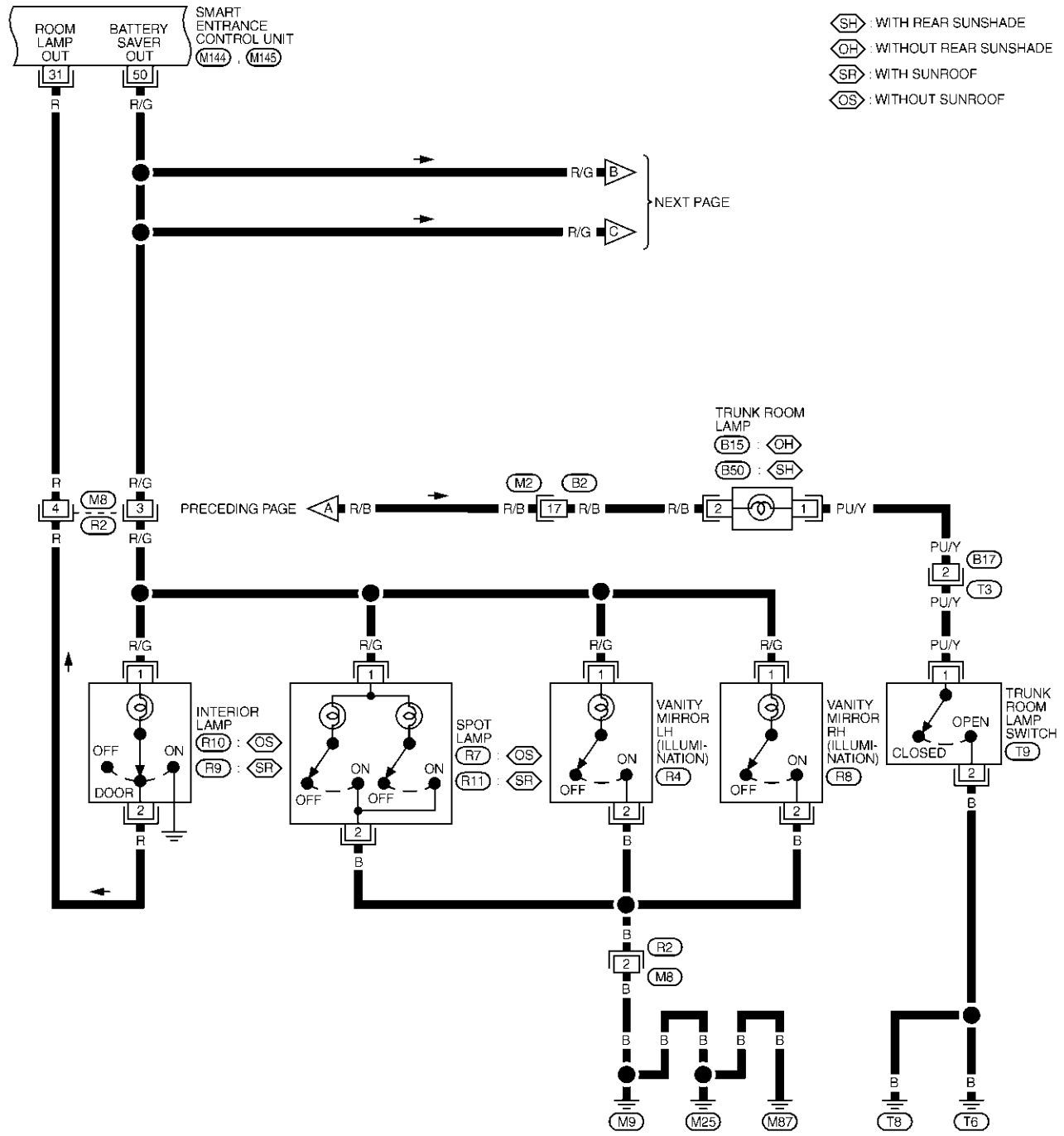

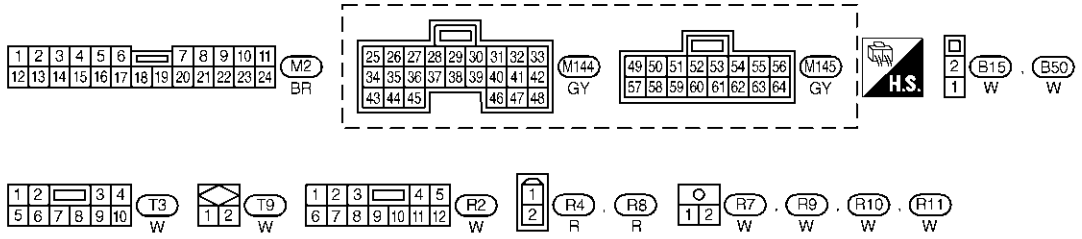

MEL289O

EL-INT/L-03

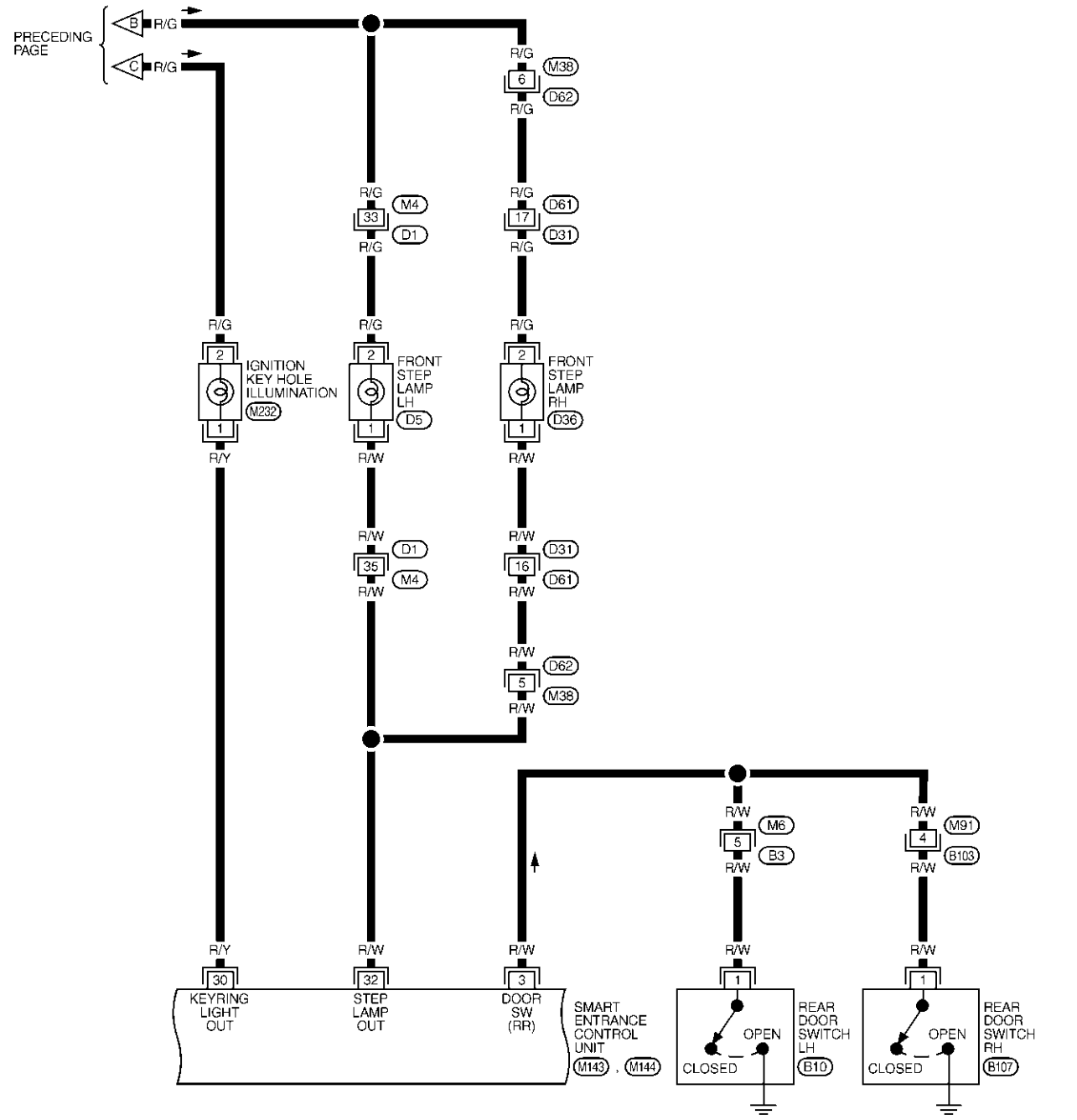

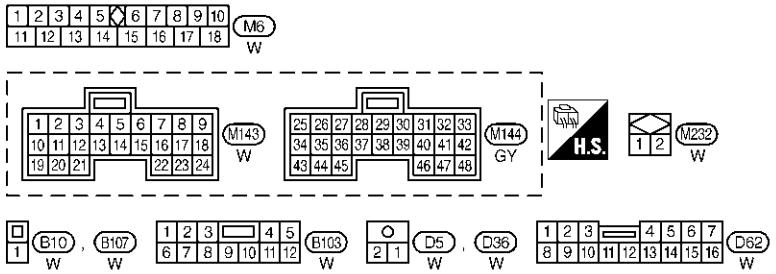

REFER TO THE FOLLOWING.
D1 , D31 -SUPER MULTIPLE JUNCTION (SMJ)

MEL382O

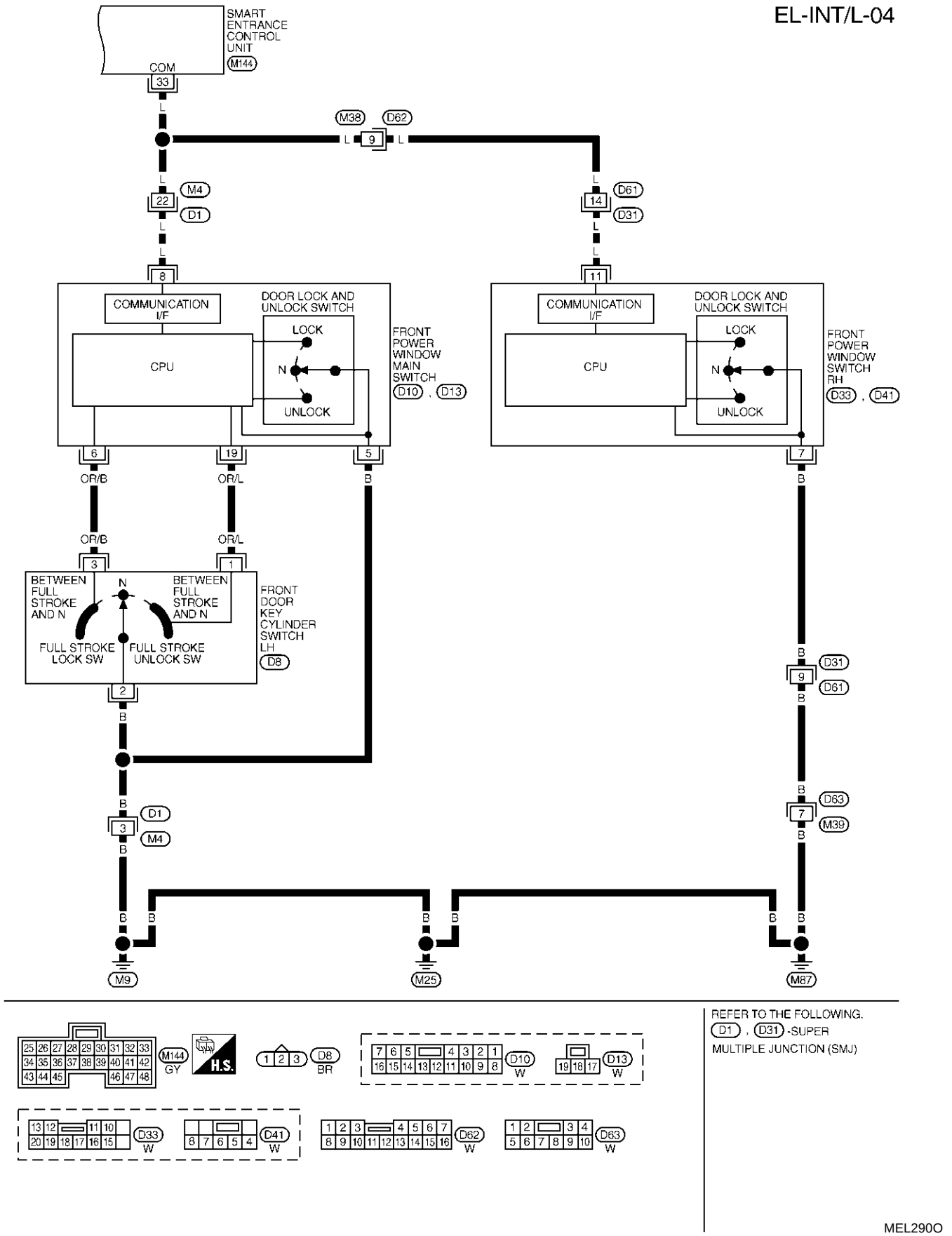
EL-INT/L-04
SMART ENTRANCE CONTROL UNIT
M144
COM
33
M38
D62
9
M4
22
D1
D61
14
D31
8
11
COMMUNICATION I/F
CPU
DOOR LOCK AND UNLOCK SWITCH
LOCK
N
UNLOCK
FRONT POWER WINDOW MAIN SWITCH
D10 , D13
FRONT POWER WINDOW SWITCH RH
D33 , D41
6
19
5
7
OR/B
OR/L
B
3
1
BETWEEN FULL STROKE AND N
FULL STROKE LOCK SW
FULL STROKE UNLOCK SW
FRONT DOOR KEY CYLINDER SWITCH LH
D8
2
D63
M39
M9
M25
M87
REFER TO THE FOLLOWING.
D1 , D31 -SUPER MULTIPLE JUNCTION (SMJ)
M144
GY
H.S.
D8
BR
D10
W
D13
W
D33
W
D41
W
D62
W
D63
W
MEL290O

SMART ENTRANCE CONTROL UNIT CONNECTOR

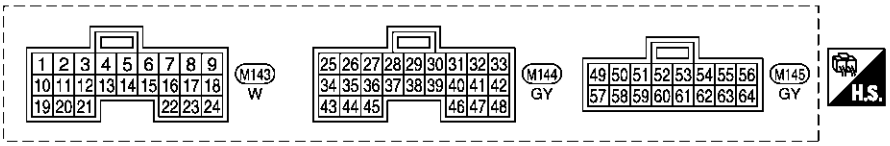

SMART ENTRANCE CONTROL UNIT TERMINALS AND REFERENCE VALUE BETWEEN EACH TERMINAL AND GROUND

TERMINAL	WIRE COLOR	ITEM	CONDITION	DATA (DC)
1	LG	DRIVER DOOR SWITCH	OFF (CLOSED) → ON (OPEN)	12V → 0V
2	R/L	PASSENGER DOOR SWITCH	OFF (CLOSED) → ON (OPEN)	5V → 0V
3	R/W	REAR DOOR SWITCH	OFF (CLOSED) → ON (OPEN)	5V → 0V
25	B/R	IGNITION KEY SWITCH (INSERT)	KEY INSERTED → KEY REMOVED FROM IGN KEY CYLINDER	12V → 0V
27	G	IGNITION SWITCH (ON)	IGNITION SWITCH IS IN "ON" POSITION	12V
30	R/Y	IGNITION KEYHOLE ILLUMINATION	WHEN DOORS ARE UNLOCKED USING KEYFOB (OFF → UNLOCK)	12V → 0V
31	R	INTERIOR LAMP	WHEN DOORS ARE LOCKED USING KEYFOB (UNLOCK → LOCK WITH LAMP SWITCH IN "DOOR" POSITION)	0V → 12V
32	R/W	FRONT STEP LAMP	ANY DOOR SWITCH: ON (OPEN) → OFF (CLOSED)	0V → 12V
33	L	COMMUNICATION INTERFACE	DOOR LOCK & UNLOCK SWITCHES (NEUTRAL → LOCK/UNLOCK)	*1
			FRONT DOOR KEY CYLINDER SWITCH LH (NEUTRAL → LOCK/UNLOCK)	
43	B	GROUND	–	–
49	R/B	POWER SOURCE (FUSE)	–	12V
50	R/G	BATTERY SAVER (INTERIOR LAMP)	BATTERY SAVER DOSE OPERATE → DOES NOT OPERATE (ON → OFF)	12V → 0V
64	B	GROUND	–	–

*1: REFER TO "SMART ENTRANCE CONTROL UNIT INSPECTION TABLE" IN "SMART ENTRANCE CONTROL UNIT".

SEL577YA

CONSULT-II Inspection Procedure

=NHEL0213

“INT LAMP”/“BATTERY SAVER”

NHEL0213S01

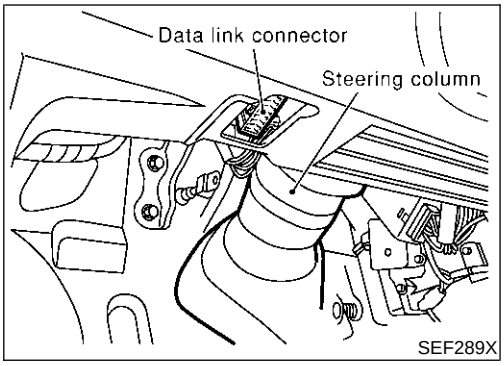

SEF289X

1. Turn ignition switch “OFF”.
2. Connect “CONSULT-II” and “CONSULT-II CONVERTER” to the data link connector.

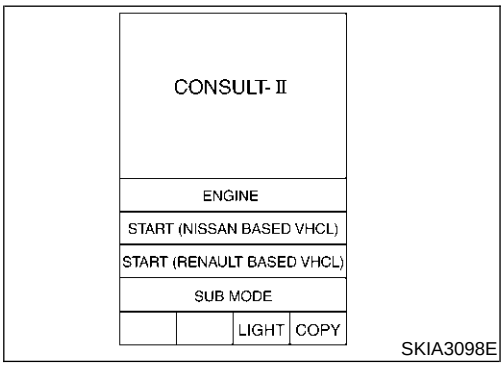

SKIA3098E

3. Turn ignition switch “ON”.
4. Touch “START (NISSAN BASED VHCL)”.

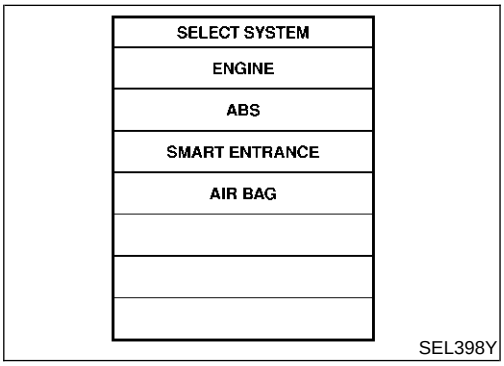

SEL398Y

5. Touch “SMART ENTRANCE”.
   If “SMART ENTRANCE” is not indicated, go to GI-42.

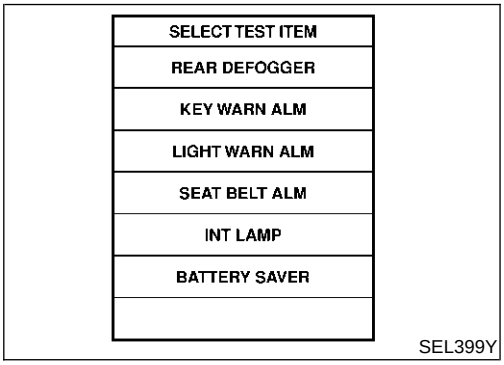

SEL399Y

6. Touch “INT LAMP” or “BATTERY SAVER”.

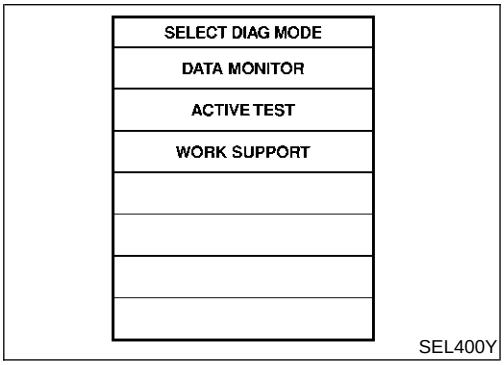

SEL400Y

7. Select diagnosis mode.
   “DATA MONITOR”, “ACTIVE TEST” and “WORK SUPPORT” are available for “INT LAMP” and “BATTERY SAVER”.

CONSULT-II Application Items

NHEL0214

"INT LAMP"

NHEL0214S01

Data Monitor

NHEL0214S0101

Monitored Item	Description
IGN ON SW	Indicates [ON/OFF] condition of ignition switch.
DOOR SW-RR	Indicates [ON/OFF] condition of ignition switch.
KEY ON SW	Indicates [ON/OFF] condition of key switch.
DOOR SW-DR	Indicates [ON/OFF] condition of front door switch LH.
DOOR SW-AS	Indicates [ON/OFF] condition of front door switch RH.
LOCK SW DR/AS	Indicates [ON/OFF] condition of front door lock switch.
UNLK SW DR/AS	Indicates [ON/OFF] condition of front door lock switch.
KEY CYL LK-SW	Indicates [ON/OFF] condition of front door key cylinder switch.
KEY CYL UN-SW	Indicates [ON/OFF] condition of front door key cylinder switch.
LK BUTTON/SIG	Indicates [ON/OFF] condition of unlock signal from remote controller.
UN BUTTON/SIG	Indicates [ON/OFF] condition of unlock signal from remote controller.

Active Test

NHEL0214S0102

Test Item	Description
INT LAMP	This test enables to check interior lamp operation. When "ON" on CONSULT-II screen is touched: ● Interior lamp turns on when the switch is at DOOR. (Smart entrance control unit supplies power and ground to interior lamp.)
IGN ILLUM	This test enables to check ignition key hole illumination operation. The illumination turns on when "ON" on CONSULT-II screen is touched.
STEP LAMP	This test enables to check step lamp operation. The illumination turns on when "ON" on CONSULT-II screen is touched.

Work Support

NHEL0214S0103

Work Item	Description
ROOM LAMP TIMER SET	Interior lamp timer mode can be changed by mode setting. Selects ON-OFF of the room lamp illumination at the time the driver door is unlocked.

"BATTERY SAVER"

NHEL0214S02

Data Monitor

NHEL0214S0201

Monitored Item	Description
IGN ON SW	Indicates [ON/OFF] condition of ignition switch.
DOOR SW-RR	Indicates [ON/OFF] condition of ignition switch.
KEY ON SW	Indicates [ON/OFF] condition of key switch.
DOOR SW-DR	Indicates [ON/OFF] condition of front door switch LH.
DOOR SW-AS	Indicates [ON/OFF] condition of front door switch RH.
LOCK SW DR/AS	Indicates [ON/OFF] condition of front door lock switch.
UNLK SW DR/AS	Indicates [ON/OFF] condition of front door lock switch.
KEY CYL LK-SW	Indicates [ON/OFF] condition of front door key cylinder switch.

Monitored Item	Description
KEY CYL UN-SW	Indicates [ON/OFF] condition of front door key cylinder switch.
LK BUTTON/SIG	Indicates [ON/OFF] condition of unlock signal from remote controller.
UN BUTTON/SIG	Indicates [ON/OFF] condition of unlock signal from remote controller.

Active Test

NHEL0214S0202

Test Item	Description
BATTERY SAVER	This test enables to check interior lamp, front step lamps, spot lamp, vanity mirror illuminations and trunk room lamp operations. When touch "ON" on CONSULT-II screen. ● Interior lamp turns on when the switch is in ON. (Smart entrance control unit supplies power to interior lamp.) ● Front step lamps turn on when any doors are open. (Smart entrance control unit supplies power to front step lamps.) ● Spot lamp, vanity mirror illuminations, trunk room lamp turn on when the switch is in ON. (Smart entrance control unit supplies power to Spot lamp, vanity mirror illuminations, trunk room lamp.)

Work Support

NHEL0214S0203

Work Item	Description
ROOM LAMP BAT SAV SET	Interior lamp battery saver control period can be changed by mode setting. Selects interior lamp battery saver control period between two modes. ● MODE 1 (30 minutes)/MODE 2 (60 minutes)

Trouble Diagnoses for Interior Lamp Timer

=NHEL0215

DIAGNOSTIC PROCEDURE 1

NHEL0215S01

SYMPTOM: Interior lamp timer does not operate.

1 CHECK IGNITION ON SIGNAL

With CONSULT-II

Check ignition switch ON signal (“IGN ON SW”) in “DATA MONITOR” mode with CONSULT-II.

DATA MONITOR	
MONITOR	
IGN ON SW	ON

When ignition switch is ON:
IGN ON SW ON

When ignition switch is OFF:
IGN ON SW OFF

SEL318W

Without CONSULT-II

Check voltage between smart entrance control unit harness connector M144 terminal 27 (G) and ground.

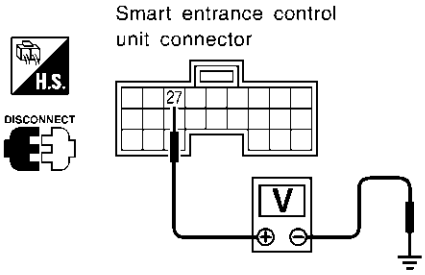

Terminals		Ignition switch position		
(+)	(−)	OFF	ACC	ON
27	Ground	0V	0V	Battery voltage

SEL003Y

OK or NG

OK	▶	GO TO 2.
NG	▶	**Check the following.** ● 10A fuse [No. 10, located in fuse block (J/B)] ● Harness for open or short between smart entrance control unit and fuse

2	CHECK FRONT DOOR SWITCH LH INPUT SIGNAL

With CONSULT-II
Check driver door switch signal ("DOOR SW-DR") in "DATA MONITOR" mode with CONSULT-II.

DATA MONITOR	
MONITOR	
DOOR SW-DR	OFF

When front LH door is open:
DOOR SW-DR ON

When driver's door is closed:
DOOR SW-DR OFF

SEL319WA

Without CONSULT-II
Check voltage between smart entrance control unit harness connector M143 terminal 1 (LG) and ground.

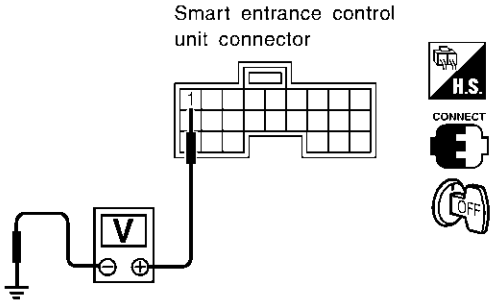

Voltage [V]:
Condition of driver's door: CLOSED
Approx. 12
Condition of driver's door: OPEN
0

SEL004YC

OK or NG

OK	▶	GO TO 4.
NG	▶	GO TO 3.

3	CHECK FRONT DOOR SWITCH LH

Check continuity between front door switch LH connector B29 terminals 2 and 3.

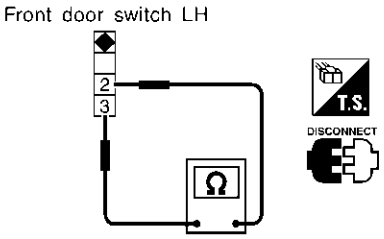

Continuity:
Door switch is pushed.
No
Door switch is released.
Yes

SEL325WB

OK or NG

OK	▶	**Check the following.** ● Front door switch LH ground circuit and condition ● Harness for open or short between smart entrance control unit and front door switch LH
NG	▶	Replace front door switch LH.

4	CHECK FRONT DOOR SWITCH RH INPUT SIGNAL

With CONSULT-II
Check front door switch RH signal ("DOOR SW-AS") in "DATA MONITOR" mode with CONSULT-II.

DATA MONITOR	
MONITOR	
DOOR SW-AS	OFF

When front RH door is open:
DOOR SW-AS ON

When driver's door is closed:
DOOR SW-AS OFF

SEL153Y

Without CONSULT-II
Check voltage between smart entrance control unit harness connector M143 terminal 2 (R/L) and ground.

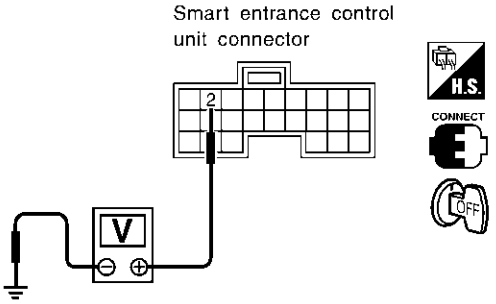

Voltage [V]:
Condition of front RH door: CLOSED
Approx. 5
Condition of front RH door: OPENED
0

SEL152Y

OK or NG

OK	▶	GO TO 6.
NG	▶	GO TO 5.

5	CHECK FRONT DOOR SWITCH RH

Check continuity between front door switch RH connector B129 terminals 2 and 3.

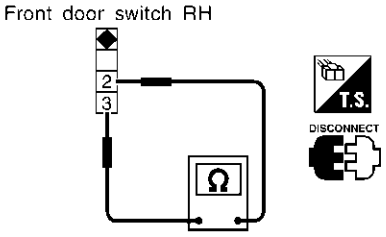

Continuity:
Door switch is pushed.
No
Door switch is released.
Yes

SEL325WC

OK or NG

OK	▶	**Check the following.** ● Front door switch RH ground circuit and condition ● Harness for open or short between smart entrance control unit and front door switch RH
NG	▶	Replace front door switch RH.

6	CHECK REAR DOOR SWITCHES LH AND RH INPUT SIGNAL

With CONSULT-II
Check door switches ("DOOR SW-RR") in "DATA MONITOR" mode with CONSULT-II.

DATA MONITOR	
MONITOR	
DOOR SW-RR	OFF

When rear door LH and/or RH is open:
DOOR SW-RR ON

When driver's door is closed:
DOOR SW-RR OFF

SEL154Y

Without CONSULT-II
Check voltage between smart entrance control unit harness connector M143 terminals 3 (R/W) and ground.

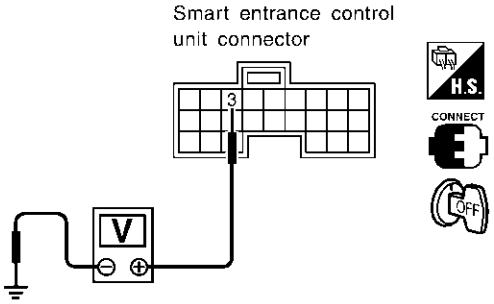

Voltage [V]:
Condition of rear LH and/or RH door: CLOSED
Approx. 5
Condition of rear LH and/or RH door: OPENED
0

SEL155Y

OK or NG

OK	▶	GO TO 8.
NG	▶	GO TO 7.

7	CHECK REAR DOOR SWITCHES LH AND RH

1. Disconnect rear door switch LH and/or RH harness connector.
2. Check continuity between rear door switch LH and/or RH terminal 1 and ground.

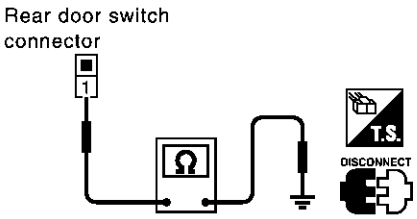

Continuity:
Door switch is pushed.
No
Door switch is released.
Yes

SEL899Y

OK or NG

OK	▶	**Check the following.** ● Rear door switch LH and/or RH ground circuit or door switch ground condition ● Harness for open or short between smart entrance control unit and rear door switch LH and/or RH
NG	▶	Replace rear door switch LH and/or RH.

8	CHECK KEY SWITCH INPUT SIGNAL

With CONSULT-II
Check key switch ("KEY ON SW") in "DATA MONITOR" mode with CONSULT-II.

DATA MONITOR	
MONITOR	
KEY ON SW	ON

When key is inserted to ignition key cylinder:
KEY ON SW ON
When key is removed from ignition key cylinder:
KEY ON SW OFF

SEL315W

Without CONSULT-II
Check voltage between smart entrance control unit harness connector M144 terminal 25 (B/R) and ground.

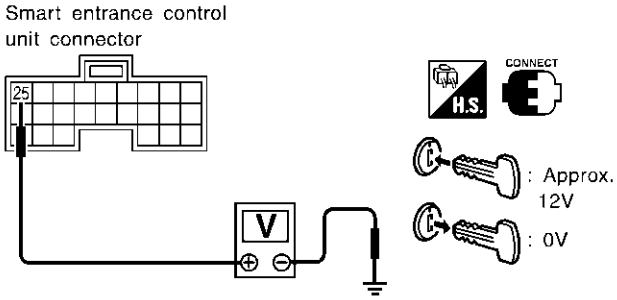

Voltage [V]:
Condition of key switch: Key is inserted.
Approx. 12
Condition of key switch: Key is removed.
0

SEL011Y

OK or NG

OK	▶	GO TO 10.
NG	▶	GO TO 9.

9	CHECK KEY SWITCH (INSERT)

Check continuity between key switch harness connector E154 terminals 3 and 4.

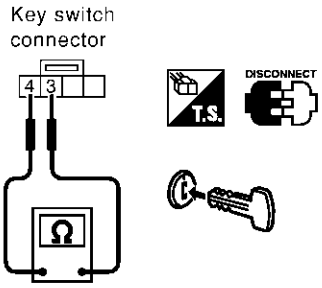

Continuity:
Condition of key switch: Key is inserted.
Yes
Condition of key switch: Key is inserted.
No

SEL549Y

OK or NG

OK	▶	**Check the following.** ● 10A fuse [No. 13, located in fuse block (J/B)] ● Harness for open or short between key switch and fuse ● Harness for open or short between smart entrance control unit and key switch
NG	▶	Replace key switch.

10	CHECK DOOR LOCK/UNLOCK SWITCH INPUT SIGNAL

With CONSULT-II

Check door lock/unlock switch ("LOCK SW DR/AS"/"UNLK SW DR/AS") in "DATA MONITOR" mode with CONSULT-II.

DATA MONITOR	
MONITOR	
LOCK SW DR/AS	OFF
UNLK SW DR/AS	OFF

When lock/unlock switch is turned to LOCK:
LOCK SW DR/AS ON

When lock/unlock switch is turned to UNLOCK:
UNLK SW DR/AS ON

SEL341W

Without CONSULT-II

1. Remove key from ignition switch.
2. Check the signal between smart entrance control unit harness connector M144 terminal 33 (L) and ground with oscilloscope when door lock/unlock switch is turned "LOCK" or "UNLOCK".
3. Make sure signals which are shown in the figure below can be detected during 10 sec. just after door lock/unlock switch is turned "LOCK" or "UNLOCK".

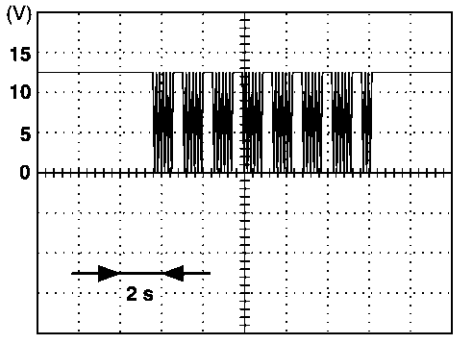

Voltage:
12V → 9V (10 sec.) measurement by analog circuit tester.

SEL396Y

OK or NG

OK	▶	GO TO 11.
NG	▶	**Check the following.** ● Ground circuit for each front power window switch ● Harness for open or short between each front power window switch and smart entrance control unit connector If above systems are normal, replace the front power window switch.

11	CHECK DOOR KEY CYLINDER SWITCH INPUT SIGNAL (LOCK/UNLOCK SIGNAL)

With CONSULT-II

Check front door key cylinder switch LH ("KEY CYL LK-SW"/"KEY CYL UN-SW") in "DATA MONITOR" mode with CONSULT-II.

DATA MONITOR	
MONITOR	
KEY CYL LK-SW	OFF
KEY CYL UN-SW	OFF

When key inserted in front key cylinder is turned to LOCK:

KEY CYL LK-SW ON

When key inserted in front key cylinder is turned to UNLOCK:

KEY CYL UN-SW ON

SEL342W

Without CONSULT-II

1. Check the signal between smart entrance control unit harness connector M144 terminal 33 (L) and ground with oscilloscope when key inserted in front door key cylinder switch LH is turned "LOCK" or "UNLOCK".
2. Make sure signals which are shown in the figure below can be detected during 10 sec. just after key is turned "LOCK" or "UNLOCK".

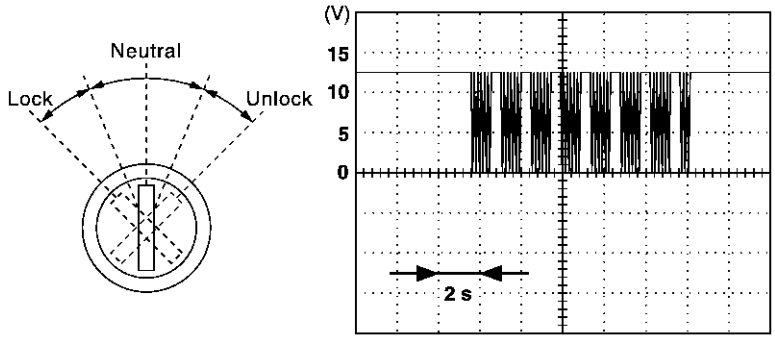

Voltage:
12V → 9V (10 sec.) measurement by analog circuit tester.

SEL397Y

OK or NG

OK	▶	Replace smart entrance control unit.
NG	▶	GO TO 12.

12	CHECK DOOR KEY CYLINDER SWITCH

1. Disconnect front door key cylinder switch LH harness connector D8.
2. Check continuity between front door key cylinder switch LH terminals.

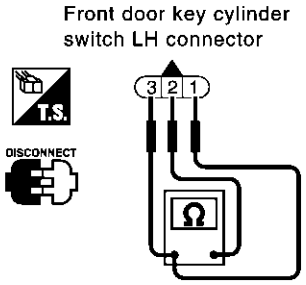

① : Door unlock switch terminal
② : Ground terminal
③ : Door lock switch terminal

Terminals	Key position	Continuity
③ - ②	Neutral/Unlock	No
	Lock	Yes
① - ②	Neutral/Lock	No
	Unlock	Yes

SEL187YB

OK or NG

OK	▶	**Check the following.** ● Front door key cylinder switch LH ground circuit ● Harness for open or short between front power window main switch and front door key cylinder switch LH If above systems are normal, replace the front power window mian switch.
NG	▶	Replace front door key cylinder switch LH.

DIAGNOSTIC PROCEDURE 2

NHEL0215S02

SYMPTOM: Interior lamp timer does not cancel properly.

1 CHECK IGNITION ON SIGNAL

With CONSULT-II

Check ignition switch ON signal ("IGN ON SW") in "DATA MONITOR" mode with CONSULT-II.

DATA MONITOR	
MONITOR	
IGN ON SW	ON

When ignition switch is ON:
IGN ON SW ON

When ignition switch is OFF:
IGN ON SW OFF

SEL318W

Without CONSULT-II

Check voltage between smart entrance control unit harness connector M144 terminal 27 (G) and ground.

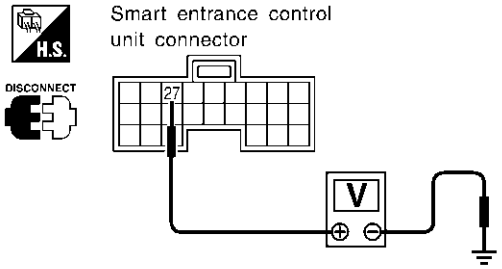

Terminals		Ignition switch position		
(+)	(–)	OFF	ACC	ON
27	Ground	0V	0V	Battery voltage

SEL995X

OK or NG

OK	▶	GO TO 2.
NG	▶	**Check the following.** ● 10A fuse [No. 10, located in fuse block (J/B)] ● Harness for open or short between smart entrance control unit and fuse

2	CHECK FRONT DOOR SWITCH LH INPUT SIGNAL

With CONSULT-II
Check driver door switch signal ("DOOR SW-DR") in "DATA MONITOR" mode with CONSULT-II.

DATA MONITOR	
MONITOR	
DOOR SW-DR	OFF

When front LH door is open:
DOOR SW-DR ON

When driver's door is closed:
DOOR SW-DR OFF

SEL319WA

Without CONSULT-II
Check voltage between smart entrance control unit harness connector M143 terminal 1 (LG) and ground.

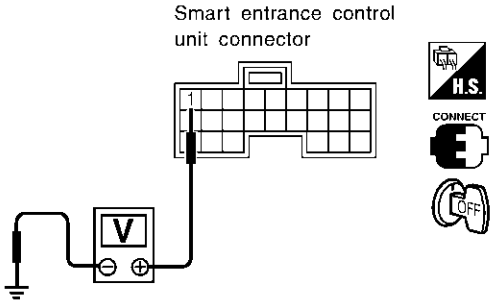

Voltage [V]:
Condition of driver's door: CLOSED
Approx. 12
Condition of driver's door: OPEN
0

SEL004YC

OK or NG

OK	▶	GO TO 4.
NG	▶	GO TO 3.

3	CHECK FRONT DOOR SWITCH LH

Check continuity between front door switch LH connector B29 terminals 2 and 3.

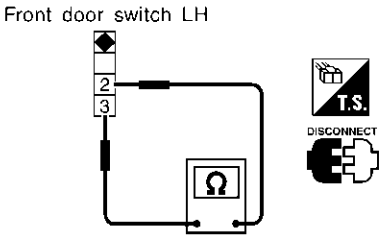

Continuity:
Door switch is pushed.
No
Door switch is released.
Yes

SEL325WB

OK or NG

OK	▶	**Check the following.** ● Front door switch LH ground circuit and condition ● Harness for open or short between smart entrance control unit and front door switch LH
NG	▶	Replace front door switch LH.

4	CHECK DOOR LOCK/UNLOCK SWITCH INPUT SIGNAL

With CONSULT-II

Check door lock/unlock switch ("LOCK SW DR/AS"/"UNLK SW DR/AS") in "DATA MONITOR" mode with CONSULT-II.

DATA MONITOR	
MONITOR	
LOCK SW DR/AS	OFF
UNLK SW DR/AS	OFF

When lock/unlock switch is turned to LOCK:
LOCK SW DR/AS ON

When lock/unlock switch is turned to UNLOCK:
UNLK SW DR/AS ON

SEL341W

Without CONSULT-II

1. Remove key from ignition switch.
2. Check the signal between smart entrance control unit harness connector M144 terminal 33 (L) and ground with oscilloscope when door lock/unlock switch is turned "LOCK" or "UNLOCK".
3. Make sure signals which are shown in the figure below can be detected during 10 sec. just after door lock/unlock switch is turned "LOCK" or "UNLOCK".

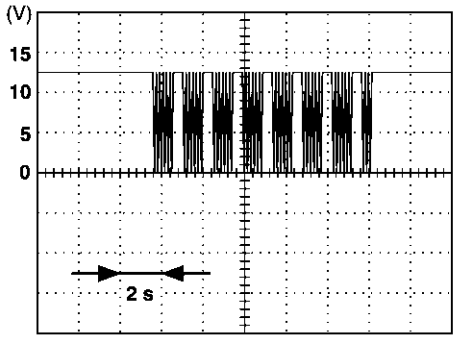

Voltage:
12V → 9V (10 sec.) measurement by analog circuit tester.

SEL396Y

OK or NG

OK	▶	GO TO 5.
NG	▶	**Check the following.** ● Ground circuit for each front power window switch ● Harness for open or short between each front power window switch and smart entrance control unit connector If above systems are normal, replace the front power window switch.

5	CHECK DOOR KEY CYLINDER SWITCH INPUT SIGNAL (LOCK/UNLOCK SIGNAL)

With CONSULT-II

Check front door key cylinder switch LH ("KEY CYL LK-SW"/"KEY CYL UN-SW") in "DATA MONITOR" mode with CONSULT-II.

DATA MONITOR	
MONITOR	
KEY CYL LK-SW	OFF
KEY CYL UN-SW	OFF

When key inserted in front key cylinder is turned to LOCK:

KEY CYL LK-SW ON

When key inserted in front key cylinder is turned to UNLOCK:

KEY CYL UN-SW ON

SEL342W

Without CONSULT-II

1. Check the signal between smart entrance control unit harness connector M144 terminal 33 (L) and ground with oscilloscope when key inserted in front door key cylinder switch LH is turned "LOCK" or "UNLOCK".
2. Make sure signals which are shown in the figure below can be detected during 10 sec. just after key is turned "LOCK" or "UNLOCK".

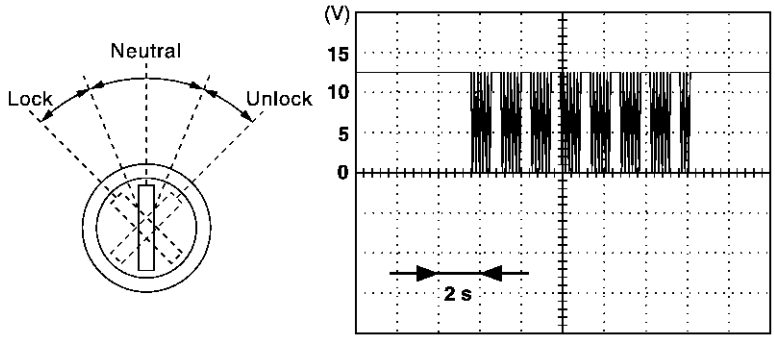

Voltage:
12V → 9V (10 sec.) measurement by analog circuit tester.

SEL397Y

OK or NG

OK	▶	Replace smart entrance control unit.
NG	▶	GO TO 6.

6	CHECK DOOR KEY CYLINDER SWITCH

1. Disconnect front door key cylinder switch LH harness connector D8.
2. Check continuity between front door key cylinder switch LH terminals.

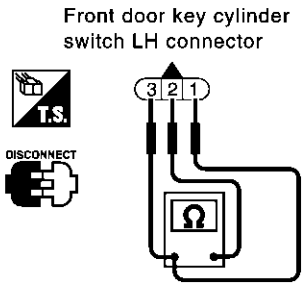

① : Door unlock switch terminal
② : Ground terminal
③ : Door lock switch terminal

Terminals	Key position	Continuity
③ - ②	Neutral/Unlock	No
	Lock	Yes
① - ②	Neutral/Lock	No
	Unlock	Yes

SEL187YB

OK or NG

OK	▶	**Check the following.** ● Front door key cylinder switch LH ground circuit ● Harness for open or short between front power window main switch and front door key cylinder switch LH If above systems are normal, replace the front power window main switch.
NG	▶	Replace front door key cylinder switch LH.

Component Parts and Harness Connector Location

NHEL0041

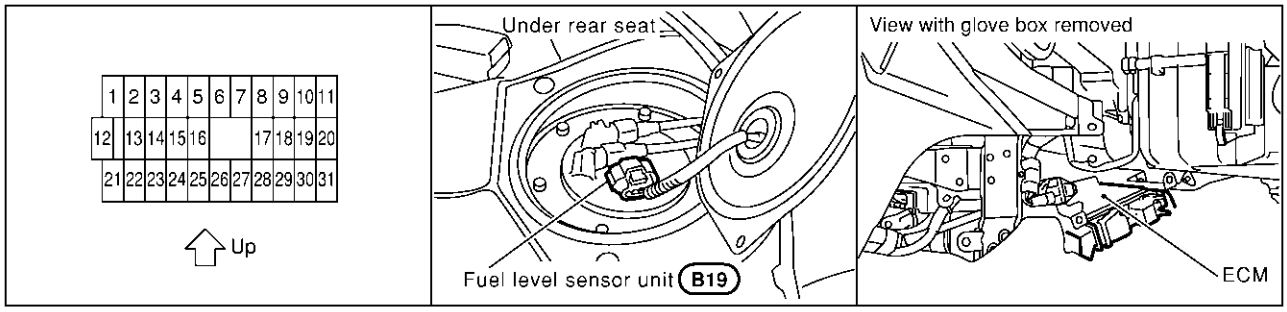

SEL550Y

System Description

NHEL0042

UNIFIED CONTROL METER

NHEL0042S06

- Speedometer, odo/trip meter, tachometer, fuel gauge and water temperature gauge are controlled totally by control unit built-in combination meter.
- Digital meter is adopted for odo/trip meter.*
  *The record of the odo meter is kept even if the battery cable is disconnected. The record of the trip meter is erased when the battery cable is disconnected.
- Odo/trip meter segment can be checked in diagnosis mode.
- Meter/gauge can be checked in diagnosis mode.

HOW TO CHANGE THE DISPLAY FOR ODO/TRIP METER

NHEL0042S07

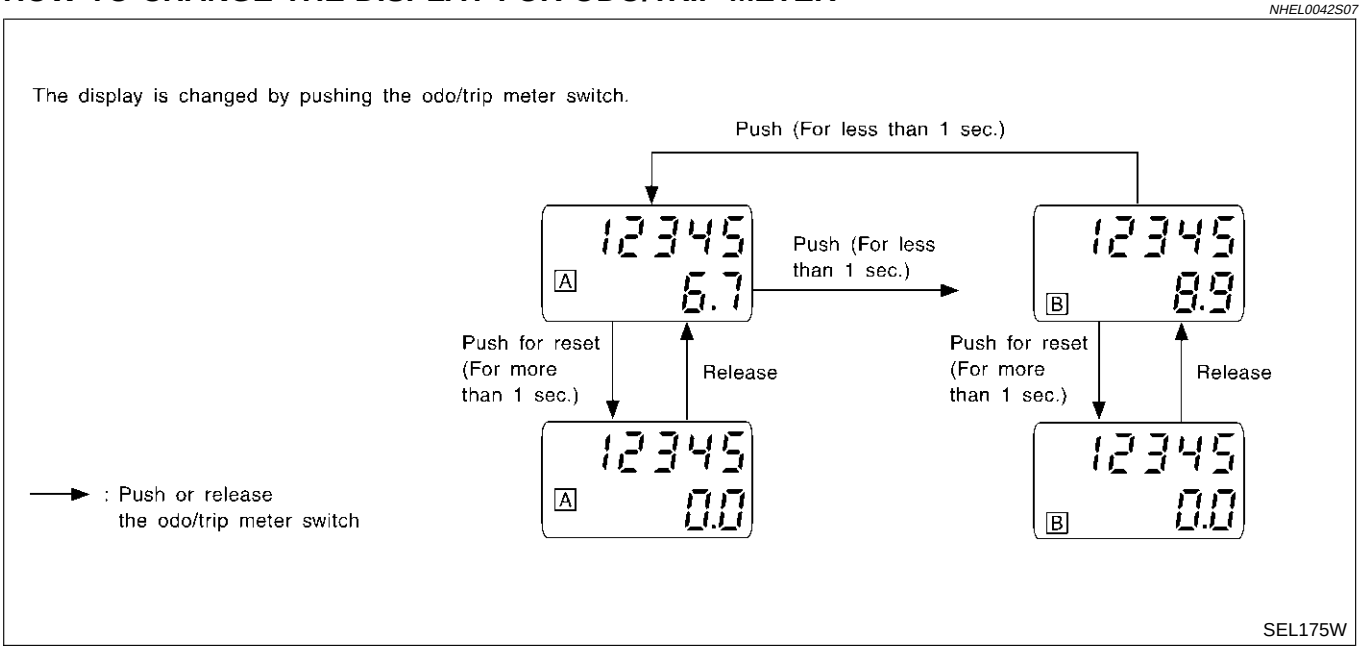

SEL175W

NOTE:
Turn ignition switch to the “ON” position to operate odo/trip meter.

POWER SUPPLY AND GROUND CIRCUIT

NHEL0042S08

Power is supplied at all times

- through 10A fuse [No. 12, located in the fuse block (J/B)]
- to combination meter terminal 62.

With the ignition switch in the ACC or ON position, power is supplied

- through 10A fuse [No. 1, located in the fuse block (J/B)]
- to combination meter terminal 31.

With the ignition switch in the ON or START position, power is supplied

- through 10A fuse [No. 30, located in the fuse block (J/B)]
- to combination meter terminal 66.

Ground is supplied

- to combination meter terminal 59
- through body grounds M9, M25 and M87.

WATER TEMPERATURE GAUGE

NHEL0042S01

The water temperature gauge indicates the engine coolant temperature. The reading on the gauge is received engine coolant temperature signal from ECM. ECM is detected by water temperature sensor.
The water temperature gauge is received by a signal

- from ECM terminal 18
- to combination meter terminal 18

The needle on the gauge moves from "C" to "H"

TACHOMETER

NHEL0042S02

The tachometer indicates engine speed in revolutions per minute (rpm).
The tachometer is regulated by a signal

- from terminal 34 of the ECM
- to combination meter terminal 16 for the tachometer.

FUEL GAUGE

NHEL0042S03

The fuel gauge indicates the approximate fuel level in the fuel tank.
The fuel gauge is regulated by a variable ground signal supplied

- to combination meter terminal 17 for the fuel gauge
- from terminal 2 of the fuel level sensor unit
- through terminal 5 of the fuel level sensor unit and
- through body ground B7 (with TCS) or B78 (with VDC) and B12 (without rear sunshade) or B46 (with rear sunshade)

SPEEDOMETER

NHEL0042S04

The combination meter provides a voltage signal to the vehicle speed sensor for the speedometer.
The voltage is supplied

- from combination meter terminal 15 for the speedometer
- to terminal 1 of the vehicle speed sensor (with VDC)
- to terminal 22 of ABS/TCS control unit (with TCS)

The speedometer converts the voltage into the vehicle speed displayed.

Combination Meter

NHEL0043

CHECK

NHEL0043S01

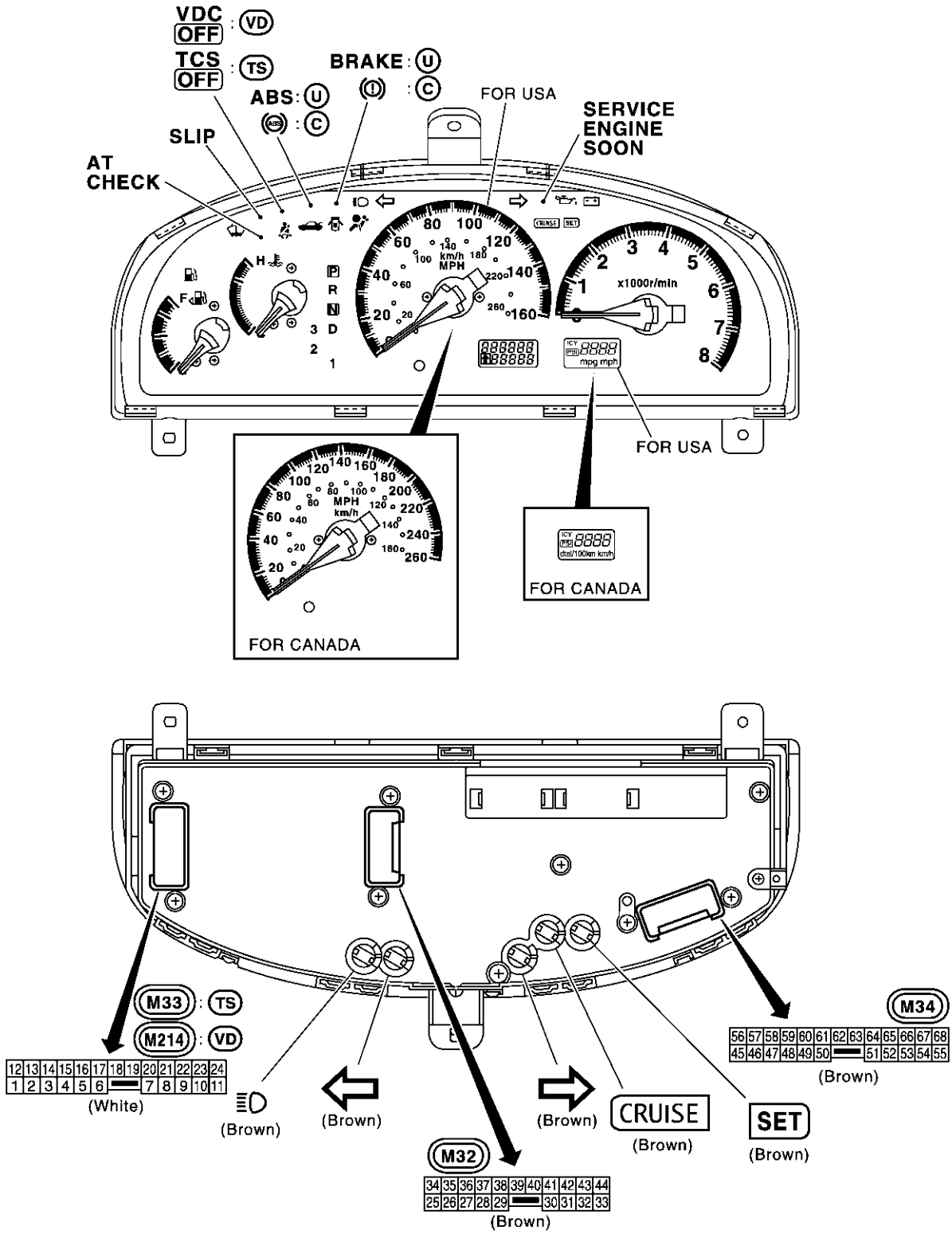

Bulb socket color	Bulb wattage
Brown	1.4 W
( ): Warning bulb socket color	

U : For USA
C : For Canada
TS : With TCS
VD : With VDC

MEL875Q

Schematic

NHEL0293

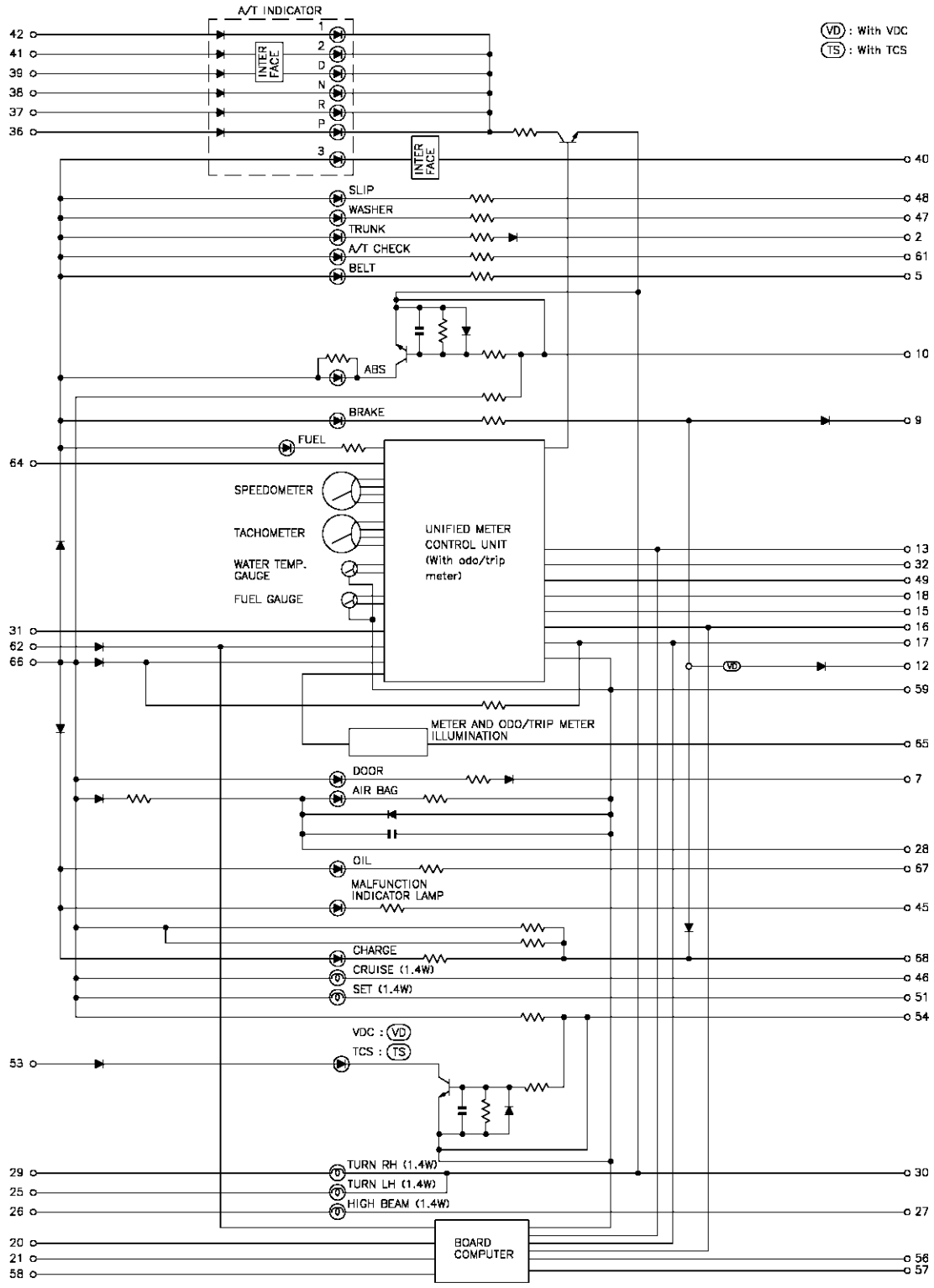

MEL876Q

Wiring Diagram — METER —

NHEL0045

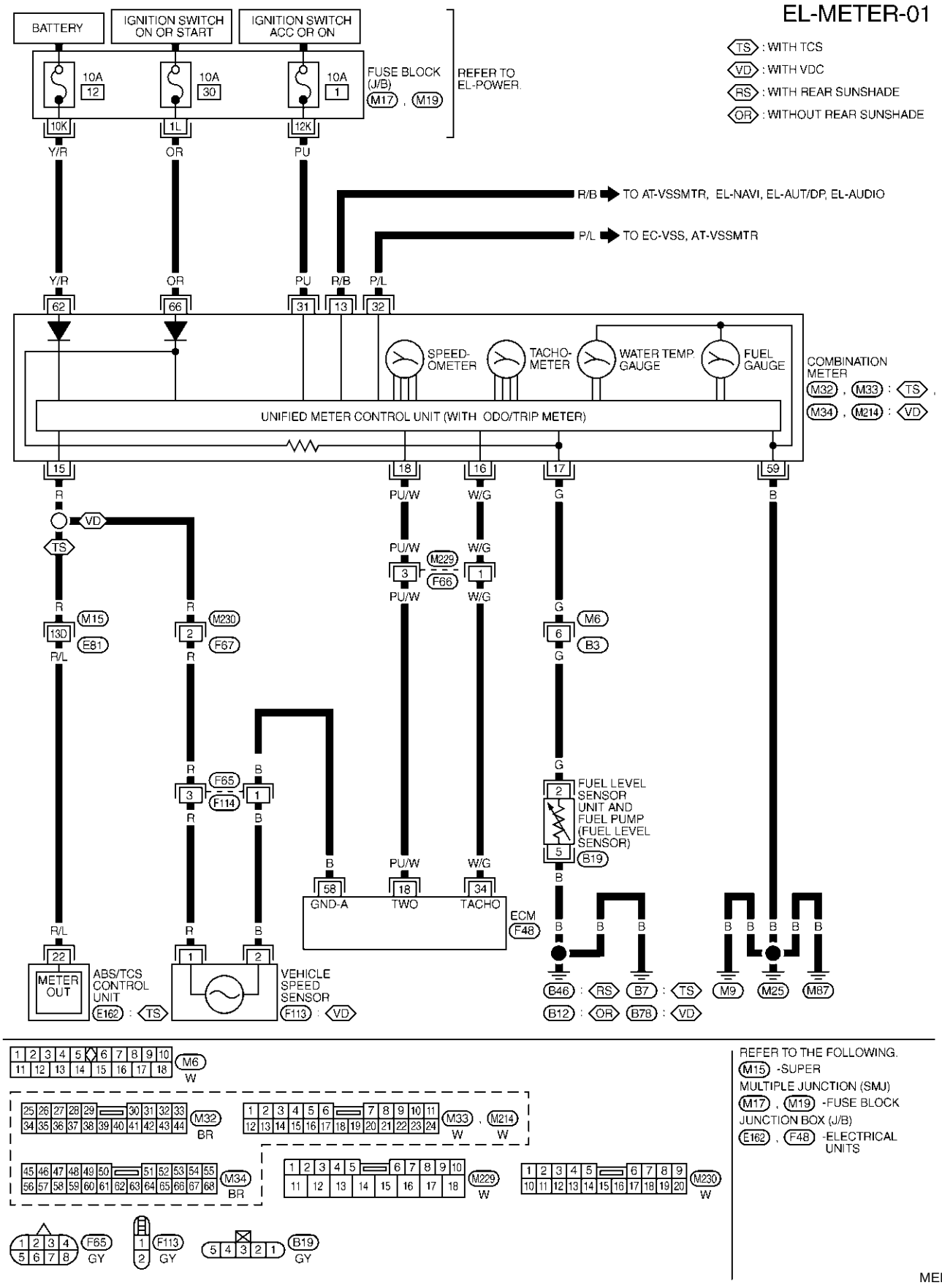

Meter/Gauge Operation and Odo/Trip Meter Segment Check in Diagnosis Mode

NHEL0151

DIAGNOSIS FUNCTION

NHEL0151S01

- Odo/trip meter segment can be checked in diagnosis mode.
- Meters/gauges can be checked in diagnosis mode.

HOW TO ALTERNATE DIAGNOSIS MODE

NHEL0151S02

1. Turn ignition switch to ON and change odo/trip meter to “TRIP A”.
2. Turn ignition switch to OFF.
3. Turn ignition switch to ON when pushing odo/trip meter switch.
4. Release odo/trip meter switch 1 second after ignition switch is turned ON.
5. Push odo/trip meter switch more than three times within 5 seconds.

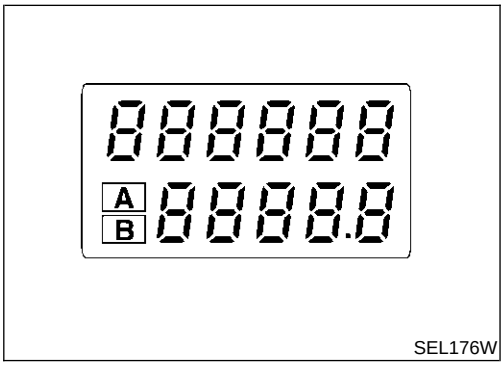

SEL176W

6. All odo/trip meter segments should be turned on.

NOTE:
If some segments are not turned on, unified meter control unit with odo/trip meter should be replaced.

At this point, the unified control meter is turned to diagnosis mode.

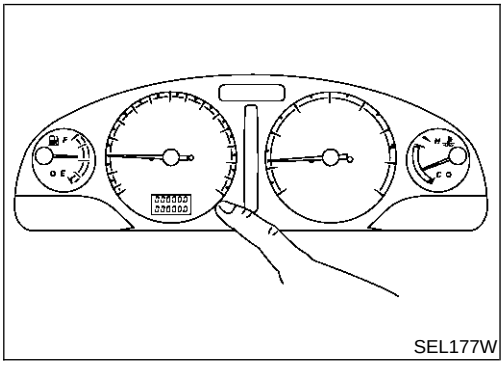
SEL177W

7. Push odo/trip meter switch. Indication of each meter/gauge should be as shown left during pushing odo/trip meter switch if it is no malfunctioning.

NOTE:
It takes about a few seconds for indication of fuel gauge and water temperature gauge to become stable.

Trouble Diagnoses

NHEL0046

PRELIMINARY CHECK

NHEL0046S04

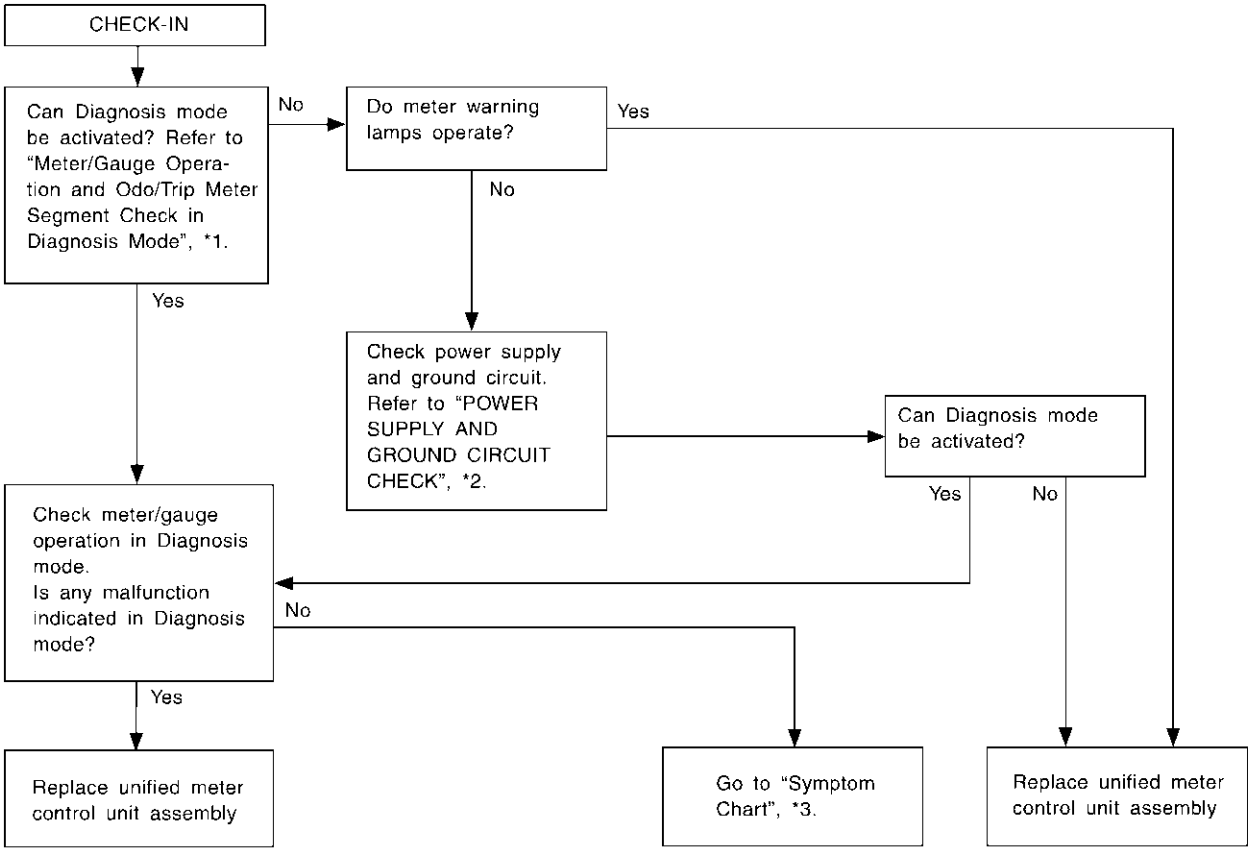

SEL479Y

*1: Meter/Gauge Operation and Odo/Trip Meter Segment Check in Diagnosis Mode (EL-130)

*2: POWER SUPPLY AND GROUND CIRCUIT CHECK (EL-133)

*3: Symptom Chart (EL-132)

SYMPTOM CHART

NHEL0046S11

Symptom	Possible causes	Repair order
One of speedometer/ tachometer/fuel gauge/ water temp. gauge is mal-functioning.	1. Sensor signal - Vehicle speed signal - Engine revolution signal - Fuel gauge - Water temp. gauge 2. Unified meter control unit	1. Check the sensor for malfunctioning meter/gauge. INSPECTION/VEHICLE SPEED SENSOR (Refer to EL-134.) INSPECTION/ENGINE REVOLUTION SIGNAL (Refer to EL-136.) INSPECTION/FUEL LEVEL SENSOR UNIT (Refer to EL-137.) INSPECTION/THERMAL TRANSMITTER (Refer to EL-138.) 2. Replace unified meter control unit assembly.
Multiple meter/gauge are malfunctioning. (except odo/trip meter)	Unified meter control unit	

Before starting trouble diagnoses below, perform PRELIMINARY CHECK, EL-131.

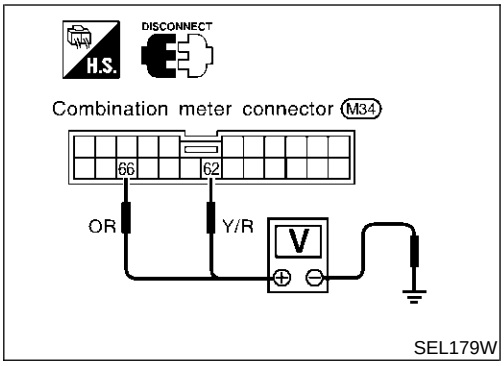

SEL179W

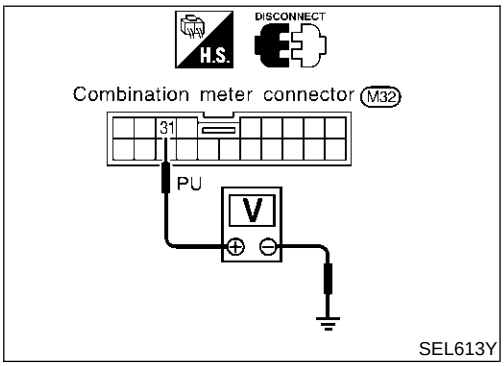

SEL613Y

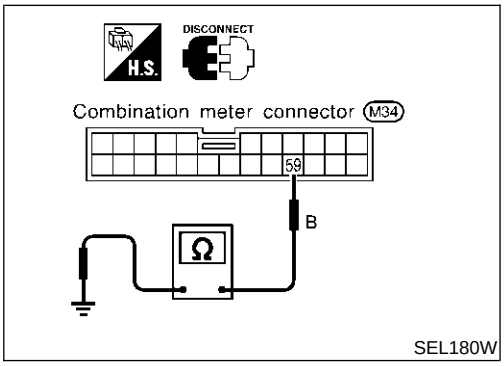

SEL180W

POWER SUPPLY AND GROUND CIRCUIT CHECK

=NHEL0046S07

Power Supply Circuit Check

NHEL0046S0701

Terminals		Ignition switch position		
(+)	(−)	OFF	ACC	ON
31	Ground	0V	Battery voltage	Battery voltage
62	Ground	Battery voltage	Battery voltage	Battery voltage
66	Ground	0V	0V	Battery voltage

If NG, check the following.

- 10A fuse [No. 12, located in fuse block (J/B)]
- 10A fuse [No. 30, located in fuse block (J/B)]
- 10A fuse [No. 1, located in fuse block (J/B)]
- Harness for open or short between fuse and combination meter

Ground Circuit Check

NHEL0046S0702

Terminals	Continuity
59 - Ground	Yes

INSPECTION/VEHICLE SPEED SIGNAL
With VDC

=NHEL0046S03

NHEL0046S0301

1	CHECK VEHICLE SPEED SENSOR OUTPUT

1. Remove vehicle speed sensor from transmission.
2. Check voltage between combination meter harness connector M214 terminal 15 (R) and ECM harness connector F48 terminal 58 (B) while quickly turning speed sensor pinion.

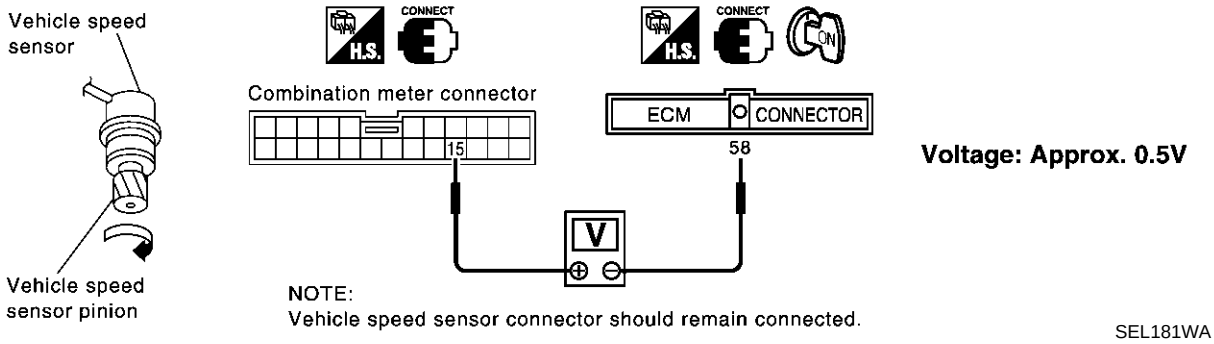

OK or NG

OK	▶	Vehicle speed sensor is OK.
NG	▶	GO TO 2.

2	CHECK VEHICLE SPEED SENSOR

Check resistance between vehicle speed sensor terminals 1 and 2.

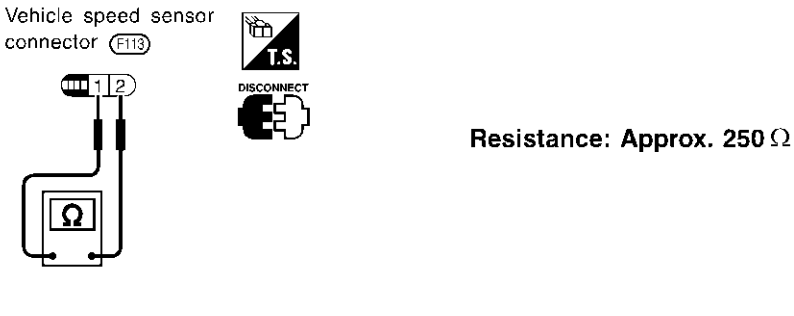

OK or NG

OK	▶	Check harness or connector between speedometer, vehicle speed sensor and ECM.
NG	▶	Replace vehicle speed sensor.

With TCS

NHEL0046S0302

1	CHECK ABS/TCS CONTROL UNIT OUTPUT SIGNAL

With CONSULT-II

1. Lift up drive wheels.
2. Start engine and drive vehicle at more than 20 km/h (12 MPH).
3. Check signal between combination meter harness connector M33 terminal 15 (R) and ground when rotating wheels with engine at idle. (Use "SIMPLE OSCILLOSCOPE" in "SUB MODE" with CONSULT-II.)

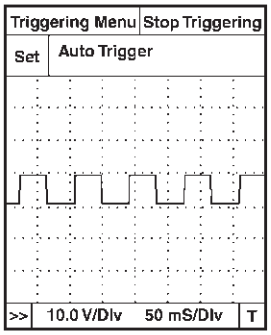

SEL938W

Without CONSULT-II

1. Lift up drive wheels.
2. Start engine and drive vehicle at more than 20 km/h (12 MPH).
3. Check voltage between combination meter harness connector terminal 15 and ground when rotating wheels with engine at idle.

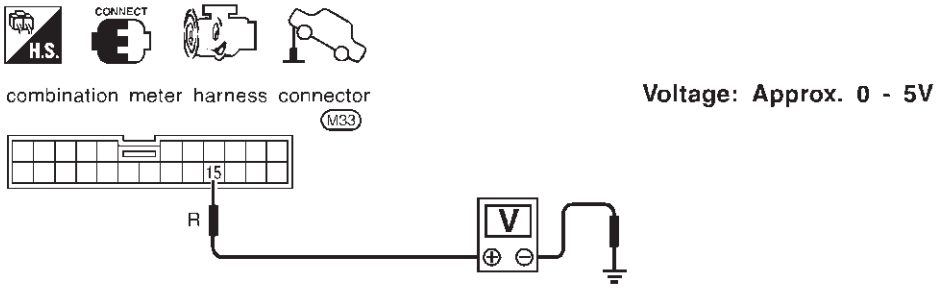

SEL939W

OK or NG

OK	▶	ABS/TCS control unit is OK.
NG	▶	**Check the following.** ● Harness for open or short between ABS/TCS control unit and combination meter. ● ABS/TCS control unit. Refer to BR-61, "Wheel Sensor or Rotor".

INSPECTION/ENGINE REVOLUTION SIGNAL

NHEL0046S02

1	CHECK ECM OUTPUT

1. Start engine.
2. Check voltage between combination meter harness connector M33 (with TCS) or M214 (with VDC) terminals 16 (W/G) and ground at idle and 2,000 rpm.

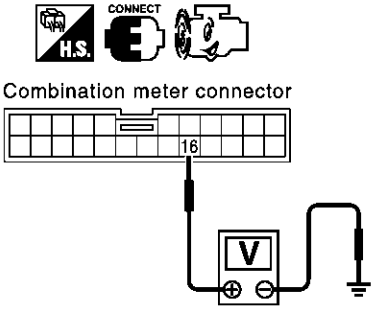

Higher rpm = Higher voltage
Lower rpm = Lower voltage
Voltage should change with rpm.

SEL364WD

OK or NG

OK	▶	Engine revolution signal is OK.
NG	▶	Harness for open or short between ECM and combination meter

INSPECTION/FUEL LEVEL SENSOR UNIT

=NHEL0046S08

1	CHECK GROUND CIRCUIT FOR FUEL LEVEL SENSOR UNIT

Check harness continuity between fuel level sensor unit and fuel pump harness connector terminal 5 and ground.

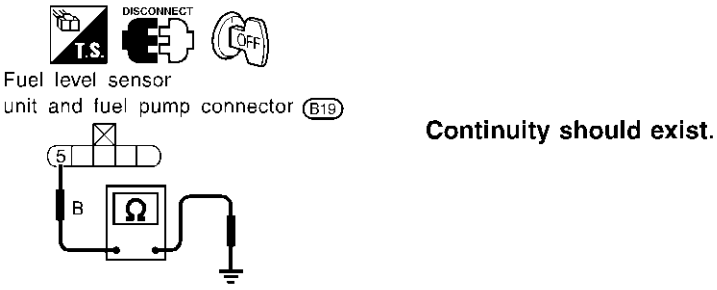

SEL182W

OK or NG

OK	▶	GO TO 2.
NG	▶	Repair harness or connector.

2	CHECK FUEL LEVEL SENSOR UNIT

Refer to "FUEL LEVEL SENSOR UNIT CHECK" (EL-140).

OK or NG

OK	▶	GO TO 3.
NG	▶	Replace fuel level sensor unit.

3	CHECK HARNESS FOR OPEN OR SHORT

1. Disconnect combination meter connector and fuel level sensor unit and fuel pump connector.
2. Check continuity between combination meter harness connector M33 (with TCS) or M214 (with VDC) terminal 17 (G) and fuel level sensor unit and fuel pump harness connector B19 terminal 2 (G).
   Continuity should exist.
3. Check continuity between combination meter harness connector M33 (with TCS) or M214 (with VDC) terminal 17 (G) and ground.
   Continuity should not exist.

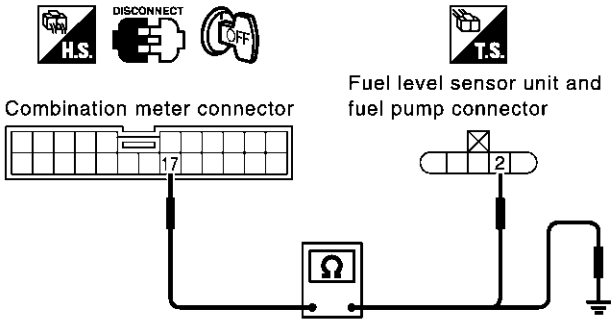

SEL183WA

OK or NG

OK	▶	Fuel level sensor unit is OK.
NG	▶	Repair harness or connector.

INSPECTION/THERMAL TRANSMITTER

=NHEL0046S09

1 CHECK ECM OUTPUT

1. Disconnect combination meter.
2. Check voltage between combination meter harness connector M33 (with TCS) or M214 (with VDC) terminal 18 (PU/W) and ground.
   Battery voltage should exist.

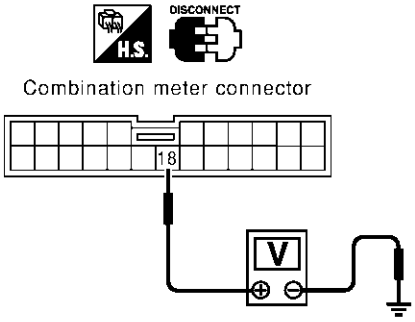

Terminals		Ignition switch position		
(+)	(−)	OFF	ACC	ON
18	Ground	0V	0V	Battery voltage

SEL413Y

OK or NG

OK	▶	GO TO 2.
NG	▶	Replace.

2 CHECK HARNESS FOR OPEN OR SHORT

1. Disconnect combination meter connector and ECM connector.
2. Check continuity between combination meter harness connector M33 (with TCS) or M214 (with VDC) terminal 18 (PU/W) and ECM terminal 18 (PU/W).
   Continuity should exist.
3. Check continuity between combination meter harness connector M33 (with TCS) or M214 (with VDC) terminal 18 (PU/W) and ground.
   Continuity should not exist.

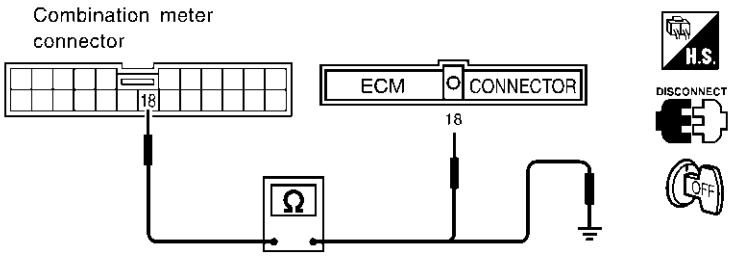

SEL417Y

OK or NG

OK	▶	Thermal transmitter is OK.
NG	▶	Repair harness or connector.

3	CHECK WATER TEMPERATURE OUTPUT SIGNAL

1. Connect combination meter connector and ECM connector.
2. Start engine.
3. Check output signal between combination meter harness connector M33 (with TCS) or M214 (with VDC) terminal 18 (PU/W) and ground. (Use "SIMPLE OSCILLOSCOPE" in "SUB MODE" with CONSULT-II.)

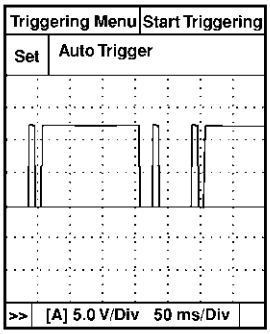

SEL414Y

OK or NG

OK	▶	Replace combination meter.
NG	▶	Check ECM.

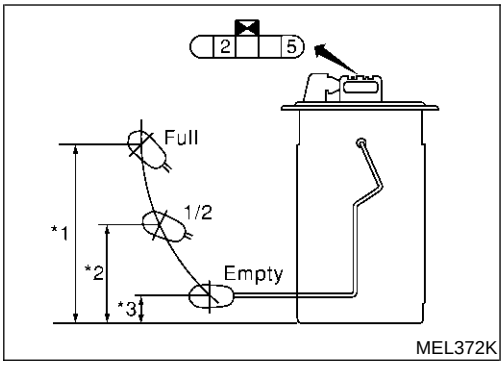

MEL372K

Electrical Components Inspection

=NHEL0047

FUEL LEVEL SENSOR UNIT CHECK

NHEL0047S01

- For removal, refer to FE-6, “REMOVAL”.

Check the resistance between terminals 2 and 5.

Ohmmeter		Float position mm (in)			Resistance value Ω
(+)	(−)				
2	5	*1	Full	158 (6.22)	Approx. 4.5 - 5.5
		*2	1/2	89.7 (3.531)	31.5 - 33.5
		*3	Empty	22.1 (0.870)	80.0 - 80.3

*1 and *3: When float rod is in contact with stopper.

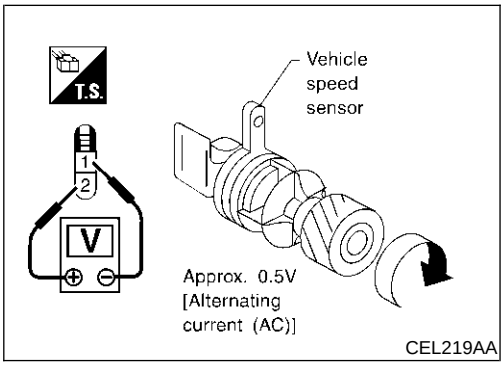

CEL219AA

VEHICLE SPEED SENSOR SIGNAL CHECK

NHEL0047S03

1. Remove vehicle speed sensor from transmission.
2. Turn vehicle speed sensor pinion quickly and measure voltage across 1 and 2.

System Description

NHEL0318

FUNCTION

NHEL0318S01

This board computer can indicate following items.

- Outside air temperature
- Range (Cruising possible distance)
- Journey time (hour meter)
- Average fuel consumption
- Average vehicle speed

Outside air temperature indication

- This indicator shows indication of outside air temperature while ignition switch is in ON position.
- Ambient sensor is used commonly by auto air conditioner and this board computer. When auto air conditioner operates, board computer will correct ambient sensor signal based on positive voltage signal to terminal 56 of board computer from A/C auto amp.
- Indication range is between −30 and +55°C (−22 and 131°F). (When outside temperature is less than −30°C (−22°F) or more than +55°C (131°F), display shows "- - - -".)
- When outside temperature is less than 3°C (37°F) continuously, display will blink as a warning. In this case, the display will change to the OUTSIDE AIR TEMPERATURE mode even though the display is showing a different item. (See NOTE.)
- The indicated temperature is not affected by engine heat. It changes only when one of the following condition exists.

a) When vehicle speed is more than 20 km/h (12 MPH).
b) The ignition key has been turned to OFF position for more than 3.5 hours.
c) When outside temperature is lower than indicated temperature.

Range (Cruising possible distance) indication

- The range indication provides driver with an estimation of the distance that can be driven before refueling. The range is conducted by fuel tank gauge unit (fuel remaining), ECM pulse signal (fuel consumption) and vehicle speed signal.
- Indication will be refreshed every 30 seconds.
- When fuel remaining is less than approx. 10.8 ℓ (11-3/8 US qt, 9-1/2 Imp qt), indication will blink as a warning. If the fuel remaining less than approx. 10.5 ℓ (11-1/8 US qt, 9-1/4 Imp qt), indication will show "- - - -". In this case, the display will change to the RANGE mode automatically even though the display is showing a different item. (See NOTE.)

Average fuel consumption

- Average fuel consumption indication is conducted by ECM pulse signal and vehicle speed signal after system is reset.
- Indication will be refreshed every 30 seconds.
- After reset operation, the display shows "...." until the vehicle is driven 500 m (1,600 ft) and 30 seconds has passed.

Average vehicle speed

- Average vehicle speed indication is conducted by running distance and running time.
- Indication will be refreshed every 30 seconds.
- After reset operation, the displays shows "...." for 30 seconds.

Journey time

- Journey time indication is conducted by integration of ignition ON time.

HOW TO CHANGE/RESET INDICATION

NHEL0318S02

- Indication can be changed by in following order by pushing board computer steering switch "TRIP".
  OUTSIDE AIR TEMPERATURE → RANGE → AVERAGE FUEL CONSUMPTION → AVERAGE VEHICLE SPEED → JOURNEY TIME
- Continuous pushing the switch (more than 0.8 second) can reset the indication of journey time (hour meter), average vehicle speed and average fuel consumption.

NOTE:

- **After the display changes automatically, the indication can be changed to the last mode by pushing the board computer steering switch. In this case, the cursor ("▲") will blink as a warning.**

- **When the OUTSIDE AIR TEMPERATURE warning and the RANGE warning match warning conditions at the same time, the display automatically indicates the OUTSIDE AIR TEMPERATURE.**

Wiring Diagram — B/COMP —

NHEL0319

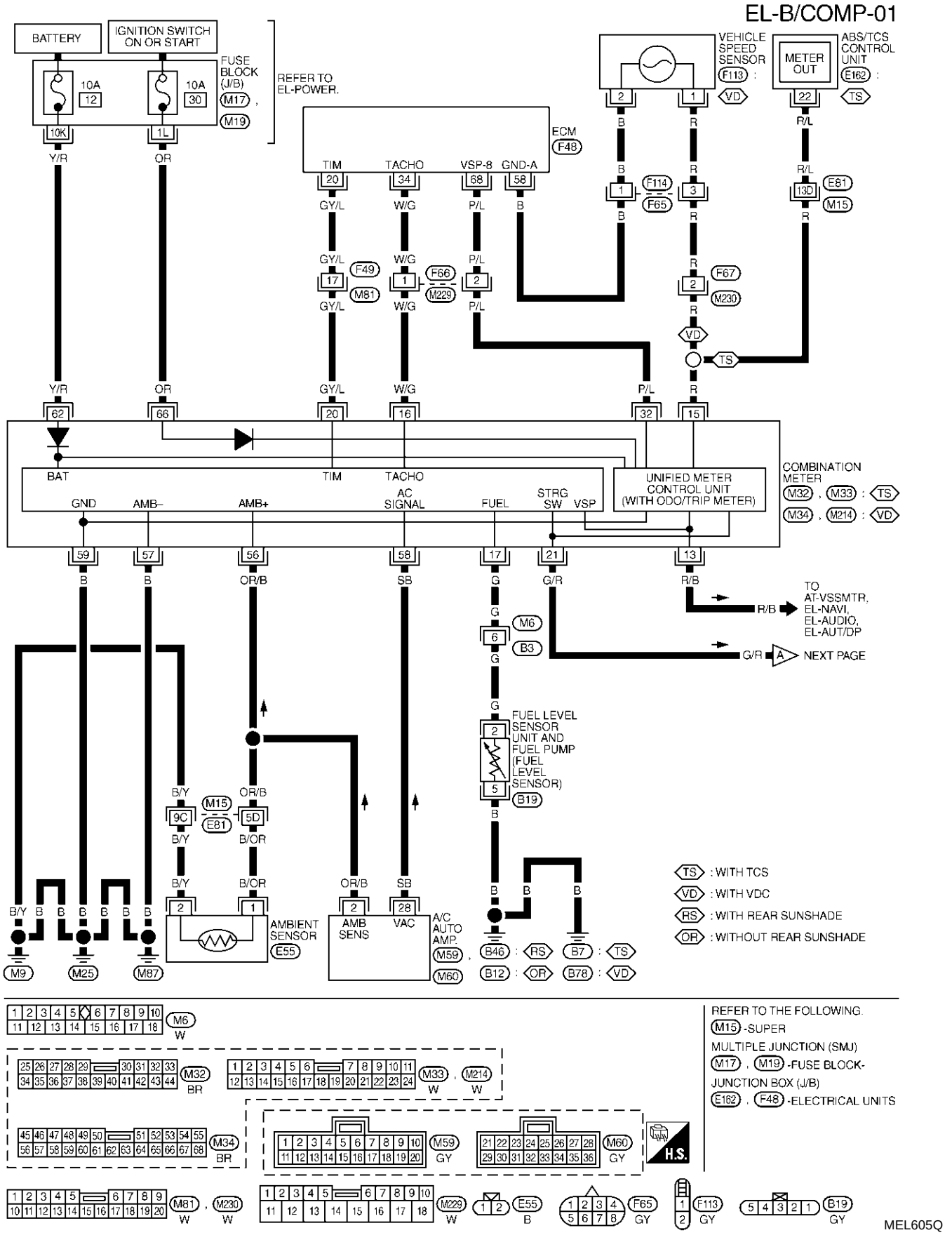

EL-B/COMP-02

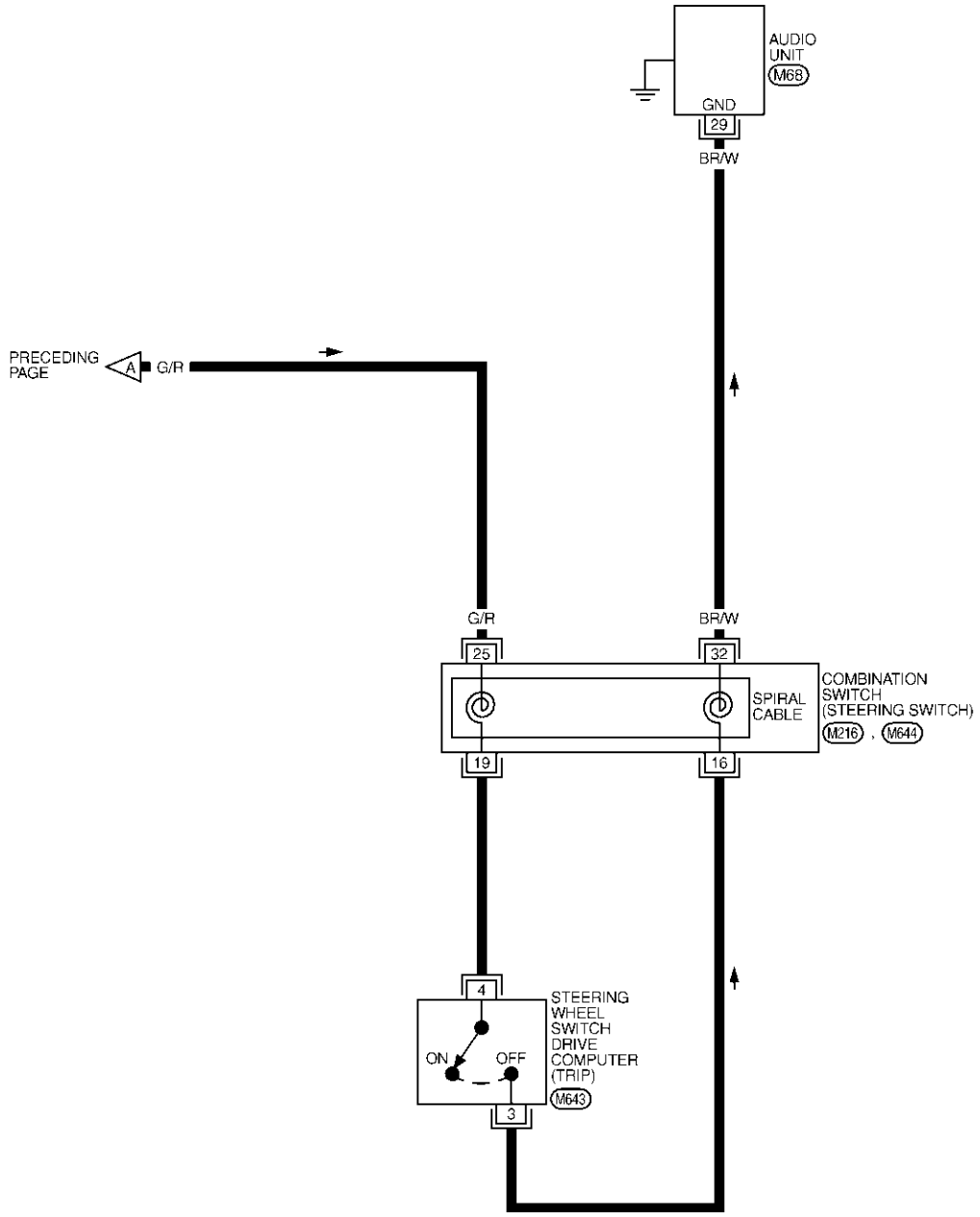

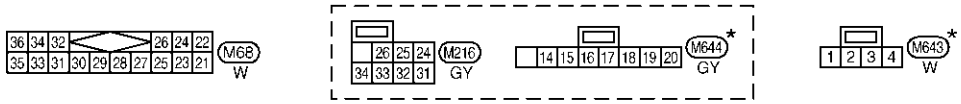

* : THIS CONNECTOR IS NOT SHOWN IN "HARNESS LAYOUT", EL SECTION.

MEL606Q

Trouble Diagnoses

=NHEL0320

SEGMENT CHECK

NHEL0320S01

Board computer display segment can be checked by the procedure shown below.

1. Turn ignition switch to ON position with pushing board computer steering switch “TRIP”. Then segment check will start.
2. Segment check will end after 1 cycle of segment check is performed or any of following conditions exists.

- Ignition switch is returned to ACC or OFF position.
- Vehicle speed signal is input.

PRELIMINARY CHECK

NHEL0320S02

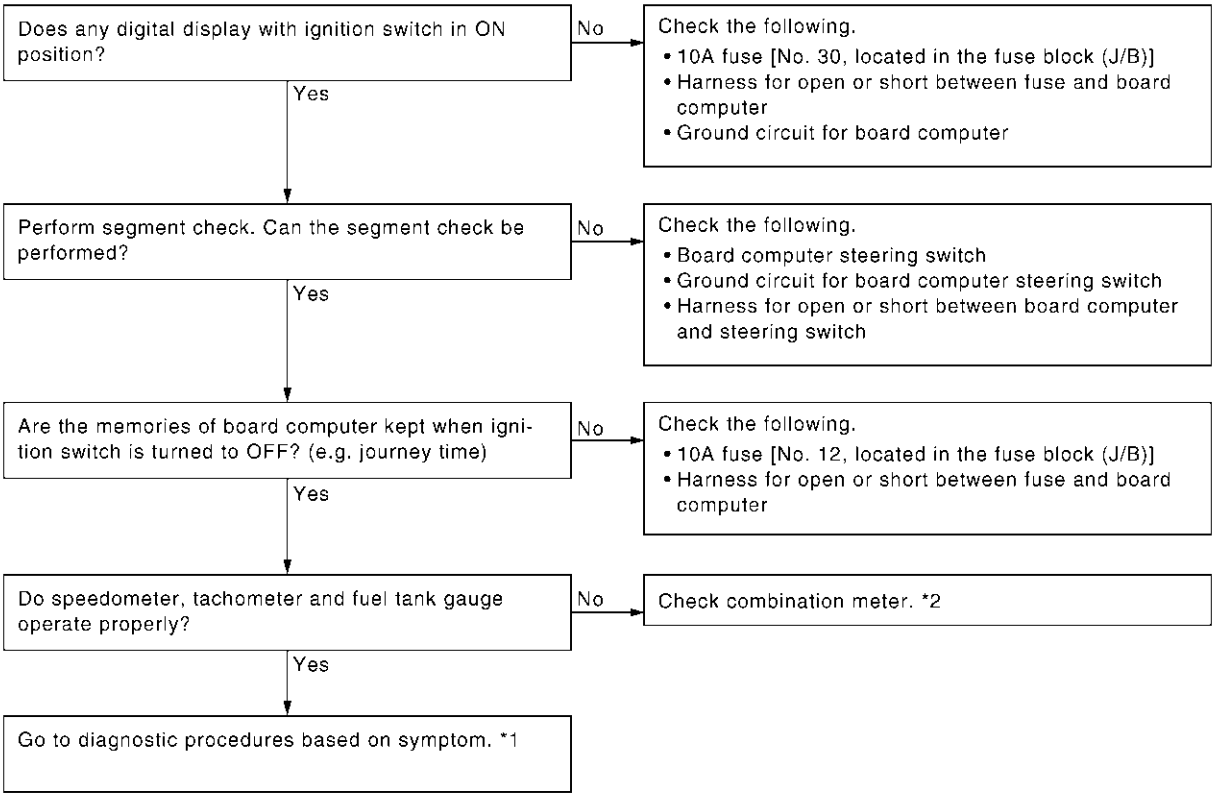

SEL831W

*1 EL-145 *2 EL-130

DIAGNOSES PROCEDURE

NHEL0320S03

Symptom	Possible cause	Repair order
Outside air temperature is not displayed properly. (It may take a short time to steady the indication after ignition switch is turned to ON.)	1. Ambient sensor 2. Ambient sensor circuit 3. A/C on signal 4. Vehicle speed sensor signal	1. Check ambient sensor. Refer to “Electrical Components Inspection”, EL-146. 2. Check harness for open or short between ambient sensor and board computer. 3. Verify more than 4V is present at terminal 58 of board computer when A/C is operated. 4. Make sure journey distance (trip) is displayed properly. If NG, check journey distance (trip) display.
Range (Cruising possible distance) is not displayed properly.	1. Average fuel consumption display 2. Fuel tank gauge signal circuit	1. Make sure fuel consumption is displayed properly. If NG, check fuel consumption display. 2. Make sure fuel gauge operates properly. If NG, check fuel gauge. Refer to EL-137.

Symptom	Possible cause	Repair order
Journey time (hour meter) is not indicated properly.	1. 10A fuse	1. 10A fuse [No. 12, located in the fuse block (J/B)]. Verify battery voltage is present at terminal 62 of combination meter.
Average fuel consumption is not displayed properly.	Fuel consumption signal	Check harness for open or short between ECM terminals (20, 34) and combination meter terminals (20, 16).
Average vehicle speed is not indicated properly.	Journey time (hour meter) display	Make sure journey time is displayed properly. If NG, check journey time display.

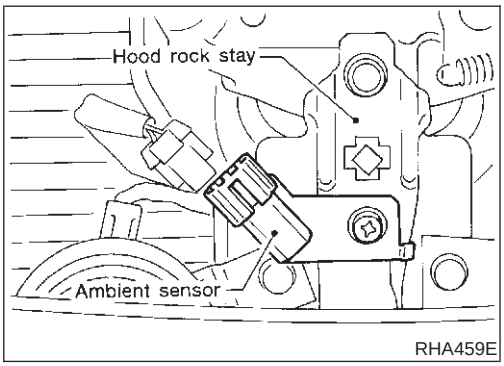

RHA459E

Electrical Components Inspection

NHEL0321

AMBIENT SENSOR

NHEL0321S01

The ambient sensor is attached to the radiator core support. It detects ambient temperature and converts it into a resistance value which is then input to A/C auto amp. and board computer.
After disconnecting ambient sensor harness connector, measure resistance between terminals 1 and 2, using the table below.

Temperature °C (°F)	Resistance kΩ
−15 (5)	12.73
−10 (14)	9.92
−5 (23)	7.80
0 (32)	6.19
5 (41)	4.95
10 (50)	3.99
15 (59)	3.24
20 (68)	2.65
25 (77)	2.19
30 (86)	1.81
35 (95)	1.51
40 (104)	1.27
45 (113)	1.07

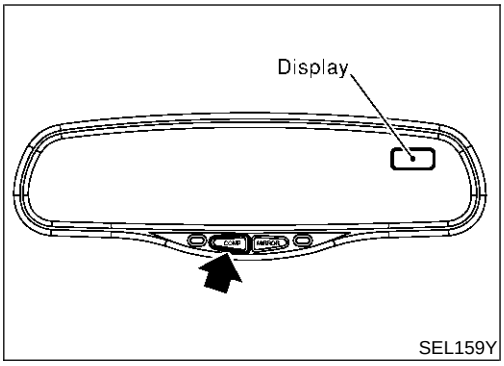

System Description

NHEL0307

This unit displays earth magnetism and heading direction of vehicle.

DIRECTION DISPLAY

NHEL0307S02

Push the “COMP” switch when the ignition key is in the “ACC” or “ON” position. The direction will be displayed.
Pushing the “COMP” switch a second time will turn off the display.

1. If the display reads “C”, calibrate the compass by driving the vehicle in 3 complete circles at less than 5 MPH.
2. To adjust for Compass Variance:

a. Press the “COMP” button for more than 3 seconds. The current zone number will appear in the display.
b. Find your current location and variance zone number on the zone map.
c. Press the “COMP” button until the new zone number appears in the display. After you stop pressing the button in, the display will show a compass direction within a few seconds.

NOTE:

1) Do not install the ski rack, antenna, etc. which are attached to the vehicle by means of a magnet. They affect the operation of the compass.
2) If the compass deviates from the correct indication soon after repeated adjustment, have the compass checked at an authorized dealer.
3) The compass may not indicate the correct compass point in tunnels or while driving up or down a steep hill.
(The compass returns to the correct compass point when the vehicle moves to an area where the geomagnetism is stabilized.)

3. Cleaning the Mirror
When cleaning the mirror, use a paper towel or similar material dampened with glass cleaner. Do not spray glass cleaner directly on the mirror as that may cause the liquid cleaner to enter the mirror housing.

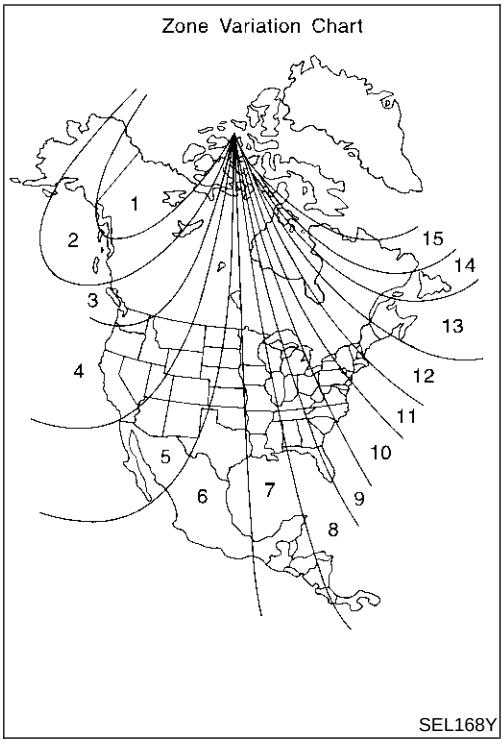

"C" is displayed in the compass window.

The compass needs to be calibrated. Drive the vehicle in 3 circles at 5 MPH or less until the display reads a direction. You can also calibrate the compass by driving your vehicle on your everyday routine. The compass will be calibrated once it has tracked 3 complete circles.

Inaccurate compass direction

a. With the display turned on, push the "COMP" button for 3 seconds, until the Zone selection comes up (a number will be displayed in the mirror compass window).

b. Toggle until correct zone is found and release switch.

c. The display will show all segments, and return to the normal compass mode within 10 seconds of no switch activity.

d. If the vehicle changes zone, repeat steps 1 thru 3. See map.

Wiring Diagram — COMPAS —

NHEL0308

EL-COMPAS-01

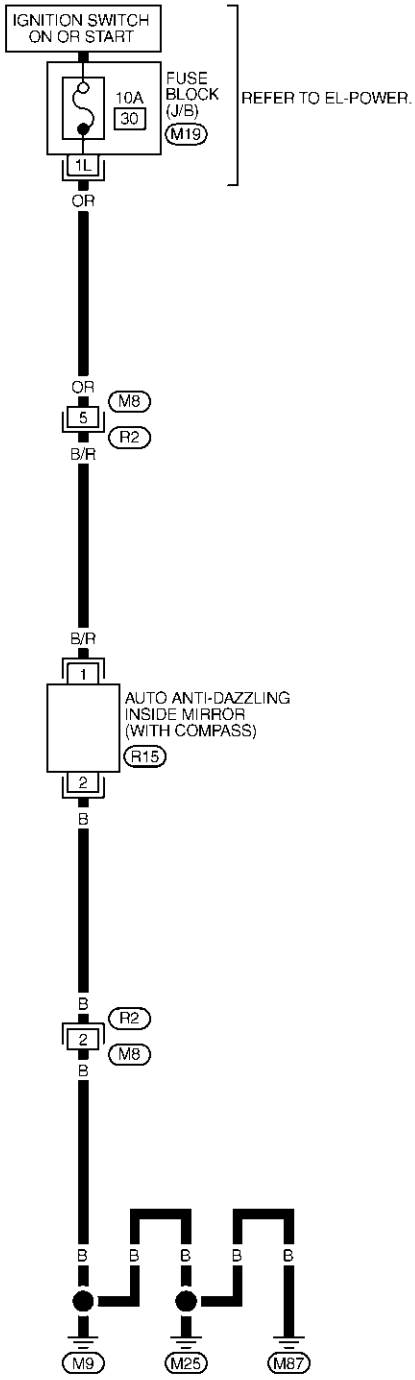

REFER TO THE FOLLOWING.
M19 - FUSE BLOCK -
JUNCTION BOX (J/B)

MEL607Q

Schematic

NHEL0049

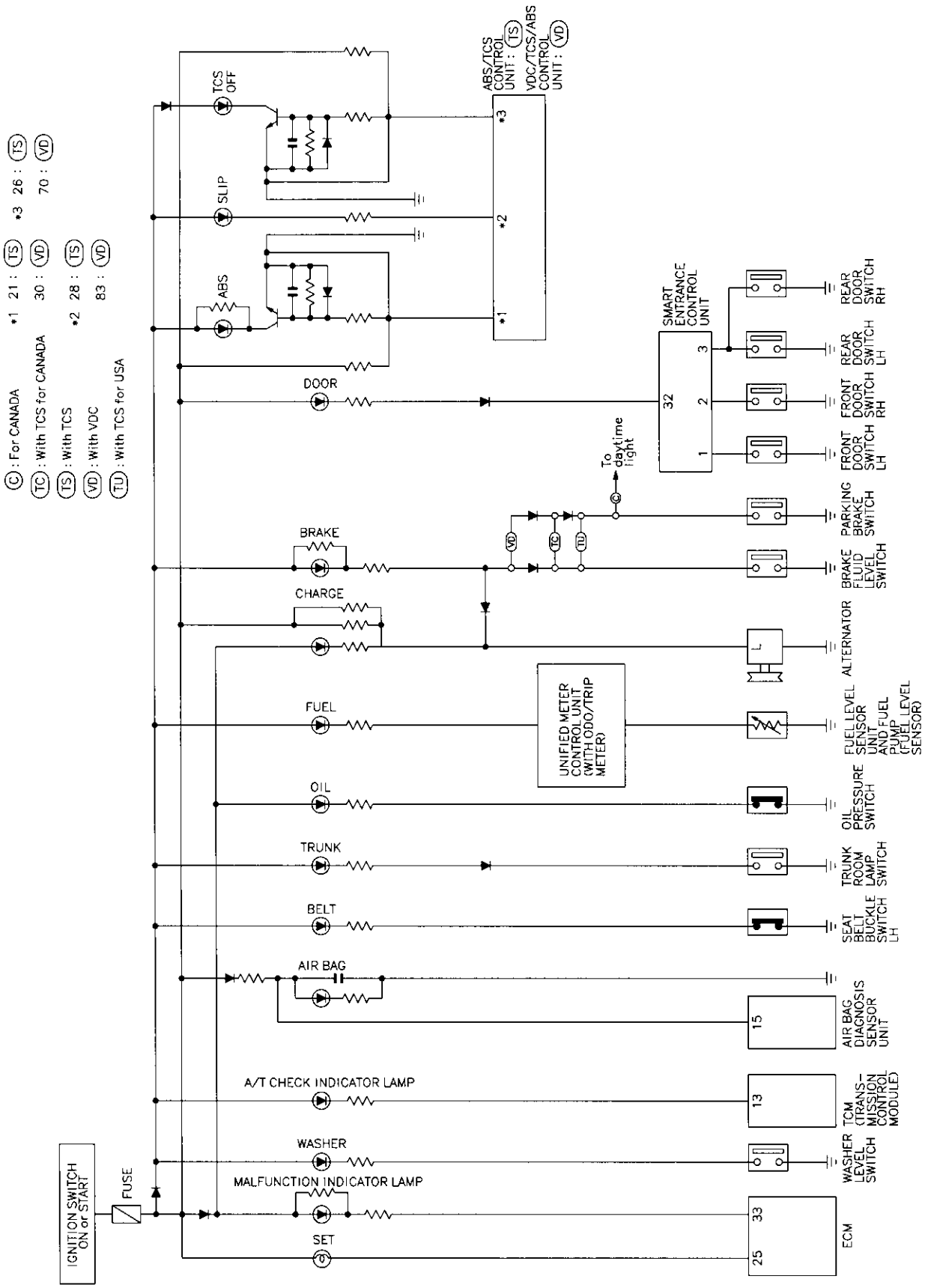

MEL608Q

Wiring Diagram — WARN —

NHEL0050

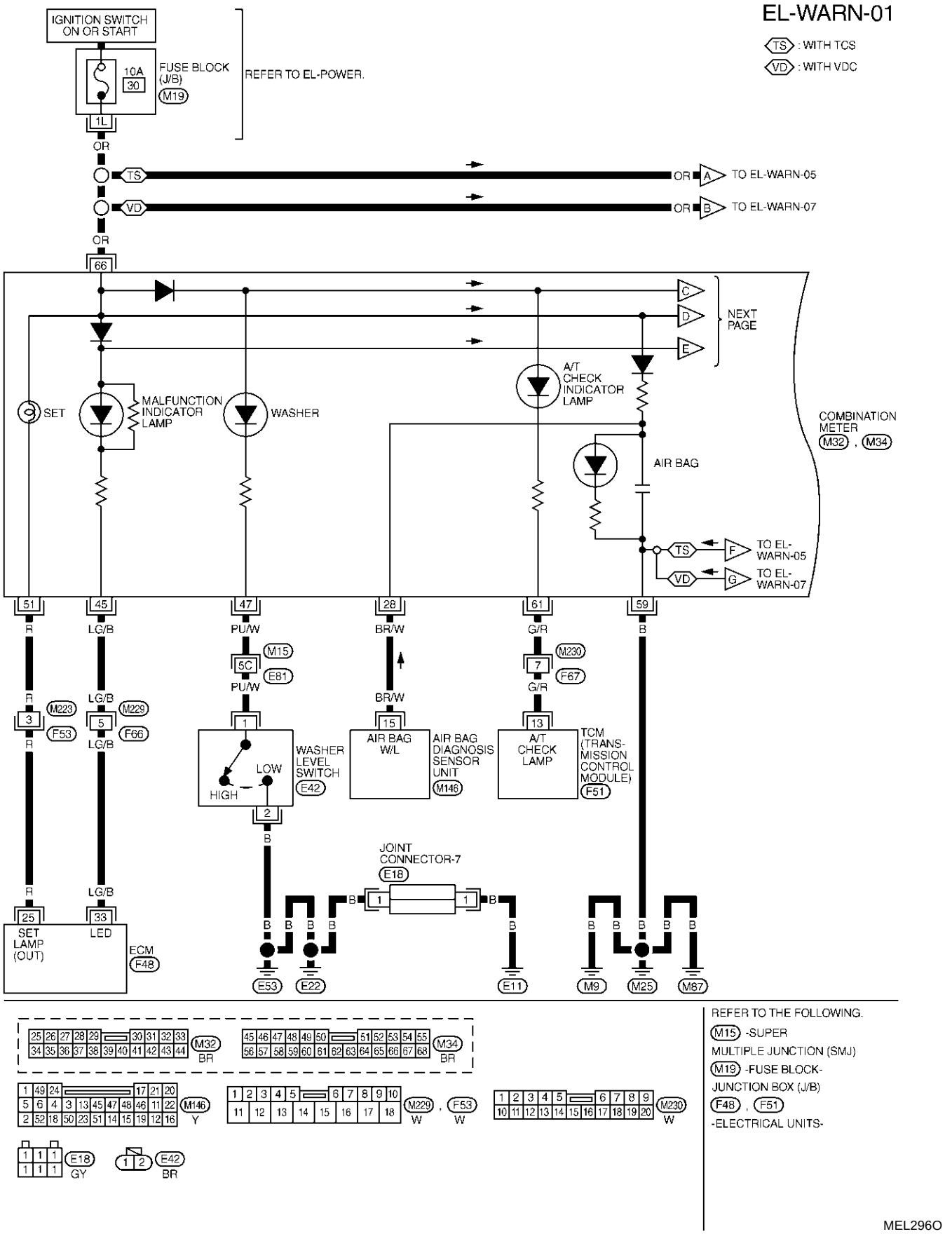

EL-WARN-02

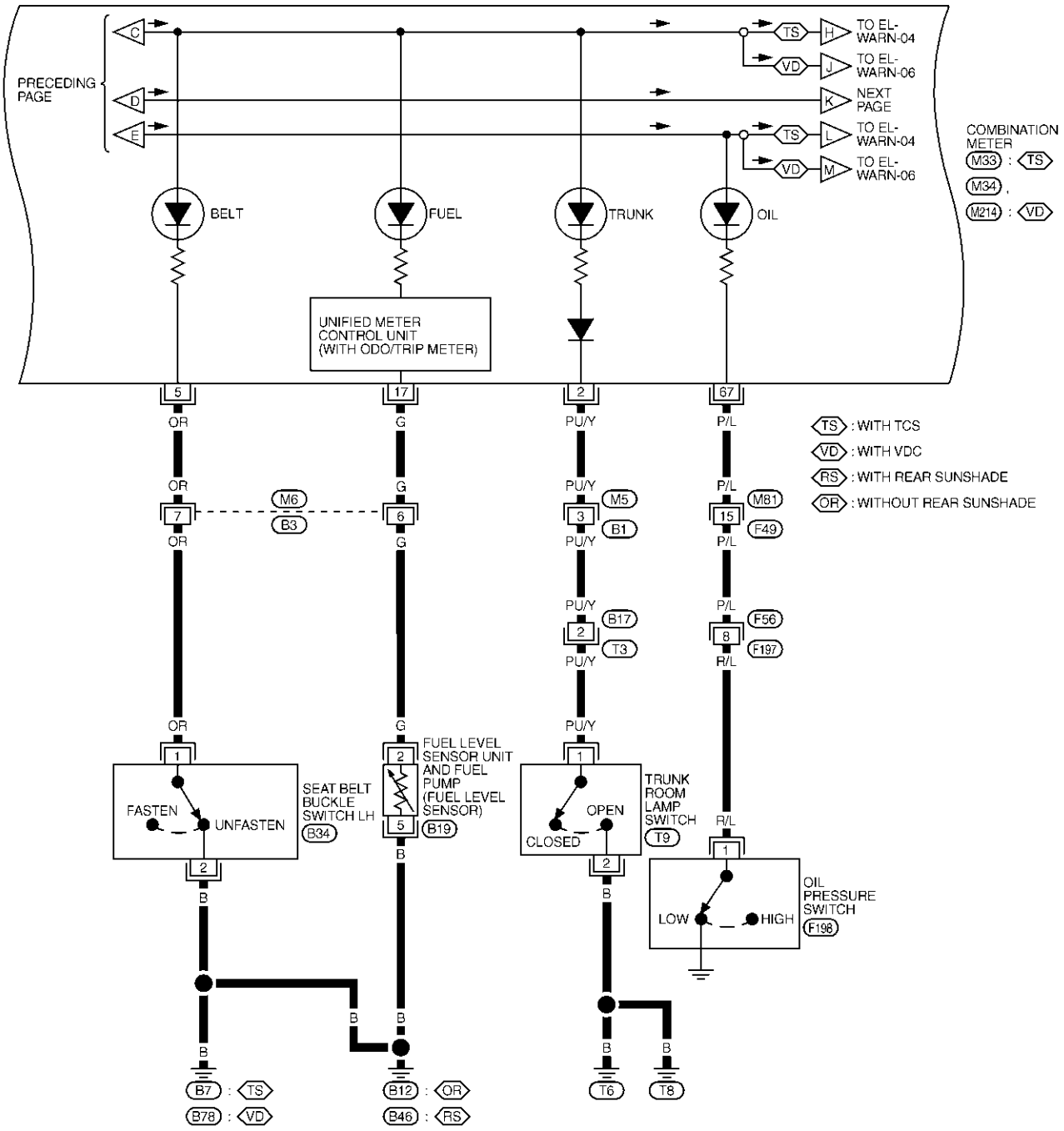

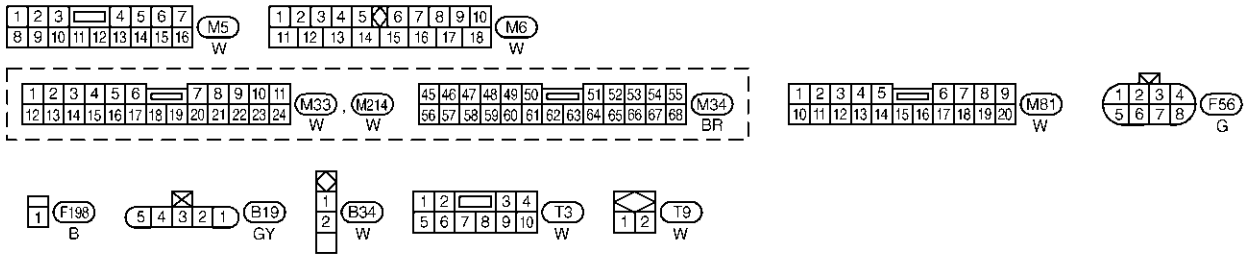

MEL609Q

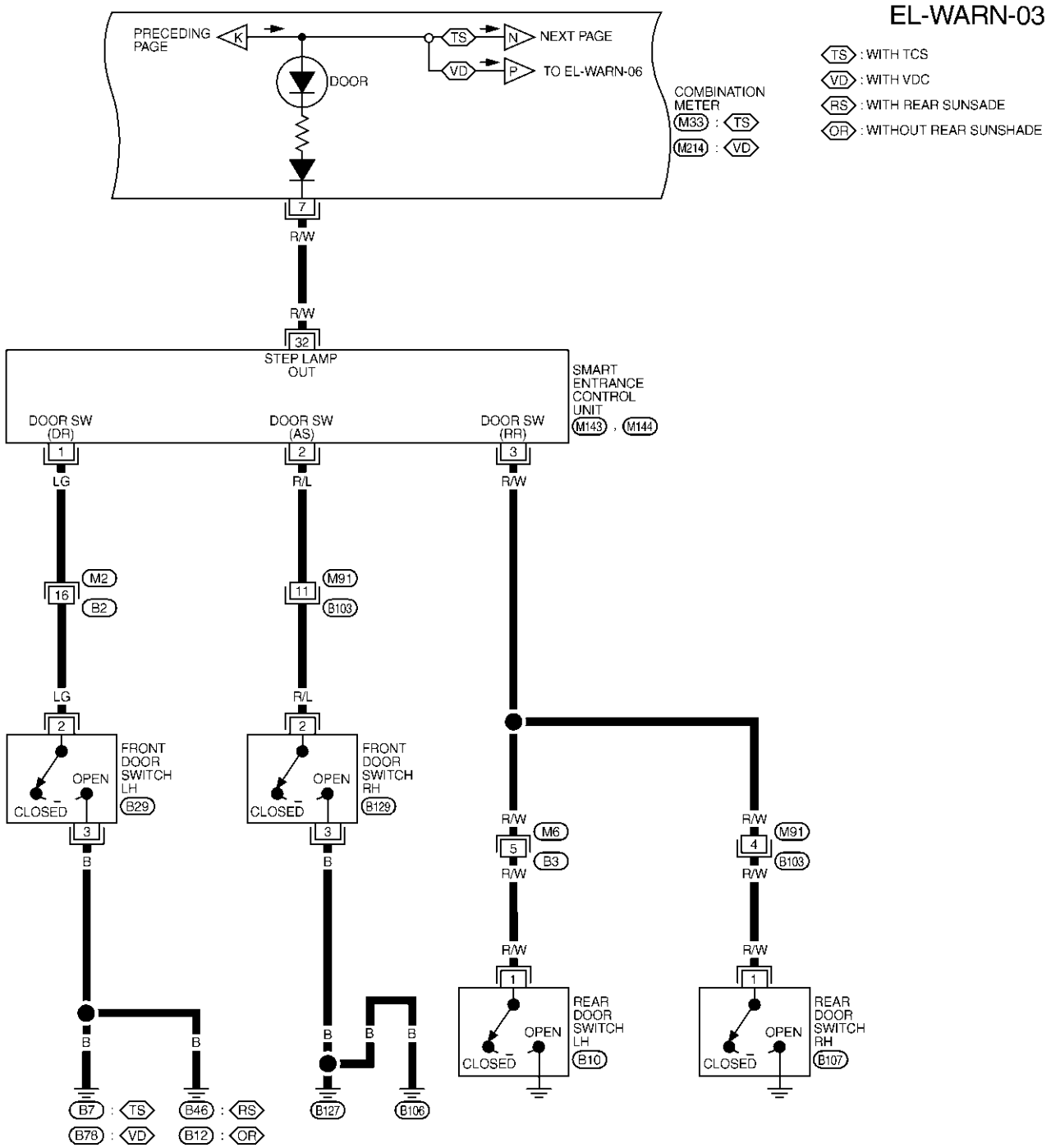
EL-WARN-03
TS : WITH TCS
VD : WITH VDC
RS : WITH REAR SUNSADE
OR : WITHOUT REAR SUNSHADE
PRECEDING PAGE
K
TS
N
NEXT PAGE
VD
P
TO EL-WARN-06
DOOR
COMBINATION METER
M33 : TS
M214 : VD
7
R/W
R/W
32
STEP LAMP OUT
SMART ENTRANCE CONTROL UNIT
M143 , M144
DOOR SW (DR)
DOOR SW (AS)
DOOR SW (RR)
1
2
3
LG
R/L
R/W
M2
16
B2
M91
11
B103
LG
R/L
2
FRONT DOOR SWITCH LH
OPEN
CLOSED
B29
FRONT DOOR SWITCH RH
B129
3
B
R/W
M6
5
B3
R/W
M91
4
B103
1
REAR DOOR SWITCH LH
B10
REAR DOOR SWITCH RH
B107
B7 : TS
B78 : VD
B46 : RS
B12 : OR
B127
B106

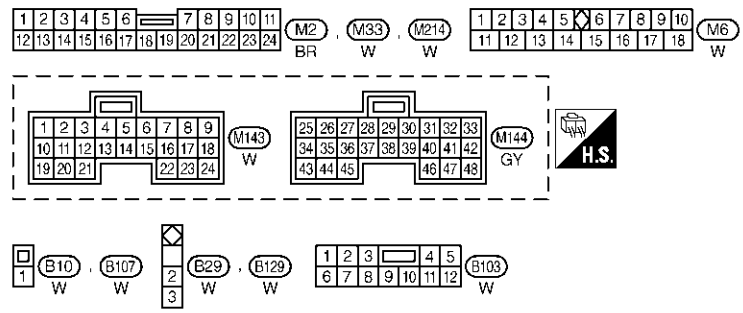
M2
BR
M33
W
M214
W
M6
W
M143
W
M144
GY
H.S.
B10
W
B107
W
B29
W
B129
W
B103
W

MEL610Q

Wiring Diagram — WARN — (Cont'd)

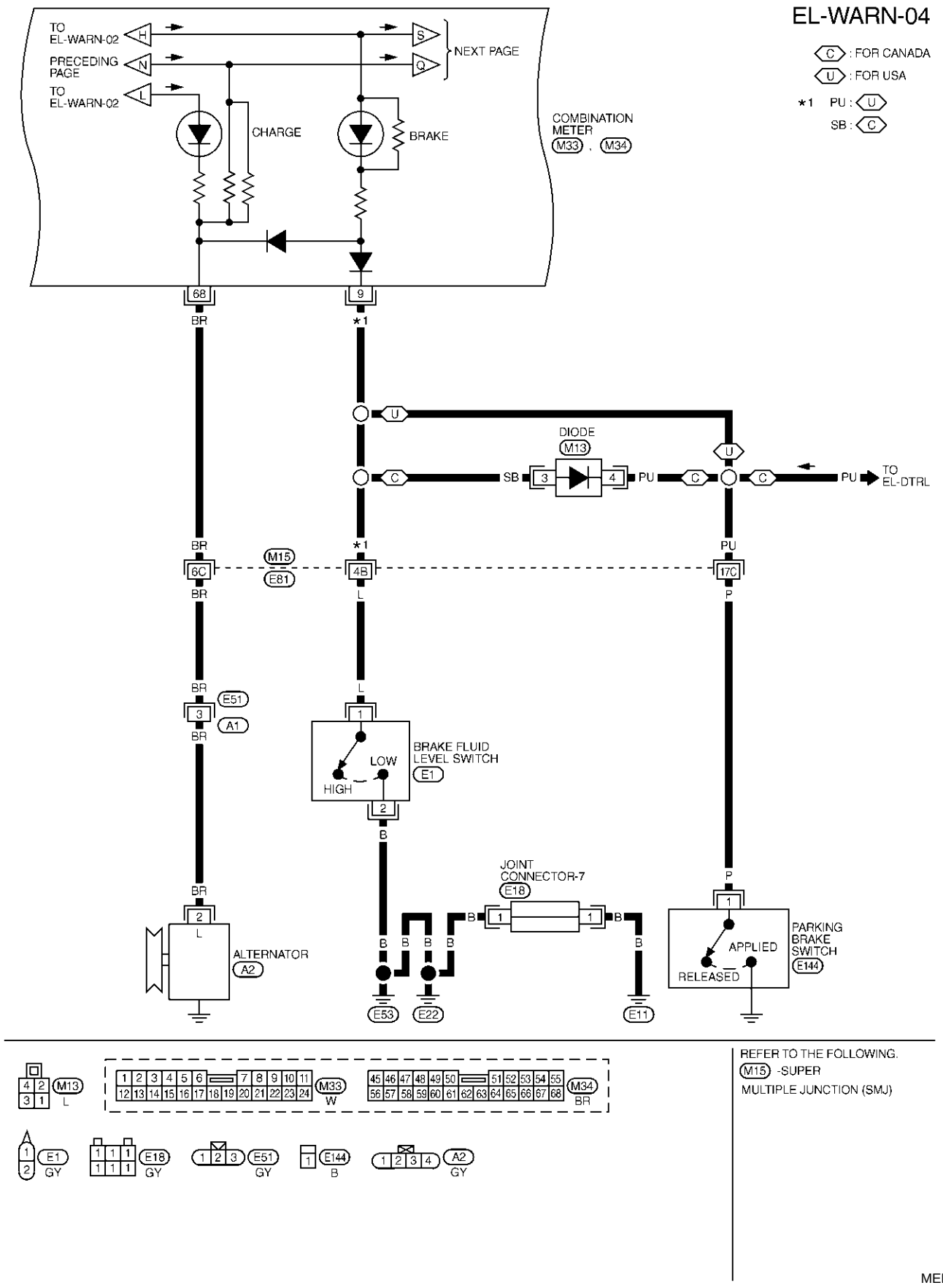

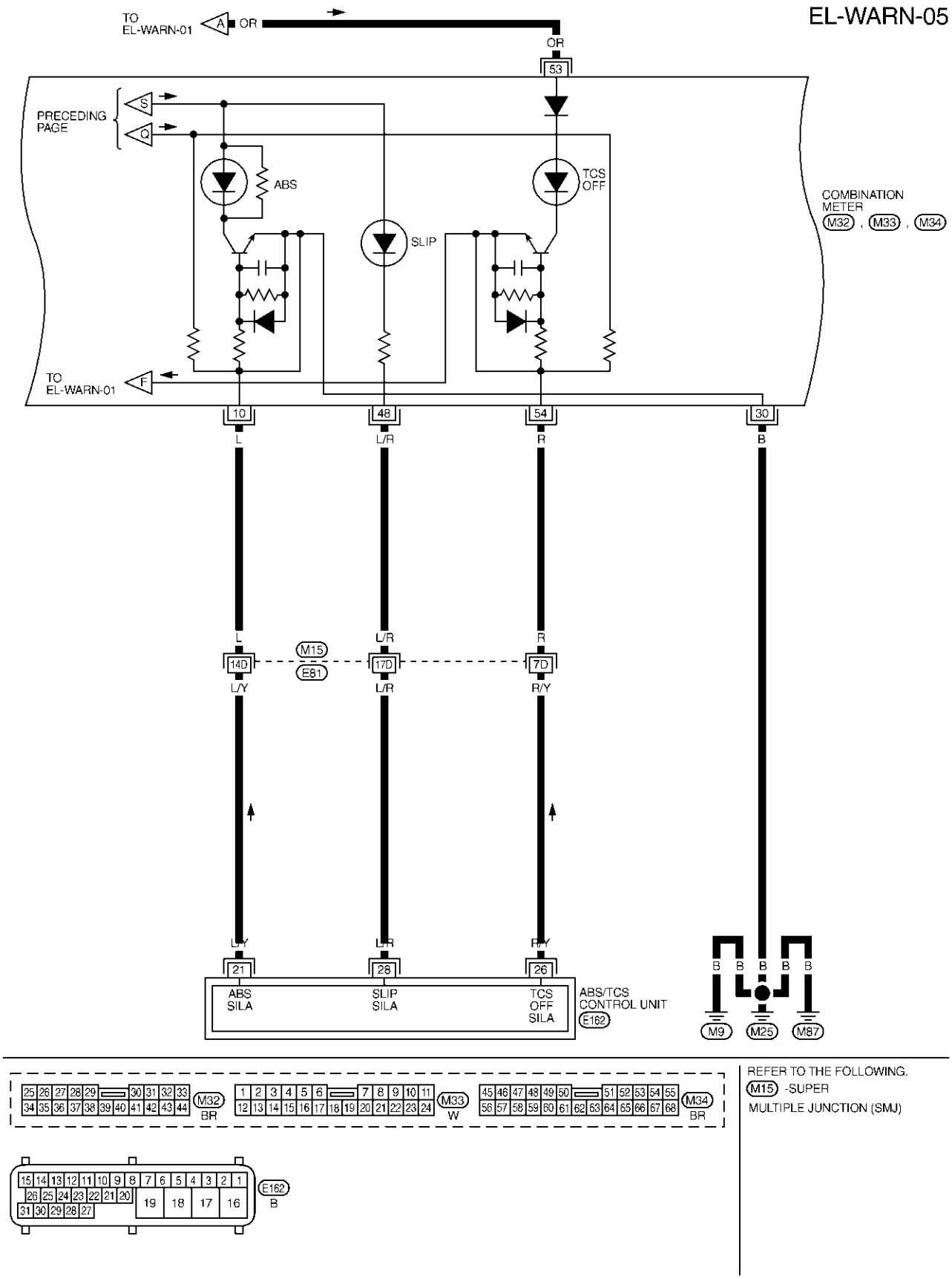
EL-WARN-05
TO EL-WARN-01
A
OR
OR
53
PRECEDING PAGE
S
Q
ABS
SLIP
TCS OFF
COMBINATION METER
M32
M33
M34
TO EL-WARN-01
F
10
48
54
30
L
L/R
R
B
L
L/R
R
M15
E81
14D
17D
7D
L/Y
L/R
R/Y
L/Y
L/R
R/Y
21
28
26
ABS SILA
SLIP SILA
TCS OFF SILA
ABS/TCS CONTROL UNIT
E162
B B B B B
M9
M25
M87
M32
BR
M33
W
M34
BR
E162
B
REFER TO THE FOLLOWING.
M15 -SUPER MULTIPLE JUNCTION (SMJ)

MEL612Q

Wiring Diagram — WARN — (Cont'd)

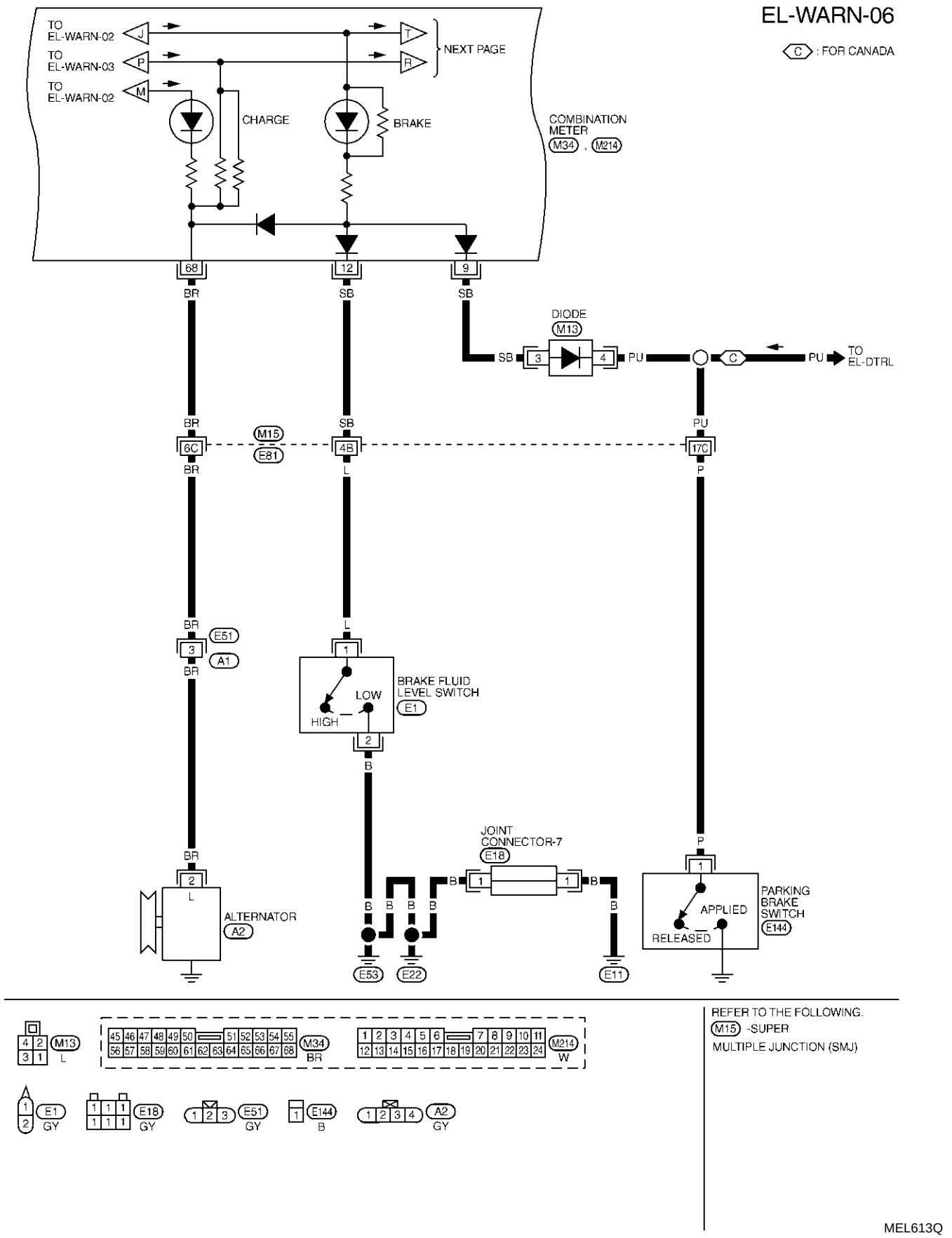

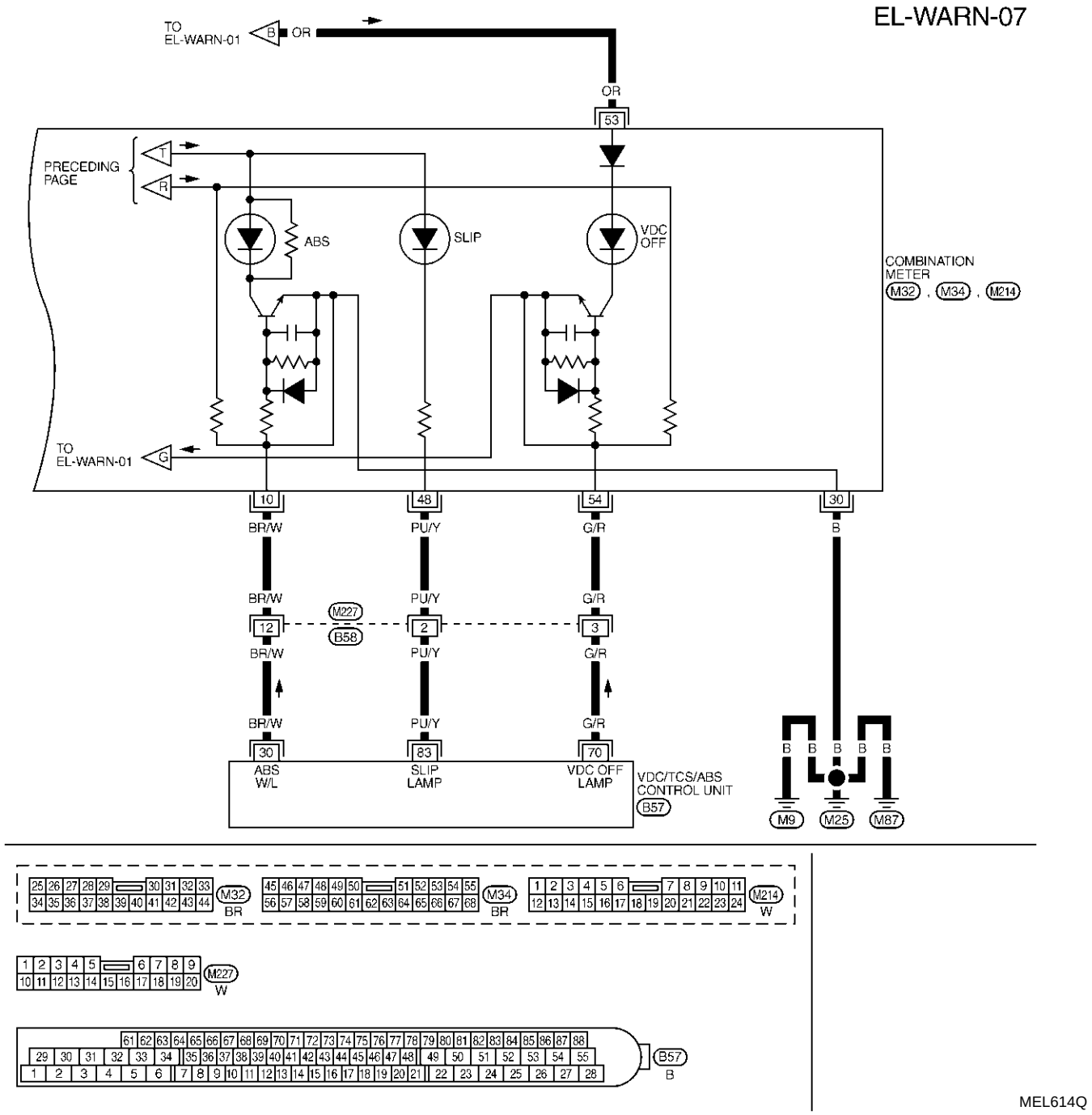

SMART ENTRANCE CONTROL UNIT TERMINALS AND REFERENCE VALUE BETWEEN EACH TERMINAL AND GROUND

TERMINAL	WIRE COLOR	ITEM	CONDITION		DATA (DC)
1	LG	DRIVER DOOR SWITCH	OFF (CLOSED) → ON (OPEN)		12V → 0V
2	R/L	PASSENGER DOOR SWITCH	OFF (CLOSED) → ON (OPEN)		5V → 0V
3	R/W	REAR DOOR SWITCH	OFF (CLOSED) → ON (OPEN)		5V → 0V
32	R/W	FRONT STEP LAMP	ANY DOOR SWITCH	ON (OPEN) → OFF (CLOSED)	0V → 12V

SEL976XB

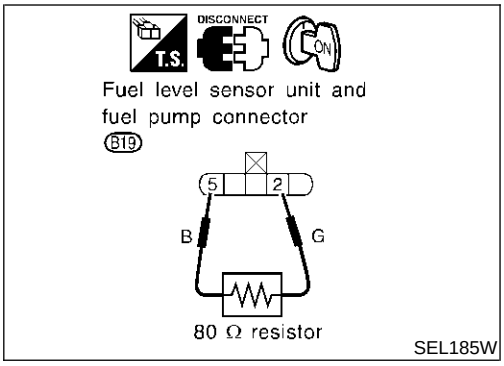

SEL185W

Electrical Components Inspection

=NHEL0051

FUEL WARNING LAMP OPERATION CHECK

NHEL0051S01

1. Turn ignition switch “OFF”.
2. Disconnect fuel level sensor unit and fuel pump harness connector B19.
3. Connect a resistor (80Ω) between fuel level sensor unit and fuel pump harness connector terminals 2 and 5.
4. Turn ignition switch “ON”.

The fuel warning lamp should come on.

NOTE:
ECM might store the 1st trip DTC P0180 and the 1st trip DTC P0464 during this inspection.
If the DTC is stored in ECM memory, erase the DTC after reconnecting fuel level sensor unit and fuel pump harness connector.
Refer to EC-89, “HOW TO ERASE EMISSION-RELATED DIAGNOSTIC INFORMATION”.

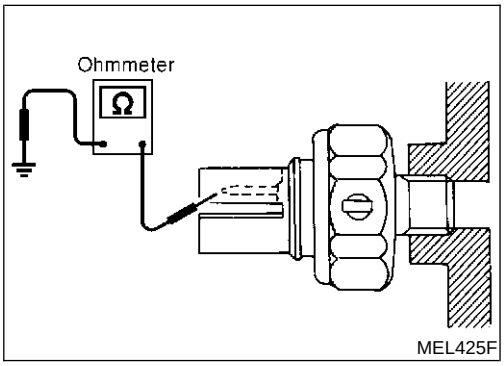

MEL425F

OIL PRESSURE SWITCH CHECK

NHEL0051S02

	Oil pressure kPa (kg/cm^2, psi)	Continuity
Engine running	More than 10 - 20 (0.1 - 0.2, 1 - 3)	No
Engine not running	Less than 10 - 20 (0.1 - 0.2, 1 - 3)	Yes

Check the continuity between the terminals of oil pressure switch and body ground.

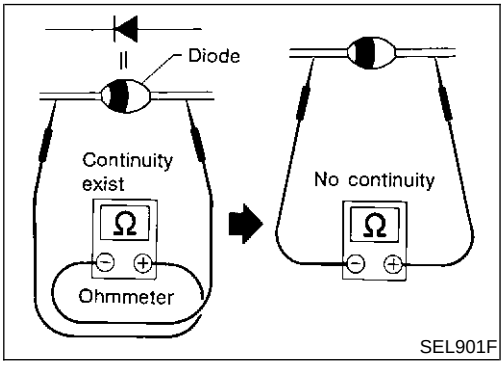

SEL901F

DIODE CHECK

NHEL0051S03

- Check continuity using an ohmmeter.
- Diode is functioning properly if test results are as shown in the figure at left.
- Check diodes at the combination meter harness connector instead of on the combination meter assembly. Refer to EL-151, “WARNING LAMP” wiring diagrams.

NOTE:
Specification may vary depending on the type of tester. Before performing this inspection, be sure to refer to the instruction manual for the tester to be used.

Wiring Diagram — AT/IND —

NHEL0159

EL-AT/IND-01

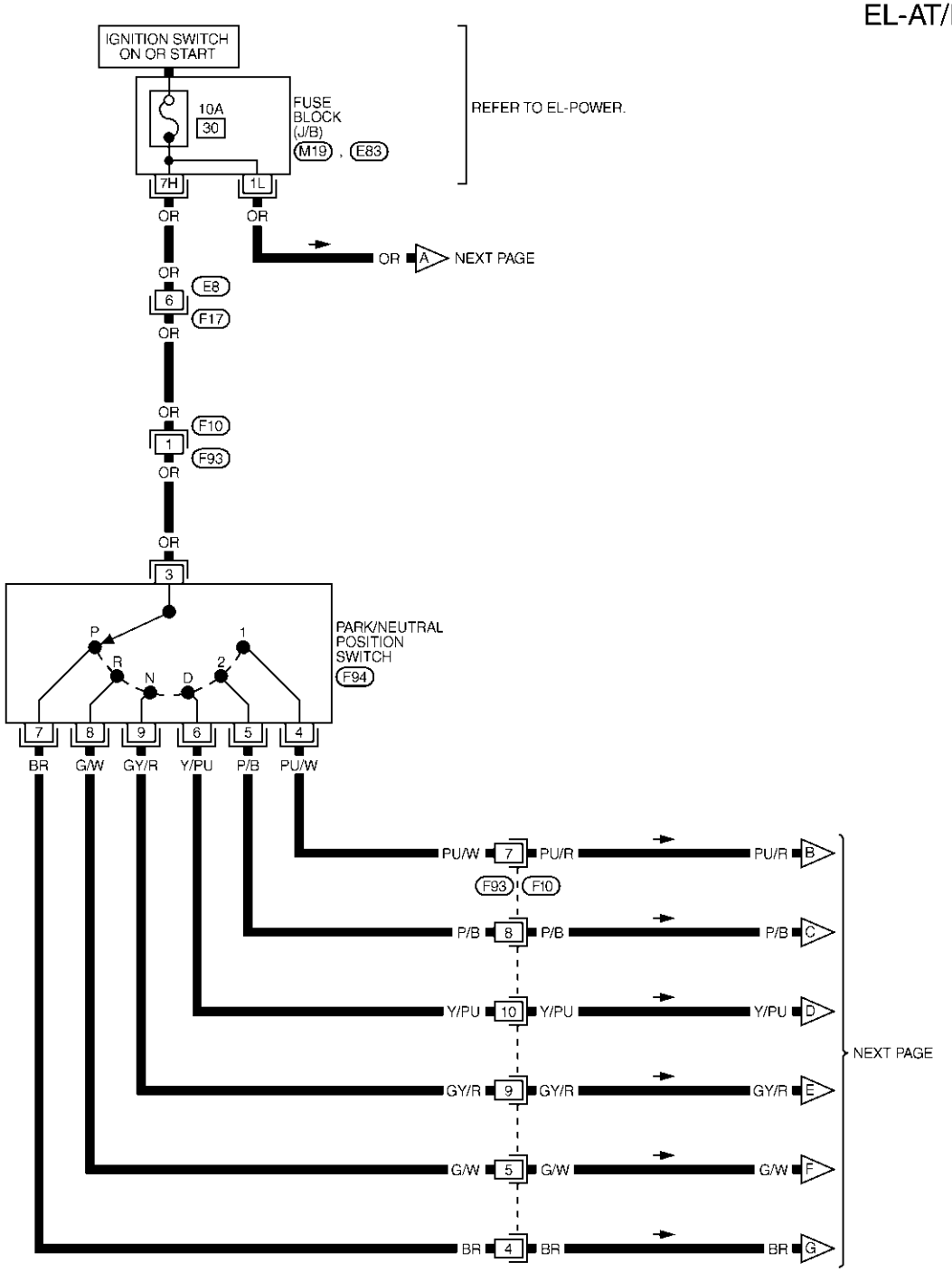

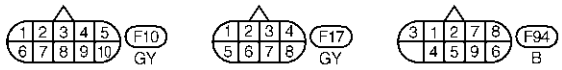

REFER TO THE FOLLOWING.
M19 , E83 -FUSE BLOCK-JUNCTION BOX (J/B)

MEL615Q

EL-AT/IND-02

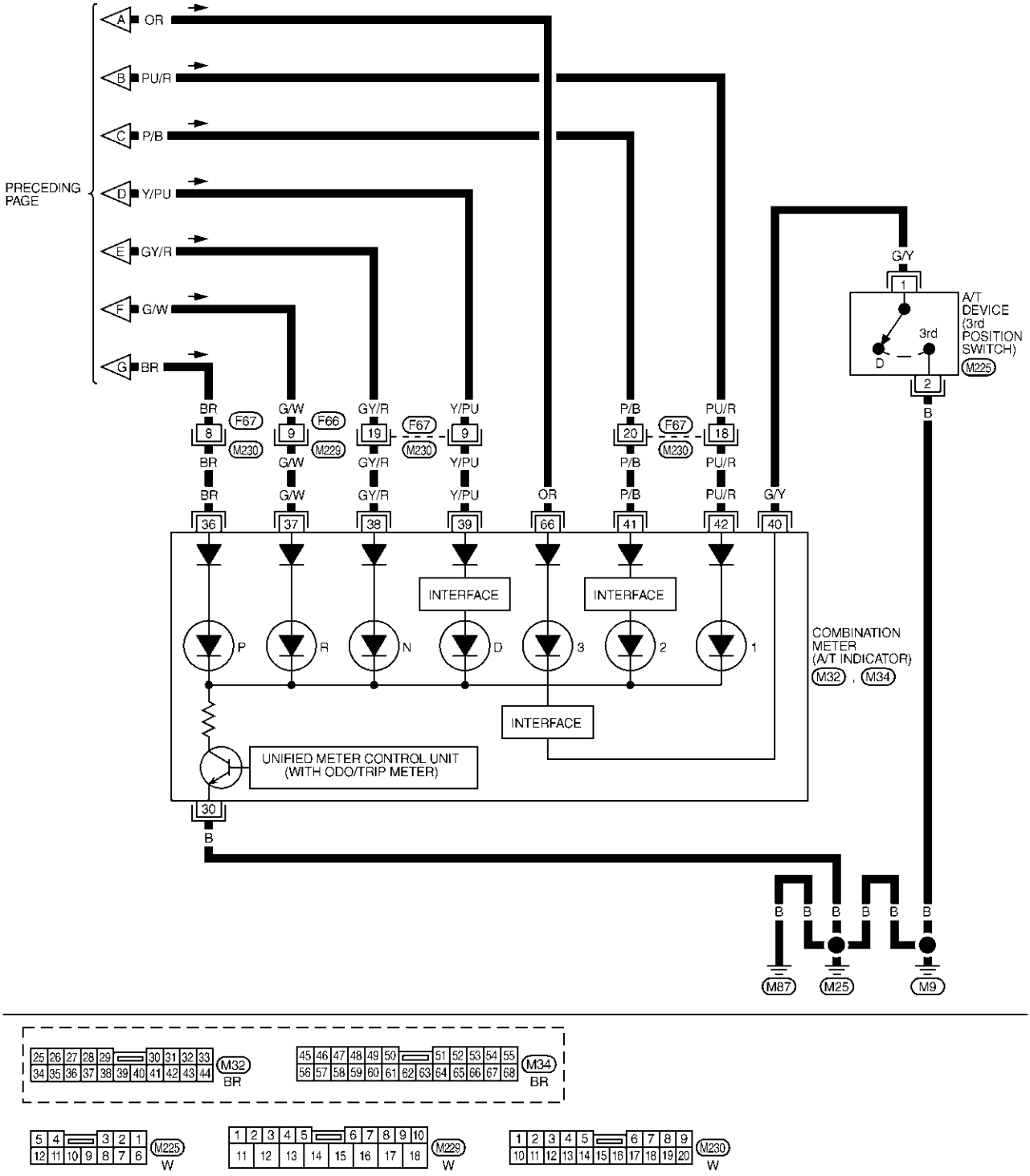

MEL616Q

Component Parts and Harness Connector Location

NHEL0052

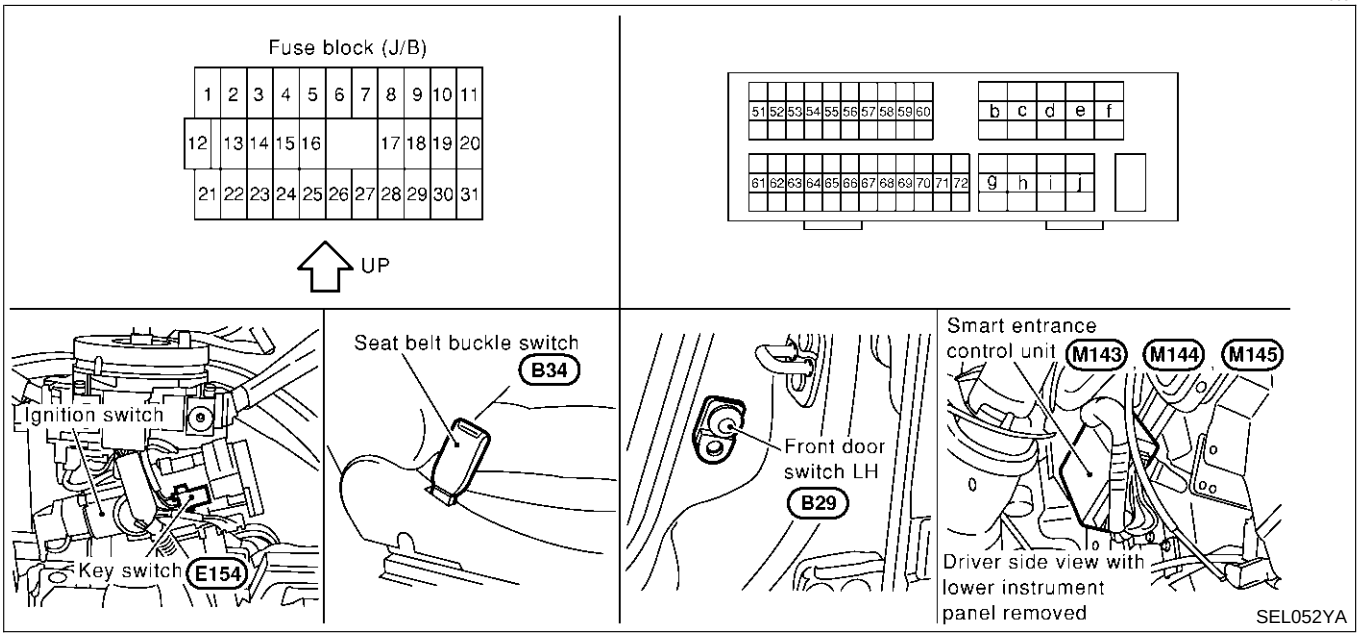

System Description

NHEL0053

The warning chime is controlled by the smart entrance control unit.
The warning chime is located in the smart entrance control unit.
Power is supplied at all times

- through 10A fuse [No. 13, located in fuse block (J/B)]
- to smart entrance control unit terminal 49 and
- to key switch terminal 3,
- through 10A fuse (No. 60, located in the fuse and fusible link box)
- to tail lamp relay terminals 1 and 3.

With the ignition switch in the ON or START position, power is supplied

- through 10A fuse [No. 10, located in the fuse block (J/B)]
- to smart entrance control unit terminal 27.

Ground is supplied to smart entrance control unit terminal 43 and 64 through body grounds M9, M25 and M87.
When a signal, or combination of signals, is received by the smart entrance control unit, the warning chime will sound.

IGNITION KEY WARNING CHIME

NHEL0053S01

With the key in the ignition switch in the OFF position, and the driver's door open, the warning chime will sound.
Power is supplied

- from key switch terminal 4
- to smart entrance control unit terminal 25.

Ground is supplied

- from front door switch (LH) terminal 2
- to smart entrance control unit terminal 1.

Front door switch (LH) terminal 3 is grounded through body grounds B7 (with TCS) or B78 (with VDC) and B12 (without rear sunshade) or B46 (with rear sunshade).

LIGHT WARNING CHIME

NHEL0053S02

With ignition switch OFF, driver's door open, and lighting switch in 1ST or 2ND position, warning chime will sound. Power is supplied.

- from tail lamp relay terminal 2
- to smart entrance control unit terminal 19 and 57.

Ground is supplied

- from front door switch (LH) terminal 2
- to smart entrance control unit terminal 1.

Front door switch (LH) terminal 3 is grounded through body grounds B7 (with TCS) or B78 (with VDC) and B12 (without rear sunshade) or B46 (with rear sunshade).

SEAT BELT WARNING CHIME

NHEL0053S03

With ignition switch turned ON and seat belt unfastened (seat belt switch ON), warning chime will sound for approximately 6 seconds.
Ground is supplied

- from seat belt buckle switch LH terminal 1
- to smart entrance control unit terminal 28.

Seat belt buckle switch LH terminal 2 is grounded through body grounds B7 (with TCS) or B78 (with VDC) and B12 (without rear sunshade) or B46 (with rear sunshade).

Wiring Diagram — CHIME —

NHEL0054

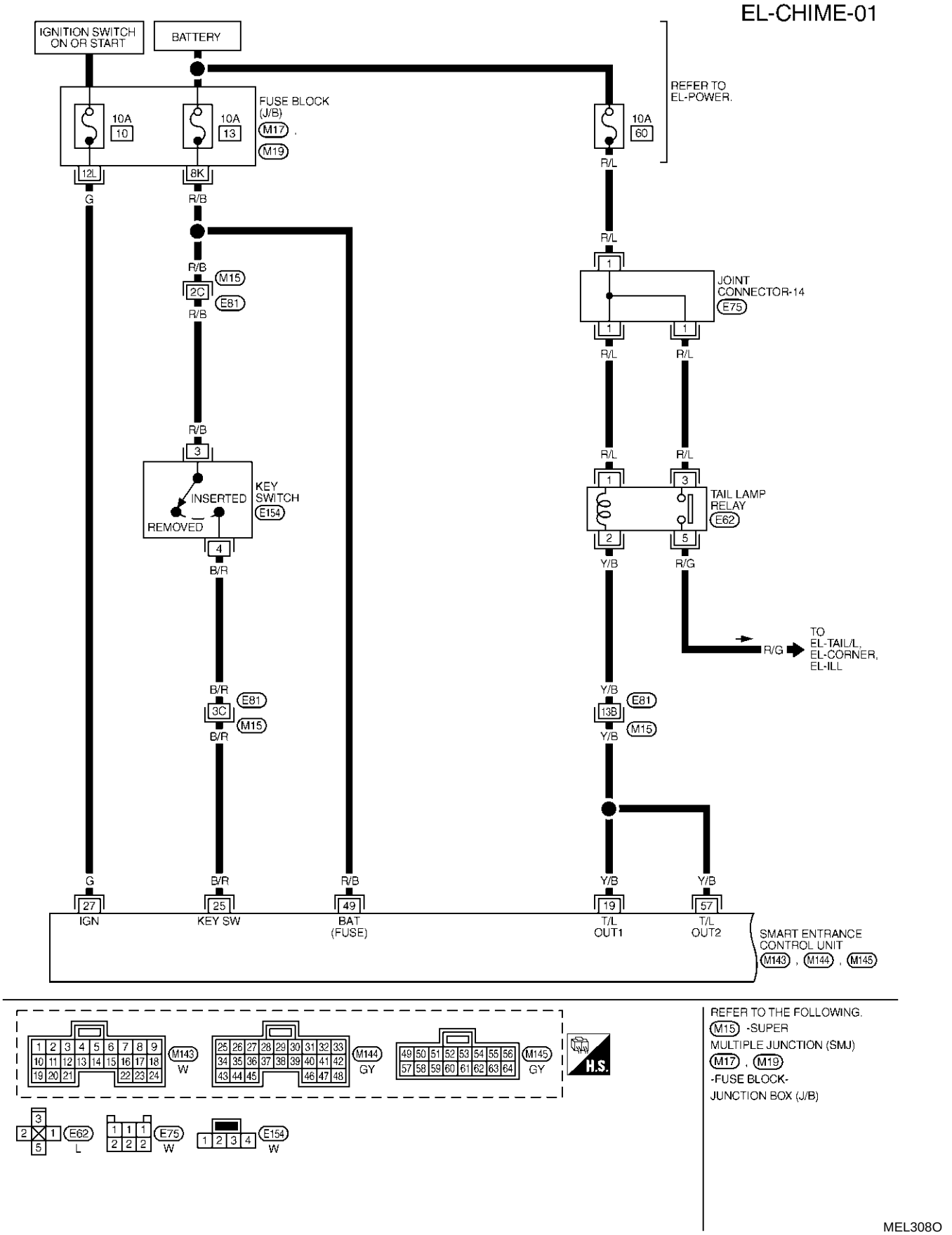

EL-CHIME-02

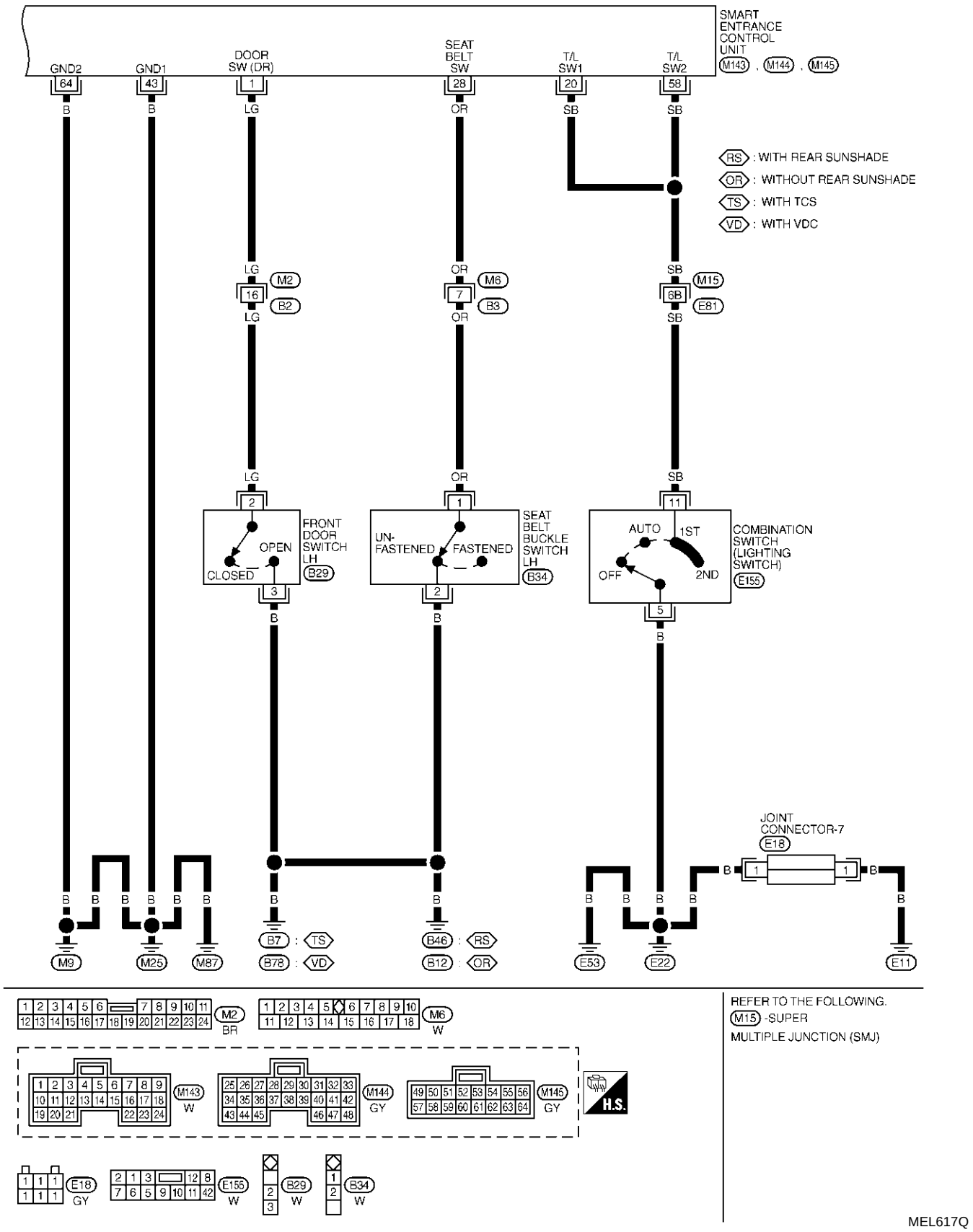
SMART ENTRANCE CONTROL UNIT
M143 , M144 , M145
GND2
GND1
DOOR SW (DR)
SEAT BELT SW
T/L SW1
T/L SW2
RS : WITH REAR SUNSHADE
OR : WITHOUT REAR SUNSHADE
TS : WITH TCS
VD : WITH VDC
FRONT DOOR SWITCH LH
OPEN
CLOSED
B29
SEAT BELT BUCKLE SWITCH LH
UN-FASTENED
FASTENED
B34
COMBINATION SWITCH (LIGHTING SWITCH)
AUTO
1ST
2ND
OFF
E155
JOINT CONNECTOR-7
E18
M9
M25
M87
B7 : TS
B78 : VD
B46 : RS
B12 : OR
E53
E22
E11
M2
BR
M6
W
M143
W
M144
GY
M145
GY
H.S.
E18
GY
E155
W
B29
W
B34
W
REFER TO THE FOLLOWING.
M15 -SUPER MULTIPLE JUNCTION (SMJ)
MEL617Q

SMART ENTRANCE CONTROL UNIT CONNECTOR

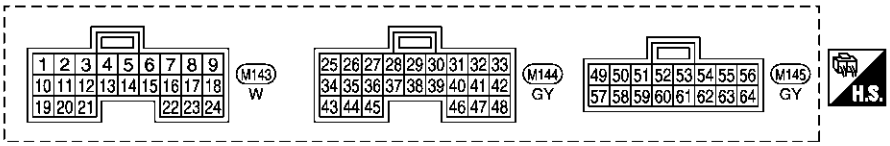

SMART ENTRANCE CONTROL UNIT TERMINALS AND REFERENCE VALUE BETWEEN EACH TERMINAL AND GROUND

TERMINAL	WIRE COLOR	ITEM	CONDITION			DATA (DC)
1	LG	DRIVER DOOR SWITCH	OFF (CLOSED) → ON (OPEN)			12V → 0V
19	Y/B	TAIL LAMP RELAY	IGNITION SWITCH (WITH LIGHTING SWITCH 1ST OR 2ND)	ON OR START → OFF	MORE THAN 5 MINUTES	12V
					WITHIN 5 MINUTES	0V
				ON OR START		0V
			HEADLAMPS ILLUMINATE BY AUTO LIGHT CONTROL (OPERATE → NOT OPERATE)			LESS THAN 1V → 12V
20	SB	TAIL LAMP SWITCH	LIGHTING SWITCH (OFF OR AUTO → 1ST OR 2ND POSITION)			12V → 0V
25	B/R	IGNITION KEY SWITCH (INSERT)	KEY INSERTED → KEY REMOVED FROM IGN KEY CYLINDER			12V → 0V
27	G	IGNITION SWITCH (ON)	IGNITION SWITCH IS IN "ON" POSITION			12V
28	OR	SEAT BELT BUCKLE SWITCH	UNFASTENED → FASTENED (IGNITION SWITCH IS IN "ON" POSITION)			0V → 12V
43	B	GROUND	–			–
49	R/B	POWER SOURCE (FUSE)	–			12V
57	Y/B	TAIL LAMP RELAY	IGNITION SWITCH (WITH LIGHTING SWITCH 1ST OR 2ND)	ON OR START → OFF	MORE THAN 5 MINUTES	12V
					WITHIN 5 MINUTES	0V
				ON OR START		0V
			HEADLAMPS ILLUMINATE BY AUTO LIGHT CONTROL (OPERATE → NOT OPERATE)			LESS THAN 1V → 12V
58	SB	TAIL LAMP SWITCH	LIGHTING SWITCH (OFF OR AUTO → 1ST OR 2ND POSITION)			12V → 0V
64	B	GROUND	–			–

SEL578Y

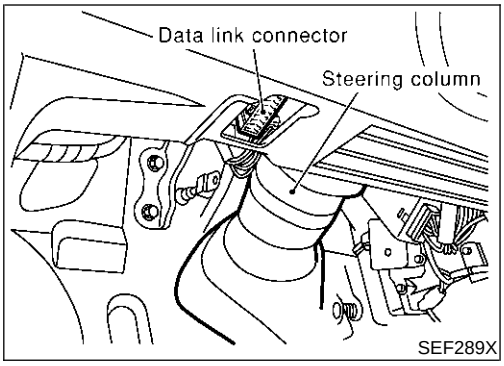

SEF289X

CONSULT-II Inspection Procedure

=NHEL0216

"KEY WARN ALM"/"LIGHT WARN ALM"/"SEAT BELT ALM"

NHEL0216S01

1. Turn ignition switch "OFF".
2. Connect "CONSULT-II" and "CONSULT-II CONVERTER" to the data link connector.

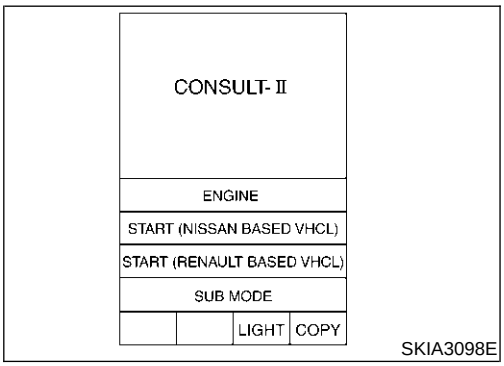

SKIA3098E

3. Turn ignition switch "ON".
4. Touch "START (NISSAN BASED VHCL)".

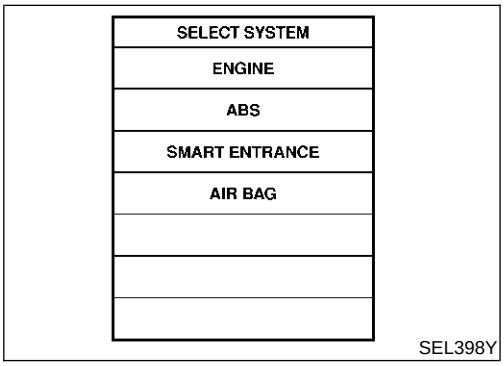

SEL398Y

5. Touch "SMART ENTRANCE".
   If "SMART ENTRANCE" is not indicated, go to GI-42.

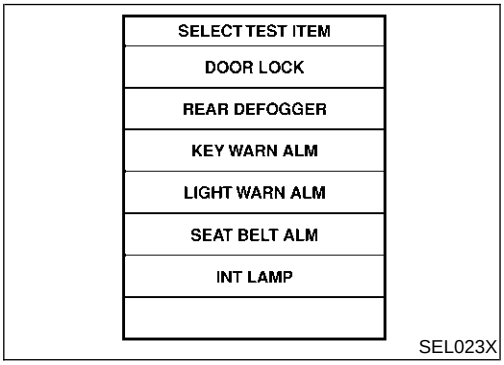

SEL023X

6. Touch "KEY WARN ALM", "LIGHT WARN ALM" or "SEAT BELT ALM".

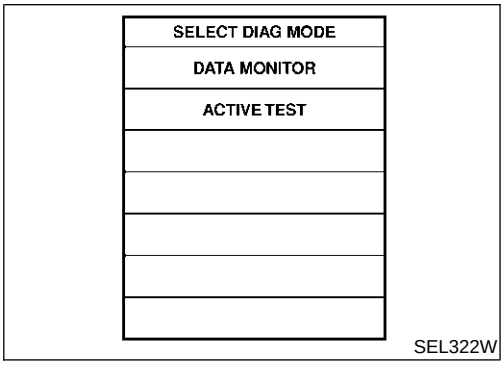

SEL322W

- DATA MONITOR and ACTIVE TEST are available for the warning chime.

CONSULT-II Application Items

NHEL0217

"KEY WARN ALARM"

NHEL0217S01

Data Monitor

NHEL0217S0101

Monitored Item	Description
IGN ON SW	Indicates [ON/OFF] condition of ignition switch.
KEY ON SW	Indicates [ON/OFF] condition of key switch.
DOOR SW DR	Indicates [ON/OFF] condition of front door switch LH.

Active Test

NHEL0217S0102

Test Item	Description
CHIME	This test is able to check key warning chime operation. Key warning chime sounds for 2 when touching "ON" on CONSULT-II screen.

"LIGHT WARN ALM"

NHEL0217S02

Data Monitor

NHEL0217S0201

Monitored Item	Description
LIGHT SW 1ST	Indicates [ON/OFF] condition of lighting switch.
IGN ON SW	Indicates [ON/OFF] condition of ignition switch.
DOOR SW-DR	Indicates [ON/OFF] condition of front door switch LH.

Active Test

NHEL0217S0202

Test Item	Description
CHIME	This test is able to check light warning chime operation. Light warning chime sounds for 2 when touching "ON" on CONSULT-II screen.

"SEAT BELT ALM"

NHEL0217S03

Data Monitor

NHEL0217S0301

Monitored Item	Description
IGN ON SW	Indicates [ON/OFF] condition of ignition switch.
SEAT BELT SW	Indicates [ON/OFF] condition of seat belt buckle switch LH.

Active Test

NHEL0217S0302

Test Item	Description
CHIME	This test is able to check seat belt warning chime operation. Seat belt warning chime sounds when touching "ON" on CONSULT-II screen.

Trouble Diagnoses

SYMPTOM CHART

NHEL0055

NHEL0055S01

REFERENCE PAGE (EL-)	168	170	171	172	173
SYMPTOM	POWER SUPPLY AND GROUND CIRCUIT CHECK	DIAGNOSTIC PROCEDURE 1 (LIGHTING SWITCH INPUT SIGNAL CHECK)	DIAGNOSTIC PROCEDURE 2 (KEY SWITCH INSERT SIGNAL CHECK)	DIAGNOSTIC PROCEDURE 3 (SEAT BELT BUCKLE SWITCH CHECK)	DIAGNOSTIC PROCEDURE 4
Light warning chime does not activate.	X	X			X
Ignition key warning chime does not activate.	X		X		X
Seat belt warning chime does not activate.	X			X	X
All warning chimes do not activate.	X				X

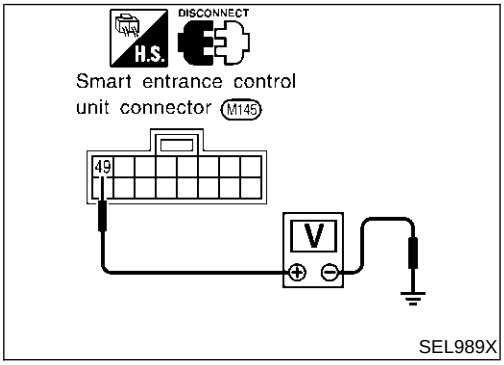

POWER SUPPLY AND GROUND CIRCUIT CHECK

NHEL0055S02

Power Supply Circuit Check

NHEL0055S0201

Terminals (Wire color)	Voltage
49 (R/B) - Ground	Battery voltage

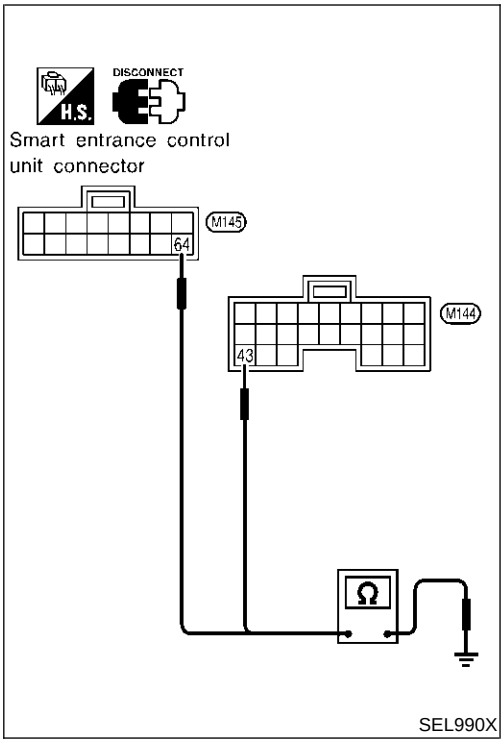

Ground Circuit Check

NHEL0055S0202

Terminals (Wire color)	Continuity
43 (B) - Ground	Yes
64 (B) - Ground	Yes

DIAGNOSTIC PROCEDURE 1 (LIGHTING SWITCH INPUT SIGNAL CHECK)

=NHEL0055S03

1	CHECK LIGHTING SWITCH INPUT SIGNAL

With CONSULT-II

Check lighting switch ("LIGHT SW 1ST") in "DATA MONITOR" mode with CONSULT-II.

DATA MONITOR	
MONITOR	
LIGHT SW 1ST	OFF

When lighting switch is in 1st or 2nd position:
LIGHT SW 1ST ON

When lighting switch is in OFF position:
LIGHT SW 1ST OFF

SEL991X

Without CONSULT-II

Check voltage between smart entrance control unit harness connector M143 terminal 19 (Y/B), connector M145 terminal 57 (Y/B) and ground.

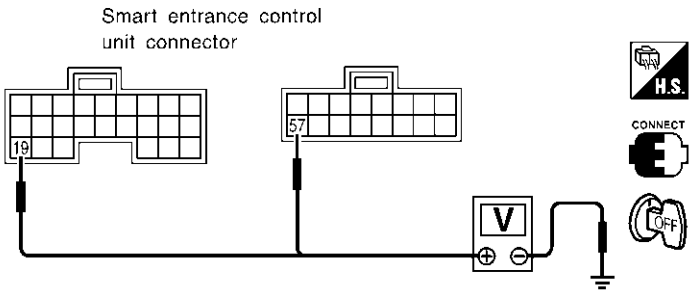

Voltage [V]:
Condition of lighting switch: 1ST or 2ND
0
Condition of lighting switch: OFF
Approx. 12

SEL654Y

OK or NG

OK	▶	Lighting switch is OK.
NG	▶	**Check the following.** ● 10A fuse (No. 60, located in the fuse and fusible link box) ● Harness for open or short between smart entrance control unit and tail lamp relay

DIAGNOSTIC PROCEDURE 2 (KEY SWITCH INSERT SIGNAL CHECK)

=NHEL0055S04

1	CHECK KEY SWITCH INPUT SIGNAL

With CONSULT-II

Check key switch ("KEY ON SW") in "DATA MONITOR" mode with CONSULT-II.

DATA MONITOR	
MONITOR	
KEY ON SW	ON

When key is inserted to ignition key cylinder:

KEY ON SW ON

When key is removed from ignition key cylinder:

KEY ON SW OFF

SEL315W

Without CONSULT-II

Check voltage between smart entrance control unit harness connector M144 terminal 25 (B/R) and ground.

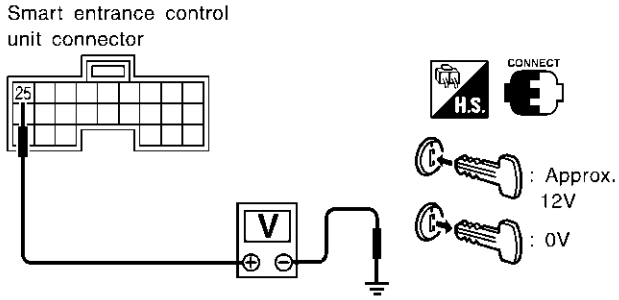

Voltage [V]:

Condition of key switch: Key is inserted.

Approx. 12

Condition of key switch: Key is removed.

0

SEL011Y

OK or NG

OK	▶	Key switch is OK.
NG	▶	GO TO 2.

2	CHECK KEY SWITCH (INSERT)

Check continuity between key switch harness connector E154 terminals 3 and 4.

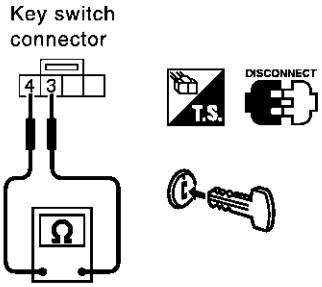

Continuity:

Condition of key switch: Key is inserted.

Yes

Condition of key switch: Key is removed.

No

SEL549YA

OK or NG

OK	▶	**Check the following.** ● 10A fuse [No. 13, located in fuse block (J/B)] ● Harness for open or short between key switch and fuse ● Harness for open or short between smart entrance control unit and key switch
NG	▶	Replace key switch.

DIAGNOSTIC PROCEDURE 3 (SEAT BELT BUCKLE SWITCH CHECK)

=NHEL0055S05

1 CHECK SEAT BELT BUCKLE SWITCH LH INPUT SIGNAL

With CONSULT-II

Check seat belt buckle switch LH ("SEAT BELT SW") in "DATA MONITOR" mode with CONSULT-II.

DATA MONITOR	
MONITOR	
SEAT BELT SW	ON

When seat belt LH is fastened:
SEAT BELT SW ON

When seat belt LH is unfastened:
SEAT BELT SW OFF

SEL317WA

Without CONSULT-II

1. Turn ignition switch "ON".
2. Check voltage between smart entrance control unit harness connector M144 terminal 28 (OR) and ground.

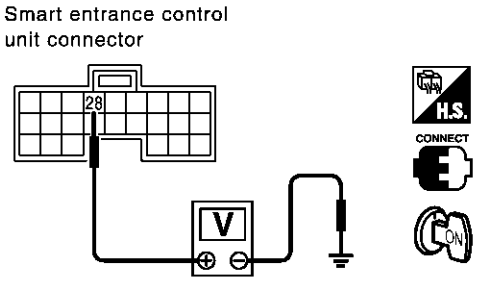

Voltage [V]:
Condition of seat belt buckle switch LH: Fastened
Approx. 12
Condition of seat belt buckle switch LH: Unfastened
0

SEL994XB

OK or NG

OK	▶	Seat belt buckle switch LH is OK.
NG	▶	GO TO 2.

2 CHECK SEAT BELT BUCKLE SWITCH LH

Check continuity between seat belt buckle switch LH terminals 1 and 2 when seat belt is fastened and unfastened.

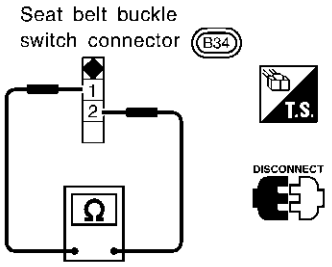

Continuity:
Seat belt is fastened.
No
Seat belt is unfastened.
Yes

SEL313W

OK or NG

OK	▶	**Check the following.** ● Seat belt buckle switch LH ground circuit ● Harness for open or short between smart entrance control unit and seat belt buckle switch LH
NG	▶	Replace seat belt buckle switch LH.

DIAGNOSTIC PROCEDURE 4

NHEL0055S06

1	CHECK IGNITION ON SIGNAL

With CONSULT-II

Check ignition switch ON signal ("IGN ON SW") in "DATA MONITOR" mode with CONSULT-II.

DATA MONITOR	
MONITOR	
IGN ON SW	ON

When ignition switch is ON:
IGN ON SW ON

When ignition switch is OFF:
IGN ON SW OFF

SEL318W

Without CONSULT-II

Check voltage between smart entrance control unit harness connector M144 terminal 27 (G) and ground.

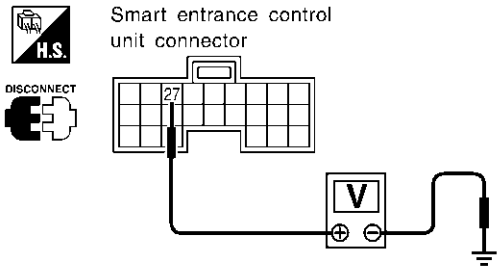

Terminals		Ignition switch position		
(+)	(–)	OFF	ACC	ON
27	Ground	0V	0V	Battery voltage

SEL995X

OK or NG

OK	▶	GO TO 2.
NG	▶	**Check the following.** ● 10A fuse [No. 10, located in fuse block (J/B)] ● Harness for open or short between smart entrance control unit and fuse

2	CHECK DOOR SWITCH INPUT SIGNAL

With CONSULT-II

Check front door switch LH signal ("DOOR SW-DR") in "DATA MONITOR" mode with CONSULT-II.

DATA MONITOR	
MONITOR	
DOOR SW-DR	OFF

When driver's door is open:

DOOR SW-DR ON

When driver's door is closed:

DOOR SW-DR OFF

SEL319W

Without CONSULT-II

Check voltage between smart entrance control unit harness connector M143 terminal 1 (LG) and ground.

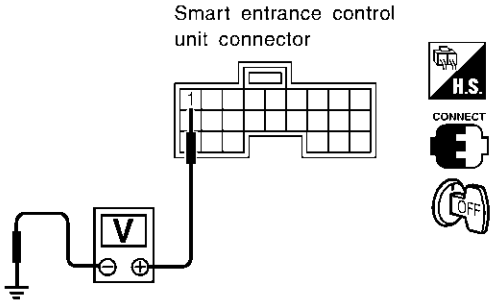

Voltage [V]:

Condition of driver's door: CLOSED

Approx. 12

Condition of driver's door: OPEN

0

SEL004YC

OK or NG

OK	▶	GO TO 4.
NG	▶	GO TO 3.

3	CHECK FRONT DOOR SWITCH LH

Check continuity between front door switch LH terminals 2 and 3.

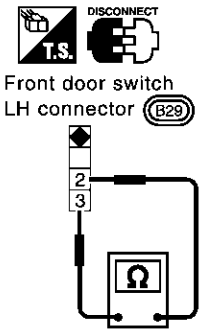

Continuity:

Door switch is pushed.

No

Door switch is released.

Yes

SEL325WF

OK or NG

OK	▶	**Check the following.** ● Front door switch LH ground circuit and condition ● Harness for open or short between smart entrance control unit and front door switch LH
NG	▶	Replace front door switch LH.

4	CHECK WARNING CHIME

Ⓔ **With CONSULT-II**

Perform "CHIME" in "ACTIVE TEST" mode with CONSULT-II.

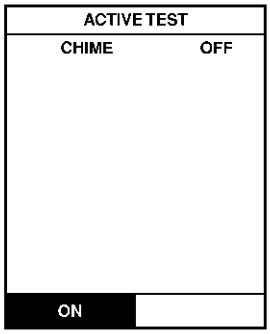

Warning chime should operate.

SEL320W

OK or NG

OK	▶	System is OK.
NG	▶	Replace smart entrance control unit.

System Description

NHEL0057

WIPER OPERATION

NHEL0057S01

The front wiper switch is controlled by a lever built into the combination switch.
There are three wiper switch positions:

- LO speed
- HI speed
- INT (Intermittent)

With the ignition switch in the ON or START position, power is supplied

- through 20A fuse [No. 25, located in the fuse block (J/B)]
- to front wiper motor terminal 4.
- to front wiper switch terminal 15.

Low (Mist) and High Speed Wiper Operation

NHEL0057S0101

Ground is supplied to front wiper switch terminal 17 through body grounds E11, E22 and E53.
When the front wiper switch is placed in the LO or MIST position, ground is supplied

- through terminal 14 of the front wiper switch
- to front wiper motor terminal 3.

With power and ground supplied, the front wiper motor operates at low speed.
When the front wiper switch is placed in the HI position, ground is supplied

- through terminal 16 of the front wiper switch
- to front wiper motor terminal 1.

With power and ground supplied, the front wiper motor operates at high speed.

Auto Stop Operation

NHEL0057S0102

With front wiper switch turned OFF, front wiper motor will continue to operate until wiper arms reach windshield base.
When wiper arms are not located at base of windshield with front wiper switch OFF, ground is provided

- from terminal 14 of the front wiper switch
- to front wiper motor terminal 3, in order to continue front wiper motor operation at low speed.

Ground is also supplied

- through terminal 13 of the front wiper switch
- to front wiper motor terminal 2
- through terminal 6 of the front wiper motor, and
- through body grounds E11, E22 and E53.

When wiper arms reach base of windshield, front wiper motor terminals 2 and 4 are connected instead of terminals 2 and 6. Front wiper motor will then stop wiper arms at the STOP position.

Intermittent Operation

NHEL0057S0103

The front wiper motor operates the wiper arms one time at low speed at a set interval of approximately 3 to 13 seconds. This feature is controlled by the wiper amplifier (INT SW) combined with front wiper switch.
When the front wiper switch is placed in the INT position, ground is supplied to wiper amplifier.
The desired interval time is input to wiper amplifier (INT VR) from wiper volume switch combined with front wiper switch.
Then intermittent ground is supplied

- to front wiper motor terminal 3
- from terminal 14 of front wiper switch
- through wiper amplifier (OUTPUT).

The front wiper motor operates at low speed at the desired interval.

WASHER OPERATION

NHEL0057S02

With the ignition switch in the ON or START position, power is supplied

- through 20A fuse [No. 25, located in the fuse block (J/B)]
- to front washer motor terminal 1.

When the lever is pulled to the WASH position, ground is supplied

- to front washer motor terminal 2, and

- from terminal 18 of the front wiper switch
- through terminal 17 of the front wiper switch, and
- through body grounds E11, E22 and E53.

With power and ground supplied, the front washer motor operates.
When the lever is pulled to the WASH position for one second or more, the front wiper motor operates at low speed for approximately 3 seconds to clean windshield. This feature is controlled by the wiper amplifier in the same manner as the intermittent operation.

Wiring Diagram — WIPER —

NHEL0058

EL-WIPER-01

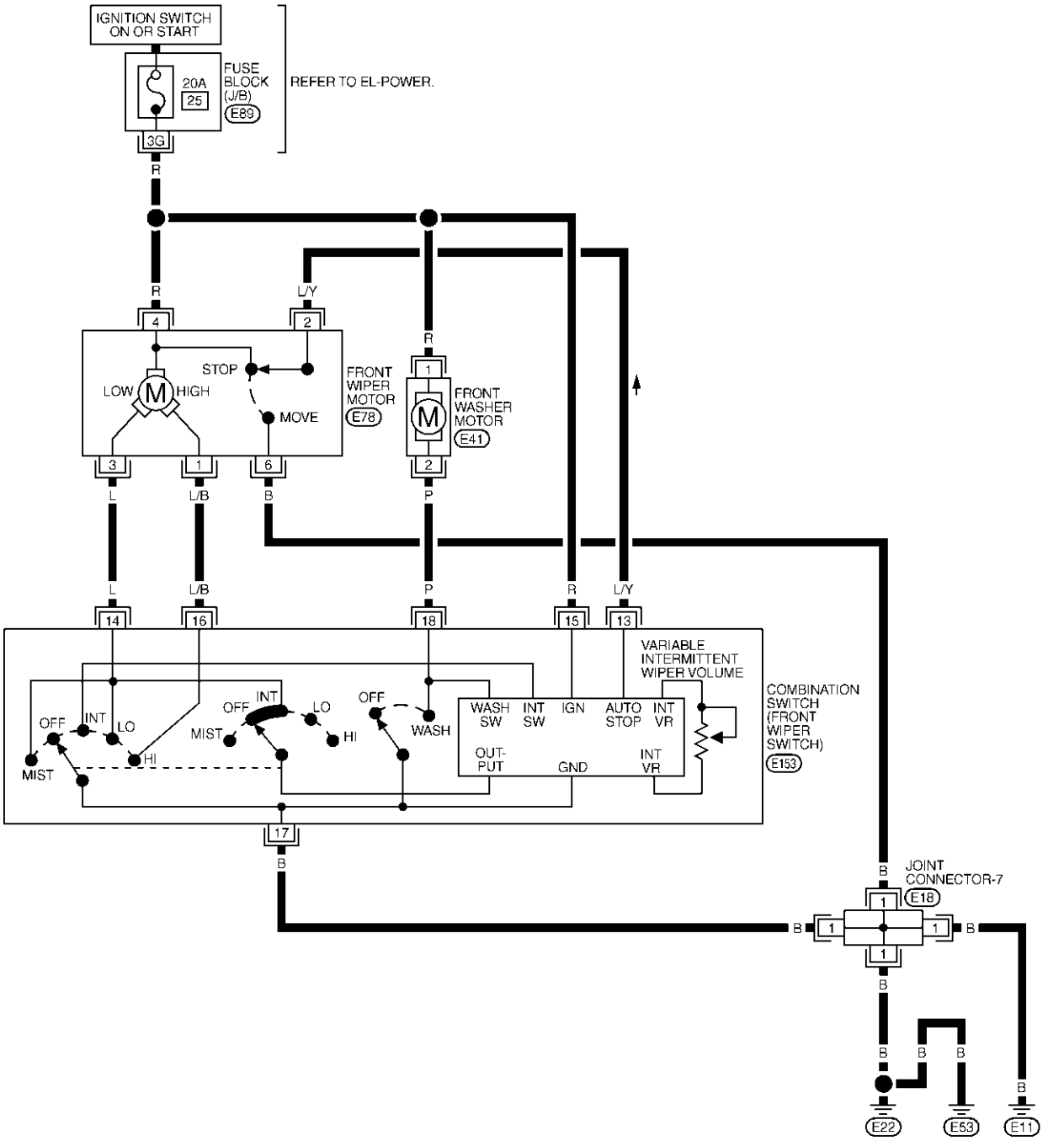

REFER TO THE FOLLOWING.
E89 -FUSE BLOCK-JUNCTION BOX (J/B)

MEL310O

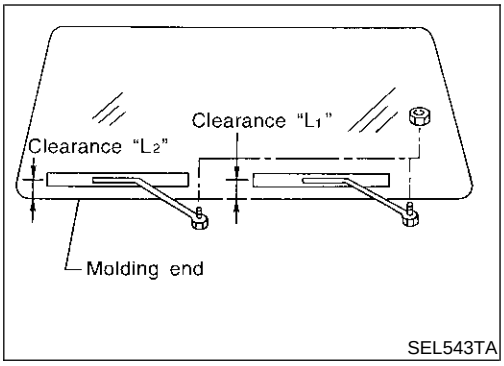

SEL543TA

Removal and Installation

NHEL0060

WIPER ARMS

NHEL0060S01

1. Prior to wiper arm installation, turn on front wiper switch to operate front wiper motor and then turn it "OFF" (Auto Stop).
2. Lift the blade up and then set it down onto glass surface to set the blade center to clearance "L_1" & "L_2" immediately before tightening nut.
3. Eject washer fluid. Turn on front wiper switch to operate front wiper motor and then turn it "OFF".
4. Ensure that wiper blades stop within clearance "L_1" & "L_2".
   Clearance "L_1": 48 - 64 mm (1.89 - 2.52 in)
   Clearance "L_2": 40 - 56 mm (1.57 - 2.20 in)

- Tighten wiper arm nuts to specified torque.
  Front wiper: 21 - 26 N·m (2.1 - 2.7 kg-m, 16 - 19 ft-lb)

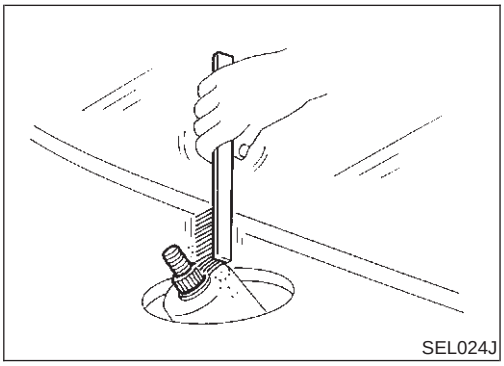
SEL024J

- **Before reinstalling wiper arm, clean up the pivot area as illustrated. This will reduce possibility of wiper arm looseness.**

WIPER LINKAGE

NHEL0060S02

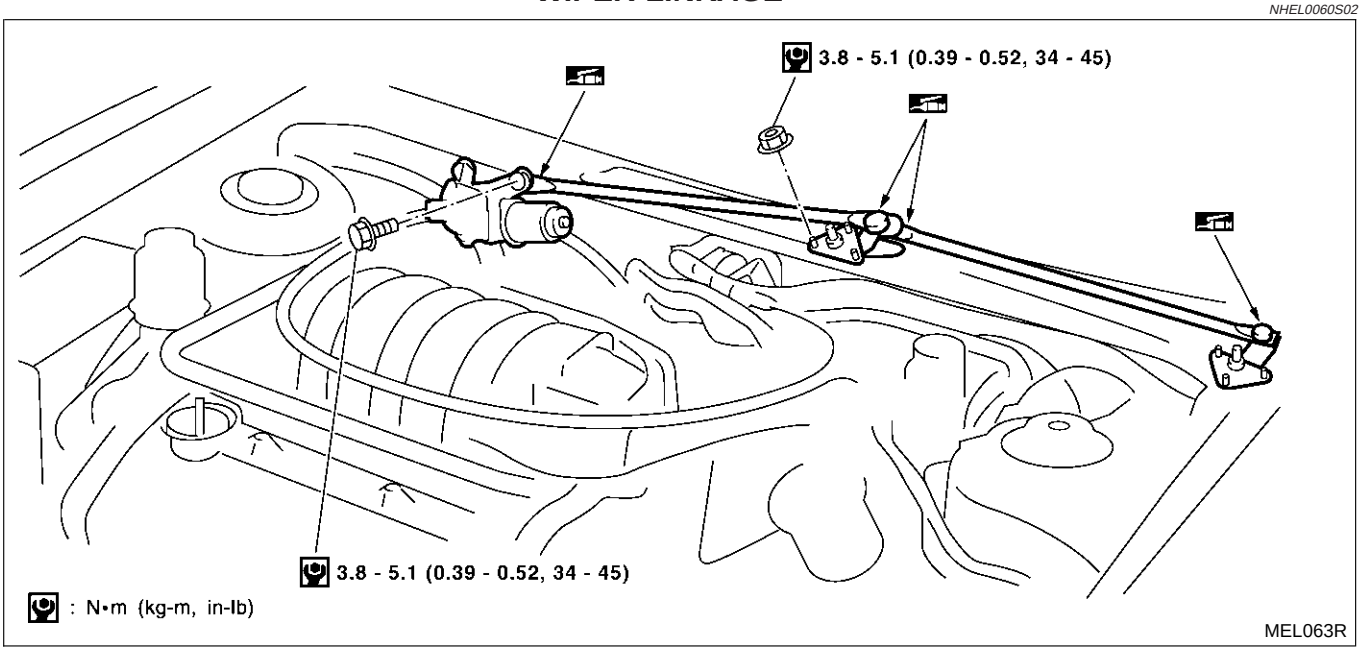

MEL063R

Removal

NHEL0060S0201

1. Remove 4 bolts that secure front wiper motor.
2. Detach front wiper motor from wiper linkage at ball joint.
3. Remove wiper linkage.

Be careful not to break ball joint rubber boot.

Installation

NHEL0060S0202

- Grease ball joint portion before installation.

1. Installation is the reverse order of removal.

Washer Nozzle Adjustment

NHEL0061

- Adjust washer nozzle with suitable tool as shown in the figure at left.

Adjustable range: ±10°

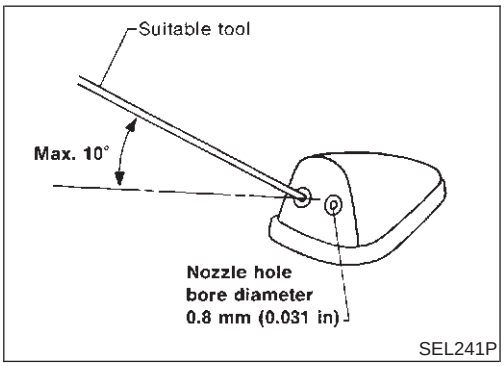

SEL241P

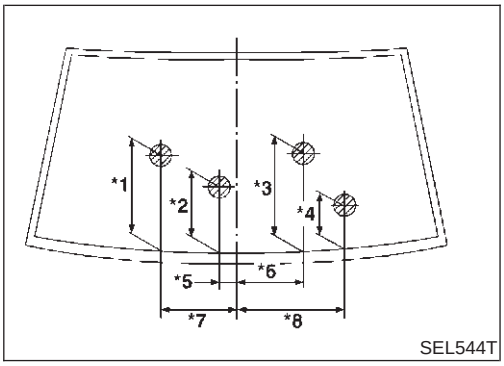

SEL544T

Unit: mm (in)

*1	341 (13.43)	*5	154 (6.06)
*2	286 (11.26)	*6	203 (7.99)
*3	285 (11.22)	*7	382 (15.04)
*4	152 (5.98)	*8	385 (15.16)

*: The diameters of these circles are less than 80 mm (3.15 in).

Washer Tube Layout

NHEL0062

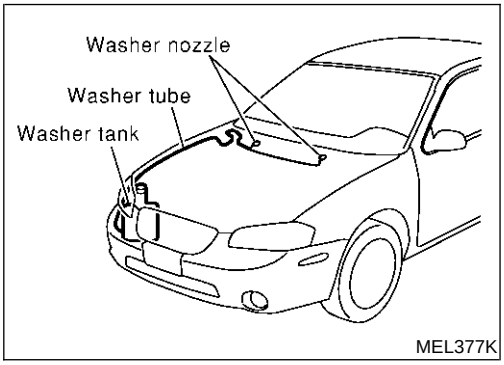

MEL377K

Wiring Diagram — HORN —

NHEL0071

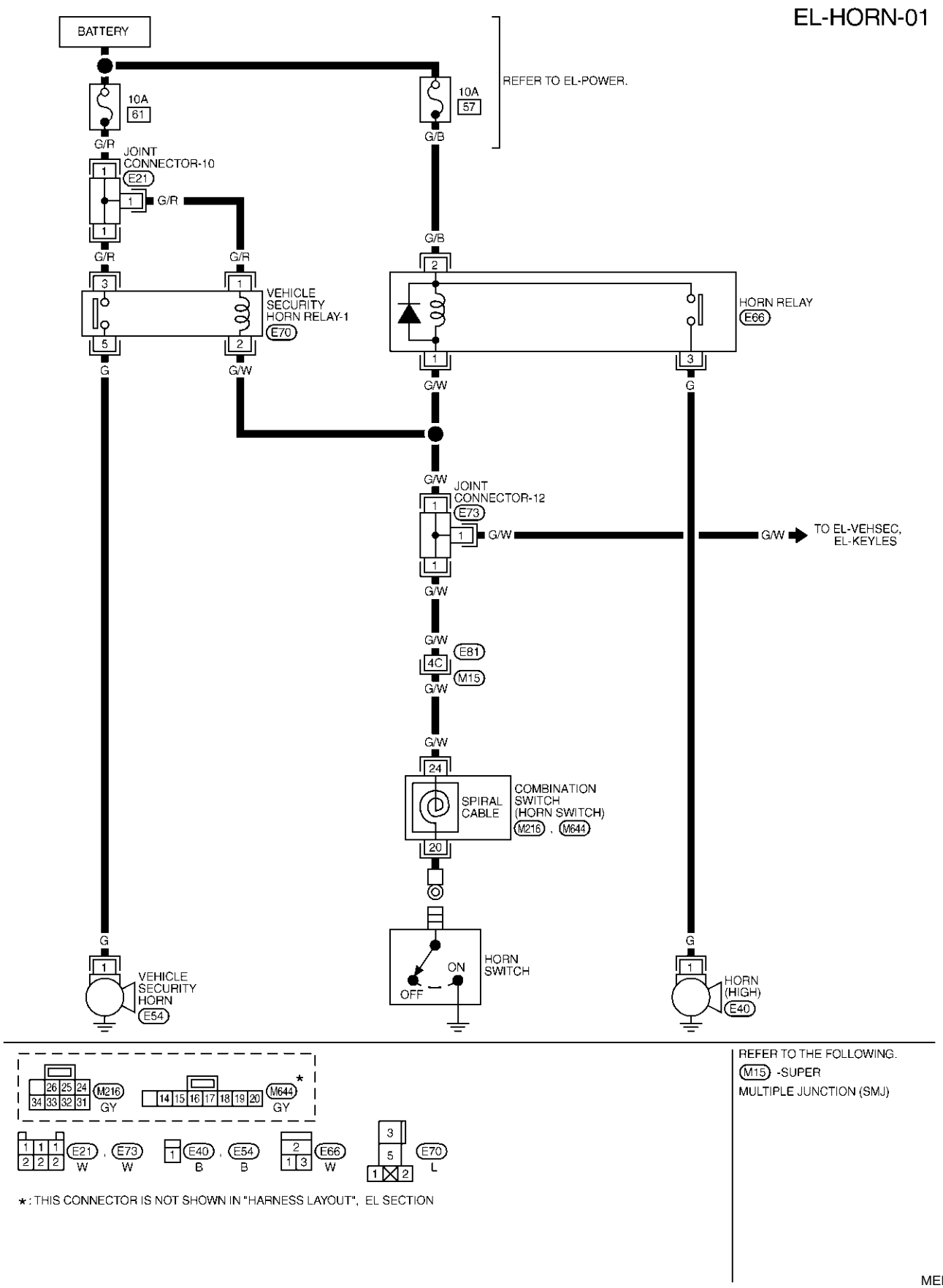

Wiring Diagram — CIGAR —

NHEL0156

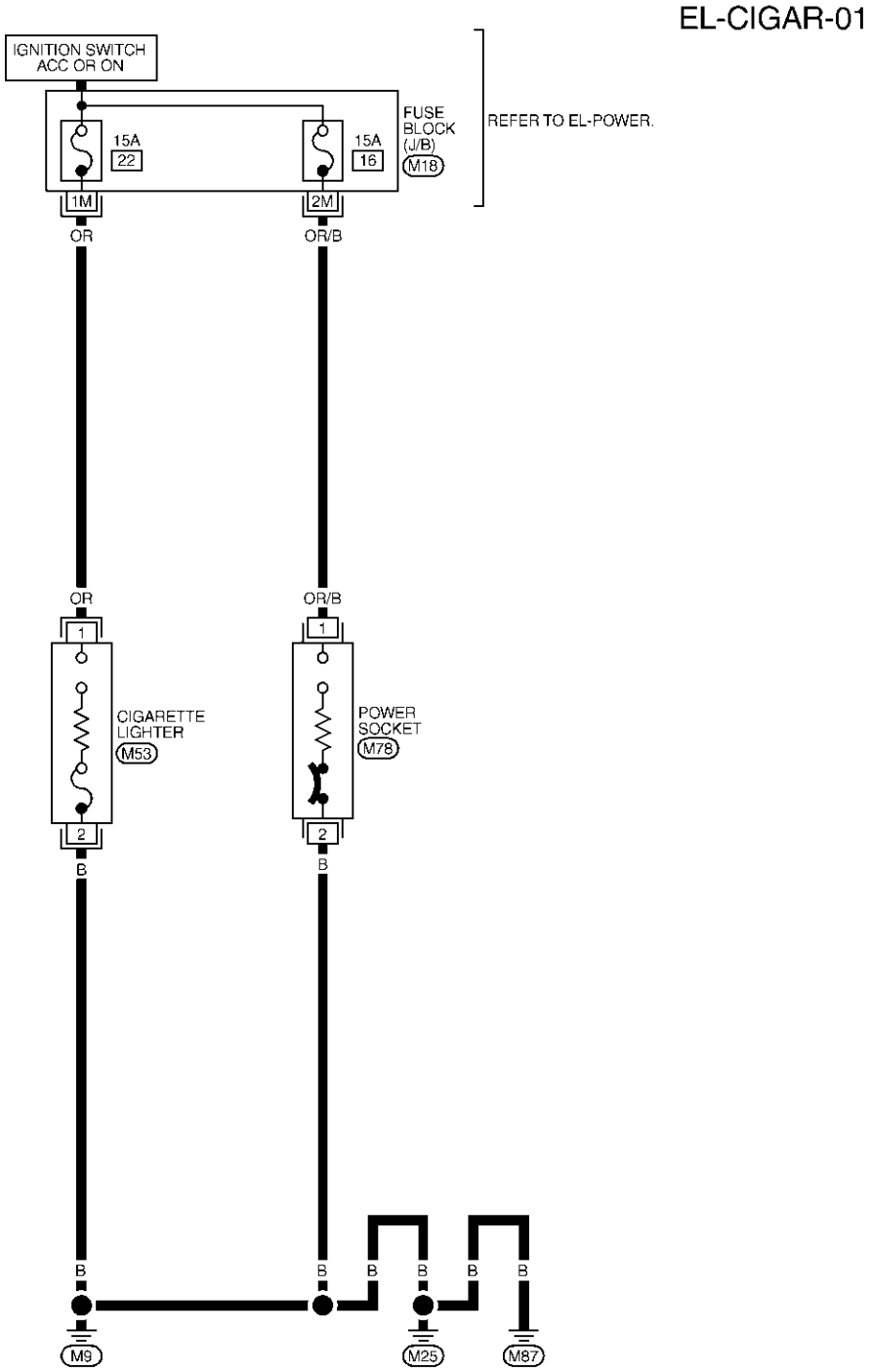

REFER TO THE FOLLOWING.
M18 -FUSE BLOCK -
JUNCTION BOX (J/B)

MEL312O

Wiring Diagram — CLOCK —

NHEL0166

EL-CLOCK-01

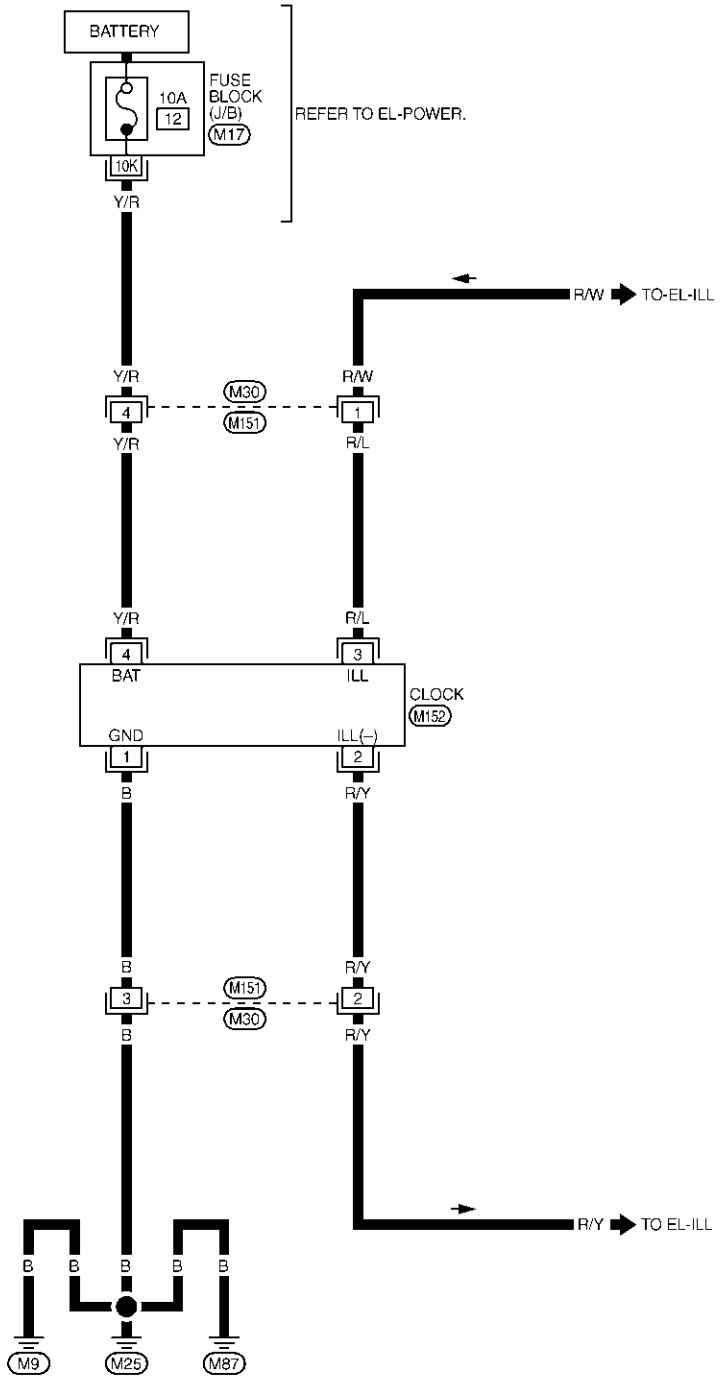

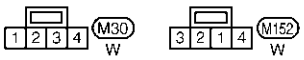

REFER TO THE FOLLOWING.
M17 - FUSE BLOCK - JUNCTION BOX (J/B)

MEL466K

Component Parts and Harness Connector Location

NHEL0072

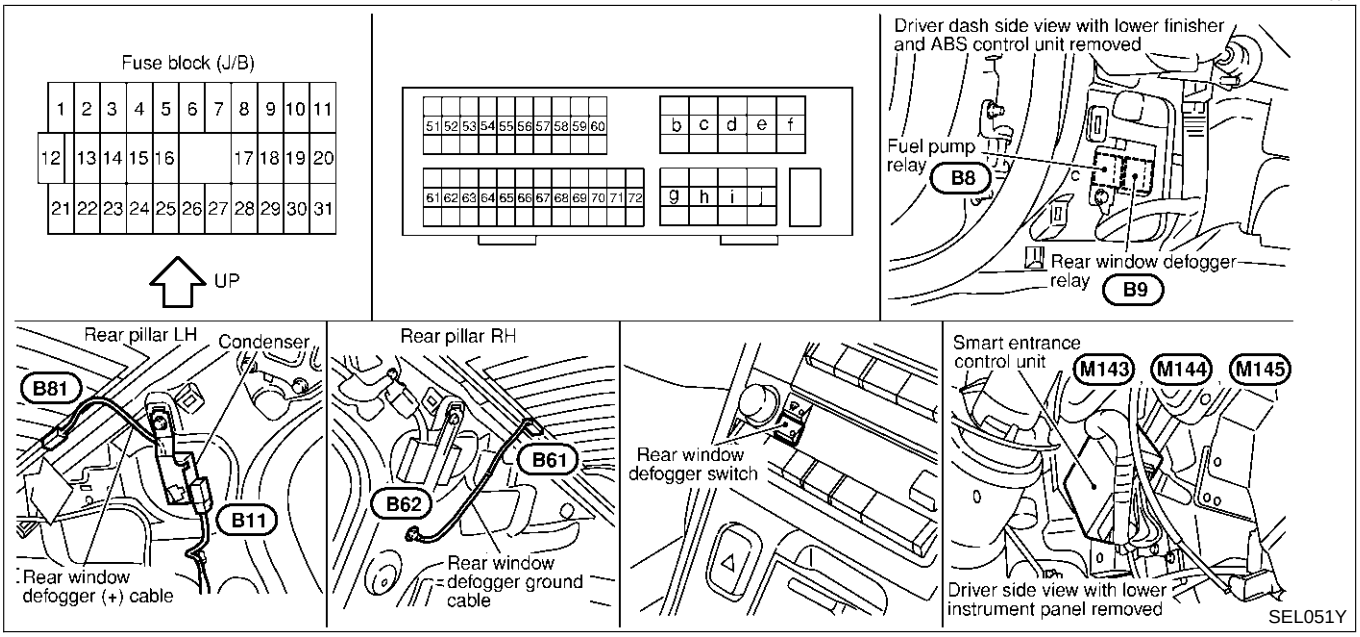

System Description

NHEL0073

The rear window defogger system is controlled by the smart entrance control unit. The rear window defogger operates only for approximately 15 minutes.

Power is supplied at all times

- to rear window defogger relay terminal 3
- through 20A fuse [No. 7, located in the fuse block (J/B)] and
- to rear window defogger relay terminal 6
- through 20A fuse [No. 4, located in the fuse block (J/B)]
- to smart entrance control unit terminal 49
- through 10A fuse [No. 13, located in the fuse block (J/B)].

With the ignition switch in the ON or START position, power is supplied

- through 10A fuse [No. 10, located in the fuse block (J/B)]
- to the rear window defogger relay terminal 1 and
- to smart entrance control unit terminal 27.

Ground is supplied to terminal 32 of the rear window defogger switch (built-in A/C auto amp.) through body grounds M9, M25 and M87.

When the rear defogger switch is turned ON, ground is supplied

- through terminal 31 of the rear window defogger switch
- to smart entrance control unit terminal 14.

Terminal 37 of the smart entrance control unit then supplies ground to the rear window defogger relay terminal 2.

With power and ground supplied, the rear window defogger relay is energized.

Power is supplied

- through terminals 5 and 7 of the rear window defogger relay
- to the rear window defogger and
- to terminal 30 of the A/C auto amp.

The rear window defogger has an independent ground.

With power and ground supplied, the rear window defogger filaments heat and defog the rear window.

When the system is activated, the rear window defogger indicator illuminates in the rear window defogger switch.

Wiring Diagram — DEF —

=NHEL0074

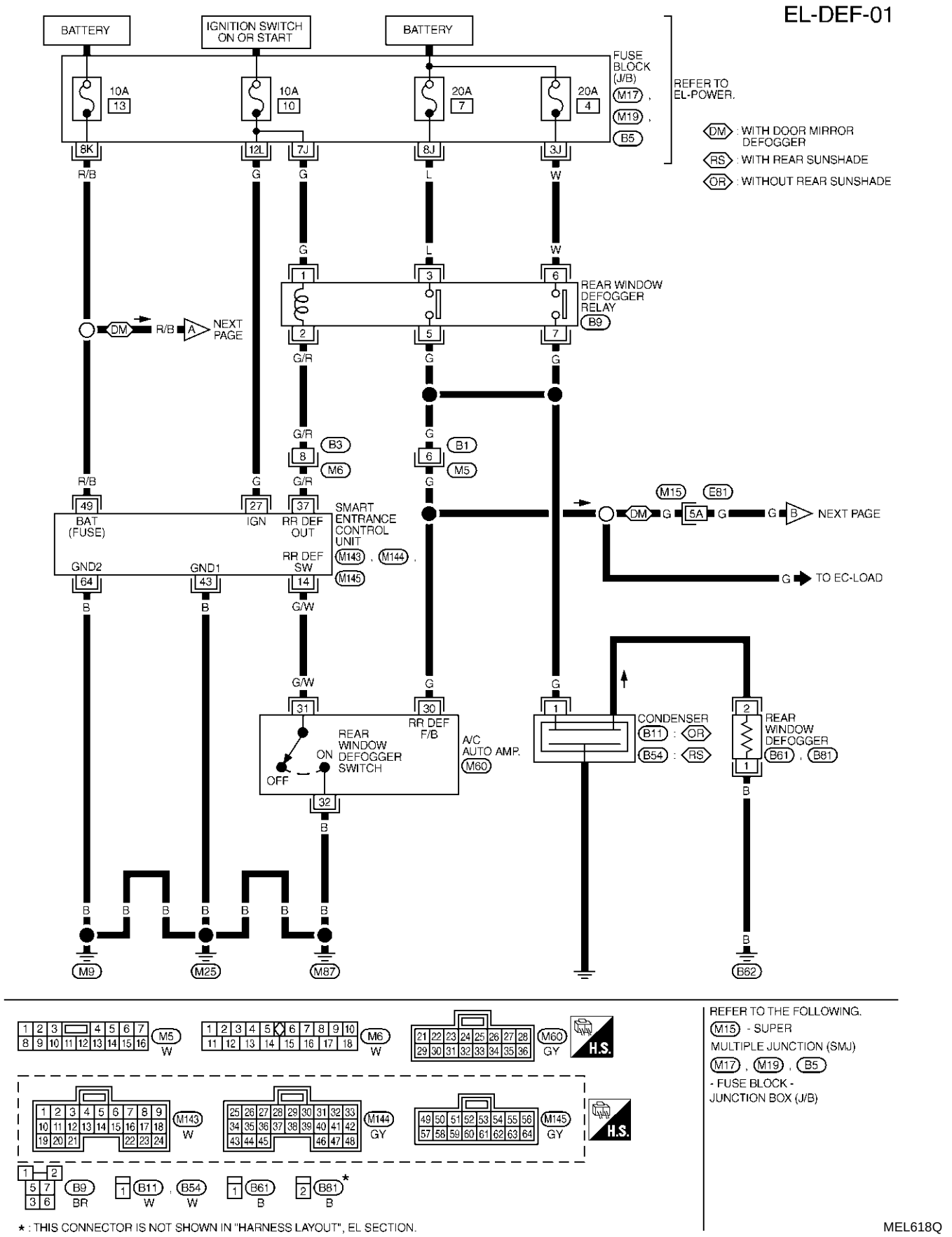

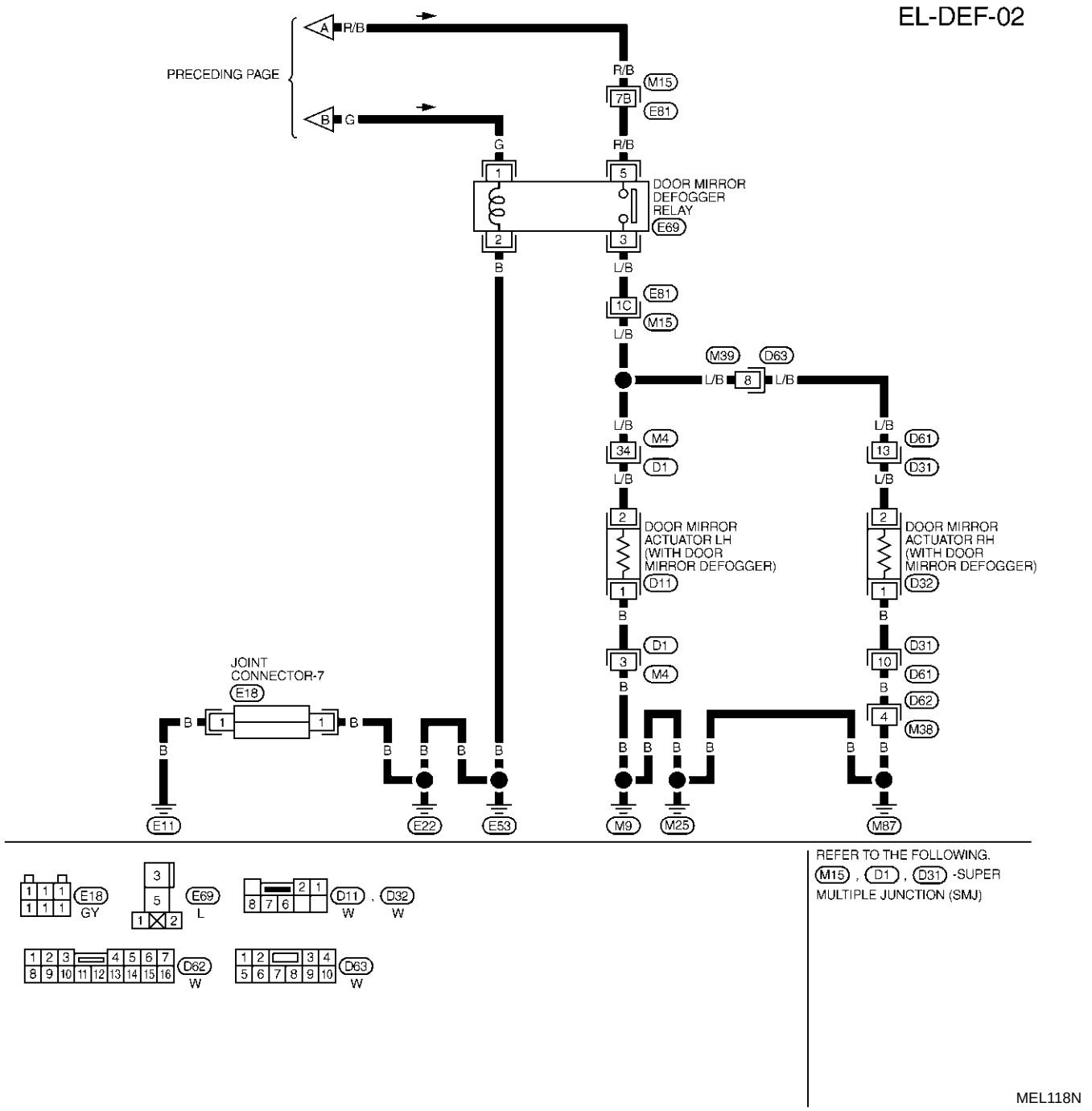

SMART ENTRANCE CONTROL UNIT TERMINALS AND REFERENCE VALUE BETWEEN EACH TERMINAL AND GROUND

TERMINAL	WIRE COLOR	ITEM	CONDITION	DATA (DC)
14	G/W	REAR WINDOW DEFOGGER SWITCH	OFF → ON (WHEN ONLY PUSHED)	5V → 0V
27	G	IGNITION SWITCH (ON)	IGNITION SWITCH IS IN "ON" POSITION	12V
37	G/R	REAR WINDOW DEFOGGER RELAY	OFF → ON (IGNITION SWITCH IS IN "ON" POSITION)	12V → 0V
43	B	GROUND	–	–
49	R/B	POWER SOURCE (FUSE)	–	12V
64	B	GROUND	–	–

SEL978XB

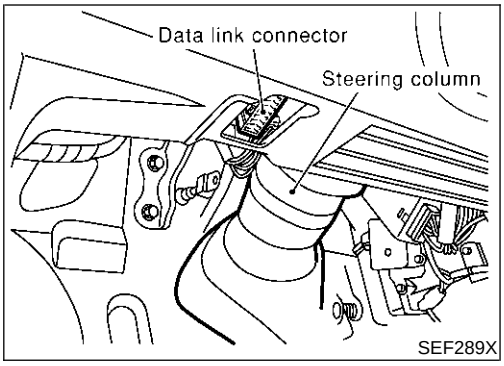

SEF289X

CONSULT-II Inspection Procedure

=NHEL0218

"REAR DEFOGGER"

NHEL0218S01

1. Turn ignition switch "OFF".
2. Connect "CONSULT-II" and "CONSULT-II CONVERTER" to the data link connector.

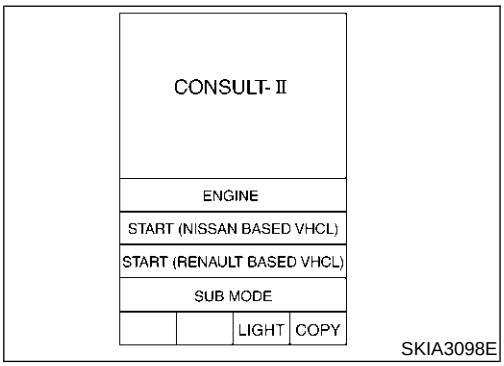

SKIA3098E

3. Turn ignition switch "ON".
4. Touch "START (NISSAN BASED VHCL)".

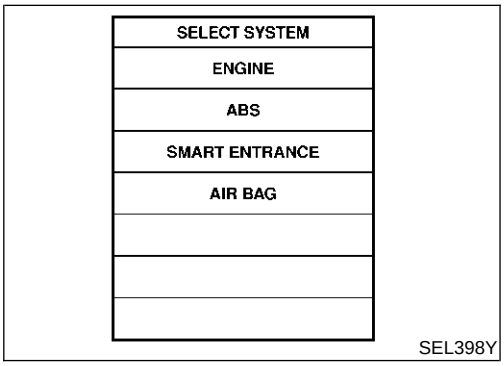

SEL398Y

5. Touch "SMART ENTRANCE".
   If "SMART ENTRANCE" is not indicated, go to GI-42.

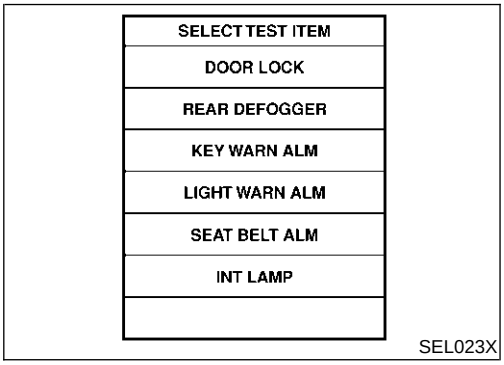

SEL023X

6. Touch "REAR DEFOGGER".

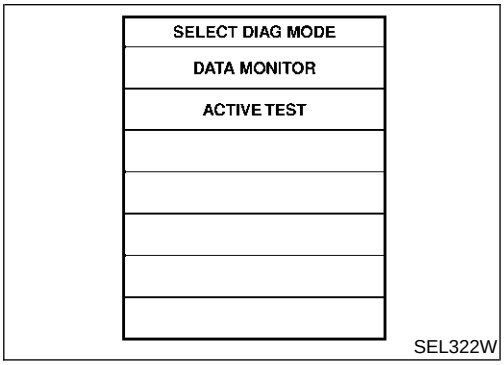

SEL322W

7. Select diagnosis mode.
   "DATA MONITOR" and "ACTIVE TEST" are available.

CONSULT-II Application Items

NHEL0219

“REAR DEFOGGER”

NHEL0219S01

Data Monitor

NHEL0219S0101

Monitored Item	Description
IGN ON SW	Indicates [ON/OFF] condition of ignition switch.
REAR DEF SW	Indicates [ON/OFF] condition of rear window defogger switch.

Active Test

NHEL0219S0102

Test Item	Description
REAR DEFOGGER	This test is able to check rear window defogger operation. Rear window defogger activates when “ON” on CONSULT-II screen is touched.

Trouble Diagnoses

NHEL0075

DIAGNOSTIC PROCEDURE

NHEL0075S01

SYMPTOM: Rear window defogger does not activate, or does not go off after activating.

1	CHECK REAR WINDOW DEFOGGER OUTPUT SIGNAL

With CONSULT-II

Select “ACTIVE TEST” in “REAR DEFOGGER” with CONSULT-II.

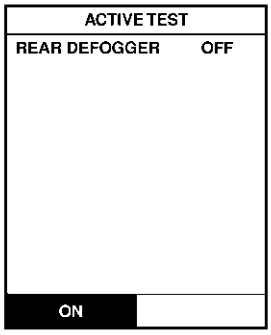

Rear window defogger and rear window defogger switch indicator should operate when the “ON” button on the CONSULT-II screen is touched.

SEL353W

Without CONSULT-II

1. Turn ignition switch to ON position.
2. Check voltage between smart entrance control unit harness connector M144 terminal 37 (G/R) and ground.

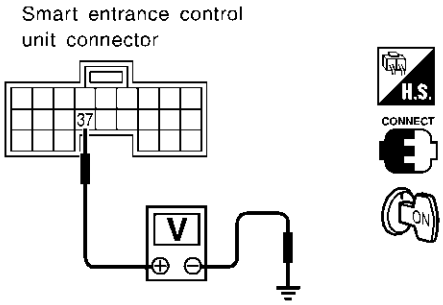

Voltage [V]:

Rear window defogger switch is “OFF”.

Approx. 12

Rear window defogger switch is “ON”.

0

SEL997X

OK or NG

OK	▶	**Check the following.** ● Rear window defogger relay (Refer to EL-192.) ● Rear window defogger circuit ● Rear window defogger filament (Refer to EL-192.)
NG	▶	GO TO 2.

2	CHECK DEFOGGER RELAY COIL SIDE CIRCUIT

1. Disconnect smart entrance control unit connector.
2. Turn ignition switch to ON position.
3. Check voltage between smart entrance control unit harness connector M144 terminal 37 (G/R) and ground.

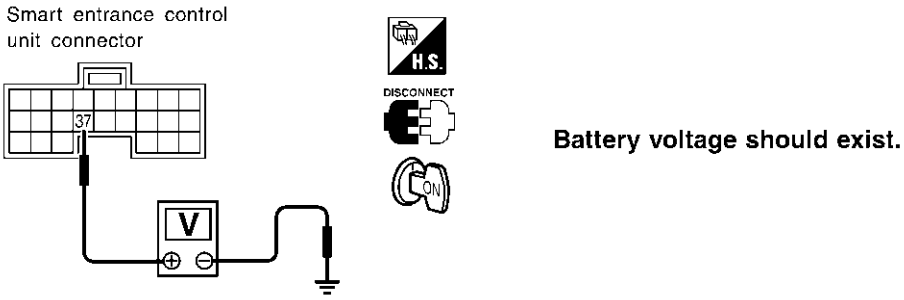

SEL998X

OK or NG

OK	▶	GO TO 3.
NG	▶	**Check the following.** ● 10A fuse [No. 10, located in the fuse block (J/B)] ● Rear window defogger relay ● Harness for open or short between 10A fuse [No. 10, located in the fuse block (J/B)] and rear window defogger relay ● Harness for open or short between rear window defogger relay and smart entrance control unit

3	CHECK REAR WINDOW DEFOGGER SWITCH INPUT SIGNAL

With CONSULT-II

Select "REAR DEF SW" in "DATA MONITOR" mode with CONSULT-II.

DATA MONITOR	
MONITOR	
REAR DEF SW	ON

When rear window defogger switch is pushed:
REAR DEF SW should be ON.

SEL352W

Without CONSULT-II

Check continuity between smart entrance control unit harness connector M143 terminal 14 (G/W) and ground.

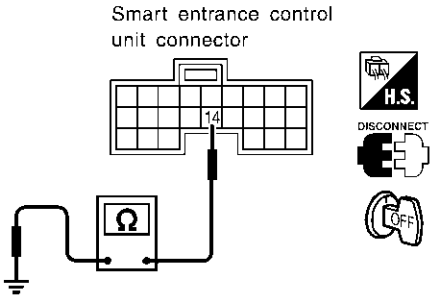

Continuity:
Rear window defogger switch is pushed.
Continuity should exist.
Rear window defogger switch is released.
Continuity should not exist.

SEL999X

OK or NG

OK	▶	GO TO 4.
NG	▶	**Check the following.** 1. Harness for open or short between smart entrance control unit and rear window defogger switch 2. Rear window defogger switch ground circuit 3. Replace rear window defogger switch.

4	CHECK POWER SUPPLY AND IGNITION INPUT SIGNAL

Check voltage between smart entrance control unit harness connector M144 terminal 27 (G), M145 terminal 49 (R/B) and ground.

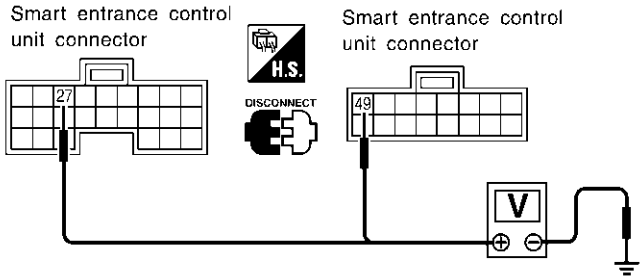

Terminals		Ignition switch position		
(+)	(−)	OFF	ACC	ON
49	Ground	Battery voltage	Battery voltage	Battery voltage
27	Ground	0V	0V	Battery voltage

SEL001Y

OK or NG

OK	▶	GO TO 5.
NG	▶	**Check the following.** ● 10A fuse [No. 10 or No. 13, located in the fuse block (J/B)] ● Harness for open or short between smart entrance control unit and fuse

5	CHECK CONTROL UNIT GROUND CIRCUIT

Check continuity between smart entrance control unit harness connector M144 terminal 43 (B), M145 terminal 64 (B) and ground.

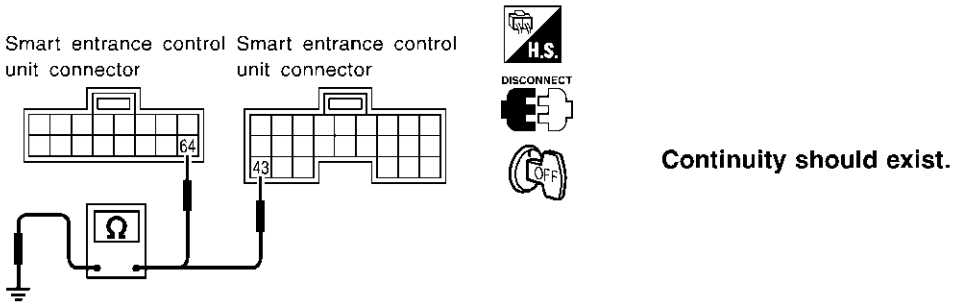

SEL002Y

Yes	▶	Replace smart entrance control unit.
No	▶	Repair harness or connectors.

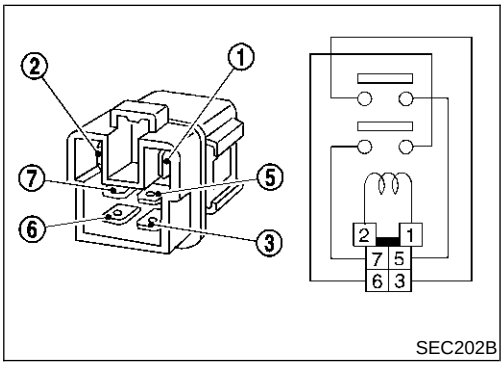

SEC202B

Electrical Components Inspection

NHEL0076

REAR WINDOW DEFOGGER RELAY

NHEL0076S01

Check continuity between terminals 3 and 5, 6 and 7.

Condition	Continuity
12V direct current supply between terminals 1 and 2	Yes
No current supply	No

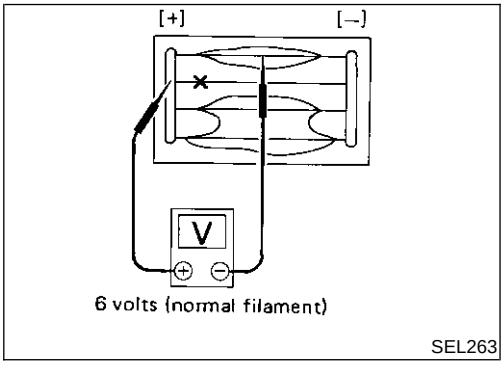

SEL263

Filament Check

NHEL0077

1. Attach probe circuit tester (in volt range) to middle portion of each filament.

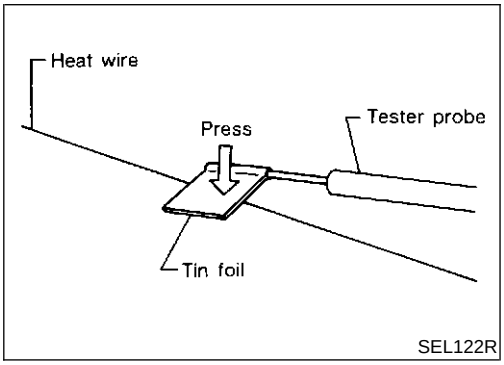

SEL122R

- **When measuring voltage, wrap tin foil around the top of the negative probe. Then press the foil against the wire with your finger.**

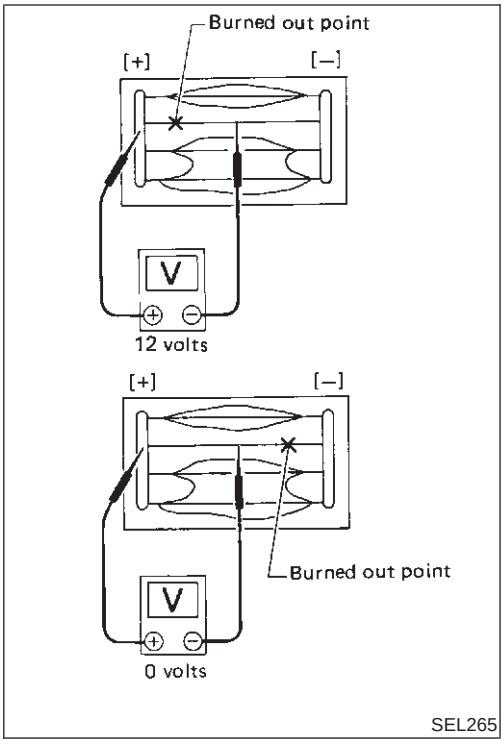

SEL265

2. If a filament is burned out, circuit tester registers 0 or 12 volts.

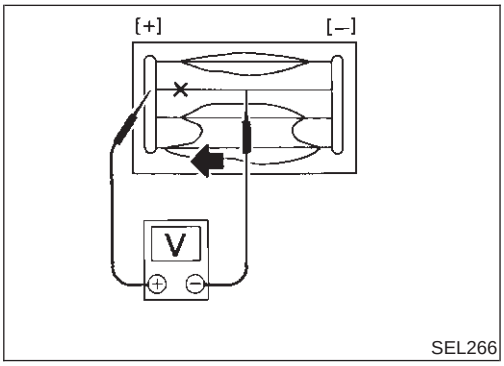

SEL266

3. To locate burned out point, move probe to left and right along filament. Test needle will swing abruptly when probe passes the point.

Filament Repair

NHEL0078

REPAIR EQUIPMENT

NHEL0078S01

1) Conductive silver composition (Dupont No. 4817 or equivalent)
2) Ruler 30 cm (11.8 in) long
3) Drawing pen
4) Heat gun
5) Alcohol
6) Cloth

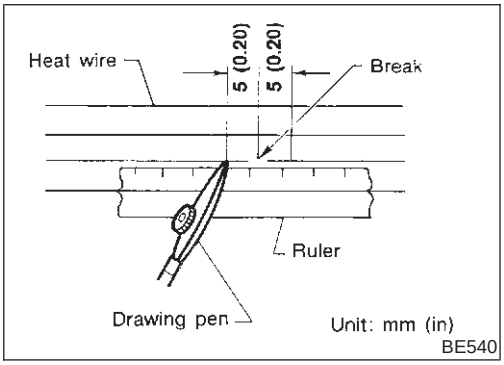

BE540

REPAIRING PROCEDURE

NHEL0078S02

1. Wipe broken heat wire and its surrounding area clean with a cloth dampened in alcohol.
2. Apply a small amount of conductive silver composition to tip of drawing pen.

Shake silver composition container before use.

3. Place ruler on glass along broken line. Deposit conductive silver composition on break with drawing pen. Slightly overlap existing heat wire on both sides [preferably 5 mm (0.20 in)] of the break.

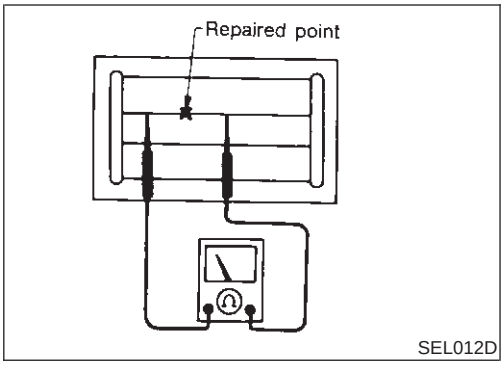

4. After repair has been completed, check repaired wire for continuity. This check should be conducted 10 minutes after silver composition is deposited.

Do not touch repaired area while test is being conducted.

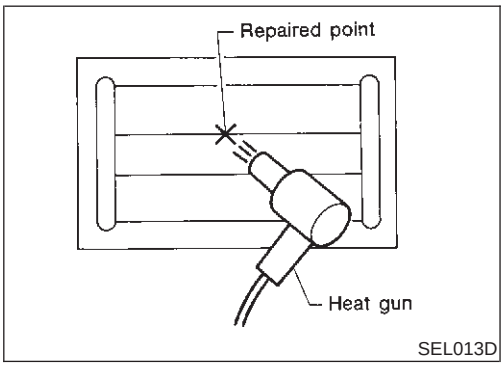

5. Apply a constant stream of hot air directly to the repaired area for approximately 20 minutes with a heat gun. A minimum distance of 3 cm (1.2 in) should be kept between repaired area and hot air outlet. If a heat gun is not available, let the repaired area dry for 24 hours.

System Description

NHEL0079

Refer to Owner's Manual for audio system operating instructions.
Power is supplied at all times

- through 15A fuse (No. 56, located in the fuse and fusible link box)
- to BOSE speaker amp. terminal 27, and
- to CD auto changer terminal 3 (with CD auto changer)
- to audio unit terminal 6.
- through 15A fuse (No. 67, located in the fuse and fusible link box)
- to woofer terminal 48.

With the ignition switch in the ACC or ON position, power is supplied

- through 10A fuse [No. 1, located in the fuse block (J/B)]
- to CD auto changer terminal 1 (with CD auto changer)
- to audio unit terminal 10.

Ground is supplied through the case of the audio unit.
Ground is supplied

- to BOSE speaker amp. terminal 40, and
- to woofer terminal 47
- through body grounds B106 and B127
- to CD auto changer terminal 7 (with CD auto changer)
- through body grounds B7 (with TCS) or B78 (with VDC) and B12 (without rear sunshade) or B46 (with rear sunshade).

When the audio unit POWER button is pressed, power is supplied to BOSE speaker amp. terminal 25 and woofer terminal 45 from audio unit terminal 12.
CD (audio) signals are supplied (with CD auto changer)

- through CD auto changer terminals 16, 6, 15 and 5
- to terminals 41, 42, 43 and 44 of the audio unit.

Audio signals are supplied

- through audio unit terminals 1, 2, 3, 4, 13, 14, 15 and 16
- to BOSE speaker amp. terminals 20, 33, 22, 35, 21, 34, 23 and 36
- through audio unit terminal 12
- to BOSE speaker amp. terminal 25 and
- to woofer terminal 45.

Audio signals are amplified by the BOSE speaker amp.
The amplified audio signals are supplied

- through BOSE speaker amp. terminals 30, 31, 28, 29, 18, 17, 41 and 42
- to terminals 1 and 2 of the front door speaker LH and RH
- to terminals 1 and 2 of the tweeter LH and RH
- to terminals 1 and 2 of the rear door speaker LH and RH
- through BOSE speaker amp. terminal 24 and 37
- to terminals 44 and 43 of the woofer.

Schematic

NHEL0167

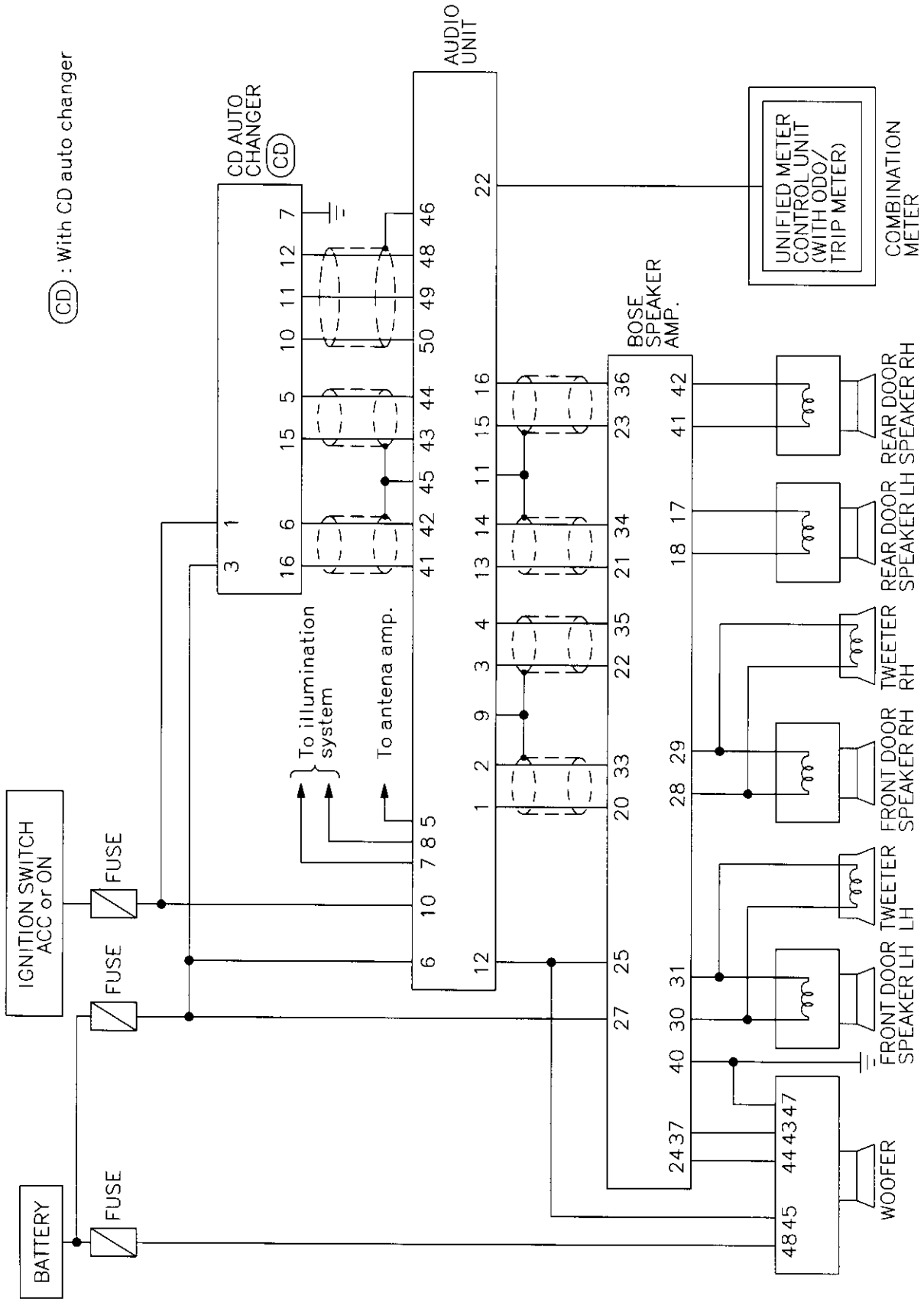

MEL314O

Wiring Diagram — AUDIO —

NHEL0081

EL-AUDIO-01

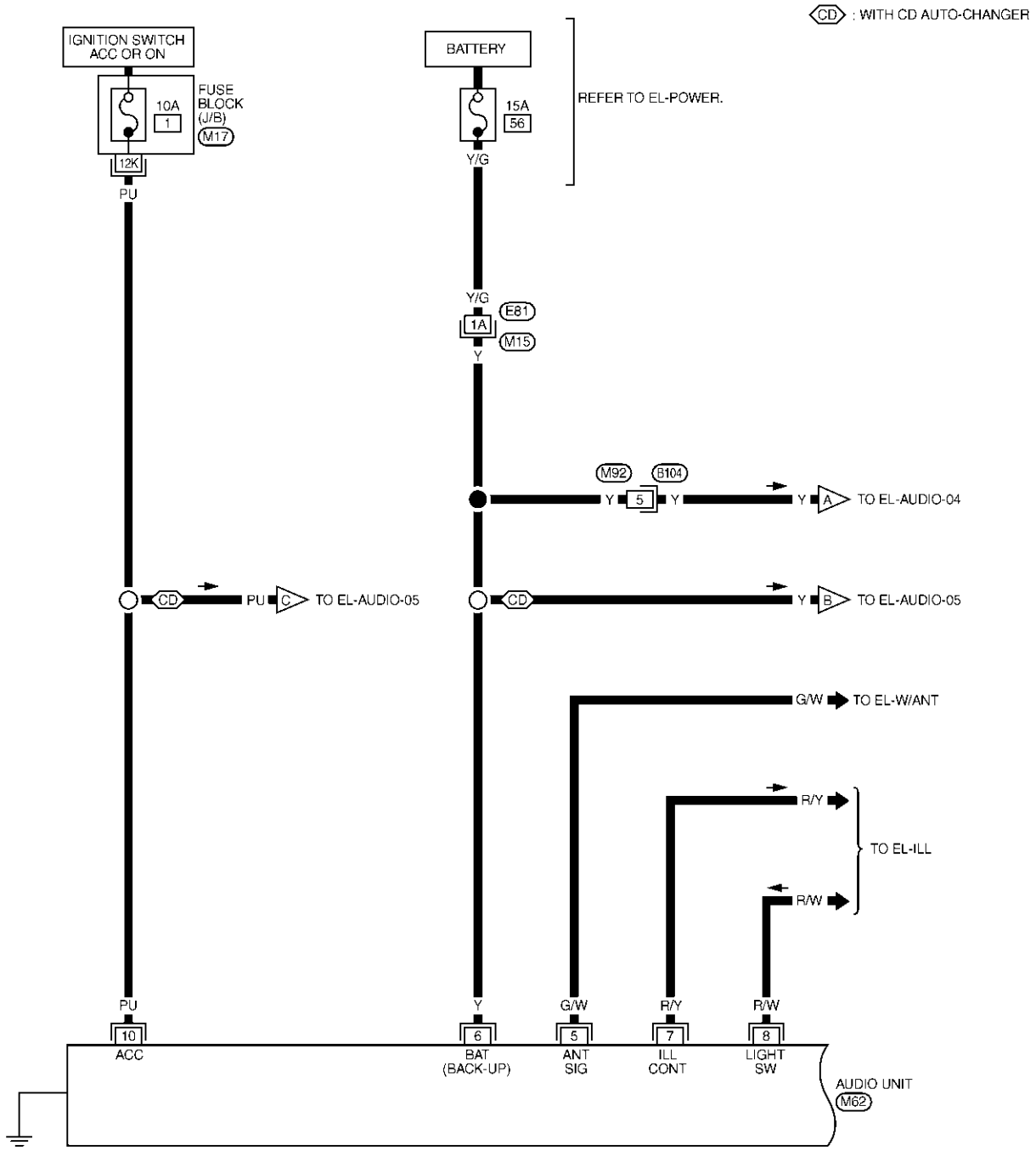

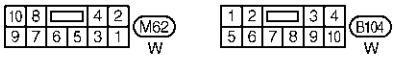

REFER TO THE FOLLOWING.
M15 -SUPER MULTIPLE JUNCTION (SMJ)
M17 -FUSE BLOCK-JUNCTION BOX (J/B)

MEL315O

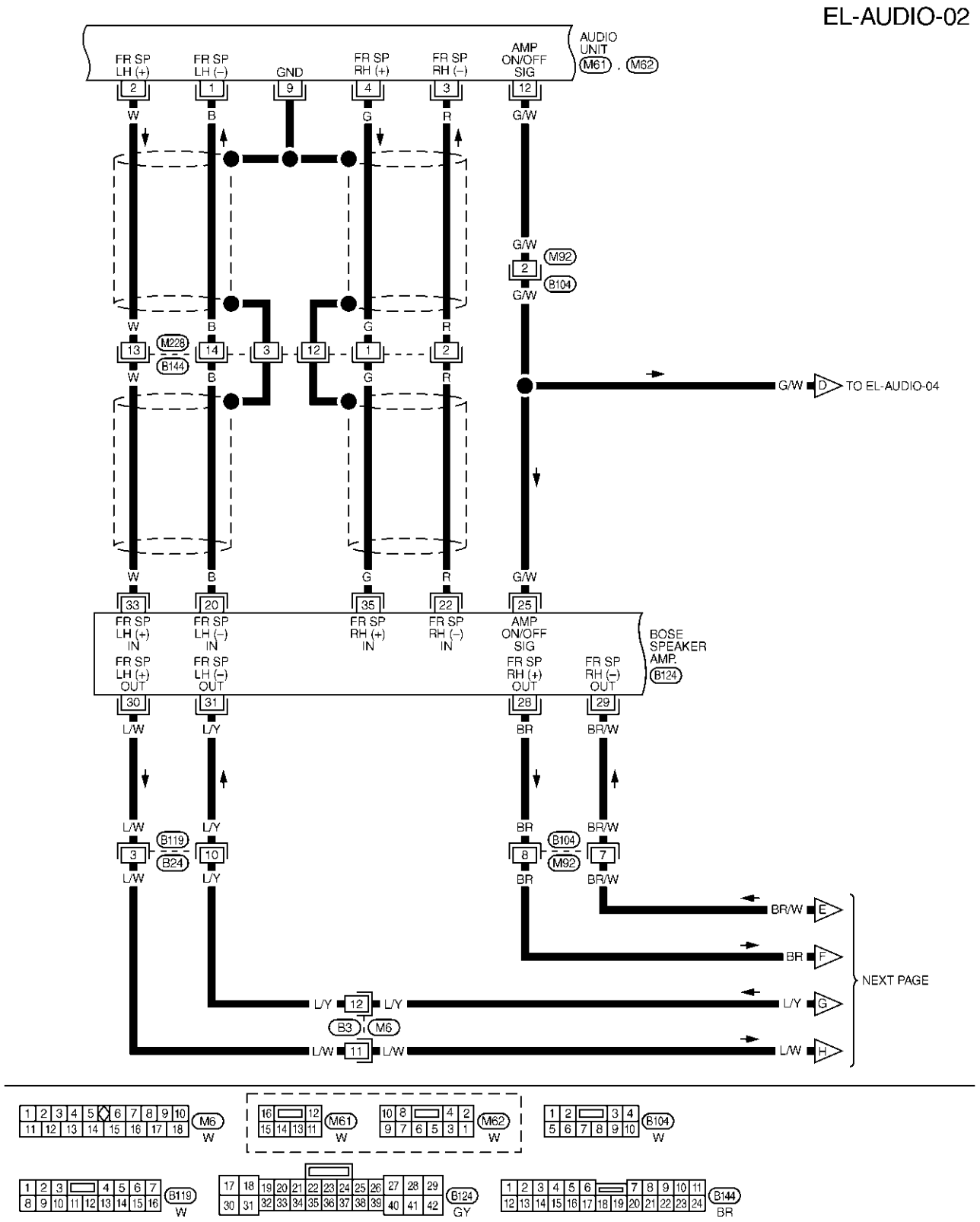
EL-AUDIO-02
AUDIO UNIT
M61
M62
FR SP LH (+)
FR SP LH (–)
GND
FR SP RH (+)
FR SP RH (–)
AMP ON/OFF SIG
M92
B104
M228
B144
TO EL-AUDIO-04
FR SP LH (+) IN
FR SP LH (–) IN
FR SP RH (+) IN
FR SP RH (–) IN
AMP ON/OFF SIG
FR SP LH (+) OUT
FR SP LH (–) OUT
FR SP RH (+) OUT
FR SP RH (–) OUT
BOSE SPEAKER AMP.
B124
B119
B24
B3
M6
NEXT PAGE
M6 W
M61 W
M62 W
B104 W
B119 W
B124 GY
B144 BR

MEL316O

EL-AUDIO-03

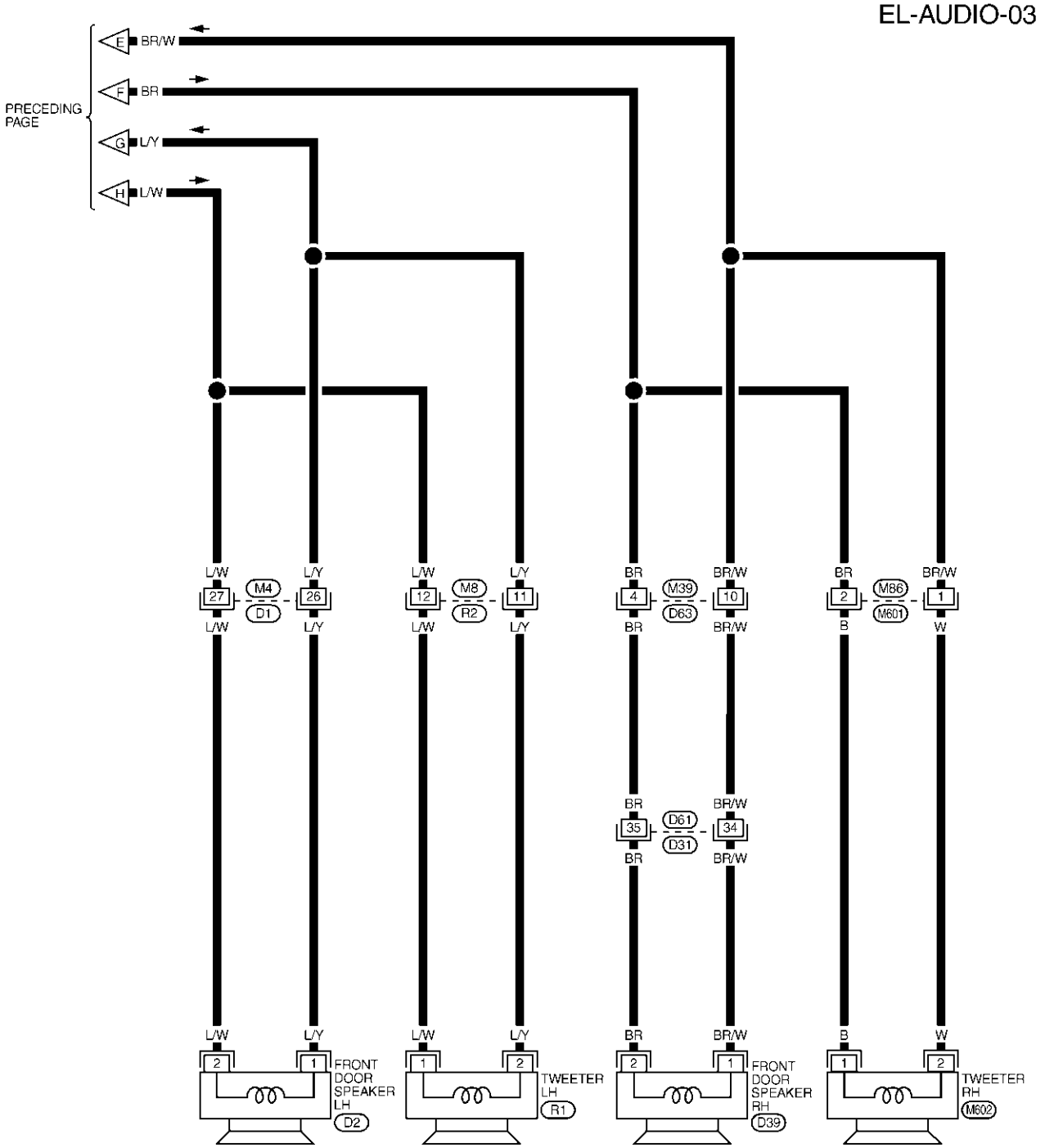

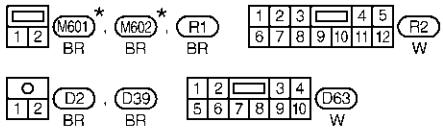

★ : THIS CONNECTOR IS NOT SHOWN IN "HARNESS LAYOUT", EL SECTION.

REFER TO THE FOLLOWING.
D1 , D31 - SUPER MULTIPLE JUNCTION (SMJ)

MEL317O

Wiring Diagram — AUDIO — (Cont'd)

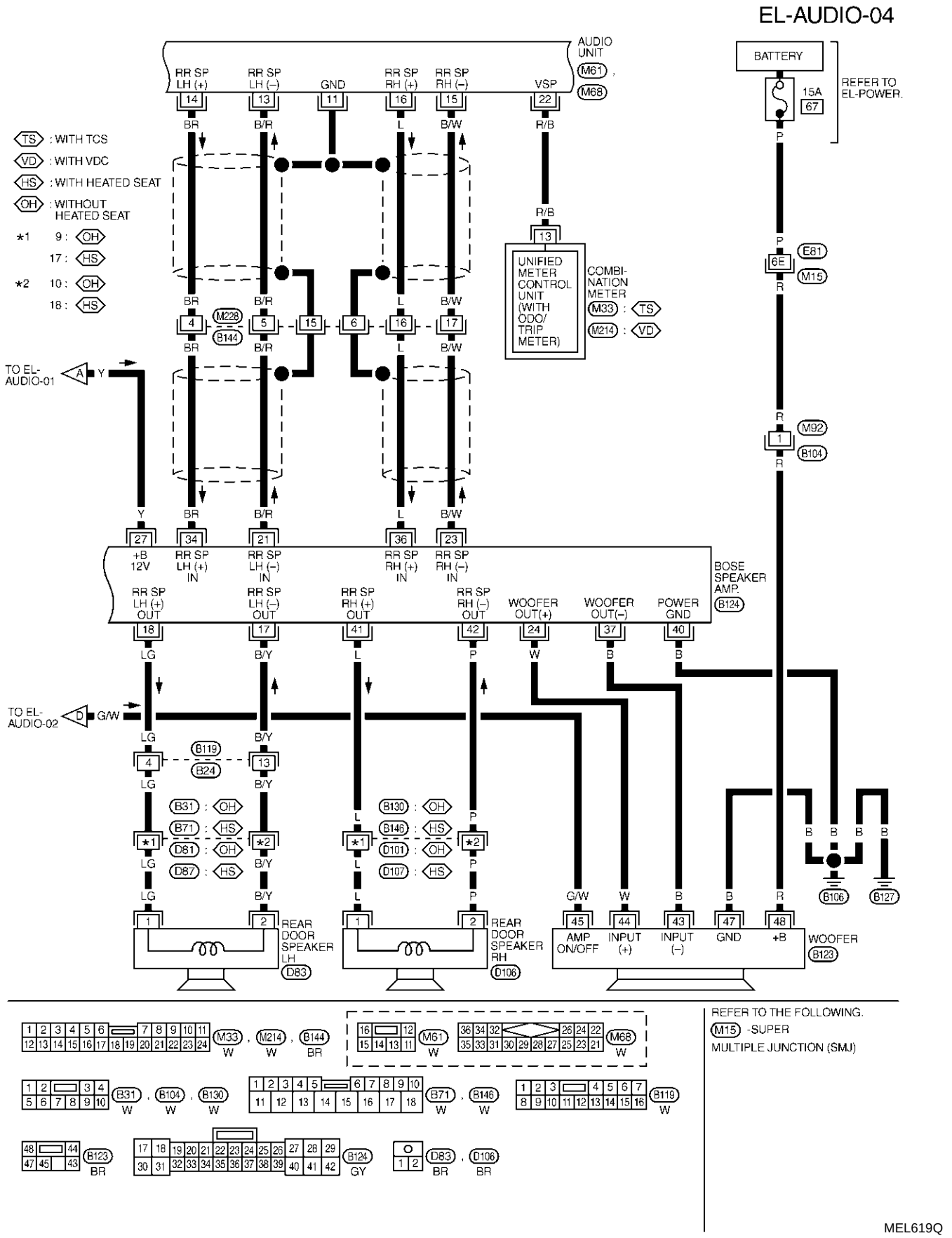

EL-AUDIO-05

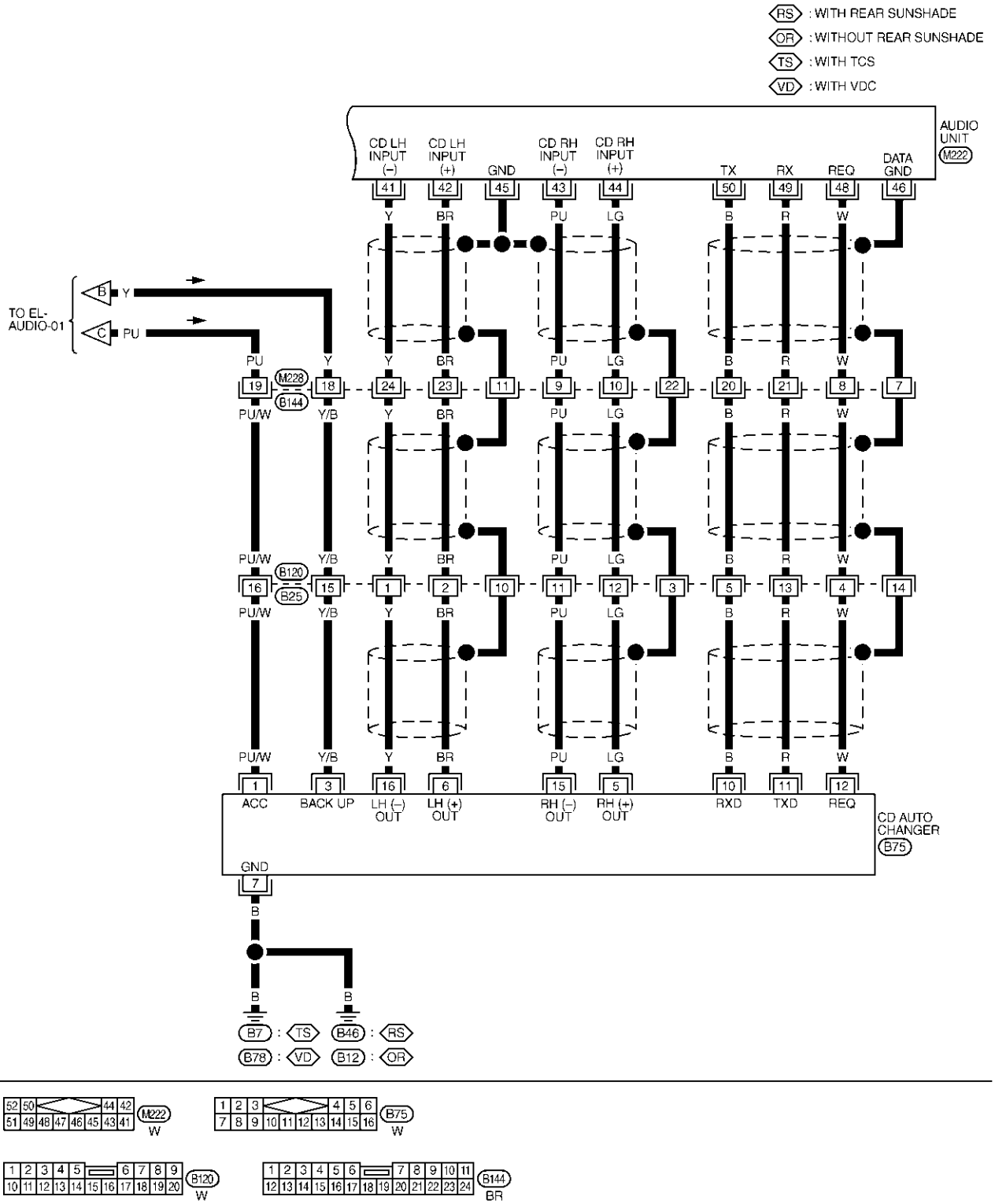

MEL620Q

Trouble Diagnoses

NHEL0220

AUDIO UNIT

NHEL0220S01

Symptom	Possible causes	Repair order
Audio unit inoperative (no digital display and no sound from speakers).	1. 10A fuse 2. Poor audio unit case ground 3. Audio unit	1. Check 10A fuse [No. 1, located in fuse block (J/B)]. Turn ignition switch ON and verify that battery positive voltage is present at terminal 10 of audio unit. 2. Check audio unit case ground. 3. Remove audio unit for repair.
Audio unit presets are lost when ignition switch is turned OFF.	1. 15A fuse 2. Audio unit	1. Check 15A fuse [No. 56, located in fuse and fusible link box] and verify that battery positive voltage is present at terminal 6 of audio unit. 2. Remove audio unit for repair.
Audio unit controls are operational, but no sound is heard from any speaker.	1. 15A fuse 2. Amp. ON/OFF signal circuit 3. Speaker amp. ground	1. Check 15A fuse [No. 56, located in fuse and fusible link box]. Verify battery positive voltage is present at terminal 27 of BOSE speaker amp. 2. Check harness continuity between audio unit terminal 12 and BOSE speaker amp. terminal 25. 3. Check harness continuity between BOSE speaker amp. terminal 40 and ground.
Individual speaker is noisy or inoperative.	1. Each speaker 2. Output circuit to each speaker	1. Check speaker. 2. Check the output circuits to each speaker ● between audio unit and BOSE speaker amp. ● between BOSE speaker amp. and each speaker.
Woofer does not operate.	1. Power supply to woofer 2. Amp. ON/OFF signal circuit 3. Speaker amp. ground 4. Output circuit to woofer	1. Check 15A fuse (No. 67, located in fuse and fusible link box). Verify battery positive voltage is present at terminal 48 of woofer. 2. Check harness continuity between audio unit terminal 12 and woofer terminal 45. 3. Check harness continuity between woofer terminal 47 and ground. 4. Check the output circuits to woofer from BOSE speaker amp.
AM/FM stations are weak or noisy.	1. Window antenna 2. Audio unit ground 3. Audio unit	1. Check window antenna. 2. Check audio unit ground condition. 3. Remove audio unit for repair.
Audio unit generates noise in AM and FM modes with engine running.	1. Poor audio unit ground 2. Loose or missing ground bonding straps 3. Ignition condenser or rear window defogger noise suppressor condenser 4. Ignition coil or secondary wiring 5. Audio unit	1. Check audio unit ground. 2. Check ground bonding straps. 3. Replace ignition condenser or rear window defogger noise suppressor condenser. 4. Check ignition coil and secondary wiring. 5. Remove audio unit for repair.
Audio unit generates noise in AM and FM modes with accessories on (switch pops and motor noise).	1. Poor audio unit ground 2. Antenna 3. Accessory ground 4. Faulty accessory	1. Check audio unit ground. 2. Check antenna. 3. Check accessory ground. 4. Replace accessory.

Inspection

=NHEL0221

AUDIO UNIT AND AMP.

NHEL0221S01

All voltage inspections are made with:

- Ignition switch ON or ACC
- Audio unit ON
- Audio unit and amps. connected (If audio unit or amp. is removed for inspection, supply a ground to the case using a jumper wire.)

ANTENNA

NHEL0221S02

Using a jumper wire, clip an auxiliary ground between antenna and body.

- If reception improves, check antenna ground (at body surface).
- If reception does not improve, check main feeder cable for short circuit or open circuit.

Wiring Diagram — REMOTE —

NHEL0306

EL-REMOTE-01

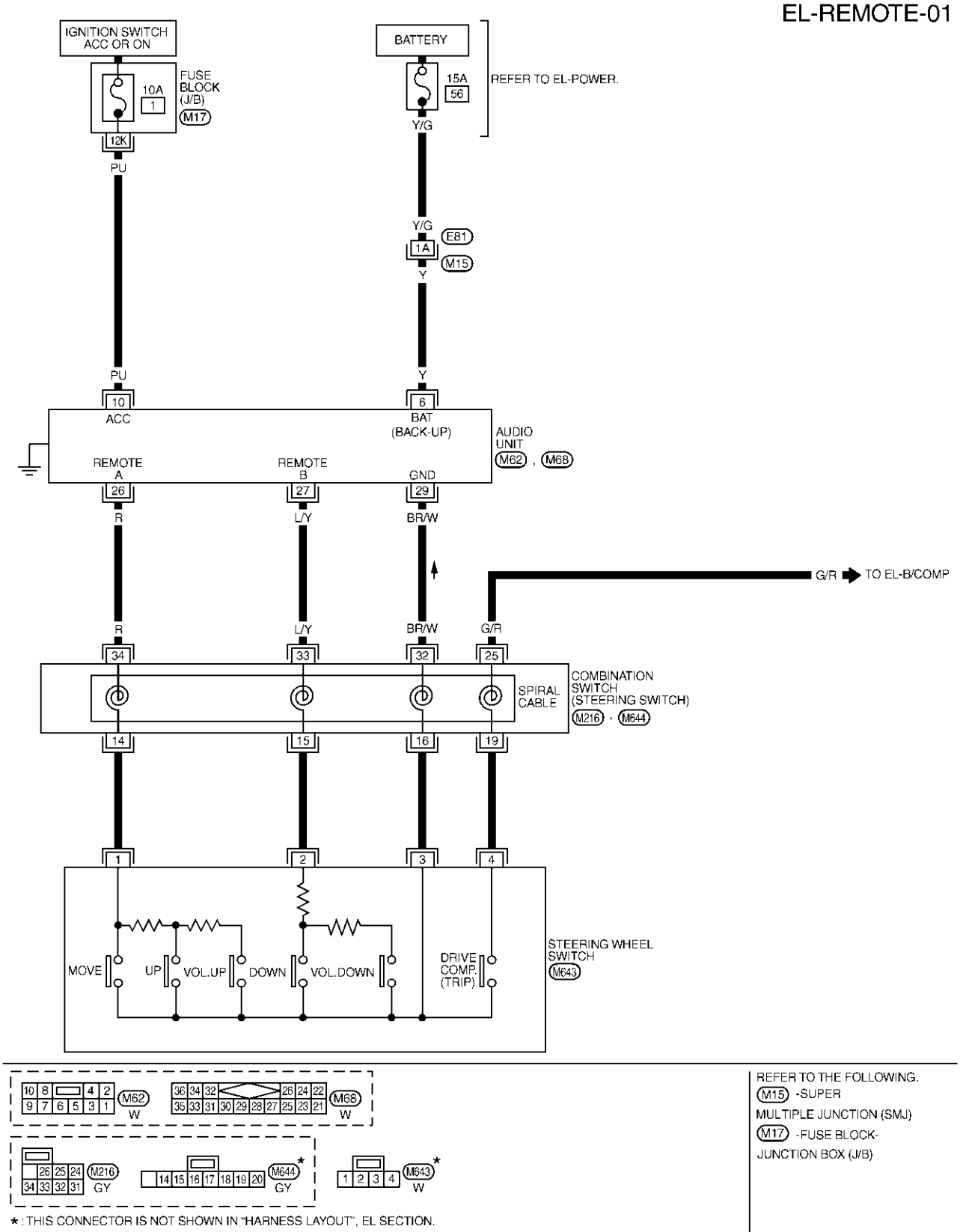

★: THIS CONNECTOR IS NOT SHOWN IN "HARNESS LAYOUT", EL SECTION.

REFER TO THE FOLLOWING.
M15 -SUPER MULTIPLE JUNCTION (SMJ)
M17 -FUSE BLOCK-JUNCTION BOX (J/B)

MEL621Q

Wiring Diagram — W/ANT —

NHEL0085

EL-W/ANT-01

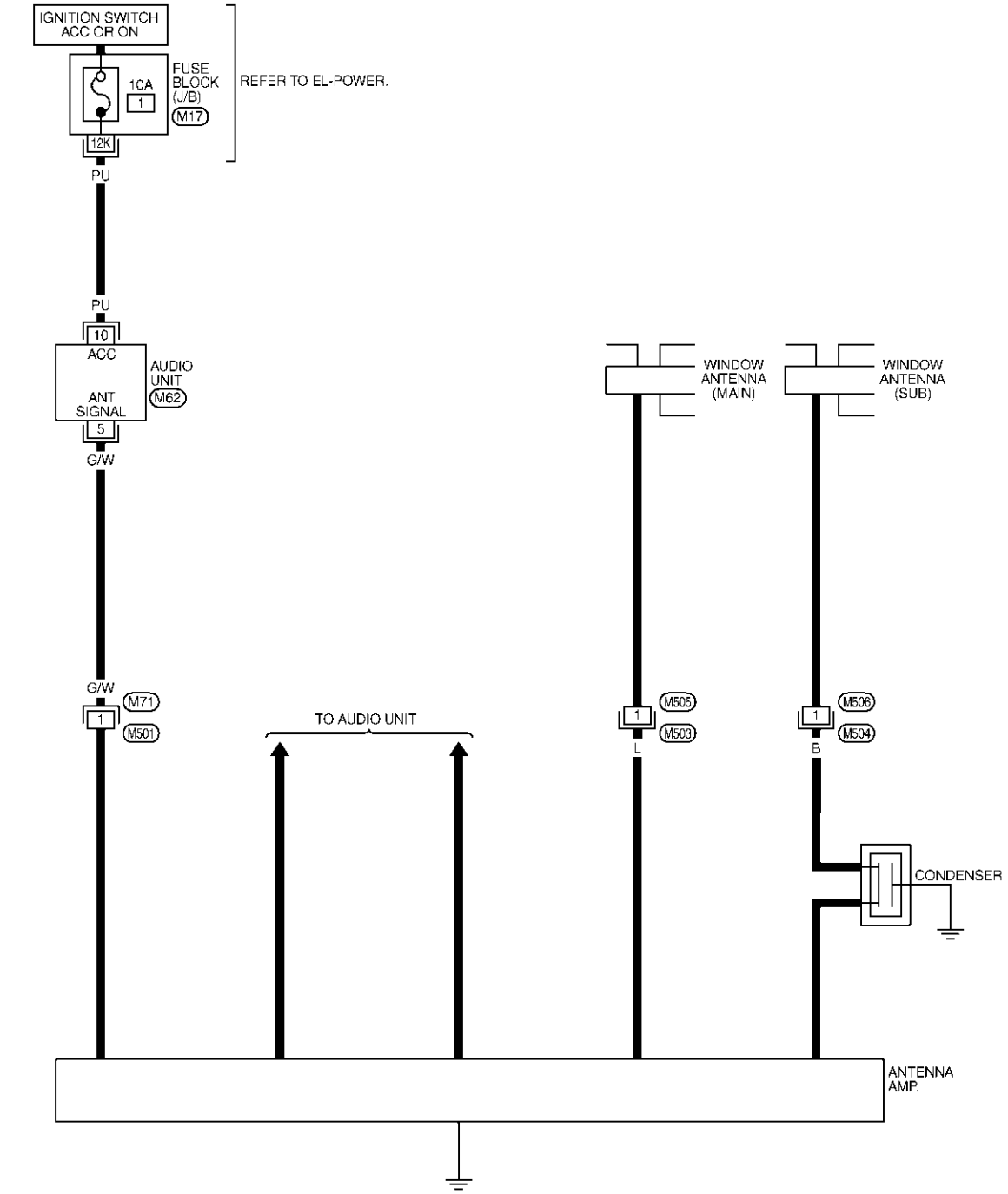

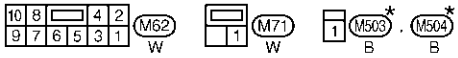

★: THIS CONNECTOR IS NOT SHOWN IN "HARNESS LAYOUT", EL SECTION.

REFER TO THE FOLLOWING.
M17 -FUSE BLOCK-
JUNCTION BOX (J/B)

MEL320O

Location of Antenna

NHEL0087

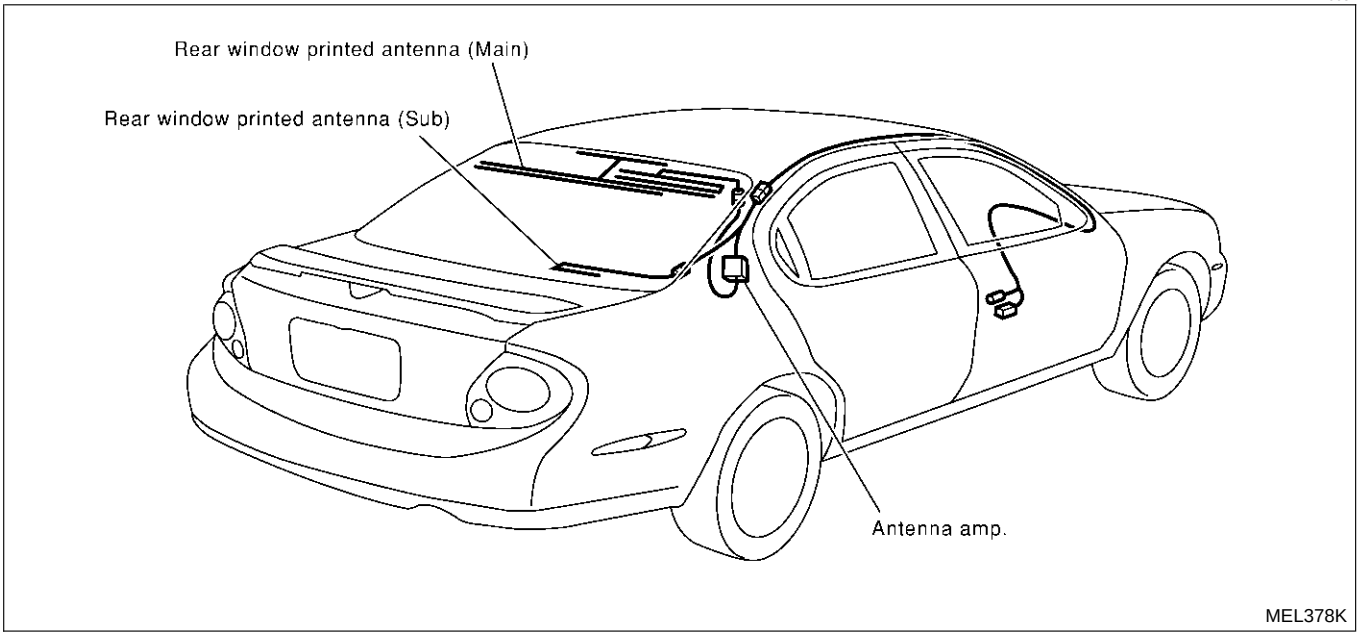

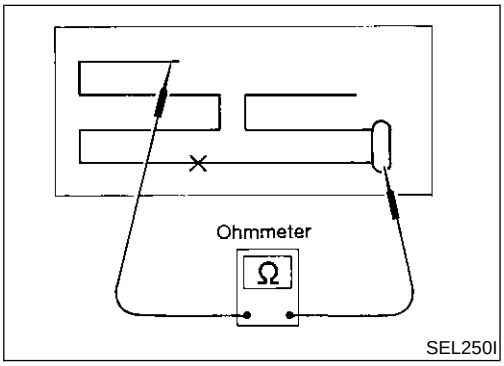

Window Antenna Repair

NHEL0250

ELEMENT CHECK

NHEL0250S01

1. Attach probe circuit tester (in ohm range) to antenna terminal on each side.
   If an element is OK, continuity should exist.
   If an element is broken, no continuity should exist. Go to step 2.

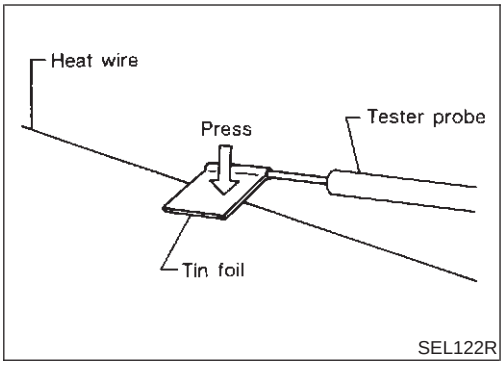

- **When measuring continuity, wrap tin foil around the top of probe. Then press the foil against the wire with your finger.**

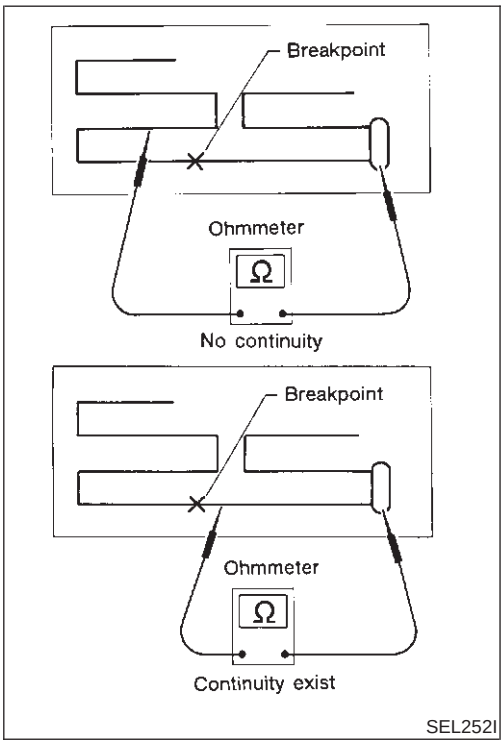

2. To locate broken point, move probe along element. Tester needle will swing abruptly when probe passes the point.

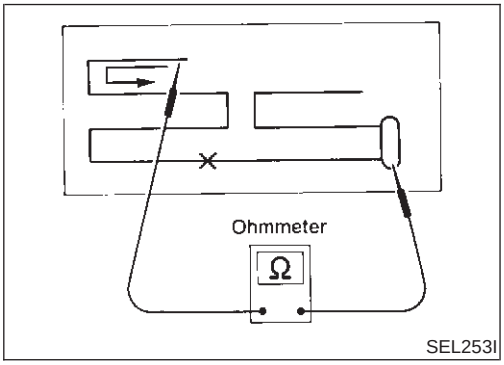

ELEMENT REPAIR

NHEL0250S02

Refer to "Filament Repair", "REAR WINDOW DEFOGGER" (EL-192).

System Description

NHEL0222

OUTLINE

NHEL0222S01

Electric sunroof system consists of

- Sunroof switch
- Sunroof motor
- Smart entrance control unit

Smart entrance control unit controls retained power operation.

OPERATION

NHEL0222S03

The sunroof can be opened or closed and tilted up or down with the sunroof switch.

RETAINED POWER OPERATION

NHEL0222S02

When the ignition switch is turned to OFF position from ON or START position, power is supplied for 45 seconds

- to sunroof motor terminal 6
- from smart entrance control unit terminal 46.

When power is supplied, the electrical sunroof can be operated.
The retained power operation is canceled when the driver or passenger side door is opened.
RAP signal period can be changed by CONSULT-II (EL-211).

INTERRUPTION DETECTION FUNCTION

NHEL0222S04

The CPU of sunroof motor monitors the sunroof motor operation and the sunroof position (full closed or other) for sunroof by the signals from encoder and limit switch in sunroof motor.
When sunroof motor detects interruption during the following close operation,

- automatic close operation when ignition switch is in the “ON” position
- automatic close operation during retained power operation

sunroof switch controls the motor for open and the sunroof will operate about 150 mm (5.91 in).

Wiring Diagram — SROOF —

NHEL0089

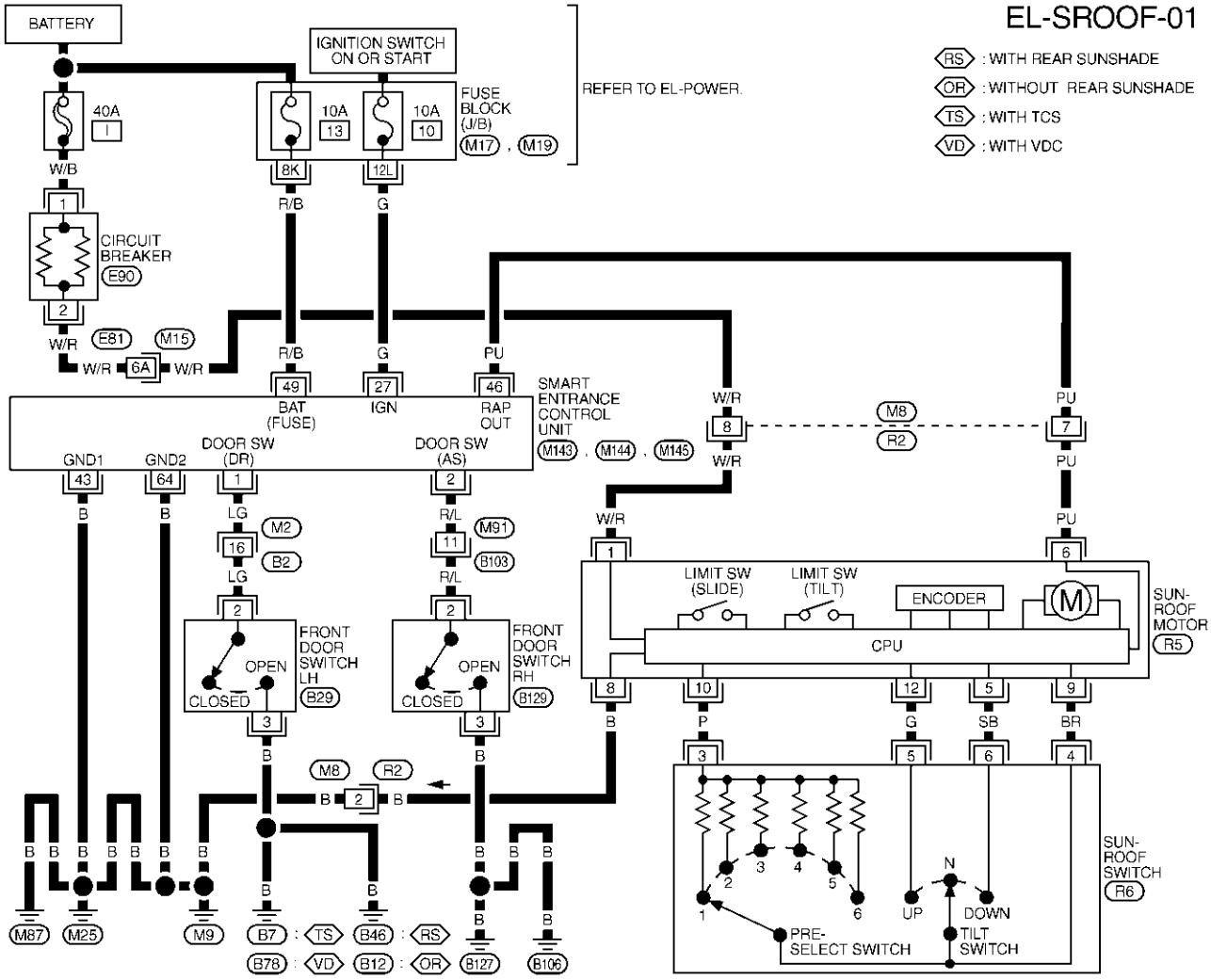

SMART ENTRANCE CONTROL UNIT TERMINALS AND REFERENCE VALUE BETWEEN EACH TERMINAL AND GROUND

TERMINAL	WIRE COLOR	ITEM	CONDITION	DATA (DC)
1	LG	DRIVER DOOR SWITCH	OFF (CLOSED) → ON (OPEN)	12V → 0V
2	R/L	PASSENGER DOOR SWITCH	OFF (CLOSED) → ON (OPEN)	5V → 0V
27	G	IGNITION SWITCH (ON)	IGNITION SWITCH IS IN "ON" POSITION	12V
43	B	GROUND	–	–
46	PU	SUNROOF MOTOR	RETAIND POWER OPERATION IS OPERATED (ON → OFF)	12V →0V
49	R/B	POWER SOURCE (FUSE)	–	12V
64	B	GROUND	–	–

SEL986XB

CONSULT-II Inspection Procedure

=NHEL0223

"RETAINED PWR"

NHEL0223S01

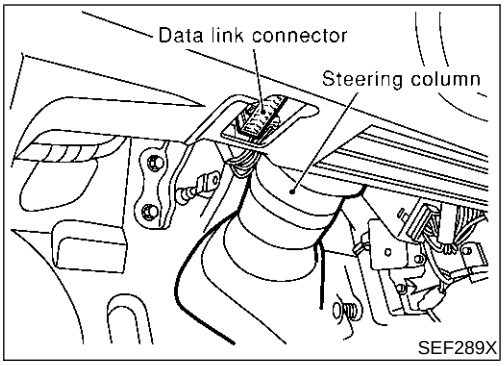

SEF289X

1. Turn ignition switch "OFF".
2. Connect "CONSULT-II" and "CONSULT-II CONVERTER" to the data link connector.

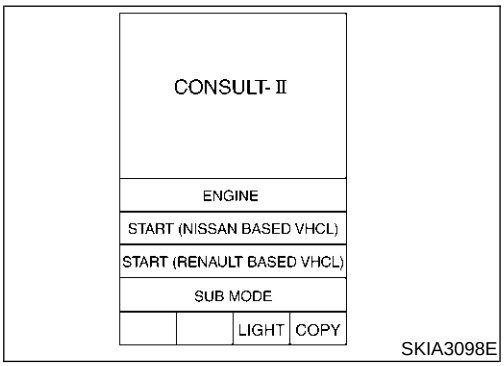

SKIA3098E

3. Turn ignition switch "ON".
4. Touch "START (NISSAN BASED VHCL)".

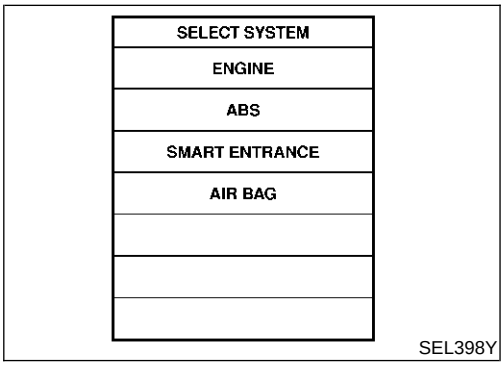

SEL398Y

5. Touch "SMART ENTRANCE".
   If "SMART ENTRANCE" is not indicated, go to GI-42.

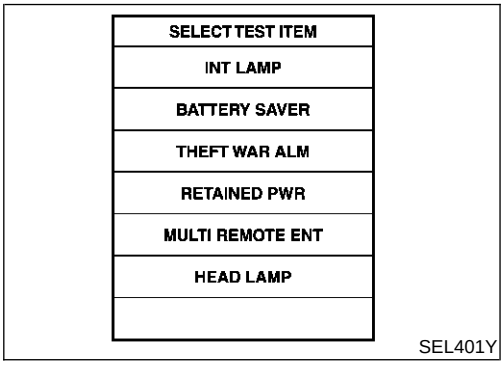

SEL401Y

6. Touch "RETAINED PWR".

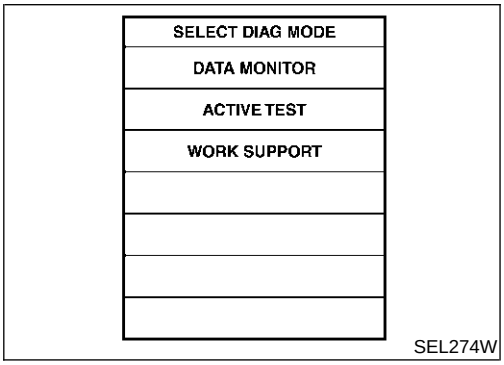

SEL274W

7. Select diagnosis mode.
   "DATA MONITOR", "ACTIVE TEST" and "WORK SUPPORT" are available.

CONSULT-II Application Items

NHEL0224

"RETAINED PWR"

NHEL0224S01

Data Monitor

NHEL0224S0101

Monitored Item	Description
IGN ON SW	Indicates [ON/OFF] condition of ignition switch.
DOOR SW-DR	Indicates [ON/OFF] condition of front door switch LH.
DOOR SW-AS	Indicates [ON/OFF] condition of front door switch RH.

Active Test

NHEL0224S0102

Test Item	Description
RETAINED PWR	This test is able to supply RAP signal (power) from smart entrance control unit to power window system, power sunroof system. Those systems can be operated when turning on "RETAINED PWR" on CONSULT-II screen even if the ignition switch is tuned OFF. **NOTE:** **During this test, CONSULT-II can be operated with ignition switch "OFF" position. "RETAINED PWR" should be turned "ON" or "OFF" on CONSULT-II screen when ignition switch is ON. Then turn ignition switch OFF for checking retained power operation. CONSULT-II might be stuck if "RETAINED PWR" is turned "ON" or "OFF" on CONSULT-II screen when ignition switch is OFF.**

Work Support

NHEL0224S0103

Work Item	Description
RETAINED PWR SET	RAP signal's power supply period can be changed by mode setting. Selects RAP signal's power supply period between two steps. ● MODE 1 (45 sec.)/MODE 2 (OFF)/MODE 3 (2 min.)

Trouble Diagnoses

NHEL0225

Symptom	Possible cause	Repair order
Power sunroof cannot be operated using any switch.	1. 10A fuse, 40A fusible link and E90 circuit breaker 2. Grounds M9, M25 and M87 3. Sunroof switch 4. Sunroof switch circuit 5. Sunroof motor	1. Check 10A fuse [No. 10, located in fuse block (J/B)], 40A fusible link (letter **i**, located in fuse and fusible link box) and E90 circuit breaker. Turn ignition switch "ON" and verify battery positive voltage is present at terminals 1 and 6 of sunroof motor. 2. Check grounds M9, M25, M87. 3. Check sunroof switch. 4. Check harness between sunroof switch and sunroof motor. 5. Replace sunroof motor.
Power sunroof cannot be operated using one of the sunroof switches.	1. Sunroof switch 2. Sunroof switch circuit	1. Check sunroof switch. 2. Check the harness between sunroof motor and sunroof switch.

Trouble Diagnoses (Cont'd)

Symptom	Possible cause	Repair order
Power sunroof cannot be operated or closed fully.	1. Full closed position not initialized 2. Sunroof slide mechanism 3. Sunroof switch 4. Sunroof switch circuit 5. Sunroof motor	1. Initialize full closed position. 2. Check the following. a. Check obstacles in sunroof, etc. b. Check worn or deformed sunroof. c. Check sunroof sash tilted too far inward or outward. 3. Check sunroof switch. 4. Check harness between sunroof motor and sunroof switch. 5. Replace sunroof motor.
Retained power operation does not operate properly.	1. RAP signal circuit 2. Driver or passenger side door switch circuit 3. Smart entrance control unit	1. Check RAP signal. a. (With CONSULT-II) Check RAP signal with CONSULT-II. Use "ACTIVE TEST" mode, "RETAINED PWR" in "SMART ENTRANCE". (Refer to EL-210.) If NG, go to the step b. below. b. Verify 12 positive voltage from smart entrance control unit is present at terminal 6 of sunroof motor: ● Within 45 seconds after ignition switch turns off. ● When front door LH and RH is closed. 2. Check harness between smart entrance control unit and driver or passenger side door switch. Check driver or passenger side door switch. 3. Check smart entrance control unit. (EL-368)

Wiring Diagram — MIRROR —

NHEL0090

EL-MIRROR-01

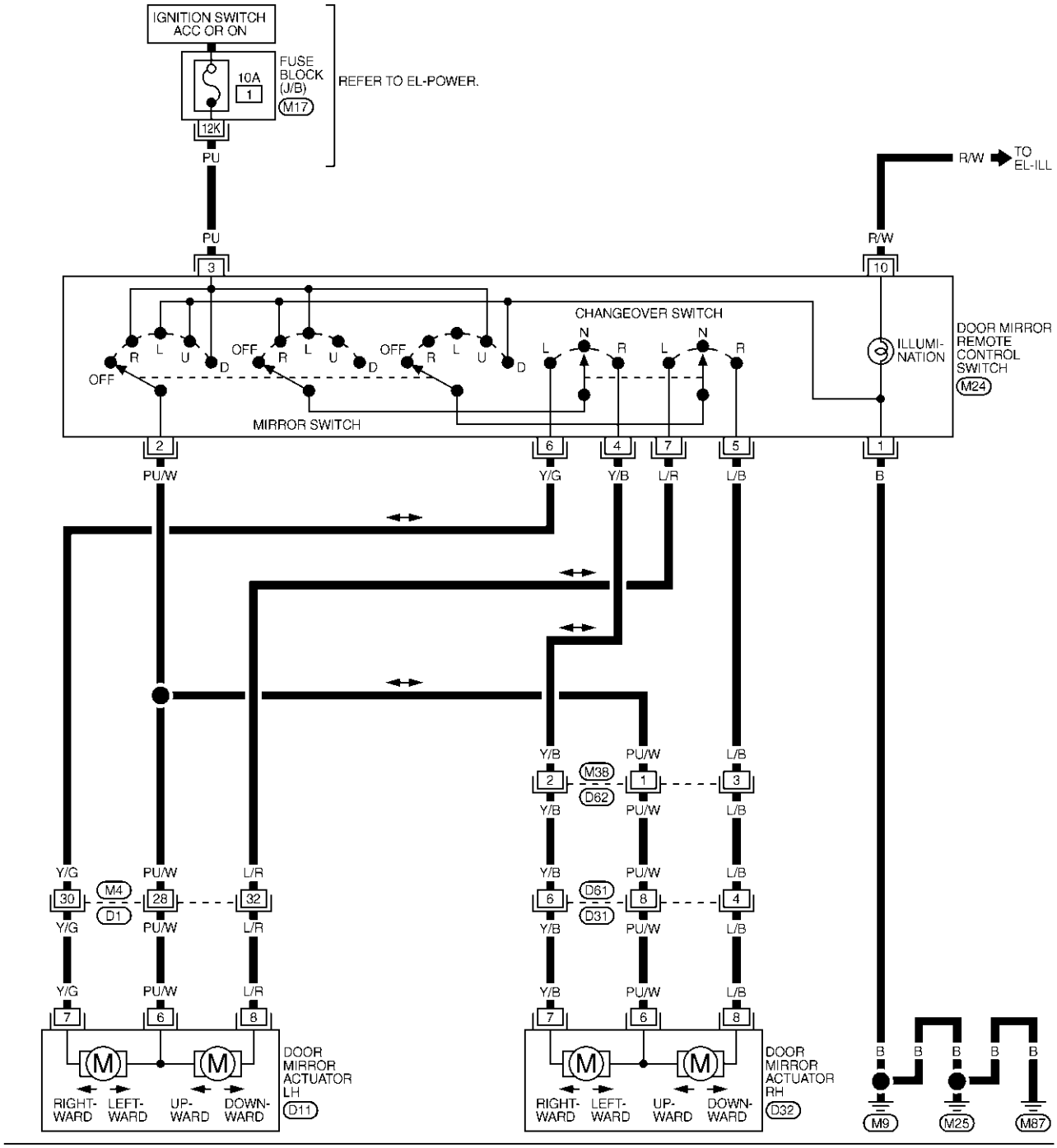

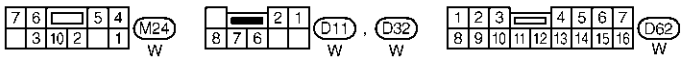

REFER TO THE FOLLOWING.
D1 , D31 -SUPER MULTIPLE JUNCTION (SMJ)
M17 -FUSE BLOCK-JUNCTION BOX (J/B)

MEL623Q

Wiring Diagram — I/MIRR —

NHEL0271

EL-I/MIRR-01

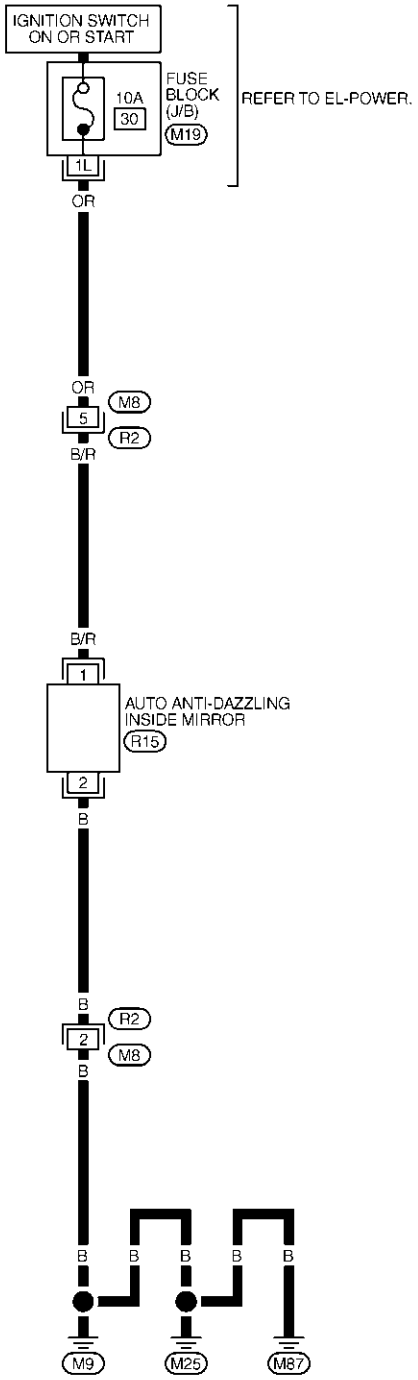

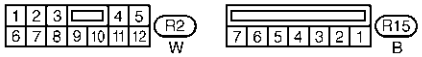

REFER TO THE FOLLOWING.
M19 - FUSE BLOCK - JUNCTION BOX (J/B)

MEL624Q

Wiring Diagram — T&FLID —

NHEL0168

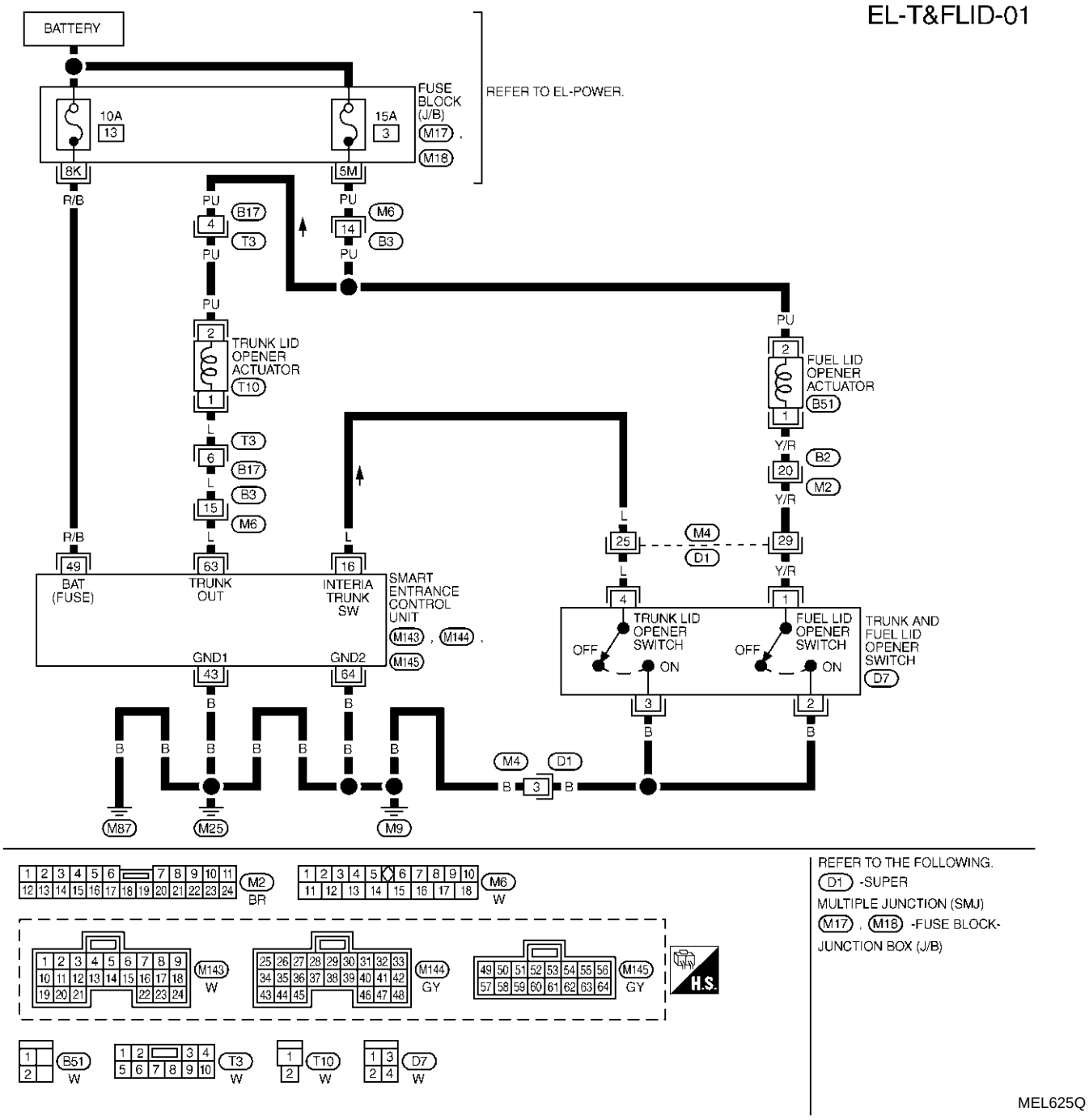

SMART ENTRANCE CONTROL UNIT TERMINALS AND REFERENCE VALUE BETWEEN EACH TERMINAL AND GROUND

TERMINAL	WIRE COLOR	ITEM	CONDITION	DATA (DC)
16	L	TRUNK AND FUEL LID OPENER SWITCH	OFF → ON (when only pulled)	12V → 0V
43	B	GROUND	–	–
49	R/B	POWER SOURCE (FUSE)	–	12V
63	L	TRUNK LID OPENER ACTUATOR	WHEN TRUNK LID OPENER ACTUATOR IS OPERATED USING KEYFOB (ON →OFF)	0V→12V
64	B	GROUND	–	–

SEL987XA

Wiring Diagram — PHONE —

NHEL0170

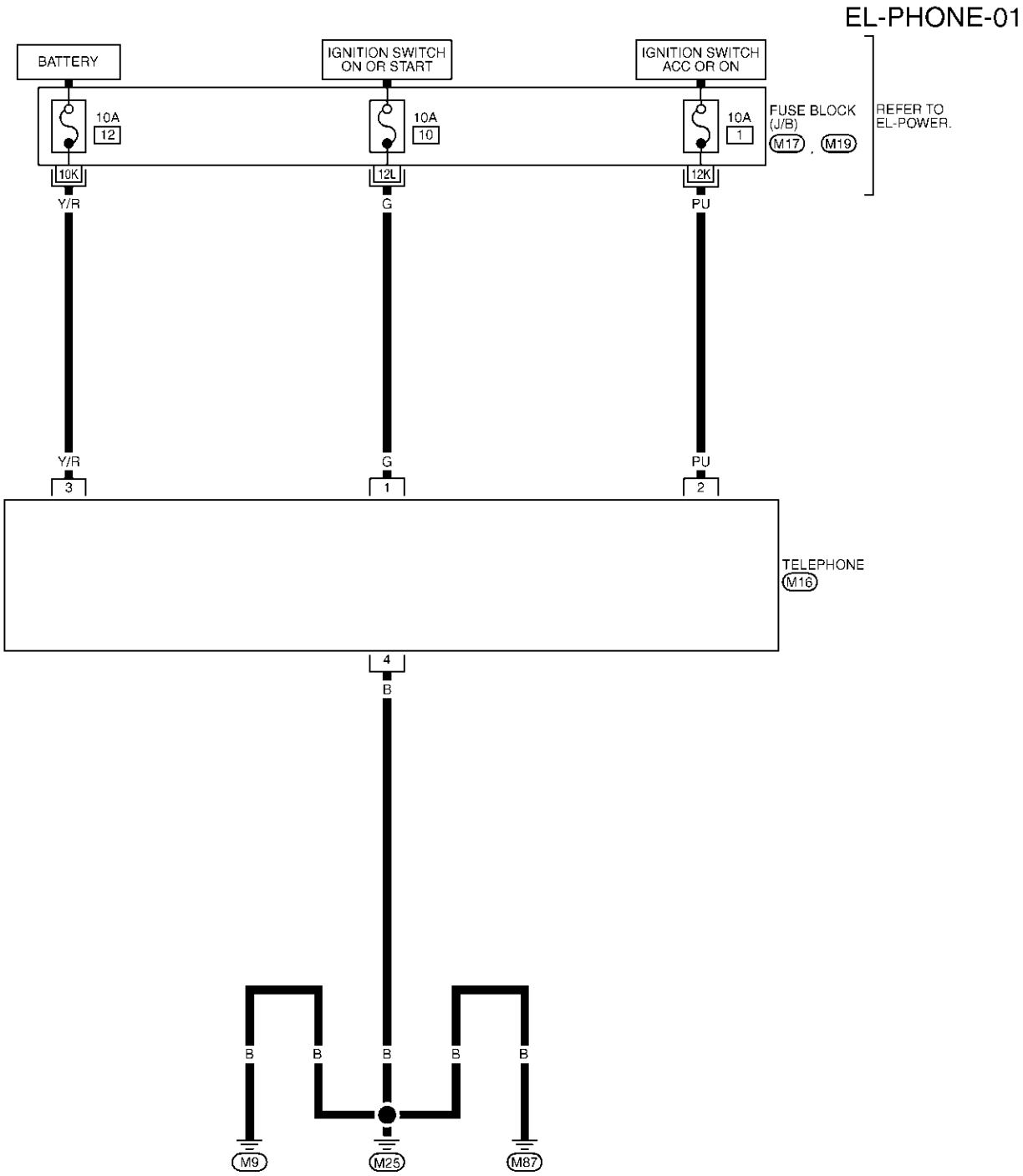

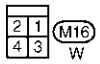

REFER TO THE FOLLOWING.
M17 -FUSE BLOCK-JUNCTION BOX (J/B)
M19 -FUSE BLOCK-JUNCTION BOX (J/B)

MEL295K

Component Parts and Harness Connector Location

NHEL0272

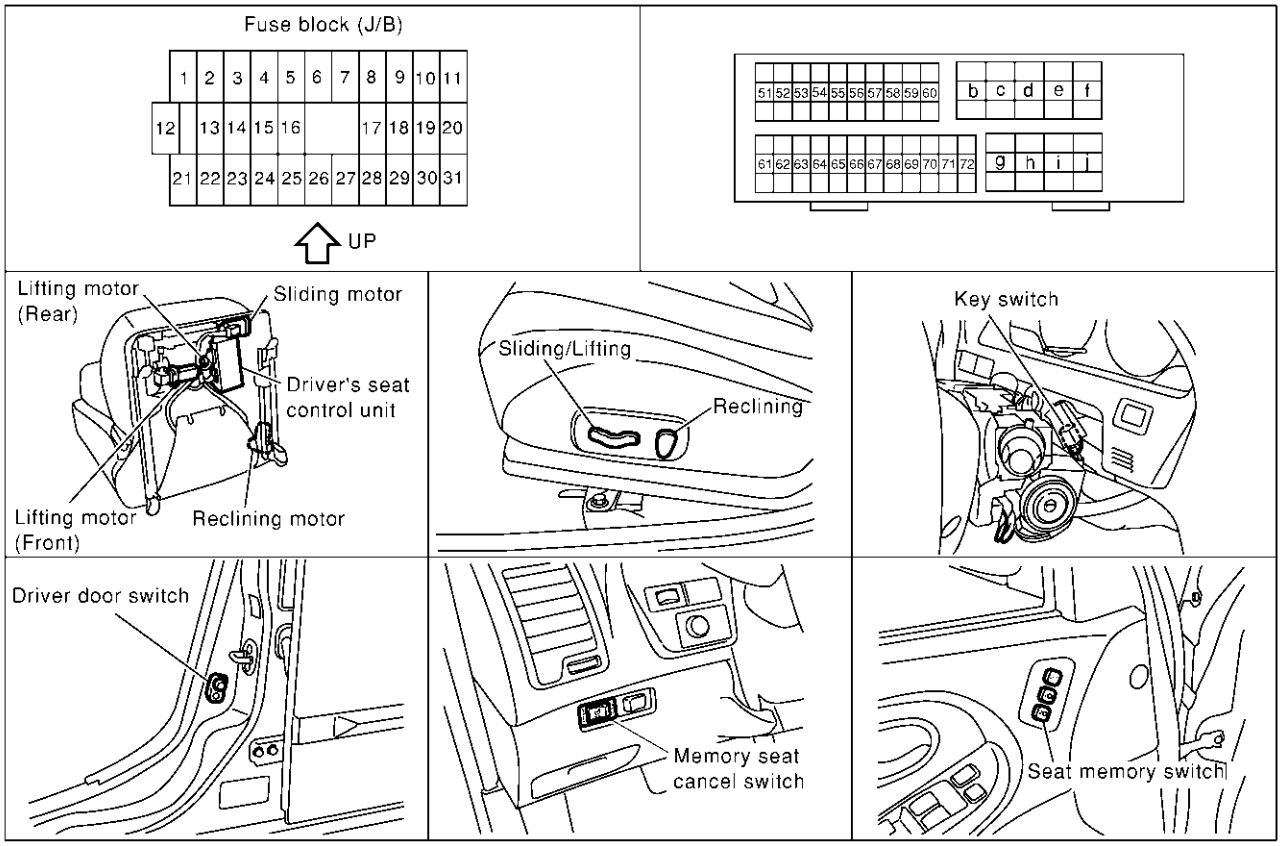

SEL383YA

System Description

=NHEL0273

OPERATIVE CONDITION

NHEL0273S01

The drive position can be set in 2 ways, manually and automatically.

Manual Operation

NHEL0273S0101

The driver's seat can be adjusted for sliding, reclining, front cushion height and rear cushion height with the LH power seat switches. The manual operation can be adjusted with the IGN key in any position.

Automatic Operation

NHEL0273S0102

The driver's seat is adjusted to the proper positions for the driver automatically, in 3 different ways: MEMORY AUTOMATIC SET, AUTOMATIC EXITING SETTING and AUTOMATIC SET RETURN. (Automatic Drive Positioner = ADP)

CONDITIONS INHIBITING AUTOMATIC OPERATION

NHEL0273S02

Automatic memory setting procedures are suspended under any of the following conditions:

1) When vehicle speed is more than 7 km/h (4 MPH).
2) When driver's side power seat switch is turned on.
3) When any two of the switches (set switch and memory switches 1 and 2) are turned ON.
4) When memory seat cancel switch is turned on.
5) When selector lever is in any position other than "P".
6) When ignition switch is turned to "START" position.
   (Operation resumes when ignition switch is returned to "ON".)
7) When detention switch malfunction is detected:

- Detention switch failure is sensed when detention switch remains off for at least 2 seconds at a vehicle speed of greater than 7 km/h (4 MPH).

FAIL-SAFE SYSTEM

NHEL0273S03

Output Failure

NHEL0273S0301

When the ignition switch is in the ON position, if any of the parts (indicated in the following chart) move more than the specified amount within a period "T2" when no "ON" input is sent from any of the switches (indicated in the following chart), or an output from the automatic drive positioner is not produced, an output failure is sensed. Motor operation will be suspended automatically, and all automatic operations will be ineffective. (In this case, the motor will not operate manually.)

OPERATED PORTION	T2	Allowable measurement
Seat sliding	Approx. 2.5 sec.	Within 6 mm (0.24 in)
Seat reclining	Same as above	Change angle within 1°

Absolving

NHEL0273S0302

When moving selector lever back to "P" position after having moved it to any position except "P", fail-safe operation will be canceled.

INITIALIZATION

NHEL0273S04

After reconnecting battery cable, perform initialization procedure A or B. If initialization has not been performed, automatic drive positioner will not operate.

PROCEDURE A

1) Insert key in the ignition key cylinder. (Ignition switch is in "OFF" position.)
2) Open → close → open driver side door. (Do not perform with the door switch operation.)
3) End

PROCEDURE B

1) Drive the vehicle at more than 25 km/h (16 MPH).
2) End

MEMORY AUTOMATIC SET

=NHEL0273S05

Two drive positions can be retained in the memory. Press memory switch to set driver's seat to preset position.

PROCEDURE FOR STORING MEMORY

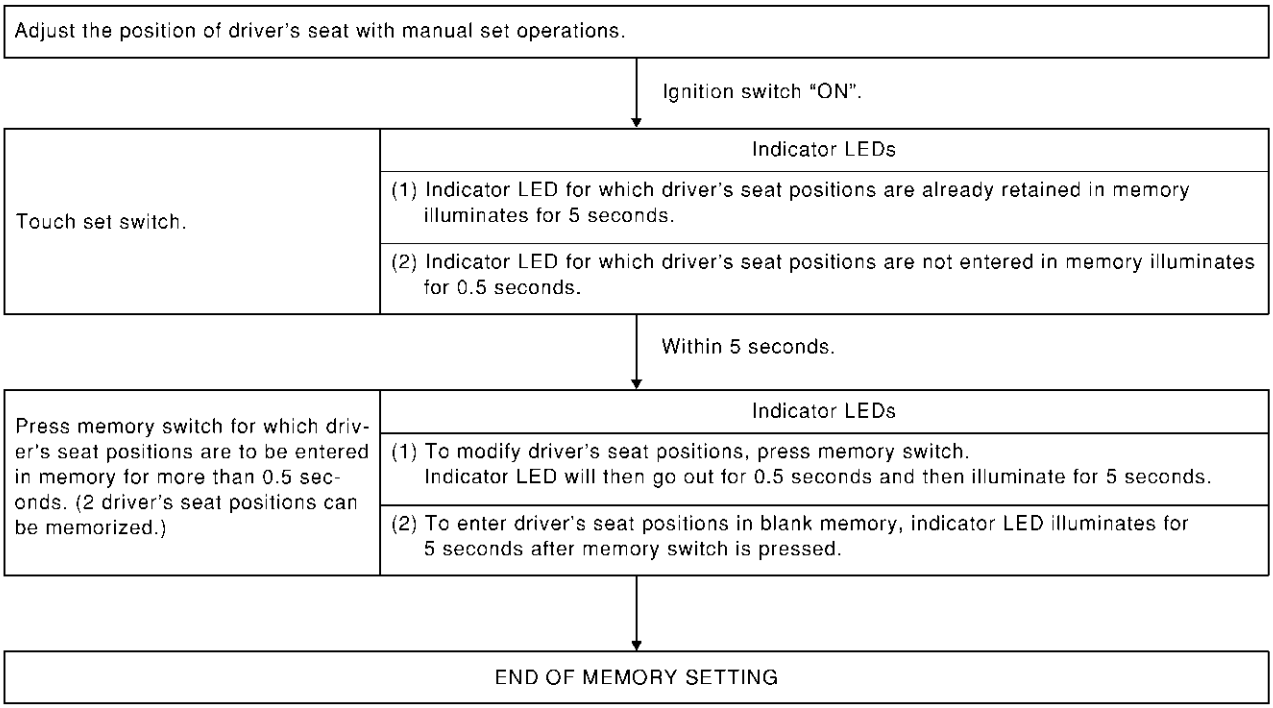

SEL592W

NOTE:

- When memory switch for which driver's seat positions are already retained in memory is pressed, new seat positions will be retained in memory in place of the previously set positions.
- Drive position is erased from the memory when battery cable is disconnected more than 30 seconds. After connecting battery cable, perform initialization procedures.

SELECTING THE MEMORIZED POSITION

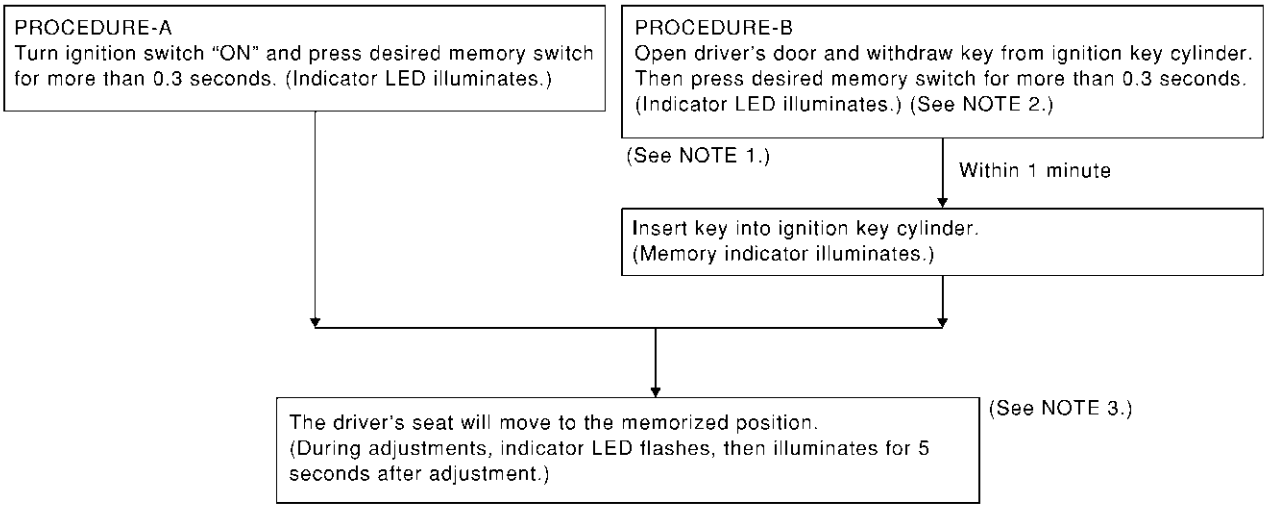

SEL593W

NOTE:
1) Do not keep memory seat cancel switch pressed as it will not operate.
2) Automatic exiting setting will be performed.
3) The driver's seat position (see the following Table) operates in the order of priority.

The order of priority	Operated portion
1	Seat sliding
2	Seat reclining
3	Seat front lifting
4	Seat rear lifting

AUTOMATIC EXITING SETTING

NHEL0273S06

"Exiting" positions:

Driver's seat ... Slides about 40 mm (1.57 in) rear from normal sitting position.

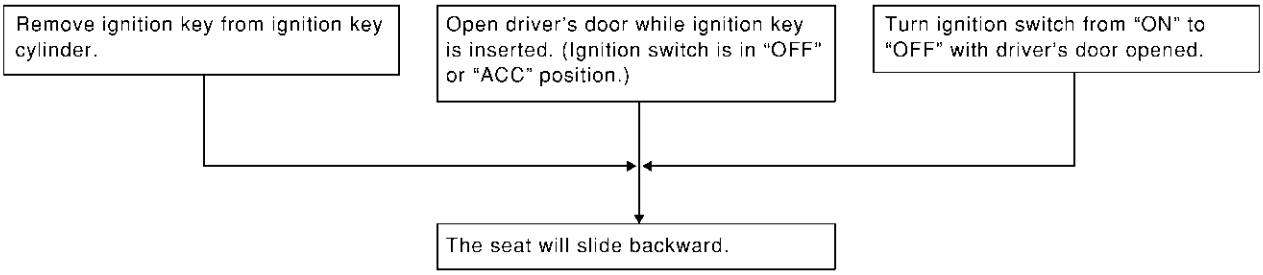

SEL594W

AUTOMATIC SET RETURN

NHEL0273S07

With driver's seat set to the "exiting" position, operating one of the following procedures moves it to the position previously retained in memory.

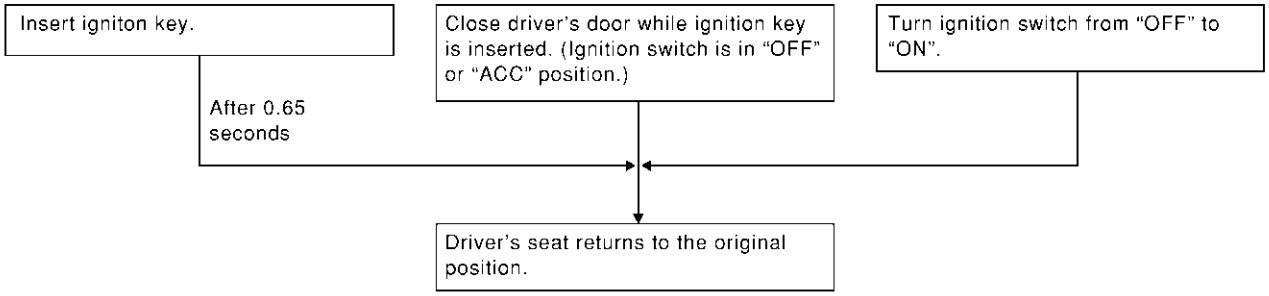

SEL595W

Schematic

NHEL0274

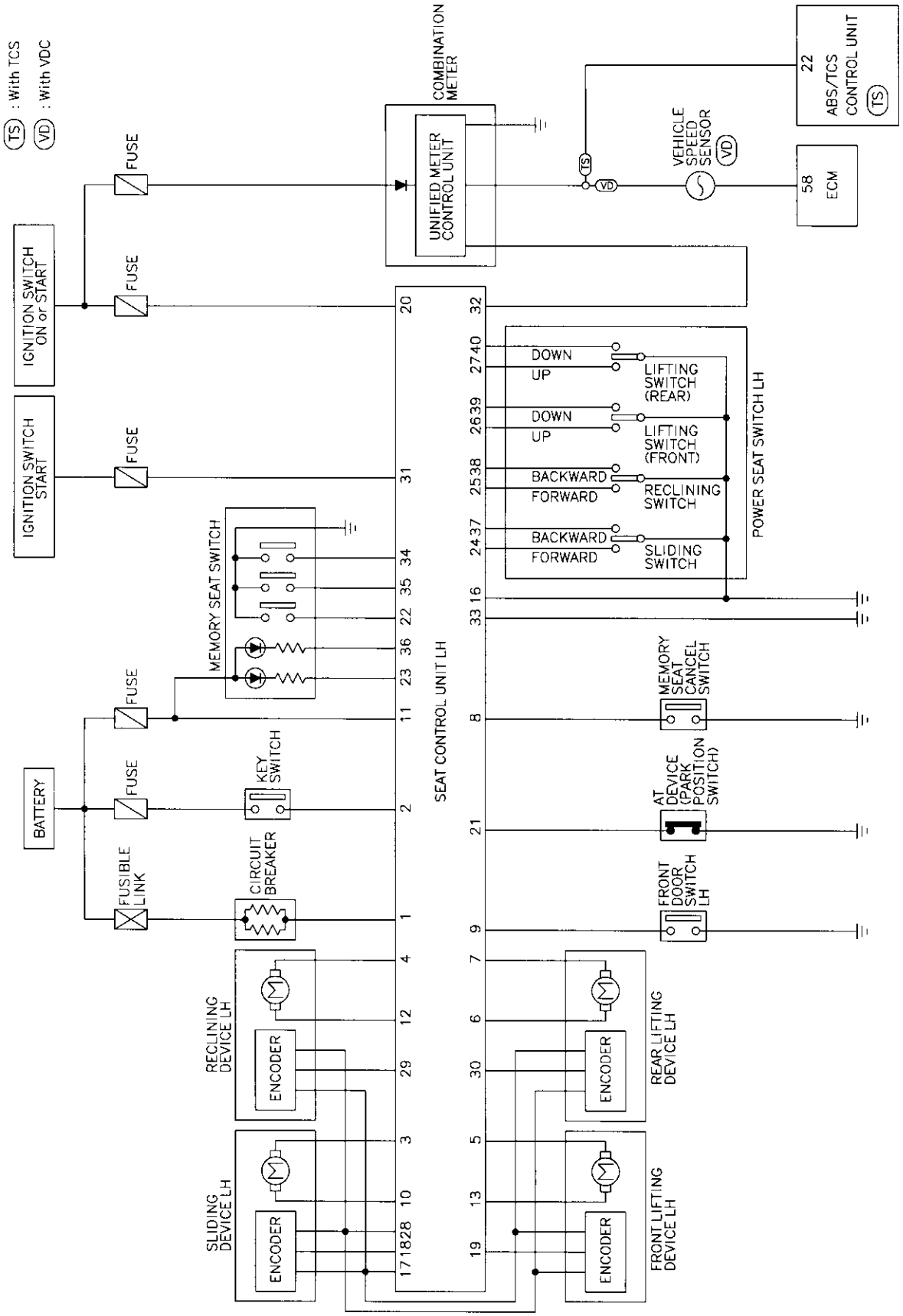

MEL626Q

Wiring Diagram — AUT/DP —

NHEL0275

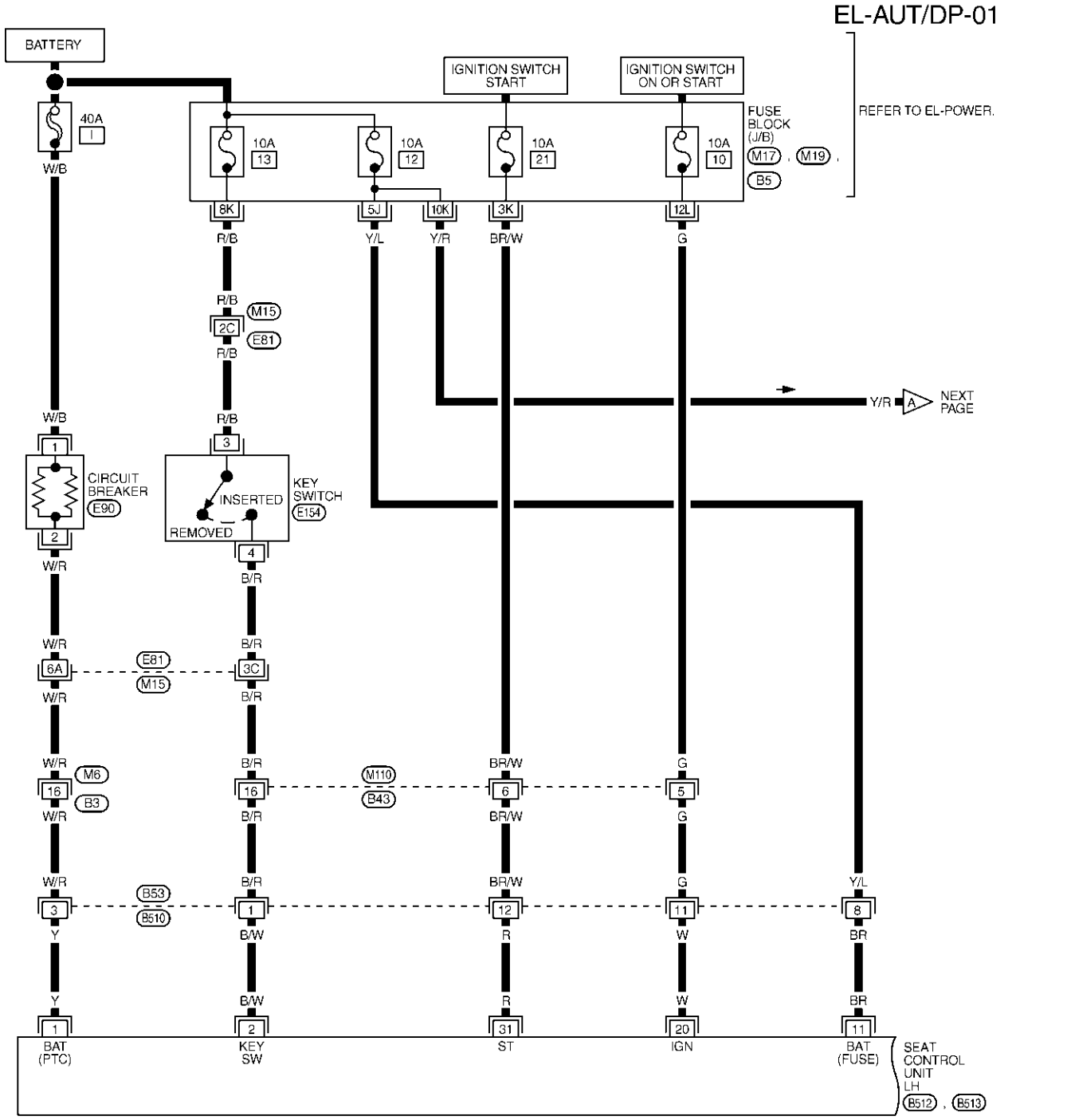

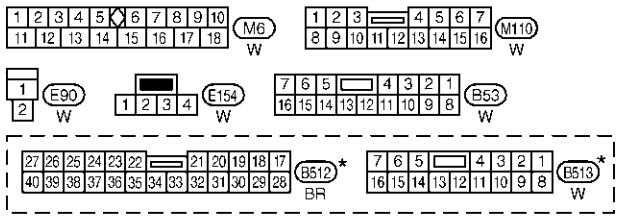

* : THIS CONNECTOR IS NOT SHOWN IN "HARNESS LAYOUT", EL SECTION.

REFER TO THE FOLLOWING.
M15 -SUPER MULTIPLE JUNCTION (SMJ)
M17 , M19 , B5
-FUSE BLOCK-JUNCTION BOX (J/B)

MEL327O

EL-AUT/DP-02

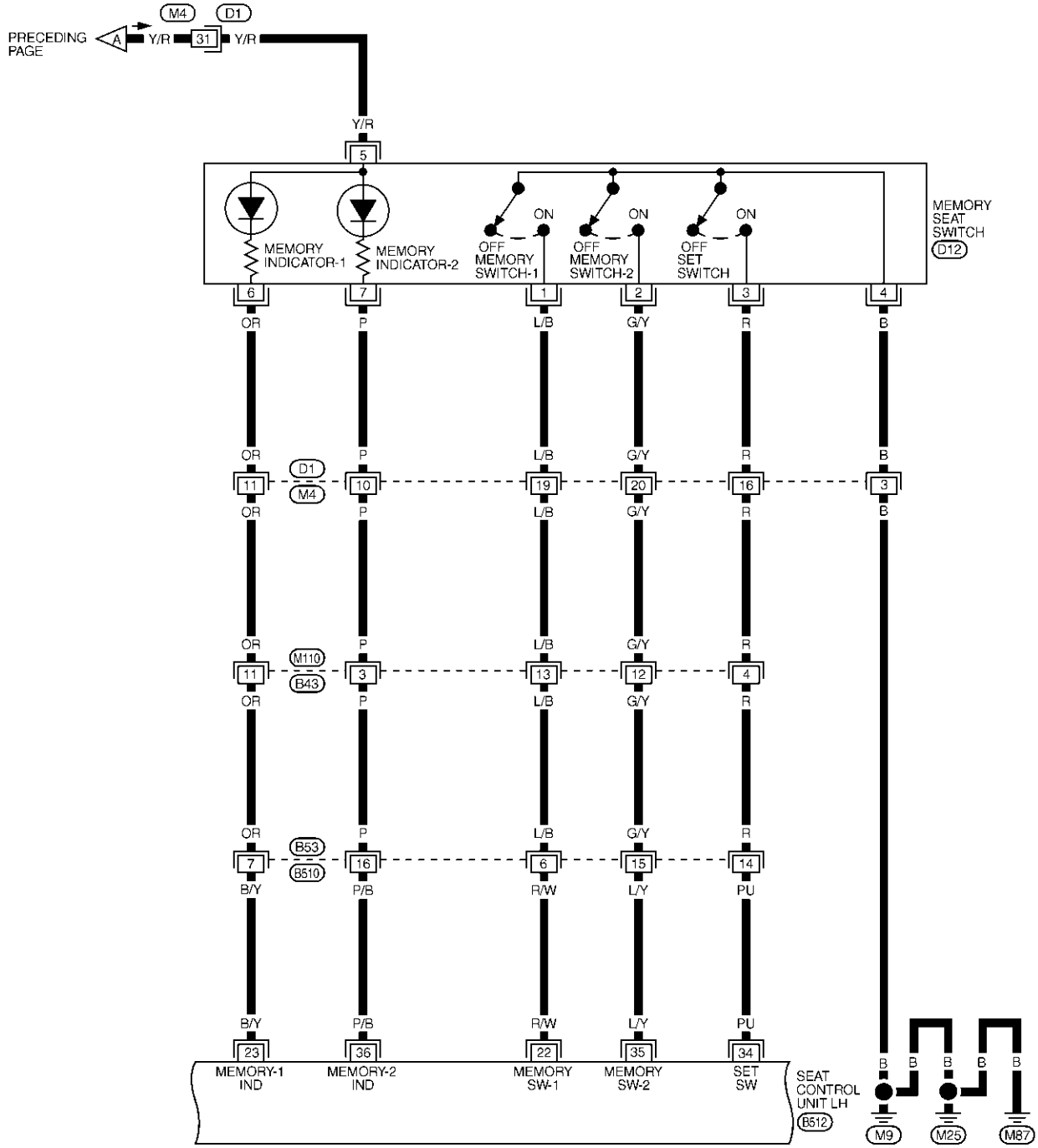

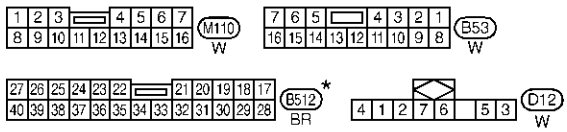

★ : THIS CONNECTOR IS NOT SHOWN IN "HARNESS LAYOUT", EL SECTION.

REFER TO THE FOLLOWING.
D1 -SUPER MULTIPLE JUNCTION (SMJ)

MEL627Q

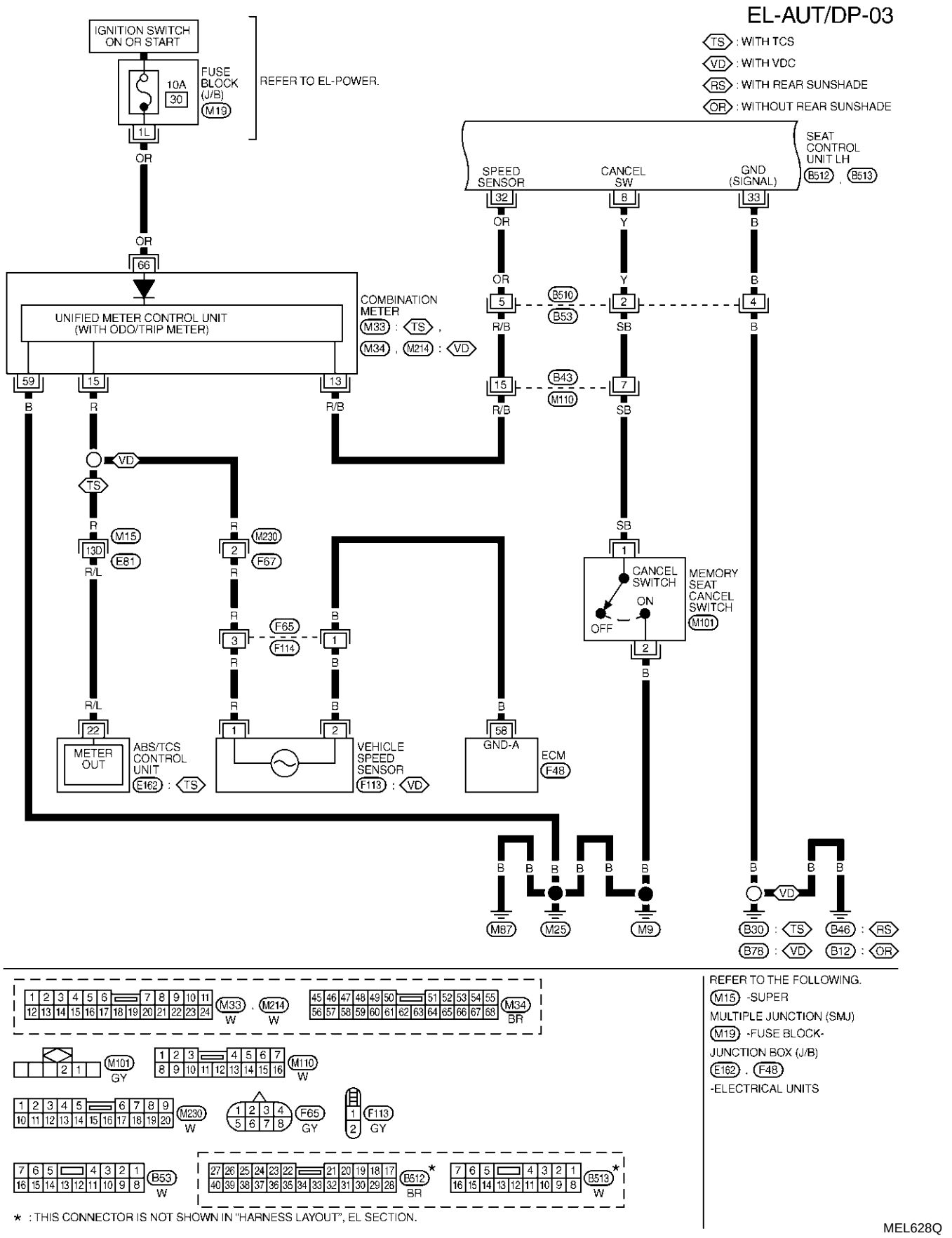
EL-AUT/DP-03
TS : WITH TCS
VD : WITH VDC
RS : WITH REAR SUNSHADE
OR : WITHOUT REAR SUNSHADE
IGNITION SWITCH ON OR START
FUSE BLOCK (J/B) M19
10A 30
REFER TO EL-POWER.
SEAT CONTROL UNIT LH B512 , B513
SPEED SENSOR
CANCEL SW
GND (SIGNAL)
COMBINATION METER
M33 : TS , M34 , M214 : VD
UNIFIED METER CONTROL UNIT (WITH ODO/TRIP METER)
CANCEL SWITCH
ON
OFF
MEMORY SEAT CANCEL SWITCH M101
METER OUT
ABS/TCS CONTROL UNIT E162 : TS
VEHICLE SPEED SENSOR F113 : VD
GND-A
ECM F48
M87
M25
M9
B30 : TS
B46 : RS
B78 : VD
B12 : OR
M33 W , M214 W
M34 BR
M101 GY
M110 W
M230 W
F65 GY
F113 GY
B53 W
B512 BR
B513 W
* : THIS CONNECTOR IS NOT SHOWN IN "HARNESS LAYOUT", EL SECTION.
REFER TO THE FOLLOWING.
M15 -SUPER MULTIPLE JUNCTION (SMJ)
M19 -FUSE BLOCK-JUNCTION BOX (J/B)
E162 , F48 -ELECTRICAL UNITS
MEL628Q

EL-AUT/DP-04

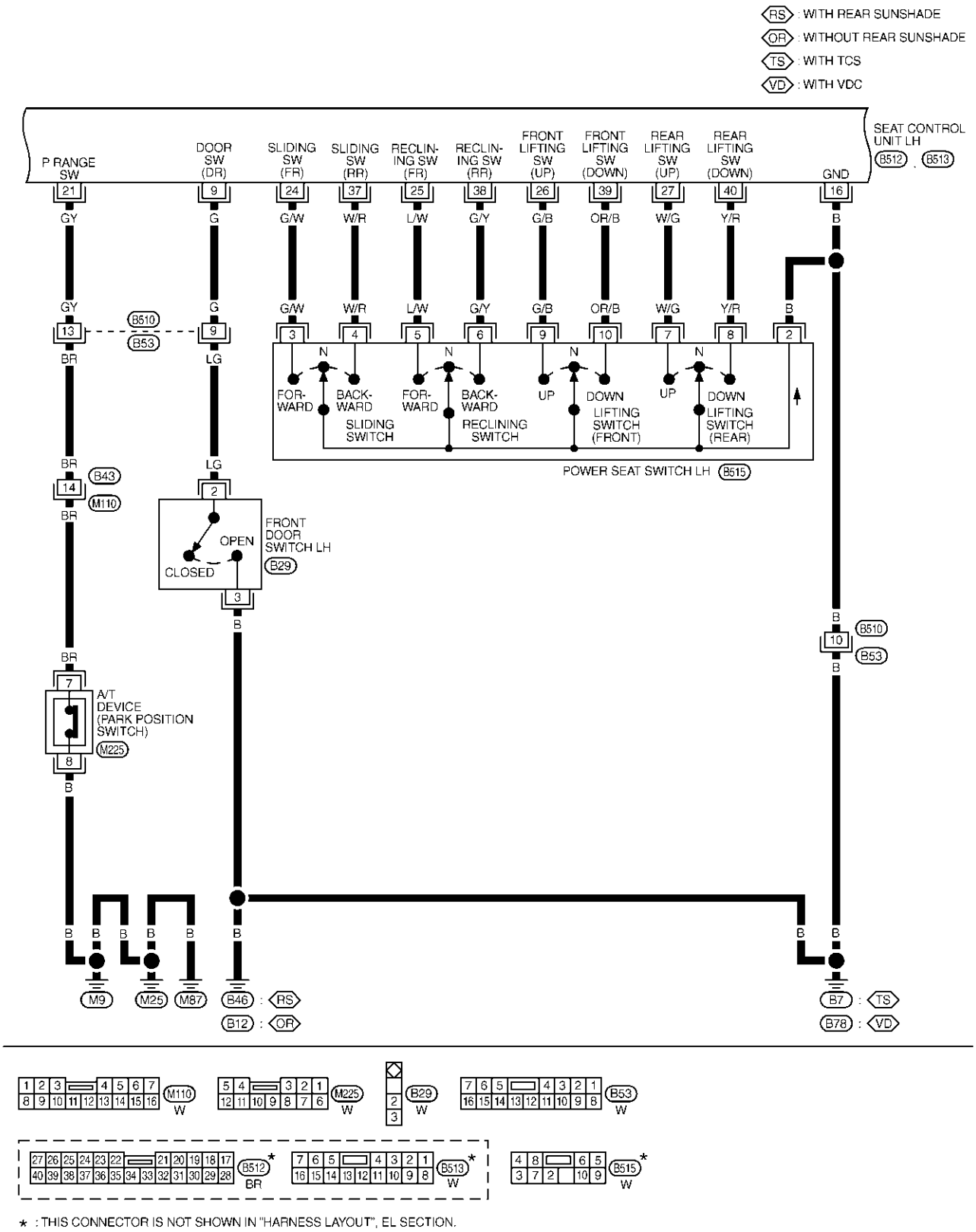

★ : THIS CONNECTOR IS NOT SHOWN IN "HARNESS LAYOUT", EL SECTION.

MEL629Q

EL-AUT/DP-05

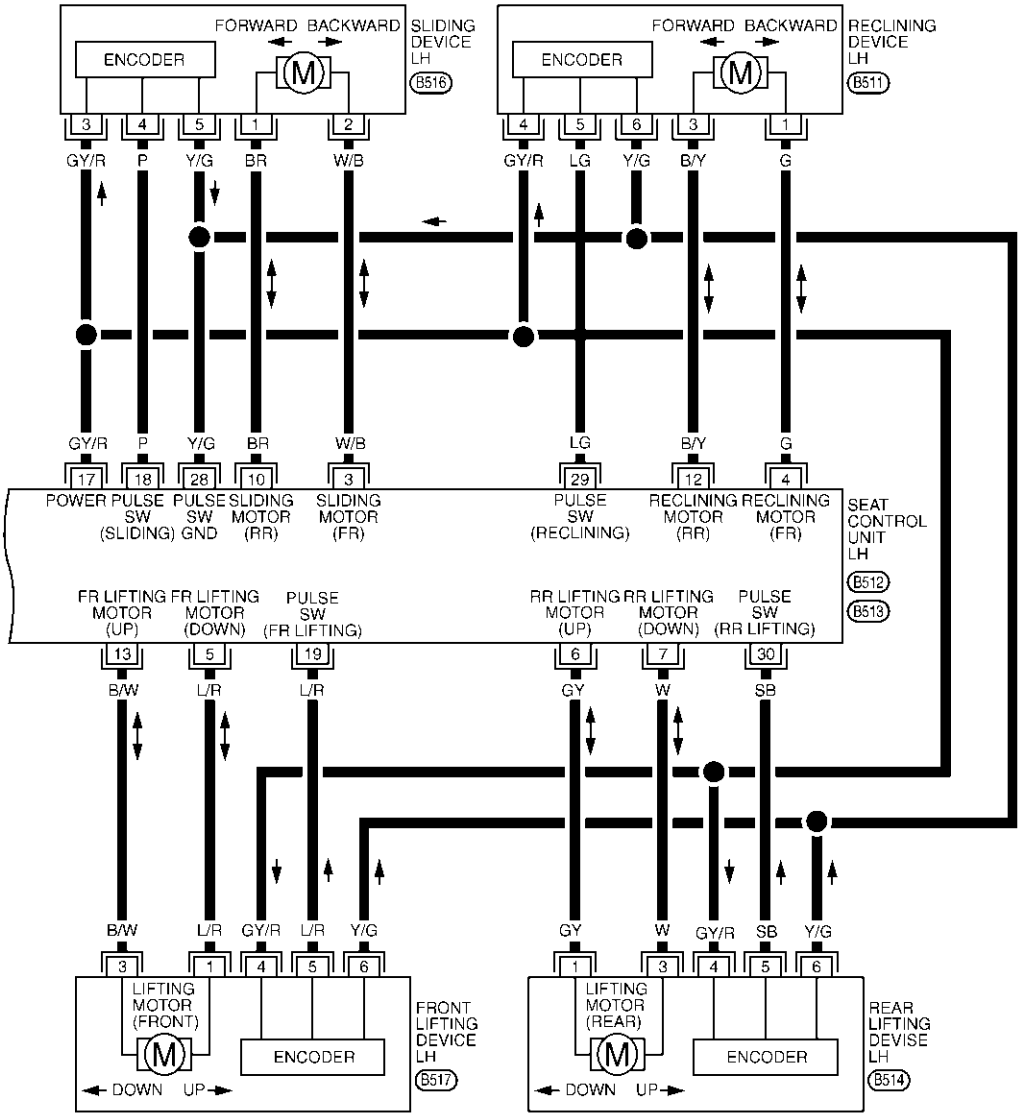

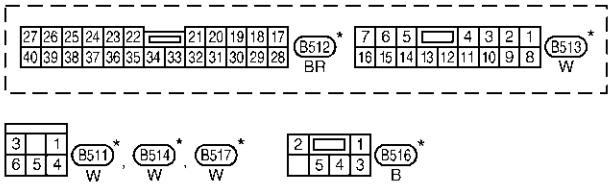

*: THIS CONNECTOR IS NOT SHOWN IN " HARNESS LAYOUT " , EL SECTION.

MEL651K

On Board Diagnosis

NHEL0276

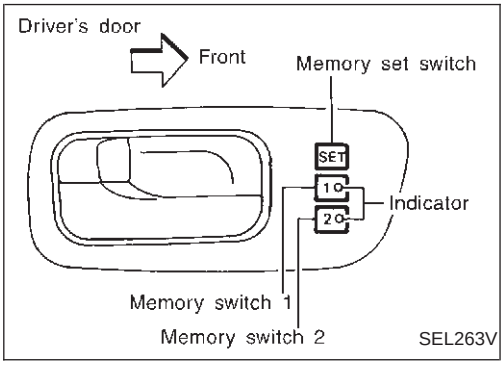

HOW TO PERFORM SELF-DIAGNOSIS

NHEL0276S01

Condition
- Ignition switch: OFF
- Selector lever: "P" range

↓

Turn ignition switch "ON".

↓ Within 5 seconds

Push memory set switch and two memory switches at the same time for more than 2 seconds.

↓

Self-diagnosis should be performed.
– Two indicator lamps should go on. (At the same time, driver's seat move automatically.)

↓

As soon as the indicator lamps go on and off by turns, start engine.

↓ Within 15 seconds

Drive the vehicle more than 7 km/h (4 MPH) and stop.
Do not stop engine.

↓

If a circuit malfunctions, a malfunction code should be indicated.*1

↓

Turn ignition switch "OFF".
or
Touch front driver's side power seat switch.

↓

DIAGNOSIS END*2

SEL596W

*1: If no malfunction is indicated, self-diagnosis will end after the vehicle speed sensor diagnosis is performed.
*2: Diagnosis ends after self-diagnostic results have been indicated for 10 minutes if left unattended.

MALFUNCTION CODE TABLE

=NHEL0276S02

In this mode, a malfunction code is indicated by the number of flashes from the automatic drive positioner indicator lamps (indicator lamp 1, indicator lamp 2) as shown below.

Code No.	Detected items	Indication of seat memory switches 1 and 2	Explanation
1	Seat sliding		While the seat motors are moving for 2.5 seconds, if the number of seat sliding/reclining/lifting encoder pulses changes 2 times or less, the seat device is determined to be malfunctioning.
2	Seat reclining	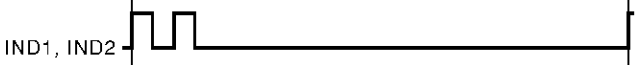	
3	Seat lifting front	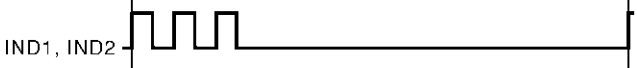	
4	Seat lifting rear	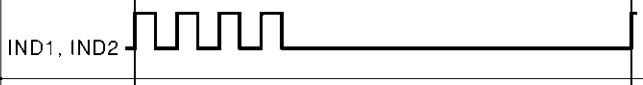	
9	Vehicle speed sensor circuit	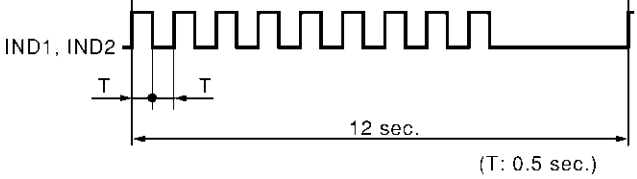	If the vehicle speed sensor output of less than 7 km/h (4 MPH) is detected, the vehicle speed sensor is determined to be malfunctioning.
–	No malfunction in the above items	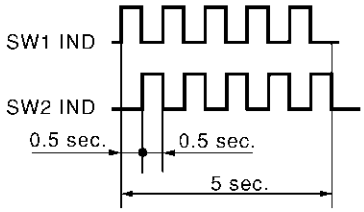	—

SEL597W

Code No.	Detected items	Diagnostic procedure	Reference page	Code No.	Detected items	Diagnostic procedure	Reference page
1	Seat sliding	PROCEDURE 2 (Sliding encoder check) PROCEDURE 6 (Sliding motor check)	EL-234 EL-242	4	Seat lifting rear	PROCEDURE 5 [Lifting encoder (rear) check] PROCEDURE 9 [Lifting motor (rear) check]	EL-240 EL-245
2	Seat reclining	PROCEDURE 3 (Reclining encoder check) PROCEDURE 7 (Reclining motor check)	EL-236 EL-243	9	Vehicle speed sensor	PROCEDURE 12 (Vehicle speed sensor check)	EL-247
3	Seat lifting front	PROCEDURE 4 [Lifting encoder (front) check] PROCEDURE 8 [Lifting motor (front) check]	EL-238 EL-244				

Trouble Diagnoses

NHEL0277

WORK FLOW

NHEL0277S01

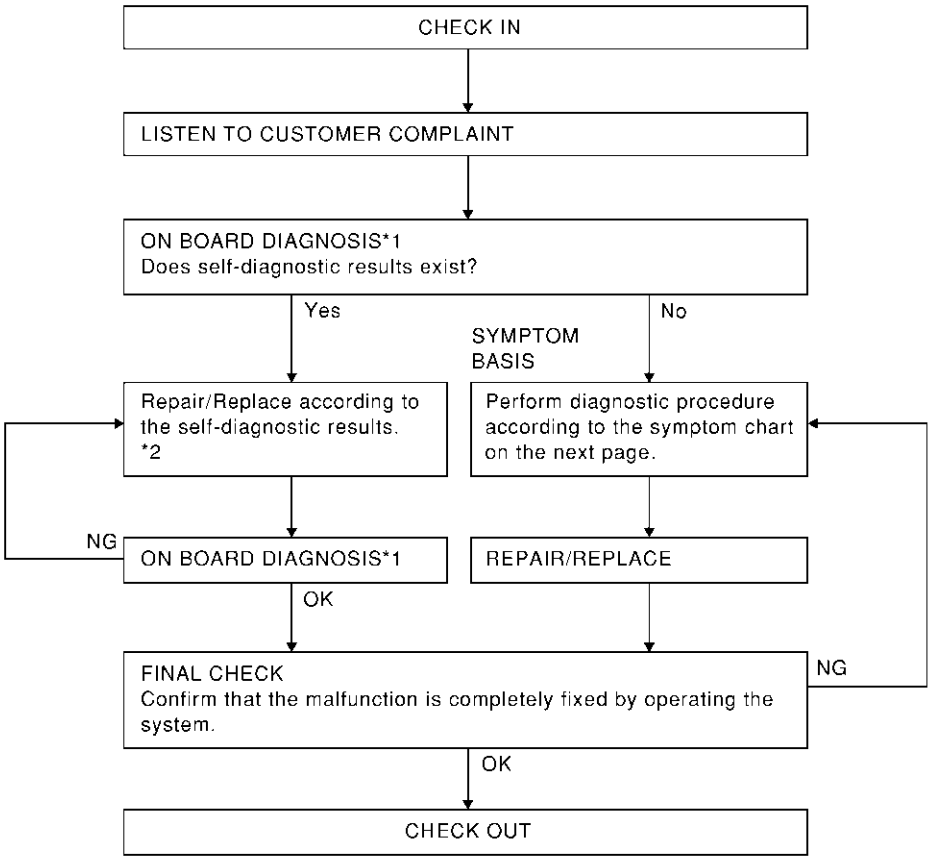

SEL599W

*1 EL-227

*2 EL-228

PRELIMINARY CHECK

NHEL0277S02

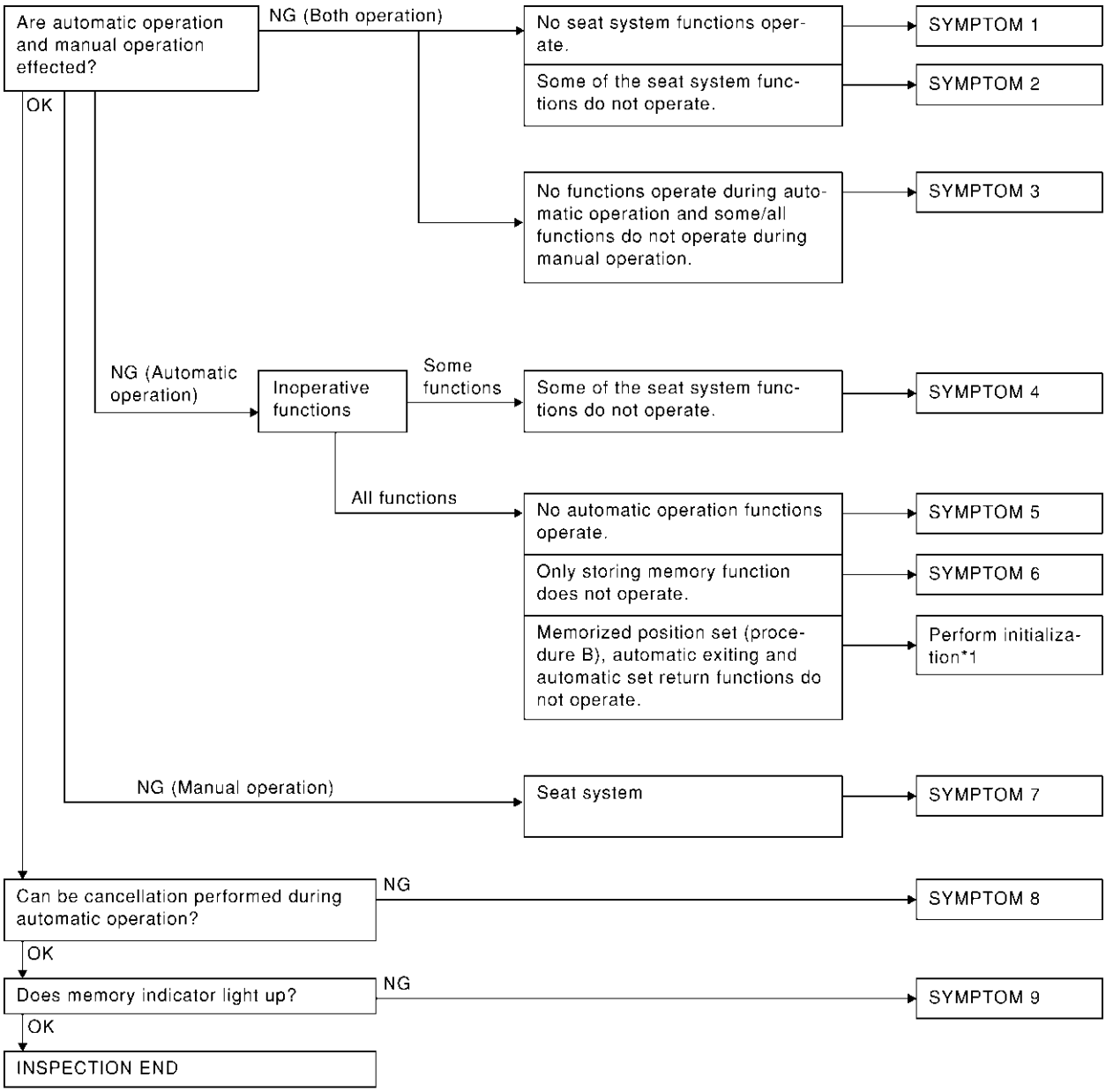

SEL600W

*1: After reconnecting battery cable, perform initialization procedure A or B.
If initialization has not been performed, automatic drive positioner will not operate.

PROCEDURE A

1) Insert key in the ignition key cylinder. (Ignition switch is in "OFF" position.)
2) Open → close → open driver side door. (Do not perform with the door switch operation.)
3) End

PROCEDURE B

1) Drive the vehicle at more than 25 km/h (16 MPH).

2) End

After performing preliminary check, go to symptom chart below.

Before starting trouble diagnoses below, perform preliminary check, EL-230. Symptom numbers in the symptom chart correspond with those of preliminary check.

SYMPTOM CHART

NHEL0277S03

PROCEDURE			Diagnostic procedure						
REFERENCE PAGE (EL-)			233	234	236	238	240	242	243
SYMPTOM			DIAGNOSTIC PROCEDURE 1 (Power supply and ground circuit for Driver's seat control unit)	DIAGNOSTIC PROCEDURE 2 (Sliding encoder check)	DIAGNOSTIC PROCEDURE 3 (Reclining encoder check)	DIAGNOSTIC PROCEDURE 4 [Lifting encoder (front) check]	DIAGNOSTIC PROCEDURE 5 [Lifting encoder (rear) check]	DIAGNOSTIC PROCEDURE 6 (Sliding motor check)	DIAGNOSTIC PROCEDURE 7 (Reclining motor check)
1	No seat system functions operate.		X						
2	Some of the seat system functions do not operate during automatic/ manual operation.	Sliding						X	
		Reclining							X
		Lifting (Front)							
		Lifting (Rear)							
3	No functions operate during automatic operation, and some/all functions do not during manual operation.								
4	Some of the seat system functions do not operate during automatic operation.	Sliding		X					
		Reclining			X				
		Lifting (Front)				X			
		Lifting (Rear)					X		
5	No automatic operation functions operate.								
6	Drive position cannot be retained in the memory.								
7	Does not operate during manual operation. (Operates during automatic operation.)	Sliding							
		Reclining							
		Lifting (Front)							
		Lifting (Rear)							
8	Automatic operation cannot be canceled.								
9	Memory indicator does not light up.								

X : Applicable

PROCEDURE			Diagnostic procedure						
REFERENCE PAGE (EL-)			244	245	246	246	247	249	250
SYMPTOM			DIAGNOSTIC PROCEDURE 8 [Lifting motor (front) check]	DIAGNOSTIC PROCEDURE 9 [Lifting motor (rear) check]	DIAGNOSTIC PROCEDURE 10 (Power seat switch check)	DIAGNOSTIC PROCEDURE 11 (Cencel switch check)	DIAGNOSTIC PROCEDURE 12 (Key, park position, door switch and vehicle speed sensor check)	DIAGNOSTIC PROCEDURE 13 (Seat memory switch check)	DIAGNOSTIC PROCEDURE 14 (Memory indicator check)
1	No seat system functions operate.								
2	Some of the seat system functions do not operate during automatic/ manual operation.	Sliding							
		Reclining							
		Lifting (Front)	X						
		Lifting (Rear)		X					
3	No functions operate during automatic operation, and some/all functions do not during manual operation.				X		X (ACC, ON START signal)		
4	Some of the seat system functions do not operate during automatic operation.	Sliding							
		Reclining							
		Lifting (Front)							
		Lifting (Rear)							
5	No automatic operation functions operate.					X	X		
6	Drive position cannot be retained in the memory.						X (IGN ON signal)	X	
7	Does not operate during manual operation. (Operates during automatic operation.)	Sliding			X				
		Reclining			X				
		Lifting (Front)			X				
		Lifting (Rear)			X				
8	Automatic operation cannot be canceled.					X			
9	Memory indicator does not light up.								X

X : Applicable

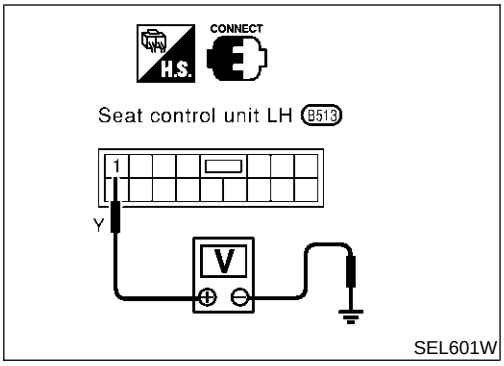

DIAGNOSTIC PROCEDURE 1

=NHEL0277S04

(Power supply and ground circuit for driver's seat control unit)

Power Supply Circuit Check

NHEL0277S0401

Check voltage between seat control unit LH terminal 1 and ground.
(Refer to wiring diagram in EL-222.)

Terminals	Ignition switch position			
	OFF	ACC	ON	START
1 - Ground	Battery voltage			

If NG, check the following.

- Circuit breaker
- Harness for open or short between circuit breaker and seat control unit LH

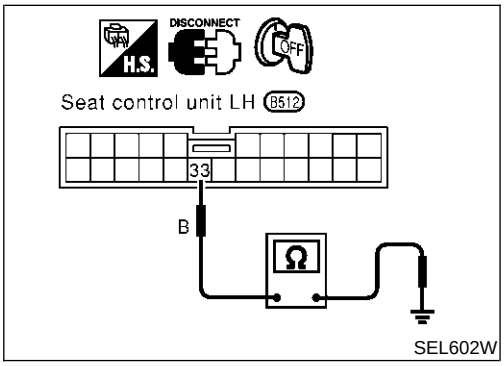

Ground Circuit Check

NHEL0277S0402

Check continuity between seat control unit LH terminal 33 and ground.
(Refer to wiring diagram in EL-222.)

Terminals	Continuity
33 - Ground	Yes

DIAGNOSTIC PROCEDURE 2
(Sliding encoder check)

=NHEL0277S05

1	CHECK SLIDING ENCODER OUTPUT SIGNAL

Measure voltage between seat control unit LH terminal 18 and ground with CONSULT-II or oscilloscope when power seat slide is operated.

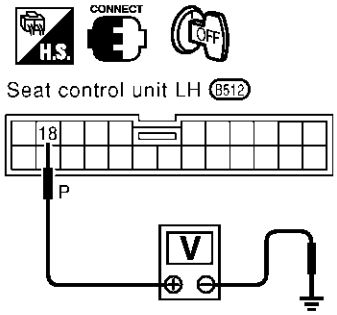

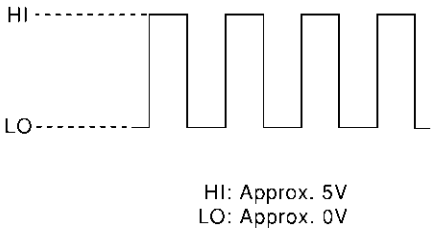

SEL603W

OK or NG

OK	▶	Sliding encoder is OK.
NG	▶	GO TO 2.

2	CHECK SLIDING ENCODER INPUT SIGNAL

Check voltage between seat control unit LH terminal 17 and ground.

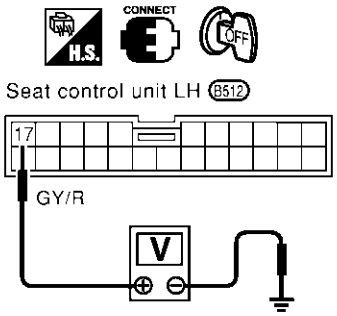

Battery voltage should exist.

SEL604W

OK or NG

OK	▶	GO TO 3.
NG	▶	Replace seat control unit LH.

3	CHECK SLIDING ENCODER OPEN CIRCUIT

1. Disconnect seat control unit LH connector and sliding device LH connector.
2. Check harness continuity between seat control unit LH connector and sliding device LH connector.

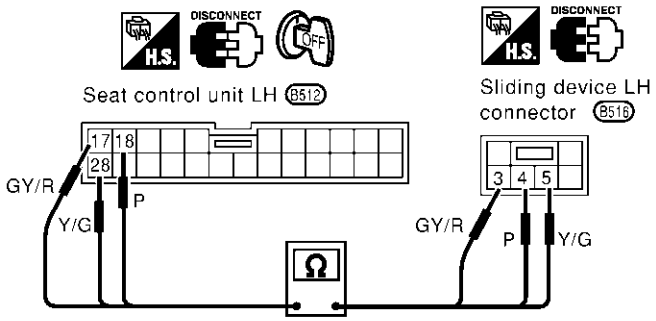

Terminals		Continuity
Seat control unit LH	Sliding device LH (Sliding encoder)	
17	3	Yes
18	4	
28	5	

SEL605W

OK or NG

OK	▶	GO TO 4.
NG	▶	Repair harness.

4	CHECK SLIDING ENCODER SHORT CIRCUIT

Check harness continuity between seat control unit LH connector and ground.

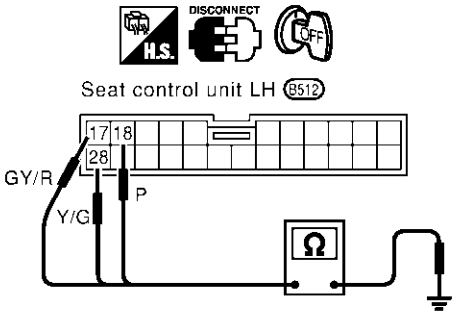

Terminals	Continuity
17 - Ground	No
18 - Ground	
28 - Ground	

SEL606W

OK or NG

OK	▶	Replace sliding encoder.
NG	▶	Repair harness.

DIAGNOSTIC PROCEDURE 3
(Reclining encoder check)

=NHEL0277S06

1	CHECK RECLINING ENCODER OUTPUT SIGNAL

Measure voltage between seat control unit LH terminal 29 and ground with CONSULT-II or oscilloscope when power seat reclining is operated.

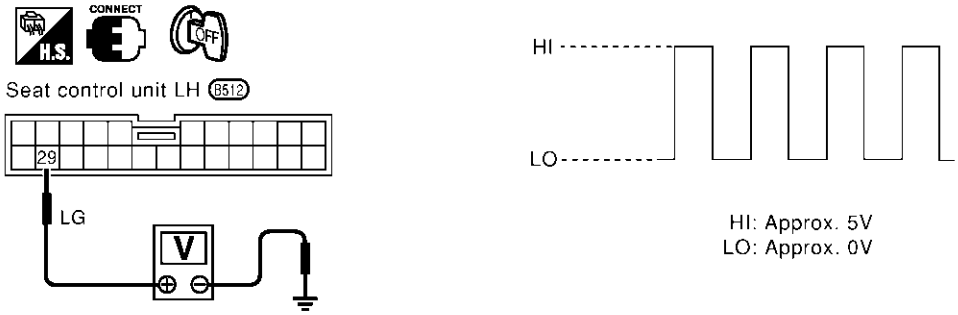

SEL607W

OK or NG

OK	▶	Reclining encoder is OK.
NG	▶	GO TO 2.

2	CHECK RECLINING ENCODER INPUT SIGNAL

Check voltage between seat control unit LH terminal 17 and ground.

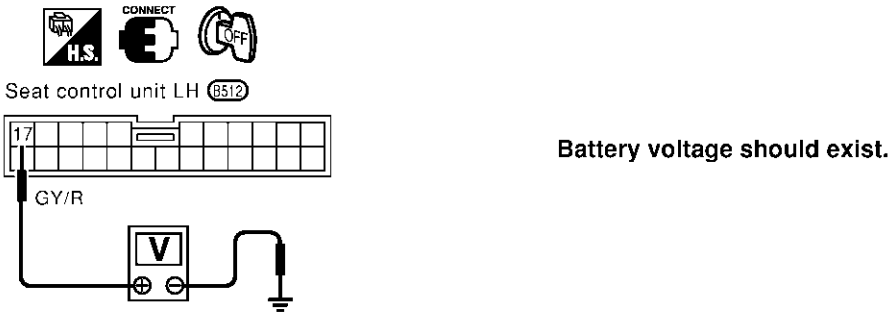

SEL608W

OK or NG

OK	▶	GO TO 3.
NG	▶	Replace seat control unit LH.

3	CHECK RECLINING ENCODER OPEN CIRCUIT

1. Disconnect seat control unit LH connector and reclining device LH connector.
2. Check harness continuity between seat control unit LH connector and reclining LH connector.

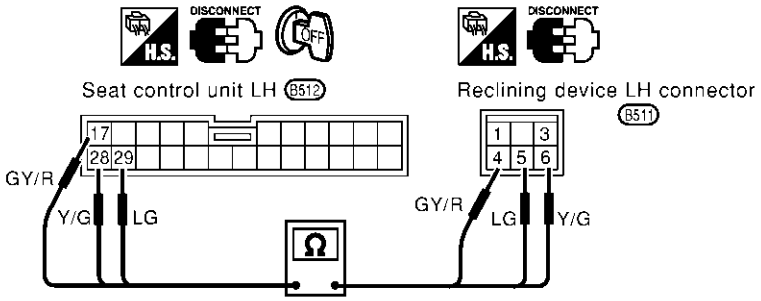

Terminals		Continuity
Seat control unit LH	Reclining device LH (Reclining encoder)	
17	4	Yes
28	6	
29	5	

SEL609W

OK or NG

OK	▶	GO TO 4.
NG	▶	Repair harness.

4	CHECK RECLINING ENCODER SHORT CIRCUIT

Check harness continuity between seat control unit LH connector and ground.

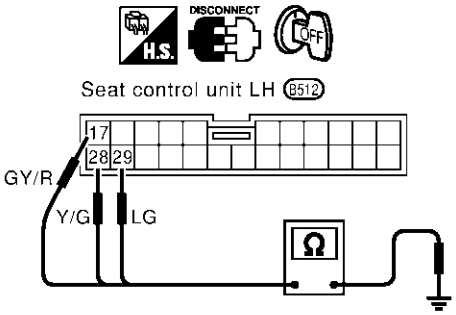

Terminals	Continuity
17 - Ground	No
28 - Ground	
29 - Ground	

SEL610W

OK or NG

OK	▶	Replace reclining encoder.
NG	▶	Repair harness.

DIAGNOSTIC PROCEDURE 4
[Lifting encoder (front) check]

=NHEL0277S07

1	CHECK LIFTING ENCODER (FRONT) OUTPUT SIGNAL

Measure voltage between seat control unit LH terminal 19 and ground with CONSULT-II or oscilloscope when power seat lifting (front) is operated.

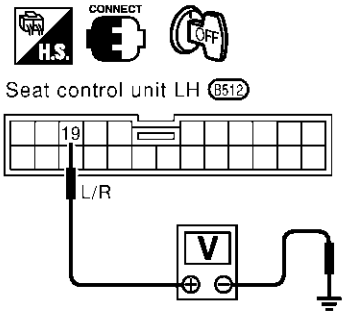

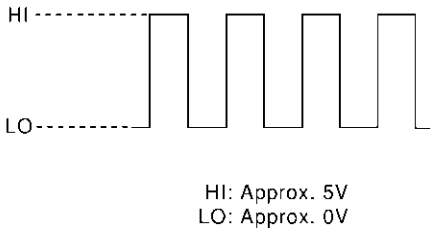

SEL611W

OK or NG

OK	▶	Lifting encoder (front) is OK.
NG	▶	GO TO 2.

2	CHECK LIFTING ENCODER (FRONT) INPUT SIGNAL

Check voltage between seat control unit LH terminal 17 and ground.

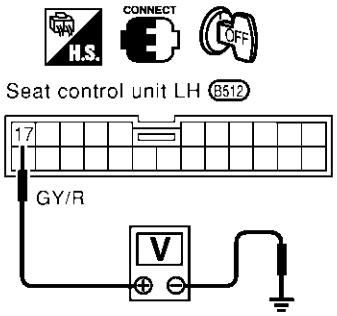

Battery voltage should exist.

SEL612W

OK or NG

OK	▶	GO TO 3.
NG	▶	Replace seat control unit LH.

3	CHECK LIFTING ENCODER (FRONT) OPEN CIRCUIT

1. Disconnect seat control unit LH connector and front lifting device LH connector.
2. Check harness continuity between seat control unit LH connector and front lifting device LH connector.

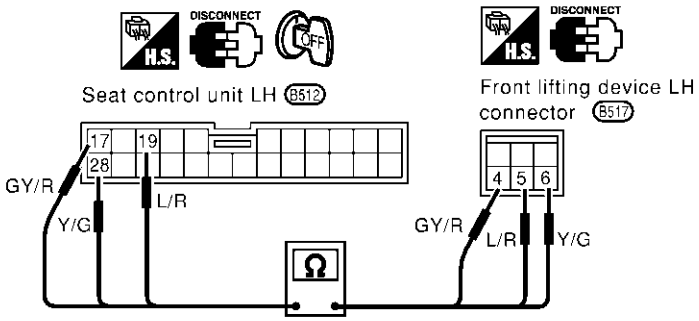

Terminals		Continuity
Seat control unit LH	Front lifting device LH Lifing encoder (front)	
17	4	Yes
19	5	
28	6	

SEL613W

OK or NG

OK	▶	GO TO 4.
NG	▶	Repair harness.

4	CHECK LIFTING ENCODER (FRONT) SHORT CIRCUIT

Check harness continuity between seat control unit LH connector and ground.

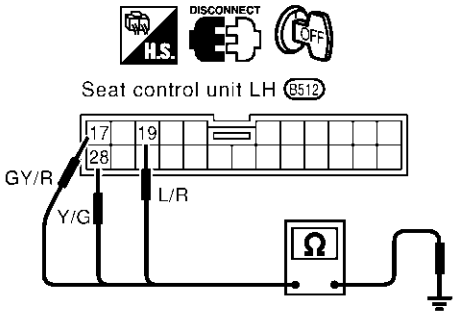

Terminals	Continuity
17 - Ground	No
19 - Ground	
28 - Ground	

SEL614W

OK or NG

OK	▶	Replace lifting encoder (front).
NG	▶	Repair harness.

DIAGNOSTIC PROCEDURE 5
[Lifting encoder (rear) check]

=NHEL0277S08

1	CHECK LIFTING ENCODER (REAR) OUTPUT SIGNAL

Measure voltage between seat control unit LH terminal 30 and ground with CONSULT-II or oscilloscope when power seat lifting (rear) is operated.

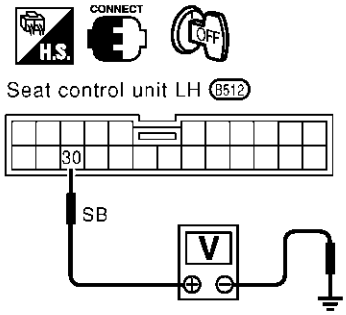

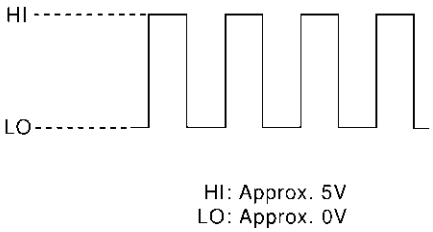

SEL615W

OK or NG

OK	▶	Lifting encoder (rear) is OK.
NG	▶	GO TO 2.

2	CHECK LIFTING ENCODER (REAR) INPUT SIGNAL

Check voltage between seat control unit LH terminal 17 and ground.

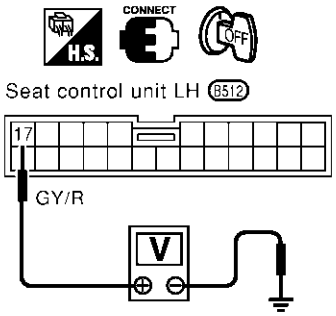

Battery voltage should exist.

SEL616W

OK or NG

OK	▶	GO TO 3.
NG	▶	Replace seat control unit LH.

3	CHECK LIFTING ENCODER (REAR) OPEN CIRCUIT

1. Disconnect seat control unit LH connector and rear lifting device LH connector.
2. Check harness continuity between seat control unit LH connector and rear lifting device LH connector.

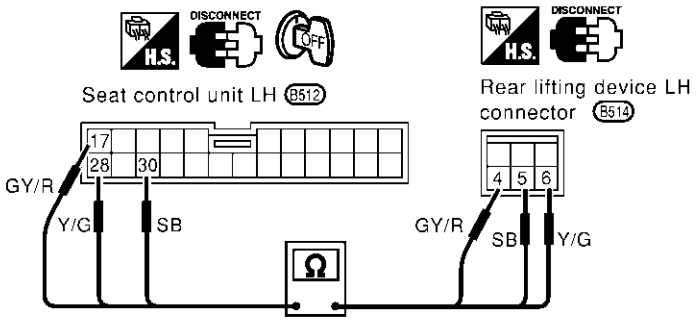

Terminals		Continuity
Seat control unit LH	Rear lifting device LH Lifing encoder (rear)	
17	4	Yes
28	6	
30	5	

SEL617W

OK or NG

OK	▶	GO TO 4.
NG	▶	Repair harness.

4	CHECK LIFTING ENCODER (REAR) SHORT CIRCUIT

Check harness continuity between seat control unit LH connector and ground.

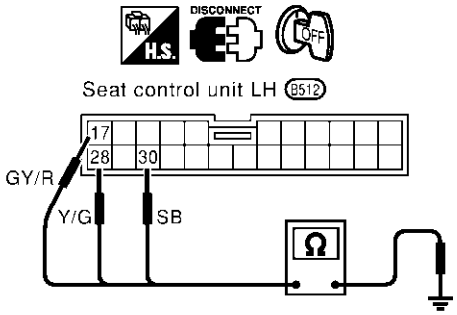

Terminals	Continuity
17 - Ground	No
28 - Ground	
30 - Ground	

SEL618W

OK or NG

OK	▶	Replace lifting encoder (rear).
NG	▶	Repair harness.

DIAGNOSTIC PROCEDURE 6
(Sliding motor check)

=NHEL0277S09

1	CHECK OUTPUT SIGNAL TO SLIDING MOTOR

Check voltage between seat control unit LH terminals 3 or 10 and ground.

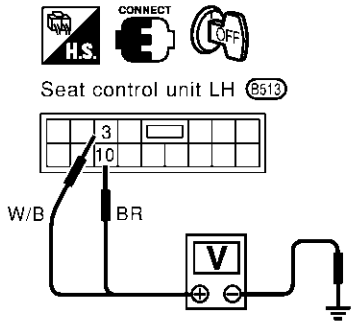

Condition of sliding switch	Terminals		Voltage [V]
	+	–	
Forward	3	Ground	Approx. 12
Backward	10	Ground	Approx. 12

SEL619W

OK or NG

OK	▶	GO TO 2.
NG	▶	Replace seat control unit LH.

2	CHECK SLIDING MOTOR

1. Disconnect sliding device LH connector.
2. Apply 12V DC direct current to motor and check operation.

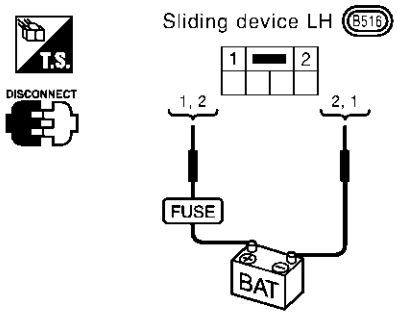

Terminals		Operation
+	–	
2	1	Forward
1	2	Backward

SEL620W

OK or NG

OK	▶	Check harness for operation between seat control unit LH and sliding motor.
NG	▶	Replace sliding motor.

DIAGNOSTIC PROCEDURE 7
(Reclining motor check)

=NHEL0277S10

1 CHECK OUTPUT SIGNAL TO RECLINING MOTOR

Check voltage between seat control unit LH terminals 4 or 12 and ground.

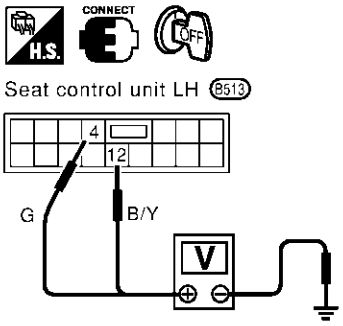

Condition of reclining switch	Terminals +	Terminals −	Voltage [V]
Forward	4	Ground	Approx. 12
Backward	12	Ground	Approx. 12

SEL621W

OK or NG

OK	▶	GO TO 2.
NG	▶	Replace seat control unit LH.

2 CHECK RECLINING MOTOR

1. Disconnect reclining device LH connector.
2. Apply 12V DC direct current to motor and check operation.

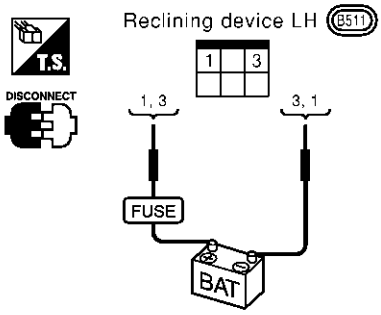

Terminals +	Terminals −	Operation
1	3	Forward
3	1	Backward

SEL622W

OK or NG

OK	▶	Check harness for operation between seat control unit LH and reclining motor.
NG	▶	Replace reclining motor.

DIAGNOSTIC PROCEDURE 8
[Lifting motor (front) check]

=NHEL0277S11

1 CHECK OUTPUT SIGNAL TO LIFTING MOTOR (FRONT)

Check voltage between seat control unit LH terminals 5 or 13 and ground.

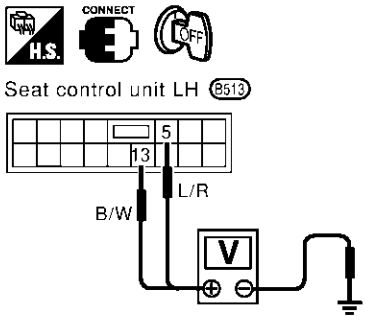

Condition of lifting switch (front)	Terminals +	Terminals −	Voltage [V]
Up	13	Ground	Approx. 12
Down	5	Ground	Approx. 12

SEL623W

OK or NG

OK	▶	GO TO 2.
NG	▶	Replace seat control unit LH.

2 CHECK LIFTING MOTOR (FRONT)

1. Disconnect front lifting device LH connector.
2. Apply 12V DC direct current to motor and check operation.

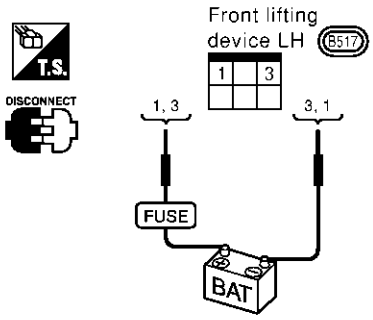

Terminals +	Terminals −	Operation
3	1	Up
1	3	Down

SEL624W

OK or NG

OK	▶	Check harness for operation between seat control unit LH and lifting motor (front).
NG	▶	Replace lifting motor (front).

DIAGNOSTIC PROCEDURE 9

[Lifting motor (rear) check]

=NHEL0277S12

1	CHECK OUTPUT SIGNAL TO LIFTING MOTOR (REAR)

Check voltage between seat control unit LH terminals 6 or 7 and ground.

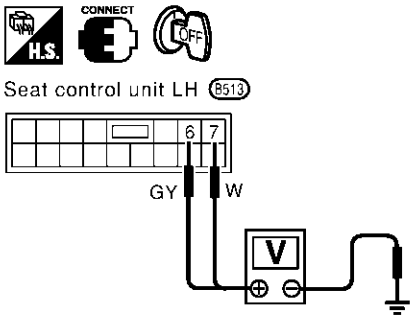

Condition of lifting switch (rear)	Terminals		Voltage [V]
	+	−	
Up	6	Ground	Approx. 12
Down	7	Ground	Approx. 12

SEL625W

OK or NG

OK	▶	GO TO 2.
NG	▶	Replace seat control unit LH.

2	CHECK LIFTING MOTOR (REAR)

1. Disconnect rear lifting device LH connector.
2. Apply 12V DC direct current to motor and check operation.

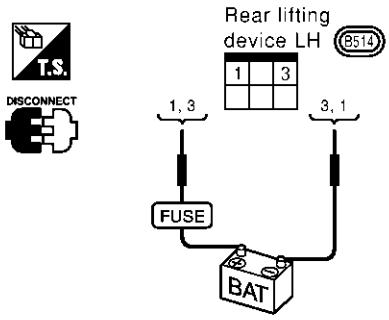

Terminals		Operation
+	−	
1	3	Up
3	1	Down

SEL626W

OK or NG

OK	▶	Check harness for operation between seat control unit LH and lifting motor (rear).
NG	▶	Replace lifting motor (rear).

DIAGNOSTIC PROCEDURE 10
(Power seat switch check)

=NHEL0277S13

1 CHECK POWER SEAT SWITCH

1. Disconnect power seat switch LH connector.
2. Check continuity between power seat switch terminals (B515).

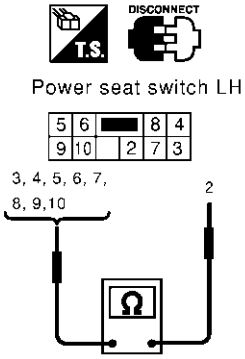

Switch	Condition	Terminals 2	3	4	5	6	7	8	9	10
Sliding	Forward	○	○							
	Backward	○		○						
Reclining	Forward	○			○					
	Backward	○				○				
Lifting (Front)	Up	○							○	
	Down	○								○
Lifting (Rear)	Up	○					○			
	Down	○						○		

SEL016Y

OK or NG

OK	▶	**Check the following.** ● Ground circuit for power seat switch ● Harness for open or short between seat control unit LH and power seat switch
NG	▶	Replace power seat switch.

DIAGNOSTIC PROCEDURE 11
(Cancel switch check)

NHEL0277S14

1 CHECK CANCEL SWITCH

1. Disconnect memory seat cancel switch connector.
2. Check continuity between memory seat cancel switch terminals.

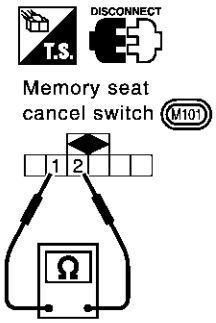

Terminals	Cancel switch condition	Continuity
1-2	ON	Yes
	OFF	No

SEL628WD

OK or NG

OK	▶	**Check the following.** ● Ground circuit for cancel switch ● Harness for open or short between seat control unit LH and memory seat cancel switch
NG	▶	Replace memory seat cancel switch.

DIAGNOSTIC PROCEDURE 12

=NHEL0277S15

(Key, detention, door switch and vehicle speed sensor check)

1	CHECK KEY SWITCH INPUT SIGNAL

Check voltage between seat control unit LH terminal 2 and ground.

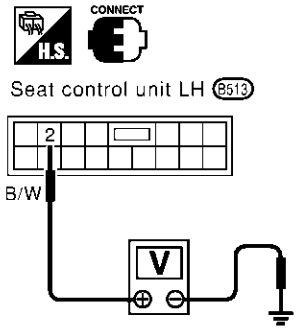

Condition	Voltage [V]
Key is inserted	Approx. 12
Key is removed	0

SEL629W

OK or NG

OK	▶	GO TO 2.
NG	▶	**Check the following.** ● 10A fuse [No. 13, located in fuse block (J/B)] ● Key switch ● Harness for open or short between key switch and fuse ● Harness for open or short between seat control unit LH and key switch

2	CHECK IGNITION SWITCH INPUT SIGNAL (ON AND START)

Check voltage between seat control unit LH terminals and ground.

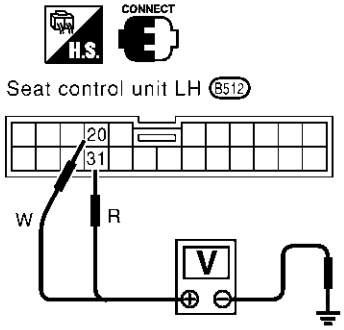

Terminals		Ignition switch position		
+	–	OFF	ON	START
20	Ground	Approx. 0V	Battery voltage	
31	Ground	Approx. 0V		Battrery voltage

SEL630W

OK or NG

OK	▶	GO TO 3.
NG	▶	**Check the following.** ● 10A fuse [No. 10, located in fuse block (J/B)] ● 10A fuse [No. 21, located in fuse block (J/B)] ● Harness for open or short between seat control unit LH and fuse

3	CHECK PARK POSITION SWITCH INPUT SIGNAL

Check voltage between seat control unit LH terminal 21 and ground.

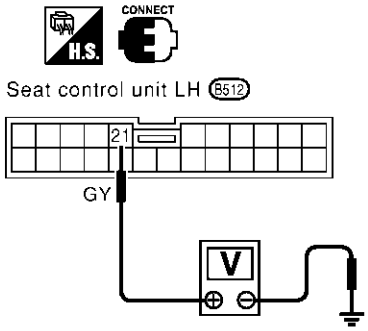

Condition	Voltage [V]
Selector lever is in "P" position	0
Except above	Approx. 12

SEL631W

OK or NG

OK	▶	GO TO 4.
NG	▶	**Check the following.** ● Park position switch ● Park position switch ground circuit ● Harness for open or short between seat control unit LH and park position switch

4	CHECK DRIVER DOOR SWITCH INPUT SIGNAL

Check voltage between seat control unit LH terminal 9 and ground.

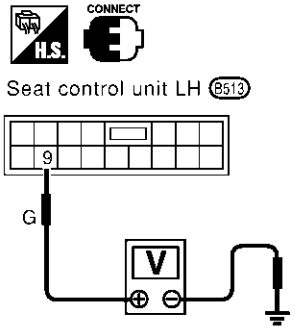

Condition	Voltage [V]
Driver's door is open	0
Driver's door is closed	Approx. 12

SEL632W

OK or NG

OK	▶	GO TO 5.
NG	▶	**Check the following.** ● Driver door switch ● Driver door switch ground circuit ● Harness for open or short between seat control unit LH and driver door switch

5	CHECK VEHICLE SPEED SENSOR

Does speedometer operate normally?

OK or NG

OK	▶	GO TO 6.
NG	▶	Check speedometer and vehicle speed sensor circuit. Refer to EL-134.

6	CHECK VEHICLE SPEED SENSOR PULL UP VOLTAGE

1. Turn ignition switch "ON".
2. Check voltage between seat control unit LH terminal 32 and ground.

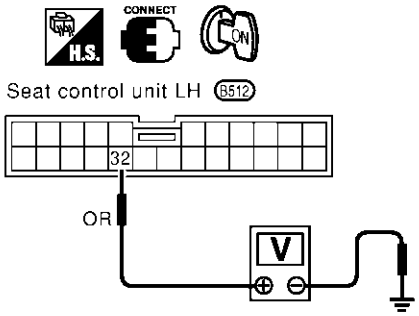

Approx. 5V should exist.

SEL633W

OK or NG

OK	▶	Harness for open or short between seat control unit LH and combination meter.
NG	▶	Repair harness.

DIAGNOSTIC PROCEDURE 13
(Memory seat switch check)

NHEL0277S16

1	CHECK MEMORY SEAT SWITCH

1. Disconnect memory seat switch connector.
2. Check continuity between memory seat switch terminals.

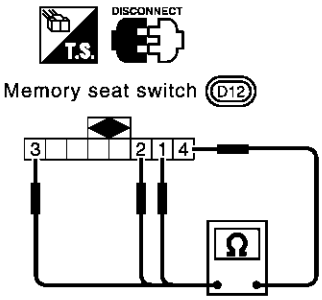

Switch	Condition	Terminals			
		1	2	3	4
Memory-1	ON	○			○
Memory-2	ON		○		○
Set	ON			○	○

SEL634WD

OK or NG

OK	▶	**Check the following.** ● Ground circuit for memory seat switch ● Harness for open or short between seat control unit LH and memory seat switch
NG	▶	Replace memory seat switch.

DIAGNOSTIC PROCEDURE 14
(Memory indicator check)

=NHEL0277S17

1	CHECK INDICATOR LAMP	
Check indicator lamp illumination.		
OK or NG		
OK	▶	GO TO 2.
NG	▶	Replace memory seat switch (indicator lamp).

2	CHECK POWER SUPPLY CIRCUIT FOR INDICATOR LAMP	
1. Disconnect memory seat switch connector. 2. Check voltage between memory seat switch terminal 5 and ground.		
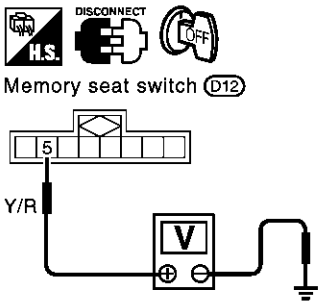	**Battery voltage should exist.**	
SEL635WD		
OK or NG		
OK	▶	Check harness for open or short between seat control unit LH and memory seat switch
NG	▶	**Check the following.** ● 10A fuse [No. 12 located in the fuse block (J/B)] ● Harness for open or short between fuse and indicator lamp

Wiring Diagram — SEAT —

NHEL0092

EL-SEAT-01

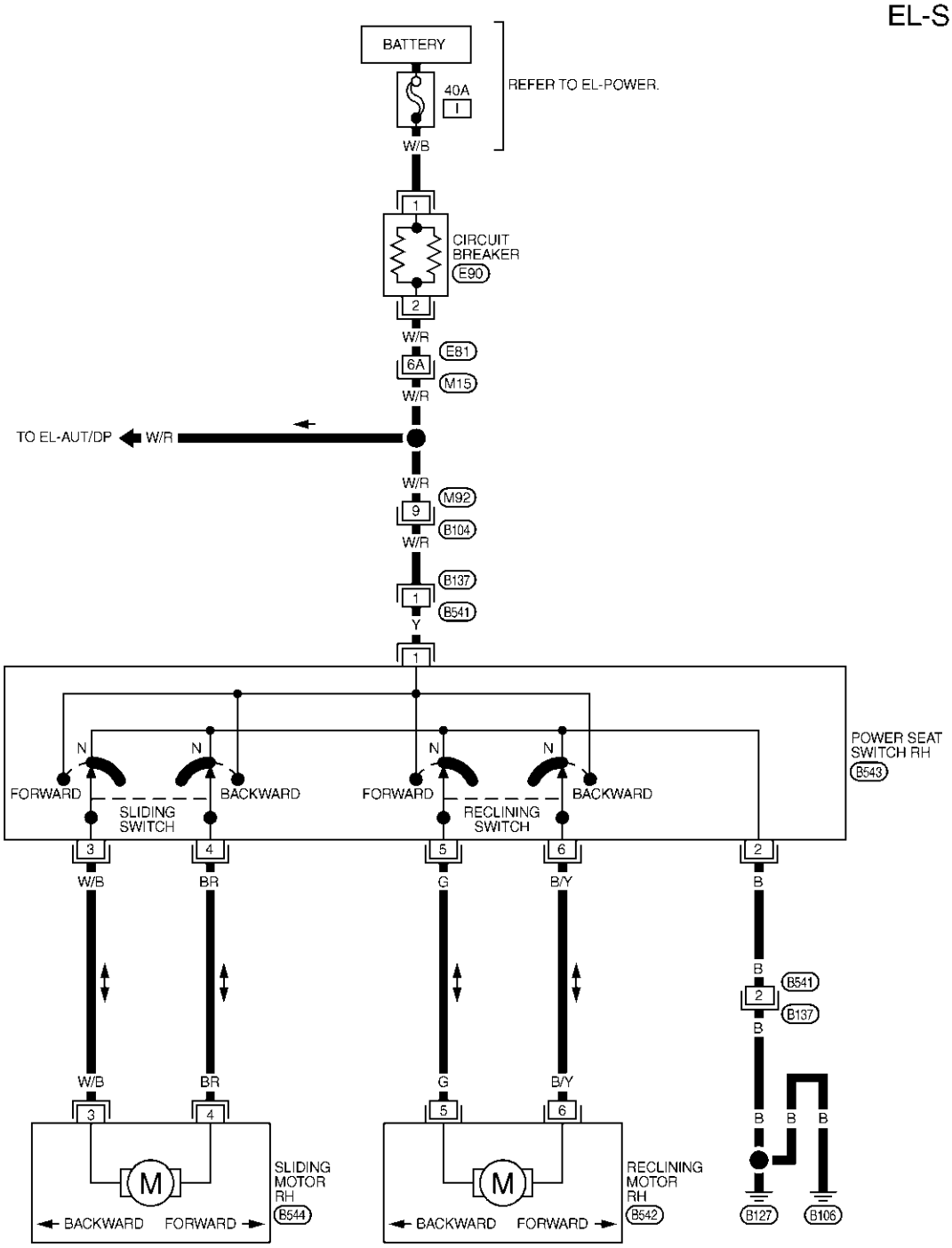

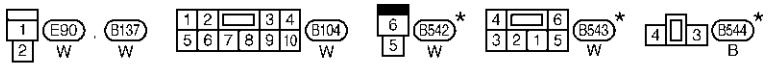

REFER TO THE FOLLOWING.
M15 -SUPER MULTIPLE JUNCTION (SMJ)

* : THIS CONNECTOR IS NOT SHOWN IN "HARNESS LAYOUT", EL SECTION.

MEL330O

Wiring Diagram — HSEAT —

NHEL0093

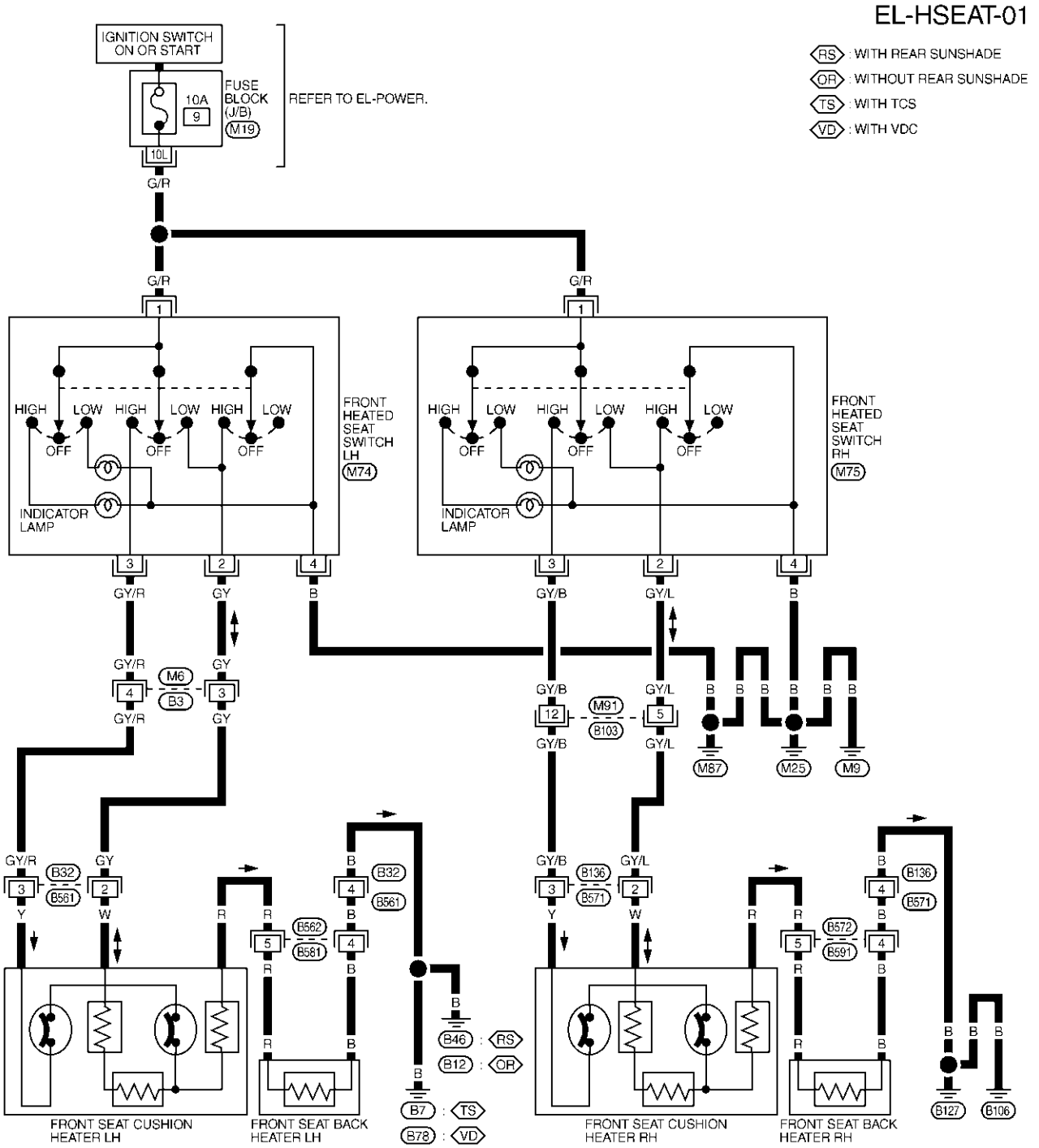

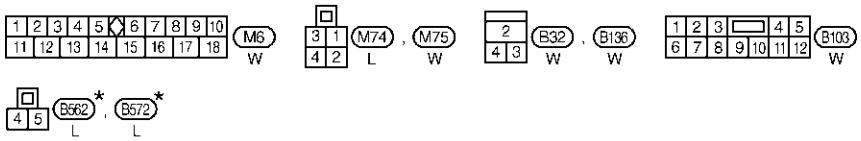

★ : THIS CONNECTOR IS NOT SHOWN IN "HARNESS LAYOUT", EL SECTION.

REFER TO THE FOLLOWING.
M19 -FUSE BLOCK-JUNCTION BOX (J/B)

MEL630Q

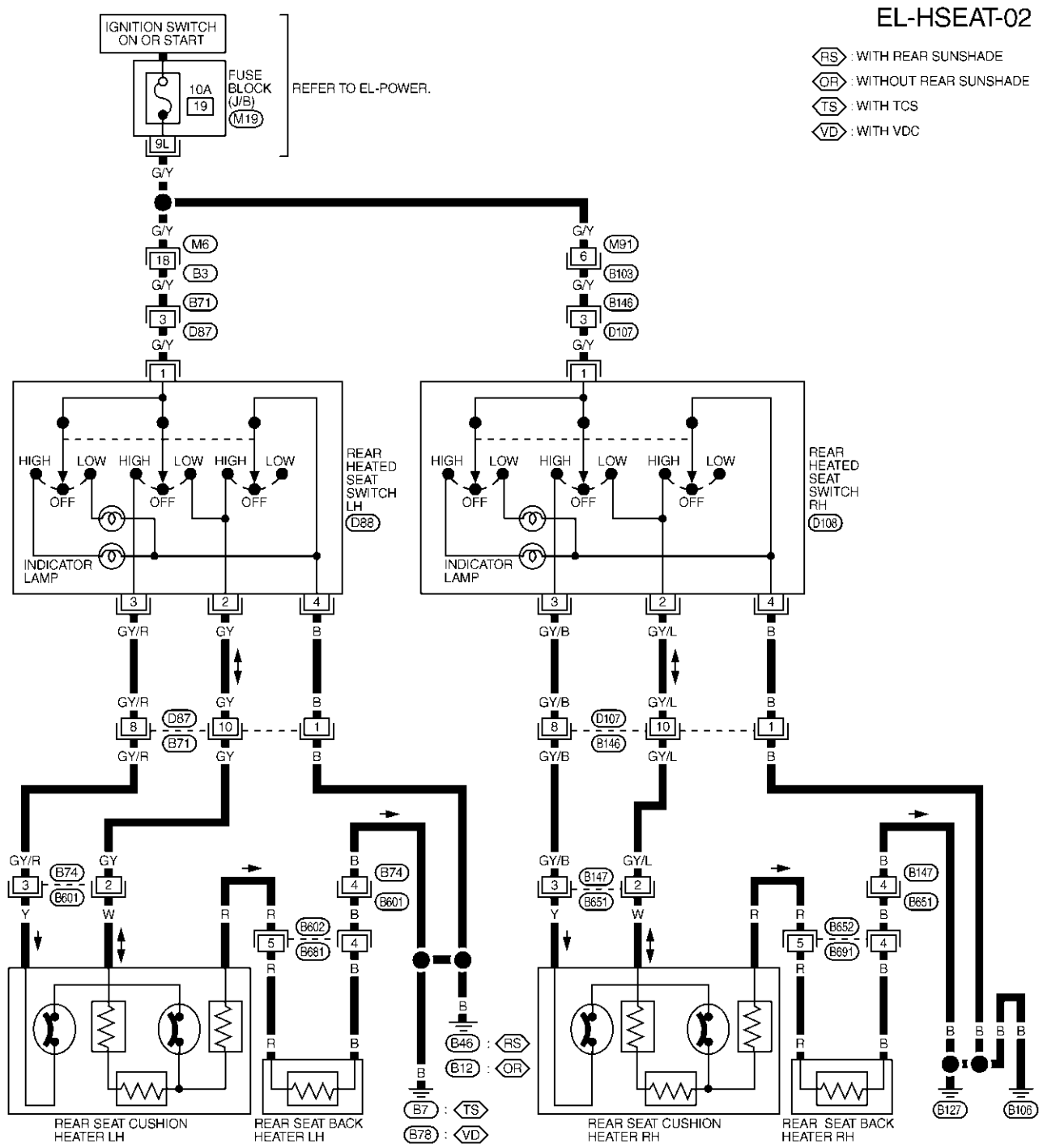
EL-HSEAT-02
RS : WITH REAR SUNSHADE
OR : WITHOUT REAR SUNSHADE
TS : WITH TCS
VD : WITH VDC
IGNITION SWITCH ON OR START
FUSE BLOCK (J/B)
10A
19
M19
REFER TO EL-POWER.
9L
G/Y
M6
18
B3
B71
3
D87
1
M91
6
B103
B146
D107
REAR HEATED SEAT SWITCH LH
D88
REAR HEATED SEAT SWITCH RH
D108
HIGH
LOW
OFF
INDICATOR LAMP
GY/R
GY
B
GY/B
GY/L
8
10
B74
B601
B147
B651
B602
B681
B652
B691
B46
B12
B7
B78
B127
B106
REAR SEAT CUSHION HEATER LH
REAR SEAT BACK HEATER LH
REAR SEAT CUSHION HEATER RH
REAR SEAT BACK HEATER RH
REFER TO THE FOLLOWING.
M19 -FUSE BLOCK- JUNCTION BOX (J/B)
★ : THIS CONNECTOR IS NOT SHOWN IN "HARNESS LAYOUT", EL SECTION.
MEL631Q

Seatback Heating Unit

NHEL0294

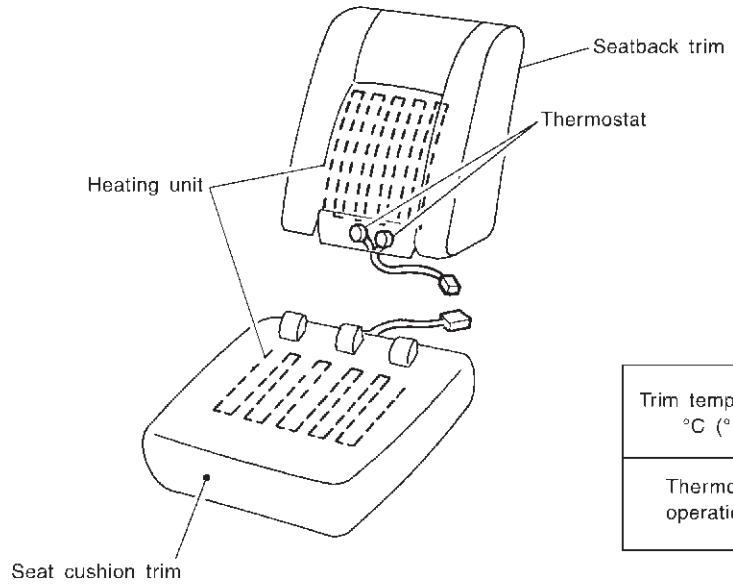

Trim temperature °C (°F)	Increasing to 35 - 45 (95 - 113)	Decreasing to 25 - 35 (77 - 95)
Thermostat operation	OFF	ON

SBT314

Component Parts and Harness Connector Location

NHEL0278

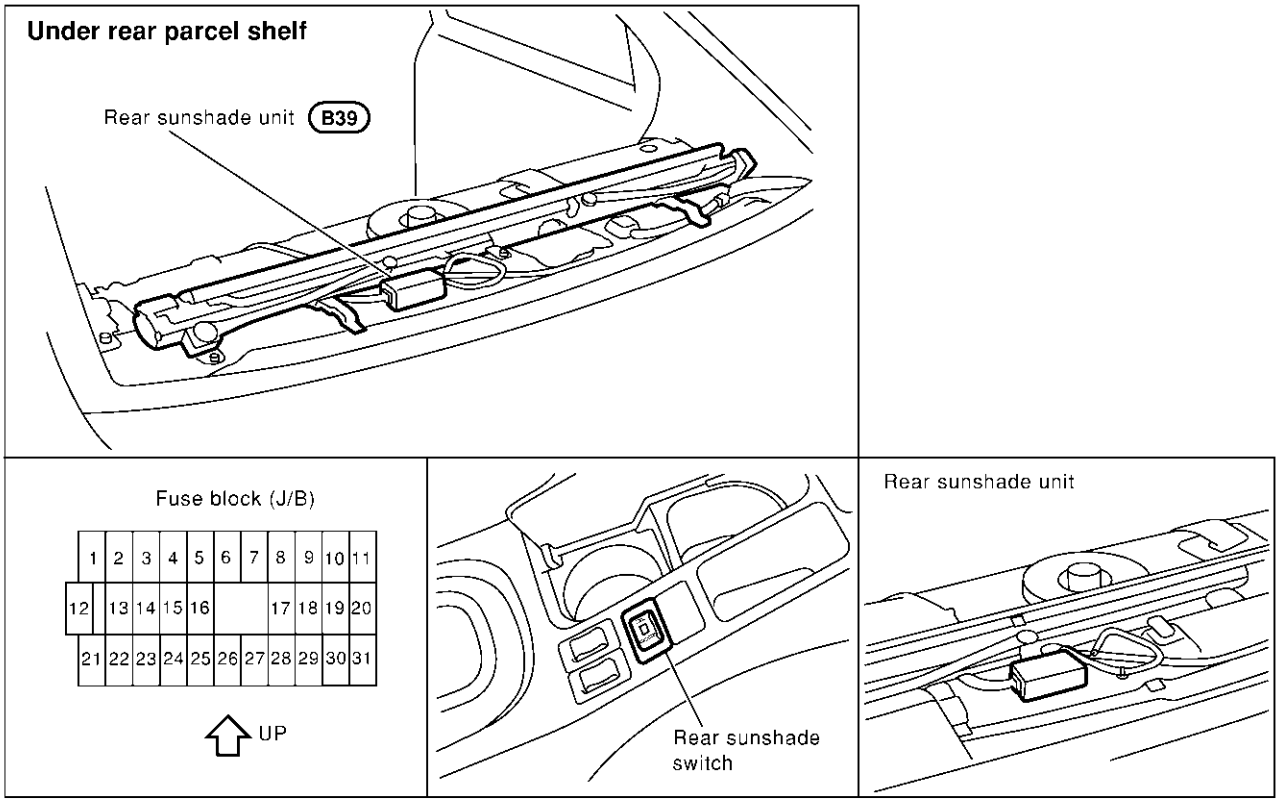

SEL636W

System Description

=NHEL0279

When ignition switch is in ACC or ON position, power is supplied.

- through 10A fuse [No. 23, located in the fuse block (J/B)]
- to rear sunshade unit terminal 5.

Ground is supplied at all times

- to rear sunshade unit terminal 6
- through body ground M9, M25 and M87.

OPEN OPERATION

NHEL0279S01

When rear sunshade switch is turned to “UP”, the ground is supplied to rear sunshade unit terminal 1. Based on the ground signal to control unit terminal 6 through rear sunshade unit terminal 1,
power is supplied

- to motor terminal 2
- from control unit terminal 9

and ground is supplied

- to motor terminal 1
- from control unit terminal 8.

When sunshade is fully up, control unit stops to supply power to motor based on the signal from UP/DOWN limit switch.

CLOSE OPERATION

NHEL0279S02

When rear sunshade switch is turned to “DOWN”, ground is supplied to rear sunshade unit terminal 2. Based on the ground signal to control unit terminal 7 through rear sunshade unit terminal 2,
power is supplied

- to motor terminal 1
- from control unit terminal 8

and ground is supplied

- to motor terminal 2
- from control unit terminal 9.

When sunshade is fully down, control unit stops to supply power to motor based on the signal from UP/DOWN limit switch.
Once the rear sunshade switch is pushed, the open or close operation will be continued until the control unit detects full open or full close based on the signal from UP/DOWN limit switch. During open or close operation of sunshade, the input signal from rear sunshade switch is ignored.
When control unit detects the slack of sunshade based on the signal from slack detection switch, the motor will be stopped. When control unit detects no slack of sunshade based on the signal from slack detection switch, power is supplied again to motor after 1 sec. after no slack is detected.

Wiring Diagram — SHADE —

NHEL0280

EL-SHADE-01

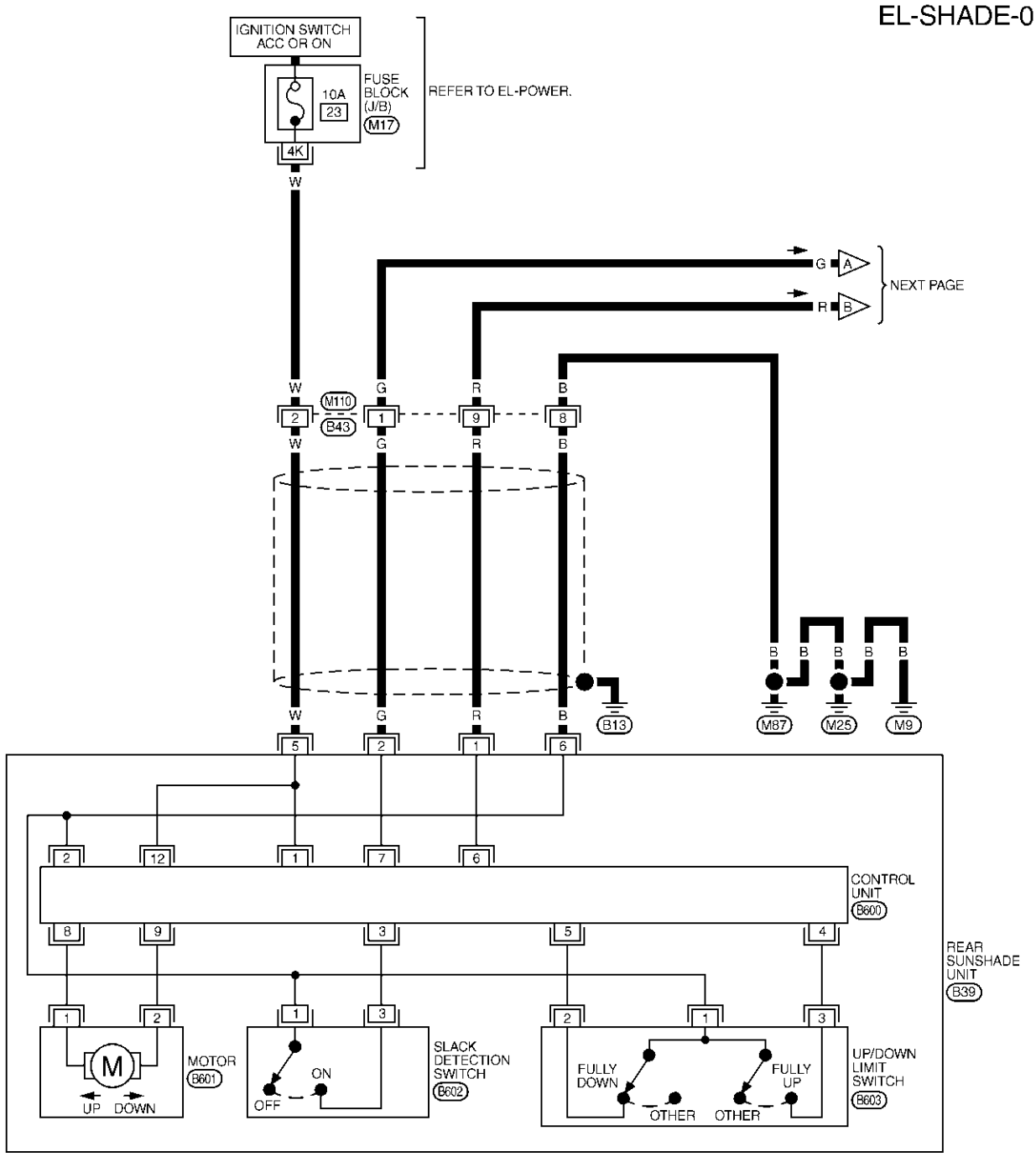

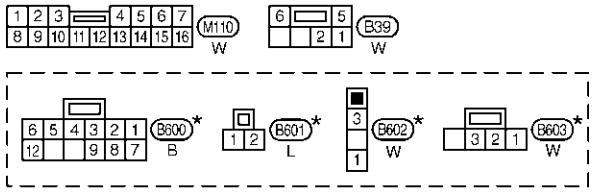

★ : THIS CONNECTOR IS NOT SHOWN IN "HARNESS LAYOUT", EL SECTION.

REFER TO THE FOLLOWING.
M17 -FUSE BLOCK-JUNCTION BOX (J/B)

MEL385O

EL-SHADE-02

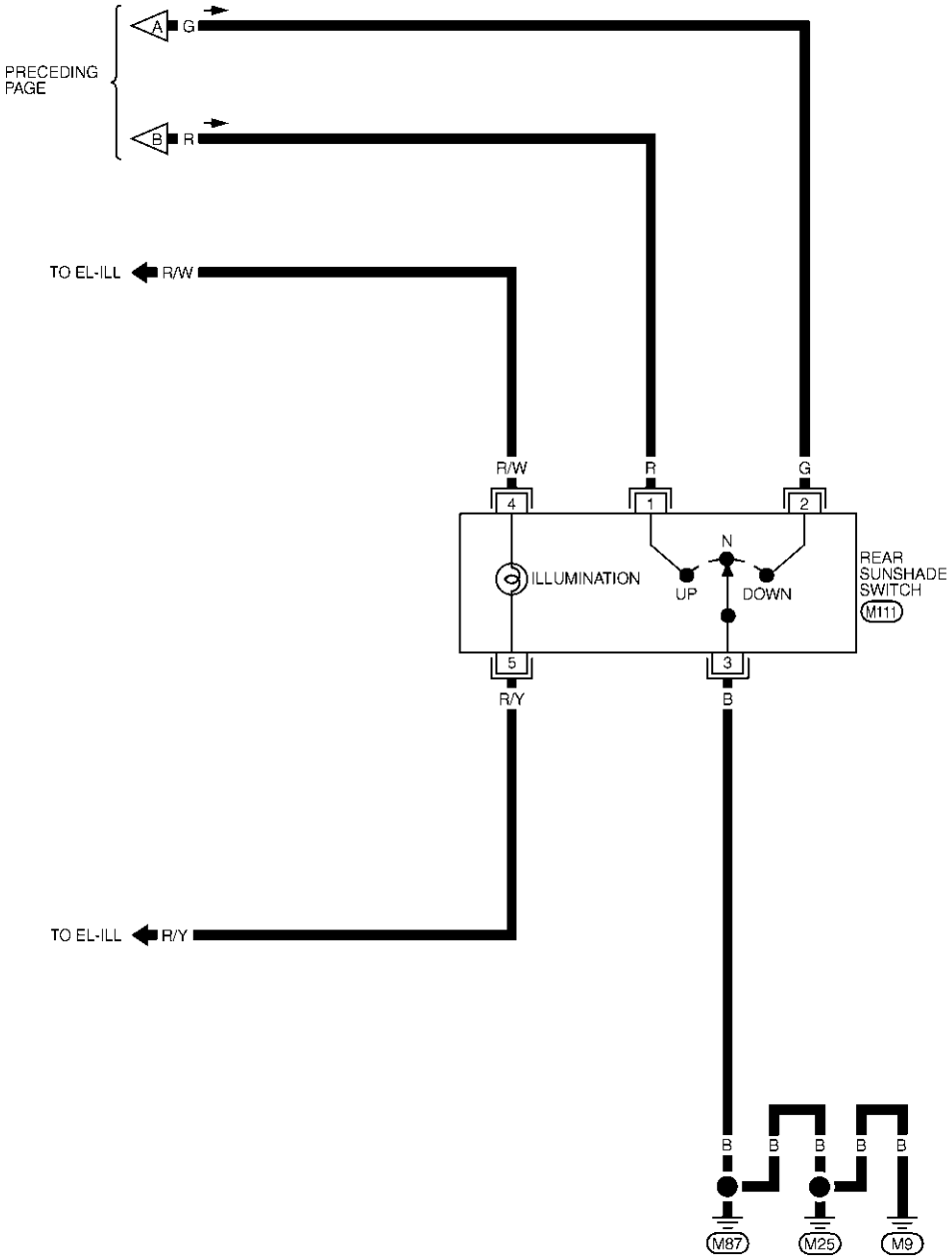

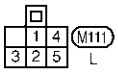

MEL386O

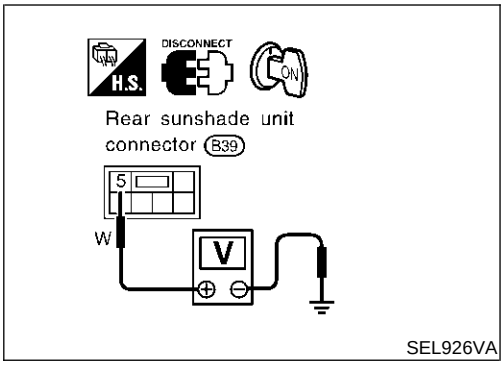

Trouble Diagnoses

NHEL0281

POWER SUPPLY CIRCUIT CHECK

NHEL0281S01

Check voltage between rear sunshade unit terminal 5 and ground.

Terminals	Ignition switch position		
	OFF	ACC	ON
5 - Ground	0V	Battery voltage	

If NG, check the following.

- 10A fuse [No. 23, located in fuse block (J/B)]
- Harness for open or short between 10A fuse [No. 23, located in fuse block (J/B)] and rear sunshade unit.

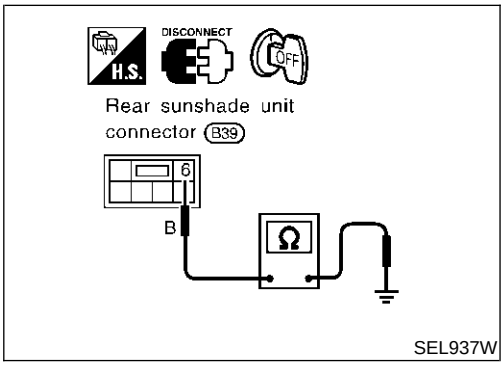

GROUND CIRCUIT CHECK

NHEL0281S02

Check continuity between rear sunshade unit terminal 6 and ground.

Terminals	Continuity
6 - Ground	Yes

If NG, check harness for open between rear sunshade unit terminal 6 and body ground M9, M25 and M87.

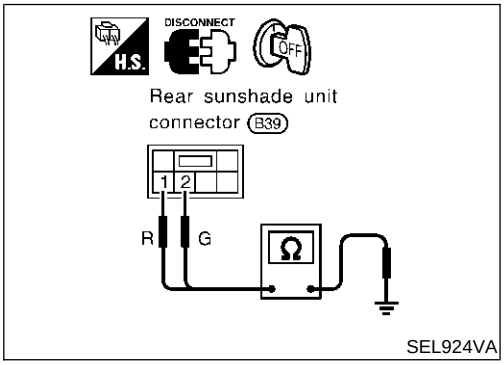

REAR SUNSHADE SIGNAL CIRCUIT CHECK

NHEL0281S03

1. Disconnect rear sunshade unit connector.
2. Check the following continuity.

Terminals	Switch position	Continuity
1 - Ground	Up	Yes
	Neutral	No
	Down	No
2 - Ground	Up	No
	Neutral	No
	Down	Yes

If NG, check the following.

- Harness for open or short between rear sunshade unit and rear sunshade switch
- Harness for open or short between rear sunshade switch and ground
- Rear sunshade switch

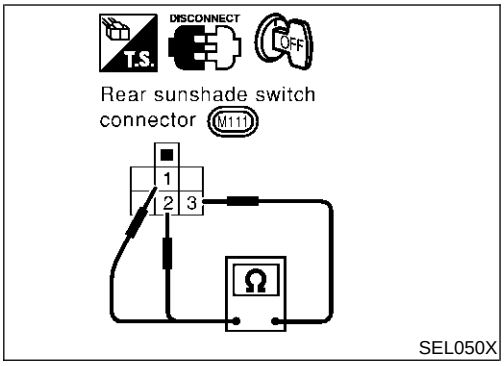

REAR SUNSHADE SWITCH CHECK

NHEL0281S04

1. Disconnect rear sunshade switch.
2. Check continuity between rear sunshade switch terminals.

Terminals	Switch position	Continuity
1 - 3	Up	Yes
	Neutral	No
	Down	No
2 - 3	Up	No
	Neutral	No
	Down	Yes

If NG, replace rear sunshade switch.

System Description

NHEL0190

Refer to EC-54, “Automatic Speed Control Device (ASCD) System” in “ENGINE AND EMISSION BASIC DESCRIPTION CONTROL SYSTEM”.

System Description

NHEL0191

Power is supplied at all times
- from 40A fusible link (letter **I**, located in the fuse and fusible link box)
- to circuit breaker terminal 1
- through circuit breaker terminal 2
- to power window relay terminal 3,
- to front power window main switch terminal 4, and
- to front power window switch RH terminal 6
- from 10A fuse [No. 13, located in the fuse block (J/B)]
- to smart entrance control unit terminal 49.

With ignition switch in ON or START position, power is supplied
- through 10A fuse [No. 10, located in the fuse block (J/B)]
- to rear power window switch LH and RH terminal 7
- to smart entrance control unit terminal 27.

Ground is supplied to power window relay terminal 1
- through body grounds M9, M25 and M87.

Ground is supplied to rear power window switch LH terminal 8
- through body grounds B7 (with TCS) or B78 (with VDC) and B46 (with rear sunshade), or B12 (without rear sunshade).

Ground is supplied to rear power window switch RH terminal 8
- through body grounds B106 and B127.

The power window relay is energized and power is supplied
- through power window relay terminal 5
- to front power window main switch terminal 11,
- to front power window switch RH terminal 13,
- to rear power window switch LH and RH terminals 5.

MANUAL OPERATION

NHEL0191S01

Front Door LH

NHEL0191S0101

Ground is supplied
- to front power window main switch terminal 5
- through body grounds M9, M25 and M87.

WINDOW UP
When the front LH switch in the front power window main switch is pressed in the up position, power is supplied
- to front power window regulator LH terminal 1
- through front power window main switch terminal 2.

Ground is supplied
- to front power window regulator LH terminal 3
- through front power window main switch terminal 3.

Then, the motor raises the window until the switch is released.
WINDOW DOWN
When the front LH switch in the front power window main switch is pressed in the down position, power is supplied
- to front power window regulator LH terminal 3
- through front power window main switch terminal 3.

Ground is supplied
- to front power window regulator LH terminal 1
- through front power window main switch terminal 2.

Then, the motor lowers the window until the switch is released.

Front Door RH

NHEL0191S0102

Ground is supplied

- to front power window switch RH terminal 7
- through body grounds M9, M25 and M87.

WINDOW UP
When the front RH switch in the front power window switch RH is pressed in the UP position, power is supplied

- to front power window regulator RH terminal 1
- through front power window switch RH terminal 5.

Ground is supplied

- to front power window regulator RH terminal 3
- through front power window switch RH terminal 4.

Then, the motor raises the window until the switch is released.
WINDOW DOWN
When the front RH switch in the front power window switch RH is pressed in the DOWN position, power is supplied

- to front power window regulator RH terminal 3
- through front power window switch RH terminal 4.

Ground is supplied

- to front power window regulator RH terminal 1
- through front power window switch RH terminal 5.

Then, the motor lowers the window until the switch is released.

Rear Door

NHEL0191S0105

REAR DOOR
MAIN SWITCH OPERATION
Rear Door LH
Power is supplied

- through front power window main switch terminal (13, 12)
- to rear power window switch LH terminal (3, 4)

The subsequent operation is the same as front power window switch RH operation.
REAR POWER WINDOW SWITCH LH OPERATION
Power is supplied

- through rear power window switch LH terminal (1, 2)
- to rear power window regulator LH terminal (1, 2)

Ground is supplied

- to rear power window regulator LH terminal (2, 1)
- through rear power window switch LH terminal (2, 1)
- to rear power window switch LH terminal (4, 3)
- through front power window main switch terminal (12, 13)

Then, the motor raises or lowers the window until the switch is released.
Rear Door RH
Power is supplied

- through front power window main switch terminal (9, 10)
- to rear power window switch RH terminal (3, 4)

The subsequent operation is the same as front power window switch RH operation.
REAR POWER WINDOW SWITCH RH OPERATION
Power is supplied

- through rear power window switch RH terminal (1, 2)
- to rear power window regulator RH terminal (1, 2)

Ground is supplied

- to rear power window regulator RH terminal (2, 1)
- through rear power window switch RH terminal (2, 1)
- to rear power window switch RH terminal (4, 3)
- through front power window main switch terminal (10, 9)

Then, the motor raises or lowers the window until the switch is released.

Power Window Opened/Closed Operation

NHEL0191S0106

- When ignition key switch is OFF, front power window can be opened or closed by turning the front door key cylinder to UNLOCK/LOCK direction.
- Power window can be opened as the door key cylinder is kept fully turning to the UNLOCK direction.
- Power window can be closed as the door key cylinder is kept fully turning to the LOCK direction.

The power window opening stops when the following operations are carried out:

- While performing open/close the window, power window is stopped at the position as the door key cylinder is placed on Neutral.
- When the ignition switch is turned ON while the power window opening is operated.

AUTO OPERATION

NHEL0191S02

The power window AUTO feature enables the driver to open or close the driver's and passenger's window without holding the window switch in the down or up position.
The AUTO feature operates on the driver's and passenger's side window.

POWER WINDOW LOCK

NHEL0191S03

The power window lock is designed to lock operation of all windows except for driver's door window.
When the lock switch is pressed to lock position, ground of the front and rear power window switches in the front power window main switch is disconnected. This prevents the power window motors from operating.

RETAINED POWER OPERATION

NHEL0191S04

When the ignition switch is turned to OFF position from ON or START position, power is supplied for 45 seconds

- to power window relay terminal 2
- from smart entrance control unit terminal 46.

Ground is always supplied

- to power window relay terminal 1
- through body grounds M9, M25 and M87.

When power and ground are supplied, the power window relay continues to be energized, and the power window can be operated.
The retained power operation is canceled when the driver or passenger side door is opened.
RAP signal's period can be changed by CONSULT-II. (Refer to EL-273.)

INTERRUPTION DETECTION FUNCTION

NHEL0191S05

Front power window main switch monitors the power window regulator motor operation and the power window position (full closed or other) for driver's and passenger's side power window by the signals from encoder and limit switch in front power window regulator (driver's and passenger's side).
When front power window main switch detects interruption during the following close operation in the driver's side door,

- automatic close operation when ignition switch is in the "ON" position
- automatic close operation during retained power operation
- manual close operation during retained power operation

Front power window main switch controls driver's and passenger's side power window regulator motor for open and the power window will be lowered about 150 mm (5.91 in).

Schematic

NHEL0103

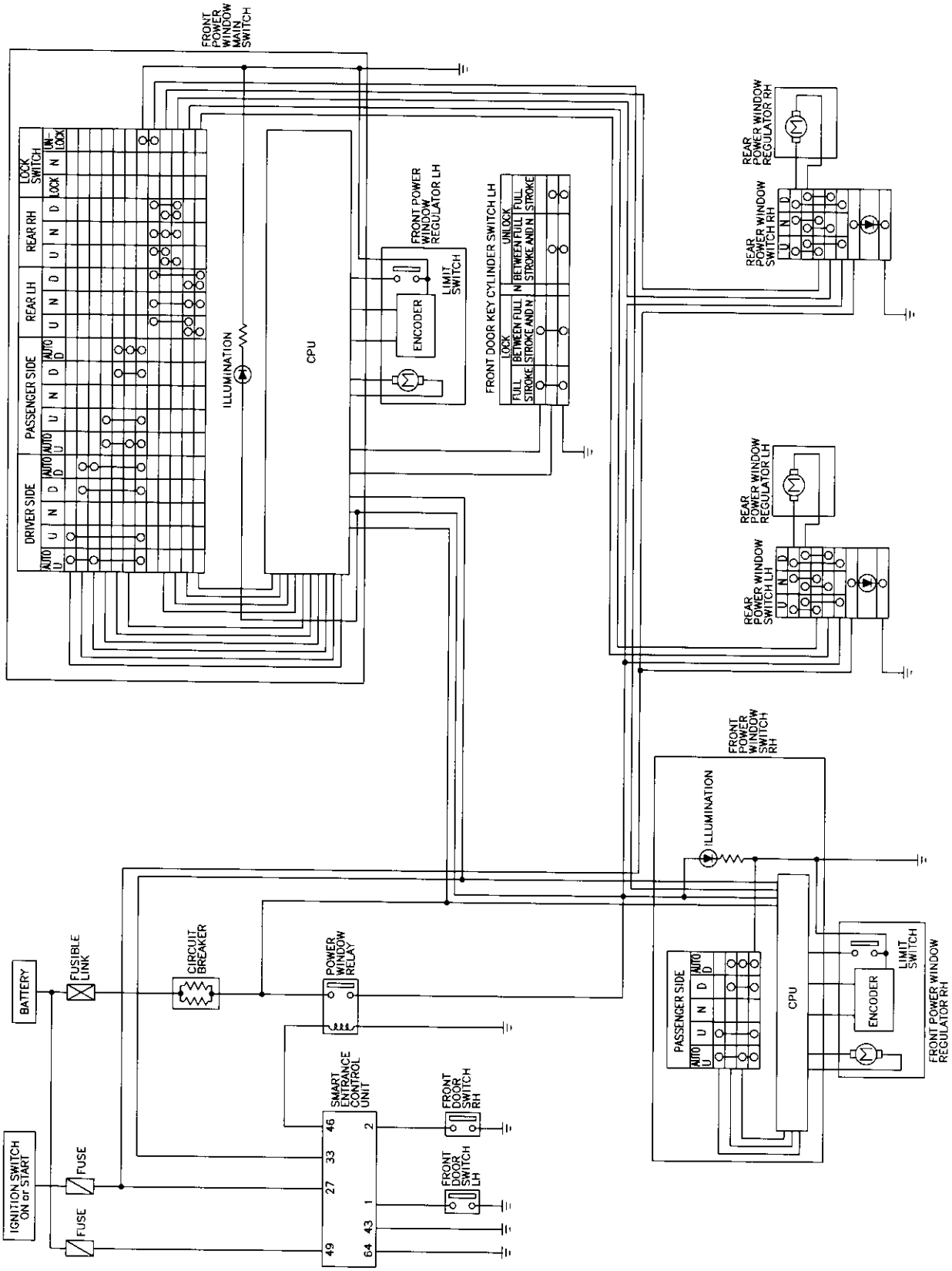

MEL338O

Wiring Diagram — WINDOW —

NHEL0104

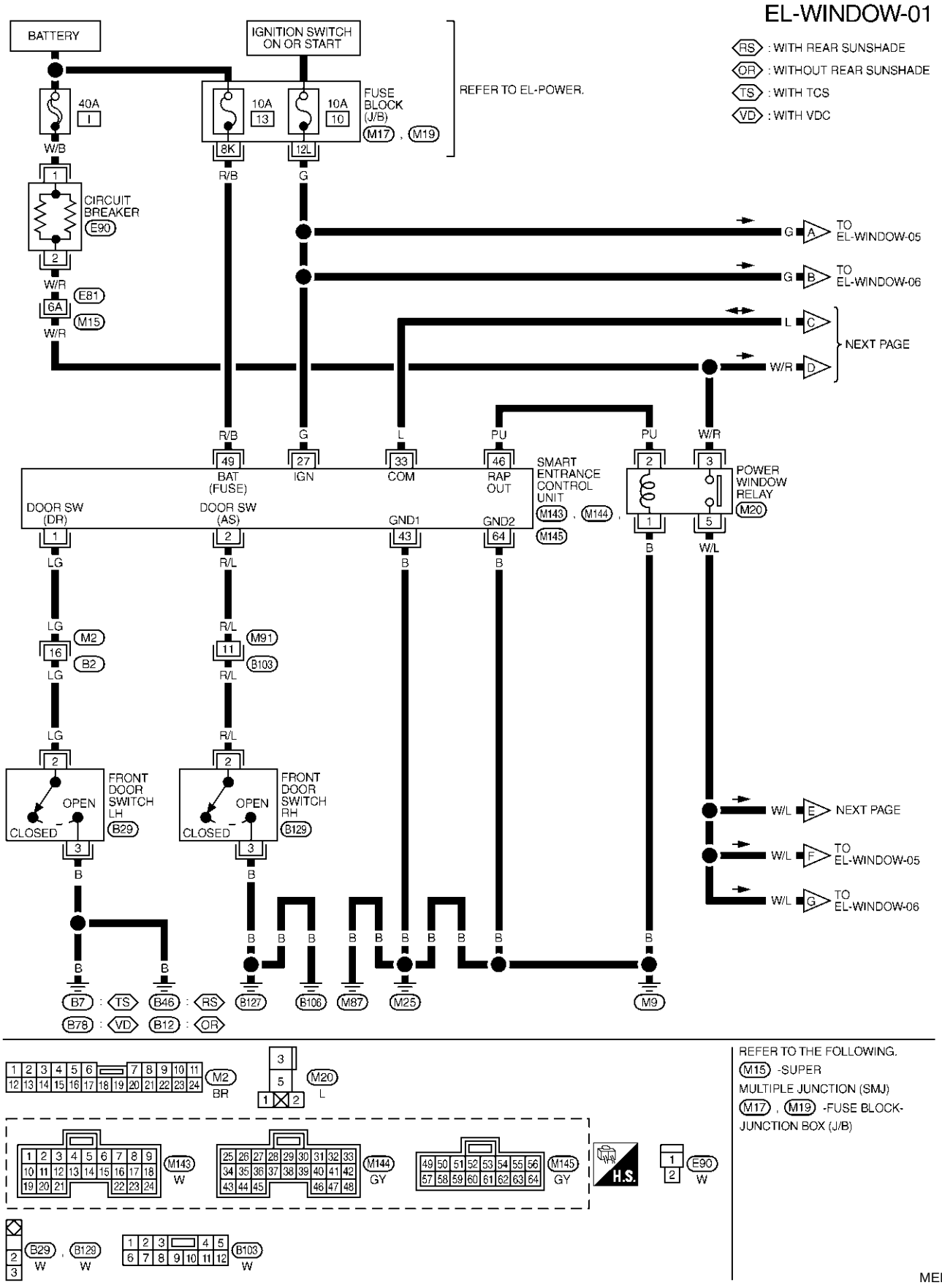

EL-WINDOW-02

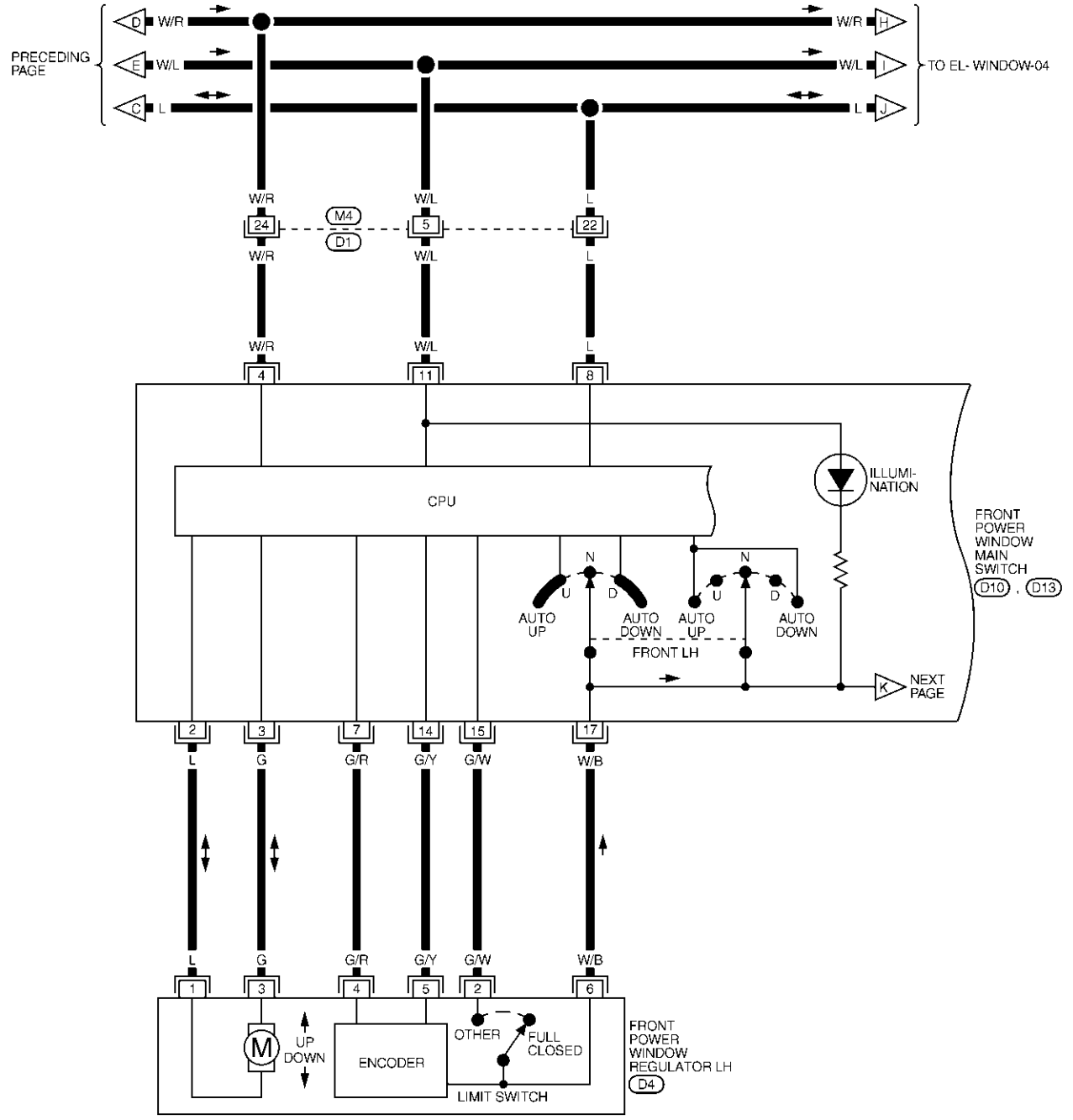

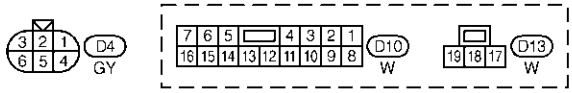

REFER TO THE FOLLOWING.
D1 -SUPER MULTIPLE JUNCTION (SMJ)

MEL340O

EL-WINDOW-03

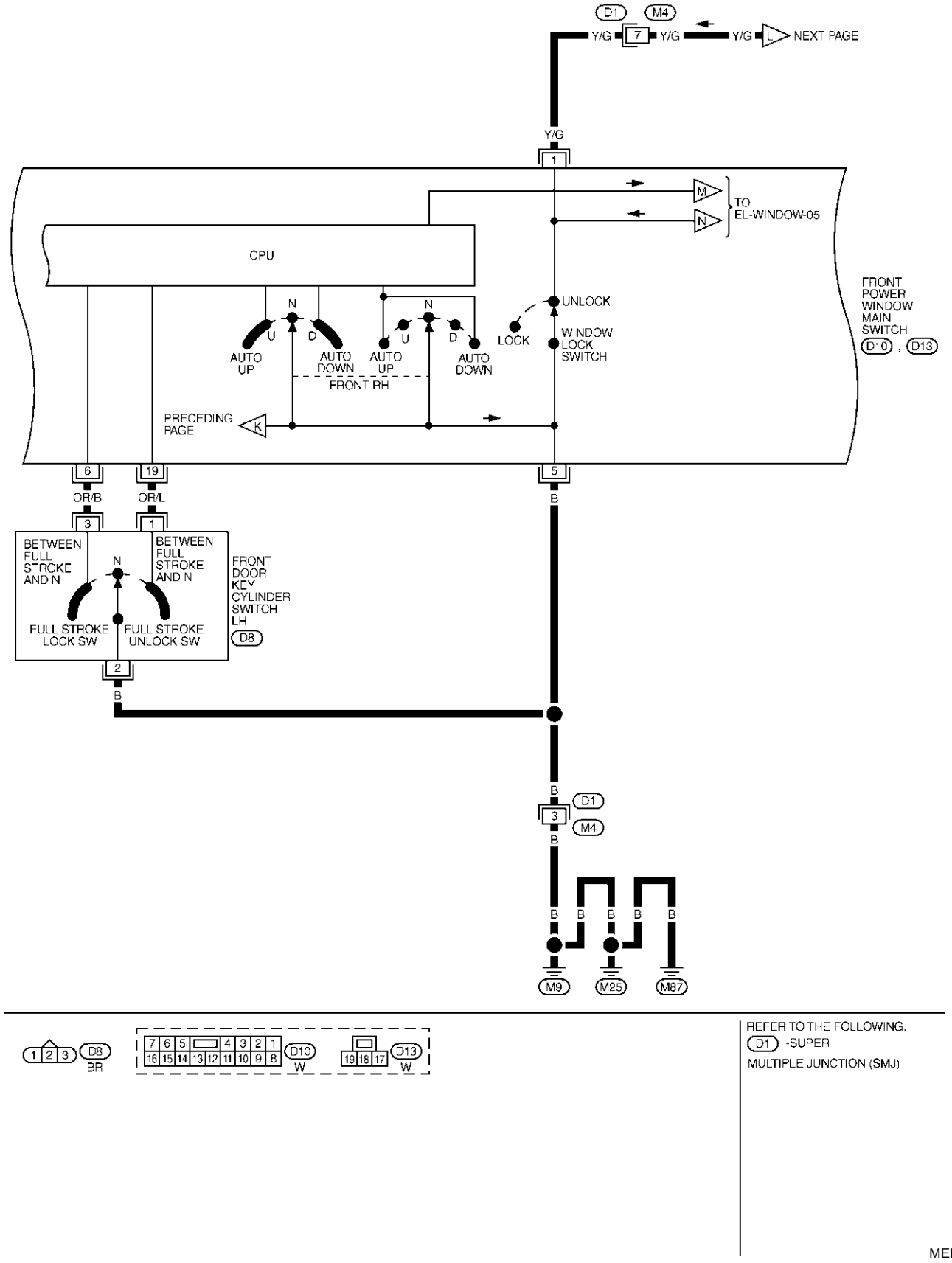

REFER TO THE FOLLOWING.
D1 -SUPER
MULTIPLE JUNCTION (SMJ)

MEL633Q

EL-WINDOW-04

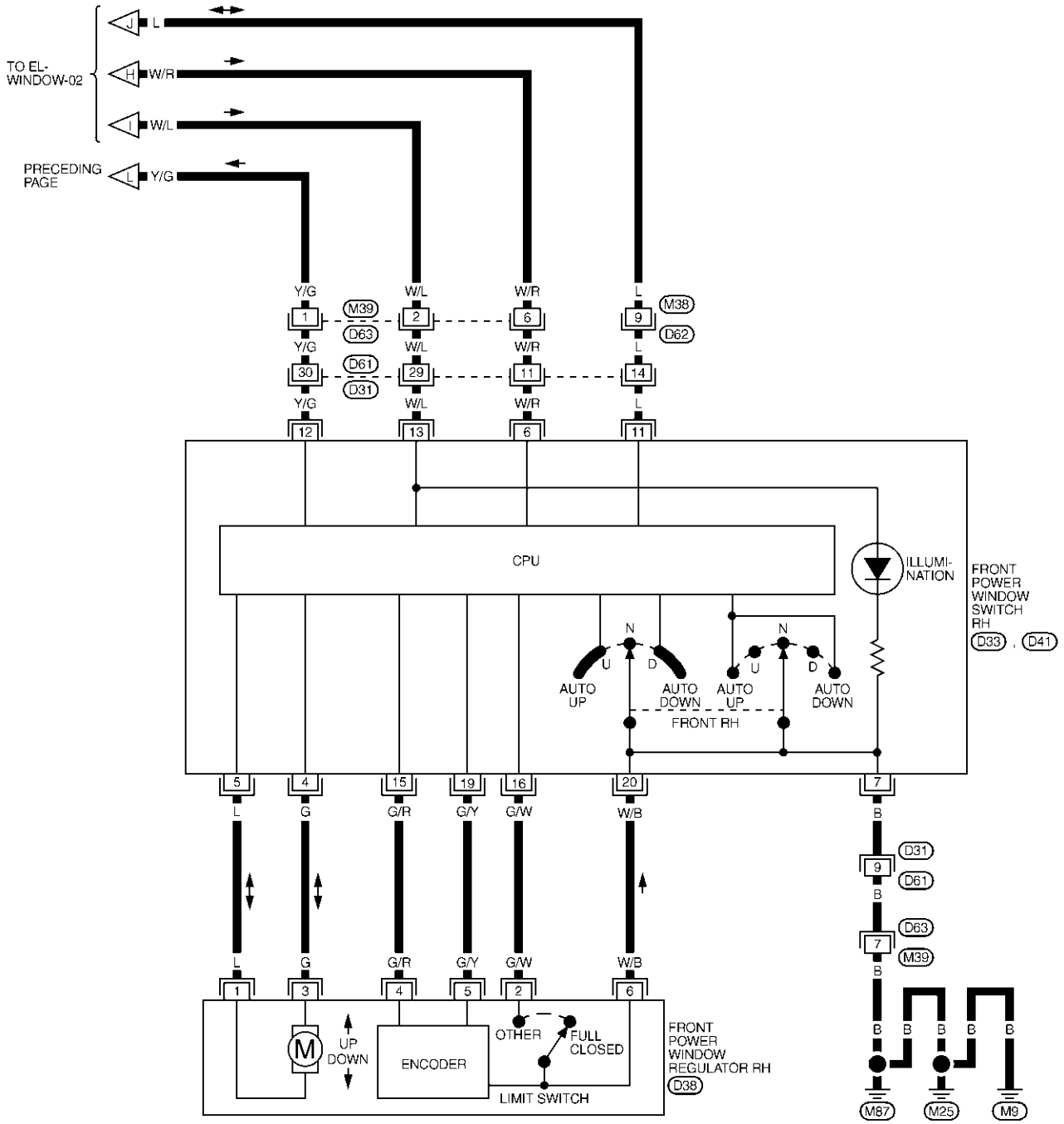

MEL342O

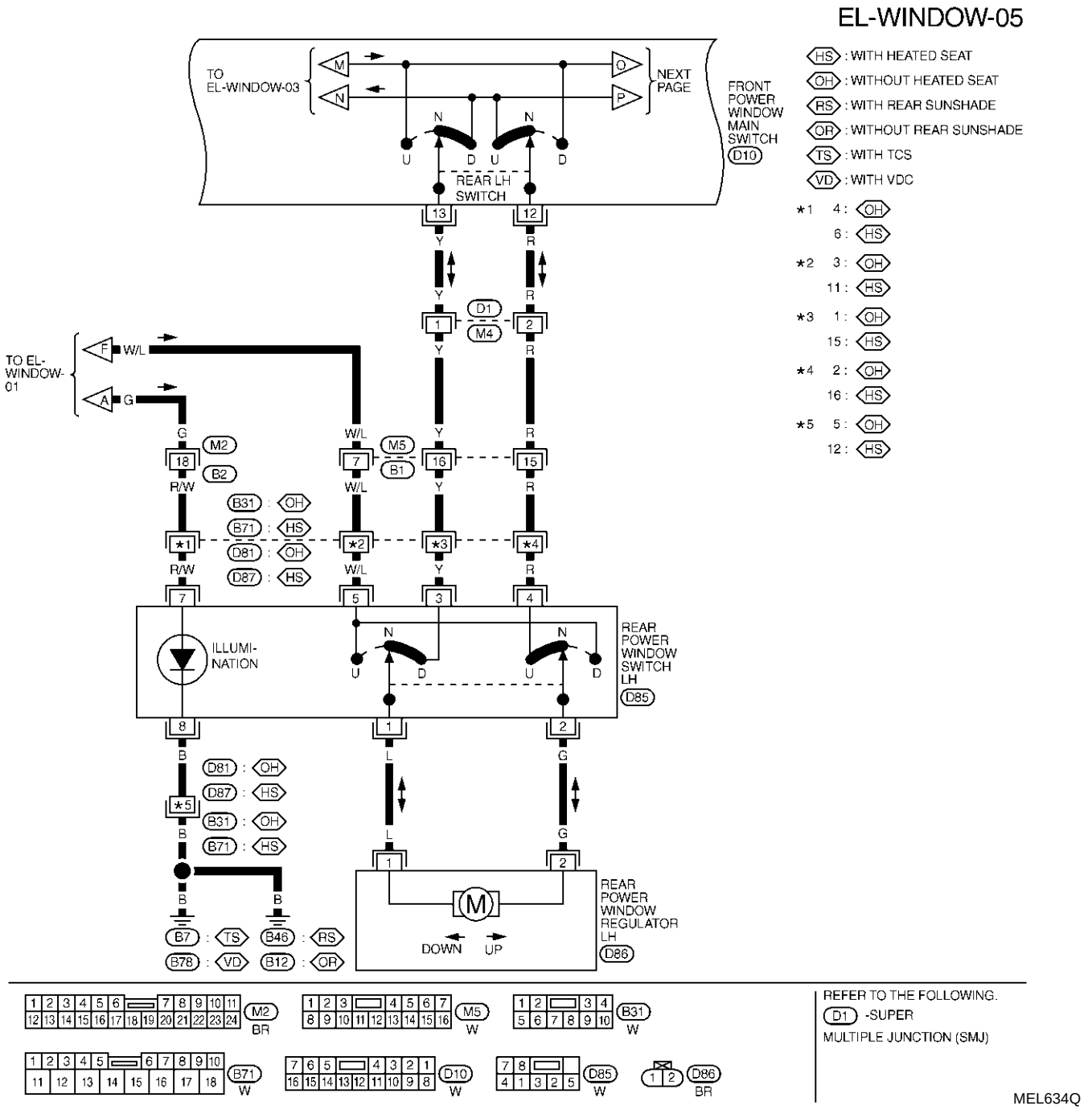
EL-WINDOW-05
TO EL-WINDOW-03
NEXT PAGE
FRONT POWER WINDOW MAIN SWITCH
D10
REAR LH SWITCH
HS : WITH HEATED SEAT
OH : WITHOUT HEATED SEAT
RS : WITH REAR SUNSHADE
OR : WITHOUT REAR SUNSHADE
TS : WITH TCS
VD : WITH VDC
*1 4 : OH
6 : HS
*2 3 : OH
11 : HS
*3 1 : OH
15 : HS
*4 2 : OH
16 : HS
*5 5 : OH
12 : HS
TO EL-WINDOW-01
ILLUMI-NATION
REAR POWER WINDOW SWITCH LH
D85
REAR POWER WINDOW REGULATOR LH
D86
DOWN
UP
B7 : TS
B78 : VD
B46 : RS
B12 : OR
REFER TO THE FOLLOWING.
D1 -SUPER
MULTIPLE JUNCTION (SMJ)
MEL634Q

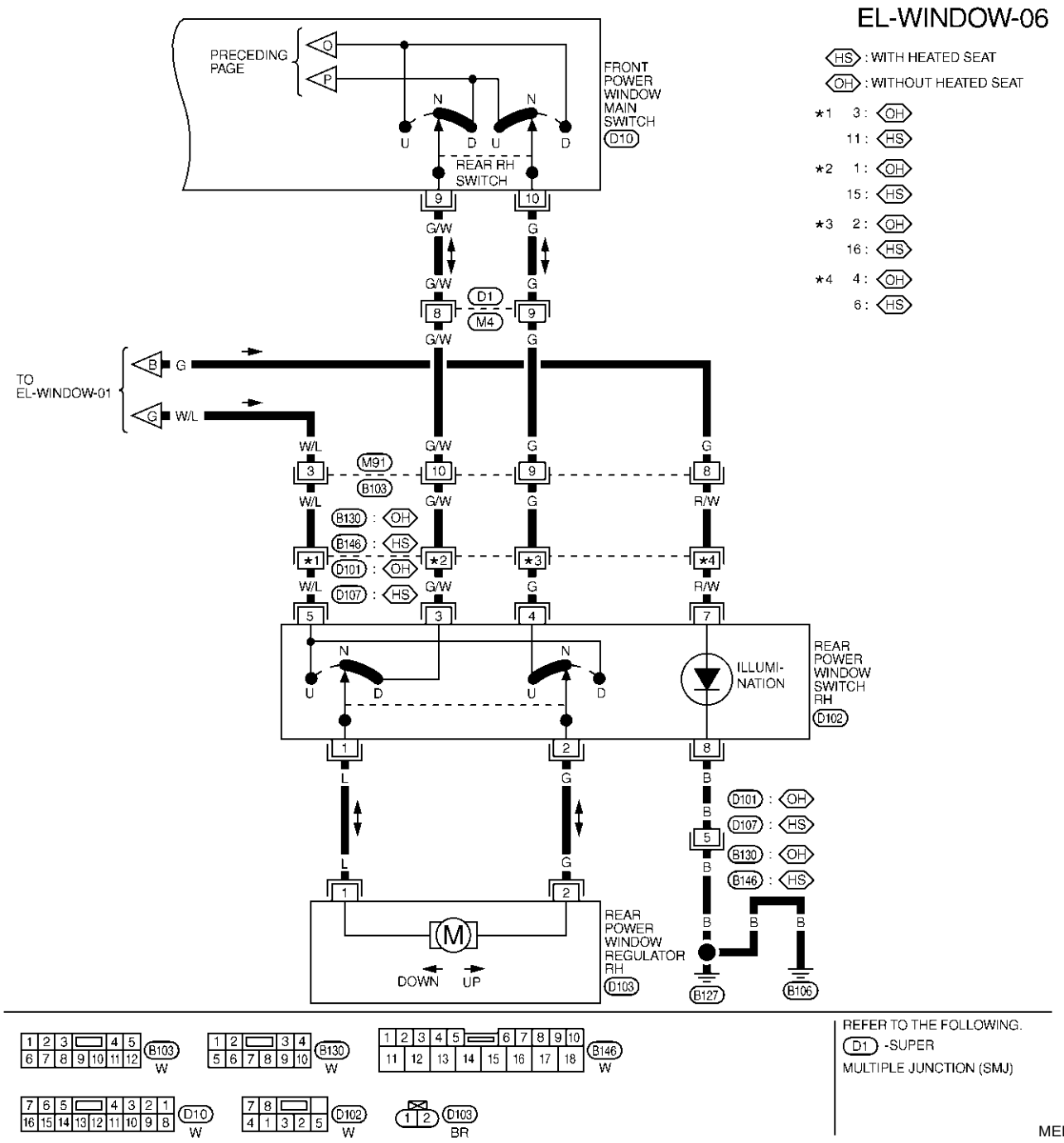

SMART ENTRANCE CONTROL UNIT TERMINALS AND REFERENCE VALUE BETWEEN EACH TERMINAL AND GROUND

TERMINAL	WIRE COLOR	ITEM	CONDITION	DATA (DC)
1	LG	DRIVER DOOR SWITCH	OFF (CLOSED) → ON (OPEN)	12V → 0V
2	R/L	PASSENGER DOOR SWITCH	OFF (CLOSED) → ON (OPEN)	5V → 0V
27	G	IGNITION SWITCH (ON)	IGNITION SWITCH IS IN "ON" POSITION	12V
33	L	COMMUNICATION INTERFACE	DOOR LOCK & UNLOCK SWITCHES (NEUTRAL → LOCK/UNLOCK) FRONT DOOR KEY CYLINDER SWITCH LH (NEUTRAL → LOCK/UNLOCK)	*1
43	B	GROUND	–	–
46	PU	POWER WINDOW RELAY	RETAIND POWER OPERATION IS OPERATED (ON → OFF)	12V → 0V
49	R/B	POWER SOURCE (FUSE)	–	12V
64	B	GROUND	–	–

*1: REFER TO "SMART ENTRANCE CONTROL UNIT INSPECTION TABLE" IN "SMART ENTRANCE CONTROL UNIT".

SEL480YA

CONSULT-II Inspection Procedure

NHEL0235

“RETAINED PWR”

NHEL0235S01

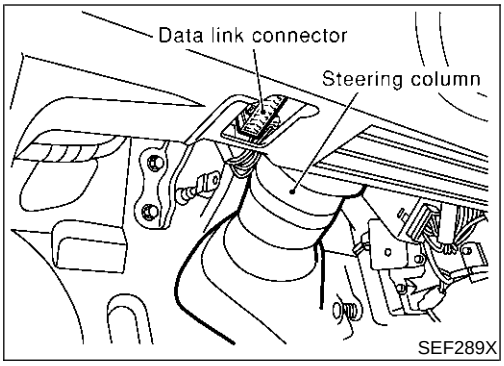

SEF289X

1. Turn ignition switch “OFF”.
2. Connect “CONSULT-II” and “CONSULT-II CONVERTER” to the data link connector.

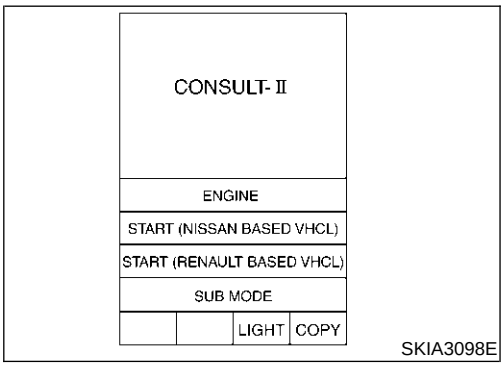

SKIA3098E

3. Turn ignition switch “ON”.
4. Touch “START (NISSAN BASED VHCL)”.

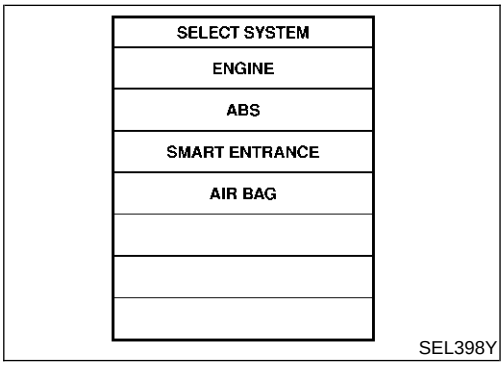

SEL398Y

5. Touch “SMART ENTRANCE”.
   If “SMART ENTRANCE” is not indicated, go to GI-42.

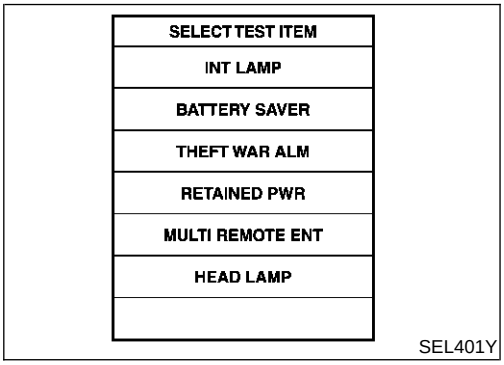

SEL401Y

6. Touch “RETAINED PWR”.

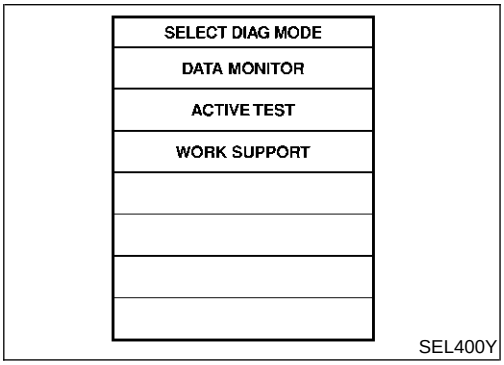

SEL400Y

7. Select diagnosis mode.
   “DATA MONITOR”, “ACTIVE TEST” and “WORK SUPPORT” are available.

CONSULT-II Application Items

NHEL0236

"RETAINED PWR"

NHEL0236S01

Data Monitor

NHEL0236S0101

Monitored Item	Description
IGN ON SW	Indicates [ON/OFF] condition of ignition switch.
DOOR SW-DR	Indicates [ON/OFF] condition of front door switch LH.
DOOR SW-AS	Indicates [ON/OFF] condition of front door switch RH.

Active Test

NHEL0236S0102

Test Item	Description
RETAINED PWR	This test is able to supply RAP signal (power) from smart entrance control unit to power window system and power sunroof system. Those systems can be operated when turning on "RETAINED PWR" on CONSULT-II screen even if the ignition switch is tuned OFF. **NOTE:** **During this test, CONSULT-II can be operated with ignition switch in "OFF" position. "RETAINED PWR" should be turned "ON" or "OFF" on CONSULT-II screen when ignition switch is ON. Then turn ignition switch OFF to check retained power operation. CONSULT-II might be stuck if "RETAINED PWR" is turned "ON" or "OFF" on CONSULT-II screen when ignition switch is OFF.**

Work Support

NHEL0236S0103

Work Item	Description
RETAINED PWR SET	RAP signal's power supply period can be changed by mode setting. Selects RAP signal's power supply period between two steps. ● MODE 1 (45 sec.)/MODE 2 (OFF)/MODE 3 (2 min.)

Trouble Diagnoses

NHEL0105

Symptom	Possible cause	Repair order
None of the power windows can be operated using any switch.	1. 10A fuse, 40A fusible link 2. E90 circuit breaker 3. Power window relay 4. E90 circuit breaker circuit 5. Power window relay circuit 6. Ground circuit 7. Front power window main switch	1. Check 10A fuse [No. 10, located in fuse block (J/B)], 40A fusible link (letter **I**, located in fuse and fusible link box). 2. Check E90 circuit breaker. 3. Check power window relay. 4. Check the following. a. Check harness between E90 circuit breaker and 40A fusible link (letter **I**, located in fuse and fusible link box). b. Check harness between E90 circuit breaker and front power window main switch. 5. Check the following. a. Check harness between E90 circuit breaker and power window relay. b. Check harness between fuse and power window relay. 6. Check the following. a. Check ground circuit of front power window main switch terminal 5. b. Check power window relay ground circuit. 7. Check front power window main switch.

Symptom	Possible cause	Repair order
Driver side power window cannot be operated but other windows can be operated.	1. Driver side power window regulator circuit 2. Driver side power window regulator 3. Front power window main switch	1. Check harness between front power window main switch and driver side power window regulator for open or short circuit. 2. Check driver side power window regulator. 3. Check front power window main switch.
One or more power windows except driver's side window cannot be operated.	1. Power window switches 2. Power window regulators 3. Power window main switch 4. Power window circuit	1. Check power window switch. 2. Check power window regulator. 3. Check power window main switch. 4. Check the following. a. Check harness between the rear power window switch (LH and RH) terminal 5 and power window relay terminal 5. b. Check harnesses between power window main switch and power window switch for open/short circuit. c. Check harnesses between power window switch and power window regulator for open/short circuit.
Power windows except driver's side window cannot be operated using power window main switch but can be operated by power window switch.	1. Power window main switch	1. Check front power window main switch.
Driver side power window automatic operation does not function properly.	1. Front power window main switch 2. Encoder and limit switch	1. Check front power window main switch. 2. Check encoder and limit switch. (EL-275)
Retained power operation does not operate properly.	1. RAP signal circuit 2. Driver or passenger side door switch circuit 3. Smart entrance control unit	1. Check RAP signal. a. (With CONSULT-II) ● Check RAP signal with CONSULT-II. Use "WORK SUPPORT" mode, "RETAINED PWR" in "SMART ENTRANCE". (Refer to EL-272.) ● Check RAP signal with CONSULT-II. Use "ACTIVE TEST" mode, "RETAINED PWR" in "SMART ENTRANCE". (Refer to EL-272.) If NG, go to the step b. below. b. Verify 12 positive voltage from smart entrance control unit is present at terminal 2 of power window relay: ● Within 45 seconds after ignition switch turns off.*1 ● When front door LH and RH is closed. 2. Check harness between smart entrance control unit and driver or passenger side door switch for short circuit. Check driver or passenger side door switch ground circuit. Check driver or passenger side door switch. 3. Check smart entrance control unit. (EL-52)
Interruption detection function does not operate properly.	1. Encoder and limit switch	1. Check encoder and limit switch. (EL-275)

NOTE: *1 RAP signal's period can be changed by CONSULT-II. (EL-273)

ENCODER AND LIMIT SWITCH CHECK

=NHEL0105S01

1	CHECK DOOR WINDOW SLIDE MECHANISM	
Check the following. ● Obstacles in window, glass molding, etc. ● Worn or deformed glass molding ● Door sash tilted too far inward or outward ● Door window regulator		
OK or NG		
OK	▶	GO TO 2.
NG	▶	Remove obstacles or repair door window slide mechanism.

2	CHECK LIMIT SWITCH POWER SUPPLY INPUT SIGNAL	
1. Disconnect front power window regulator LH or RH connector. 2. Turn ignition switch to ON position. 3. Check voltage between front power window regulator LH harness connector D4 terminal 2 (G/W) or front power window regulator RH harness connector D38 terminal 2 (G/W) and ground.		

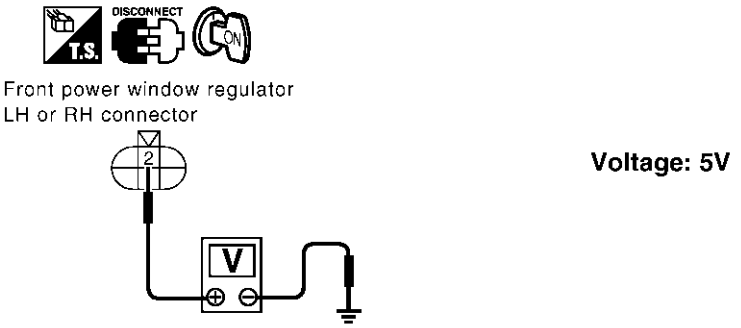

SEL835Y

OK or NG		
OK	▶	GO TO 4.
NG	▶	GO TO 3.

3	CHECK LIMIT SWITCH POWER SUPPLY OUTPUT SIGNAL	
Check voltage between front power window main switch terminal 15 or front power window switch RH terminal 16 and ground.		

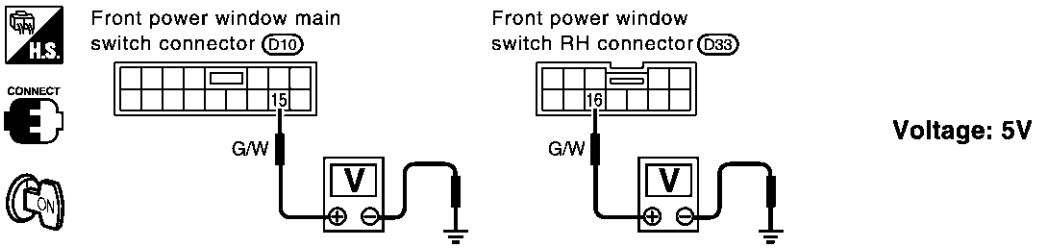

SEL725WB

OK or NG		
OK	▶	Repair harness or connectors between power window switch and front power window regulator.
NG	▶	Replace power window main switch or front power window switch RH.

4	CHECK LIMIT SWITCH OPERATION

1. Connect front power window regulator LH or RH connector.
2. Check voltage between front power window main switch terminal 15 or front power window switch RH terminal 16 and ground during power window closing operation.

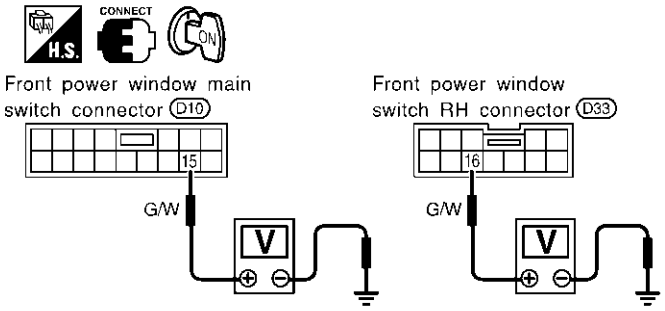

Terminal No.	Condition	Voltage (DCV)
Front power window main switch: 15 Front power window switch RH: 16	Approx.15 mm (0.59 in) below the full closed position to full closed position	Approx. 5
	Other positions	Approx. 0

SEL726W

OK or NG

OK	▶	GO TO 7.
NG	▶	GO TO 5.

5	RESET LIMIT SWITCH

Reset limit switch. Refer to BT-22, "Front Door Glass Limit Switch Reset". Then check voltage between front power window main switch terminal 15 or front power window switch RH terminal 16 and ground during power window closing operation at least ten times.

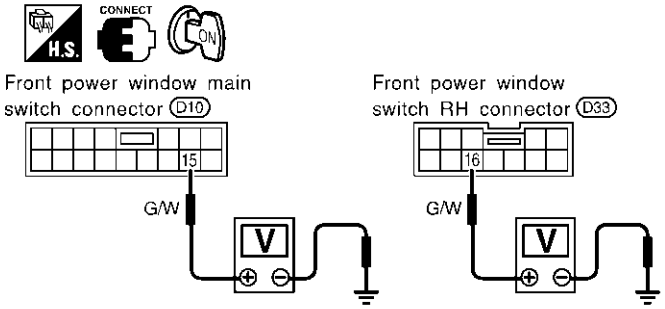

Terminal No.	Condition	Voltage (DCV)
Front power window main switch: 15 Front power window switch RH: 16	Approx.15 mm (0.59 in) below the full closed position to full closed position	Approx. 5
	Other positions	Approx. 0

SEL726W

OK or NG

OK	▶	INSPECTION END
NG	▶	GO TO 6.

6	CHECK POWER WINDOW REGULATOR GROUND CIRCUIT

1. Disconnect front power window main switch connector or front power window switch RH connector.
2. Check the following.
- Continuity between front power window main switch harness connector D13 terminal 17 (W/B) and front power window regulator LH harness connector D4 terminal 6 (W/B).
- Continuity between front power window switch RH harness connector D33 terminal 20 (W/B) and front power window regulator RH harness connector D38 terminal 6 (W/B).

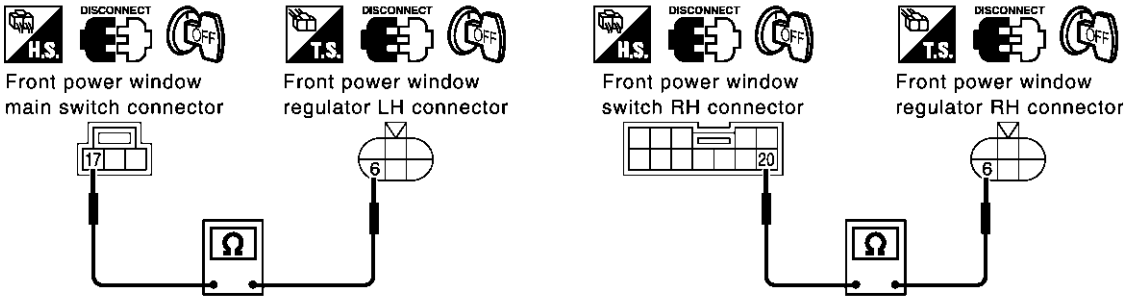

SEL843Y

OK or NG

OK	▶	Replace front power window regulator LH or RH.
NG	▶	Repair harness or connectors between power window switch and front power window regulator.

7	CHECK ENCODER POWER SUPPLY OUTPUT SIGNAL

1. Connect front power window main switch or front power window switch RH connector.
2. Turn ignition switch to ON position.
3. Check voltage between front power window main switch harness connector D10 terminal 7 (G/R) or front power window switch RH harness connector D33 terminal 15 (G/R) and ground.

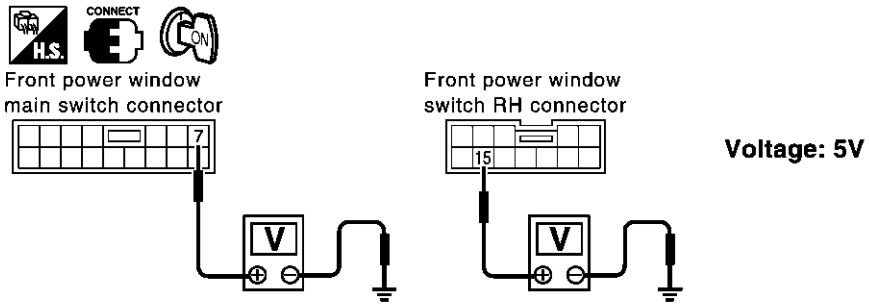

SEL844Y

OK or NG

OK	▶	GO TO 8.
NG	▶	Replace front power window main switch or front power window switch RH.

8	CHECK ENCODER POWER SUPPLY INPUT SIGNAL

Check voltage between front power window regulator LH harness connector D4 terminal 4 (G/R) or front power window regulator RH harness connector D38 terminal 4 (G/R) and ground.

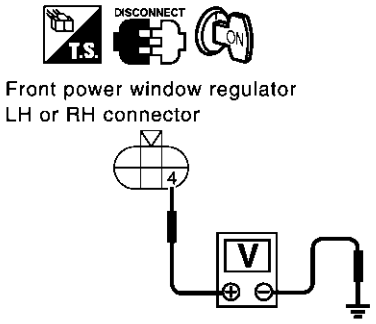

Voltage: 5V

SEL838Y

OK or NG

OK	▶	GO TO 9.
NG	▶	Repair harness or connector.

9	CHECK ENCODER INPUT SIGNAL

1. Connect front power window regulator LH or RH connector.
2. Check voltage signal between front power window main switch harness connector D10 terminal 14 (G/Y) or front power window switch RH harness connector D33 terminal 19 (G/Y) and ground with oscilloscope when power window is in automatic closing operation.

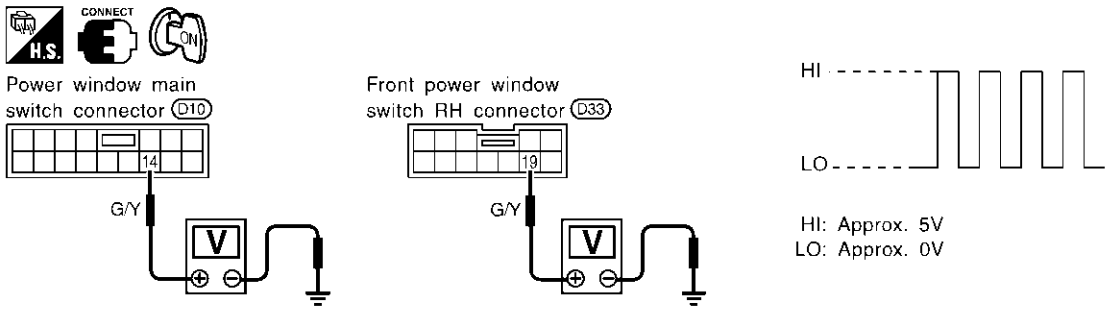

SEL727W

OK or NG

OK	▶	Replace front power window main switch or front power window switch RH.
NG	▶	GO TO 10.

10	CHECK HARNESS FOR OPEN OR SHORT

1. Turn ignition switch to OFF position.
2. Disconnect front power window main switch connector or front power window switch RH and front power window regulator LH or RH connector.
3. Check the following.

- Check continuity between front power window main switch harness connector D10 terminal 14 (G/Y) and front power window regulator LH harness connector D4 terminal 5 (G/Y).
- Check continuity between front power window switch RH harness connector D33 terminal 19 (G/Y) and front power window regulator RH harness connector D38 terminal 5 (G/Y).
- Check continuity between front power window main switch harness connector D10 terminal 14 (G/Y) or front power window switch RH harness connector D33 terminal 19 (G/Y) and ground.

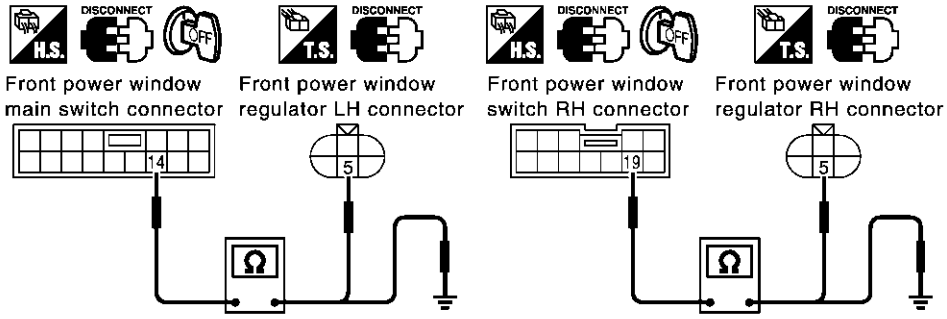

	Terminal		Continuity
LH	14	5	Yes
	14	Ground	No
RH	19	5	Yes
	19	Ground	No

SEL894Y

OK or NG

OK	▶	Replace front power window regulator LH or RH.
NG	▶	Repair harness or connector.

Component Parts and Harness Connector Location

NHEL0106

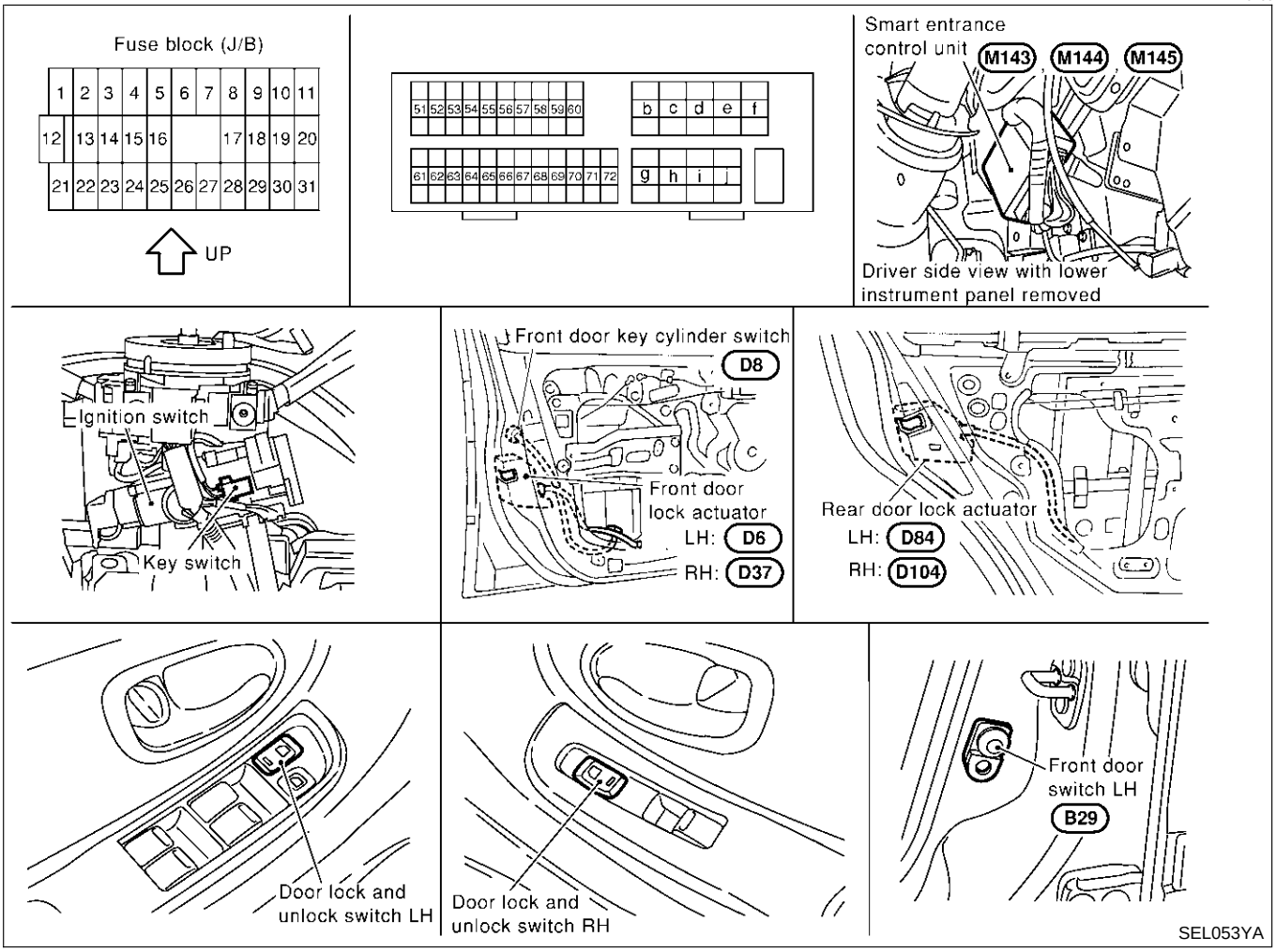

System Description

NHEL0107

OPERATION

NHEL0107S04

- The lock/unlock switches (LH and RH) on door trim can lock and unlock all doors.
- With the door key inserted in the key cylinder on front LH, turning it to “LOCK”, will lock all doors; turning it to “UNLOCK” once unlocks the corresponding door; turning it to “UNLOCK” again within 5 seconds after the first unlock operation unlocks all of the other doors. (Signals from door key cylinder switch)
  Select unlock mode can be changed by CONSULT-II (EL-287).
- If the ignition key is in the ignition key cylinder and one or more of the doors are open, setting the lock/unlock switch to “LOCK” locks the doors once but then immediately unlocks them. Key reminder door mode can be changed by CONSULT-II (EL-287).

Schematic

NHEL0108

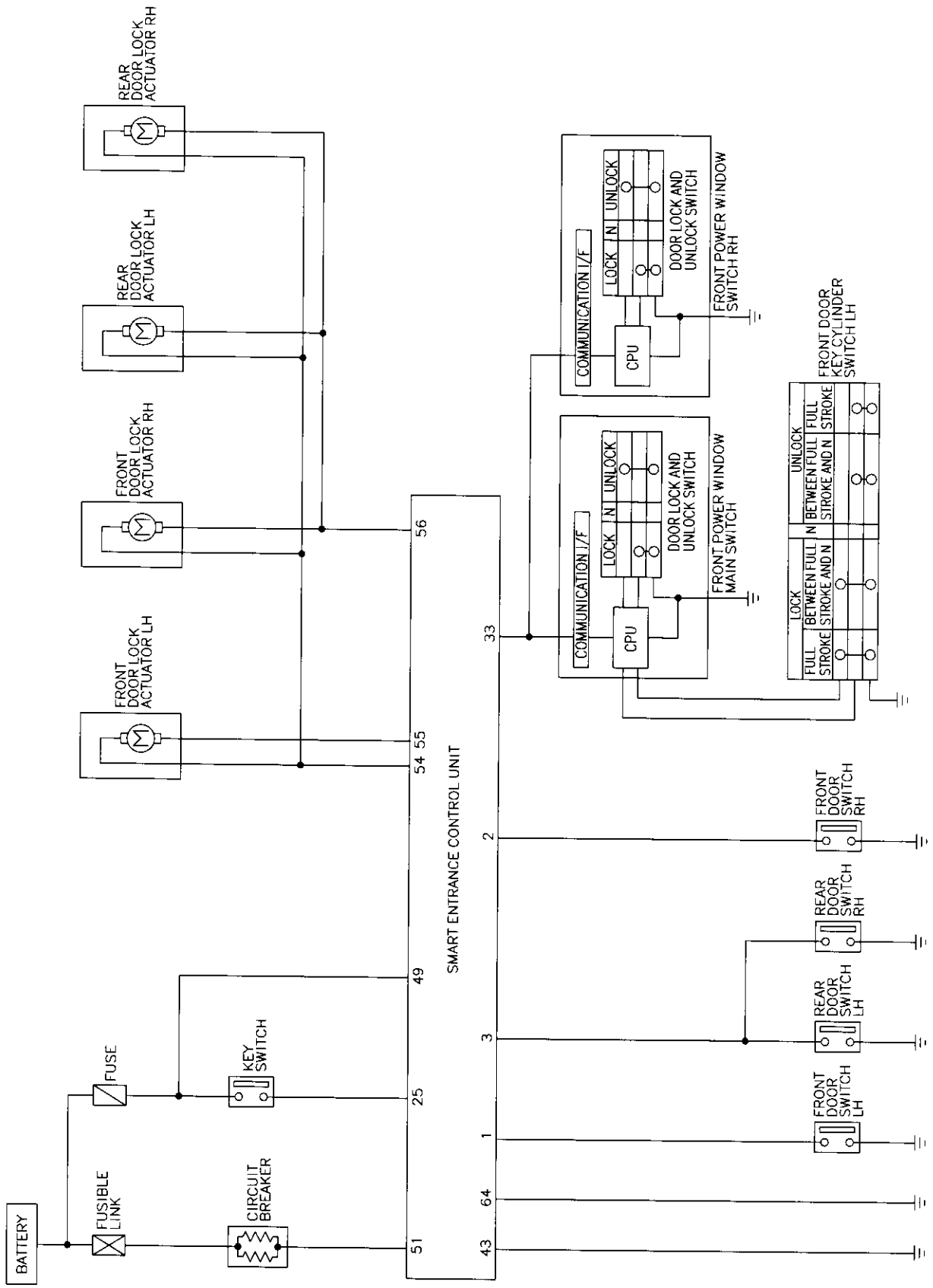

MEL345O

Wiring Diagram — D/LOCK —

NHEL0109

FIG. 1

NHEL0109S01

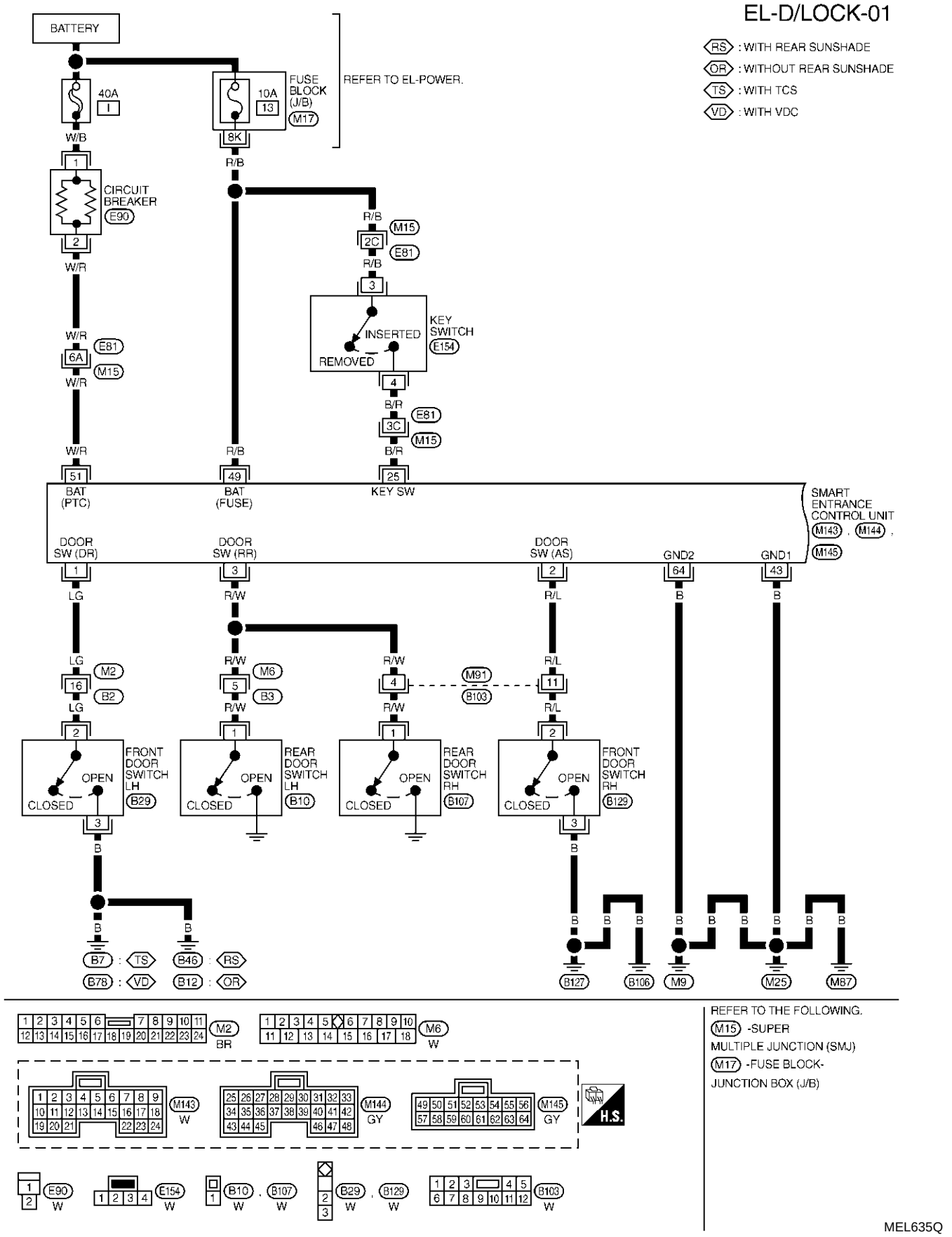

FIG. 2

NHEL0109S02

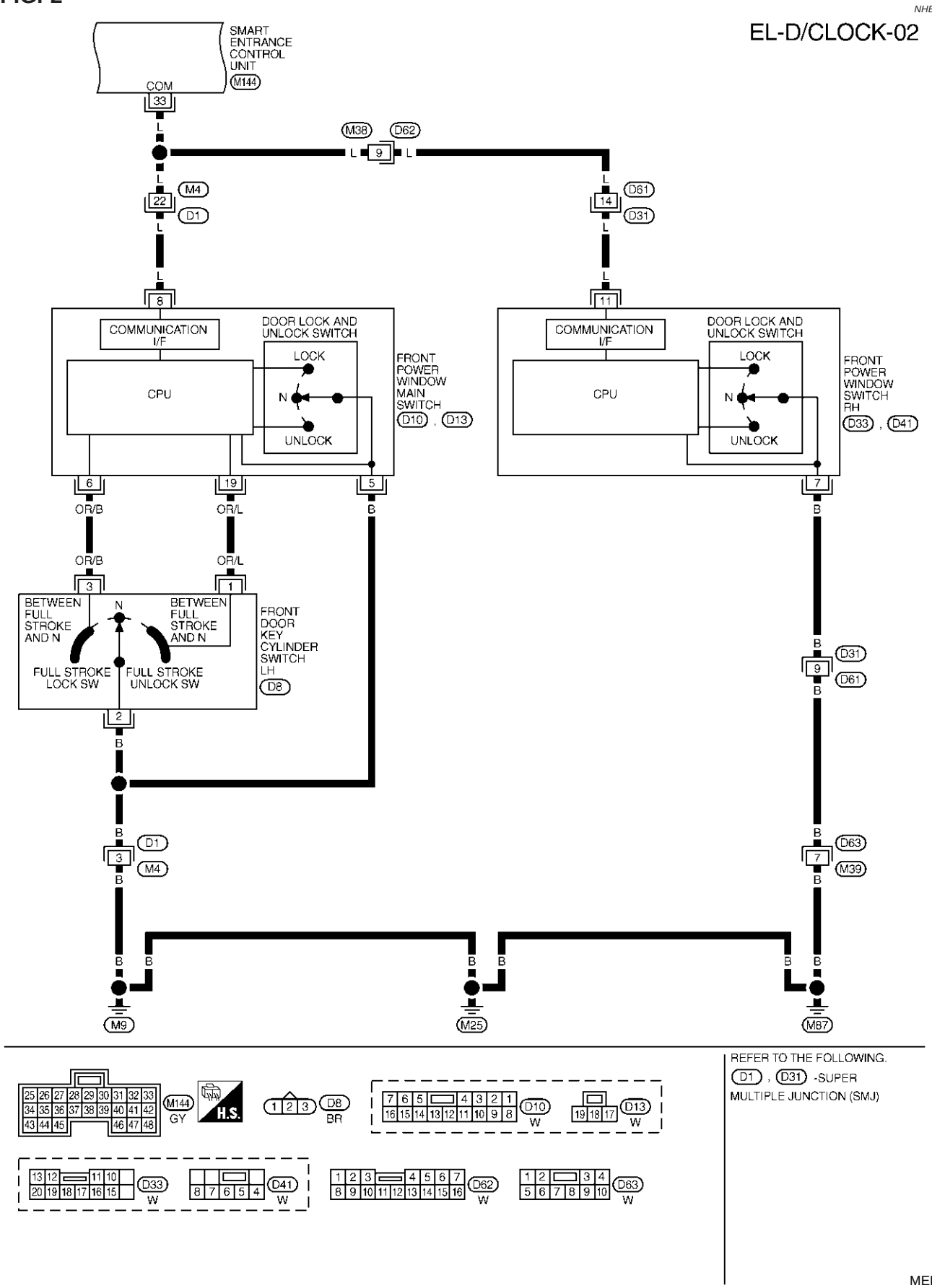

Wiring Diagram — D/LOCK — (Cont'd)

FIG. 3

NHEL0109S03

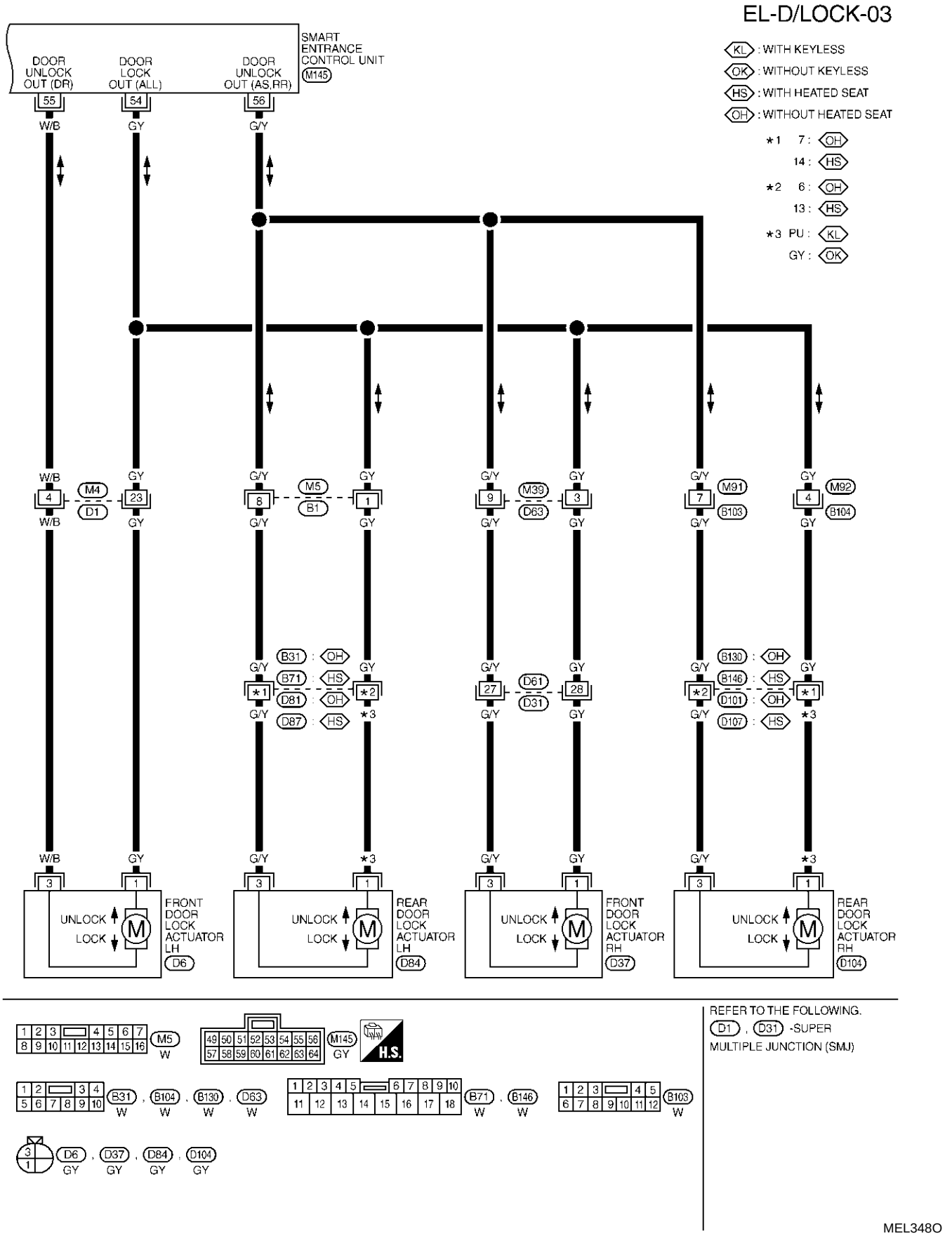

SMART ENTRANCE CONTROL UNIT CONNECTOR

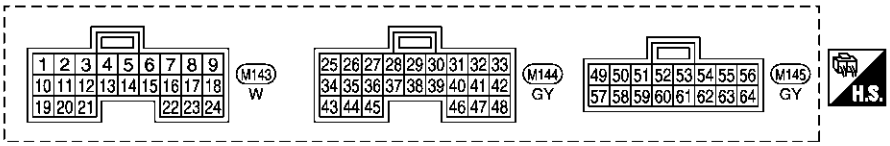

SMART ENTRANCE CONTROL UNIT TERMINALS AND REFERENCE VALUE BETWEEN EACH TERMINAL AND GROUND

TERMINAL	WIRE COLOR	ITEM	CONDITION	DATA (DC)
1	LG	DRIVER DOOR SWITCH	OFF (CLOSED) → ON (OPEN)	12V → 0V
2	R/L	PASSENGER DOOR SWITCH	OFF (CLOSED) → ON (OPEN)	5V → 0V
3	R/W	REAR DOOR SWITCH	OFF (CLOSED) → ON (OPEN)	5V → 0V
25	B/R	IGNITION KEY SWITCH (INSERT)	KEY INSERTED → KEY REMOVED FROM IGN KEY CYLINDER	12V → 0V
33	L	COMMUNICATION INTERFACE	DOOR LOCK & UNLOCK SWITCHES (NEUTRAL → LOCK/UNLOCK)	*1
			FRONT DOOR KEY CYLINDER SWITCH LH (NEUTRAL → LOCK/UNLOCK)	
43	B	GROUND	–	–
49	R/B	POWER SOURCE (FUSE)	–	12V
51	W/R	POWER SOURCE (PTC)	–	12V
54	GY	DOOR LOCK ACTUATORS	DOOR LOCK & UNLOCK SWITCH (FREE → LOCK)	0V → 12V
55	W/B	DRIVER DOOR LOCK ACTUATOR	DOOR LOCK & UNLOCK SWITCH (FREE → UNLOCK)	0V → 12V
56	GY	PASSENGER AND REAR DOORS LOCK ACTUATOR	DOOR LOCK & UNLOCK SWITCH (FREE → UNLOCK)	0V → 12V
64	B	GROUND	–	–

*1: REFER TO "SMART ENTRANCE CONTROL UNIT INSPECTION TABLE" IN "SMART ENTRANCE CONTROL UNIT".

SEL579Y

CONSULT-II Inspection Procedure

=NHEL0238

"DOOR LOCK"

NHEL0238S01

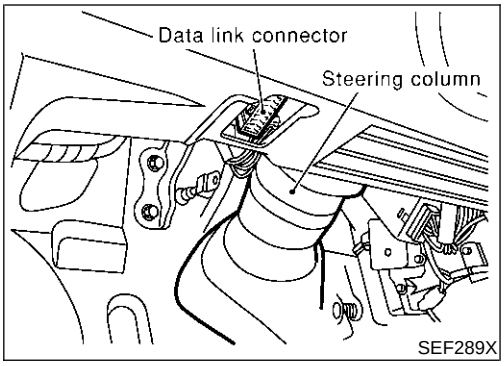

SEF289X

1. Turn ignition switch "OFF".
2. Connect "CONSULT-II" and "CONSULT-II CONVERTER" to the data link connector.

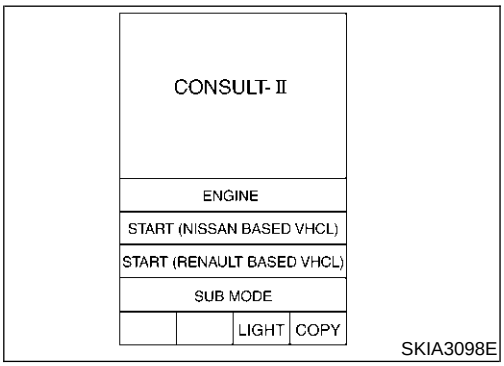

SKIA3098E

3. Turn ignition switch "ON".
4. Touch "START (NISSAN BASED VHCL)".

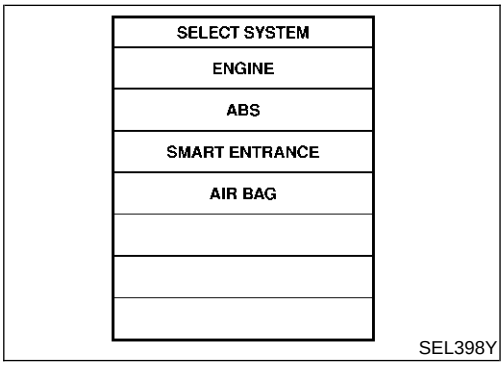

SEL398Y

5. Touch "SMART ENTRANCE".
   If "SMART ENTRANCE" is not indicated, go to GI-42.

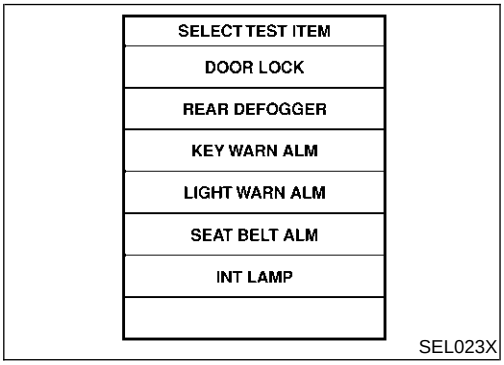

SEL023X

6. Touch "DOOR LOCK".

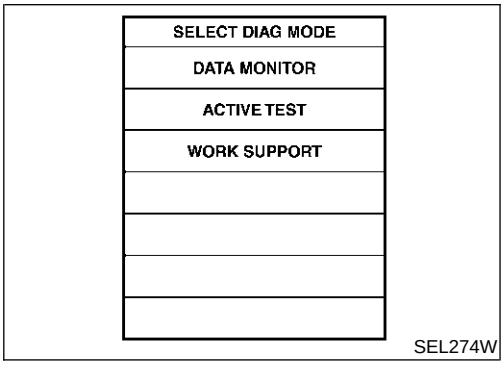

SEL274W

7. Select diagnosis mode.
   "DATA MONITOR", "ACTIVE TEST" and "WORK SUPPORT" are available.

CONSULT-II Application Items

NHEL0239

"DOOR LOCK"

NHEL0239S01

Data Monitor

NHEL0239S0101

Monitored Item	Description
KEY ON SW	Indicates [ON/OFF] condition of key switch.
LOCK SW DR/AS	Indicates [ON/OFF] condition of lock signal from lock/unlock switch LH and RH.
DOOR SW-RR	Indicates [ON/OFF] condition of door switch (Rear).
UNLK SW DR/AS	Indicates [ON/OFF] condition of unlock signal from lock/unlock switch LH and RH.
KEY CYL LK SW	Indicates [ON/OFF] condition of lock signal from key cylinder.
KEY CYL UN SW	Indicates [ON/OFF] condition of unlock signal from key cylinder.
LK BUTTON/SIG	Indicates [ON/OFF] condition of lock signal from remote controller.
UN BUTTON/SIG	Indicates [ON/OFF] condition of unlock signal from remote controller.
IGN ON SW	Indicates [ON/OFF] condition of ignition switch.
DOOR SW-DR	Indicates [ON/OFF] condition of front door switch LH.
DOOR SW-AS	Indicates [ON/OFF] condition of front door switch RH.

Active Test

NHEL0239S0102

Test Item	Description
ALL D/LK MTR	This test is able to check all door lock actuators lock operation. These actuators lock when "ON" on CONSULT-II screen is touched.
DR D/UN MTR	This test is able to check front door lock actuator LH unlock operation. The actuator unlocks when "ON" on CONSULT-II screen is touched.
NON DR D/UN	This test is able to check door lock actuators (except front door lock actuator LH) unlock operation. These actuators unlock when "ON" on CONSULT-II screen is touched.

Work Support

NHEL0239S0103

Work Item	Description
DOOR LOCK-UNLOCK SET	Select unlock mode can be changed in this mode. Selects ON-OFF of select unlock mode.
ANTI-LOCK OUT SET	Key reminder door mode can be changed in this mode. Selects ON-OFF of key reminder door mode.

Trouble Diagnoses

SYMPTOM CHART

=NHEL0193

NHEL0193S01

REFERENCE PAGE (EL-)	289	290	291	292	293	295
SYMPTOM	MAIN POWER SUPPLY AND GROUND CIRCUIT CHECK	DOOR SWITCH CHECK	KEY SWITCH (INSERT) CHECK	DOOR LOCK/UNLOCK SWITCH CHECK	FRONT DOOR KEY CYLINDER SWITCH CHECK	DOOR LOCK ACTUATOR CHECK
Key reminder door system does not operate properly.	X	X	X			X
Specific door lock actuator does not operate.	X					X
Power door lock does not operate with door lock and unlock switch (LH and RH) on door trim.	X			X		
Power door lock does not operate with front door key cylinder operation.	X				X	

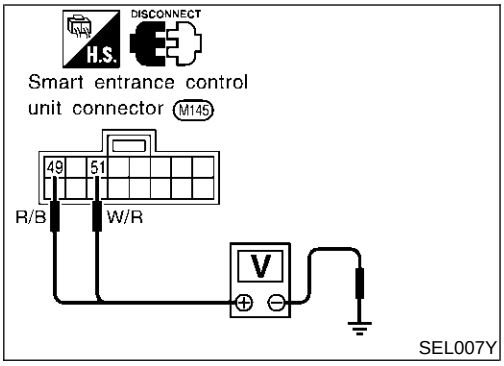

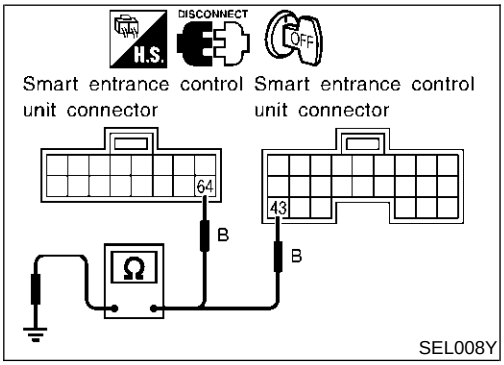

MAIN POWER SUPPLY AND GROUND CIRCUIT CHECK

=NHEL0193S02

Main Power Supply Circuit Check

NHEL0193S0201

Terminals		Ignition switch		
(+)	(–)	OFF	ACC	ON
49	Ground	Battery voltage	Battery voltage	Battery voltage
51				

Ground Circuit Check

NHEL0193S0202

Connector	Terminals	Continuity
M144	43 - Ground	Yes
M145	64 - Ground	Yes

DOOR SWITCH CHECK

=NHEL0193S03

1 CHECK DOOR SWITCHES INPUT SIGNAL

With CONSULT-II

Check door switches ("DOOR SW-DR", "DOOR SW-AS", "DOOR SW-RR") in "DATA MONITOR" mode with CONSULT-II.

DATA MONITOR	
MONITOR	
DOOR SW-RR	OFF
DOOR SW-DR	OFF
DOOR SW-AS	OFF

When any doors are open:
DOOR SW-DR ON
DOOR SW-AS ON
DOOR SW-RR ON

When any doors are closed:
DOOR SW-DR OFF
DOOR SW-AS OFF
DOOR SW-RR OFF

SEL009Y

Without CONSULT-II

Check voltage between smart entrance control unit harness connector M143 terminals 1 (LG), 2 (R/L) or 3 (R/W) and ground.

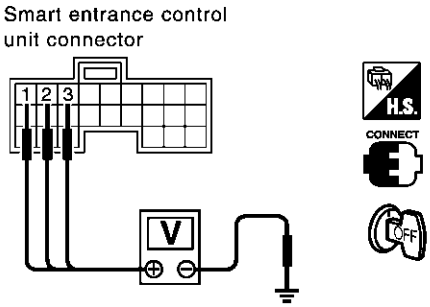

	Terminals (+)	Terminals (−)	Condition	Voltage [V]
Front LH door switch	1	Ground	Open	0
			Closed	Approx. 12
Front RH door switch	2	Ground	Open	0
			Closed	Approx. 5
Rear door switches	3	Ground	Open	0
			Closed	Approx. 5

SEL010YB

Refer to wiring diagram in EL-282.

OK or NG

OK	▶	Door switch is OK.
NG	▶	GO TO 2.

2 CHECK DOOR SWITCHES

1. Disconnect door switch harness connector.
2. Check continuity between door switch connector terminals.

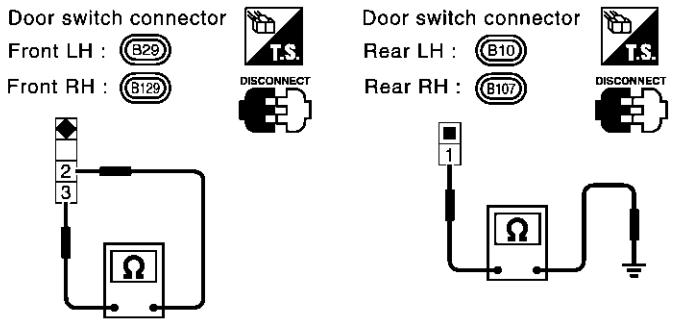

	Terminals	Condition	Continuity
Front door switches	2 - 3	Closed	No
		Open	Yes
Rear door switches	1 - Ground	Closed	No
		Open	Yes

SEL900Y

OK or NG

OK	▶	**Check the following.** ● Door switch ground circuit or door switch ground condition ● Harness for open or short between smart entrance control unit and door switch
NG	▶	Replace door switch.

KEY SWITCH (INSERT) CHECK

=NHEL0193S04

1	CHECK KEY SWITCH INPUT SIGNAL

With CONSULT-II

Check key switch ("KEY ON SW") in "DATA MONITOR" mode with CONSULT-II.

DATA MONITOR	
MONITOR	
KEY ON SW	ON

When key is inserted to ignition key cylinder:

KEY ON SW ON

When key is removed from ignition key cylinder:

KEY ON SW OFF

SEL315W

Without CONSULT-II

Check voltage between smart entrance control unit harness connector M144 terminal 25 (B/R) and ground.

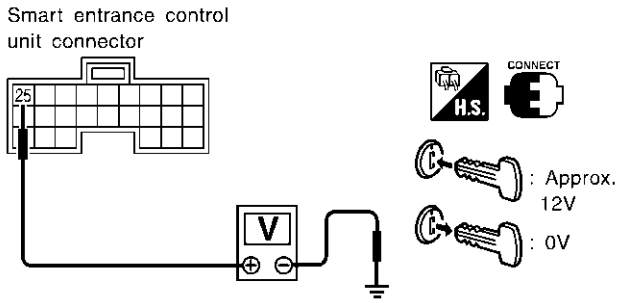

Voltage [V]:

Condition of key switch: Key is inserted.

Approx. 12

Condition of key switch: Key is removed.

0

SEL011Y

Refer to wiring diagram in EL-282.

OK or NG

OK	▶	Key switch is OK.
NG	▶	GO TO 2.

2	CHECK KEY SWITCH (INSERT)

Check continuity between key switch harness connector E154 terminals 3 and 4.

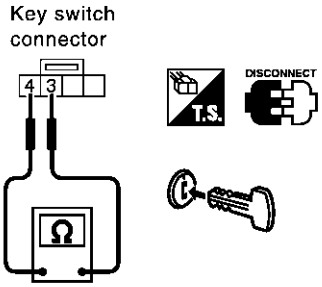

Continuity:

Condition of key switch: Key is inserted.

Yes

Condition of key switch: Key is removed.

No

SEL549YA

OK or NG

OK	▶	**Check the following.** ● 10A fuse [No. 13, located in fuse block (J/B)] ● Harness for open or short between key switch and fuse ● Harness for open or short between smart entrance control unit and key switch
NG	▶	Replace key switch.

DOOR LOCK/UNLOCK SWITCH CHECK

=NHEL0193S05

1	CHECK DOOR LOCK/UNLOCK SWITCH INPUT SIGNAL

With CONSULT-II

Check door lock/unlock switch ("LOCK SW DR/AS"/"UNLK SW DR/AS") in "DATA MONITOR" mode with CONSULT-II.

DATA MONITOR	
MONITOR	
LOCK SW DR/AS	OFF
UNLK SW DR/AS	OFF

When lock/unlock switch is turned to LOCK:
LOCK SW DR/AS ON

When lock/unlock switch is turned to UNLOCK:
UNLK SW DR/AS ON

SEL341W

Without CONSULT-II

1. Remove key from ignition switch.
2. Check the signal between smart entrance control unit harness connector M144 terminal 33 (L) and ground with oscilloscope when door lock/unlock switch is turned "LOCK" or "UNLOCK".
3. Make sure signals which are shown in the figure below can be detected during 10 sec. just after door lock/unlock switch is turned "LOCK" or "UNLOCK".

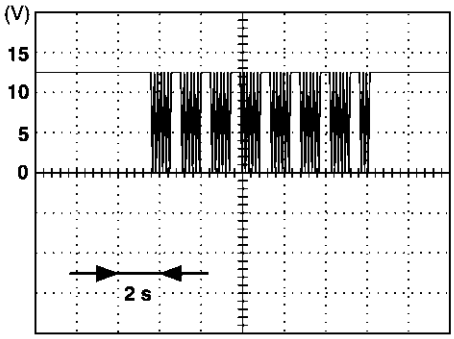

Voltage:
12V → 9V (10 sec.) measurement by analog circuit tester.

SEL396Y

Refer to wiring diagram in EL-283.

OK or NG

OK	▶	Door lock/unlock switch is OK.
NG	▶	**Check the following.** ● Ground circuit for each front power window switch ● Harness for open or short between each front power window switch and smart entrance control unit connector If above systems are normal, replace the front power window switch.

FRONT DOOR KEY CYLINDER SWITCH CHECK

=NHEL0193S06

1	CHECK DOOR KEY CYLINDER SWITCH INPUT SIGNAL (LOCK/UNLOCK SIGNAL)

With CONSULT-II

Check front door key cylinder switch ("KEY CYL LK-SW"/"KEY CYL UN-SW") in "DATA MONITOR" mode with CONSULT-II.

DATA MONITOR	
MONITOR	
KEY CYL LK-SW	OFF
KEY CYL UN-SW	OFF

When key inserted in front key cylinder is turned to LOCK:

KEY CYL LK-SW ON

When key inserted in front key cylinder is turned to UNLOCK:

KEY CYL UN-SW ON

SEL342W

Without CONSULT-II

1. Check the signal between smart entrance control unit harness connector M144 terminal 33 (L) and ground with oscilloscope when key inserted in front key cylinder is turned "LOCK" or "UNLOCK".
2. Make sure signals which are shown in the figure below can be detected during 10 sec. just after key is turned "LOCK" or "UNLOCK".

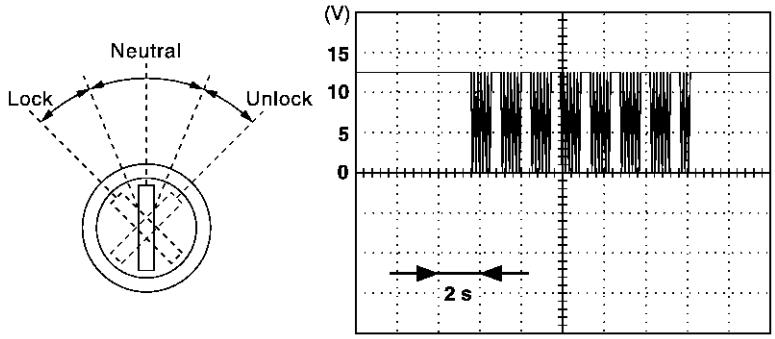

Voltage:
12V → 9V (10 sec.) measurement by analog circuit tester.

SEL397Y

Refer to wiring diagram in EL-283.

OK or NG

OK	▶	Door key cylinder switch is OK.
NG	▶	GO TO 2.

2	CHECK DOOR KEY CYLINDER SWITCH

1. Disconnect door key cylinder switch harness connector.
2. Check continuity between door key cylinder switch terminals.

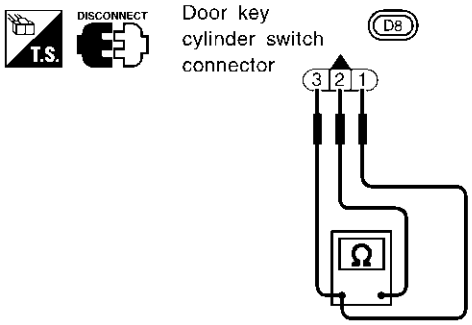

① : Door unlock switch terminal
② : Ground terminal
③ : Door lock switch terminal

Terminals	Key position	Continuity
③ - ②	Neutral/Unlock	No
	Lock	Yes
① - ②	Neutral/Lock	No
	Unlock	Yes

SEL034X

OK or NG

OK	▶	**Check the following.** ● Door key cylinder switch ground circuit ● Harness for open or short between front power window main switch and door key cylinder switch If above systems are normal, replace the front power window main switch.
NG	▶	Replace door key cylinder switch.

DOOR LOCK ACTUATOR CHECK

=NHEL0193S08

1	CHECK DOOR LOCK ACTUATOR OPERATION

Ⓔ **With CONSULT-II**

1. Select "ACTIVE TEST" in "DOOR LOCK" with CONSULT-II.
2. Select "ALL D/LK MTR" and touch "ON".
3. Then, select "DR D/UN MTR" and touch "ON".
4. Select "NON DR D/UN" and touch "ON".

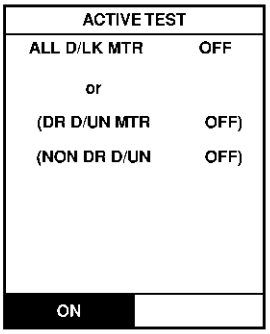

Door lock motor should operate.

SEL343W

NOTE:
If CONSULT-II is not available, skip this procedure and go to the next step.

OK or NG

OK	▶	Door lock actuator is OK.
NG	▶	GO TO 2.

2	CHECK DOOR LOCK ACTUATOR CIRCUIT

- Front door lock actuator LH
  Check voltage between smart entrance control unit harness connector M145 terminal 54 (GY), 55 (W/B) and ground.

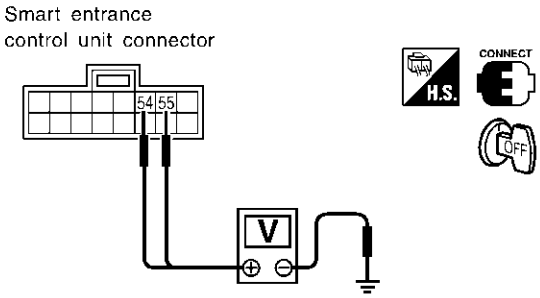

Door lock/unlock switch condition	Terminal No. (+)	Terminal No. (–)	Voltage V
Lock	54	Ground	Approx. 12
Unlock	55	Ground	

SEL014Y

- Front door lock actuator RH and rear
  Check voltage between smart entrance control unit harness connector M145 terminal 54 (GY), 56 (G/Y) and ground.

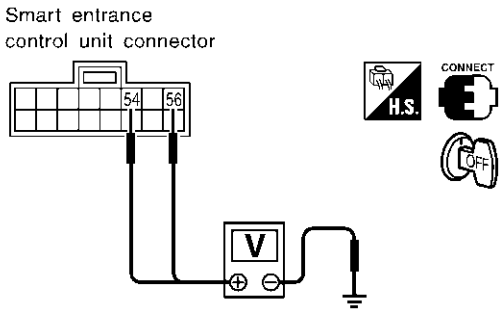

Door lock/unlock switch condition	Terminal No. (+)	Terminal No. (–)	Voltage V
Lock	54	Ground	Approx. 12
Unlock	56	Ground	

SEL015Y

Refer to wiring diagram in EL-284.

OK or NG

OK	▶	GO TO 3.
NG	▶	Replace smart entrance control unit. (Before replacing the control unit, perform "DOOR LOCK/UNLOCK SWITCH CHECK".)

3	CHECK DOOR LOCK ACTUATOR

1. Disconnect door lock actuator harness connector.
2. Apply 12V direct current to door lock actuator and check operation.

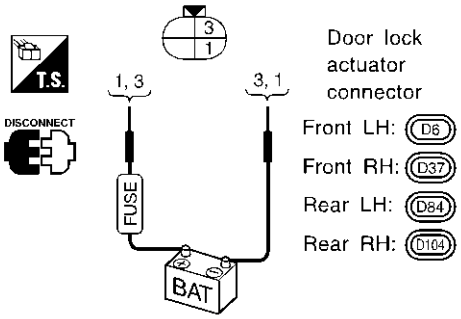

Door lock actuator operation:
Terminals between (+): 1 and (–): 3
Unlocked → Locked
Terminals between (+): 3 and (–): 1
Locked → Unlocked

SEL222W

OK or NG

OK	▶	Check harness for open or short between smart entrance control unit connector and door lock actuator.
NG	▶	Replace door lock actuator.

Component Parts and Harness Connector Location

NHEL0111

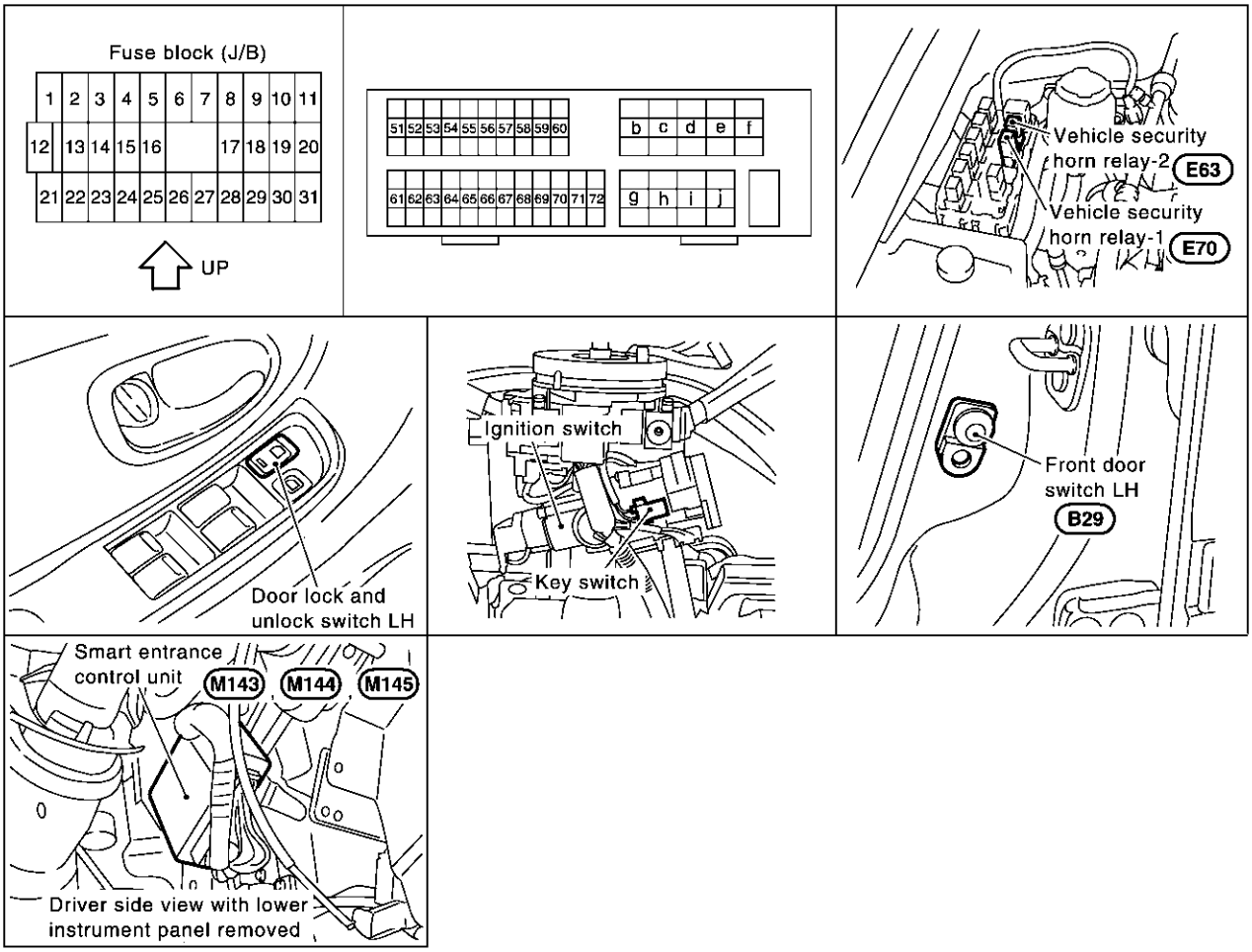

SEL054YA

System Description

NHEL0194

NHEL0194S01

INPUTS

Power is supplied at all times

- to smart entrance control unit terminal 49 and
- to key switch terminal 3
- through 10A fuse [No. 13, located in the fuse block (J/B)].

When the key switch is ON (ignition key is inserted in key cylinder), power is supplied

- through key switch terminal 4
- to smart entrance control unit terminal 25.

When the front door switch LH is ON (door is OPEN), ground is supplied

- to smart entrance control unit terminal 1
- through front door switch LH terminal 2
- to front door switch LH terminal 3
- through body grounds B7 (with TCS) or B78 (with VDC) and B12 (without rear sunshade) or B46 (with rear sunshade).

When the front door switch RH is ON (door is OPEN), ground is supplied

- to smart entrance control unit terminal 2
- through front door switch RH terminal 2, and
- to front door switch RH terminal 3
- through body grounds B127 and B106.

When the rear door switches are ON (door is OPEN), ground is supplied

- to smart entrance control unit terminal 3
- through each rear door switches terminal 1
- to rear door switchs case grounds.

When door lock/unlock switch of front power window main switch is LOCK/UNLOCK, ground is supplied

- to smart entrance control unit terminal 33
- through front power window main switch terminals 8 and 5, and
- through body grounds M9, M25 and M87.

Keyfob signal is inputted to smart entrance control unit (The antenna of the system is combined with smart entrance control unit).
The remote keyless entry system controls operation of the

- power door lock
- auto door lock
- trunk lid opener
- interior lamp
- panic alarm
- hazard and horn reminder
- power window opener

OPERATED PROCEDURE

NHEL0194S02

Power Door Lock Operation

NHEL0194S0201

Smart entrance control unit receives a LOCK signal from keyfob. Smart entrance control unit locks all doors with input of LOCK signal from keyfob.
When an UNLOCK signal is sent from keyfob once, driver's door will be unlocked.
Then, if an UNLOCK signal is sent from keyfob again within 5 seconds, all other door will be unlocked.
Select unlock mode can be changed by CONSULT-II (EL-308).

Auto Door Lock Operation

NHEL0194S0206

Auto lock function signal is sent for operation when any of the following signals are not sent within 5 minutes after the unlock signal is sent from the keyfob:

- when door switch is turned ON for open.
- when the ignition switch is turned ON.
- when the lock signal is sent from the keyfob.

Auto door lock mode can be changed by CONSULT-II (EL-308).

Hazard and Horn Reminder

NHEL0194S0202

Power is supplied at all times

- to vehicle security horn relay-1 terminals 1 and 3, and
- to vehicle security horn relay-2 terminal 1
- through 10A fuse (No. 61, located in the fuse and fusible link box), and
- to horn relay terminal 2
- through 10A fuse (No. 57, located in the fuse and fusible link box)

When smart entrance control unit receives LOCK or UNLOCK signal from keyfob with all doors closed, ground is supplied

- to vehicle security horn relay-2 terminal 2
- through smart entrance control unit terminal 42

Vehicle security horn relay-2 is then energized

- to horn relay terminal 1, and
- to vehicle security horn relay-1 terminal 2
- through vehicle security horn relay-2 terminals 5 and 3, and
- through body ground E11, E22 and E53
- to smart entrance control unit terminals 47 and 48 from hazard warning lamp system.

Vehicle security horn relay-1 and horn relay are now energized, and hazard warning lamp flashes and horn sounds as a reminder.
The hazard and horn reminder has six steps.

Operating function of hazard and horn reminder

	Lock		Unlock	
	Hazard warning lamp flash	Horn sound	Hazard warning lamp flash	Horn sound
C MODE	Twice	Once	Once	—
S MODE	Twice	—	—	—
MODE 3	—	—	—	—
MODE 4	Twice	—	Once	—
MODE 5	Twice	Once	—	—
MODE 6	—	Once	Once	—

How to change hazard and horn reminder mode

Ⓔ With CONSULT-II

Hazard and horn reminder can be changed by CONSULT-II (EL-308).

Ⓚ Without CONSULT-II

When LOCK and UNLOCK signals are sent from the keyfob for more than 2 seconds at the same time, the hazard and horn reminder mode is changed and hazard warning lamp flashes and horn sounds as follows:

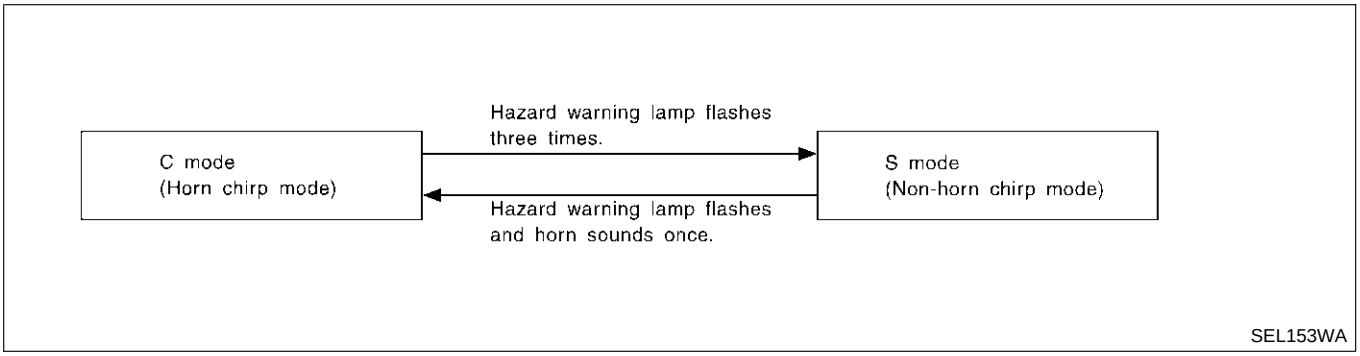

NOTE:

Reminder mode setting cannot be changed without CONSULT-II for MODES 3,4, 5, and 6. However, C and S MODES can be changed without CONSULT-II.

Interior Lamp Operation

NHEL0194S0203

When the following input signals are both supplied:

- door switch CLOSED (when all the doors are closed);
- driver's door LOCKED;

remote keyless entry system turns on interior lamp and key hole illumination (for 30 seconds) with input of UNLOCK signal from keyfob.

For detailed description, refer to "INTERIOR, STEP, SPOT, VANITY MIRROR AND TRUNK ROOM LAMPS" (EL-100).

Panic Alarm Operation

NHEL0194S0204

When key switch is OFF (when ignition key is not inserted in key cylinder), remote keyless entry system turns on and off horn and headlamp intermittently with input of PANIC ALARM signal from keyfob.

The alarm automatically turns off after 25 seconds or when smart entrance control unit receives any signal from keyfob.

For detailed description, refer to "VEHICLE SECURITY SYSTEM" (EL-330).

The panic alarm button's pressing time on keyfob can be changed by CONSULT-II (EL-308).

Trunk Lid Opener Operation

NHEL0194S0205

Power is supplied at all times

- through 15A fuse [No. 3, located in the fuse block (J/B)]
- to trunk lid opener actuator terminal 2.

When a TRUNK OPEN signal is sent with key OFF (ignition key removed from key cylinder) from keyfob, ground is supplied

- to trunk lid opener actuator terminal 1
- through smart entrance control unit terminal 63.

Then power and ground are supplied, trunk lid opener actuator opens trunk lid.
The trunk lid opener button's pressing time on keyfob can be changed by CONSULT-II (EL-308).

Power Window Opener Operation

NHEL0194S0207

The front power windows open when the unlock button on keyfob is activated and kept pressed for more than 3 seconds with the ignition key OFF. The windows keep opening if the unlock button is continuously pressed. The power window opening stops when the following operations are carried out:

- When the unlock button is kept pressed more than 15 seconds.
- When the ignition switch is turned ON while the power window opening is operated.
- When the unlock button is released.

The unlock button's pressing time can be changed by CONSULT-II (EL-308).
Door Lock/Unlock and front power window down signal is supplied

- through smart entrance control unit terminal 33
- to front power window main switch terminal 8 and
- to front power window switch RH terminal 11.

Schematic

NHEL0171

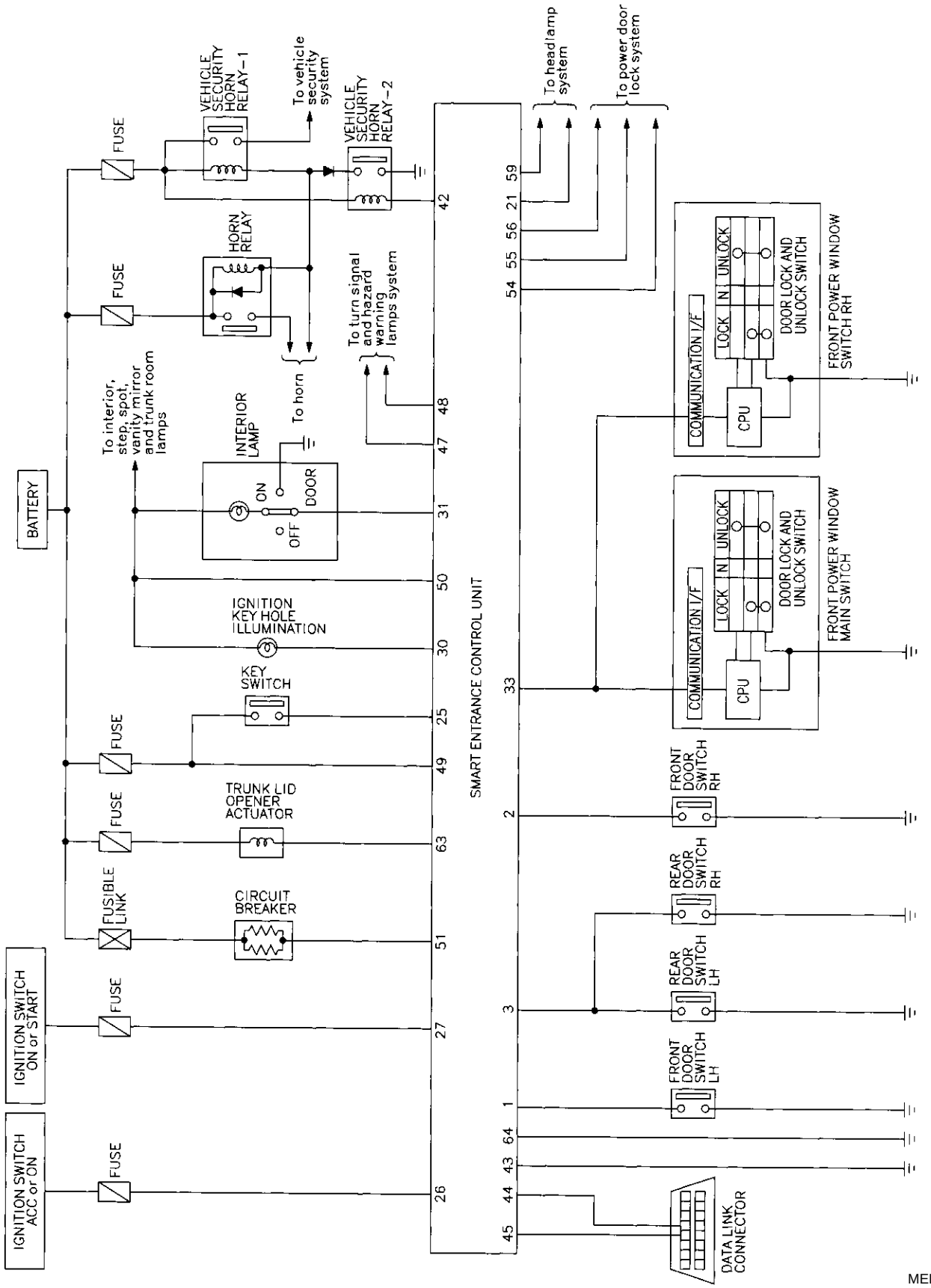

MEL349O

Wiring Diagram — KEYLES —

NHEL0114

FIG. 1

NHEL0114S01

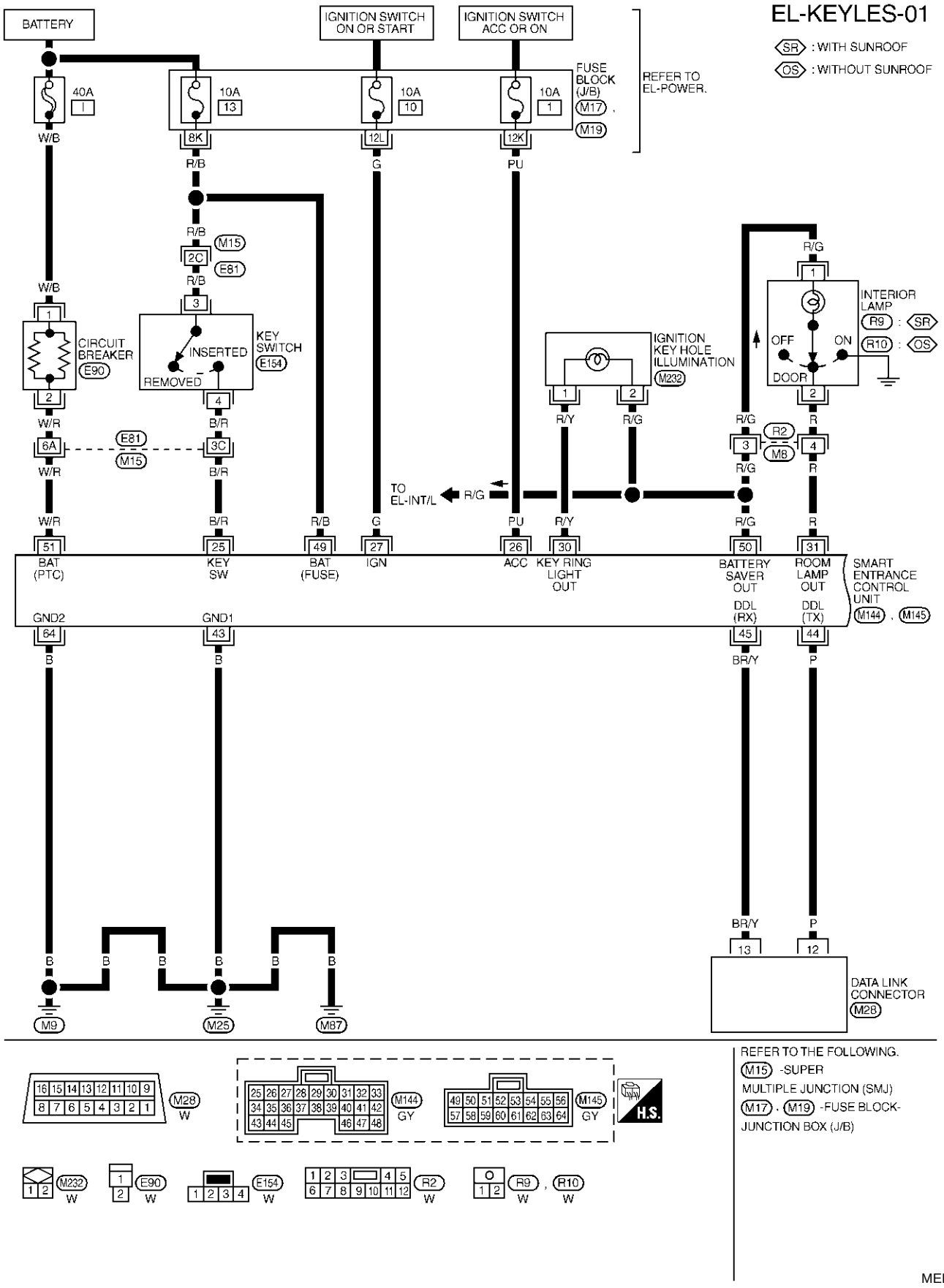

FIG. 2

NHEL0114S02

EL-KEYLES-02

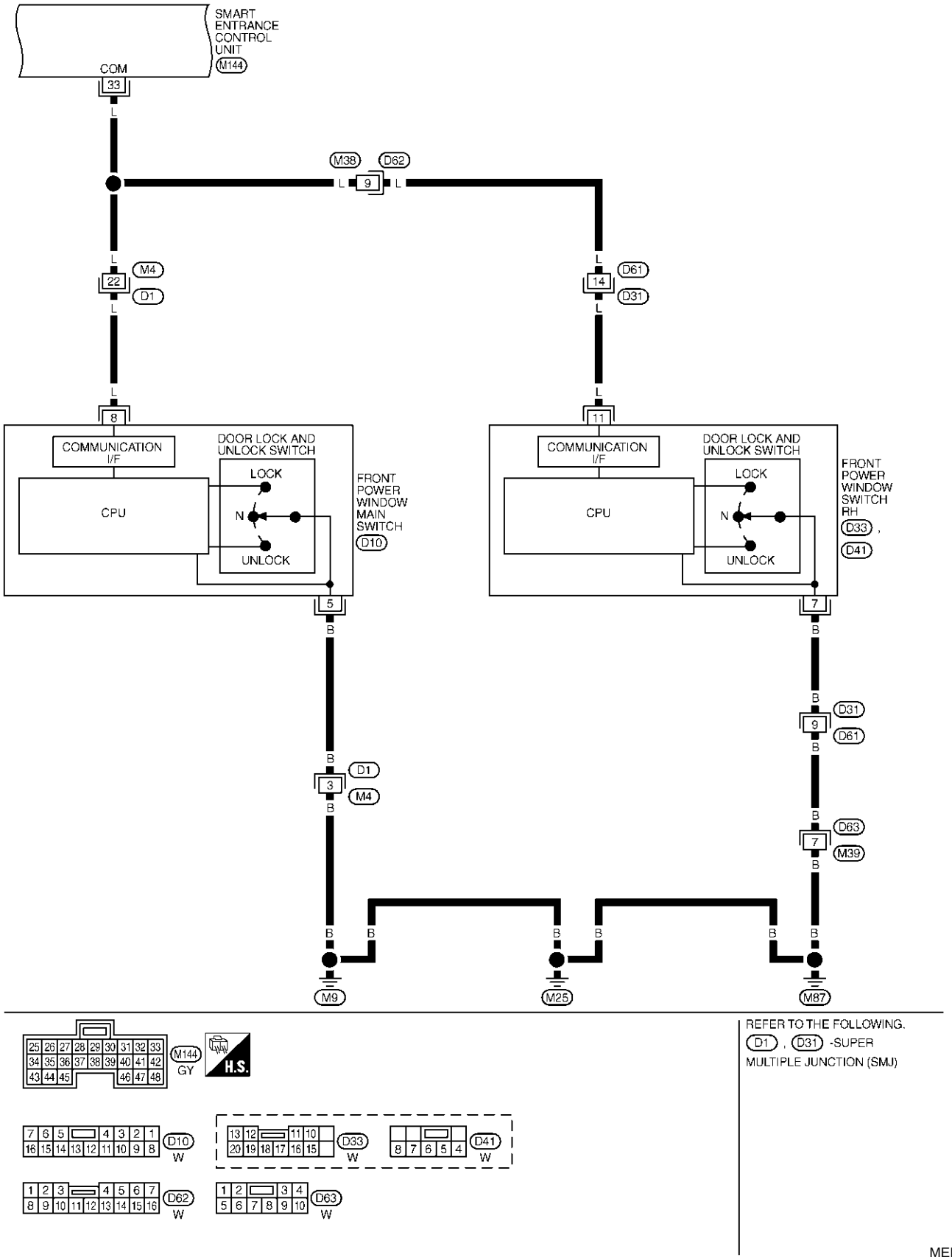

FIG. 3

NHEL0114S05

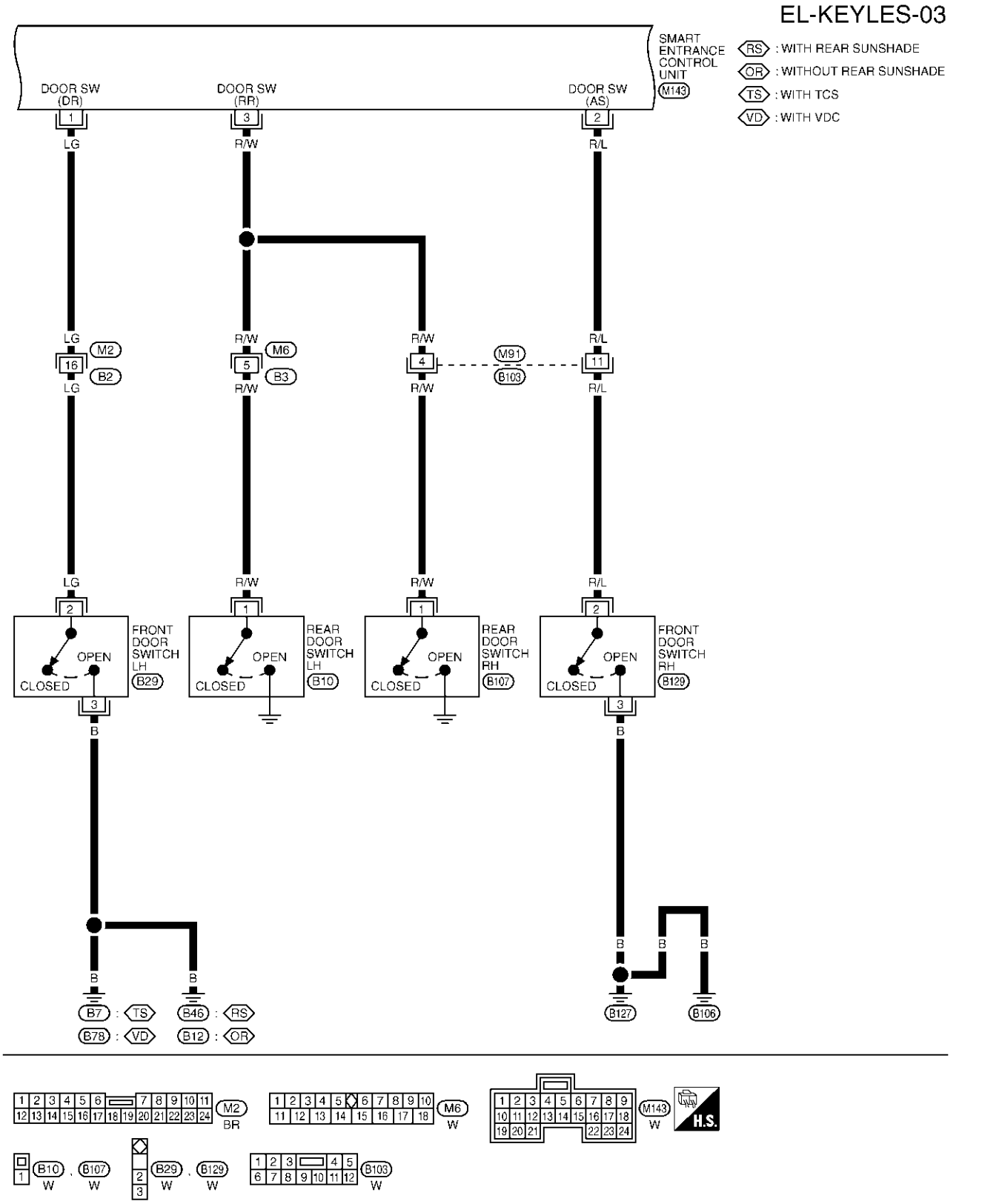

MEL637Q

FIG. 4

NHEL0114S06

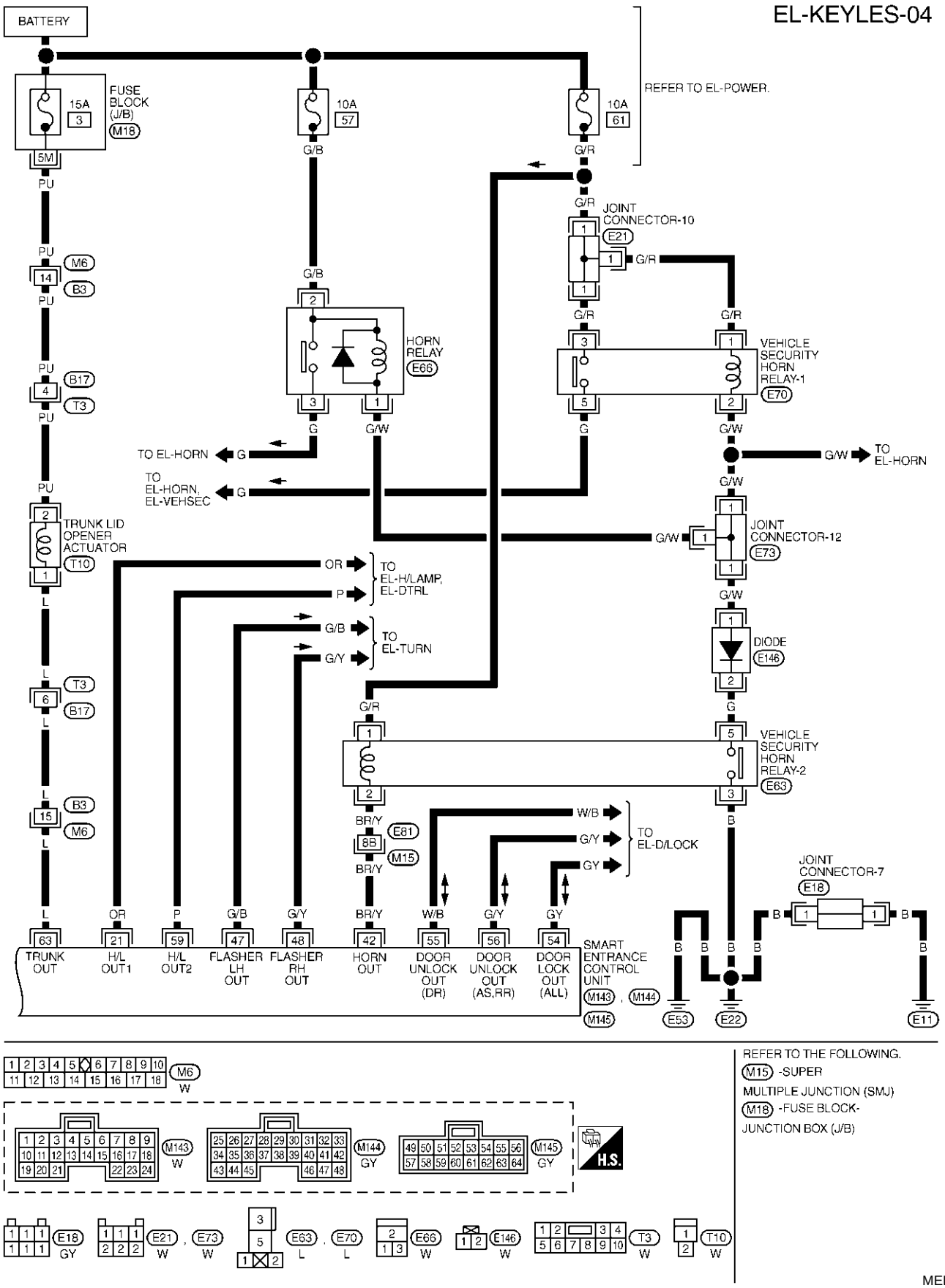

SMART ENTRANCE CONTROL UNIT CONNECTOR

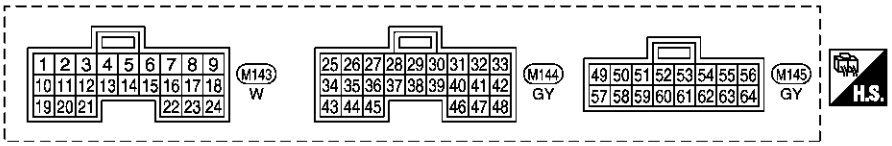

SMART ENTRANCE CONTROL UNIT TERMINALS AND REFERENCE VALUE BETWEEN EACH TERMINAL AND GROUND

TERMINAL	WIRE COLOR	ITEM	CONDITION			DATA (DC)
1	LG	DRIVER DOOR SWITCH	OFF (CLOSED) → ON (OPEN)			12V → 0V
2	R/L	PASSENGER DOOR SWITCH	OFF (CLOSED) → ON (OPEN)			5V → 0V
3	R/W	REAR DOOR SWITCH	OFF (CLOSED) → ON (OPEN)			5V → 0V
21	OR	HEADLAMP LH RELAY	IGNITION SWITCH (WITH LIGHTING SWITCH 2ND)	ON OR START → OFF	MORE THAN 5 MINUTES	12V
					WITHIN 5 MINUTES	0V
				ON OR START		0V
			HEADLAMPS ILLUMINATE BY AUTO LIGHT CONTROL			0V
25	B/R	IGNITION KEY SWITCH (INSERT)	KEY INSERTED → KEY REMOVED FROM IGN KEY CYLINDER			12V → 0V
26	PU	IGNITION SWITCH (ACC)	"ACC" POSITION			12V
27	G	IGNITION SWITCH (ON)	IGNITION SWITCH IS IN "ON" POSITION			12V
30	R/Y	IGNITION KEYHOLE ILLUMINATION	WHEN DOORS ARE UNLOCKED USING KEYFOB (OFF → UNLOCK)			12V → 0V
31	R	INTERIOR LAMP	WHEN DOORS ARE LOCKED USING KEYFOB (UNLOCK → LOCK WITH LAMP SWITCH IN "DOOR" POSITION)			0V → 12V
33	L	COMMUNICATION INTERFACE	DOOR LOCK & UNLOCK SWITCHES (NEUTRAL → LOCK/UNLOCK)			*1
			FRONT DOOR KEY CYLINDER SWITCH LH (NEUTRAL → LOCK/UNLOCK)			
42	BR/Y	VEHICLE SECURITY HORN RELAY	WHEN PANIC ALARM IS OPERATED USING KEYFOB (ON → OFF)			12V → 0V
43	B	GROUND	–			–
47	G/B	LH TURN SIGNAL LAMP	WHEN DOOR LOCK OR UNLOCK IS OPERATED USING KEYFOB (ON → OFF)			12V → 0V
48	G/Y	RH TURN SIGNAL LAMP	WHEN DOOR LOCK OR UNLOCK IS OPERATED USING KEYFOB (ON → OFF)			12V → 0V
49	R/B	POWER SOURCE (FUSE)	–			12V
50	R/G	BATTERY SAVER (INTERIOR LAMP)	BATTERY SAVER DOSE OPERATE → DOES NOT OPERATE (ON → OFF)			12V → 0V
51	W/R	POWER SOURCE (PTC)	–			12V
54	GY	DOOR LOCK ACTUATORS	DOOR LOCK & UNLOCK SWITCH (FREE → LOCK)			0V → 12V
55	W/B	DRIVER DOOR LOCK ACTUATORS	DOOR LOCK & UNLOCK SWITCH (FREE → UNLOCK)			0V → 12V
56	G/Y	PASSENGER AND REAR DOORS LOCK ACTUATOR	DOOR LOCK & UNLOCK SWITCH (FREE → UNLOCK)			0V → 12V
59	P	HEADLAMP RH RELAY	IGNITION SWITCH (WITH LIGHTING SWITCH 2ND)	ON OR START → OFF	MORE THAN 5 MINUTES	12V
					WITHIN 5 MINUTES	0V
				ON OR START		0V
			HEADLAMPS ILLUMINATE BY AUTO LIGHT CONTROL (OPERATE → NOT OPERATE)			LESS THAN 1V → 12V
63	L	TRUNK LID OPENER ACTUATOR	WHEN TRUNK LID OPENER ACTUATOR IS OPERATED USING KEYFOB (ON → OFF)			0V → 12V
64	B	GROUND	–			–

*1: REFER TO "SMART ENTRANCE CONTROL UNIT INSPECTION TABLE" IN "SMART ENTRANCE CONTROL UNIT".

SEL580YA

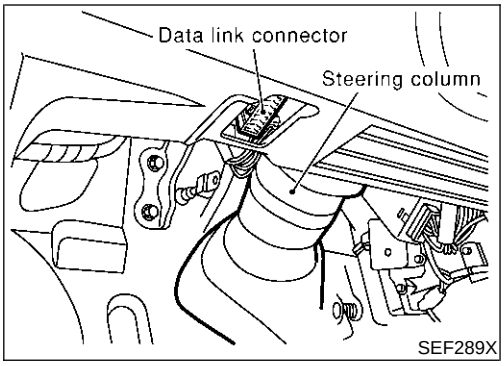

SEF289X

CONSULT-II Inspection Procedure

NHEL0241

"MULTI REMOTE ENT"

NHEL0241S01

1. Turn ignition switch "OFF".
2. Connect "CONSULT-II" and "CONSULT-II CONVERTER" to the data link connector.

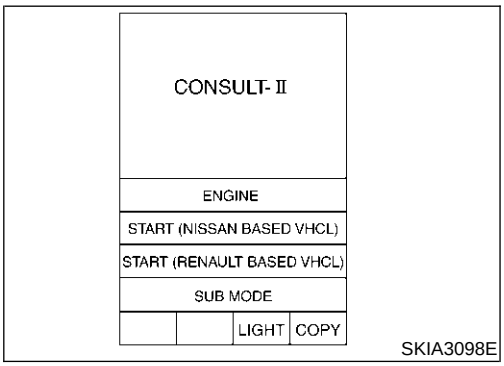

SKIA3098E

3. Turn ignition switch "ON".
4. Touch "START (NISSAN BASED VHCL)".

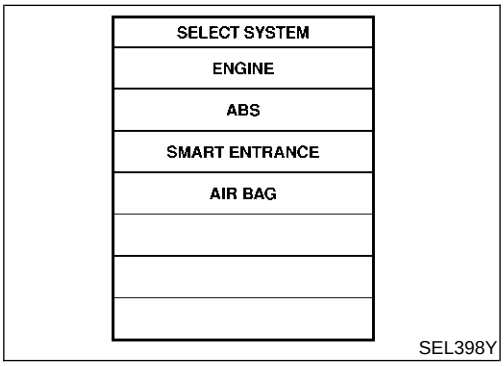

SEL398Y

5. Touch "SMART ENTRANCE".
   If "SMART ENTRANCE" is not indicated, go to GI-42.

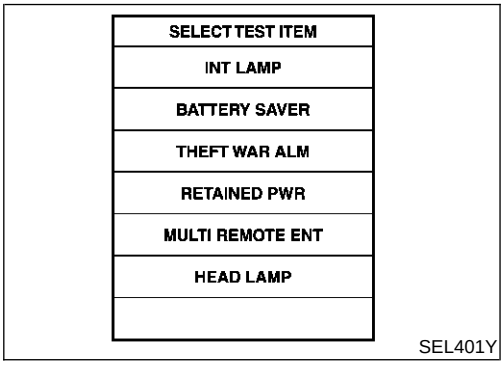

SEL401Y

6. Touch "MULTI REMOTE ENT".

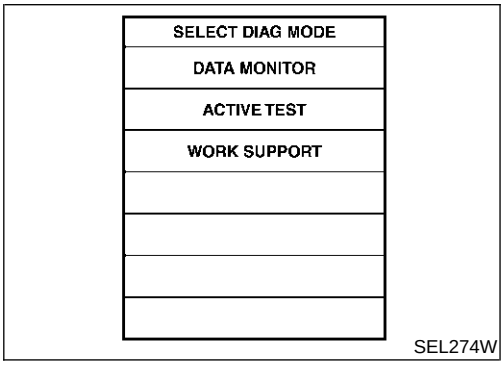

SEL274W

7. Select diagnosis mode.
   "DATA MONITOR", "ACTIVE TEST" and "WORK SUPPORT" are available.

CONSULT-II Application Items

NHEL0242

"MULTI REMOTE ENT"

NHEL0242S01

Data Monitor

NHEL0242S0101

Monitored Item	Description
IGN ON SW	Indicates [ON/OFF] condition of ignition switch in ON position.
ACC ON SW	Indicates [ON/OFF] condition of ignition switch in ACC position.
DOOR SW-RR	Indicates [ON/OFF] condition of rear door switch.
KEY ON SW	Indicates [ON/OFF] condition of key switch.
DOOR SW-DR	Indicates [ON/OFF] condition of front door switch LH.
DOOR SW-AS	Indicates [ON/OFF] condition of door switch RH.
LOCK SW DR/AS	Indicates [ON/OFF] condition of lock signal from lock/unlock switch LH and RH.
UNLK SW DR/AS	Indicates [ON/OFF] condition of unlock signal from lock/unlock switch LH and RH.
KEY CYL LK-SW	Indicates [ON/OFF] condition of lock signal from key cylinder switch.
LK BUTTON/SIG	Indicates [ON/OFF] condition of lock signal from keyfob.
UN BUTTON/SIG	Indicates [ON/OFF] condition of unlock signal from keyfob.
TRUNK BTN/SIG	Indicates [ON/OFF] condition of trunk open signal from keyfob.
PANIC BTN	Indicates [ON/OFF] condition of panic signal from keyfob.
UN BUTTON ON	Indicates [ON/OFF] condition of unlock switch form keyfob.
LK/UN BTN ON	Indicates [ON/OFF] condition of lock/unlock signal at the same time from keyfob.

Active Test

NHEL0242S0102

Test Item	Description
INT/IGN ILLUM	This test is able to check interior lamp and ignition key hole illumination operation. The interior lamp and ignition key hole illumination are turned on when "ON" on CONSULT-II screen is touched.
HAZARD	This test is able to check hazard reminder operation. The hazard lamp turns on when "ON" on CONSULT-II screen is touched.
TRUNK OUTPUT	This test is able to check trunk lid opener actuator operation. The trunk is unlocked when "ON" on CONSULT-II screen is touched.
HORN	This test is able to check panic alarm and horn reminder operations. The alarm activate for 0.5 seconds after "ON" on CONSULT-II screen is touched.
HEAD LAMP	This test is able to check headlamps panic alarm operation. The headlamp illuminates for 0.5 seconds after "ON" on CONSULT-II screen is touched.
PW REMOTE DOWN SET	This test is able to check power window open operation. The front power windows activate for 10 seconds after "ON" on CONSULT-II screen is touched.

Work Support

NHEL0242S0103

Test Item	Description
REMO CONT ID CONFIR	It can be checked whether keyfob ID code is registered or not in this mode.
REMO CONT ID REGIST	Keyfob ID code can be registered.
REMO CONT ID ERASUR	Keyfob ID code can be erased.
MULTI ANSWER BACK SET	Hazard and horn reminder mode can be changed with this mode. Selects hazard and horn reminder mode among six steps (EL-298).

Test Item	Description
AUTO LOCK SET	Auto door lock mode can be selected among the following periods: ● MODE 1 (5 min.)/MODE 2 (OFF-Mode)/MODE 3 (1 min.)
PANIC ALARM SET	The panic alarm button's pressing time on keyfob can be selected among the following periods: ● MODE 1 (0.5 sec.)/MODE 2 (OFF-Mode)/MODE 3 (1.5 sec.)
TRUNK OPENER	The trunk lid opener button's pressing time on keyfob can be selected among the following periods: ● MODE 1 (0.5 sec.)/MODE 2 (OFF-Mode)/MODE 3 (1.5 sec.)
PW DOWN SET	The unlock button's pressing time on keyfob can be selected among the following periods: ● MODE 1 (3 sec.)/MODE 2 (OFF-Mode)/MODE 3 (5 sec.)

Trouble Diagnoses

NHEL0195

SYMPTOM CHART

NHEL0195S01

NOTE:

- Always check keyfob battery before replacing keyfob.
- The panic alarm operation and trunk lid opener operation of keyfob system do not activate with the ignition key inserted in the ignition key cylinder.

Symptom	Diagnoses/service procedure	Reference page (EL-)
All function of remote keyless entry system do not operate.	1. Keyfob battery and function check	311
	2. Power supply and ground circuit for smart entrance control unit check	312
	3. Replace keyfob. Refer to ID Code Entry Procedure. NOTE: If the result of keyfob function check with CONSULT-II is OK, keyfob is not malfunctioning.	324
The new ID of keyfob cannot be entered.	1. Keyfob battery and function check	311
	2. Key switch (insert) check	316
	3. Door switch check	314
	4. Door lock/unlock switch LH check	317
	5. Power supply and ground circuit for smart entrance control unit check	312
	6. Replace keyfob. Refer to ID Code Entry Procedure. NOTE: If the result of keyfob function check with CONSULT-II is OK, keyfob is not malfunctioning.	324
Door lock or unlock does not function. (If the power door lock system does not operate manually, check power door lock system. Refer to EL-288.)	1. Keyfob battery and function check	311
	2. Replace keyfob. Refer to ID Code Entry Procedure. NOTE: If the result of keyfob function check with CONSULT-II is OK, keyfob is not malfunctioning.	324

Symptom	Diagnoses/service procedure	Reference page (EL-)
Hazard and horn reminder does not activate properly when pressing lock or unlock button of keyfob.	1. Keyfob battery and function check	311
	2. Hazard reminder check	319
	3. Horn reminder check* *: Horn chirp can be activated or deactivated. First check the horn chirp setting. Refer to "System Description", EL-297.	320
	4. Door switch check	314
	5. Replace keyfob. Refer to ID Code Entry Procedure. NOTE: If the result of keyfob function check with CONSULT-II is OK, keyfob is not malfunctioning.	324
Interior lamp and key hole illumination operation do not activate properly.	1. Interior lamp operation check	322
	2. Key hole illumination operation check	323
	3. Door switch check	314
Panic alarm (horn and headlamp) does not activate when panic alarm button is continuously pressed.	1. Keyfob battery and function check	311
	2. Theft warning operation check. Refer to "PRELIMINARY CHECK" in "VEHICLE SECURITY SYSTEM".	344
	3. Key switch (insert) check	316
	4. Replace keyfob. Refer to ID Code Entry Procedure. NOTE: If the result of keyfob function check with CONSULT-II is OK, keyfob is not malfunctioning.	324
Trunk lid does not open when trunk opener button is continuously pressed.	1. Keyfob battery and function check	311
	2. Trunk lid opener actuator check	318
	3. Key switch (insert) check	316
	4. Replace keyfob. Refer to ID Code Entry Procedure. NOTE: If the result of keyfob function check with CONSULT-II is OK, keyfob is not malfunctioning.	324

KEYFOB BATTERY AND FUNCTION CHECK

=NHEL0195S02

1	CHECK KEYFOB BATTERY

Remove battery (refer to EL-327) and measure voltage across battery positive and negative terminals, (+) and (−).

Voltage [V]:

2.5 - 3.0

NOTE:

Keyfob does not function if battery is not set correctly.

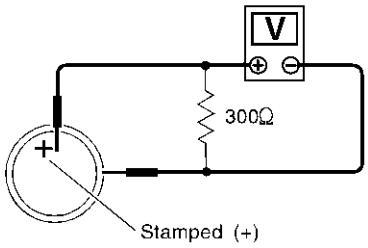

SEL237W

OK or NG

OK	▶	GO TO 2.
NG	▶	Replace battery.

2	CHECK KEYFOB FUNCTION

Ⓔ **With CONSULT-II**

Check keyfob function ("LK BUTTON/SIG", "UN BUTTON/SIG", "TRUNK BTN/SIG", "PANIC BTN", "UN BUTTON ON" and "LK/UN BTN ON") in "DATA MONITOR" mode with CONSULT-II.

DATA MONITOR	
MONITOR	
LK BUTTON/SIG	ON
UN BUTTON/SIG	ON
TRUNK BTN/SIG	ON
PANIC BTN	ON
UN BUTTON ON	ON
LK/UN BTN ON	ON

When pushing each button of keyfob, the corresponding monitor item should be turned as follows.

Condition	Monitor item	
Pushing LOCK	LK BUTTON/SIG	ON
Pushing UNLOCK	UN BUTTON/SIG	ON
Pushing TRUNK	TRUNK BTN/SIG	ON
Pushing PANIC	PANIC BTN/SIG	ON
Pushing UNLOCK	UN BUTTON ON	ON
Pushing LOCK and UNLOCK at the same time	LK/UN BTN ON	ON

SEL423Y

OK or NG

OK	▶	Keyfob is OK. Further inspection is necessary. Refer to "SYMPTOM CHART", EL-309.
NG	▶	Replace keyfob. Refer to ID Code Entry Procedure.

POWER SUPPLY AND GROUND CIRCUIT CHECK

=NHEL0195S03

1	CHECK MAIN POWER SUPPLY CIRCUIT FOR SMART ENTRANCE CONTROL UNIT

1. Disconnect smart entrance control unit harness connector.
2. Check voltage between smart entrance control unit harness connector M145 terminal 49 (R/B) or 51 (W/R) and ground.

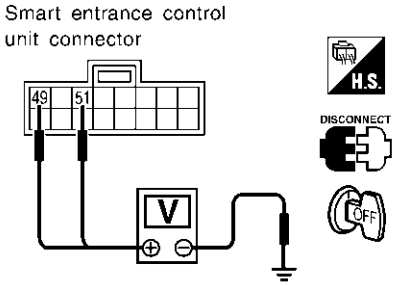

Battery voltage should exist.

SEL018Y

Refer to wiring diagram in EL-302.

OK or NG

OK	▶	GO TO 2.
NG	▶	**Check the following.** ● 40A fusible link (letter **I**, located in fuse and fusible link box) ● 10A fuse [No. 13, located in fuse block (J/B)] ● E90 circuit breaker ● Harness for open or short between smart entrance control unit and fuse

2	CHECK IGNITION SWITCH "ACC" CIRCUIT

1. Disconnect smart entrance control unit harness connector.
2. Check voltage between smart entrance control unit harness connector M144 terminal 26 (PU) and ground while ignition switch is "ACC".

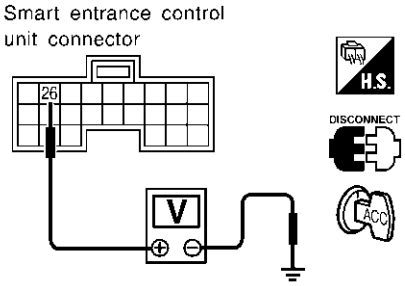

Battery voltage should exist.

SEL019Y

Refer to wiring diagram in EL-302.

OK or NG

OK	▶	GO TO 3.
NG	▶	**Check the following.** ● 10A fuse [No. 1, located in fuse block (J/B)] ● Harness for open or short between smart entrance control unit and fuse

3	CHECK GROUND CIRCUIT FOR SMART ENTRANCE CONTROL UNIT

Check continuity between smart entrance control unit harness connector M144 terminals 43 (B) or M145 terminal 64 (B) and ground.

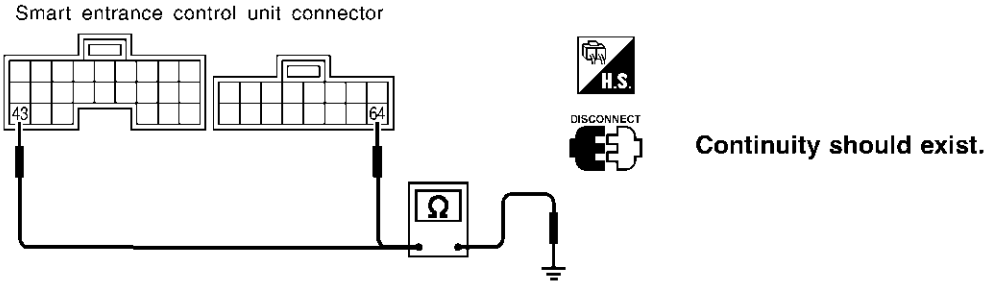

SEL020Y

Refer to wiring diagram in EL-302.

OK or NG

OK	▶	Power supply and ground circuits are OK.
NG	▶	Check ground harness.

DOOR SWITCH CHECK

=NHEL0195S04

1	CHECK DOOR SWITCH INPUT SIGNAL

With CONSULT-II

Check door switches ("DOOR SW-RR", "DOOR SW-DR" and "DOOR SW-AS") in "DATA MONITOR" mode with CONSULT-II.

DATA MONITOR	
MONITOR	
DOOR SW-RR	OFF
DOOR SW-DR	OFF
DOOR SW-AS	OFF

	Monitor item	Condition	Condition
DOOR SW-RR	Rear doors switch	Open	ON
		Closed	OFF
DOOR SW-DR	Door switch LH	Open	ON
		Closed	OFF
DOOR SW-AS	Door switch RH	Open	ON
		Closed	OFF

SEL024Y

Without CONSULT-II

Check voltage between smart entrance control unit harness connector M143 terminals 1 (LG), 2 (R/L) or 3 (R/W) and ground.

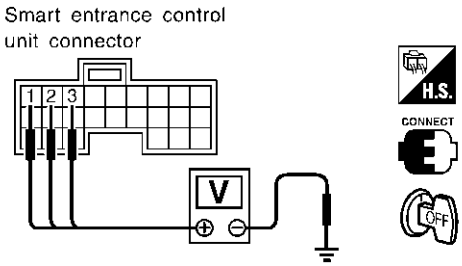

	Terminals (+)	Terminals (−)	Condition	Voltage [V]
Front door switch LH	1	Ground	Open	0
			Closed	Approx. 12
Front door switch RH	2	Ground	Open	0
			Closed	Approx. 5
Rear door switches	3	Ground	Open	0
			Closed	Approx. 5

SEL021YC

Refer to wiring diagram in EL-304.

OK or NG

OK	▶	Door switch is OK.
NG	▶	GO TO 2.

2	CHECK DOOR SWITCH

1. Disconnect door switch harness connector.
2. Check continuity between door switch terminals.

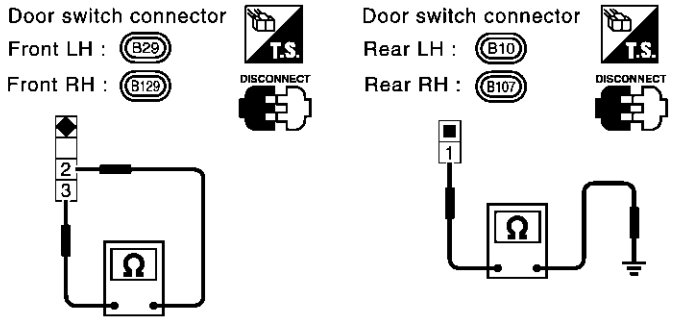

	Terminals	Condition	Continuity
Front door switches	2 - 3	Closed	No
		Open	Yes
Rear door switches	1 - Ground	Closed	No
		Open	Yes

SEL900Y

OK or NG

OK	▶	**Check the following.** ● Door switch ground circuit or door switch ground condition ● Harness for open or short between smart entrance control unit and door switch
NG	▶	Replace door switch.

KEY SWITCH (INSERT) CHECK

=NHEL0195S05

1	CHECK KEY SWITCH INPUT SIGNAL

With CONSULT-II

Check key switch ("KEY ON SW") in "DATA MONITOR" mode with CONSULT-II.

DATA MONITOR	
MONITOR	
KEY ON SW	ON

When key is inserted to ignition key cylinder:

KEY ON SW ON

When key is removed from ignition key cylinder:

KEY ON SW OFF

SEL315W

Without CONSULT-II

Check voltage between smart entrance control unit harness connector E144 terminals 25 (B/R) and ground.

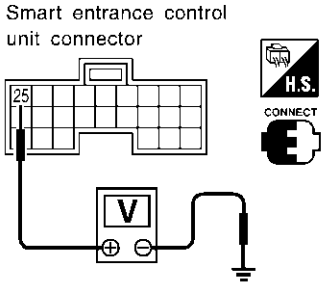

Voltage [V]:

Condition of key switch : Key is inserted.
Approx. 12

Condition of key switch : Key is removed.
0

SEL022Y

Refer to wiring diagram in EL-302.

OK or NG

OK	▶	Key switch is OK.
NG	▶	GO TO 2.

2	CHECK KEY SWITCH (INSERT)

Check continuity between key switch harness connector E154 terminals 3 and 4.

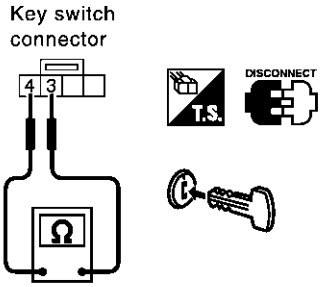

Continuity:

Condition of key switch: Key is inserted.
Yes

Condition of key switch: Key is removed.
No

SEL549YA

OK or NG

OK	▶	**Check the following.** ● 10A fuse [No. 13, located in fuse block (J/B)] ● Harness for open or short between key switch and fuse ● Harness for open or short between smart entrance control unit and key switch
NG	▶	Replace key switch.

DOOR LOCK/UNLOCK SWITCH LH CHECK

=NHEL0195S06

1	CHECK DOOR LOCK/UNLOCK SWITCH INPUT SIGNAL

With CONSULT-II

Check door lock/unlock switch ("LOCK SW DR/AS"/"UNLK SW DR/AS") in "DATA MONITOR" mode with CONSULT-II.

DATA MONITOR	
MONITOR	
LOCK SW DR/AS	OFF
UNLK SW DR/AS	OFF

When lock/unlock switch is turned to LOCK:
LOCK SW DR/AS ON

When lock/unlock switch is turned to UNLOCK:
UNLK SW DR/AS ON

SEL341W

Without CONSULT-II

1. Remove key from ignition switch.
2. Check the signal between smart entrance control unit harness connector M144 terminal 33 (L) and ground with oscilloscope when door lock/unlock switch is turned "LOCK" or "UNLOCK".
3. Make sure signals which are shown in the figure below can be detected during 10 sec. just after door lock/unlock switch is turned "LOCK" or "UNLOCK".

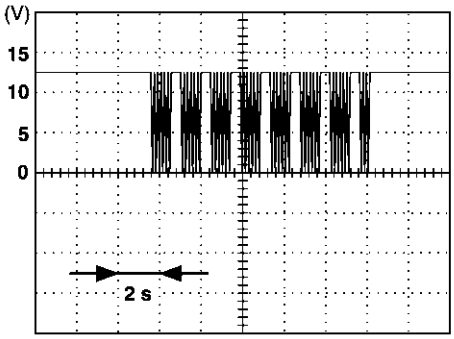

Voltage:
12V → 9V (10 sec.) measurement by analog circuit tester.

SEL396Y

Refer to wiring diagram in EL-303.

OK or NG

OK	▶	Door lock/unlock switch is OK.
NG	▶	**Check the following.** ● Ground circuit for each front power window switch. ● Harness for open or short between each front power window switch and smart entrance control unit connector If above systems are normal, replace the front power window switch.

TRUNK LID OPENER ACTUATOR CHECK

=NHEL0195S12

1	CHECK TRUNK LID OPENER	
Check trunk lid opener operation with trunk lid opener switch. NOTE: First check trunk lid opener cancel lever position.		
Does trunk lid open?		
Yes	▶	GO TO 2.
No	▶	Check trunk lid opener actuator and the circuit.

2	CHECK TRUNK LID OPENER ACTUATOR OPERATION	

Ⓔ **With CONSULT-II**
1. Select "ACTIVE TEST" in "MULTI REMOTE ENT" with CONSULT-II.
2. Select "TRUNK OUTPUT" and touch "ON".

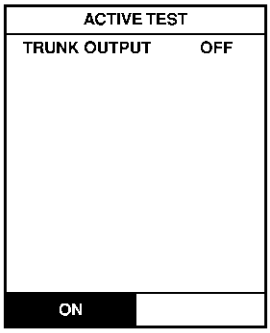

Trunk lid opener should operate.

SEL345W

NOTE: If CONSULT-II is not available, skip this procedure and go to the next step.

OK or NG		
OK	▶	Trunk lid opener actuator circuit is OK.
NG	▶	Check harness for open or short between smart entrance control unit and trunk lid opener actuator.

3	CHECK TRUNK LID OPENER ACTUATOR CIRCUIT	

Ⓚ **Without CONSULT-II**
1. Disconnect smart entrance control unit harness connector.
2. Apply ground to smart entrance control unit harness connector M145 terminal 63 (L).

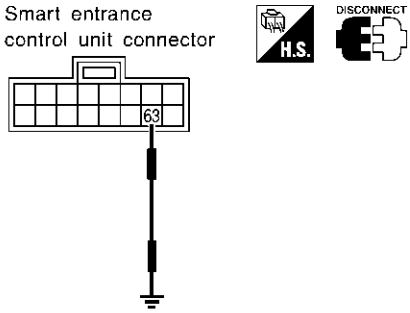

SEL026Y

Refer to wiring diagram in EL-305.

Does trunk lid open?		
Yes	▶	Replace smart entrance control unit.
No	▶	Check harness for open or short between smart entrance control unit and trunk lid opener actuator.

HAZARD REMINDER CHECK

=NHEL0195S08

1	CHECK HAZARD INDICATOR	
Check if hazard indicator flashes with hazard switch. **Does hazard indicator operate?**		
Yes	▶	GO TO 2.
No	▶	Check "hazard indicator" circuit.

2	CHECK HAZARD REMINDER OPERATION WITH CONSULT-II	

With CONSULT-II

1. Select "ACTIVE TEST" in "MULTI REMOTE ENT" with CONSULT-II.
2. Select "HAZARD" and touch "ON".

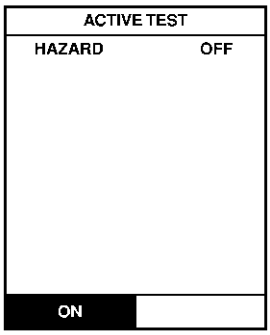

Hazard indicator should illuminate.

SEL347W

NOTE: If CONSULT-II is not available, skip this procedure and go to the next step.

OK or NG

OK	▶	Hazard reminder operation is OK.
NG	▶	Replace smart entrance control unit.

3	CHECK HAZARD REMINDER OPERATION WITHOUT CONSULT-II	

Without CONSULT-II

Check voltage between smart entrance control unit harness connector M144 terminal 47 (G/B) or 48 (G/Y) and ground.

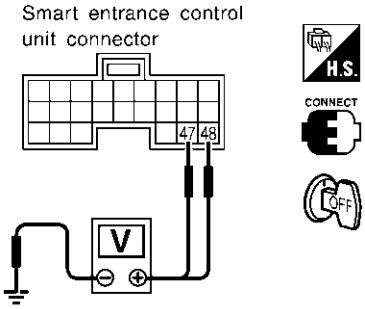

Condition of lock or unlock button	Voltage (V)
Push.	Approx. 0 - 12
Do not push.	0

SEL581Y

Refer to wiring diagram in EL-305.

OK or NG

OK	▶	System is OK.
NG	▶	Replace smart entrance control unit.

HORN REMINDER CHECK

=NHEL0195S09

1	CHECK HORN	
Check if horn sounds with horn switch.		
Does horn operate?		
Yes	▶	GO TO 2.
No	▶	Check horn circuit.

2	CHECK HORN REMINDER OPERATION WITH CONSULT-II	

With CONSULT-II
1. Select "ACTIVE TEST" in "MULTI REMOTE ENT" with CONSULT-II.
2. Select "HORN" and touch "ON".

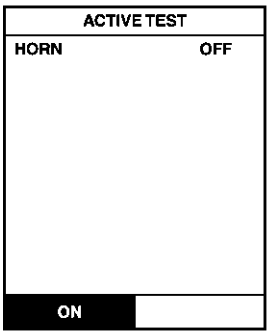

Horn should sound.

SEL451Y

NOTE: If CONSULT-II is not available, skip this procedure and go to the next step.

OK or NG		
OK	▶	Horn reminder operation is OK.
NG	▶	GO TO 4.

3	CHECK HORN REMINDER OPERATION WITHOUT CONSULT-II	

Without CONSULT-II
1. Disconnect smart entrance control unit harness connector.
2. Apply ground to smart entrance control unit harness connector M144 terminal 42 (BR/Y).

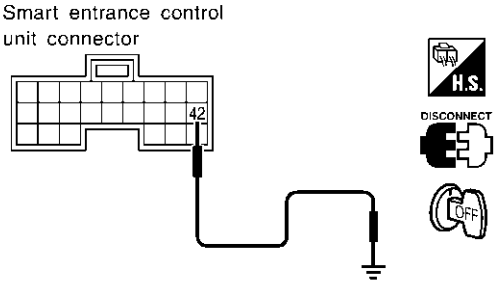

SEL028Y

Refer to wiring diagram in EL-305.

Does horn sound?		
Yes	▶	Replace smart entrance control unit.
No	▶	GO TO 4.

4	CHECK VEHICLE SECURITY HORN RELAY-2	
Check vehicle security horn relay-2.		
OK or NG		
OK	▶	GO TO 5.
NG	▶	Replace vehicle security horn relay-2.

5	CHECK POWER SUPPLY FOR VEHICLE SECURITY HORN RELAY-2	
1. Disconnect vehicle security horn relay-2 harness connector. 2. Check voltage between vehicle security horn relay-2 harness connector E63 terminal 1 (G/R) and ground.		
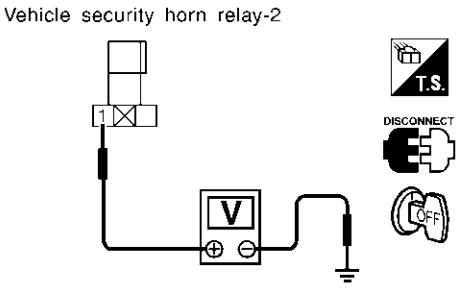 SEL031Y		
Does battery voltage exist?		
Yes	▶	GO TO 6.
No	▶	**Check the following.** ● 10A fuse [No. 61, located in fuse and fusible link box] ● Harness for open or short between vehicle security horn relay-2 and fuse

6	CHECK VEHICLE SECURITY HORN RELAY-2	
1. Disconnect vehicle security horn relay-2 harness connector. 2. Check voltage between vehicle security horn relay-2 harness connector E63 terminals 5 (G) and 3 (B).		
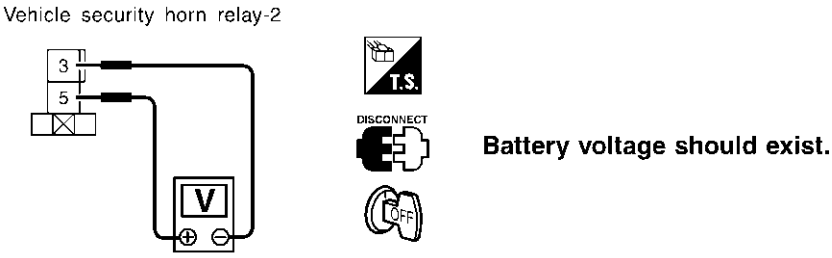 SEL032Y		
OK or NG		
OK	▶	Check harness for open or short between smart entrance control unit and vehicle security horn relay-2.
NG	▶	**Check the following.** ● Harness for open or short between vehicle security horn relay-2 and fuse ● Harness for open or short between horn relay and vehicle security horn relay-2 ● Harness for open or short between vehicle security horn relay-2 and body grounds

INTERIOR LAMP OPERATION CHECK

=NHEL0195S10

1	CHECK INTERIOR LAMP	
Check if the interior lamp switch is in the "ON" position and the lamp illuminates. **Does interior lamp illuminate?**		
Yes	▶	GO TO 2.
No	▶	**Check the following.** ● Harness for open or short between smart entrance control unit and interior lamp ● Interior lamp

2 CHECK INTERIOR LAMP OPERATION

With CONSULT-II

1. Select "ACTIVE TEST" in "MULTI REMOTE ENT" with CONSULT-II.
2. Select "INT/IGN ILLUM" and touch "ON".

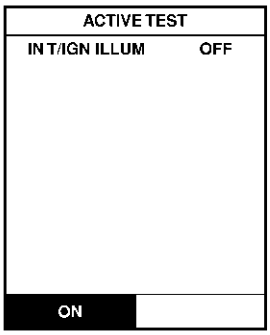

Interior lamp should illuminate.

SEL349W

Without CONSULT-II

Push unlock button of keyfob with all doors closed and driver's door locked, and check voltage between smart entrance control unit harness connector M144 terminal 31 (R) and ground.

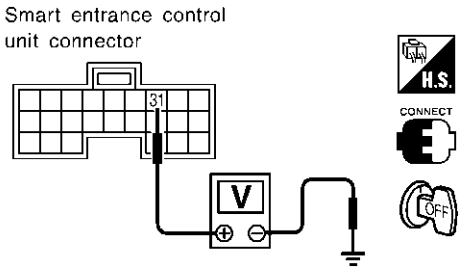

Voltage [V]:
Unlock button is pushed.
0 (For approx. 30 seconds.)
Unlock button is not pushed.
Battery voltage

SEL029Y

Refer to wiring diagram in EL-302.

OK or NG

OK	▶	System is OK.
NG	▶	Check harness open or short between smart entrance control unit and interior lamp.

KEY HOLE ILLUMINATION OPERATION CHECK

NHEL0195S13

1	CHECK KEY HOLE ILLUMINATION OPERATION

With CONSULT-II

1. Select "ACTIVE TEST" IN "MULTI REMOTE ENT" with CONSULT-II.
2. Select "INT/IGN ILLUM" and touch "ON".

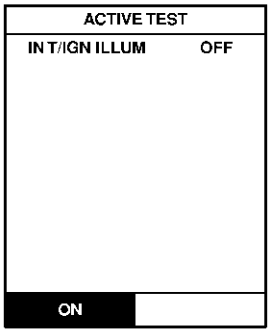

Key hole illuminate should illuminate.

SEL350W

Without CONSULT-II

Push unlock button of keyfob with all doors closed and driver's door locked, and check voltage between smart entrance control unit harness connector M144 terminal 30 (R/Y) and ground.

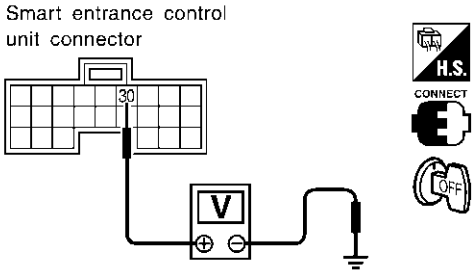

Voltage [V]:
Unlock button is pushed.
0 (For approx. 30 seconds)
Unlock button is not pushed.
Battery voltage

SEL030Y

Refer to wiring diagram in EL-302.

OK or NG

OK	▶	System is OK.
NG	▶	**Check the following.** ● Harness for open or short between smart entrance control unit and key hole illumination. ● Key hole illumination

ID Code Entry Procedure

=NHEL0117

KEYFOB ID SET UP WITH CONSULT-II

NHEL0117S01

NOTE:

If a keyfob is lost, the ID code of the lost keyfob must be erased to prevent unauthorized use. When the ID code of a lost keyfob is not known, all keyfob ID codes should be erased. After all ID codes are erased, the ID codes of all remaining and/or new keyfob must be re-registered.

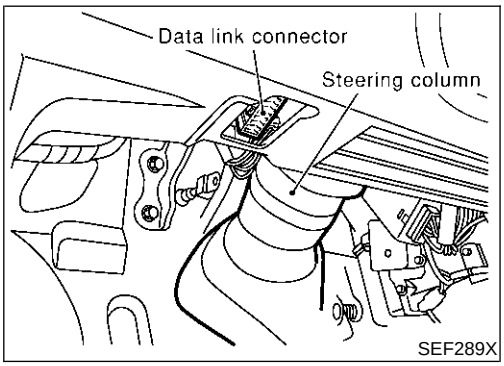

SEF289X

1. Turn ignition switch “OFF”.
2. Connect “CONSULT-II” and “CONSULT-II CONVERTER” to the data link connector.

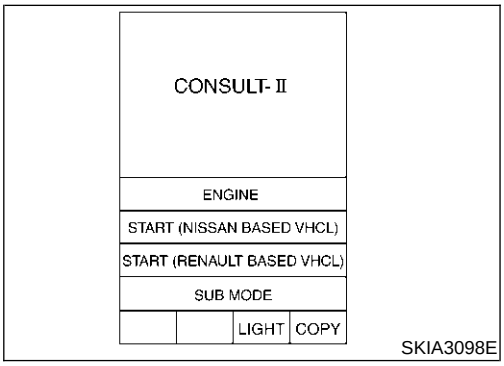

SKIA3098E

3. Turn ignition switch “ON”.
4. Touch “START (NISSAN BASED VHCL)”.

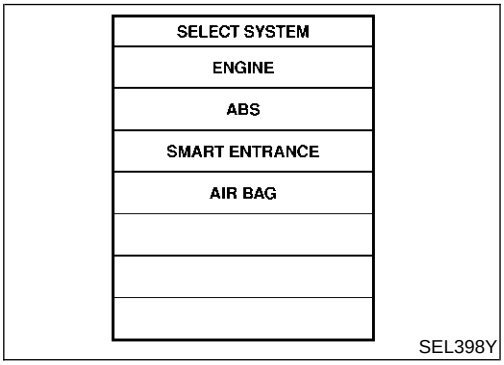

SEL398Y

5. Touch “SMART ENTRANCE”.
   If “SMART ENTRANCE” is not indicated, go to GI-42.

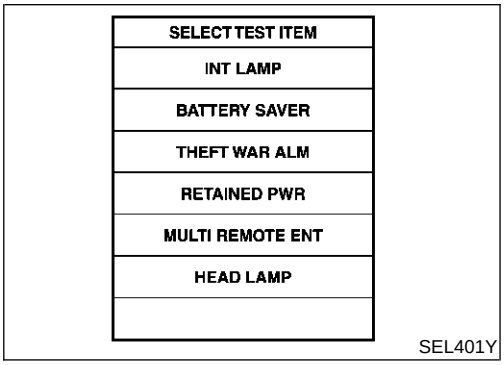

SEL401Y

6. Touch “MULTI REMOTE ENT”.

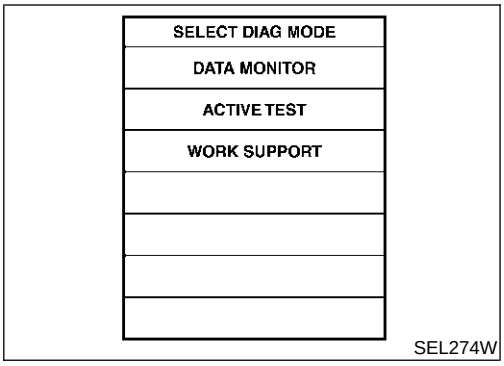

7. Touch "WORK SUPPORT".

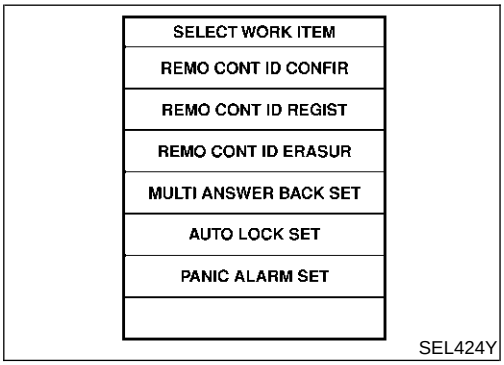

8. The items are shown on the figure at left can be set up.

- "REMO CONT ID CONFIR"
  Use this mode to confirm if a keyfob ID code is registered or not.
- "REMO CONT ID REGIST"
  Use this mode to register a keyfob ID code.

NOTE:
Register the ID code when keyfob or smart entrance control unit is replaced, or when additional keyfob is required.

- "REMO CONT ID ERASUR"
  Use this mode to erase a keyfob ID code.

Refer to the EL-308 "Work Support" in "CONSULT-II Application Items" for the following items.

- "MULTI ANSWER BACK SET"
- "AUTO LOCK SET"
- "PANIC ALARM SET"
- "TRUNK OPENER"
- "PW DOWN SET"

KEYFOB ID SET UP WITHOUT CONSULT-II

NHEL0117S02

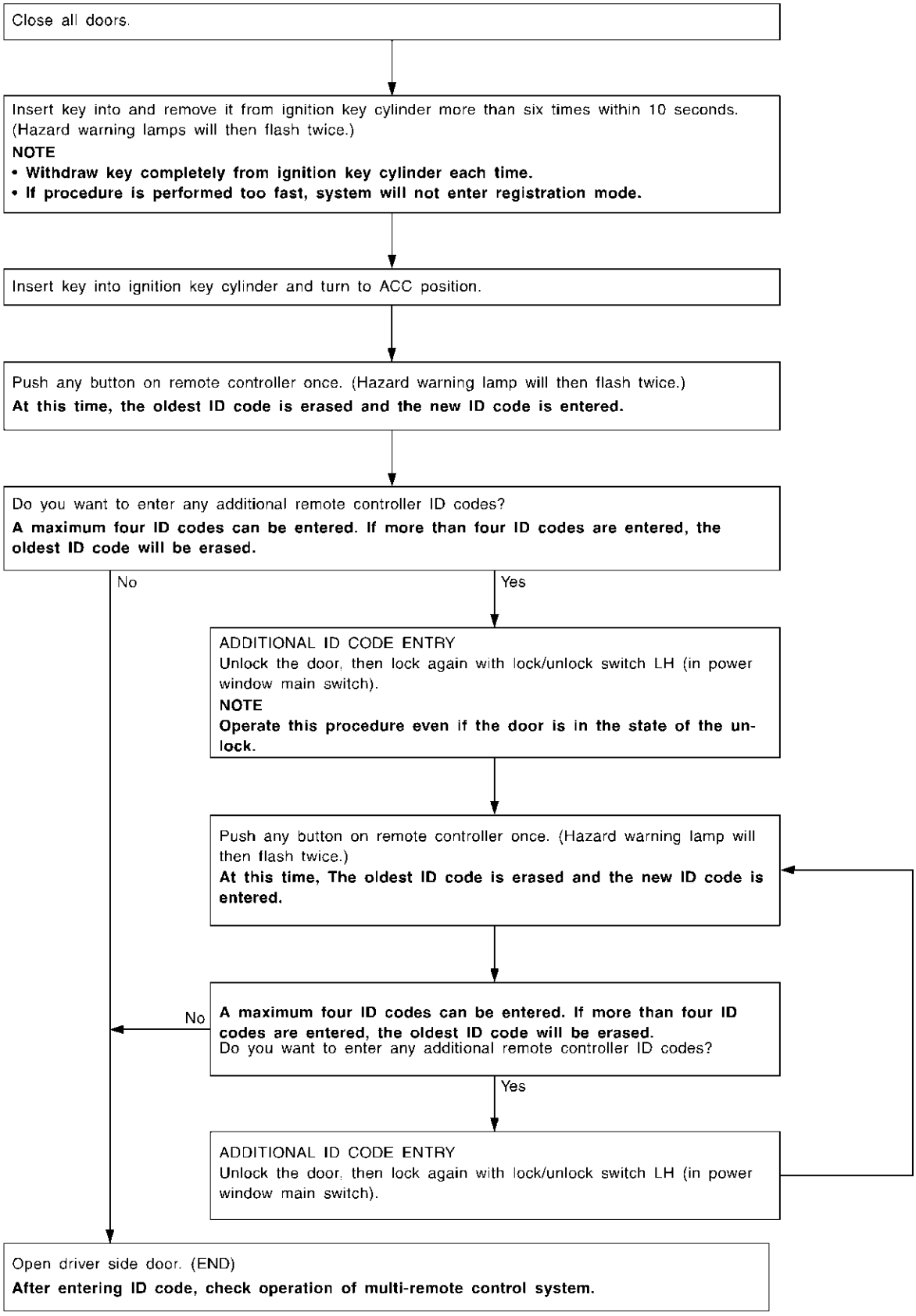

SEL170Y

NOTE:

- If a keyfob is lost, the ID code of the lost keyfob must be erased to prevent unauthorized use. A specific ID code can be erased with CONSULT-II. However, when the ID code of a lost keyfob is not known, all keyfob ID codes should be erased. After all ID codes are erased, the ID codes of all remaining and/or new keyfob must be re-registered.
  To erase all ID codes in memory, register one ID code (keyfob) four times. After all ID codes are erased, the ID codes of all remaining and/or new keyfob must be re-registered.
- When registering an additional keyfob, the existing ID codes in memory may or may not be erased. If four ID codes are stored in memory, when an additional code is registered, only the oldest code is erased. If less than four ID codes are stored in memory, when an additional ID code is registered, the new ID code is added and no ID codes are erased.
- If you need to activate more than two keyfob, repeat the procedure "Additional ID code entry" for each new keyfob.
- Entry of maximum four ID codes is allowed. When more than four ID codes are entered, the oldest ID code will be erased.
- Even if same ID code that is already in the memory is input, the same ID code can be entered. The code is counted as an additional code.

Keyfob Battery Replacement

NHEL0118

NOTE:
• Be careful not to touch the circuit board or battery terminal.
• The keyfob is water-resistant. However, if it does get wet, immediately wipe it dry.

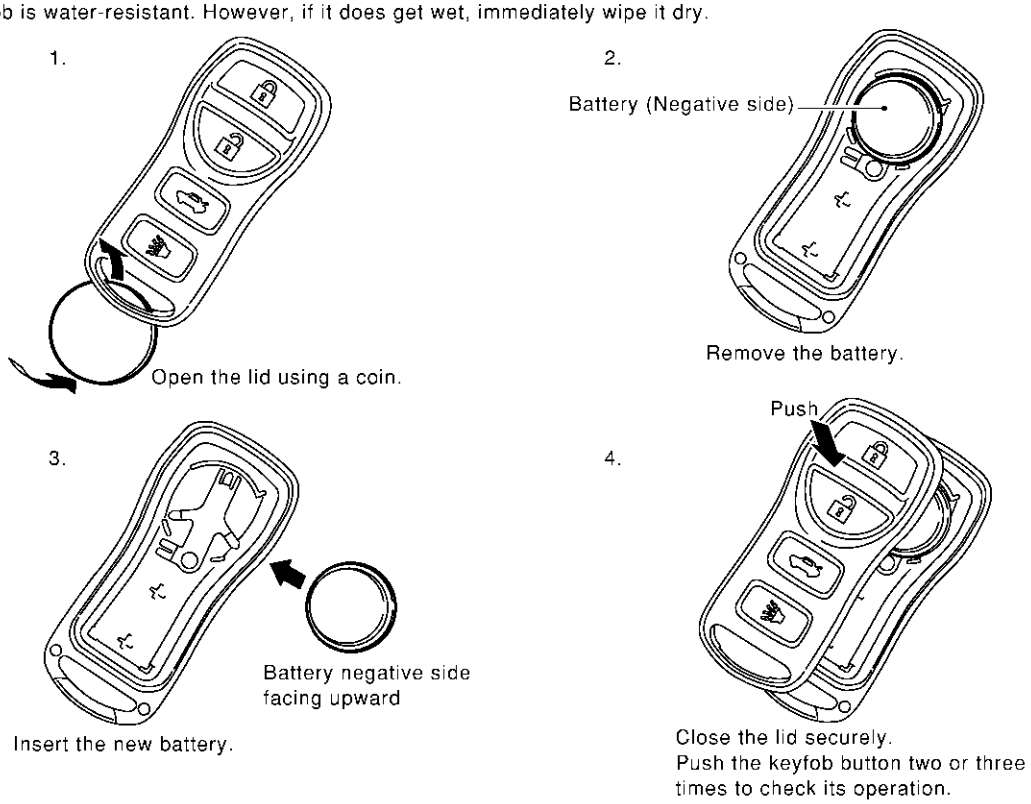

SEL411Y

Component Parts and Harness Connector Location

NHEL0119

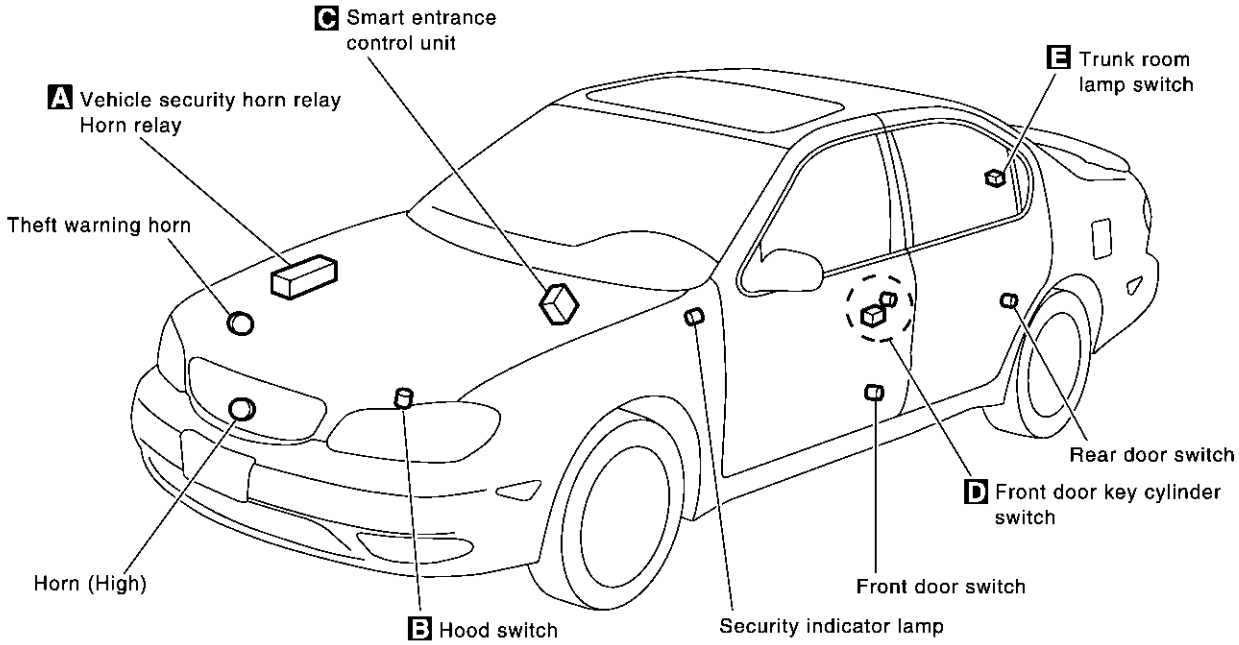

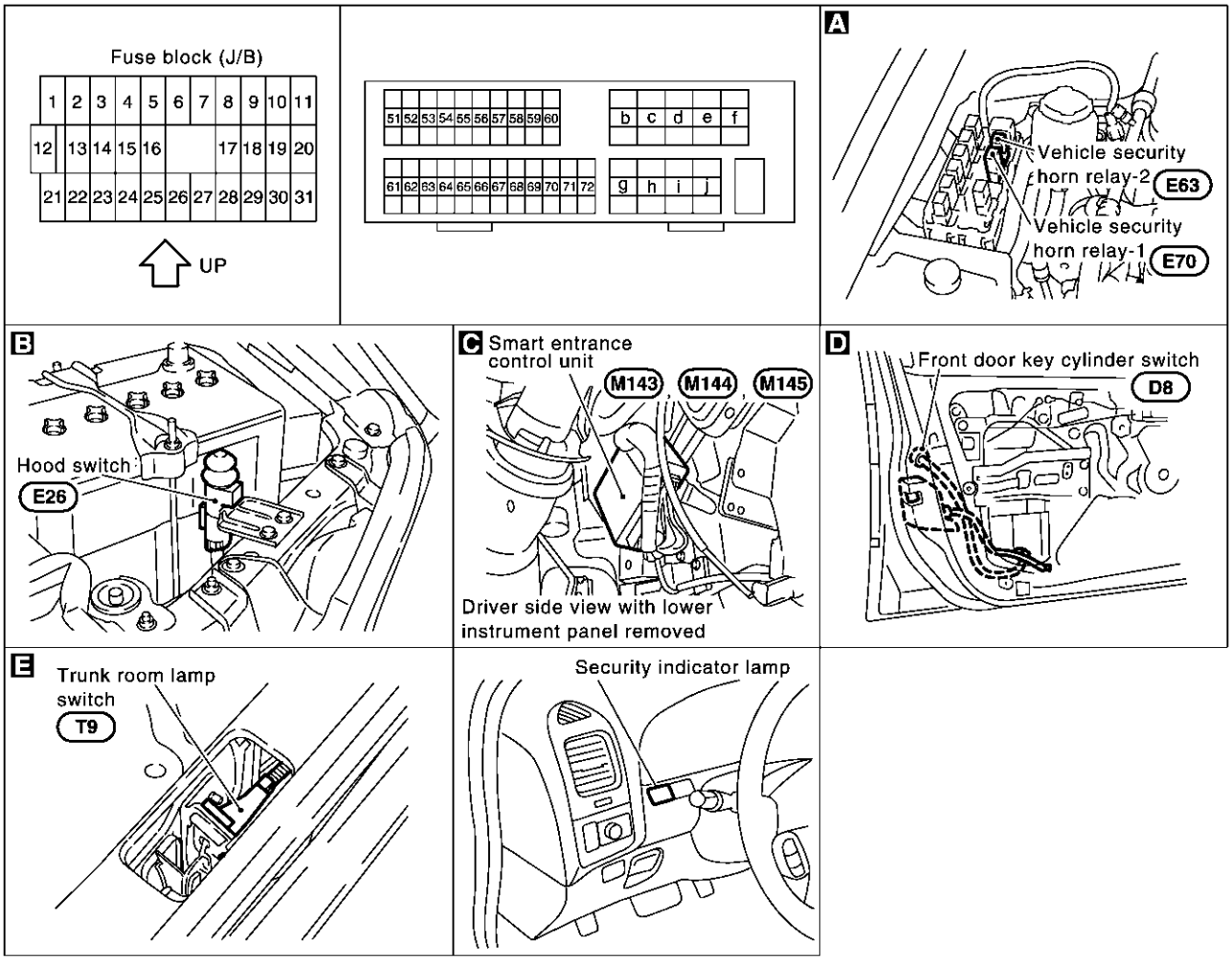

SEL552Y

System Description

NHEL0196

DESCRIPTION

NHEL0196S01

1. Operation Flow

NHEL0196S0101

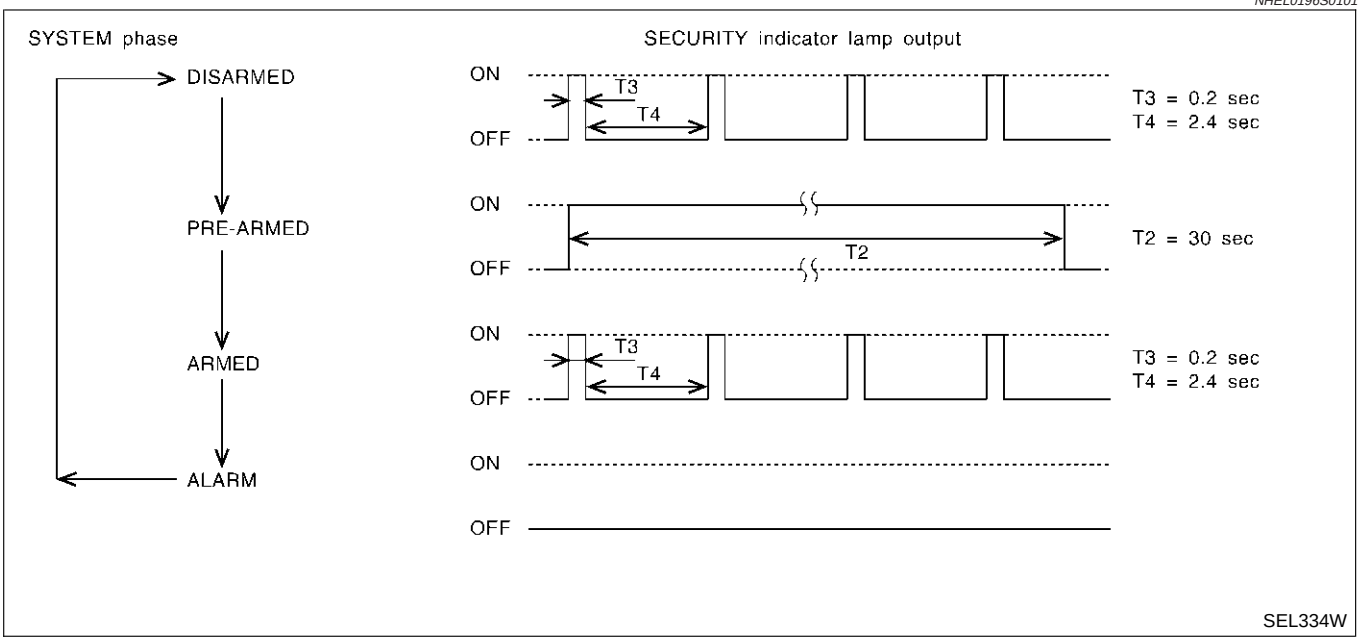

2. Setting The Vehicle Security System

NHEL0196S0102

Initial condition

1) Ignition switch is in OFF position.

Disarmed phase

When the vehicle security system is in the disarmed phase, the security indicator lamp blinks every 2.6 seconds.

Pre-armed phase and armed phase

When the following operation 1) or 2) is performed, the vehicle security system turns into the “pre-armed” phase. (The security indicator lamp illuminates.)

1) Smart entrance control unit receives LOCK signal from key cylinder switch or keyfob after hood, trunk lid and all doors are closed.
2) Hood, trunk lid and all doors are closed after front doors are locked by key, lock/unlock switch or keyfob.

After about 30 seconds, the system automatically shifts into the “armed” phase (the system is set). (The security indicator lamp blinks every 2.6 seconds.)

3. Canceling The Set Vehicle Security System

NHEL0196S0103

When the following 1) or 2) operation is performed, the armed phase is canceled.

1) Unlock the doors with the key or keyfob.
2) Open the trunk lid with the key or keyfob.

4. Activating The Alarm Operation of The Vehicle Security System

NHEL0196S0104

Make sure the system is in the armed phase. (The security indicator lamp blinks every 2.6 seconds.)
When the following operation 1) or 2) is performed, the system sounds the horns and flashes the headlamps for about 50 seconds.

1) Engine hood, trunk lid or any door is opened during armed phase.
2) Disconnecting and connecting the battery connector before canceling armed phase.

POWER SUPPLY AND GROUND

NHEL0196S02

Power is supplied at all times

- through 10A fuse [No. 12, located in the fuse block (J/B)]
- to security indicator lamp terminal 1.

Power is supplied at all times

- through 10A fuse [No. 13, located in the fuse block (J/B)]

- to smart entrance control unit terminal 49.

With the ignition switch in the ON or START position, power is supplied

- through 10A fuse [No. 10, located in the fuse block (J/B)]
- to smart entrance control unit terminal 27.

With the ignition switch in the ACC or ON position, power is supplied

- through 10A fuse [No. 1, located in the fuse block (J/B)]
- to smart entrance control unit terminal 26.

Ground is supplied

- to smart entrance control unit terminals 43 and 64
- through body grounds M9, M25 and M87.

INITIAL CONDITION TO ACTIVATE THE SYSTEM

NHEL0196S03

The operation of the vehicle security system is controlled by the doors, hood and trunk lid.

Pattern A

NHEL0196S0301

To activate the vehicle security system, the smart entrance control unit must receive signals indicating the doors, hood and trunk lid are closed.
When a door is open, smart entrance control unit terminal 1, 2 or 3 receives a ground signal from each door switch.
When the hood is open, smart entrance control unit terminal 6 receives a ground signal

- from terminal 1 of the hood switch
- through body grounds E11, E22 and E53.

When the trunk lid is open, smart entrance control unit terminal 13 receives a ground signal

- from terminal 1 of the trunk room lamp switch
- through body grounds T6 and T8.

When smart entrance control unit receives LOCK signal from key cylinder switch or keyfob and none of the described conditions exist, the vehicle security system will automatically shift to armed mode.

Pattern B

NHEL0196S0302

To activate the vehicle security system, the smart entrance control unit must receive signal indicating any door (including hood and trunk lid) is opened.
When the front doors are locked with key, lock/unlock switch or keyfob and then all doors are closed, the vehicle security system will automatically shift to armed mode.

VEHICLE SECURITY SYSTEM ACTIVATION

NHEL0196S04

Pattern A

NHEL0196S0401

With all doors (including hood and trunk lid) close if the key is used to lock doors, front power window main switch terminal 6 receives a ground signal

- from terminal 3 of the key cylinder switch LH
- through body grounds M9, M25 and M87.

If this signal, or lock signal from keyfob is received by the smart entrance control unit, the vehicle security system will activate automatically.

NOTE:
Vehicle security system can be set even though all doors are not locked.

Pattern B

NHEL0196S0402

With any door (including hood and trunk lid) open if lock/unlock switch is used to lock doors, smart entrance control unit terminal 33 receives a ground signal

- from terminal 8 of lock/unlock switch LH, or
- from terminal 11 of lock/unlock switch RH
- through body grounds M9, M25 and M87, or

With any door (including hood and trunk lid) open if the key is used to lock doors, front power window main switch terminal 6 receives a ground signal

- from terminal 3 of the key cylinder switch LH
- through body grounds M9, M25 and M87.

If these signals and lock signal from keyfob are received by the smart entrance control unit, ground signals of terminals 1, 2 and 3 are interrupted and all doors are closed, the vehicle security system will activate automatically.

NOTE:
Vehicle security system can be set even though the rear door is not locked.

Once the vehicle security system has been activated, smart entrance control unit terminal 38 supplies ground to terminal 2 of the security indicator lamp.
The security indicator lamp will illuminate for approximately 30 seconds and then blinks every 2.6 seconds.
Now the vehicle security system is in armed phase.

VEHICLE SECURITY SYSTEM ALARM OPERATION

NHEL0196S05

The vehicle security system is triggered by

- opening a door
- opening the hood or the trunk lid
- detection of battery disconnect and connect.

Once the vehicle security system is in armed phase, if the smart entrance control unit receives a ground signal at terminal 1, 2, 3 (door switch), 13 (trunk room lamp switch) or 6 (hood switch), the vehicle security system will be triggered. The headlamps flash and the horn sounds intermittently.
Power is supplied at all times

- through 10A fuse (No. 61 located in fuse and fusible link box)
- to vehicle security horn relay-1 terminals 1 and 3, and
- to vehicle security horn relay-2 terminal 1
- through 10A fuse (No. 57, located in fuse and fusible link box)
- to horn relay terminal 2.

Power is also supplied at all times

- through 15A fuse (No. 68, located in fuse and fusible link box)
- to headlamp LH relay terminal 3,
- through 20A fuse (No. 54, located in fuse and fusible link box)
- to headlamp LH relay terminals 1 and 6,
- through 15A fuse (No. 69, located in fuse and fusible link box)
- to headlamp RH relay terminal 3, and
- through 20A fuse (No. 55, located in fuse and fusible link box)
- to headlamp RH relay terminals 1 and 6.

When the vehicle security system is triggered, ground is supplied intermittently

- to headlamp LH relay terminal 2 from smart entrance control unit terminal 21 and
- to headlamp RH relay terminal 2 from smart entrance control unit terminal 59
- through smart entrance control unit terminals 43 and 64.
- through body grounds M9, M25 and M87.

When headlamp relays (LH and RH) are energized and then power is supplied to headlamps (LH and RH).
The headlamps flash intermittently.
When the vehicle security system is triggered, ground is supplied intermittently

- from smart entrance control unit terminal 42
- to vehicle security horn relay-2 terminal 2.

When vehicle security horn relay-2 is energized, ground is supplied intermittently

- to vehicle security horn relay-1 terminal 2, and
- to horn relay terminal 1.

When vehicle security horn relay-1 and horn relay are energized, then power is supplied to vehicle security horn and horn.
The horn sounds intermittently.
The alarm automatically turns off after 50 seconds but will reactivate if the vehicle is tampered with again.

VEHICLE SECURITY SYSTEM DEACTIVATION

NHEL0196S06

To deactivate the vehicle security system, a door or trunk lid must be unlocked with the key or keyfob.
When the key is used to unlock the door, front power window main switch terminal 19 receives a ground signal

- from terminal 1 of the key cylinder switch LH.

When the smart entrance control unit receives either one of these signals or unlock signal from keyfob, the vehicle security system is deactivated. (Disarmed phase)

PANIC ALARM OPERATION

NHEL0196S07

Remote keyless entry system may or may not operate vehicle security system (horn and headlamps) as required.
When the remote keyless entry system (panic alarm) is triggered, ground is supplied intermittently

- from smart entrance control unit terminal 42
- to vehicle security horn relay-2 terminal 2.
- from smart entrance control unit terminal 21
- to headlamp LH relay terminal 2 and
- from smart entrance control unit terminal 59
- to headlamp RH relay terminal 2

The headlamp flashes and the horn sounds intermittently.
The alarm automatically turns off after 25 seconds or when smart entrance control unit receives any signal from keyfob.

NOTE:

Schematic

NHEL0121

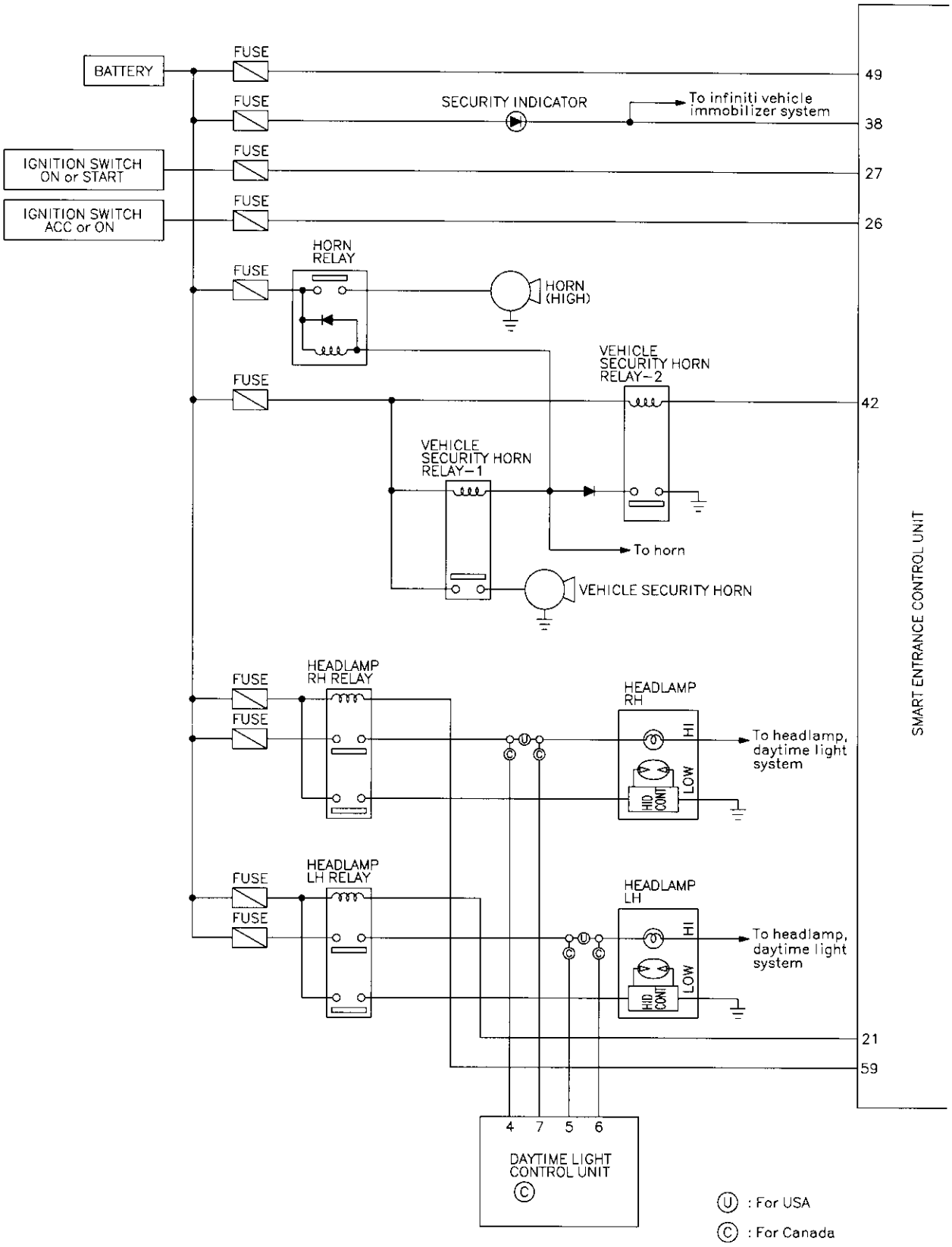

MEL639Q

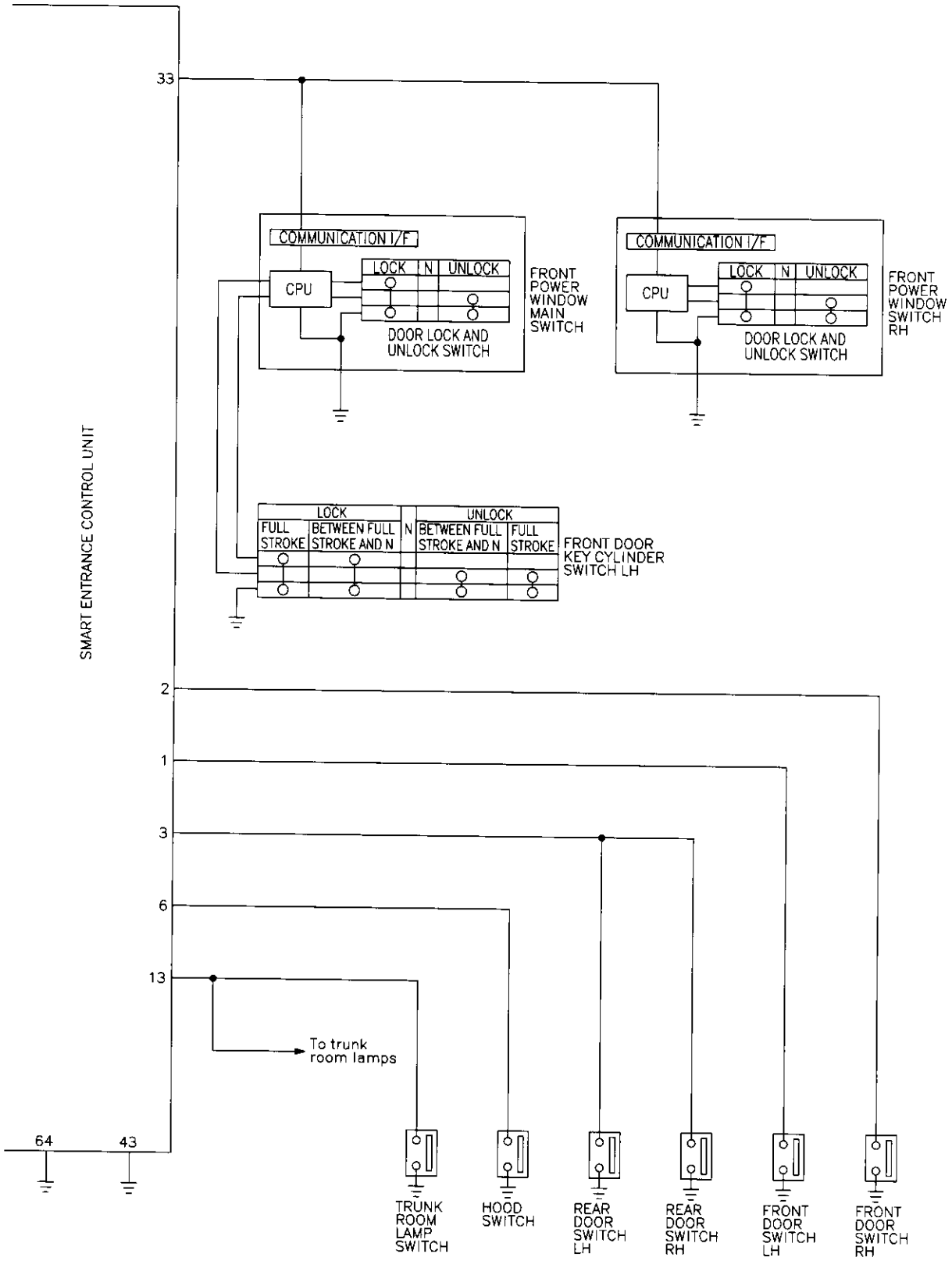
SMART ENTRANCE CONTROL UNIT
33
COMMUNICATION I/F
CPU
LOCK
N
UNLOCK
DOOR LOCK AND UNLOCK SWITCH
FRONT POWER WINDOW MAIN SWITCH
COMMUNICATION I/F
CPU
LOCK
N
UNLOCK
DOOR LOCK AND UNLOCK SWITCH
FRONT POWER WINDOW SWITCH RH
LOCK
UNLOCK
FULL STROKE
BETWEEN FULL STROKE AND N
N
BETWEEN FULL STROKE AND N
FULL STROKE
FRONT DOOR KEY CYLINDER SWITCH LH
2
1
3
6
13
To trunk room lamps
64
43
TRUNK ROOM LAMP SWITCH
HOOD SWITCH
REAR DOOR SWITCH LH
REAR DOOR SWITCH RH
FRONT DOOR SWITCH LH
FRONT DOOR SWITCH RH

MEL353O

Wiring Diagram — VEHSEC —

NHEL0122

FIG. 1

NHEL0122S01

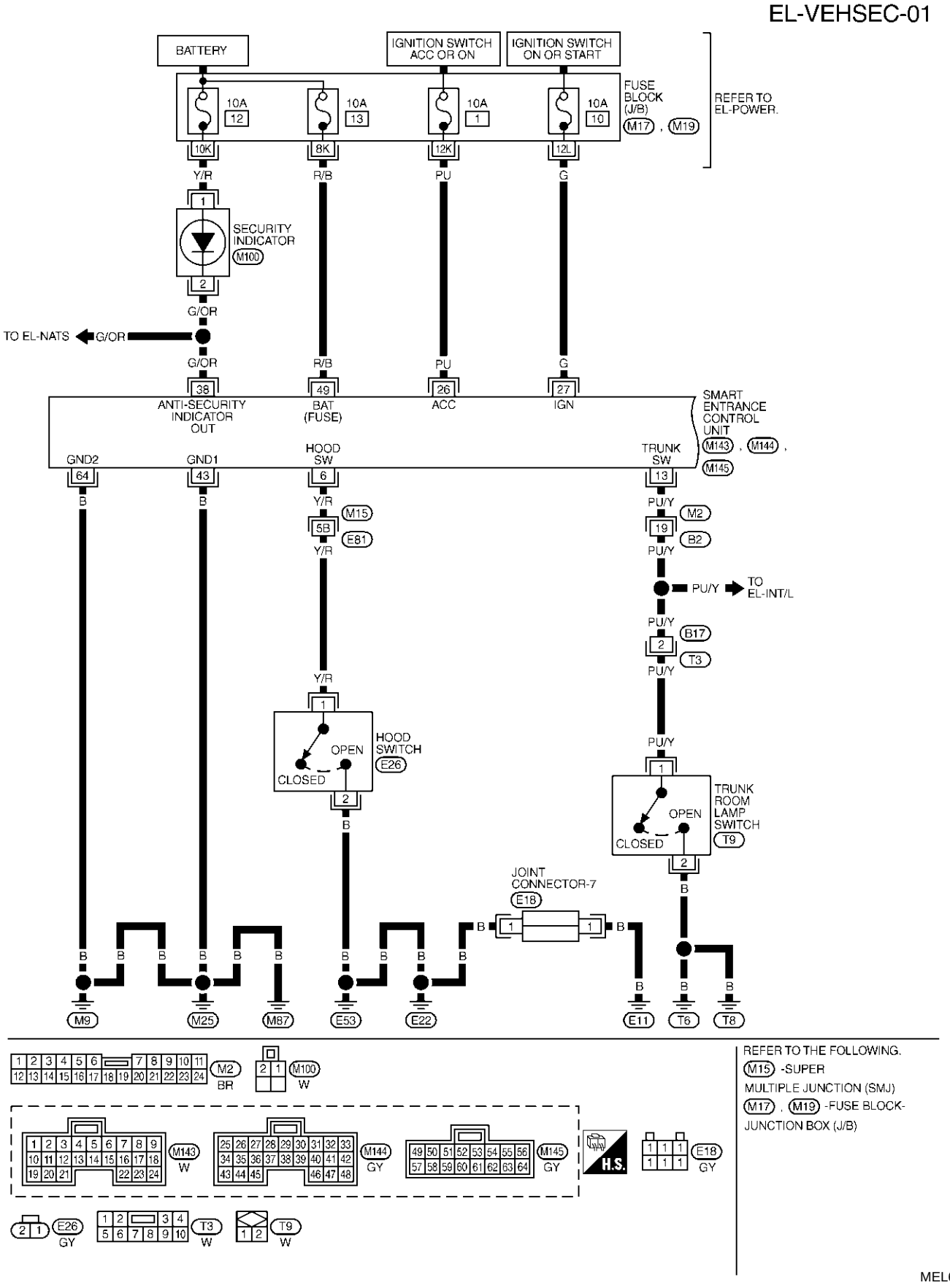

FIG. 2

NHEL0122S02

EL-VEHSEC-02

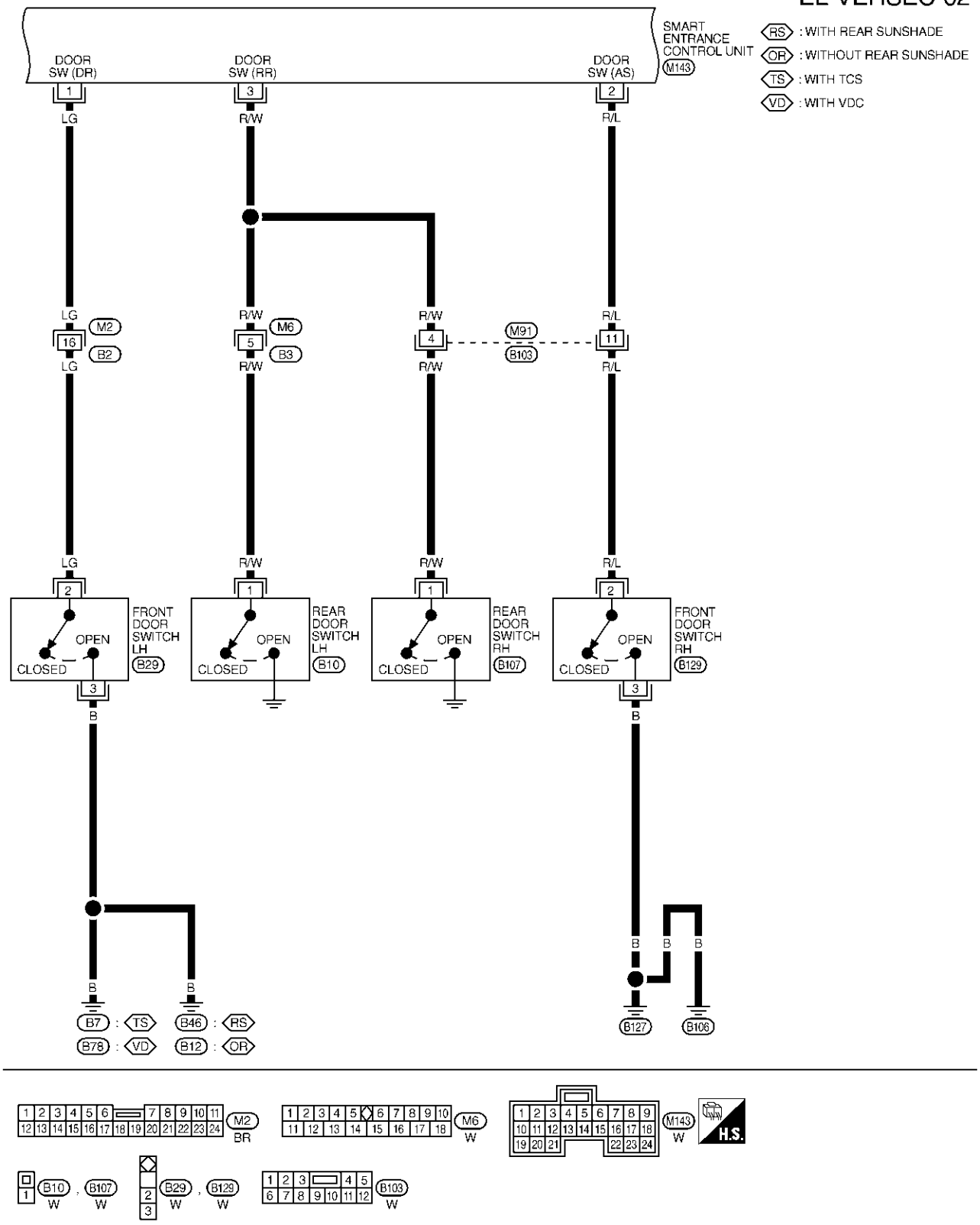

MEL641Q

FIG. 3

NHEL0122S03

EL-VEHSEC-03

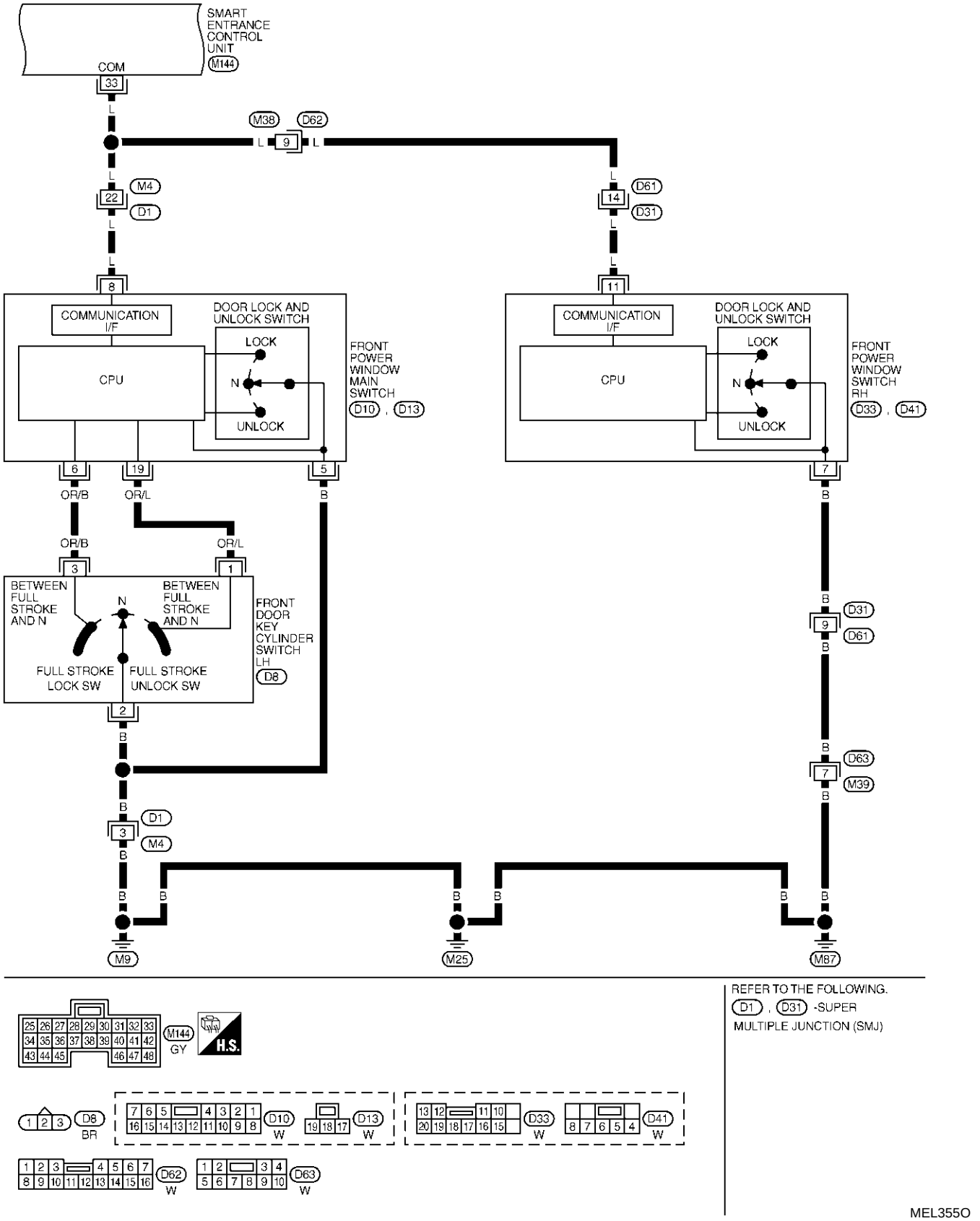

FIG. 4

NHEL0122S04

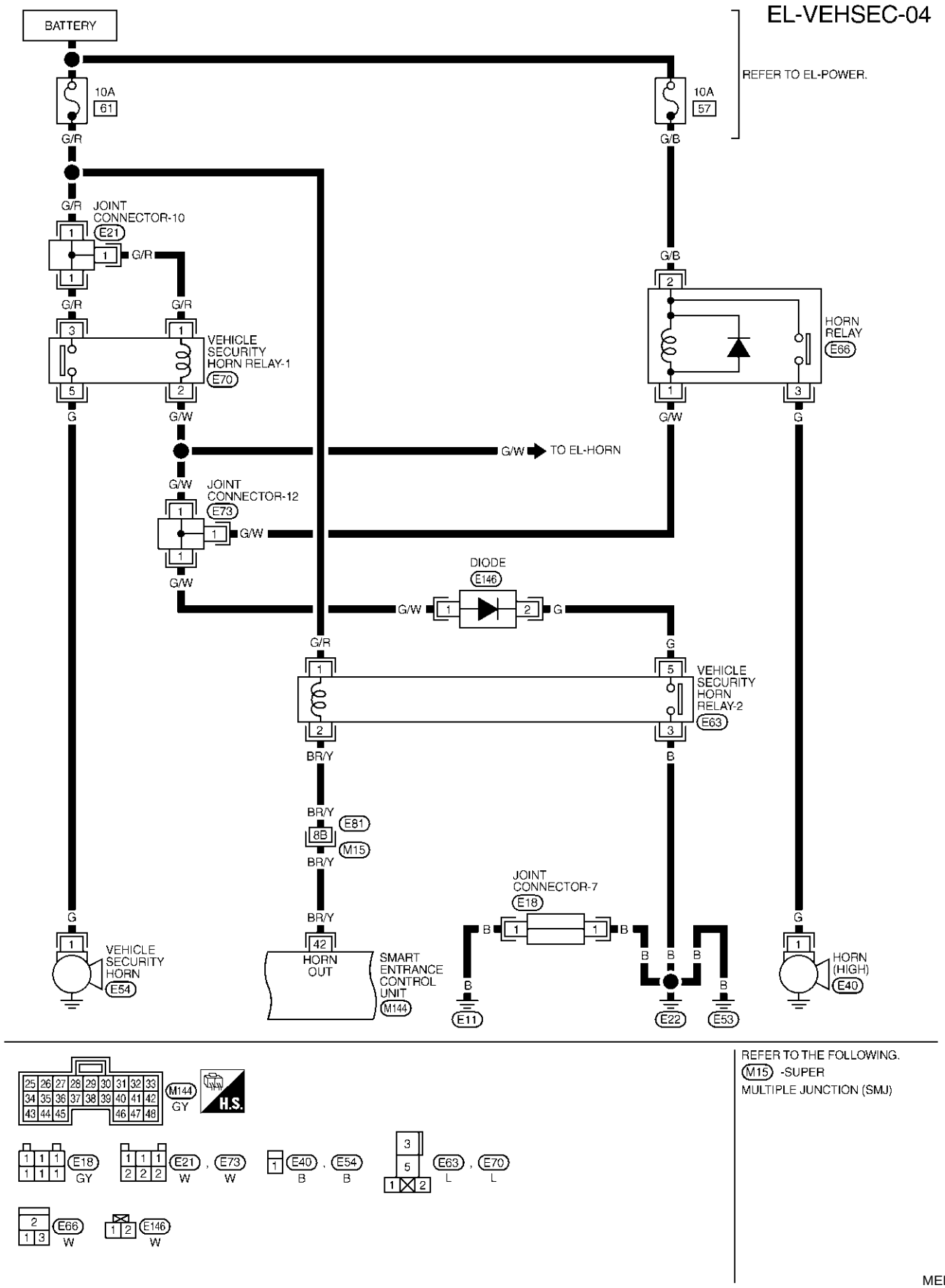

FIG. 5

NHEL0122S07

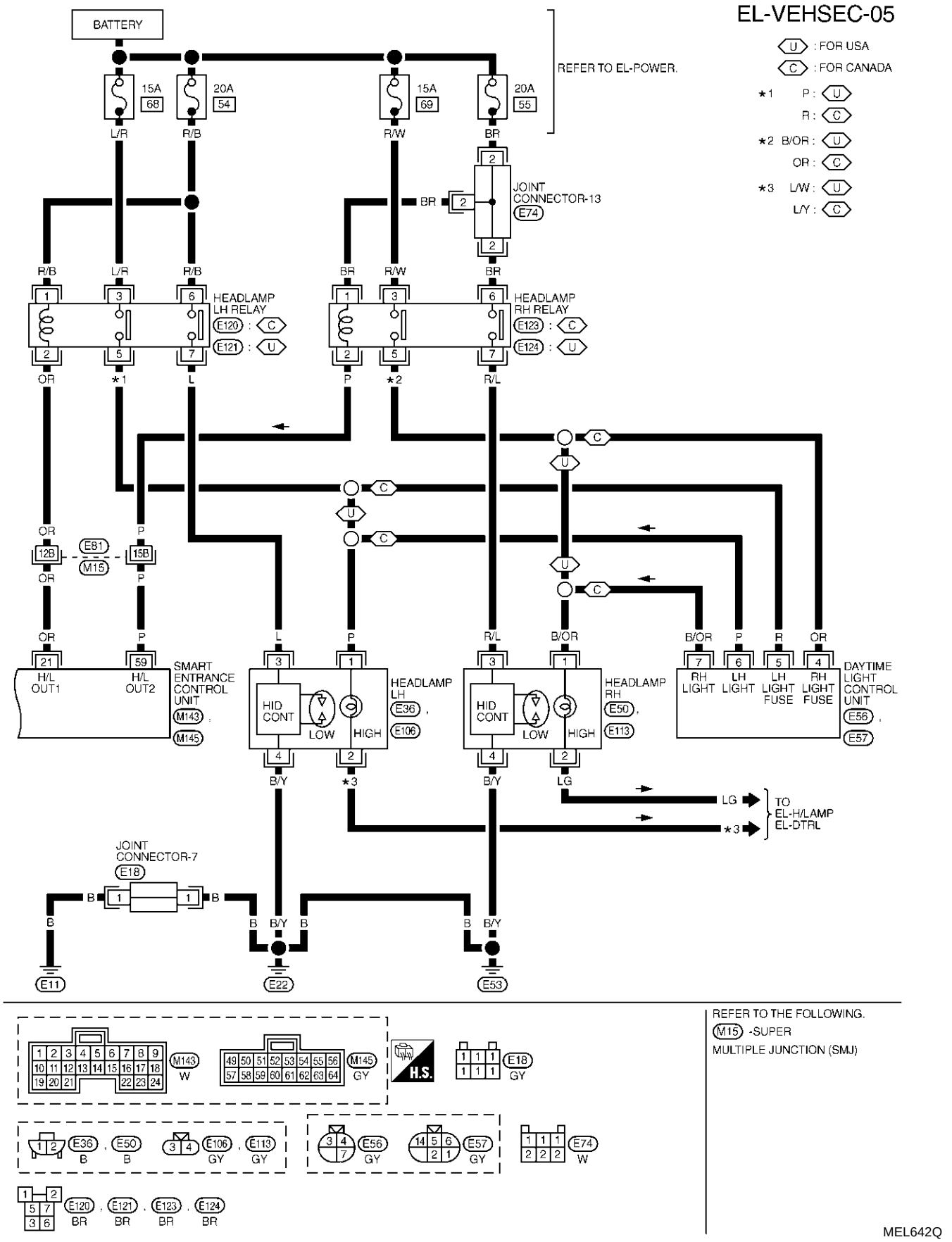

SMART ENTRANCE CONTROL UNIT CONNECTOR

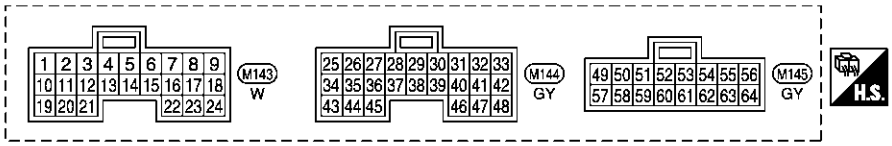

SMART ENTRANCE CONTROL UNIT TERMINALS AND REFERENCE VALUE BETWEEN EACH TERMINAL AND GROUND

TERMINAL	WIRE COLOR	ITEM	CONDITION			DATA (DC)
1	LG	DRIVER DOOR SWITCH	OFF (CLOSED) → ON (OPEN)			12V → 0V
2	R/L	PASSENGER DOOR SWITCH	OFF (CLOSED) → ON (OPEN)			5V → 0V
3	R/W	REAR DOOR SWITCH	OFF (CLOSED) → ON (OPEN)			5V → 0V
6	Y/R	HOOD SWITCH	ON (OPEN) → OFF (CLOSED)			0V → 12V
13	PU/Y	TRUNK ROOM LAMP SWITCH	ON (OPEN) → OFF (CLOSED)			0V → 12V
21	OR	HEADLAMP LH RELAY	IGNITION SWITCH (WITH LIGHTING SWITCH 2ND)	ON OR START → OFF	MORE THAN 5 MINUTES	12V
					WITHIN 5 MINUTES	0V
				ON OR START		0V
			HEADLAMPS ILLUMINATE BY AUTO LIGHT CONTROL			0V
26	PU	IGNITION SWITCH (ACC)	"ACC" POSITION			12V
27	G	IGNITION SWITCH (ON)	IGNITION SWITCH IS IN "ON" POSITION			12V
33	L	COMMUNICATION INTERFACE	DOOR LOCK & UNLOCK SWITCHES (NEUTRAL → LOCK/UNLOCK)			*1
			FRONT DOOR KEY CYLINDER SWITCH LH (NEUTRAL → LOCK/UNLOCK)			
38	G/OR	SECURITY INDICATOR	GOES OFF → ILLUMINATES			12V → 0V
42	BR/Y	VEHICLE SECURITY HORN RELAY	WHEN PANIC ALARM IS OPERATED USING KEYFOB (ON → OFF)			12V → 0V
43	B	GROUND	–			–
49	R/B	POWER SOURCE (FUSE)	–			12V
59	P	HEADLAMP RH RELAY	IGNITION SWITCH (WITH LIGHTING SWITCH 2ND)	ON OR START → OFF	MORE THAN 5 MINUTES	12V
					WITHIN 5 MINUTES	0V
				ON OR START		0V
			HEAD LAMP ILLUMINATE BY AUTO LIGHT CONTROL (OPERATE → NOT OPERATE)			LESS THAN 1V → 12V
64	B	GROUND	–			–

*1: REFER TO "SMART ENTRANCE CONTROL UNIT INSPECTION TABLE" IN "SMART ENTRANCE CONTROL UNIT".

SEL553YA

CONSULT-II Inspection Procedure

=NHEL0244

“THEFT WAR ALM”

NHEL0244S01

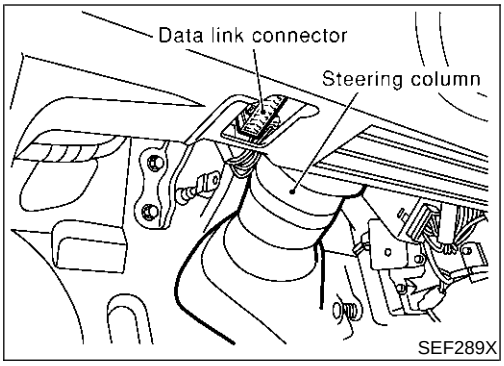

SEF289X

1. Turn ignition switch “OFF”.
2. Connect “CONSULT-II” and “CONSULT-II CONVERTER” to the data link connector.

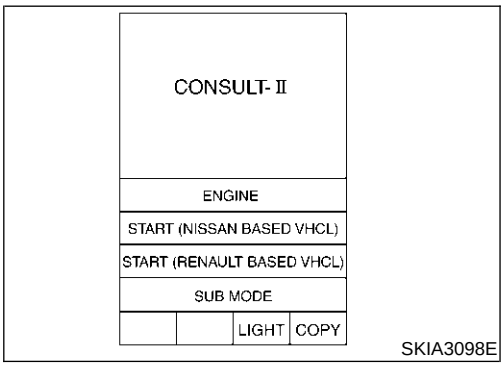

SKIA3098E

3. Turn ignition switch “ON”.
4. Touch “START (NISSAN BASED VHCL)”.

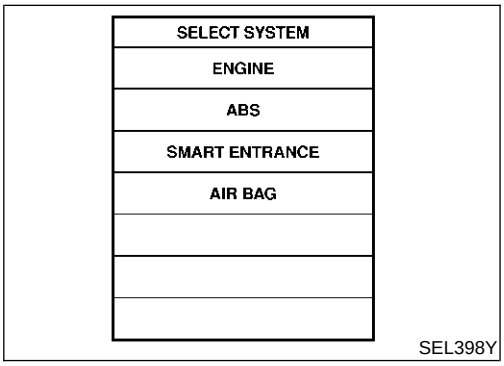

SEL398Y

5. Touch “SMART ENTRANCE”.
   If “SMART ENTRANCE” is not indicated, go to GI-42.

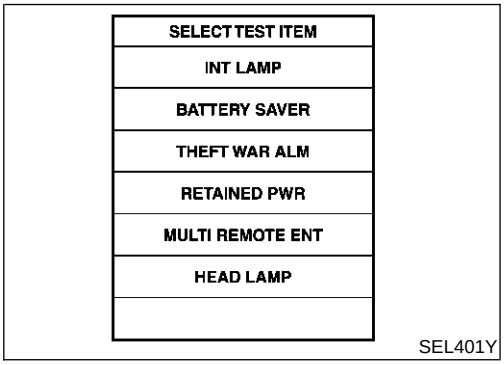

SEL401Y

6. Touch “THEFT WAR ALM”.

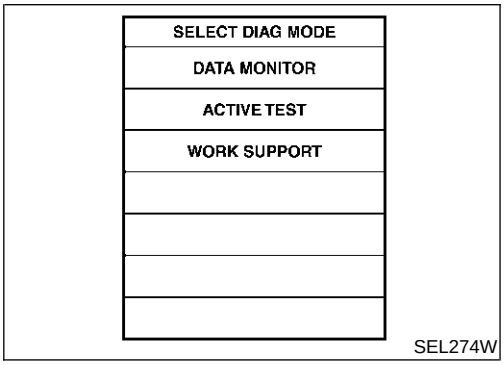

SEL274W

7. Select diagnosis mode.
   “DATA MONITOR”, “ACTIVE TEST” and “WORK SUPPORT” are available.

CONSULT-II Application Item

NHEL0245

"THEFT WAR ALM"

NHEL0245S01

Data Monitor

NHEL0245S0101

Monitored Item	Description
IGN ON SW	Indicates [ON/OFF] condition of ignition switch.
ACC ON SW	Indicates [ON/OFF] condition of ignition switch in ACC position.
KEY CYL LK SW	Indicates [ON/OFF] condition of lock signal from key cylinder switch.
KEY CYL UN SW	Indicates [ON/OFF] condition of unlock signal from key cylinder switch.
DOOR SW-RR	Indicates [ON/OFF] condition of rear door switch.
DOOR SW-DR	Indicates [ON/OFF] condition of front door switch LH.
DOOR SW-AS	Indicates [ON/OFF] condition of front door switch RH.
TRUNK SW	Indicates [ON/OFF] condition of trunk switch.
HOOD SWITCH	Indicates [ON/OFF] condition of hood switch.
LOCK SW DR/AS	Indicates [ON/OFF] condition of lock signal from door lock/unlock switch LH and RH.
UNLK SW DR/AS	Indicates [ON/OFF] condition of unlock signal from door lock/unlock LH and RH.
LK BUTTON/SIG	Indicates [ON/OFF] condition of lock signal from keyfob.
UN BUTTON/SIG	Indicates [ON/OFF] condition of unlock signal from keyfob.
TRUNK BTN/SIG	Indicates [ON/OFF] condition of trunk open signal from keyfob.

Active Test

NHEL0245S0102

Test Item	Description
THEFT IND	This test is able to check security indicator lamp operation. The lamp will be turned on when "ON" on CONSULT-II screen is touched.
HORN	This test is able to check vehicle security alarm operation. The alarm will be activated for 0.5 seconds after "ON" on CONSULT-II screen is touched.
HEADLAMP	This test is able to check vehicle security alarm headlamp operation. The headlamp illuminates for 0.5 seconds after "ON" on CONSULT-II screen is touched.

Work Support

NHEL0245S0103

Test Item	Description
THEFT ALM TRG	The switch which triggered vehicle security alarm is recorded. This mode is able to confirm and erase the record of theft waning alarm. The trigger data can be erased by touching "CLEAR" on CONSULT-II screen.
SECURITY ALARM SET	This mode is able to confirm and change security alarm ON-OFF setting.

Trouble Diagnoses

=NHEL0123

PRELIMINARY CHECK

NHEL0123S01

The system operation is canceled by turning ignition switch to “ACC” at any step between START and ARMED in the following flow chart.

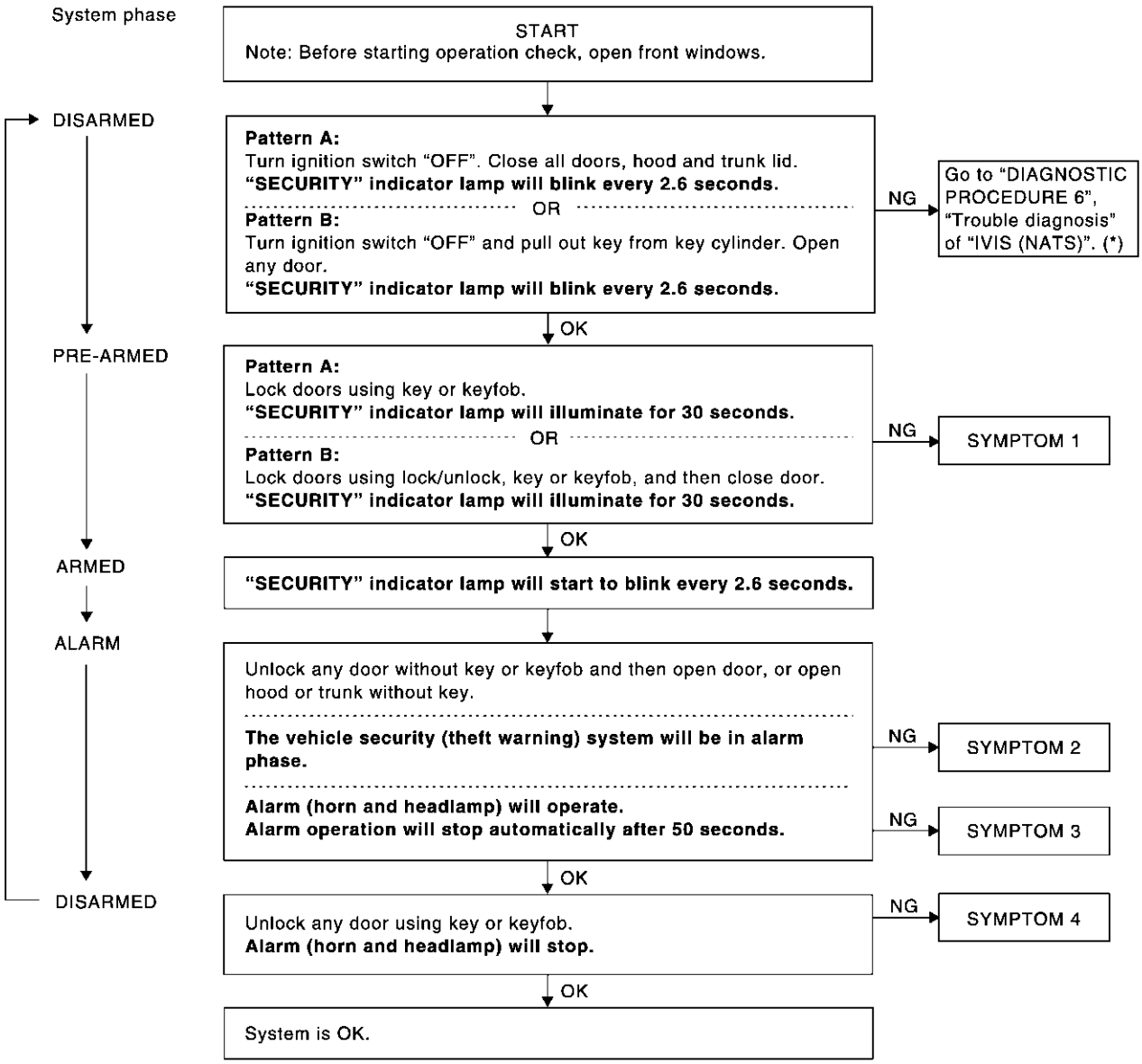

SEL731WB

For details of “Pattern A” and “Pattern B” about vehicle security (theft warning) system setting, refer to EL-330.
*: Refer to EL-391.
After performing preliminary check, go to symptom chart on next page.

SYMPTOM CHART

NHEL0123S02

REFERENCE PAGE (EL-)			344	346	347	353	355	357	358	309
SYMPTOM			PRELIMINARY CHECK	POWER SUPPLY AND GROUND CIRCUIT CHECK	DOOR, HOOD AND TRUNK ROOM LAMP SWITCH CHECK	SECURITY INDICATOR LAMP CHECK	DOOR KEY CYLINDER SWITCH CHECK	DOOR LOCK/UNLOCK SWITCH CHECK	VEHICLE SECURITY HORN AND HEADLAMP ALARM CHECK	Check "REMOTE KEYLESS ENTRY SYSTEM".
1	Vehicle security indicator does not illuminate for 30 seconds.		X	X		X				
	Vehicle security system cannot be set by	All items	X	X	X					
		Door outside key	X				X			
		Lock/unlock switch	X					X		
		Keyfob	X							X
2	*1 Vehicle security system does not alarm when ...	One of the door is opened	X		X					
3	Vehicle security alarm does not activate.	Horn or headlamp alarm	X		X				X	
4	Vehicle security system cannot be canceled by	Door outside key	X				X			
		Keyfob	X							X

X : Applicable

*1: Make sure the system is in the armed phase.

Before starting trouble diagnoses above, perform preliminary check, EL-344.

Symptom numbers in the symptom chart correspond with those of preliminary check.

POWER SUPPLY AND GROUND CIRCUIT CHECK

NHEL0123S03

Power Supply Circuit Check

NHEL0123S0301

1. Disconnect smart entrance control unit harness connector.
2. Check voltage between smart entrance control unit harness connector M144 terminals 26 (PU), 27 (G), M145 terminal 49 (R/B) and ground.

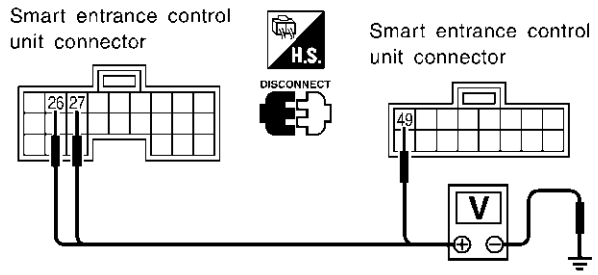

Terminals		Ignition switch position		
(+)	(−)	OFF	ACC	ON
49	Ground	Battery voltage	Battery voltage	Battery voltage
27	Ground	0V	0V	Battery voltage
26	Ground	0V	Battery voltage	Battery voltage

SEL582Y

Ground Circuit Check

NHEL0123S0302

1. Disconnect smart entrance control unit harness connector.
2. Check continuity between smart entrance control unit harness connector M144 terminal 43 (B), M145 terminal 64 (B) and ground.

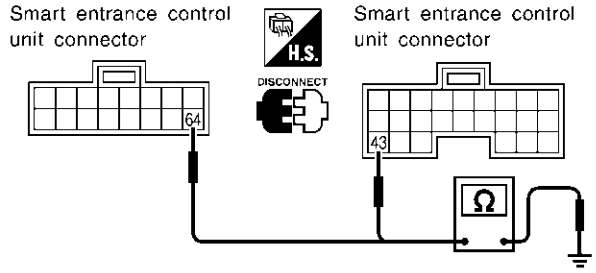

Terminals	Continuity
43 - Ground	Yes
64 - Ground	Yes

SEL034Y

DOOR, HOOD AND TRUNK ROOM LAMP SWITCH CHECK

=NHEL0123S04

Door Switch Check

NHEL0123S0401

1	PRELIMINARY CHECK

1. Turn ignition switch OFF and remove key from ignition key cylinder.
   "SECURITY" indicator lamp should blink every 2.6 seconds.
2. Close all doors, hood and trunk lid.
3. Lock doors with keyfob from inside the vehicle.
   "SECURITY" indicator lamp should turn on for 30 seconds.
4. Unlock any door with the door lock knob and open the door within 30 seconds after door is locked.
   "SECURITY" indicator lamp should turn off.

OK or NG

OK	▶	Door switch is OK, and go to hood switch check.
NG	▶	GO TO 2.

2	CHECK DOOR SWITCH INPUT SIGNAL

With CONSULT-II

Check door switches ("DOOR SW-RR", "DOOR SW-DR" and "DOOR SW-AS") in "DATA MONITOR" mode with CONSULT-II.

DATA MONITOR	
MONITOR	
DOOR SW-RR	OFF
DOOR SW-DR	OFF
DOOR SW-AS	OFF

	Monitor item	Condition	Condition
DOOR SW-RR	Rear doors switch	Open	ON
		Closed	OFF
DOOR SW-DR	Door switch LH	Open	ON
		Closed	OFF
DOOR SW-AS	Door switch RH	Open	ON
		Closed	OFF

SEL024Y

Without CONSULT-II

Check voltage between smart entrance control unit harness connector M143 terminals 1 (LG), 2 (R/L) or 3 (R/W) and ground.

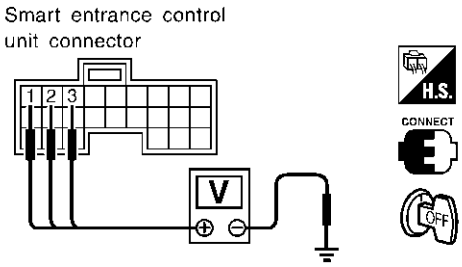

	Terminals (+)	Terminals (−)	Condition	Voltage [V]
Front door switch LH	1	Ground	Open	0
			Closed	Approx. 12
Front door switch RH	2	Ground	Open	0
			Closed	Approx. 5
Rear door switches	3	Ground	Open	0
			Closed	Approx. 5

SEL021YC

Refer to wiring diagram in EL-337.

OK or NG

OK	▶	Door switch is OK, and go to hood switch check.
NG	▶	GO TO 3.

3	CHECK DOOR SWITCH

1. Disconnect door switch connector.
2. Check continuity between door switch terminals.

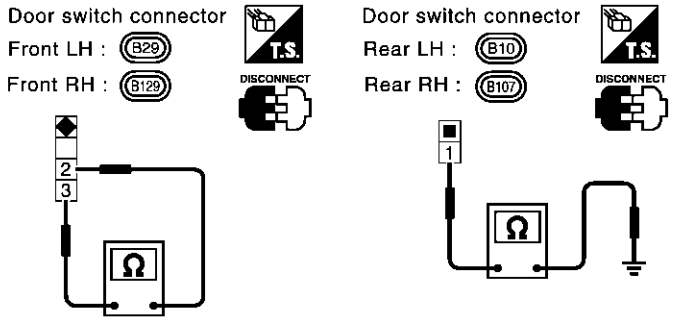

	Terminals	Condition	Continuity
Front door switches	2 - 3	Closed	No
		Open	Yes
Rear door switches	1 - Ground	Closed	No
		Open	Yes

SEL900Y

OK or NG

OK ▶	**Check the following.** ● Door switch ground circuit or door switch ground condition ● Harness for open or short between smart entrance control unit and door switch
NG ▶	Replace door switch.

Hood Switch Check

=NHEL0123S0402

1	PRELIMINARY CHECK

1. Turn ignition switch OFF and remove key from ignition key cylinder.
   "SECURITY" indicator lamp should blink every 2.6 seconds.
2. Close all doors, hood and trunk lid.
3. Lock doors with keyfob from inside the vehicle.
   "SECURITY" indicator lamp should turn on for 30 seconds.
4. Unlock hood with hood opener within 30 seconds after door is locked.
   "SECURITY" indicator lamp should turn off.

OK or NG

OK	▶	Hood switch is OK, and go to trunk room lamp switch check.
NG	▶	GO TO 2.

2	CHECK HOOD SWITCH FITTING CONDITION

OK or NG

OK	▶	GO TO 3.
NG	▶	Adjust installation of hood switch or hood.

3	CHECK HOOD SWITCH INPUT SIGNAL

With CONSULT-II
Check hood switch ("HOOD SWITCH") in "DATA MONITOR" mode with CONSULT-II.

DATA MONITOR	
MONITOR	
HOOD SWITCH	OFF

When hood is open:
HOOD SWITCH ON
When hood is closed:
HOOD SWITCH OFF

SEL354W

Without CONSULT-II
Check voltage between smart entrance control unit harness connector M143 terminal 6 (Y/R) and ground.

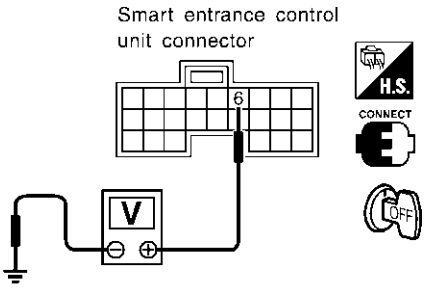

Voltage [V]:
Engine hood is open.
0
Engine hood is closed.
Approx. 12

SEL035YA

Refer to wiring diagram in EL-336.

OK or NG

OK	▶	Hood switch is OK, and go to trunk room lamp switch check.
NG	▶	GO TO 4.

4	CHECK HOOD SWITCH

1. Disconnect hood switch connector.
2. Check continuity between hood switch terminals 1 and 2.

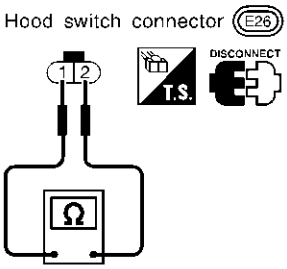

Continuity:
Condition: Pushed
No
Condition: Released
Yes

SEL240W

OK or NG

OK	▶	**Check the following.** ● Hood switch ground circuit ● Harness for open or short between smart entrance control unit and hood switch
NG	▶	Replace hood switch.

Trunk Room Lamp Switch Check

=NHEL0123S0403

1	PRELIMINARY CHECK

1. Turn ignition switch OFF and remove key from ignition key cylinder.
   "SECURITY" indicator lamp should blink every 2.6 seconds.
2. Close all doors, hood and trunk lid.
3. Lock doors with keyfob from inside the vehicle.
   "SECURITY" indicator lamp should turn on for 30 seconds.
4. Open trunk lid with trunk lid opener switch (on driver side door trim) within 30 seconds after door is locked.
   "SECURITY" indicator lamp should turn off.

OK or NG

OK	▶	Trunk room lamp switch is OK.
NG	▶	GO TO 2.

2	CHECK TRUNK ROOM LAMP SWITCH INPUT SIGNAL

With CONSULT-II

Check trunk room lamp switch ("TRUNK SW"), in "DATA MONITOR" mode with CONSULT-II.

DATA MONITOR	
MONITOR	
TRUNK SW	OFF

When trunk lid is open:
TRUNK SW ON

When trunk lid is closed:
TRUNK SW OFF

SEL355W

Without CONSULT-II

Check voltage between smart entrance control unit harness connector M143 terminal 13 (PU/Y) and ground.

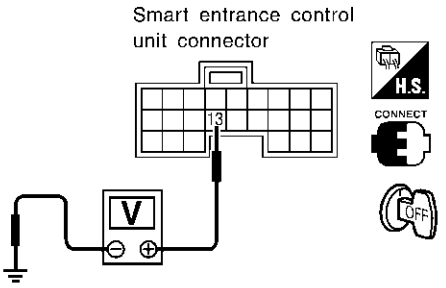

Voltage [V]:
Trunk lid is open.
Approx. 0
Trunk lid is closed.
Approx. 12

SEL036Y

Refer to wiring diagram in EL-336.

OK or NG

OK	▶	Trunk room lamp switch is OK.
NG	▶	GO TO 3.

3	CHECK TRUNK ROOM LAMP SWITCH

1. Disconnect trunk room lamp switch connector.
2. Check continuity between trunk room lamp switch terminals 1 and 2.

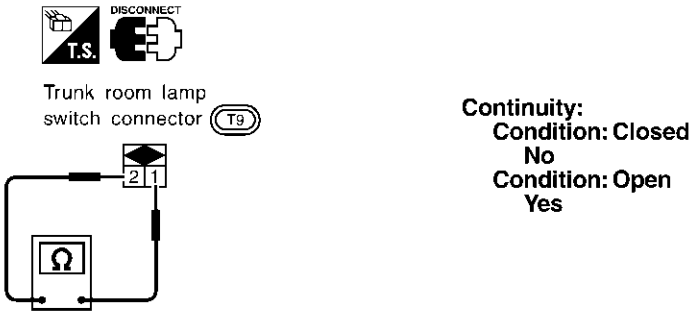

Continuity:
Condition: Closed
No
Condition: Open
Yes

SEL242W

OK or NG

OK	▶	**Check the following.** ● Trunk room lamp switch ground circuit ● Harness for open or short between smart entrance control unit and trunk room lamp switch
NG	▶	Replace trunk room lamp switch.

SECURITY INDICATOR LAMP CHECK

=NHEL0123S05

1	CHECK SECURITY INDICATOR LAMP OPERATION

With CONSULT-II

1. Select "ACTIVE TEST" in "THEFT WAR ALM" with CONSULT-II.
2. Select "THEFT IND" and touch "ON".

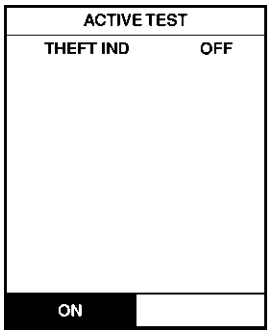

Security indicator lamp should illuminate.

SEL356W

Without CONSULT-II

1. Disconnect smart entrance control unit harness connector.
2. Check voltage between smart entrance control unit harness connector M144 terminal 38 (G/OR) and ground.

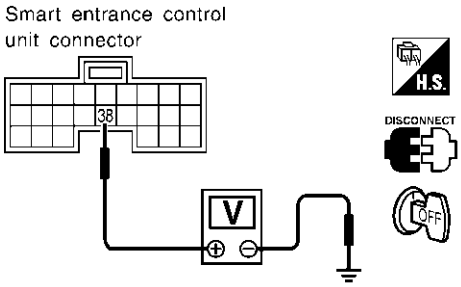

Battery voltage should exist.

SEL037Y

Refer to wiring diagram in EL-336.

OK or NG

OK	▶	Security indicator lamp is OK.
NG	▶	GO TO 2.

2	CHECK SECURITY INDICATOR LAMP

OK or NG

OK	▶	GO TO 3.
NG	▶	Replace security indicator lamp.

3	CHECK POWER SUPPLY CIRCUIT FOR SECURITY INDICATOR LAMP

1. Disconnect security indicator lamp connector.
2. Check voltage between security indicator lamp terminal 1 and ground.

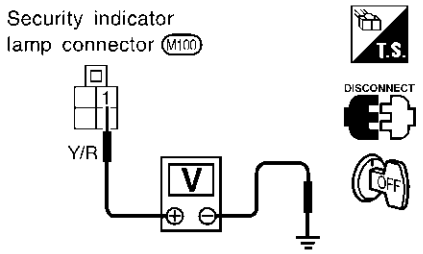

Battery voltage should exist.

SEL653WA

OK or NG

OK	▶	Check harness for open or short between security indicator lamp and smart entrance control unit.
NG	▶	**Check the following.** ● 10A fuse [No. 12, located in fuse block (J/B)] ● Harness for open or short between security indicator lamp and fuse

DOOR KEY CYLINDER SWITCH CHECK

=NHEL0123S07

1	CHECK DOOR KEY CYLINDER SWITCH INPUT SIGNAL (LOCK/UNLOCK SIGNAL)

With CONSULT-II

Check front door key cylinder switch ("KEY CYL LK-SW"/"KEY CYL UN-SW") in "DATA MONITOR" mode with CONSULT-II.

DATA MONITOR	
MONITOR	
KEY CYL LK-SW	OFF
KEY CYL UN-SW	OFF

When key inserted in front key cylinder is turned to LOCK:
KEY CYL LK-SW ON
When key inserted in front key cylinder is turned to UNLOCK:
KEY CYL UN-SW ON

SEL342W

Without CONSULT-II

1. Check the signal between smart entrance control unit harness connector M144 terminal 33 (L) and ground with oscilloscope when key inserted in front key cylinder is turned to "LOCK" or "UNLOCK".
2. Make sure signals which are shown in the figure below can be detected during 10 sec. just after key is turned to "LOCK" or "UNLOCK".

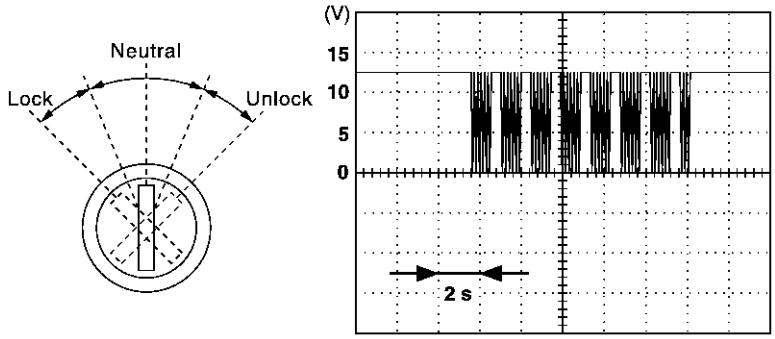

Voltage:
12V → 9V (10 sec.) measurement by analog circuit tester.

SEL397Y

Refer to wiring diagram in EL-338.

OK or NG

OK	▶	Door key cylinder switch is OK.
NG	▶	GO TO 2.

2	CHECK DOOR KEY CYLINDER SWITCH

1. Disconnect door key cylinder switch connector.
2. Check continuity between door key cylinder switch connector terminals.

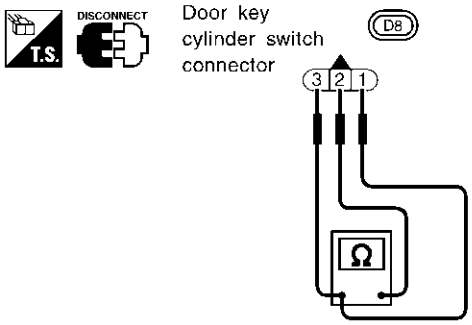

① : Door unlock switch terminal
② : Ground terminal
③ : Door lock switch terminal

Terminals	Key position	Continuity
③ - ②	Neutral/Unlock	No
	Lock	Yes
① - ②	Neutral/Lock	No
	Unlock	Yes

SEL034X

OK or NG

OK	▶	**Check the following.** ● Door key cylinder switch ground circuit ● Harness for open or short between smart entrance control unit and door key cylinder switch
NG	▶	Replace door key cylinder switch.

DOOR LOCK/UNLOCK SWITCH CHECK

NHEL0123S13

1	CHECK DOOR LOCK/UNLOCK SWITCH INPUT SIGNAL

With CONSULT-II

Check door lock/unlock switch ("LOCK SW DR/AS"/"UNLK SW DR/AS") in "DATA MONITOR" mode with CONSULT-II.

DATA MONITOR	
MONITOR	
LOCK SW DR/AS	OFF
UNLK SW DR/AS	OFF

When lock/unlock switch is turned to LOCK:
LOCK SW DR/AS ON

When lock/unlock switch is turned to UNLOCK:
UNLK SW DR/AS ON

SEL341W

Without CONSULT-II

1. Remove key from ignition switch.
2. Check the signal between smart entrance control unit harness connector M144 terminal 33 (L) and ground with oscilloscope when door lock/unlock switch is turned to "LOCK" or "UNLOCK".
3. Make sure signals which are shown in the figure below can be detected during 10 sec. just after door lock/unlock switch is turned to "LOCK" or "UNLOCK".

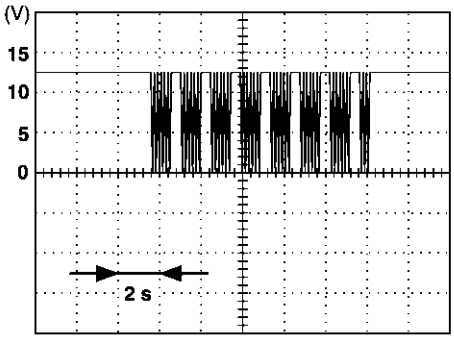

Voltage:
12V → 9V (10 sec.) measurement by analog circuit tester.

SEL396Y

Refer to wiring diagram in EL-338.

OK or NG

OK	▶	Door lock/unlock switch is OK.
NG	▶	**Check the following.** ● Ground circuit for front power window switch. ● Harness for open or short between front power window switch and smart entrance control unit. If above systems are normal, replace front power window switch.

VEHICLE SECURITY HORN AND HEADLAMP ALARM CHECK

=NHEL0123S09

1	CHECK VEHICLE SECURITY HORN AND HEADLAMP ALARM OPERATION WITH CONSULT-II

Ⓕ **With CONSULT-II**

1. Select "ACTIVE TEST" in "THEFT WAR ALM" with CONSULT-II.
2. Select "HORN" and touch "ON".

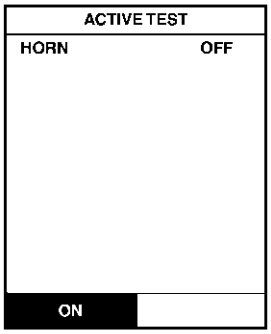

Vehicle security horn alarm should operate.

SEL041Y

3. Select "HEADLAMP" and touch "ON".

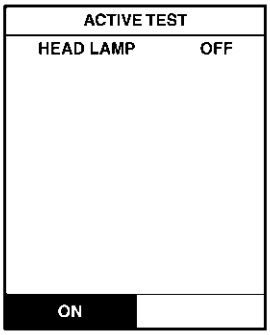

Vehicle security headlamp alarm should operate.

SEL042Y

NOTE:
If CONSULT-II is not available, skip this procedure and go to the nest step.

OK or NG

OK	▶	Vehicle security horn and headlamp alarm operation are OK.
NG	▶	GO TO 2.

2	CHECK VEHICLE SECURITY HORN AND HEADLAMP ALARM OPERATION WITHOUT CONSULT-II

Without CONSULT-II

1. Disconnect smart entrance control unit harness connector.
2. Apply ground to smart entrance control unit harness connector M144 terminal 42 (BR/Y).

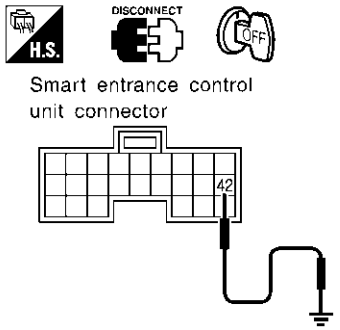

Vehicle security horn should operate.

SEL043YA

Refer to wiring diagram in EL-339.

3. Apply ground to smart entrance control unit harness connector M143 and M145 terminal 21 (OR) and 59 (P).

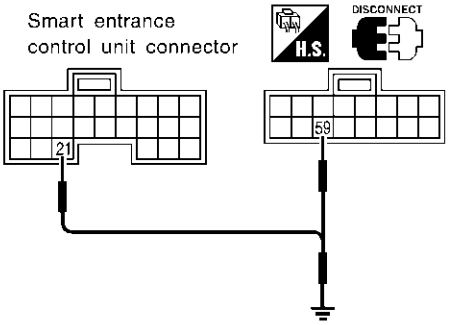

Vehicle security headlamp alarm should operate.

SEL198Y

Refer to wiring diagram in EL-340.

OK or NG

OK	▶	Horn and headlamp alarm is OK.
NG	▶	GO TO 3.

3	CHECK VEHICLE SECURITY HORN RELAYS

Check vehicle security horn relay-1 and relay-2.

OK or NG

OK	▶	GO TO 4.
NG	▶	Replace.

4	CHECK POWER SUPPLY FOR VEHICLE SECURITY HORN RELAYS

1. Disconnect vehicle security horn relay-1 and relay-2 connectors.
2. Check voltage between vehicle security horn relay-1 and relay-2 terminal 1 and ground.

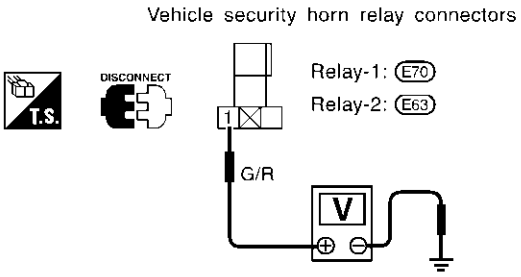

SEL044Y

Does battery voltage exist?

Yes	▶	GO TO 5.
No	▶	**Check the following.** ● 10A fuse (No. 61 located in the fuse and fusible link box) ● Harness for open or short between vehicle security horn relays and fuse

5	CHECK VEHICLE SECURITY HORN RELAYS CIRCUIT

1. Disconnect vehicle security horn relay-1 and relay-2 connectors.
2. Check voltage between vehicle security horn relay-1 and relay-2 terminals of each relay.
   Battery voltage should exist.

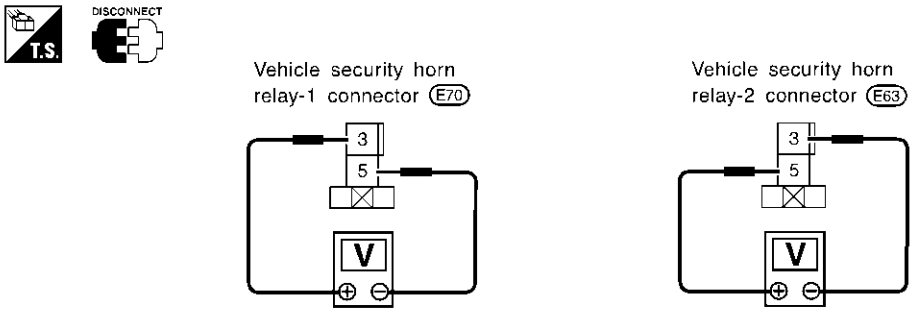

SEL045Y

OK or NG

OK	▶	Check harness for open or short between vehicle security horn relay-2 and headlamp relays.
NG	▶	**Check the following.** ● Harness for open or short between vehicle security horn relay-1 and fuse ● Harness for open or short between vehicle security horn relay-1 and relay-2 ● Harness for open or short between vehicle security horn relay-1 and vehicle security horn

Description

NHEL0124

OUTLINE

NHEL0124S01

The smart entrance control unit totally controls the following body electrical system operations.

- Heated steering
- Headlamp system
- Warning chime
- Rear defogger and door mirror defogger
- Power door lock
- Remote keyless entry system
- Vehicle security system
- Interior lamp

In addition, the following timer operations are controlled by the smart entrance control unit.

- Battery saver control
- Retained power control

BATTERY SAVER CONTROL

NHEL0124S05

Headlamps/Parking Lamps/License Lamps/Tail Lamps/Fog Lamps/Illumination Lamps

NHEL0124S0501

While the headlamp is turned ON by “1st” or “2ND” step of light switch, the 5 minute timer is activated when the ignition switch signal changes from ON (or START) to OFF (ACC OFF). The headlamps (including parking, license, tail, fog and illumination lamps) are turned off after 5 minutes.
While the headlamp is turned ON by “AUTO” of light switch, the 5 minute timer is activated when the ignition switch signal changes from ON (or START) to OFF (ACC OFF), and either one of LH or RH front door switch ON signal is input.
The auto light delay off timer is activated as the following:

- When the door switch signal changes from ON to OFF while the timer is activated, the timer in operation is discontinued and the 45 second timer is reset.
- When the door switch signal changes from OFF to ON while the timer is activated, the timer is discontinued and the 45 second timer is reset.
- When the one of four door switch signals changes from OFF to ON while the timer is activated, the timer is discontinued and the 5 minute timer is reset.
- When all the door switch ON signals are input while the timer is activated, the timer is discontinued and the 45 second timer is reset.

Exterior lamp battery saver control mode and auto light delay off timer period can be changed by the function setting of CONSULT-II.

Interior Lamp/Spot Lamp/Vanity Mirror Illumination

NHEL0124S0502

The lamps turn off automatically when the interior lamp, spot lamp or/and vanity mirror illumination are illuminated with the ignition key in the OFF position, if the lamp remains lit by the door switch open signal or if the lamp switch is in the ON position for more than 30 minutes.
After lamps are turned off by the battery saver system, the lamps illuminate again when:

- Driver’s door is locked or unlocked with keyfob, door lock/unlock switch or door key cylinder.
- Ignition switch is turned to ON.
- Door is opened or closed,
- Key is inserted into ignition key cylinder.

Interior lamp battery saver control period can be changed by the function setting of CONSULT-II.

Rear Window Defogger/Door Mirror Defogger

NHEL0124S0503

Rear window defogger and door mirror defogger are turned off in approximately 15 minutes after the rear window defogger switch is turned on.

Heated Steering

NHEL0124S0504

Heated steering is turned off in approximately 30 minutes after the heated steering switch is turned ON.

RETAINED POWER CONTROL

NHEL0124S06

When the ignition switch is turned to OFF (or ACC) position from ON or START position, the following systems can be operated for 45 seconds by the RAP signal from the smart entrance control unit terminal 46.

- Electric sunroof

- Power window

The retained power operation is canceled when the driver or passenger side door is opened.
RAP signal period can be changed by CONSULT-II.

INPUT/OUTPUT

NHEL0124S04

System	Input	Output
Power door lock	Door lock and unlock switch LH and RH Key switch (Insert) Door switches Door key cylinder switches	Door lock actuator
Remote keyless entry	Key switch (Insert) Ignition switch (ACC) Door switches Keyfob signal Door lock/unlock switch LH	Horn relay Vehicle security horn relay-1 Vehicle security horn relay-2 Hazard warning lamp Interior lamp Ignition key hole illumination Door lock actuator Trunk lid opener actuator
Warning chime	Key switch (Insert) Ignition switch (ON) Lighting switch (1st) Seat belt switch (driver's seat) Front door switch LH	Warning chime (located in smart entrance control unit)
Rear window defogger and door mirror defogger	Ignition switch (ON) Rear window defogger switch	Rear window defogger relay
Vehicle security	Ignition switch (ACC, ON) Door switches Hood switch Trunk room lamp switch Door lock/unlock switches Door key cylinder switch (lock/unlock)	Vehicle security horn relay-2 Headlamp relay Security indicator
Interior lamp	Door switches Keyfob signal (lock/unlock) Door lock/unlock switches (lock/unlock) Door key cylinder switch (lock/unlock) Ignition switch (ON) Key system	Interior lamp Key hole illumination Step lamp Door indicator
Battery saver control for headlamps/parking lamps/ licence lamps/tail lamps/fog lamps/illumination lamps	Ignition switch (ON) Front door switches Lighting switch	Headlamps Parking lamps License lamps Tail lamps Fog lamps Illumination lamps
Battery saver control for interior lamp/step lamp/spot lamp/ vanity mirror illumination	Ignition switch (ON) Front door switches Lighting switch	Interior lamps Step lamp Spot lamp Vanity mirror illumination
Battery saver control for rear window defogger and door mirror defogger	Ignition switch (ON) Rear window defogger switch	Rear window defogger relay
Retained power control for electric sunroof	Ignition switch (ON) Front door switches	Sunroof motor
Retained power control for power window	Ignition switch (ON) Front door switches	Power window relay
Heated steering	Ignition switch (ON) Heated steering switches	Heated steering relay

CONSULT-II

=NHEL0247

DIAGNOSTIC ITEMS APPLICATION

NHEL0247S01

Item (CONSULT-II screen terms)	Diagnosed system	DATA MONITOR	ACTIVE TEST	WORK SUPPORT
DOOR LOCK	Power door lock	X	X	X
REAR DEFOGGER	Rear window defogger	X	X	
KEY WARN ALM	Warning chime	X	X	
LIGHT WARN ALM	Warning chime	X	X	
SEAT BELT ALM	Warning chime	X	X	
INT LAMP	Interior lamps	X	X	X
BATTERY SAVER	Battery saver control for interior lamp	X	X	X
THEFT WAR ALM	Vehicle security system	X	X	X
RETAINED PWR	Retained power control	X	X	X
MULTI REMOTE ENT	Remote keyless entry system	X	X	X
HEADLAMP	Headlamp	X	X	X

X: Applicable

For diagnostic item in each control system, refer to the relevant pages for each system.

DIAGNOSTIC ITEM DESCRIPTION

NHEL0247S02

MODE	Description
DATA MONITOR	Input/output data in the smart entrance control unit can be read.
ACTIVE TEST	Diagnostic Test Mode in which CONSULT-II drives some systems apart from the smart entrance control unit.
WORK SUPPORT for DOOR LOCK	• Select unlock mode ON-OFF setting can be changed. • Key reminder door mode ON-OFF setting can be changed.
WORK SUPPORT for INT LAMP	Interior lamp timer mode ON-OFF setting can be changed.
WORK SUPPORT for BATTERY SAVER	Interior lamp battery saver period can be changed.
WORK SUPPORT for THEFT WAR ALM	• The recorded trigger signal when vehicle security system was activated can be checked. • Security alarm ON-OFF setting can be changed.
WORK SUPPORT for RETAINED PWR SET	RAP signal's power supply period can be changed.
WORK SUPPORT for MULTI REMOTE ENT	• ID code of keyfob can be registered and erased. • Keyless answer back mode can be changed. • Pressing time of panic alarm, trunk lid opener and door unlock (for power window down operation) buttons on keyfob can be changed. • Auto lock operation starting time can be changed.
WORK SUPPORT for HEAD LAMP	• Auto light sensitivity can be changed. • Exterior lamp battery saver control ON-OFF setting can be changed. • Auto light delay off time can be changed.

CONSULT-II INSPECTION PROCEDURE

=NHEL0247S03

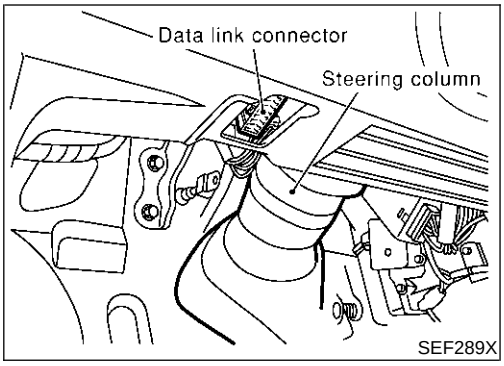

SEF289X

1. Turn the ignition switch "OFF".
2. Connect "CONSULT-II" and "CONSULT-II CONVERTER" to the data link connector.

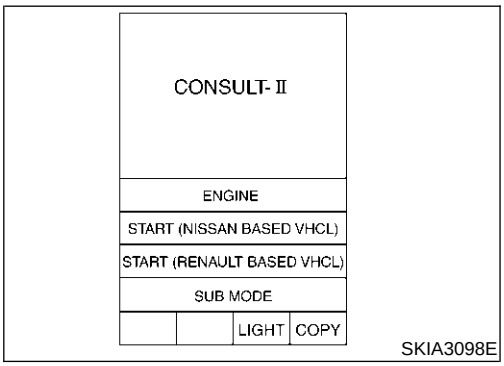

SKIA3098E

3. Turn ignition switch "ON".
4. Touch "START (NISSAN BASED VHCL)".

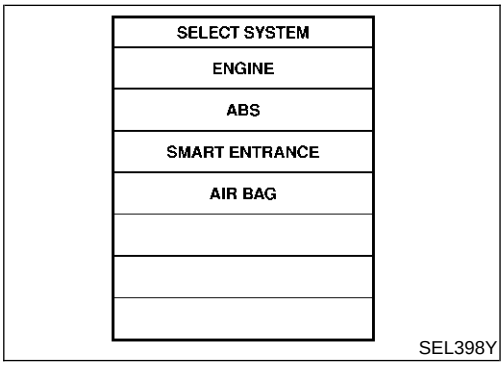

SEL398Y

5. Touch "SMART ENTRANCE".
   If "SMART ENTRANCE" is not indicated, go to GI-42.

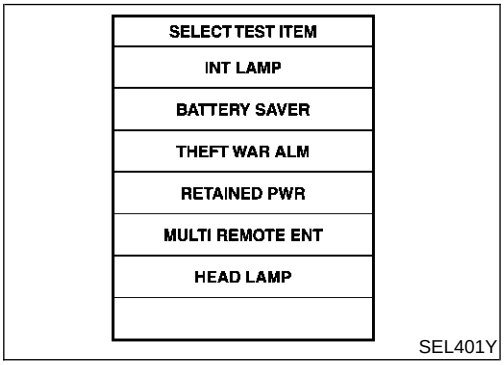

SEL401Y

6. Perform each diagnostic item according to "DIAGNOSTIC ITEMS APPLICATION". Refer to EL-363.

NOTE:

Schematic

NHEL0125

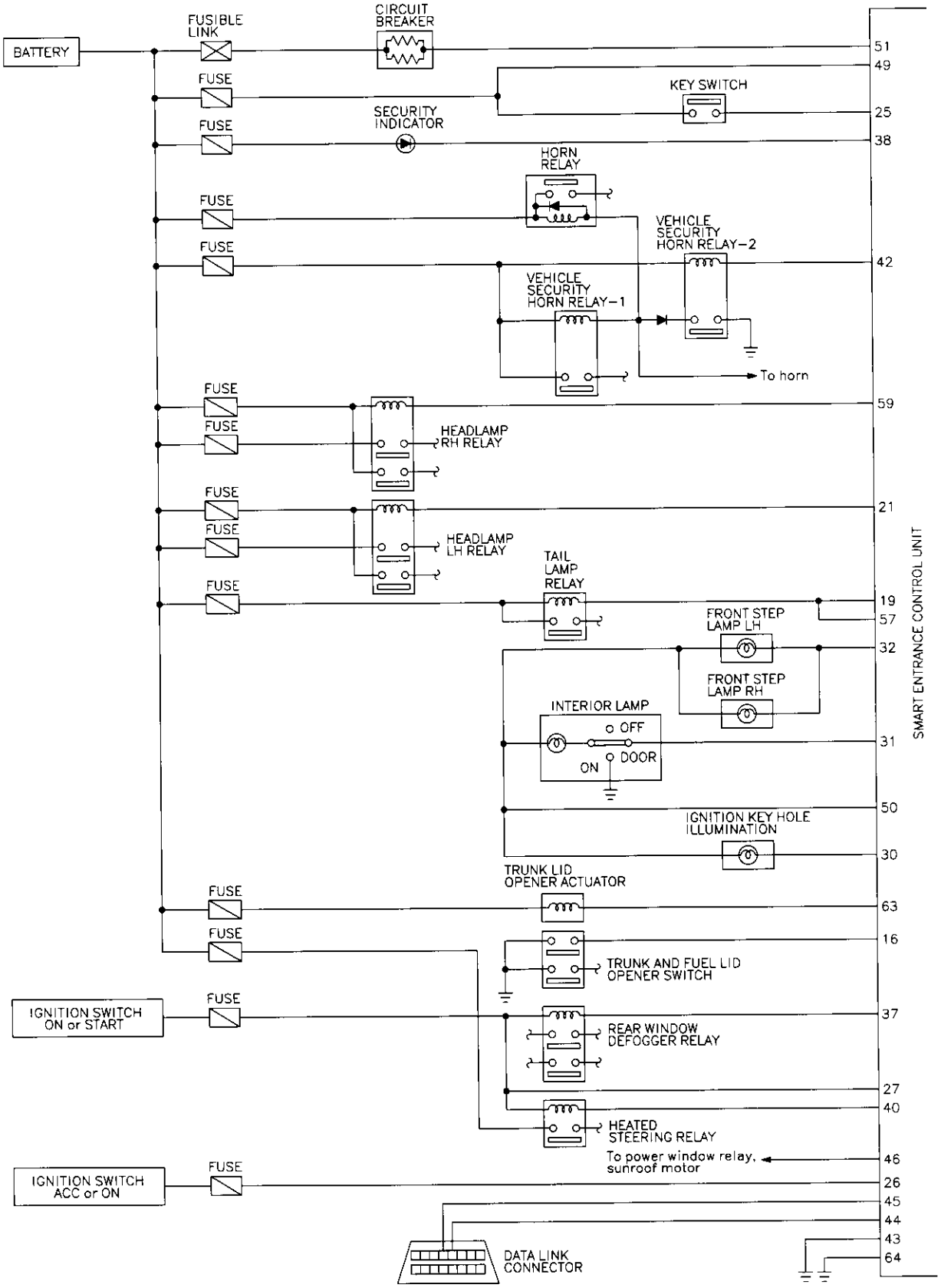

MEL358O

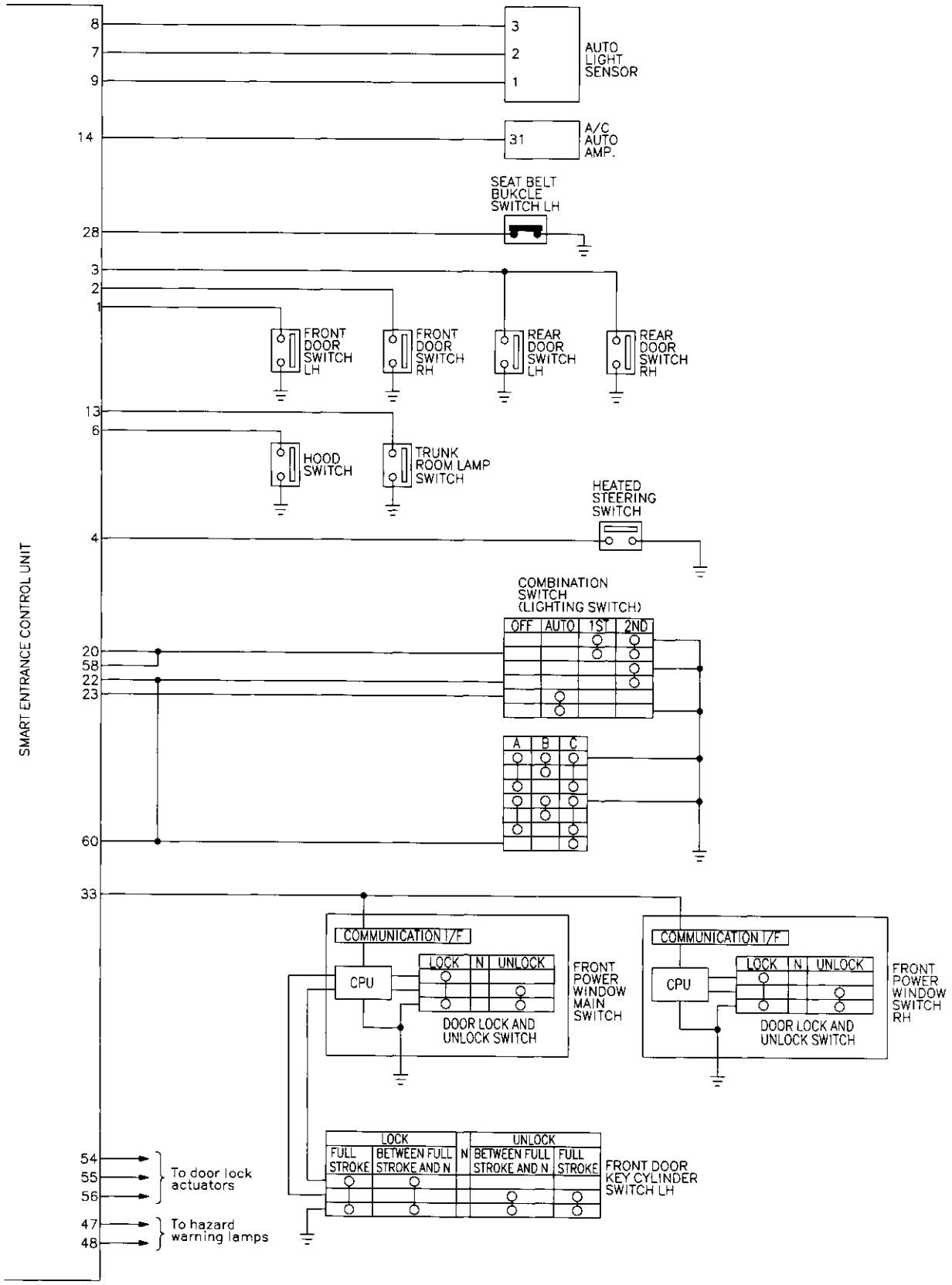
SMART ENTRANCE CONTROL UNIT
8
7
9
3
2
1
AUTO LIGHT SENSOR
14
31
A/C AUTO AMP.
SEAT BELT BUKCLE SWITCH LH
28
3
2
1
FRONT DOOR SWITCH LH
FRONT DOOR SWITCH RH
REAR DOOR SWITCH LH
REAR DOOR SWITCH RH
13
6
HOOD SWITCH
TRUNK ROOM LAMP SWITCH
HEATED STEERING SWITCH
4
COMBINATION SWITCH (LIGHTING SWITCH)
OFF
AUTO
1ST
2ND
20
58
22
23
A
B
C
60
33
COMMUNICATION I/F
CPU
LOCK
N
UNLOCK
DOOR LOCK AND UNLOCK SWITCH
FRONT POWER WINDOW MAIN SWITCH
FRONT POWER WINDOW SWITCH RH
LOCK
UNLOCK
FULL STROKE
BETWEEN FULL STROKE AND N
FRONT DOOR KEY CYLINDER SWITCH LH
54
55
56
To door lock actuators
47
48
To hazard warning lamps

MEL359O

Smart Entrance Control Unit Inspection Table

NHEL0126

Terminal No.	Wire color	Connections	Operated condition			Voltage (Approximate values)
1	LG	Driver door switch	OFF (Closed) → ON (Open)			12V → 0V
2	R/L	Passenger door switch	OFF (Closed) → ON (Open)			5V → 0V
3	R/W	Rear door switch	OFF (Closed) → ON (Open)			5V → 0V
4	G	Heated steering switch	OFF → ON (Only when pushed)			5V → 0V
6	Y/R	Hood switch	ON (Open) → OFF (Closed)			0V → 12V
7	W/R	Auto light sensor (Signal)	Ignition switch ON position	Light is applied to auto light sensor.		1 to 5V
				Light is not applied to auto light sensor.		Less than 1V
8	P/B	Auto light sensor (GND)	—			—
9	R	Auto light sensor (Power)	Ignition switch (OFF → ON)			0V → 5V
13	PU/Y	Trunk room lamp switch	ON (Open) → OFF (Closed)			0V → 12V
14	G/W	Rear window defogger switch	OFF → ON (Only when pushed)			5V → 0V
16	L	Trunk and fuel lid opener switch	OFF → ON (Only when pulled)			12V → 0V
19	Y/B	Tail lamp relay (Output)	Ignition switch (with lighting switch 1ST or 2ND)	ON or START → OFF position	More than 5 minutes after ignition switch is turned to OFF position	12V
					Within 5 minutes after ignition switch is turned to OFF position	0V
				ON or START position		0V
			Headlamps illuminate by auto light control. (Operate → Not operate)			Less than 1V → 12V
20	SB	Tail lamp switch	Lighting switch (OFF or AUTO → 1ST or 2ND position)			12V → 0V
21	OR	Headlamp LH relay	Ignition switch (with lighting switch 2ND)	ON or START → OFF position	More than 5 minutes after ignition switch is turned to OFF position	12V
					Within 5 minutes after ignition switch is turned to OFF position	0V
				ON or START position		0V
			Headlamps illuminate by auto light control.			0V
22	L/OR	Headlamp switch	Lighting switch	Except PASS or 2ND position		12V
				PASS or 2ND position		0V
			Headlamps illuminate by auto light control. (Operate → Not operate)			10V→ 12V

Terminal No.	Wire color	Connections	Operated condition		Voltage (Approximate values)
23	L/Y	Headlamp switch	Ignition switch "ON" position	Lighting switch (Except AUTO → AUTO position)	12V → 0V
25	B/R	Ignition key switch (Insert)	Key inserted → Key removed from IGN key cylinder		12V → 0V
26	PU	Ignition switch (ACC)	"ACC" position		12V
27	G	Ignition switch (ON)	Ignition switch is in "ON" position		12V
28	OR	Seat belt buckle switch	Unfastened → Fastened (Ignition switch is in "ON" position)		0V → 12V
30	R/Y	Ignition keyhole illumination	When doors are unlocked using keyfob (OFF → Unlock)		12V → 0V
31	R	Interior lamp	When doors are locked using keyfob (Unlock → lock with lamp switch in "DOOR" position)		0V → 12V
32	R/W	Front step lamp	Any door switch	ON (Open) → OFF (Closed)	0V → 12V
33	L	Communication interface	Door lock & unlock switches (Neutral → Lock/Unlock)		EL-370
			Front door key cylinder switch LH (Neutral → Lock/Unlock)		
37	G/R	Rear window defogger relay	OFF → ON (Ignition switch is in "ON" position)		12V → 0V
38	G/OR	Security indicator	Goes off → Illuminates		12V → 0V
40	B/R	Heated steering relay	OFF → ON (Ignition switch is in "ON" position)		12 → 0V
42	BR/Y	Vehicle Security horn relay	When panic alarm is operated using keyfob (ON → OFF)		12V → 0V
43	B	Ground	—		—
46	PU	Power window relay	Retained power operation is operated (ON → OFF)		12V → 0V
47	G/B	LH turn signal lamp	When door lock or unlock is operated using keyfob (ON → OFF)		12V → 0V
48	G/Y	RH turn signal lamp	When door lock or unlock is operated using keyfob (ON → OFF)		12V → 0V
49	R/B	Power source (Fuse)	—		12V
50	R/G	Battery saver (Interior lamp)	Battery saver operates → Does not operate (ON →OFF)		12V → 0V
51	W/R	Power source (PTC)	—		12V
54	GY	Door lock actuators	Door lock & unlock switch (Free → Lock)		0V → 12V
55	W/B	Driver door lock actuator	Door lock & unlock switch (Free → Unlock)		0V → 12V
56	G/Y	Passenger and rear doors lock actuator	Door lock & unlock switch (Free → Unlock)		0V → 12V

Smart Entrance Control Unit Inspection Table (Cont'd)

Terminal No.	Wire color	Connections	Operated condition			Voltage (Approximate values)
57	Y/B	Tail lamp relay	Ignition switch (with lighting switch 1ST or 2ND)	ON or START → OFF position	More than 5 minutes after ignition switch is turned to OFF position	12V
					Within 5 minutes after ignition switch is turned to OFF position	0V
				ON or START position		0V
			Headlamps illuminate by auto light control. (Operate → Not operate)			Less than 1V → 12V
58	SB	Tail lamp switch	Lighting switch (OFF or AUTO → 1ST or 2ND)			12V → 0V
59	P	Headlamp RH relay	Ignition switch (with lighting switch 2ND)	ON or START → OFF position	More than 5 minutes after ignition switch is turned to OFF position	12V
					Within 5 minutes after ignition switch is turned to OFF position	0V
				ON or START position		0V
			Headlamps illuminate by auto light control. (Operate → Not operate)			Less than 1V → 12V
60	LG/R	Headlamp switch	Lighting switch	Except PASS or 2ND position		12V
				PASS or 2ND position		0V
			Headlamps illuminate by auto light control. (Operate → Not operate)			10V → 12V
63	L	Trunk lid opener actuator	When trunk lid opener actuator is operated using keyfob. (ON → OFF)			0V → 12V
64	B	Ground	—			—

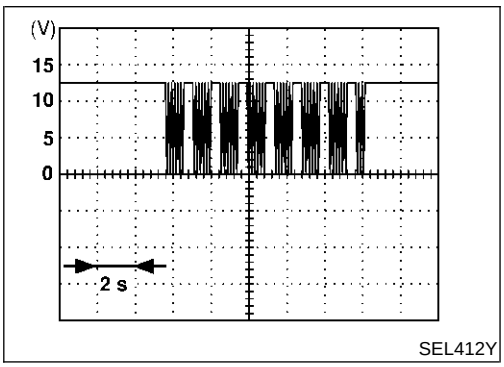

COMMUNICATION INTERFACE SIGNAL

NHEL0126S01

Voltage:

12 V → 9V (10 sec.) measurement by analog circuit tester.

Wiring Diagram — TRNSCV —

NHEL0127

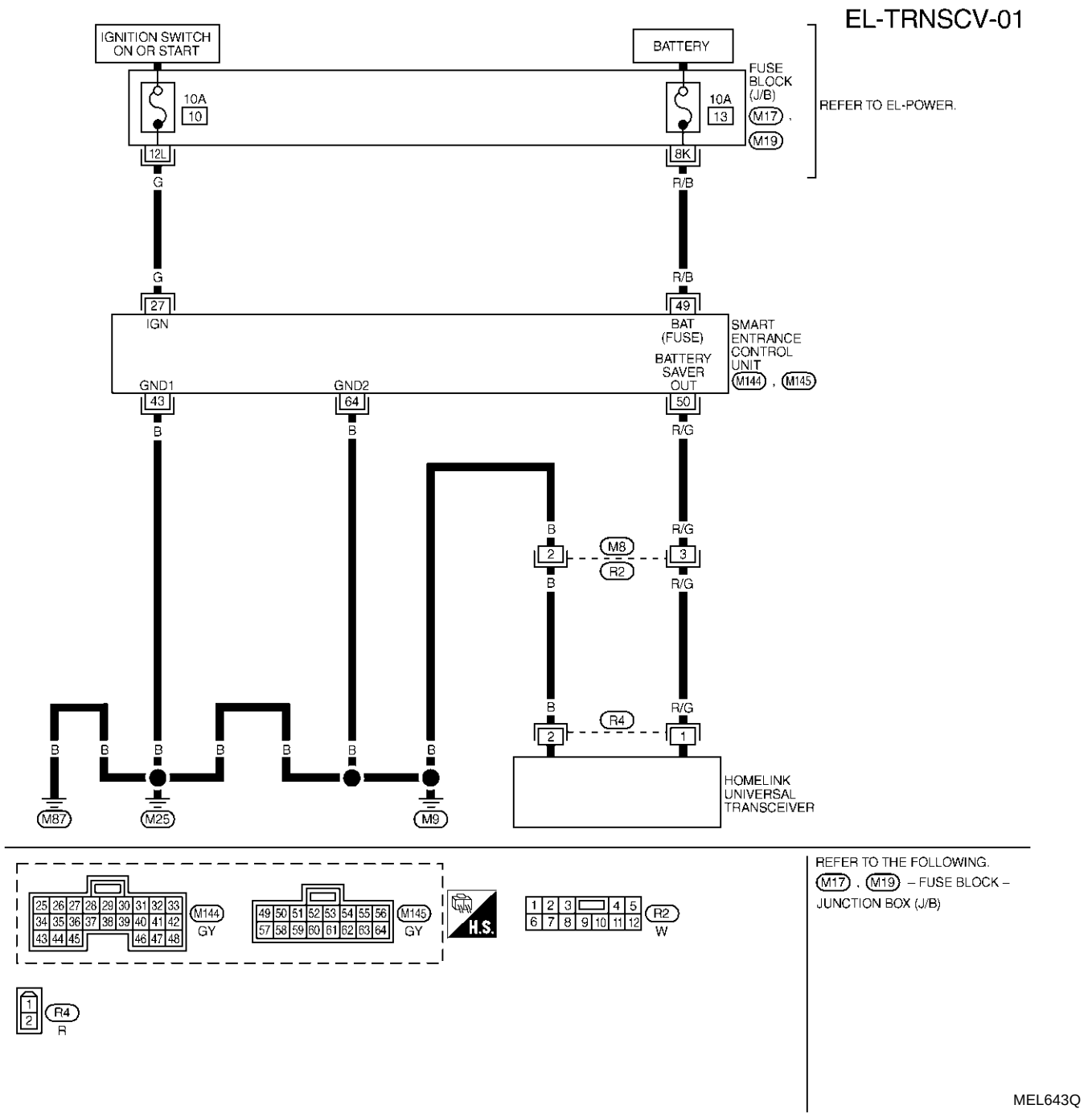

SMART ENTRANCE CONTROL UNIT TERMINALS AND REFERENCE VALUE BETWEEN EACH TERMINAL AND GROUND

TERMINAL	WIRE COLOR	ITEM	CONDITION	DATA (DC)
27	G	IGNITION SWITCH (ON)	IGNITION SWITCH IS IN "ON" POSITION	12V
43	B	GROUND	–	–
49	R/B	POWER SOURCE (FUSE)	–	12V
50	R/G	BATTERY SAVER (INTERIOR LAMP)	BATTERY SAVER DOSE OPERATE → DOES NOT OPERATE (ON → OFF)	12V → 0V
64	B	GROUND	–	–

SEL983XA

Trouble Diagnoses

NHEL0128

DIAGNOSTIC PROCEDURE

NHEL0128S01

SYMPTOM: Homelink universal transceiver does not activate receiver.

Before conducting the procedure given below, make sure that system receiver (garage door opener, etc.) operates with original, hand-held transmitter. If NG, receiver or hand-held transmitter is malfunctioning, not vehicle related.

1	PRELIMINARY CHECK

1. Turn ignition switch “OFF”.
2. Does red light (LED) of homelink universal transceiver illuminate when any button is pressed?

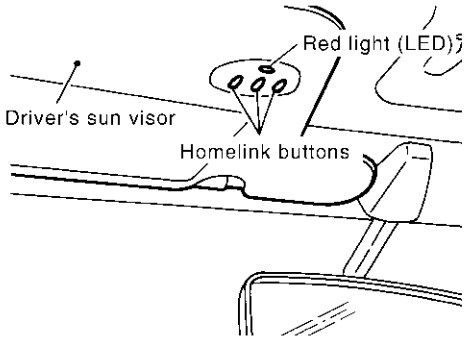

SEL442UA

Yes or No

Yes	▶	GO TO 2.
No	▶	GO TO 3.

2	CHECK HOMELINK UNIVERSAL TRANSCEIVER FUNCTION

Check homelink universal transceiver with Tool.
For details, refer to Technical Service Bulletin.

OK or NG

OK	▶	Receiver or handheld transmitter is malfunctioning, not vehicle related.
NG	▶	Replace homelink universal transceiver with sun visor assembly.

3	CHECK POWER SUPPLY

1. Disconnect homelink universal transceiver connector.
2. Turn ignition switch "OFF".
3. Check voltage between homelink universal transceiver harness connector R4 terminal 1 (R/G) and body ground. (Within 10 minutes after turn ignition switch "OFF".)

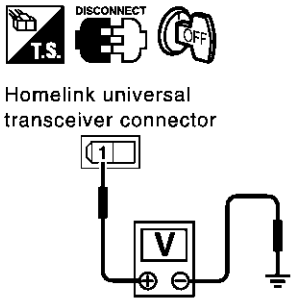

Battery voltage should exist.

SEL367WB

OK or NG

OK	▶	GO TO 4.
NG	▶	GO TO 5.

4	CHECK GROUND CIRCUIT

Check continuity between homelink universal transceiver harness connector R4 terminal 2 (B) and ground.

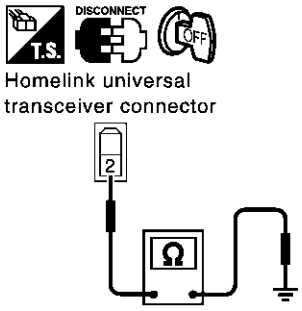

Continuity should exist.

SEL368WB

OK or NG

OK	▶	Replace homelink universal transceiver with sun visor assembly.
NG	▶	Repair harness.

5	CHECK MAIN POWER SUPPLY FOR SMART ENTRANCE CONTROL UNIT

1. Disconnect smart entrance control unit.
2. Check voltage between smart entrance control unit harness connector M145 terminal 49 (R/B) and ground.

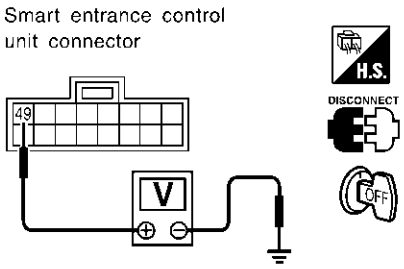

Battery voltage should exist.

SEL284Y

OK or NG

OK	▶	GO TO 6.
NG	▶	**Check the following.** ● 10A fuse [No. 13, located in fuse block (J/B)]

6	CHECK GROUND CIRCUIT FOR SMART ENTRANCE CONTROL UNIT

Check continuity between smart entrance control unit harness connector M144 terminal 43 (B) or M145 terminal 64 (B) and ground.

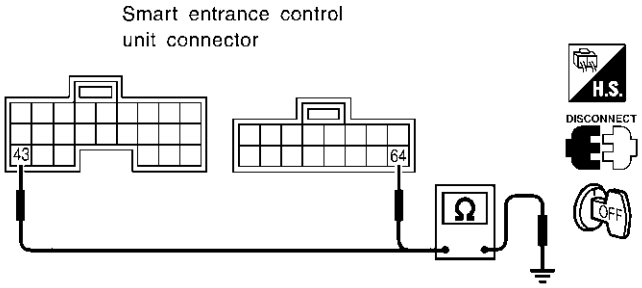

Continuity should exist.

SEL285Y

OK or NG

OK	▶	Check harness for open or short between smart entrance control unit and homelink universal transceiver.
NG	▶	Check ground harness.

Component Parts and Harness Connector Location

NHEL0172

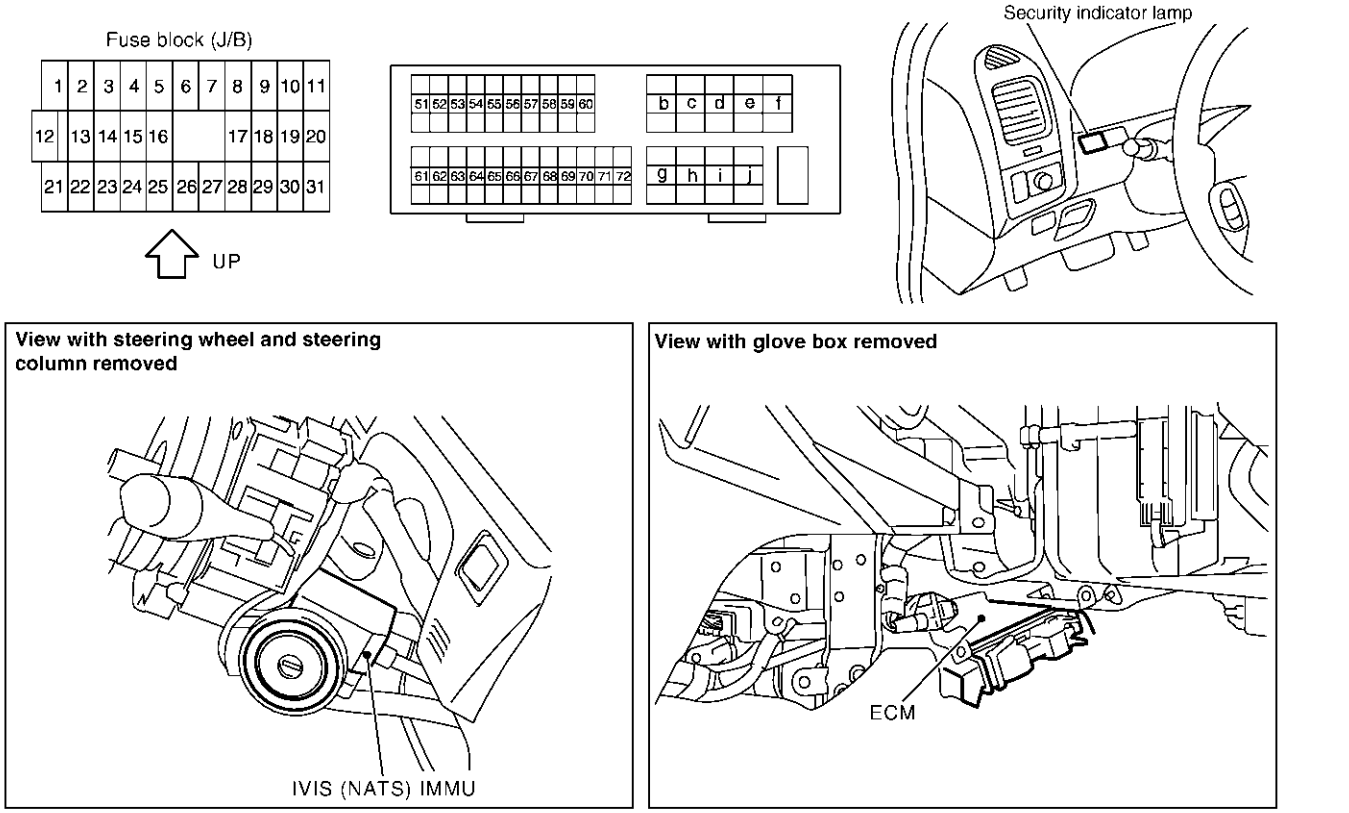

SEL054X

NOTE:
If customer reports a "No Start" condition, request ALL KEYS to be brought to an INFINITI dealer in case of an IVIS (NATS) malfunction.

System Description

=NHEL0173

IVIS (Infiniti Vehicle Immobilizer System — NATS) has the following immobilizer functions:

- Since only IVIS (NATS) ignition keys, whose ID nos. have been registered into the ECM and IMMU of IVIS (NATS), allow the engine to run, operation of a stolen vehicle without a IVIS (NATS) registered key is prevented by IVIS (NATS).
  That is to say, IVIS (NATS) will immobilize the engine if someone tries to start it without the registered key of IVIS (NATS).
- All of the originally supplied ignition key IDs (except for card plate key) have been IVIS (NATS) registered. If requested by the vehicle owner, a maximum of five key IDs can be registered into the IVIS (NATS) components.
- The security indicator blinks when the ignition switch is in “OFF” or “ACC” position. Therefore, IVIS (NATS) warns outsiders that the vehicle is equipped with the anti-theft system.
- When IVIS (NATS) detects trouble, the security indicator lamp lights up while ignition key is in the “ON” position.
- IVIS (NATS) trouble diagnoses, system initialization and additional registration of other IVIS (NATS) ignition key IDs must be carried out using CONSULT-II hardware and CONSULT-II IVIS (NATS) software.
  Regarding the procedures of IVIS (NATS) initialization and IVIS (NATS) ignition key ID registration, refer to CONSULT-II operation manual, IVIS/NVIS.
- **When servicing a malfunction of the IVIS (indicated by lighting up of Security Indicator Lamp) or registering another IVIS ignition key ID no., it is necessary to re-register original key identification. Therefore, be sure to receive ALL KEYS from vehicle owner.**

System Composition

NHEL0174

The immobilizer function of the IVIS (NATS) consists of the following:

- IVIS (NATS) ignition key
- IVIS (NATS) immobilizer control unit (IMMU) located in the ignition key cylinder
- Engine control module (ECM)
- Security indicator

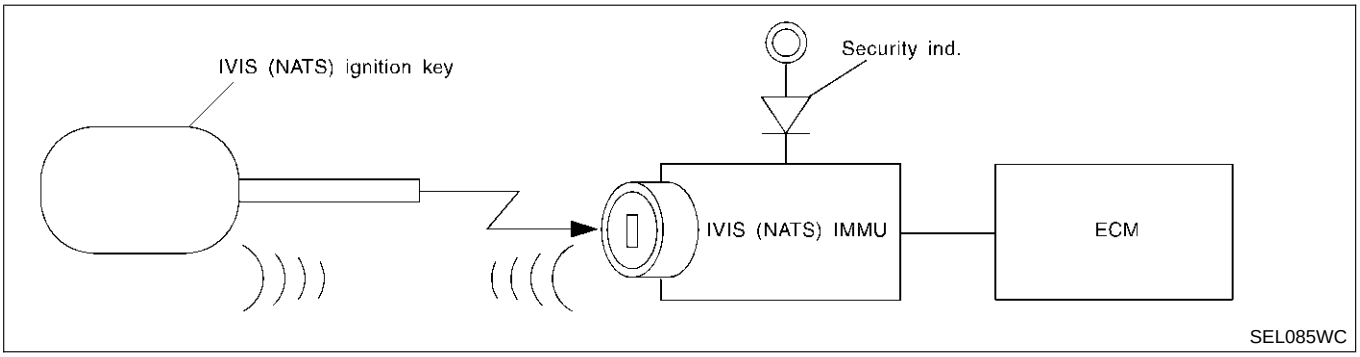

Wiring Diagram — NATS —

NHEL0175

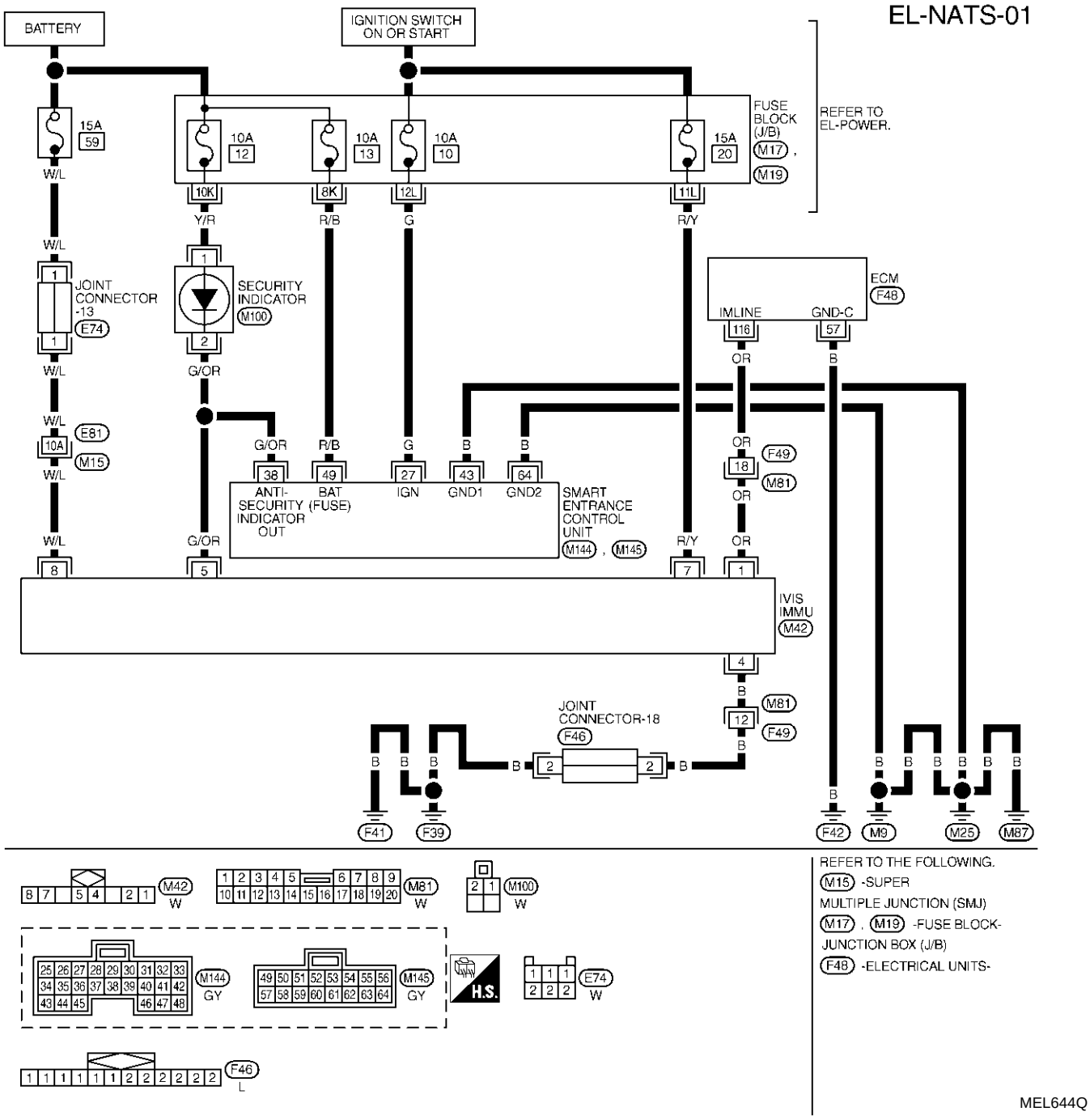

SMART ENTRANCE CONTROL UNIT TERMINALS AND REFERENCE VALUE BETWEEN EACH TERMINAL AND GROUND

TERMINAL	WIRE COLOR	ITEM	CONDITION	DATA (DC)
27	G	IGNITION SWITCH (ON)	IGNITION SWITCH IS IN "ON" POSITION	12V
38	G/OR	SECURITY INDICATOR	GOES OFF → ILLUMINATES	12V → 0V
43	B	GROUND	–	–
49	R/B	POWER SOURCE (FUSE)	–	12V
64	B	GROUND	–	–

SEL984XA

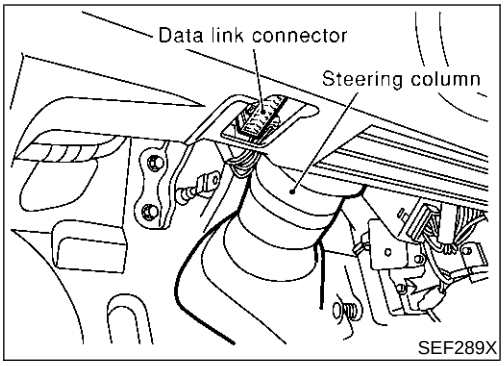

SEF289X

CONSULT-II

NHEL0176

CONSULT-II INSPECTION PROCEDURE

NHEL0176S01

1. Turn ignition switch OFF.
2. Connect “CONSULT-II” and “CONSULT-II CONVERTER” to the data link connector.

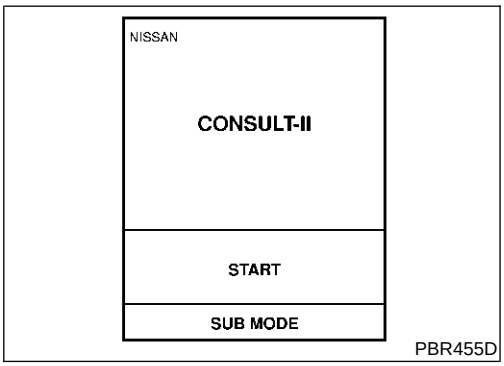

PBR455D

3. Insert IVIS (NATS) program card into CONSULT-II.
   : Program card
   NATS (AEN02C)
4. Turn ignition switch ON.
5. Touch “START”.

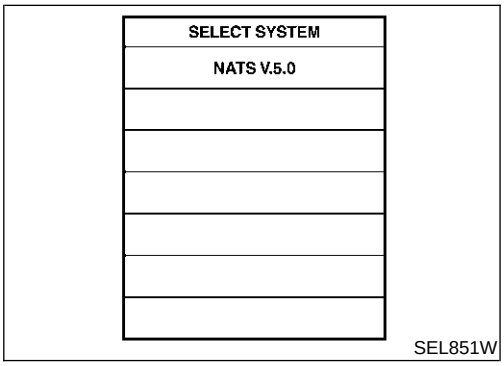

SEL851W

6. Select “NATS V.5.0”.
   If “NATS V.5.0” is not indicated, go to GI-42.

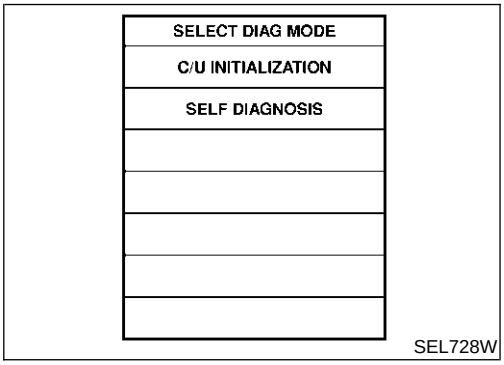

SEL728W

7. Perform each diagnostic test mode according to each service procedure.

For further information, see the CONSULT-II Operation Manual, IVIS/NVIS.

CONSULT-II DIAGNOSTIC TEST MODE FUNCTION

NHEL0176S02

CONSULT-II DIAGNOSTIC TEST MODE	Description
C/U INITIALIZATION	When replacing any of the following three components, C/U initialization and re-registration of all IVIS (NATS) ignition keys are necessary. [IVIS (NATS) ignition key/IMMU/ECM]
SELF-DIAG RESULTS	Detected items (screen terms) are as shown in the chart EL-379.

NOTE:

- **When any initialization is performed, all ID previously registered will be erased and all IVIS (NATS) ignition keys must be registered again.**
- The engine cannot be started with an unregistered key. In this case, the system will show "DIFFERENCE OF KEY" or "LOCK MODE" as a self-diagnostic result on the CONSULT-II screen.
- In rare case, "CHAIN OF ECM-IMMU" might be stored as a self-diagnostic result during key registration procedure, even if the system is not malfunctioning.

HOW TO READ SELF-DIAGNOSTIC RESULTS

NHEL0176S03

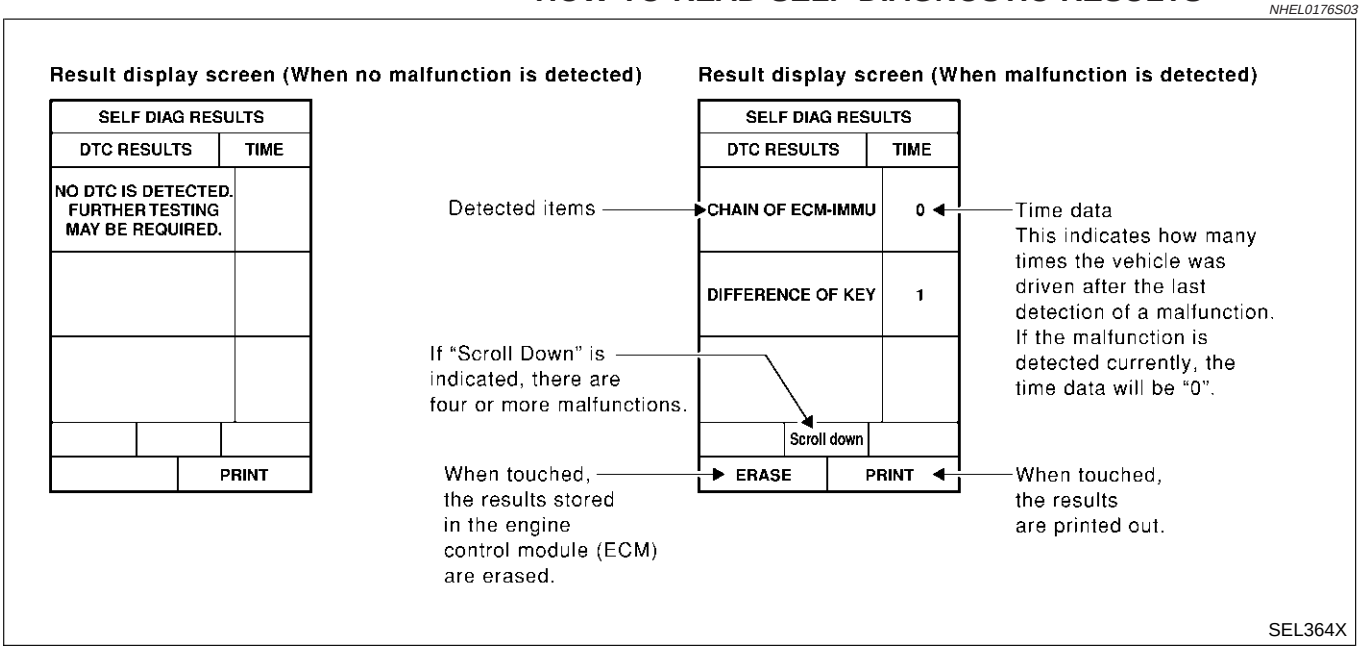

IVIS (NATS) SELF-DIAGNOSTIC RESULTS ITEM CHART

NHEL0176S04

Detected items (NATS program card screen terms)	P No. Code (Self-diagnostic result of "ENGINE"	Malfunction is detected when	Reference page
ECM INT CIRC-IMMU	NATS MALFUNCTION P1613	The malfunction of ECM internal circuit of IMMU communication line is detected.	EL-383
CHAIN OF ECM-IMMU	NATS MALFUNCTION P1612	Communication impossible between ECM and IMMU (In rare case, "CHAIN OF ECM-IMMU" might be stored during key registration procedure, even if the system is not malfunctioning.)	EL-384
DIFFERENCE OF KEY	NATS MALFUNCTION P1615	IMMU can receive the key ID signal but the result of ID verification between key ID and IMMU is NG.	EL-388
CHAIN OF IMMU-KEY	NATS MALFUNCTION P1614	IMMU cannot receive the key ID signal.	EL-389
ID DISCORD, IMM-ECM	NATS MALFUNCTION P1611	The result of ID verification between IMMU and ECM is NG. System initialization is required.	EL-390

Detected items (NATS program card screen terms)	P No. Code (Self-diagnostic result of "ENGINE"	Malfunction is detected when	Reference page
LOCK MODE	NATS MALFUNCTION P1610	When the starting operation is carried out five or more times consecutively under the following conditions, IVIS (NATS) will shift the mode to one which prevents the engine from being started. ● Unregistered ignition key is used. ● IMMU or ECM's malfunctioning.	EL-393
DON'T ERASE BEFORE CHECKING ENG DIAG	—	All engine trouble codes except IVIS (NATS) trouble code has been detected in ECM.	EL-381

Trouble Diagnoses

WORK FLOW

NHEL0177

NHEL0177S01

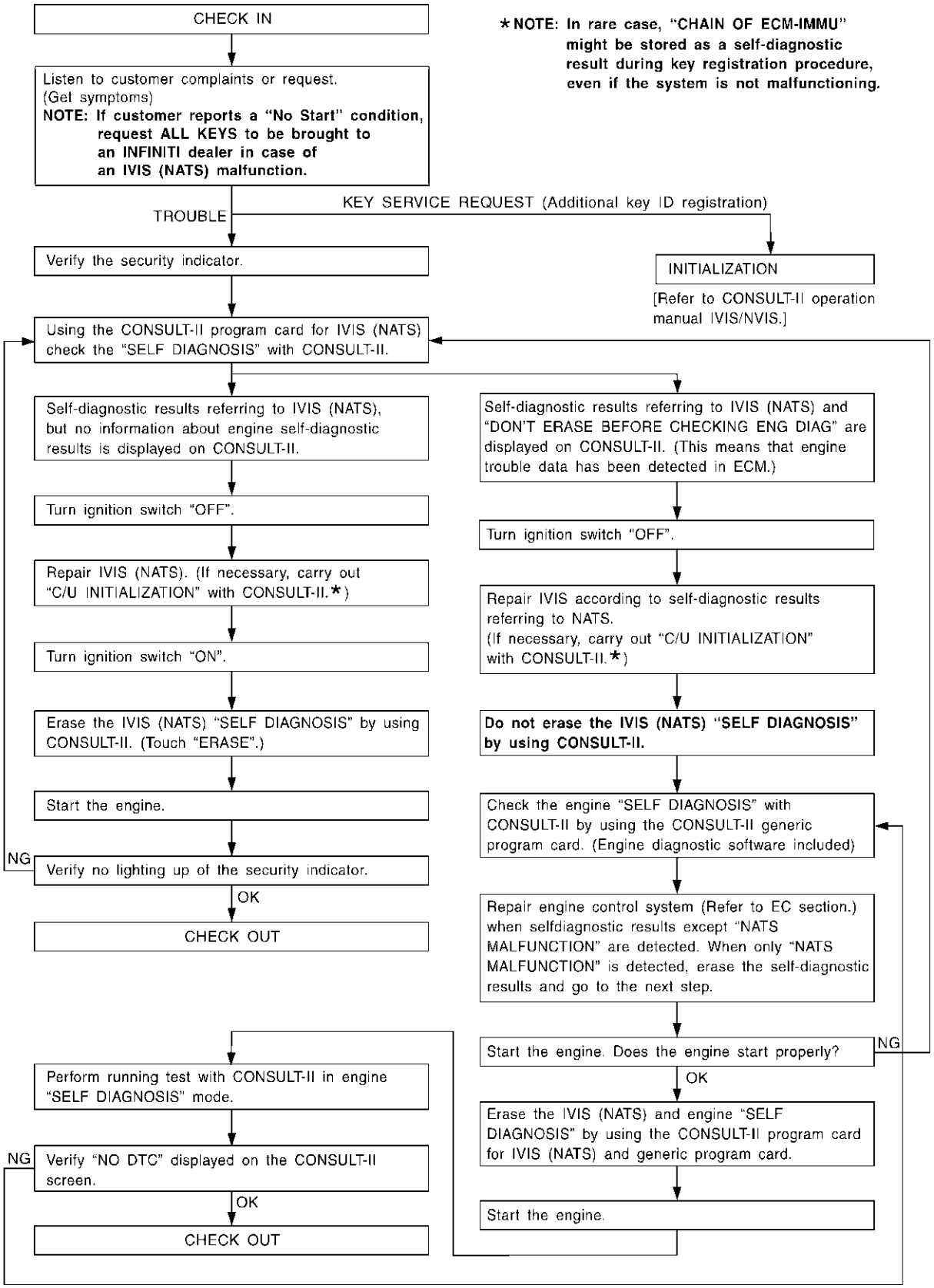

SEL024X

SYMPTOM MATRIX CHART 1
(Self-diagnosis related item)

NHEL0177S02

SYMPTOM	Displayed "SELF-DIAG RESULTS" on CONSULT-II screen.	DIAGNOSTIC PROCEDURE (Reference page)	SYSTEM (Malfunctioning part or mode)	REFERENCE PART NO. OF ILLUSTRATION ON NEXT PAGE
• Security indicator lighting up* • Engine hard to start	ECM INT CIRC-IMMU	PROCEDURE 1 (EL-383)	ECM	B
	CHAIN OF ECM-IMMU	PROCEDURE 2 (EL-384)	In rare case, "CHAIN OF ECM-IMMU" might be stored during key registration procedure, even if the system is not malfunctioning.	—
			Open circuit in battery voltage line of IMMU circuit	C1
			Open circuit in ignition line of IMMU circuit	C2
			Open circuit in ground line of IMMU circuit	C3
			Open circuit in communication line between IMMU and ECM	C4
			Short circuit between IMMU and ECM communication line and battery voltage line	C4
			Short circuit between IMMU and ECM communication line and ground line	C4
			ECM	B
			IMMU	A
	DIFFERENCE OF KEY	PROCEDURE 3 (EL-388)	Unregistered key	D
			IMMU	A
	CHAIN OF IMMU-KEY	PROCEDURE 4 (EL-389)	Malfunction of key ID chip	E
			IMMU	A
	ID DISCORD, IMM-ECM	PROCEDURE 5 (EL-390)	System initialization has not yet been completed.	F
			ECM	F
	LOCK MODE	PROCEDURE 7 (EL-393)	LOCK MODE	D
• MIL staying ON • Security indicator lighting up*	DON'T ERASE BEFORE CHECKING ENG DIAG	WORK FLOW (EL-381)	Engine trouble data and IVIS (NATS) trouble data have been detected in ECM	—

*: When IVIS (NATS) detects trouble, the security indicator lights up while ignition key is in the "ON" position.

SYMPTOM MATRIX CHART 2
(Non self-diagnosis related item)

NHEL0177S03

SYMPTOM	DIAGNOSTIC PROCEDURE (Reference page)	SYSTEM (Malfunctioning part or mode)
Security ind. does not light up.	PROCEDURE 6 (EL-391)	Security ind.
		Open circuit between Fuse and IMMU
		Continuation of initialization mode
		IMMU

DIAGNOSTIC SYSTEM DIAGRAM

NHEL0177S04

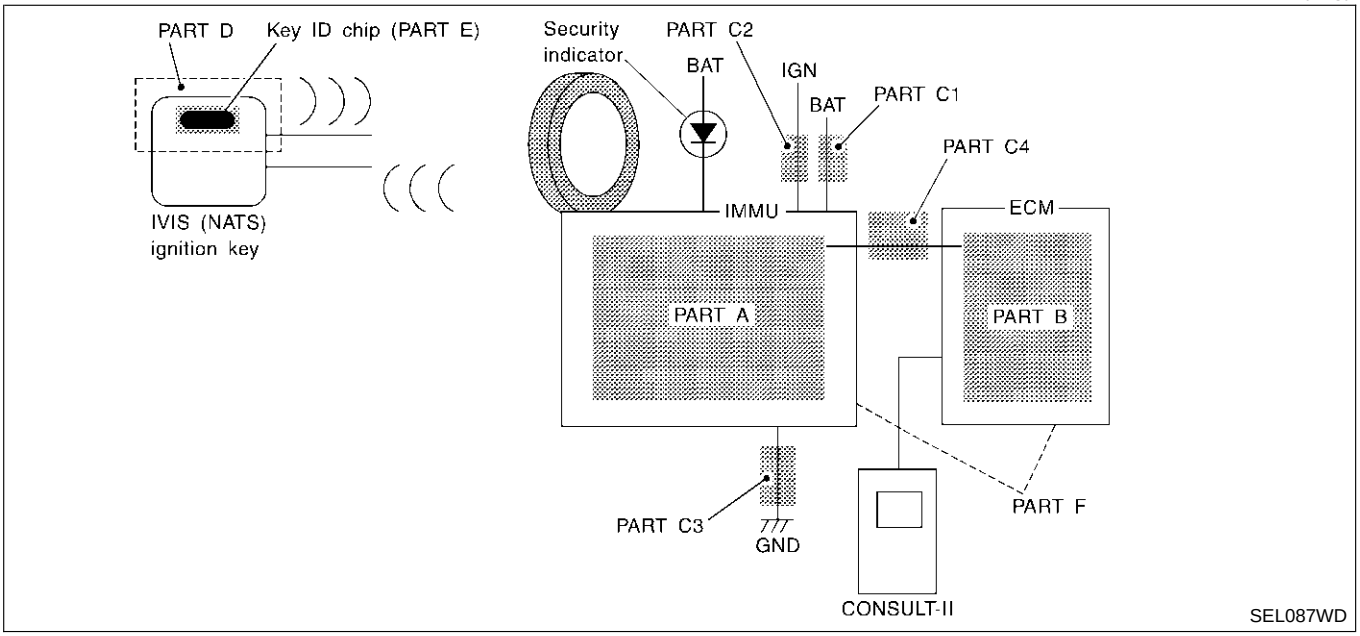

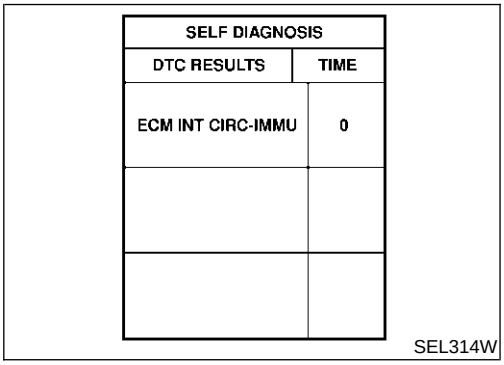

SELF DIAGNOSIS	
DTC RESULTS	TIME
ECM INT CIRC-IMMU	0

SEL314W

DIAGNOSTIC PROCEDURE 1

NHEL0177S06

Self-diagnostic results:
"ECM INT CIRC-IMMU" displayed on CONSULT-II screen

1. Confirm SELF-DIAGNOSTIC RESULTS "ECM INT CIRC-IMMU" displayed on CONSULT-II screen. Ref. part No. B.
2. Replace ECM.
3. Perform initialization with CONSULT-II.
   For initialization, refer to "CONSULT-II operation manual IVIS/NVIS".

DIAGNOSTIC PROCEDURE 2

=NHEL0177S07

Self-diagnostic results:
"CHAIN OF ECM-IMMU" displayed on CONSULT-II screen

1	CONFIRM SELF-DIAGNOSTIC RESULTS

Confirm SELF-DIAGNOSTIC RESULTS "CHAIN OF ECM-IMMU" displayed on CONSULT-II screen.
NOTE:
In rare case, "CHAIN OF ECM-IMMU" might be stored during key registration procedure, even if the system is not malfunctioning.

SELF DIAGNOSIS	
DTC RESULTS	TIME
CHAIN OF ECM-IMMU	0

SEL292W

Is CONSULT-II screen displayed as above?

Yes	▶	GO TO 2.
No	▶	GO TO SYMPTOM MATRIX CHART 1.

2	CHECK POWER SUPPLY CIRCUIT FOR IMMU

1. Disconnect IMMU connector.
2. Check voltage between terminal 8 of IMMU and ground with CONSULT-II or tester.

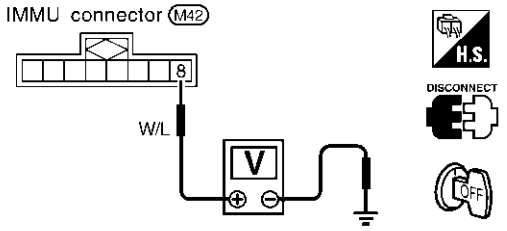

Battery voltage should exist.

SEL302W

OK or NG

OK	▶	GO TO 3.
NG	▶	**Check the following** ● 15A fuse (No. 59, located in the fuse and fusible link box) ● Harness for open or short between fuse and IMMU connector **Ref. Part No. C1**

3	CHECK IGN SW. ON SIGNAL

1. Turn ignition switch ON.
2. Check voltage between terminal 7 of IMMU and ground with CONSULT-II or tester.

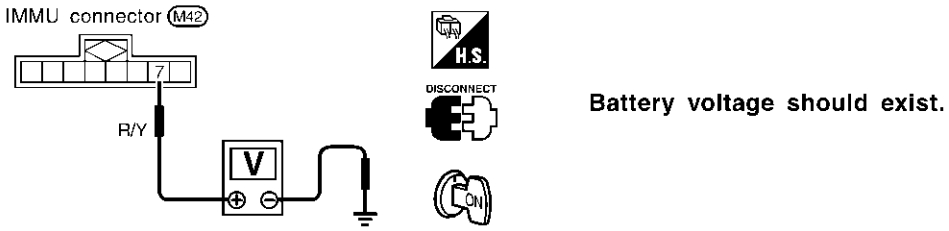

SEL303W

OK or NG

OK	▶	GO TO 4.
NG	▶	**Check the following** ● 15A fuse [No. 20, located in the fuse block (J/B)] ● Harness for open or short between fuse and IMMU connector **Ref. part No. C2**

4	CHECK GROUND CIRCUIT FOR IMMU

1. Turn ignition OFF.
2. Check harness continuity between IMMU terminal 4 and ground.

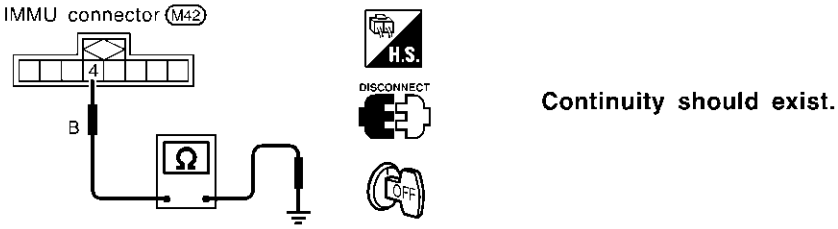

SEL304W

OK or NG

OK	▶	GO TO 5.
NG	▶	Repair harness. **Ref. part No. C3**

5	CHECK COMMUNICATION LINE OPEN CIRCUIT

1. Disconnect ECM connector.
2. Check harness continuity between ECM terminal 116 and IMMU terminal 1.

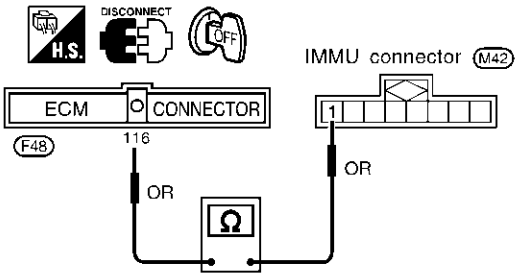

Continuity should exist.

SEL305W

OK or NG

OK	▶	GO TO 6.
NG	▶	Repair harness or connector. **Ref. part No. C4**

6	CHECK COMMUNICATION LINE BATTERY SHORT CIRCUIT

1. Turn ignition ON.
2. Check voltage between ECM terminal 116 or IMMU terminal 1 and ground.

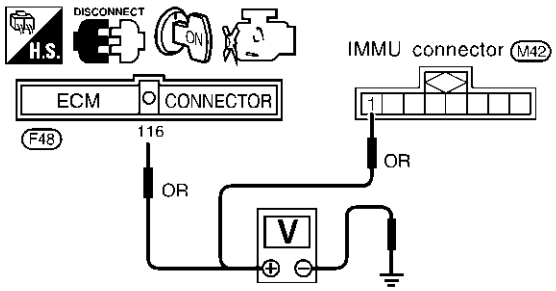

Voltage: 0V

SEL306W

OK or NG

OK	▶	GO TO 7.
NG	▶	Communication line is short-circuited with battery voltage line or ignition switch ON line. Repair harness or connectors. **Ref. part No. C4**

7	CHECK COMMUNICATION LINE GROUND SHORT CIRCUIT

1. Turn ignition switch OFF.
2. Check continuity between ECM terminal 116 or IMMU terminal 1 and ground.

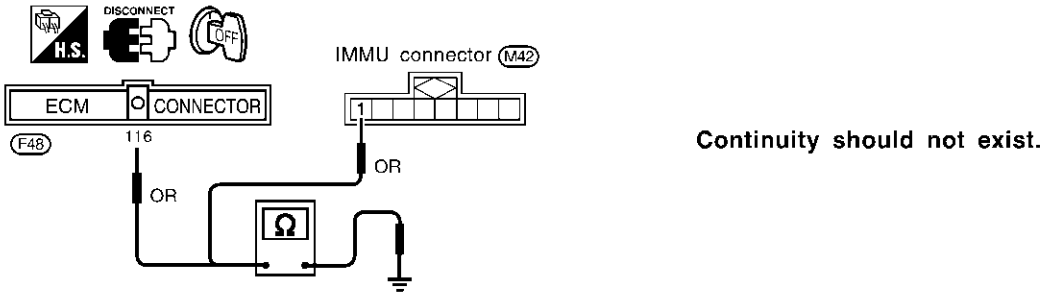

SEL307W

OK or NG

OK	▶	GO TO 8.
NG	▶	Communication line is short-circuited with ground line. Repair harness or connectors. **Ref. part No. C4**

8	SIGNAL FROM ECM TO IMMU CHECK

1. Check the signal between ECM terminal 116 and ground with CONSULT-II or oscilloscope when ignition switch is turned "ON".
2. Make sure signals which are shown in the figure below can be detected during 750 msec. just after ignition switch is turned "ON".

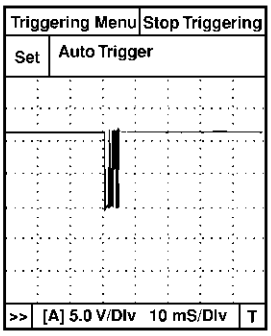

SEL730W

OK or NG

OK	▶	IMMU is malfunctioning. Replace IMMU. **Ref. part No. A** Perform initialization with CONSULT-II. For the operation of initialization, refer to "CONSULT-II Operation Manual IVIS/NVIS".
NG	▶	ECM is malfunctioning. Replace ECM. **Ref. part No. B** Perform initialization with CONSULT-II. For the operation of initialization, refer to "CONSULT-II Operation Manual IVIS/NVIS".

DIAGNOSTIC PROCEDURE 3

=NHEL0177S08

Self-diagnostic results:
"DIFFERENCE OF KEY" displayed on CONSULT-II screen

1	CONFIRM SELF-DIAGNOSTIC RESULTS

Confirm SELF-DIAGNOSTIC RESULTS "DIFFERENCE OF KEY" displayed on CONSULT-II screen.

SELF DIAGNOSIS	
DTC RESULTS	TIME
DIFFERENCE OF KEY	0

SEL293W

Is CONSULT-II screen displayed as above?

Yes	▶	GO TO 2.
No	▶	GO TO SYMPTOM MATRIX CHART 1.

2	PERFORM INITIALIZATION WITH CONSULT-II

Perform initialization with CONSULT-II. Re-register all IVIS (NATS) ignition key IDs.
For initialization and registration of IVIS (NATS) ignition key IDs, refer to "CONSULT-II operation manual IVIS/NVIS".

IMMU INITIALIZATION
INITIALIZATION FAIL
THEN IGN KEY SW 'OFF' AND 'ON', AFTER CONFIRMING SELF-DIAG AND PASSWORD, PERFORM C/U INITIALIZATION AGAIN.

SEL297W

NOTE:
If the initialization is not completed or fails, CONSULT-II shows above message on the screen.

Can the system be initialized and can the engine be started with re-registered IVIS (NATS) ignition key?

Yes	▶	Ignition key ID was unregistered. **Ref. part No. D**
No	▶	IMMU is malfunctioning. Replace IMMU. **Ref. part No. A** Perform initialization with CONSULT-II. For initialization, refer to "CONSULT-II operation manual IVIS/NVIS".

DIAGNOSTIC PROCEDURE 4

=NHEL0177S09

Self-diagnostic results:
"CHAIN OF IMMU-KEY" displayed on CONSULT-II screen

1	CONFIRM SELF-DIAGNOSTIC RESULTS
Confirm SELF-DIAGNOSTIC RESULTS "CHAIN OF IMMU-KEY" displayed on CONSULT-II screen.	

SELF DIAGNOSIS	
DTC RESULTS	TIME
CHAIN OF IMMU-KEY	0

SEL294W

Is CONSULT-II screen displayed as above?

Yes	▶	GO TO 2.
No	▶	GO TO SYMPTOM MATRIX CHART 1.

2	CHECK IVIS (NATS) IGNITION KEY ID CHIP
Start engine with another registered IVIS (NATS) ignition key.	
Does the engine start?	
Yes ▶	Ignition key ID chip is malfunctioning. Replace the ignition key. **Ref. part No. E** Perform initialization with CONSULT-II. For initialization, refer to "CONSULT-II Operation Manual IVIS/NVIS".
No ▶	GO TO 3.

3	CHECK IMMU INSTALLATION
Check IMMU installation. Refer to "How to Replace IMMU" in EL-394.	
OK or NG	
OK ▶	IMMU is malfunctioning. Replace IMMU. **Ref. part No. A** Perform initialization with CONSULT-II. For initialization, refer to "CONSULT-II Operation Manual IVIS/NVIS".
NG ▶	Reinstall IMMU correctly.

DIAGNOSTIC PROCEDURE 5

=NHEL0177S10

Self-diagnostic results:
"ID DISCORD, IMM-ECM" displayed on CONSULT-II screen

1	CONFIRM SELF-DIAGNOSTIC RESULTS

Confirm SELF-DIAGNOSTIC RESULTS "ID DISCORD, IMM-ECM" displayed on CONSULT-II screen.

SELF DIAGNOSIS	
DTC RESULTS	TIME
ID DISCORD, IMM-ECM	0

SEL298W

NOTE:
"ID DISCORD IMMU-ECM":
Registered ID of IMMU is in discord with that of ECM.

Is CONSULT-II screen displayed as above?

Yes	▶	GO TO 2.
No	▶	GO TO SYMPTOM MATRIX CHART 1.

2	PERFORM INITIALIZATION WITH CONSULT-II

Perform initialization with CONSULT-II. Re-register all IVIS (NATS) ignition key IDs.
For initialization, refer to "CONSULT-II operation manual IVIS/NVIS".

IMMU INITIALIZATION
INITIALIZATION FAIL
THEN IGN KEY SW 'OFF' AND 'ON', AFTER CONFIRMING SELF-DIAG AND PASSWORD, PERFORM C/U INITIALIZATION AGAIN.

SEL297W

NOTE:
If the initialization is not completed or fails, CONSULT-II shows above message on the screen.

Can the system be initialized?

Yes	▶	Start engine. (END) (System initialization had not been completed. **Ref. part No. F**)
No	▶	ECM is malfunctioning. Replace ECM. **Ref. part No. F** Perform initialization with CONSULT-II. For initialization, refer to "CONSULT-II operation manual IVIS/NVIS".

DIAGNOSTIC PROCEDURE 6
"SECURITY INDICATOR LAMP DOES NOT LIGHT UP"

=NHEL0177S12

1	CHECK FUSE	
Check 10A fuse [No. 12, located in the fuse block (J/B)].		
Is 10A fuse OK?		
Yes	▶	GO TO 2.
No	▶	Replace fuse.

2	CHECK SECURITY INDICATOR LAMP	
1. Perform initialization with CONSULT-II. For initialization, refer to "CONSULT-II Operation Manual IVIS/NVIS". 2. Turn ignition switch OFF. 3. Start engine and turn ignition switch OFF. 4. Check the security indicator lamp lighting. **Security indicator lamp should be blinking.**		
OK or NG		
OK	▶	INSPECTION END
NG	▶	GO TO 3.

3	CHECK SECURITY INDICATOR LAMP POWER SUPPLY CIRCUIT	
1. Disconnect security indicator lamp connector. 2. Check voltage between security indicator lamp connector terminal 1 and ground.		

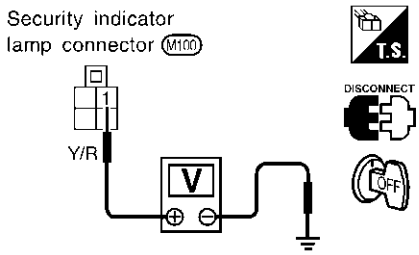

Battery voltage should exist.

SEL653WA

OK or NG		
OK	▶	GO TO 4.
NG	▶	Check harness for open or short between fuse and security indicator lamp.

4	CHECK SECURITY INDICATOR LAMP	
Check security Indicator Lamp.		
Is security indicator lamp OK?		
Yes	▶	GO TO 5.
No	▶	Replace security indicator lamp.

5	CHECK IMMU FUNCTION

1. Connect IMMU connector.
2. Disconnect security indicator lamp connector.
3. Check continuity between IMMU terminal 5 and ground.

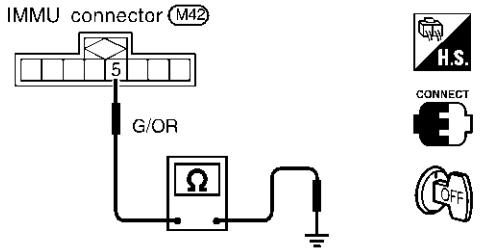

Cotinuity should exist intermittently.

SEL300W

OK or NG

OK	▶	Check harness for open or short between security indicator lamp and IMMU.
NG	▶	IMMU is malfunctioning. Replace IMMU. Perform initialization with CONSULT-II. For initialization, refer to "CONSULT-II operation manual IVIS/NVIS".

DIAGNOSTIC PROCEDURE 7

=NHEL0177S13

Self-diagnostic results:
"LOCK MODE" displayed on CONSULT-II screen

1	CONFIRM SELF-DIAGNOSTIC RESULTS

Confirm SELF-DIAGNOSTIC RESULTS "LOCK MODE" is displayed on CONSULT-II screen.

SELF DIAGNOSIS	
DTC RESULTS	TIME
LOCK MODE	0

SEL295W

Is CONSULT-II screen displayed as above?

Yes	▶	GO TO 2.
No	▶	GO TO SYMPTOM MATRIX CHART 1.

2	ESCAPE FROM LOCK MODE

1. Turn ignition switch OFF.
2. Turn ignition switch ON with registered key. (Do not start engine.) Wait 5 seconds.
3. Return the key to OFF position.
4. Repeat steps 2 and 3 twice (total of three cycles).
5. Start the engine.

Does engine start?

Yes	▶	System is OK. (Now system is escaped from "LOCK MODE".)
No	▶	GO TO 3.

3	CHECK IMMU ILLUSTRATION

Check IMMU installation. Refer to "How to Replace IMMU" in EL-394.

OK or NG

OK	▶	GO TO 4.
NG	▶	Reinstall IMMU correctly.

4	PERFORM INITIALIZATION WITH CONSULT-II

Perform initialization with CONSULT-II.
For initialization, refer to "CONSULT-II operation manual IVIS/NVIS".

IMMU INITIALIZATION
INITIALIZATION FAIL
THEN IGN KEY SW 'OFF' AND 'ON', AFTER CONFIRMING SELF-DIAG AND PASSWORD, PERFORM C/U INITIALIZATION AGAIN.

SEL297W

NOTE:
If the initialization is not completed or fails, CONSULT-II shows the above message on the screen.

Can the system be initialized?

Yes	▶	System is OK.
No	▶	GO TO DIAGNOSTIC PROCEDURE 5 to check "CHAIN OF IMMU-KEY", refer to EL-389.

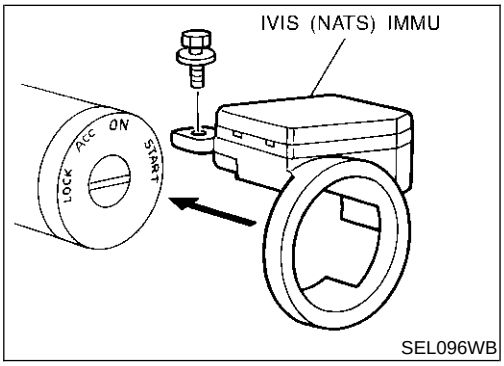

SEL096WB

How to Replace IVIS (NATS) IMMU

NHEL0178

NOTE:

- **If IVIS (NATS) IMMU is not installed correctly, IVIS (NATS) system will not operate properly and SELF-DIAG RESULTS on CONSULT-II screen will show "LOCK MODE" or "CHAIN OF IMMU-KEY".**

Precautions

NHEL0295

WARNING:

Do not attempt to disassemble the monitor. Parts of the monitor have high voltages that can result in severe and dangerous electric shock.

CAUTION:

- **Do not reverse battery connections.**
- **Do not attach unauthorized parts.**
- **Protect the unit from severe impact.**

NOTE:

Before beginning repair, determine whether or not the unit is defective. Refer to “This Condition Is Not Abnormal” (EL-438).

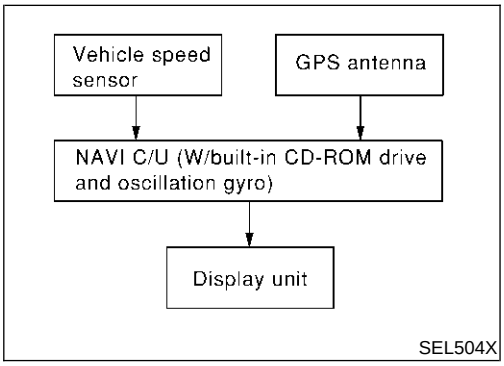

System Description

NHEL0296

OUTLINE

NHEL0296S01

The Navigation System (Multi-AV System) relies upon three sensing devices in order to determine vehicle location at regular time intervals.

1. Vehicle speed sensor: Determines the distance the vehicle has traveled.
2. Gyro (Angular velocity sensor): Determines vehicle steering angle and directional change.
3. GPS antenna (GPS data): Determines vehicle forward movement and direction.

The data provided by the three sensing functions together with a comparison of the mapping information read from the CD-ROM drive permit accurate determination of the vehicle’s current location and subsequent course (map matching). The information appears on a liquid crystal display.

This comparison of GPS data (vehicle position sensing) and map matching permits precise determination of vehicle location.

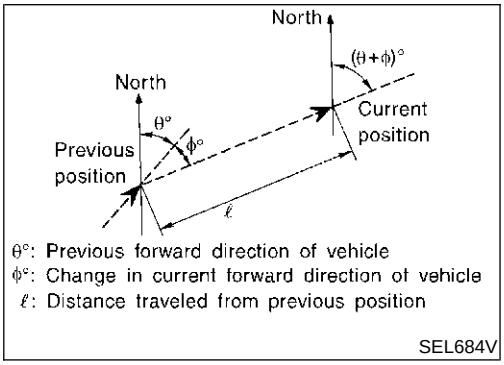

Position Sensor Operating Principles

NHEL0296S0101

The sensor determines current vehicle location by calculating the previously sensed position, the distance traveled from this position, and the directional changes occurring during this travel.

1. Distance traveled
   The distance traveled is calculated using signals received from the vehicle speed sensor. The sensor automatically compensates for the slightly reduced wheel and tire diameter resulting from tire wear.
2. Forward movement (Direction)
   Changes in the direction of forward movement are calculated

by the gyro (angular velocity sensor) and the GPS antenna (GPS data). Each of these functions has its advantage and disadvantages. Depending upon conditions, one function takes precedence over the other to accurately determine the direction of forward movement.

Function type	Advantage	Disadvantage
Gyro (Angular velocity sensor)	● Able to accurately detect minute changes in steering angle and direction.	● Calculation errors may accumulate over a long period of continuous vehicle travel.
GPS antenna (GPS data)	● Able to sense vehicle travel in four general directions (North, South, East, and West)	● Unable to detect direction of vehicle travel at low vehicle speeds.

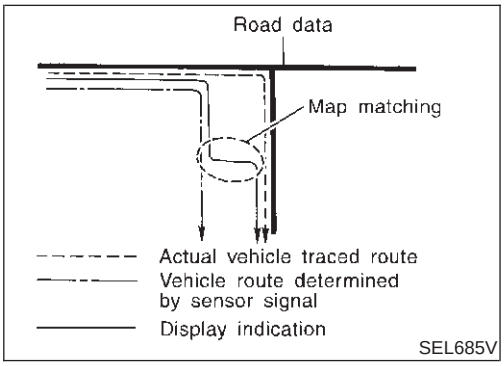

Map Matching

NHEL0296S0102

Map matching allows the driver to compare the sensed vehicle location data with the road map contained in the CD-ROM drive. Vehicle position is marked on the CD-ROM map. This permits the driver to accurately determine his/her present position on the highway and to make appropriate course decisions.
When GPS data reception is poor during travel, the vehicle position is not amended. At this time, manual manipulation of the CD-ROM map position marker is required.

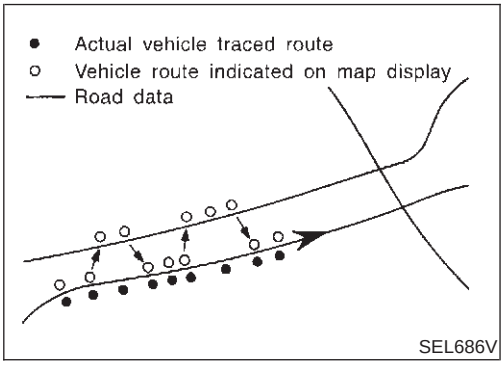

Map matching permits the driver to make priority judgments about possible appropriate roads other than the one currently being traveled.
If there is an error in the distance or direction of travel, there will also be an error in the relative position of other routes. When two routes are closely parallel to one another, the indicated position for both routes will be nearly the same priority. This is so that, slight changes in the steering direction may cause the marker to indicate both routes alternately.

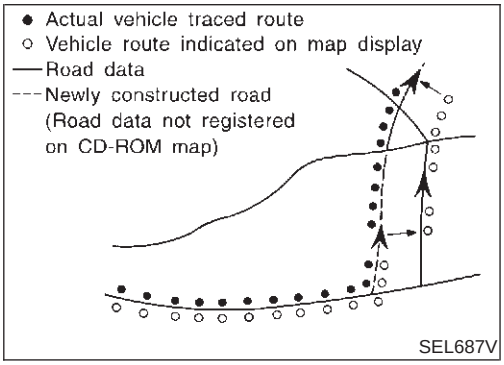

Newly constructed roads may not appear on the CD-ROM map. In this case, map matching is not possible. Changes in the course of a road will also prevent accurate map matching.
When driving on a road not shown on the CD-ROM map, the position marker used for map matching may indicate a different route. Even after returning to a route shown on the map, the position marker may jump to the position currently detected.

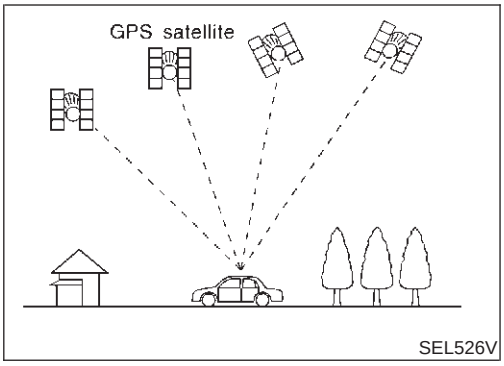

GPS (Global Positioning System)

NHEL0296S0103

GPS is the global positioning system developed and operated by the US Department of Defense. GPS satellites (NAVSTAR) transmit radio waves and orbit around the earth at an altitude of approximately 21,000 km (13,000 miles).

GPS receiver calculates the three-dimensional position of the vehicle (latitude, longitude, and altitude from the sea level) by the time difference of the radio wave arriving from more than four GPS satellites (three-dimensional positioning).

When the radio wave is received from only three GPS satellites, the two-dimensional position (latitude and longitude) is calculated, using the altitude from the sea level data calculated by using four GPS satellites (two-dimensional positioning).

Positioning capability is degraded in the following cases.

- In two-dimensional positioning, when the vehicle's altitude from the sea level changes, the precision becomes lower.
- The location detection performance can have an error of about 100 m (300 ft) even in three-dimensional positioning with high precision. Because the precision is influenced by the location of GPS satellites used for positioning, the location detection performance may drop depending on the location of GPS satellites.
- When the radio wave from GPS satellites cannot be received, for example, when the vehicle is in a tunnel, in a parking lot inside building, under an elevated superhighway or near strong power lines, the location may not be detected. Turbulent/electric weather conditions may also affect positioning performance. If something is placed on the antenna, the radio wave from GPS satellites may not be received.

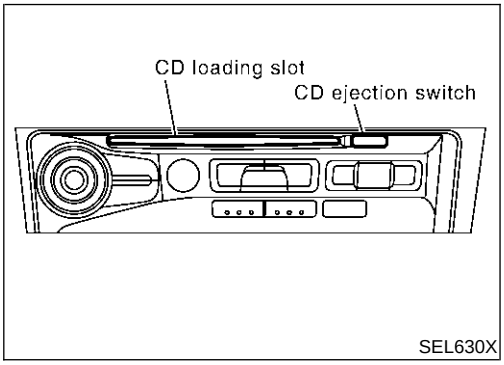

COMPONENT DESCRIPTION

NHEL0296S02

NAVI Control Unit

NHEL0296S0201

- The gyro (angular speed sensor) and the CD-ROM drive are built-in units that control the navigation functions.
- Signals are received from the gyro, the vehicle speed sensor, and the GPS antenna. Vehicle location is determined by combining this data with the data contained in the CD-ROM map. Locational information is shown on liquid crystal display panel.

CD-ROM Driver

NHEL0296S0202

Maps, traffic control regulations, and other pertinent information can be easily red from the CD-ROM disc.

Map CD-ROM

NHEL0296S0203

- The map CD-ROM has maps, traffic control regulations, and other pertinent information.
- To improve CD-ROM map matching and route determination functions, the CD-ROM uses an exclusive Nissan format. Therefore, the use of a CD-ROM provided by other manufacturers cannot be used.

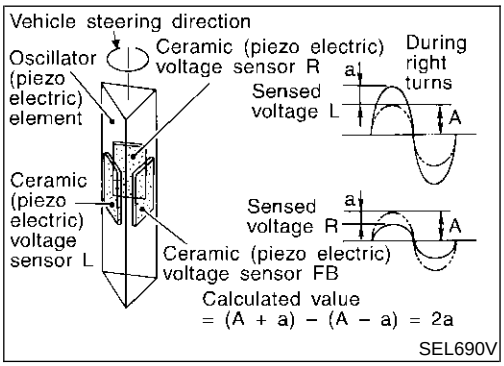

SEL690V

Gyro (Angular Speed Sensor)

NHEL0296S0204

- The oscillator gyro sensor is used to detect changes in vehicle steering angle.
- The oscillator gyro periodically senses oscillatory variation at the oscillation terminals. This variation is caused by changes in the vehicle angular velocity. Voltage variations are sensed by ceramic voltage sensors at the left and right sides of the terminals. Vehicle angular velocity corresponds directly with these changes in voltage.
- The gyro is built into the navigation (NAVI) control unit.

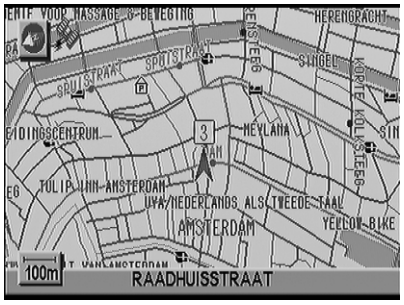

MAP DISPLAY

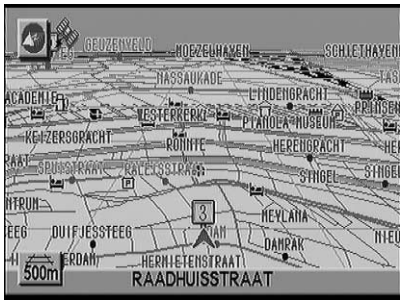

BIRDVIEW®

SEL524X

BIRDVIEW®

NHEL0296S0205

The BIRDVIEW® provides a detailed and easily seen display of road conditions covering the vehicle's immediate to distant area.

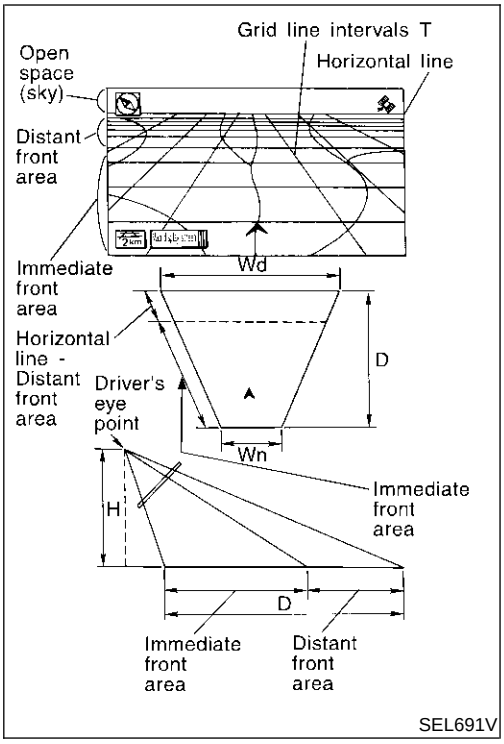

Description

NHEL0296S0206

- Display area: Trapezoidal representation showing approximate distances (Wn, D, and Wd).
- Ten horizontal grid lines indicate display width while six vertical grid lines indicate display depth and direction.
- Drawing line area shows open space, depth, and immediate front area. Each area is to a scale of approximately 5:6:25.
- Pushing the "ZOOM IN" button during operation displays the scale change and the view point height on the left side of the screen.
  The height of the view point increases or decreases when "ZOOM" OR "WIDE" is selected with the joystick.

MAP DISPLAY

=NHEL0296S03

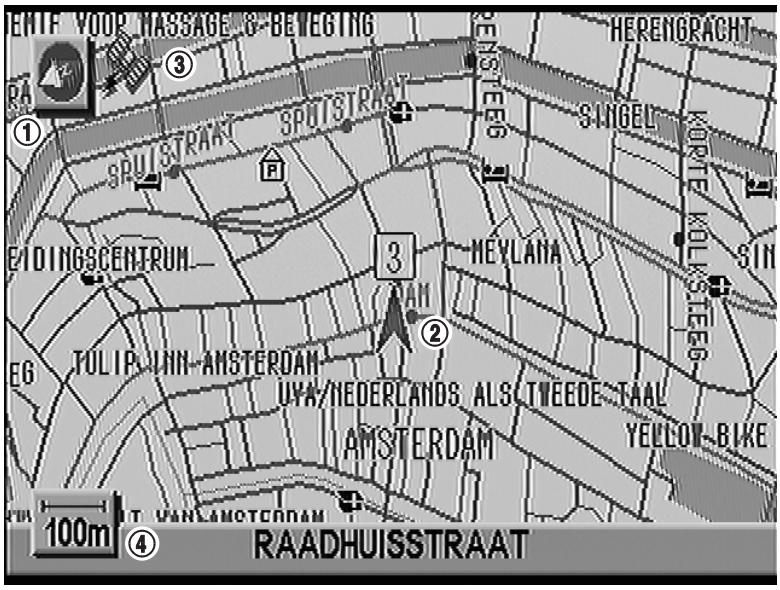

SEL525X

Function of each icon is as follows:

1) Azimuth indication
2) Position marker
   The tip of the arrow shows the current position. The shaft of the arrow indicates the direction in which the vehicle is traveling.
3) GPS reception signal (indicates current reception conditions)
4) Distance display (shows the distance in a reduced scale)

FUNCTION OF PANEL SWITCH

=NHEL0296S04

Display with Pushed "DEST" Switch

NHEL0296S0401

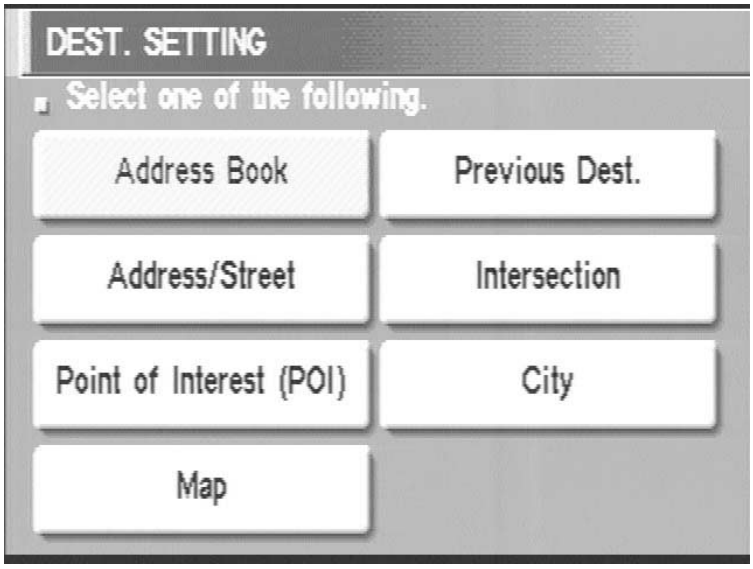

SEL637X

The function of each icon is as follows:

Icon	Description
Address Book	Favorite areas can be saved to memory.
Address/Street	The information can be searched from the address.
Point of Interest (POI)	The information of favorite areas can be searched.
Intersection	The destination from the intersection name can be retrieved.
Previous Dest.	The previous ten destinations stored in memory are displayed.
City	The information can be searched from city name.
Map	The information can be searched from the map.

Display with Pushed "ROUTE" Switch

=NHEL0296S0402

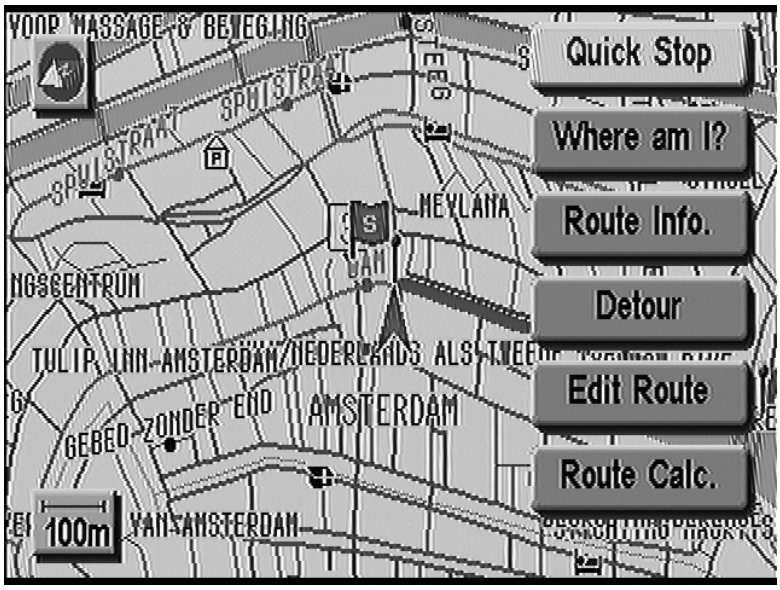

SEL526X

The function of each icon is as follows:

Icon	Description
Quick Stop	The selected facility is set as the destination or way-point. (Route guidance has been turned OFF or the destination has been reached)
Where am I?	Next, current and previous street names can be displayed.
Route Info.*	The following items can be set ● Complete Route ● Turn List ● Route Simulation (Displayed only when the destination area has been set.)
Detour*	Based on the selected distance, an alternative route is searched. [Displayed only when the recommended route (not its reverse) is followed.]
Edit Route*	Change the destination, or add the transit points of the route set in the route guide. (Displayed only when the automatic reroute function has been turned OFF and the recommended route is not followed.)
Route Calc.	Search for a recommended route between the vehicle's current location and the destination area. (Displayed only when the destination area has been set.)

*: When destinations have been entered, route guidance OFF or destination have been reached "Route Info.", "Detour", "Edit Route" and "Route Clac." are not displayed.

Display with Pushed "SETTING" Switch

=NHEL0296S0403

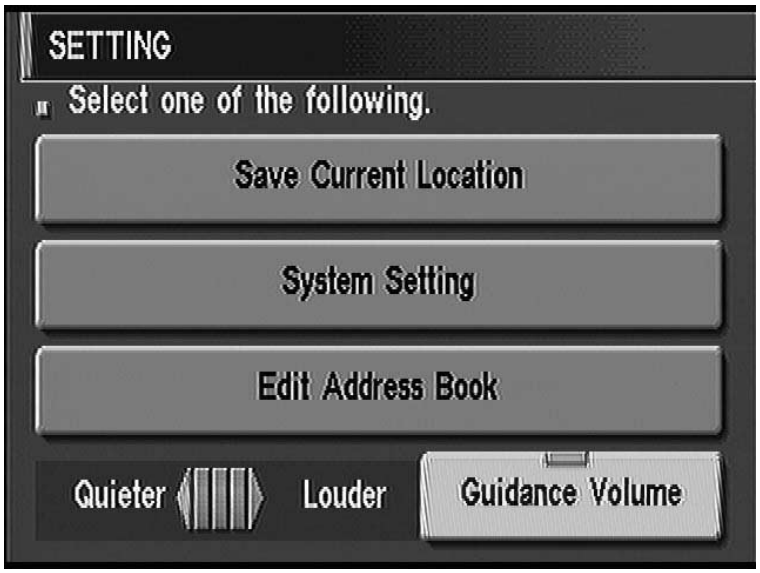

SEL614X

The function of each icon is as follows:

Icon	Description
Save Current Location	The current location can be stored in the Address Book.
System Setting	Many adjustments and settings can be made for maximum driving pleasure and convenience.
Edit Address Book	The Address Book data can be edited.
Guidance Volume	The volume and/or on/off of voice prompt can be controlled by the joystick.

Schematic

NHEL0297

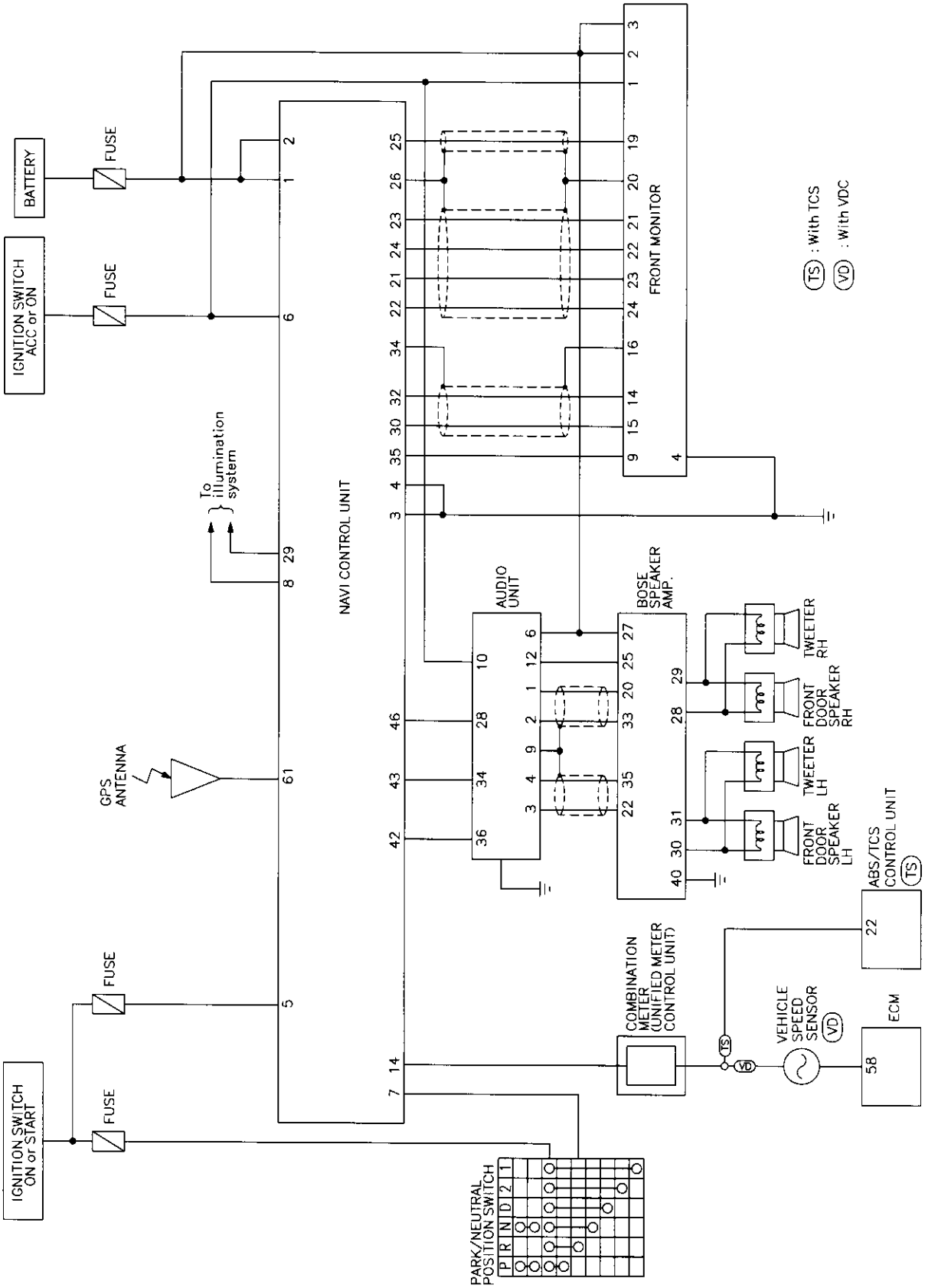

MEL362O

Wiring Diagram — NAVI —

NHEL0298

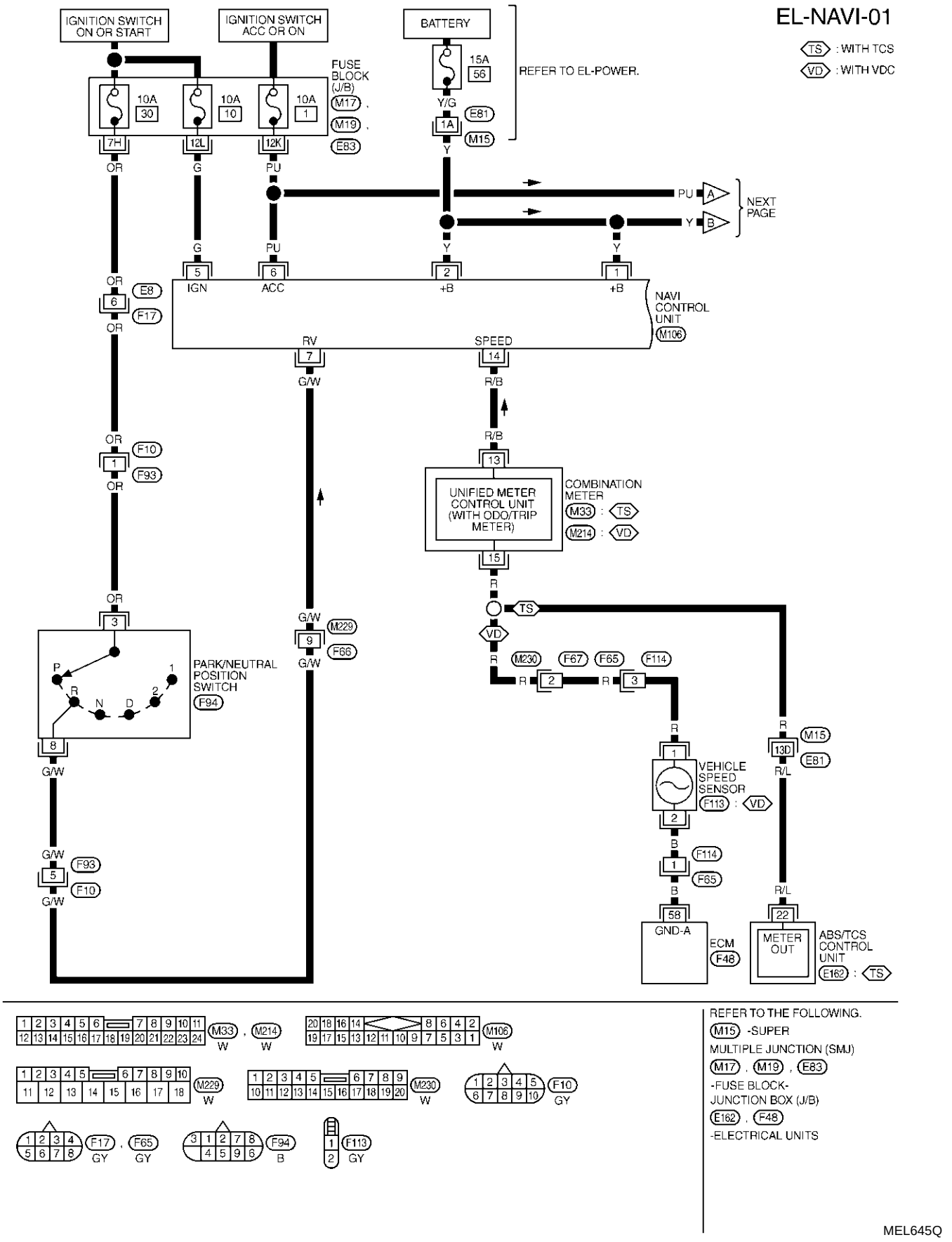

REFER TO THE FOLLOWING.
M15 -SUPER MULTIPLE JUNCTION (SMJ)
M17 , M19 , E83 -FUSE BLOCK-JUNCTION BOX (J/B)
E162 , F48 -ELECTRICAL UNITS

MEL645Q

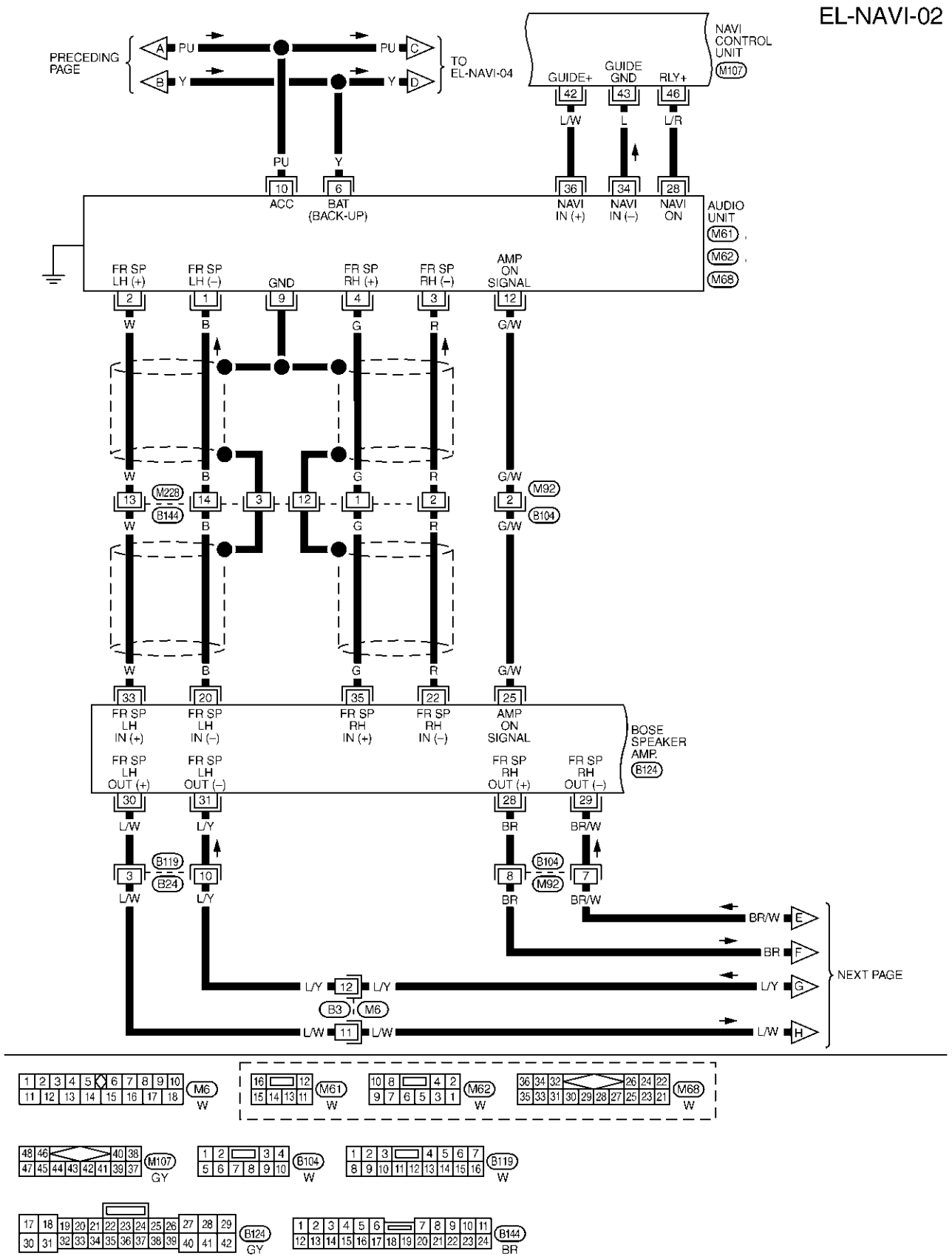
EL-NAVI-02
PRECEDING PAGE
TO EL-NAVI-04
NAVI CONTROL UNIT
M107
GUIDE+
GUIDE GND
RLY+
ACC
BAT (BACK-UP)
NAVI IN (+)
NAVI IN (–)
NAVI ON
AUDIO UNIT
M61
M62
M68
FR SP LH (+)
FR SP LH (–)
GND
FR SP RH (+)
FR SP RH (–)
AMP ON SIGNAL
M228
B144
M92
B104
FR SP LH IN (+)
FR SP LH IN (–)
FR SP RH IN (+)
FR SP RH IN (–)
AMP ON SIGNAL
BOSE SPEAKER AMP.
B124
FR SP LH OUT (+)
FR SP LH OUT (–)
FR SP RH OUT (+)
FR SP RH OUT (–)
B119
B24
B3
M6
NEXT PAGE
M6
M61
M62
M68
M107
B104
B119
B124
B144

MEL364O

EL-NAVI-03

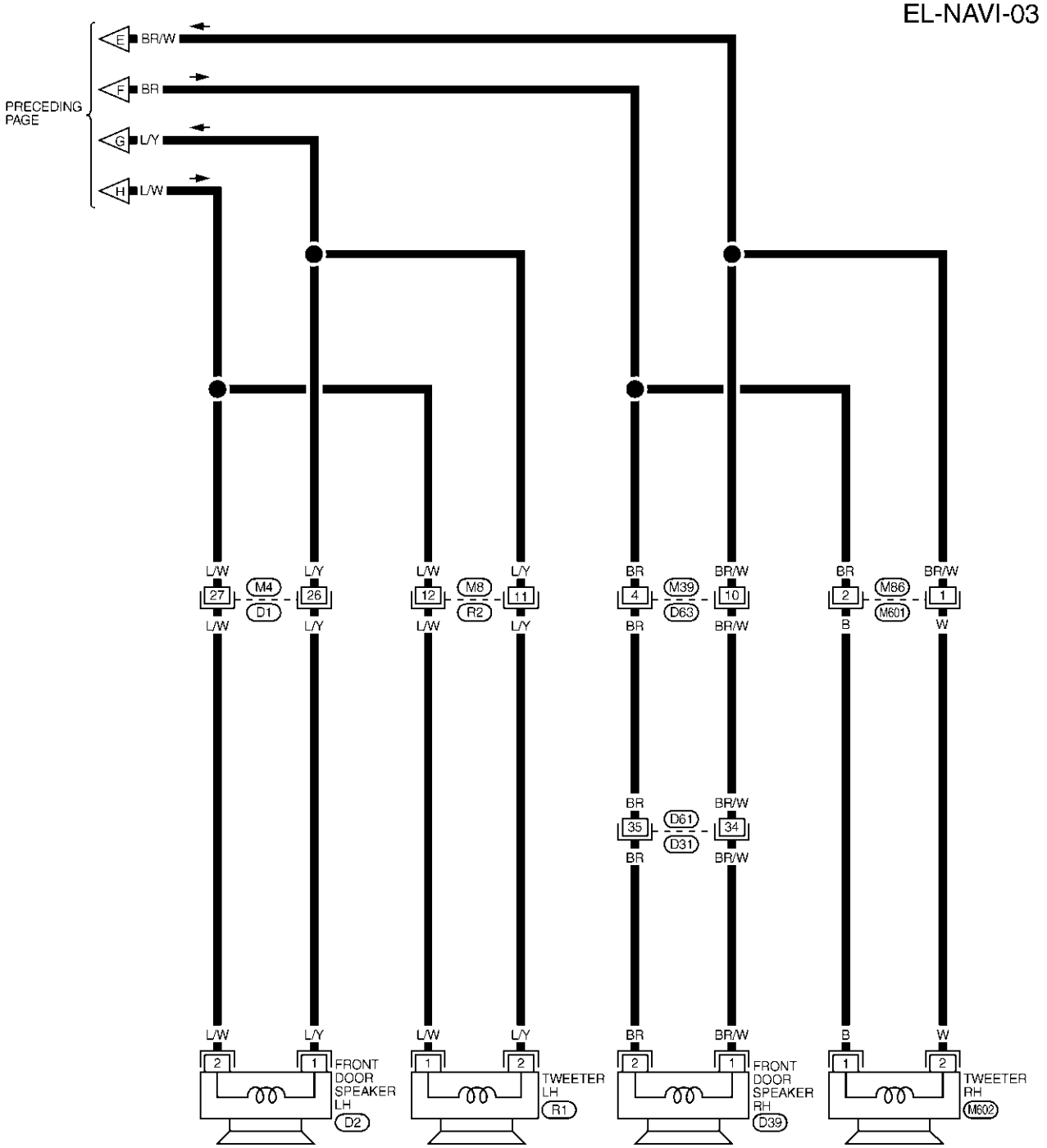

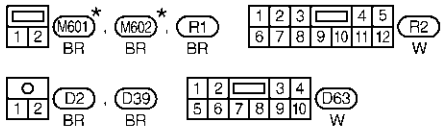

REFER TO THE FOLLOWING.
D1 , D31 - SUPER MULTIPLE JUNCTION (SMJ)

* : THIS CONNECTOR IS NOT SHOWN IN "HARNESS LAYOUT", EL SECTION.

MEL365O

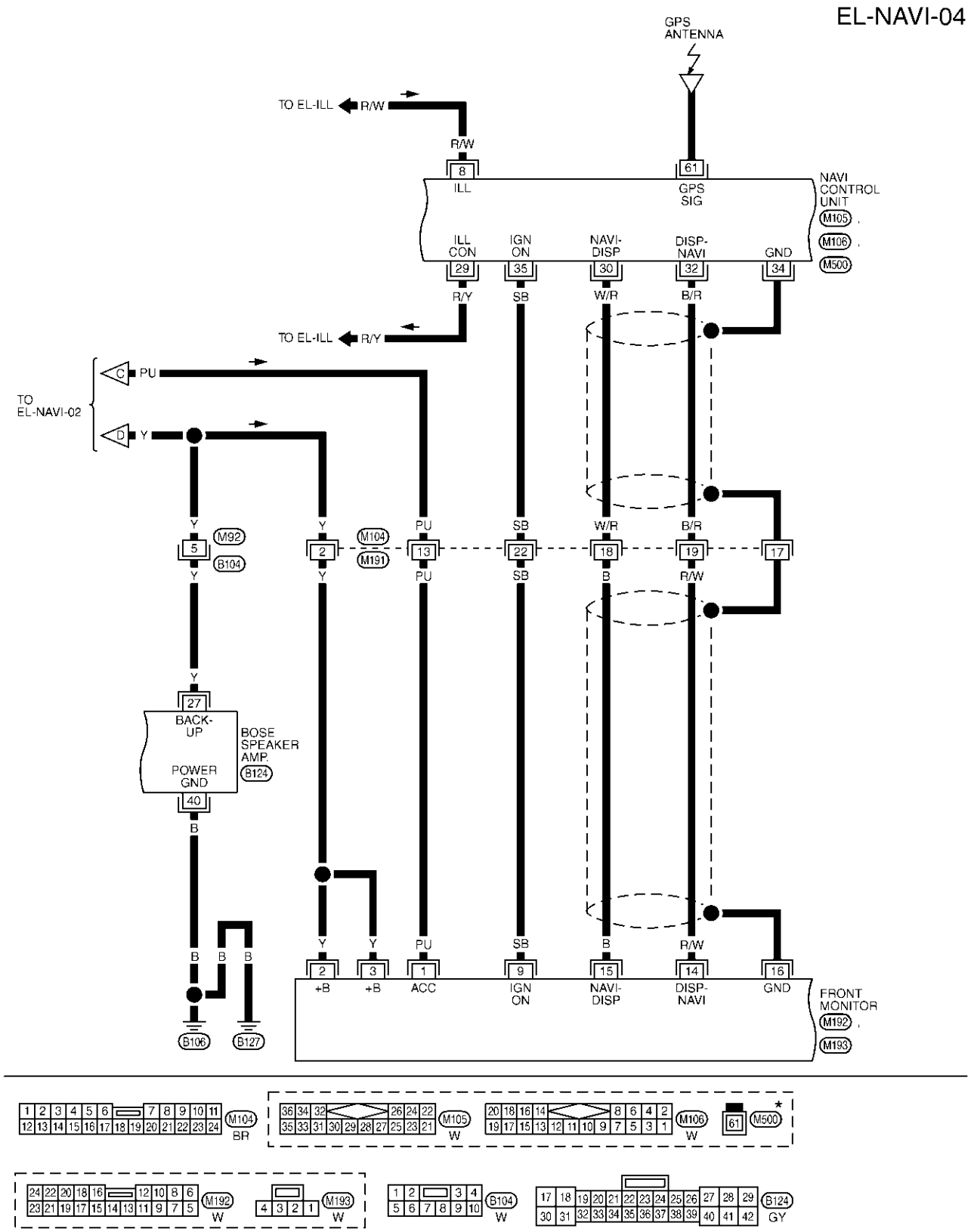

★: THIS CONNECTOR IS NOT SHOWN IN "HARNESS LAYOUT", EL SECTION.

MEL098M

EL-NAVI-05

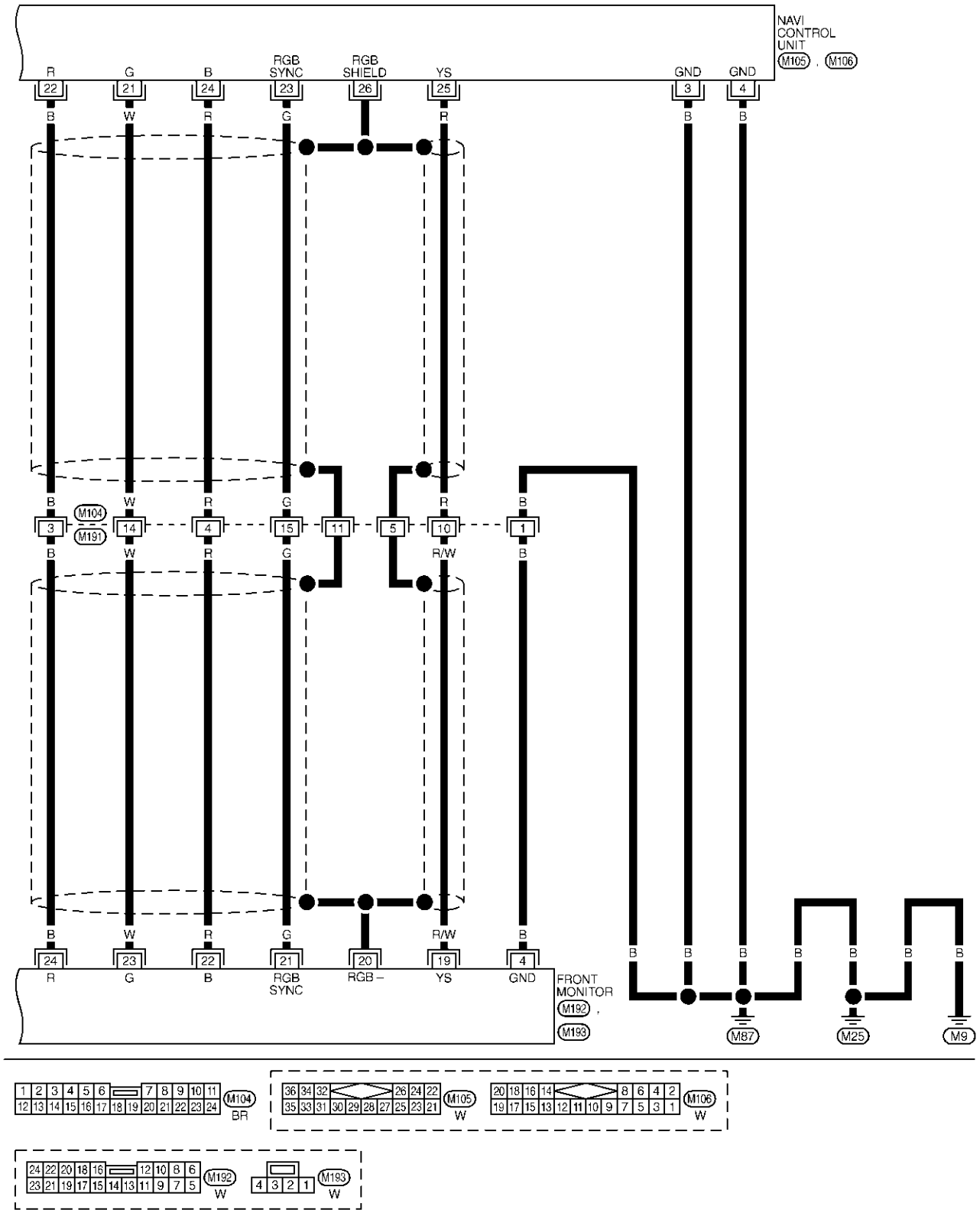

MEL646Q

Self-diagnosis Mode

NHEL0299

APPLICATION ITEMS

NHEL0299S01

Mode			Description	Reference page
Self Diagnosis			Self-diagnosis for Navigation, Display and GPS Antenna connection.	EL-411
Confirmation/ adjustment	Diagnose the Display		Color and gray gradation of display can be checked in this mode.	EL-419
	Diagnosis for Signals from the Car		Several input signals to NAVI control unit, can be monitored in this mode.	EL-417
	Navigation	Check the map CD-ROM version	The version (parts number) of inserted CD-ROM can be checked in this model.	EL-418
		Error history	Diagnosis results previously stored in the memory (before turning ignition switch ON) are displayed in this mode. Time and location when/where the errors occurred are also displayed.	EL-413
		Longitude & Latitude	Display the map. Use the joystick to adjust position. Longitude and latitude will be displayed.	EL-420
		Adjust the Angle	Turning angle of the vehicle on the display can be adjusted in this mode.	EL-421
		Speed Calibration	Under ordinary conditions, the navigation system distance measuring function will automatically compensate for minute decreases in wheel and tire diameter caused by tire wear or low pressure. Speed calibration immediately restores system accuracy in cases such as when distance calibration is needed because of the use of tire chains in inclement weather.	EL-422
	Initialize Location		This mode is for initializing the current location. Use when the vehicle is transported a long distance on a trailer, etc.	EL-423

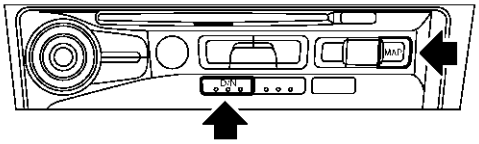

SEL631X

HOW TO PERFORM SELF-DIAGNOSIS MODE

NHEL0299S02

1. Start the engine.
2. Push “OPEN/CLOSE” switch and then open the display.
3. Push both of “MAP” and “D/N” switches at the same time for more than five seconds.

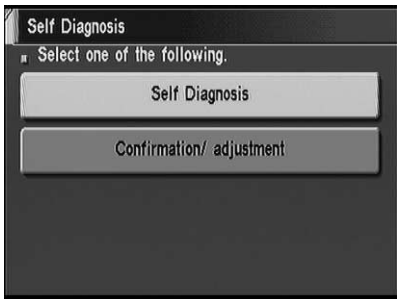

SEL527X

4. Select “Self Diagnosis” or “Confirmation/ adjustment”.

- For further procedure, refer to the following pages which describe each application item of the self-diagnosis mode.

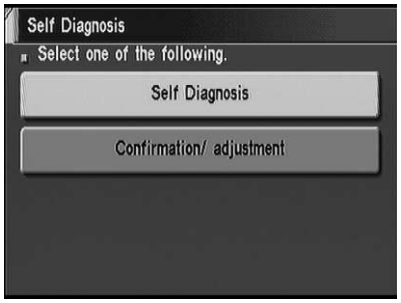

SEL527X

"Self Diagnosis"

NHEL0299S0201

1. Start the engine.
2. Push "OPEN/CLOSE" switch and then open the display.
3. Push both "MAP" and "D/N" switches at the same time for more than 5 seconds.
4. Select "Self Diagnosis".

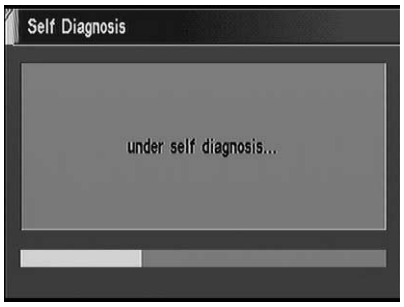

SEL528X

5. Self-diagnosis will be performed.

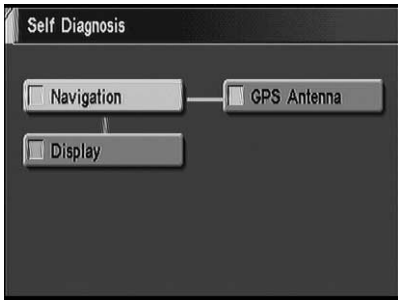

SEL529X

6. Diagnosis results will be displayed. Diagnosis results are indicated by display color. For details refer to EL-412, "SELF-DIAGNOSIS RESULTS".

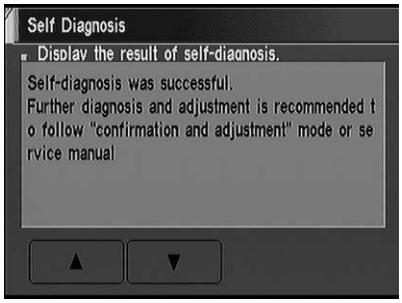

SEL530X

To obtain detailed diagnosis results on the screen, touch "Navigation" or "Display" or "GPS Antenna".

SELF-DIAGNOSIS RESULTS

=NHEL0299S03

Diagnosed item	Displayed color	Detailed result	Description	Diagnoses/service procedure **Recheck system at each check or replacement (When malfunction is eliminated, further repair work is not required.)**
"GPS Antenna" (GPS antenna connection)	Green	—	GPS antenna is connected to NAVI control unit correctly.	—
	Yellow	Connection to the following unit is abnormal. See the Service Manual for further diagnosis.	GPS antenna connection error is detected.	1. Check GPS antenna feeder cable connection at NAVI control unit. 2. Visually check GPS antenna feeder cable. If NG, replace GPS antenna assembly. 3. Replace GPS antenna.
"Navigation"	Green	—	No failure is detected.	—
	Red	[*** is abnormal.]	NAVI control unit is malfunctioning.	Replace NAVI control unit.
	Gray	Self-diagnosis for CD-ROM DRIVER of NAVI was not conducted due to no insertion of CD-ROM.	Any CD-ROM is not inserted or NAVI control unit is malfunctioning.	1. Confirm that map CD-ROM is not inserted into NAVI control unit. 2. Replace NAVI control unit.
	Yellow	CD-ROM or CD-ROM DRIVER of NAVI is abnormal. See the Service Manual for further diagnosis.	NAVI control unit judges that inserted CD-ROM is malfunctioning. Map CD-ROM or CD-ROM driver of the unit is malfunctioning.	1. Confirm the disc is installed correctly (not up side down.) 2. Perform "Check the Map CD-ROM version MODE" in EL-418 to confirm whether correct CD-ROM is inserted or not. 3. Check the disc surface. Are there any scratches, abrasions or pits on the surface? 4. Replace the CD-ROM. 5. Replace NAVI control unit.
		CD-ROM is abnormal. Please check the disc.	Inserted map CD-ROM can not be read. Map CD-ROM or CD-ROM driver of the unit is malfunctioning.	
		Connection to the following unit is abnormal. See the Service Manual for further diagnosis.	GPS antenna connection error is detected.	1. Check GPS antenna feeder cable connection at NAVI control unit. 2. Visually check GPS antenna feeder cable. If NG, replace GPS antenna assembly. 3. Replace GPS antenna.

NOTE:
Connection between NAVI control unit and display unit should be normal. Therefore, "Display connection error" will not occur when the display can be opened or closed properly.

Confirmation/Adjustment Mode

=NHEL0300

"ERROR HISTORY" MODE

NHEL0300S01

Description

NHEL0300S0101

In this mode, error history of the system are displayed with the following data.

- How many times the error was detected
- The last time data when the error was detected
- The last place where the error was detected

NOTE:

- **The number of errors can be counted up to 50 times. More than 51 times will be indicated as 50 times.**
- **Malfunction of the GPS board (inside the NAVI control unit) will result in the display of incorrect time data.**
- **When an error occurs, an incorrect position marker appears on the display. The accuracy of the display data (position marker) will be affected.**

How to Perform

NHEL0300S0102

1. Start the engine.
2. Push "OPEN/CLOSE" switch and then open the display.
3. Push both "MAP" and "D/N" switch at the same time for more than 5 seconds.
4. Select "Confirmation/ adjustment".

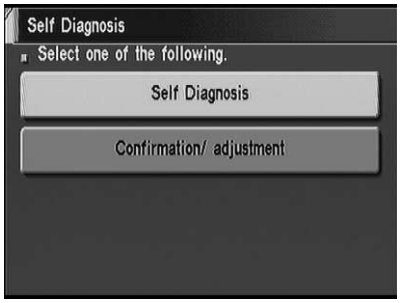

SEL527X

5. Select "Navigation".

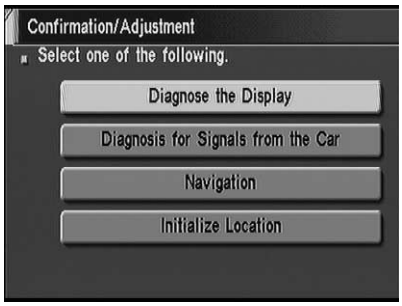

SEL531X

6. Select "Error history".

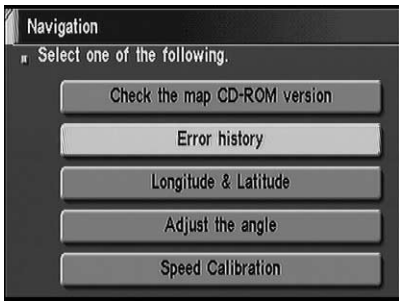

SEL532X

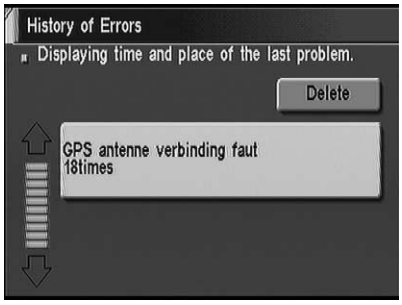

SEL533X

7. If trouble items are displayed with time count, repair/replace the system according to "ERROR HISTORY" TABLE, EL-415.

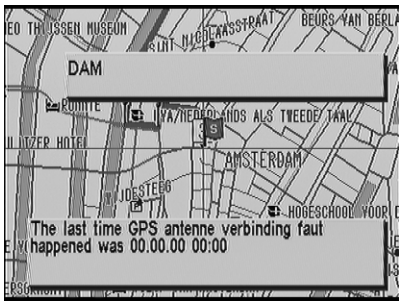

SEL534X

8. If necessary, touch error item to display the time when the error was detected and the place where the error was detected.

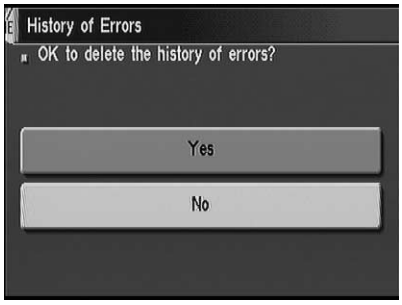

SEL535X

9. After repairing the system, erase the diagnosis memory.

NOTE:
When the NAVI control unit must be replaced, do not erase the diagnosis memory for further inspection of malfunctions.

1) Start the engine.
2) Push both "Map" and "D/N" switches at the same time for more than 5 seconds.
3) Select "Confirmation/ adjustment".
4) Select "Navigation".
5) Select "Error history".
6) Select "Delete".
7) Select "Yes".

"ERROR HISTORY" TABLE

=NHEL0300S02

Detected items	Description	Diagnosis/service procedure	Reference page
Gyro sensor disconnected	Communications malfunction between NAVI control unit and internal gyro	Perform self-diagnosis to confirm whether the NAVI control unit is malfunctioning or not. If no failure is detected, a momentary and/or temporary malfunction may have been caused by strong electromagnetic wave interference.	EL-410
Connection problem of speed sensor	Input malfunction of NAVI control unit and speed sensor	Check vehicle speed sensor signal in "Diagnosis for signals from the car" mode. If the input signal is not detected correctly, check harness for open or short between combination meter and NAVI control unit.	EL-417
GPS disconnected	Communications malfunction between NAVI control unit and GPS board	Perform self-diagnosis to confirm whether the NAVI control unit is malfunctioning or not. If no failure is detected, a momentary and/or temporary malfunction may have been caused by strong electromagnetic wave interference.	EL-410
GPS transmission cable malfunction			
GPS input line connection error			
GPS TCXO over	The transmission circuit of the GPS board frequency synchronization oscillator (inside the NAVI control unit) is sending an oscillation frequency that is greater or less than the set value.	A location error occurs. Strong electromagnetic wave interference may have occurred. The GPS antenna may be in a very hot or very cold environment. This is usually a temporary malfunction.	—
GPS TCXO under			
GPS ROM malfunction	Internal malfunction of GPS board RAM or ROM inside the NAVI control unit.	Perform self-diagnosis to confirm whether the NAVI control unit is malfunctioning or not. If no failure is detected, a momentary and/or temporary malfunction may have been caused by strong electromagnetic wave interference.	EL-410
GPS RAM malfunction			
GPS RTC malfunction	Malfunction of GPS board clock IC inside the NAVI control unit.		
GPS antenna disconnected	—	Perform self-diagnosis to confirm GPS antenna connection. If no failure is detected, a momentary and/or temporary malfunction may have been caused by a strong impact.	EL-410
Low voltage of GPS	Power supply voltage for GPS board inside the NAVI control unit is low.	1. Check power supply circuits for NAVI control unit.	EL-435
		2. Perform self-diagnosis to confirm GPS antenna connection.	EL-410
		3. If above diagnosis results are OK, a momentary and/or temporary malfunction may have been caused by a strong impact.	—
CD-ROM communication error	CD-ROM driver malfunction (inside the NAVI control unit)	Perform self-diagnosis to confirm whether the NAVI control unit is malfunctioning or not. If no failure is detected, a momentary and/or temporary malfunction may have been caused by strong electromagnetic wave interference.	EL-410

Detected items	Description	Diagnosis/service procedure	Reference page
Loading mechanism malfunction	—	Check that whether the disc can be inserted and ejected correctly. If the loading function does not operate correctly, replace NAVI control unit.	—
CD-ROM reading error	It is confirmed that the appropriate CD-ROM disc is positioned in the CD-ROM loader. However, no data can be read.	Perform self-diagnosis to confirm whether the inserted disc is malfunctioning or not.	EL-410
Malfunctioning of error correction for CD-ROM	Erroneous data is read from the CD-ROM. The errors cannot be corrected.		
CD-ROM focus error	CD-ROM data reading beam is out of focus.	Rough road driving might create CD skipping like music CD audio unit.	—
CD-ROM malfunction	—	Perform self-diagnosis to confirm whether the inserted disc is malfunctioning or not.	EL-410

"DIAGNOSIS FOR SIGNALS FROM THE CAR" MODE

=NHEL0300S03

Description

NHEL0300S0301

In "Diagnosis for Signals from the Car" mode, following input signals to the NAVI control unit can be checked on the display.

Item	Indication	Vehicle condition
Vehicle Speed*	ON	Vehicle speed is greater than 0 km/h (0 MPH).
	OFF	Vehicle speed is 0 km/h (0 MPH).
Light	ON	Lighting switch is in 1st or 2nd position.
	OFF	Lighting switch is in "OFF" position.
IGN	ON	Ignition switch is in "ON" position.
	OFF	Ignition switch is in "ACC" position.
Reverse*	ON	Selector/shift lever is in "Reverse" position.
	OFF	Selector/shift lever is in other than "Reverse" position.

*: When ignition switch is in "ACC" position, indication will be changed to "-".

How to Perform

NHEL0300S0302

1. Start the engine.
2. Push "OPEN/CLOSE" switch and then open the display.
3. Push both "MAP" and "D/N" switches at the same time for more than 5 seconds.
4. Select "Confirmation/ adjustment".

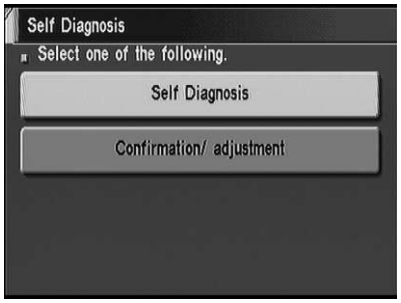

SEL527X

5. Select "Diagnosis for Signals from the Car".

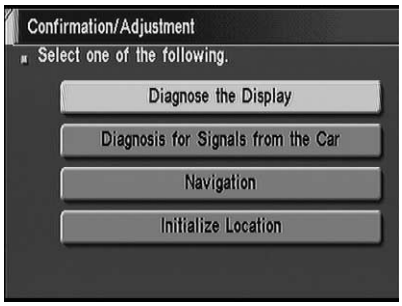

SEL531X

6. Then "Diagnosis for Signals from the Car" mode is performed.

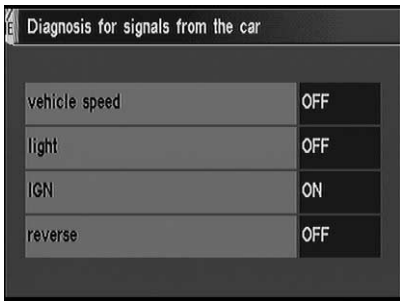

SEL542X

"CHECK THE MAP CD-ROM VERSION" MODE

=NHEL0300S04

How to Perform

NHEL0300S0401

1. Start the engine.
2. Push "OPEN/CLOSE" switch and then open the display.
3. Push both "MAP" and "D/N" switches at the same time for more than 5 seconds.
4. Select "Confirmation/ adjustment".

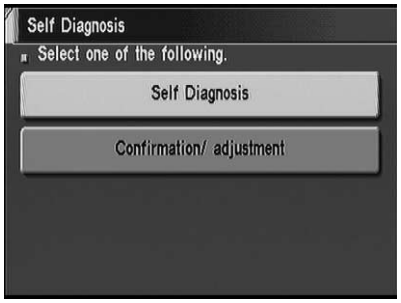

SEL527X

5. Select "Navigation".

SEL531X

6. Select "Check the map CD-ROM version".

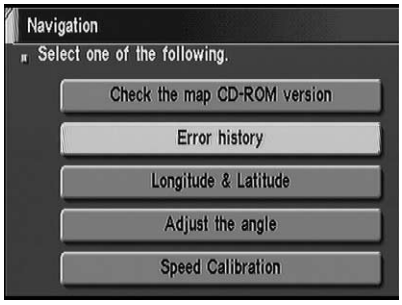

SEL532X

7. The version (parts number) of CD-ROM loaded to the NAVI control unit will be displayed.

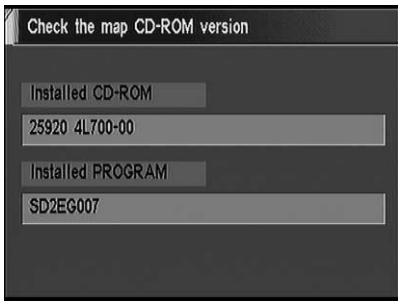

SEL536X

"DIAGNOSE THE DISPLAY" MODE

=NHEL0300S05

Description

NHEL0300S0501

Use the "Diagnose the Display" mode to check the display color brightness and shading. The NAVI control unit must be replaced if the color brightness and shading are abnormal.

How to Perform

NHEL0300S0502

1. Start the engine.
2. Push "OPEN/CLOSE" switch and then open the display.
3. Push both "MAP" and "D/N" switches at the same time for more than 5 seconds.
4. Select "Confirmation/ adjustment".

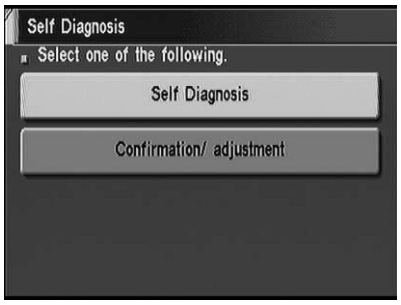

SEL527X

5. Select "Diagnose the Display".

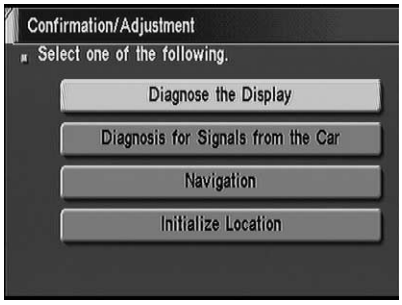

SEL531X

6. Select "Display Color Spectrum Bar" or "Display Gradation Bar".
7. Then color bar/gray scale will be displayed.

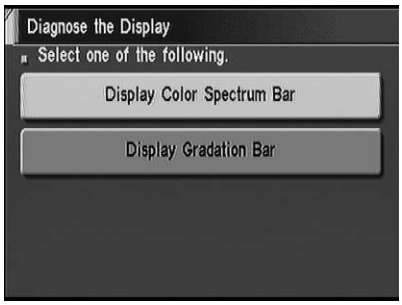

SEL540X

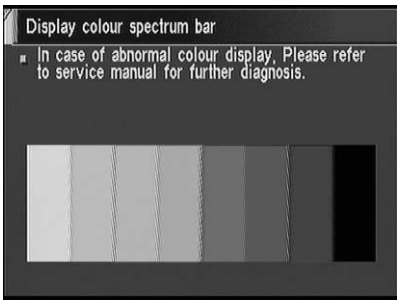

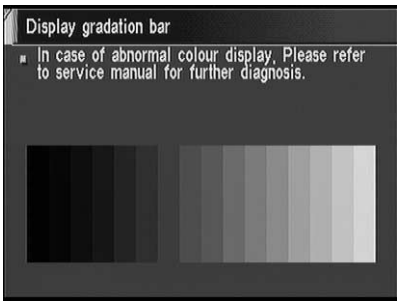

SEL541X

"LONGITUDE & LATITUDE" MODE

NHEL0300S06

Description

NHEL0300S0601

The "Longitude & Latitude" is used to confirm the longitude and latitude of some optional area point.

How to Perform

NHEL0300S0602

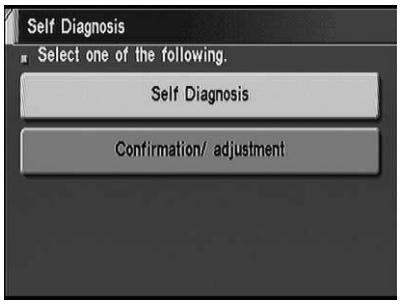

SEL527X

1. Start the engine.
2. Push "OPEN/CLOSE" switch and then open the display.
3. Push both "MAP" and "D/N" switches at the same time for more than 5 seconds.
4. Select "Confirmation/ adjustment".

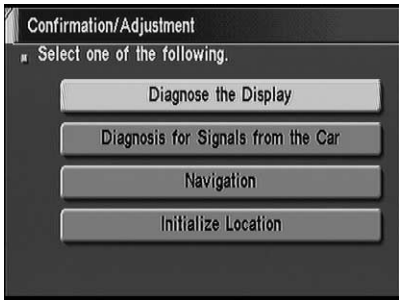

SEL531X

5. Select "Navigation".

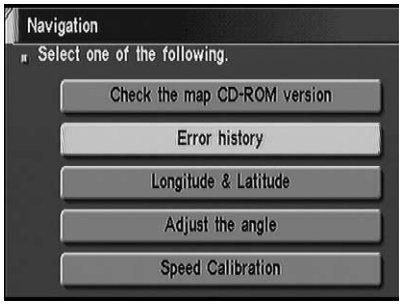

SEL532X

6. Select "Longitude & Latitude".

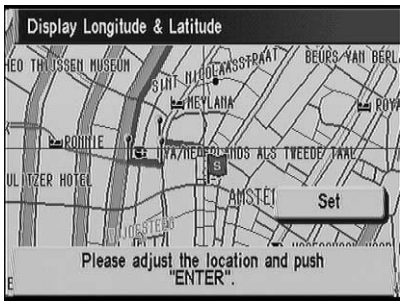

SEL537X

7. Adjust the pointer with using the joystick and touch "Set".
8. The longitude and latitude are displayed.

"ADJUST THE ANGLE" MODE

NHEL0300S07

Description

NHEL0300S0701

If the display indicates a larger or smaller turning angle than the actual turning angle, the gyro (angular speed sensor) sensing values must be checked.
In case that the vehicle on the display makes larger angle turn than reality, touch "−". In case that the vehicle on the display makes smaller angle turn than reality, touch "+".

How to Perform

NHEL0300S0702

1. Start the engine.
2. Push "OPEN/CLOSE" switch and then open the display.
3. Push both "MAP" and "D/N" switches at the same time for more than 5 seconds.
4. Select "Confirmation/ adjustment".

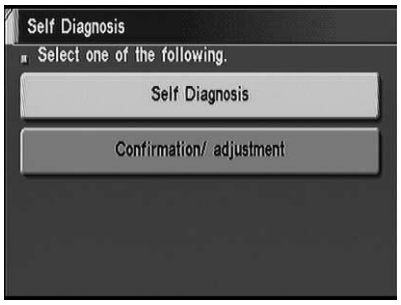

SEL527X

5. Select "Navigation".

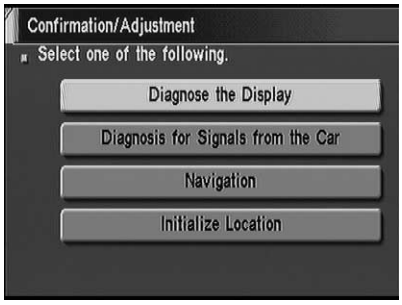

SEL531X

6. Select "Adjust the angle".

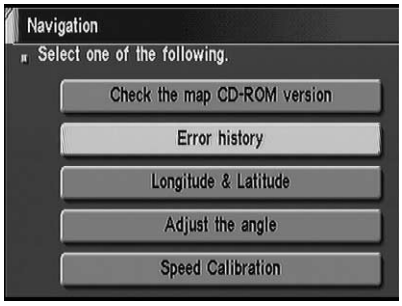

SEL532X

7. Select "Left Turn" to adjust the angle to the left. Touch "Right Turn" to adjust the angle to the right.
8. Select "+" to increase the angle change coefficient or "–" to reduce the angle change coefficient.
9. Select "Set" to save the changed values in memory.
10. Then the vehicle turning angle on the display has adjusted.

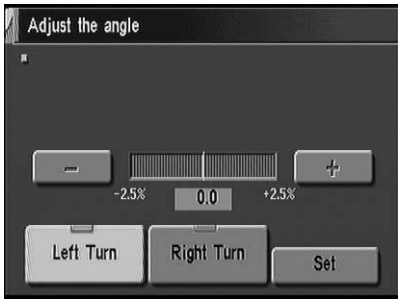

SEL538X

"SPEED CALIBRATION" MODE

NHEL0300S08

How to Perform

NHEL0300S0801

1. Start the engine.
2. Push "OPEN/CLOSE" switch and then open the display.
3. Push both "MAP" and "D/N" switches at the same time for more than 5 seconds.
4. Select "Confirmation/ adjustment".

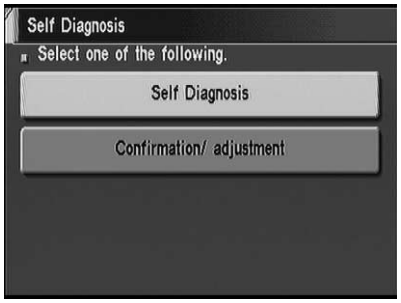

SEL527X

5. Select "Navigation".

SEL531X

6. Select "Speed Calibration".

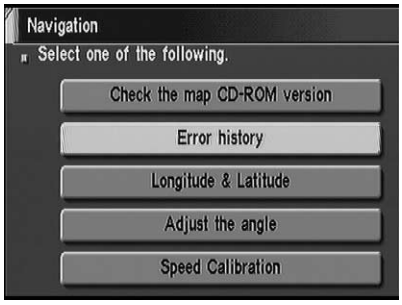

SEL532X

7. Select "+" or "−" to adjust the distance change coefficient.
- To make the distance change coefficient smaller, touch "−".
- To make the distance change coefficient larger, touch "+".
8. Select "Set".

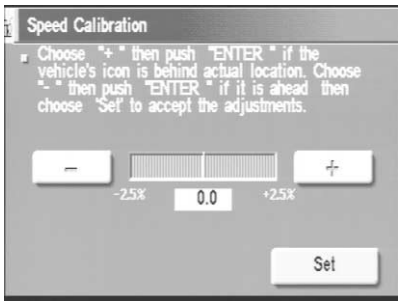

SEL539X

"INITIALIZE LOCATION" MODE

=NHEL0300S09

This procedure is for initializing the current location. Perform "Initialize Location" when the vehicle is transported a long distance on a trailer, etc.
Map with grey background appears and the vehicle location can not be adjusted by scrolling the display when the vehicle location in the memory is out of the area of the inserted map data. Perform "Initialize Location" when this occurs.

NOTE:

- **Only initialize the system when the NAVI control unit is replaced. If the system is initialized in other cases, it may cause inaccurate positioning of the position marker for a while.**
- **Initialize the system outside for receiving the radio wave from the GPS satellite.**

How to Perform

NHEL0300S0901

1. Switch the navigation system mode to self-diagnosis by pushing both "MAP" and "D/N" switches at the same time for more than 5 seconds.

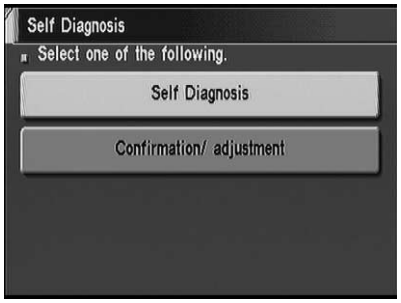

SEL527X

2. Select "Confirmation/ adjustment".

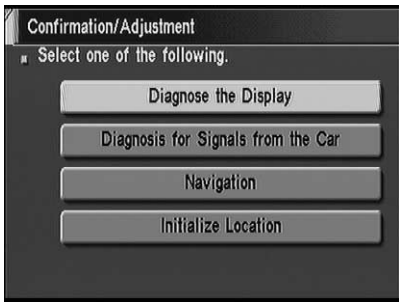

SEL531X

3. Select "Initialize Location". Then the previous screen is displayed.

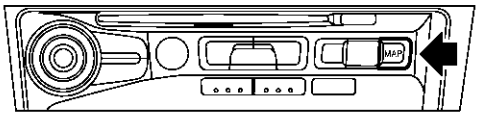

SEL632X

4. Push "MAP" switch, and then push "SETTING" switch.
5. Select "System Setting".

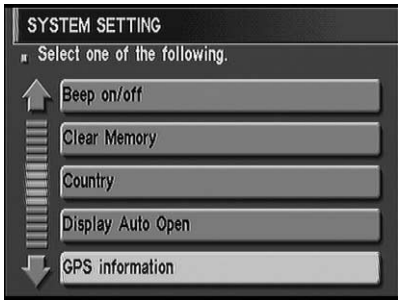

SEL559X

6. Select "GPS Information".

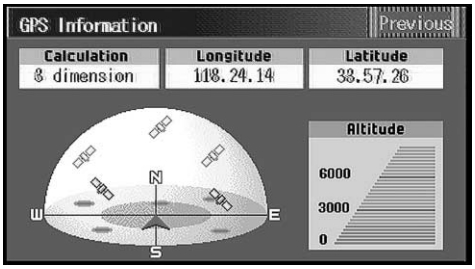

SEL146W

7. More than one GPS satellite icon turns green. (It may take 1 to 15 minutes.)

NOTE:
Drive the vehicle for a while* in order to change the receiving condition of the radio wave from the GPS satellite if the GPS icon does not turn green.
*** The driving distance which is necessary depends on the receiving condition of the radio wave from the GPS satellite.**

8. Push "MAP" switch and check the following.
- Confirm that the GPS icon on the map turns green.
- Then the position marker should show the current location.
- Position marker rotates corresponding to the movement of the vehicle.

9. Initialization is completed.

Control Panel Mode

APPLICATION ITEMS

=NHEL0301

NHEL0301S01

Mode	Description	Reference page
Display Auto Open	Display can be set to open by either of the following controls. ● Display will be opened when OPEN/CLOSE SW is selected with Key SW positioned ACC. ● Display will be automatically opened when Key SW is turned from OFF to ACC.	EL-425
GPS Information	The GPS data includes longitude, latitude and altitude (distance above sea level) of the present vehicle position, and current date and time for the area in which the vehicle is being driven. Also indicated are the GPS reception conditions and the GPS satellite position.	EL-426
Quick Stop Customer Setting	One facility of your selection can be added to your Quick Stop.	EL-426
Route Priorities	Priorities of search request and automatic re-searching can be set for route search.	EL-427
Tracking	Tracking to the present vehicle position can be displayed.	EL-427
Display Setting	The following display settings can be customized. ● Display color (Day mode or Night mode) ● Brightness of display	EL-428
Heading	Heading of the map display can be customized for either north heading or the actual driving direction of the vehicle.	EL-428
Nearby Display Icons	Icons of facilities can be displayed. Facilities to be displayed can be selected from the variety selections.	EL-429
Adjust Current Location	Current location of position marker can be adjusted. Direction of position marker also can be calibrated when heading direction of the vehicle on the display is not matched with the actual direction.	EL-429
Avoid Area Setting	Particular area can be avoided when routing.	—
Beep On/Off	Beep sounds which corresponds to the system operation can be activated/deactivated.	EL-430
Clear Memory	Address book, Previous destination or Avoid area can be deleted.	EL-430

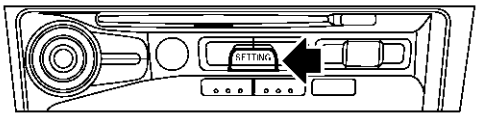

SEL633X

HOW TO PERFORM CONTROL PANEL MODE

NHEL0301S02

1. Start the engine.
2. Push “OPEN/CLOSE” switch and then open the display.
3. Push “SETTING” switch.

● For further procedures, refer to the following pages which describe each application item of the control panel mode.

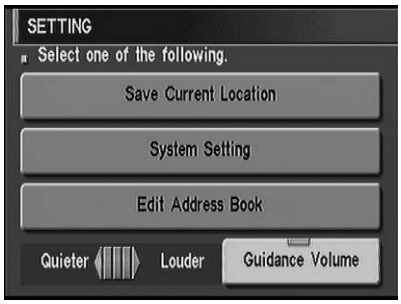

SEL619X

“DISPLAY AUTO OPEN” MODE

NHEL0301S03

1. Start the engine.
2. Push “OPEN/CLOSE” switch and then open the display.
3. Push “SETTING” switch.
4. Select “System Setting”.

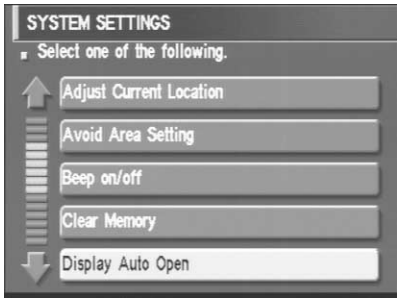

SEL638X

5. Select "Display Auto Open".

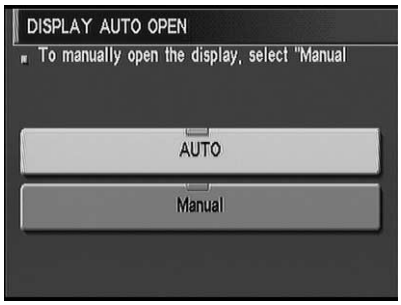

SEL621X

6. Select "Auto" or "Manual" icon.
- To manually open the display, select "Manual".
- To automatically open the display, select "Auto".
7. Push "MAP" switch, then the display will go back to the current location map.

"GPS INFORMATION" MODE

NHEL0301S04

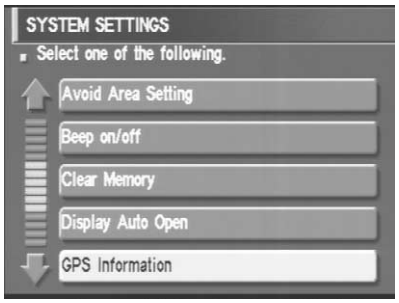

SEL639X

1. Start the engine.
2. Push "OPEN/CLOSE" switch and then open the display.
3. Push "SETTING" switch.
4. Select "System Setting".
5. Select "GPS information".

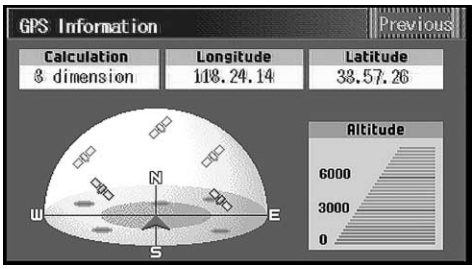

SEL146W

6. Then GPS information will be displayed.

"QUICK STOP CUSTOMER SETTING" MODE

NHEL0301S05

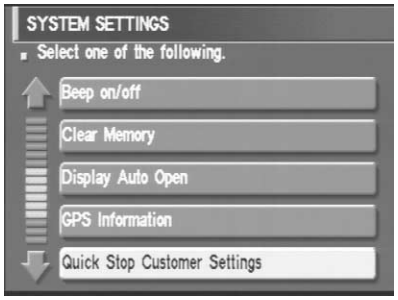

SEL640X

1. Start the engine.
2. Push "OPEN/CLOSE" switch and then open the display.
3. Push "SETTING" switch.
4. Select "System Setting".
5. Select "Quick Stop Customer Setting".

SEL544X

6. Select an item from the list.

"ROUTE PRIORITIES" MODE

NHEL0301S06

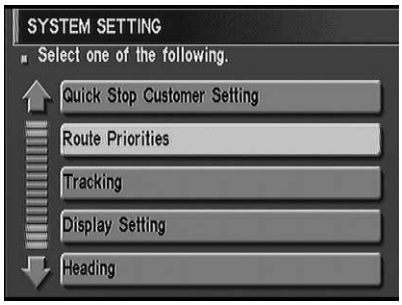

SEL545X

1. Start the engine.
2. Push "OPEN/CLOSE" switch and then open the display.
3. Push "SETTING" switch.
4. Select "System Setting".
5. Select "Route Priorities".

SEL546X

6. Select an item from the list.

"TRACKING" MODE

NHEL0301S07

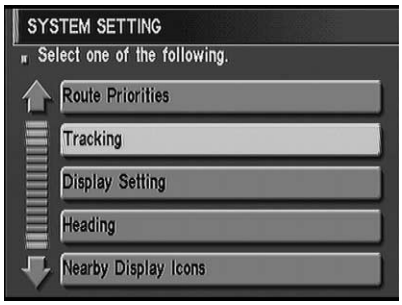

SEL547X

1. Start the engine.
2. Push "OPEN/CLOSE" switch and then open the display.
3. Push "SETTING" switch.
4. Select "System Setting".
5. Select "Tracking".

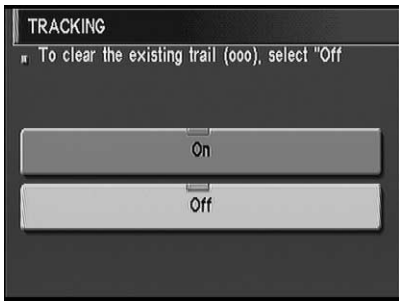

SEL548X

6. Select "On" or "Off" icon.
- To leave no trail on the map, select "Off".
- To leave a trail in the map, select "On".
7. Push "MAP" switch, then the display will go back to the current location map.

NOTE:
When a trail display is turned OFF, trail data is erased from the memory.

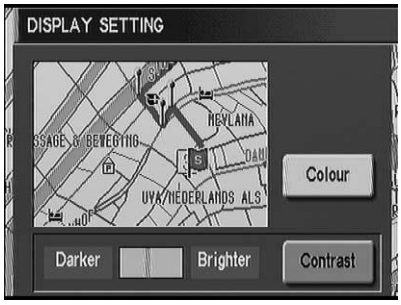

SEL560X

"DISPLAY SETTING" MODE

NHEL0301S08

Display Color Setting

NHEL0301S0801

1. Start the engine.
2. Push "OPEN/CLOSE" switch and then open the display.
3. Push "SETTING" switch.
4. Select "System Setting".
5. Select "Color". Display color will change to Day mode/Night mode.
6. Select "MAP" switch, then the display will go back to the current location map.

NOTE:

- **Display color can be changed independently when lighting switch is turned on and off.**
- **Initial setting of the color is as follows:**
  When lighting switch is turned off: Day mode
  When lighting switch is turned on: Night mode

SEL561X

Brightness Setting

NHEL0301S0802

1. Start the engine.
2. Push "OPEN/CLOSE" switch and then open the display.
3. Push "SETTING" switch.
4. Select "System Setting".
5. Select "Bright" or "Dark" to adjust the brightness of display.
6. Select "MAP" switch, then the display will go back to the current location map.

NOTE:

Display brightness can be adjusted independently when lighting switch is turned on and off.

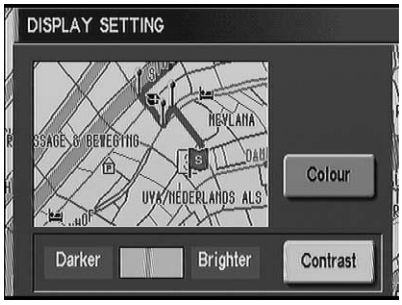

SEL562X

"HEADING" MODE

NHEL0301S09

1. Start the engine.
2. Push "OPEN/CLOSE" switch and then open the display.
3. Push "SETTING" switch.
4. Select "System Setting".
5. Select "Heading".

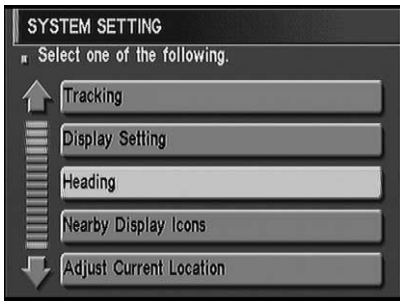

SEL549X

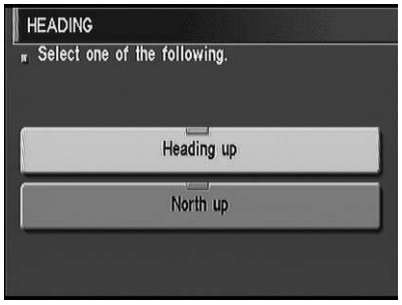

SEL550X

6. Select "Heading up" or "North up" icon.
- To display North up, select "North up".
- To display the car heading up, select "Heading up".
7. Push "MAP" switch, then the display will go back to the current location map.

"NEARBY DISPLAY ICONS" MODE

NHEL0301S10

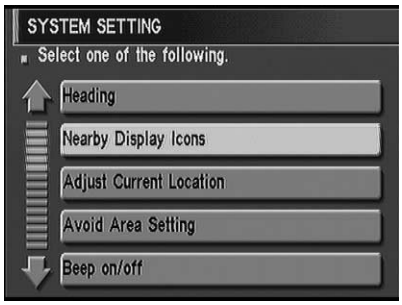

SEL551X

1. Start the engine.
2. Push "OPEN/CLOSE" switch and then open the display.
3. Push "SETTING" switch.
4. Select "System Setting".
5. Select "Nearby Display Icons".

SEL552X

6. Select and touch an item on the list.
7. Push "MAP" switch, then the display will go back to the current location map.

"ADJUST CURRENT LOCATION" MODE

NHEL0301S11

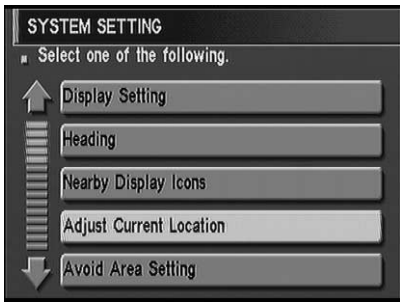

SEL553X

1. Start the engine.
2. Push "OPEN/CLOSE" switch and then open the display.
3. Push "SETTING" switch.
4. Select "System Setting".
5. Select "Adjust Current Location".

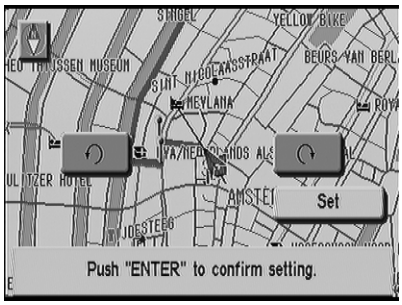

SEL554X

6. Select "↶" or "↷" to calibrate the heading direction. (Arrow marks will rotate corresponding to the calibration key.)
7. Select "Set". Then the vehicle mark will be matched to the arrow mark.
8. Display will show "Heading direction has been calibrated" and then go back to the current location map.

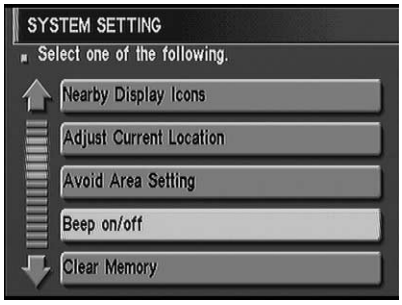

SEL555X

"BEEP ON/OFF" MODE

NHEL0301S12

1. Start the engine.
2. Push "OPEN/CLOSE" switch and then open display.
3. Push "SETTING" switch.
4. Select "System Setting".
5. Touch "Beep On/Off".

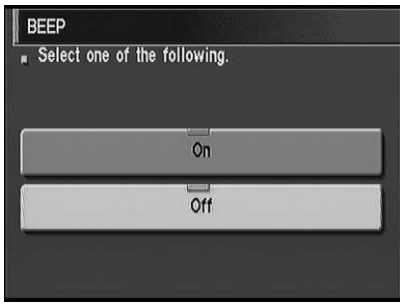

SEL556X

6. Select "On" or "Off" icon.
- If you want the beep sound, select "On".
- If you do not want the beep sound, select "Off".

7. Push "PREVIOUS" switch, then the display will go back to the current location map.

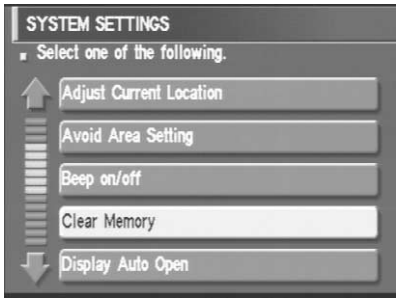

SEL641X

"CLEAR MEMORY" MODE

NHEL0301S13

1. Start the engine.
2. Push "OPEN/CLOSE" switch and then open the display.
3. Push "SETTING" switch.
4. Select "System Setting".
5. Select "Clear Memory".

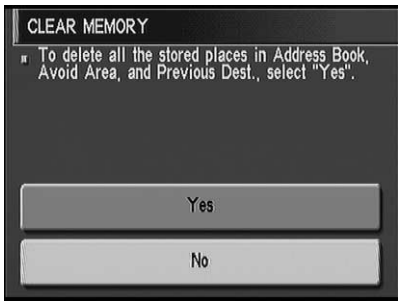

SEL558X

6. To delete all the stored places in "Address Book", "Avoid Area" and "Previous Dest", select "Yes".

Guide Volume Setting

=NHEL0302

DESCRIPTION

NHEL0302S01

Following voice guidance setting can be changed.

- Voice guidance activation/deactivation
- Voice volume of the guidance

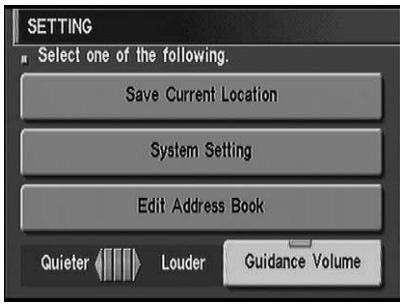

SEL563X

ACTIVATION/DEACTIVATION SETTING

NHEL0302S02

1. Start the engine.
2. Push “OPEN/CLOSE” switch and then open the display.
3. Push “SETTING” switch.
4. The voice prompt can be turned on/off by pressing the “Guidance Volume” button.

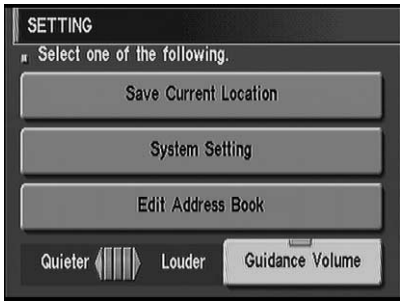

SEL563X

VOICE VOLUME SETTING

NHEL0302S03

1. Start the engine.
2. Push “OPEN/CLOSE” switch and then open the display.
3. Push “SETTING” switch.
4. Volume of the voice can be controlled by bending the joystick to left/right.

Trouble Diagnoses

SYMPTOM CHART

=NHEL0303

NHEL0303S01

Symptom	Diagnoses/service procedure	Reference page
Any function of the system does not operate.	Check power supply and ground circuit for NAVI control unit.	EL-435
Strange screen color or unusual screen brightness.	1. Check “DISPLAY SETTING” MODE.	EL-428
	2. Check display in “DIAGNOSE THE DISPLAY” MODE.	EL-419
The display is not dimmed when turning lighting switch to ON.	1. Check “DISPLAY SETTING” MODE.	EL-428
	2. Check lighting switch signal input to NAVI control unit correctly in “DIAGNOSIS FOR THE SIGNALS FROM THE CAR” MODE.	EL-417
No navigation guide voice are heard from both front speakers.	1. Check “Guide Volume Setting”.	EL-431
	2. Check voice guide operation.	EL-436
Beep does not sound when the system guides route.	Check “BEEP ON/OFF” MODE.	EL-430
Position marker does not trace along the route being traveled.	Go to “WORK FLOW FOR NAVIGATION INSPECTION”.	EL-433
Position marker does not indicate forward or backward movement.	Check reverse signal input to NAVI control unit correctly by “DIAGNOSIS FOR THE SIGNALS FROM THE CAR” MODE.	EL-417
Radio wave of GPS cannot be received. (GPS marker on the display does not become green color.)	1. Is there anything obstructing the GPS antenna on the rear parcel finisher? (GPS antenna located under the rear parcel finisher.)	—
	2. Check GPS radio wave receive condition in “GPS INFORMATION MODE”.	EL-426
	3. Check GPS antenna in “Self Diagnosis”.	EL-411
Heading direction of position marker does not match vehicle direction.	1. Perform “ADJUST CURRENT LOCATION” MODE.	EL-429
	2. Go to “WORK FLOW FOR NAVIGATION INSPECTION”.	EL-433
Stored location in the address book and other memory functions are lost when battery is disconnected or becomes discharged.	Stored location in the address book and other memory functions may be lost if the battery is disconnected or becomes discharged. If this should occur, charge or replace the battery as necessary and re-enter the information.	—
Map appears grey and cannot be scrolled	The current location in the memory is out of the map data area. Perform “INITIALIZE LOCATION” MODE.	EL-423

WORK FLOW FOR NAVIGATION INSPECTION

NHEL0303S02

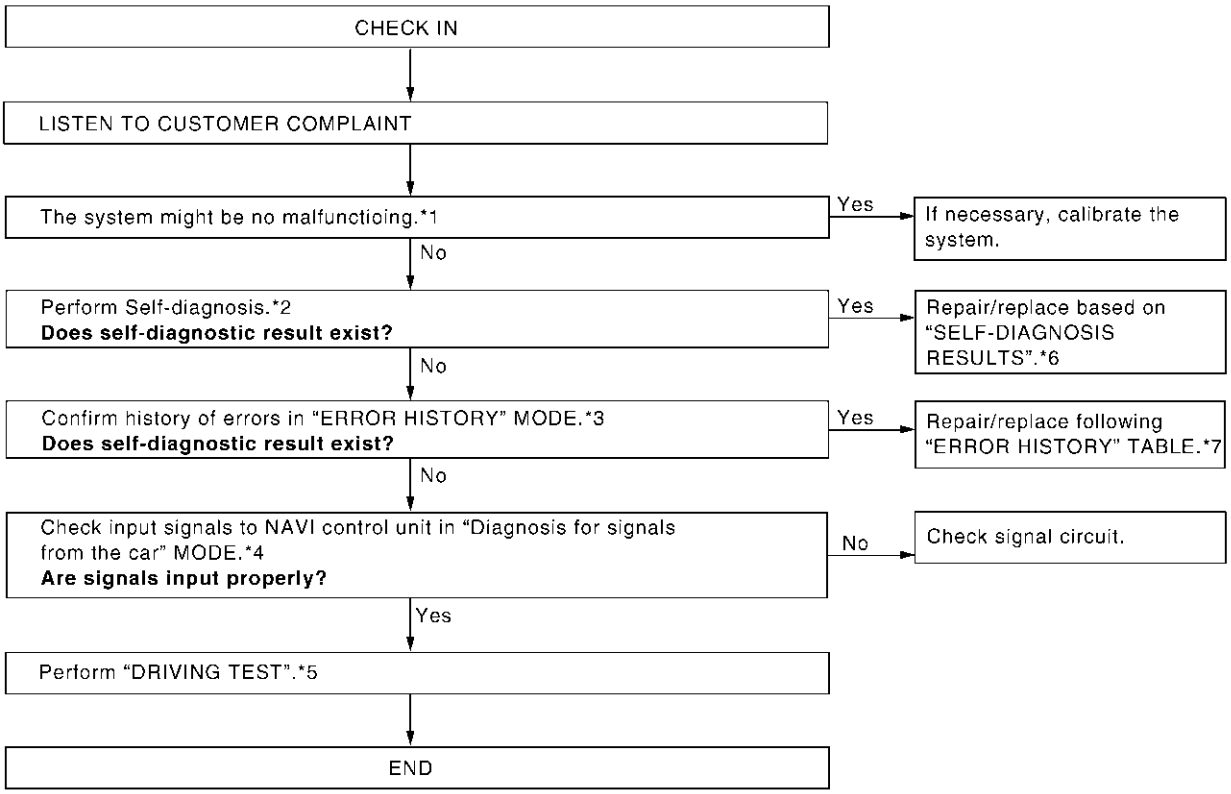

SEL519X

*1: EL-438
*2: EL-410
*3: EL-413
*4: EL-417
*5: EL-434
*6: EL-412
*7: EL-415

DRIVING TEST

=NHEL0303S03

During the driving test, diagnose the system by checking the difference of symptoms with each sensor ON or OFF.

Test Pattern 1

NHEL0303S0301

Test method in which current position adjustment is not made according to GPS data.

- Remove the GPS antenna connector from the NAVI control unit. Drive the vehicle.
  Before driving the vehicle, perform "Adjust Current Location" MODE (EL-429).

Test Pattern 2

NHEL0303S0302

Test procedure in which map matching is not used.

- Before driving the vehicle, perform "Adjust Current Location" MODE (EL-429). With the ignition switch OFF and the map CD-ROM removed from the NAVI control unit, drive the vehicle. After driving the vehicle, reinstall the map CD-ROM. Compare the saved driving tracks for the vehicle's current location with roads on the map.

Example

NHEL0303S0303

<The position marker consistently indicates the wrong position when driving in the same area. Determine if this is the result of the map matching function or the GPS function.>
→ Perform test pattern 1.
<To verify the accuracy of the road configuration shown on the display>
→ Perform test patterns 1 and 2.

- Compare the map and the saved driving tracks. The precision of the saved driving tracks is within several hundred meters.

<To make distance calibration and adjustments>
→ Perform test patterns 1 and 2.

- Make adjustments by driving the vehicle over a known course (highway or other road where distances are clearly marked). Calibrate the distance against the known distance. Use the formula below.
  Calibration value = Screen display distance/Actual distance

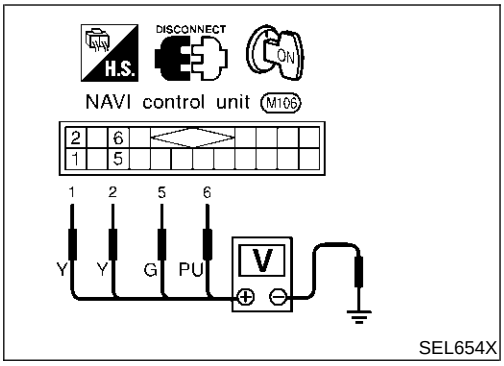

POWER SUPPLY AND GROUND CIRCUIT CHECK FOR NAVI CONTROL UNIT

=NHEL0303S04

Power Supply Circuit Check

NHEL0303S0401

Terminal		Ignition switch		
(+)	(−)	OFF	ACC	ON
1	Ground	Battery voltage	Battery voltage	Battery voltage
2	Ground	Battery voltage	Battery voltage	Battery voltage
5	Ground	0V	0V	Battery voltage
6	Ground	0V	Battery voltage	Battery voltage

If NG, check the following.

- 10A fuse [No. 10, located in the fuse block (J/B)]
- 10A fuse [No. 1, located in the fuse block (J/B)]
- 15A fuse (No. 56, located in the fuse and fusible link box)
- Harness for open or short between fuse and NAVI control unit

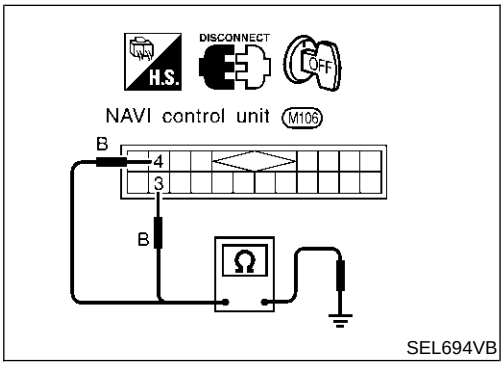

Ground Circuit Check

NHEL0303S0402

Terminals	Continuity
3 - Ground	Yes
4 - Ground	Yes

VOICE GUIDE OPERATION CHECK

=NHEL0303S05

1	PRELIMINARY CHECK

1. Turn ignition switch to ACC position.
2. Insert the music CD into the radio and CD player.
3. Try to play the music CD.
   Is the sound emitted from all speakers?

Yes or No

Yes	▶	GO TO 2.
No	▶	Repair or replace audio system. Refer to "AUDIO" in EL section of Service Manual.

2	CHECK NAVI OPERATION ON SIGNAL

1. Disconnect audio unit connector.
2. Push "VOICE" button.
3. Check voltage between audio unit terminal 28 and ground.

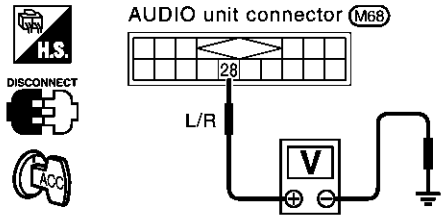

Voltage [V]:
Condition of VOICE button: Push.
Approx. 10
Condition of VOICE button: Do not push.
0

SEL645XC

OK or NG

OK	▶	GO TO 3.
NG	▶	Repair or replace harness or NAVI control unit.

3	CHECK VOICE SIGNAL

1. Push "VOICE" button.
2. Check voltage between NAVI control unit terminal 42 or 43 and ground.

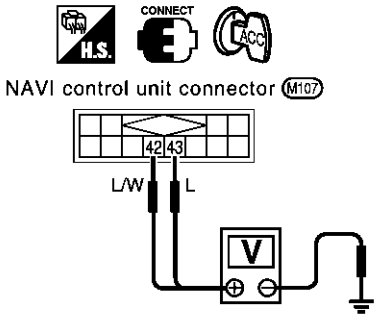

Voltage [V]:
Condition of VOICE button: Push.
Approx. 5
Condition of VOICE button: Do not push.
0

SEL832Y

OK or NG

OK	▶	GO TO 4.
NG	▶	Repairor replace NAVI control unit.

4	CHECK VOICE SIGNAL CIRCUIT

1. Turn ignition switch OFF.
2. Disconnect NAVI control unit connector and AUDIO unit connector.
3. Check continuity between NAVI control unit terminal 42 and AUDIO unit terminal 36.
4. Check continuity between NAVI control unit terminal 43 and AUDIO unit terminal 34.

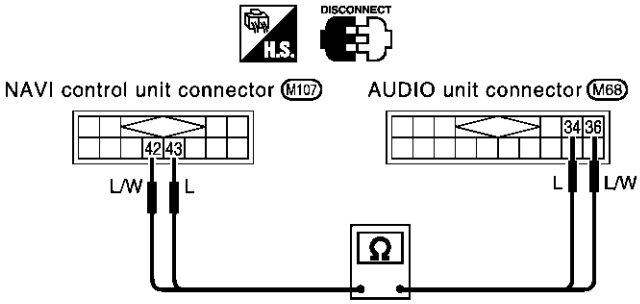

Does continuity exist?

SEL833Y

Yes or No

Yes	▶	Repair or replace audio unit. Refer to "AUDIO" in EL section of Service Manual.
No	▶	Repair or replace harness or connector.

This Condition Is Not Abnormal

=NHEL0304

EXAMPLE OF BASIC OPERATIONAL ERRORS

NHEL0304S01

Symptom	Possible cause	Repair order
No image is displayed.	Monitor brightness control is set to full dark.	Readjust monitor brightness.
Map does not appear on display.	Map CD is not inserted or inserted upside down.	Insert the map CD with the label facing up.
	Map mode is turned OFF.	Press the “MAP” button.
No guide tone is heard.	Voice guide adjustment OFF/Volume is set to the lowest or highest level.	Adjust the voice guide level.
Voice guide volume is too high or too low.		
Dark display/Slow image movement	Low vehicle interior temperature	Wait until vehicle interior temperature rises to appropriate level.
Small black or white dots appear on the screen.	Unique liquid crystal display phenomena	No problem
“Unable to read CD” message appears only during specified operation.	Map CD surface is tainted/CD surface is partially scratched.	Check map CD surface. If dirty, wipe clean with a soft cloth.
		If map CD surface is damaged, replace the CD.

Area place names are not displayed.
If area place names do not appear on the map display, these names may not be available. Use the BIRDVIEW® flat surface map display function. Display output may differ. Note the items related to BIRDVIEW® below.

- Priority is given to the display of place names in the direction of vehicle travel.
- Extended display of vehicle travel distance for both surfaces and steering angle (flat directional changes). This phenomenon disappears after the display image has been replaced by another one.
- The names of route and area might vary between the immediate front area and distance front area.
- Alphanumeric display characters are limited to maintain display simplicity and clarity. Display details may differ with time and place.
- Identical place and road names may appear on the display at more than one location.

EXAMPLE OF CURRENT VEHICLE POSITION MARKER ERROR

=NHEL0304S02

The navigation system reads the vehicle distance and steering angle data. Because the vehicle is moving, there will be an error in the current position indication. After the error appears, drive the vehicle for a short distance. Stop the vehicle. If the position marker does not return to its original position, perform "Adjust Current Location" MODE (EL-429).

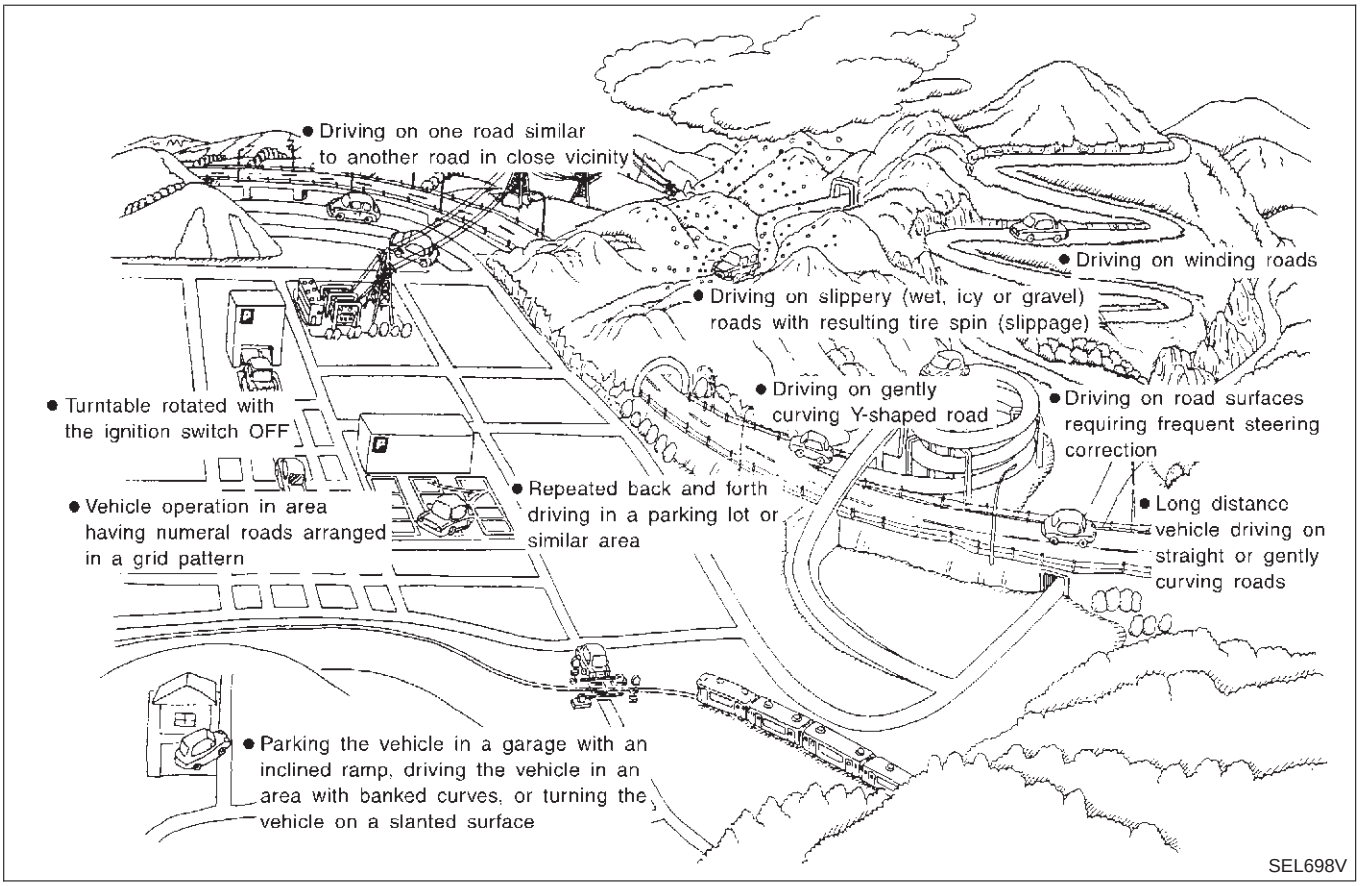

Possible cause		Drive condition	Service procedure
Area	Slippery road surface	On wet, icy, or gravel road where frequent wheel slippage occurs, distance calculations may be erroneous. The position marker may show the vehicle to be in inaccurate position.	If the position marker does not move to the correct position even after the vehicle has been driven approximately 10 km (6 miles), perform "Adjust Current Location" MODE (EL-429). If necessary, perform "Speed Calibration" (EL-422).
	Slanted area	Hilly areas where the road has banked curves. When the vehicle enters these banked curves, there may be an error in steering angle measurement. The position marker may show the vehicle to be in inaccurate position.	
Map data	Map display for a given road does not appear. 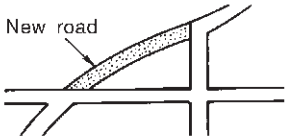 SEL699V	When the vehicle is driven on a newly constructed road that does not appear on the existing map. Map marking and calibration are not possible. The position marker may indicate inaccurate position in close proximity to the actual position. Subsequently, when the vehicle is driven on a road which is available as map data, the position marker may still indicate an inaccurate position.	
	The vehicle is driven on a road whose course has been altered (usually to improve the road or to eliminate some hazard).  SEL700V	When the map data shown on the display and the actual conditions are different. Map matching will not be possible. The position marker may indicate inaccurate position in close proximity to the actual position. If the vehicle is driven on the indicated road, further errors may occur.	
Vehicle	Use of tire chains (Stormy weather)	Tire chains will affect distance sensing. The position marker may indicate inaccurate position.	If the position marker does not move to the correct position even after the vehicle has been driven approximately 10 km (6 miles), perform "Speed Calibration" (EL-422). After removing the tire chains, sensing accuracy may recover by itself.

Possible cause		Drive condition	Service procedure
Operation	Driving immediately after starting engine.	The gyro (angular velocity sensor) needs about 15 seconds after the engine is started to precisely sense the angular velocity. Directional sensing errors will occur if the vehicle is moved immediately after starting the engine. The position marker may indicate inaccurate position.	Wait a few moments between starting the engine and actually driving the vehicle.
	Continuous driving for long distances (non-stop)	When the vehicle is driven continuously without stopping over a long distance, errors in directional sensing may occur. The position marker may indicate inaccurate position.	Stop the vehicle. Perform "Speed Calibration" (EL-422).
	Rough or violent driving	Wheel spinning (peeling out) or similar rough driving techniques can adversely affect sensing accuracy. The position marker may indicate inaccurate position.	If the position marker does not move to the correct position even after the vehicle has been driven approximately 10 km (6 miles), perform "Adjust Current Location" MODE (EL-429).
Positional calibration procedures	Positional calibration precision 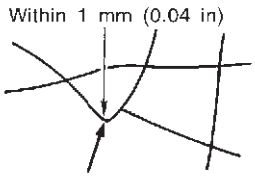 SEL701V	If current vehicle location is roughly set, the system may be unable to locate the road that the vehicle is traveling on. (This is especially true in an area where there are many roads.)	Perform "Adjust Current Location" MODE (EL-429) within a precision standard of 1 mm (0.04 in) on the display. **NOTE:** During calibration, use the most detailed map possible.
	Position calibration direction 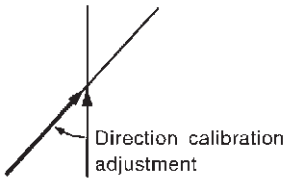 SEL702V	When calibrating the position, check the vehicle direction. If the vehicle direction is not correct, subsequent precision of current location will be affected.	Perform "Adjust Current Location" MODE, refer to EL-429.

Possible cause: —: Vehicle running ---: Indication		Drive condition	Service procedure
Road shapes	Y-intersection 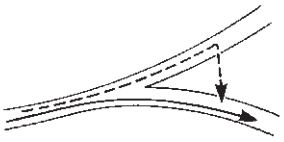 SEL703V	In Y-intersections with a very gradual change in course, a directional sensing may be inaccurate. This may result in the position marker giving the wrong road indication.	If the position marker does not move to the correct position even after the vehicle has been driven approximately 10 km (6 miles), perform "Store place". If required, also perform "Adjust Current Location" MODE (EL-429).
	Spiral road 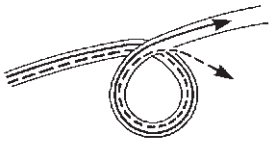 SEL704V	On loop bridges and similar structures which result in a large and continuous turn, turning angle may be sensed inaccurately. As a result, the position marker may separate from the route on the map.	
	Straight road 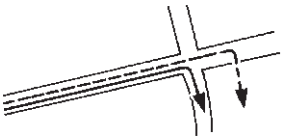 SEL705V	In long distance driving on a straight road or road with very gradual curves, map marking inaccuracies may occur. In such cases, the position marker may stray from the route being traveled during subsequent turns due to inaccurate distance calculation.	
	Winding road 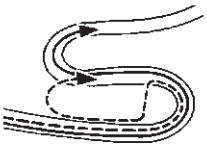 SEL706V	Directional sensing precision errors may occur when traveling on winding roads. During map matching, the position marker may stray to an adjacent road having a similar shape. Subsequent position marker error may occur.	
	Grid-like road shape 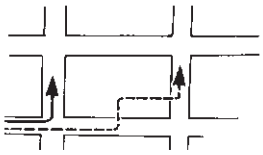 SEL707V	Directional sensing and distance sensing, precision errors may occur because of many roads having a similar shape in the immediate area. During map matching, the position marker may stray to an adjacent road having a similar shape. Subsequent position marker error may occur.	
	Parallel roads 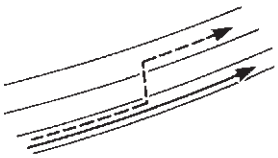 SEL708V	When driving on a parallel road, map matching errors may occur. Subsequent position marker error may also occur.	

Possible cause: —: Vehicle running ---: Indication		Drive condition	Service procedure
Location	Parking lot or similar area 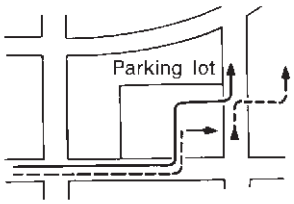 SEL709V	When the vehicle is driven in a parking lot or similar area, such as in an area not normally marked as a road on map, during map matching, the system may select nearby roads. This error may continue after the vehicle exits the parking area and begins to run on ordinary roads. Vehicle operation in a parking area may involve frequent turns and up and/or down operation. Directional sensing errors may occur leading to subsequent route and position mistakes.	If the position marker does not move to the correct position even after the vehicle has been driven approximately 10 km (6 miles), perform "Store place". If required, also perform "Adjust Current Location" MODE (EL-429).
	Turntable 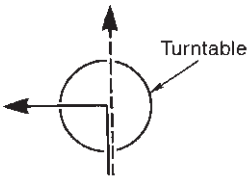 SEL710V	When the ignition switch is OFF (the usual situation when the vehicle is on a turntable), the navigation system receives no data from the gyro (angular velocity sensor). When the turntable rotates, no directional change is sensed. During subsequent vehicle operation, directional and route errors may occur.	

Position marker displays a completely different location

In circumstances such as those described below, GPS signal reception conditions may result in an erroneous position of the position marker. Perform "Adjust Current Location" MODE (EL-429).

NOTE:

- When GPS satellite signal reception conditions are poor, the position of position marker may be erroneous. If correction is not made immediately, the position marker error will be compounded and a completely different location will be indicated. In an area where GPS satellite signal reception conditions are good, the system can be returned to normal operation.
- The vehicle is driven aboard a car ferry or is towed for some distance with the ignition switch OFF. Vehicle movement is not sensed. Current location calculations do not occur and current location data does not appear on the display screen. Use GPS to accurately determine actual vehicle position. The system can be returned to normal operation when the GPS satellite signal reception conditions are good.

Position marker jumps

In circumstances such as those described below, the position marker may jump as a result of automatic current location corrections made by the system.

During map matching

- During map matching, the position marker may jump from one spot to another. In this case, it may be corrected to a wrong road or to an area where no road exist.

GPS location correcting

- Vehicle current location is sensed using the GPS data. Positional calibration is performed. The position marker continues to be in the wrong position. It may jump about from one area of the screen to another. In this case, it may be corrected to a wrong road or to an area where no road exist.

Position marker indicates that the vehicle is in the middle of an ocean or large river

The navigation system does not distinguish between land and water surfaces. In some cases, a position marker error may cause the display to show the vehicle above a water surface.

Position of position marker varies when the vehicle is repeatedly operated on the same road

Driving lane and steering wheel movement results in a variety of different positions of the position mark when traveling on the same road based on sensing results by the GPS antenna and gyro (angular velocity sensor).

Slow locational correction using map matching

- The map matching function requires verification of local data. To make the map matching function, some distance needs to be driven.
- The map matching function may not provide accurate performance in an area where there are numerous parallel roads. Until the system judges the road characteristics, an incorrect position may be shown.

GPS signal reception conditions are good. However, the position mark does not return to its proper position.

- The system senses the vehicle location with an error of approximately 100 m (328 ft). Due to the limitation of precision, the position marker may be inaccurate even if the GPS signal reception condition is good.
- The navigation system uses GPS data to determine vehicle location. GPS data is compared with other locational sensing data during the map matching process. The system decides which data is more precise and uses that data.
- When the vehicle is stationary, GPS data cannot be used to make system corrections.

Area designations on the map display and the BIRDVIEW® display differ.
To prevent the display from becoming congested, alphanumeric information is abridged.
[No problem]
Correct position of your vehicle is not displayed.
Vehicle position changed after ignition key was turned to the OFF position (Vehicle is transported on car ferry, car train, or by some other means).
[Operate vehicle for short time under GPS receiving conditions.]
The display does not change to night-time mode even though the light switch has been turned ON.
Lights have been turned on. In "DISPLAY CHANGE" mode, night-time mode on display has been switched to day-time mode and still is.
[Turn lights on again. Set the display to night-time mode. Refer to EL-428.]
Map does not scroll even though the position of your vehicle is changed.
Present area does not appear on the display.
[Press the "MAP" switch.]
Vehicle position marker does not appear.
Present area does not appear on the display.
[Press the "MAP" switch.]
The map surface precision display (GPS satellite marker) still remains gray.
Vehicle is parked inside a building or in the shadow of a large building. This intercepts the GPS signal.
[Move the vehicle to a more open position.]
GPS signal is not received because objects are placed on the rear parcel shelf.
[Remove objects from the rear parcel shelf.]
GPS satellite position is bad.
[Wait until GPS satellite position improves.]
Vehicle position precision is bad.
The map surface precision display (GPS satellite marker) still remains gray.
[Refer to "The map surface precision display (GPS satellite marker) still remains gray" item (Symptoms)]
Vehicle speed and elapsed distance is calculated from the vehicle speed pulse. This pulse is dependent upon tire size. If tire chains are used on the vehicle, accuracy will be affected (pulse rate will be too fast or too slow). The same is true if the system installed to your vehicle is removed and installed on another vehicle.
[Drive the vehicle at a speed higher than 30 km/h (19 MPH) for approximately 30 minutes. Automatic readjustment should occur. If it does not (remains too fast or too slow), distance calibration is required. Or, drive the vehicle for a short distance. Perform "SPEED CALIBRATION" (EL-422). After removing the tire chains, sensing accuracy may recover by itself.]
Bad map data or system defect (same error consistently occurs in the same area)

ROUTE SEARCH/ROUTE GUIDE

NHEL0304S03

- If the present location or the destination location is displayed in the avoid area, it is not possible to search routes.
- If the avoid area is set to wide range area, it may not be possible to find appropriate routes or search for alternate routes.
- The automatic re-route calculates a return to the original route. Because of this, it may not be possible to search appropriate new routes. If you deviate from the original route and wish to select an appropriate new route, touch "Route Calculation".
- The automatic re-route function may sometimes require considerable time.
- Displayed route number and directional information at a highway junction may differ from the information posted on the actual road signs.
- Displayed street name information at a highway exit may differ from the information posted on the actual road signs.
- Street name information displayed on the enlarged intersection map may differ from the information posted on the actual road signs.

- The enlarged intersection map may display an "Unknown Street" message at some street intersections.
- Because of road configuration, etc. the guide may finish early. If this occurs, follow the marker to reach your destination.
- Destination area side information (left side and right side) may differ from actual conditions because of data error.

Unable to Set Destination, Way Point, and/or menu items

NHEL0304S0301

Symptom	Possible cause	Repair order
Unable to search way points in re-search mode	A way point already crossed or determined to have been crossed.	If you desire to pass through a way point for a second time, reperform route edit.
Turn list is not displayed.	Route search does not occur.	Set designation areas and perform route search.
	Car marker does not appear on recommended route.	Drive on the recommended route.
	Route guide is canceled.	Turn the route guide ON. (Push "VOICE" switch.)
Automatic search does not function.	Vehicle is not running on search object route (road indicated by orange, brown or red line).	Drive the vehicle on the search object route or perform a manual route search. Note that all routes will be re-searched at this time.
Unable to select detour route.	Vehicle is not running on recommended route.	Use the "RE-ROUTE" mode to search again or return to the recommended route.
Detour route search results are identical to previous search.	All possible conditions were considered, but results are the same.	This is not abnormal.
Unable to set a way point.	More than five way points have been previously set (and not cleared).	More than five way points cannot be specified at the same time. Break down into smaller segments and perform search.
Unable to select starting point during route edit.	Starting point will normally be your present location during route edit.	This is not abnormal.
Cannot select certain menu items.	While vehicle is running.	Park the vehicle in a safe area and perform operation.

Voice Guide Information

NHEL0304S0302

Symptom	Possible cause	Repair order
Voice guide does not function.	Voice guide is only available at certain intersections (marked with). In some cases, the guide is not available even when the vehicle makes a turn.	This is not abnormal.
	Vehicle is not running on recommended route.	Return to recommended route or reperform route search.
	Voice guide is OFF.	Set voice guide to the ON position.
	Route guide is canceled.	Turn the route guide ON. (Push "VOICE" switch.)
The guide content does not correspond to actual conditions.	The content of the voice guide may vary depending on the type of junction.	Operate vehicle following the traffic rules and regulation.

Route Search Information

NHEL0304S0303

Symptom	Possible cause	Repair order
Proceeding in desired direction. However, route search in desired direction does not function.	Unable to find appropriate route in the desired direction.	This is not abnormal.

This Condition Is Not Abnormal (Cont'd)

Symptom	Possible cause	Repair order
No route is displayed.	No object route is searched near destination area.	Adjust position to wide road (brown) near destination area. In an area where traffic direction is displayed separately, pay close attention to the direction of travel. Set the destination area and the way point over the road.
	Starting point and destination areas are very near.	Move destination areas away from starting point on the screen.
Recommended route which has been passed disappears from the display.	The recommended route is divided into individual control segments. When way point 1 is passed, the data from the starting point to the way point 1 is erased.	This is not abnormal.
Search recommends roundabout route.	There may be special conditions for roads near the starting point and destination area (one-way traffic, etc.). A roundabout route may be displayed.	Slightly change starting point and destination area settings.
Landmark display does not show actual conditions.	Mistaken or missing map data may result in erroneous display.	Change map CD.
Recommended route drawn slightly away from starting point, way points, and destination area.	Course search data may not exist for closely positioned starting point, way points, and destination area shown on the map. Route guide starting point, way point, and destination point may be separated.	Set the destination area to the general route (indicated by a thick brown line). However, even if the selected route is a major one, appropriate route search data may not be available.

LOCATION OF CAR MARKER

NHEL0304S04

- If the vehicle has been parked in a multi-level parking facility or underground parking facility, the car marker position may be inaccurate immediately after exiting the parking facility.
- The GPS accuracy is within ±100 m (300 ft). Even when receiving conditions are excellent, further positional correction may not occur.

STREET INDICATION

NHEL0304S05

- Street names displayed on the map may differ from the actual street names.
- An "Unknown Street" message may appear on the map in place of street name information.

RESEARCH

NHEL0304S06

- Position may be searched by house number. However, the displayed position and street may differ from the actual position and street.
- When position is searched using Point of Interest (POI), the displayed position may differ from the actual position.
- Some data may not be available for new buildings and other structures in a map.

GPS ANTENNA

NHEL0304S07

- Do not place metal objects above the GPS antenna mounted on the rear parcel shelf. This will cause interference with signal reception.
- Do not place mobile telephones or vehicle radio transceivers in close proximity to the GPS antenna mounted on the rear parcel shelf. This may cause interference with signal reception.

Program Loading

NHEL0305

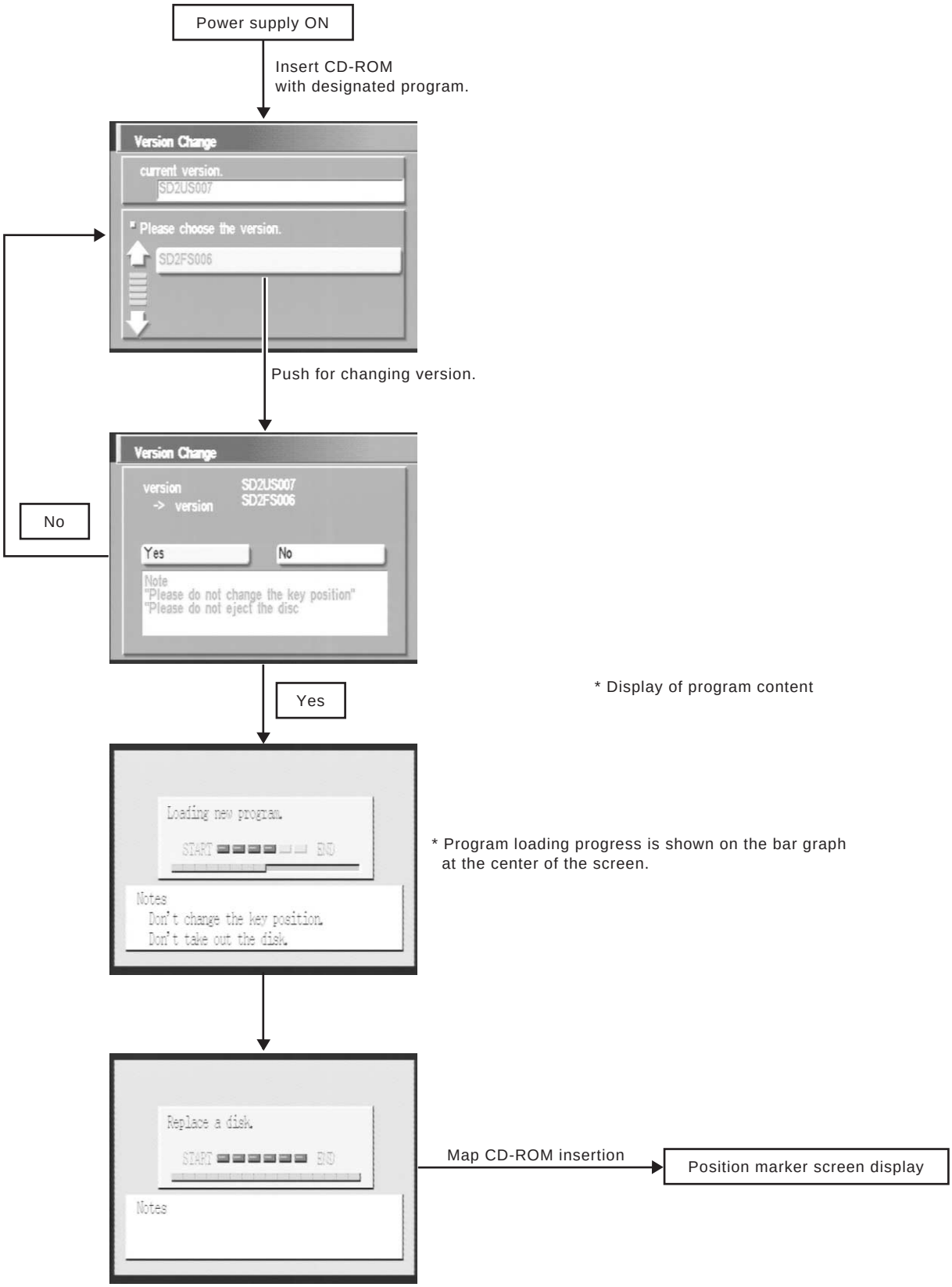

Note: Load the program only after the engine has been started.

SEL564X

System Description

NHEL0322

CAN (Controller Area Network) is a serial communication line for real time application. It is an on-vehicle multiplex communication line with high data communication speed and excellent error detection ability. Many electronic control units are equipped onto a vehicle, and each control unit shares information and links with other control units during operation (not independent). In CAN communication, control units are connected with 2 communication lines (CAN H line, CAN L line) allowing a high rate of information transmission with less wiring. Each control unit transmits/receives data but selectively reads required data only.

FOR TCS MODELS

NHEL0322S02

System Diagram

NHEL0322S0201

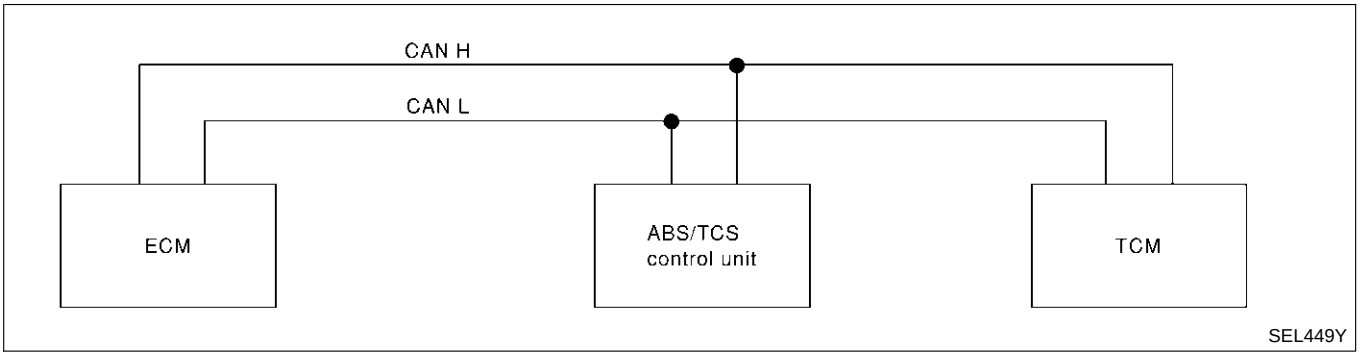

Input/Output Signal Chart

NHEL0322S0202

T: Transmit R: Receive

Signals	ECM	ABS/TCS control unit	TCM
Accelerator pedal position signal	T	R	R
Output shaft revolution signal	R		T
TCS self-diagnostic signal	R	T	
ABS self-diagnostic signal	R	T	

FOR VDC MODELS

NHEL0322S03

System Diagram

NHEL0322S0301

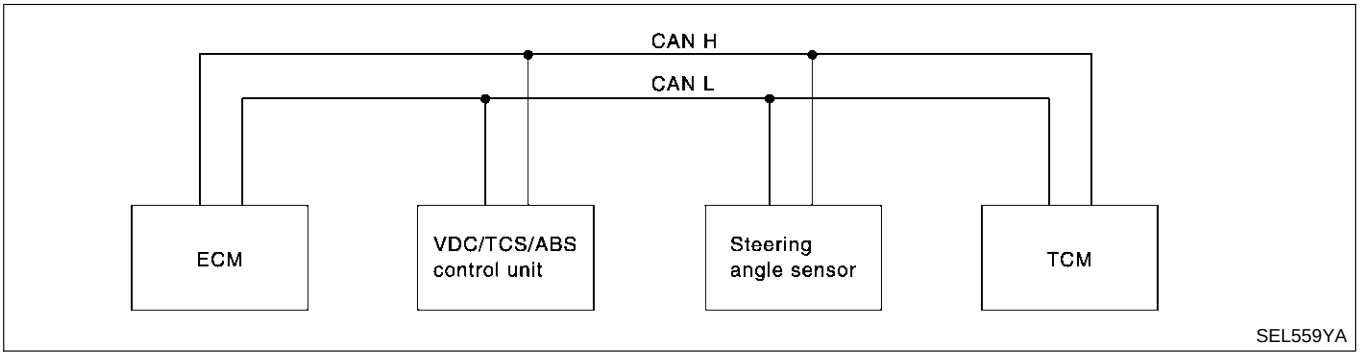

Input/output Signal Chart

NHEL0322S0302

T: Transmit R: Receive

Signals	ECM	Steering angle sensor	VDC/TCS/ABS control unit	TCM
Output shaft revolution signal	R			T
VDC/TCS self-diagnostic signal	R		T	
ABS self-diagnostic signal	R		T	
Engine speed signal	T		R	

Signals	ECM	Steering angle sensor	VDC/TCS/ABS control unit	TCM
Accelerator pedal position signal	T		R	R
Steering angle sensor signal		T	R	

Component Parts and Harness Connector Location

NHEL0323

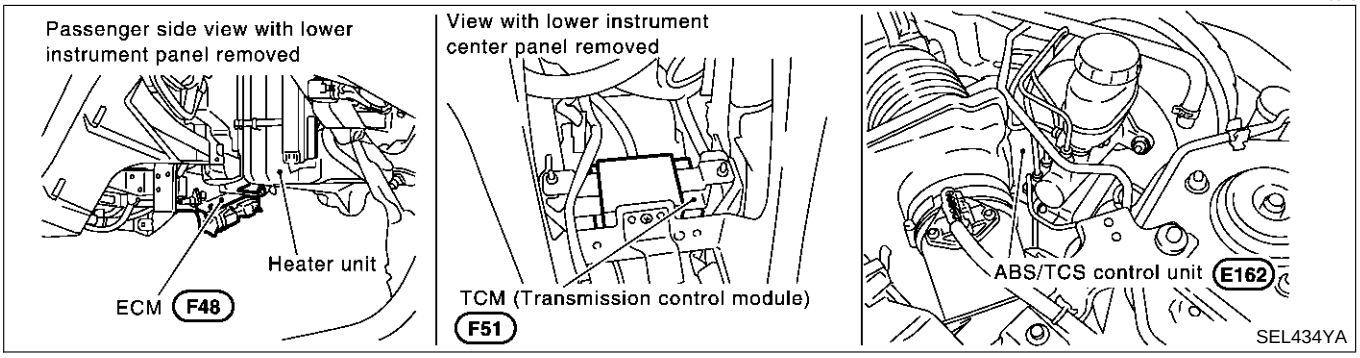

System Description

NHEL0324

CAN (Controller Area Network) is a serial communication line for real time application. It is an on-vehicle multiplex communication line with high data communication speed and excellent error detection ability. Many electronic control units are equipped onto a vehicle, and each control unit shares information and links with other control units during operation (not independent). In CAN communication, control units are connected with 2 communication lines (CAN H line, CAN L line) allowing a high rate of information transmission with less wiring. Each control unit transmits/receives data but selectively reads required data only.

Wiring Diagram — CAN —

NHEL0325

EL-CAN-01

: DATA LINE

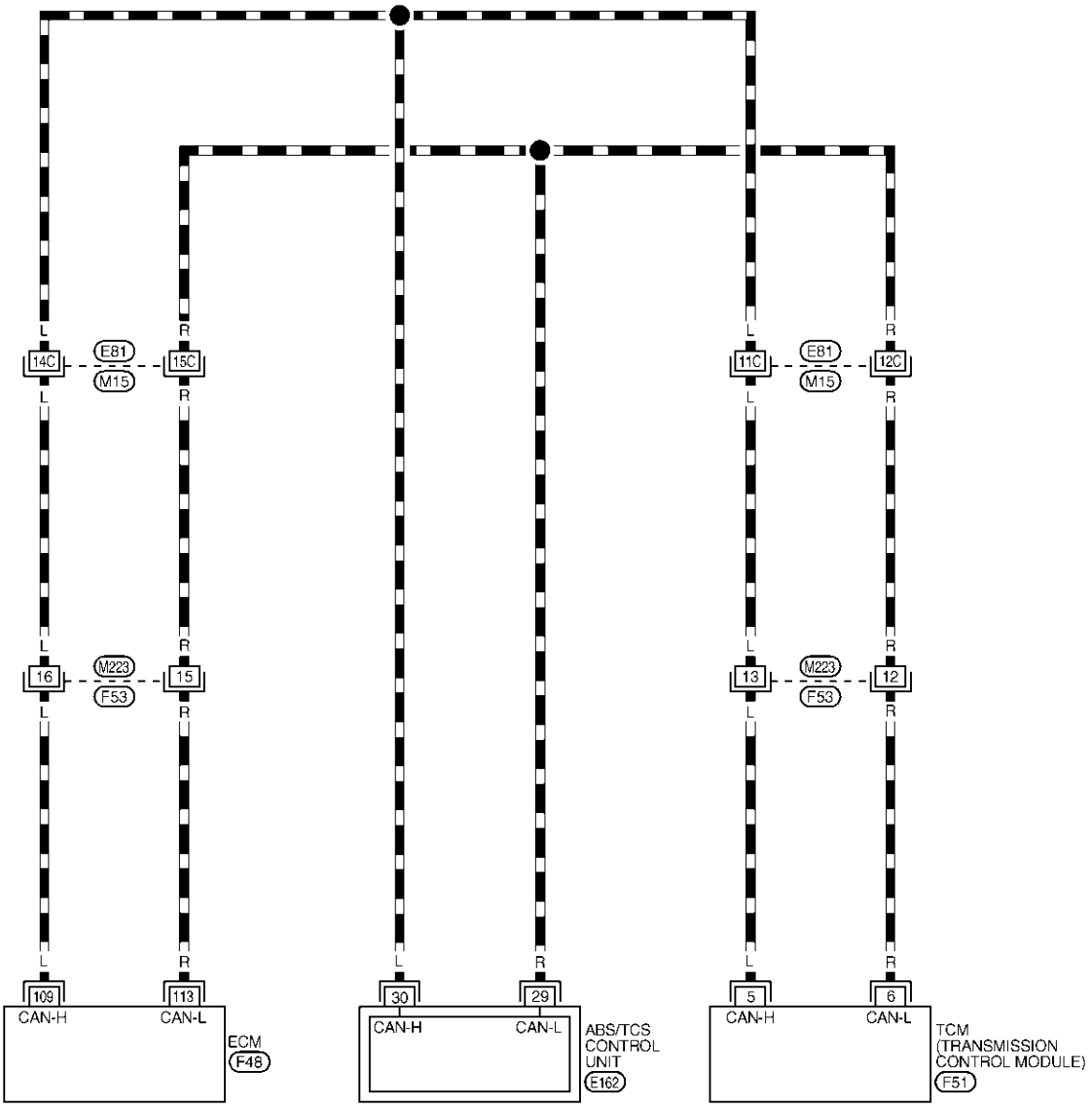

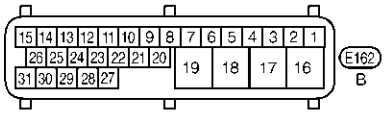

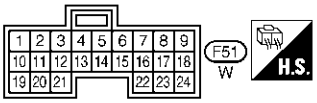

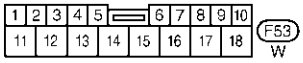

REFER TO THE FOLLOWING.
M15 -SUPER
MULTIPLE JUNCTION (SMJ)
F48 -ELECTRICAL UNITS

MEL368O

Trouble Diagnoses

NHEL0326

WORK FLOW

NHEL0326S01

1. Print all the data of “SELF-DIAG RESULTS” for “ENGINE”, “ABS” and “A/T” displayed on CONSULT-II.

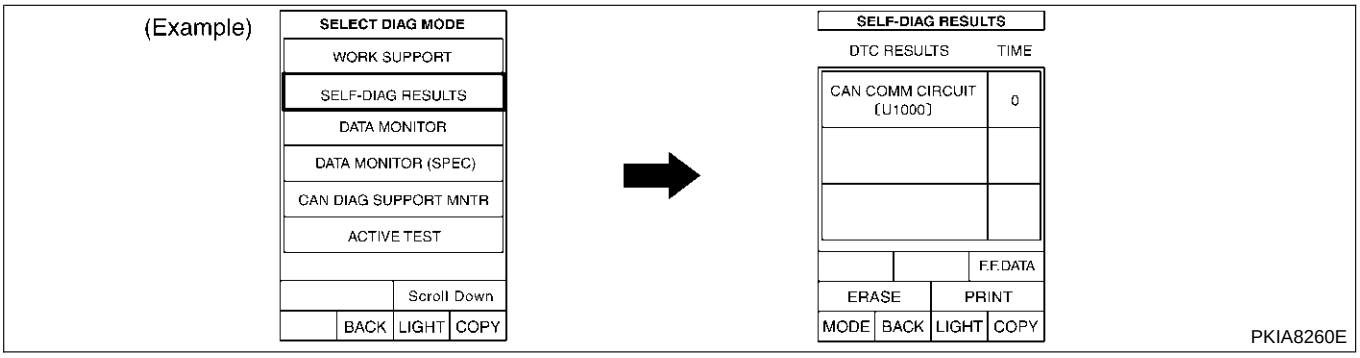

2. Print all the data of “CAN DIAG SUPPORT MNTR” for “ENGINE”, “ABS” and “A/T” displayed on CONSULT-II.

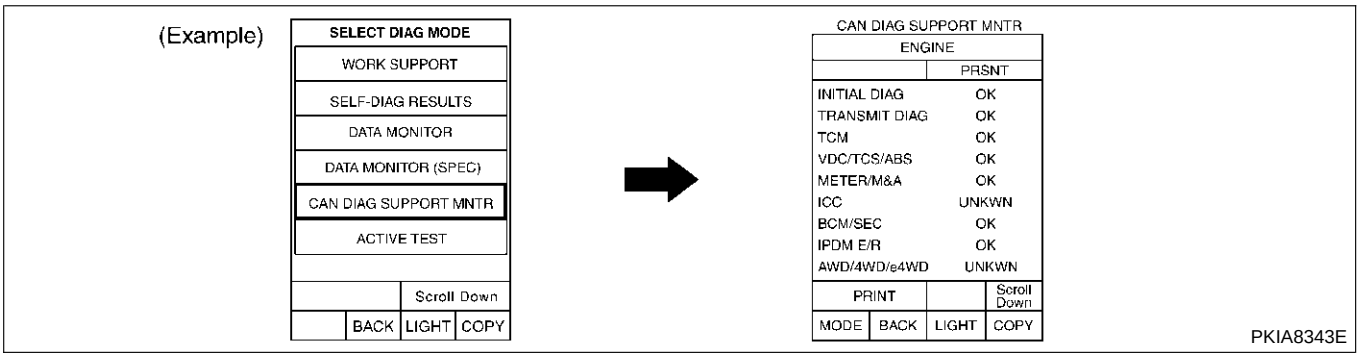

3. Attach the printed sheet of “SELF-DIAG RESULTS” and “CAN DIAG SUPPORT MNTR” onto the check sheet. Refer to “CHECK SHEET” (EL-453).
4. Based on the “CAN DIAG SUPPORT MNTR” results, put “v” marks onto the items with “UNKWN” or “NG” in the check sheet table. Refer to “CHECK SHEET” (EL-453).

NOTE:
If “NG” is displayed on “INITIAL DIAG (Initial diagnosis)” as “CAN DIAG SUPPORT MNTR” for the diagnosed control unit, replace the control unit.

5. According to the check sheet results (example), start inspection. Refer to “CHECK SHEET RESULTS (EXAMPLE)” (EL-454).

CHECK SHEET

=NHEL0326S02

NOTE:

If "NG" is displayed on "INITIAL DIAG (Initial diagnosis)" as "CAN DIAG SUPPORT MNTR" for the diagnosed control unit, replace the control unit.

Check sheet table

SELECT SYSTEM screen	CAN DIAG SUPPORT MNTR				
	Initial diagnosis	Transmit diagnosis	Receive diagnosis		
			ECM	VDC/TCS/ABS	TCM
ENGINE	NG	UNKWN	–	UNKWN	UNKWN
ABS	NG	UNKWN	UNKWN	–	UNKWN
A/T	NG	UNKWN	UNKWN	UNKWN	–

Symptoms :

Attach copy of ENGINE SELF-DIAG RESULTS	Attach copy of ABS SELF-DIAG RESULTS	Attach copy of A/T SELF-DIAG RESULTS
Attach copy of ENGINE CAN DIAG SUPPORT MNTR	Attach copy of ABS CAN DIAG SUPPORT MNTR	Attach copy of A/T CAN DIAG SUPPORT MNTR

PKIA8323E

CHECK SHEET RESULTS (EXAMPLE)

=NHEL0326S03

NOTE:

If "NG" is displayed on "INITIAL DIAG (Initial diagnosis)" as "CAN DIAG SUPPORT MNTR" for the diagnosed control unit, replace the control unit.

Case 1

NHEL0326S0301

Check ECM circuit. Refer to "ECM CIRCUIT CHECK" (EL-455).

SELECT SYSTEM screen	CAN DIAG SUPPORT MNTR				
	Initial diagnosis	Transmit diagnosis	Receive diagnosis		
			ECM	VDC/TCS/ABS	TCM
ENGINE	NG	UNKWN	–	UNKWN	UNKWN
ABS	NG	UNKWN	UNKWN	–	UNKWN
A/T	NG	UNKWN	UNKWN	UNKWN	–

PKIA8325E

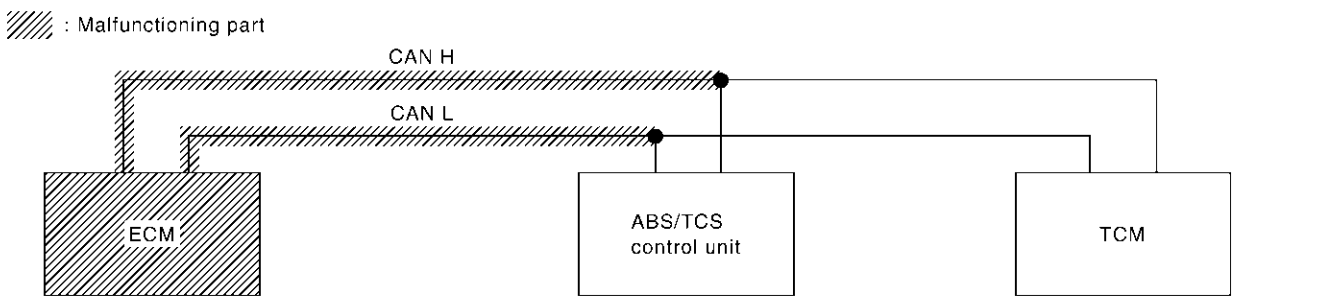

PKIA8335E

Case 2

NHEL0326S0302

Check ABS/TCS control unit circuit. Refer to "ABS/TCS CONTROL UNIT CIRCUIT CHECK" (EL-456).

SELECT SYSTEM screen	CAN DIAG SUPPORT MNTR				
	Initial diagnosis	Transmit diagnosis	Receive diagnosis		
			ECM	VDC/TCS/ABS	TCM
ENGINE	NG	UNKWN	–	UNKWN	UNKWN
ABS	NG	UNKWN	UNKWN	–	UNKWN
A/T	NG	UNKWN	UNKWN	UNKWN	–

PKIA8326E

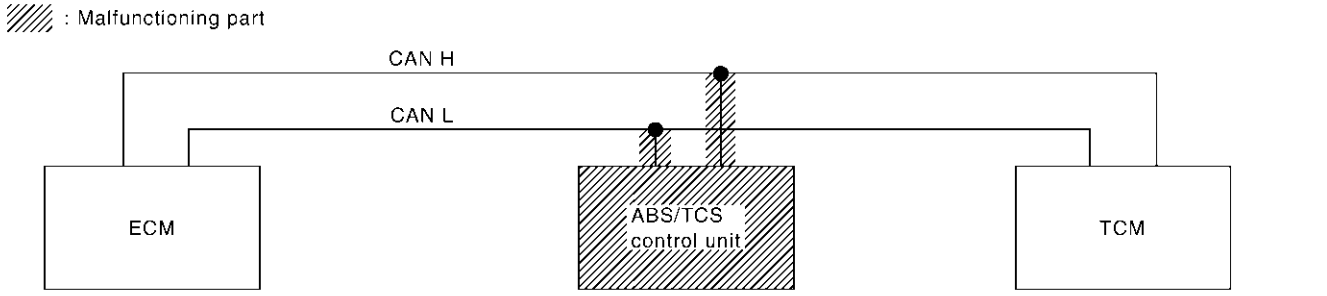

PKIA8336E

Case 3

NHEL0326S0303

Check TCM circuit. Refer to "TCM CIRCUIT CHECK" (EL-457).

SELECT SYSTEM screen	CAN DIAG SUPPORT MNTR				
	Initial diagnosis	Transmit diagnosis	Receive diagnosis		
			ECM	VDC/TCS/ABS	TCM
ENGINE	NG	UNKWN	–	UNKWN	UNKWN
ABS	NG	UNKWN	UNKWN	–	UNKWN
A/T	NG	UNKWN	UNKWN	UNKWN	–

PKIA8327E

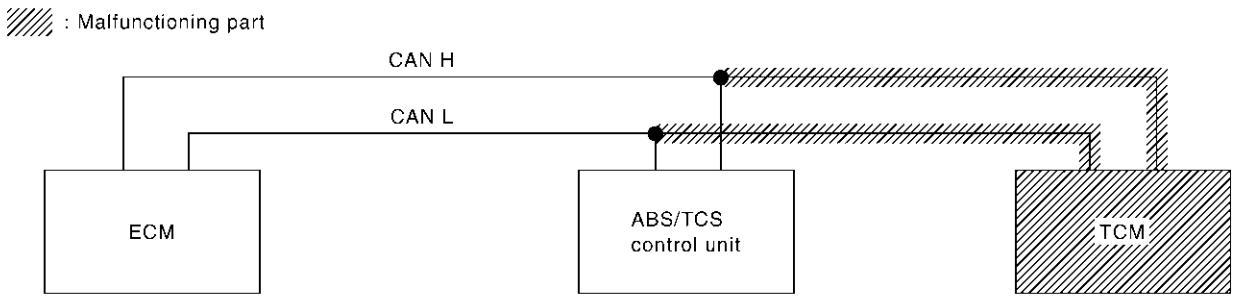

PKIA8337E

Case 4

NHEL0326S0304

Check CAN communication circuit. Refer to "CAN COMMUNICATION CIRCUIT CHECK" (EL-457).

SELECT SYSTEM screen	CAN DIAG SUPPORT MNTR				
	Initial diagnosis	Transmit diagnosis	Receive diagnosis		
			ECM	VDC/TCS/ABS	TCM
ENGINE	NG	UNKWN	–	UNKWN	UNKWN
ABS	NG	UNKWN	UNKWN	–	UNKWN
A/T	NG	UNKWN	UNKWN	UNKWN	–

PKIA8328E

ECM CIRCUIT CHECK

NHEL0326S05

1	CHECK CONNECTOR

1. Turn ignition switch OFF.
2. Check following terminals and connector for damage, bend and loose connection. (control module-side and harness-side)

- ECM
- Harness connector F53
- Harness connector M223
- Harness connector M15
- Harness connector E81

OK or NG

OK	▶	GO TO 2.
NG	▶	Repair terminal or connector.

2	CHECK HARNESS FOR OPEN CIRCUIT

1. Disconnect ECM connector.
2. Check resistance between ECM harness connector F48 terminals 109 (L) and 113 (R).

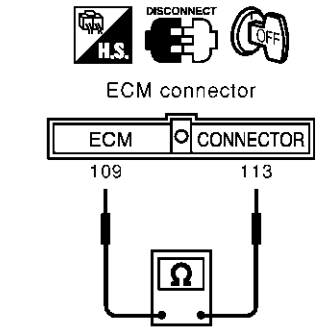

Approx. 108 - 132 Ω

SEL437Y

OK or NG

OK	▶	Replace ECM.
NG	▶	Repair harness between ABS/TCS control unit and ECM.

ABS/TCS CONTROL UNIT CIRCUIT CHECK

NHEL0326S06

1	CHECK CONNECTOR

1. Turn ignition switch OFF.
2. Check the terminals and connector of ABS/TCS control unit for damage, bend and loose connection. (control unit-side and harness-side)

OK or NG

OK	▶	GO TO 2.
NG	▶	Repair terminal or connector.

2	CHECK HARNESS FOR OPEN CIRCUIT

1. Disconnect ABS/TCS control unit connector.
2. Check resistance between ABS/TCS control unit harness connector E162 terminals 30 (L) and 29 (R).

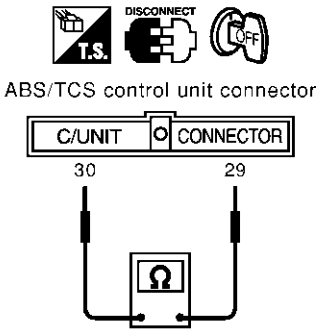

Approx. 54 - 66 Ω

SEL438Y

OK or NG

OK	▶	Replace ABS/TCS control unit.
NG	▶	Repair harness between ABS/TCS control unit and harness connector E81.

TCM CIRCUIT CHECK

NHEL0326S07

1	CHECK CONNECTOR	
1. Turn ignition switch OFF. 2. Check following terminals and connector for damage, bend and loose connection. (control module-side and harness-side) ● TCM ● Harness connector F53 ● Harness connector M223 ● Harness connector M15 ● Harness connector E81		
OK or NG		
OK	▶	GO TO 2.
NG	▶	Repair terminal or connector.

2	CHECK HARNESS FOR OPEN CIRCUIT	
1. Disconnect TCM connector. 2. Check resistance between TCM harness connector F51 terminals 5 (L) and 6 (R).		
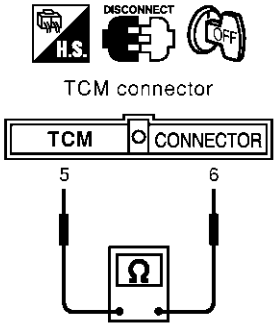 **Approx. 108 - 132 Ω** SEL439Y		
OK or NG		
OK	▶	Replace TCM.
NG	▶	Repair harness ABS/TCS control unit and TCM.

CAN COMMUNICATION CIRCUIT CHECK

NHEL0326S08

1	CHECK CONNECTOR	
1. Turn ignition switch OFF. 2. Check following terminals and connector for damage, bend and loose connection. (control module-side, control unit-side and harness-side) ● TCM ● ECM ● ABS/TCS control unit ● Between ECM and TCM		
OK or NG		
OK	▶	GO TO 2.
NG	▶	Repair terminal or connector.

2	CHECK HARNESS FOR SHORT CIRCUIT

1. Disconnect ECM connector and harness connector F53.
2. Check continuity between ECM harness connector F48 terminals 109 (L) and 113 (R).

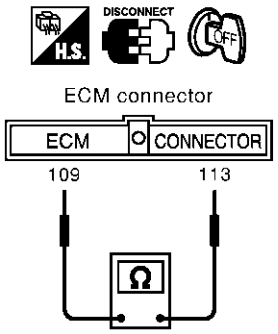

Continuity should not exist.

SEL431Y

OK or NG

OK	▶	GO TO 3.
NG	▶	Repair harness between ECM and harness connector F53.

3	CHECK HARNESS FOR SHORT CIRCUIT

Check continuity between ECM harness connector F48 terminals 109 (L), 113 (R) and ground.

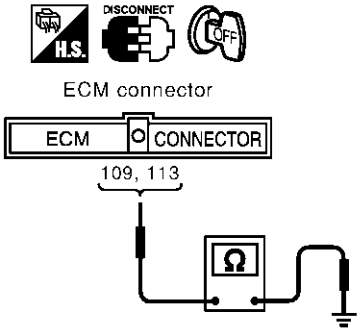

Continuity should not exist.

SEL432Y

OK or NG

OK	▶	GO TO 4.
NG	▶	Repair harness between ECM and harness connector F53.

4	CHECK HARNESS FOR SHORT CIRCUIT

1. Disconnect TCM connector.
2. Check continuity between TCM harness connector F51 terminals 5 (L) and 6 (R).

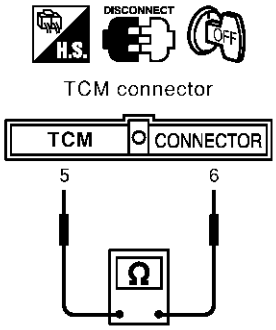

Continuity should not exist.

SEL440Y

OK or NG

OK	▶	GO TO 5.
NG	▶	Repair harness between TCM and harness connector F53.

5	CHECK HARNESS FOR SHORT CIRCUIT

Check continuity between TCM harness connector F51 terminals 5 (L), 6 (R) and ground.

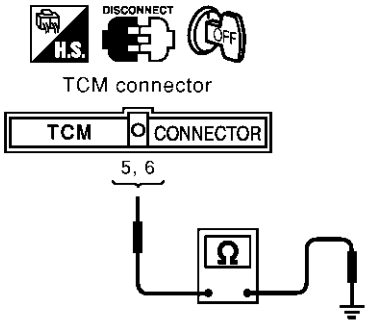

Continuity should not exist.

SEL441Y

OK or NG

OK	▶	GO TO 6.
NG	▶	Repair harness between TCM and harness connector F53.

6	CHECK HARNESS FOR SHORT CIRCUIT

1. Disconnect harness connector M15.
2. Check continuity between harness connector M15 terminals 14C (L) and 15C (R).

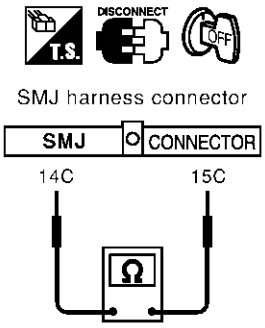

Continuity should not exist.

SEL442Y

OK or NG

OK	▶	GO TO 7.
NG	▶	Repair harness between harness connector M223 and harness connector M15.

7	CHECK HARNESS FOR SHORT CIRCUIT

Check continuity between harness connector M15 terminals 14C (L), 15C (R) and ground.

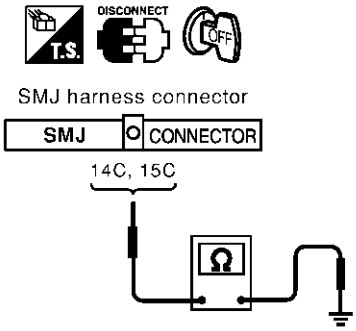

Continuity should not exist.

SEL443Y

OK or NG

OK	▶	GO TO 8.
NG	▶	Repair harness between harness connector M223 and harness connector M15.

8	CHECK HARNESS FOR SHORT CIRCUIT

Check continuity between harness connector M15 terminals 11C (L) and 12C (R).

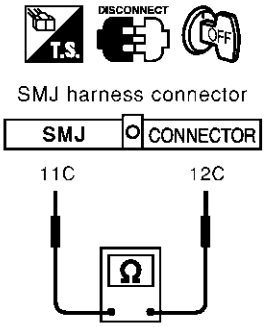

Continuity should not exist.

SEL444Y

OK or NG

OK	▶	GO TO 9.
NG	▶	Repair harness between harness connector M223 and harness connector M15.

9	CHECK HARNESS FOR SHORT CIRCUIT

Check continuity between harness connector M15 terminals 11C (L), 12C (R) and ground.

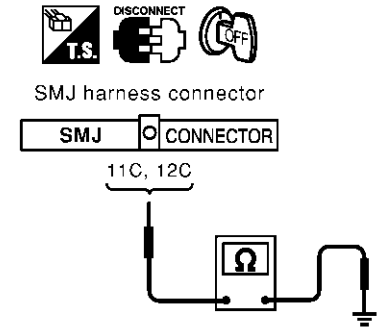

Continuity should not exist.

SEL445Y

OK or NG

OK	▶	GO TO 10.
NG	▶	Repair harness between harness connector M223 and harness connector M15.

10	CHECK HARNESS FOR SHORT CIRCUIT

1. Disconnect ABS/TCS control unit connector.
2. Check continuity between ABS/TCS control unit harness connector E162 terminals 30 (L) and 29 (R).

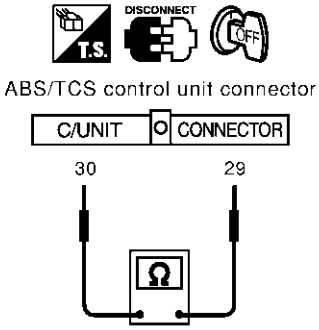

Continuity should not exist.

SEL446Y

OK or NG

OK	▶	GO TO 11.
NG	▶	Repair harness between ABS/TCS control unit and harness connector E81.

11	CHECK HARNESS FOR SHORT CIRCUIT

Check continuity between ABS/TCS control unit harness connector E162 terminals 30 (L), 29 (R) and ground.

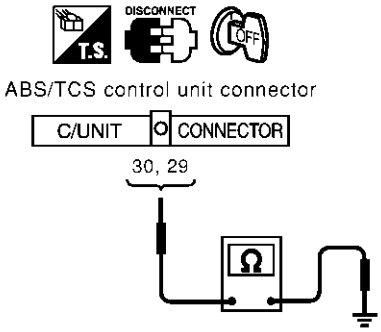

Continuity should not exist.

SEL447Y

OK or NG

OK	▶	GO TO 12.
NG	▶	Repair harness between ABS/TCS control unit and harness connector E81.

12	ECM/TCM INTERNAL CIRCUIT INSPECTION	
Check components inspection. Refer to "ECM/TCM INTERNAL CIRCUIT INSPECTION" (EL-462).		
OK or NG		
OK	▶	Connect all the connectors and diagnose again. Refer to "Work Flow" (EL-452).
NG	▶	Replace ECM and/or TCM.

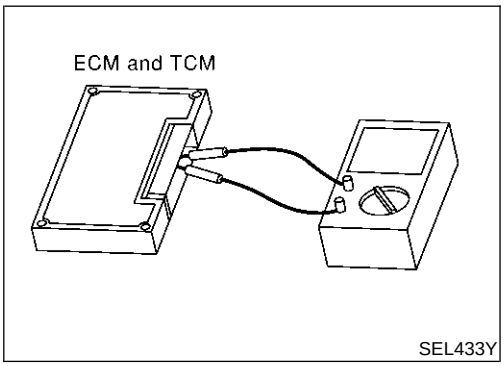

Component Inspection

NHEL0327

ECM/TCM INTERNAL CIRCUIT INSPECTION

NHEL0327S01

- Remove ECM and TCM from vehicle.
- Check resistance between ECM terminals 109 and 113.
- Check resistance between TCM terminals 5 and 6.

Unit	Terminal	Resistance value (Ω)
ECM	109 - 113	Approx. 108 - 132
TCM	5 - 6	

Component Parts and Harness Connector Location

NHEL0328

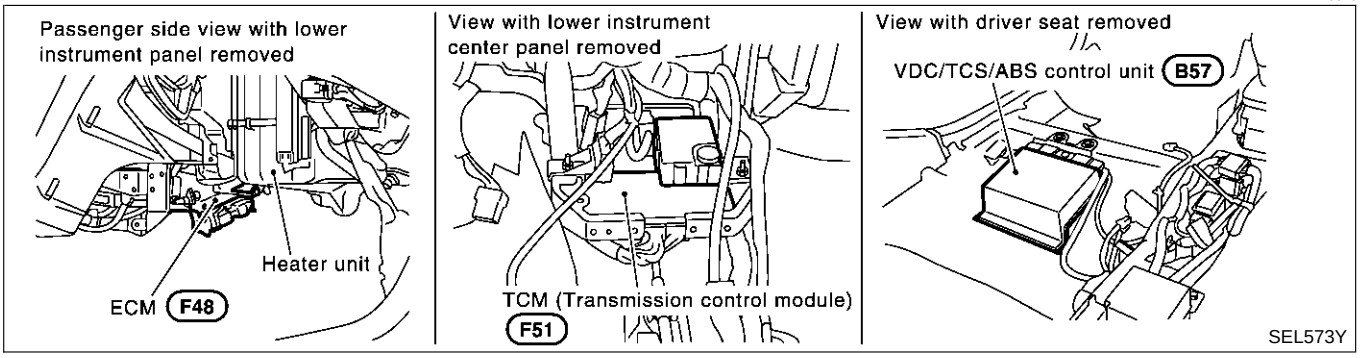

System Description

NHEL0329

CAN (Controller Area Network) is a serial communication line for real time application. It is an on-vehicle multiplex communication line with high data communication speed and excellent error detection ability. Many electronic control units are equipped onto a vehicle, and each control unit shares information and links with other control units during operation (not independent). In CAN communication, control units are connected with 2 communication lines (CAN H line, CAN L line) allowing a high rate of information transmission with less wiring. Each control unit transmits/receives data but selectively reads required data only.

Wiring Diagram — CAN —

NHEL0330

EL-CAN-02

: DATA LINE

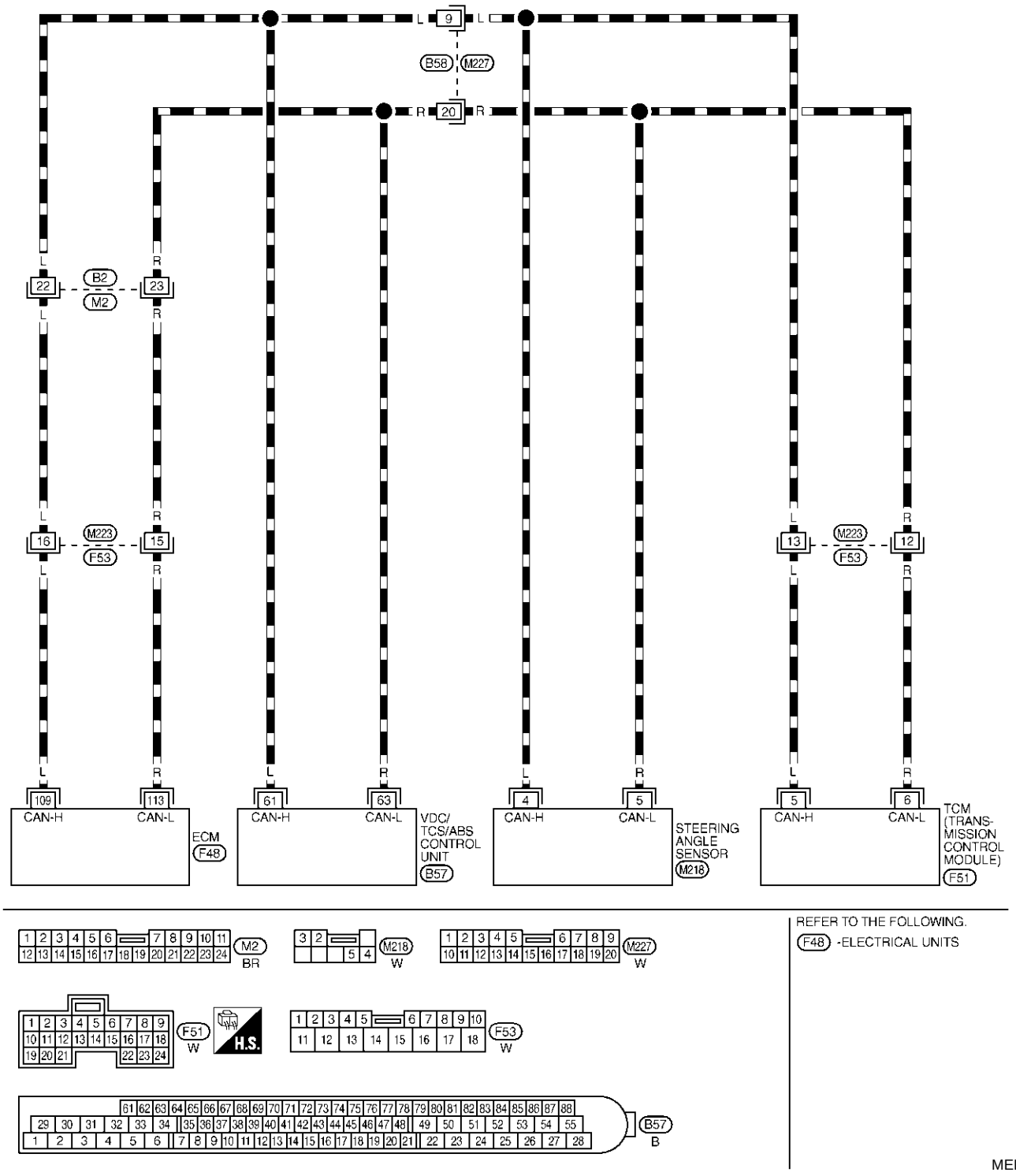

Trouble Diagnoses

NHEL0331

WORK FLOW

NHEL0331S01

1. Print all the data of “SELF-DIAG RESULTS” for “ENGINE”, “VDC” and “A/T” displayed on CONSULT-II.

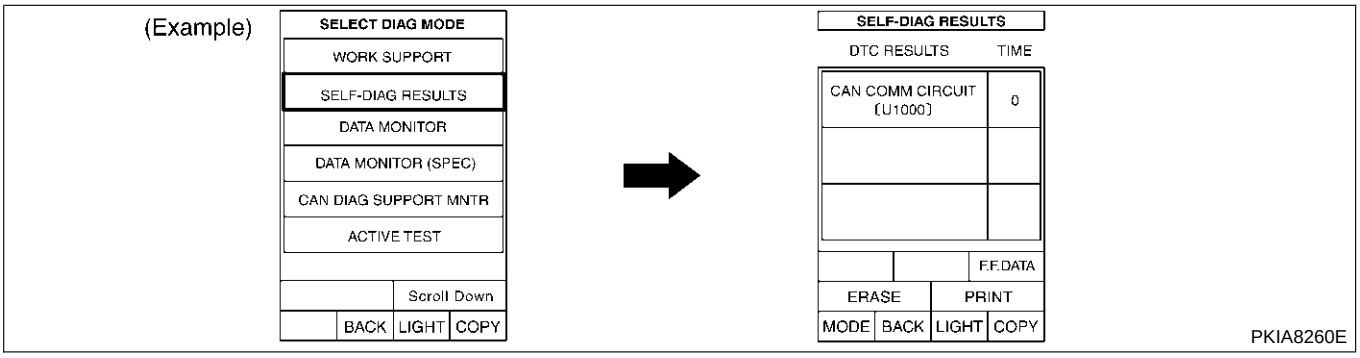

2. Print all the data of “CAN DIAG SUPPORT MNTR” for “ENGINE”, “VDC” and “A/T” displayed on CONSULT-II.

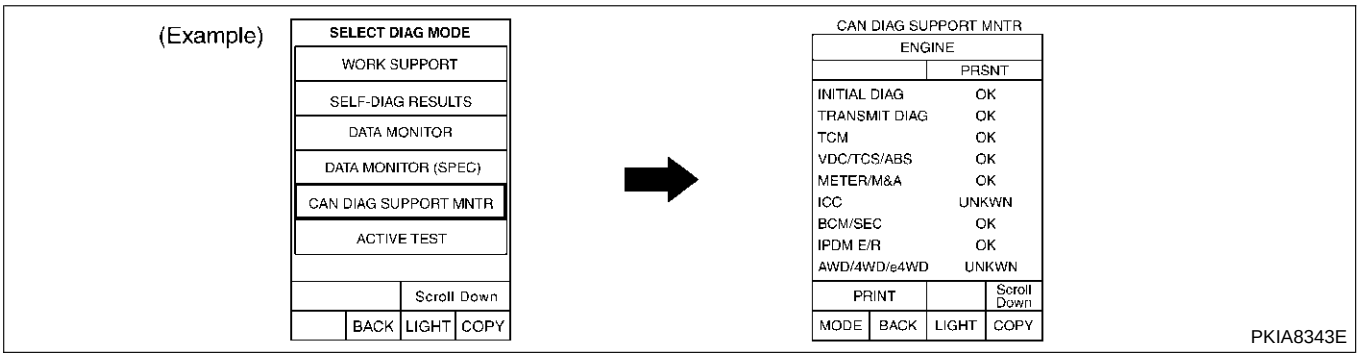

3. Attach the printed sheet of “SELF-DIAG RESULTS” and “CAN DIAG SUPPORT MNTR” onto the check sheet. Refer to “CHECK SHEET” (EL-466).
4. Based on the “CAN DIAG SUPPORT MNTR” results, put “v” marks onto the items with “UNKWN” or “NG” in the check sheet table. Refer to “CHECK SHEET” (EL-466).

NOTE:
If “NG” is displayed on “INITIAL DIAG (Initial diagnosis)” as “CAN DIAG SUPPORT MNTR” for the diagnosed control unit, replace the control unit.

5. According to the check sheet results (example), start inspection. Refer to “CHECK SHEET RESULTS (EXAMPLE)” (EL-467).

CHECK SHEET

=NHEL0331S02

NOTE:

If "NG" is displayed on "INITIAL DIAG (Initial diagnosis)" as "CAN DIAG SUPPORT MNTR" for the diagnosed control unit, replace the control unit.

Check sheet table

SELECT SYSTEM screen	CAN DIAG SUPPORT MNTR					
	Initial diagnosis	Transmit diagnosis	Receive diagnosis			
			ECM	VDC/TCS/ ABS	STRG	TCM
ENGINE	NG	UNKWN	–	UNKWN	–	UNKWN
VDC	NG	UNKWN	UNKWN	–	UNKWN	UNKWN
A/T	NG	UNKWN	UNKWN	UNKWN	–	–

Symptoms :

Attach copy of
ENGINE
SELF-DIAG RESULTS

Attach copy of
VDC
SELF-DIAG RESULTS

Attach copy of
A/T
SELF-DIAG RESULTS

Attach copy of
ENGINE
CAN DIAG SUPPORT MNTR

Attach copy of
VDC
CAN DIAG SUPPORT MNTR

Attach copy of
A/T
CAN DIAG SUPPORT MNTR

PKIA8324E

CHECK SHEET RESULTS (EXAMPLE)

=NHEL0331S03

NOTE:

If "NG" is displayed on "INITIAL DIAG (Initial diagnosis)" as "CAN DIAG SUPPORT MNTR" for the diagnosed control unit, replace the control unit.

Case 1

NHEL0331S0301

Check harness between VDC/TCS/ABS control unit and steering angle sensor. Refer to "CIRCUIT CHECK BETWEEN VDC/TCS/ABS CONTROL UNIT AND STEERING ANGLE SENSOR" (EL-469).

SELECT SYSTEM screen	CAN DIAG SUPPORT MNTR					
	Initial diagnosis	Transmit diagnosis	Receive diagnosis			
			ECM	VDC/TCS/ABS	STRG	TCM
ENGINE	NG	UNKWN	–	UNKWN	–	UNKWN ✓
VDC	NG	UNKWN	UNKWN	–	UNKWN ✓	UNKWN ✓
A/T	NG	UNKWN	UNKWN ✓	UNKWN ✓	–	–

PKIA8329E

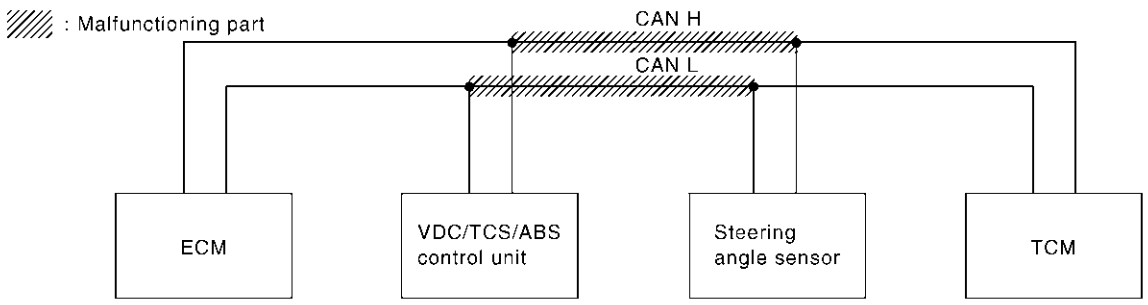

PKIA8338E

Case 2

NHEL0331S0302

Check ECM circuit. Refer to "ECM CIRCUIT CHECK" (EL-470).

SELECT SYSTEM screen	CAN DIAG SUPPORT MNTR					
	Initial diagnosis	Transmit diagnosis	Receive diagnosis			
			ECM	VDC/TCS/ABS	STRG	TCM
ENGINE	NG	UNKWN ✓	–	UNKWN ✓	–	UNKWN ✓
VDC	NG	UNKWN	UNKWN ✓	–	UNKWN	UNKWN
A/T	NG	UNKWN	UNKWN ✓	UNKWN	–	–

PKIA8330E

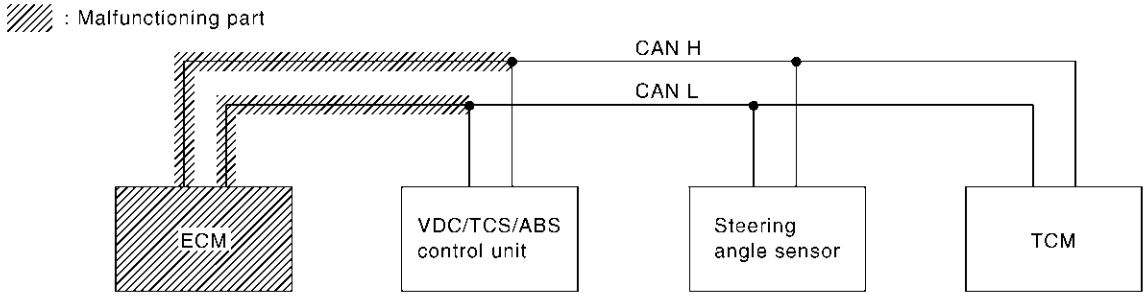

PKIA8339E

Case 3

NHEL0331S0303

Check TCM circuit. Refer to "TCM CIRCUIT CHECK" (EL-471).

SELECT SYSTEM screen	CAN DIAG SUPPORT MNTR					
	Initial diagnosis	Transmit diagnosis	Receive diagnosis			
			ECM	VDC/TCS/ ABS	STRG	TCM
ENGINE	NG	UNKWN	–	UNKWN	–	UNKWN
VDC	NG	UNKWN	UNKWN	–	UNKWN	UNKWN
A/T	NG	UNKWN	UNKWN	UNKWN	–	–

PKIA8331E

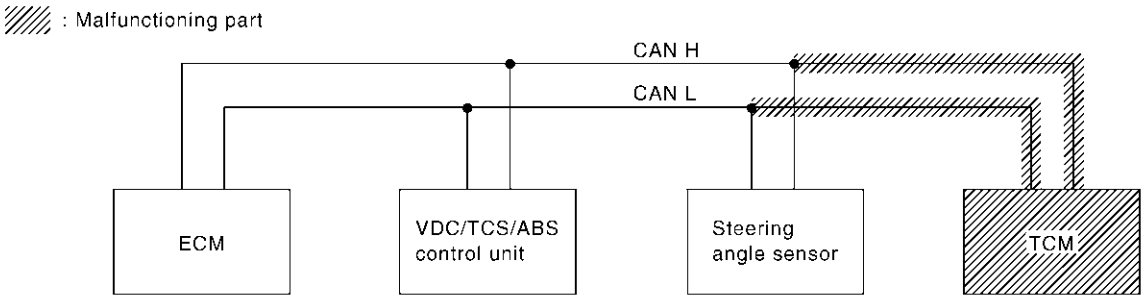

PKIA8340E

Case 4

NHEL0331S0304

Check steering angle sensor circuit. Refer to "STEERING ANGLE SENSOR CIRCUIT CHECK" (EL-472).

SELECT SYSTEM screen	CAN DIAG SUPPORT MNTR					
	Initial diagnosis	Transmit diagnosis	Receive diagnosis			
			ECM	VDC/TCS/ ABS	STRG	TCM
ENGINE	NG	UNKWN	–	UNKWN	–	UNKWN
VDC	NG	UNKWN	UNKWN	–	UNKWN	UNKWN
A/T	NG	UNKWN	UNKWN	UNKWN	–	–

PKIA8332E

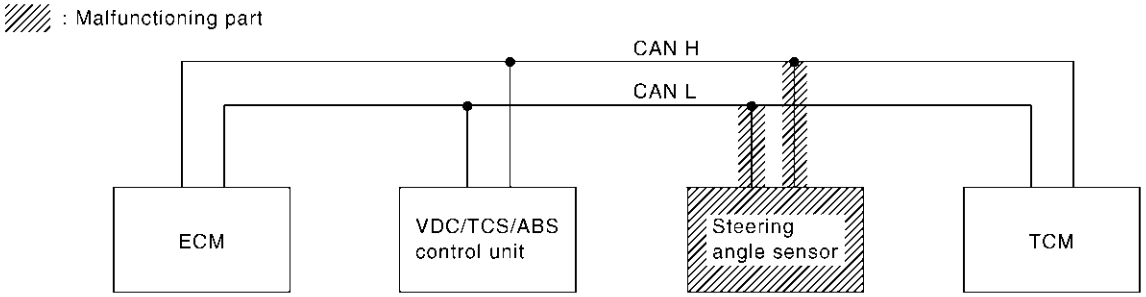

PKIA8341E

Case 5

=NHEL0331S0305

Check VDC/TCS/ABS control unit circuit. Refer to "VDC/TCS/ABS CONTROL UNIT CIRCUIT CHECK" (EL-472).

SELECT SYSTEM screen	CAN DIAG SUPPORT MNTR					
	Initial diagnosis	Transmit diagnosis	Receive diagnosis			
			ECM	VDC/TCS/ABS	STRG	TCM
ENGINE	NG	UNKWN	–	UNKWN	–	UNKWN
VDC	NG	UNKWN	UNKWN	–	UNKWN	UNKWN
A/T	NG	UNKWN	UNKWN	UNKWN	–	–

PKIA8333E

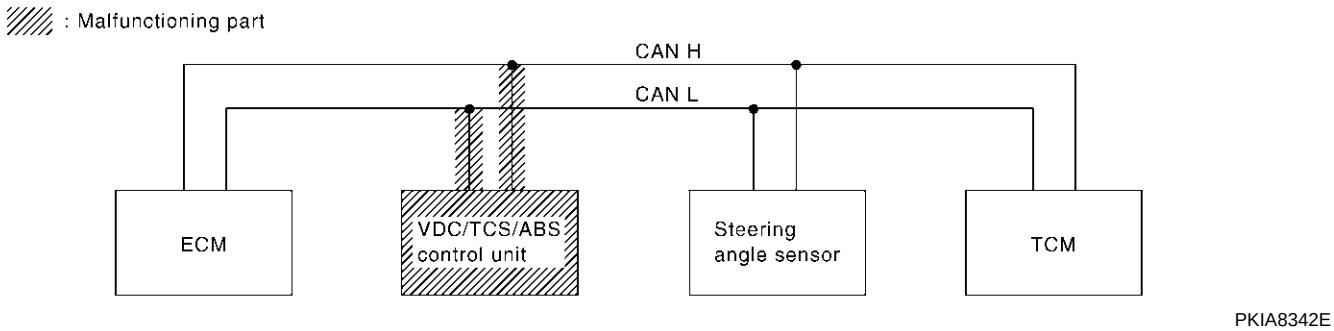

PKIA8342E

Case 6

NHEL0331S0306

Check CAN communication circuit. Refer to "CAN COMMUNICATION CIRCUIT CHECK" (EL-473).

SELECT SYSTEM screen	CAN DIAG SUPPORT MNTR					
	Initial diagnosis	Transmit diagnosis	Receive diagnosis			
			ECM	VDC/TCS/ABS	STRG	TCM
ENGINE	NG	UNKWN	–	UNKWN	–	UNKWN
VDC	NG	UNKWN	UNKWN	–	UNKWN	UNKWN
A/T	NG	UNKWN	UNKWN	UNKWN	–	–

PKIA8334E

CIRCUIT CHECK BETWEEN VDC/TCS/ABS CONTROL UNIT AND STEERING ANGLE SENSOR

NHEL0331S09

1	CHECK CONNECTOR
1. Turn ignition switch OFF. 2. Check following terminals and connector for damage, bend and loose connection. (control unit-side, sensor-side and harness-side) ● VDC/TCS/ABS control unit ● Steering angle sensor ● Between VDC/TCS/ABS control unit and steering angle sensor	
OK or NG	
OK ▶	GO TO 2.
NG ▶	Repair terminal or connector.

2	CHECK HARNESS FOR OPEN CIRCUIT

1. Disconnect VDC/TCS/ABS control unit connector and harness connector B58.
2. Check continuity between VDC/TCS/ABS control unit harness connector B57 terminals 61 (L), 63 (R) and harness connector B58 terminals 9 (L), 20 (R).

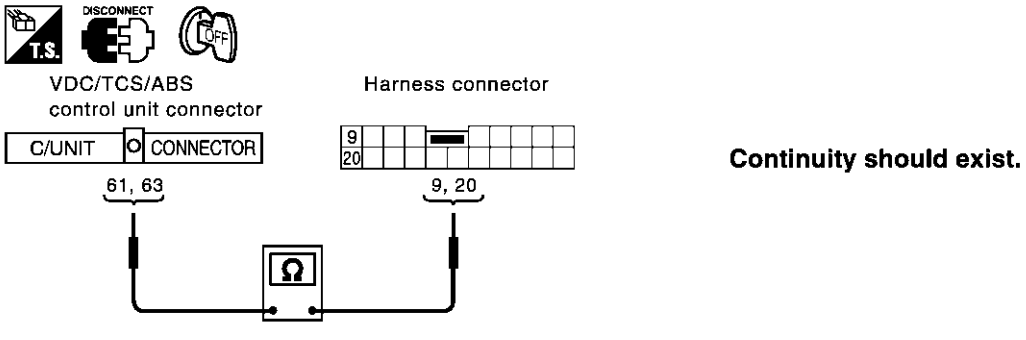

OK or NG

OK	▶	GO TO 3.
NG	▶	Repair harness.

3	CHECK HARNESS FOR OPEN CIRCUIT

1. Disconnect steering angle sensor connector M218.
2. Check continuity between harness connector M227 terminals 9 (L), 20 (R) and steering angle sensor harness connector M218 terminals 4 (L), 5 (R).

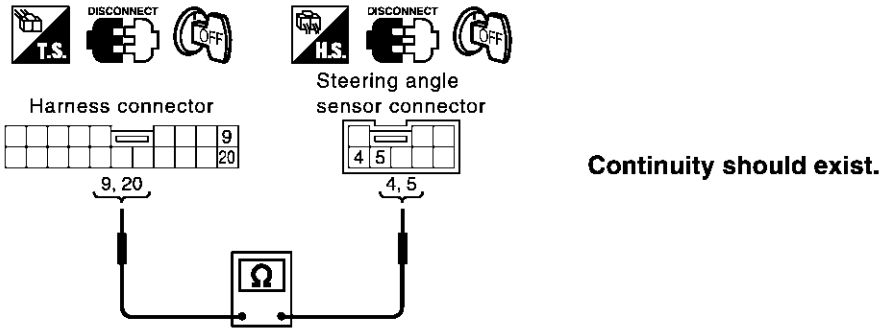

OK or NG

OK	▶	Connect all the connectors and diagnose again. Refer to "Work Flow" (EL-465).
NG	▶	Repair harness.

ECM CIRCUIT CHECK

NHEL0331S05

1	CHECK CONNECTOR

1. Turn ignition switch OFF.
2. Check following terminals and connector for damage, bend and loose connection. (control module-side and harness-side)

- ECM
- Harness connector F53
- Harness connector M223
- Harness connector M2
- Harness connector B2

OK or NG

OK	▶	GO TO 2.
NG	▶	Repair terminal or connector.

2	CHECK HARNESS FOR OPEN CIRCUIT

1. Disconnect ECM connector.
2. Check resistance between ECM harness connector F48 terminals 109 (L) and 113 (R).

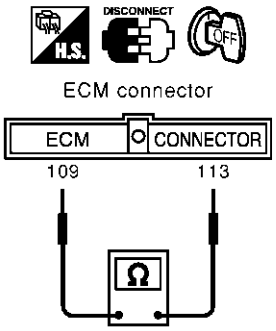

Approx. 108 - 132 Ω

SEL437Y

OK or NG

OK	▶	Replace ECM.
NG	▶	Repair harness between VDC/TCS/ABS control unit and ECM.

TCM CIRCUIT CHECK

NHEL0331S10

1	CHECK CONNECTOR

1. Turn ignition switch OFF.
2. Check following terminals and connector for damage, bend and loose connection. (control module-side and harness-side)

- TCM
- Harness connector F53
- Harness connector M223

OK or NG

OK	▶	GO TO 2.
NG	▶	Repair terminal or connector.

2	CHECK HARNESS FOR OPEN CIRCUIT

1. Disconnect TCM connector.
2. Check resistance between TCM harness connector F51 terminals 5 (L) and 6 (R).

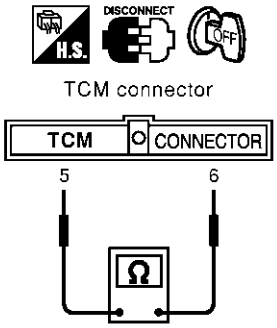

Approx. 108 - 132 Ω

SEL439Y

OK or NG

OK	▶	Replace TCM.
NG	▶	Repair harness between steering angle sensor and TCM.

STEERING ANGLE SENSOR CIRCUIT CHECK

NHEL0331S11

1	CHECK CONNECTOR	
1. Turn ignition switch OFF. 2. Check the terminals and connector of steering angle sensor for damage, bend and loose connection. (sensor-side and harness-side)		
OK or NG		
OK	▶	GO TO 2.
NG	▶	Repair terminal or connector.

2	CHECK HARNESS FOR OPEN CIRCUIT	
1. Disconnect steering angle sensor connector. 2. Check resistance between steering angle sensor harness connector M218 terminals 4 (L) and 5 (R).		
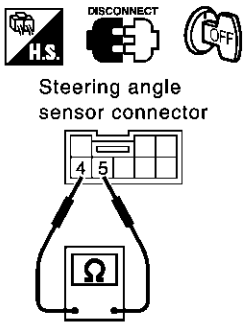 **Approx. 54 - 66Ω** SEL565YA		
OK or NG		
OK	▶	Replace steering angle sensor.
NG	▶	Repair harness between steering angle sensor and harness connector M227.

VDC/TCS/ABS CONTROL UNIT CIRCUIT CHECK

NHEL0331S06

1	CHECK CONNECTOR	
1. Turn ignition switch OFF. 2. Check the terminals and connector of VDC/TCS/ABS control unit for damage, bend and loose connection. (control unit-side and harness-side)		
OK or NG		
OK	▶	GO TO 2.
NG	▶	Repair terminal or connector.

2	CHECK HARNESS FOR OPEN CIRCUIT

1. Disconnect VDC/TCS/ABS control unit connector.
2. Check resistance between VDC/TCS/ABS control unit harness connector B57 terminals 61 (L) and 63 (R).

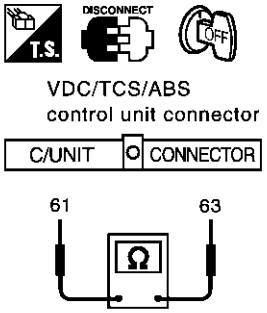

Approx. 54 - 66Ω

SEL566Y

OK or NG

OK	▶	Replace VDC/TCS/ABS control unit.
NG	▶	Repair harness between VDC/TCS/ABS control unit and harness connector B58.

CAN COMMUNICATION CIRCUIT CHECK

NHEL0331S08

1	CHECK CONNECTOR

1. Turn ignition switch OFF.
2. Check following terminals and connector for damage, bend and loose connection. (control module-side, control unit-side, sensor-side and harness-side)

- TCM
- ECM
- VDC/TCS/ABS control unit
- Steering angle sensor
- Between ECM and TCM

OK or NG

OK	▶	GO TO 2.
NG	▶	Repair terminal or connector.

2	CHECK HARNESS FOR SHORT CIRCUIT

1. Disconnect ECM connector and harness connector F53.
2. Check continuity between ECM harness connector F48 terminals 109 (L) and 113 (R).

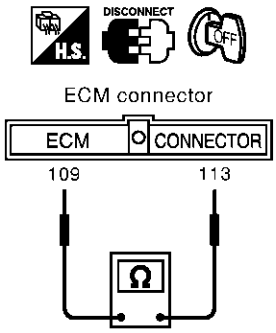

Continuity should not exist.

SEL431Y

OK or NG

OK	▶	GO TO 3.
NG	▶	Repair harness between ECM and harness connector F53.

3	CHECK HARNESS FOR SHORT CIRCUIT

Check continuity between ECM harness connector F48 terminals 109 (L), 113 (R) and ground.

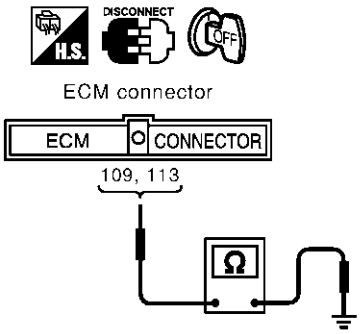

Continuity should not exist.

SEL432Y

OK or NG

OK	▶	GO TO 4.
NG	▶	Repair harness between ECM and harness connector F53.

4	CHECK HARNESS FOR SHORT CIRCUIT

1. Disconnect harness connector M2.
2. Check continuity between harness connector M2 terminals 22 (L) and 23 (R).

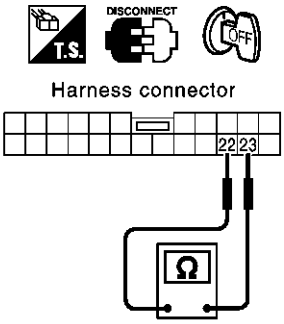

Continuity should not exist.

SEL567Y

OK or NG

OK	▶	GO TO 5.
NG	▶	Repair harness between harness connector M223 and harness connector M2.

5	CHECK HARNESS FOR SHORT CIRCUIT

Check continuity between harness connector M2 terminals 22 (L), 23 (R) and ground.

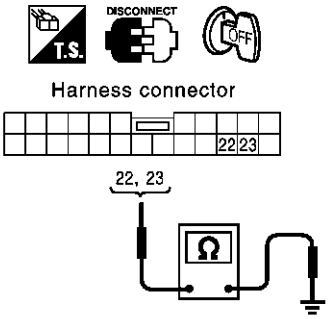

Continuity should not exist.

SEL568Y

OK or NG

OK	▶	GO TO 6.
NG	▶	Repair harness between harness connector M223 and harness connector M2.

6	CHECK HARNESS FOR SHORT CIRCUIT

1. Disconnect VDC/TCS/ABS control unit connector and harness connector B58.
2. Check continuity between VDC/TCS/ABS control unit harness connector B57 terminals 61 (L) and 63 (R).

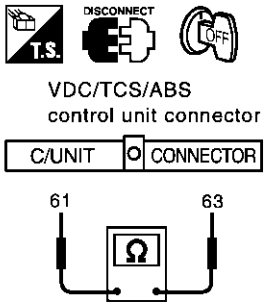

Continuity should not exist.

SEL569Y

OK or NG

OK	▶	GO TO 7.
NG	▶	● Repair harness between VDC/TCS/ABS control unit and harness connector B58. ● Repair harness between harness connector B2 and harness connector B58.

7	CHECK HARNESS FOR SHORT CIRCUIT

Check continuity between VDC/TCS/ABS control unit harness connector B57 terminals 61 (L), 63 (R) and ground.

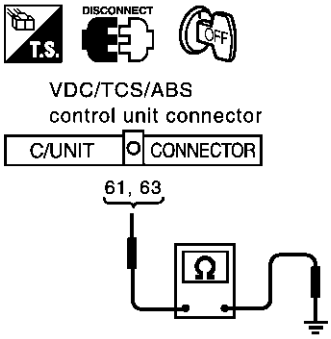

Continuity should not exist.

SEL570Y

OK or NG

OK	▶	GO TO 8.
NG	▶	● Repair harness between VDC/TCS/ABS control unit and harness connector B58. ● Repair harness between harness connector B2 and harness connector B58.

8	CHECK HARNESS FOR SHORT CIRCUIT

1. Disconnect steering angle sensor connector.
2. Check continuity between steering angle sensor harness connector M218 terminals 4 (L) and 5 (R).

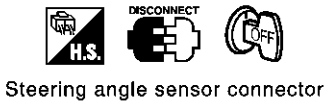

Steering angle sensor connector

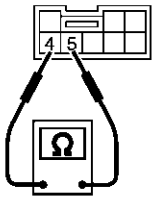

Continuity should not exist.

SEL571YA

OK or NG

OK	▶	GO TO 9.
NG	▶	● Repair harness between steering angle sensor and harness connector M227. ● Repair harness between harness connector M227 and harness connector M223.

9	CHECK HARNESS FOR SHORT CIRCUIT

Check continuity between steering angle sensor harness connector M218 terminals 4 (L), 5 (R) and ground.

Steering angle sensor connector

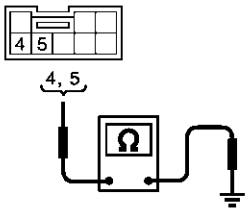

Continuity should not exist.

SEL572YA

OK or NG

OK	▶	GO TO 10.
NG	▶	● Repair harness between steering angle sensor and harness connector M227. ● Repair harness between harness connector M227 and harness connector M223.

10	CHECK HARNESS FOR SHORT CIRCUIT

1. Disconnect TCM connector.
2. Check continuity between TCM harness connector F51 terminals 5 (L) and 6 (R).

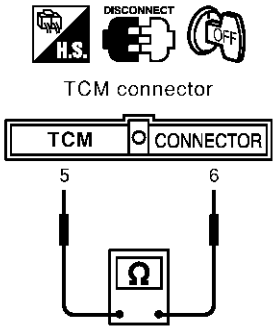

Continuity should not exist.

SEL440Y

OK or NG

OK	▶	GO TO 11.
NG	▶	Repair harness between TCM and harness connector F53.

11	CHECK HARNESS FOR SHORT CIRCUIT

Check continuity between TCM harness connector F51 terminals 5 (L), 6 (R) and ground.

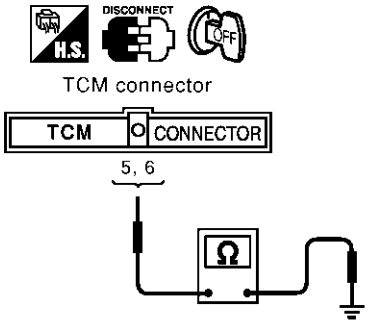

Continuity should not exist.

SEL441Y

OK or NG

OK	▶	GO TO 12.
NG	▶	Repair harness between TCM and harness connector F53.

12	ECM/TCM INTERNAL CIRCUIT INSPECTION

Check components inspection. Refer to "ECM/TCM INTERNAL CIRCUIT INSPECTION" (EL-477).

OK or NG

OK	▶	Connect all the connectors and diagnose again. Refer to "Work Flow" (EL-465).
NG	▶	Replace ECM and/or TCM.

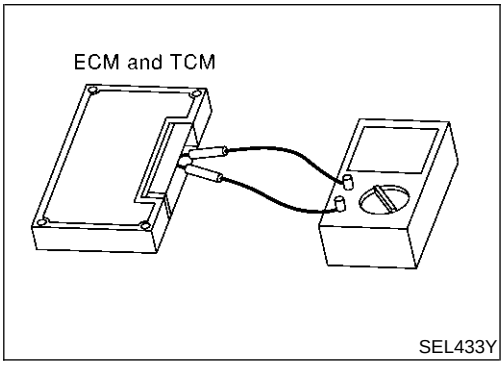

SEL433Y

Component Inspection

NHEL0332

ECM/TCM INTERNAL CIRCUIT INSPECTION

NHEL0332S01

- Remove ECM and TCM from vehicle.
- Check resistance between ECM terminals 109 and 113.
- Check resistance between TCM terminals 5 and 6.

Unit	Terminal	Resistance value (Ω)
ECM	109 - 113	Approx. 108 - 132
TCM	5 - 6	

Engine Compartment

NHEL0129

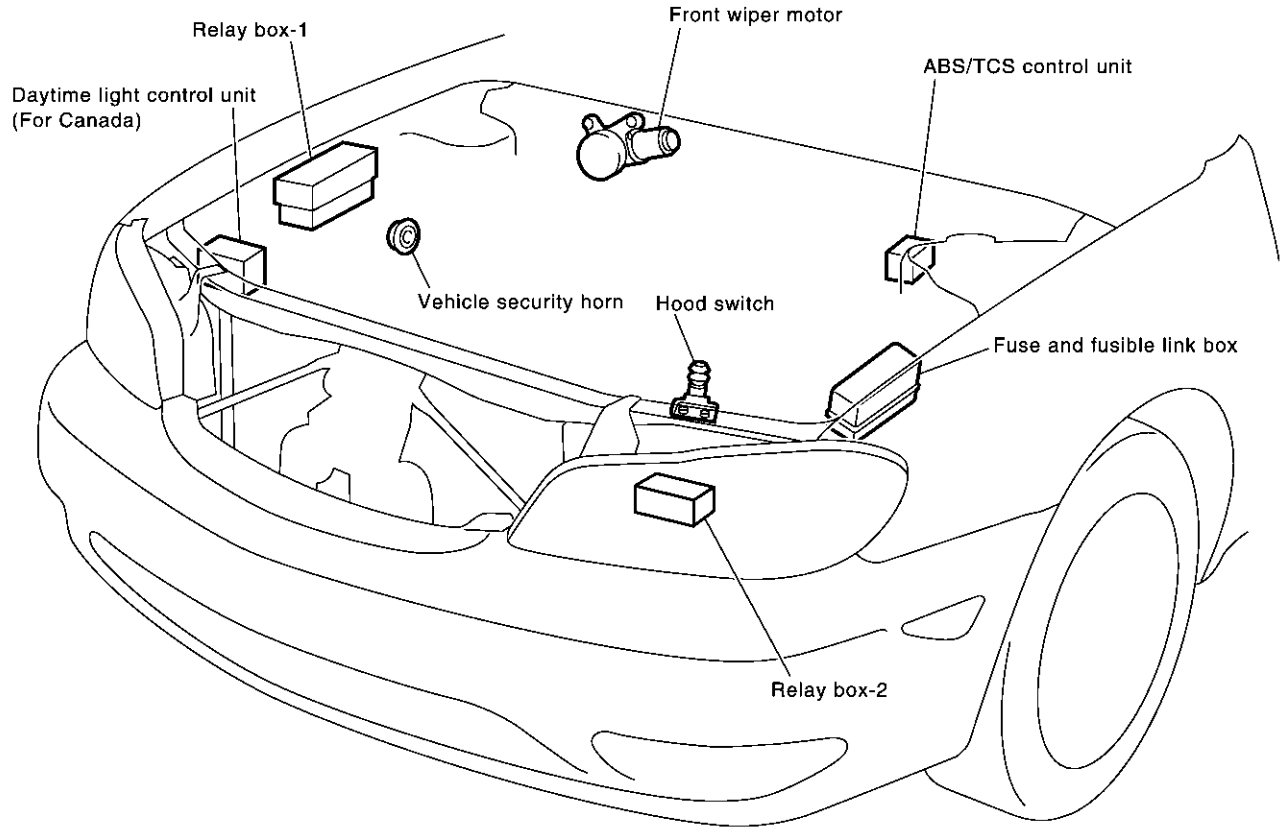

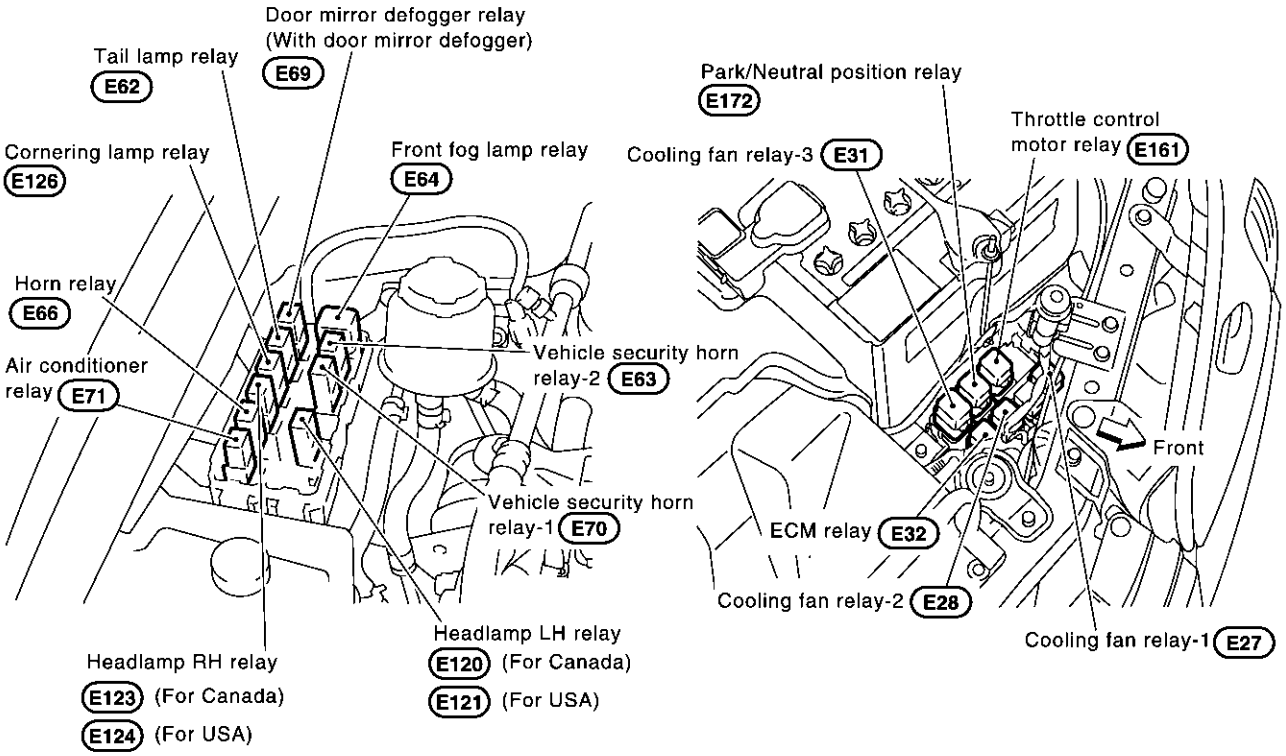

MEL873Q

NOTE:

Passenger Compartment

NHEL0130

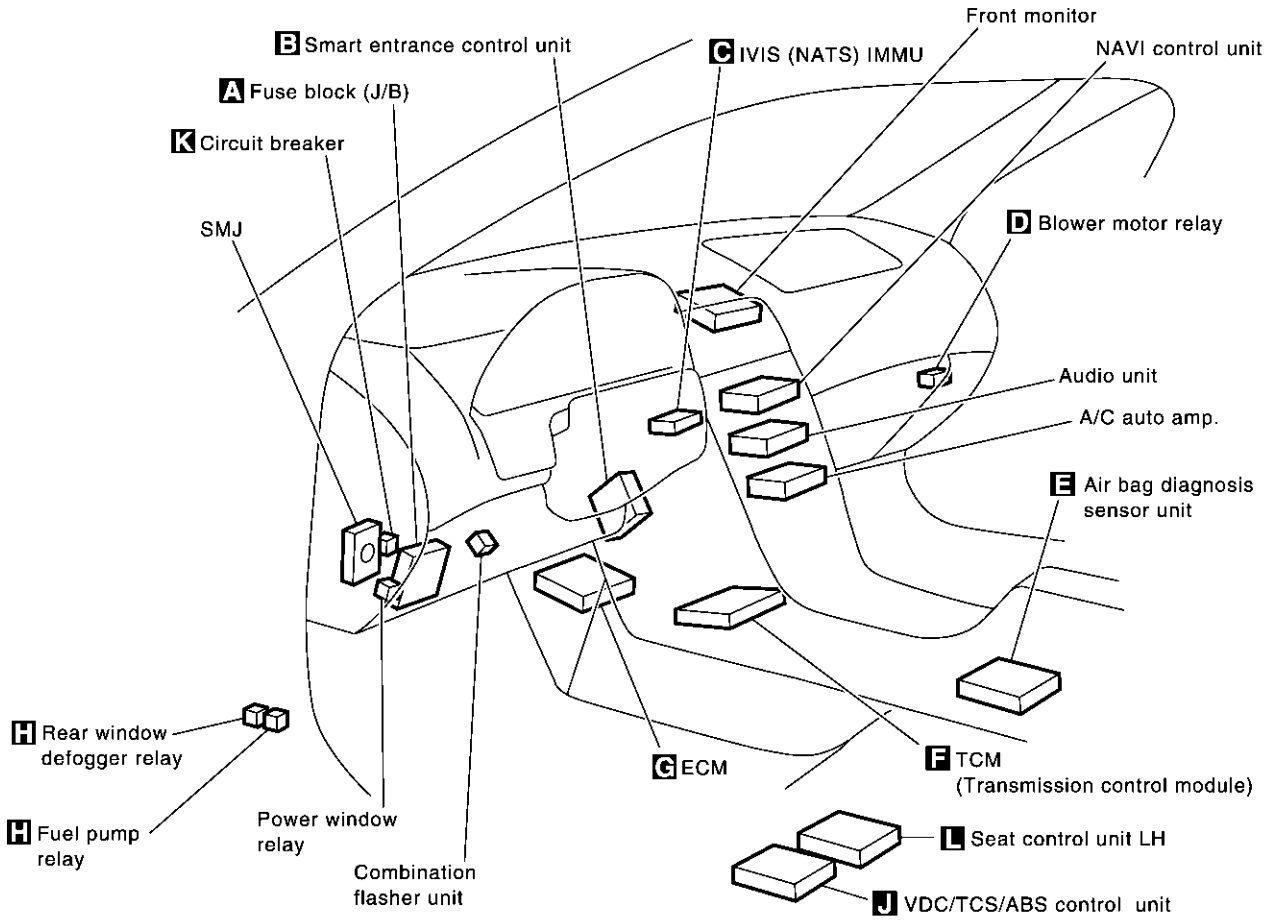

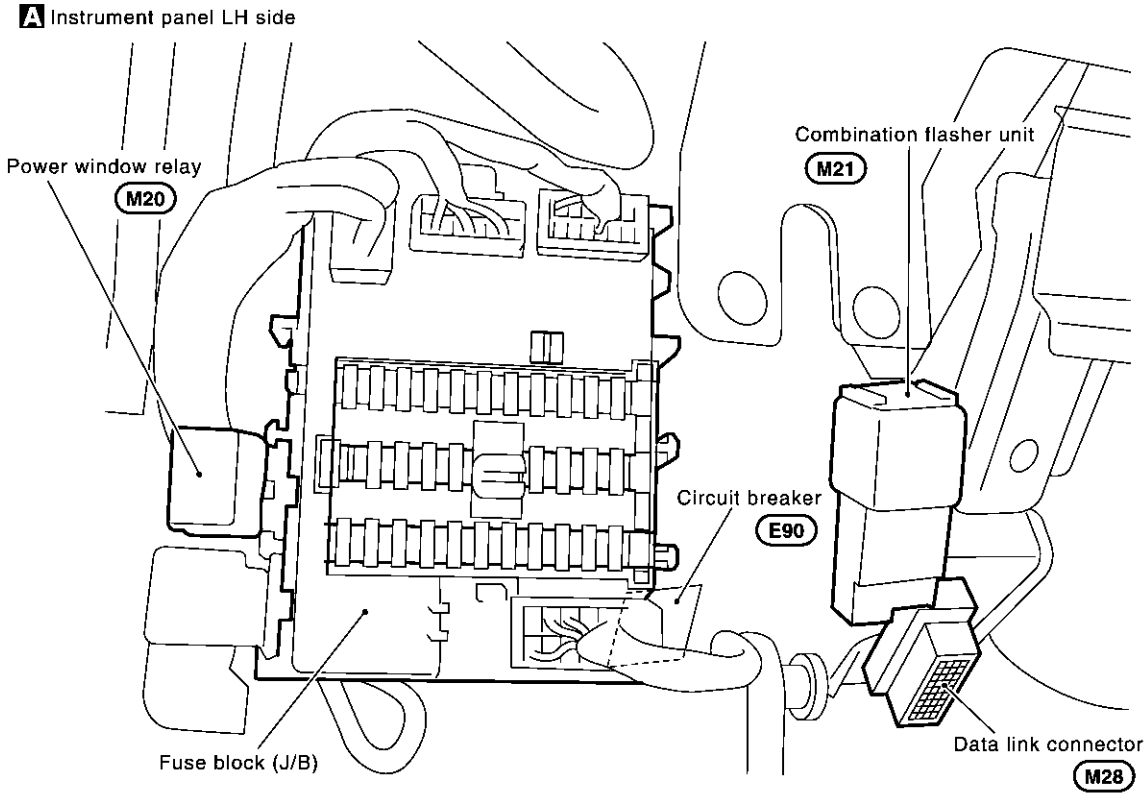

MEL246O

B Driver side view with lower instrument panel removed

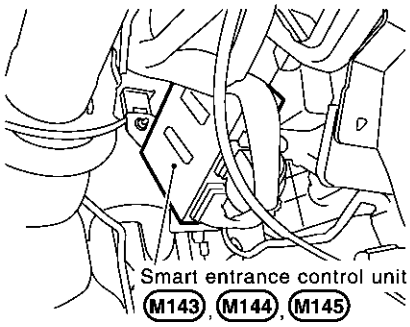

C View with steering wheel and steering column removed

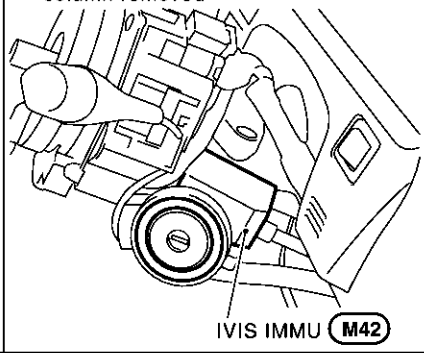

D Passenger side view with dash side lower finisher removed

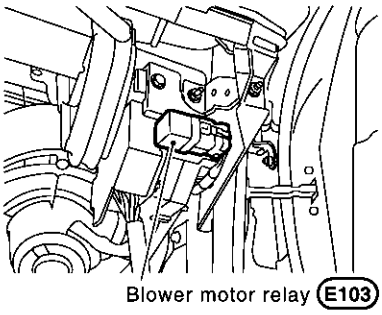

E View with console box assembly removed

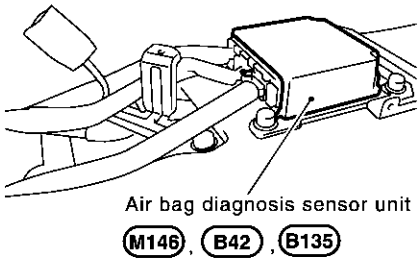

F View with lower instrument center panel removed

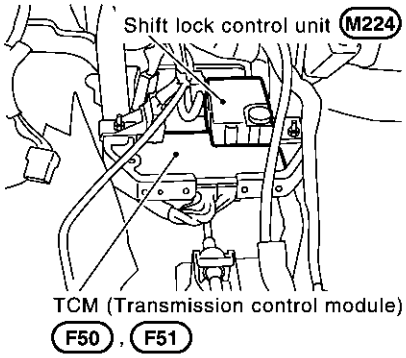

G Passenger side view with lower instrument panel removed

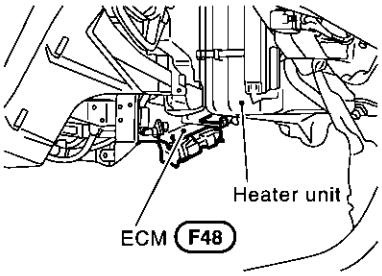

H Driver side view with dash side lower finisher removed

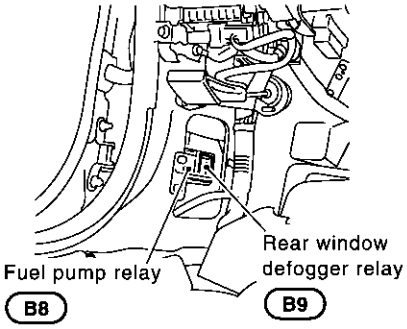

J View with driver seat removed

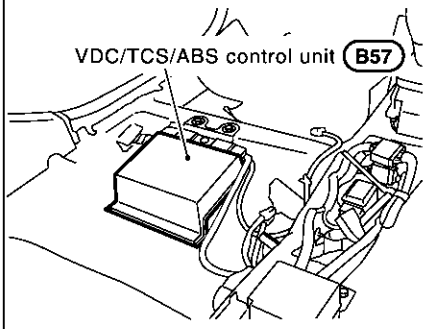

K Driver side view with lower instrument panel removed

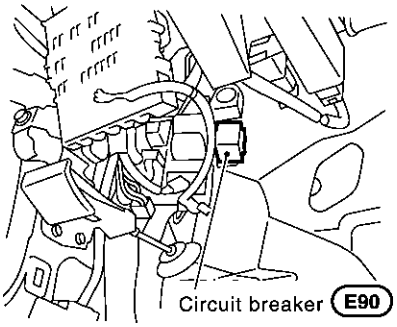

L Under driver seat

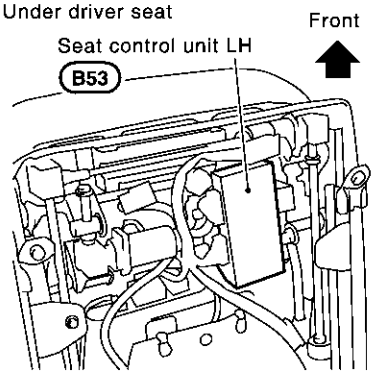

MEL247O

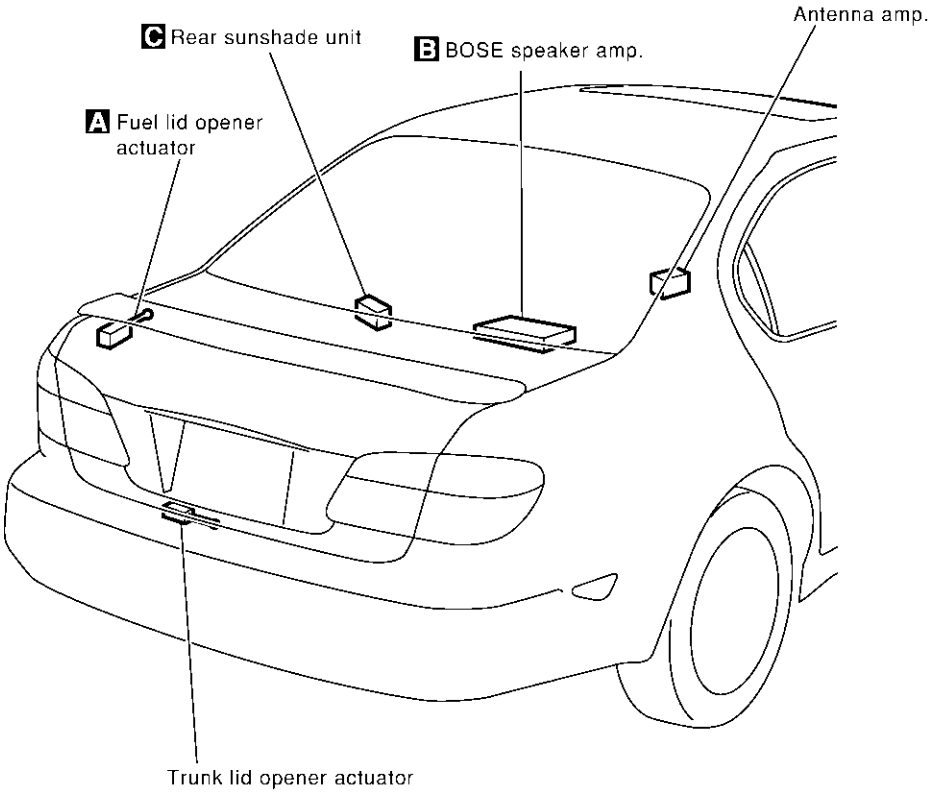
C Rear sunshade unit
B BOSE speaker amp.
Antenna amp.
A Fuel lid opener actuator
Trunk lid opener actuator

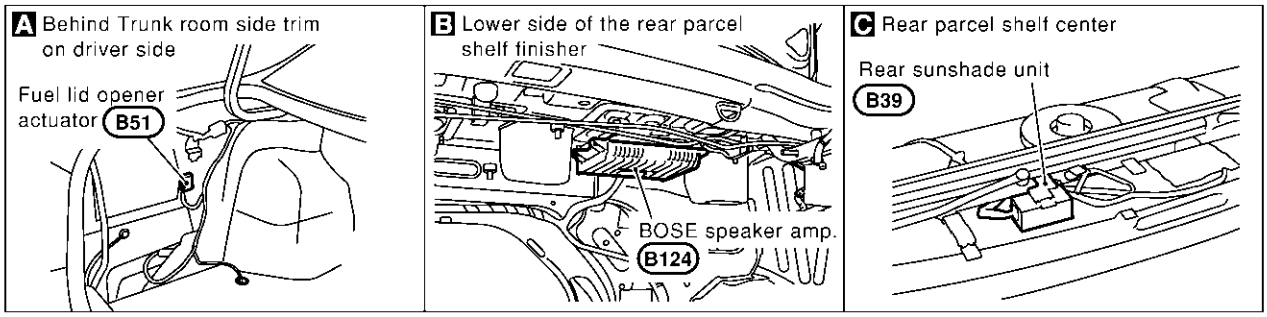
A Behind Trunk room side trim on driver side
Fuel lid opener actuator
B51
B Lower side of the rear parcel shelf finisher
BOSE speaker amp.
B124
C Rear parcel shelf center
Rear sunshade unit
B39

MEL248O

How to Read Harness Layout

NHEL0131

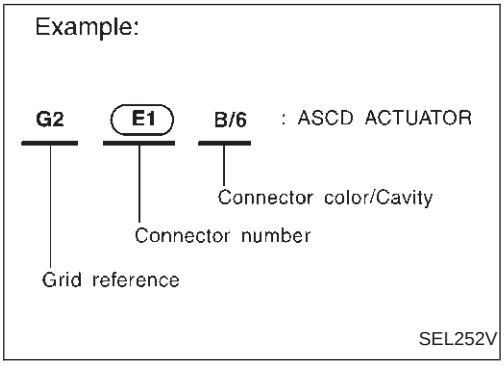

The following Harness Layouts use a map style grid to help locate connectors on the drawings:

- Main Harness
- Engine Room Harness (Engine Compartment)
- Engine Control Harness
- Body Harness (Passenger Compartment)

TO USE THE GRID REFERENCE

NHEL0131S01

1. Find the desired connector number on the connector list.
2. Find the grid reference.
3. On the drawing, find the crossing of the grid reference letter column and number row.
4. Find the connector number in the crossing zone.
5. Follow the line (if used) to the connector.

CONNECTOR SYMBOL

NHEL0131S02

Main symbols of connector (in Harness Layout) are indicated in the below.

Connector type	Water proof type		Standard type	
	Male	Female	Male	Female
• Cavity: Less than 4 • Relay connector				
• Cavity: From 5 to 8				
• Cavity: More than 9				
• Ground terminal etc.	—			

Outline

NHEL0132

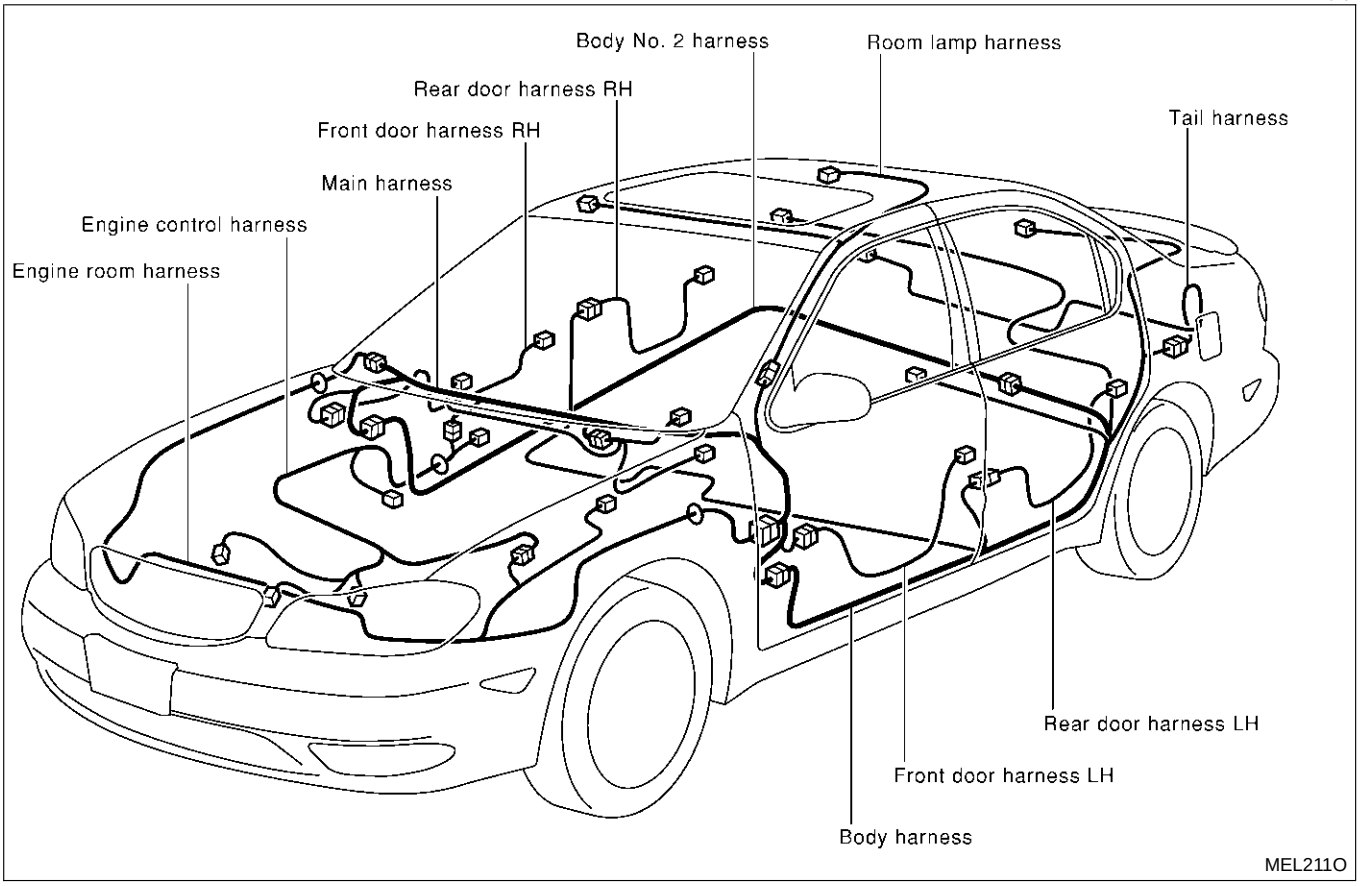

NOTE:
For detailed ground distribution information, refer to “Ground Distribution”, “GROUND”, EL-20.

NOTE:

Main Harness

NHEL0133

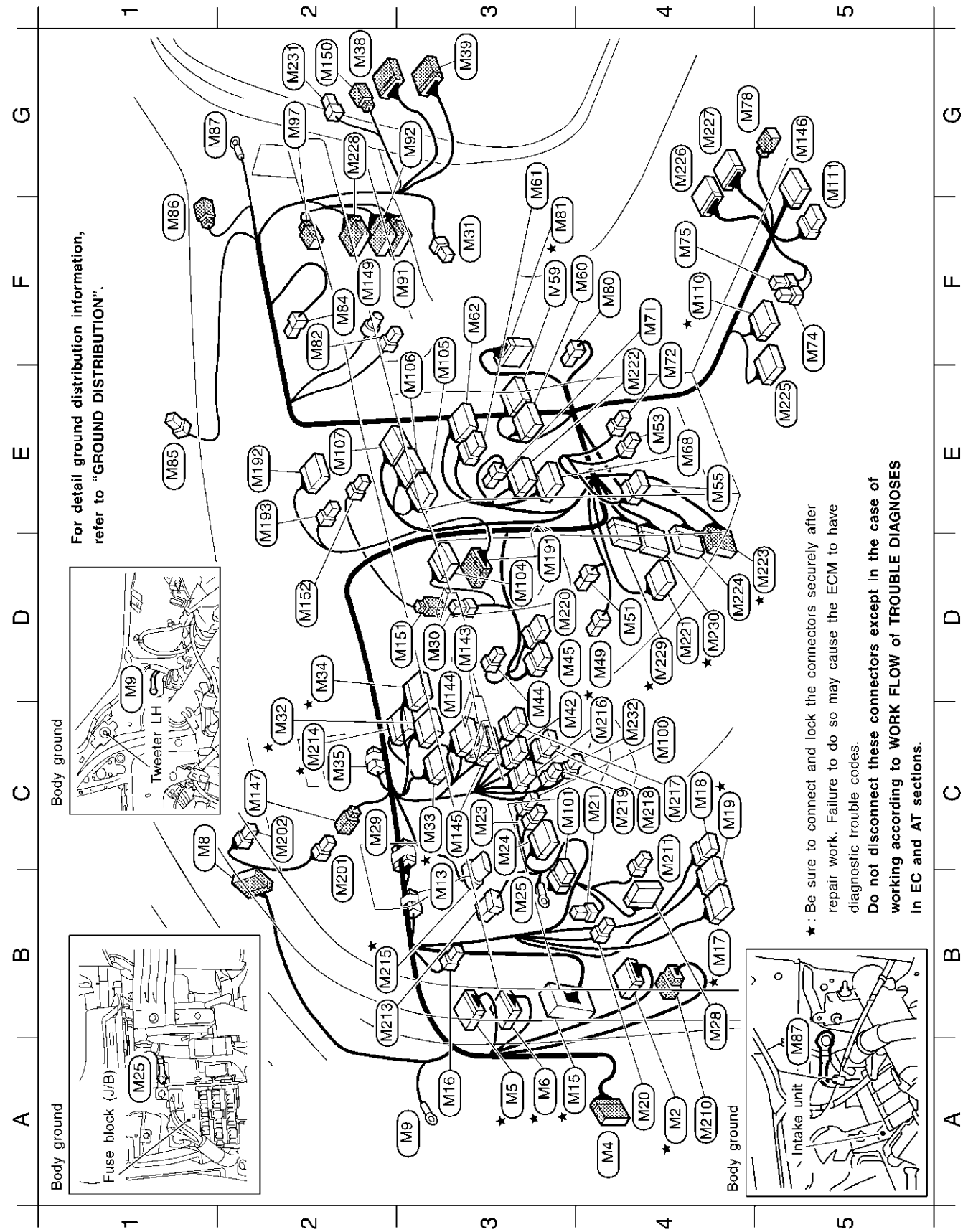

MEL862Q

Main harness

A4 ★	M2	BR/24	:	To B2
A4	M4	SMJ	:	To D1
A3 ★	M5	W/16	:	To B1
A3 ★	M6	W/18	:	To B3
C1	M8	W/12	:	To R2
A3	M9	–	:	Body ground
B3	M13	L/4	:	Diode (With TCS for Canada and VDC)
A3 ★	M15	SMJ	:	To E81
A3	M16	W/4	:	Telephone
B4 ★	M17	W/12	:	Fuse block (J/B)
C4	M18	W/6	:	Fuse block (J/B)
C4 ★	M19	W/16	:	Fuse block (J/B)
A4	M20	L/4	:	Power window relay
C4	M21	B/3	:	Combination flasher unit
C3	M23	W/3	:	Illumination control switch
C3	M24	W/10	:	Door mirror remote control switch
B3	M25	–	:	Body ground
B4	M28	W/16	:	Data link connector
C2	M29	GY/3	:	Joint connector-3 (Diode)
D3	M30	W/4	:	To M151
F3	M31	W/4	:	Fan control amp.
C2 ★	M32	BR/20	:	Combination meter
C3 ★	M33	W/24	:	Combination meter (With TCS)
D2 ★	M34	BR/24	:	Combination meter
C2	M35	B/2	:	Diode
G2	M38	W/16	:	To D62
G3	M39	W/10	:	To D63
C3	M42	W/8	:	IVIS IMMU
C3	M44	W/2	:	In-vehicle sensor
D3	M45	L/6	:	TCS on/off switch (With TCS)
D4	M49	W/3	:	Mode door motor
D4	M51	W/3	:	Air mix door motor
E4	M53	B/2	:	Cigarette lighter
E4	M55	W/8	:	Hazard switch
F3	M59	GY/20	:	A/C auto amp.
F4	M60	GY/16	:	A/C auto amp.
G3	M61	W/6	:	Audio unit
F3	M62	W/10	:	Audio unit
E4	M68	W/16	:	Audio unit
F4	M71	W/2	:	Antenna amp.
F4	M72	W/2	:	Ashtray illumination
F5	M74	L/4	:	Front heated seat switch LH
F4	M75	W/4	:	Front heated seat switch RH
G4	M78	B/2	:	Power socket
F4	M80	W/3	:	Intake sensor

M13 : Diode

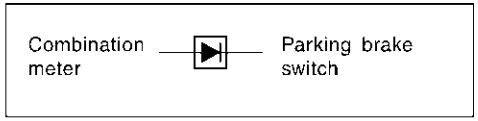

M29 : Joint connector-3 (Diode)

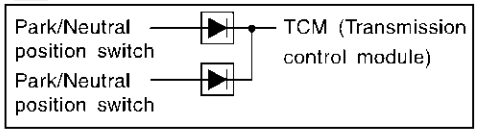

M35 : Diode

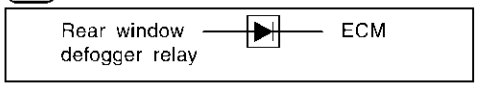

★ : Be sure to connect and lock the connectors securely after repair work. Failure to do so may cause the ECM to have diagnostic trouble codes. **Do not disconnect these connectors except in the case of working according to WORK FLOW of TROUBLE DIAGNOSES in EC and AT sections.**

Main harness

F3 ★	M81	W/20	:	To F49
F2	M82	W/2	:	Glove box lamp
F2	M84	W/3	:	Intake door motor
E1	M85	B/2	:	Sunload sensor
F1	M86	BR/2	:	Tweeter RH
G1	M87	–	:	Body ground
F3	M91	W/12	:	To B103
G3	M92	W/10	:	To B104
G2	M97	G/2	:	To E105
C4	M100	W/4	:	Security indicator
C3	M101	GY/6	:	Memory seat cancel switch
D3	M104	BR/24	:	To M191 (With navigation system)
F3	M105	W/16	:	Navi control unit (With navigation system)
E3	M106	W/20	:	Navi control unit (With navigation system)
E2	M107	GY/12	:	Navi control unit (With navigation system)
F4 ★	M110	W/16	:	To B43
G5	M111	L/6	:	Rear sunshade switch (With rear sunshade)
D3	M143	W/24	:	Smart entrance control unit
D3	M144	GY/24	:	Smart entrance control unit
C3	M145	GY/16	:	Smart entrance control unit
G5	M146	Y/28	:	Air bag diagnosis sensor unit
C2	M147	W/3	:	To M201
F2	M149	Y/4	:	Passenger air bag module
G2	M150	Y/4	:	To E147
A4	M210	W/8	:	To E152 (With VDC)
C4	M211	W/2	:	Not used
B2	M213	W/8	:	Heated steering switch (With heated steering)
C2 ★	M214	W/24	:	Combination meter (With VDC)
B2 ★	M215	GY/6	:	Acceletor pedal position sensor
C4 ★	M216	GY/8	:	Combination switch (Steering switch and horn switch)
C4	M217	Y/6	:	Combination switch (Air bag)
C4	M218	W/8	:	Steering angle sensor (With VDC)
C4	M219	W/2	:	Combination switch (Heated steering switch) (With heated steering)
D3	M220	L/6	:	VDC off switch (With VDC)
D4	M221	W/16	:	Not used
E4	M222	W/12	:	Audio unit (With CD auto changer)
D5 ★	M223	W/18	:	To F53
D5	M224	GY/10	:	Shift lock control unit
E5	M225	W/12	:	A/T device
G4	M226	W/16	:	To B59 (With VDC)
G4	M227	W/20	:	To B58 (With VDC)
G2	M228	BR/24	:	To B144
D4 ★	M229	W/18	:	To F66
D4 ★	M230	W/20	:	To F67
G2	M231	L/4	:	Heated steering relay (With heated steering)
C4	M232	W/2	:	Ignition key hole illumination

Main sub-harness-1

D3	M151	W/4	:	To M30
D2	M152	W/4	:	Clock

Main sub-harness-2 (With navigation system)

D3	M191	BR/24	:	To M104
E2	M192	W/20	:	Front monitor
E2	M193	W/4	:	Front monitor

Main sub-harness-3

B2	M201	W/3	:	To M147
C2	M202	W/3	:	Auto light sensor

★: Be sure to connect and lock the connectors securely after repair work. Failure to do so may cause the ECM to have diagnostic trouble codes. **Do not disconnect these connectors except in the case of working according to WORK FLOW of TROUBLE DIAGNOSES in EC and AT sections.**

NOTE:

Engine Room Harness

NHEL0134

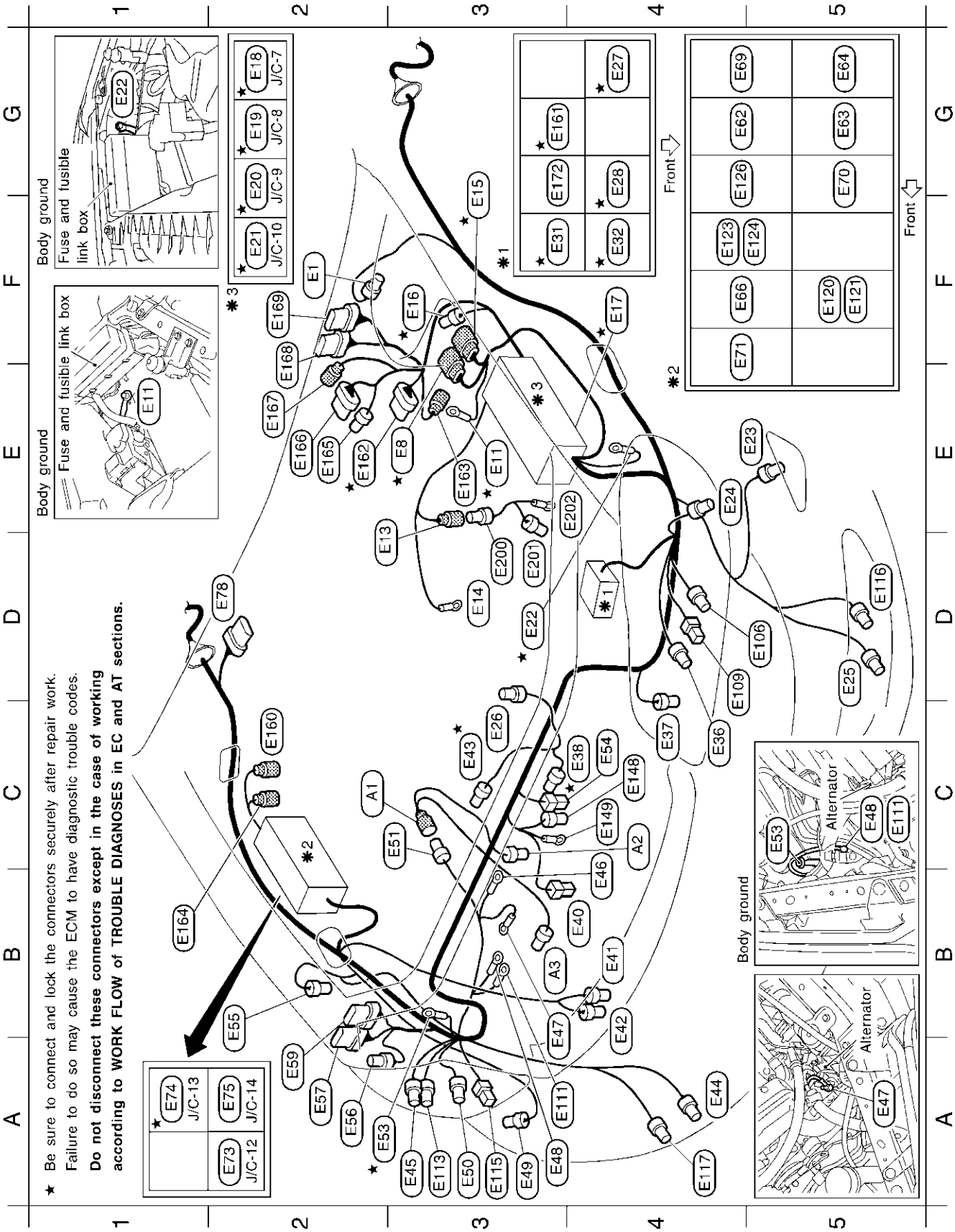

★ Be sure to connect and lock the connectors securely after repair work.
Failure to do so may cause the ECM to have diagnostic trouble codes.
Do not disconnect these connectors except in the case of working according to WORK FLOW of TROUBLE DIAGNOSES in EC and AT sections.

MEL865Q

Engine room harness

F2	E1	GY/2	:	Brake fluid level switch
E3★	E8	GY/8	:	To F17
E3★	E11	–	:	Body ground
D2	E13	GY/1	:	To E200
D3	E14	–	:	Battery (Fusible link 120A)
F3★	E15	B/8	:	To F18
F3★	E16	GY/2	:	Dropping resistor
F4★	E17	–	:	Fuse and fusible link box
G2★	E18	GY/6	:	Joint connector-7
G2★	E19	GY/6	:	Joint connector-8
G2★	E20	W/6	:	Joint connector-9
F2★	E21	W/6	:	Joint connector-10
D3★	E22	–	:	Body ground
E5	E23	BR/2	:	Front side marker lamp LH
E4	E24	BR/2	:	Front turn signal lamp LH
D5	E25	B/2	:	Front fog lamp LH
C3	E26	GY/2	:	Hood switch
G4★	E27	BR/6	:	Cooling fan relay-1
G4★	E28	BR/6	:	Cooling fan relay-2
F3★	E31	BR/6	:	Cooling fan relay-3
F4★	E32	BR/6	:	ECM relay
C4	E36	B/2	:	Headlamp LH (High beam)
C4	E37	B/3	:	Refrigerant pressure sensor
C4★	E38	GY/4	:	Cooling fan motor-1
B4	E40	B/1	:	Horn (High)
B4	E41	GY/2	:	Front washer motor
B4	E42	BR/2	:	Washer level switch
C3★	E43	GY/4	:	Cooling fan motor-2
A4	E44	B/2	:	Front fog lamp RH
A3	E45	BR/2	:	Front turn signal lamp RH
B4	E46	–	:	Alternator
B3	E47	–	:	Alternator
A3	E48	–	:	Body ground
A3	E49	BR/2	:	Front side marker lamp RH
A3	E50	B/2	:	Headlamp RH (High beam)
C3	E51	GY/3	:	To A1
A2★	E53	–	:	Body ground
C4	E54	B/1	:	Vehicle security horn
B2	E55	B/2	:	Ambient sensor
A2	E56	GY/4	:	Daytime light control unit (For Canada)
A2	E57	GY/6	:	Daytime light control unit (For Canada)
A2	E59	GY/8	:	Daytime light control unit (For Canada)
G4	E62	L/4	:	Tail lamp relay
G5	E63	L/4	:	Vehicle security horn relay-2
G5	E64	L/4	:	Front fog lamp relay
F4	E66	W/3	:	Horn relay
G4	E69	L/4	:	Door mirror defogger relay (With door mirror defogger)
G5	E70	L/4	:	Vehicle security horn relay-1
F4	E71	L/4	:	Air conditioner relay
A2	E73	W/6	:	Joint connector-12
A1★	E74	W/6	:	Joint connector-13
A2	E75	W/6	:	Joint connector-14
D2	E78	GY/6	:	Front wiper motor
D5	E106	GY/2	:	Headlamp LH (Low beam)
D4	E109	B/2	:	Parking lamp LH
A3	E111	–	:	Body ground
A3	E113	GY/2	:	Headlamp RH (Low beam)
A3	E115	B/2	:	Parking lamp RH
D5	E116	BR/2	:	Cornering lamp LH
A4	E117	BR/2	:	Cornering lamp RH
F5	E120	BR/6	:	Headlamp LH relay (For Canada)
F5	E121	BR/6	:	Headlamp LH relay (For USA)
F4	E123	BR/6	:	Headlamp RH relay (For Canada)
F5	E124	BR/6	:	Headlamp RH relay (For USA)
G4	E126	L/4	:	Cornering lamp relay
C4	E148	Y/2	:	Crash zone sensor
C4	E149	–	:	Body ground
C2	E160	GY/2	:	Front wheel sensor RH (With VDC)
G3★	E161	L/4	:	Throttle control motor relay
E2★	E162	B/31	:	ABS/TCS control unit (With TCS)
E3	E163	L/2	:	Front wheel sensor LH (With TCS)
B1	E164	GY/2	:	Front wheel sensor RH (With TCS)
E2	E165	B/2	:	VDC relay box (With VDC)
E2	E166	B/8	:	VDC relay box (With VDC)
E2	E167	BR/2	:	Front wheel sensor LH (With VDC)
E2	E168	B/8	:	ABS actuator (With VDC)
F2	E169	GY/8	:	ABS actuator (With VDC)
G3	E172	L/4	:	Park/Neutral position relay

Engine room sub-harness

D3	E200	GY/1	:	To E13
D3	E201	GY/1	:	Starter motor
E4	E202	–	:	Starter motor

Alternater harness

C2	A1	GY/3	:	To E51
C4	A2	GY/4	:	Alternator
B3	A3	B/1	:	Compressor

★ : Be sure to connect and lock the connectors securely after repair work. Failure to do so may cause the ECM to have diagnostic trouble codes. **Do not disconnect these connectors except in the case of working according to WORK FLOW of TROUBLE DIAGNOSES in EC and AT sections.**

E79 : Diode

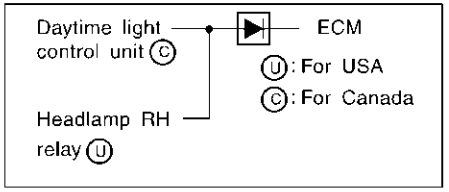

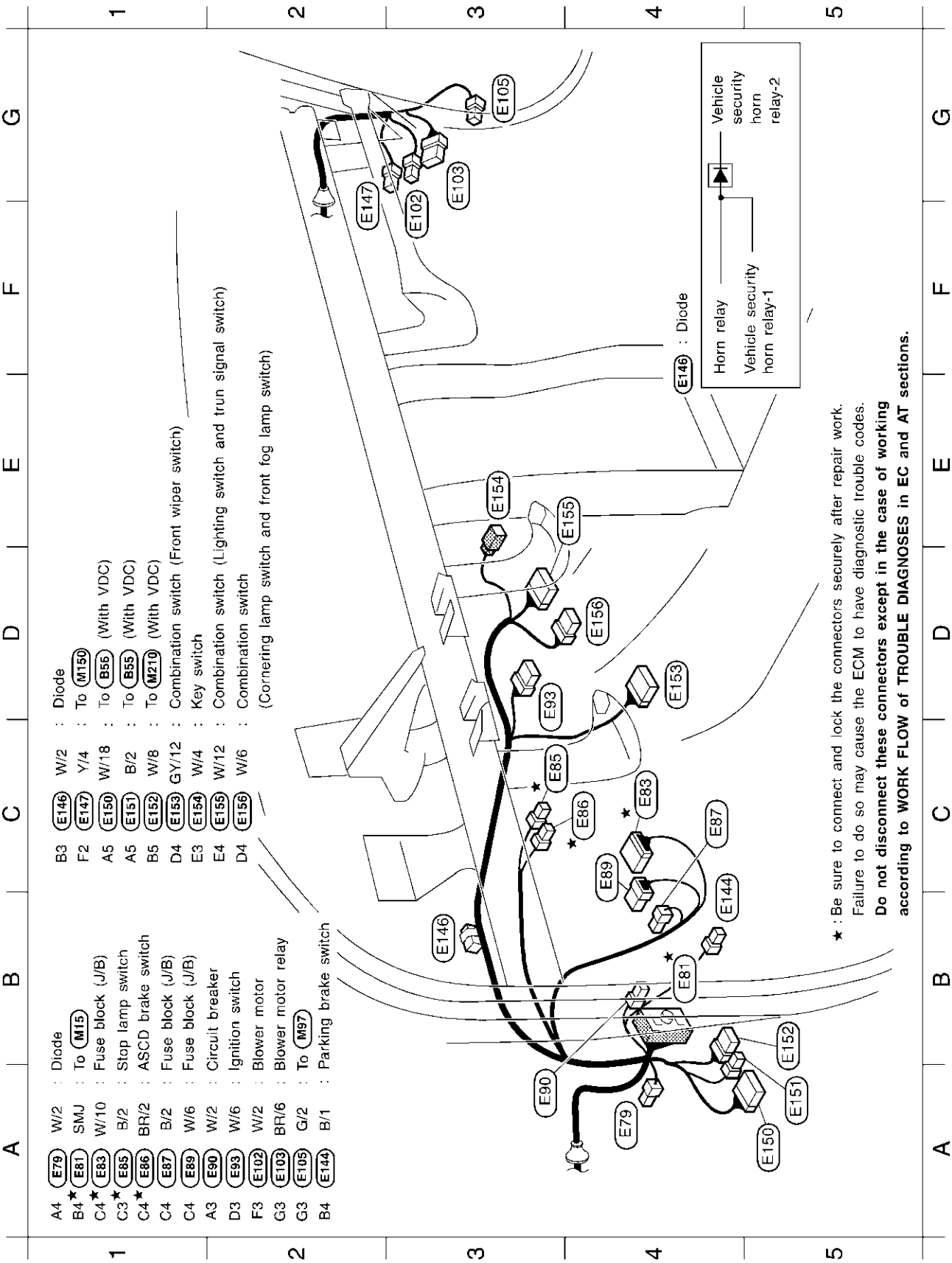
A4 E79 W/2 : Diode
B4★ E81 SMJ : To M15
C4★ E83 W/10 : Fuse block (J/B)
C3★ E85 B/2 : Stop lamp switch
C4★ E86 BR/2 : ASCD brake switch
C4 E87 B/2 : Fuse block (J/B)
C4 E89 W/6 : Fuse block (J/B)
A3 E90 W/2 : Circuit breaker
D3 E93 W/6 : Ignition switch
F3 E102 W/2 : Blower motor
G3 E103 BR/6 : Blower motor relay
G3 E105 G/2 : To M97
B4 E144 B/1 : Parking brake switch
B3 E146 W/2 : Diode
F2 E147 Y/4 : To M150
A5 E150 W/18 : To B56 (With VDC)
A5 E151 B/2 : To B55 (With VDC)
B5 E152 W/8 : To M210 (With VDC)
D4 E153 GY/12 : Combination switch (Front wiper switch)
E3 E154 W/4 : Key switch
E4 E155 W/12 : Combination switch (Lighting switch and trun signal switch)
D4 E156 W/6 : Combination switch
(Cornering lamp switch and front fog lamp switch)
E146 : Diode
Horn relay
Vehicle security horn relay-1
Vehicle security horn relay-2
★ : Be sure to connect and lock the connectors securely after repair work.
Failure to do so may cause the ECM to have diagnostic trouble codes.
Do not disconnect these connectors except in the case of working according to WORK FLOW of TROUBLE DIAGNOSES in EC and AT sections.

MEL867Q

NOTE:

Engine Control Harness

NHEL0135

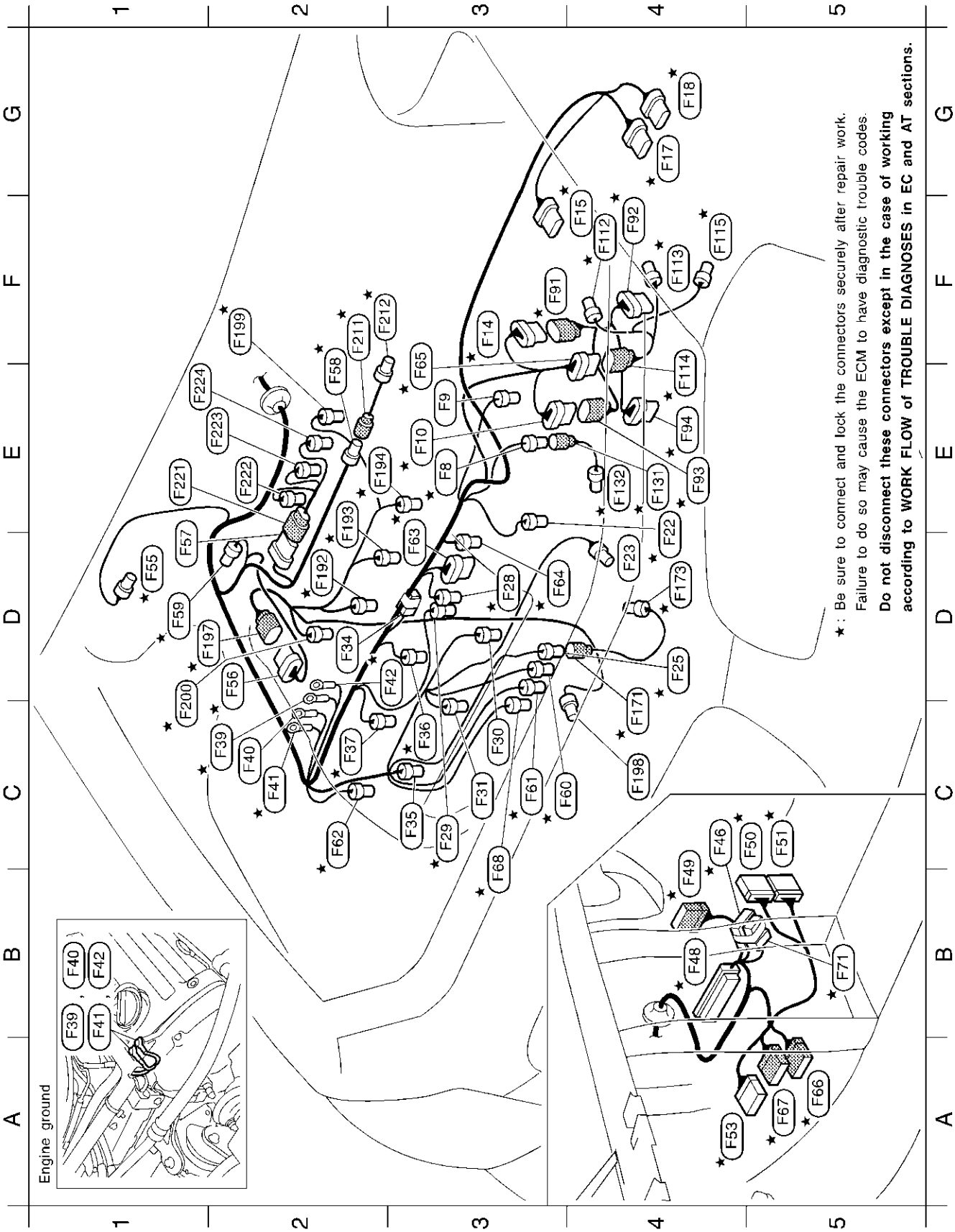

MEL868Q

Engine control harness

E3★ F8 B/2 : To F131
E3 F9 BR/3 : Rear electronic controlled engine mount
E3★ F10 GY/10 : To F93
F3★ F14 BR/8 : To F91
F4★ F15 GY/5 : Mass air flow sensor
G4★ F17 GY/8 : To E8
G4★ F18 B/8 : To E15
E4★ F22 GY/2 : Engine coolant temperature sensor
D4 F23 BR/3 : Front electronic controlled engine mount
D4★ F25 G/4 : To F171
D3★ F28 GY/2 : Injector No. 6
C3★ F29 B/2 : VIAS control solenoid valve
C3 F30 GY/3 : Ignition coil No. 6
C3 F31 GY/3 : Ignition coil No. 4
D2 F34 W/2 : Condenser
C3 F35 GY/3 : Ignition coil No. 2
C3★ F36 GY/2 : Injector No. 4
C2★ F37 GY/2 : Injector No. 2
C2★ F39 – : Engine ground
C2 F40 – : Engine ground
C2★ F41 – : Engine ground
D3★ F42 – : Engine ground
C4★ F46 L/12 : Joint connector-18
B4★ F48 SMJ : ECM
B4★ F49 W/20 : To M81
C5★ F50 GY/24 : TCM (Transmission control module)
C5★ F51 W/24 : TCM (Transmission control module)
A4★ F53 W/18 : To M223
D1★ F55 B/3 : Power steering pressure sensor
D2★ F56 G/8 : To F197
D1 F57 G/6 : To F221
E2★ F58 L/4 : To F211
D1★ F59 SB/3 : Heated oxygen sensor 1 (Bank 1)
C3★ F60 SB/3 : Heated oxygen sensor 1 (Bank 2)
C3★ F61 L/4 : Heated oxygen sensor 2 (Bank 1)
C2★ F62 G/2 : Intake valve timing control solenoid valve (Bank 2)
D3★ F63 G/6 : Electric throttle control actuator
D3★ F64 B/3 : Camshaft position sensor (Phase) bank 2
E3★ F65 GY/8 : To F114
A5★ F66 W/18 : To M229
A5★ F67 W/20 : To M230
B3★ F68 G/4 : Heated oxygen sensor 2 (Bank 2)
B5★ F71 GY/6 : Joint connector-20

Engine control sub-harness-1

F3★ F91 BR/8 : To F14
F4★ F92 B/8 : Terminal cord assembly
E4★ F93 GY/10 : To F10
E4★ F94 B/10 : Park/Neutral position switch

Engine control sub-harness-2

F4★ F112 B/3 : Revolution sensor
F4★ F113 GY/2 : Vehicle speed sensor
E4★ F114 GY/8 : To F65
F4★ F115 B/3 : Power train revolution sensor

Engine control sub-harness-3

E4★ F131 B/2 : To F8
E4★ F132 GY/2 : Knock sensor

Engine control sub-harness-5

C4★ F171 G/4 : To F25
D4★ F173 B/3 : Crankshaft position sensor (POS)

Engine control sub-harness-6

D2★ F192 GY/2 : Injector No. 1
E2★ F193 GY/2 : Injector No. 3
E2★ F194 GY/2 : Injector No. 5
D1★ F197 G/8 : To F56
C4 F198 B/1 : Oil pressure switch
F2★ F199 L/2 : EVAP canister purge volume control solenoid valve
C1★ F200 G/2 : Intake valve timing control solenoid valve (Bank 1)

Engine control sub-harness-7

F2★ F211 L/4 : To F58
F2★ F212 G/3 : Camshaft position sensor (Phase) bank 1

Engine control sub-harness-8

E1 F221 G/6 : To F57
E2 F222 GY/3 : Ignition coil No. 1
E2 F223 GY/3 : Ignition coil No. 3
E1 F224 GY/3 : Ignition coil No. 5

★: Be sure to connect and lock the connectors securely after repair work. Failure to do so may cause the ECM to have diagnostic trouble codes. **Do not disconnect these connectors except in the case of working according to WORK FLOW of TROUBLE DIAGNOSES in EC and AT sections.**

MEL869Q

Body Harness

NHEL0136

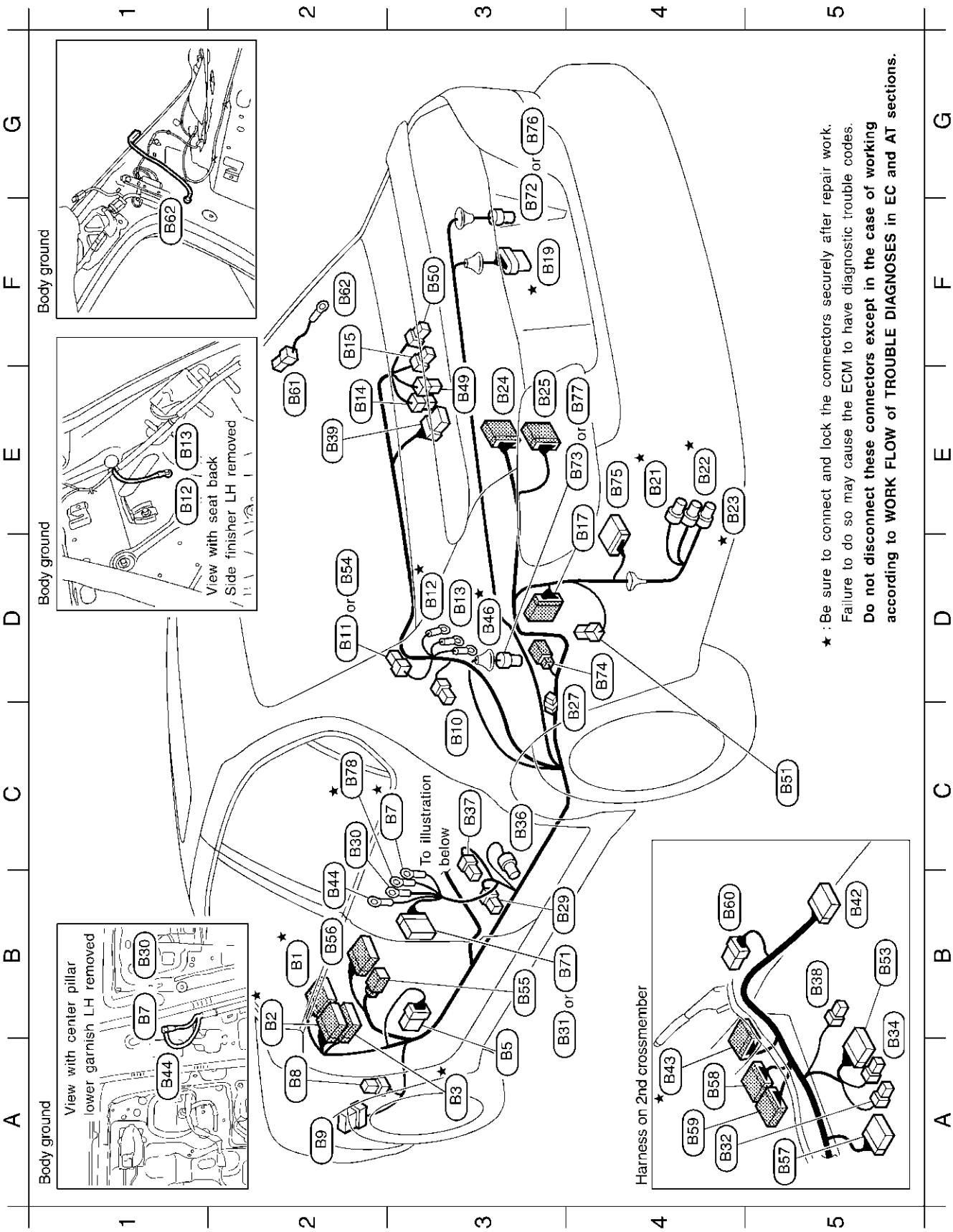

MEL870Q

Body harness

B2★	B1	W/16	:	To M5
B2★	B2	BR/24	:	To M2
A3★	B3	W/18	:	To M6
A3	B5	W/8	:	Fuse block (J/B)
C3★	B7	–	:	Body ground (With TCS)
A2	B8	L/4	:	Fuel pump relay
A2	B9	BR/6	:	Rear window defogger relay
C3	B10	W/1	:	Rear door switch LH
D2	B11	W/1	:	Condenser (Rear window defogger) (Without rear sunshade)
D3★	B12	–	:	Body ground (Without rear sunshade)
D3	B13	–	:	Body ground (With rear sunshade)
E2	B14	BR/2	:	High-mounted stop lamp (Without rear air spoiler) (Without rear sunshade)
F2	B15	W/2	:	Trunk room lamp (Without rear sunshade)
E4	B17	W/10	:	To T3
F3★	B19	GY/5	:	Fuel level sensor unit and fuel pump
E4★	B21	G/2	:	Vacuum cut valve bypass valve
E4★	B22	B/2	:	EVAP canister vent control valve
E4★	B23	GY/3	:	EVAP control system pressure sensor
E3	B24	W/16	:	To B119
E3	B25	W/20	:	To B120 (With CD auto changer)
C4	B27	W/2	:	Condenser
B3	B29	W/3	:	Front door switch LH
C2	B30	–	:	Body ground (With TCS)
B3	B31	W/10	:	To D81 (Without heated seat)
A4	B32	W/3	:	Front heated seat LH (Via sub-harness) (With heated seat)
B5	B34	W/3	:	Seat belt buckle switch LH
C3	B36	Y/2	:	Satellite sensor LH
C3	B37	Y/2	:	Seat belt pre-tensioner LH
B5	B38	Y/2	:	Side air bag module LH (Via sub-harness)
E2	B39	W/6	:	Rear sunshade unit (With rear sunshade)
B5	B42	Y/12	:	Side air bag diagnosis sensor unit LH
A4★	B43	W/16	:	To M110
B2	B44	–	:	Body ground
D3★	B46	–	:	Body ground (With rear sunshade)
E3	B49	W/2	:	High-mounted stop lamp (Without rear air spoiler) (With rear sunshade)
F3	B50	W/2	:	Trunk room lamp (With rear sunshade)
C5	B51	W/4	:	Fuel lid opener actuator
B5	B53	W/16	:	Seat control unit LH (Via sub-harness)
D2	B54	W/1	:	Condenser (Rear window defogger) (With rear sunshade)
B3	B55	B/2	:	To E151 (With VDC)
B2	B56	W/18	:	To E150 (With VDC)
A5	B57	B/83	:	VDC/TCS/ABS control unit (With VDC)
A4	B58	W/20	:	To M227
A4	B59	W/16	:	To M226
B4	B60	B/6	:	Yaw rate/side G sensor
B3	B71	W/18	:	To D87 (With heated seat)
F3	B72	GY/2	:	Rear wheel sensor RH (With TCS)
E4	B73	L/2	:	Rear wheel sensor LH (With TCS)
D4	B74	W/3	:	Rear heated seat LH (Via sub-harness) (With heated seat)
E4	B75	W/16	:	CD auto changer (With CD auto changer)
G3	B76	GY/2	:	Rear wheel sensor RH (With VDC)
E4	B77	BR/2	:	Rear wheel sensor LH (With VDC)
C2★	B78	–	:	Body ground (With VDC)

Defogger harness

E2	B61	B/1	:	Rear window defogger
F2	B62	–	:	Body ground

★ : Be sure to connect and lock the connectors securely after repair work. Failure to do so may cause the ECM to have diagnostic trouble codes. **Do not disconnect these connectors except in the case of working according to WORK FLOW of TROUBLE DIAGNOSES in EC and AT sections.**

MEL871Q

Body No. 2 Harness

NHEL0137

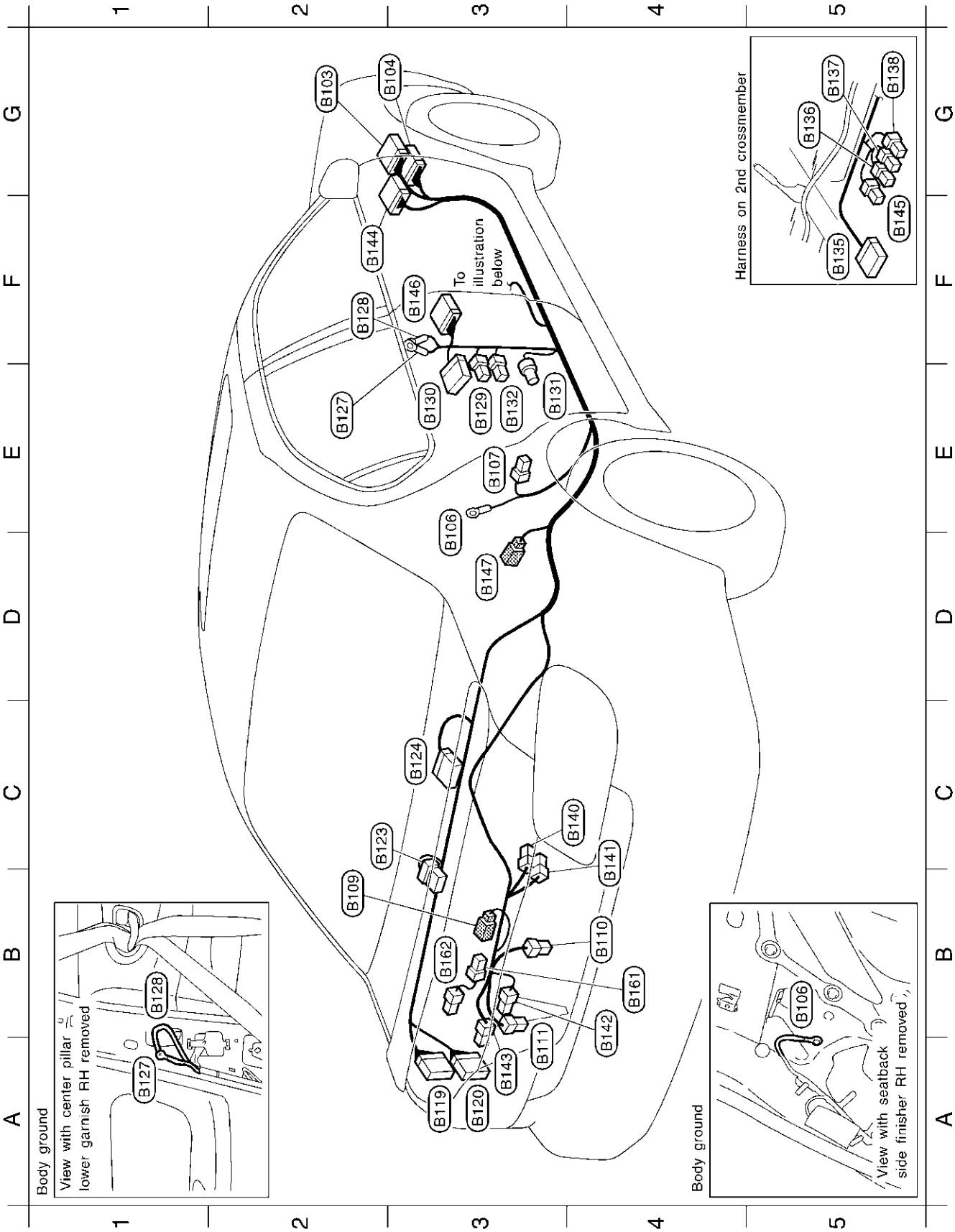

MEL222O

Body No. 2 harness

G2	B103	W/12	:	To M91
G3	B104	W/10	:	To M92
D3	B106	–	:	Body ground
E3	B107	W/1	:	Rear door switch RH
B2	B109	BR/2	:	To B161 (With rear air spoiler)
B4	B110	W/2	:	License lamp RH
A3	B111	W/2	:	License lamp LH
A3	B119	W/16	:	To B24
A3	B120	W/20	:	To B25 (With CD auto changer)
C2	B123	BR/6	:	Woofer
C3	B124	GY/26	:	BOSE speaker amp.
E2	B127	–	:	Body ground
F2	B128	–	:	Body ground
E3	B129	W/3	:	Front door switch RH
E3	B130	W/10	:	To D101 (Without heated seat)
E3	B131	Y/2	:	Satellite sensor RH
E3	B132	Y/2	:	Seat belt pre-tensioner RH
F5	B135	Y/12	:	Side air bag diagnosis sensor unit RH
G5	B136	W/3	:	Front heated seat RH (Via sub-harness) (With heated seat)
G5	B137	W/2	:	Power seat switch RH (Via sub-harness)
G5	B138	Y/2	:	Side air bag module RH (Via sub-harness)
C4	B140	W/3	:	Trunk lid combination lamp RH (For stop and tail)
C4	B141	W/2	:	Trunk lid combination lamp RH (For back-up)
B4	B142	W/2	:	Trunk lid combination lamp LH (For back-up)
A3	B143	W/3	:	Trunk lid combination lamp LH (For stop and tail)
F2	B144	BR/24	:	To M228
F5	B145	W/3	:	Seat belt buckle switch RH
F3	B146	W/18	:	To D107 (With heated seat)
D3	B147	W/3	:	Rear heated seat RH (Via sub-harness) (With heated seat)

Body No. 2 sub-harness (With rear air spoiler)

B4	B161	BR/2	:	To B109
B3	B162	B/2	:	High-mounted stop lamp

MEL223O

Tail Harness

NHEL0138

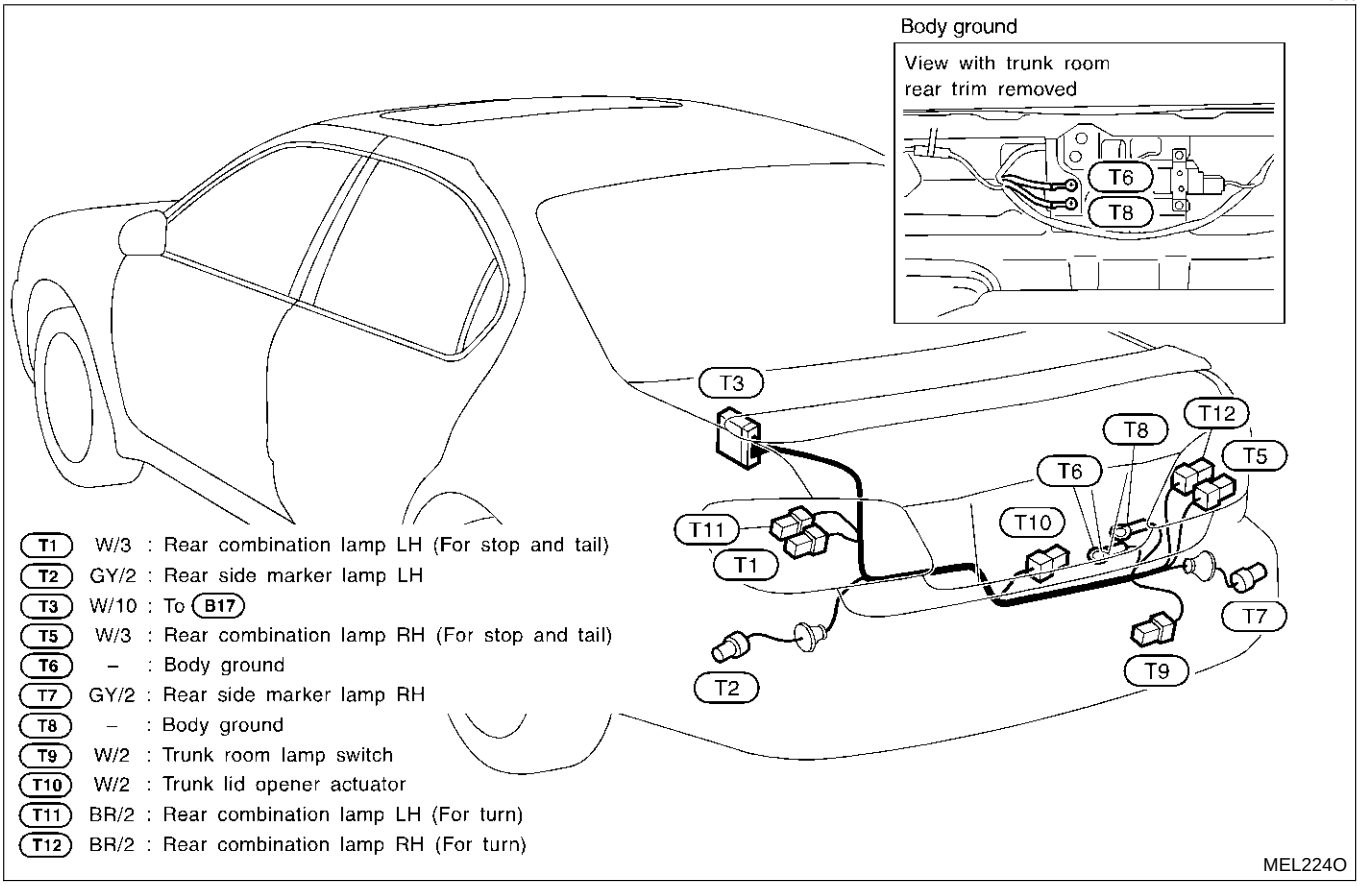

Room Lamp Harness

NHEL0140

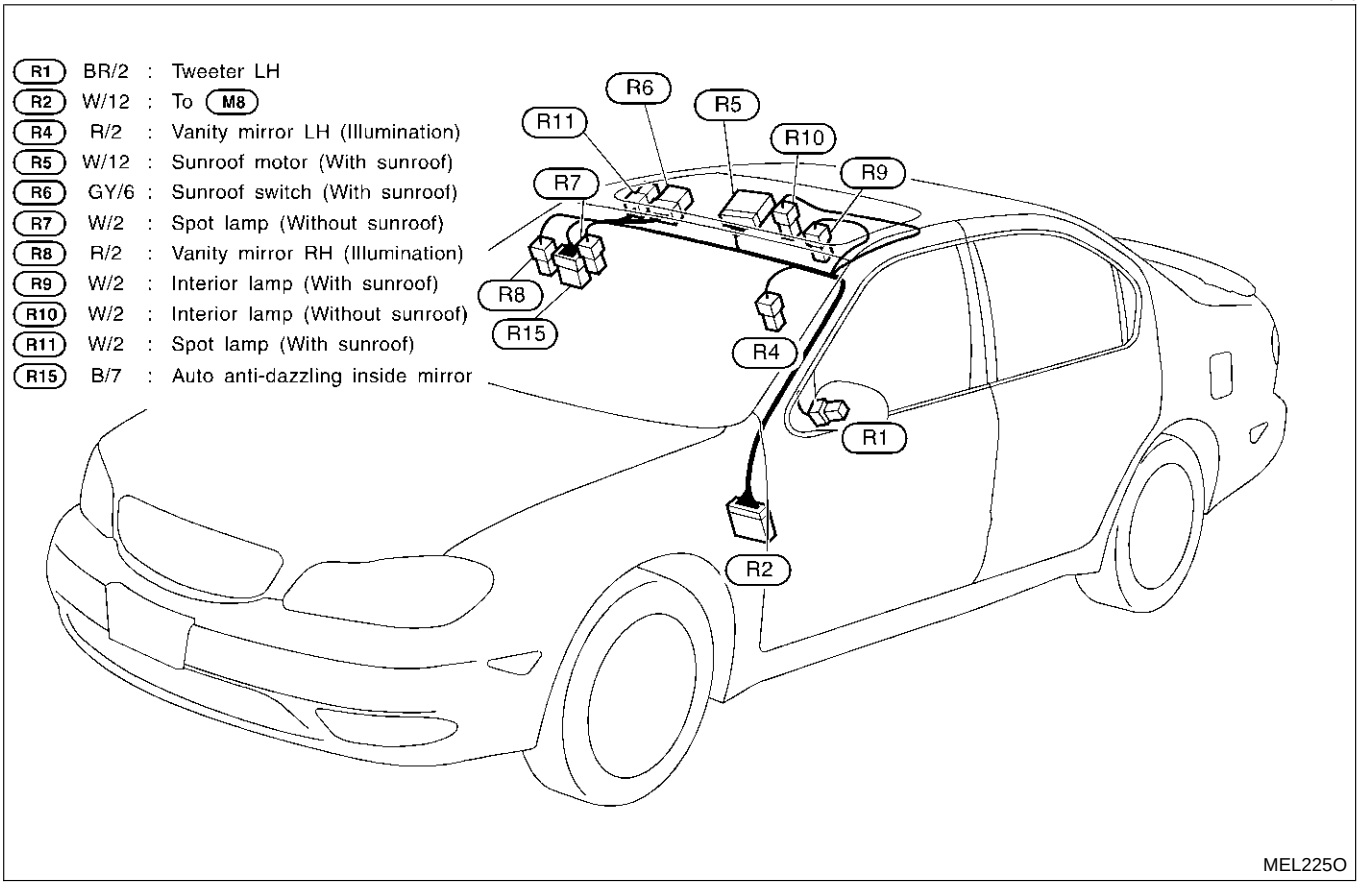

Front Door Harness

NHEL0142

LH SIDE

NHEL0142S03

D1	SMJ	: To M4	
D2	BR/2	: Front door speaker LH	
D4	GY/6	: Front power window regulator LH	
D5	W/2	: Front step lamp LH	
D6	GY/4	: Front door lock actuator LH	
D7	W/4	: Trunk and fuel lid opener switch	
D8	BR/3	: Front door key cylinder switch LH	
D10	W/16	: Front power window main switch	
D11	W/8	: Door mirror actuator LH	
D12	W/8	: Memory seat switch	
D13	W/3	: Front power window main switch	

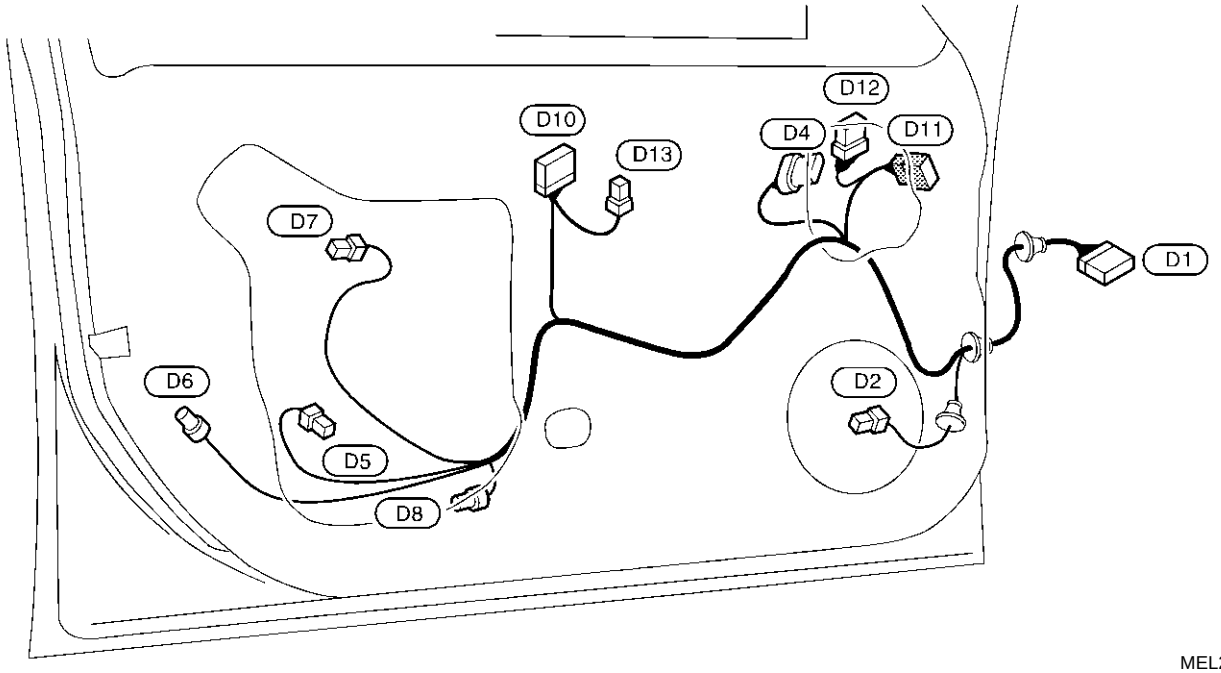

MEL226O

RH SIDE

NHEL0142S04

Door harness front RH

D31	SMJ	:	To D61
D32	W/8	:	Door mirror actuator RH
D33	W/12	:	Front power window switch RH
D36	W/2	:	Front step lamp RH
D37	GY/4	:	Front door lock actuator RH
D38	GY/6	:	Front power window regulator RH
D39	BR/2	:	Front door speaker RH
D41	W/8	:	Front power window switch RH

Door sub-harness

D61	SMJ	:	To D31
D62	W/16	:	To M38
D63	W/10	:	To M39

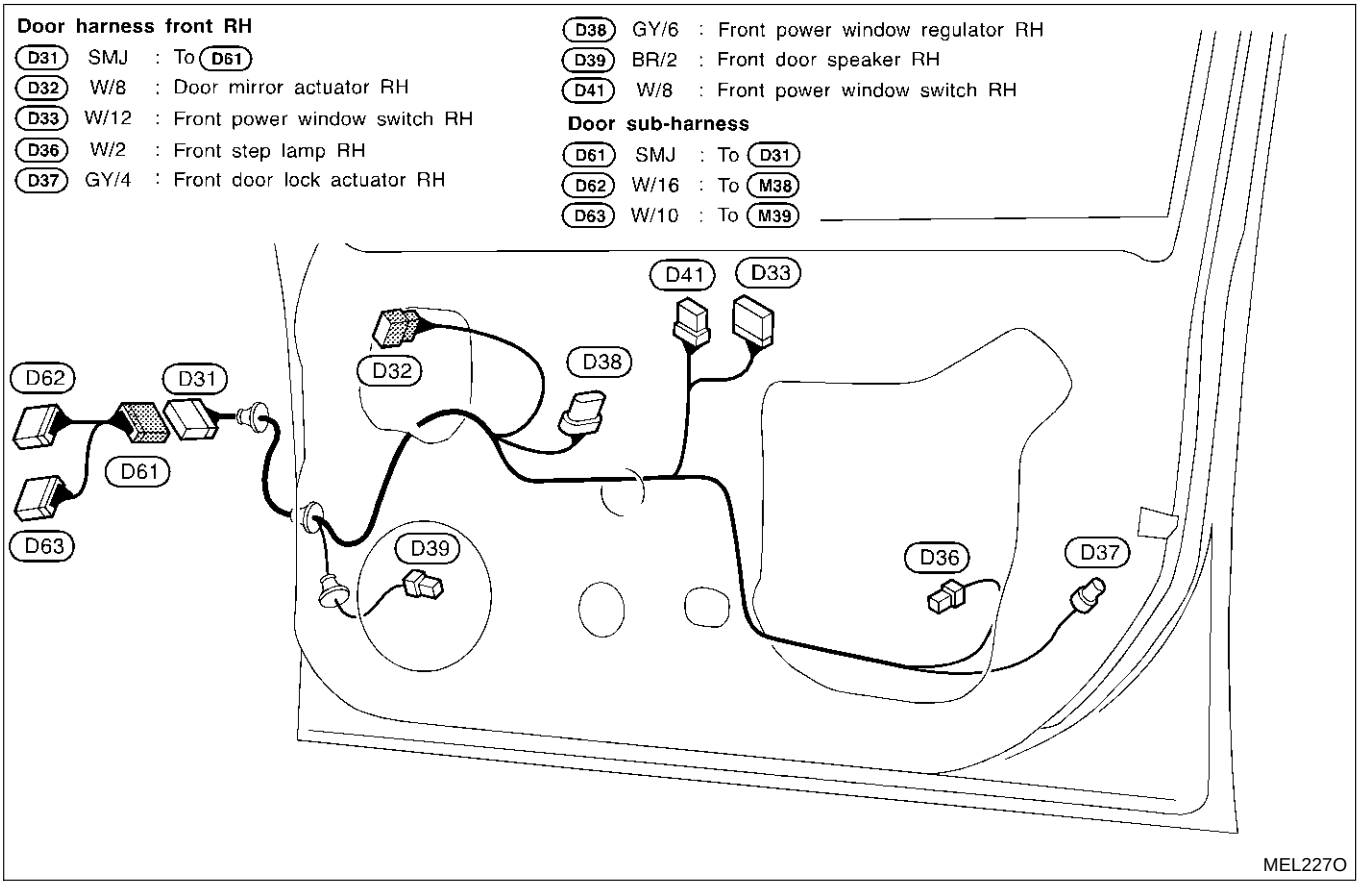

Rear Door Harness

NHEL0143

LH SIDE

NHEL0143S03

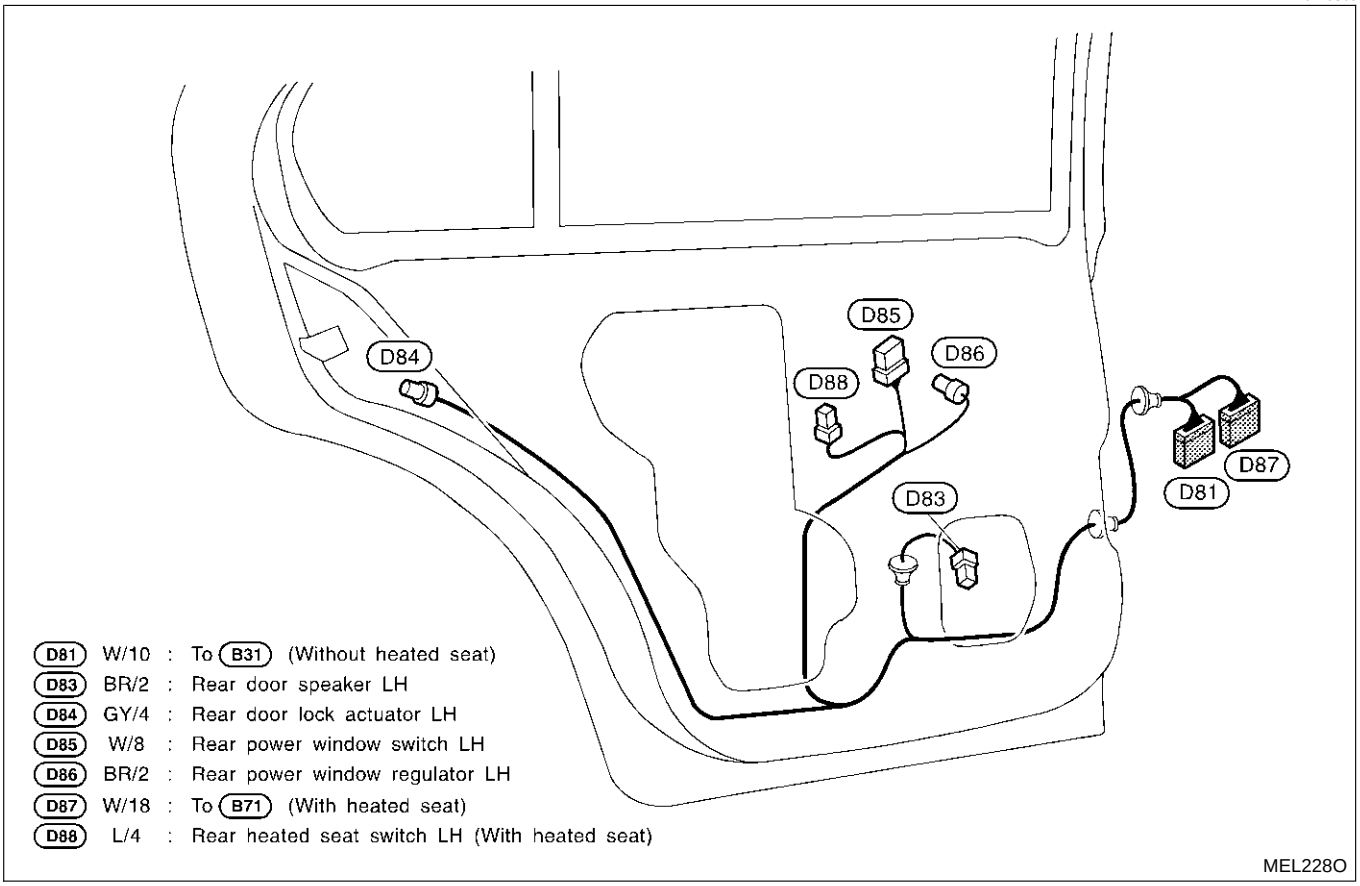

RH SIDE

NHEL0143S04

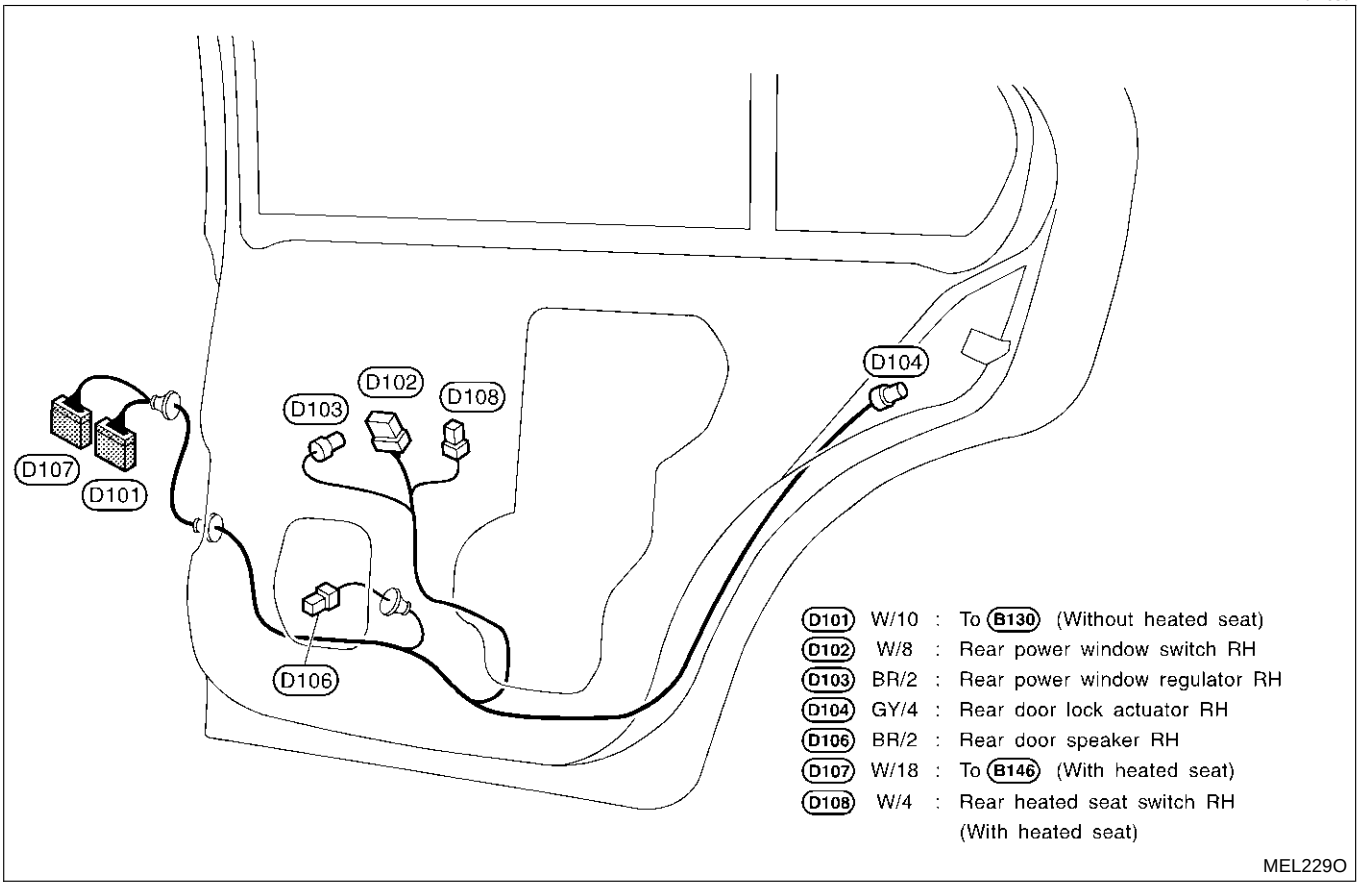

BULB SPECIFICATIONS

Headlamp

Headlamp

NHEL0144S03

Item	Wattage (W)
High/Low	60/35 (HB3)

Exterior Lamp

NHEL0144S01

Item		Wattage (W)
Front fog lamp		21 (H3)
Front turn signal lamp		21
Parking lamp		5
Front side marker lamp		3.8
Rear combination lamp	Turn signal	21
	Stop/Tail	21/5
	Back-up	18
Rear side marker lamp		3.8
License lamp		5
High-mounted stop lamp	Without rear air spoiler	5
	With rear air spoiler	LED

Interior Lamp

NHEL0144S02

Item	Wattage (W)
Interior room lamp	10
Spot lamp	8
Vanity mirror lamp	8
Trunk room lamp	3.4
Step lamp	2.7

WIRING DIAGRAM CODES (CELL CODES)

Use the chart below to find out what each wiring diagram code stands for.
Refer to the wiring diagram code in the alphabetical index to find the location (page number) of each wiring diagram.

Code	Section	Wiring Diagram Name
1STSIG	AT	A/T 1ST Signal
2NDSIG	AT	A/T 2ND Signal
3RDSIG	AT	A/T 3RD Signal
4THSIG	AT	A/T 4TH Signal
A/C, A	HA	Auto Air Conditioner
APPS1	EC	Accelerator Pedal Position Sensor (Sensor 1)
APPS2	EC	Accelerator Pedal Position Sensor (Sensor 2)
APPS3	EC	Accelerator Pedal Position Sensor
ASC/BS	EC	Automatic Speed Control Device (ASCD) Brake Switch
ASC/SW	EC	Automatic Speed Control Device (ASCD) Steering Switch
ASC/VS	EC	Automatic Speed Control Device (ASCD) Vehicle Speed Sensor
ASCBOF	EC	Automatic Speed Control Device (ASCD) Brake Switch (Off)
ASCIND	EC	Automatic Speed Control Device (ASCD) Indicator
AT/IND	EL	A/T Indicator
AUDIO	EL	Audio
AUT/DP	EL	Automatic Drive Positioner
BACK/L	EL	Back-up Lamp
BA/FTS	AT	A/T Fluid Temperature Sensor and TCM Power Supply
B/COMP	EL	Board Computer
BRK/SW	EC	Brake Switch
BYPS/V	EC	Vacuum Cut Valve Bypass Valve
CAN	AT	CAN Communication Line
CAN	EC	CAN Communication Line
CAN	EL	CAN System
CHARGE	SC	Charging System
CHIME	EL	Warning Chime
CIGAR	EL	Cigarette Lighter
CLOCK	EL	Clock
COMPAS	EL	Compass

Code	Section	Wiring Diagram Name
COOL/F	EC	Cooling Fan Control
CORNER	EL	Cornering Lamp
DEF	EL	Rear Window Defogger
D/LOCK	EL	Power Door Lock
DLC	EC	Data Link Connectors
DTRL	EL	Headlamp - With Daytime Light System
ECM/PW	EC	ECM Power Supply
ECTS	EC	Engine Coolant Temperature Sensor
EMNT	EC	Electronic Controlled Engine Mount
ENGSS	AT	Engine Speed Signal
ETC1	EC	Electrical Throttle Control Function
ETC2	EC	Electrical Throttle Control Motor Relay
ETC3	EC	Electrical Throttle Control Motor
F/FOG	EL	Front Fog Lamp
FLS1	EC	Fuel Level Sensor Circuit (SLOSH)
FLS2	EC	Fuel Level Sensor Circuit
FLS3	EC	Fuel Level Sensor Circit (Ground Signal)
F/PUMP	EC	Fuel Pump Control
FTS	AT	A/T Fluid Temperature Sensor
FTTS	EC	Fuel Tank Temperature Sensor
FUELB1	EC	Fuel Injection System Function (Bank 1)
FUELB2	EC	Fuel Injection System Function (Bank 2)
H/LAMP	EL	Headlamp
HORN	EL	Horn
HSEAT	EL	Heated Seat
H/STRG	EL	Heated Steering
I/MIRR	EL	Inside Mirror (Auto Anti-dazzling Mirror)
IATS	EC	Intake Air Temperature Sensor
IGNSYS	EC	Ignition Signal
ILL	EL	Illumination
INJECT	EC	Injector

Code	Section	Wiring Diagram Name
INT/L	EL	Interior, Step, Spot, Vanity Mirror and Trunk Room Lamps
IVCB1	EC	Intake Valve Timing Control Solenoid Valve (Bank 1)
IVCB2	EC	Intake Valve Timing Control Solenoid Valve (Bank 2)
KEYLES	EL	Remote Keyless Entry System
KS	EC	Knock Sensor
LOAD	EC	Electrical Load Signal
LPSV	AT	Line Pressure Solenoid Valve
MAFS	EC	Mass Air Flow Sensor
MAIN	AT	Main Power Supply and Ground Circuit
MAIN	EC	Main Power Supply and Ground Circuit
METER	EL	Speedometer, Tachometer, Temp., and Fuel Gauges
MIL	EC	Malfunction Indicator Lamp
MIRROR	EL	Power Door Mirror
NATS	EL	IVIS (Infiniti Vehicle Immobilizer System — NATS)
NAVI	EL	Navigation System
NONDTC	AT	Non-detectable Items
O2H1B1	EC	Heated Oxygen Sensor 1 Heater (Bank 1)
O2H1B2	EC	Heated Oxygen Sensor 1 Heater (Bank 2)
O2H2B1	EC	Heated Oxygen Sensor 2 Heater (Bank 1)
O2H2B2	EC	Heated Oxygen Sensor 2 Heater (Bank 2)
O2S1B1	EC	Heated Oxygen Sensor 1 (Bank 1)
O2S1B2	EC	Heated Oxygen Sensor 1 (Bank 2)
O2S2B1	EC	Heated Oxygen Sensor 2 (Bank 1)
O2S2B2	EC	Heated Oxygen Sensor 2 (Bank 2)
OVRCSV	AT	Overrun Clutch Solenoid Valve
PHASE	EC	Camshaft Position Sensor (Phase) Bank 1
PHASE	EC	Camshaft Position Sensor (Phase) Bank 2
PHONE	EL	Telephone (Pre-wire)

Code	Section	Wiring Diagram Name
PGC/V	EC	EVAP Canister Purge Volume Control Solenoid Valve
PNP/SW	AT	Park/Neutral Position Switch
PNP/SW	EC	Park/Neutral Position Switch
POS	EC	Crankshaft Position Sensor (CKPS) (POS)
POWER	EL	Power Supply Routing
PRE/SE	EC	EVAP Control System Pressure Sensor
PS/SEN	EC	Power Steering Pressure Sensor
PT/SEN	AT	Power Train Revolution Sensor
REMOTE	EL	Audio (Remote Control Switch)
RP/SEN	EC	Refrigerant Pressure Sensor
SEAT	EL	Power Seat
SEN/PW	EC	Sensor Power Supply
SHADE	EL	Rear Sunshade
SHIFT	AT	A/T Shift Lock System
SROOF	EL	Sunroof
SRS	RS	Supplemental Restraint System
S/SIG	EC	Start Signal
SSV/A	AT	Shift Solenoid Valve A
SSV/B	AT	Shift Solenoid Valve B
START	SC	Starting System
STOP/L	EL	Stop Lamp
TAIL/L	EL	Parking, License and Tail Lamps
TCCSIG	AT	A/T TCC Signal (Lock Up)
TCS	BR	Traction Control System
TCV	AT	Torque Converter Clutch Solenoid Valve
T&FLID	EL	Trunk Lid and Fuel Filler Lid Opener
TPS	AT	Throttle Position Sensor
TPS1	EC	Throttle Position Sensor (Sensor 1)
TPS2	EC	Throttle Position Sensor (Sensor 2)
TPS3	EC	Throttle Position Sensor
TRNSCV	EL	Homelink Universal Transceiver
TURN	EL	Turn Signal and Hazard Warning Lamps
VDC	BR	Vehicle Dynamics Control

Code	Section	Wiring Diagram Name
VEHSEC	EL	Vehicle Security (Theft Warning) System
VENT/V	EC	EVAP Canister Vent Control Valve
VIAS	EC	Variable Induction Air Control System
VIAS/V	EC	Variable Induction Air Control System
VSS	EC	Vehicle Speed Sensor
VSSA/T	AT	Vehicle Speed Sensor·A/T (Revolution Sensor)
VSSMTR	AT	Vehicle Speed Sensor MTR
W/ANT	EL	Audio Antenna
WARN	EL	Warning Lamps
WINDOW	EL	Power Window
WIPER	EL	Front Wiper and Washer

NOTES