BRAKE SYSTEM

SECTION BR

CONTENTS

CONTENTS (Cont'd)

ABS

TCS

CONTENTS (Cont'd)

ABS/TCS

Supplemental Restraint System (SRS) “AIR BAG” and “SEAT BELT PRE-TENSIONER”

NFBR0127

The Supplemental Restraint System such as “AIR BAG” and “SEAT BELT PRE-TENSIONER” used along with a seat belt, helps to reduce the risk or severity of injury to the driver and front passenger for certain types of collision. The SRS system composition which is available to NISSAN MODEL A33 is as follows:

- For a frontal collision
  The Supplemental Restraint System consists of driver air bag module (located in the center of the steering wheel), front passenger air bag module (located on the instrument panel on passenger side), seat belt pre-tensioners, a diagnosis sensor unit, crash zone sensor, warning lamp, wiring harness and spiral cable.
- For a side collision
  The Supplemental Restraint System consists of front side air bag module (located in the outer side of front seat), satellite sensor, diagnosis sensor unit (one of components of air bags for a frontal collision), wiring harness, warning lamp (one of components of air bags for a frontal collision).

Information necessary to service the system safely is included in the **RS section** of this Service Manual.

WARNING:

- **To avoid rendering the SRS inoperative, which could increase the risk of personal injury or death in the event of a collision which would result in air bag inflation, all maintenance should be performed by an authorized NISSAN dealer.**
- **Improper maintenance, including incorrect removal and installation of the SRS, can lead to personal injury caused by unintentional activation of the system. For removal of Spiral Cable and Air Bag Module, see the RS section.**
- **Do not use electrical test equipment on any circuit related to the SRS unless instructed to in this Service Manual. SRS wiring harnesses can be identified with yellow harness connector (and with yellow harness protector or yellow insulation tape before the harness connectors).**

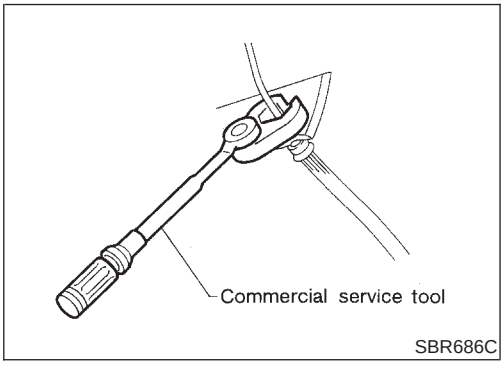

Precautions for Brake System

NFBR0002

- **Recommended fluid is brake fluid “DOT 3”.**
- **Never reuse drained brake fluid.**
- **Be careful not to splash brake fluid on painted areas.**
- **To clean or wash all parts of master cylinder, disc brake caliper and wheel cylinder, use clean brake fluid.**
- **Never use mineral oils such as gasoline or kerosene. They will ruin rubber parts of the hydraulic system.**
- **Use flare nut wrench when removing and installing brake tube.**
- **Always torque brake lines when installing.**
- **Burnish the brake contact surfaces after refinishing or replacing drums or rotors, after replacing pads or linings, or if a soft pedal occurs at very low mileage.**
  Refer to “Brake Burnishing Procedure”, “ON-VEHICLE SERVICE”, BR-8.

WARNING:

- **Clean brake pads and shoes with a waste cloth, then wipe with a dust collector.**

Wiring Diagrams and Trouble Diagnosis

NFBR0003

When you read wiring diagrams, refer to the following:

- “HOW TO READ WIRING DIAGRAMS” in GI section
- “POWER SUPPLY ROUTING” for power distribution circuit in EL section

When you perform trouble diagnosis, refer to the following:

- “HOW TO FOLLOW TEST GROUPS IN TROUBLE DIAGNOSES” in GI section
- “HOW TO PERFORM EFFICIENT DIAGNOSIS FOR AN ELECTRICAL INCIDENT” in GI section
- For trouble diagnoses of models with ABS, refer to the trouble diagnoses for models with ABS. Refer to BR-39.
- For trouble diagnoses of models with TCS, refer to the trouble diagnoses for models with TCS even when the diagnostic items are related to the ABS system. Refer to BR-81.

Commercial Service Tools

NFBR0004

Tool name	Description	
1 Flare nut crowfoot 2 Torque wrench	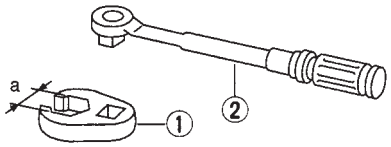 NT360	Removing and installing each brake piping **a: 10 mm (0.39 in)**
Brake fluid pressure gauge	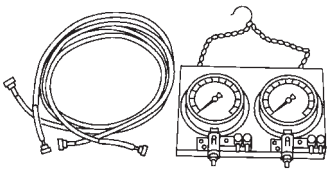 NT151	Measuring brake fluid pressure

NVH Troubleshooting Chart

NFBR0005S01

Use the chart below to help you find the cause of the symptom. If necessary, repair or replace these parts.

Reference page			BR-24, 28	BR-24, 28	BR-24, 28	—	—	BR-26, 32	—	—	—	BR-27, 33	NVH in AX section	NVH in AX section	NVH in SU section	NVH in SU section	NVH in SU section	NVH in ST section
Possible cause and SUSPECTED PARTS			Pads - damaged	Pads - uneven wear	Shims damaged	Rotor imbalance	Rotor damage	Rotor runout	Rotor deformation	Rotor deflection	Rotor rust	Rotor thickness variation	DRIVE SHAFT	AXLE	SUSPENSION	TIRES	ROAD WHEEL	STEERING
Symptom	BRAKE	Noise	X	X	X								X	X	X	X	X	X
		Shake				X							X	X	X	X	X	X
		Shimmy, Judder				X	X	X	X	X	X	X		X	X	X	X	X

X: Applicable

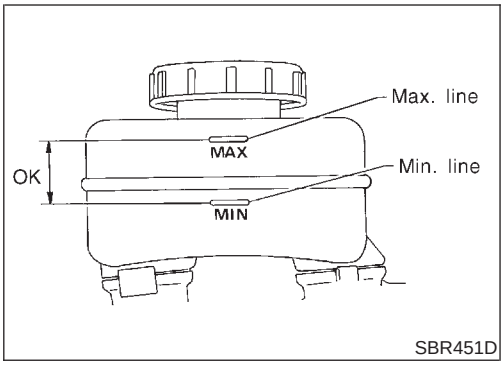

Checking Brake Fluid Level

NFBR0006

- Check fluid level in reservoir tank. It should be between Max and Min lines on reservoir tank.
- If fluid level is extremely low, check brake system for leaks.
- Release parking brake lever and see if brake warning lamp goes off. If not, check brake system for leaks.

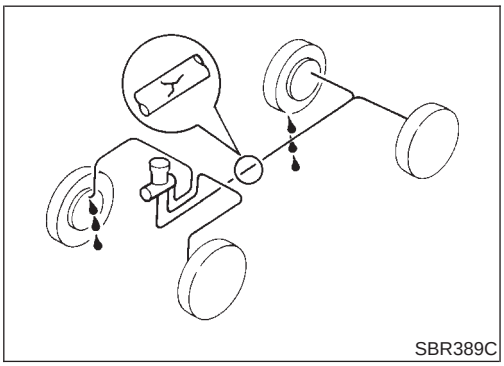

Checking Brake Line

NFBR0007

CAUTION:

If leakage occurs around joints, retighten or, if necessary, replace damaged parts.

1. Check brake lines (tubes and hoses) for cracks, deterioration or other damage. Replace any damaged parts.
2. Check for oil leakage by fully depressing brake pedal while engine is running.

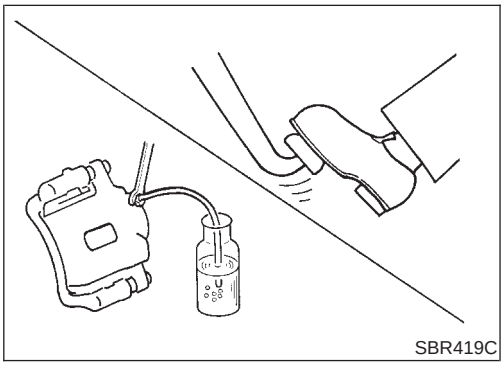

Changing Brake Fluid

NFBR0008

CAUTION:

- **Refill with new brake fluid “DOT 3”.**
- **Always keep fluid level higher than minimum line on reservoir tank.**
- **Never reuse drained brake fluid.**
- **Be careful not to splash brake fluid on painted areas; it may cause paint damage. If brake fluid is splashed on painted areas, wash it away with water immediately.**

1. Clean inside of reservoir tank, and refill with new brake fluid.
2. Connect a vinyl tube to each air bleeder valve.
3. Drain brake fluid from each air bleeder valve by depressing brake pedal.
4. Refill until brake fluid comes out of each air bleeder valve. Use same procedure as in bleeding hydraulic system to refill brake fluid. Refer to “Bleeding Brake System”, BR-9.

Brake Burnishing Procedure

NFBR0036

Burnish the brake contact surfaces according to the following procedure after refinishing or replacing drums or rotors, after replacing pads or linings, or if a soft pedal occurs at very low mileage.

CAUTION:

Only perform this procedure under safe road and traffic conditions. Use extreme caution.

1. Drive the vehicle on a straight smooth road at 50 km/h (31 MPH).
2. Use medium brake pedal/foot effort to bring the vehicle to a complete stop from 50 km/h (31 MPH). Adjust brake pedal/foot

pressure such that vehicle stopping time equals 3 to 5 seconds.

3. To cool the brake system, drive the vehicle at 50 km/h (31 MPH) for 1 minute without stopping.
4. Repeat steps 1 to 3, 10 times or more to complete the burnishing procedure.

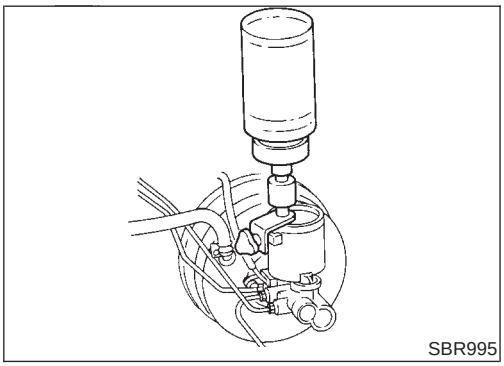
SBR995

Bleeding Brake System

NFBR0009

CAUTION:

- **Carefully monitor brake fluid level at master cylinder during bleeding operation.**
- **Fill reservoir with new brake fluid "DOT 3". Make sure it is full at all times while bleeding air out of system.**
- **Place a container under master cylinder to avoid spillage of brake fluid.**
- **For models with ABS, turn ignition switch OFF and disconnect ABS actuator connectors or battery ground cable.**

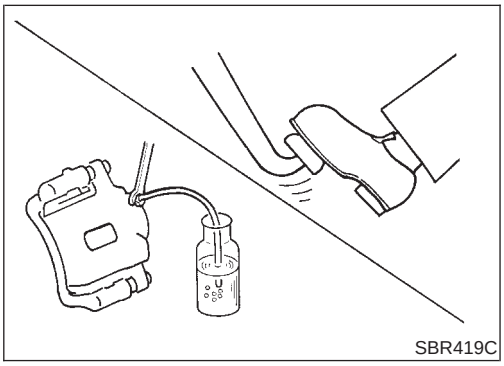
SBR419C

- Bleed air in the following order.
  Right rear brake → Left front brake → Left rear brake → Right front brake

1. Connect a transparent vinyl tube to air bleeder valve.
2. Fully depress brake pedal several times.
3. With brake pedal depressed, open air bleeder valve to release air.
4. Close air bleeder valve.
5. Release brake pedal slowly.
6. Repeat steps 2. through 5. until clear brake fluid comes out of air bleeder valve.

Hydraulic Circuit

NFBR0010

Without TCS

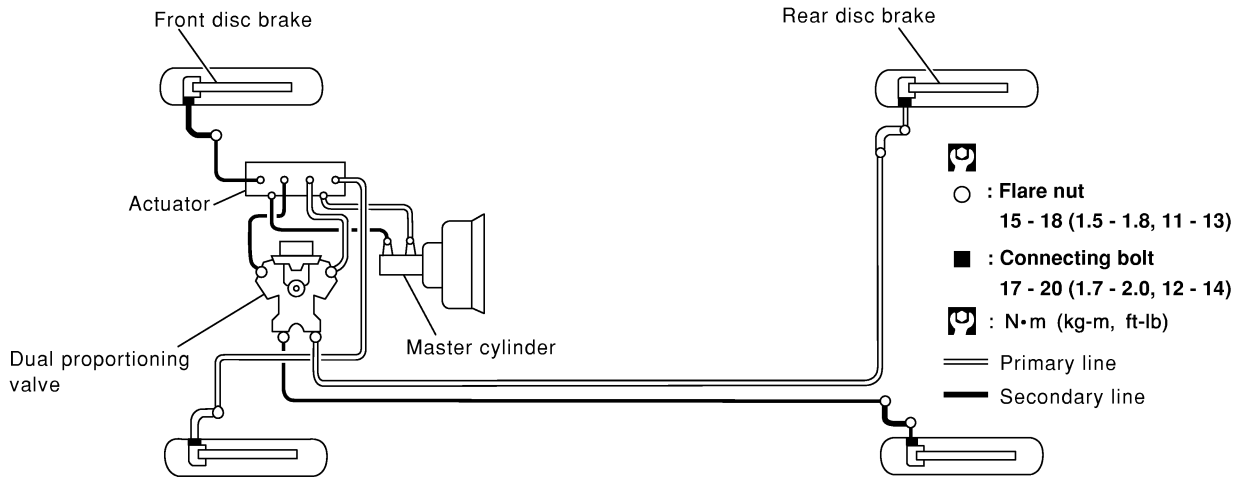

SBR661E

With TCS

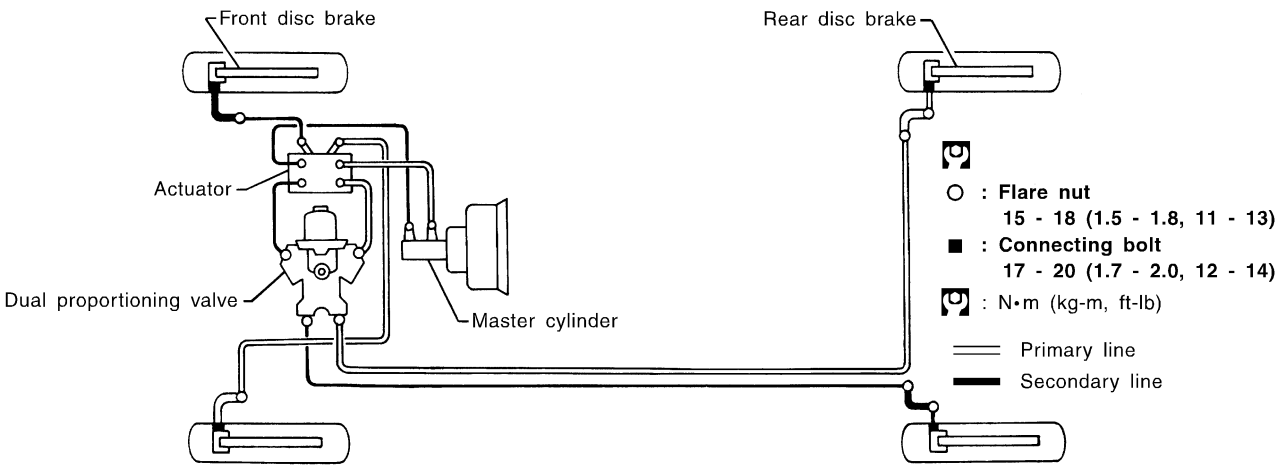

MBR151AB

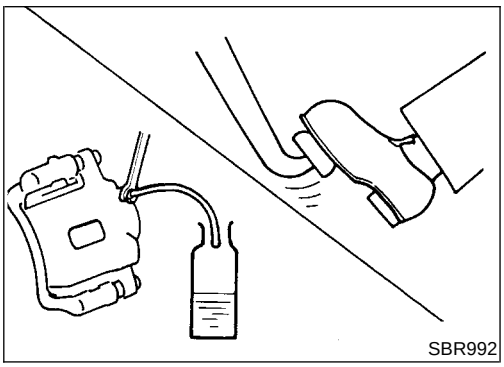

SBR992

Removal

NFBR0011

CAUTION:

- **Be careful not to splash brake fluid on painted areas; it may cause paint damage. If brake fluid is splashed on painted areas, wash it away with water immediately.**
- **All hoses must be free from excessive bending, twisting and pulling.**

1. Connect vinyl tube to air bleeder valve.
2. Drain brake fluid from each air bleeder valve by depressing brake pedal.

3. Remove flare nut connecting brake tube and hose, then withdraw lock spring.
4. Cover openings to prevent entrance of dirt whenever disconnecting brake line.

Inspection

NFBR0012

Check brake lines (tubes and hoses) for cracks, deterioration or other damage. Replace any damaged parts.

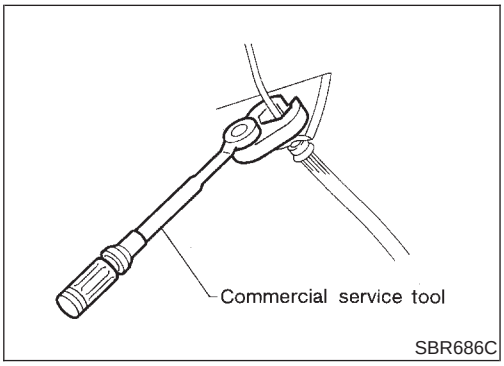

Installation

NFBR0013

CAUTION:

- **Refill with new brake fluid "DOT 3".**
- **Never reuse drained brake fluid.**

1. Tighten all flare nuts and connecting bolts.

   Specification:

   Flare nut

   15 - 18 N·m (1.5 - 1.8 kg-m, 11 - 13 ft-lb)

   Connecting bolt

   17 - 20 N·m (1.7 - 2.0 kg-m, 12 - 14 ft-lb)
2. Refill until new brake fluid comes out of each air bleeder valve.
3. Bleed air. Refer to "Bleeding Brake System", BR-9.

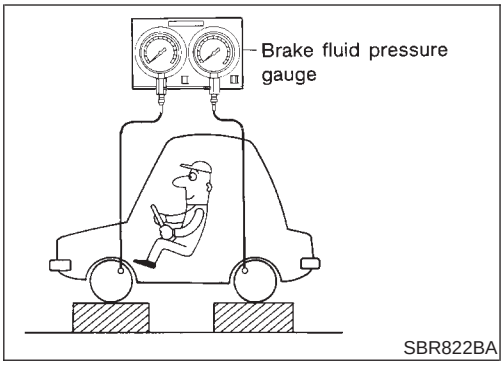

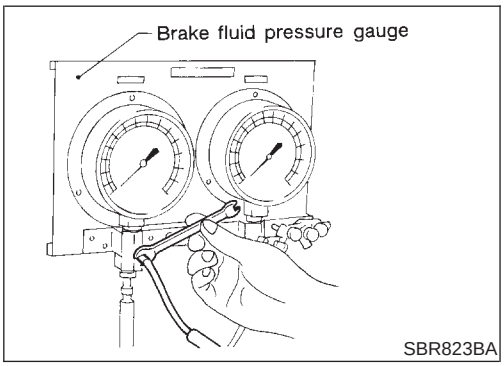

Inspection

NFBR0014

CAUTION:

- **Carefully monitor brake fluid level at master cylinder.**
- **Use new brake fluid "DOT 3".**
- **Be careful not to splash brake fluid on painted areas; it may cause paint damage. If brake fluid is splashed on paint areas, wash it away with water immediately.**

1. Connect Tool to air bleeders of front and rear brakes on either LH and RH side.
2. Bleed air from the Tool.
3. Check fluid pressure by depressing brake pedal.

Unit: kPa (kg/cm^2, psi)

Applied pressure (Front brake)	7,355 (75, 1,067)
Output pressure (Rear brake)	5,100 - 5,492 (52 - 56, 739 - 796)

If output pressure is out of specification, replace dual proportioning valve.

4. Bleed air after disconnecting the Tool. Refer to "Bleeding Brake System", BR-9.

Removal and Installation

NFBR0015

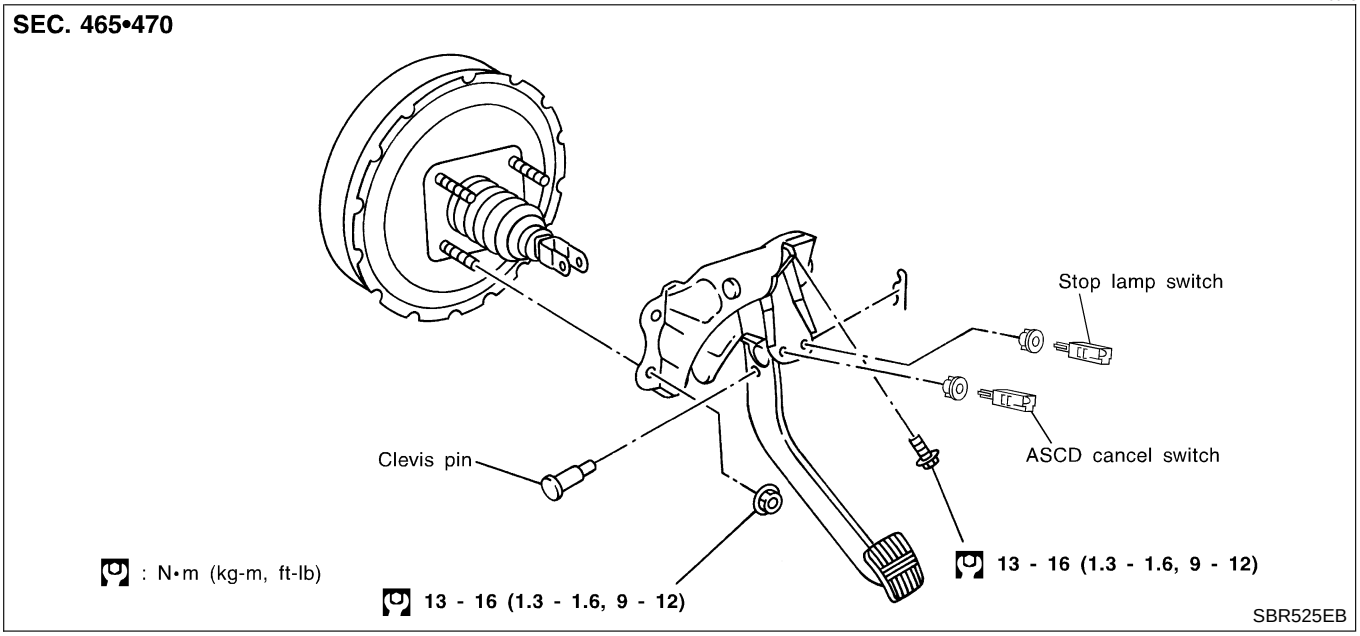

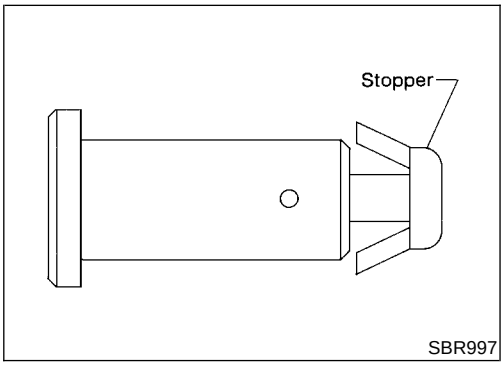

Inspection

NFBR0016

Check brake pedal for following items.

- Brake pedal bend
- Clevis pin deformation
- Crack of any welded portion
- Crack or deformation of clevis pin stopper

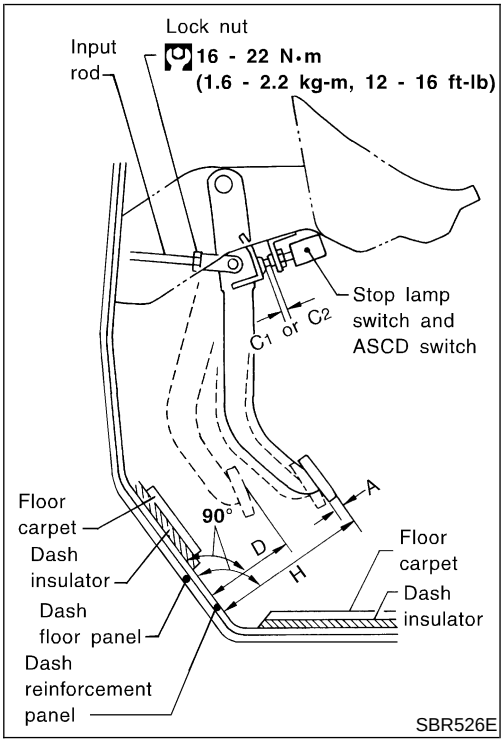

Adjustment

NFBR0017

Check brake pedal free height from metal panel. Adjust if necessary.

H: Free height

Refer to SDS, BR-157.

C_1, C_2: Clearance between pedal stopper and threaded end of stop lamp switch and ASCD switch

0.74 - 1.96 mm (0.0291 - 0.0772 in)

D: Depressed height

A/T models: 82.5 mm (3.248 in)

M/T models: 75.3 mm (2.965 in)

Under force of 490 N (50 kg, 110 lb) with engine running.

Adjustment (Cont'd)

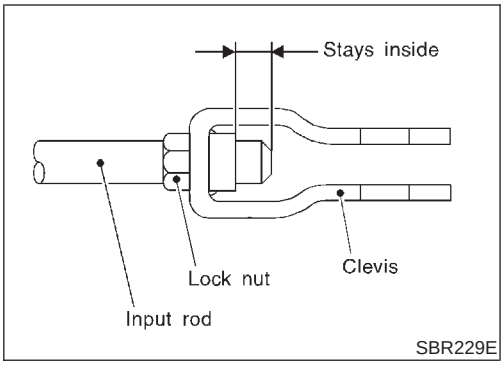

1. Loosen lock nut and adjust pedal free height by turning brake booster input rod. Then tighten lock nut.
2. Check pedal free play.
   Make sure that stop lamps go off when pedal is released.
3. Check brake pedal's depressed height while engine is running. If lower than specification, check brake system for leaks, accumulation of air or any damage to components (master cylinder, wheel cylinder, etc.); then make necessary repairs.

Removal

NFBR0018

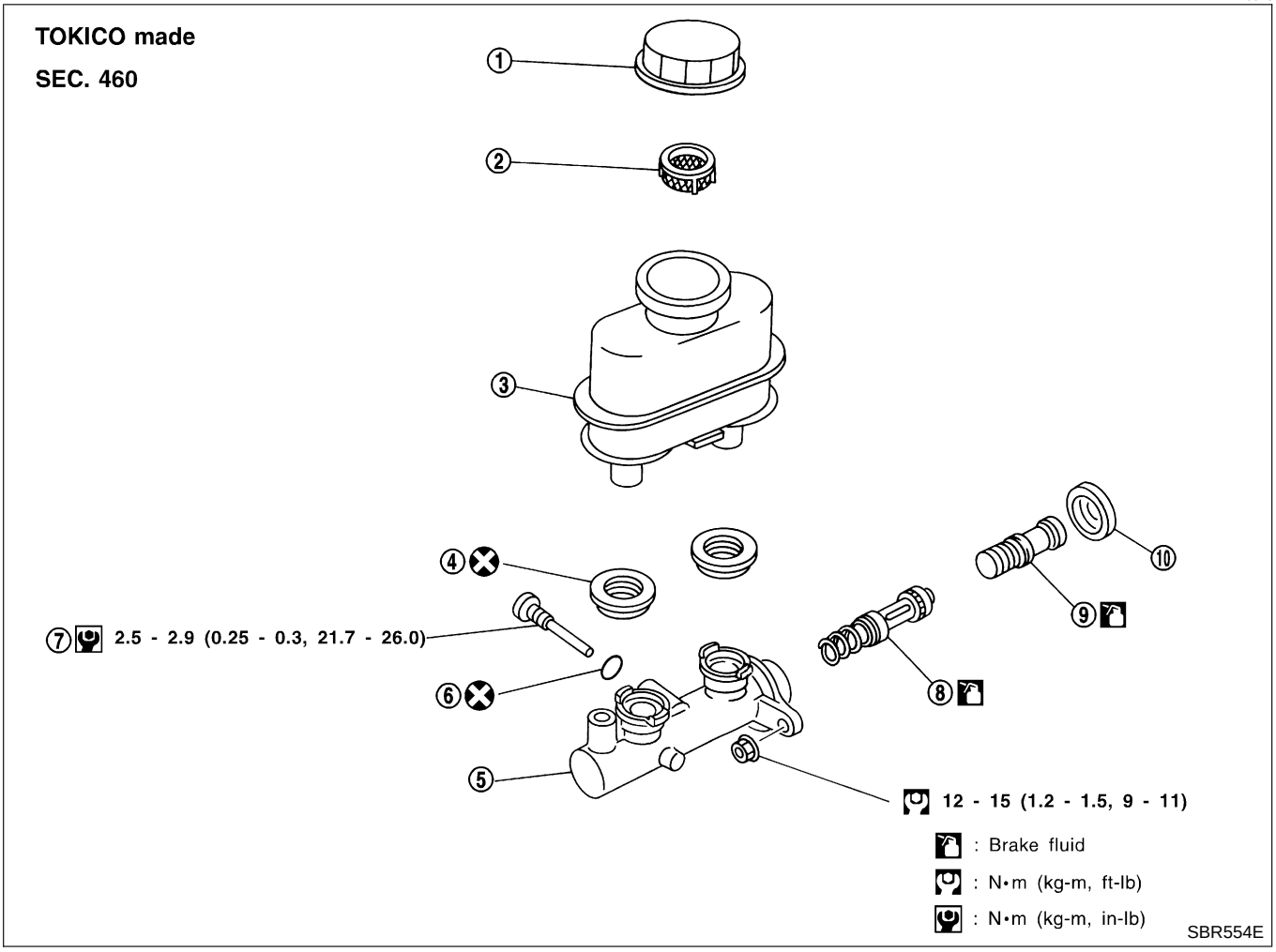

1. Reservoir cap
2. Oil filter
3. Reservoir tank
4. Seal
5. Cylinder body
6. O-ring
7. Piston stopper
8. Secondary piston assembly
9. Primary piston assembly
10. Stopper cap

CAUTION:

Be careful not to splash brake fluid on painted areas; it may cause paint damage. If brake fluid is splashed on painted areas, wash it away with water immediately.

1. Connect a vinyl tube to air bleeder valve.
2. Drain brake fluid from each air bleeder valve, depressing brake pedal to empty fluid from master cylinder.
3. Remove brake pipe flare nuts.
4. Remove master cylinder mounting nuts.

Disassembly

NFBR0019

1. Bend claws of stopper cap outward and remove stopper cap.

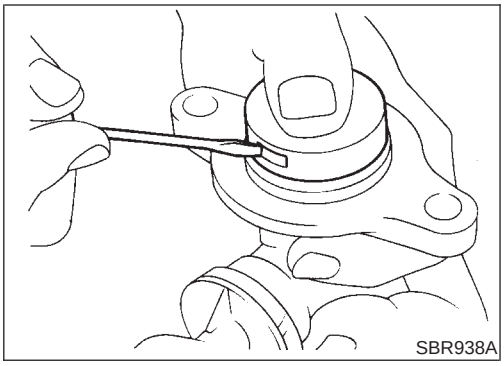
SBR938A

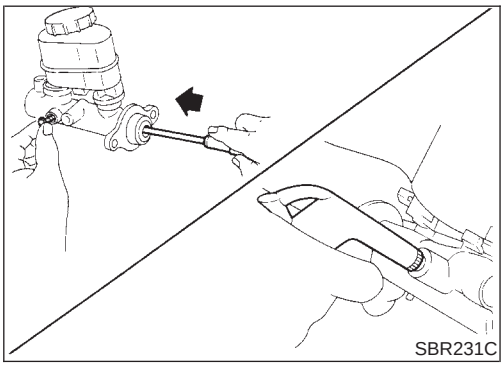
SBR231C

2. Remove valve stopper while piston is pushed into cylinder.
3. Remove piston assemblies.
   If it is difficult to remove secondary piston assembly, gradually apply compressed air through fluid outlet.
4. Draw out reservoir tank.

Inspection

NFBR0020

Check for the following items.
Replace any part if damaged.
Master cylinder:

- Pin holes or scratches on inner wall.

Piston:

- Deformation of or scratches on piston cups.

Assembly

NFBR0021

1. Insert secondary piston assembly. Then insert primary piston assembly.
   - Pay attention to alignment of secondary piston slit with valve stopper mounting hole of cylinder body.

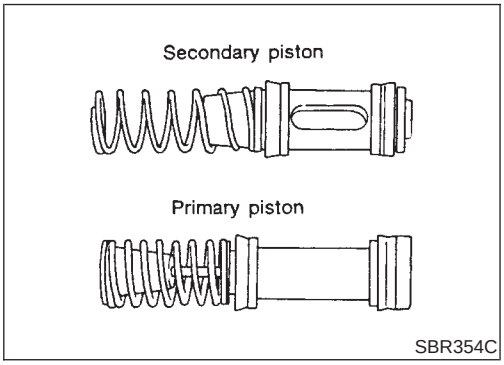

SBR354C

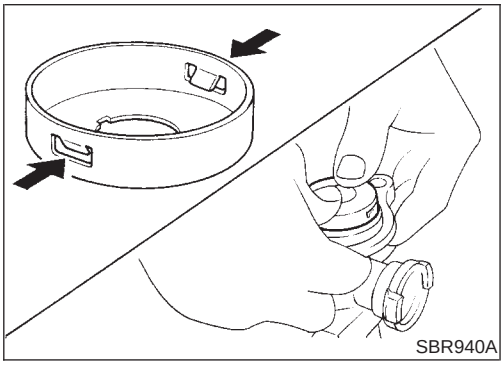
SBR940A

2. Install stopper cap.
   Before installing stopper cap, ensure that claws are bent inward.
3. Push reservoir tank seals into cylinder body.
4. Push reservoir tank into cylinder body.

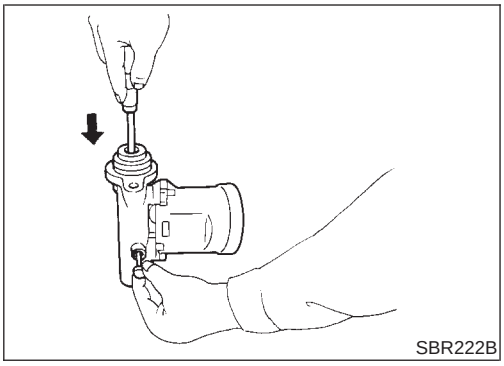

5. Install valve stopper while piston is pushed into cylinder.

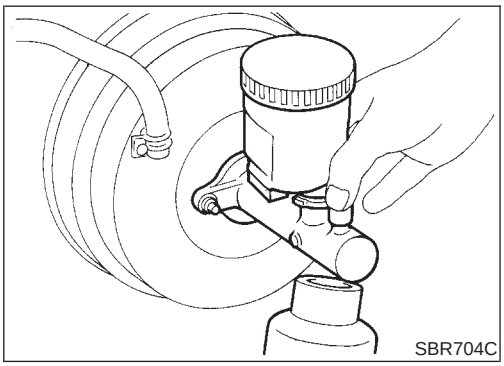

Installation

NFBR0022

CAUTION:

- **Refill with new brake fluid "DOT 3".**
- **Never reuse drained brake fluid.**

1. Place master cylinder onto brake booster and secure mounting nuts lightly.
2. Torque mounting nuts.
   : 12 - 15 N·m (1.2 - 1.5 kg-m, 9 - 11 ft-lb)
3. Fill up reservoir tank with new brake fluid.
4. Plug all ports on master cylinder with fingers to prevent air suction while releasing brake pedal.
5. Have driver depress brake pedal slowly several times until no air comes out of master cylinder.
6. Fit brake lines to master cylinder.
7. Tighten flare nuts.
   : 15 - 18 N·m (1.5 - 1.8 kg-m, 11 - 13 ft-lb)
8. Bleed air from brake system. Refer to "Bleeding Brake System", BR-9.

Removal

NFBR0095

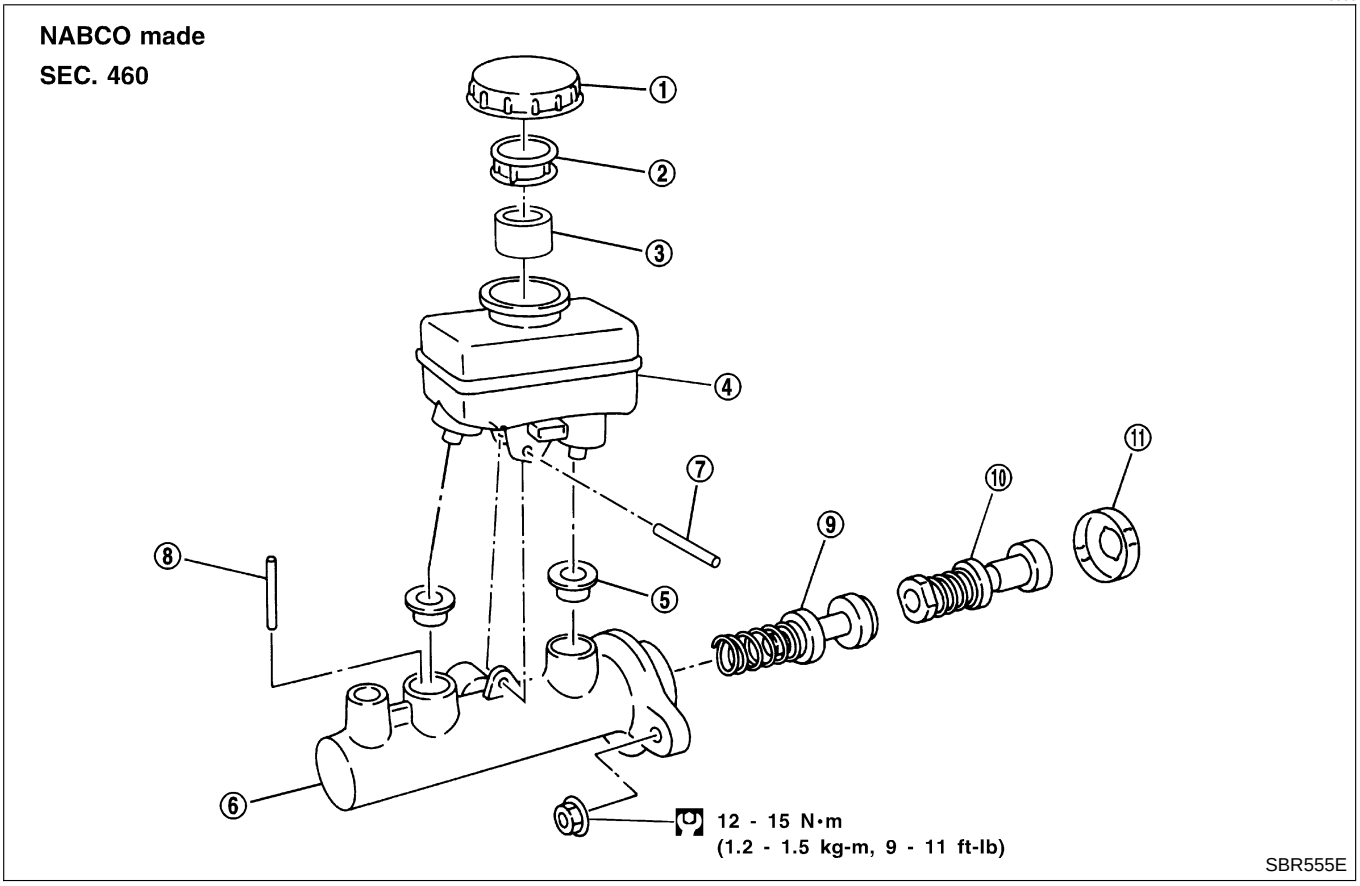

1. Reservoir cap
2. Oil filter
3. Float
4. Reservoir tank
5. Seal
6. Cylinder body
7. Spring pin
8. Piston stopper pin
9. Secondary piston assembly
10. Primary piston assembly
11. Stopper cap

CAUTION:
Be careful not to splash brake fluid on painted areas; it may cause paint damage. If brake fluid is splashed on painted areas, wash it away with water immediately.

1. Connect a vinyl tube to air bleeder valve.
2. Drain brake fluid from each air bleeder valve, depressing brake pedal to empty fluid from master cylinder.
3. Remove brake pipe flare nuts.
4. Remove master cylinder mounting nuts.

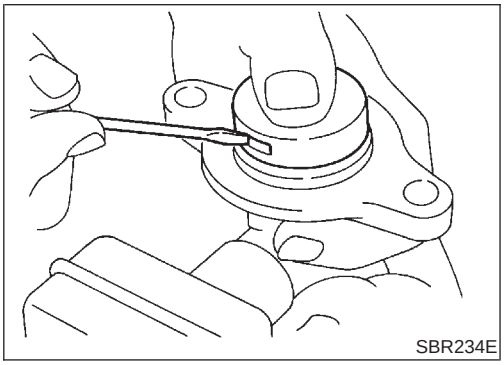

Disassembly

NFBR0096

1. Bend claws of stopper cap outward and remove stopper cap.

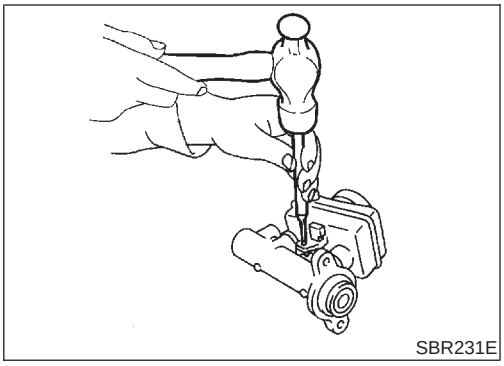
SBR231E

2. Drive out spring pin from cylinder body.
3. Draw out reservoir tank and seals.

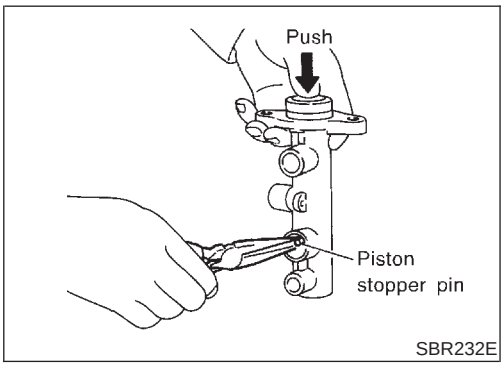

SBR232E

4. Remove piston stopper pin while piston is pushed into cylinder.
5. Remove piston assemblies.
   If it is difficult to remove secondary piston assembly, gradually apply compressed air through fluid outlet.

Inspection

NFBR0097

Check for the following items.
Replace any part if damaged.
Master cylinder:

- Pin holes or scratches on inner wall.

Piston:

- Deformation of or scratches on piston cups.

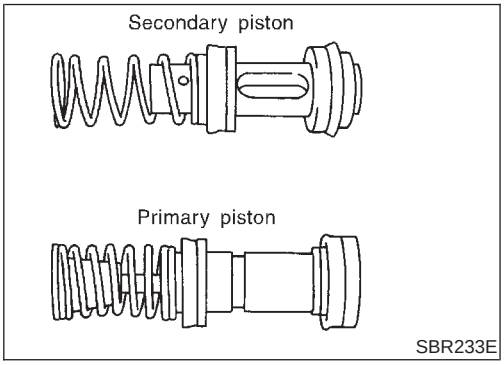

SBR233E

Assembly

NFBR0098

1. Insert secondary piston assembly. Then insert primary piston assembly.
   - **Pay attention to alignment of secondary piston slit with valve stopper mounting hole of cylinder body.**

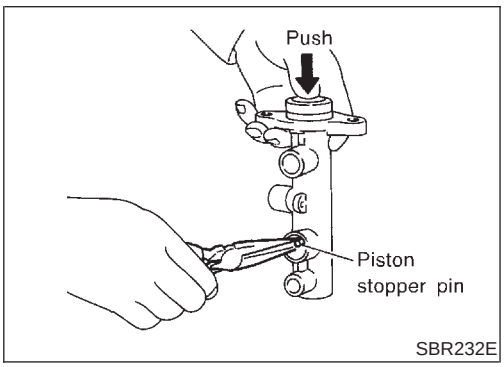

SBR232E

2. Install piston stopper pin while piston is pushed into cylinder.
3. Push reservoir tank seals and reservoir tank into cylinder body.
4. Install spring pin.

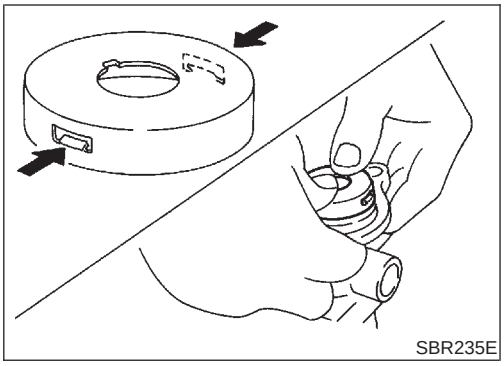
SBR235E

5. Install stopper cap.

Before installing stopper cap, ensure that claws are bent inward.

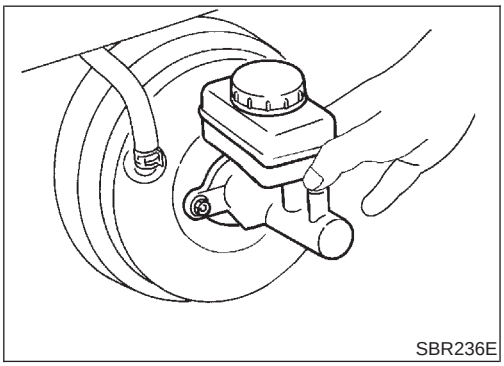
SBR236E

Installation

NFBR0099

CAUTION:

- **Refill with new brake fluid "DOT 3".**
- **Never reuse drained brake fluid.**

1. Place master cylinder onto brake booster and secure mounting nuts lightly.
2. Torque mounting nuts.
   : 12 - 15 N·m (1.2 - 1.5 kg-m, 9 - 11 ft-lb)
3. Fill up reservoir tank with new brake fluid.
4. Plug all ports on master cylinder with fingers to prevent air suction while releasing brake pedal.
5. Have driver depress brake pedal slowly several times until no air comes out of master cylinder.
6. Fit brake lines to master cylinder.
7. Tighten flare nuts.
   : 15 - 18 N·m (1.5 - 1.8 kg-m, 11 - 13 ft-lb)
8. Bleed air from brake system.

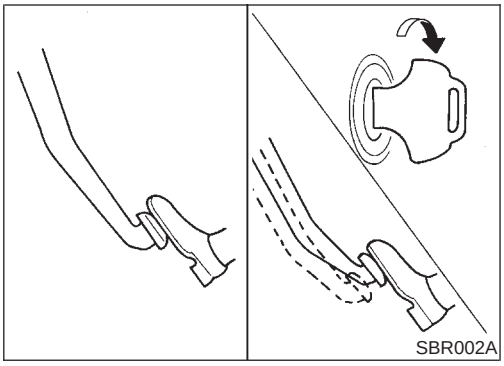

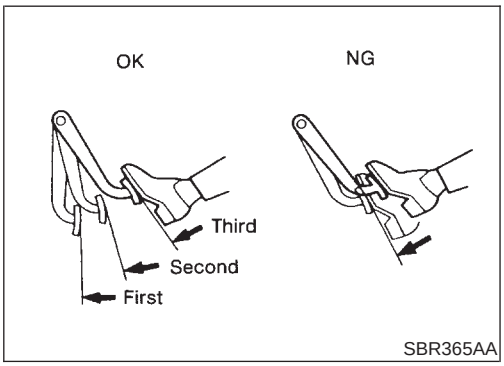

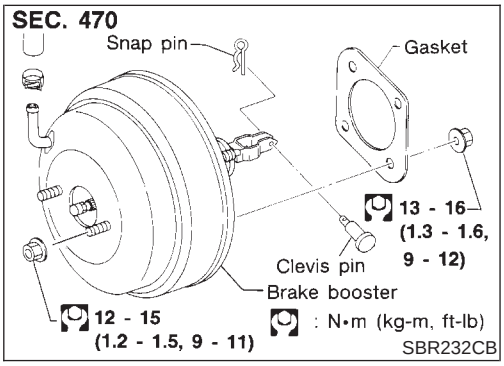

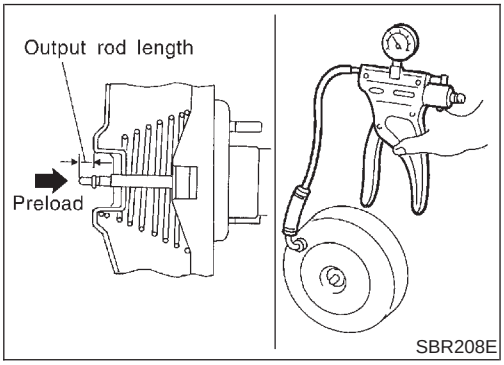

On-vehicle Service

NFBR0023

OPERATING CHECK

NFBR0023S01

1. Stop engine and depress brake pedal several times. Check that pedal stroke does not change.
2. Depress brake pedal, then start engine. If pedal goes down slightly, operation is normal.

AIRTIGHT CHECK

NFBR0023S02

1. Start engine, and stop it after one or two minutes. Depress brake pedal several times slowly. The pedal should go further down the first time, and then it should gradually rise thereafter.
2. Depress brake pedal while engine is running, and stop engine with pedal depressed. The pedal stroke should not change after holding pedal down for **30 seconds.**

Removal

NFBR0024

CAUTION:

- **Be careful not to splash brake fluid on painted areas; it may cause paint damage. If brake fluid is splashed on painted areas, wash it away with water immediately.**
- **Be careful not to deform or bend brake pipes, during removal of booster.**

Inspection

NFBR0025

OUTPUT ROD LENGTH CHECK

NFBR0025S01

1. Apply vacuum of −66.7 kPa (−500 mmHg, −19.69 inHg) to brake booster with a handy vacuum pump.
2. Add preload of 19.6 N (2 kg, 4.4 lb) to output rod.
3. Check output rod length.

   Specified length:

   10.275 - 10.525 mm (0.4045 - 0.4144 in)

Installation

NFBR0026

CAUTION:

- **Be careful not to deform or bend brake pipes, during installation of booster.**
- **Replace clevis pin if damaged.**
- **Refill with new brake fluid “DOT 3”.**
- **Never reuse drained brake fluid.**
- **Take care not to damage brake booster mounting bolt thread when installing. Due to the acute angle of installation, the threads can be damaged with the dash panel.**

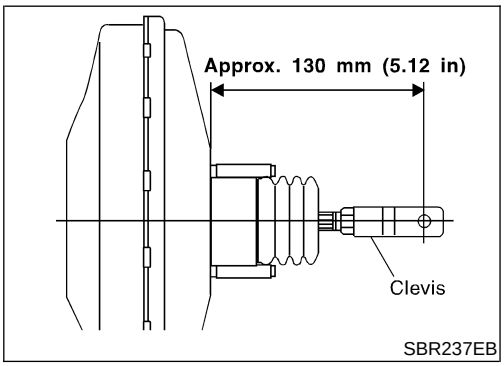

1. Before fitting booster, temporarily adjust clevis to dimension shown.
2. Fit booster, then secure mounting nuts (brake pedal bracket to master cylinder) lightly.
3. Connect brake pedal and booster input rod with clevis pin.
4. Secure mounting nuts.

   Specification:

   13 - 16 N·m (1.3 - 1.6 kg-m, 9 - 12 ft-lb)
5. Install master cylinder. Refer to “Installation” in “MASTER CYLINDER”, BR-17 or BR-20.
6. Bleed air. Refer to “Bleeding Brake System”, BR-9.

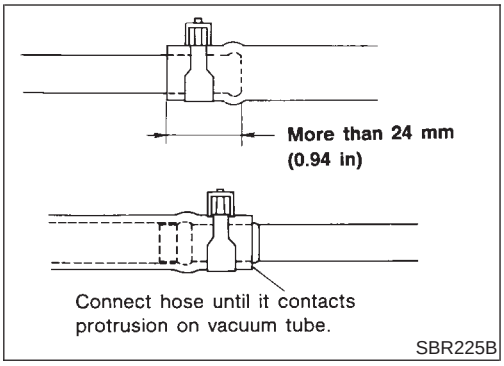

Removal and Installation

NFBR0027

CAUTION:

When installing vacuum hoses, pay attention to the following points.

- **Do not apply any oil or lubricants to vacuum hose and check valve.**
- **Insert vacuum tube into vacuum hose as shown.**
- **Install check valve, paying attention to its direction.**

Inspection

NFBR0028

HOSES AND CONNECTORS

NFBR0028S01

Check vacuum lines, connections and check valve for airtightness, improper attachment chafing and deterioration.

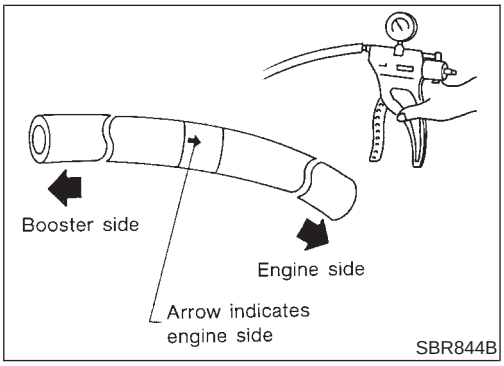

CHECK VALVE

NFBR0028S02

Check vacuum with a vacuum pump.

Connect to booster side	Vacuum should exist.
Connect to engine side	Vacuum should not exist.

Component

NFBR0030

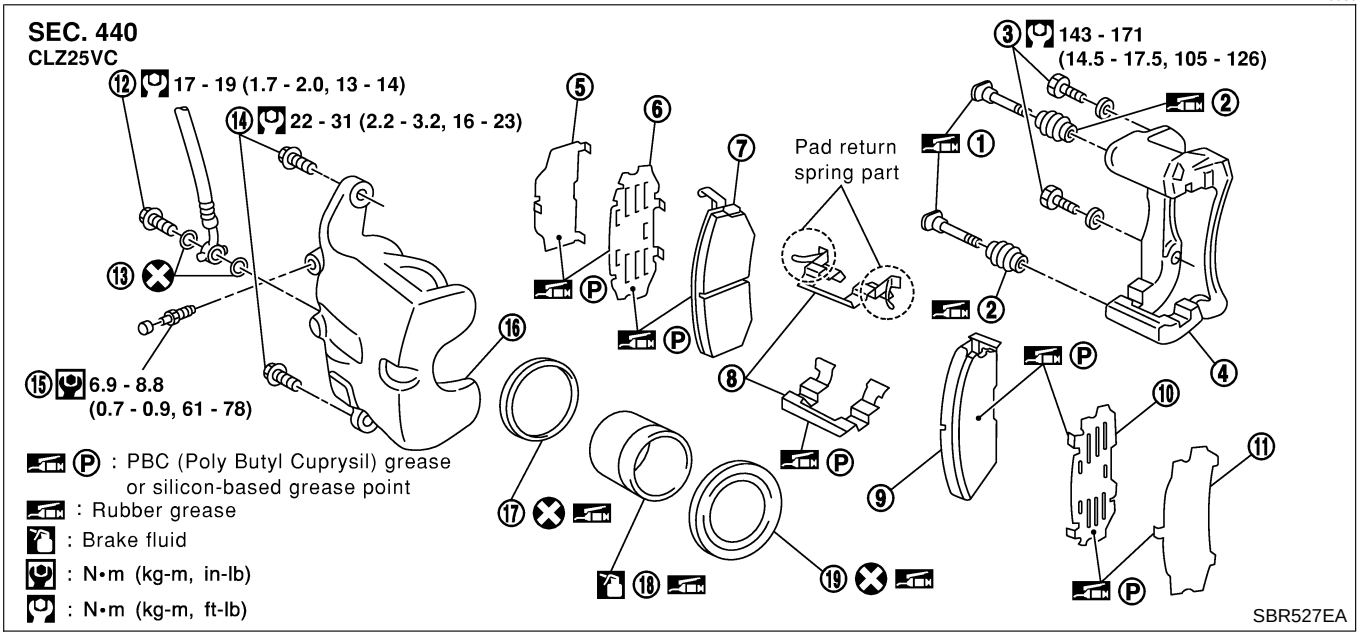

1. Main pin
2. Pin boot
3. Torque member fixing bolt
4. Torque member
5. Shim cover
6. Inner shim
7. Inner pad
8. Pad retainer
9. Outer pad
10. Outer shim
11. Shim cover
12. Connecting bolt
13. Copper washer
14. Main pin bolt
15. Bleed valve
16. Cylinder body
17. Piston seal
18. Piston
19. Piston boot

Pad Replacement

NFBR0029

WARNING:

Clean brake pads with a vacuum dust collector to minimize the hazard of airborne particles or other materials.

CAUTION:

- **When cylinder body is open, do not depress brake pedal because piston will pop out.**
- **Be careful not to damage piston boot or get oil on rotor. Always replace shims when replacing pads.**
- **If shims are rusted or show peeling of the rubber coat, replace them with new shims.**
- **It is not necessary to remove connecting bolt except for disassembly or replacement of caliper assembly. In this case, suspend cylinder body with wire so as not to stretch brake hose.**
- **Burnish the brake contact surfaces after refinishing or replacing drums or rotors, after replacing pads or linings, or if a soft pedal occurs at very low mileage.**
  Refer to “Brake Burnishing Procedure”, “ON-VEHICLE SERVICE”, BR-8.

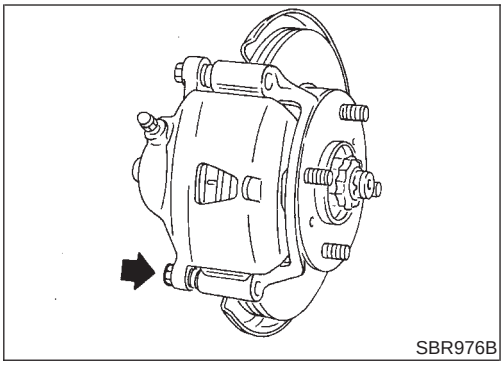
SBR976B

1. Remove master cylinder reservoir cap.
2. Remove pin bolt.
3. Open cylinder body upward. Then remove pad with retainers, inner and outer shims.

   Standard pad thickness:
   11 mm (0.43 in)
   Pad wear limit:
   2.0 mm (0.079 in)

   Carefully monitor brake fluid level because brake fluid will return to reservoir when pushing back piston.

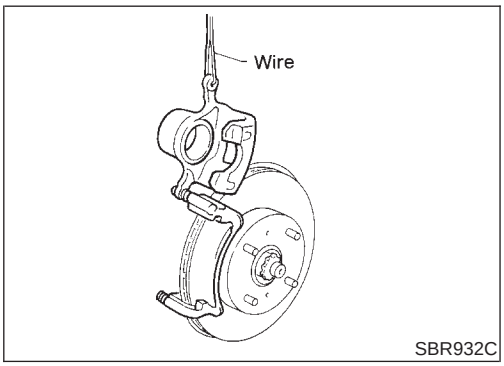

SBR932C

Removal

NFBR0031

WARNING:
Clean brake pads with a vacuum dust collector to minimize the hazard of airborne particles or other materials.

Remove torque member fixing bolts and connecting bolt.
It is not necessary to remove connecting bolt except for disassembly or replacement of caliper assembly. In this case, suspend caliper assembly with wire so as not to stretch brake hose.

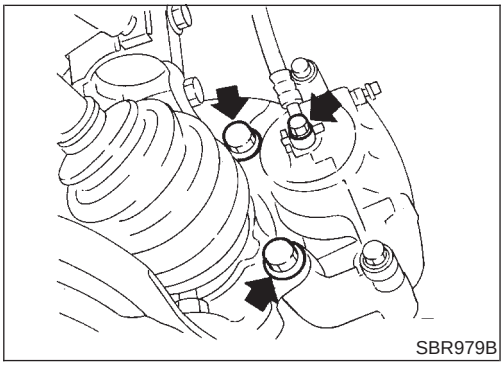
SBR979B

Disassembly

NFBR0032

WARNING:
Do not place your fingers in front of piston.

CAUTION:
Do not scratch or score cylinder wall.

1. Push out piston with piston boot with compressed air.
2. Remove piston seal with a suitable tool.

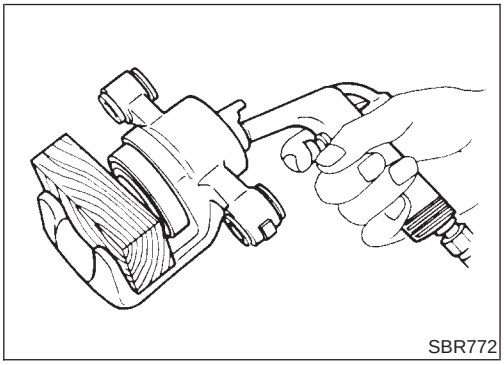
SBR772

CAUTION:
When removing the pad retainer from the torque member, lift it up and out in the direction of the arrows in the figure.

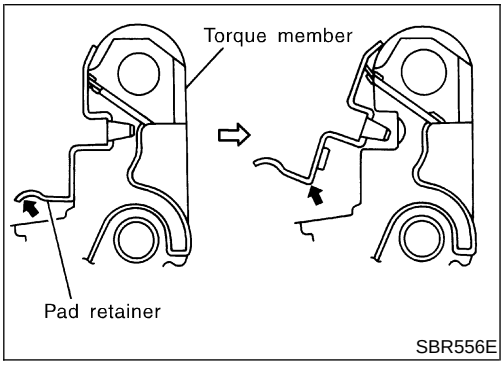

SBR556E

Inspection

NFBR0033

CALIPER

NFBR0033S01

Cylinder Body

NFBR0033S0101

- Check inside surface of cylinder for score, rust, wear, damage or presence of foreign materials. If any of the above conditions are observed, replace cylinder body.
- Minor damage from rust or foreign materials may be eliminated by polishing surface with a fine emery paper. Replace cylinder body if necessary.

CAUTION:
Use brake fluid to clean. Never use mineral oil.

Piston

NFBR0033S0102

CAUTION:
Piston sliding surface is plated. Do not polish with emery paper even if rust or foreign materials are stuck to sliding surface.

Check piston for score, rust, wear, damage or presence of foreign materials. Replace if any of the above conditions are observed.

Slide Pin, Pin Bolt and Pin Boot

NFBR0033S0103

Check for wear, cracks or other damage. Replace if any of the above conditions are observed.

ROTOR

NFBR0033S02

Rubbing Surface

NFBR0033S0201

Check rotor for roughness, cracks or chips.

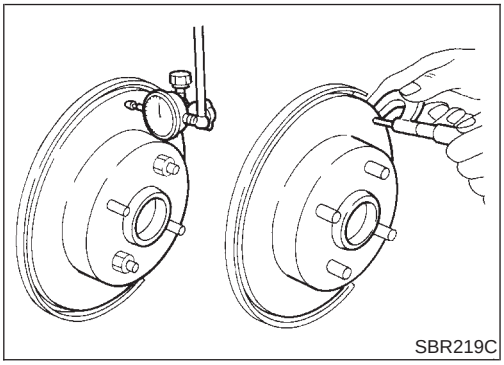
SBR219C

Runout

NFBR0033S0202

1. Secure rotor to wheel hub with at least two nuts (M12 x 1.25).
2. Check runout using a dial indicator.
   Make sure that wheel bearing axial end play is within the specifications before measuring. Refer to AX section (“Front Wheel Bearing”, “ON-VEHICLE SERVICE”).
   Maximum runout:
   0.07 mm (0.0028 in)
3. If the runout is out of specification, find minimum runout position as follows:

a. Remove nuts and rotor from wheel hub.
b. Shift the rotor one hole and secure rotor to wheel hub with nuts.
c. Measure runout.
d. Repeat steps a. to c. so that minimum runout position can be found.

4. If the runout is still out of specification, turn rotor with on-car brake lathe (“MAD, DL-8700”, “AMMCO 700 and 705” or equivalent).

Thickness

NFBR0033S0203

Thickness variation (At least 8 positions):
Maximum 0.01 mm (0.0004 in)

If thickness variation exceeds the specification, turn rotor with on-car brake lathe.

Rotor repair limit:
24.0 mm (0.945 in)

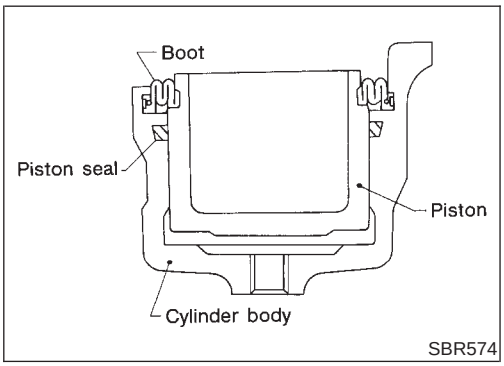

Assembly

NFBR0034

1. Insert piston seal into groove on cylinder body.
2. With piston boot fitted to piston, insert piston boot into groove on cylinder body and install piston.
3. Properly secure piston boot.

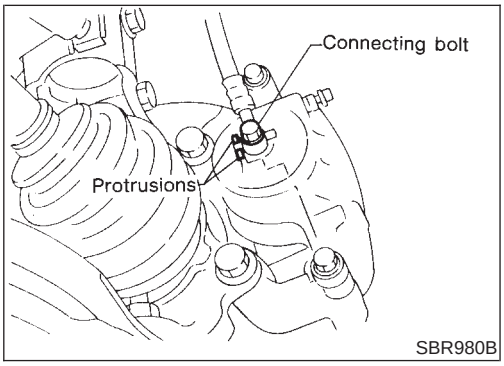

Installation

NFBR0035

CAUTION:

- **Refill with new brake fluid "DOT 3".**
- **Never reuse drained brake fluid.**

1. Install brake hose to caliper securely.
2. Install all parts and secure all bolts.
3. Bleed air. Refer to "Bleeding Brake System", BR-9.

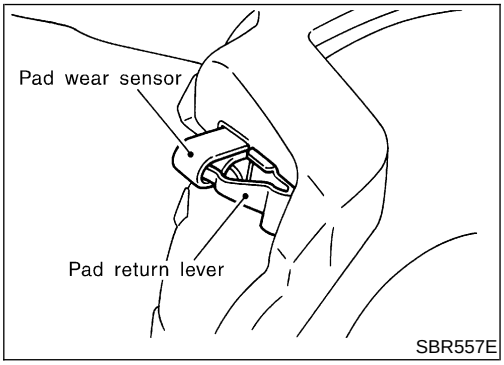

CAUTION:

The upper pad retainer is built so the pad returns to its original position. Be careful to install the pad-return lever securely to the pad wear sensor, as shown in the left figure.

Component

NFBR0038

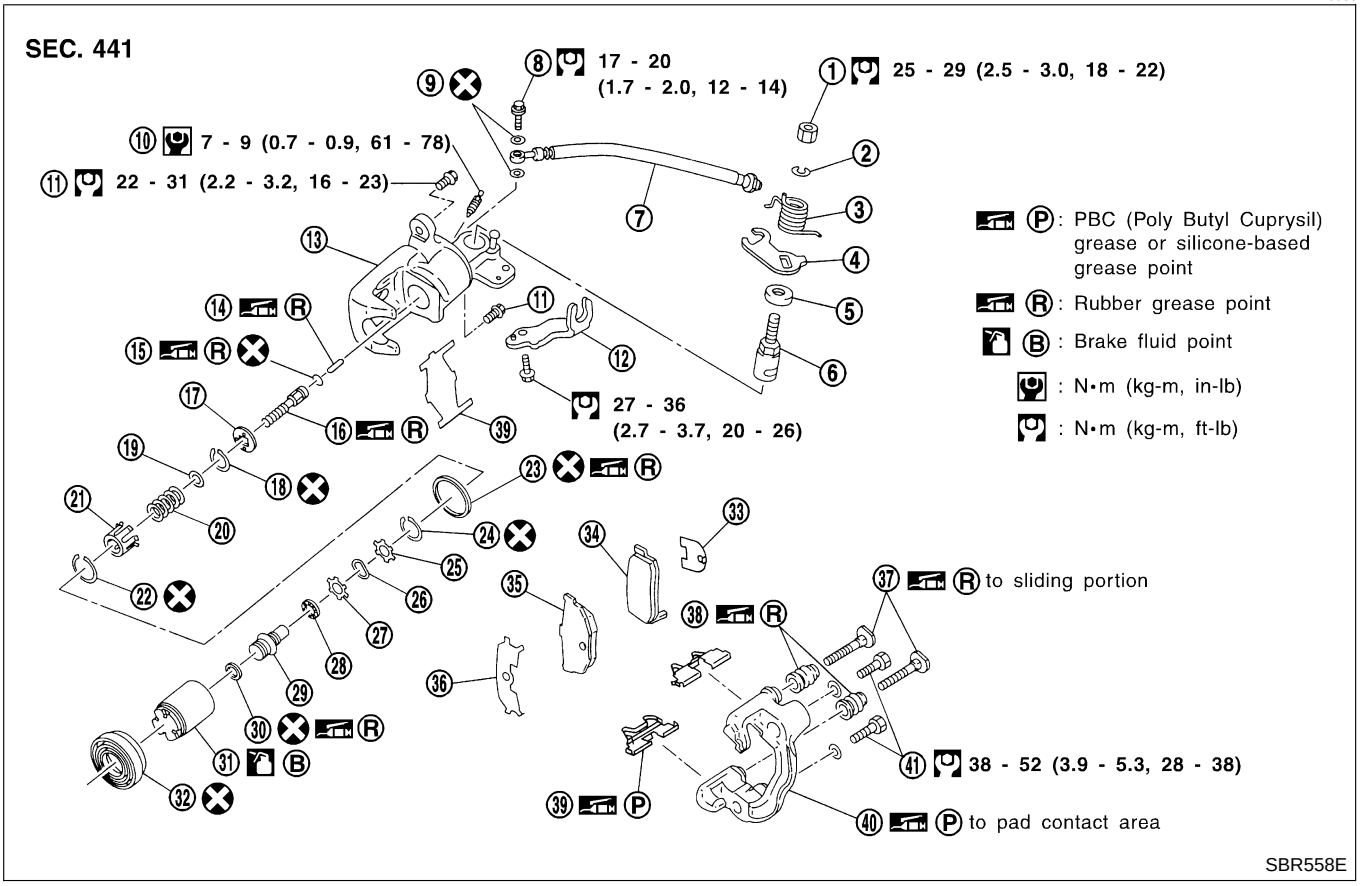

1. Nut
2. Washer
3. Return spring
4. Parking brake lever
5. Cam boot
6. Cam
7. Brake hose
8. Connecting bolt
9. Copper washer
10. Bleed screw
11. Pin bolt
12. Cable mounting bracket
13. Cylinder
14. Strut
15. O-ring
16. Push rod
17. Key plate
18. Ring C
19. Seat
20. Spring
21. Spring cover
22. Ring B
23. Piston seal
24. Ring A
25. Spacer
26. Wave washer
27. Spacer
28. Ball bearing
29. Adjust nut
30. Cup
31. Piston
32. Dust seal
33. Inner shim
34. Inner pad
35. Outer pad
36. Outer shim
37. Pin
38. Pin boot
39. Pad retainer
40. Torque member
41. Torque member fixing bolt

Pad Replacement

NFBR0037

WARNING:

Clean brake pads with a vacuum dust collector to minimize the hazard of airborne particles or other materials.

CAUTION:

- **When cylinder body is open, do not depress brake pedal because piston will pop out.**
- **Be careful not to damage piston boot or get oil on rotor. Always replace shims in replacing pads.**
- **If shims are rusted or show peeling of rubber coat, replace them with new shims.**

- **It is not necessary to remove connecting bolt except for disassembly or replacement of caliper assembly. In this case, suspend cylinder body with wire so as not to stretch brake hose.**
- **Burnish the brake contact surfaces after refinishing or replacing drums or rotors, after replacing pads or linings, or if a soft pedal occurs at very low mileage.**
  Refer to "Brake Burnishing Procedure", "ON-VEHICLE SERVICE", BR-8.

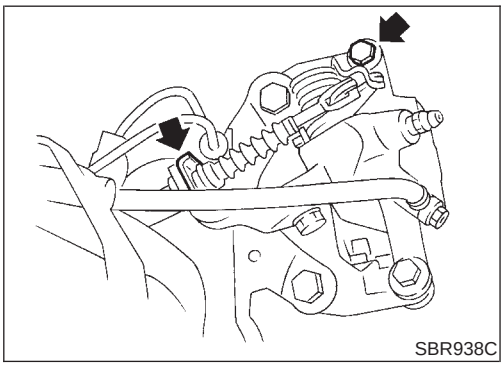

SBR938C

1. Remove master cylinder reservoir cap.
2. Remove brake cable mounting bolt and lock spring.
3. Release parking brake control lever, then disconnect cable from the caliper.
4. Remove upper pin bolt.
5. Open cylinder body downward. Then remove pad retainers, and inner and outer shims.

   Standard pad thickness:
   10 mm (0.39 in)
   Pad wear limit:
   1.5 mm (0.059 in)

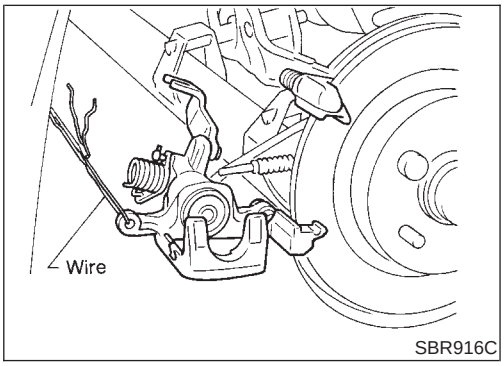

SBR916C

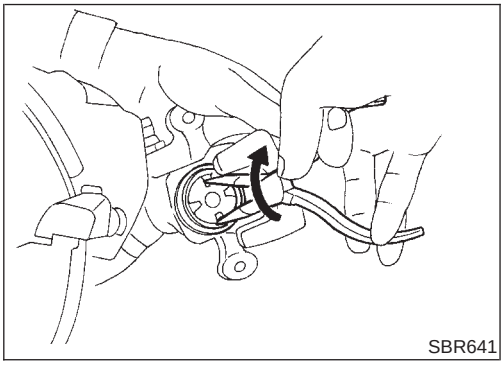

SBR641

6. When installing new pads, push piston into cylinder body by gently turning piston clockwise, as shown.
   Carefully monitor brake fluid level because brake fluid will return to reservoir when pushing back piston.

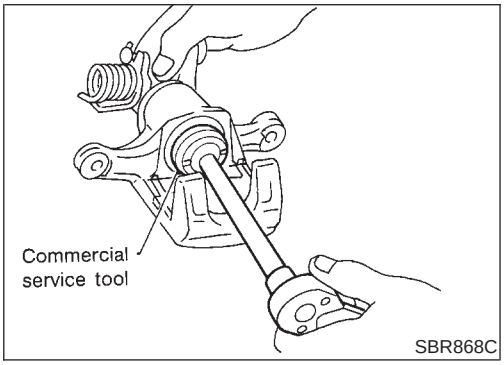

SBR868C

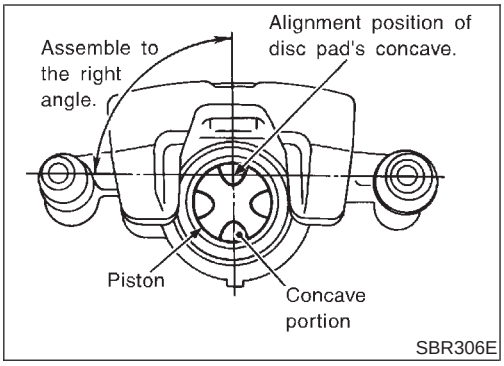

7. Adjust the piston to the right angle as shown in the figure.

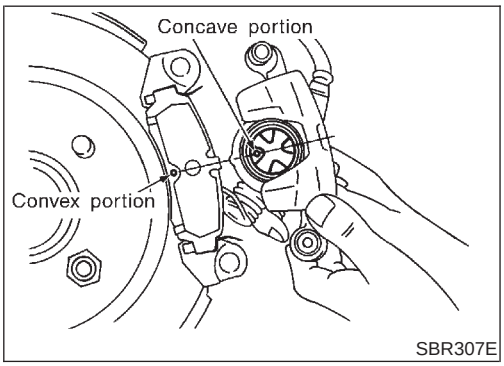

8. As shown in the figure, align the piston's concave to the pad's convex, then install the cylinder body to the torque member.

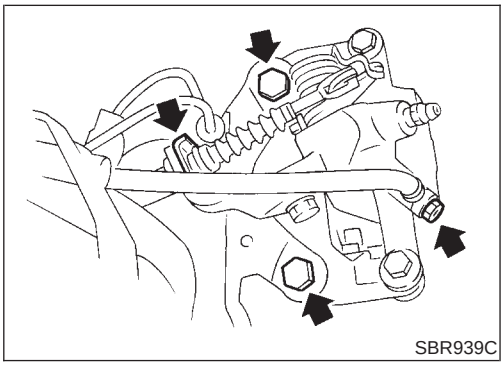

Removal

NFBR0039

WARNING:

Clean brake pads with a vacuum dust collector to minimize the hazard of airborne particles or other materials.

1. Remove brake cable mounting bolt and lock spring.
2. Release parking brake control lever, then disconnect cable from the caliper.
3. Remove torque member fixing bolts and connecting bolt.

It is not necessary to remove connecting bolt except for disassembly or replacement of caliper assembly. In this case, suspend caliper assembly with wire so as not to stretch brake hose.

Disassembly

NFBR0040

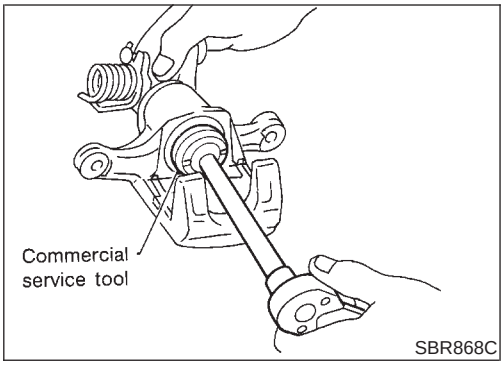

SBR868C

1. Remove piston by turning it counterclockwise with suitable commercial service tool or long nose pliers.

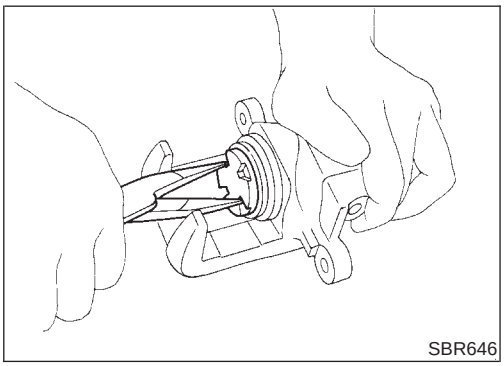
SBR646

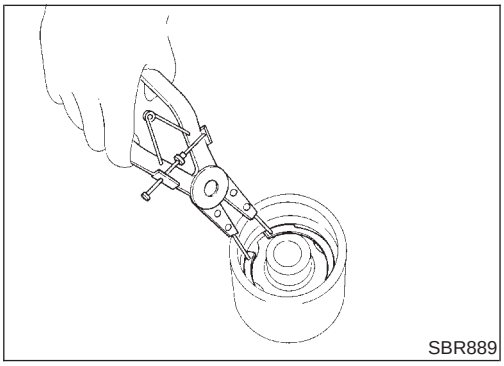
SBR889

2. Pry off ring A from piston with suitable pliers and remove adjusting nut.

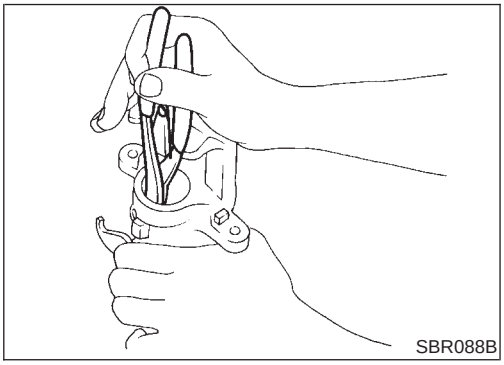
SBR088B

3. Disassemble cylinder body.
   a. Pry off ring B with suitable pliers, then remove spring cover, spring and seat.
   b. Pry off ring C, then remove key plate, push rod and rod.

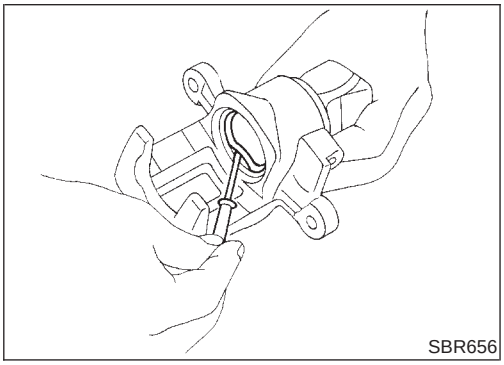
SBR656

   c. Remove piston seal.
      Be careful not to damage cylinder body.

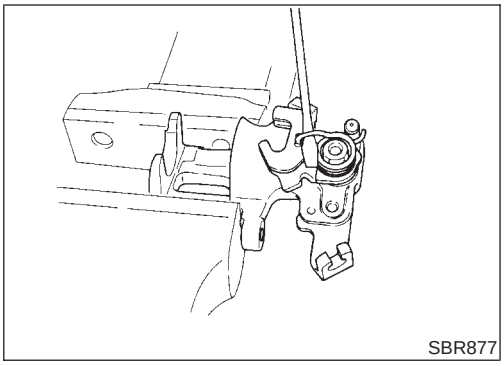
SBR877

4. Remove return spring, toggle lever and cable guide.

Inspection

NFBR0041

CALIPER

NFBR0041S01

CAUTION:

Use brake fluid to clean cylinder. Never use mineral oil.

Cylinder Body

NFBR0041S0101

- Check inside surface of cylinder for score, rust, wear, damage or presence of foreign materials. If any of the above conditions are observed, replace cylinder body.
- Minor damage from rust or foreign materials may be eliminated by polishing surface with a fine emery paper.
  Replace cylinder body if necessary.

Torque Member

NFBR0041S0102

Check for wear, cracks or other damage. Replace if necessary.

Piston

NFBR0041S0103

CAUTION:

Piston sliding surface is plated. Do not polish with emery paper even if rust or foreign matter is stuck to sliding surface.

Check piston for score, rust, wear, damage or presence of foreign materials.
Replace if any of the above conditions are observed.

Pin and Pin Boot

NFBR0041S0104

Check for wear, cracks or other damage.
Replace if any of the above conditions are observed.

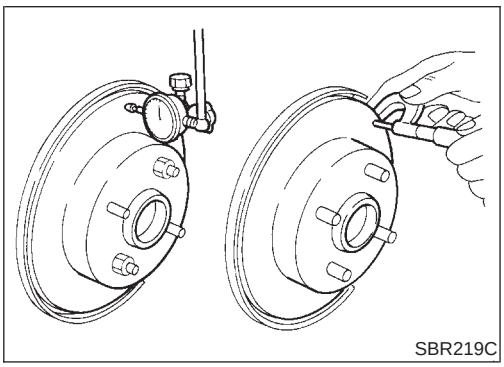
SBR219C

ROTOR

NFBR0041S02

Rubbing Surface

NFBR0041S0201

Check rotor for roughness, cracks or chips.

Runout

NFBR0041S0202

1. Secure rotor to wheel hub with two nuts (M12 x 1.25).
2. Check runout using a dial indicator.

Make sure that axial end play is within the specifications before measuring. Refer to AX section ("REAR WHEEL BEARING", "On-vehicle Service").

3. Change relative positions of rotor and wheel hub so that runout is minimized.

Maximum runout:
0.07 mm (0.0028 in)

Thickness

NFBR0041S0203

Rotor repair limit:
Standard thickness
9 mm (0.35 in)
Minimum thickness
8 mm (0.31 in)
Thickness variation (At least 8 portions)
Maximum 0.02 mm (0.0008 in)

Assembly

NFBR0042

1. Insert cam with depression facing towards open end of cylinder.

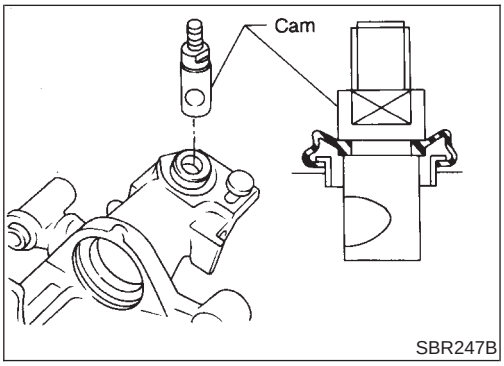

SBR247B

2. Generously apply rubber grease to strut and push rod to make insertion easy.

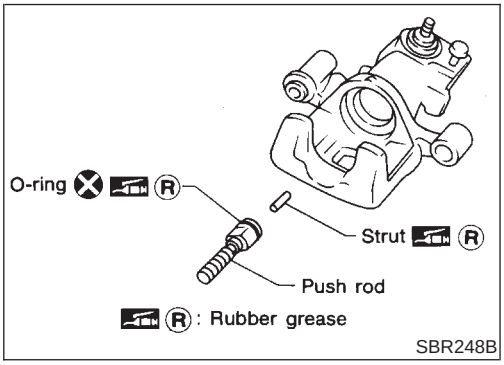

SBR248B

3. Fit push rod into square hole in key plate. Also match convex portion of key plate with concave portion of cylinder.

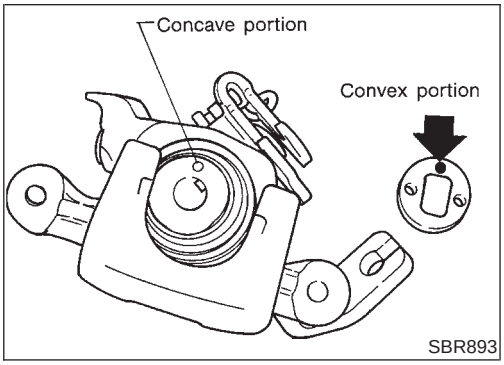

SBR893

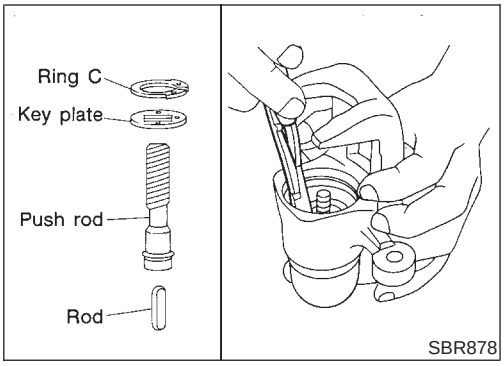

4. Install ring C with a suitable tool.

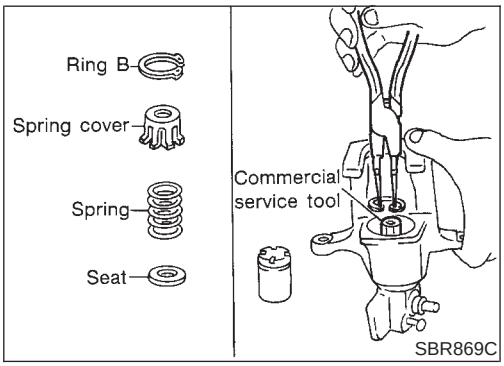

5. Install seat, spring, spring cover and ring B with suitable press and drift.

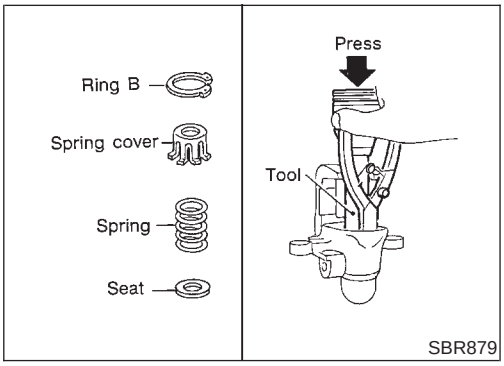

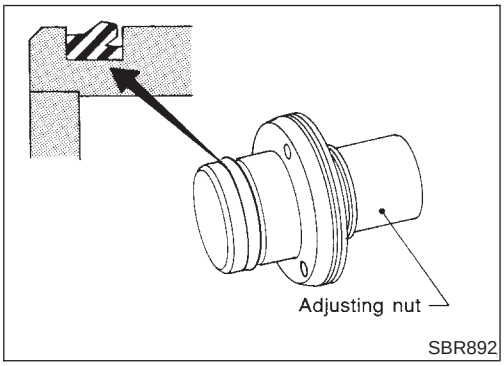

6. Install cup in the specified direction.

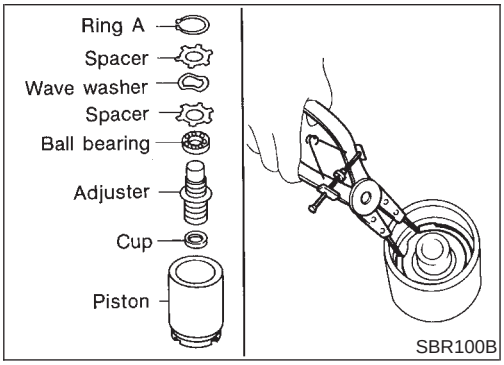

7. Install cup, adjuster, bearing, spacers, washers and ring A with a suitable tool.

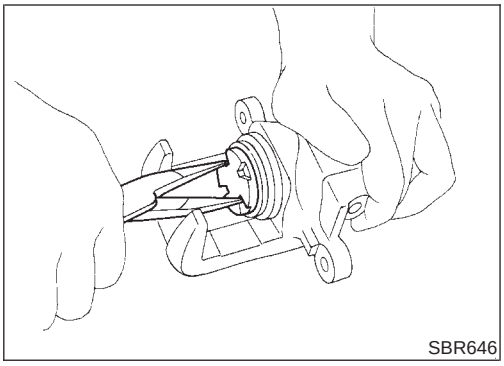
SBR646

8. Insert piston seal into groove on cylinder body.
9. With piston boot fitted to piston, insert piston boot into groove on cylinder body and fit piston by turning it clockwise with long nose pilers, or suitable tool.

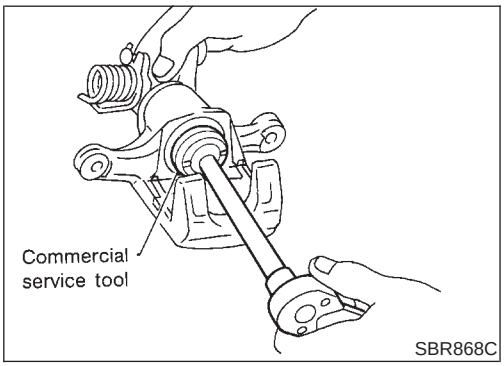

SBR868C

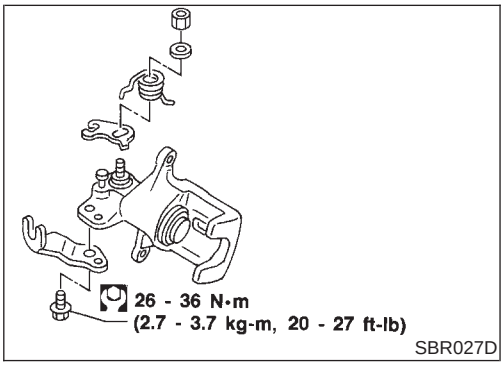

SBR027D

10. Fit toggle lever, return spring and cable guide.

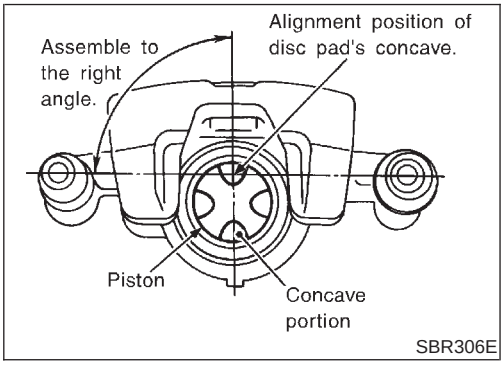

SBR306E

11. Adjust the piston to the right angle as shown in the figure.

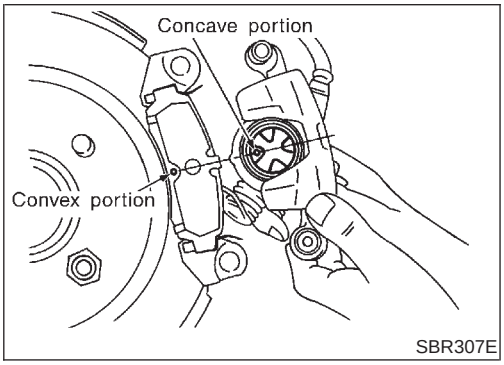

SBR307E

Installation

NFBR0043

CAUTION:

- **Refill with new brake fluid "DOT 3".**
- **Never reuse drained brake fluid.**

1. Install caliper assembly.
   - As shown in the figure, align the piston's concave to the pad's convex, then install the cylinder body to the torque member.
2. Install brake hose to caliper securely.
3. Install all parts and secure all bolts.
4. Bleed air. Refer to "Bleeding Brake System", BR-9.

Installation (Cont'd)

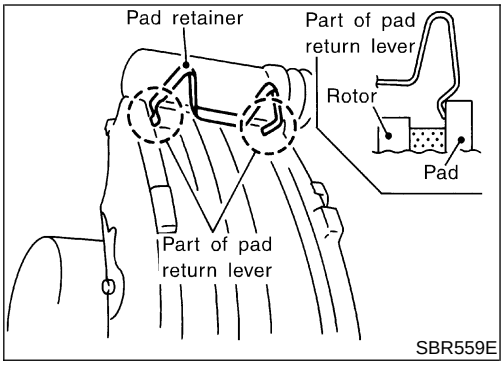

CAUTION:

The pad retainer is built so the pad returns to its original position. Be careful to install the pad so the pad-return lever is against the inner side of the pad, as shown in the left figure.

Components

NFBR0044

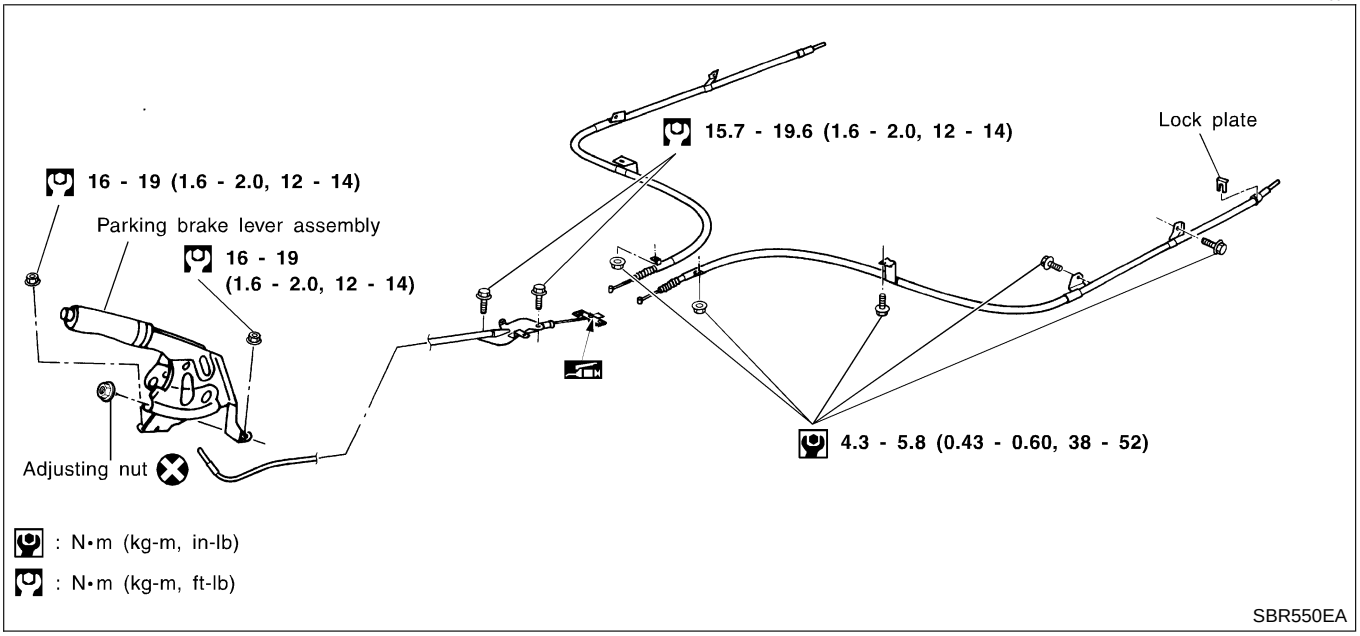

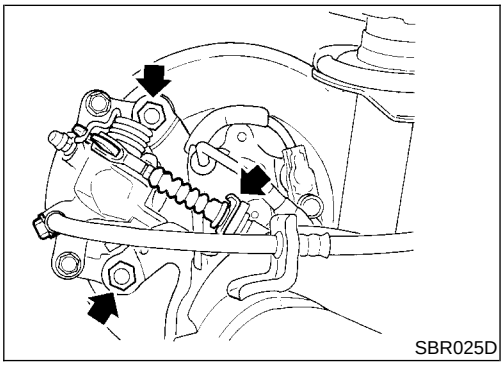

Removal and Installation

NFBR0045

1. To remove parking brake cable, first remove center console.
2. Disconnect warning switch connector.
3. Remove bolts, slacken off and remove adjusting nut.
4. Remove lock plate and disconnect cable.

Inspection

NFBR0046

1. Check control lever for wear or other damage. Replace if necessary.
2. Check wires for discontinuity or deterioration. Replace if necessary.
3. Check warning lamp and switch. Replace if necessary.
4. Check parts at each connecting portion and, if found deformed or damaged, replace.

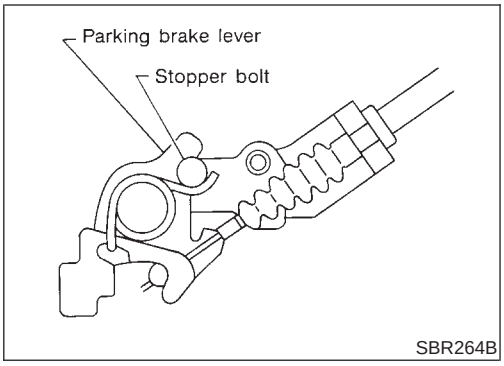

Adjustment

=NFBR0047

Pay attention to the following points after adjustment.

1) There is no drag when control lever is being released.
2) Be sure that toggle lever returns to stopper when parking brake lever is released.

1. Loosen parking brake cable.
2. Depress brake pedal fully more than five times.
3. Operate control lever 10 times or more with a full stroke [203.5 mm (8.01 in)].
4. Adjust control lever or pedal by turning adjusting nut.
5. Pull control lever with specified amount of force. Check lever stroke and ensure smooth operation.

   Number of notches:

   10 - 11 [196 N (20 kg, 44 lb)]
6. Bend warning lamp switch plate. Warning lamp should come on when lever is pulled “A” notches. It should go off when the lever is fully released.

   Number of “A” notches: 1

Purpose

NFBR0100

The ABS consists of electronic and hydraulic components. It allows for control of braking force so that locking of the wheels can be avoided.
The ABS:

1) Ensures proper tracking performance through steering wheel operation.
2) Enables obstacles to be avoided through steering wheel operation.
3) Ensures vehicle stability by preventing flat spins.

ABS (Anti-Lock Brake System) Operation

NFBR0101

- When the vehicle speed is less than 10 km/h (6 MPH) this system does not work.
- The Anti-Lock Brake System (ABS) has self-test capabilities. The system turns on the ABS warning lamp for 1 second after turning the ignition switch ON. The system performs another test the first time the vehicle reaches 6 km/h (4 MPH). A mechanical noise may be heard as the ABS performs a self-test. This is a normal part of the self-test feature. If a malfunction is found during this check, the ABS warning lamp will come on.
- During ABS operation, a mechanical noise may be heard. This is a normal condition.

ABS Hydraulic Circuit

NFBR0102

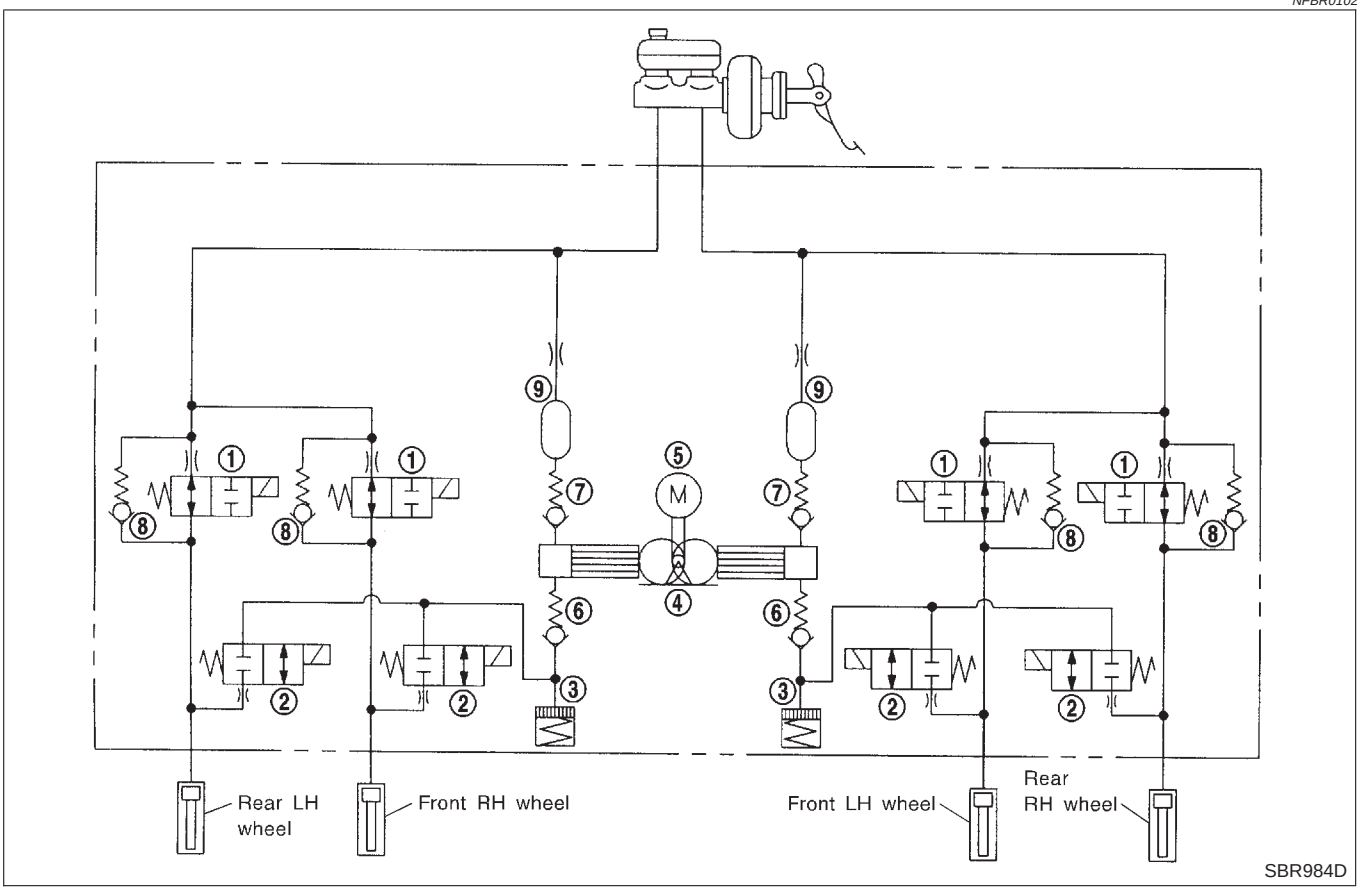

1. Inlet solenoid valve
2. Outlet solenoid valve
3. Reservoir
4. Pump
5. Motor
6. Inlet valve
7. Outlet valve
8. Bypass check valve
9. Damper

System Components

NFBR0103

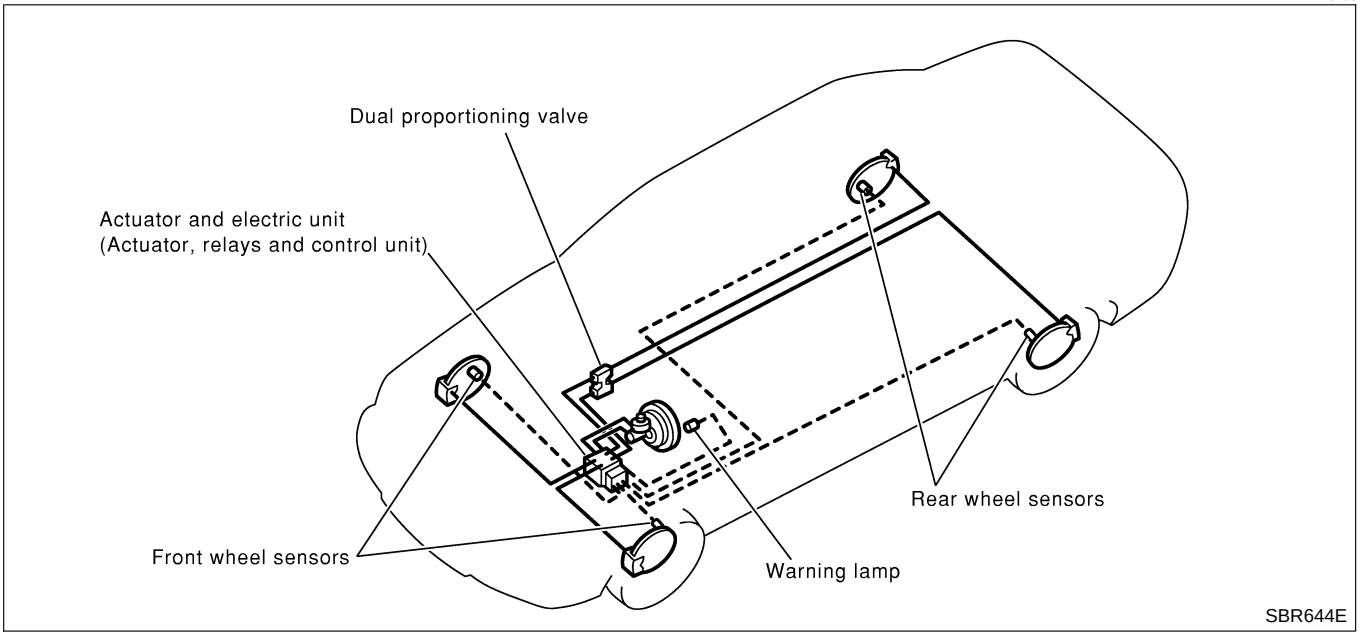

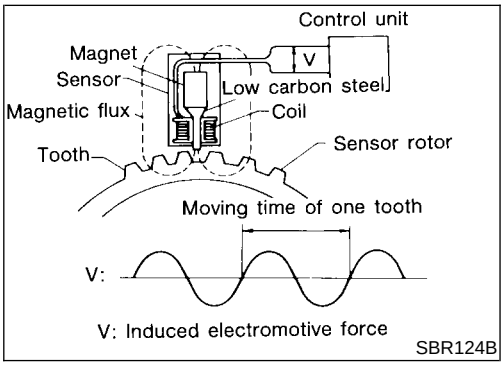

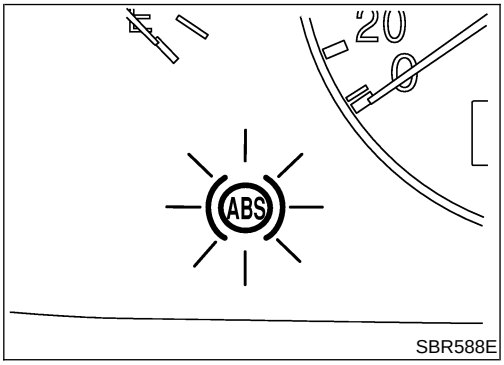

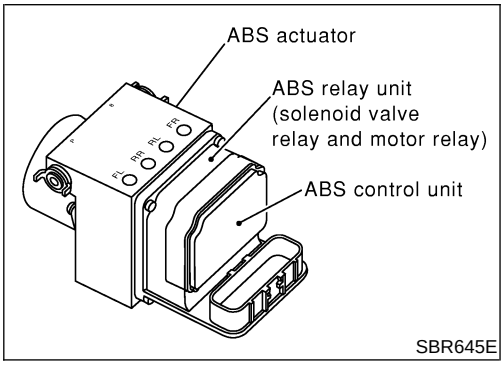

System Description

NFBR0104

SENSOR

NFBR0104S01

The sensor unit consists of a gear-shaped sensor rotor and a sensor element. The element contains a bar magnet around which a coil is wound. The sensor is installed on the back side of the brake rotor. Sine-wave current is generated by the sensor as the wheel rotates. The frequency and voltage increase(s) as the rotating speed increases.

CONTROL UNIT

NFBR0104S02

The control unit computes the wheel rotating speed by the signal current sent from the sensor. Then it supplies a DC current to the actuator solenoid valve. It also controls ON-OFF operation of the valve relay and motor relay. If any electrical malfunction should be detected in the system, the control unit causes the warning lamp to light up. In this condition, the ABS will be deactivated by the control unit, and the vehicle's brake system reverts to normal operation.

ABS ACTUATOR AND ELECTRIC UNIT

NFBR0104S03

The ABS actuator and electric unit contains:

- An electric motor and pump
- Two relays
- Eight solenoid valves, each inlet and outlet for
  — LH front
  — RH front
  — LH rear
  — RH rear
- ABS control unit

This components controls the hydraulic circuit and increases, holds or decreases hydraulic pressure to all or individual wheels. The ABS actuator and electric unit are not disassemble.

ABS Actuator Operation

NFBR0104S0301

		Inlet solenoid valve	Outlet solenoid valve	
Normal brake operation		OFF (Open)	OFF (Closed)	Master cylinder brake fluid pressure is directly transmitted to caliper via the inlet solenoid valve.
ABS operation	Pressure hold	ON (Closed)	OFF (Closed)	Hydraulic circuit is shut off to hold the caliper brake fluid pressure.
	Pressure decrease	ON (Closed)	ON (Open)	Caliper brake fluid is sent to reservoir via the outlet solenoid valve. Then it is pushed up to the master cylinder by pump.
	Pressure increase	OFF (Open)	OFF (Closed)	Master cylinder brake fluid pressure is transmitted to caliper.

Component Parts and Harness Connector Location

NFBR0105

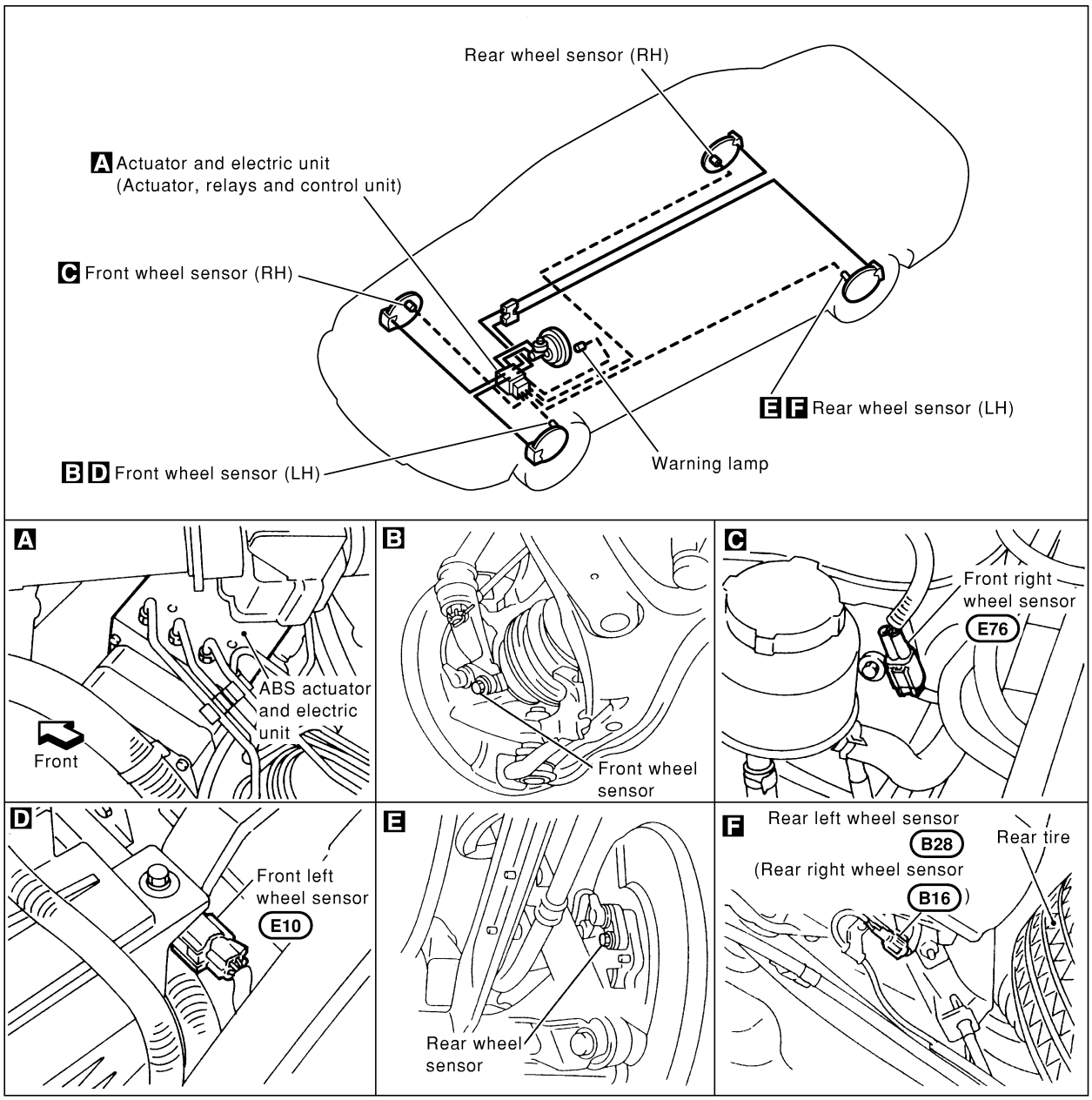

SBR646EA

Schematic

NFBR0106

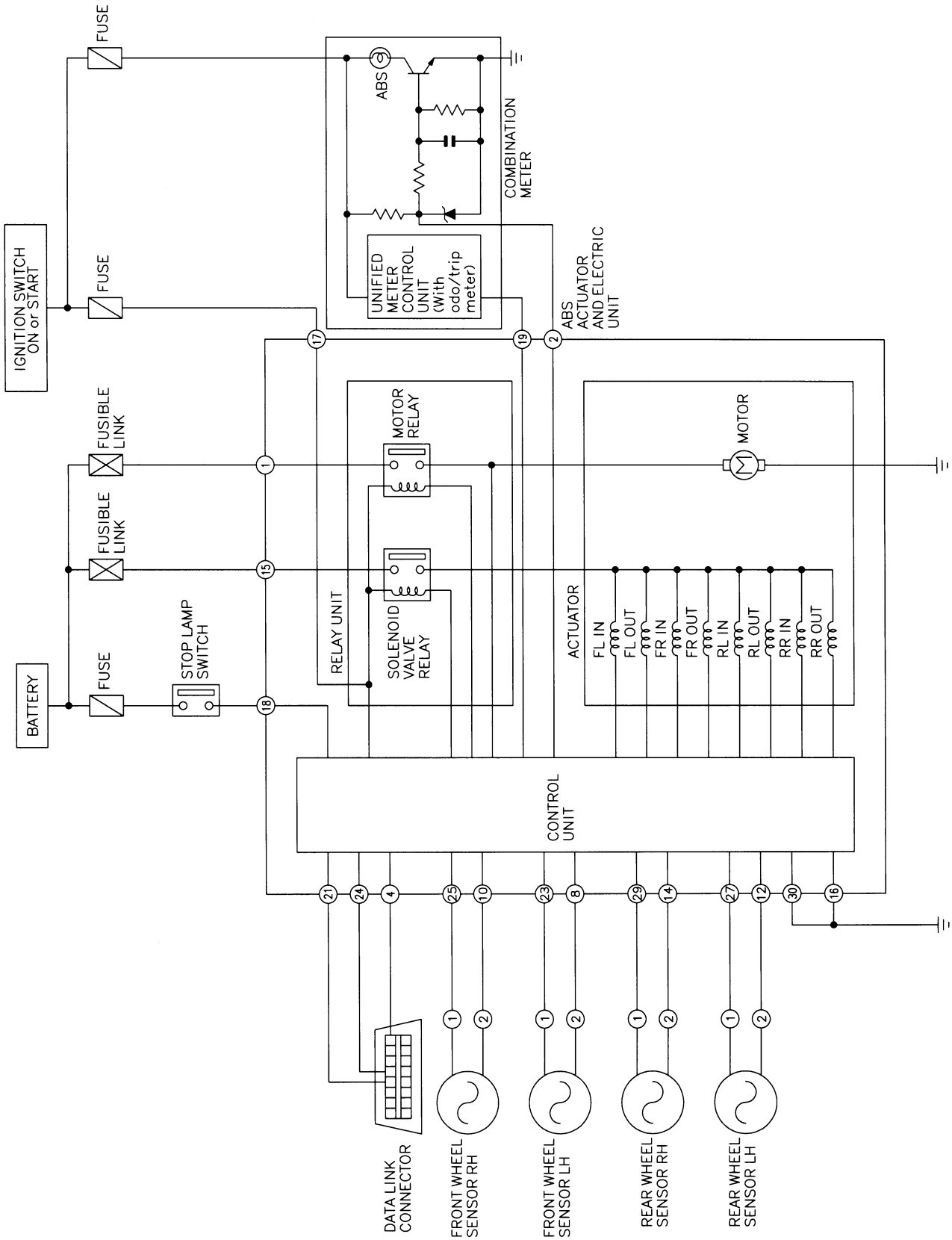

MBR387A

Wiring Diagram — ABS —

NFBR0107

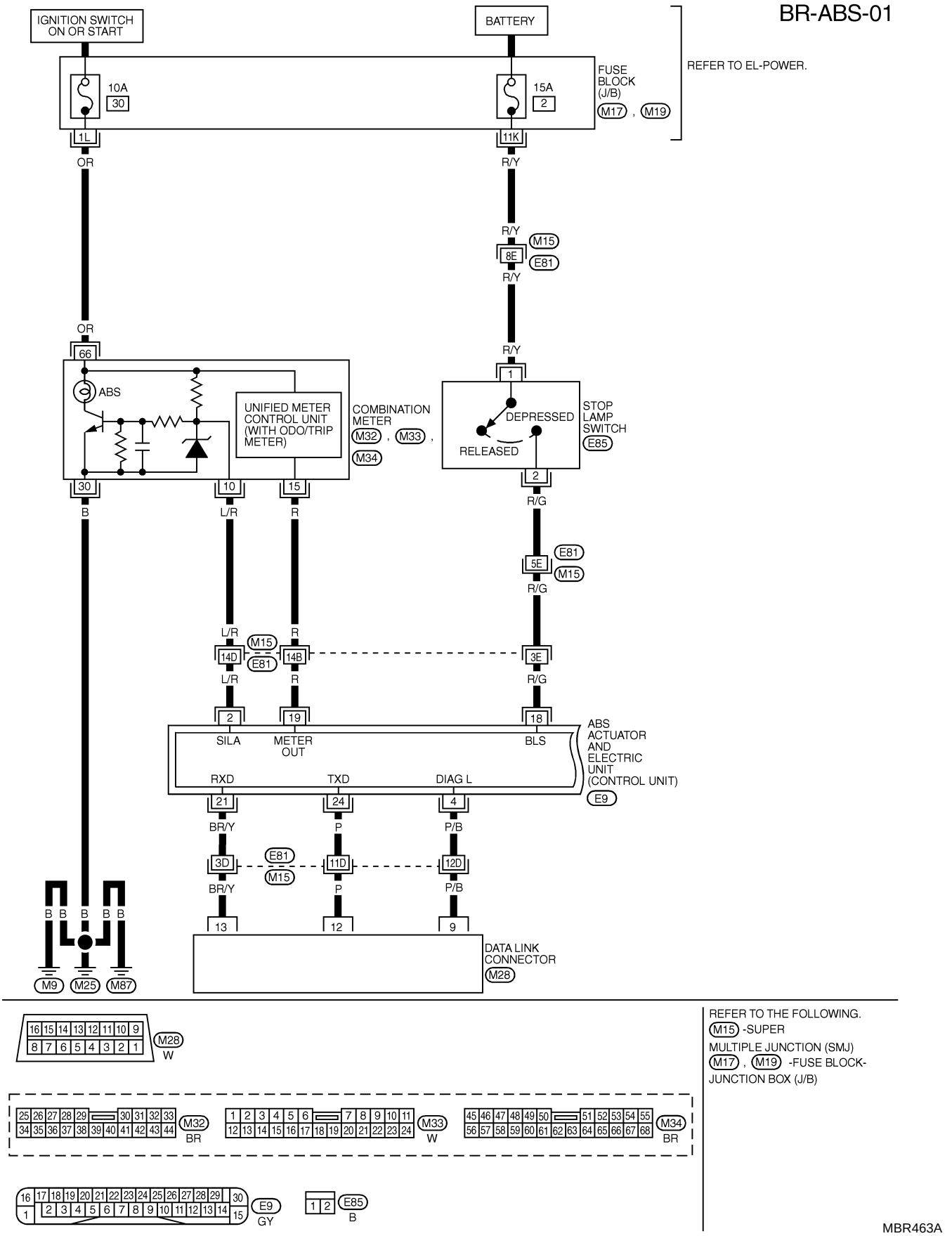

BR-ABS-02

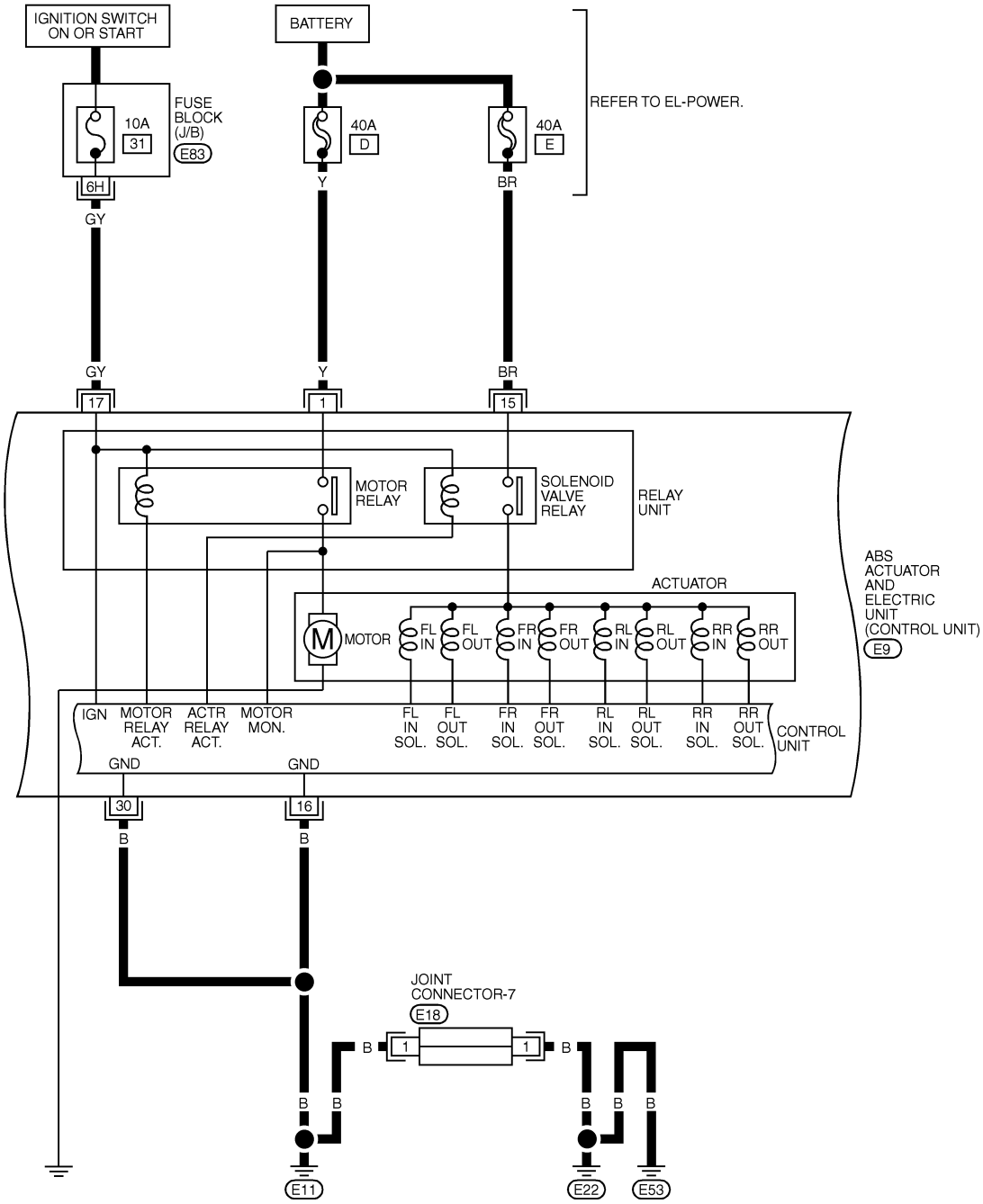

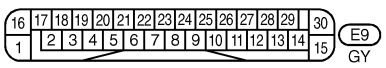

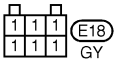

REFER TO THE FOLLOWING.
E83 -FUSE BLOCK-JUNCTION BOX (J/B)

MBR450A

BR-ABS-03

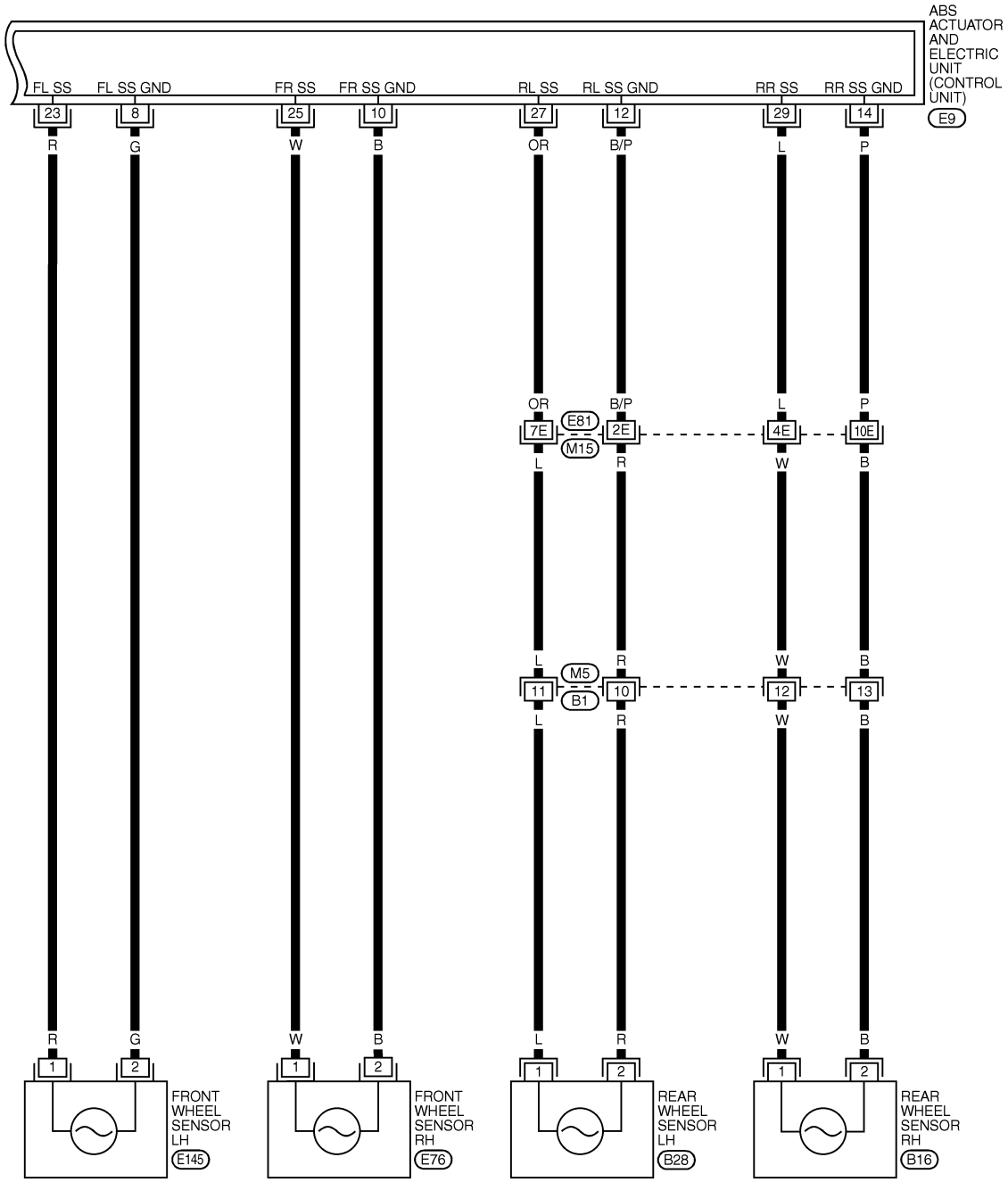

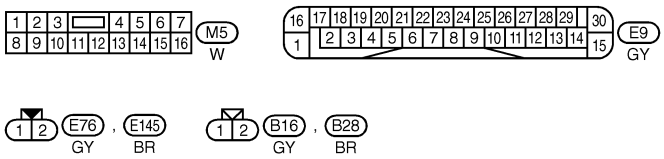

REFER TO THE FOLLOWING.
M15 -SUPER MULTIPLE JUNCTION (SMJ)

MBR417A

ABS ACTUATOR AND ELECTRIC UNIT TERMINALS AND REFERENCE VALUE (MEASURED BETWEEN EACH TERMINAL AND 16 OR 30).

TERMINAL	WIRE COLOR	ITEM	CONDITION	DATA (DC)
1	Y	POWER SOURCE	–	BATTERY VOLTAGE
2	L/R	ABS WARNING LAMP IN COMBINATION METER	WHEN ABS WARNING LAMP IS ACTIVE	BATTERY VOLTAGE
			WHEN ABS WARNING LAMP IS NOT ACTIVE	APPROX. 0V
4	P/B	DATA LINK CONNECTOR	–	–
8	G	FRONT WHEEL SENSOR LH	WHEN VEHICLE CRUISES AT 30 KM/H (19 MPH)	PULSE FRONT: APPROX. 190 HZ REAR: APPROX. 190 HZ
10	B	FRONT WHEEL SENSOR RH		
12	B/P	REAR WHEEL SENSOR LH		
14	P	REAR WHEEL SENSOR RH		
23	R	FRONT WHEEL SENSOR LH		
25	W	FRONT WHEEL SENSOR RH		
27	OR	REAR WHEEL SENSOR LH		
29	L	REAR WHEEL SENSOR RH		
15	BR	POWER SOURCE	–	BATTERY VOLTAGE
16	B	GROUND	–	–
17	GY	POWER SOURCE	IGN ON	BATTERY VOLTAGE
			IGN OFF	APPROX. 0V
18	R/G	STOP LAMP SWITCH	WHEN BRAKE PEDAL DEPRESSED	BATTERY VOLTAGE
			WHEN BRAKE PRDAL RELEASED	APPROX. 0V
21	BR/Y	DATA LINK CONNECTOR	–	–
24	P	DATA LINK CONNECTOR	–	–
30	B	GROUND	–	–

SBR650E

Self-diagnosis

NFBR0108

FUNCTION

NFBR0108S01

- When a problem occurs in the ABS, the ABS warning lamp on the instrument panel comes on. To start the self-diagnostic results mode, ground the self-diagnostic (check) terminal located on “Data link connector”. The location of the malfunction is indicated by the ABS warning lamp flashing.

SELF-DIAGNOSIS PROCEDURE

NFBR0108S02

1. Drive vehicle over 30 km/h (19 MPH) for at least one minute.
2. Turn ignition switch “OFF”.

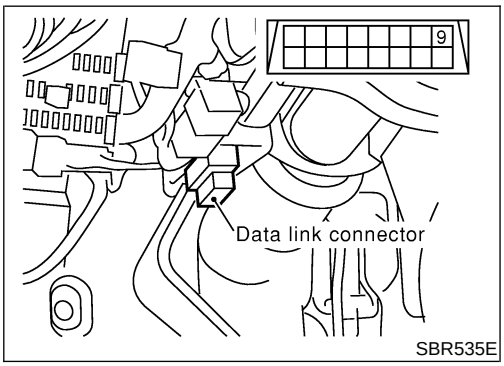

SBR535E

3. Ground terminal “8” of “Data link connector” with a suitable harness.
4. Turn ignition switch “ON” while grounding terminal “8”.
   Do not depress brake pedal.
   Do not start engine.

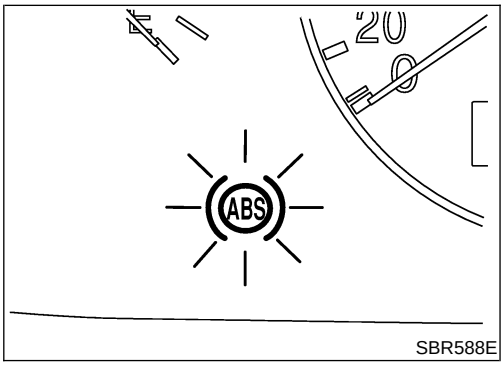

SBR588E

5. After 3.0 seconds, the ABS warning lamp starts flashing to indicate the malfunction code No. (See NOTE.)
6. Verify the location of the malfunction with the malfunction code chart. Refer to BR-61. Then make the necessary repairs following the diagnostic procedures.
7. After the malfunctions are repaired, erase the malfunction codes stored in the control unit. Refer to BR-49.
8. Rerun the self-diagnostic results mode to verify that the malfunction codes have been erased.

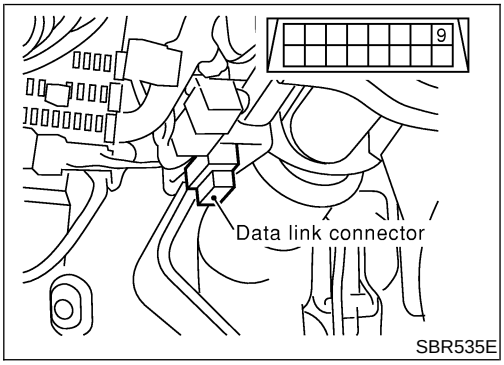

SBR535E

9. Disconnect the check terminal from the ground. The self-diagnostic results mode is now complete.
10. Check ABS warning lamp for deactivation after driving vehicle over 30 km/h (19 MPH) for at least one minute.
11. After making certain that ABS warning lamp does not come on, test the ABS SELF-DIAGNOSIS in a safe area to verify that it functions properly.

NOTE:
The indication terminates after five minutes.
However, when the ignition switch is turned from “OFF” to “ON”, the indication starts flashing again.

HOW TO READ SELF-DIAGNOSTIC RESULTS (MALFUNCTION CODES)

NFBR0108S03

1. Determine the code No. by counting the number of times the ABS warning lamp flashes on and off.
2. When several malfunctions occur at one time, up to three code numbers can be stored; the latest malfunction will be indicated first.
3. The indication begins with the start code 12. After that a maximum of three code numbers appear in the order of the latest one first. The indication then returns to the start code 12 to repeat (the indication will stay on for five minutes at the most).

4. The malfunction code chart is given on the BR-61 page.

Example: Code No. 32 REAR SENSOR SHORT-CIRCUIT

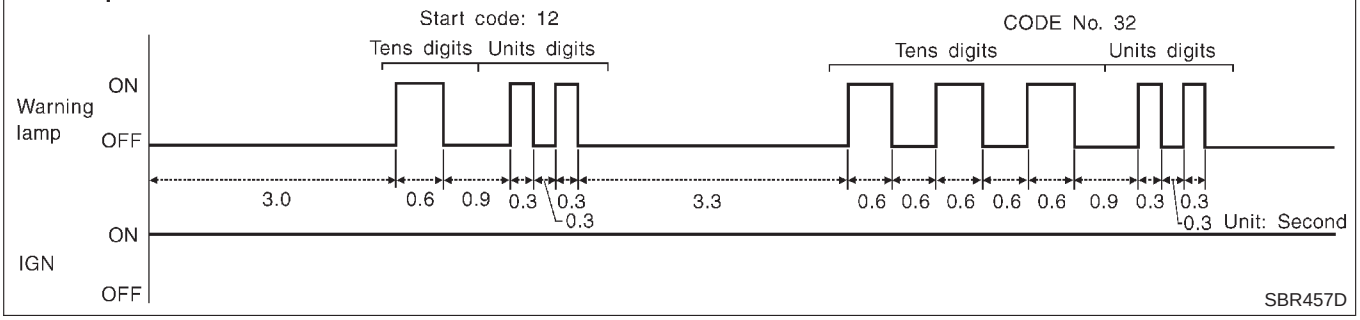

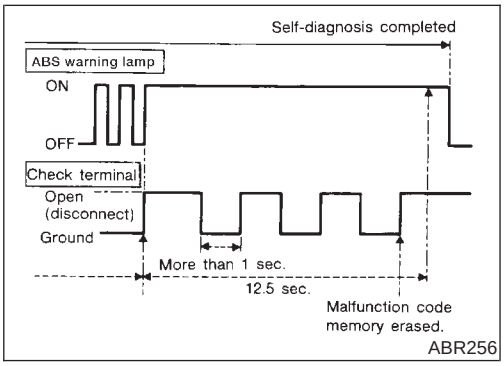

HOW TO ERASE SELF-DIAGNOSTIC RESULTS (MALFUNCTION CODES)

NFBR0108S04

1. Disconnect the check terminal from ground (ABS warning lamp will stay lit).
2. Within 12.5 seconds, ground the check terminal 3 times. Each terminal ground must last more than 1 second. The ABS warning lamp goes out after the erase operation has been completed.
3. Perform self-diagnosis again. Refer to BR-48. Only the start code should appear, no malfunction codes.

CONSULT-II

NFBR0109

CONSULT-II APPLICATION TO ABS

NFBR0109S01

ITEM	SELF-DIAGNOSTIC RESULTS	DATA MONITOR	ACTIVE TEST
Front right wheel sensor	X	X	—
Front left wheel sensor	X	X	—
Rear right wheel sensor	X	X	—
Rear left wheel sensor	X	X	—
Stop lamp switch	—	X	—
Front right inlet solenoid valve	X	X	X
Front right outlet solenoid valve	X	X	X
Front left inlet solenoid valve	X	X	X
Front left outlet solenoid valve	X	X	X
Rear right inlet solenoid valve	X	X	X
Rear right outlet solenoid valve	X	X	X
Rear left inlet solenoid valve	X	X	X
Rear left outlet solenoid valve	X	X	X
Actuator solenoid valve relay	X	X	—
Actuator motor relay (ABS MOTOR is shown on the ACTIVE TEST screen.)	X	X	X
ABS warning lamp	—	X	—
Battery voltage	X	X	—
Control unit	X	—	—

X: Applicable
—: Not applicable

ECU (ABS CONTROL UNIT) PART NUMBER MODE

NFBR0109S02

Ignore the ECU part number displayed in the ECU PART NUMBER MODE. Refer to parts catalog to order the ABS actuator and electric unit.

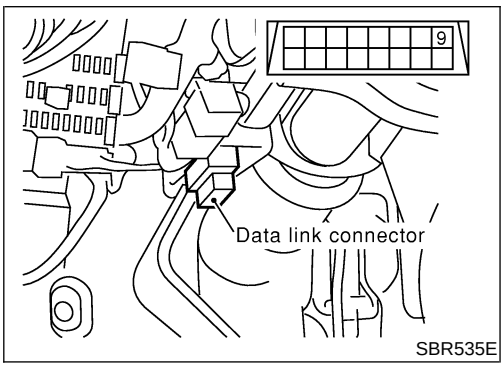

CONSULT-II Inspection Procedure

NFBR0110

SELF-DIAGNOSIS PROCEDURE

NFBR0110S01

1. Turn ignition switch OFF.
2. Connect CONSULT-II to Data Link Connector.
3. Start engine.
4. Drive vehicle over 30 km/h (19 MPH) for at least one minute.

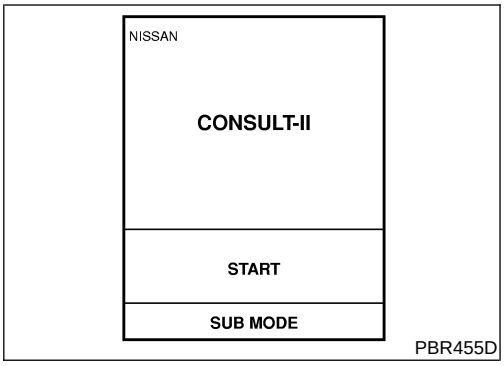

PBR455D

5. Stop vehicle with engine running and touch "START" on CONSULT-II screen.

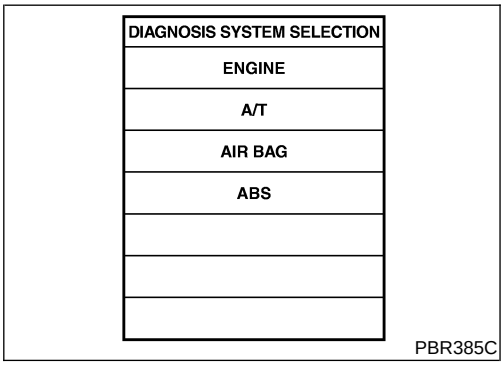

PBR385C

6. Touch "ABS".

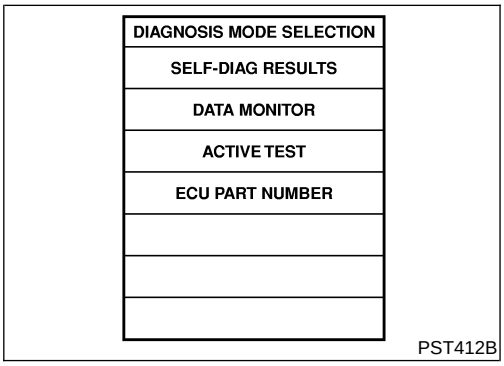

PST412B

7. Touch "SELF-DIAG RESULTS".
- The screen shows the detected malfunction and how many times the ignition switch has been turned since the malfunction.
8. Make the necessary repairs following the diagnostic procedures.

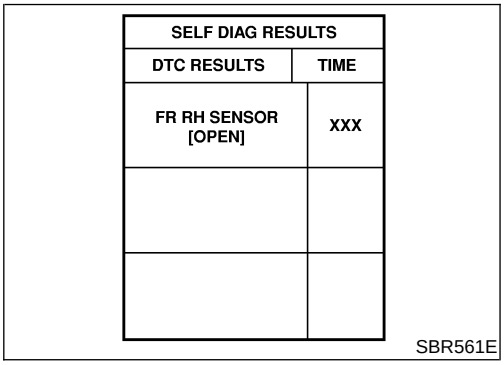

SBR561E

9. After the malfunctions are repaired, erase the self-diagnostic results stored in the control unit by touching "ERASE".
10. Check ABS warning lamp for deactivation after driving vehicle over 30 km/h (19 MPH) for at least one minute.

NOTE:
"SELF-DIAG RESULTS" screen shows the detected malfunction and how many times the ignition switch has been turned since the malfunction.

SELF-DIAGNOSTIC RESULTS MODE

=NFBR0110S02

Diagnostic item	Diagnostic item is detected when ...	Reference Page
FR RH SENSOR [OPEN]*1	● Circuit for front right wheel sensor is open. (An abnormally high input voltage is entered.)	BR-62
FR LH SENSOR [OPEN]*1	● Circuit for front left wheel sensor is open. (An abnormally high input voltage is entered.)	BR-62
RR RH SENSOR [OPEN]*1	● Circuit for rear right sensor is open. (An abnormally high input voltage is entered.)	BR-62
RR LH SENSOR [OPEN]*1	● Circuit for rear left sensor is open. (An abnormally high input voltage is entered.)	BR-62
FR RH SENSOR [SHORT]*1	● Circuit for front right wheel sensor is shorted. (An abnormally low input voltage is entered.)	BR-62
FR LH SENSOR [SHORT]*1	● Circuit for front left wheel sensor is shorted. (An abnormally low input voltage is entered.)	BR-62
RR RH SENSOR [SHORT]*1	● Circuit for rear right sensor is shorted. (An abnormally low input voltage is entered.)	BR-62
RR LH SENSOR [SHORT]*1	● Circuit for rear left sensor is shorted. (An abnormally low input voltage is entered.)	BR-62
ABS SENSOR [ABNORMAL SIGNAL]	● Teeth damage on sensor rotor or improper installation of wheel sensor. (Abnormal wheel sensor signal is entered.)	BR-62
FR RH IN ABS SOL [OPEN]	● Circuit for front right inlet solenoid valve is open. (An abnormally low output voltage is entered.)	BR-65
FR LH IN ABS SOL [OPEN]	● Circuit for front left inlet solenoid valve is open. (An abnormally low output voltage is entered.)	BR-65
RR RH IN ABS SOL [OPEN]	● Circuit for rear right inlet solenoid valve is open. (An abnormally low output voltage is entered.)	BR-65
RR LH IN ABS SOL [OPEN]	● Circuit for rear left inlet solenoid valve is open. (An abnormally low output voltage is entered.)	BR-65
FR RH IN ABS SOL [SHORT]	● Circuit for front right inlet solenoid valve is shorted. (An abnormally high output voltage is entered.)	BR-65
FR LH IN ABS SOL [SHORT]	● Circuit for front left inlet solenoid valve is shorted. (An abnormally high output voltage is entered.)	BR-65
RR RH IN ABS SOL [SHORT]	● Circuit for rear right inlet solenoid valve is shorted. (An abnormally high output voltage is entered.)	BR-65
RR LH IN ABS SOL [SHORT]	● Circuit for rear left inlet solenoid valve is shorted. (An abnormally high output voltage is entered.)	BR-65
FR RH OUT ABS SOL [OPEN]	● Circuit for front right outlet solenoid valve is open. (An abnormally low output voltage is entered.)	BR-65
FR LH OUT ABS SOL [OPEN]	● Circuit for front left outlet solenoid valve is open. (An abnormally low output voltage is entered.)	BR-65
RR RH OUT ABS SOL [OPEN]	● Circuit for rear right outlet solenoid valve is open. (An abnormally low output voltage is entered.)	BR-65
RR LH OUT ABS SOL [OPEN]	● Circuit for rear left outlet solenoid valve is open. (An abnormally low output voltage is entered.)	BR-65
FR RH OUT ABS SOL [SHORT]	● Circuit for front right outlet solenoid valve is shorted. (An abnormally high output voltage is entered.)	BR-65
FR LH OUT ABS SOL [SHORT]	● Circuit for front left outlet solenoid valve is shorted. (An abnormally high output voltage is entered.)	BR-65

Diagnostic item	Diagnostic item is detected when ...	Reference Page
RR RH OUT ABS SOL [SHORT]	● Circuit for rear right outlet solenoid valve is shorted. (An abnormally high output voltage is entered.)	BR-65
RR LH OUT ABS SOL [SHORT]	● Circuit for rear left outlet solenoid valve is shorted. (An abnormally high output voltage is entered.)	BR-65
ABS ACTUATOR RELAY [ABNORMAL]	● Actuator solenoid valve relay is ON, even control unit sends off signal. ● Actuator solenoid valve relay is OFF, even control unit sends on signal.	BR-65
ABS MOTOR RELAY [ABNORMAL]	● Circuit for actuator motor is open or shorted. ● Actuator motor relay is stuck.	BR-68
BATTERY VOLT [ABNORMAL]	● Power source voltage supplied to ABS control unit is abnormally low.	BR-70
CONTROL UNIT*2, *3	● Function of calculation in ABS control unit has failed.	BR-72

*1: Be sure to confirm the ABS warning lamp illuminates when the ignition switch is turned ON after repairing the shorted sensor circuit, but the lamp goes out when driving the vehicle over 30 km/h (19 MPH) for one minute in accordance with SELF-DIAGNOSIS PROCEDURE.

*2: When "CONTROL UNIT 5" is displayed, check to see if the ABS warning lamp is burned out, and check the circuit between the ABS warning lamp and ABS actuator/electric unit for open or short. Then check the ABS actuator/electric unit and circuit.

*3: When "CONTROL UNIT_XX" (except "CONTROL UNIT 5") is displayed, refer to "DIAGNOSTIC PROCEDURE" in "Control Unit", BR-72.

DATA MONITOR PROCEDURE

NFBR0110S03

1. Turn ignition switch OFF.
2. Connect CONSULT-II to data link connector.
3. Turn ignition switch ON.
4. Touch "START" on CONSULT-II screen.

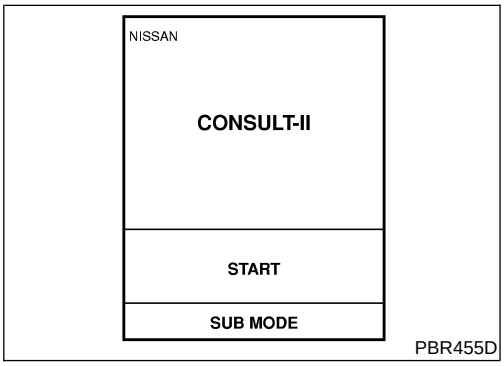

PBR455D

5. Touch "ABS".

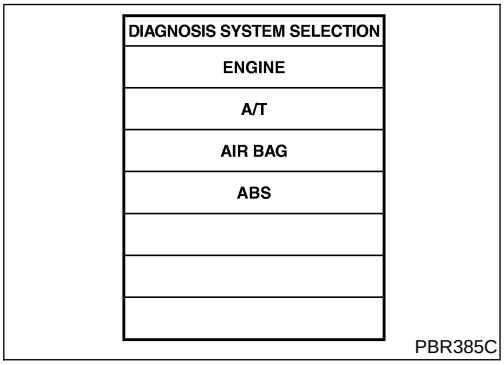

PBR385C

6. Touch "DATA MONITOR".
7. Touch "SETTING" on "SELECT MONITOR ITEM" screen.
8. Touch "LONG TIME" on "SET RECORDING COND" screen.
9. Touch "START" on "SELECT MONITOR ITEM".

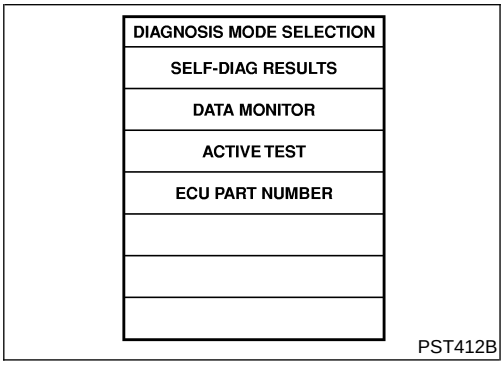

PST412B

ACTIVE TEST PROCEDURE

NFBR0110S04

- When conducting Active test, vehicle must be stationary.
- When ABS warning lamp stays on, never conduct Active test.

1. Turn ignition switch OFF.
2. Connect CONSULT-II to Data Link Connector.
3. Start engine.
4. Touch "START" on CONSULT-II screen.

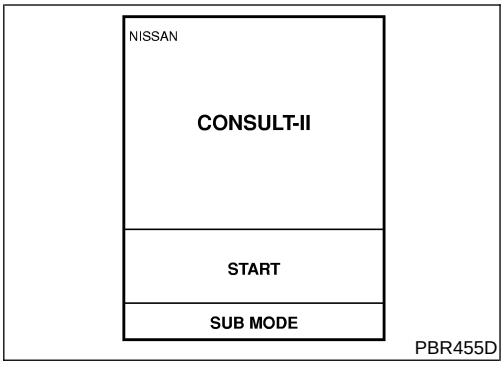

PBR455D

5. Touch "ABS".

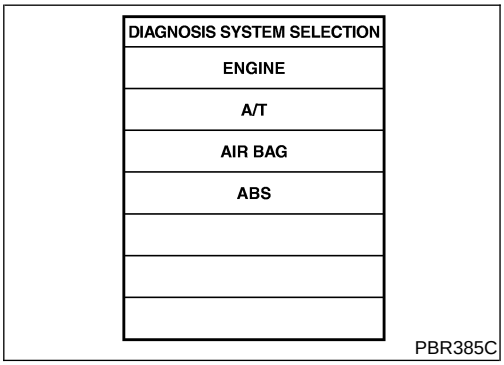

PBR385C

6. Touch "ACTIVE TEST".

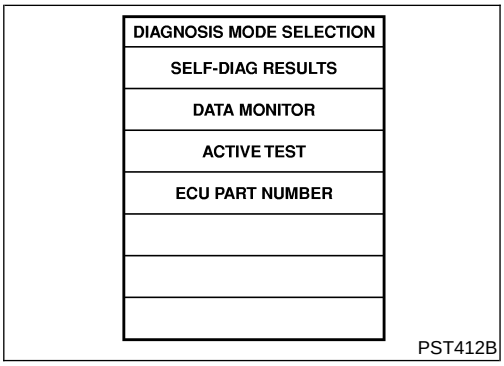

PST412B

7. Select active test item by touching screen.

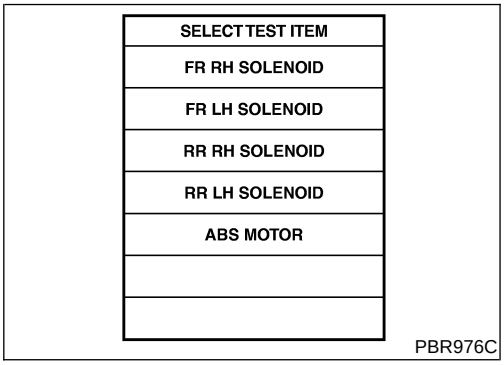

PBR976C

8. Touch "START".
9. Carry out the active test by touching screen key.

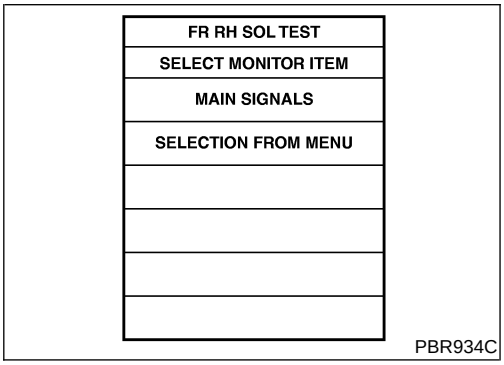

PBR934C

DATA MONITOR MODE

NFBR0110S05

MONITOR ITEM	CONDITION	SPECIFICATION
FR RH SENSOR FR LH SENSOR RR RH SENSOR RR LH SENSOR	Drive vehicle. (Each wheel is rotating.)	Displays computed vehicle speed from wheel sensor signal. Almost the same speed as speedometer.
STOP LAMP SW	Turn ignition switch ON and depress brake pedal.	Depress the pedal: ON Release the pedal: OFF
FR RH IN SOL FR RH OUT SOL FR LH IN SOL FR LH OUT SOL RR IN SOL RR OUT SOL RL IN SOL RL OUT SOL	Ignition switch is turned ON or engine is running.	Operating conditions for each solenoid valve are indicated. ABS is not operating: OFF
ACTUATOR RLY	Ignition switch is turned ON or engine is running.	Displays ON/OFF condition of ABS actuator relay. When turning ignition switch ON, ABS actuator relay is operated.
MOTOR RELAY		ABS is not operating: OFF ABS is operating: ON
WARNING LAMP		Warning lamp is turned on: ON Warning lamp is turned off: OFF
BATTERY VOLT		Power supply voltage for control unit

ACTIVE TEST MODE

NFBR0110S06

TEST ITEM	CONDITION	JUDGEMENT		
FR RH SOLENOID FR LH SOLENOID RR RH SOLENOID RR LH SOLENOID	Ignition switch is turned ON.	Brake fluid pressure control operation		
			IN SOL	OUT SOL
		UP (Increase):	OFF	OFF
		KEEP (Hold):	ON	OFF
		DOWN (Decrease):	ON	ON
ABS MOTOR		ABS actuator motor ON: Motor runs OFF: Motor stops		

NOTE:
Active test will automatically stop ten seconds after the test starts. (TEST IS STOPPED monitor shows ON.)

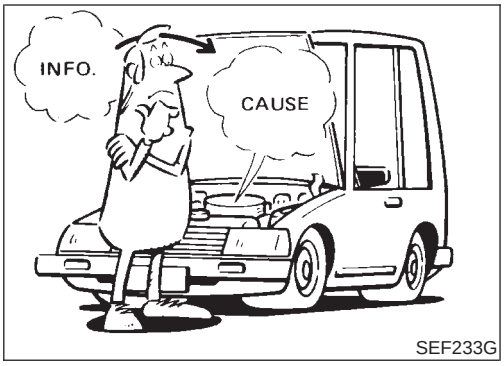

SEF233G

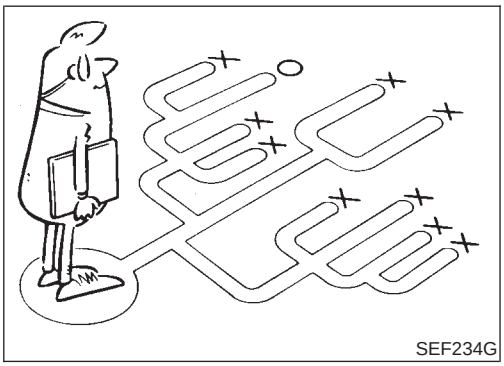
SEF234G

How to Perform Trouble Diagnoses for Quick and Accurate Repair

NFBR0111

INTRODUCTION

NFBR0111S01

The ABS system has an electronic control unit to control major functions. The control unit accepts input signals from sensors and instantly drives actuator. It is essential that both kinds of signals are proper and stable. It is also important to check for conventional problems: such as air leaks in the booster or lines, lack of brake fluid, or other problems with the brake system.

It is much more difficult to diagnose a problem that occurs intermittently rather than continuously. Most intermittent problems are caused by poor electric connections or faulty wiring. In this case, careful checking of suspicious circuits may help prevent the replacement of good parts.

A visual check only may not find the cause of the problems, so a road test should be performed.

Before undertaking actual checks, take just a few minutes to talk with a customer who approaches with a ABS complaint. The customer is a very good source of information on such problems; especially intermittent ones. Through the talks with the customer, find out what symptoms are present and under what conditions they occur.

Start your diagnosis by looking for “conventional” problems first. This is one of the best ways to troubleshoot brake problems on an ABS controlled vehicle. Also check related Service Bulletins for information.

Preliminary Check

NFBR0112

1	CHECK BRAKE FLUID LEVEL

Check brake fluid level in reservoir tank.
Low fluid level may indicate brake pad wear or leakage from brake line.

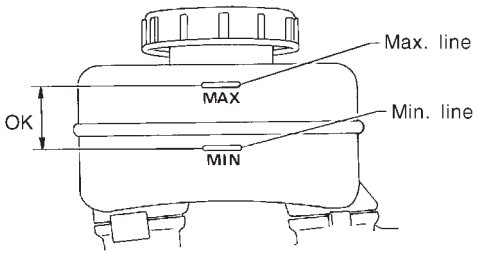

SBR451D

Is brake fluid filled between MAX and MIN lines on reservoir tank and/or has brake fluid been contaminated?

Yes	▶	GO TO 2.
No	▶	Repair. GO TO 2.

2	CHECK BRAKE LINE

Check brake line for leakage.

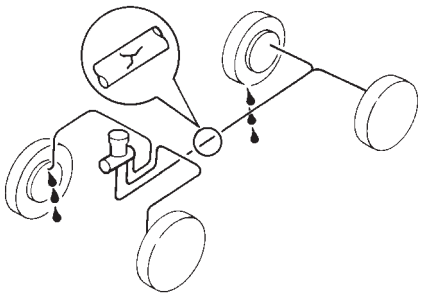

SBR389C

Is leakage present at or around brake lines, tubes or hoses or are any of these parts cracked or damaged?

Yes	▶	GO TO 3.
No	▶	Repair. GO TO 3.

3	CHECK BRAKE BOOSTER OPERATION	
Check brake booster for operation and air tightness. Refer to BR-21. 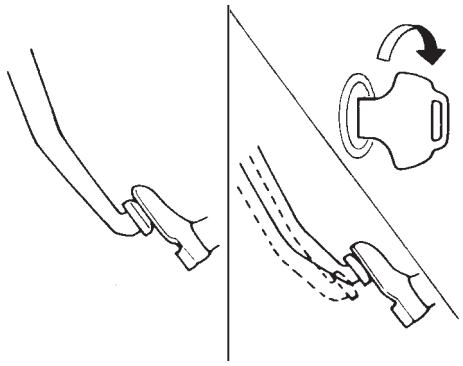 SBR058C **Is brake booster airtight and functioning properly?**		
Yes	▶	GO TO 4.
No	▶	Replace. GO TO 4.

4	CHECK BRAKE PAD AND ROTOR	
Check brake pad and rotor. Refer to BR-24, BR-26, BR-28, BR-32. 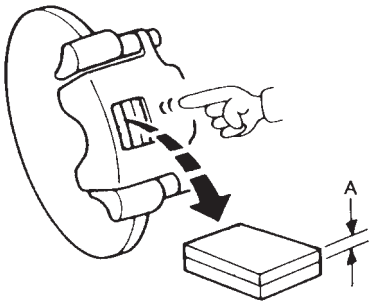 SBR059C **Are brake pads and rotors functioning properly?**		
Yes	▶	GO TO 5.
No	▶	Replace.

5	RECHECK BRAKE FLUID LEVEL

Check brake fluid level in reservoir tank again.

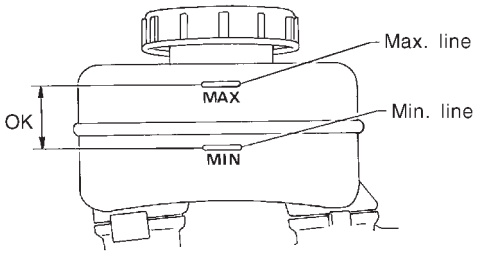

SBR451D

Is brake fluid filled between MAX and MIN lines on reservoir tank and/or has brake fluid been contaminated?

Yes	▶	GO TO 6.
No	▶	Fill up brake fluid.

6	CHECK WARNING LAMP ACTIVATION

Check warning lamp activation.

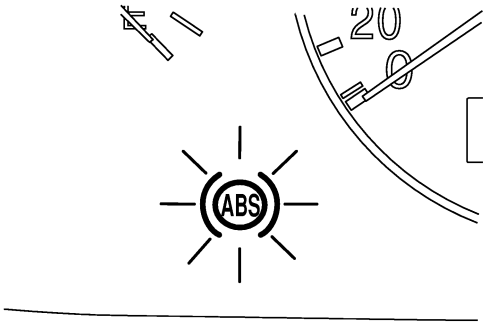

SBR588E

Does warning lamp turn on when ignition switch is turned "ON"?

Yes	▶	GO TO 7.
No	▶	Check fuse, warning lamp bulb and warning lamp circuit.

7	CHECK WARNING LAMP DEACTIVATION

Check warning lamp for deactivation after engine is started.

Does warning lamp turn off when engine is started?

Yes	▶	GO TO 8.
No	▶	Go to Self-diagnosis. Refer to BR-48, 50.

8	DRIVE VEHICLE

Drive vehicle at speeds over 30 km/h (19 MPH) for at least one minute.

Does warning lamp remain off after vehicle has been driven at 30 km/h (19 MPH) for at least one minute?

Yes	▶	END
No	▶	Go to Self-diagnosis. Refer to BR-48, 50.

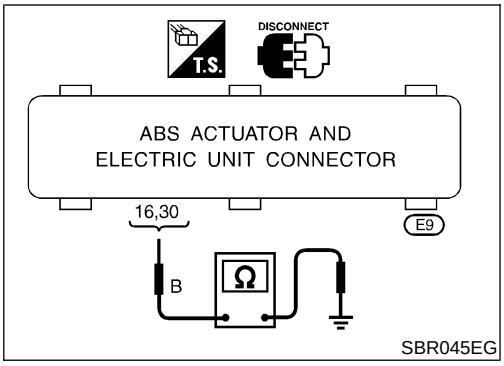

Ground Circuit Check

NFBR0113

ABS ACTUATOR AND ELECTRIC UNIT GROUND

NFBR0113S01

- Check continuity between ABS actuator and electric unit connector terminals and ground.

  Continuity should exist.

Malfunction Code/Symptom Chart

NFBR0114

Code No. (No. of LED flashes)	Malfunctioning part	Reference page
12	Self-diagnosis could not detect any malfunctions.	—
21	Front right sensor (open-circuit)	BR-62
22	Front right sensor (short-circuit)	BR-62
25	Front left sensor (open-circuit)	BR-62
26	Front left sensor (short-circuit)	BR-62
31	Rear right sensor (open-circuit)	BR-62
32	Rear right sensor (short-circuit)	BR-62
35	Rear left sensor (open-circuit)	BR-62
36	Rear left sensor (short-circuit)	BR-62
41	Actuator front right outlet solenoid valve	BR-65
42	Actuator front right inlet solenoid valve	BR-65
45	Actuator front left outlet solenoid valve	BR-65
46	Actuator front left inlet solenoid valve	BR-65
51	Actuator rear right outlet solenoid valve	BR-65
52	Actuator rear right inlet solenoid valve	BR-65
55	Actuator rear left outlet solenoid valve	BR-65
56	Actuator rear left inlet solenoid valve	BR-65
57*	Power supply (Low voltage)	BR-70
61	Actuator motor or motor relay	BR-68
63	Solenoid valve relay	BR-65
71	Control unit	BR-72
ABS warning lamp stays on when ignition switch is turned on.	Control unit power supply circuit Warning lamp bulb circuit Control unit or control unit connector Solenoid valve relay stuck Power supply for solenoid valve relay coil	BR-79
ABS warning lamp stays on, during self-diagnosis.	Control unit	—
ABS warning lamp does not come on when ignition switch is turned on.	Fuse, warning lamp bulb or warning lamp circuit Control unit	BR-77
ABS warning lamp does not come on during self-diagnosis.	Control unit	—
Pedal vibration and noise	—	BR-76
Long stopping distance	—	BR-74
Unexpected pedal action	—	BR-73
ABS does not work.	—	BR-75
ABS works frequently.	—	BR-73

*: Under voltage that is too low, the control unit disable the ABS. It does not set the ABS in fail-safe condition. Instead, the ABS becomes a conventional brake system. After the power supply has resumed, the warning lamp goes off, making it possible for the ABS to be re-engaged.

Wheel Sensor or Rotor

NFBR0115

DIAGNOSTIC PROCEDURE

NFBR0115S01

Malfunction code No. 21, 22, 25, 26, 31, 32, 35, 36 or 18

NOTE:
Wheel position should be identified by code No. except code No. 18 (sensor rotor).

1	INSPECTION START
Wheel sensor inspection	

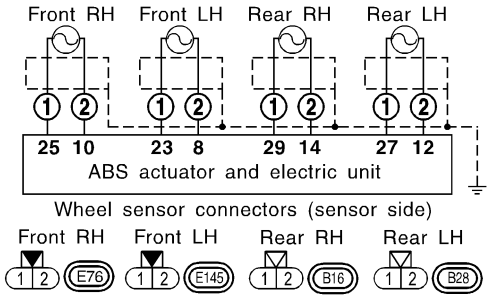

SBR590EA

▶	GO TO 2.

2	CHECK CONNECTOR
1. Disconnect connectors from control unit and wheel sensor of malfunction code No. Check terminals for damage or loose connections. Then reconnect connectors. 2. Carry out self-diagnosis again.	
Does warning lamp activate again?	
Yes ▶	GO TO 3.
No ▶	**INSPECTION END**

3	CHECK WHEEL SENSOR CIRCUIT

1. Disconnect control unit connector.
2. Check resistance between control unit connector terminals.
   Code No. 21 or 22 (Front RH wheel)
   Terminals 10 and 25
   Code No. 25 or 26 (Front LH wheel)
   Terminals 8 and 23
   Code No. 31 or 32 (Rear RH wheel)
   Terminals 14 and 29
   Code No. 35 or 36 (Rear LH wheel)
   Terminals 12 and 27
   Resistance: 0.8 - 1.85 kΩ

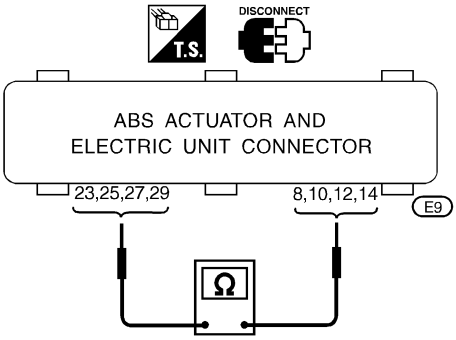

SBR477EB

Is resistance 0.8 - 1.85 kΩ?

Yes	▶	GO TO 5.
No	▶	GO TO 4.

4	CHECK WHEEL SENSOR

Check resistance of each sensor. (See NOTE.)
Resistance: 0.8 - 1.85 kΩ

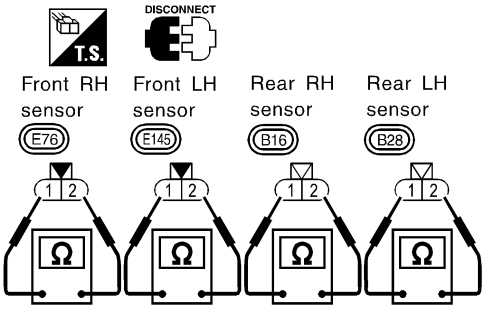

SBR478ED

Is resistance 0.8 - 1.85 kΩ?

Yes	▶	Repair harness and connectors between control unit connector and wheel sensor connector.
No	▶	Replace wheel sensor.

5	CHECK TIRE

Check for inflation pressure, wear and size of each tire.

Are tire pressure and size correct and is tire wear within specifications?

Yes	▶	GO TO 6.
No	▶	Adjust tire pressure or replace tire(s).

6	CHECK WHEEL BEARING

Check wheel bearing axial end play.
Check clearance between sensor and rotor.

Clearance:
Front
0.273 - 0.925 mm (0.0107 - 0.0364 in)
Rear
0.385 - 0.973 mm (0.0152 - 0.0383 in)

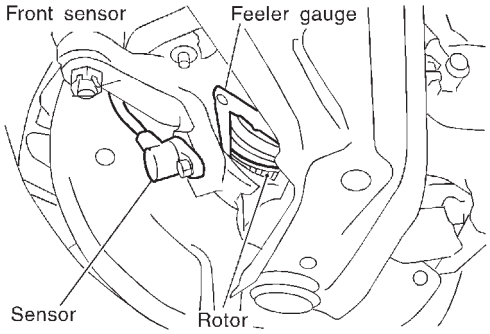

SBR333E

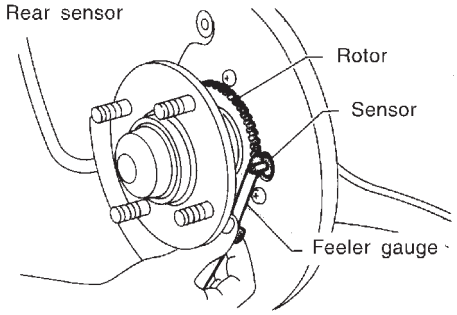

SBR069CA

Is axial end play and clearance within specifications?

Yes	▶	GO TO 7.
No	▶	Clean sensor fixing portion, or replace sensor.

7	CHECK SENSOR ROTOR

Check sensor rotor for teeth damage.

Is sensor rotor free from damage?

Yes	▶	Check control unit pin terminals for damage or the connection of control unit harness connector. Reconnect control unit harness connector. Then retest.
No	▶	Replace sensor rotor.

ABS Actuator Solenoid Valve or Solenoid Valve Relay

=NFBR0116

DIAGNOSTIC PROCEDURE

NFBR0116S01

Malfunction code No. 41, 45, 55, 42, 46, 56, 63, 51, 52

1	INSPECTION START
Solenoid valve relay inspection	

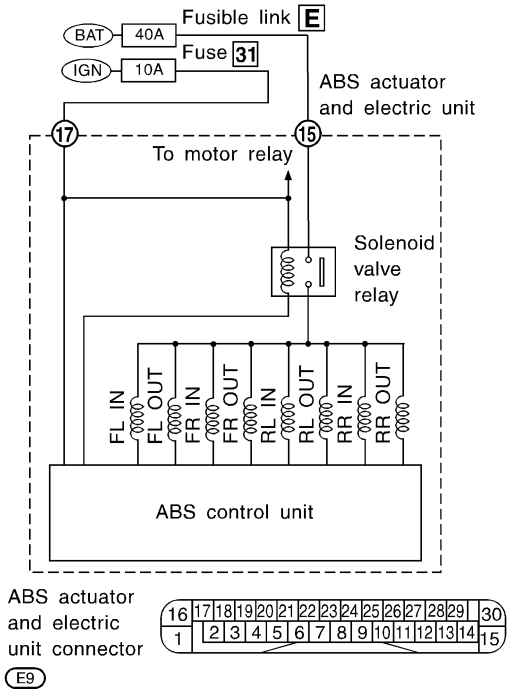

SBR591EA

▶	GO TO 2.

2	CHECK SOLENOID VALVE POWER SUPPLY CIRCUIT
Check 40A [**E**] fusible link (ABS ACTR) for ABS solenoid valve relay. For fusible link layout, refer to POWER SUPPLY ROUTING in EL section.	
Is fusible link OK?	
Yes ▶	GO TO 3.
No ▶	GO TO 7.

3	CHECK FUSE
Check 10A fuse No. 31. For fuse layout, refer to “POWER SUPPLY ROUTING” in EL section.	
Is fuse OK?	
Yes ▶	GO TO 4.
No ▶	GO TO 9.

4	CHECK CONNECTOR	
1. Disconnect connectors from control unit and ABS actuator. Check terminals for damage or loose connection. Then reconnect connectors. 2. Carry out self-diagnosis again. **Does warning lamp activate again?**		
Yes	▶	GO TO 5.
No	▶	**INSPECTION END**

5	CHECK GROUND CIRCUIT	
Refer to ABS ACTUATOR AND ELECTRIC UNIT in Ground Circuit Check, BR-60. **Is ground circuit OK?**		
Yes	▶	GO TO 6.
No	▶	Repair harness and connectors.

6	CHECK SOLENOID VALVE POWER SUPPLY CIRCUIT	
1. Disconnect ABS actuator and electric unit connector. 2. Check voltage between ABS actuator and electric unit connector terminal 15 and ground. 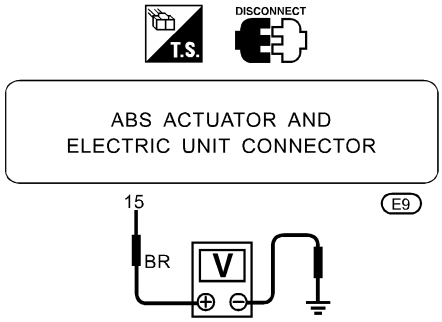 SBR592E **Does battery voltage exist?**		
Yes	▶	Replace ABS actuator and electric unit.
No	▶	**Check the following.** ● Harness connector E9 ● Harness for open or short between ABS actuator and electric unit and fusible link If NG, repair harness or connectors.

7	REPLACE FUSIBLE LINK	
Replace fusible link. **Does the fusible link blow out when ignition switch is turned "ON"?**		
Yes	▶	GO TO 8.
No	▶	**INSPECTION END**

8	CHECK RELAY UNIT POWER SUPPLY CIRCUIT

1. Disconnect ABS actuator and electric unit connector.
2. Check continuity between ABS actuator and electric unit connector terminal 15 and ground.

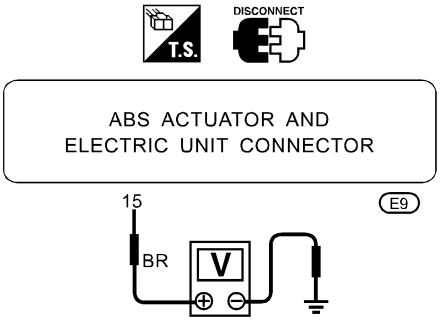

SBR592E

Does continuity exist?

Yes	▶	Replace ABS actuator and electric unit.
No	▶	**Check the following.** ● Harness connector E9 ● Harness for open or short between ABS actuator and electric unit and fusible link If NG, repair harness or connectors.

9	REPLACE FUSE

Replace fuse.

Does the fuse blow out when ignition switch is turned "ON"?

Yes	▶	**Check the following.** ● Harness connector E9 ● Harness for open or short between ABS actuator and electric unit and fuse If NG, repair harness or connectors.
No	▶	**INSPECTION END**

Motor Relay or Motor

DIAGNOSTIC PROCEDURE

=NFBR0117

NFBR0117S01

Malfunction code No. 61

1	INSPECTION START

ABS motor relay inspection

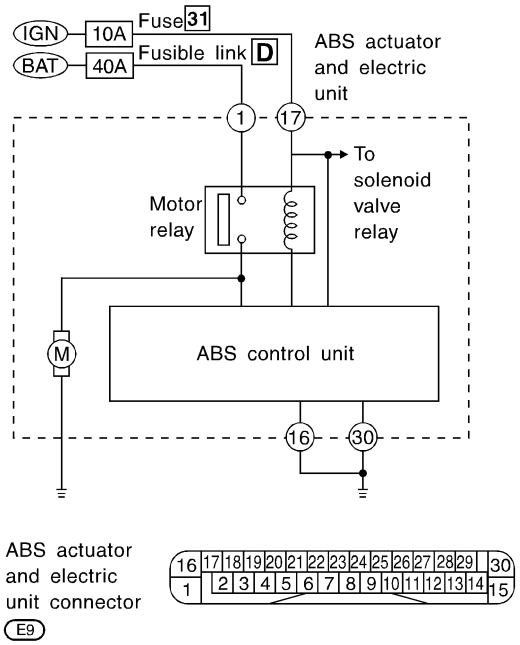

SBR593EA

▶	GO TO 2.

2	CHECK MOTOR POWER SUPPLY CIRCUIT

Check 40A [**D**] fusible link (ABS MTR) for ABS motor relay. For fusible link layout, refer to POWER SUPPLY ROUTING in EL section.

Is fusible link OK?

Yes	▶	GO TO 3.
No	▶	GO TO 6.

3	CHECK CONNECTOR

1. Disconnect ABS actuator and electric unit connector. Check terminals for damage or loose connection. Then reconnect connectors.
2. Carry out self-diagnosis again.

Does warning lamp activate again?

Yes	▶	GO TO 4.
No	▶	**INSPECTION END**

4	CHECK MOTOR RELAY POWER SUPPLY CIRCUIT

1. Disconnect ABS actuator and electric unit connector.
2. Check voltage between ABS actuator and electric unit connector terminal 1 and ground.

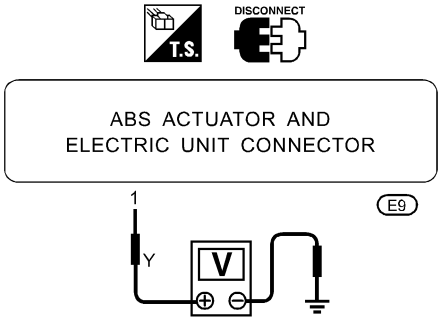

Does battery voltage exist?

Yes	▶	GO TO 5.
No	▶	**Check the following.** ● Harness connector E9 ● Harness for open or short between ABS actuator and electric unit and fusible link If NG, repair harness or connectors.

5	CHECK ABS ACTUATOR AND ELECTRIC UNIT GROUND CIRCUIT

Refer to ABS ACTUATOR AND ELECTRIC UNIT GROUND in Ground Circuit Check, BR-60.

Is ground circuit OK?

Yes	▶	Replace ABS actuator and electric unit.
No	▶	**Check the following.** ● Harness connector E9 ● Harness for open or short between ABS actuator and electric unit and ground If NG, repair harness or connectors.

6	REPLACE FUSIBLE LINK

Replace fusible link.

Does the fusible link blow out when ignition switch is turned "ON"?

Yes	▶	GO TO 7.
No	▶	**INSPECTION END**

7	CHECK ABS ACTUATOR MOTOR POWER SUPPLY CIRCUIT

1. Disconnect battery cable and ABS actuator and electric unit connector.
2. Check continuity between ABS actuator and electric unit connector terminal 1 and ground.

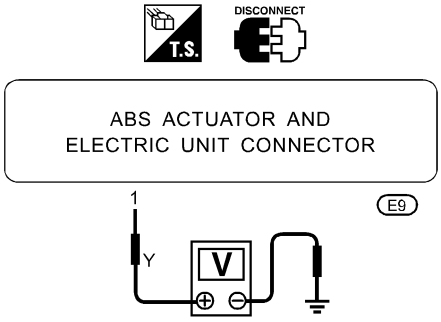

SBR594E

Does continuity exist?

Yes	▶	Check ABS actuator and electric unit pin terminals for damage or the connection of ABS actuator and electric unit harness connector. Reconnect ABS actuator and electric unit harness connector. Then retest.
No	▶	**Check the following.** ● Harness connector E9 ● Harness for open or short between ABS actuator and electric unit and fusible link If NG, repair harness or connectors.

Low Voltage

NFBR0118

DIAGNOSTIC PROCEDURE

NFBR0118S01

Malfunction code No. 57

1	INSPECTION START

ABS actuator and electric unit power supply and ground circuit inspection

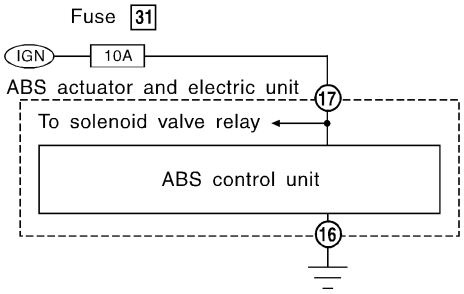

SBR595E

	▶	GO TO 2.

2	CHECK CONNECTOR
1. Disconnect ABS actuator and electric unit connector. Check terminals for damage or loose connections. Then reconnect connector. 2. Carry out self-diagnosis again. **Does warning lamp activate again?**	
Yes ▶	GO TO 3.
No ▶	**INSPECTION END**

3	CHECK ABS ACTUATOR AND ELECTRIC UNIT POWER SUPPLY CIRCUIT
1. Disconnect ABS actuator and electric unit connector. 2. Check voltage between ABS actuator and electric unit connector terminal 17 and ground.	

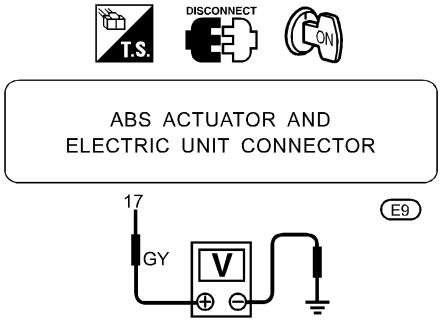

SBR596E

Does battery voltage exist when ignition switch is turned ON?

Yes ▶	GO TO 4.
No ▶	GO TO 5.

4	CHECK ABS ACTUATOR AND ELECTRIC UNIT GROUND
Refer to ABS ACTUATOR AND ELECTRIC UNIT GROUND in Ground Circuit Check, BR-60. **Is ground circuit OK?**	
OK ▶	Check ABS actuator and electric unit pin terminals for damage or the connection of ABS actuator and electric unit harness connector. Reconnect ABS actuator and electric unit harness connector. Then retest.
NG ▶	**Check the following.** ● Harness connector E9 ● Harness for open or short between ABS actuator and electric unit and ground If NG, repair harness or connectors.

5	CHECK FUSE
Check 10A fuse 31 (Engine control) for control unit. Refer to POWER SUPPLY ROUTING in EL section. **Is fuse OK?**	
Yes ▶	GO TO 6.
No ▶	Replace fuse.

6	CHECK ABS ACTUATOR AND ELECTRIC UNIT POWER SUPPLY CIRCUIT	
Check continuity between battery and ABS actuator and electric unit connector terminal 17. **Does continuity exist?**		
Yes	▶	Check battery. Refer to BATTERY in EL section.
No	▶	**Check the following.** ● Harness connector E9 ● Harness for open or short between ABS actuator and electric unit and fuse If NG, repair harness or connectors.

Control Unit

NFBR0119

DIAGNOSTIC PROCEDURE

NFBR0119S01

Malfunction code No. 71

1	INSPECTION START	
ABS actuator and electric unit power supply and ground circuit inspection 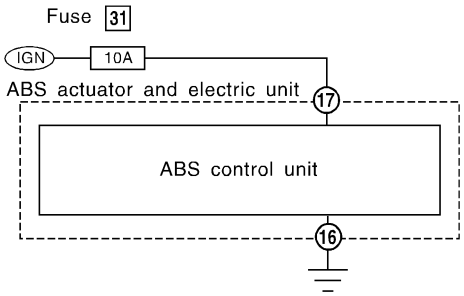 SBR597E		
	▶	GO TO 2.

2	CHECK CONNECTOR	
1. Disconnect ABS actuator and electric unit connector. Check terminals for damage or loose connections. Then reconnect connectors. 2. Carry out self-diagnosis again. **Does warning lamp activate again?**		
Yes	▶	GO TO 3.
No	▶	**INSPECTION END**

3	CHECK ABS ACTUATOR AND ELECTRIC UNIT POWER SUPPLY CIRCUIT	
Check voltage. Refer to "3. CHECK ABS ACTUATOR AND ELECTRIC UNIT POWER SUPPLY CIRCUIT" in "Low Voltage", BR-70. **Does battery voltage exist when ignition switch is turned ON?**		
Yes	▶	GO TO 4.
No	▶	Repair.

4	CHECK WARNING LAMP INDICATION	
Does warning lamp indicate code No. 71 again?		
Yes	▶	Replace ABS actuator and electric unit.
No	▶	Inspect the system according to the code No.

1. ABS Works Frequently

NFBR0120

1	CHECK BRAKE FLUID PRESSURE	
Check brake fluid pressure distribution. Refer to dual proportioning valve inspection in “DUAL PROPORTIONING VALVE”, BR-12. **Is brake fluid pressure distribution normal?**		
Yes	▶	GO TO 2.
No	▶	Perform Preliminary Check. Refer to BR-57.

2	CHECK WHEEL SENSOR	
1. Check wheel sensor connector for terminal damage or loose connections. 2. Perform wheel sensor mechanical check. Refer to “Wheel Sensor or Rotor”, BR-62. **Are wheel sensors functioning properly?**		
Yes	▶	GO TO 3.
No	▶	Repair.

3	CHECK FRONT AXLE	
Check front and rear axles for excessive looseness. Refer to AX section, “Front Wheel Bearing”, “ON-VEHICLE SERVICE” and “Rear Wheel Bearing”, “ON-VEHICLE SERVICE”. **Is front axle installed properly?**		
Yes	▶	Go to “3. CHECK WARNING LAMP INDICATION” in “2. Unexpected Pedal Action”, BR-73.
No	▶	Repair.

2. Unexpected Pedal Action

NFBR0121

1	CHECK BRAKE PEDAL STROKE	
Check brake pedal stroke. Is stroke excessively large?		
Yes	▶	Perform Preliminary Check. Refer to BR-57.
No	▶	GO TO 2.

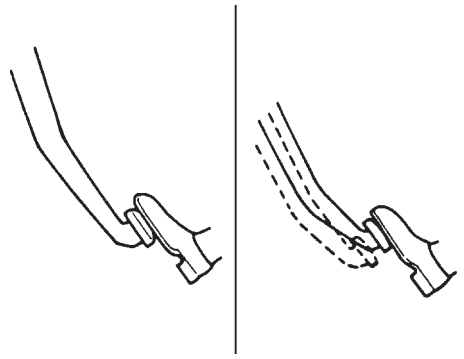

SBR540A

2	CHECK CONNECTOR AND PERFORMANCE	
1. Disconnect ABS actuator and electric unit connector. 2. Check whether brake is effective.		
OK or NG		
Yes	▶	GO TO 3.
No	▶	Perform Preliminary Check. Refer to BR-57.

3	CHECK WARNING LAMP INDICATION	
Ensure warning lamp remains off while driving.		
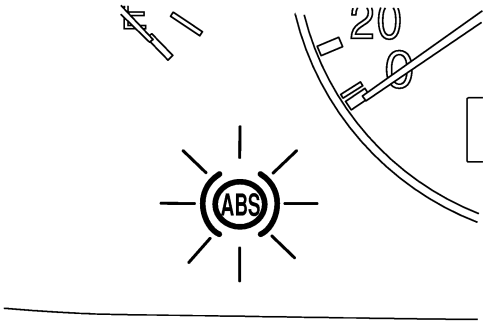 SBR588E		
Is warning lamp turned off?		
Yes	▶	GO TO 4.
No	▶	Carry out self-diagnosis. Refer to BR-48, BR-50.

4	CHECK WHEEL SENSOR	
1. Check wheel sensor connector for terminal damage or loose connection. 2. Perform wheel sensor mechanical check.		
Is wheel sensor mechanism OK?		
Yes	▶	Check ABS actuator and electric unit pin terminals for damage or the connection of ABS actuator and electric unit harness connector. Reconnect ABS actuator and electric unit harness connector. Then retest.
No	▶	Repair.

3. Long Stopping Distance

NFBR0122

1	CHECK CONNECTOR AND PERFORMANCE	
1. Cancel ABS by disconnecting ABS actuator and electric unit connector. 2. Check whether stopping distance is still long.		
OK or NG		
OK	▶	Perform Preliminary Check and air bleeding.
NG	▶	Go to "3. CHECK WARNING LAMP INDICATION" in "2. Unexpected Pedal Action", BR-73.

NOTE:
Stopping distance may be longer than vehicles without ABS when road condition is slippery.

4. ABS Does Not Work

NFBR0123

1	CHECK WARNING LAMP INDICATION	
Does the ABS warning lamp activate?		
Yes	▶	Carry out self-diagnosis. Refer to BR-48, BR-50.
No	▶	Go to "3. CHECK WARNING LAMP INDICATION" in "2. Unexpected Pedal Action", BR-73.

NOTE:
ABS does not work when vehicle speed is under 10 km/h (6 MPH).

5. Pedal Vibration and Noise

=NFBR0124

1	INSPECTION START
Pedal vibration and noise inspection 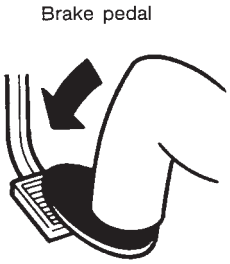 SAT797A	
▶	GO TO 2.

2	CHECK SYMPTOM
1. Apply brake. 2. Start engine. **Does the symptom appear only when engine is started?**	
Yes ▶	Carry out self-diagnosis. Refer to BR-48, BR-50.
No ▶	GO TO 3.

3	RECHECK SYMPTOM
Does the symptom appear when electrical equipment switches (such as headlamp) are operated?	
Yes ▶	**INSPECTION END**
No ▶	Go to “3. CHECK WARNING LAMP INDICATION” in “2. Unexpected Pedal Action”, BR-73.

NOTE:
ABS may operate and cause vibration under any of the following conditions.

- Applying brake gradually when shifting or operating clutch.
- Low friction (slippery) road.
- High speed cornering.
- Driving over bumps and pot holes.
- Engine speed is over 5,000 rpm with vehicle stopped.

6. ABS Warning Lamp Does Not Come On When Ignition Switch Is Turned On

=NFBR0125

1	INSPECTION START

Warning lamp circuit inspection

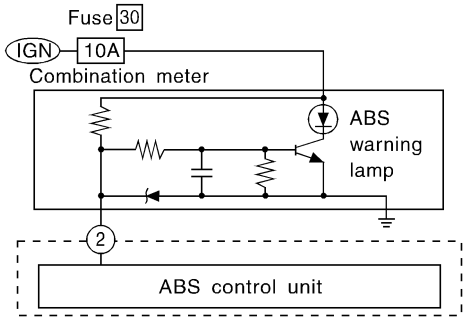

SBR598E

▶	GO TO 2.

2	CHECK FUSE

Check 10A fuse No. 30 for warning lamp. For fuse layout, refer to “POWER SUPPLY ROUTING” in EL section.

Is fuse OK?

Yes	▶	GO TO 3.
No	▶	Replace fuse.

3	CHECK ABS CONTROL UNIT POWER SUPPLY CIRCUIT

1. Install 10A fuse.
2. Remove solenoid valve relay.
3. Disconnect connectors from control unit and actuator.
4. Check voltage between control unit connector terminal 2 and ground after turning ignition switch “ON”.

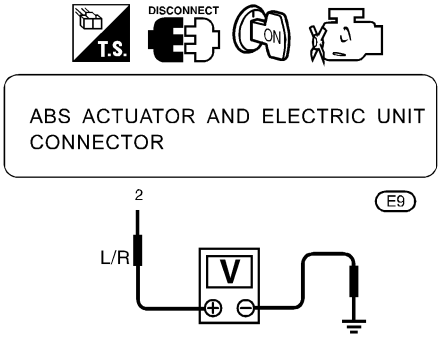

SBR599E

Does battery voltage exist after turning ignition switch “ON”?

Yes	▶	GO TO 5.
No	▶	GO TO 4.

4	CHECK WARNING LAMP INDICATION

Disconnect ABS actuator and electric unit connector.

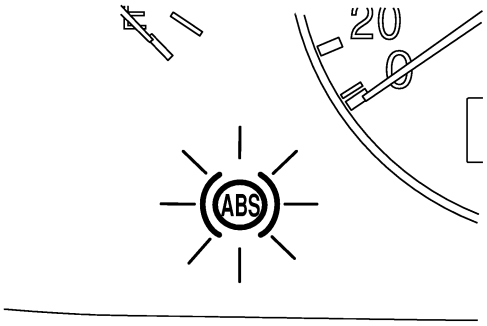

SBR588E

Does the ABS warning lamp activate?

Yes	▶	GO TO 6.
No	▶	GO TO 5.

5	CHECK HARNESS FOR SHORT

1. Disconnect ABS actuator and electric unit connector.
2. Check voltage between ABS actuator and electric unit connector terminal 2 and ground.

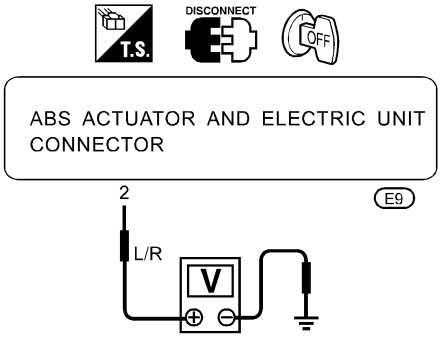

SBR600E

Does battery voltage exist?

Yes	▶	Check combination meter. Refer to WARNING LAMPS in EL section.
No	▶	Repair harness and connectors between fuse and ABS actuator and electric unit connector terminal 2.

6	CHECK HARNESS CONNECTOR

Check ABS actuator and electric unit pin terminals for damage or connection of ABS actuator and electric unit harness connector. Reconnect ABS actuator and electric unit harness connector. Then reset.

OK	▶	**INSPECTION END**
NG	▶	Replace ABS actuator and electric unit.

7. ABS Warning Lamp Stays On When Ignition Switch Is Turned On

=NFBR0126

1	INSPECTION START

ABS control unit inspection

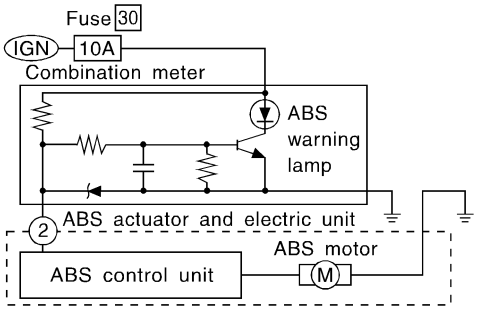

SBR601E

	▶	GO TO 2.

2	CHECK WARNING LAMP

1. Disconnect ABS actuator and electric unit connector.
2. Connect suitable wire between ABS actuator and electric unit connector terminal 2 and ground.

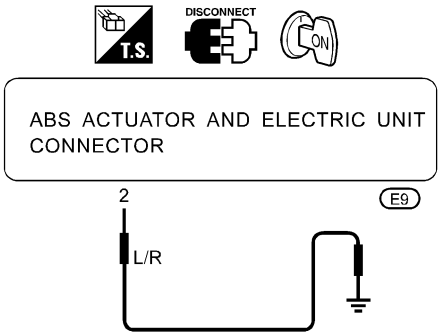

SBR602E

Does warning lamp activate?

Yes	▶	GO TO 3.
No	▶	**Repair combination meter. Check the following.** ● Harness connector E9 ● Harness for open or short between ABS actuator and electric unit and fuse If NG, repair harness or connector.

3	CHECK HARNESS CONNECTOR

Check ABS actuator and electric unit pin terminals for damage or the connection of ABS actuator and electric unit harness connector. Reconnect ABS actuator and electric unit harness connector. Then retest.

OK	▶	**INSPECTION END**
NG	▶	GO TO 4.

4	CHECK ABS MOTOR GROUND	
1. Turn ignition switch "OFF". 2. Check continuity between ABS motor and ground. **Does continuity exist?**		
Yes	▶	Replace ABS actuator and electric unit.
No	▶	**Check the following.** ● ABS motor ground harness ● ABS motor ground harness for open or short between ABS motor and ground If NG, repair harness.

Purpose

NFBR0048

The ABS consists of electronic and hydraulic components. It allows for control of braking force so that locking of the wheels can be avoided.
The ABS:

1) Ensures proper tracking performance through steering wheel operation.
2) Enables obstacles to be avoided through steering wheel operation.
3) Ensures vehicle stability by preventing flat spins.

ABS (Anti-Lock Brake System) Operation

NFBR0049

- When the vehicle speed is less than 10 km/h (6 MPH) this system does not work.
- The Anti-Lock Brake System (ABS) has self-test capabilities. The system turns on the ABS warning lamp for 1 second after turning the ignition switch ON. The system performs another test the first time the vehicle reaches 6 km/h (4 MPH). A mechanical noise may be heard as the ABS performs a self-test. This is a normal part of the self-test feature. If a malfunction is found during this check, the ABS warning lamp will come on.
- During ABS operation, a mechanical noise may be heard. This is a normal condition.

ABS Hydraulic Circuit

NFBR0050

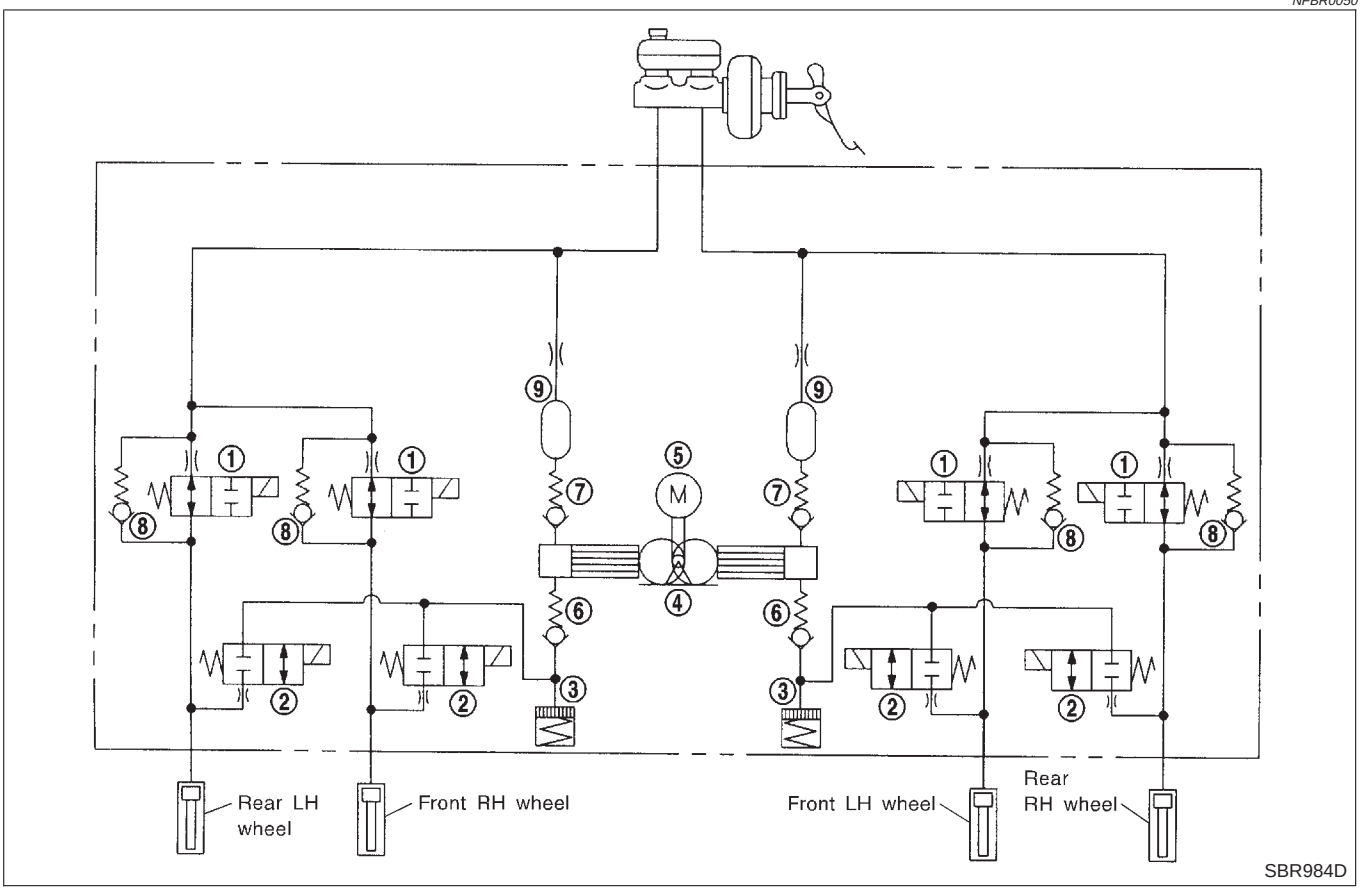

1. Inlet solenoid valve
2. Outlet solenoid valve
3. Reservoir
4. Pump
5. Motor
6. Inlet valve
7. Outlet valve
8. Bypass check valve
9. Damper

TCS (Traction Control System) Operation

=NFBR0081

- This system is designed to limit wheel slip during acceleration by cutting fuel to selected cylinders and changing transmission shift schedule.
  The ABS/TCS control unit monitors wheel speed slips through the ABS wheel sensors and determines the desired torque reduction needed to minimize wheel spin.
  The torque reduction by the ABS/TCS control unit may result in a combination of fuel cutoff and change shift timing of the transmission.
  The torque reduction is sent from the ABS/TCS control unit through the data link to the ECM and TCM. The ECM will cut off fuel and/or TCM change shift schedule to achieve torque reduction.
  The TCS will be enabled when the TCS switch is in the ON position (TCS OFF indicator not illuminated), and if the catalytic converter temperature is within normal operating range.
- This system has a self-diagnostic function. When the ignition switch is initially turned “ON”, the SLIP indicator lamp and TCS OFF indicator lamp light. If there is no problem with the ABS and TCS, both indicator lamps will go out as soon as the engine starts.
- The TCS OFF switch cancels the TCS function. The TCS OFF indicator lamp then lights to indicate that the TCS is not operating.
- This system utilizes a fuel-cut function to control drive torque. If fuel cut continues for an extended period of time during high-speed operations, the catalyst may melt and deteriorate. During continued TCS operations, the system will sometimes suspend the drive torque control function, preventing catalyst melting and deterioration.

System Components

NFBR0051

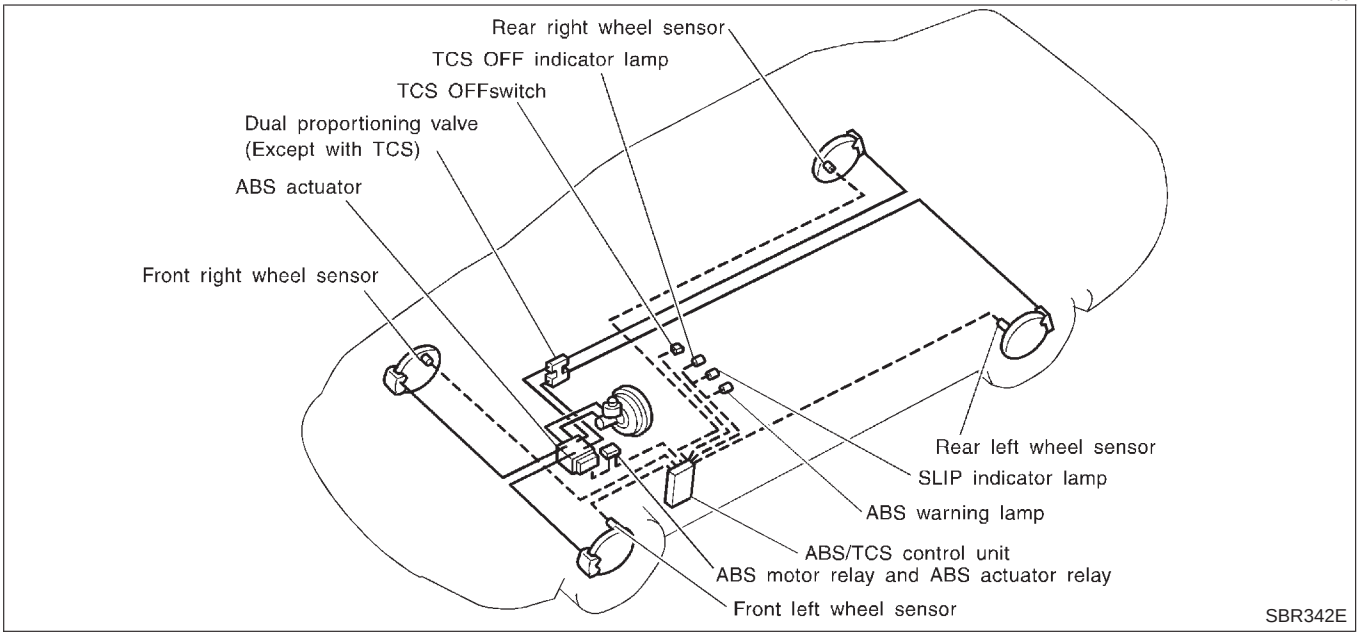

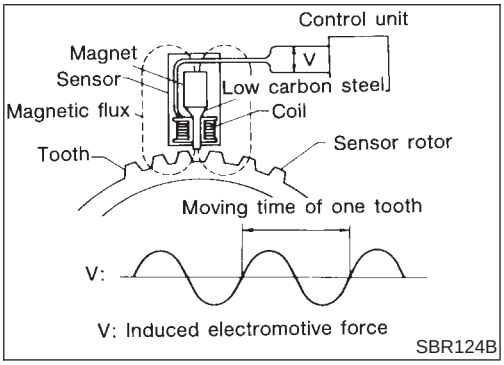

System Description

NFBR0052

SENSOR

NFBR0052S01

The sensor unit consists of a gear-shaped sensor rotor and a sensor element. The element contains a bar magnet around which a coil is wound. The sensor is installed on the back side of the brake rotor. Sine-wave current is generated by the sensor as the wheel rotates. The frequency and voltage increase(s) as the rotating speed increases.

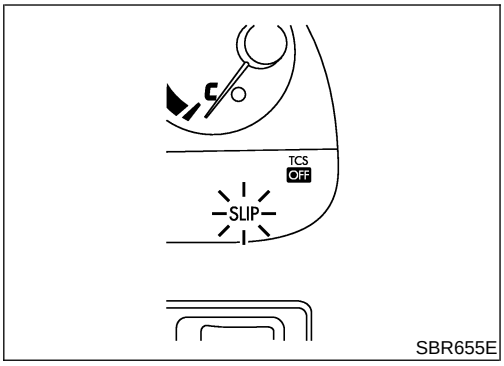

SBR655E

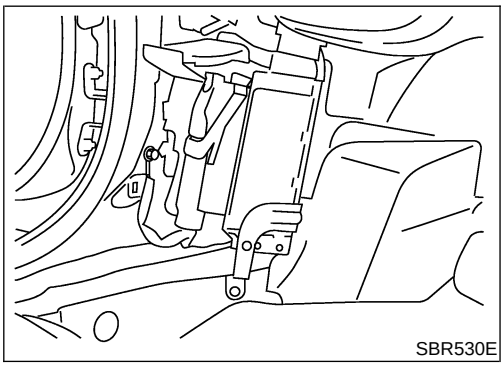
SBR530E

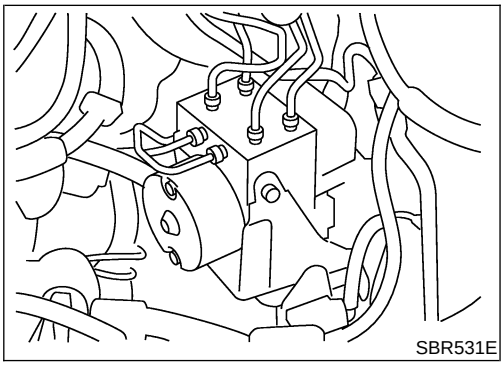
SBR531E

CONTROL UNIT

NFBR0052S02

ABS Function

NFBR0052S0201

The control unit computes the wheel rotating speed by the signal current sent from the sensor. Then it supplies a DC current to the actuator solenoid valve. It also controls ON-OFF operation of the valve relay and motor relay. If any electrical malfunction should be detected in the system, the warning lamp is turned on. In this condition, the ABS will be deactivated, and the vehicle's brake system reverts to normal operation.

TCS Function

NFBR0052S0202

Drive wheel slippage is detected by the 4-wheel rotating speed signal. When the wheel slip becomes excessive, the TCS operates, causing the SLIP indicator lamp to flash. And, at the same time, a fuel-cut signal to be sent to the ECM and a signal requiring a change in the shift schedule is sent to the TCM. When the TCS OFF switch is used to cancel TCS function, the TCS OFF indicator lamp will light. (TCS does not activate.) In case of a malfunction in the TCS, both the SLIP indicator lamp and the TCS OFF indicator lamp will light, while shutting down the TCS system operation. The vehicle will operate in the same way as a vehicle not equipped with the TCS.

ACTUATOR

NFBR0052S03

The actuator contains:

- An electric motor and pump
- Two relays
- Eight solenoid valves, each inlet and outlet for
  - — LH front
  - — RH front
  - — LH rear
  - — RH rear

These components control the hydraulic circuit. The ABS control unit directs the actuator to increase, hold or decrease hydraulic pressure to all or individual wheels.

ABS Actuator Operation

NFBR0052S0301

		Inlet solenoid valve	Outlet solenoid valve	
Normal brake operation		OFF (Open)	OFF (Closed)	Master cylinder brake fluid pressure is directly transmitted to caliper via the inlet solenoid valve.
ABS operation	Pressure hold	ON (Closed)	OFF (Closed)	Hydraulic circuit is shut off to hold the caliper brake fluid pressure.
	Pressure decrease	ON (Closed)	ON (Open)	Caliper brake fluid is sent to reservoir via the outlet solenoid valve. Then it is pushed up to the master cylinder by pump.
	Pressure increase	OFF (Open)	OFF (Closed)	Master cylinder brake fluid pressure is transmitted to caliper.

Component Parts and Harness Connector Location

NFBR0053

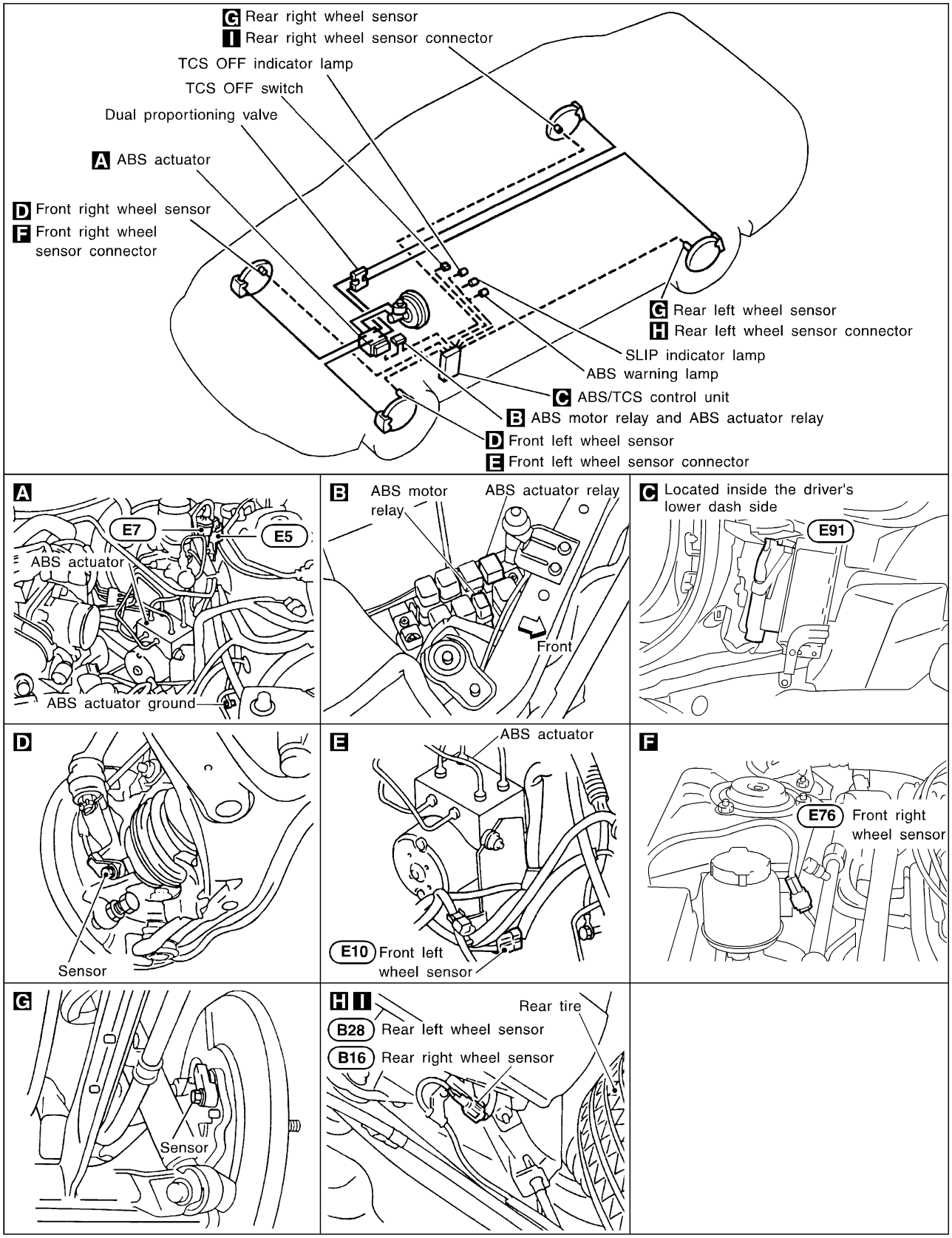

SBR534EB

Schematic

NFBR0054

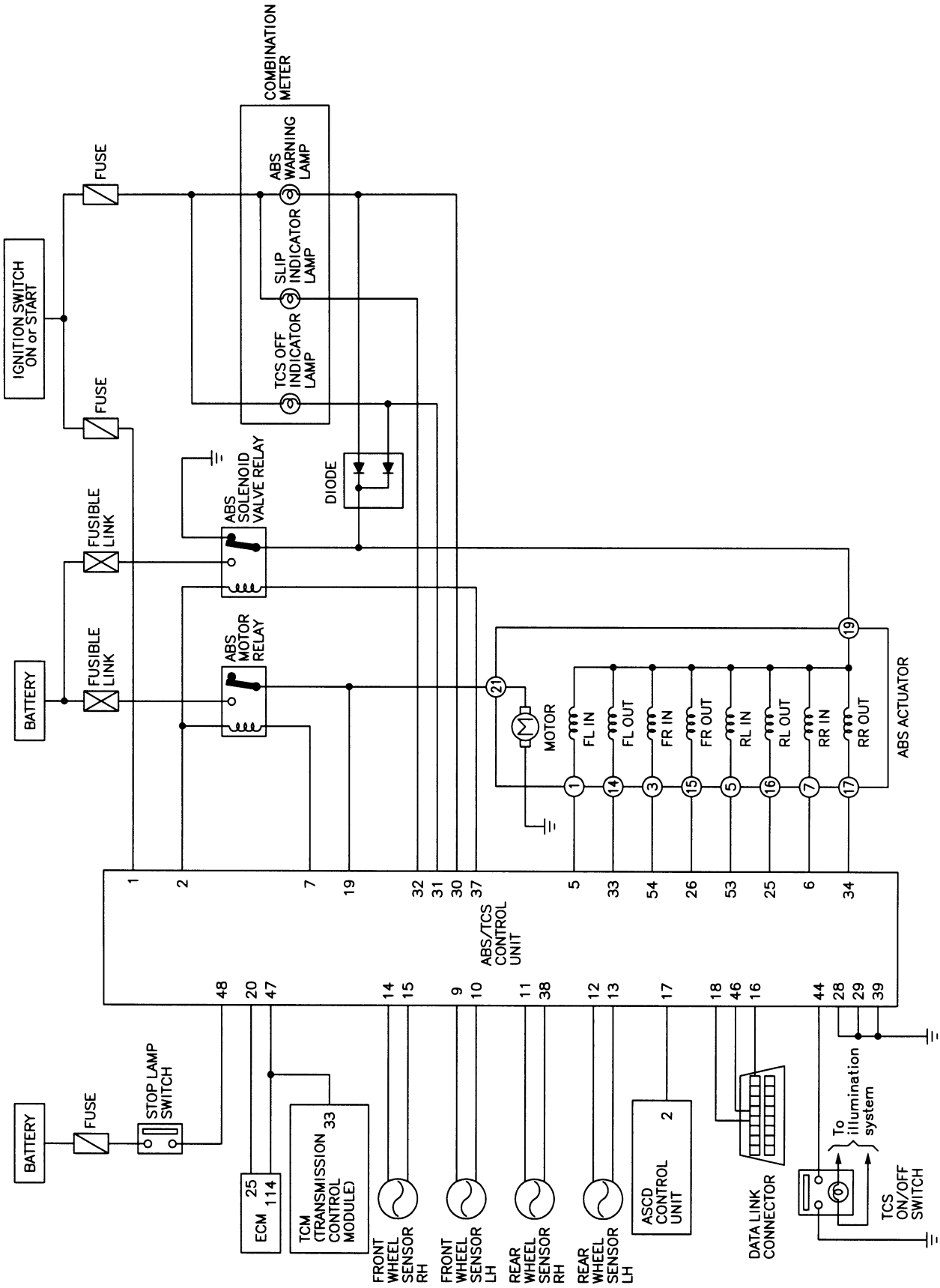

MBR418A

Wiring Diagram — TCS —

NFBR0055

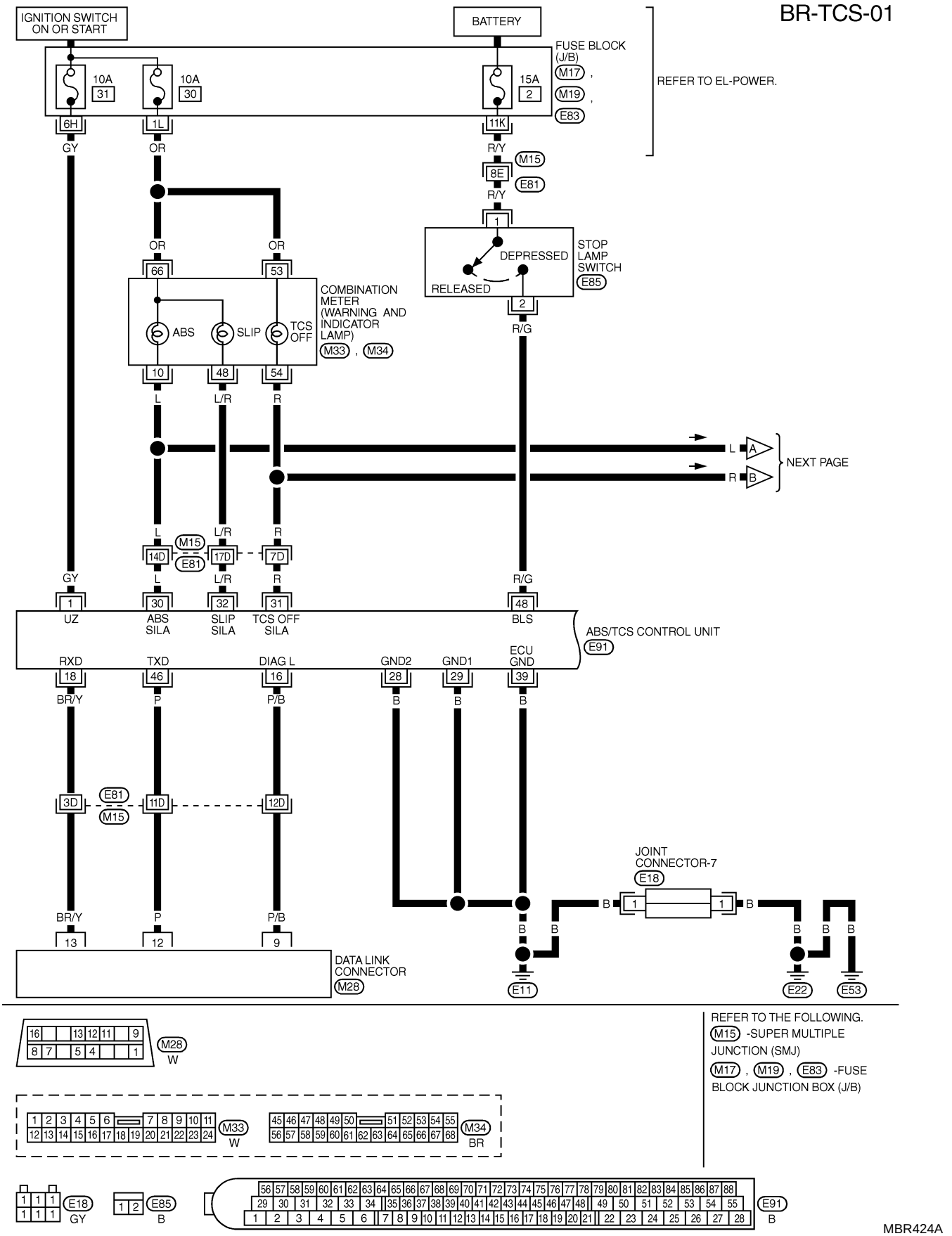

BR-TCS-02

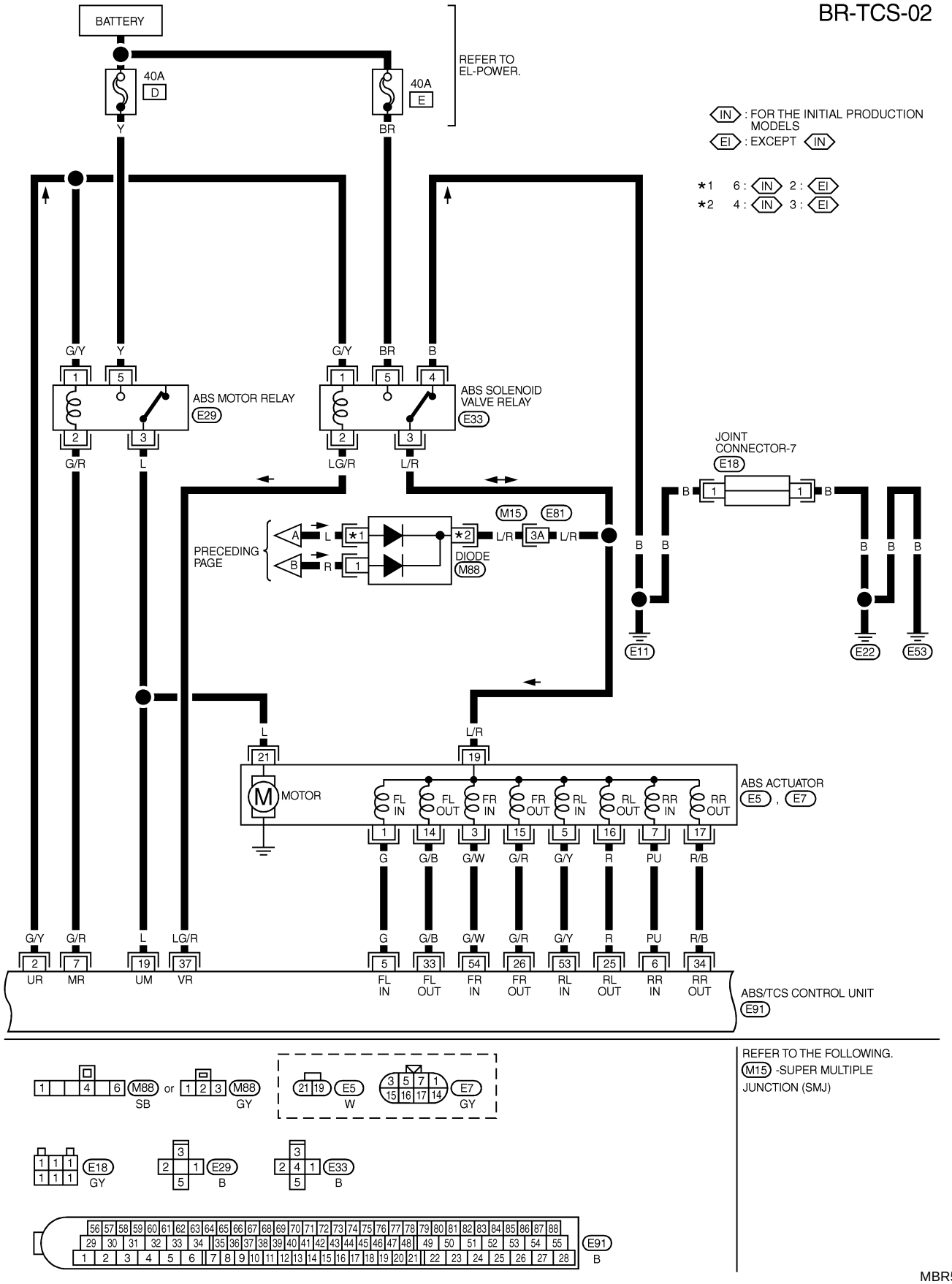
BATTERY
40A D
40A E
REFER TO EL-POWER.
IN : FOR THE INITIAL PRODUCTION MODELS
EI : EXCEPT IN
*1 6 : IN 2 : EI
*2 4 : IN 3 : EI
ABS MOTOR RELAY E29
ABS SOLENOID VALVE RELAY E33
JOINT CONNECTOR-7 E18
PRECEDING PAGE
DIODE M88
M15 E81
3A
E11
E22
E53
MOTOR
ABS ACTUATOR E5 , E7
FL IN
FL OUT
FR IN
FR OUT
RL IN
RL OUT
RR IN
RR OUT
ABS/TCS CONTROL UNIT E91
UR
MR
UM
VR
REFER TO THE FOLLOWING.
M15 -SUPER MULTIPLE JUNCTION (SMJ)
M88 SB
M88 GY
E5 W
E7 GY
E18 GY
E29 B
E33 B
E91 B
MBR500A

BR-TCS-03

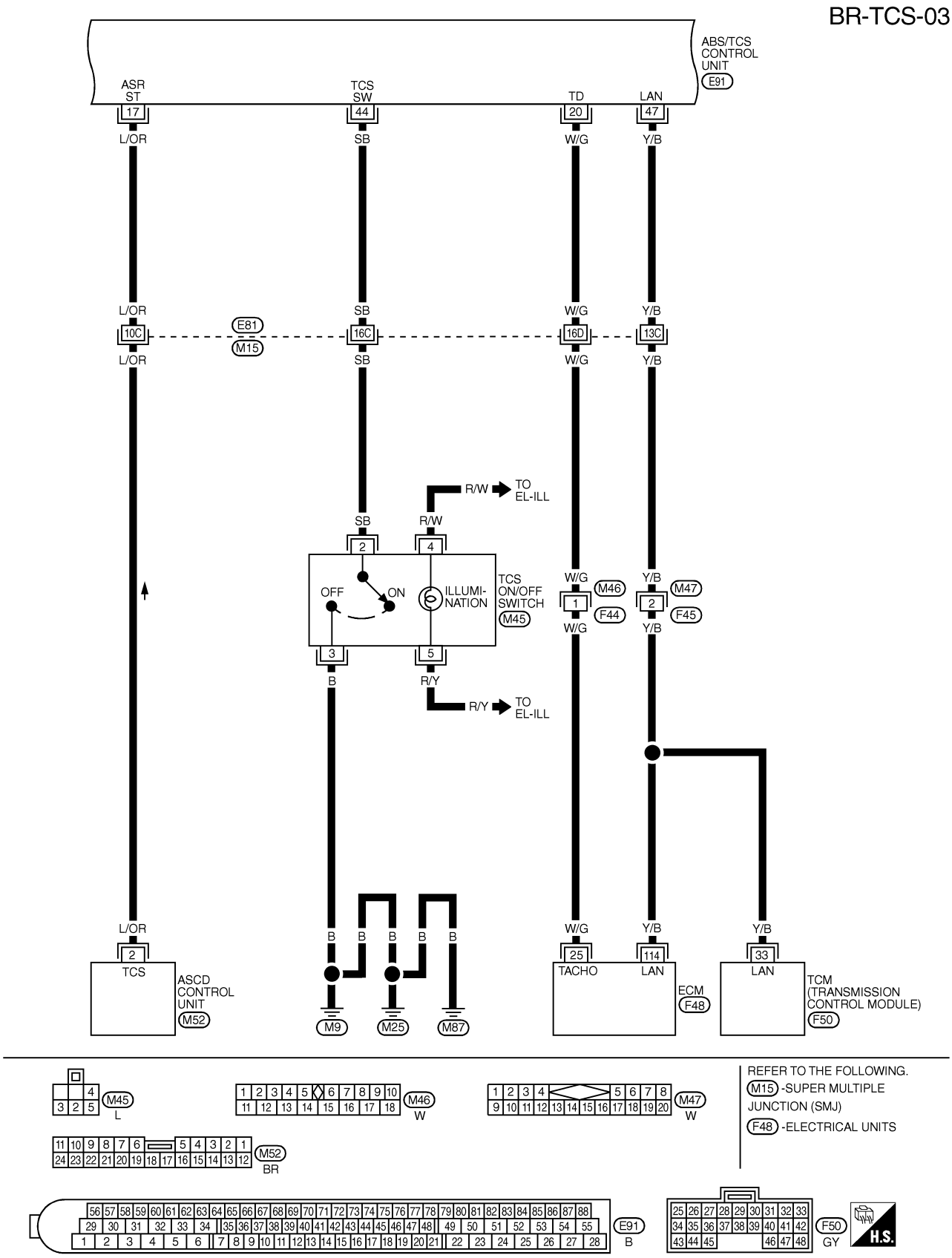

MBR425A

BR-TCS-04

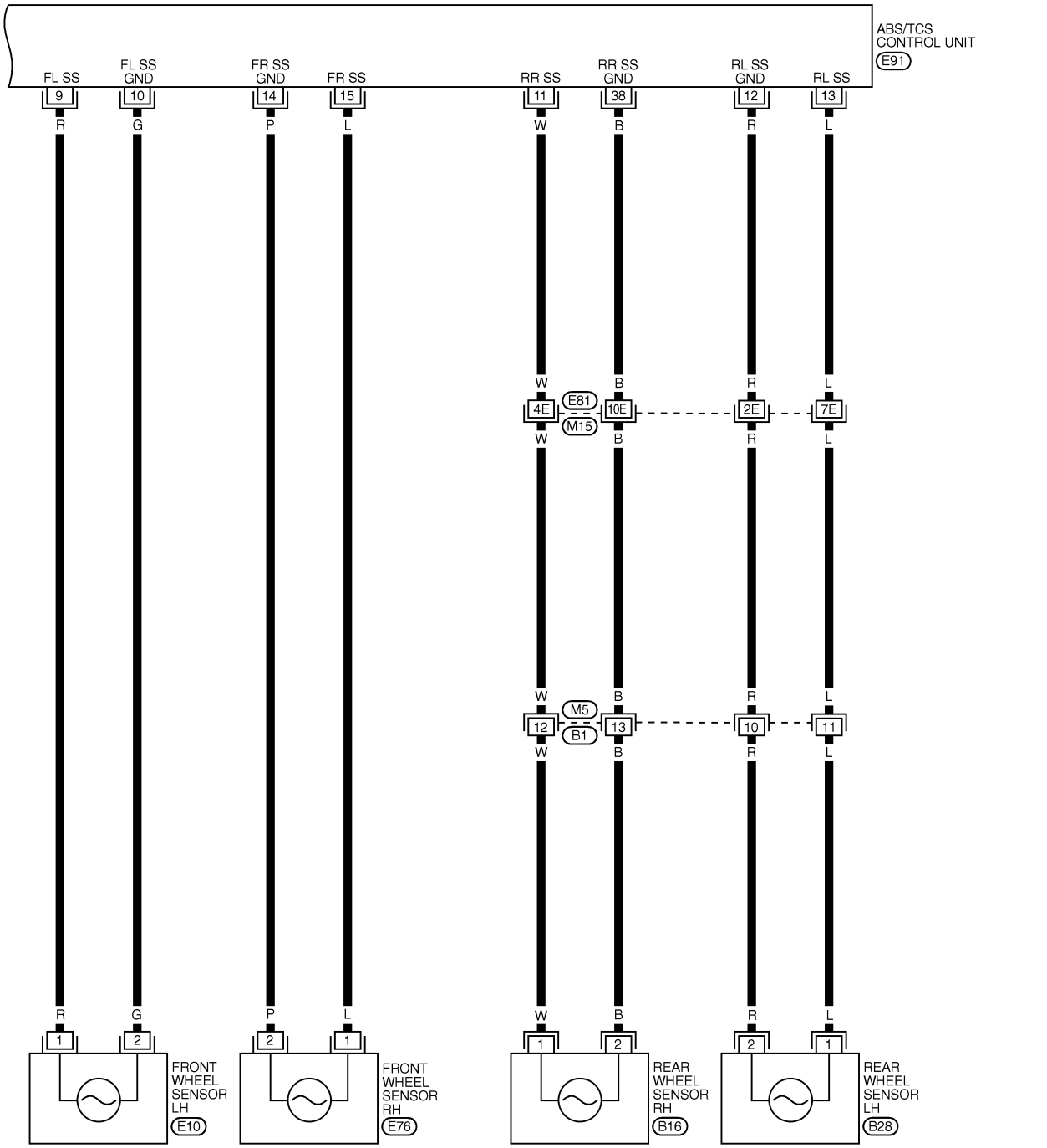

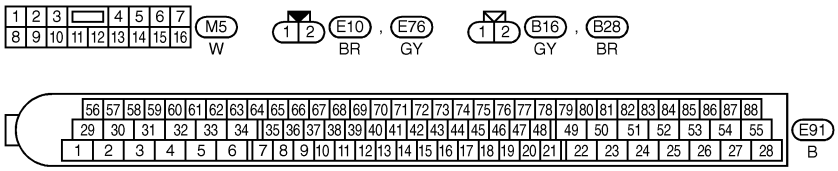

REFER TO THE FOLLOWING.
M15 -SUPER MULTIPLE JUNCTION (SMJ)

MBR435A

ABS (/TCS) CONTROL UNIT TERMINALS AND REFERENCE VALUE (MEASURED BETWEEN EACH TERMINAL AND 28 OR 29 OR 39).

TERMINAL	WIRE COLOR	ITEM	CONDITION	DATA (DC)
1	GY	POWER SOURCE	IGN ON	BATTERY VOLTAGE
			IGN OFF	APPROX. 0V
2	G/Y	ABS MOTOR RELAY AND ABS SOLENOID VALVE RELAY	–	–
5	G	ABS ACTUATOR FRONT LH IN SOLENOID	WHEN ABS ACTUATOR OPERATES (BY ACTIVE TEST WITH CONSULT-II) OR ABS SOLENOID VALVE RELAY DOES NOT OPERATE	APPROX. 0V
			WHEN ABS ACTUATOR DOES NOT OPERATE AND SOLENOID VALVE RELAY OPERATES	BATTERY VOLTAGE
6	PU	ABS ACTUATOR REAR RH IN SOLENOID	SAME AS TERMINAL NO. 5	
7	G/R	ABS MOTOR RELAY	WHEN ABS MOTOR OPERATES (BY ACTIVE TEST WITH CONSULT-II)	APPROX. LESS THAN 2V
			WHEN ABS MOTOR DOES NOT OPERATE	BATTERY VOLTAGE
9	R	FRONT WHEEL SENSOR LH	WHEN VEHICLE CRUISES AT 30 KM/H (19 MPH)	PULSE FRONT: APRROX. 190 HZ REAR: APRROX. 190 HZ
10	G	FRONT WHEEL SENSOR LH		
11	W	REAR WHEEL SENSOR RH		
12	R	REAR WHEEL SENSOR LH		
13	L	REAR WHEEL SENSOR LH		
14	P	FRONT WHEEL SENSOR RH		
15	L	FRONT WHEEL SENSOR RH		
16	P/B	DATA LINK CONNECTOR	–	–
17	L/OR	ASCD CONTROL UNIT	–	–
18	BR/Y	DATA LINK CONNECTOR	–	–
19	L	ABS MOTOR RELAY	WHEN ABS MOTOR OPERATES (BY ACTIVE TEST WITH CONSULT-II)	BATTERY VOLTAGE
			WHEN ABS MOTOR DOES NOT OPERATE	APPROX. 0V
20	W/G	ECM (ENGINE SPEED SIGNAL)	–	–
25	R	ABS ACTUATOR REAR LH OUT SOLENOID	SAME AS TERMINAL NO. 5	
26	G/R	ABS ACTUATOR FRONT RH OUT SOLENOID		
28	B	GROUND	–	–
29	B	GROUND	–	–
30	L	ABS WARNING LAMP IN COMBINATION METER	WHEN ABS WARNING LAMP IS ACTIVE	APPROX. 0V
			WHEN ABS WARNING LAMP IS NOT ACTIVATE	BATTERY VOLTAGE
31	R	TCS OFF INDICATOR LAMP IN COMBINATION METER	WHEN TCS OFF INDICATOR LAMP IS ACTIVE	APPROX. 0V
			WHEN TCS OFF INDICATOR LAMP IS NOT ACTIVE	BATTERY VOLTAGE
32	L/R	SLIP INDICATOR LAMP IN COMBINATION METER	WHEN SLIP INDICATOR LAMP IS ACTIVE	APPROX. 0V
			WHEN SLIP INDICATOR LAMP IS NOT ACTIVE	BATTERY VOLTAGE
33	G/B	ABS ACTUATOR FRONT LH OUT SOLENOID	SAME AS TERMINAL NO. 5	
34	R/B	ABS ACTUATOR REAR RH OUT SOLENOID		
37	LG/R	ABS SOLENOID VALVE RELAY	WHEN ABS SOLENOID VALVE RELAY IS OPERATING	APRROX. LESS THAN 2V
			WHEN ABS SOLENOID VALVE RELAY IS NOT OPERATING	BATTERY VOLTAGE
38	B	REAR WHEEL SENSOR RH	SAME AS TERMINAL NO. 9, 10, 11, 12, 13, 14, 15	
39	B	GROUND	–	–
44	SB	TCS ON/OFF SWITCH	WHEN TCS OFF SWITCH IS "ON (TCS IS CANCELED)"	APPROX. 0V
			WHEN TCS OFF SWITCH IS "OFF (TCS CAN BE OPERATED)"	APPROX. 4.5V
46	P	DATA LINK CONNECTOR	–	–
47	Y/B	LAN (ECM, TCM)	–	–
48	R/G	STOP LAMP SWITCH	WHEN BREAKE PEDAL DEPRESSED	BATTERY VOLTAGE
			WHEN BREAKE PEDAL RELEASED	APPROX. 0V
53	G/Y	ABS ACTUATOR REAR LH IN SOLENOID	SAME AS TERMINAL NO. 5	
54	G/W	ABS ACTUATOR FRONT RH IN SOLENOID		

SBR641E

Self-diagnosis

NFBR0056

FUNCTION

NFBR0056S01

- When a problem occurs in the ABS, the ABS warning lamp on the instrument panel comes on. When a problem occurs in the TCS, the TCS OFF indicator lamp and SLIP indicator lamp on the instrument panel comes on. To actuate the self-diagnostic results mode, ground the self-diagnostic (check) terminal located on “Data link connector”. The location of the malfunction is indicated by the ABS warning lamp or SLIP indicator lamp flashing.

SELF-DIAGNOSIS PROCEDURE

NFBR0056S02

1. Drive vehicle over 30 km/h (19 MPH) for at least one minute.
2. Turn ignition switch “OFF”.

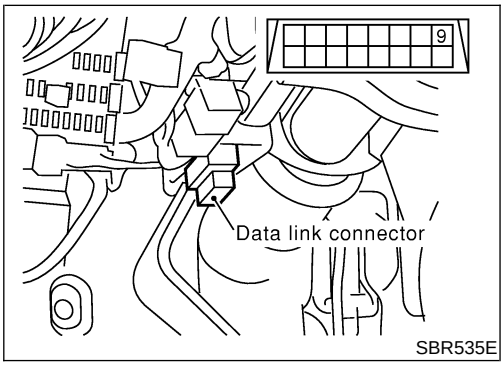

SBR535E

3. Ground terminal “9” of “Data link connector” with a suitable harness.
4. Turn ignition switch “ON” while grounding terminal “9”.
   Do not depress brake pedal.
   Do not start engine.

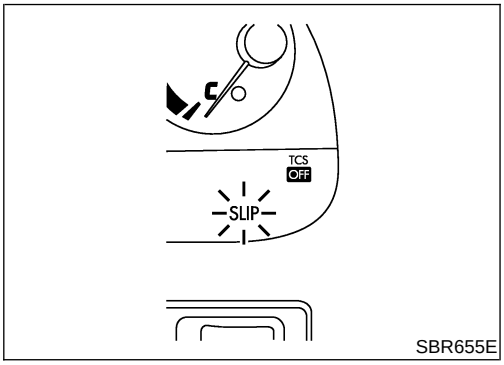

SBR655E

5. After 3.0 seconds, the SLIP indicator lamp starts flashing to indicate the malfunction code No. (See NOTE.)
6. Verify the location of the malfunction with the malfunction code chart. Refer to BR-105. Then make the necessary repairs following the diagnostic procedures.
7. After the malfunctions are repaired, erase the malfunction codes stored in the control unit. Refer to BR-92.
8. Rerun the self-diagnostic results mode to verify that the malfunction codes have been erased.

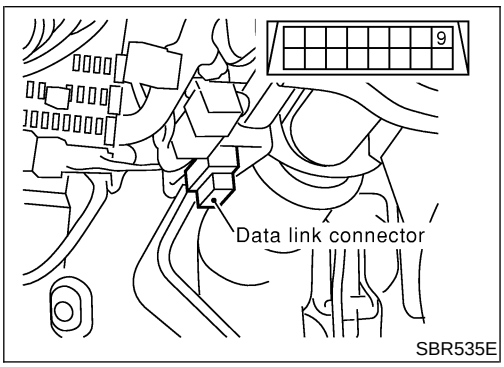

SBR535E

9. Disconnect the check terminal from the ground. The self-diagnostic results mode is now complete.
10. Check ABS warning lamp, TCS OFF indicator lamp and SLIP indicator lamp for deactivation after driving vehicle over 30 km/h (19 MPH) for at least one minute.
11. After making certain that ABS warning lamp, TCS OFF indicator lamp and SLIP indicator lamp does not come on, test the ABS/TCS SELF-DIAGNOSIS in a safe area to verify that it functions properly.

NOTE:
The indication terminates after five minutes.
However, when the ignition switch is turned from "OFF" to "ON", the SLIP indication starts flashing again. The TCS OFF indicator lamp and ABS warning lamp remain lighted.

HOW TO READ SELF-DIAGNOSTIC RESULTS (MALFUNCTION CODES)

NFBR0056S03

1. Determine the code No. by counting the number of times the ABS warning lamp or SLIP indicator lamp flashes on and off.
2. When several malfunctions occur at one time, up to three code numbers can be stored; the latest malfunction will be indicated first.
3. The indication begins with the start code 12. After that a maximum of three code numbers appear in the order of the latest one first. The indication then returns to the start code 12 to repeat (the indication will stay on for five minutes at the most).
4. The malfunction code chart is given on the BR-105 page.

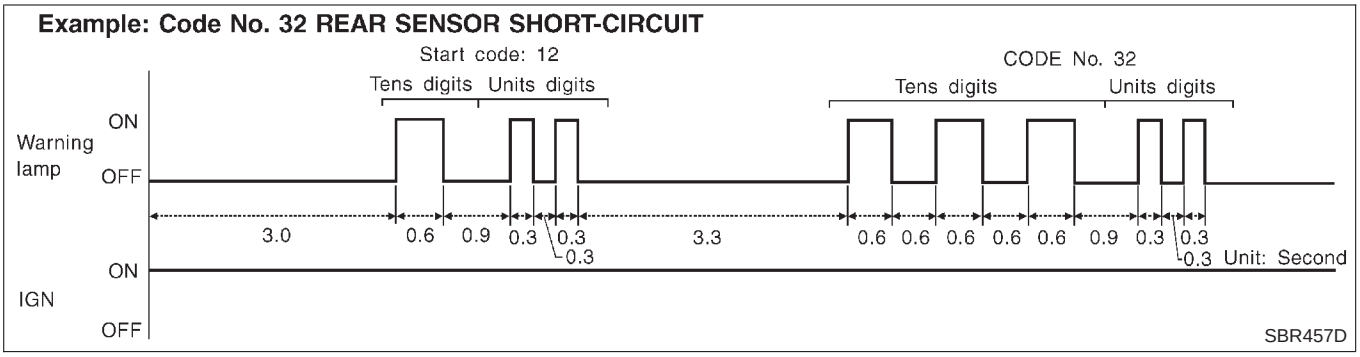

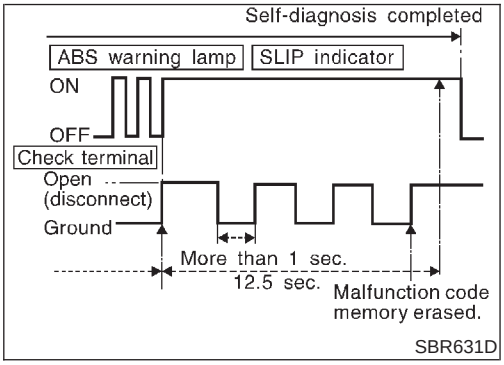

HOW TO ERASE SELF-DIAGNOSTIC RESULTS (MALFUNCTION CODES)

NFBR0056S04

1. Under the self-diagnostic results mode, the malfunction memory erase mode starts when the check terminal is disconnected from the ground.
2. The self-diagnostic results (malfunction codes) can be erased by grounding the check terminal more than three times in succession within 12.5 seconds after the erase mode starts. (Each grounding must be longer than one second.)
   The ABS warning lamp or SLIP indicator lamp stays on while the self-diagnosis is in the erase mode, and goes out after the erase operation has been completed.
3. The self-diagnosis is also completed at the same time. (Refer to BR-91.)

After the erase operation is completed, it is necessary to rerun the self-diagnostic mode to verify that malfunction codes no longer appear. Only the start code (12) should be indicated when erase operation is completed and system is functioning normally.

NOTE:
The TCS OFF indicator lamp and ABS warning lamp remain lighted.

CONSULT-II

NFBR0057

CONSULT-II APPLICATION TO TCS

NFBR0057S01

ITEM	SELF-DIAGNOSTIC RESULTS	DATA MONITOR	ACTIVE TEST
Front right wheel sensor	X	X	—
Front left wheel sensor	X	X	—
Rear right wheel sensor	X	X	—
Rear left wheel sensor	X	X	—
ABS sensor	X	—	—
Stop lamp switch	—	X	—
Front right inlet solenoid valve	X	X	X
Front right outlet solenoid valve	X	X	X
Front left inlet solenoid valve	X	X	X
Front left outlet solenoid valve	X	X	X
Rear right inlet solenoid valve	X	X	X
Rear right outlet solenoid valve	X	X	X
Rear left inlet solenoid valve	X	X	X
Rear left outlet solenoid valve	X	X	X
Actuator solenoid valve relay	X	X	—
Actuator motor relay (ABS MOTOR is shown on the ACTIVE TEST screen.)	X	X	X
ABS warning lamp	—	X	—
Battery voltage	X	X	—
Control unit	X	—	—
Engine speed signal	—	X	—
ABS motor	X	—	X
A/T gear position signal	—	X	—
TCS OFF indicator lamp	—	X	—
SLIP indicator lamp	—	X	—
ECM	X	—	—
LAN signal	X	—	—

X: Applicable
—: Not applicable

ECU (ABS/TCS CONTROL UNIT) PART NUMBER MODE

NFBR0057S02

Ignore the ECU part number displayed in the ECU PART NUMBER MODE. Refer to parts catalog to order the ECU.

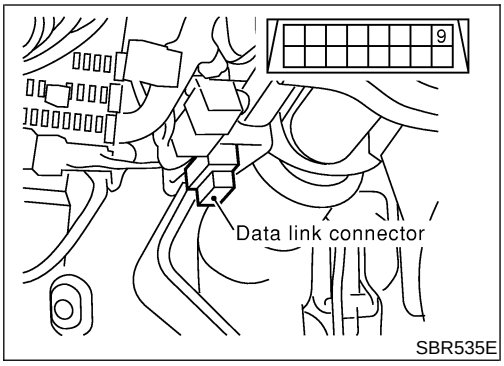

SBR535E

CONSULT-II Inspection Procedure

NFBR0058

SELF-DIAGNOSIS PROCEDURE

NFBR0058S01

1. Turn ignition switch OFF.
2. Connect CONSULT-II to Data Link Connector.
3. Start engine.
4. Drive vehicle over 30 km/h (19 MPH) for at least one minute.

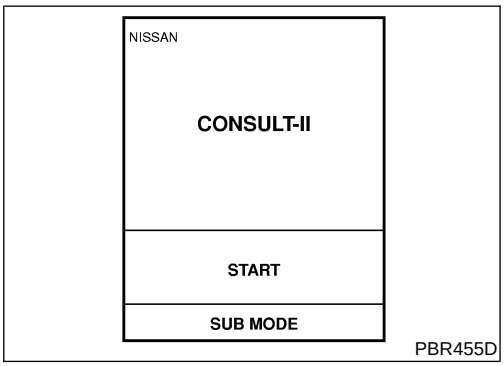

PBR455D

5. Stop vehicle with engine running and touch “START” on CONSULT-II screen.

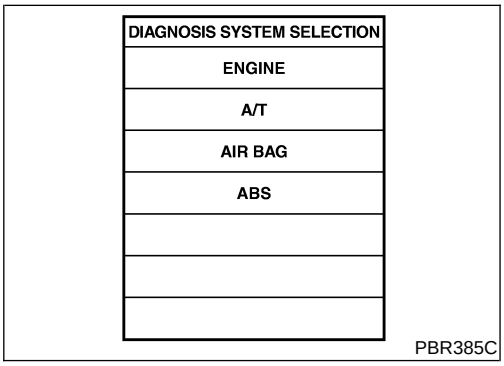

PBR385C

6. Touch “ABS”.

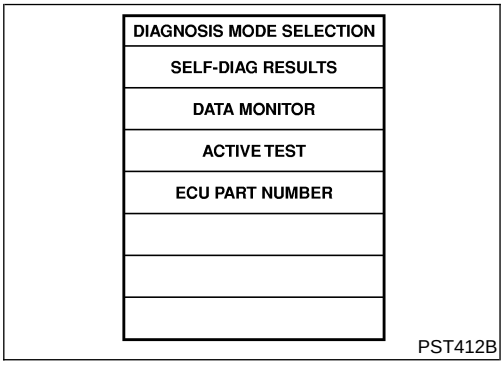

PST412B

7. Touch “SELF DIAGNOSIS”.

- The screen shows the detected malfunction and how many times the ignition switch has been turned since the malfunction.

8. Make the necessary repairs following the diagnostic procedures.

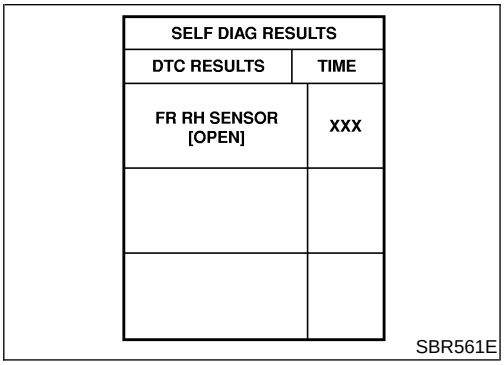

SBR561E

9. After the malfunctions are repaired, erase the self-diagnostic results stored in the control unit by touching “ERASE”.
10. Check ABS warning lamp, SLIP indicator lamp, TCS OFF indicator lamp for deactivation after driving vehicle over 30 km/h (19 MPH) for at least one minute.

NOTE:
“SELF-DIAG RESULTS” screen shows the detected malfunction and how many times the ignition switch has been turned since the malfunction.

SELF-DIAGNOSTIC RESULTS MODE

=NFBR0058S02

Diagnostic item	Diagnostic item is detected when ...	Reference Page
FR RH SENSOR [OPEN]*1	● Circuit for front right wheel sensor is open. (An abnormally high input voltage is entered.)	BR-107
FR LH SENSOR [OPEN]*1	● Circuit for front left wheel sensor is open. (An abnormally high input voltage is entered.)	BR-107
RR RH SENSOR [OPEN]*1	● Circuit for rear right sensor is open. (An abnormally high input voltage is entered.)	BR-107
RR LH SENSOR [OPEN]*1	● Circuit for rear left sensor is open. (An abnormally high input voltage is entered.)	BR-107
FR RH SENSOR [SHORT]*1	● Circuit for front right wheel sensor is shorted. (An abnormally low input voltage is entered.)	BR-107
FR LH SENSOR [SHORT]*1	● Circuit for front left wheel sensor is shorted. (An abnormally low input voltage is entered.)	BR-107
RR RH SENSOR [SHORT]*1	● Circuit for rear right sensor is shorted. (An abnormally low input voltage is entered.)	BR-107
RR LH SENSOR [SHORT]*1	● Circuit for rear left sensor is shorted. (An abnormally low input voltage is entered.)	BR-107
ABS SENSOR [ABNORMAL SIGNAL]	● Teeth damage on sensor rotor or improper installation of wheel sensor. (Abnormal wheel sensor signal is entered.)	BR-107
FR RH IN ABS SOL [OPEN]	● Circuit for front right inlet solenoid valve is open. (An abnormally low output voltage is entered.)	BR-110
FR LH IN ABS SOL [OPEN]	● Circuit for front left inlet solenoid valve is open. (An abnormally low output voltage is entered.)	BR-110
RR RH IN ABS SOL [OPEN]	● Circuit for rear right inlet solenoid valve is open. (An abnormally low output voltage is entered.)	BR-110
RR LH IN ABS SOL [OPEN]	● Circuit for rear left inlet solenoid valve is open. (An abnormally low output voltage is entered.)	BR-110
FR RH IN ABS SOL [SHORT]	● Circuit for front right inlet solenoid valve is shorted. (An abnormally high output voltage is entered.)	BR-110
FR LH IN ABS SOL [SHORT]	● Circuit for front left inlet solenoid valve is shorted. (An abnormally high output voltage is entered.)	BR-110
RR RH IN ABS SOL [SHORT]	● Circuit for rear right inlet solenoid valve is shorted. (An abnormally high output voltage is entered.)	BR-110
RR LH IN ABS SOL [SHORT]	● Circuit for rear left inlet solenoid valve is shorted. (An abnormally high output voltage is entered.)	BR-110
FR RH OUT ABS SOL [OPEN]	● Circuit for front right outlet solenoid valve is open. (An abnormally low output voltage is entered.)	BR-110
FR LH OUT ABS SOL [OPEN]	● Circuit for front left outlet solenoid valve is open. (An abnormally low output voltage is entered.)	BR-110
RR RH OUT ABS SOL [OPEN]	● Circuit for rear right outlet solenoid valve is open. (An abnormally low output voltage is entered.)	BR-110
RR LH OUT ABS SOL [OPEN]	● Circuit for rear left outlet solenoid valve is open. (An abnormally low output voltage is entered.)	BR-110
FR RH OUT ABS SOL [SHORT]	● Circuit for front right outlet solenoid valve is shorted. (An abnormally high output voltage is entered.)	BR-110
FR LH OUT ABS SOL [SHORT]	● Circuit for front left outlet solenoid valve is shorted. (An abnormally high output voltage is entered.)	BR-110

Diagnostic item	Diagnostic item is detected when ...	Reference Page
RR RH OUT ABS SOL [SHORT]	● Circuit for rear right outlet solenoid valve is shorted. (An abnormally high output voltage is entered.)	BR-110
RR LH OUT ABS SOL [SHORT]	● Circuit for rear left outlet solenoid valve is shorted. (An abnormally high output voltage is entered.)	BR-110
ABS ACTUATOR RELAY [ABNORMAL]	● Actuator solenoid valve relay is ON, even control unit sends off signal. ● Actuator solenoid valve relay is OFF, even control unit sends on signal.	BR-114
ABS MOTOR [ABNORMAL]	● Circuit for actuator motor is open or shorted. ● Actuator motor relay is stuck.	BR-120
BATTERY VOLTAGE [ABNORMAL]	● Power source voltage supplied to ABS control unit is abnormally low.	BR-126
CONTROL UNIT	● Function of calculation in ABS control unit has failed.	BR-128
LAN SIGNAL 1 [ABNORMAL]	● ECM judges that communication signal between ABS/TCS control unit and ECM is abnormal.	BR-131
LAN SIGNAL 2 [ABNORMAL]	● On the Local Area Network (LAN) between ABS/TCS control unit and ECM, ECM does not transmit the LAN start signal to ABS/TCS control unit.	BR-132
LAN SIGNAL 3 [ABNORMAL]	● The communication start signal output is not terminated and the ordinary signals are not entered to ABS/TCS control unit.	BR-135
ENGINE SPEED SIG [ABNORMAL]	● Engine speed signal from ECM is not entered.	BR-129
ENGINE CHECK SIGNAL	● Based on the signal from ECM, the ABS/TCS control unit judges that the engine control system is malfunctioning.	BR-129
LAN CIRCUIT 1 [ABNORMAL]	● The communication line between ABS/TCS control unit and ECM is open or shorted.	BR-133
LAN CIRCUIT 2 [ABNORMAL]	● An instantaneous signal interruption occurs repeatedly on the communication line between ABS/TCS control unit and ECM.	BR-133

*1: Be sure to confirm the ABS warning lamp illuminates when the ignition switch is turned ON after repairing the shorted sensor circuit, but the lamp goes out when driving the vehicle over 30 km/h (19 MPH) for one minute in accordance with SELF-DIAGNOSIS PROCEDURE.

DATA MONITOR PROCEDURE

NFBR0058S03

1. Turn ignition switch OFF.
2. Connect CONSULT-II to data link connector.
3. Turn ignition switch ON.
4. Touch "START" on CONSULT-II screen.

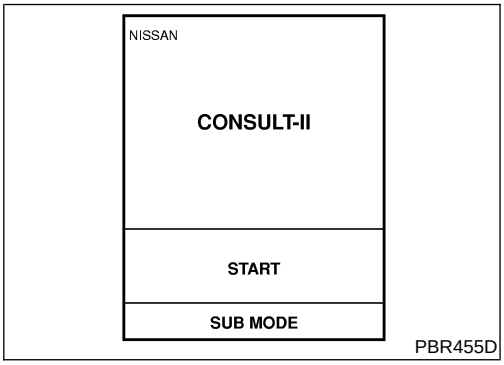

PBR455D

5. Touch "ABS".

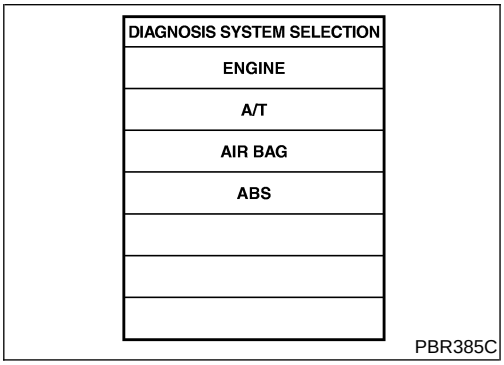

PBR385C

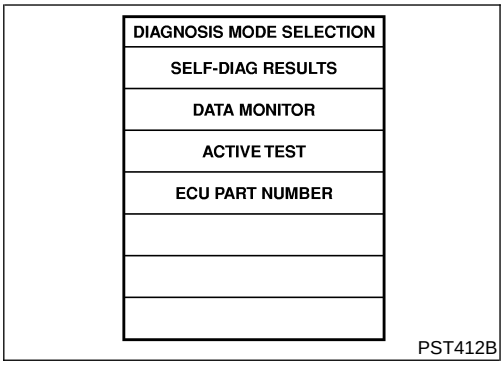

6. Touch "DATA MONITOR".
7. Touch "SETTING" on "SELECT MONITOR ITEM" screen.
8. Touch "LONG TIME" on "SET RECORDING COND" screen.
9. Touch "START" on "SELECT MONITOR ITEM".

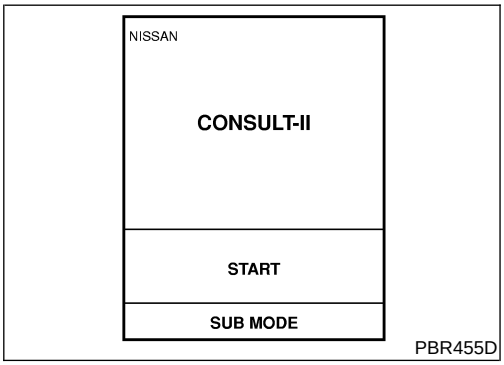

ACTIVE TEST PROCEDURE

NFBR0058S04

- When conducting Active test, vehicle must be stationary.
- When ABS warning lamp or SLIP indicator lamp stays on, never conduct Active test.

1. Turn ignition switch OFF.
2. Connect CONSULT-II to Data Link Connector.
3. Start engine.
4. Touch "START" on CONSULT-II screen.

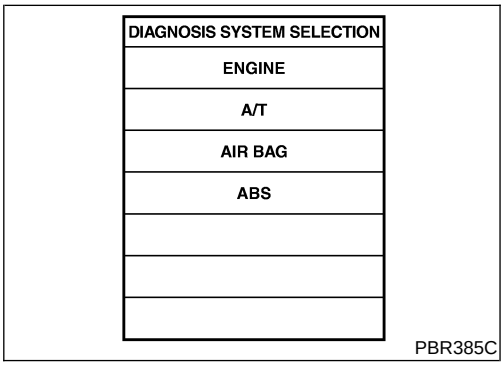

5. Touch "ABS".

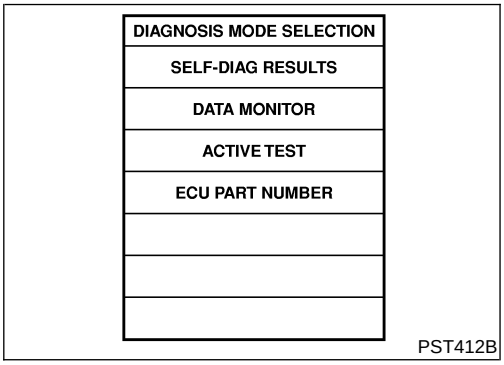

6. Touch "ACTIVE TEST".

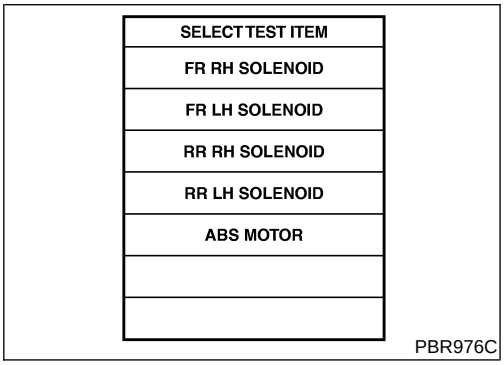

7. Select active test item by touching screen.

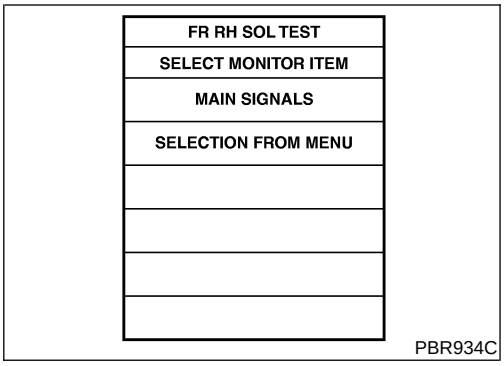

8. Touch "START".
9. Carry out the active test by touching screen key.

DATA MONITOR MODE

NFBR0058S05

MONITOR ITEM	CONDITION	SPECIFICATION
FR RH SENSOR FR LH SENSOR RR RH SENSOR RR LH SENSOR	Drive vehicle. (Each wheel is rotating.)	Displays computed vehicle speed from wheel sensor signal. Almost the same speed as speedometer.
STOP LAMP SW	Turn ignition switch ON and depress brake pedal.	Depress the pedal: ON Release the pedal: OFF
ENGINE SPEED	Engine is running. (rpm)	Engine speed: 0 - 8,000 (rpm)
FR RH IN SOL FR RH OUT SOL FR LH IN SOL FR LH OUT SOL RR IN SOL RR OUT SOL RL IN SOL RL OUT SOL	Ignition switch is turned ON or engine is running.	Operating conditions for each solenoid valve are indicated. ABS is not operating: OFF
ACTUATOR RLY	Ignition switch is turned ON or engine is running.	Displays ON/OFF condition of ABS actuator relay. When turning ignition switch ON, ABS actuator relay is operated.
MOTOR RELAY		ABS is not operating: OFF ABS is operating: ON
WARNING LAMP		Warning lamp is turned on: ON Warning lamp is turned off: OFF
BATTERY VOLT		Power supply voltage for control unit
THRTL OPENING	The throttle valve opening rate (%)	Opening rate: 0 - 100%
TRQ RDUC SIG	The operating cylinder ratio to fuel injected, calculated and sent by ABS/TCS control unit to ECM, is displayed.	TCS is not operating: 0 TCS is operating: 0 - 6* * Displays the number of cylinders to which fuel supply is cut.
GEAR	A/T gear position signal detected by TCM via ECM is displayed.	Gear position: P, N: N.P 1st: 1 2nd: 2 3rd: 3 4th: 4
TCS SW	ON/OFF condition of signal from TCS switch is displayed.	TCS OFF S/W (all the time switch is pressed): ON TCS OFF S/W (released): OFF
TCS OFF LAMP	• TCS OFF condition is displayed. • The condition of malfunctioning TCS is displayed.	TCS OFF indicator "OFF": OFF TCS OFF indicator "ON": ON

MONITOR ITEM	CONDITION	SPECIFICATION
SLIP LAMP	The TCS functioning state is displayed by detecting rear wheel slip.	SLIP indicator "ON": ON SLIP indicator "OFF": OFF
TCS OPR SIG	TCS operating condition	TCS is not operating: OFF TCS is operating: ON

ACTIVE TEST MODE

NFBR0058S06

TEST ITEM	CONDITION	JUDGEMENT		
FR RH SOLENOID FR LH SOLENOID RR RH SOLENOID RR LH SOLENOID	Ignition switch is turned ON.	Brake fluid pressure control operation		
			IN SOL	OUT SOL
		UP (Increase):	OFF	OFF
		KEEP (Hold):	ON	OFF
		DOWN (Decrease):	ON	ON
ABS MOTOR		ABS actuator motor ON: Motor runs OFF: Motor stops		

NOTE:
Active test will automatically stop ten seconds after the test starts. (TEST IS STOPPED monitor shows ON.)

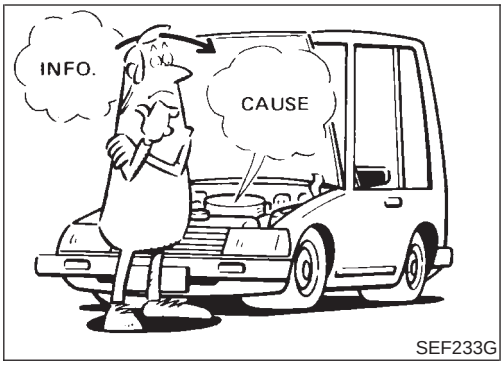

SEF233G

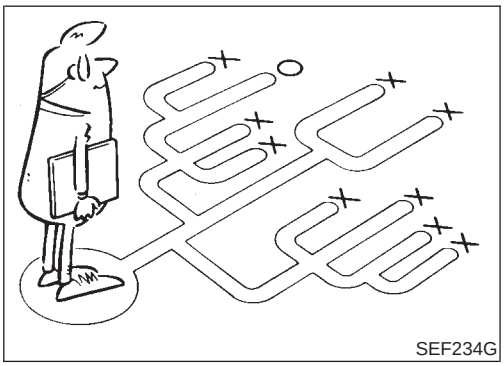
SEF234G

How to Perform Trouble Diagnoses for Quick and Accurate Repair

NFBR0059

INTRODUCTION

NFBR0059S01

The ABS/TCS system has an electronic control unit to control major functions. The control unit accepts input signals from sensors and instantly drives actuator. It is essential that both kinds of signals are proper and stable. It is also important to check for conventional problems: such as air leaks in the booster or lines, lack of brake fluid, or other problems with the brake system.

It is much more difficult to diagnose a problem that occurs intermittently rather than continuously. Most intermittent problems are caused by poor electric connections or faulty wiring. In this case, careful checking of suspicious circuits may help prevent the replacement of good parts.

A visual check only may not find the cause of the problems, so a road test should be performed.

Before undertaking actual checks, take just a few minutes to talk with a customer who approaches with an ABS/TCS complaint. The customer is a very good source of information on such problems; especially intermittent ones. Through the talks with the customer, find out what symptoms are present and under what conditions they occur.

Start your diagnosis by looking for “conventional” problems first. This is one of the best ways to troubleshoot brake problems on an ABS/TCS controlled vehicle. Also check related Service Bulletins for information.

Preliminary Check

NFBR0060

1	CHECK BRAKE FLUID LEVEL

Check brake fluid level in reservoir tank.
Low fluid level may indicate brake pad wear or leakage from brake line.

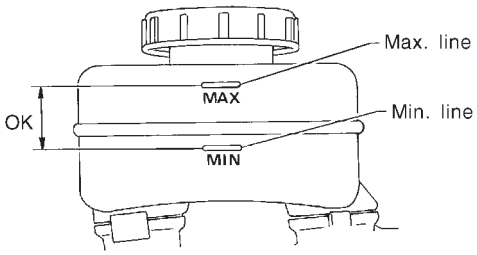

SBR451D

Is brake fluid filled between MAX and MIN lines on reservoir tank and/or has brake fluid been contaminated?

Yes	▶	GO TO 2.
No	▶	Repair. GO TO 2.

2	CHECK BRAKE LINE

Check brake line for leakage.

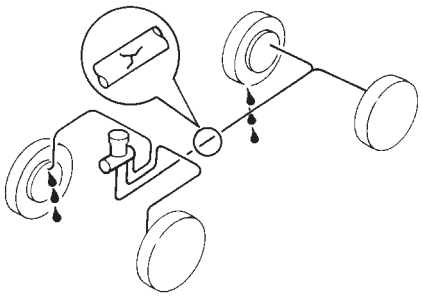

SBR389C

Is leakage present at or around brake lines, tubes or hoses or are any of these parts cracked or damaged?

Yes	▶	GO TO 3.
No	▶	Repair. GO TO 3.

3	CHECK BRAKE BOOSTER OPERATION	
Check brake booster for operation and air tightness. Refer to BR-21. 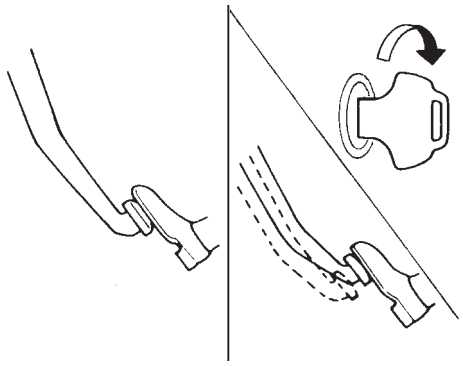 SBR058C **Is brake booster airtight and functioning properly?**		
Yes	▶	GO TO 4.
No	▶	Replace. GO TO 4.

4	CHECK BRAKE PAD AND ROTOR	
Check brake pad and rotor. Refer to BR-24, 26, 28, 32. 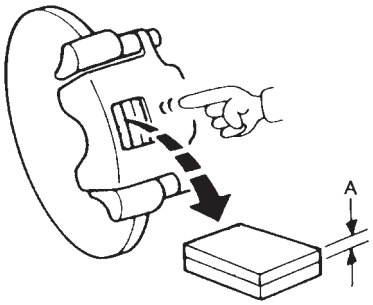 SBR059C **Are brake pads and rotors functioning properly?**		
Yes	▶	GO TO 5.
No	▶	Replace.

5	RECHECK BRAKE FLUID LEVEL

Check brake fluid level in reservoir tank again.

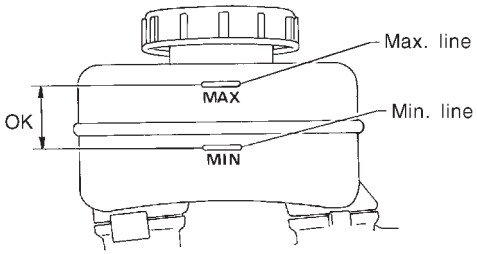

SBR451D

Is brake fluid filled between MAX and MIN lines on reservoir tank and/or has brake fluid been contaminated?

Yes	▶	GO TO 6.
No	▶	Fill up brake fluid.

6	CHECK WARNING LAMP ACTIVATION

Check warning lamp activation.

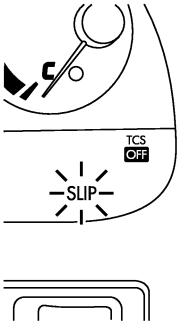

SBR655E

Does warning lamp turn on when ignition switch is turned "ON"?

Yes	▶	GO TO 7.
No	▶	Check fuse, warning lamp bulb and warning lamp circuit.

7	CHECK WARNING LAMP DEACTIVATION

Check warning lamp for deactivation after engine is started.

Does warning lamp turn off when engine is started?

Yes	▶	GO TO 8.
No	▶	Go to Self-diagnosis. Refer to BR-91, 94.

8	DRIVE VEHICLE

Drive vehicle at speeds over 30 km/h (19 MPH) for at least one minute.

Does warning lamp remain off after vehicle has been driven at 30 km/h (19 MPH) for at least one minute?

Yes	▶	END
No	▶	Go to Self-diagnosis. Refer to BR-91, 94.

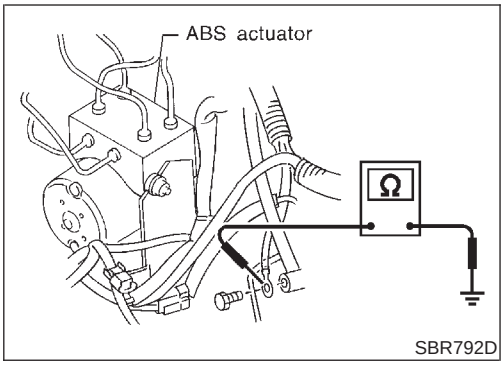

SBR792D

Ground Circuit Check

NFBR0061

ACTUATOR MOTOR GROUND

NFBR0061S01

- Check resistance between actuator motor ground terminal and body ground.

  Resistance: 0Ω

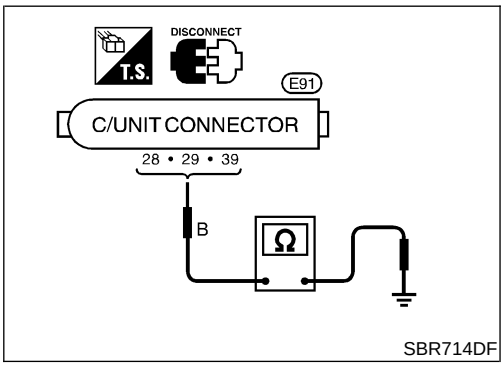

SBR714DF

CONTROL UNIT GROUND

NFBR0061S02

- Check resistance between the terminals and ground.

  Resistance: 0Ω

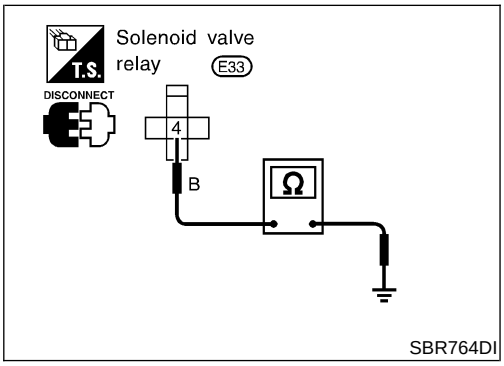

SBR764DI

ABS SOLENOID VALVE RELAY GROUND

NFBR0061S03

- Check resistance between solenoid valve relay terminal 4 and ground.

  Resistance: 0Ω

Malfunction Code/Symptom Chart

NFBR0062

Code No. (No. of SLIP indicator flashes)	Malfunctioning part	Warning lamp	Indicator		Fail-safe	Reference Page
		ABS	TCS OFF	SLIP		
12	Self-diagnosis could not detect any malfunctions	OFF	OFF	OFF	—	—
21	Front right sensor (open-circuit)	ON	ON	ON	X	BR-107
22	Front right sensor (short-circuit)*2	ON	ON	ON	X	BR-107
25	Front left sensor (open-circuit)	ON	ON	ON	X	BR-107
26	Front left sensor (short-circuit)*2	ON	ON	ON	X	BR-107
31	Rear right sensor (open-circuit)	ON	ON	ON	X	BR-107
32	Rear right sensor (short-circuit)*2	ON	ON	ON	X	BR-107
35	Rear left sensor (open-circuit)	ON	ON	ON	X	BR-107
36	Rear left sensor (short-circuit)*2	ON	ON	ON	X	BR-107
41	Actuator front right outlet solenoid valve	ON	ON	ON	X	BR-110
42	Actuator front right inlet solenoid valve	ON	ON	ON	X	BR-110
45	Actuator front left outlet solenoid valve	ON	ON	ON	X	BR-110
46	Actuator front left inlet solenoid valve	ON	ON	ON	X	BR-110
51	Actuator rear right outlet solenoid valve	ON	ON	ON	X	BR-110
52	Actuator rear right inlet solenoid valve	ON	ON	ON	X	BR-110
55	Actuator rear left outlet solenoid valve	ON	ON	ON	X	BR-110
56	Actuator rear left inlet solenoid valve	ON	ON	ON	X	BR-110
57	Power supply (Low or high voltage)*3	ON	ON	OFF	—*1	BR-126
61	Actuator motor or motor relay*4	ON	ON	ON	X	BR-120
63	Solenoid valve relay	ON	ON	ON	X	BR-114
71	Control unit	ON	ON	ON*5	X	BR-128
98	LAN communication system failure	OFF	ON	ON	X	BR-133
81	Engine speed signal	OFF	ON	ON	X	BR-129
96	LAN is monitoring	OFF	ON	ON	X	BR-131
87	Engine parts are under fail-safe condition	OFF	ON	ON	X	BR-129
92	LAN communication start procedures are incomplete	OFF	ON	ON	X	BR-132
94	Continued reception after LAN communication starts	OFF	ON	ON	X	BR-135
85	ECM determines the ABS/TCS control unit is malfunctioning.	OFF	ON	ON	X	BR-131
ABS works frequently.	—	—	—	—	—	BR-136
Unexpected pedal action	—	—	—	—	—	BR-136
Long stopping distance	—	—	—	—	—	BR-137
ABS does not work.	—	—	—	—	—	BR-138
Pedal vibration and noise	—	—	—	—	—	BR-139

Malfunction Code/Symptom Chart (Cont'd)

Code No. (No. of SLIP indicator flashes)	Malfunctioning part	Warning lamp	Indicator		Fail-safe	Reference Page
		ABS	TCS OFF	SLIP		
SLIP indicator stays on when engine is running	Control unit power supply circuit Warning lamp bulb circuit Control unit or control unit connector Solenoid valve relay stuck Power supply for solenoid valve relay coil	ON	ON	ON	X*6	—
SLIP indicator does not come on when engine is running	Fuse, warning lamp bulb or warning lamp circuit Control unit	ON	ON	ON	X	—
Poor acceleration	TCM is the cause of the symptom.	OFF	OFF	OFF	—	BR-154

X: Available —: Not available

*1: Fail-safe operation does not activate. A signal from control unit suspends TCS and ABS control operation. Brakes operate conventionally. After specified power supply voltage resumes, TCS OFF indicator and ABS warning lamp go out, allowing for TCS and ABS control operation.

*2: If a wheel or wheels spin on bad or slippery road surfaces for a period of approximately 10 to 80 seconds, the ABS warning lamp and the TCS OFF indicator lamp light. But this is not a malfunction. When the ignition switch is turned "ON" after a shorted wheel sensor circuit has been repaired, the ABS warning lamp and the TCS OFF indicator lamp light. Drive the vehicle at about 30 km/h (19 MPH) to ensure these lamps go out within 1 minute.

*3: When the BATTERY VOLTAGE [ABNORMAL] code No. appears on the display, it does not indicate a malfunction related to the ABS/TCS control unit. Do not replace the ABS/TCS control unit even if the code No. appears.

*4: The BATTERY VOLTAGE [ABNORMAL] code No. can sometimes appear when the ABS motor ground circuit is loose or disconnected. When it does, always check the ground circuit for improper installation.

*5: Only the SLIP indicator lamp goes out depending on the type of ECM malfunction.

*6: If failure occurs in self-diagnostic check terminal (terminal No. 4 of data link connector) circuit and/or TCS operation (SLIP indicator) circuit, fail-safe operation will not activate.

Wheel Sensor or Rotor

NFBR0064

DIAGNOSTIC PROCEDURE

NFBR0064S01

Malfunction code No. 21, 22, 25, 26, 31, 32, 35, 36 or 18

NOTE:
Wheel position should be identified by code No. except code No. 18 (sensor rotor).

1	INSPECTION START
Wheel sensor inspection	

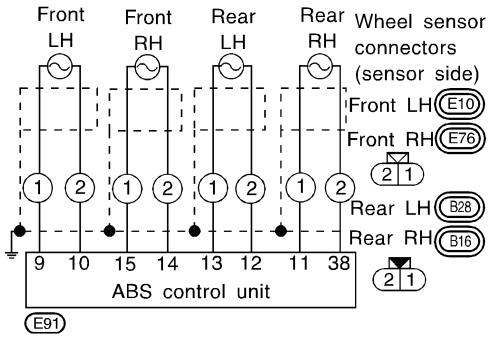

SBR769DE

▶	GO TO 2.

2	CHECK CONNECTOR
1. Disconnect connectors from control unit and wheel sensor of malfunction code No. Check terminals for damage or loose connections. Then reconnect connectors. 2. Carry out self-diagnosis again.	
Does warning lamp activate again?	
Yes ▶	GO TO 3.
No ▶	**INSPECTION END**

3	CHECK WHEEL SENSOR CIRCUIT

1. Disconnect control unit connector.
2. Check resistance between control unit connector terminals.
   Code No. 21 or 22 (Front RH wheel)
   Terminals 14 and 15
   Code No. 25 or 26 (Front LH wheel)
   Terminals 9 and 10
   Code No. 31 or 32 (Rear RH wheel)
   Terminals 11 and 38
   Code No. 35 or 36 (Rear LH wheel)
   Terminals 12 and 13
   Resistance: 0.8 - 1.85 kΩ

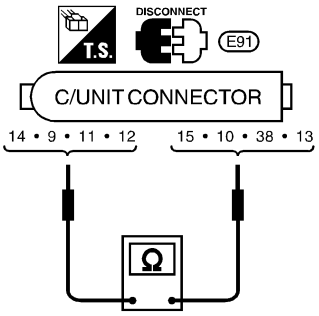

SBR247DJ

Is resistance 0.8 - 1.85 kΩ?

Yes	▶	GO TO 5.
No	▶	GO TO 4.

4	CHECK WHEEL SENSOR

Check resistance of each sensor. (See NOTE)
Resistance: 0.8 - 1.85 kΩ

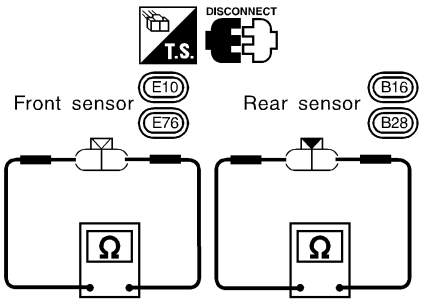

SBR761DE

Is resistance 0.8 - 1.85 kΩ?

Yes	▶	Repair harness and connectors between control unit connector and wheel sensor connector.
No	▶	Replace wheel sensor.

5	CHECK TIRE

Check for inflation pressure, wear and size of each tire.

Are tire pressure and size correct and is tire wear within specifications?

Yes	▶	GO TO 6.
No	▶	Adjust tire pressure or replace tire(s).

6	CHECK WHEEL BEARING

Check wheel bearing axial end play.
Check clearance between sensor and rotor.

Clearance:
Front
0.273 - 0.925 mm (0.0107 - 0.0364 in)
Rear
0.387 - 0.992 mm (0.0152 - 0.0391 in)

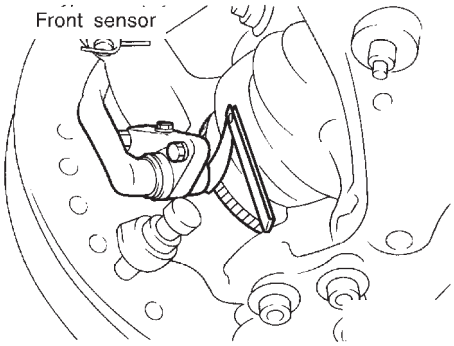

SBR605AA

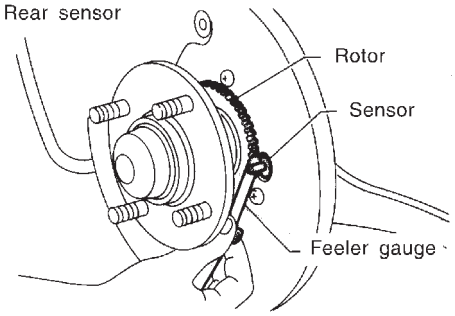

SBR069CA

Is axial end play and clearance within specifications?

Yes	▶	GO TO 7.
No	▶	Clean sensor fixing portion, or replace sensor.

7	CHECK SENSOR ROTOR

Check sensor rotor for teeth damage.

Is sensor rotor free from damage?

Yes	▶	Check control unit pin terminals for damage or the connection of control unit harness connector. Reconnect control unit harness connector. Then retest.
No	▶	Replace sensor rotor.

ABS Actuator Solenoid Valve

=NFBR0063

DIAGNOSTIC PROCEDURE

NFBR0063S01

Malfunction code No. 41, 45, 51, 55, 42, 46, 52, 56

1	INSPECTION START

ABS actuator solenoid valve inspection

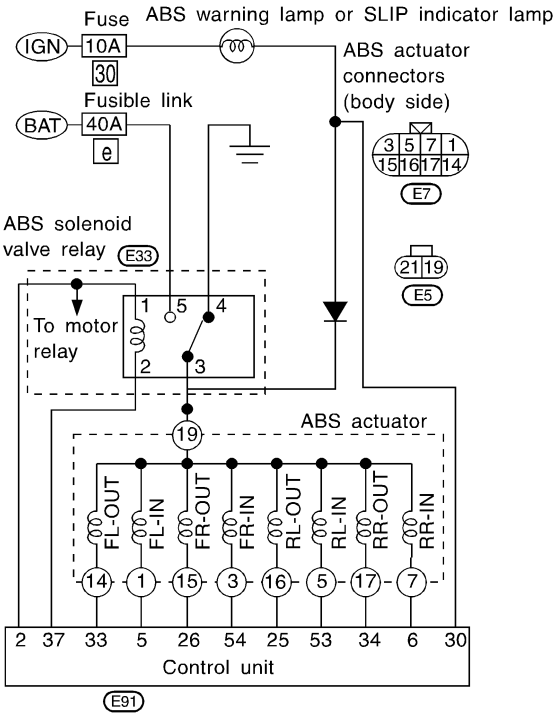

SBR334EB

▶	GO TO 2.

2	CHECK CONNECTOR

1. Disconnect connectors from control unit, ABS actuator and ABS solenoid valve relay. Check terminals for damage or loose connections. Then reconnect connectors.
2. Carry out self-diagnosis again.

Does warning lamp activate again?

Yes	▶	GO TO 3.
No	▶	**INSPECTION END**

3	CHECK ABS ACTUATOR SOLENOID VALVE

1. Disconnect connectors from control unit and ABS actuator.
2. Check resistance between control unit connector terminals and ABS actuator 2-pin connector E5 (ABS actuator side) terminals.

Code No.	Control unit	ABS actuator	Resistance
41	26	19	4.4 - 6.0Ω
45	33	19	
51	34	19	
55	25	19	
42	54	19	8.5 - 9.5Ω
46	5	19	
52	6	19	
56	53	19	

MTBL0084

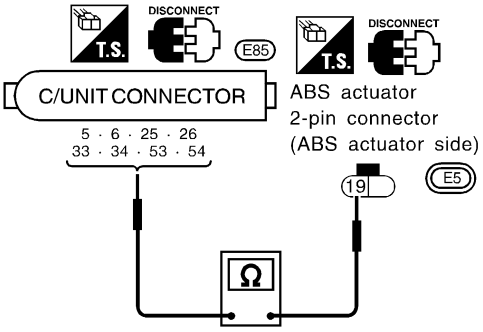

SBR766DH

Is resistance within specifications?

Yes	▶	GO TO 6.
No	▶	GO TO 4.

4 CHECK ABS ACTUATOR SOLENOID VALVE

1. Disconnect ABS actuator 8-pin connector.
2. Check resistance between ABS actuator 8-pin connector E7 (ABS actuator side) terminals and ABS actuator 2-pin connector E5 (ABS actuator side) terminals.

Code No.	ABS actuator		Resistance
41	15	19	4.4 - 6.0Ω
45	14	19	
51	17	19	
55	16	19	
42	3	19	8.5 - 9.5Ω
46	1	19	
52	7	19	
56	5	19	

MTBL0085

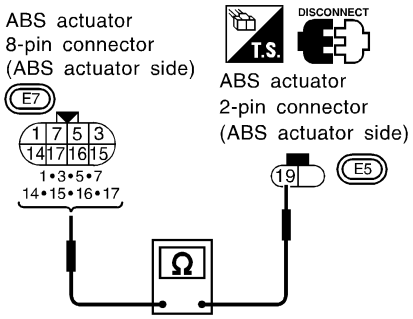

SBR767DH

Is resistance within specifications?

Yes ▶	**Check the following.** ● Harness connectors E7, E5 ● Harness for open or short between actuator connector and control unit ● Harness for open or short between actuator 8-pin connector and actuator 2-pin connector If NG, repair harness or connectors.
No ▶	GO TO 5.

5	CHECK ABS ACTUATOR SOLENOID VALVE

Check resistance between solenoid valve terminals 1, 3, 5, 7, 14, 15, 16, 17.

ABS actuator				Resistance
OUT solenoid valve		14	15, 16, 17	8.8 - 12.0Ω
		15	16, 17	
		16	17	
Solenoid valve	IN	1, 3, 5, 7	—	12.9 - 15.5Ω
	OUT	—	14, 15, 16, 17	
IN solenoid valve		1	3, 5, 7	17.0 - 19.0Ω
		3	5, 7	
		5	7	

MTBL0086

Is resistance within specifications?

Yes ▶	**Check the following.** ● Harness connectors E7, E5 ● Harness for open or short between actuator connector and control unit ● Harness for open or short between actuator 8-pin connector and actuator 2-pin connector If NG, repair harness or connectors.
No ▶	Replace ABS actuator.

6	CHECK ABS ACTUATOR SOLENOID VALVE RELAY

1. Remove solenoid valve relay.
2. Check continuity between ABS actuator 2-pin connector E5 (body side) terminal 19 and solenoid valve relay terminal 3.
   Continuity should exist.

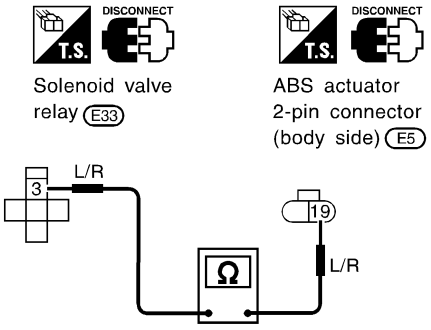

SBR768DH

Does continuity exist?

Yes ▶	Go to "Solenoid Valve Relay", BR-114.
No ▶	**Check the following.** ● Harness connectors E33, E5 ● Harness for open or short between actuator connector and solenoid valve relay terminal (relay box side) If NG, repair harness or connectors.

Solenoid Valve Relay

NFBR0066

DIAGNOSTIC PROCEDURE

NFBR0066S01

Malfunction code No. 63

1	INSPECTION START

Solenoid valve relay inspection

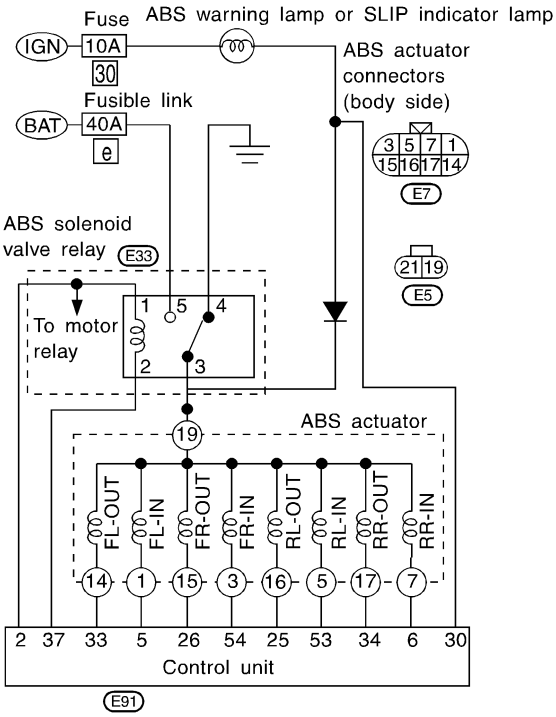

SBR334EB

▶	GO TO 2.

2	CHECK SOLENOID VALVE POWER SUPPLY CIRCUIT

Check 40A [**e**] fusible link (ABS ACTR) for ABS solenoid valve relay. For fusible link layout, refer to POWER SUPPLY ROUTING in EL section.

Is fusible link OK?

Yes	▶	GO TO 3.
No	▶	GO TO 9.

3	CHECK FUSE

Check 10A fuse No. 30. For fuse layout, refer to “POWER SUPPLY ROUTING” in EL section.

Is fuse OK?

Yes	▶	GO TO 4.
No	▶	GO TO 13.

4	CHECK CONNECTOR

1. Disconnect connectors from control unit and ABS actuator. Check terminals for damage or loose connection. Then reconnect connectors.
2. Carry out self-diagnosis again.

Does warning lamp activate again?

Yes	▶	GO TO 5.
No	▶	**INSPECTION END**

5	CHECK GROUND CIRCUIT	
Refer to CONTROL UNIT GROUND and ACTUATOR MOTOR GROUND in Ground Circuit Check, BR-104. **Is ground circuit OK?**		
Yes	▶	GO TO 6.
No	▶	Repair harness and connectors.

6	CHECK SOLENOID VALVE POWER SUPPLY CIRCUIT	
1. Remove solenoid valve relay. 2. Check voltage between solenoid valve relay terminal 5 and ground. 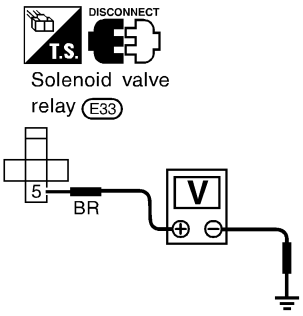 SBR777DI **Does battery voltage exist?**		
Yes	▶	GO TO 7.
No	▶	**Check the following.** ● Harness connector E33 ● Harness for open or short between solenoid valve terminal (relay box side) and fusible link If NG, repair harness or connectors.

7	CHECK CIRCUIT

1. Disconnect control unit connector.
2. Check continuity between control unit connector terminals and solenoid valve relay terminals.

Control unit	Solenoid valve relay
37	2
2	1
30	3

MTBL0089

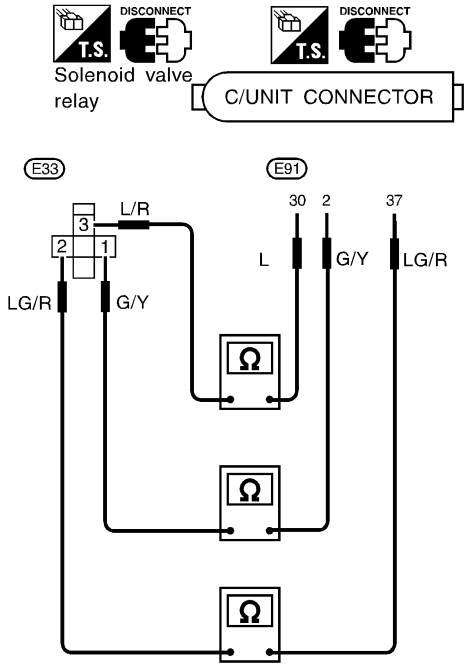

SBR778DH

Does continuity exist?

Yes	▶	GO TO 8.
No	▶	**Check the following.** ● Harness connector E91 ● Harness for open or short between solenoid valve relay terminal (relay box side) and control unit If NG, repair harness or connectors.

8	CHECK SOLENOID VALVE RELAY

Relay type		Solenoid valve relay	
Condition		Continuity existence between terminals	
		3 and 4	3 and 5
Battery voltage not applied between each terminal	1 and 2	Yes	No
Battery voltage applied between each terminal	1 and 2	No	Yes

MTBL0090

While applying battery voltage to relay terminals, insert fuse into the circuit.

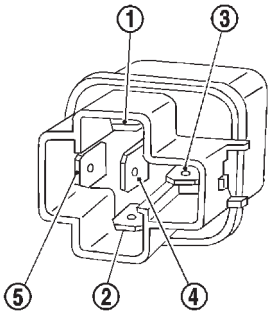

SBR776D

Is solenoid valve relay OK?

Yes	▶	Go to "ABS Actuator Solenoid Valve", BR-110.
No	▶	Replace solenoid valve relay.

9	REPLACE FUSIBLE LINK

Replace fusible link.

Does the fusible link blow out when ignition switch is turned "ON"?

Yes	▶	GO TO 10.
No	▶	**INSPECTION END**

10	CHECK RELAY UNIT POWER SUPPLY CIRCUIT

1. Remove solenoid valve relay.
2. Check continuity between solenoid valve relay terminal 5 and ground.

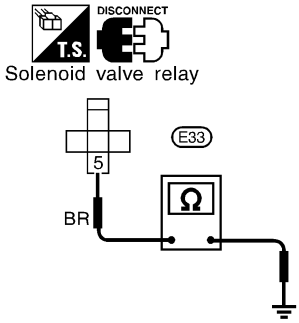

SBR779DI

Does continuity exist?

Yes	▶	GO TO 11.
No	▶	**Check the following.** ● Harness connector E33 ● Harness for open or short between solenoid valve terminal (relay box side) and fusible link If NG, repair harness or connectors.

11	CHECK ABS SOLENOID VALVE RELAY

1. Disconnect ABS actuator 2-pin connectors and control unit connector.
2. Check continuity between ABS actuator 2-pin connector E5 (body side) terminal 19 and ground.

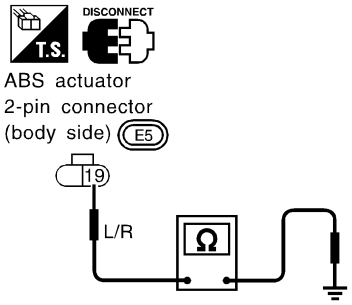

SBR493DH

Does continuity exist?

Yes	▶	Replace ABS relay box.
No	▶	GO TO 12.

12	CHECK ABS SOLENOID VALVE

Check continuity between ABS actuator 2-pin connector E5 (ABS actuator side) terminal 19 and ground.

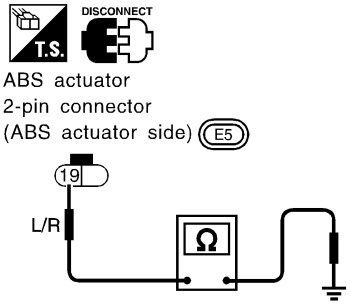

SBR494DH

Does continuity exist?

Yes	▶	Replace ABS actuator.
No	▶	Go to "ABS Actuator Solenoid Valve", BR-110.

13	REPLACE FUSE

Replace fuse.

Does the fuse blow out when ignition switch is turned "ON"?

Yes	▶	**Check the following.** ● Harness connector E91 ● Harness for open or short between ABS control unit connector and fuse If NG, repair harness or connectors.
No	▶	**INSPECTION END**

Motor Relay or Motor

DIAGNOSTIC PROCEDURE

=NFBR0065

NFBR0065S01

Malfunction code No. 61

1	INSPECTION START

ABS motor relay inspection

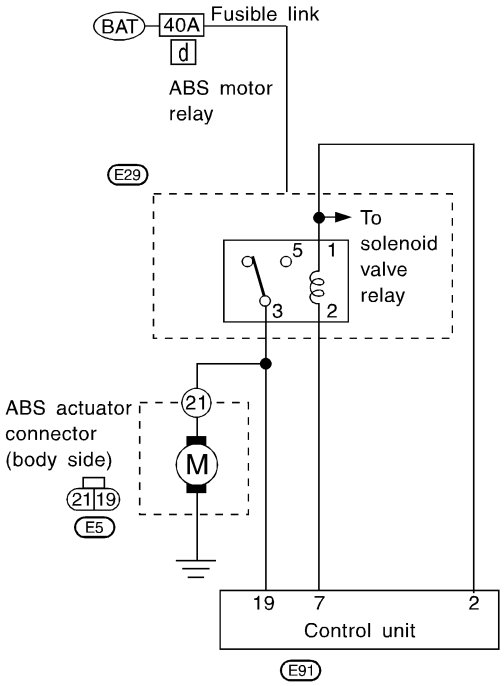

SBR335EB

▶	GO TO 2.

2	CHECK MOTOR POWER SUPPLY CIRCUIT

Check 40A [**d**] fusible link (ABS MTR) for ABS motor relay. For fusible link layout, refer to POWER SUPPLY ROUTING in EL section.

Is fusible link OK?

Yes	▶	GO TO 3.
No	▶	GO TO 10.

3	CHECK CONNECTOR

1. Disconnect connectors from control unit and ABS actuator. Check terminals for damage or loose connection. Then reconnect connectors.
2. Carry out self-diagnosis again.

Does warning lamp activate again?

Yes	▶	GO TO 4.
No	▶	**INSPECTION END**

4	CHECK ABS RELAY UNIT POWER SUPPLY CIRCUIT

1. Remove motor relay.
2. Check voltage between motor relay terminal 5 and ground.

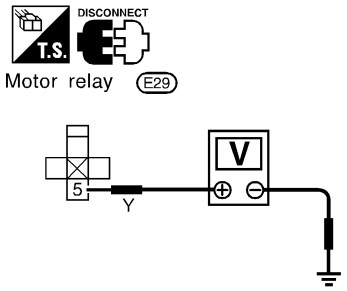

SBR771DI

Does battery voltage exist?

Yes ▶	GO TO 5.
No ▶	**Check the following.** ● Harness connector E29 ● Harness for open or short between motor relay terminal (relay box side) and fusible link If NG, repair harness or connectors.

5	CHECK CIRCUIT

1. Disconnect control unit connector.
2. Check continuity between control unit connector terminals and motor relay terminals.

Control unit	Motor relay
7	2
19	3
2	1

MTBL0087

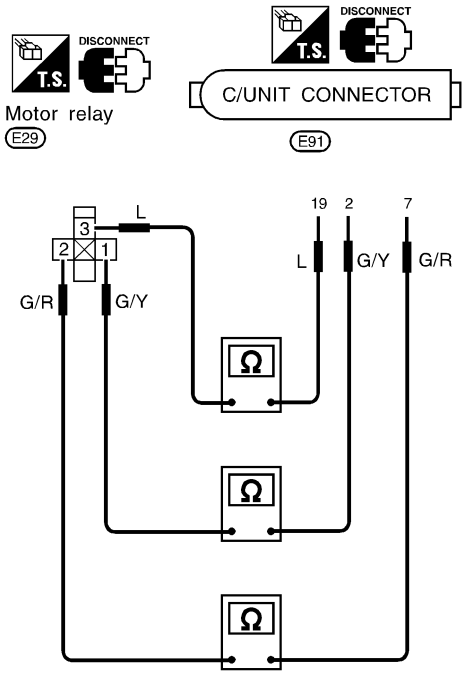

SBR772DH

Does continuity exist?

Yes ▶	GO TO 6.
No ▶	**Check the following.** ● Harness connectors E29, E91 ● Harness for open or short between motor relay terminal (relay box side) and control unit If NG, repair harness or connectors.

6	CHECK MOTOR RELAY

Relay type		ABS motor relay
Condition		Continuity existence between terminals 3 and 5
Battery voltage not applied between each terminal	1 and 2	No
Battery voltage applied between each terminal	1 and 2	Yes

MTBL0088

While applying battery voltage to relay terminals, insert fuse into the circuit.

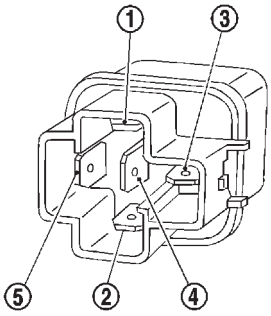

SBR776D

Is motor relay OK?

Yes	▶	GO TO 7.
No	▶	Replace motor relay.

7	CHECK ACTUATOR MOTOR GROUND CIRCUIT

Refer to ACTUATOR MOTOR GROUND in Ground Circuit Check, BR-104.

Is ground circuit OK?

Yes	▶	GO TO 8.
No	▶	**Check the following.** ● Harness connector E29 ● Harness for open or short between solenoid valve relay terminal (relay box side) and ground If NG, repair harness or connectors.

8	CHECK ABS ACTUATOR CIRCUIT

Check continuity between ABS actuator 2-pin connector E5 (ABS actuator side) terminal 21 and actuator motor ground terminal.

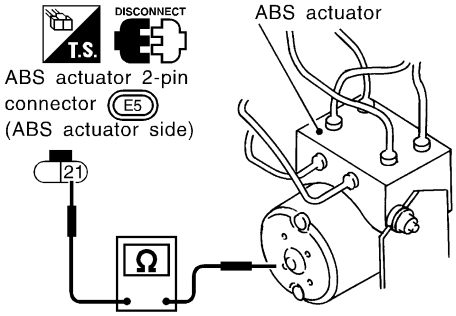

SBR793DF

Does continuity exist?

Yes	▶	GO TO 9.
No	▶	**Check the following.** ● Harness connector E5 ● Harness for open or short between actuator connector and motor terminal If NG, repair harness or connectors.

9	CHECK MOTOR

1. Remove motor relay.
2. Connect actuator connectors.
3. Connect suitable wire between motor relay connector terminals 3 and 5.
   Do not connect wire for more than 5 seconds.

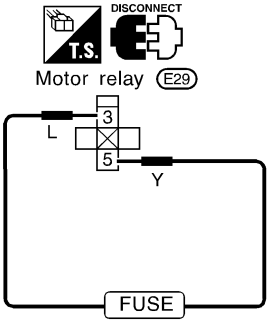

SBR773DI

Does motor operate?

Yes	▶	Go to "Low Voltage", BR-126.
No	▶	Replace ABS actuator.

10	REPLACE FUSIBLE LINK

Replace fusible link.

Does the fusible link blow out when ignition switch is turned "ON"?

Yes	▶	GO TO 11.
No	▶	**INSPECTION END**

11	CHECK MOTOR POWER SUPPLY CIRCUIT

1. Remove motor relay.
2. Check continuity between motor relay terminal 5 and ground.

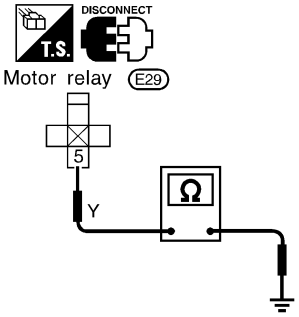

SBR774DI

Does continuity exist?

Yes	▶	GO TO 12.
No	▶	**Check the following.** ● Harness connector E29 ● Harness for open or short between motor relay terminal (relay box side) and fusible link If NG, repair harness or connectors.

12	CHECK ABS MOTOR RELAY

1. Disconnect control unit connector.
2. Check continuity between motor relay terminal 3 and ground.

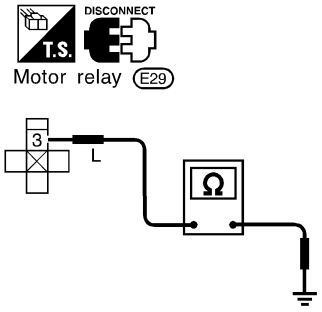

SBR775DJ

Does continuity exist?

Yes	▶	**Check the following.** ● Harness connector E29 ● Harness for open or short between motor relay terminal (relay box side) and fusible link If NG, repair harness or connectors.
No	▶	GO TO 13.

13	CHECK ABS MOTOR POWER SUPPLY CIRCUIT

1. Remove motor ground.
2. Check continuity between ABS actuator 2-pin connector E5 (ABS actuator side) terminal 21 and ground.

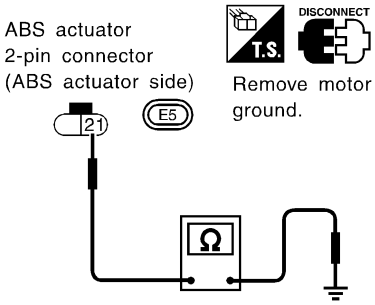

SBR489DH

Does continuity exist?

Yes	▶	Replace ABS actuator.
No	▶	GO TO 14.

14	CHECK MOTOR

Go to "9. CHECK MOTOR" in "Motor Relay or Motor" (preceding page).

Does motor operate?

Yes	▶	Check control unit pin terminals for damage or the connection of control unit harness connector. Reconnect control unit harness connector. Then retest.
No	▶	Replace ABS actuator.

Low Voltage

NFBR0067

DIAGNOSTIC PROCEDURE

NFBR0067S01

Malfunction code No. 57

1	INSPECTION START

ABS control unit power supply and ground circuit inspection

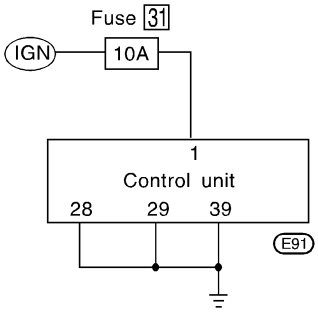

SBR337EB

	▶	GO TO 2.

2	CHECK CONNECTOR	
1. Disconnect control unit connectors. Check terminals for damage or loose connections. Then reconnect connectors. 2. Carry out self-diagnosis again.		
Does warning lamp activate again?		
Yes	▶	GO TO 3.
No	▶	**INSPECTION END**

3	CHECK ABS CONTROL UNIT POWER SUPPLY	
1. Disconnect control unit connector. 2. Check voltage between control unit connector terminal 1 and ground.		
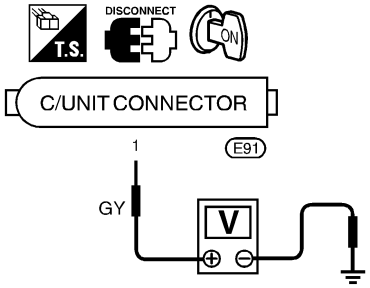 SBR726DF		
Does battery voltage exist when ignition switch is turned ON?		
Yes	▶	GO TO 4.
No	▶	GO TO 5.

4	CHECK CONTROL UNIT GROUND	
Refer to CONTROL UNIT GROUND in Ground Circuit Check, BR-104.		
Is ground circuit OK?		
OK	▶	Check control unit pin terminals for damage or the connection of control unit harness connector. Reconnect control unit harness connector. Then retest.
NG	▶	**Check the following.** ● Harness connector E91 ● Harness for open or short between control unit and ground If NG, repair harness or connectors.

5	CHECK FUSE	
Check 10A fuse 31 (Engine control) for control unit. Refer to POWER SUPPLY ROUTING in EL section.		
Is fuse OK?		
Yes	▶	GO TO 6.
No	▶	Replace fuse.

6	CHECK ABS CONTROL UNIT POWER SUPPLY CIRCUIT	
Check continuity between battery and control unit connector terminal 1.		
Does continuity exist?		
Yes	▶	Check battery. Refer to BATTERY in EL section.
No	▶	**Check the following.** ● Harness connector E91 ● Harness for open or short between control unit and fuse If NG, repair harness or connectors.

Control Unit

NFBR0068

DIAGNOSTIC PROCEDURE

NFBR0068S01

Malfunction code No. 71

1	INSPECTION START
ABS control unit power supply and ground circuit inspection	

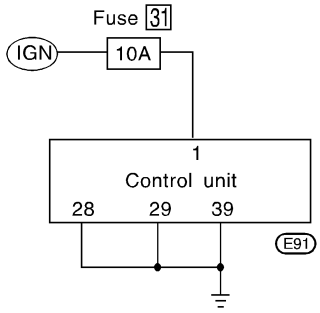

SBR337EB

	▶	GO TO 2.

2	CHECK CONNECTOR	
1. Disconnect control unit connector. Check terminals for damage or loose connections. Then reconnect connectors. 2. Carry out self-diagnosis again.		
Does warning lamp activate again?		
Yes	▶	GO TO 3.
No	▶	**INSPECTION END**

3	CHECK ABS CONTROL UNIT POWER SUPPLY CIRCUIT	
Check voltage. Refer to “3. CHECK ABS CONTROL UNIT POWER SUPPLY CIRCUIT” in “Low Voltage”, BR-126.		
Does battery voltage exist when ignition switch is turned ON?		
Yes	▶	GO TO 4.
No	▶	Repair.

4	CHECK WARNING LAMP INDICATION	
Does warning lamp indicate code No. 71 again?		
Yes	▶	Replace control unit.
No	▶	Inspect the system according to the code No.

ENGINE CHECK SIGNAL — Engine System

=NFBR0082

DIAGNOSTIC PROCEDURE

NFBR0082S01

Malfunction code No. 87

1	INSPECTION START
Self-diagnostic item “ENGINE CHECK SIGNAL” appears on display.	
▶	GO TO 2.

2	CHECK ENGINE SYSTEM
Perform self-diagnostic procedures for ECM. **Does any of following self-diagnostic items appear on display?** [P1335 CRANK POS SEN (REF)]*1, [P0100 MAF SEN/CIRCUIT]*1, [P0115 COOLANT T SEN/CIRC]*1, [P0125 COOLANT T SEN/CIRC]*1, [P1320 IGN SIGNAL-PRIMARY]*1, [P0120 THRTL POS SEN/CIRC]*1, [P0605 ECM]*1 *1: Out of ECM diagnostic items, 7 items shown at left cause TCS to be suspended (TCS OFF indicator “ON” and SLIP indicator “ON”) and allow control unit to indicate “ENGINE CHECK SIGNAL”.	
Yes ▶	Go to “TROUBLE DIAGNOSES” in EC section.
No ▶	GO TO 3.

3	CHECK CONTROL UNIT TO ECM CIRCUIT
Do “ECM — ABSTCS COMM NG” and/or “ABS-TCS C/U SIGNAL” [ECM self-diagnostic items]*2 appear on display? *2: Items which cause TCS to be suspended (TCS OFF indicator “ON” and SLIP indicator “ON”) and allow ABS/TCS control unit to indicate “ENGINE CHECK SIGNAL”.	
Yes ▶	Go to “LAN monitoring”, “LAN communication start procedures incomplete” and “LAN communication system failure”.
No ▶	GO TO 4.

4	CHECK DIAGNOSTIC ITEMS
Does any other diagnostic items appears?	
Yes ▶	Repair or replace affected engine control system parts.
No ▶	**INSPECTION END**

ENG SPEED SIG — Engine Speed Signal

NFBR0083

DIAGNOSTIC PROCEDURE

NFBR0083S01

Malfunction code No. 81

1	INSPECTION START
Self-diagnostic item “ENGINE SPEED SIG” appears on display.	

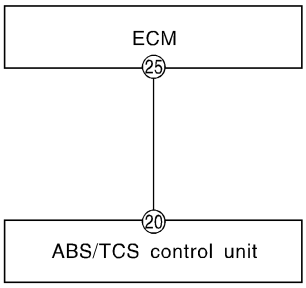

SBR539E

▶	GO TO 2.

2	CHECK ENGINE SYSTEM
Perform self-diagnostic procedures for ECM. **Does [P1335 CRANK POS SEN (REF)]*1 (Self-diagnostic item) appear on display?** *1: Out of ECM diagnostic item, only [P1335 CRANK POS SEN (REF)] causes TCS to be suspended (SLIP indicator lamp "ON" and TCS OFF indicator lamp "ON") and allows control unit to indicate "ENGINE SPEED SIG".	
Yes ▶	Check ECM. Refer to "TROUBLE DIAGNOSES" in EC section.
No ▶	GO TO 3.

3	CHECK CONTROL UNIT TO ECM CIRCUIT
Perform self-diagnostic procedures for ECM. **Does [ECM-ABSTCS COMM NG] and [ABS-TCS C/U SIGNAL]*1 (self-diagnostic items) appears on display?**	
Yes ▶	Go to "LAN monitoring", "LAN communication start procedures incomplete" and "LAN communication system failure".
No ▶	GO TO 4.

4	CHECK CONNECTOR
1. Disconnect control unit and ECM connectors, then reconnect them securely. 2. Carry out self-diagnosis again. **Does warning lamp activate again?**	
Yes ▶	GO TO 5.
No ▶	**INSPECTION END**

5	CHECK CONTROL UNIT TO ECM HARNESS CONNECTORS
1. Disconnect control unit and ECM connectors. 2. Check continuity between control unit terminal 20 and ECM terminal 25.	

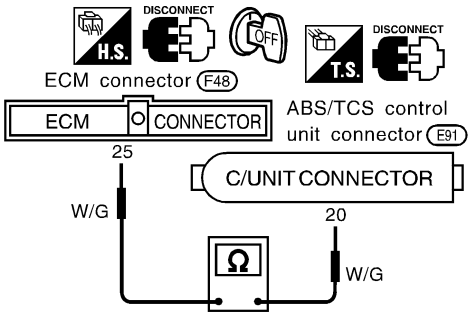

SBR540E

Continuity should exist?	
Yes ▶	GO TO 6.
No ▶	**Check the following.** ● Harness connectors E91 and F48 ● Harness for open or short between control unit connector and ECM connector If NG, repair harness or connectors.

6	CHECK SELF-DIAGNOSIS
Connect connectors, then repeat self-diagnostic procedures. **Does self-diagnostic item appears on display?**	
Yes ▶	Repair or replace.
No ▶	**INSPECTION END**

LAN SIGNAL 1 — LAN Monitoring

NFBR0084

DIAGNOSTIC PROCEDURE

NFBR0084S01

Malfunction code No. 85

1	INSPECTION START
Self-diagnostic item “LAN SIGNAL 1” appears on display.	
▶	GO TO 2.

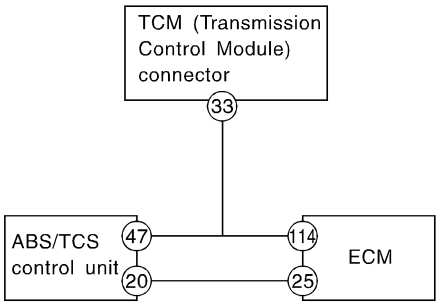

SBR541E

2	CHECK SELF-DIAGNOSIS
Perform self-diagnostic procedures for ECM.	
Does “ABS-TCS communication” (self-diagnostic item) appears on display?	
Yes ▶	Check LAN circuit. Refer to “CHECK LAN CIRCUIT”, BR-133.
No ▶	GO TO 3.

3	CHECK CIRCUIT
Check ECM to battery power circuits, harness and connectors.	
OK or NG	
OK ▶	● Repeat self-diagnostic procedures for control unit. ● If NG, replace control unit.
NG ▶	Repair or replace affected parts.

LAN SIGNAL 2 — LAN Communication Start Procedures Incomplete

=NFBR0085

DIAGNOSTIC PROCEDURE

NFBR0085S01

Malfunction code No. 92

1	INSPECTION START
Self-diagnostic item “LAN SIGNAL 2” appears on display.	
▶	GO TO 2.

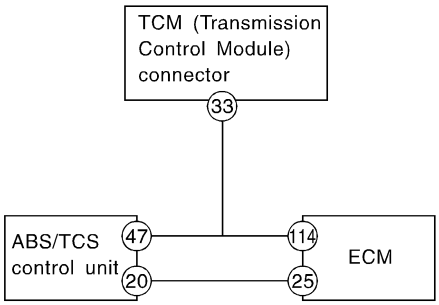

SBR541E

2	CHECK ENGINE SYSTEM
Is self-diagnosis for ECM able to start?	
Yes ▶	GO TO 3.
No ▶	● Repair or replace data link connector to ECM harness and connector. ● Faulty ECM. (Malfunction indicator lamp remains “ON” during operation.)

3	CHECK SELF-DIAGNOSIS
Does [ECM-ABSTCS COMM NG] (self-diagnostic item) appear on display?	
Yes ▶	Check LAN circuit. Refer to “CHECK LAN CIRCUIT”, BR-131.
No ▶	GO TO 4.

4	CHECK STARTER SIGNAL
Is starter signal input to ECM?	
Yes ▶	● If other items appear on display, repair or replace affected areas. ● Repeat self-diagnostic procedures for control unit.
No ▶	Repair or replace starter switch system.

LAN CIRCUITS 1, LAN CIRCUITS 2 — LAN Communication System Failure

=NFBR0086

DIAGNOSTIC PROCEDURE

NFBR0086S01

Malfunction code No. 96, 98

1	INSPECTION START
Self-diagnostic item “LAN CIRCUITS 1” or “LAN CIRCUITS 2” appears on display.	

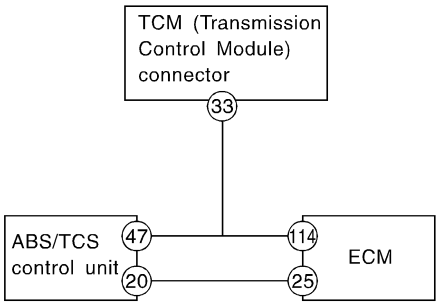

SBR541E

	▶	GO TO 2.

2	CHECK ENGINE SYSTEM	
Perform self-diagnostic procedures for ECM.		
Does self-diagnostic item [ECM-ABSTCS COMM NG] appear on display?		
Yes	▶	GO TO 6.
No	▶	GO TO 3.

3	CHECK SELF-DIAGNOSIS	
Does “ABS-TCS C/U SIGNAL” appear on display?		
Yes	▶	GO TO 4.
No	▶	Faulty control unit

4	CHECK SELF-DIAGNOSIS	
Does any other control unit self-diagnostic items appears on display?		
Yes	▶	Repair or replace affected items shown on display.
No	▶	GO TO 5.

5	CHECK VOLTAGE	
Check if battery voltage is too low (less than 9V) or battery terminals are loose.		
OK	▶	Repeat self-diagnostic procedures.
NG	▶	Faulty control unit

6	CHECK LAN CIRCUIT

Check continuity between connector terminals.

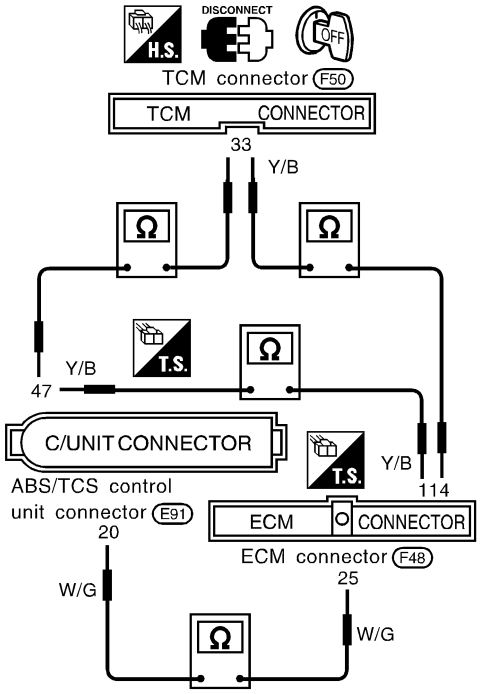

SBR542E

Control unit	ECM	TCM
20	25	
47	114	
47		33
	114	33

MTBL0320

Does continuity exist?

Yes ▶	Repeat self-diagnostic procedures.
No ▶	**Check the following.** ● Harness connectors E91, F48, F50 ● Harness for open or short between control unit connector and TCM connector ● Harness for open or short between ECM connector and TCM connector If NG, repair harness or connectors.

LAN SIGNAL 3 — Continued Reception After LAN Communication Starts

=NFBR0087

DIAGNOSTIC PROCEDURE

NFBR0087S01

Malfunction code No. 94

1	INSPECTION START
Self-diagnostic item “LAN SIGNAL 3” appears on display.	
▶	GO TO 2.

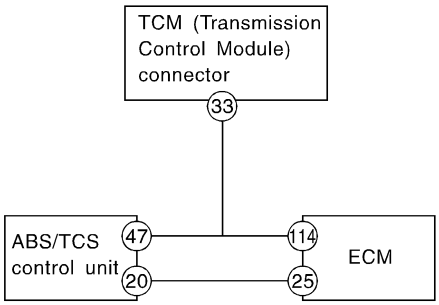

SBR541E

2	CHECK SELF-DIAGNOSIS
Perform self-diagnostic procedures for ECM.	
Does self-diagnostic item [ECM-ABSTCS COMM NG] appear on display?	
Yes ▶	Check ECM. Refer to “TROUBLE DIAGNOSES” in EC section.
No ▶	GO TO 3.

3	CHECK SELF-DIAGNOSIS
Does self-diagnostic item [ABS-TCS C/U SIGNAL] appears on display?	
Yes ▶	● Replace control unit. ● Repeat self-diagnostic procedures for control unit.
No ▶	If other items appears on display, repair or replace affected areas.

1. ABS Works Frequently

NFBR0073

1	CHECK BRAKE FLUID PRESSURE	
Check brake fluid pressure distribution. Refer to dual proportioning valve inspection in “DUAL PROPORTIONING VALVE”, BR-12.		
Is brake fluid pressure distribution normal?		
Yes	▶	GO TO 2.
No	▶	Perform Preliminary Check. Refer to BR-101.

2	CHECK WHEEL SENSOR	
1. Check wheel sensor connector for terminal damage or loose connections. 2. Perform wheel sensor mechanical check. Refer to “Wheel Sensor or Rotor”, BR-107.		
Are wheel sensors functioning properly?		
Yes	▶	GO TO 3.
No	▶	Repair.

3	CHECK FRONT AXLE	
Check front and rear axles for excessive looseness. Refer to AX section, “Front Wheel Bearing”, “ON-VEHICLE SERVICE” and “Rear Wheel Bearing”, “ON-VEHICLE SERVICE”.		
Is front axle installed properly?		
Yes	▶	Go to “3. CHECK WARNING LAMP INDICATION” in “2. Unexpected Pedal Action”, BR-136.
No	▶	Repair.

2. Unexpected Pedal Action

NFBR0071

1	CHECK BRAKE PEDAL STROKE	
Check brake pedal stroke. Is stroke excessively large?		
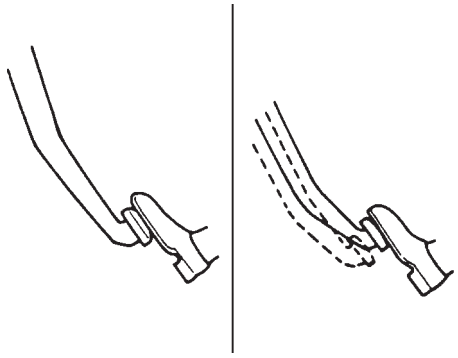 SBR540A		
Yes	▶	Perform Preliminary Check. Refer to BR-101.
No	▶	GO TO 2.

2	CHECK CONNECTOR AND PERFORMANCE	
1. Disconnect ABS solenoid valve relay. 2. Check whether brake is effective.		
OK or NG		
Yes	▶	GO TO 3.
No	▶	Perform Preliminary Check. Refer to BR-101.

3	CHECK WARNING LAMP INDICATION	
Ensure warning lamp remains off while driving.		
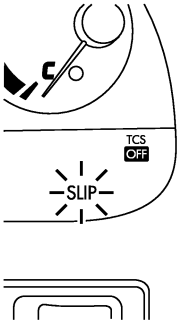 SBR655E		
Is warning lamp turned off?		
Yes	▶	GO TO 4.
No	▶	Carry out self-diagnosis. Refer to BR-91, BR-94.

4	CHECK WHEEL SENSOR	
1. Check wheel sensor connector for terminal damage or loose connection. 2. Perform wheel sensor mechanical check. Refer to "Wheel Sensor Rotor", BR-107.		
Is wheel sensor mechanism OK?		
Yes	▶	Check control unit pin terminals for damage or the connection of control unit harness connector. Reconnect control unit harness connector. Then retest.
No	▶	Repair.

3. Long Stopping Distance

NFBR0070

1	CHECK CONNECTOR AND PERFORMANCE	
1. Cancel ABS by disconnecting ABS solenoid valve relay. 2. Check stopping distance.		
OK or NG		
OK	▶	Perform Preliminary Check and air bleeding.
NG	▶	Go to "3. CHECK WARNING LAMP INDICATION" in "2. Unexpected Pedal Action", BR-136.

NOTE:
Stopping distance may be longer than vehicles without ABS when road condition is slippery.

4. ABS Does Not Work

NFBR0072

1	CHECK WARNING LAMP INDICATION	
Does the ABS warning lamp activate?		
Yes	▶	Carry out self-diagnosis. Refer to BR-91, 94.
No	▶	Go to "3. CHECK WARNING LAMP INDICATION" in "2. Unexpected Pedal Action", BR-136.

NOTE:
ABS does not work when vehicle speed is under 10 km/h (6 MPH).

5. Pedal Vibration and Noise

=NFBR0069

1	INSPECTION START
Pedal vibration and noise inspection 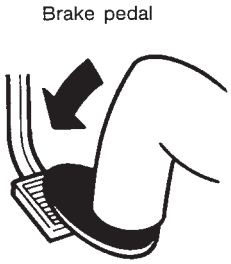 SAT797A	
▶	GO TO 2.

2	CHECK SYMPTOM
1. Apply brake. 2. Start engine. **Does the symptom appear only when engine is started?**	
Yes ▶	Carry out self-diagnosis. Refer to BR-91, 94.
No ▶	GO TO 3.

3	RECHECK SYMPTOM
Does the symptom appear when electrical equipment switches (such as headlamp) are operated?	
Yes ▶	GO TO 4.
No ▶	Go to “3. CHECK WARNING LAMP INDICATION” in “2. Unexpected Pedal Action”, BR-136.

4	CHECK WHEEL SENSOR
Check wheel sensor shield ground. For location of shield ground, refer to wiring diagram and “HARNESS LAYOUT” in EL section. **Is wheel sensor shield grounded properly?**	
Yes ▶	Check control unit pin terminals for damage or the connection of control unit harness connector. Reconnect control unit harness connector. Then retest.
No ▶	Repair.

NOTE:
ABS may operate and cause vibration under any of the following conditions.

- Applying brake gradually when shifting or operating clutch.
- Low friction (slippery) road.
- High speed cornering.
- Driving over bumps and pot holes.
- Engine speed is over 5,000 rpm with vehicle stopped.

6. ABS Warning Lamp Does Not Come On When Ignition Switch Is Turned On

=NFBR0074

1	INSPECTION START

Warning lamp circuit inspection

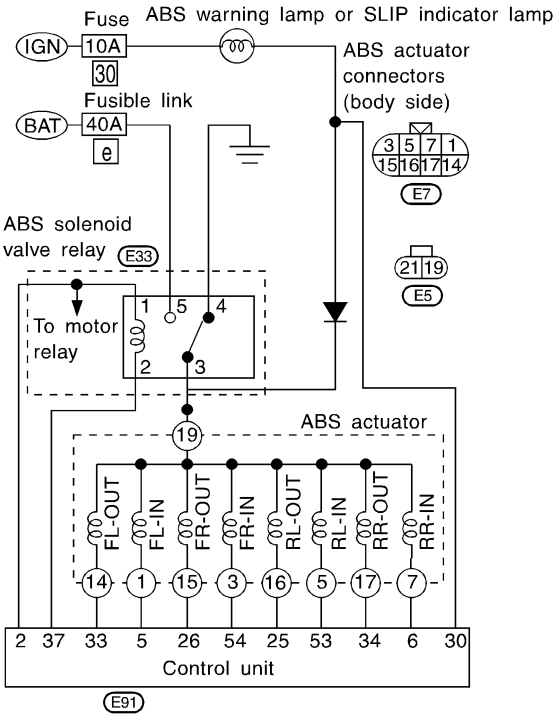

SBR334EB

▶	GO TO 2.

2	CHECK FUSE

Check 10A fuse No. 30 for warning lamp. For fuse layout, refer to “POWER SUPPLY ROUTING” in EL section.

Is fuse OK?

Yes	▶	GO TO 3.
No	▶	Replace fuse.

3	CHECK ABS CONTROL UNIT POWER SUPPLY CIRCUIT

1. Install 10A fuse.
2. Remove solenoid valve relay.
3. Disconnect connectors from control unit and actuator.
4. Check voltage between control unit connector terminal 30 and ground after turning ignition switch "ON".

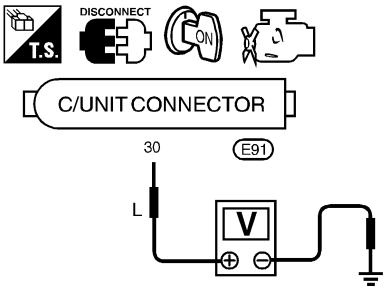

SBR715DD

Does battery voltage exist after turning ignition switch "ON"?

Yes	▶	GO TO 5.
No	▶	GO TO 4.

4	CHECK WARNING LAMP

Check warning lamp bulb.

Is warning lamp bulb OK?

Yes	▶	Repair harness and connectors between fuse and control unit connector terminal 30 (including combination meter).
No	▶	Replace bulb.

5	CHECK CIRCUIT

1. Remove solenoid valve relay.
2. Check continuity between control unit terminals and solenoid valve relay terminals.

ABS control unit	Solenoid valve relay
30 (+)	3 (−)
Ground	4

MTBL0091

NOTE:
Pay attention to tester polarity.
Specifications may vary depending on the type of tester.
Before performing this inspection, refer to the instruction manual of the tester.

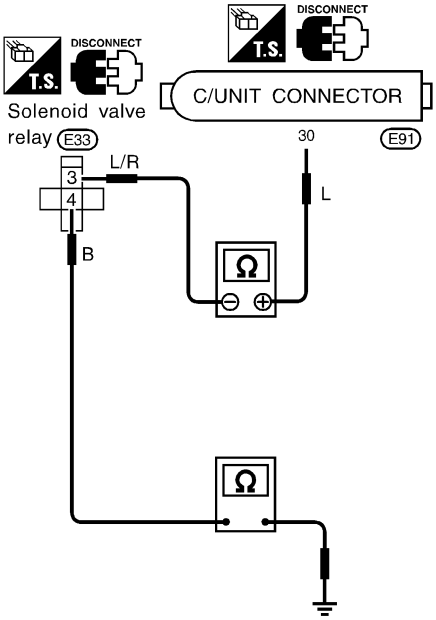

SBR105EF

Does continuity exist?

Yes	▶	GO TO 6.
No	▶	**Check the following.** ● Harness connectors E33, E91 ● Harness for open or short between solenoid valve relay terminal (relay box side) and control unit

6	CHECK SOLENOID VALVE RELAY

Refer to "8. CHECK SOLENOID VALVE RELAY", "Solenoid Valve Relay", BR-114.

Is solenoid valve relay OK?

Yes	▶	Go to "Low Voltage", BR-126.
No	▶	Replace solenoid valve relay.

7. ABS Warning Lamp Stays On When Ignition Switch Is Turned On

=NFBR0075

1	INSPECTION START

ABS control unit inspection

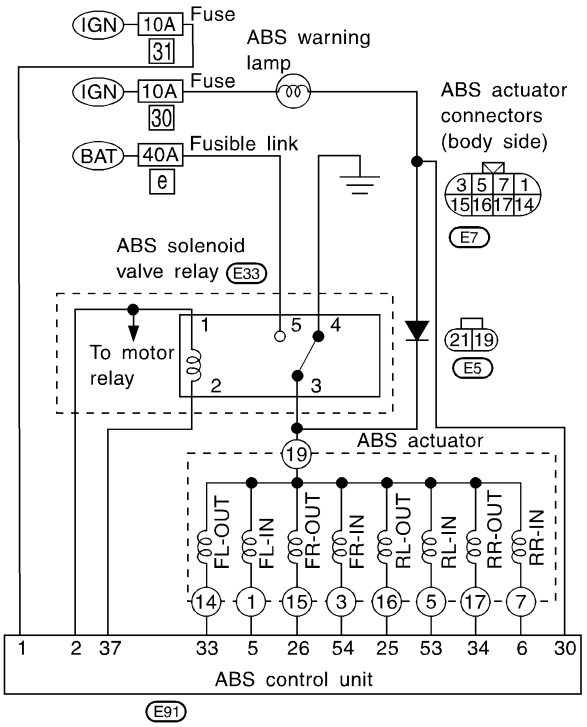

SBR338EB

▶	GO TO 2.

2	CHECK FUSE

Check 10A fuse No. 31 for control unit. For fuse layout, refer to “POWER SUPPLY ROUTING” in EL section.

Is fuse OK?

Yes	▶	GO TO 3.
No	▶	GO TO 9.

3	CHECK ABS CONTROL UNIT POWER SUPPLY CIRCUIT

1. Disconnect connector from control unit.
2. Check voltage between control unit connector terminal 1 and ground after turning ignition switch "ON".

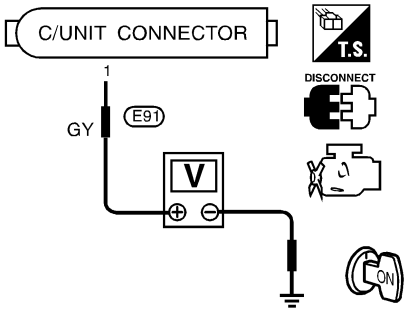

SBR240DG

Does battery voltage exist?

Yes	▶	GO TO 4.
No	▶	**Check the following.** ● Harness connector E91 ● Harness for open or short between control unit and fuse If NG, repair harness or connectors.

4	CHECK ABS SOLENOID VALVE RELAY COIL POWER SUPPLY CIRCUIT

1. Turn ignition switch "OFF".
2. Remove solenoid valve relay.
3. Check continuity between control unit connector terminals and solenoid valve relay terminals.

Control unit	Solenoid valve relay
2	1
37	2

MTBL0092

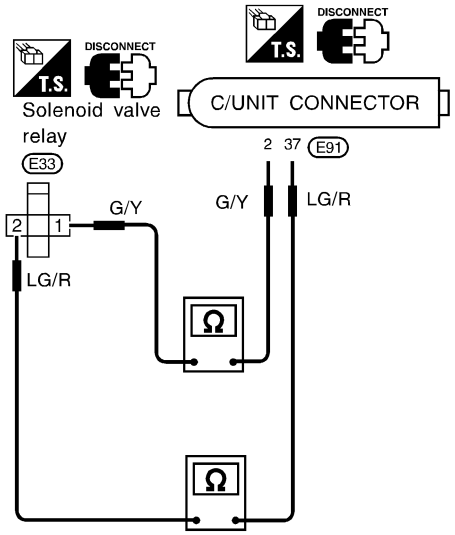

SBR781DH

Does continuity exist?

Yes	▶	GO TO 5.
No	▶	**Check the following.** ● Harness connectors E33, E91 ● Harness for open or short between solenoid valve relay terminal (relay box side) and control unit If NG, repair harness or connectors.

5	CHECK ABS SOLENOID VALVE RELAY

Go to "8. CHECK SOLENOID VALVE RELAY", "Solenoid Valve Relay", BR-114.

Does continuity exist?

Yes	▶	GO TO 6.
No	▶	Replace solenoid valve relay.

6	CHECK WARNING LAMP GROUND CIRCUIT

1. Turn ignition switch "OFF".
2. Disconnect connectors from control unit and remove solenoid valve relay.
3. Check continuity between control unit connector terminal 30 and body ground.

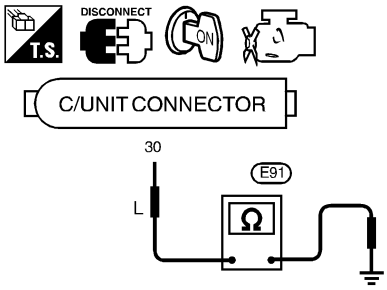

SBR106ED

Does continuity exist?

Yes	▶	**Check the following.** ● Harness connector E91 ● Harness for open or short between control unit and fuse If NG, repair harness or connectors.
No	▶	GO TO 7.

7	CHECK ABS SOLENOID VALVE RELAY CIRCUIT

1. Remove 10A fuse 30 (meter) for warning lamp. For fuse layout, refer to POWER SUPPLY ROUTING in EL section.
2. Disconnect ABS actuator 2-pin connector E5.
3. Check continuity between ABS actuator 2-pin connector (body side) terminal 19 (−) and 10A fuse 11 (fuse box side) terminal (+).

NOTE:
Pay attention to tester polarity.
Specifications may vary depending on the type of tester.
Before performing this inspection, refer to the instruction manual of the tester.

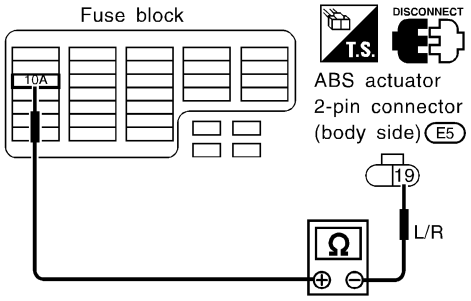

SBR339EA

Does continuity exist?

Yes	▶	Replace ABS relay unit.
No	▶	GO TO 8.

8	CHECK ABS SOLENOID VALVE CIRCUIT

1. Disconnect ABS actuator 8-pin connector.
2. Check continuity between each ABS actuator 8-pin connector (ABS actuator side) terminal and body ground.

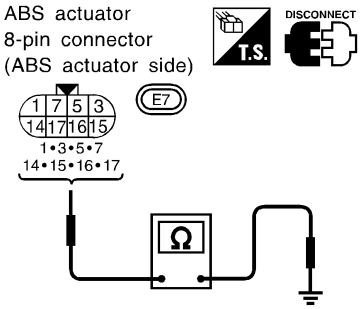

SBR783DG

Does continuity exist?

Yes	▶	Replace ABS actuator.
No	▶	Check control unit pin terminals for damage or the connection of control unit harness connector. Reconnect control unit harness connector. Then retest.

9	REPLACE FUSE

Replace 10A fuse No. 31.

Does the fuse blow out when ignition switch is turned "ON"?

Yes	▶	GO TO 10.
No	▶	**INSPECTION END**

10	CHECK ABS CONTROL UNIT POWER SUPPLY CIRCUIT

1. Disconnect control unit connector.
2. Check continuity between control unit connector terminal 1 and body ground.

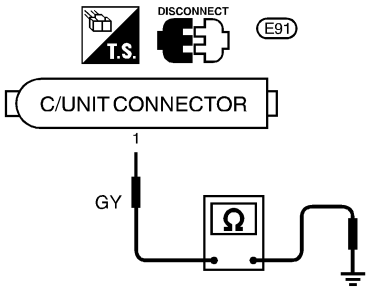

SBR720DF

Does continuity exist?

Yes	▶	**Check the following.** ● Harness connector E91 ● Harness for open or short between control unit and fuse If NG, repair harness or connectors.
No	▶	Check control unit pin terminals for damage or the connection of control unit harness connector. Reconnect control unit harness connector. Then retest.

8. SLIP Indicator Lamp Does Not Come On When Ignition Switch Is Turned On

=NFBR0088

1	INSPECTION START
Indicator lamp circuit inspection	

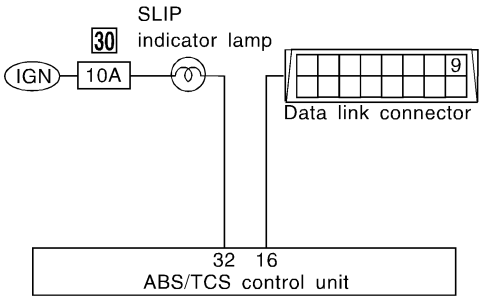

SBR537E

	▶	GO TO 2.

2	CHECK FUSE
Check 10A fuse No. 30 for control unit. For fuse layout, refer to “POWER SUPPLY ROUTING” in EL section.	
Is fuse OK?	

Yes	▶	GO TO 3.
No	▶	Replace fuse.

3	CHECK CONTROL UNIT POWER SUPPLY CIRCUIT

1. Install 10A fuse.
2. Disconnect connector from control unit.
3. Check voltage between control unit connector terminal 32 and ground after turning ignition switch “ON”.

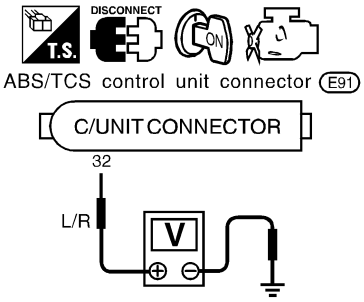

SBR350EA

Does battery voltage exist?

Yes	▶	GO TO 5.
No	▶	GO TO 4.

4	CHECK INDICATOR LAMP
Check indicator lamp bulb.	
Is indicator lamp bulb OK?	

Yes	▶	Repair harness and connectors between fuse and control unit connector terminal 32 (including combination meter).
No	▶	Replace bulb.

5	CHECK CIRCUIT

1. Disconnect control unit connector.
2. Check continuity between control unit connector terminal 16 and data link connector terminal 9.

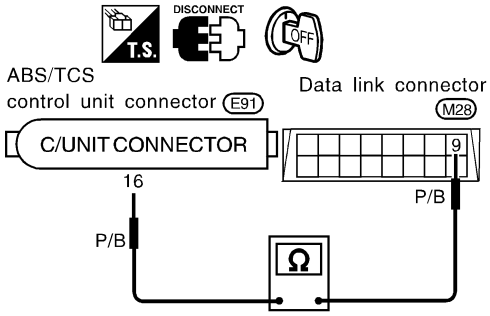

SBR538E

Does continuity exist?

Yes	▶	GO TO 6.
No	▶	**Check the following.** ● Harness connectors E91, M28 ● Harness for open or short between control unit and data link connector

6	CHECK CONNECTOR

1. Disconnect connector from control unit. Check terminals for damage or loose connection. Then reconnect connector.
2. Carry out self-diagnosis again.

Does warning lamp activate again?

Yes	▶	Check items the self-diagnosis detected as faulty.
No	▶	**INSPECTION END**

9. TCS OFF Indicator Lamp Does Not Come On When Ignition Switch Is Turned On

NFBR0089

1	INSPECTION START

Indicator lamp circuit inspection

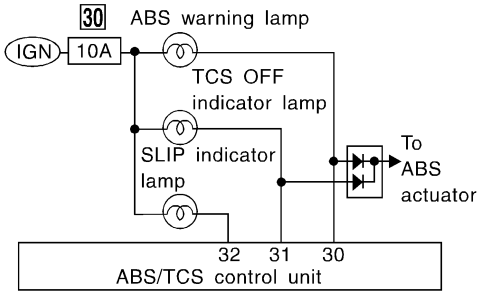

SBR352EA

	▶	GO TO 2.

2	CHECK FUSE	
Check 10A fuse No. 30 for control unit. For fuse layout, refer to "POWER SUPPLY ROUTING" in EL section.		
Is fuse OK?		
Yes	▶	GO TO 3.
No	▶	Replace fuse.

3	CHECK CONTROL UNIT POWER SUPPLY CIRCUIT	
1. Install 10A fuse. 2. Disconnect connector from control unit. 3. Check voltage between control unit connector terminal 31 and ground after turning ignition switch "ON".		
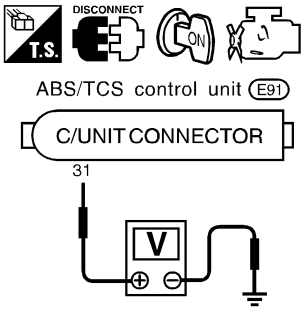 SBR353EA		
Does battery voltage exist?		
Yes	▶	GO TO 5.
No	▶	GO TO 4.

4	CHECK INDICATOR LAMP	
Check indicator lamp bulb.		
Is indicator lamp bulb OK?		
Yes	▶	Repair harness and connectors between control unit connector terminal 31 and fuse box (including combination meter).
No	▶	Replace bulb.

5	CHECK CONNECTOR	
1. Disconnect connector from control unit. Check terminals for damage or loose connection. Then reconnect connector. 2. Carry out self-diagnosis again.		
Does warning lamp activate again?		
Yes	▶	Check items the self-diagnosis detected as faulty.
No	▶	**INSPECTION END**

10. TCS OFF Switch Is Inoperative

=NFBR0090

1	INSPECTION START

Inspect TCS OFF switch.

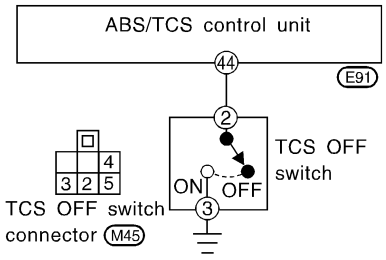

SBR543E

▶	GO TO 2.

2	CHECK TCS OFF SWITCH

1. Remove TCS OFF switch and disconnect TCS OFF switch connector.
2. Check continuity between terminal 2 and 3 for TCS OFF switch connector.

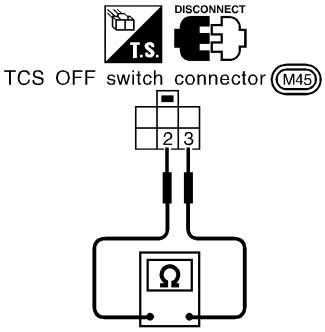

SBR544E

When TCS OFF switch is pressed:
Continuity should exist.
When TCS OFF switch is released:
Continuity should not exist.

OK	▶	GO TO 3.
NG	▶	Replace TCS OFF switch.

3	CHECK TCS OFF SWITCH POWER SUPPLY CIRCUIT

- Disconnect connector from control unit.
- Check continuity between control unit connector terminal 44 and TCS OFF switch connector terminal 2.

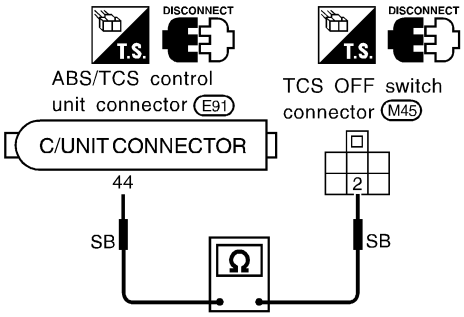

SBR545E

Does continuity exist?

Yes	▶	GO TO 4.
No	▶	**Check the following.** • Harness connectors E91, M45 • Harness for open or short between TCS OFF switch terminal (body side) and control unit If NG, repair harness or connectors.

4	CHECK TCS OFF SWITCH POWER SUPPLY

Check continuity between TCS OFF switch connector terminal 2 and ground.

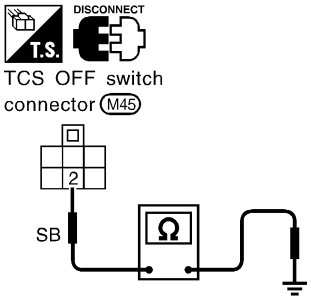

SBR546E

Does continuity exist?

Yes	▶	GO TO 5.
No	▶	Repair harness and connectors.

5	CHECK TCS OFF SWITCH GROUND CIRCUIT

Check continuity between TCS OFF switch connector terminal 3 and ground.

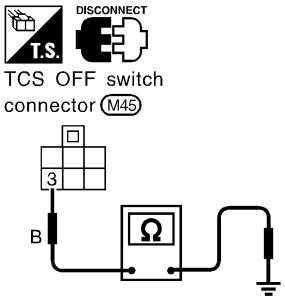

SBR547E

Does continuity exist?

Yes	▶	Final check
No	▶	Repair harness and connectors.

11. Poor Acceleration

=NFBR0091

1	INSPECTION START
Engine acceleration is poor while TCS is operating. Vehicle instability is caused by unstable engine rpm operation. (Engine is shaking.)	
▶	GO TO 2.

2	CHECK PERFORMANCE
1. Cancel TCS operation using TCS OFF switch. (TCS OFF indicator lamp lights.) 2. Drive vehicle or accelerate engine. **Is engine acceleration poor or does automatic transaxle shift when TCS is not operating?**	
Yes ▶	Go to “TROUBLE DIAGNOSES” in BR section.
No ▶	GO TO 3.

3	CHECK SELF-DIAGNOSIS
Perform self-diagnostic procedures for TCM. **Does any of the following self-diagnostic items appear on the display?**	
Yes ▶	Go to “TROUBLE DIAGNOSES” in AT section.
No ▶	GO TO 4.

4	CHECK SELF-DIAGNOSIS
Perform self-diagnostic procedures for ABS/TCS. **Does any of the following self-diagnostic items appear on the display?**	
Yes ▶	Go to “TROUBLE DIAGNOSES” in BR section.
No ▶	GO TO 5.

5	CHECK SELF-DIAGNOSIS
Perform self-diagnostic procedures for ECM. **Does any of the following self-diagnostic items appear on the display?**	
Yes ▶	Go to “TROUBLE DIAGNOSES” in EC section.
No ▶	**INSPECTION END**

CAUTION:
Be careful not to damage sensor edge and sensor rotor teeth. When removing the front or rear wheel hub assembly, first remove the ABS wheel sensor from the assembly. Failure to do so may result in damage to the sensor wires making the sensor inoperative.

Wheel Sensors

NFBR0076S01

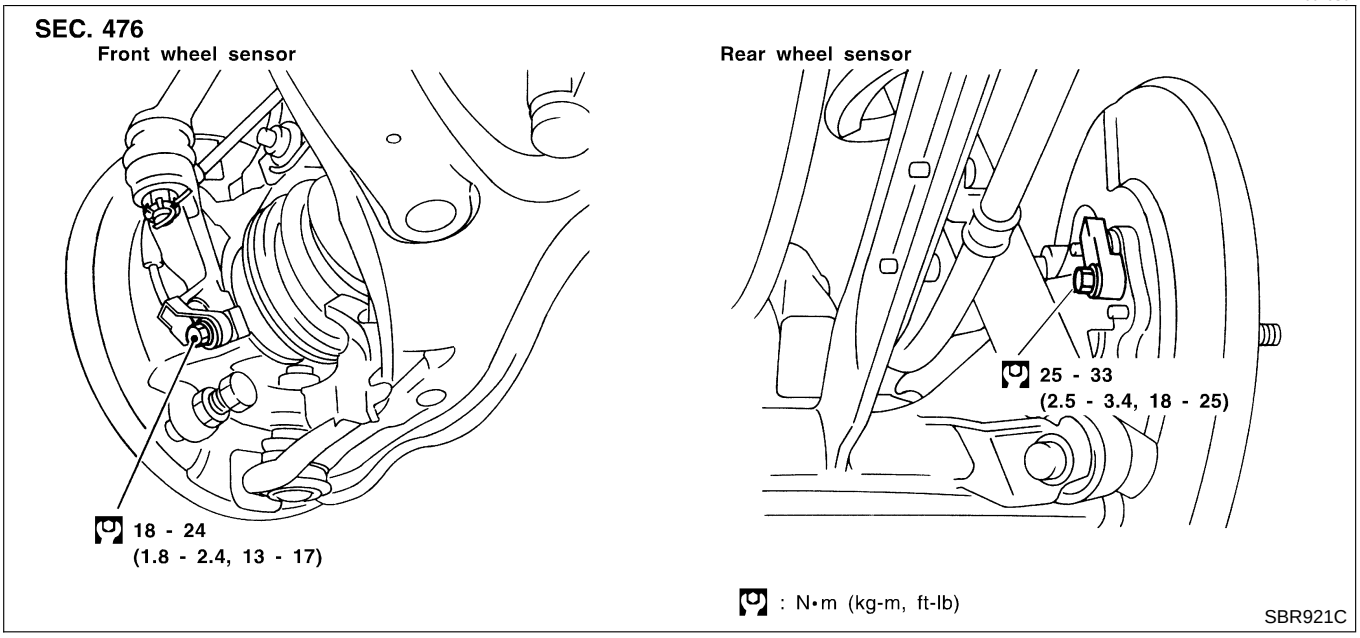

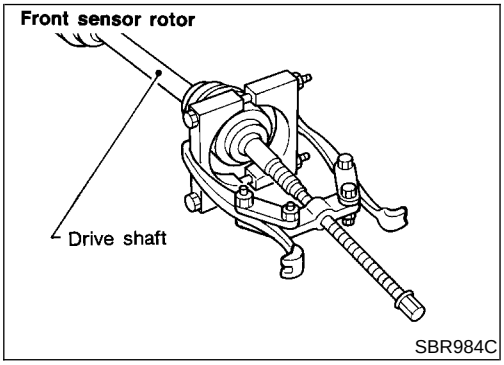

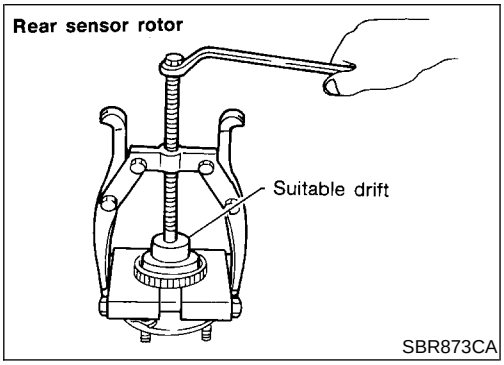

Sensor Rotor

NFBR0076S02

REMOVAL

NFBR0076S0201

1. Remove the drive shaft and rear wheel hub. Refer to “Drive Shaft” and “Wheel Hub” in AX section.
2. Remove the sensor rotor using suitable puller, drift and bearing replacer.

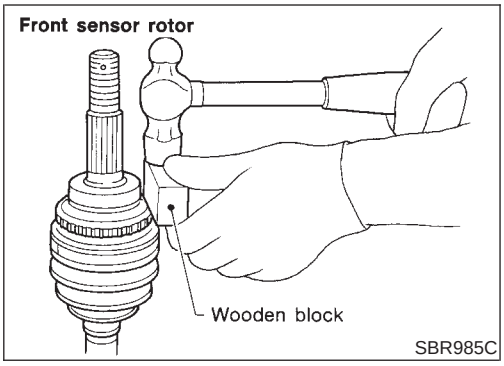

INSTALLATION

NFBR0076S0202

Install the sensor rotor. For front sensor rotor, use hammer and wooden block. For rear sensor rotor, use suitable drift and press.

- Always replace sensor rotor with new one.

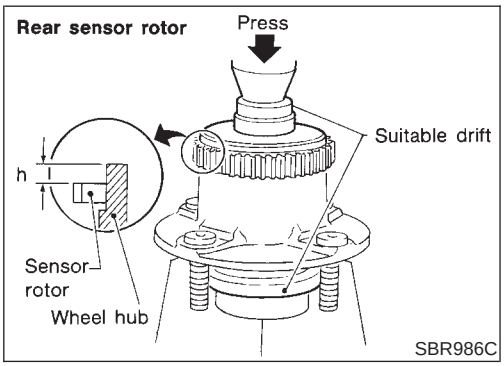

- Pay attention to the dimension of rear sensor rotor as show in figure.

  h: 12.5 - 13.5 mm (0.492 - 0.531 in)

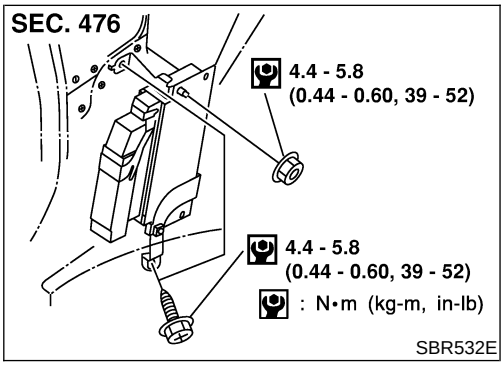

Control Unit (With TCS Models)

NFBR0076S03

Location: Driver side dash side lower.

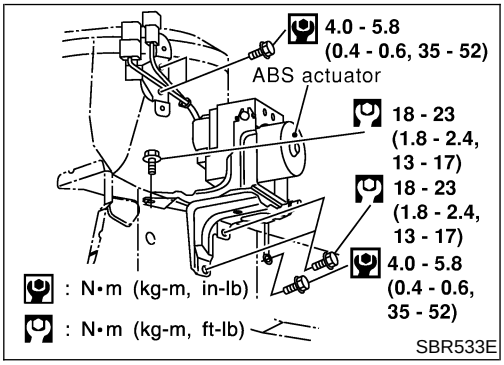

Actuator

NFBR0076S04

REMOVAL

NFBR0076S0401

1. Disconnect battery cable.
2. Drain brake fluid. Refer to "Changing Brake Fluid" (BR-8).
3. Remove air cleaner and duct.
4. Apply different colored paint to each pipe connector and actuator to prevent incorrect connection.
5. Disconnect harness connectors, brake pipes and remove fixing nuts and actuator ground cable.

INSTALLATION

NFBR0076S0402

CAUTION:

After installation, refill brake fluid. Then bleed air. Refer to "Bleeding Brake System" (BR-9).

1. Temporarily install actuator on the bracket.
2. Tighten actuator ground cable.
3. Connect brake pipes temporarily.
4. Tighten fixing nuts.
5. Tighten brake pipes.
6. Connect harness connectors and battery cable.
7. Install air cleaner and duct.

General Specifications

NFBR0077
Unit: mm (in)

Front brake	Brake model		CLZ25VC disc brake
	Cylinder bore diameter		57.2 (2.252)
	Pad Length × width × thickness		125.6 × 46 × 11 (4.94 × 1.81 × 0.43)
	Rotor outer diameter × thickness		280 × 26 (11.02 × 1.02)
Rear brake	Brake model		CL9HB disc brake
	Cylinder bore diameter		33.96 (1.3370)
	Pad Length × width × thickness		89.1 × 39.5 × 10 (3.508 × 1.555 × 0.39)
	Rotor outer diameter × thickness		278 × 9 (10.94 × 0.35)
Master cylinder	Cylinder bore diameter		23.81 (15/16)
Control valve	Valve model		Dual proportioning valve
Brake booster	Booster model		M215T
	Diaphragm diameter	Primary	230 (9.06)
		Secondary	205 (8.07)
Recommended brake fluid			DOT 3

Disc Brake

NFBR0078
Unit: mm (in)

Brake model		CLZ25VC	CL9HB
Pad wear limit	Minimum thickness	2.0 (0.079)	1.5 (0.059)
Rotor repair limit	Maximum runout	0.07 (0.0028)	0.07 (0.0028)
	Minimum thickness	24.0 (0.945)	8 (0.31)

Brake Pedal

NFBR0079
Unit: mm (in)

Free height “H”*	M/T	158 - 165 (6.22 - 6.50)
	A/T	167 - 174 (6.57 - 6.85)
Clearance “C” between pedal stopper and threaded end of stop lamp switch or ASCD switch		0.74 - 1.96 (0.0291 - 0.0772)

*: Measured from surface of dash reinforcement panel to surface of pedal pad

Parking Brake

NFBR0080

Number of notches [under force of 196 N (20 kg, 44 lb)]	10 - 11
Number of notches when warning lamp switch comes on	1

Control Valve

NFBR0092
Unit: kPa (kg/cm^2, psi)

Applied pressure (front)	7,355 (75, 1,067)
Output pressure (rear)	5,100 - 5,492 (52 - 56, 739 - 796)

Brake Booster

NFBR0093

Unit: mm (in)

Output rod length	10.275 - 10.525 (0.4045 - 0.4144)
Clevis length	130 (5.12)

ABS Wheel Sensor

NFBR0094

Clearance	Front	0.273 - 0.925 mm (0.0107 - 0.0364 in)
	Rear	0.385 - 0.973 mm (0.0252 - 0.0383 in)
Resistance	Front	0.8 - 1.85Ω
	Rear	0.8 - 1.85Ω
Dimension of rear sensor rotor		12.5 - 13.5 mm (0.4921 - 0.5315 in)