FRONT & REAR AXLE

SECTION AX

CONTENTS

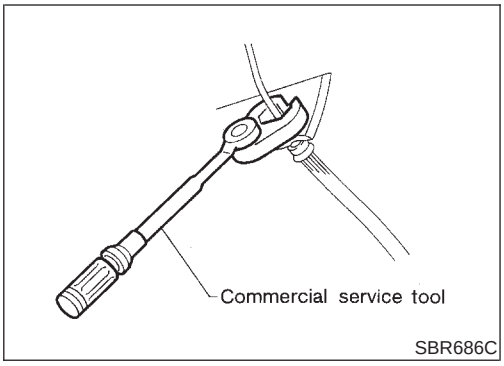

Precautions

PRECAUTIONS

NFAX0001

- **When installing rubber parts, final tightening must be carried out under unladen condition* with tires on ground.**
  ***: Fuel, radiator coolant and engine oil full. Spare tire, jack, hand tools and mats in designated positions.**
- **After installing removed suspension parts, check wheel alignment and adjust if necessary.**
- **Use flare nut wrench when removing or installing brake tubes.**
- **Always torque brake lines when installing.**

Preparation

SPECIAL SERVICE TOOLS

NFAX0002

The actual shapes of Kent-Moore tools may differ from those of special service tools illustrated here.

Tool number (Kent-Moore No.) Tool name	Description	
HT72520000 (J25730-B) Ball joint remover	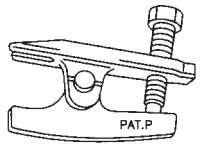 NT146	Removing tie-rod outer end and lower ball joint
KV38106700 (J34296) KV38106800 (J34297) Differential side oil seal protector	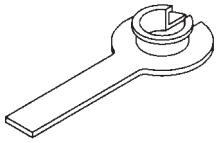 NT147	Installing drive shaft LH: KV38106700 (J34296) RH: KV38106800 (J34297)

COMMERCIAL SERVICE TOOLS

NFAX0003

Tool name	Description	
1 Flare nut crowfoot 2 Torque wrench	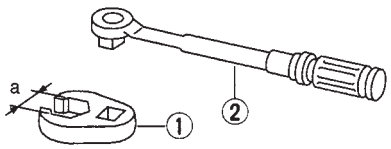 NT360	Removing and installing each brake piping **a: 10 mm (0.39 in)**

Noise, Vibration and Harshness (NVH) Troubleshooting

=NFAX0004

NVH TROUBLESHOOTING CHART

NFAX0004S01

Use the chart below to help you find the cause of the symptom. If necessary, repair or replace these parts.

Reference page			—	AX-13	—	AX-5, 19	—	AX-4, 18	Refer to DRIVE SHAFT in this chart.	Refer to AXLE in this chart.	SU-4	SU-4	SU-4	BR-7	ST-5
Possible cause and SUSPECTED PARTS			Excessive joint angle	Joint sliding resistance	Imbalance	Improper installation, looseness	Parts interference	Wheel bearing damage	DRIVE SHAFT	AXLE	SUSPENSION	TIRES	ROAD WHEEL	BRAKES	STEERING
Symptom	DRIVE SHAFT	Noise, Vibration	×	×						×	×	×	×	×	×
		Shake	×		×					×	×	×	×	×	×
	AXLE	Noise				×	×		×		×	×	×	×	×
		Shake				×	×		×		×	×	×	×	×
		Vibration				×	×		×		×	×			×
		Shimmy				×	×				×	×	×	×	×
		Judder				×					×	×	×	×	×
		Poor quality ride or handling				×	×	×			×	×	×		

×: Applicable

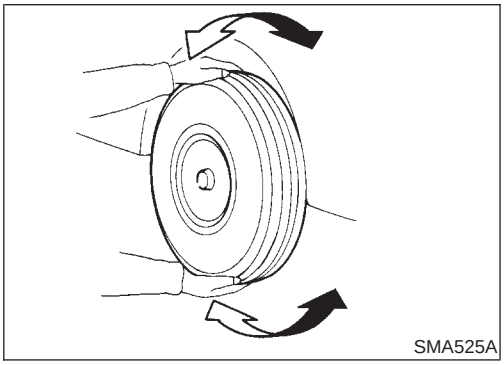

On-vehicle Service

FRONT AXLE PARTS

NFAX0005

Check front axle and front suspension parts for excessive play, cracks, wear or other damage.

- Shake each front wheel to check for excessive play.
- Make sure that cotter pin is inserted.
- Retighten all axle and suspension nuts and bolts to the specified torque.

Tightening torque:

Refer to SU-9, “FRONT SUSPENSION”.

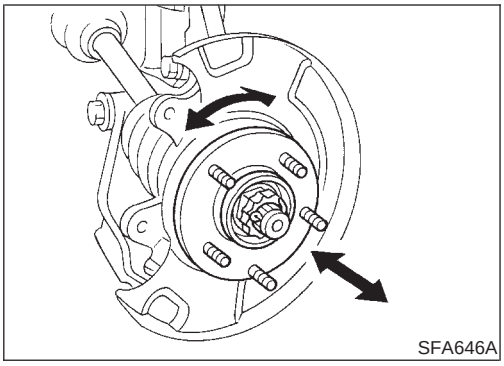

FRONT WHEEL BEARING

NFAX0006

- Check that wheel bearings operate smoothly.
- Check axial end play.

Axial end play:

Less than 0.05 mm (0.0020 in)

If out of specification or wheel bearing does not turn smoothly, replace wheel bearing assembly.
Refer to "Wheel Hub and Knuckle", "FRONT AXLE", AX-5.

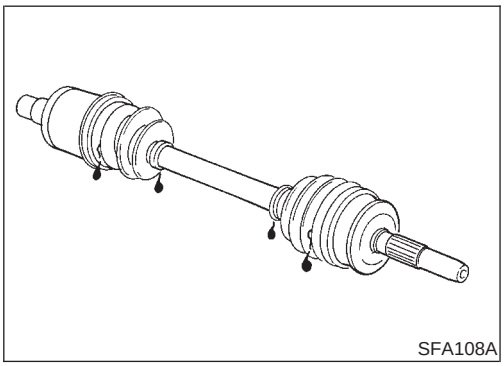

DRIVE SHAFT

NFAX0007

Check for grease leakage or other damage.

Wheel Hub and Knuckle

COMPONENTS

=NFAX0008

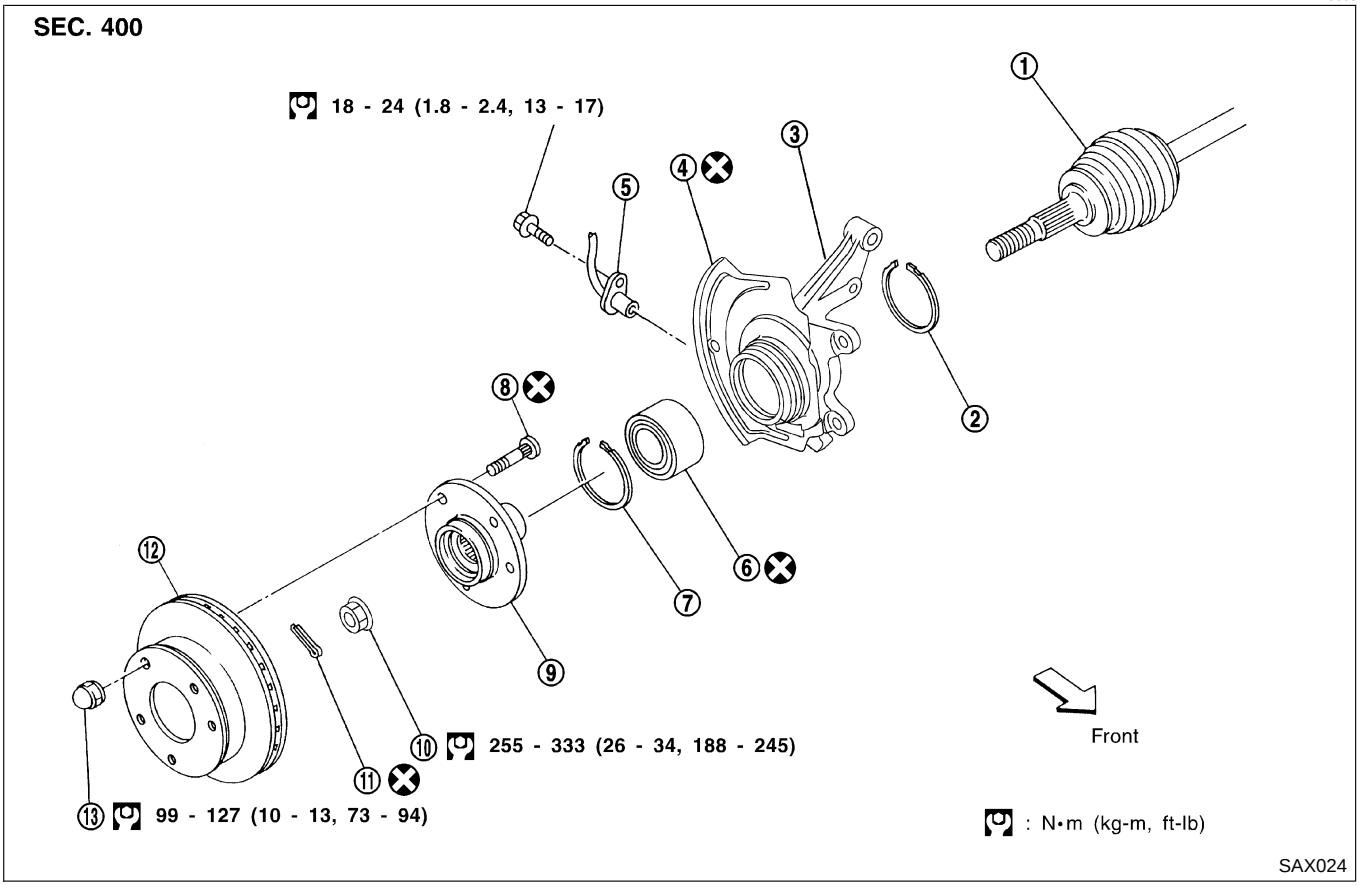

1. Drive shaft
2. Snap ring
3. Knuckle
4. Baffle plate
5. ABS sensor
6. Wheel bearing assembly
7. Snap ring
8. Hub bolt
9. Wheel hub
10. Wheel bearing lock nut
11. Cotter pin
12. Brake disc
13. Wheel nut

REMOVAL

NFAX0009

CAUTION:

Before removing the front axle assembly, disconnect the ABS wheel sensor from the assembly. Then move it away from the front axle assembly area.
Failure to do so may result in damage to the sensor wires and the sensor becoming inoperative.

1. Remove wheel bearing lock nut.

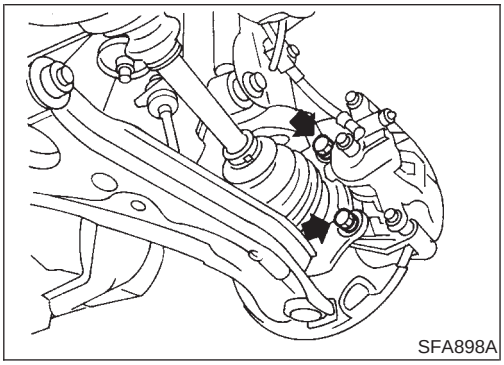

2. Remove brake caliper assembly and rotor.

Brake hose need not be disconnected from brake caliper. In this case, suspend caliper assembly with wire so as not to stretch brake hose. Be careful not to depress brake pedal, or piston will pop out.
Make sure brake hose is not twisted.

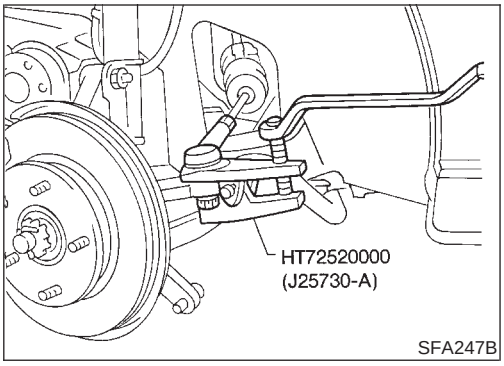

SFA247B

3. Separate tie-rod from knuckle with Tool.

Install stud nut on stud bolt to prevent damage to stud bolt.

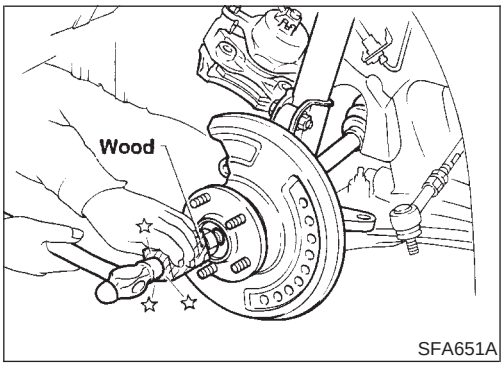

SFA651A

4. Separate drive shaft from knuckle by lightly tapping it. If it is hard to remove, use a puller.

- **Cover boots with shop towel so as not to damage them when removing drive shaft.**

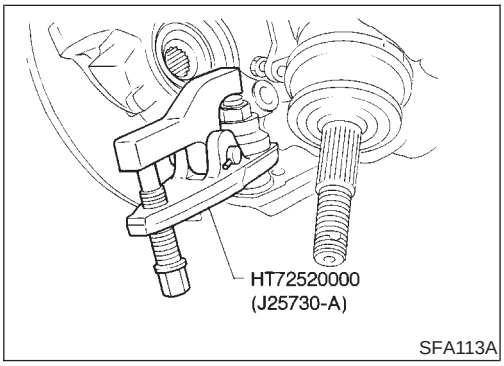

SFA113A

5. Loosen lower ball joint tightening nut.
6. Separate knuckle from lower ball joint stud with Tool.
7. Remove knuckle from transverse link.

INSTALLATION

NFAX0010

1. Install knuckle with wheel hub.

When installing knuckle to strut, be sure to hold bolts and tighten nuts.

: 125 - 155 N·m (13 - 15 kg-m, 93 - 114 ft-lb)

- **Before tightening, apply oil to threaded portion of drive shaft.**

2. Tighten wheel bearing lock nut.

: 255 - 333 N·m (26 - 34 kg-m, 188 - 245 ft-lb)

3. Check that wheel bearings operate smoothly.

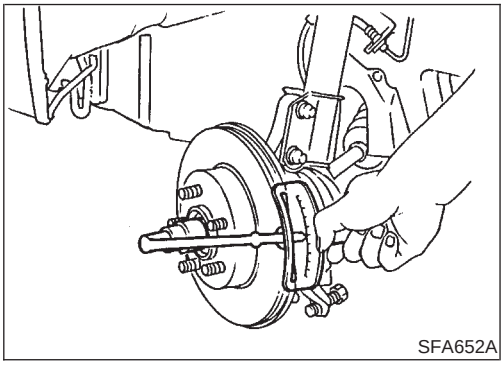
SFA652A

4. Check wheel bearing axial end play.

Axial end play:

Less than 0.05 mm (0.0020 in)

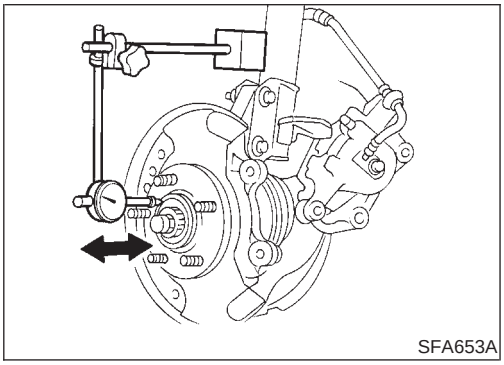
SFA653A

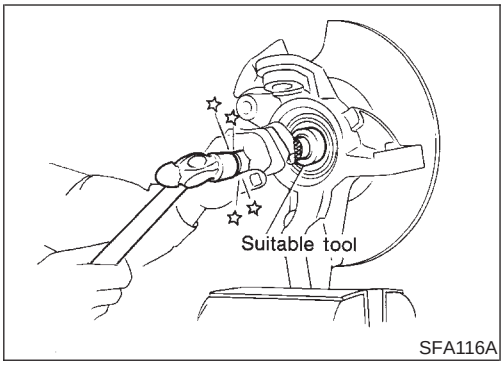

SFA116A

DISASSEMBLY

NFAX0011

CAUTION:

When removing wheel hub or wheel bearing from knuckle, replace wheel bearing assembly (outer race, inner races and grease seals) with a new one.

Wheel Hub

NFAX0011S01

Drive out hub with inner race (outside) from knuckle with a suitable tool.

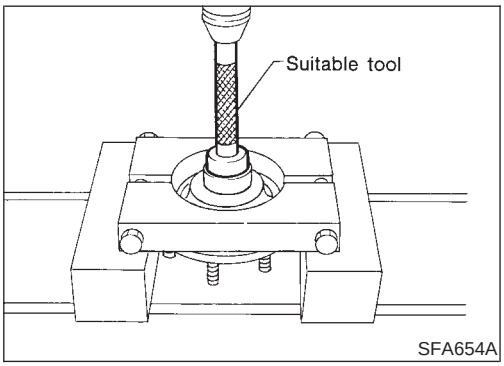

SFA654A

Wheel Bearing

NFAX0011S02

When replacing wheel bearing, replace complete wheel bearing assembly (Inner races and outer race).

1. Remove bearing inner race (outside).

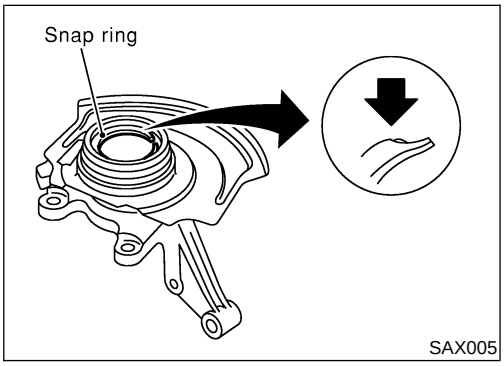

SAX005

2. Remove snap rings.

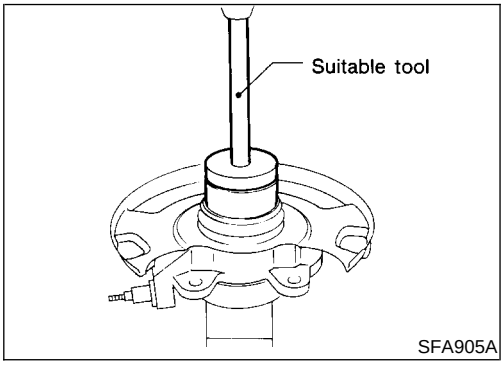

SFA905A

3. Press out bearing outer race.

INSPECTION

NFAX0012

Wheel Hub and Knuckle

NFAX0012S01

Check wheel hub and knuckle for cracks by using a magnetic exploration or dyeing test.

Snap Ring

NFAX0012S02

Check snap ring for wear or cracks. Replace if necessary.

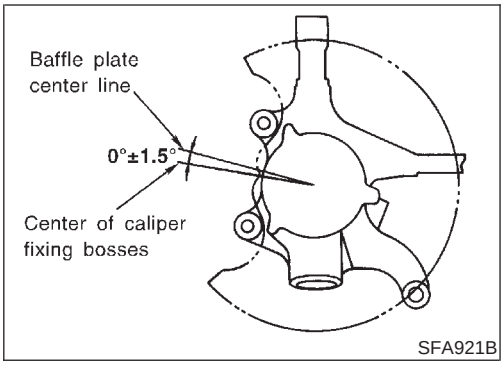

ASSEMBLY

NFAX0013

- When removing baffle plate, replace it with a new one.
- When installing the baffle plate, press new plate so that it is in contact with knuckle wall. Refer to figure at left.

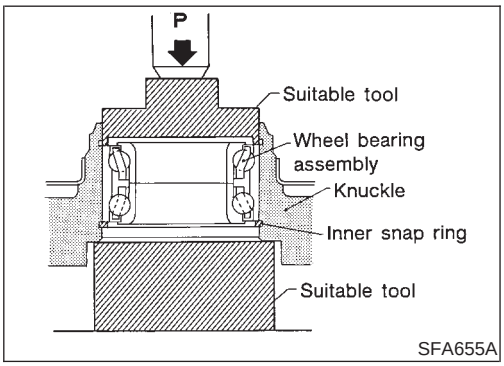

1. Install inner snap ring into groove of knuckle.
2. Press new wheel bearing assembly into knuckle until it contacts snap ring.

   Maximum load P:

   29 kN (3 ton, 3.3 US ton, 3.0 Imp ton)

CAUTION:

- **Do not press inner race of wheel bearing assembly.**
- **Do not apply oil or grease to mating surfaces of wheel bearing outer race and knuckle.**

3. Install outer snap ring into groove of knuckle.

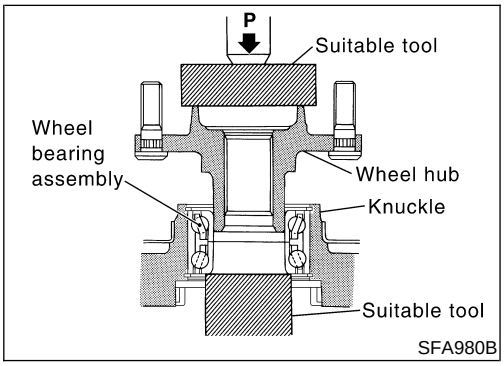

4. Press wheel hub into knuckle until it stops when the end of the wheel bearing is hit.

   Maximum load P:

   49 kN (5 ton, 5.5 US ton, 4.9 Imp ton)

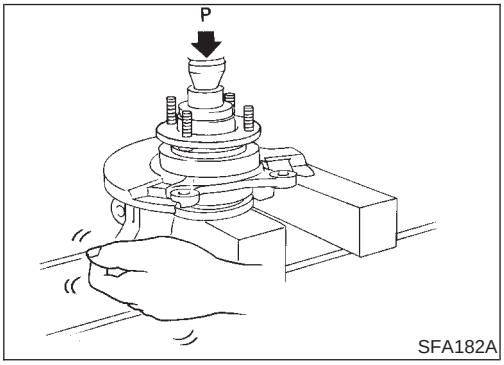

5. Check bearing operation.

a. Add load P with press.

   Load P:

   49.0 kN
   (5.0 ton, 5.5 US ton, 4.92 Imp ton)

b. Spin knuckle several turns in both directions.

c. Make sure that wheel bearings operate smoothly.

Drive Shaft

COMPONENTS

NFAX0016

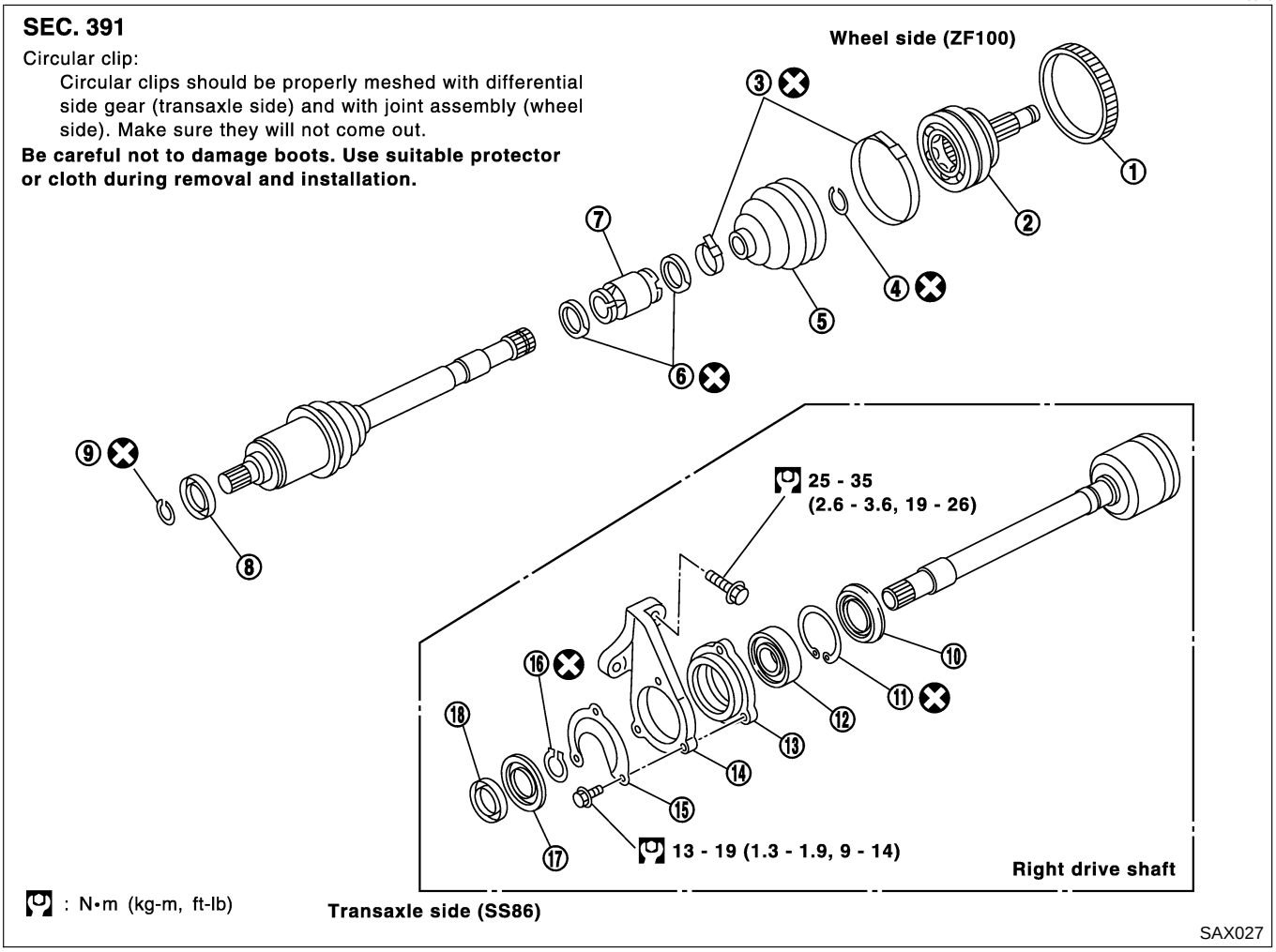

1. ABS sensor rotor
2. Joint assembly
3. Boot band
4. Circular clip
5. Boot
6. Dynamic damper band
7. Dynamic damper
8. Dust shield
9. Circular clip
10. Support bearing dust shield
11. Snap ring
12. Support bearing
13. Support bearing retainer
14. Support bearing bracket
15. Shield heat plate
16. Snap ring
17. Support bearing dust shield
18. Dust shield

REMOVAL

=NFAX0014

1. Remove wheel bearing lock nut.

Brake caliper need not be disconnected. Do not twist or stretch brake hose when moving components.

2. Remove strut lower mount bolts.
3. Remove brake hose clip.
4. Separate drive shaft from knuckle by lightly tapping it. If it is hard to remove, use a puller.

- **Cover boots with shop towel so as not to damage them when removing drive shaft.**

  Refer to "Wheel Hub and Knuckle", "FRONT AXLE", AX-5.

5. Remove right drive shaft from transaxle.

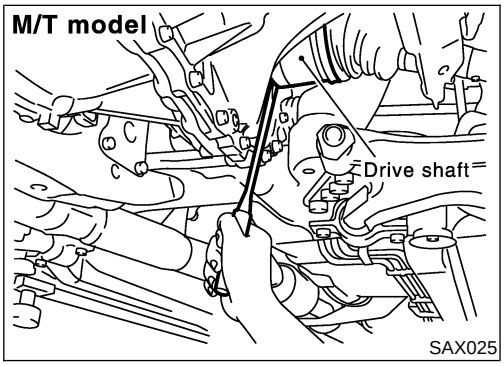

6. Remove left drive shaft from transaxle.

— For M/T models —

- Pry off drive shaft from transaxle as shown at left.

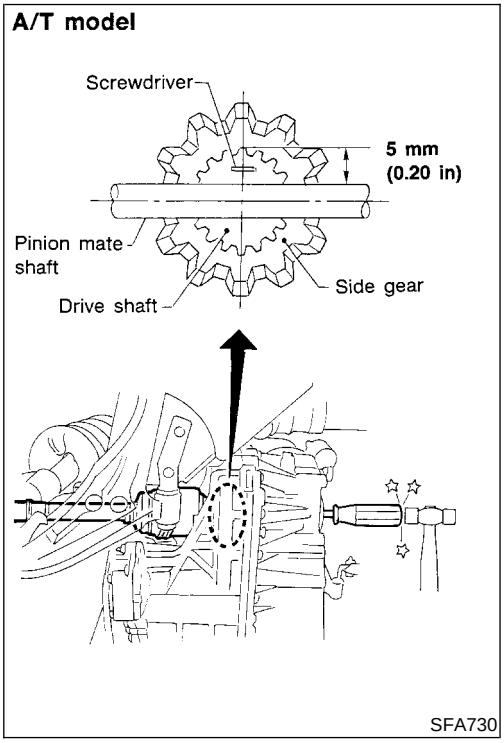

— For A/T models —

- Insert screwdriver into transaxle opening for right drive shaft and strike with a hammer.

Be careful not to damage pinion mate shaft and side gear.

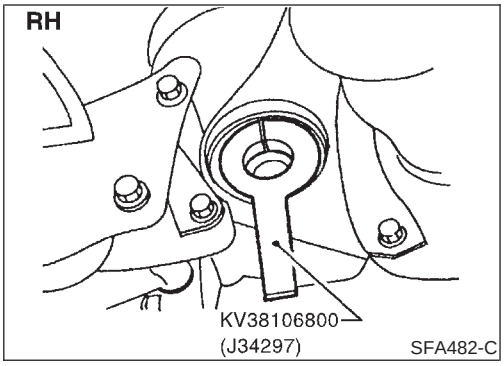

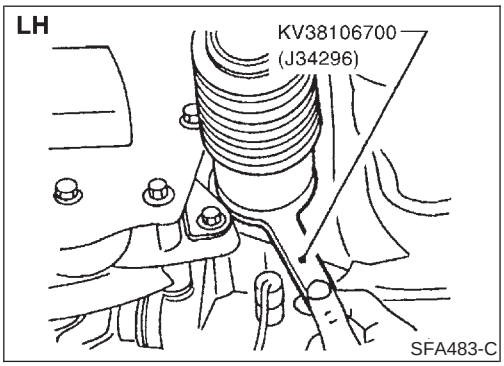

INSTALLATION

NFAX0015

Transaxle Side

NFAX0015S01

1. Drive a new oil seal to transaxle. Refer to MA-21, "Replacing Oil Seal" or "Differential Side Oil Seal Replacement", "ON-VEHICLE SERVICE".
2. Set Tool along the inner circumference of oil seal.
3. Insert drive shaft into transaxle. Be sure to properly align the serrations and then withdraw Tool.
4. Push drive shaft, then press-fit circular clip on the drive shaft into circular clip groove of side gear.
5. After its insertion, try to pull the flange out of the slide joint by hand. If it pulls out, the circular clip is not properly meshed with the side gear.

Wheel Side

NFAX0015S02

- Install drive shaft into knuckle.
- Tighten upper knuckle nut and wheel bearing lock nut. Refer to section Installation in "Wheel Hub and Knuckle", "FRONT AXLE", AX-5.

DISASSEMBLY

NFAX0017

Transaxle Side

NFAX0017S01

The joint on the transaxle side cannot be disassembled.

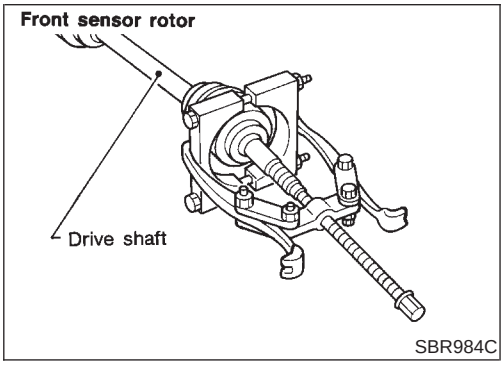

Wheel Side

NFAX0017S02

CAUTION:

The joint on the wheel side cannot be disassembled.

1. Before separating joint assembly, put matching marks on drive shaft and joint assembly.
2. Remove ABS sensor rotor.

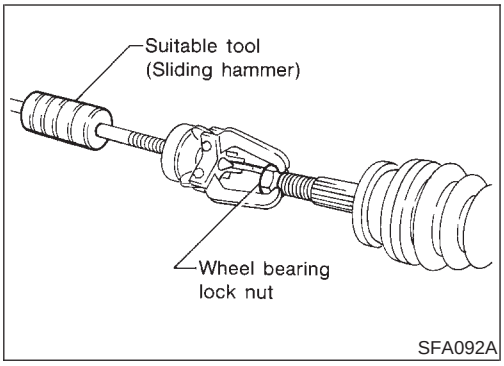

3. Separate joint assembly with a suitable tool.

Be careful not to damage threads on drive shaft.

4. Remove boot bands.
5. Draw out boot.

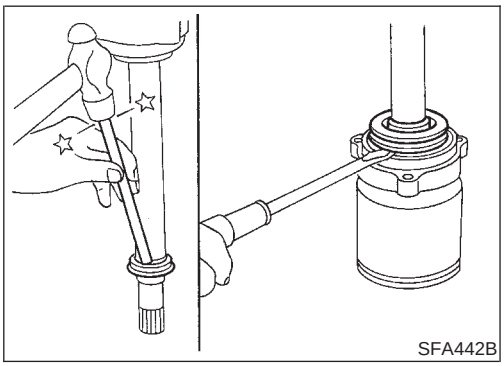

Support Bearing

NFAX0017S03

1. Remove dust shield.
2. Remove support bearing dust shield.

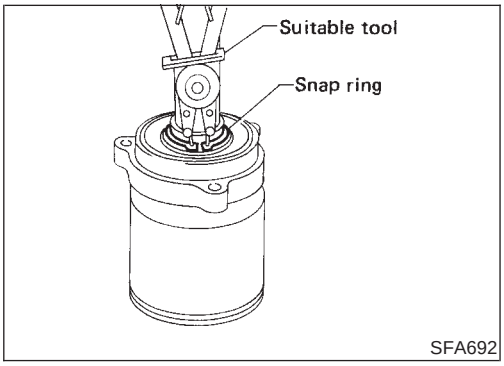

3. Remove snap ring.

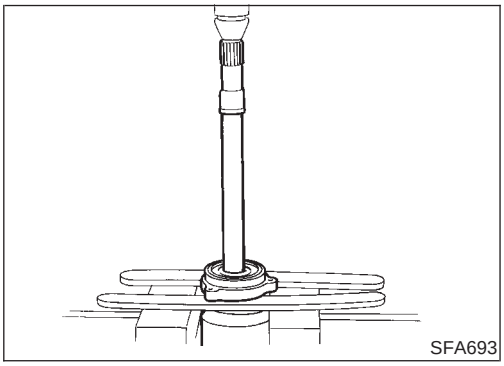

4. Press support bearing assembly off of drive shaft.
5. Remove support bearing dust shield.
6. Remove snap ring.

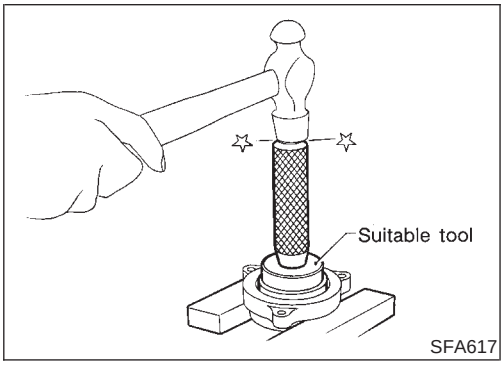

7. Separate support bearing from support bearing retainer.

INSPECTION

NFAX0018

Thoroughly clean all parts in cleaning solvent, and dry with compressed air. Check parts for evidence of deformation or other damage.

Drive Shaft

NFAX0018S01

Replace drive shaft if it is twisted or cracked.

Boot

NFAX0018S02

Check boot for fatigue, cracks or wear. Replace boot with new boot bands.

Joint Assembly (Transaxle side)

NFAX0018S03

- Check serration for deformation. Replace if necessary.
- Check slide joint housing for any damage. Replace if necessary.

Joint Assembly (Wheel side)

NFAX0018S04

Replace joint assembly if it is deformed or damaged.

Support Bearing

NFAX0018S05

Make sure wheel bearing rolls freely and is free from noise, cracks, pitting or wear.

Support Bearing Bracket

NFAX0018S06

Check support bearing bracket for cracks with a magnetic exploration or dyeing test.

ASSEMBLY

NFAX0019

- **After drive shaft has been assembled, ensure that it moves smoothly over its entire range without binding.**
- **Use NISSAN GENUINE GREASE or equivalent after every overhaul.**

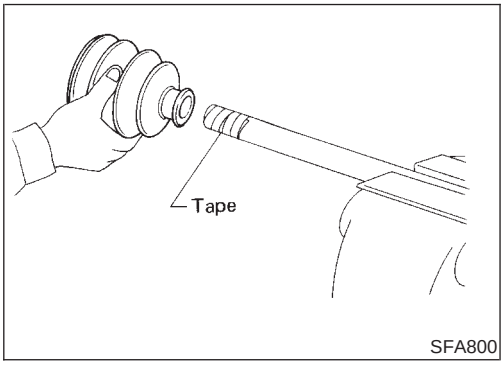

SFA800

Wheel Side

NFAX0019S01

1. Install boot and new small boot band on drive shaft.

Cover drive shaft serration with tape so as not to damage boot during installation.

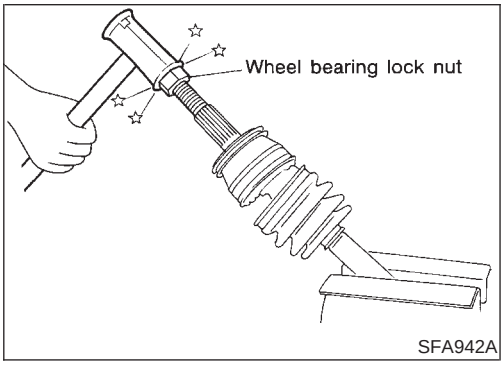

SFA942A

2. Set joint assembly onto drive shaft by lightly tapping it. Install joint assembly securely, ensuring marks which were made during disassembly are properly aligned.

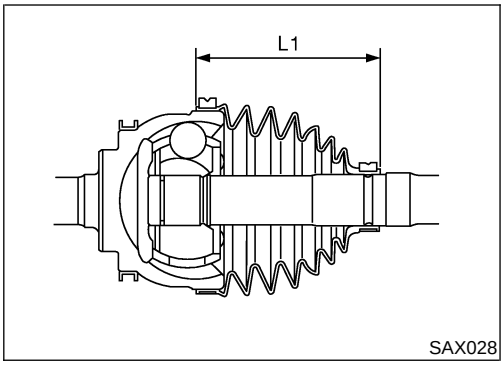

3. Pack drive shaft with specified amount of grease.
   Specified amount of grease:
   115 - 125 g (4.06 - 4.41 oz)
4. Make sure that boot is properly installed on the drive shaft groove.
   Set boot so that it does not swell and deform when its length is "L_1".
   Length "L_1":
   103 mm (4.06 in)

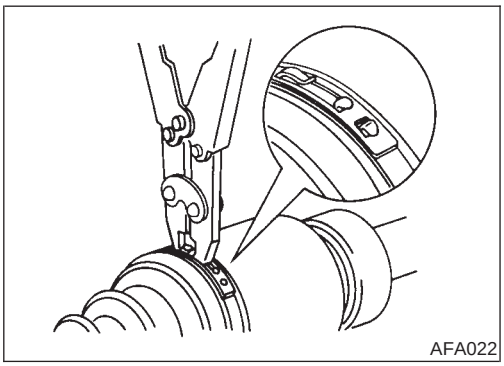

5. Lock new larger and smaller boot bands securely with a suitable tool.

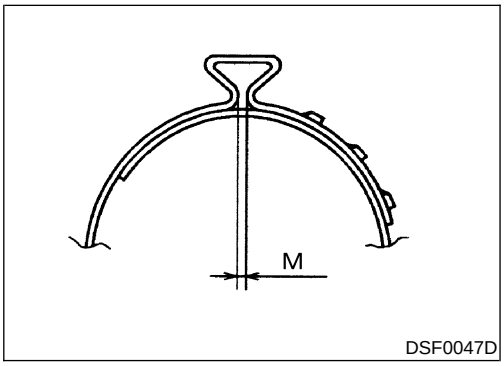

CAUTION:
Secure boot band so that dimension "M" shown at left satisfies the following:
Dimension "M":
Large diameter 2.5±0.5 mm
Small diameter 2.5±0.5 mm

- Check installation status of boot. Rotate joint to check that boot is securely in place. If not, reinstall a new boot band.

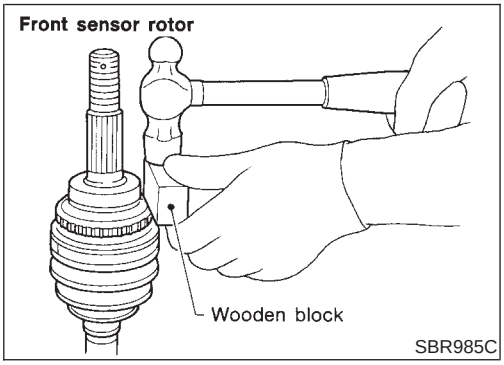

6. Install the sensor rotor. For front sensor rotor, use hammer and wooden block. For rear sensor rotor, use suitable drift and press.
- Always replace sensor rotor with new one.

Dynamic Damper

NFAX0019S02

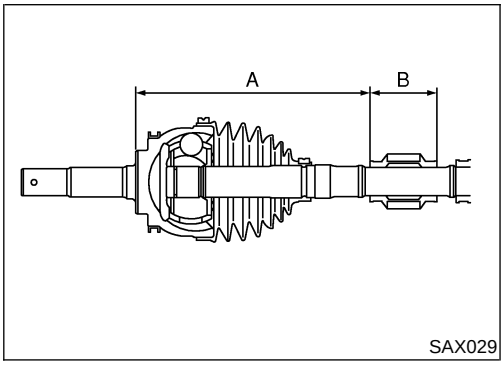

1. Use new damper bands when installing.
2. Install dynamic damper from stationary-joint side while holding it securely.
   Length:
   "A": 205 - 215 mm (8.07 - 8.46 in)
   "B": 50 mm (1.97 in) (Except M/T model with LSD)
   70 mm (2.76 in) (M/T model with LSD)

Transaxle Side

NFAX0019S03

The joint on the transaxle side cannot be disassembled.

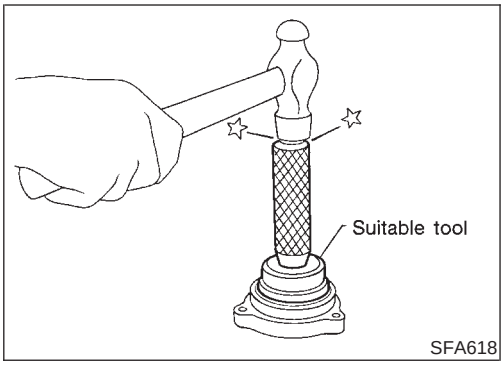

Support Bearing

NFAX0019S04

- Press bearing into retainer.
- Install snap ring.
- Install support bearing dust shield.

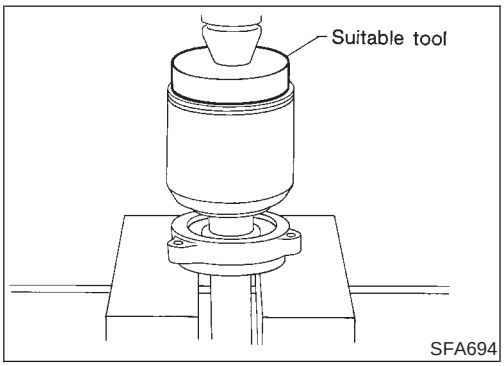

- Press drive shaft into bearing.

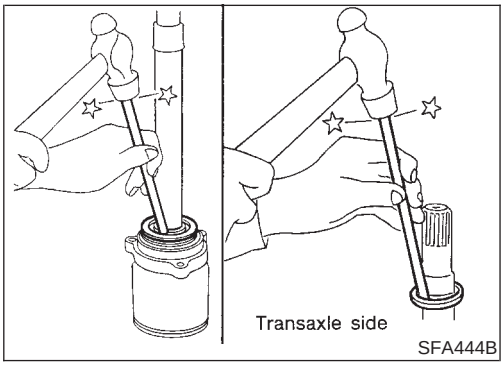

- Install snap ring.
- Install support bearing dust shield.
- Install dust shield.

Service Data and Specifications (SDS)

DRIVE SHAFT

NFAX0020

Applied model			All
Joint type	Transaxle side		SS86
	Wheel side		ZF100
	Quality		Nissan genuine grease or equivalent
Grease	Capacity g (oz)	Wheel side	115 - 125 (4.06 - 4.41)
Boot length mm (in)	Wheel side "L_1"		103 (4.06)

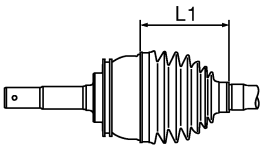

SAX030

WHEEL BEARING (FRONT)

NFAX0021

Wheel bearing axial end play limit mm (in)	Less than 0.05 (0.0020)
Wheel bearing lock nut tightening torque N·m (kg-m, ft-lb)	255 - 333 (26 - 34, 188 - 245)

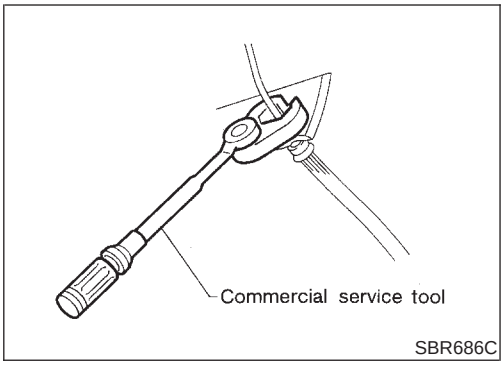

Precautions

PRECAUTIONS

NFAX0022

- **When installing each rubber part, final tightening must be carried out under unladen condition* with tires on ground. *: Fuel, radiator coolant and engine oil full. Spare tire, jack, hand tools and mats in designated positions.**
- **Use flare nut wrench when removing or installing brake tubes.**
- **After installing removed suspension parts, check wheel alignment.**
- **Do not jack up at the trailing arm and lateral link.**
- **Always torque brake lines when installing.**

Preparation

SPECIAL SERVICE TOOLS

NFAX0032

The actual shapes of Kent-Moore tools may differ from those of special service tools illustrated here.

Tool number (Kent-Moore No.) Tool name	Description
ST15310000 (—) Drift	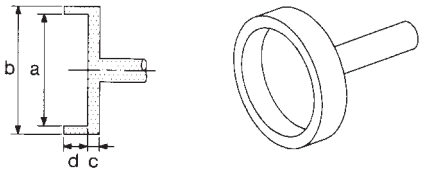 NT607 Install ABS sensor rotor **a: 84 mm (3.31 in) dia.** **b: 96 mm (3.78 in) dia.** **c: 8 mm (0.31 in)** **d: 20 mm (0.79 in)**

COMMERCIAL SERVICE TOOLS

NFAX0024

Tool name	Description
1 Flare nut crowfoot 2 Torque wrench	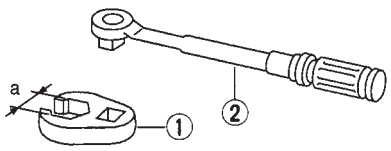 NT360 Removing and installing brake piping **a: 10 mm (0.39 in)**
Drift	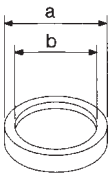 NT371 Install ABS sensor rotor **a: 75 mm (2.95 in) dia.** **b: 62 mm (2.44 in) dia.**

Noise, Vibration and Harshness (NVH) Troubleshooting

NFAX0025

Refer to “Noise, Vibration and Harshness (NVH) Troubleshooting”, “FRONT AXLE”, AX-3.

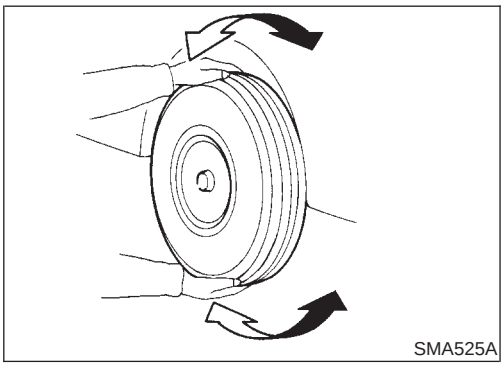

On-vehicle Service

REAR AXLE PARTS

NFAX0026

Check axle and suspension parts for excessive play, wear or damage.

- Shake each rear wheel to check for excessive play.

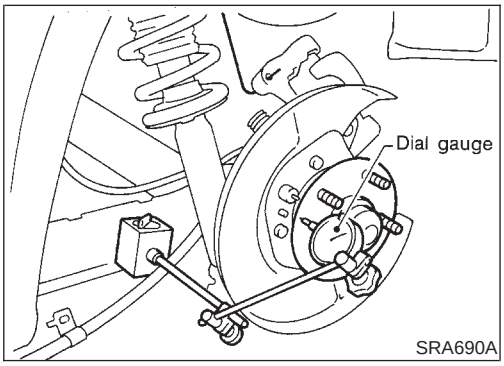

REAR WHEEL BEARING

NFAX0027

- Check axial end play.

  Axial end play:

  Less than 0.05 mm (0.0020 in)
- Check that wheel hub bearings operate smoothly.
- Check tightening torque of wheel bearing lock nut.

  : 187 - 254 N·m (19 - 26 kg-m, 138 - 188 ft-lb)
- Replace wheel bearing assembly if there is axial end play or wheel bearing does not turn smoothly. Refer to “Wheel Hub”, “REAR AXLE”, AX-19.

Wheel Hub

COMPONENTS

NFAX0028

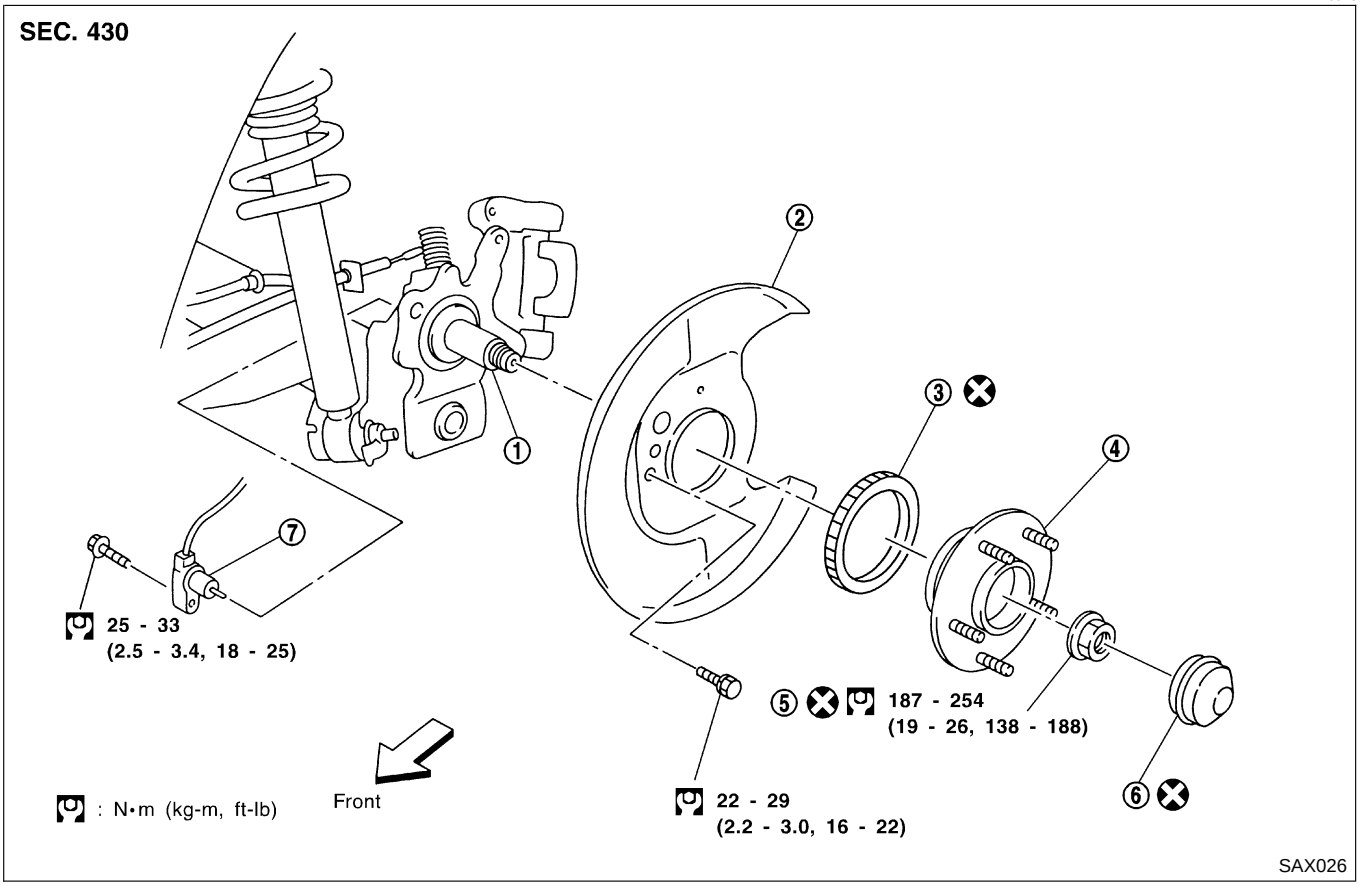

1. Spindle
2. Baffle plate
3. ABS sensor rotor
4. Wheel hub bearing
5. Wheel bearing lock nut
6. Hub cap
7. ABS sensor

REMOVAL

NFAX0029

CAUTION:

- **Before removing the rear wheel hub assembly, disconnect the ABS wheel sensor from the assembly. Then move it away from the hub assembly. Failure to do so may result in damage to the sensor wires and the sensor becoming inoperative.**
- **Wheel hub bearing does not require maintenance. If any of the following symptoms are noted, replace wheel hub bearing assembly.**

1) Growling noise is emitted from wheel hub bearing during operation.

2) Wheel hub bearing drags or turns roughly. This occurs when turning hub by hand after bearing lock nut is tightened to specified torque.

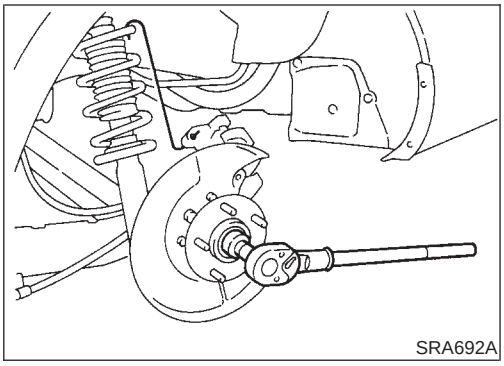

1. Remove brake caliper assembly.
2. Remove wheel bearing lock nut.
3. Remove brake rotor.
4. Remove wheel hub bearing from spindle.

Brake hose does not need to be disconnected from brake caliper.
Suspend caliper assembly with wire so as not to stretch brake hose.
Be careful not to depress brake pedal, or piston will pop out.
Make sure brake hose is not twisted.

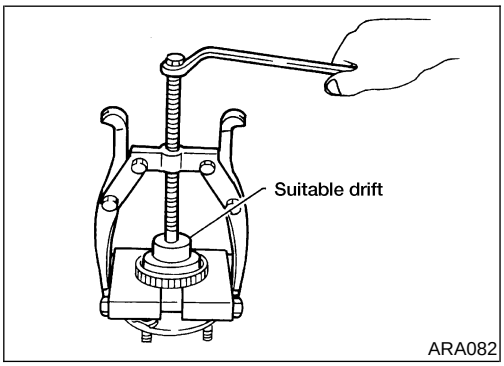

5. Remove the sensor rotor using suitable puller, drift and bea ring replacer.

INSTALLATION

NFAX0030

- With vehicles equipped with ABS, press-fit ABS sensor rotor into wheel hub bearing using a drift.
  Do not reuse ABS sensor rotor. When installing, replace it with a new one.

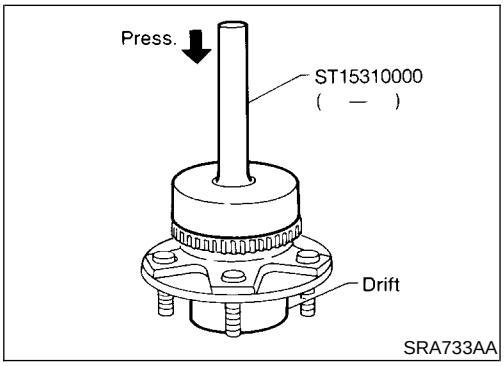

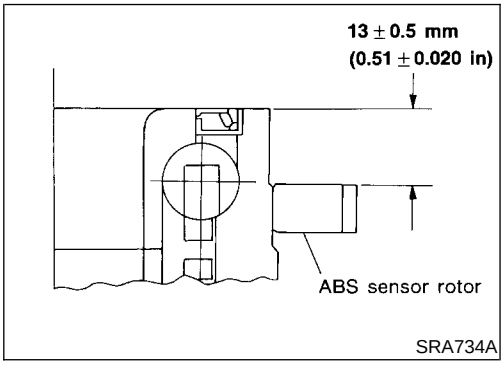

- Press-fit ABS sensor rotor as far as the location shown in figure at left.

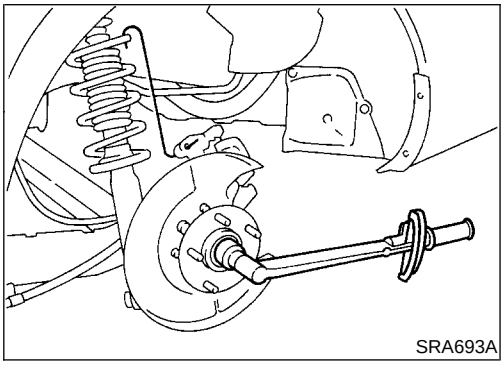

- Install wheel hub bearing.
- Tighten wheel bearing lock nut.
  Before tightening, apply oil to threaded portion of rear spindle.
  Do not reuse wheel bearing lock nut.
  : 187 - 254 N·m (19 - 26 kg-m, 138 - 188 ft-lb)
- Check that wheel bearings operate smoothly.

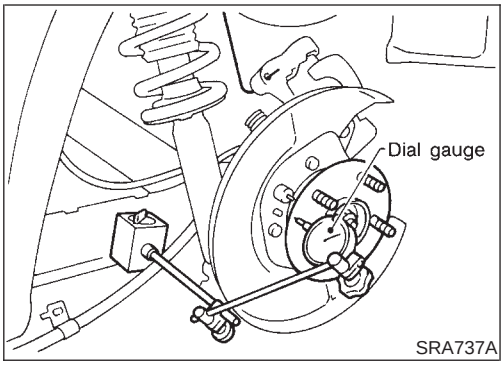

- Check wheel hub bearing axial end play.

  Axial end play:

  Less than 0.05 mm (0.0020 in)

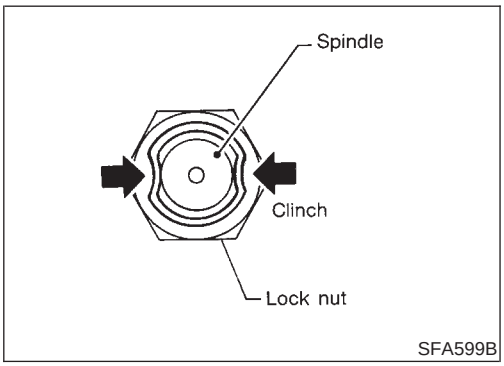

- Clinch two places of lock nut.

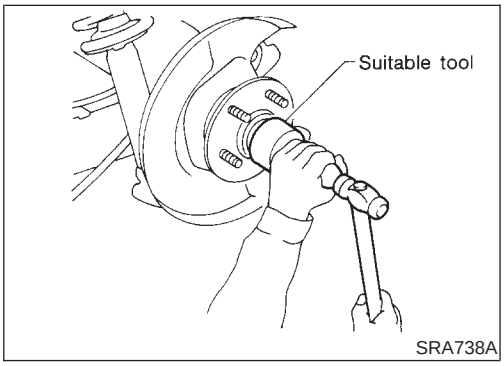

- Install hub cap using a suitable tool.
  Do not reuse hub cap. When installing, replace it with a new one.

Service Data and Specifications (SDS)

WHEEL BEARING (REAR)

=NFAX0031

Wheel bearing axial end play limit mm (in)	Less than 0.05 (0.0020)
Wheel bearing lock nut tightening torque N·m (kg-m, ft-lb)	187 - 254 (19 - 26, 138 - 188)