MANUAL TRANSAXLE

SECTION MT

GI
MA
EM
LC
EC
FE
CL
MT
AT
AX
SU
BR
ST
RS
BT
HA
SC
EL
IDX

CONTENTS

CONTENTS (Cont'd)

Special Service Tools

NFMT0001

The actual shapes of Kent-Moore tools may differ from those of special service tools illustrated here.

Tool number (Kent-Moore No.) Tool name	Description	
KV381054S0 (J34286) Puller	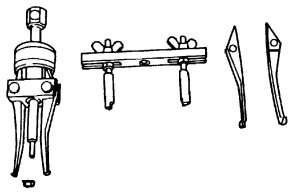 ZZA0601D	Side bearing outer race removal Mainshaft front bearing removal
ST35321000 (—) Drift	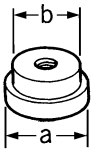 ZZA1000D	Input shaft oil seal installation Reverse main gear installation 1st bushing installation 1st-2nd synchronizer hub installation 2nd bushing installation 3rd main gear installation **a: 49 mm (1.93 in) dia.** **b: 41 mm (1.61 in) dia.**
ST30720000 (J25405) Drift	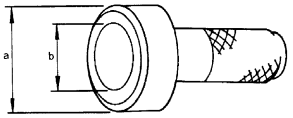 ZZA0811D	Differential oil seal installation Differential side bearing outer race installation Mainshaft rear bearing installation Differential side bearing installation **a: 77 mm (3.03 in) dia.** **b: 55.5 mm (2.185 in) dia.**
ST33200000 (J26082) Drift	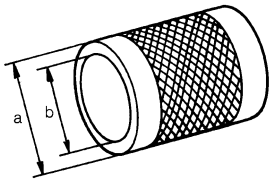 ZZA1002D	Mainshaft front bearing installation 6th bushing installation 4th main gear installation 5th main gear installation 6th main gear installation **a: 60 mm (2.36 in) dia.** **b: 44.5 mm (1.752 in) dia.**
ST33061000 (J8107-2) Drift	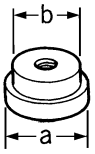 ZZA1000D	Bore plug installation Differential side bearing removal **a: 38 mm (1.50 in) dia.** **b: 28.5 mm (1.122 in) dia.**

Special Service Tools (Cont'd)

Tool number (Kent-Moore No.) Tool name	Description	
ST33052000 (—) Drift	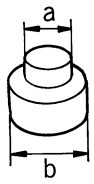 ZZA1023D	Welch plug installation Input shaft rear bearing removal 5th bushing, thrust washer, 4th input gear, 4th gear bushing, 3rd-4th synchronizer hub and 3rd input gear removal Input shaft front bearing installation 6th input gear and 6th bushing removal Mainshaft rear bearing removal 4th main gear and 5th main gear removal 6th main gear removal **a: 22 mm (0.87 in) dia.** **b: 28 mm (1.10 in) dia.**
KV40105020 (—) Drift	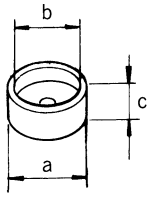 ZZA1133D	5th input gear and synchronizer hub removal 3rd main gear, 2nd main gear, 2nd bushing, 1st-2nd synchronizer hub, 1st main gear, reverse main gear and 1st bushing removal **a: 39.7 mm (1.563 in) dia.** **b: 35 mm (1.38 in) dia.** **c: 15 mm (0.59 in)**
KV40105710 (—) Press stand	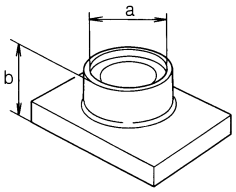 ZZA1058D	3rd-4th synchronizer hub installation 4th bushing installation 5th bushing installation 5th-6th synchronizer hub installation 2nd bushing installation 3rd main gear installation **a: 46 mm (1.81 in) dia.** **b: 41 mm (1.61 in)**
ST38220000 (—) Press stand	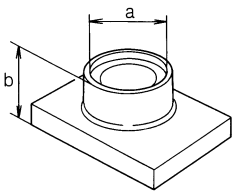 ZZA1058D	Reverse main gear installation 1st bushing installation 1st-2nd synchronizer hub installation **a: 63 mm (2.48 in) dia.** **b: 65 mm (2.56 in)**
ST30032000 (J26010-01) Drift	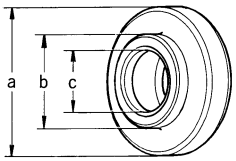 ZZA0978D	Input shaft front bearing installation **a: 80 mm (3.15 in) dia.** **b: 38 mm (1.50 in) dia.** **c: 31 mm (1.22 in) dia.**
ST30901000 (J26010-01) Drift	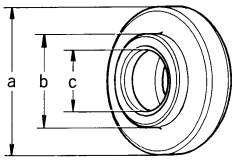 ZZA0978D	Input shaft rear bearing installation 4th main gear installation 5th main gear installation 6th main gear installation Mainshaft rear bearing installation **a: 79 mm (3.11 in) dia.** **b: 45 mm (1.77 in) dia.** **c: 35.2 mm (1.386 in) dia.**

Tool number (Kent-Moore No.) Tool name	Description
ST30031000 (J22912-01) Puller	Measuring wear of 1st and 2nd baulk ring 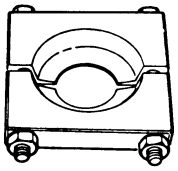 ZZA0537D
KV40101630 (J35870) Drift	Reverse main gear installation **a: 68 mm (2.68 in) dia.** **b: 60 mm (2.36 in) dia.** 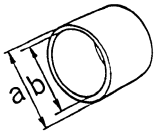 ZZA1003D
KV38102510 (—) Drift	1st bushing installation 1st-2nd synchronizer hub installation Differential side bearing installation **a: 71 mm (2.80 in) dia.** **b: 65 mm (2.56 in) dia.** 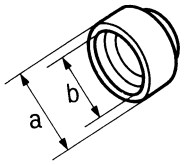 ZZA0838D
(J39713) Preload adapter	Checking differential side gear end play (RS6F51A) 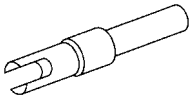 NT087

Commercial Service Tools

NFMT0002

Tool name	Description
Puller	Each bearing gear and bushing removal 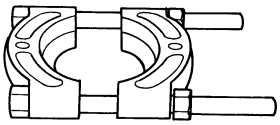 ZZB0823D
Puller	Each bearing gear and bushing removal 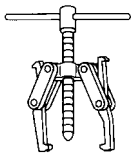 NT077

Commercial Service Tools (Cont'd)

Tool name	Description	
Pin punch	 ZZA0815D	Each retaining pin removal and installation **Tip diameter: 4.5 mm (0.177 in) dia.**
Power tool	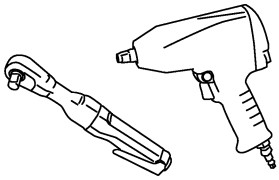 PBIC0190E	Loosening bolts and nuts

NVH Troubleshooting Chart

NFMT0003S01

Use the chart below to help you find the cause of the symptom. The numbers indicate the order of the inspection. If necessary, repair or replace these parts.

MANUAL TRANSAXLE

NFMT0003S0101

Reference page			Refer to MA-20, "Checking M/T Oil".		MT-16	MT-16	MT-16	MT-12	MT-19	MT-19	MT-17	MT-17	MT-17	MT-17
SUSPECTED PARTS (Possible cause)		(Oil level is low.)	(Wrong oil.)	(Oil level is high.)	GASKET (Damaged)	OIL SEAL (Worn or damaged)	O-RING (Worn or damaged)	SHIFT CONTROL LINKAGE (Worn)	CHECK PLUG RETURN SPRING AND CHECK BALL (Worn or damaged)	SHIFT FORK (Worn)	GEAR (Worn or damaged)	BEARING (Worn or damaged)	BAULK RING (Worn or damaged)	INSERT SPRING (Damaged)
Symptoms	Noise	1	2								3	3		
	Oil leakage		3	1	2	2	2							
	Hard to shift or will not shift		1	1				2					3	3
	Jumps out of gear							1	2	3	3			

Cross-sectional View

NFMT0004S01

RS6F51A

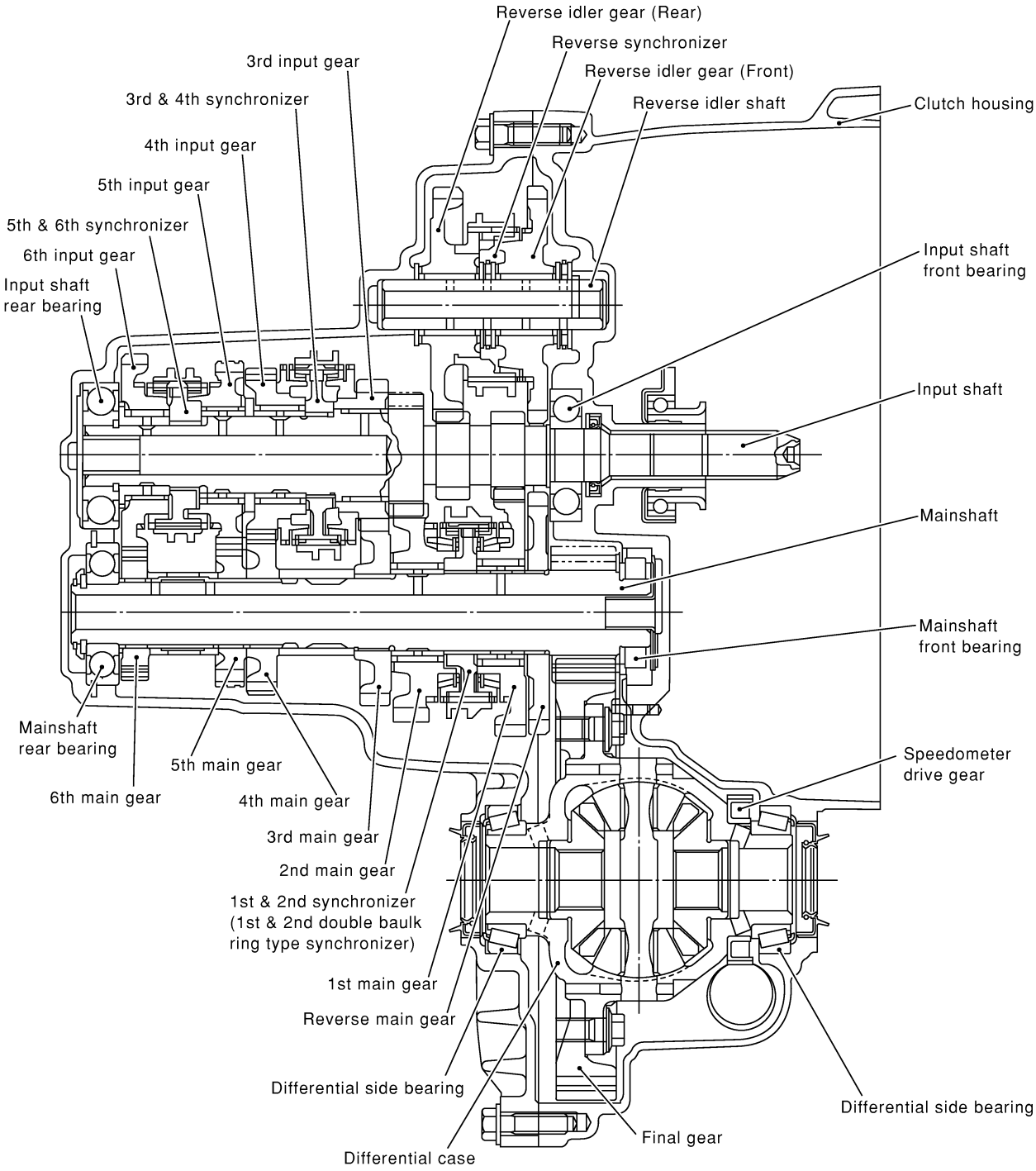

SMT115E

RS6F51H

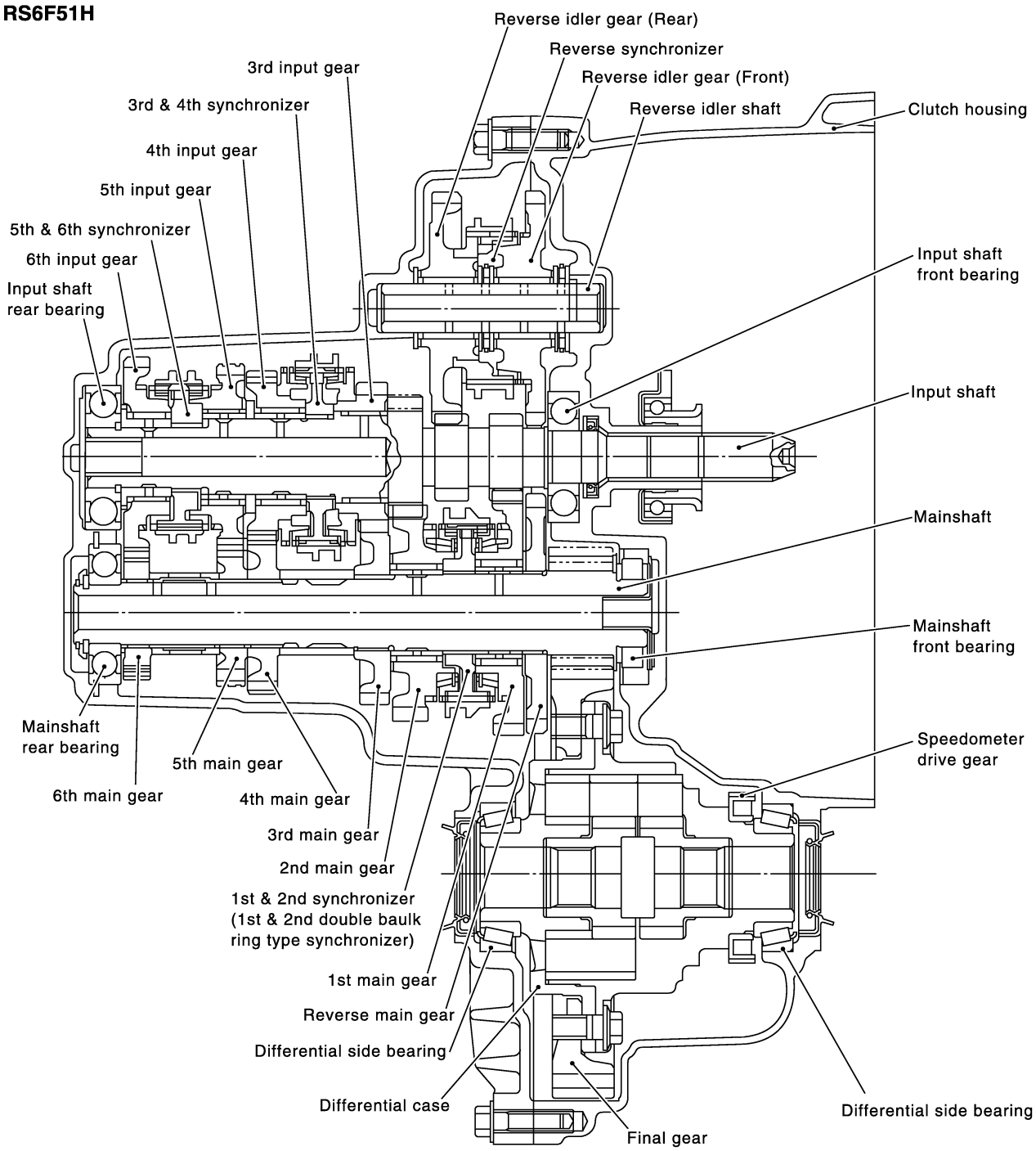

SCIA0999E

Cross-sectional View (Cont'd)

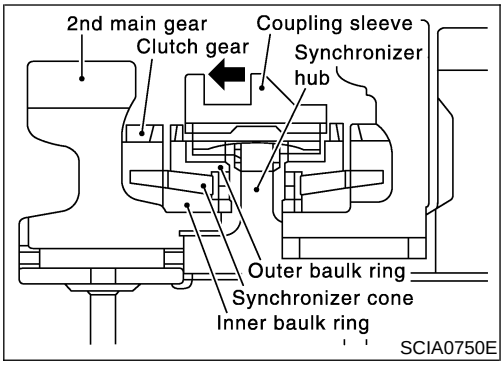

DOUBLE-CONE SYNCHRONIZER

NFMT0004S0101

Double-cone synchronizer is adopted for 1st and 2nd gears to reduce operating force of the shift lever.

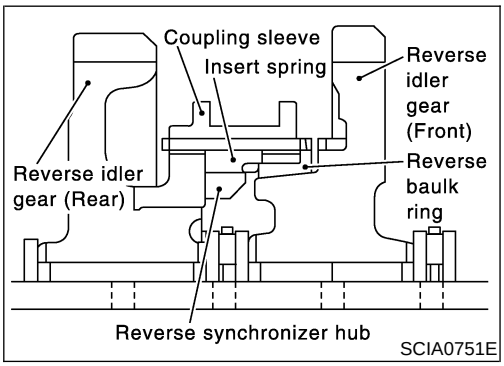

REVERSE GEAR NOISE PREVENTION FUNCTION (SYNCHRONIZING METHOD)

NFMT0004S0102

The gear can be matched smoothly in a structure by setting synchronizer hub, coupling sleeve, baulk ring and insert spring to reverse gear, and letting gear be synchronized.

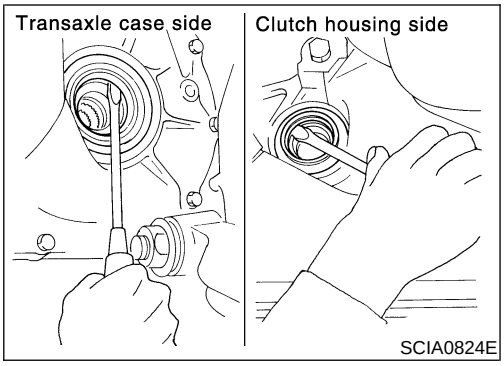

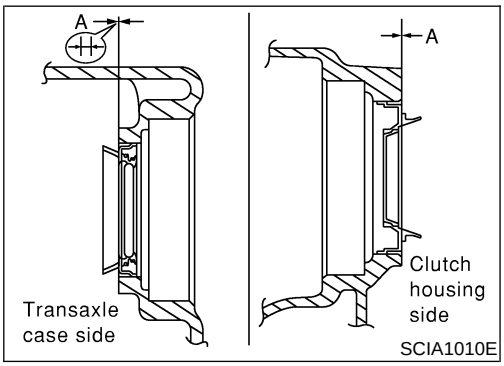

Replacing Oil Seal

NFMT0005

DIFFERENTIAL OIL SEAL

NFMT0005S01

1. Drain gear oil from transaxle.
2. Remove driveshaft. Refer to AX-10, “Drive Shaft”.
3. Remove differential oil seals.

CAUTION:

Be careful not to damage the case surface when removing the oil seal.

4. Using a drift (special service tool), drive the oil seal straight until it protrudes from the case end equal to dimension A shown in the figure.

   Dimension “A”:

   Within 0.5 mm (0.020 in) of flush with the case.

   Drift to be used:

   ST30720000 (J25405)

CAUTION:

- **When installing oil seals, apply multi-purpose grease to oil seal lips.**
- **Oil seals are not reusable. Never reuse them.**

5. Install all parts in reverse order of removal and check oil level after installation.

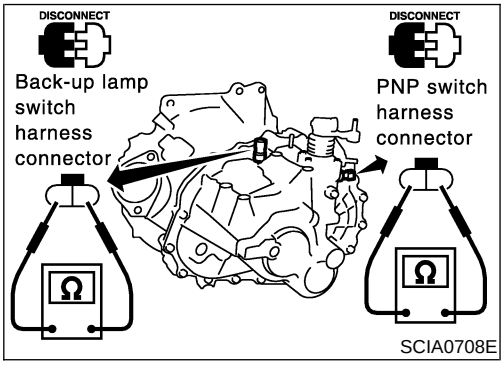

Position Switch Check

NFMT0006

BACK-UP LAMP SWITCH

NFMT0006S01

- Check continuity.

Gear position	Continuity
Reverse	Yes
Except reverse	No

PARK/NEUTRAL POSITION SWITCH

NFMT0006S02

- Check continuity.

Gear position	Continuity
Neutral	Yes
Except neutral	No

Control Device and Cable

NFMT0007

Refer to the figure for removal and installation procedure.

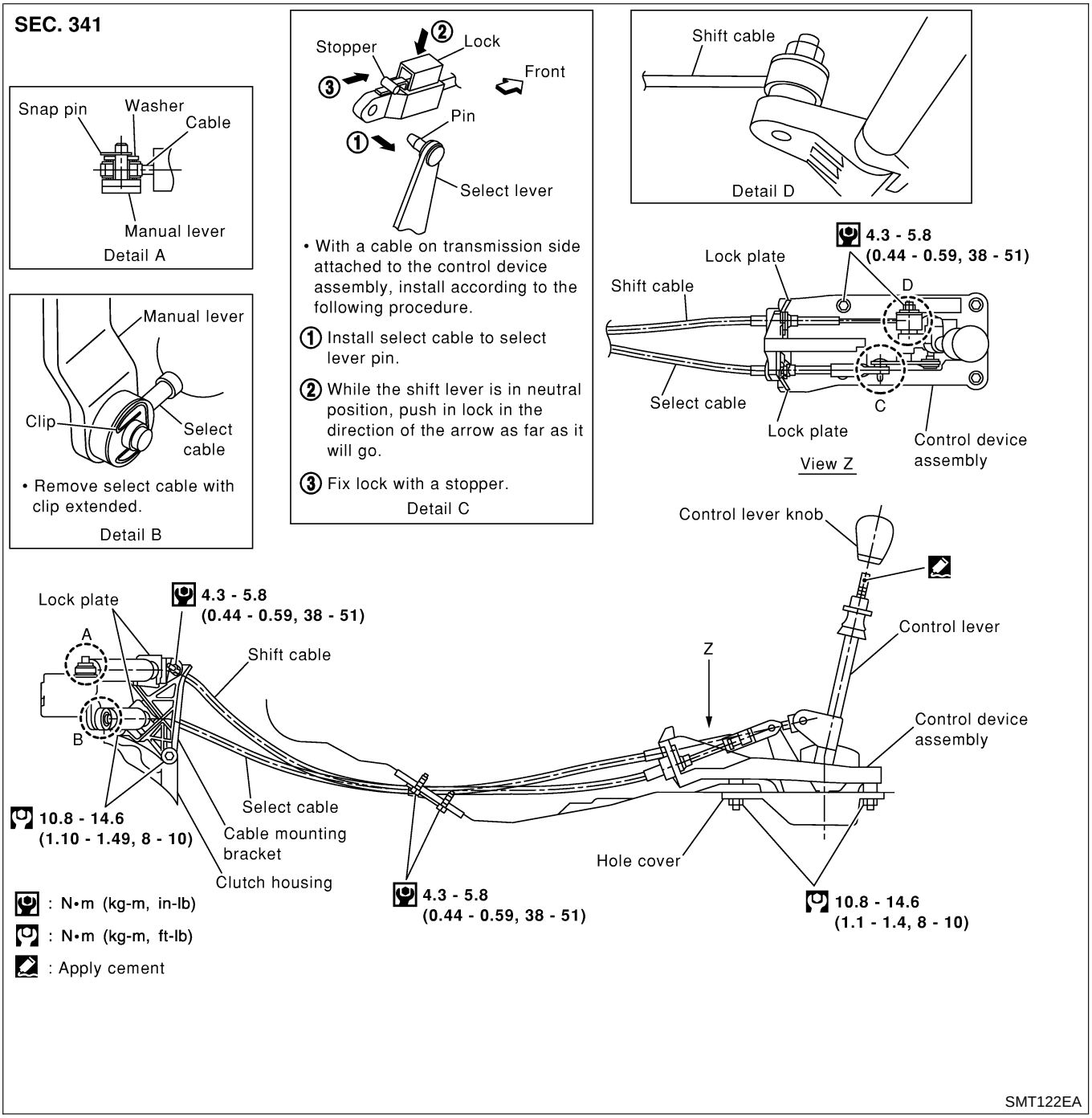

CAUTION:

- **Keep in mind that the select side lock plate for securing the control cable is different from the one on the shift side.**
- **After assembly, make sure selector lever automatically returns to Neutral when it is moved to 1st, 2nd, or Reverse.**

Air Breather Hose

NFMT0030

Refer to the figure for air breather hose removal and installation information.

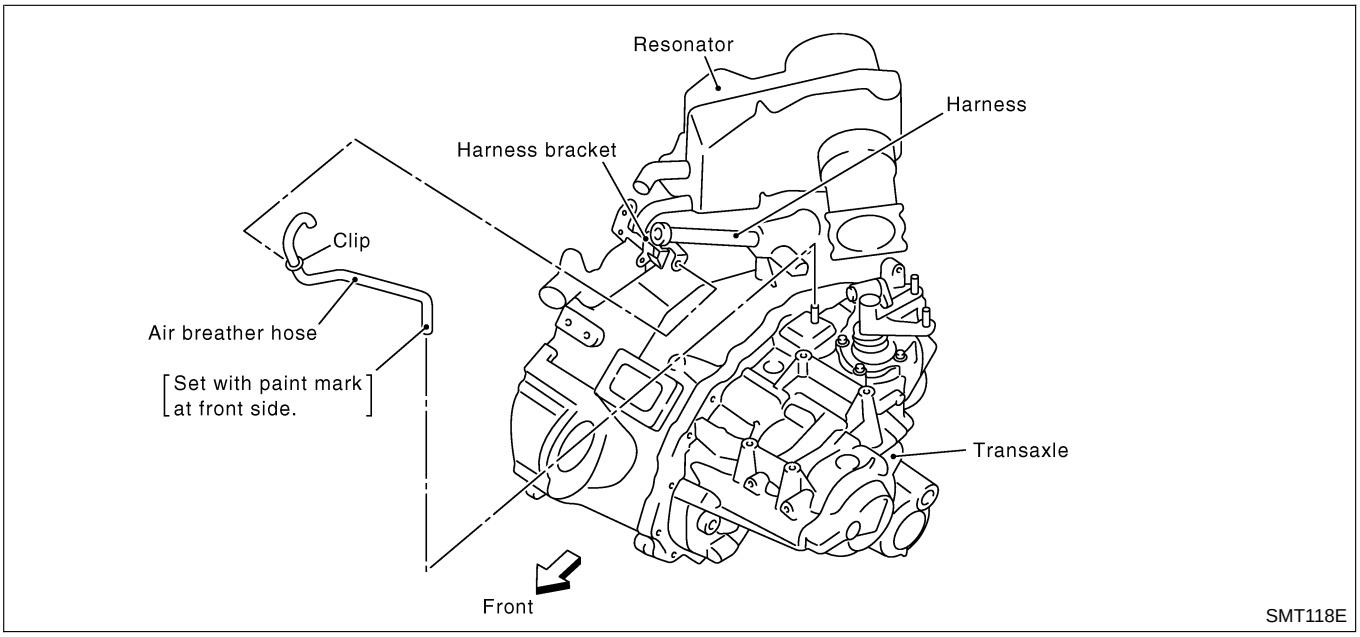

CAUTION:

- **Make sure there are no pinched or restricted areas on the air breather hose caused by bending or winding when installing it.**
- **Be sure to insert hose into the transaxle tube until overlap area reaches the spool.**

Removal

NFMT0008S01

CAUTION:
Remove the crankshaft position sensor (POS) from transaxle assembly before separating transaxle from engine.
Be careful not to damage sensor edge.

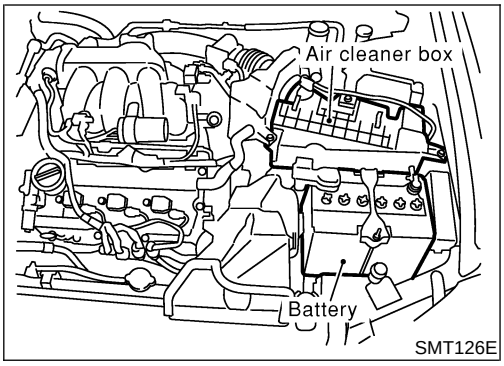

SMT126E

1. Remove battery and its bracket.
2. Remove air duct and air cleaner box with mass air flow sensor.
3. Remove air breather hose.

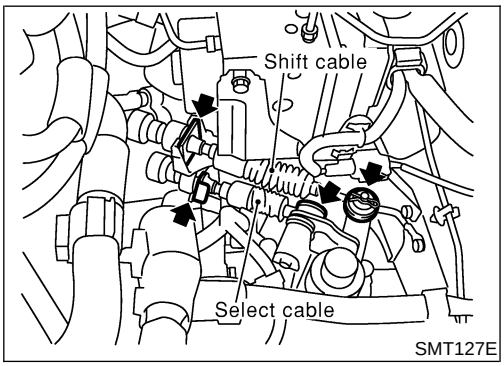

SMT127E

4. Disconnect control cable from transaxle.
5. Remove control cable mounting bracket.

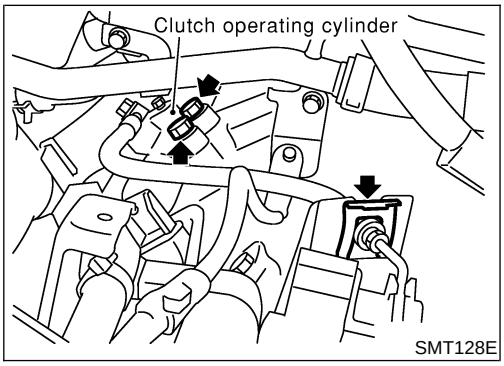

SMT128E

6. Remove clutch operating cylinder from transaxle.
7. Disconnect PNP switch, back-up lamp switch and ground harness connectors.

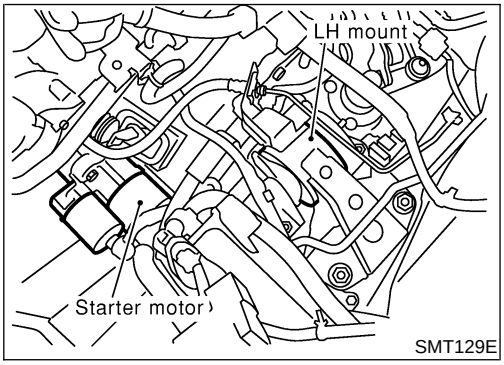

SMT129E

8. Remove starter motor from transaxle.
9. Remove crankshaft position sensor (POS) from transaxle front side.

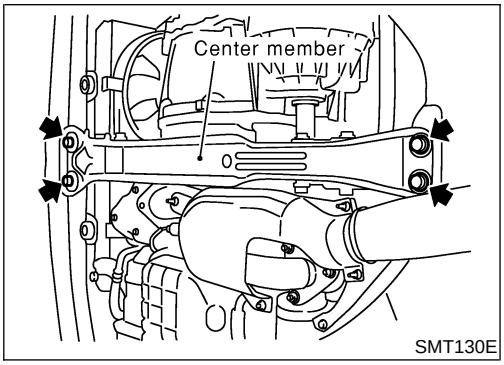

SMT130E

10. Drain gear oil from transaxle.
11. Draw out drive shafts from transaxle. Refer to AX-10, “Drive Shaft”.
12. Support engine of transaxle by placing a jack under oil pan.

CAUTION:
Do not place jack under oil pan drain plug.

13. Remove center member.

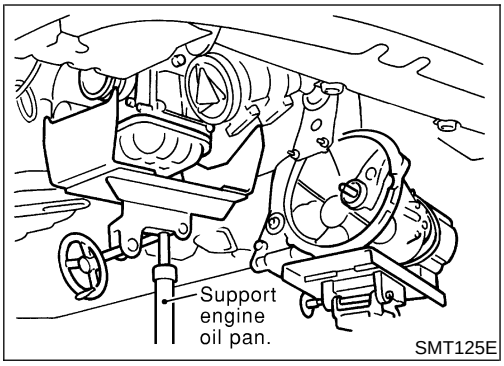

14. Remove LH mount.
15. Remove bolts securing transaxle.
16. Lower transaxle while supporting it with a jack.

Installation

NFMT0008S02

- Tighten LH mount and center member bolts. Refer to EM-69, "ENGINE ASSEMBLY".
- Tighten clutch operating cylinder bolts. Refer to CL-10, "OPERATING CYLINDER".
- Install drive shafts. Refer to AX-11, "Drive Shaft".
- Tighten all transaxle bolts and any part removed.

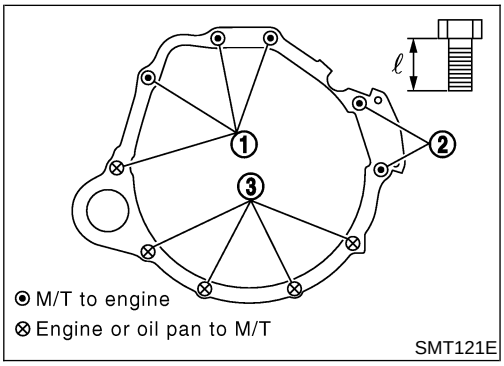

Bolt No.	Tightening torque N·m (kg-m, ft-lb)	"ℓ" mm (in)
1	69.6 - 79.4 (7.1 - 8.0, 52 - 58)	52 (2.05)
2	69.6 - 79.4 (7.1 - 8.0, 52 - 58)	113 (4.45)
3	36 - 47 (3.7 - 4.7, 27 - 34)	40 (1.57)

Case and Housing Components

NFMT0009S02

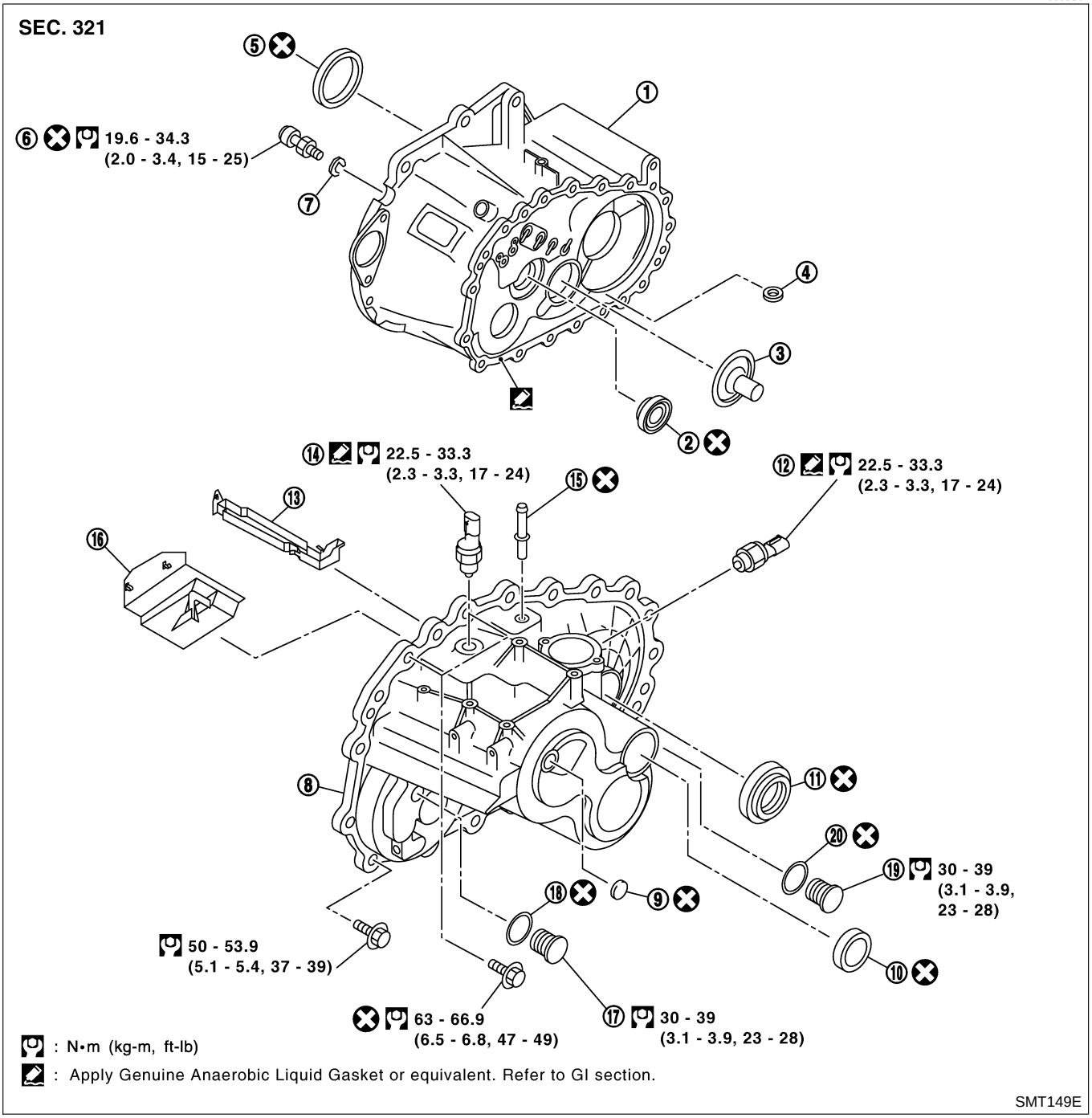

1. Clutch housing
2. Input shaft oil seal
3. Oil channel
4. Magnet
5. Differential oil seal
6. Ball pin
7. Washer
8. Transaxle case
9. Welch plug
10. Bore plug
11. Differential oil seal
12. Park/Neutral position switch
13. Oil gutter
14. Back-up lamp switch
15. Air breather tube
16. Baffle plate
17. Filler plug
18. Gasket
19. Drain plug
20. Gasket

Gear Components

NFMT0009S03

SEC. 322

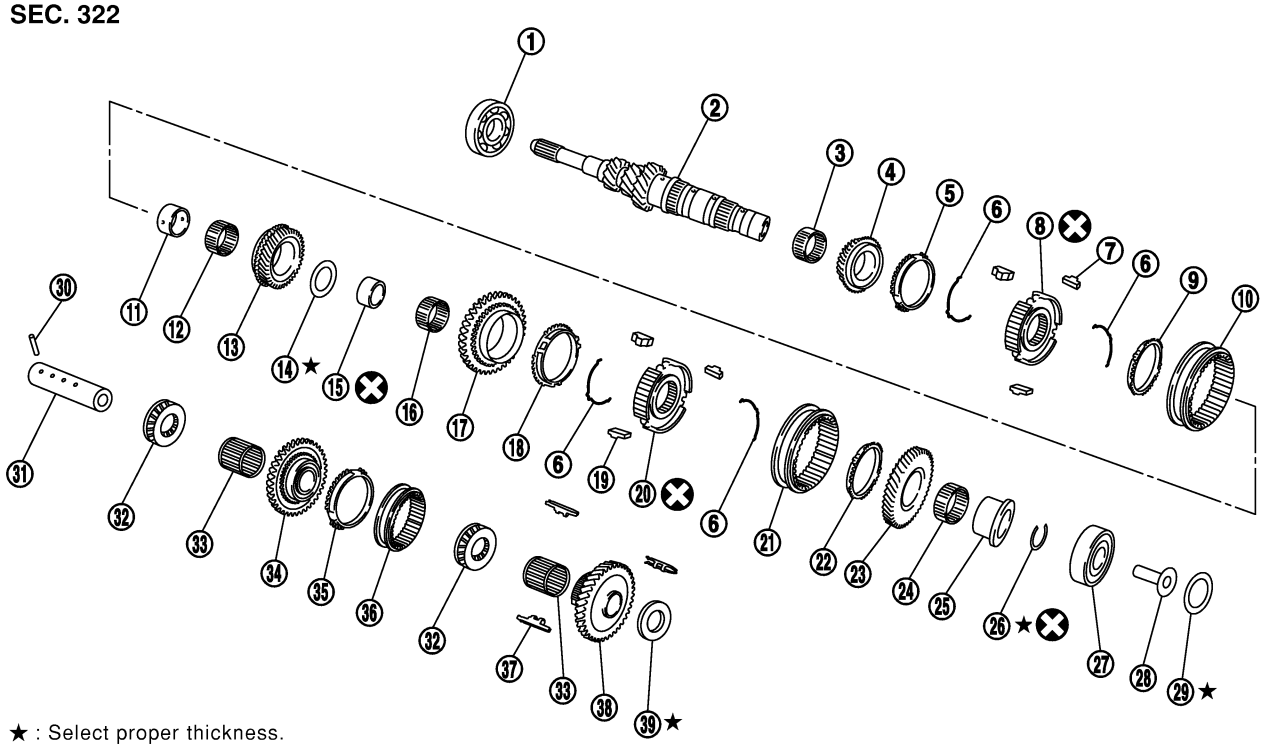

★ : Select proper thickness.

NOTE :

- Apply gear oil to gears, shafts, synchronizers and bearings when assembling.
- Replace ⑧ and ⑩, ⑳ and ㉑ as a set.

SCIA0956E

1. Input shaft front bearing
2. Input shaft
3. Needle bearing
4. 3rd input gear
5. 3rd baulk ring
6. Spread spring
7. 3rd & 4th shifting insert
8. 3rd & 4th synchronizer hub
9. 4th baulk ring
10. 3rd & 4th coupling sleeve
11. Bushing
12. Needle bearing
13. 4th input gear
14. Thrust washer
15. Bushing
16. Needle bearing
17. 5th input gear
18. 5th baulk ring
19. 5th & 6th shifting insert
20. 5th & 6th synchronizer hub
21. 5th & 6th coupling sleeve
22. 6th baulk ring
23. 6th input gear
24. Needle bearing
25. Bushing
26. Snap ring
27. Input shaft rear bearing
28. Oil channel
29. Input shaft rear bearing adjusting shim
30. Retaining pin
31. Reverse idler shaft
32. Thrust bearing
33. Needle bearing
34. Reverse idler gear (Front)
35. Reverse baulk ring
36. Reverse coupling sleeve
37. Insert spring
38. Reverse idler gear (Rear)
39. Reverse idler gear adjusting shim

Gear Components (Cont'd)

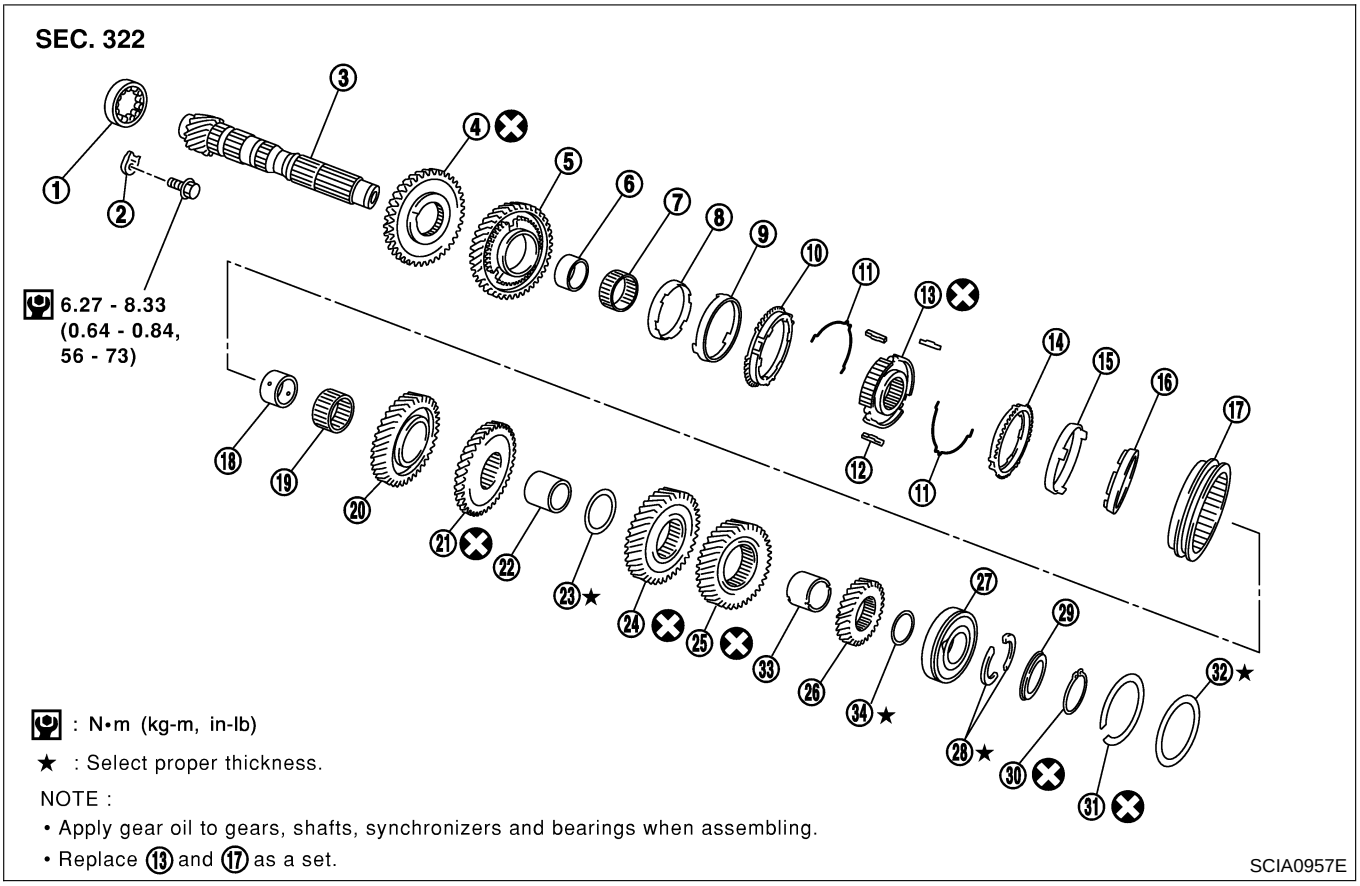

1. Mainshaft front bearing
2. Mainshaft bearing retainer
3. Mainshaft
4. Reverse main gear
5. 1st main gear
6. Bushing
7. Needle bearing
8. 1st inner baulk ring
9. 1st gear synchronizer cone
10. 1st outer baulk ring
11. Spread spring
12. 1st & 2nd shifting insert
13. 1st & 2nd synchronizer hub
14. 2nd outer baulk ring
15. 2nd gear synchronizer cone
16. 2nd inner baulk ring
17. 1st & 2nd coupling sleeve
18. Bushing
19. Needle bearing
20. 2nd main gear
21. 3rd main gear
22. 3rd & 4th mainshaft spacer
23. 4th main adjusting shim
24. 4th main gear
25. 5th main gear
26. 6th main gear
27. Mainshaft rear bearing
28. Mainshaft C ring
29. C ring holder
30. Snap ring
31. Snap ring
32. Mainshaft rear bearing adjusting shim
33. 5th & 6th mainshaft spacer
34. 6th main adjusting shim

Shift Control Components

NFMT0009S04

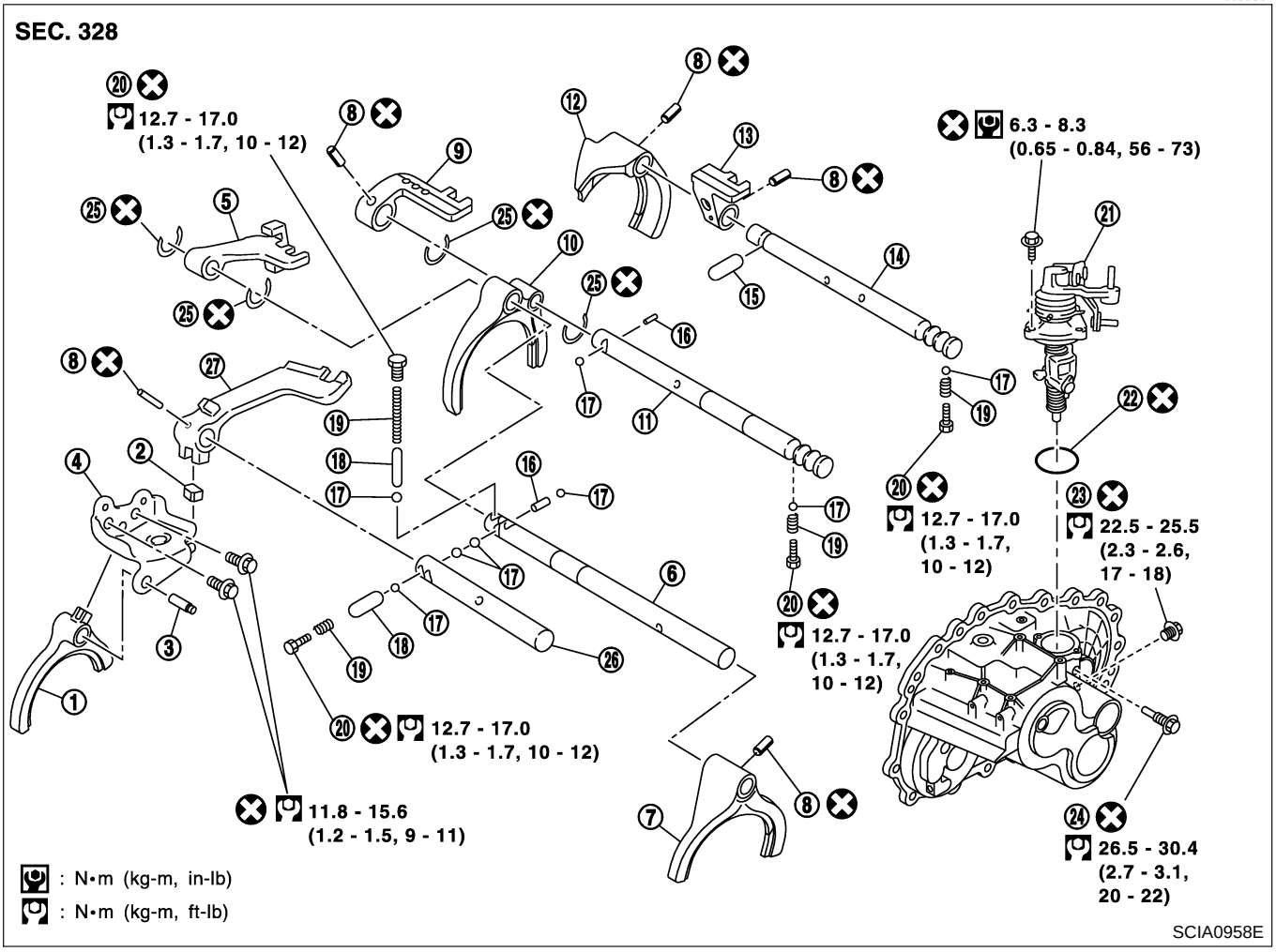

1. Reverse shift fork
2. Shifter cap
3. Reverse fork rod
4. Reverse lever assembly
5. 5th & 6th bracket
6. 5th & 6th fork rod
7. 5th & 6th shift fork
8. Retaining pin
9. 3rd & 4th bracket
10. 3rd & 4th shift fork
11. 3rd & 4th fork rod
12. 1st & 2nd shift fork
13. 1st & 2nd bracket
14. 1st & 2nd fork rod
15. Shift check sleeve
16. Inter lock pin
17. Check ball
18. Shift check sleeve
19. Check spring
20. Check plug
21. Control assembly
22. O ring
23. Shift check
24. Stopper bolt
25. Stopper ring
26. Reverse bracket fork rod
27. Reverse bracket

Final Drive Components

NFMT0009S05

—RS6F51A—

NFMT0009S0501

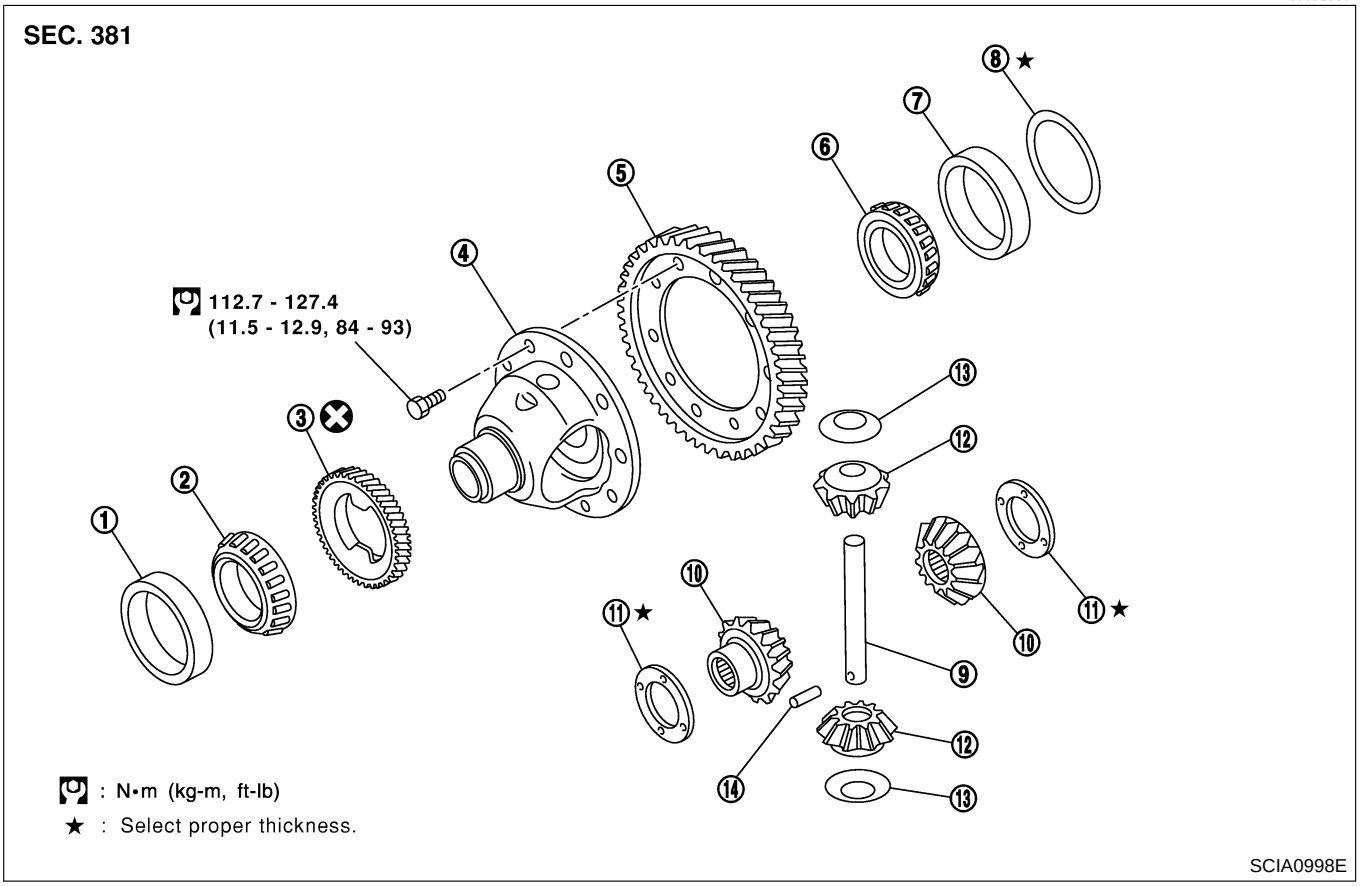

1. Differential side bearing outer race
2. Differential side bearing
3. Speedometer drive gear
4. Differential case
5. Final gear
6. Differential side bearing
7. Differential side bearing outer race
8. Differential side bearing adjusting shim
9. Pinion mate shaft
10. Side gear
11. Side gear thrust washer
12. Pinion mate gear
13. Pinion mate gear washer
14. Retaining pin

—RS6F51H—

NFMT0009S0502

SEC. 381

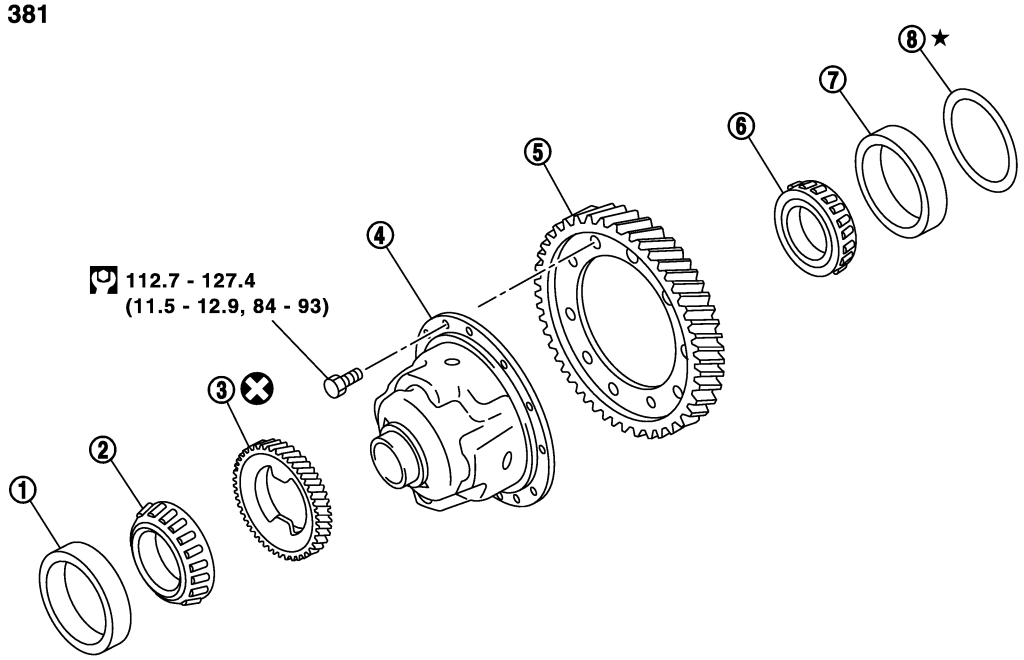

: N•m (kg-m, ft-lb)
★ : Select proper thickness.

SCIA1000E

1. Differential side bearing outer race
2. Differential side bearing
3. Speedometer drive gear
4. Differential case
5. Final gear
6. Differential side bearing
7. Differential side bearing outer race
8. Differential side bearing adjusting shim

DISASSEMBLY

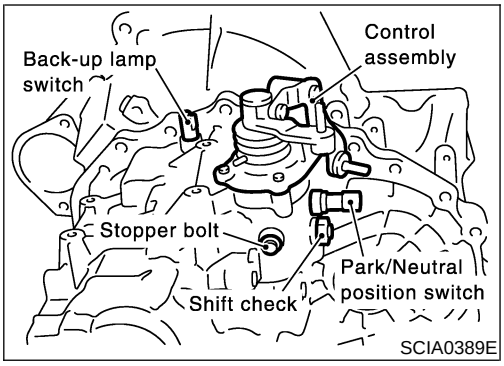

1. Remove drain plug and filler plug.
2. Remove park/neutral position switch and back-up lamp switch.
3. After removing shift check and stopper bolt, remove control assembly.

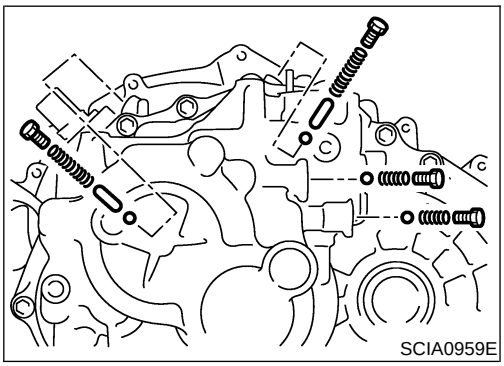

4. Remove check plugs (4 pieces), check springs (4 pieces), check balls (4 pieces) and shift check sleeve (2 pieces).

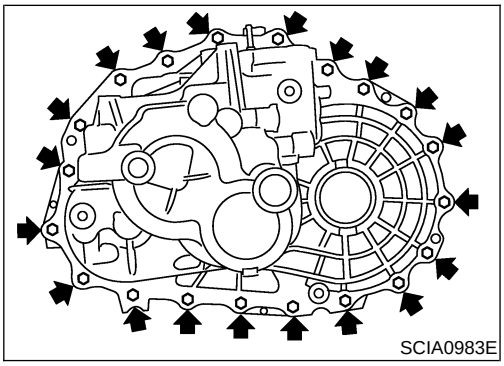

5. Remove transaxle case fixing bolts.
6. Remove bore plug.

CAUTION:

Be careful not to damage transaxle case.

7. While spreading the snap ring of mainshaft rear bearing located at bore plug hole, remove transaxle case.
8. Remove oil gutter, baffle plate.
9. Remove snap ring, mainshaft rear bearing adjusting shim and input shaft rear bearing adjusting shim from transaxle case.

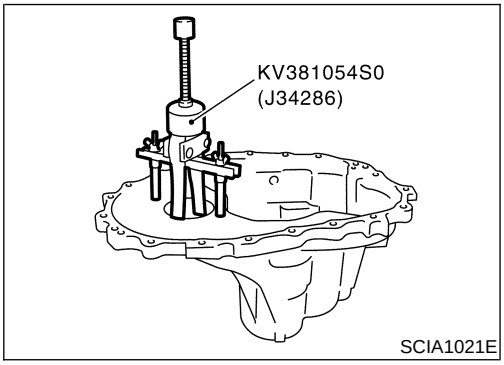

10. Remove differential side bearing outer race (transaxle case side) and then adjusting shim.

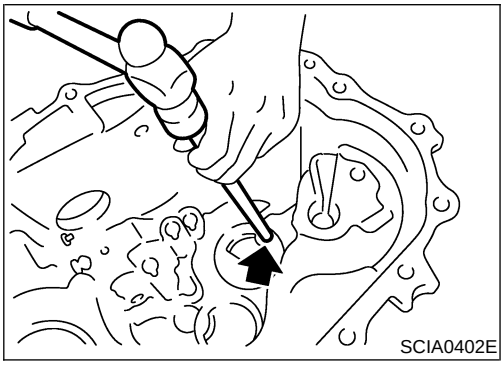

11. Remove welch plug.

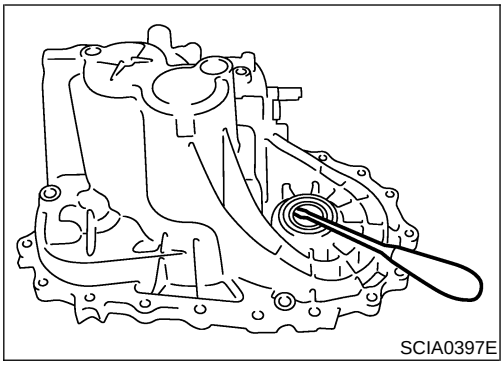
SCIA0397E

12. Remove differential oil seal (transaxle case side).
13. Remove magnet from clutch housing.

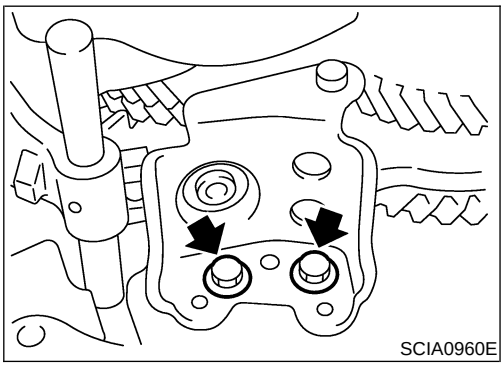
SCIA0960E

14. With shift lever in 5th position, remove bracket bolts from reverse lever assembly. Lift reverse lever assembly to remove.

CAUTION:
Be careful not to lose shifter cap.

15. Pull out reverse fork rod then remove reverse shift fork.

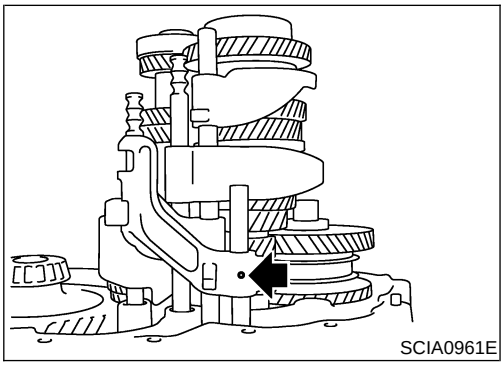
SCIA0961E

16. Remove retaining pin of reverse bracket.
17. Pull out reverse bracket and reverse bracket fork rod.
18. Remove check ball (2 pieces) and inter lock pin.

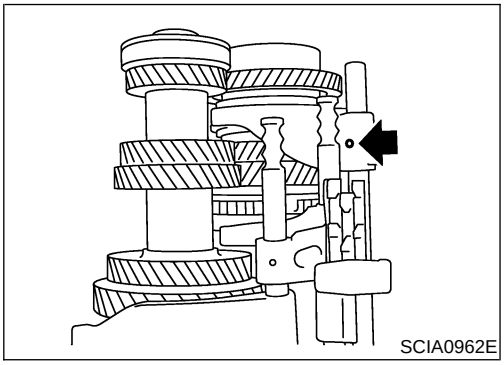
SCIA0962E

19. Shift 3rd & 4th fork rod to 3rd position. Remove retaining pin of 5th & 6th shift fork using pin punch.

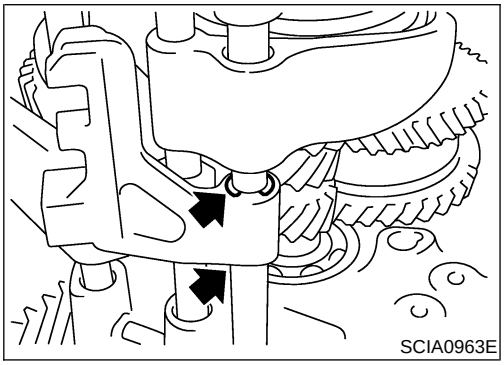
SCIA0963E

20. Remove stopper rings for 5th & 6th bracket.
21. Pull out 5th & 6th fork rod and remove 5th & 6th shift fork and 5th & 6th bracket.
22. Remove check balls (2 pieces) and inter lock pin.

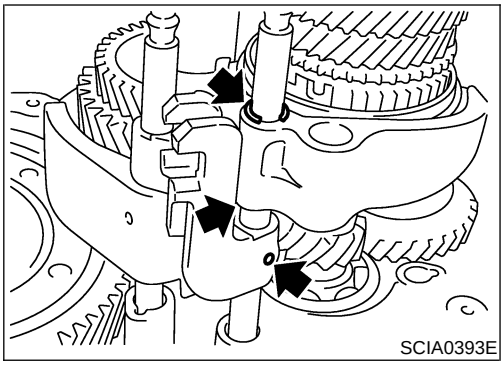

23. Remove retaining pin of 3rd & 4th bracket using pin punch.
24. Remove stopper rings for 3rd & 4th shift fork.
25. Pull out 3rd & 4th fork rod and remove 3rd & 4th shift fork and bracket.
26. Remove shift check sleeve from clutch housing.

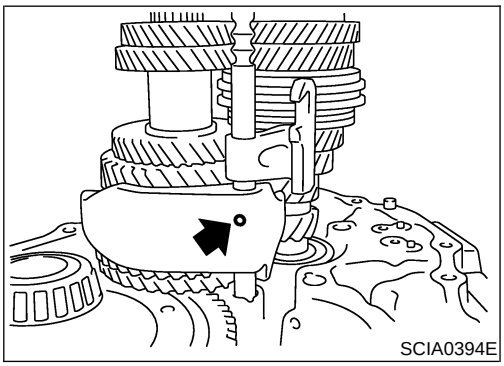

27. Remove retaining pin of 1st & 2nd shift fork using pin punch.
28. Pull out 1st & 2nd fork rod with bracket.
29. Remove 1st & 2nd shift fork.
30. Remove retaining pin of 1st & 2nd bracket using pin punch and separate fork rod and bracket.

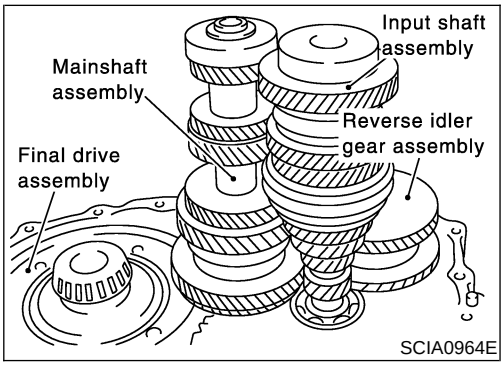

31. Remove gear components from clutch housing in the following procedure.

a. While tapping input shaft with plastic hammer, remove input shaft assembly, mainshaft assembly and reverse idler gear assembly as a set.

CAUTION:

Always withdraw mainshaft straight out. Failure to do so can damage resin oil channel on clutch housing side.

b. Remove final drive assembly.

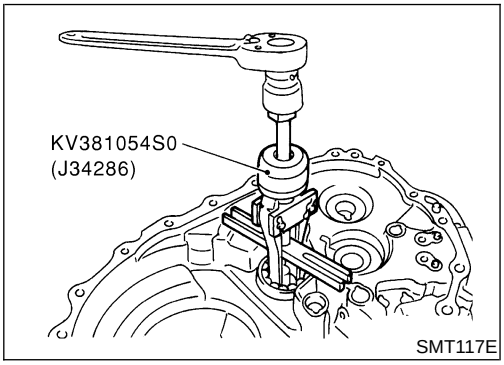

32. Remove mainshaft bearing retainer and then mainshaft front bearing.
33. Remove oil channel on mainshaft side.
34. Remove differential oil seal (clutch housing side).

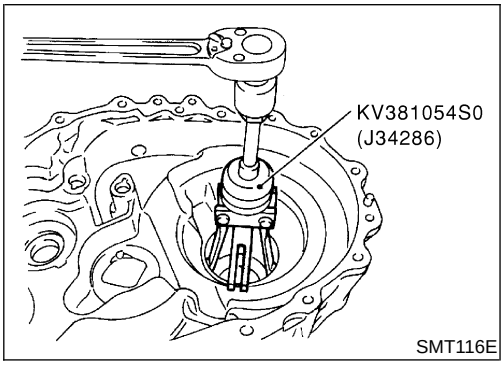

35. Remove differential side bearing outer race (clutch housing side).

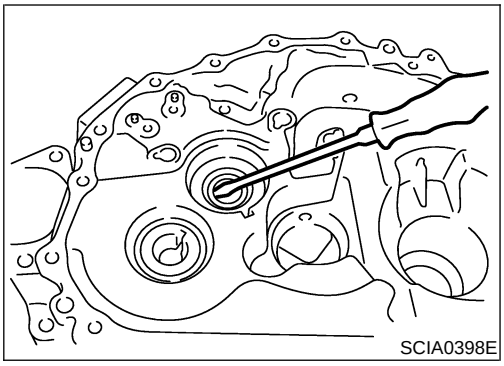

36. Remove input shaft oil seal.

CAUTION:

Be careful not to damage clutch housing.

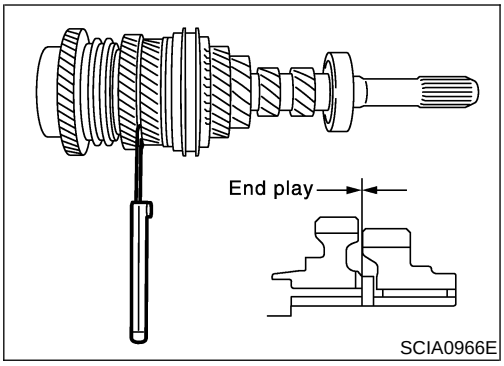

Input Shaft and Gears

DISASSEMBLY

NFMT0011

1. Before disassembling, measure end play for 3rd, 4th, 5th and 6th input gears.

   End play standard value

   3rd gear: 0.18 - 0.31 mm (0.0071 - 0.0122 in)
   4th gear: 0.20 - 0.30 mm (0.0079 - 0.0118 in)
   5th gear: 0.06 - 0.16 mm (0.0024 - 0.0063 in)
   6th gear: 0.06 - 0.16 mm (0.0024 - 0.0063 in)

2. Remove oil channel.

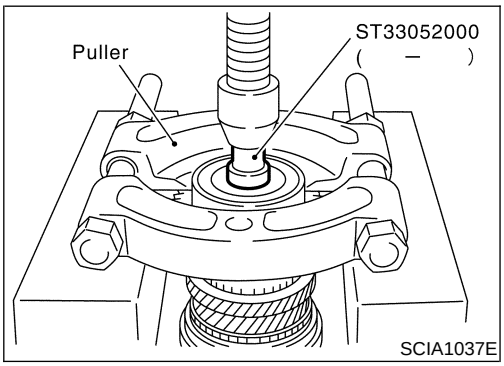

3. Remove input shaft rear bearing.
4. Remove the snap ring.

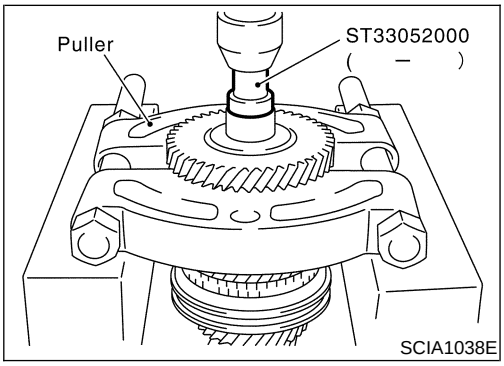

5. Remove 6th input gear, 6th bushing and 6th needle bearing.
6. Remove 6th baulk ring, 5th-6th coupling sleeve and shifting insert.

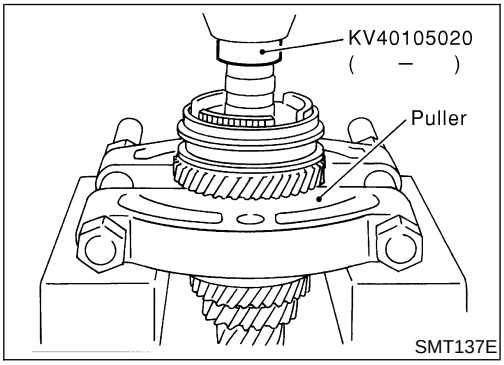

7. Remove 5th input gear and 5th synchronizer hub assembly simultaneously.
8. Remove 5th needle bearing.

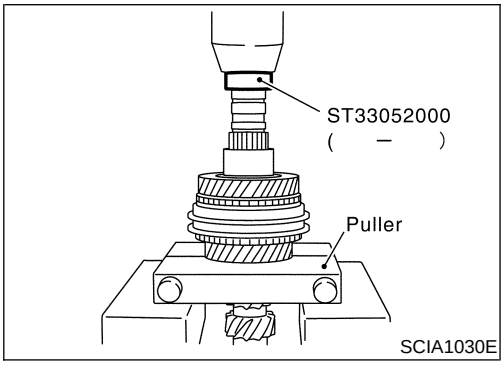

9. Remove 5th bushing, thrust washer, 4th input gear, 4th needle bearing, 4th bushing, 4th baulk ring, 3rd-4th synchronizer hub assembly, 3rd baulk ring and 3rd input gear simultaneously.
10. Remove 3rd needle bearing.

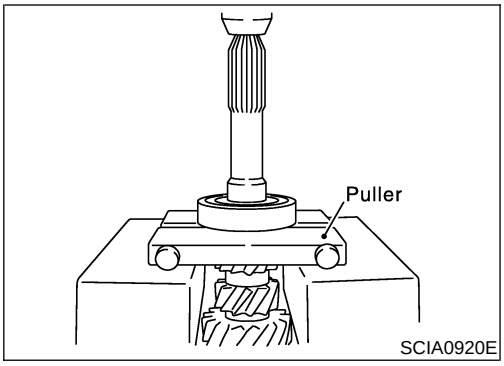

11. Remove input shaft front bearing.

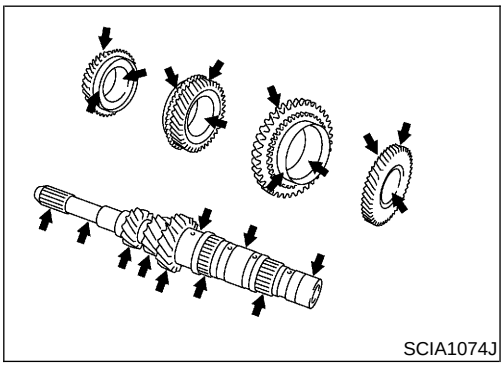

INSPECTION

NFMT0012

Input Shaft and Gears

NFMT0012S01

Check items below. If necessary, replace them with new ones.

- Damage, peeling, dent, uneven wear, bending, etc. of shaft
- Excessive wear, damage, peeling, etc. of gears

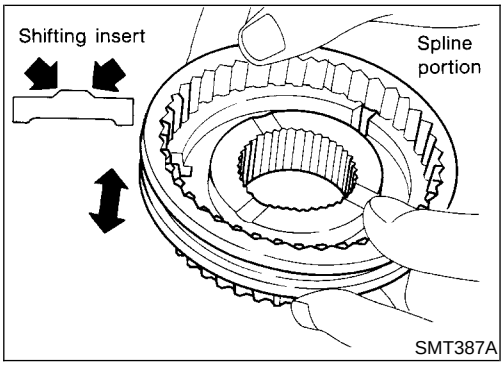

Synchronizer

NFMT0012S02

Check items below. If necessary, replace them with new ones.

- Damage and excessive wear of contact surfaces of coupling sleeve, synchronizer hub, and shifting insert
- Coupling sleeve and synchronizer hub must move smoothly.

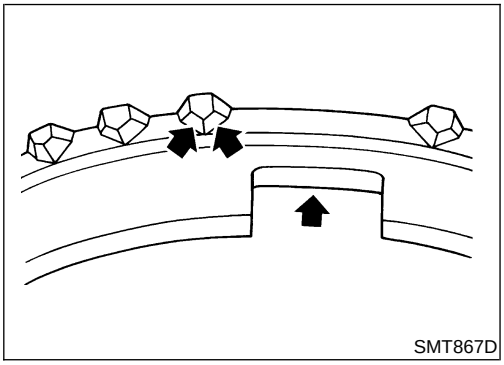

- If any crack, damage, or excessive wear is found on cam face of baulk ring or working face of insert, replace it.

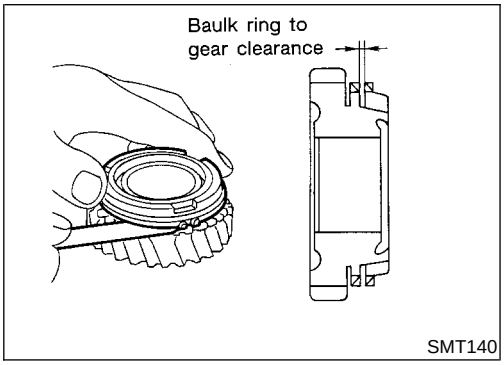

Baulk Ring Clearance

NFMT0012S0201

- Press baulk ring against cone, and measure clearance between baulk ring and cone. If measurement is below limit, replace it with a new one.

Clearance

Standard

3rd and 4th: 0.9 - 1.45 mm (0.0354 - 0.0571 in)

5th and 6th: 0.95 - 1.4 mm (0.0374 - 0.0551 in)

Limit value: 0.7 mm (0.0276 in)

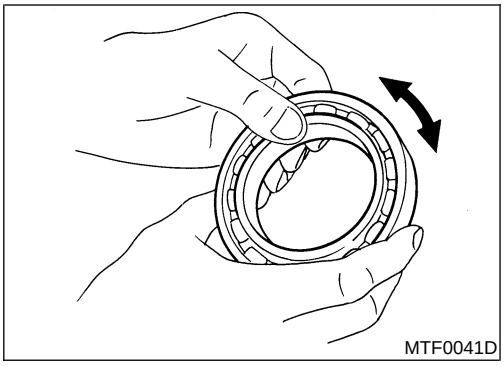

Bearing

NFMT0012S03

Check items below. If necessary, replace them with new ones.

- Damage and rough rotation of bearing

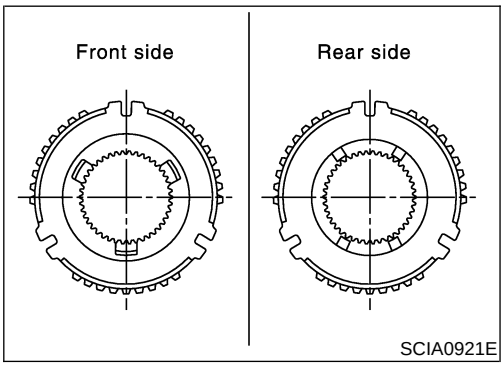

ASSEMBLY

NFMT0013

1. Install 3rd needle bearing.
2. Install 3rd input gear and 3rd baulk ring.
3. Install spread spring, shifting insert and 3rd-4th synchronizer hub onto 3rd-4th coupling sleeve.

CAUTION:

- **Be careful with orientation of synchronizer hub.**
- **Do not reuse 3rd-4th synchronizer hub.**

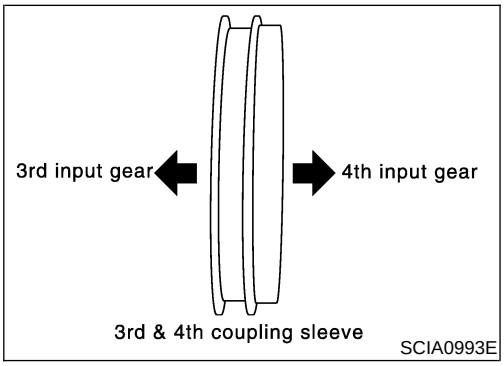

- **Be careful with orientation of coupling sleeve.**

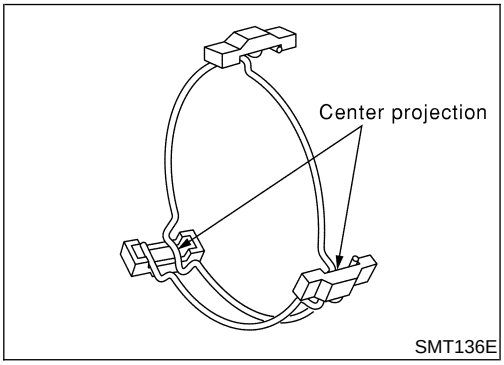

- **Be sure not to hook center projection of 2 spread springs on same shifting insert.**

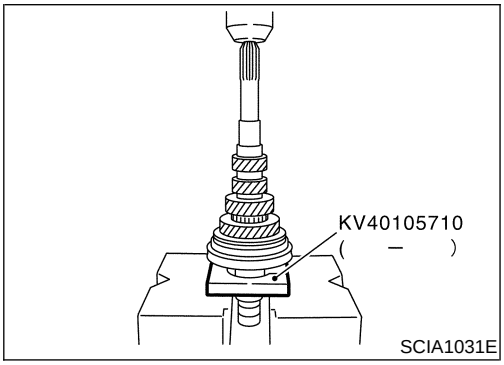

4. Install 3rd-4th synchronizer hub assembly.

CAUTION:

Align grooves of shifting insert and 3rd baulk ring.

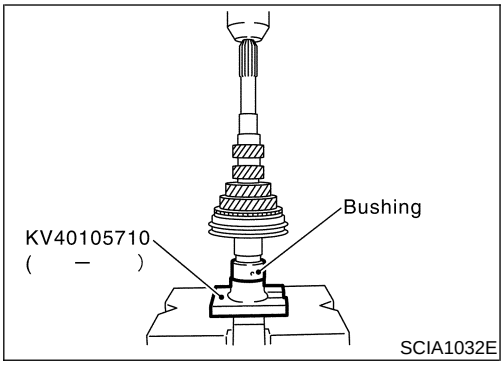

5. Install 4th bushing.
6. Install 4th baulk ring.
7. Install 4th input gear and 4th needle bearing.

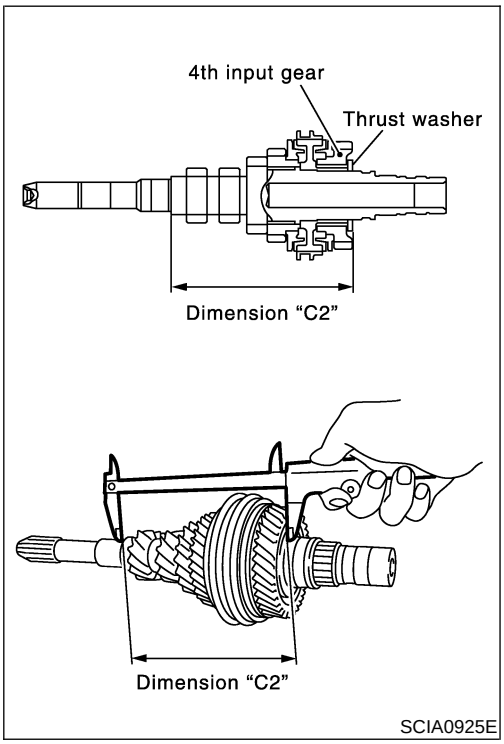

8. Select thrust washer so that dimension "C2" satisfies standard below. Then install it onto input shaft.

   Standard for dimension C2:
   154.7 - 154.8 mm (6.091 - 6.094 in)

Thrust Washer

Thickness	Part number	Thickness	Part number
3.84 mm (0.1512 in)	32347 8H500	4.02 mm (0.1583 in)	32347 8H503
3.90 mm (0.1535 in)	32347 8H501	4.08 mm (0.1606 in)	32347 8H504
3.96 mm (0.1559 in)	32347 8H502	4.14 mm (0.1630 in)	32347 8H505

CAUTION:
Only one thrust washer can be selected.

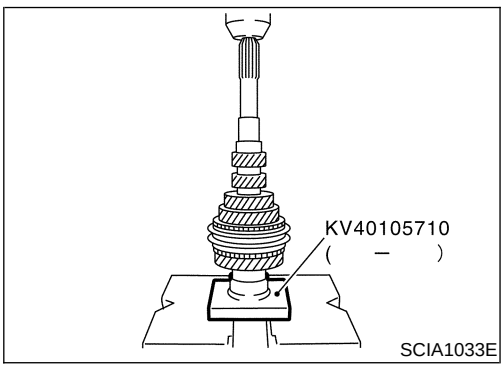

9. Install 5th bushing.
10. Install 5th needle bearing and 5th input gear.
11. Install 5th baulk ring.

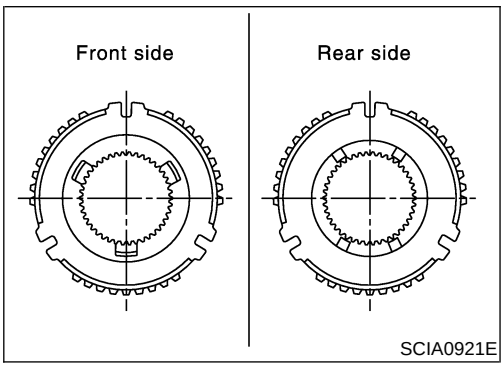

12. Install 5th-6th synchronizer hub, spread spring and shifting insert onto 5th-6th coupling sleeve.

CAUTION:
- **Be careful with orientation of synchronizer hub.**
- **Do not reuse 5th-6th synchronizer hub.**

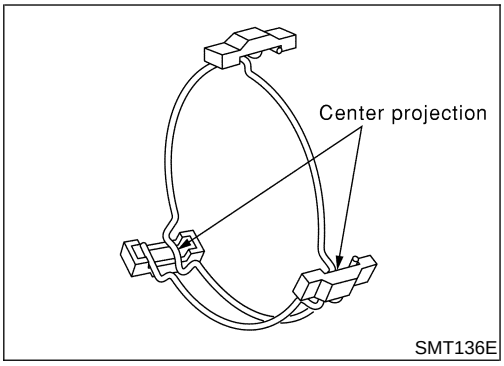

- **Be sure not to hook center projection of 2 spread springs on same shifting insert.**

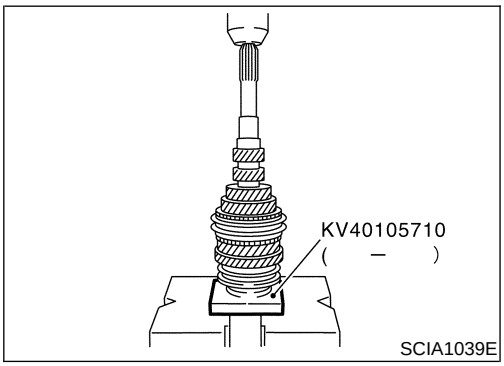

13. Install 5th-6th synchronizer hub assembly.

CAUTION:

Align grooves of 5th-6th shifting insert and 5th-6th baulk ring.

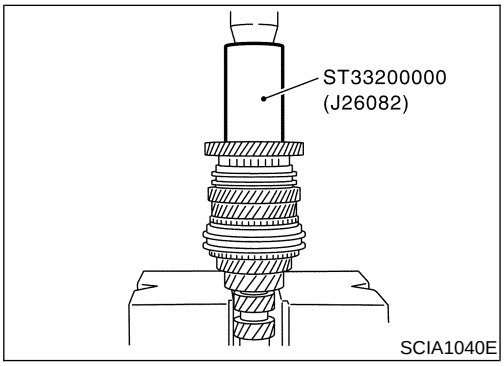

14. Install 6th needle bearing, 6th input gear onto 6th bushing, and then install them onto input shaft.

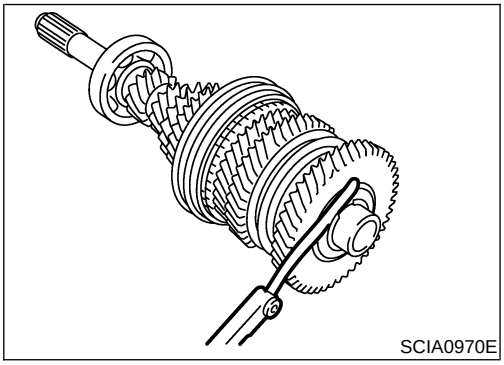

15. Install snap ring onto input shaft, and check that end play (gap between snap ring and groove) of 6th bushing satisfies standard.

End play standard value: 0 - 0.1 mm (0 - 0.004 in)

- If measurement is outside the standard range, select snap ring.

Snap Rings

Thickness	Part number	Thickness	Part number
1.76 mm (0.0693 in)	32204 8H511	2.01 mm (0.0791 in)	32204 8H516
1.81 mm (0.0713 in)	32204 8H512	2.06 mm (0.0811 in)	32204 8H517
1.86 mm (0.0732 in)	32204 8H513	2.11 mm (0.0831 in)	32204 8H518
1.91 mm (0.0752 in)	32204 8H514	2.16 mm (0.0850 in)	32204 8H519
1.96 mm (0.0772 in)	32204 8H515	2.21 mm (0.0870 in)	32204 8H520

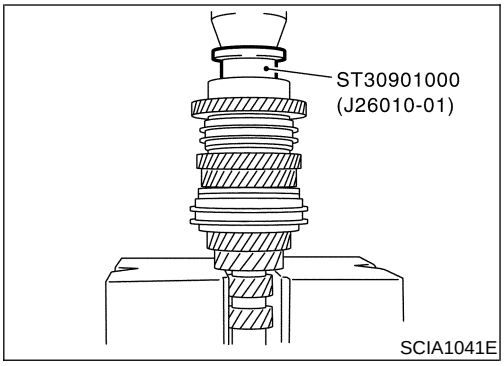

16. Install input shaft rear bearing.

CAUTION:
Install input shaft rear bearing with its brown surface facing the 6th input gear side.

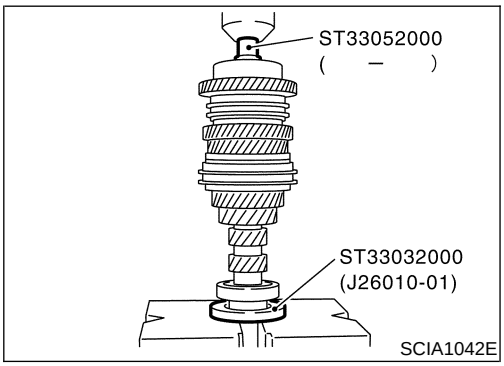

17. Install input shaft front bearing.
18. Install oil channel onto input shaft.

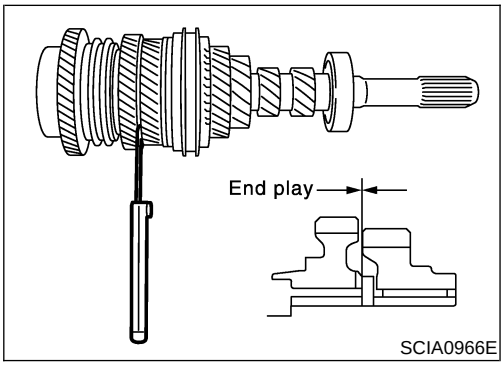

19. Check end play of 3rd, 4th, 5th and 6th input gears.

End play standard value
3rd gear: 0.18 - 0.31 mm (0.0071 - 0.0122 in)
4th gear: 0.20 - 0.30 mm (0.0079 - 0.0118 in)
5th gear: 0.06 - 0.16 mm (0.0024 - 0.0063 in)
6th gear: 0.06 - 0.16 mm (0.0024 - 0.0063 in)

Mainshaft and Gears

DISASSEMBLY

NFMT0014

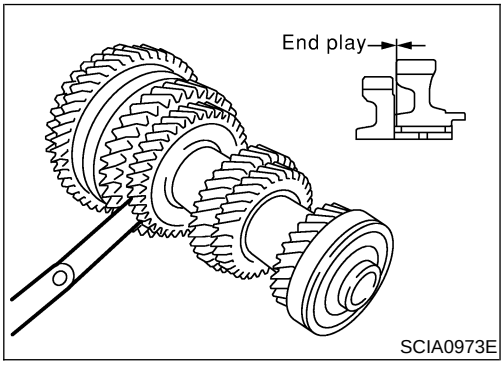

1. Before disassembling, measure end play of 1st and 2nd main gears.

End play standard value
1st gear: 0.20 - 0.30 mm (0.0079 - 0.0118 in)
2nd gear: 0.06 - 0.16 mm (0.0024 - 0.0063 in)

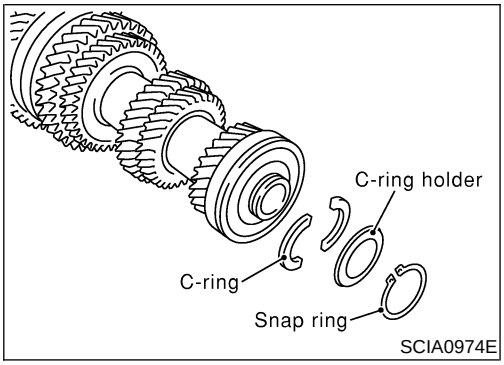

2. Remove the snap ring.
3. Remove C-ring holder, and then mainshaft C-ring.

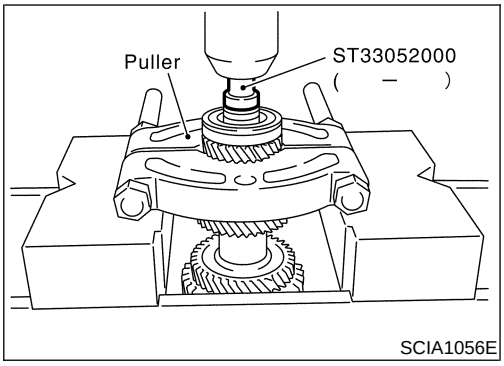

4. Remove mainshaft rear bearing, adjust shim and 6th main gear.
5. Remove 5th-6th mainshaft spacer.

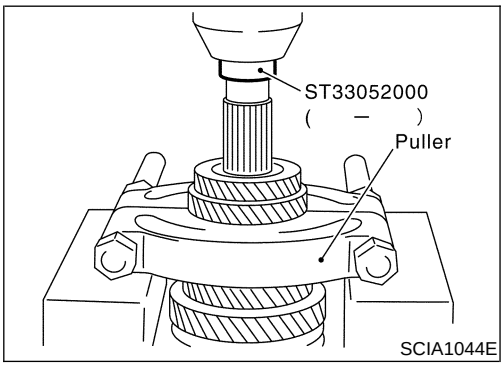

6. Remove 4th main gear and 5th main gear simultaneously.
7. Remove adjusting shim.
8. Remove 3rd & 4th mainshaft spacer.

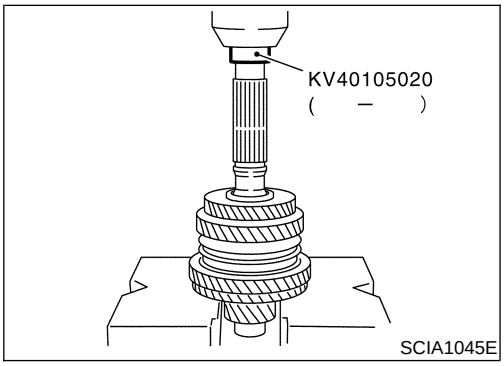

9. Remove 3rd main gear, 2nd main gear, 2nd gear needle bearing, 2nd bushing, 1st-2nd synchronizer assembly, 1st main gear, reverse main gear, 1st gear needle bearing, and 1st bushing simultaneously.

INSPECTION

NFMT0015

Mainshaft and Gears

NFMT0015S01

Check items below. If necessary, replace them with new ones.

- Damage, peeling, dent, uneven wear, bending, and other non-standard conditions of the shaft.
- Excessive wear, damage, peeling, and other non-standard conditions of the gears.

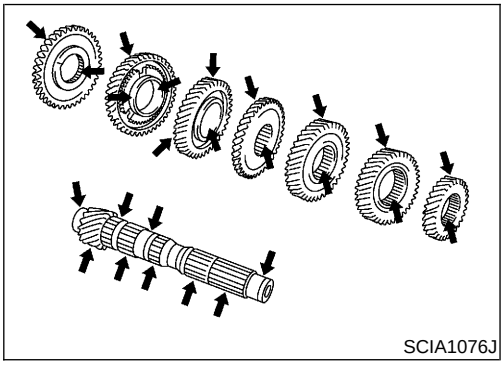

Synchronizer

NFMT0015S02

Check items below. If necessary, replace them with new ones.

- Damage and unusual wear on contact surfaces of coupling sleeve, synchronizer hub, and shifting insert.
- Coupling sleeve and synchronizer hub must move smoothly.

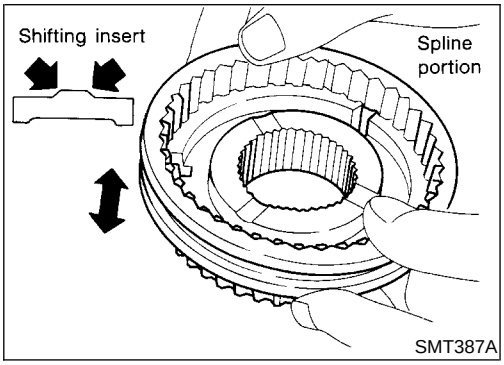

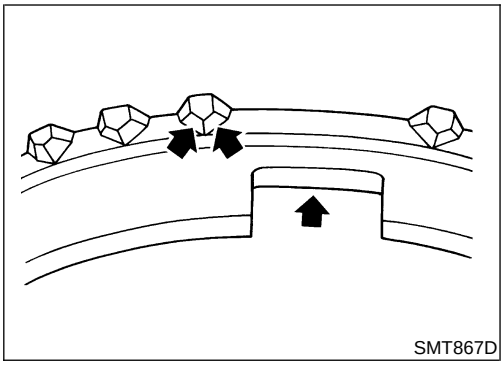
SMT867D

- If any crack, damage, or excessive wear is found on cam face of baulk ring or working face of insert, replace it.

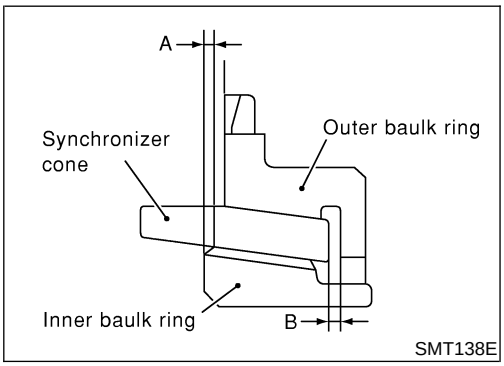

SMT138E

Baulk Ring Clearance

NFMT0015S0201

- Double cone synchronizer (1st and 2nd)
  Check clearance of outer baulk ring, synchronizer cone, and inner baulk ring of 1st and 2nd double cone synchronizers, following procedure below.

CAUTION:
Outer baulk ring, synchronizer cone, and inner baulk ring as a set control clearance A and B. If measurement exceeds service limit value, replace all of them as a set.

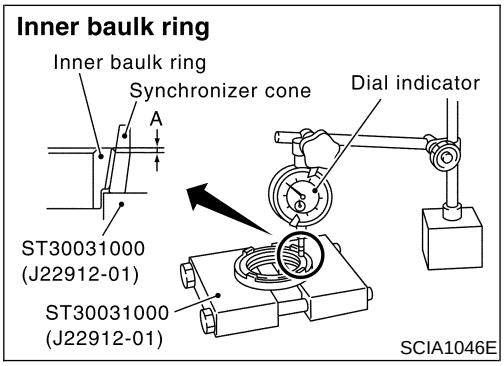

SCIA1046E

1. Using a dial gauge, measure clearance A at 2 or more points diagonally opposite, and calculate mean value.
   Clearance A
   Standard: 0.6 - 0.8 mm (0.024 - 0.031 in)
   Limit value: 0.2 mm (0.008 in) or less

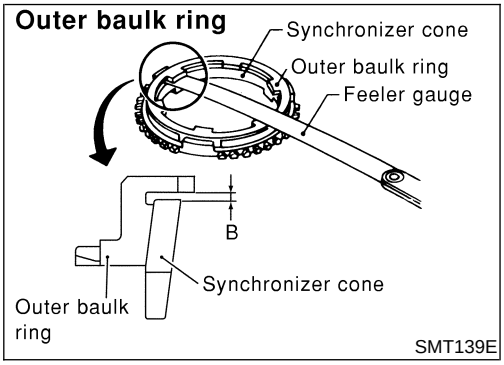

SMT139E

2. Using a feeler gauge, measure clearance B at 2 or more points diagonally opposite, and calculate mean value.
   Clearance B
   Standard: 0.6 - 1.1 mm (0.024 - 0.043 in)
   Limit value: 0.2 mm (0.008 in) or less

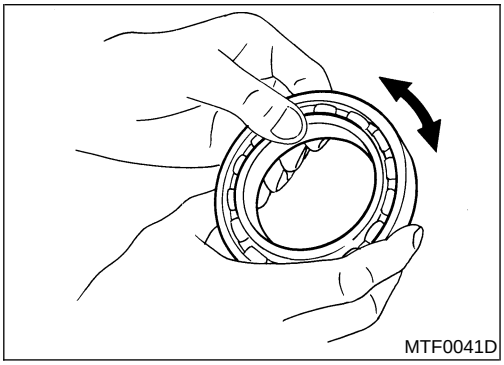
MTF0041D

Bearing

NFMT0015S03

Check items below. If necessary, replace them with new ones.

- Damage and rough rotation of bearing

ASSEMBLY

NFMT0016

1. Install reverse main gear.

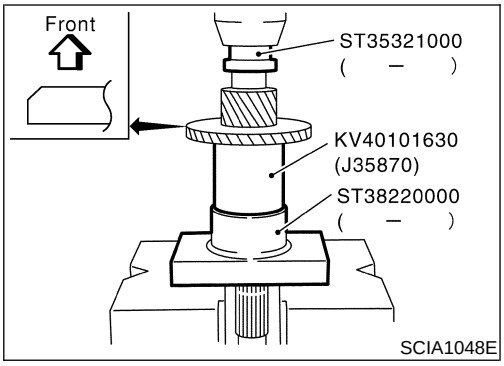

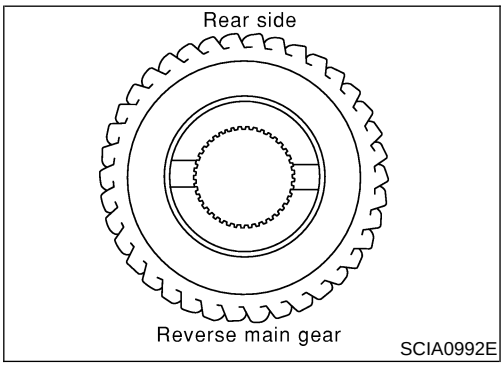

CAUTION:
Be careful with orientation of reverse main gear.

2. Install 1st bushing.
3. Install needle bearing, and then 1st main gear.

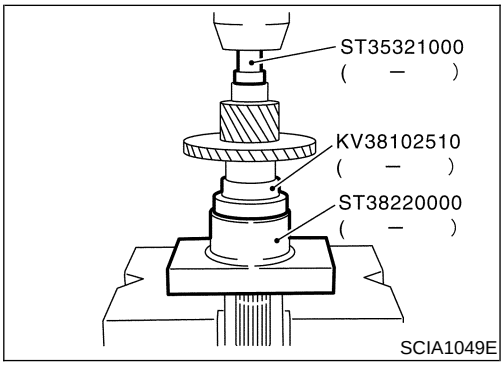

4. Install spread spring, shifting insert and 1st-2nd synchronizer hub onto 1st-2nd coupling sleeve.

CAUTION:
- **Be careful with orientation of synchronizer hub.**
- **Do not reuse 1st-2nd synchronizer hub.**

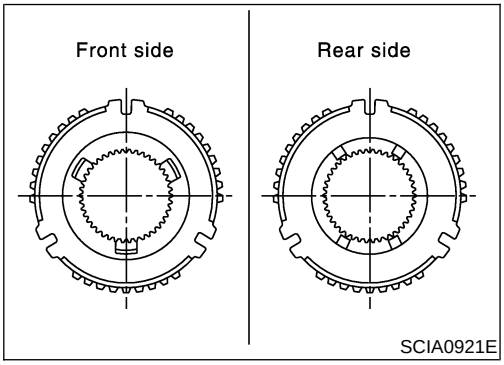

- **Be careful with orientation of coupling sleeve.**

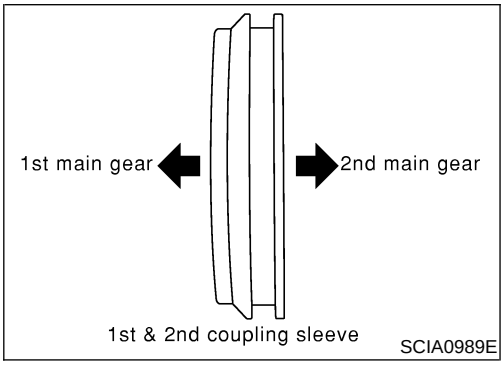

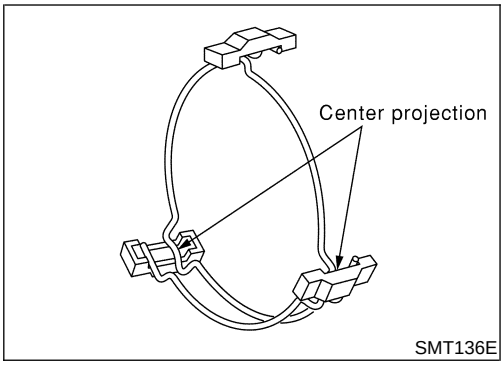

- **Be sure not to hook center projection of 2 spread springs on same shifting insert.**

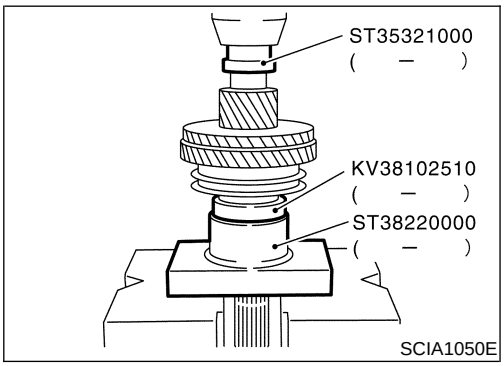

5. Install 1st gear synchronizer assembly onto mainshaft, and synchronizer hub assembly onto mainshaft.

CAUTION:

- **Outer baulk ring, synchronizer cone, and inner baulk ring on 2nd gear-side must have been removed.**
- **Be careful with orientation of coupling sleeve.**

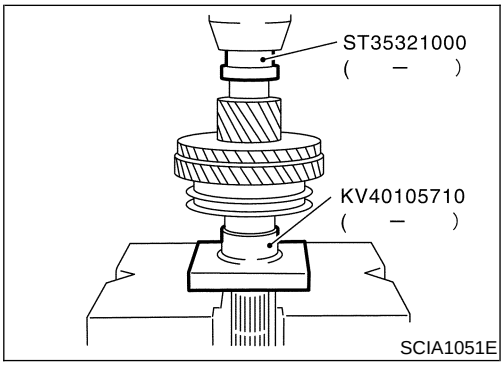

6. Install 2nd bushing.
7. Install outer baulk ring, synchronizer cone, and inner baulk ring on 2nd gear-side.
8. Install 2nd needle bearing and 2nd gear.

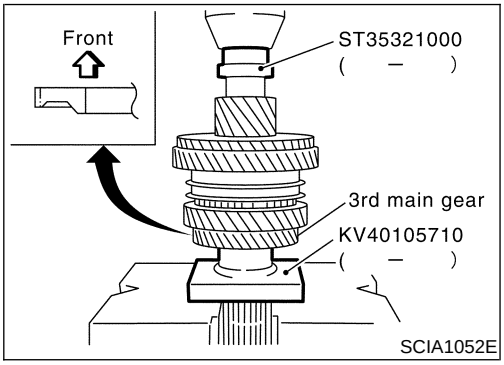

9. Install 3rd main gear.

CAUTION:

Be careful with orientation of 3rd main gear.

10. Install 3rd-4th mainshaft spacer.

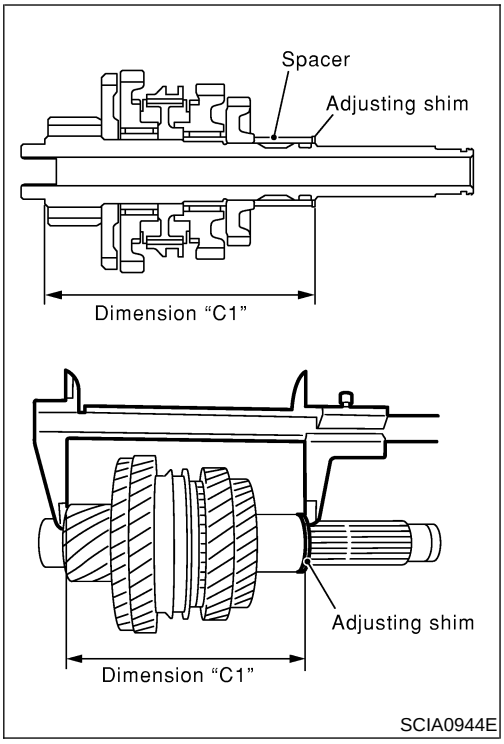

11. Select suitable adjusting shim so that dimension "C1" satisfies standard value below, and install it onto mainshaft.

Standard for dimension C1:
173.85 - 173.95 mm (6.844 - 6.848 in)

Adjusting Shim

Thickness	Part number	Thickness	Part number
0.52 mm (0.0205 in)	32238 8H500	0.84 mm (0.0331 in)	32238 8H504
0.60 mm (0.0236 in)	32238 8H501	0.92 mm (0.0362 in)	32238 8H505
0.68 mm (0.0268 in)	32238 8H502	1.00 mm (0.0394 in)	32238 8H506
0.76 mm (0.0299 in)	32238 8H503	1.08 mm (0.0425 in)	32238 8H507

CAUTION:
Only one adjusting shim can be selected.

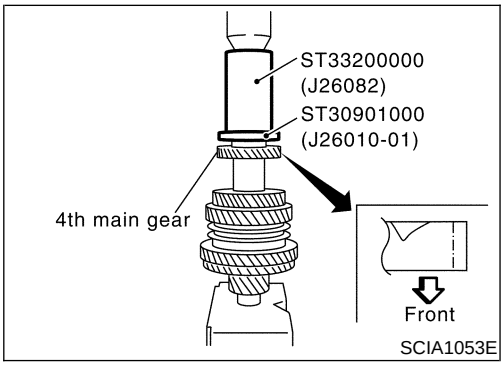

12. Install 4th main gear.

CAUTION:
Be careful with orientation of 4th main gear.

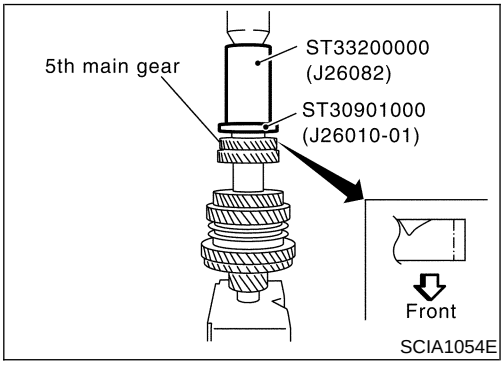

13. Install 5th main gear.

CAUTION:
Be careful with orientation of 5th main gear.

14. Install 5th-6th mainshaft spacer.

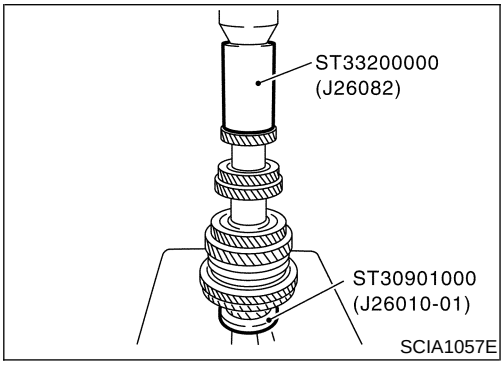

15. Install 6th main gear.

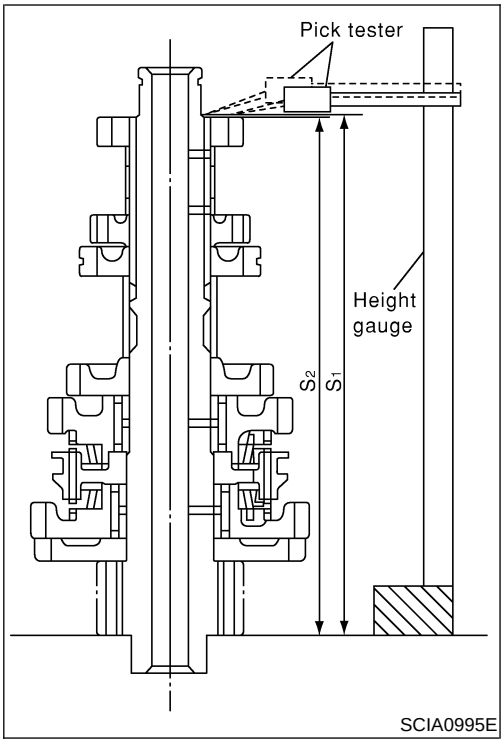

16. Select 6th main adjusting shim and then install it onto mainshaft.

- Calculate thickness "S" of 6th main adjusting shim by procedure below so that end play dimension between 6th main gear and mainshaft rear bearing becomes the dimension shown below.

End play: 0 - 0.1 mm (0 - 0.004 in)

Dimension "S" = (S_1 − S_2) + End play

S: Thickness of adjusting shim

S_1: Dimension from mainshaft standard face to mainshaft rear bearing press-fit end face

S_2: Dimension from mainshaft standard face to 6th main gear end face

Adjusting Shim

Thickness	Part number	Thickness	Part number
0.88 mm (0.0346 in)	32237 8H560	1.20 mm (0.0472 in)	32237 8H564
0.96 mm (0.0378 in)	32237 8H561	1.28 mm (0.0504 in)	32237 8H565
1.04 mm (0.0409 in)	32237 8H562	1.36 mm (0.0535 in)	32237 8H566
1.12 mm (0.0441 in)	32237 8H563		

CAUTION:

Only one adjusting shim can be selected.

1) Using height gauge, measure dimension "S_1" and "S_2".
2) Install selected 6th main adjusting shim to mainshaft.

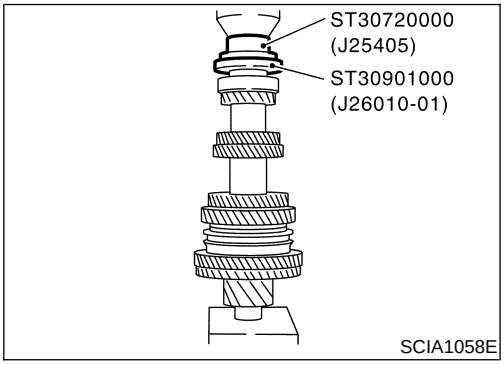

17. Install mainshaft rear bearing.

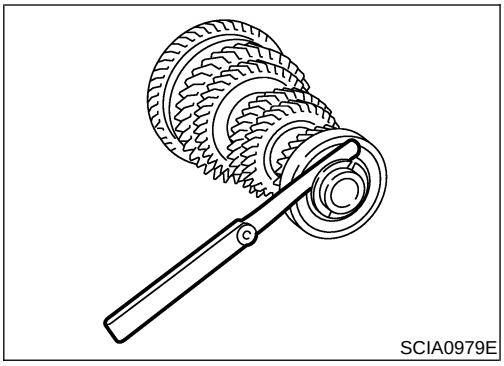

18. Install C-ring onto mainshaft, and check that end play of mainshaft rear bearing satisfies standard value.

    End play standard value: 0 - 0.06 mm (0 - 0.0024 in)

- If measurement is outside the standard range, reselect C-ring.

C-ring

Thickness	Part number	Thickness	Part number
2.535 mm (0.0998 in)	32348 8H800	2.835 mm (0.1116 in)	32348 8H810
2.565 mm (0.1010 in)	32348 8H801	2.865 mm (0.1128 in)	32348 8H811
2.595 mm (0.1022 in)	32348 8H802	2.895 mm (0.1140 in)	32348 8H812
2.625 mm (0.1033 in)	32348 8H803	2.925 mm (0.1152 in)	32348 8H813
2.655 mm (0.1045 in)	32348 8H804	2.955 mm (0.1163 in)	32348 8H814
2.685 mm (0.1057 in)	32348 8H805	2.985 mm (0.1175 in)	32348 8H815
2.715 mm (0.1069 in)	32348 8H806	3.015 mm (0.1187 in)	32348 8H816
2.745 mm (0.1081 in)	32348 8H807	3.045 mm (0.1199 in)	32348 8H817
2.775 mm (0.1093 in)	32348 8H808	3.075 mm (0.1211 in)	32348 8H818
2.805 mm (0.1104 in)	32348 8H809		

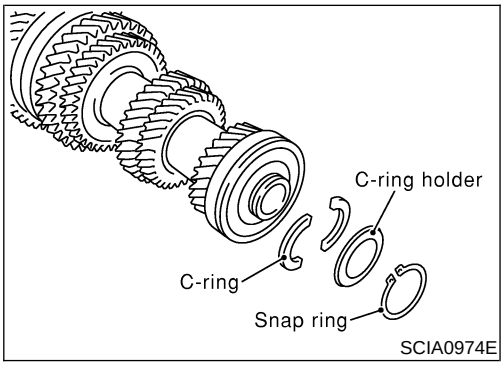

19. Fit C-ring holder, and install snap ring.

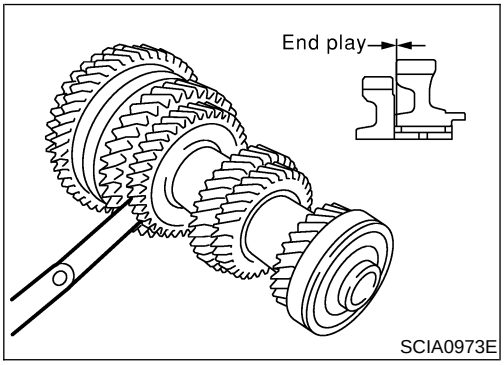

20. Check end play of 1st and 2nd main gears.

    End play standard value

    1st gear: 0.20 - 0.30 mm (0.0079 - 0.0118 in)

    2nd gear: 0.06 - 0.16 mm (0.0024 - 0.0063 in)

Reverse Idler Shaft and Gears

DISASSEMBLY

=NFMT0032

1. Remove reverse idler gear adjusting shim.
2. Remove reverse idler gear (rear), reverse coupling sleeve and insert spring simultaneously.
3. Remove reverse idler gear needle bearing.
4. Remove thrust needle bearing.
5. Remove reverse baulk ring.
6. Remove reverse idler gear (front).
7. Remove reverse idler gear needle bearing.
8. Remove thrust needle bearing.
9. Pull off locking pin from reverse idler shaft.

INSPECTION

NFMT0033

Reverse Idler Shaft and Gears

NFMT0033S01

Check items below. If necessary, replace them with new ones.

- Damage, peeling, dent, uneven wear, bending, and other non-standard conditions of the shaft.
- Excessive wear, damage, peeling, and other non-standard conditions of the gears.

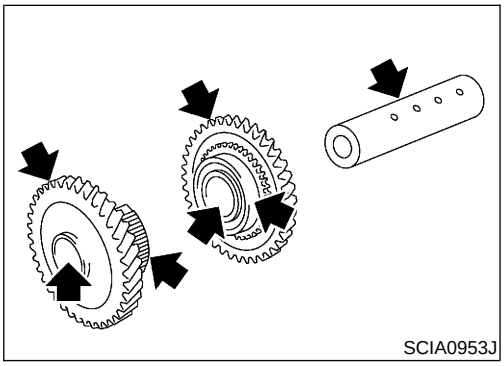
SCIA0953J

Synchronizer

NFMT0033S02

Check items below. If necessary, replace them with new ones.

- Damage and unusual wear on contact surfaces of coupling sleeve, synchronizer hub, and insert spring.
- Coupling sleeve and synchronizer hub must move smoothly.

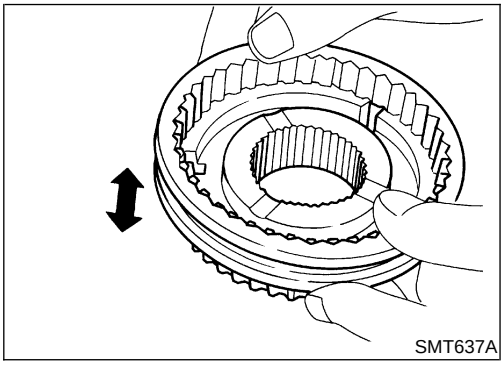
SMT637A

- If any crack, damage, or excessive wear is found on cam face of baulk ring or working face of insert, replace it.

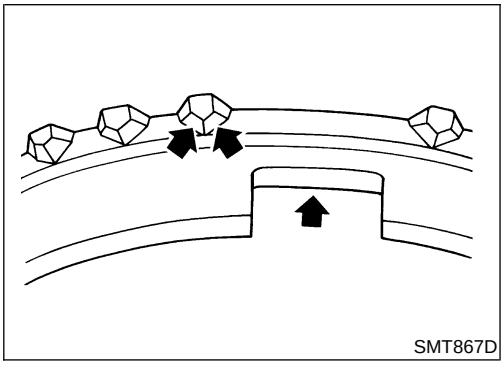
SMT867D

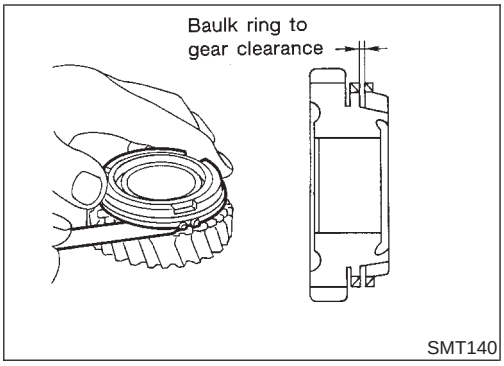

Baulk Ring Clearance

NFMT0033S0201

- Press baulk ring against cone, and measure clearance between baulk ring and cone. If measurement is below limit, replace it with a new one.

Clearance

Standard: 0.95 - 1.4 mm (0.0374 - 0.0551 in)

Limit value: 0.7 mm (0.0276 in)

Bearing

NFMT0033S03

Check items below. If necessary, replace them with new ones.

- Damage and rough rotation of bearing.

ASSEMBLY

NFMT0034

Paying attention to following work, assemble in reverse order of disassembly.

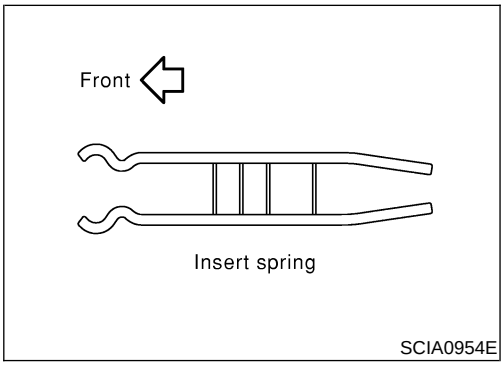

CAUTION:

- **Be careful with orientation of insert spring.**

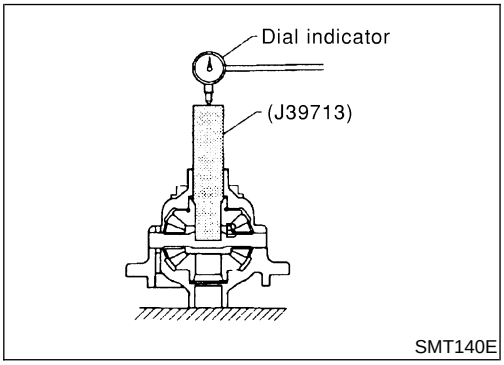

Final Drive

PRE-INSPECTION (FOR RS6F51A MODEL)

NFMT0035

- Check the clearance between side gear and differential case as follows.

1. Clean final drive assembly sufficiently to prevent side gear thrust washer, differential case, side gear, and other parts from sticking by gear oil.
2. Upright the differential case so that the side gear to be measured faces upward.

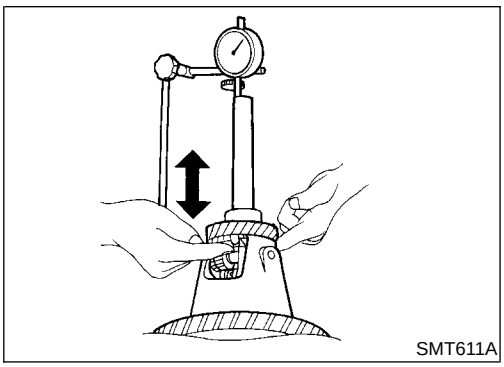

3. Place final drive adapter and dial indicator onto side gear. Move side gear up and down, and measure the clearance.

Clearance between side gear and differential case:

0.1 - 0.2 mm (0.004 - 0.008 in)

CAUTION:

There should be no resistance and gears should rotate freely.

4. If not within specification, adjust the clearance by changing thrust washer thickness.
5. Turn differential case upside down, and measure the clearance between side gear and differential case on the other side in the same way.

DISASSEMBLY

NFMT0017

—RS6F51A—

NFMT0017S03

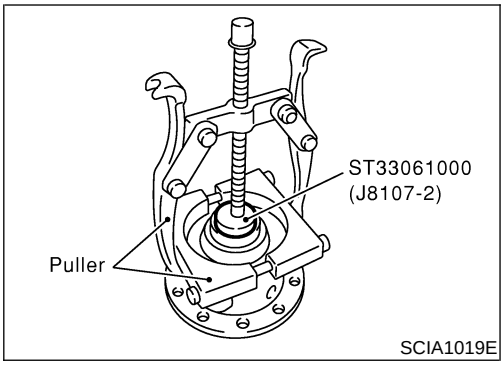

1. Remove mounting bolts.Then, separate the final gear from differential case.
2. Remove speedometer drive gear.
3. Using a drift and puller, remove differential side bearing (clutch housing side).

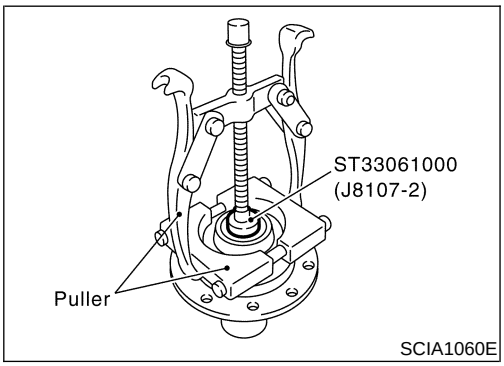

4. Using a drift and puller, remove differential side bearing (transaxle case side).

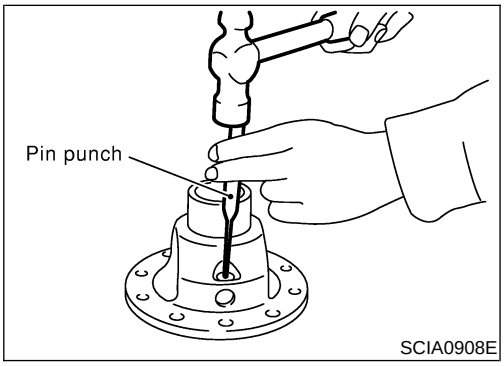

5. Using a pin punch, pull out lock pin and pinion mate shaft.
6. Rotate pinion mate gears, and remove pinion mate gears, pinion mate thrust washers, side gears, and side gear thrust washers from differential case.

—RS6F51H—

NFMT0017S04

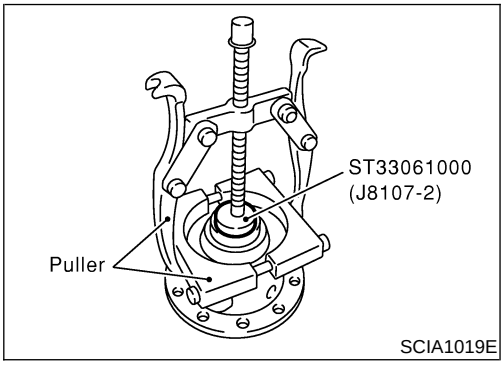

1. Remove mounting bolts.Then, separate the final gear from differential case.
2. Remove speedometer drive gear.
3. Using a drift and puller, remove differential side bearing (clutch housing side).

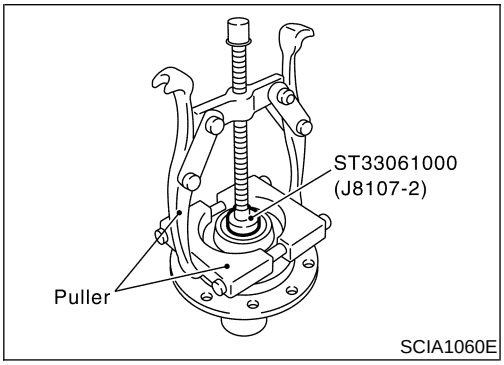

4. Using a drift and puller, remove differential side bearing (transaxle case side).

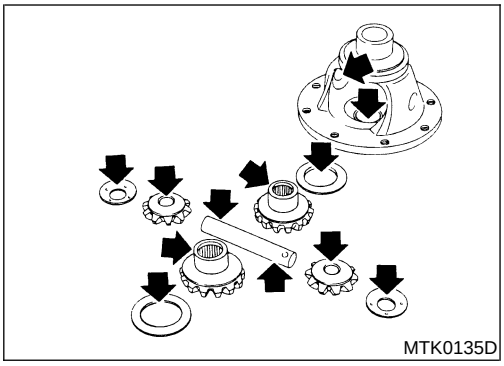
MTK0135D

INSPECTION

NFMT0018

Gear, Washer, Shaft and Case

NFMT0018S01

- Check side gears, side gear thrust washers, pinion mate shaft, pinion mate gears, pinion mate thrust washers and differential case. If necessary, replace with a new one.

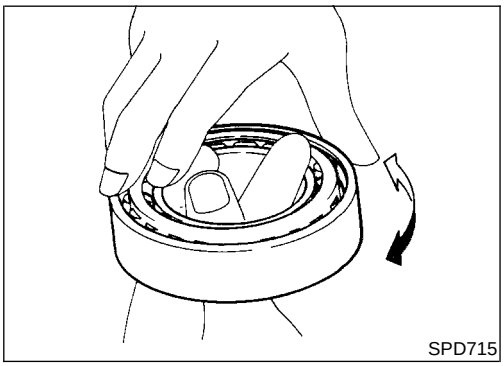
SPD715

Bearings

NFMT0018S03

- Check for bearing damage and rough rotation. If necessary, replace with a new one.

CAUTION:
When replacing tapered roller bearing, replace outer and inner races as a set.

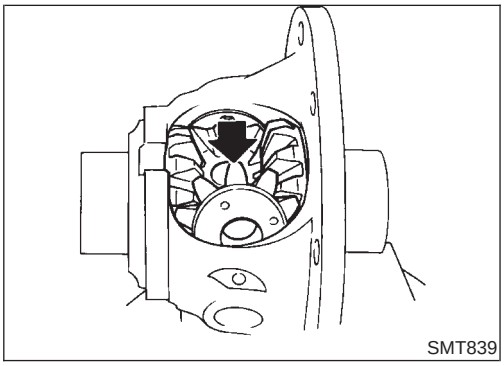
SMT839

ASSEMBLY

NFMT0019

—RS6F51A—

NFMT0019S03

1. Apply gear oil to sliding area of differential case, each gear, and thrust washer.
2. Install side gear thrust washers and side gears into differential case.
3. While rotating pinion mate thrust washers and pinion mate gears, aligning them diagonally, install them into differential case.

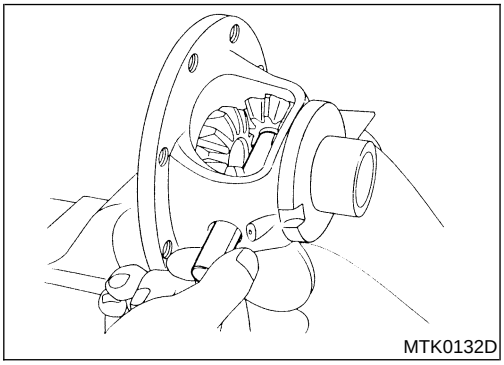
MTK0132D

4. Insert pinion mate shaft into differential case.

CAUTION:
Be sure not to damage pinion mate thrust washers.

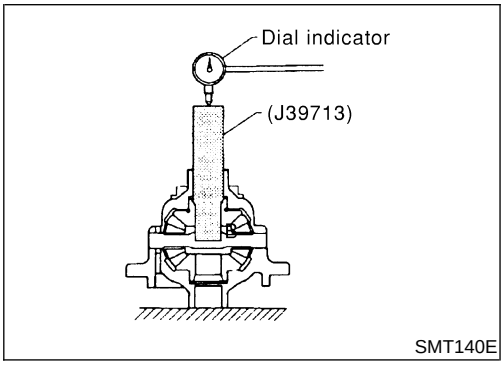

SMT140E

5. Measure end play of side gears following procedure below. Then select side gear thrust washer.

a. Upright the differential case so that its side gear to be measured face upward.
b. Place final drive adapter and dial indicator onto side gears.

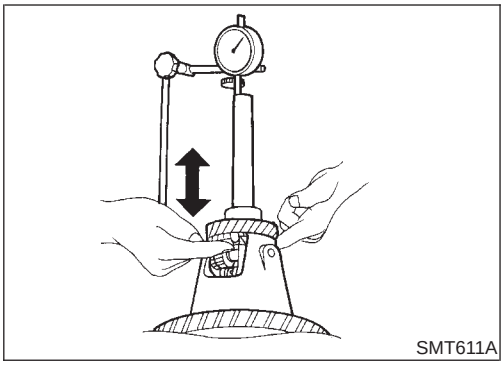
SMT611A

c. Move side gears up and down to measure end play, and select thrust washer so that it satisfies standard.

End play standard value:

0.1 - 0.2 mm (0.004 - 0.008 in)

CAUTION:

- **There should be no resistance and gears should rotate freely.**
- **Place differential case upside down. Be sure to measure end play for opposite side-gears likewise.**

Thrust washer

Thickness	Part number
0.75 mm (0.0295 in)	38424 81X00
0.80 mm (0.0315 in)	38424 81X01
0.85 mm (0.0335 in)	38424 81X02
0.90 mm (0.0354 in)	38424 81X03
0.95 mm (0.0374 in)	38424 81X04

CAUTION:

Only one thrust washer can be selected.

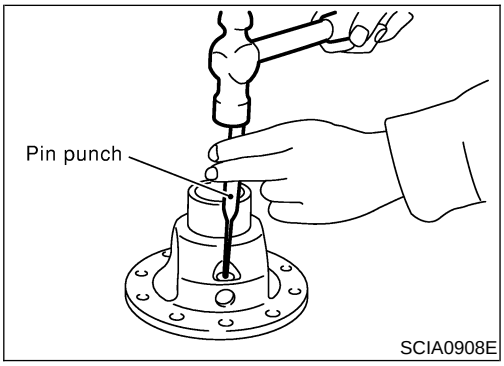

SCIA0908E

6. Using a pin punch (special service tool), drive a lock pin into the pinion mate shaft.

CAUTION:

Do not reuse the lock pin.

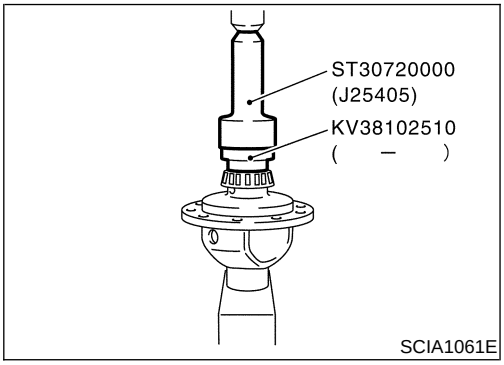

SCIA1061E

7. Using a drift (special service tool), install differential side bearing (transaxle case side).

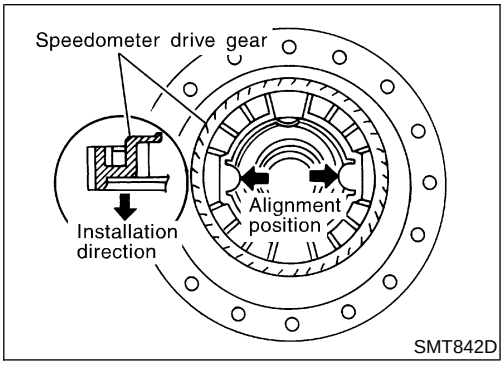

SMT842D

8. Align and install speedometer drive gear onto differential case.

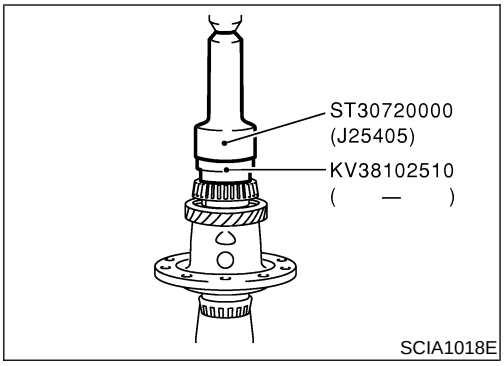

9. Using a drift (special service tool), install differential side bearing (clutch housing side).

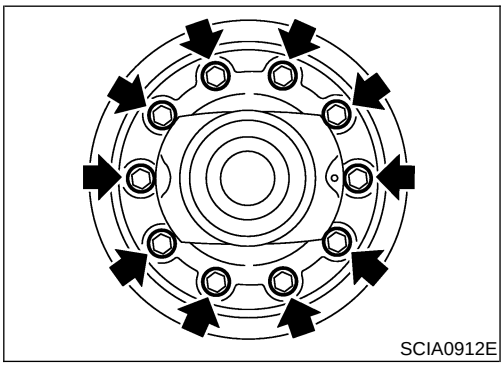

10. Install final gear into differential case, and tighten final gear mounting bolts.

—RS6F51H—

NFMT0019S04

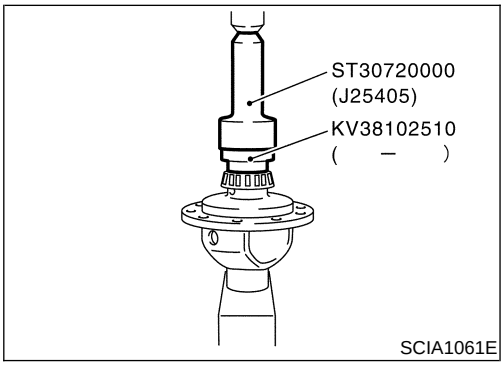

1. Using a drift (special service tool), install differential side bearing (transaxle case side).

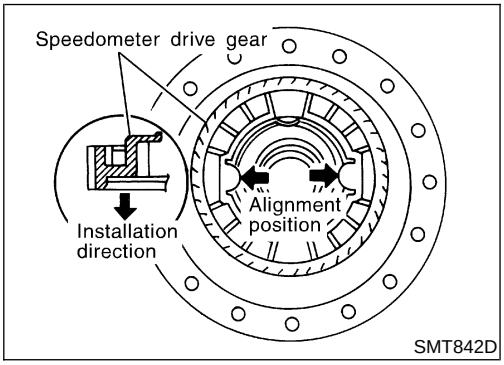

2. Align and install speedometer drive gear onto differential case.

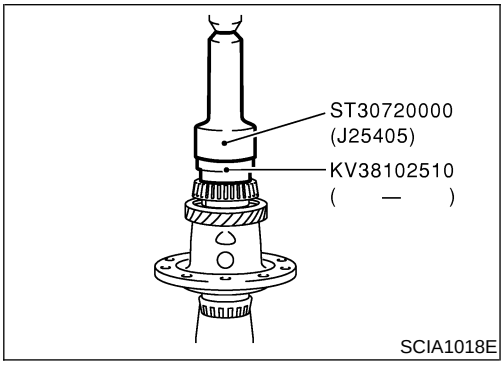

3. Using a drift (special service tool), install differential side bearing (clutch housing side).

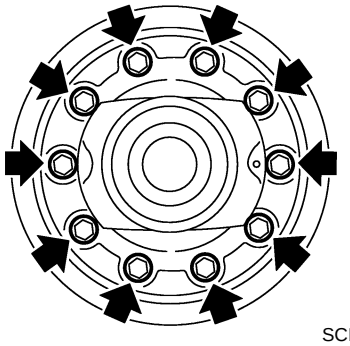

SCIA0912E

4. Install final gear into differential case, and tighten final gear mounting bolts.

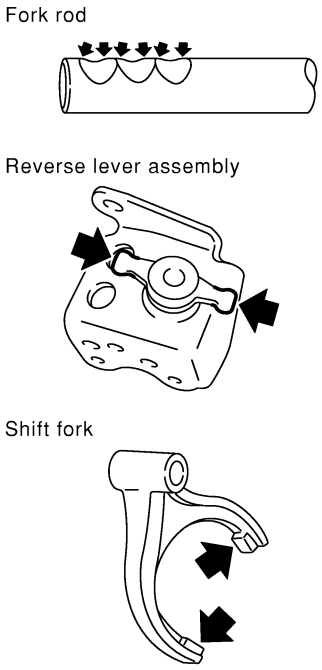

SCIA0913E

Shift Control Components

INSPECTION

NFMT0020

- Check contact surfaces and sliding area for wear, damage, bending, etc. If necessary, replace parts.

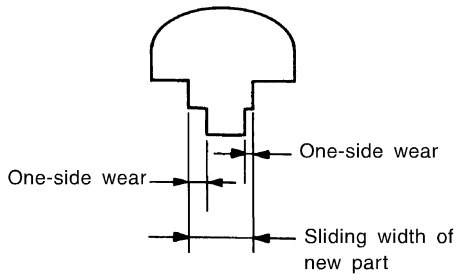

SMT801D

Shift Fork

NFMT0020S01

- Check if the width of shift fork hook (sliding area with coupling sleeve) is within allowable specification below.

Item	One-side wear specification	Sliding width of new part
1st & 2nd	0.2 mm (0.008 in)	7.80 - 7.93 mm (0.3071 - 0.3122 in)
3rd & 4th	0.2 mm (0.008 in)	7.80 - 7.93 mm (0.3071 - 0.3122 in)
5th & 6th	0.2 mm (0.008 in)	6.10 - 6.23 mm (0.2402 - 0.2453 in)
Reverse	0.2 mm (0.008 in)	12.80 - 12.93 mm (0.5039 - 0.5091 in)

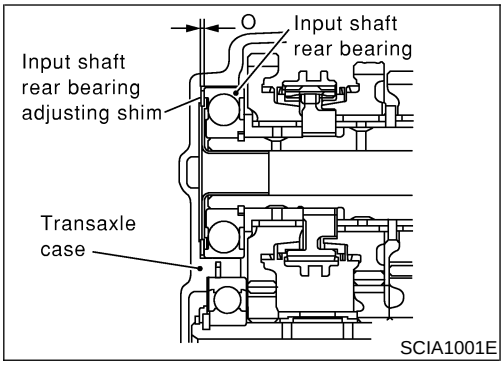

Input Shaft End Play

NFMT0022S01

- When adjusting input shaft end play, select adjusting shim for input shaft bearing. To select adjusting shim, measure clearance between transaxle case and input shaft rear bearing.
- Calculate dimension “O” (thickness of adjusting shim) using the following procedure to satisfy specification of end play for input shaft rear bearing.

End play: 0 - 0.06 mm (0 - 0.0024 in)

Dimension “O” = (O_1 − O_2) + End play

O: Thickness of adjusting shim

O_1: Distance between transaxle case end face and mounting face of adjusting shim

O_2: Distance between clutch housing case end face and end face of input shaft rear bearing

Adjusting Shim

Shim thickness	Part number	Shim thickness	Part number	Shim thickness	Part number
0.40 mm (0.0157 in)	32225 8H500	0.88 mm (0.0346 in)	32225 8H512	1.36 mm (0.0535 in)	32225 8H524
0.44 mm (0.0173 in)	32225 8H501	0.92 mm (0.0362 in)	32225 8H513	1.40 mm (0.0551 in)	32225 8H560
0.48 mm (0.0189 in)	32225 8H502	0.96 mm (0.0378 in)	32225 8H514	1.44 mm (0.0567 in)	32225 8H561
0.52 mm (0.0205 in)	32225 8H503	1.00 mm (0.0394 in)	32225 8H515	1.48 mm (0.0583 in)	32225 8H562
0.56 mm (0.0220 in)	32225 8H504	1.04 mm (0.0409 in)	32225 8H516	1.52 mm (0.0598 in)	32225 8H563
0.60 mm (0.0236 in)	32225 8H505	1.08 mm (0.0425 in)	32225 8H517	1.56 mm (0.0614 in)	32225 8H564
0.64 mm (0.0252 in)	32225 8H506	1.12 mm (0.0441 in)	32225 8H518	1.60 mm (0.0630 in)	32225 8H565
0.68 mm (0.0268 in)	32225 8H507	1.16 mm (0.0457 in)	32225 8H519	1.64 mm (0.0646 in)	32225 8H566
0.72 mm (0.0283 in)	32225 8H508	1.20 mm (0.0472 in)	32225 8H520		
0.76 mm (0.0299 in)	32225 8H509	1.24 mm (0.0488 in)	32225 8H521		
0.80 mm (0.0315 in)	32225 8H510	1.28 mm (0.0504 in)	32225 8H522		
0.84 mm (0.0331 in)	32225 8H511	1.32 mm (0.0520 in)	32225 8H523		

CAUTION:
Only 1 adjusting shim can be selected.

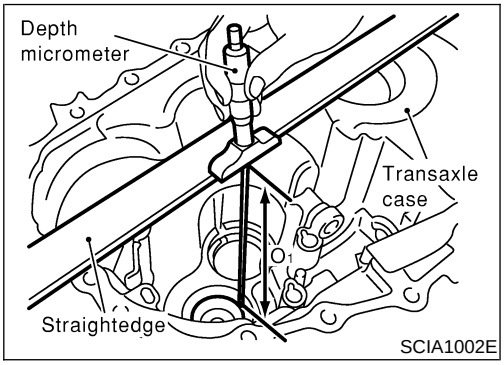

1. Using depth micrometer and straight edge, measure dimension “O_1” between transaxle case end face and mounting face of adjusting shim.

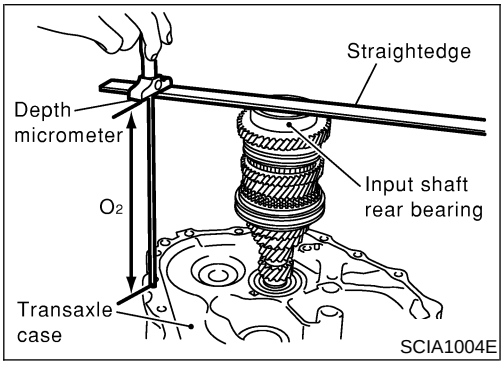

2. Using depth micrometer and straight edge as shown in the figure, measure dimension “O_2” between clutch housing case end face and end face of input shaft rear bearing.
3. Install selected input shaft rear bearing adjusting shim onto input shaft.

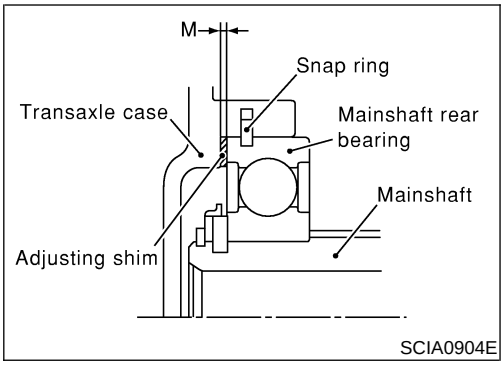

Mainshaft End Play

NFMT0022S02

- When adjusting mainshaft end play, select adjusting shim for mainshaft rear bearing. To select adjusting shim, measure clearance “M” between transaxle case and mainshaft rear bearing.
- Calculate dimension “P” (thickness of adjusting shim) using the following procedure to satisfy specification of end play for mainshaft rear bearing.

End play: 0 - 0.06 mm (0 - 0.0024 in)

Dimension “P” = “M” + End play

P: Thickness of adjusting shim

M: Distance between mainshaft rear bearing and transaxle case

Adjusting Shim

Shim thickness	Part number
0.44 mm (0.0173 in)	32238 8H510
0.48 mm (0.0189 in)	32238 8H511
0.52 mm (0.0205 in)	32238 8H512
0.56 mm (0.0220 in)	32238 8H513
0.60 mm (0.0236 in)	32238 8H514
0.64 mm (0.0252 in)	32238 8H515
0.68 mm (0.0268 in)	32238 8H516
0.72 mm (0.0283 in)	32238 8H517
0.76 mm (0.0299 in)	32238 8H518
0.80 mm (0.0315 in)	32238 8H519
0.84 mm (0.0331 in)	32238 8H520
0.88 mm (0.0346 in)	32238 8H521
0.92 mm (0.0362 in)	32238 8H522
0.96 mm (0.0378 in)	32238 8H523
1.00 mm (0.0394 in)	32238 8H524
1.04 mm (0.0409 in)	32238 8H560
1.08 mm (0.0425 in)	32238 8H561

CAUTION:

Only 1 adjusting shim can be selected.

1. Install mainshaft assembly to clutch housing.
2. Install snap ring to transaxle case.
3. Install transaxle case to clutch housing, and temporarily assemble them with fixing bolts. Install temporarily snap ring to mainshaft rear bearing.

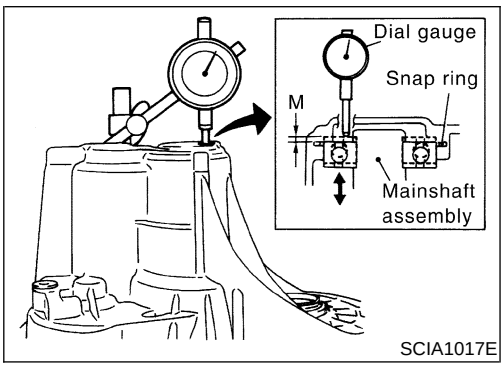

4. Install dial gauge to snap ring access hole, and expand snap ring. Lift mainshaft assembly through control assembly installation hole, and push it against transaxle case. This state shall be defined as base. Moving distance of mainshaft assembly, with snap ring fit on main bearing, becomes “M”.

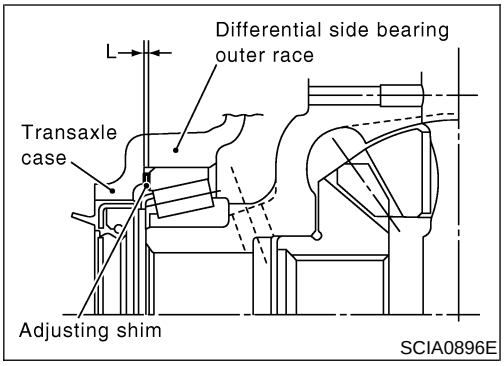

Differential Side Bearing Preload

NFMT0022S03

- When adjusting differential side bearing preload, select adjusting shim for differential side bearing. To select adjusting shim, measure clearance “L” between transaxle case and differential side bearing outer race.
- Calculate dimension “L” (thickness of adjusting shim) using the following procedure to satisfy specification of preload for differential side bearing.

Preload: 0.15 - 0.21 mm (0.0059 - 0.0083 in)

Dimension “L” = (L_1 − L_2) + Preload

L: Thickness of adjusting shim

L_1: Distance between clutch housing case end face and mounting face of adjusting shim

L_2: Distance between differential side bearing and transaxle case

Adjusting Shim

Shim thickness	Part number
0.48 mm (0.0189 in)	31438 80X00
0.52 mm (0.0205 in)	31438 80X01
0.56 mm (0.0220 in)	31438 80X02
0.60 mm (0.0236 in)	31438 80X03
0.64 mm (0.0252 in)	31438 80X04
0.68 mm (0.0268 in)	31438 80X05
0.72 mm (0.0283 in)	31438 80X06
0.76 mm (0.0299 in)	31438 80X07
0.80 mm (0.0315 in)	31438 80X08
0.84 mm (0.0331 in)	31438 80X09
0.88 mm (0.0346 in)	31438 80X10
0.92 mm (0.0362 in)	31438 80X11

CAUTION:
Up to 2 adjusting shims can be selected.

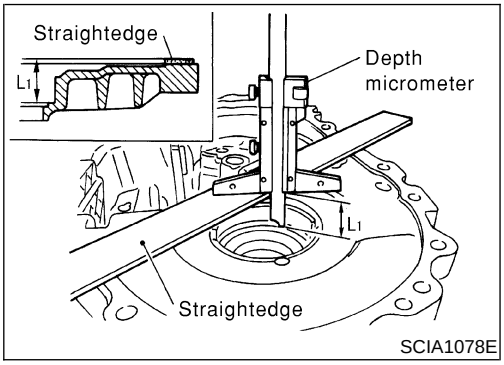

1. Using depth micrometer and straightedge, measure dimension “L_1” between clutch housing case end face and mounting face of adjusting shim.
2. Install outer race onto differential side bearing on final gear side. Holding lightly the outer race horizontally by hand, rotate final gear five times or more (for smooth movement of bearing roller).

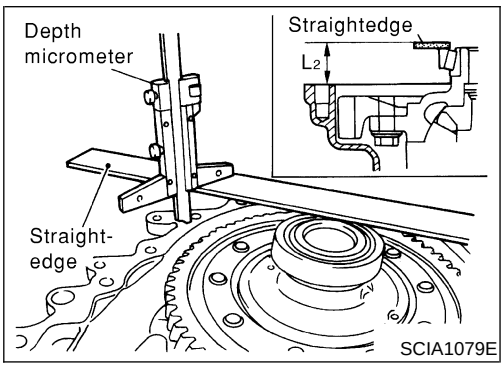

3. Using depth micrometer and straightedge as shown in the figure, measure dimension “L_2” between differential side bearing outer race and transaxle case end face.

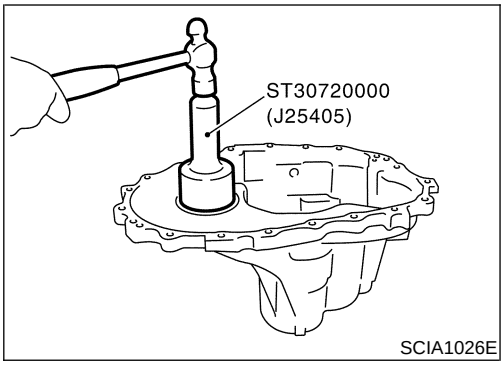

4. Install selected adjusting shim and then differential side bearing outer race.

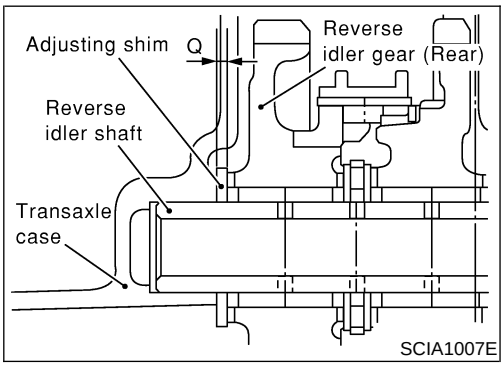

Reverse Idler Gear End Play

NFMT0022S04

- When adjusting reverse idler gear end play, select adjusting shim for reverse idler gear. To select adjusting shim, measure clearance between transaxle case and reverse idler gear.
- Calculate dimension "Q" (thickness of adjusting shim) using the following procedure to satisfy specification of end play for reverse idler gear.

End play: 0.04 - 0.10 mm (0.0016 - 0.0039 in)

Dimension "Q" = (Q_1 − Q_2) + End play

Q: Thickness of adjusting shim

Q_1: Distance between transaxle case end face and mounting face of adjusting shim

Q_2: Distance between clutch housing case end face and end face of reverse idler gear

Adjusting Shim

Shim thickness	Part number	Shim thickness	Part number	Shim thickness	Part number
1.76 mm (0.0693 in)	32237 8H800	2.08 mm (0.0819 in)	32237 8H808	2.40 mm (0.0945 in)	32237 8H816
1.80 mm (0.0709 in)	32237 8H801	2.12 mm (0.0835 in)	32237 8H809	2.44 mm (0.0961 in)	32237 8H817
1.84 mm (0.0724 in)	32237 8H802	2.16 mm (0.0850 in)	32237 8H810	2.48 mm (0.0976 in)	32237 8H818
1.88 mm (0.0740 in)	32237 8H803	2.20 mm (0.0866 in)	32237 8H811	2.52 mm (0.0992 in)	32237 8H819
1.92 mm (0.0756 in)	32237 8H804	2.24 mm (0.0882 in)	32237 8H812	2.56 mm (0.1008 in)	32237 8H820
1.96 mm (0.0772 in)	32237 8H805	2.28 mm (0.0898 in)	32237 8H813	2.60 mm (0.1024 in)	32237 8H821
2.00 mm (0.0787 in)	32237 8H806	2.32 mm (0.0913 in)	32237 8H814	2.64 mm (0.1039 in)	32237 8H822
2.04 mm (0.0803 in)	32237 8H807	2.36 mm (0.0929 in)	32237 8H815		

CAUTION:
Only 1 adjusting shim can be selected.

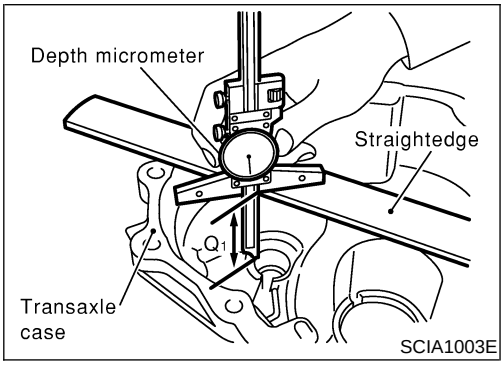

1. Using depth micrometer and straightedge, measure dimension "Q_1" between transaxle case end face and mounting face of adjusting shim.

Reverse Idler Gear End Play (Cont'd)

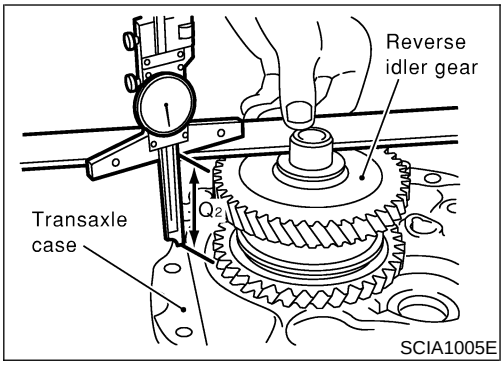

2. Using depth micrometer and straightedge as shown in the figure, measure dimension "Q_2" between clutch housing case end face and end face of reverse idler gear.
3. Install selected reverse idler gear adjusting shim onto reverse idler gear assembly.

ASSEMBLY

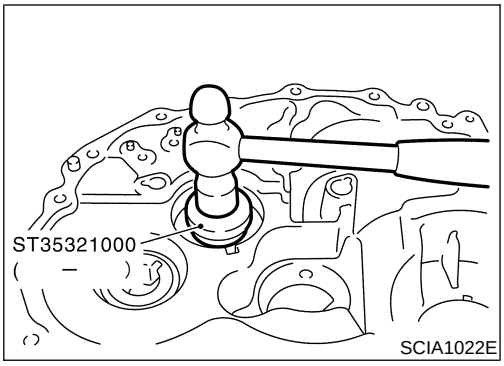

1. Using a drift, install input shaft oil seal from clutch housing end of side to the depth of 1.8 to 2.8 mm (0.071 to 0.110 in).

CAUTION:
Do not reuse oil seal.

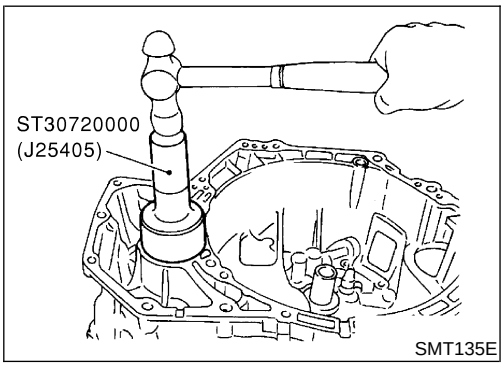

2. Using a drift, install differential oil seal until the face is flush with clutch housing.

CAUTION:
Do not reuse oil seal.

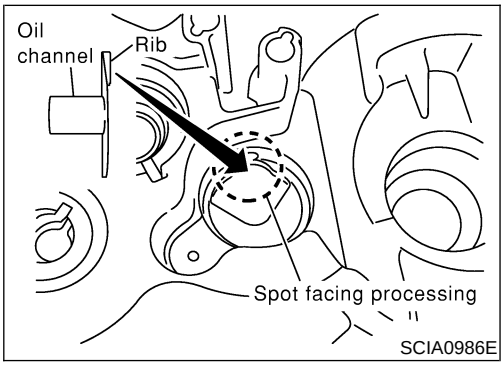

3. Install oil channel on mainshaft side.

CAUTION:
Be careful with orientation of installation.

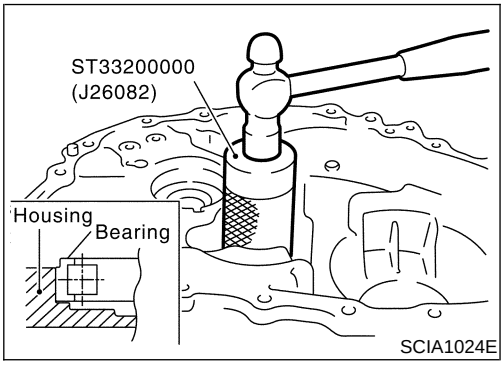

4. Using a drift, install mainshaft front bearing.

CAUTION:
Be careful with orientation of installation.

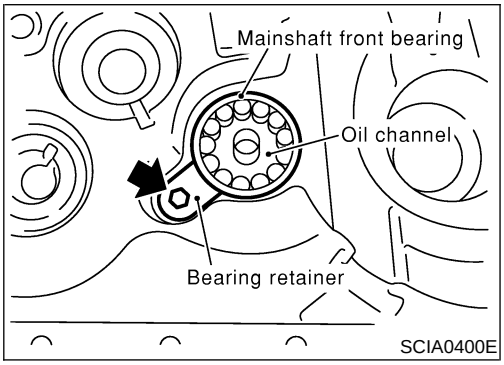

5. Install bearing retainer.

CAUTION:
Install with punched surface facing up.

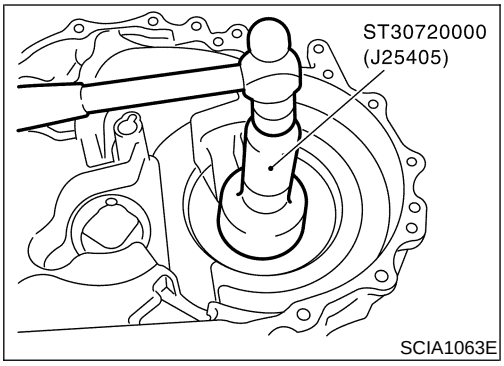

6. Install differential side bearing outer race.

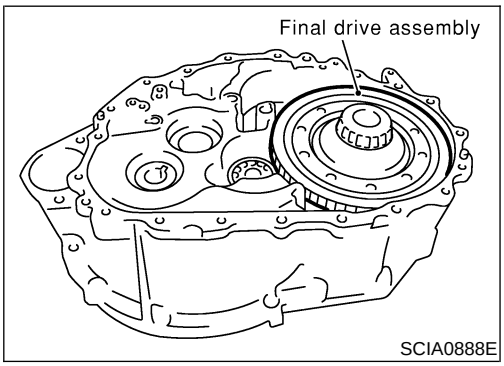

7. Install final drive assembly into clutch housing.

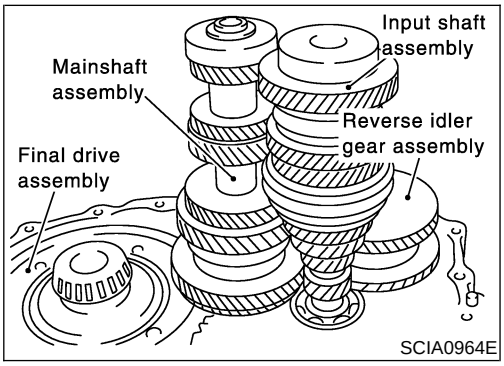

8. Install input shaft assembly, mainshaft assembly, and reverse idler gear assembly into clutch housing.

CAUTION:
Be sure not to damage input shaft oil seal.

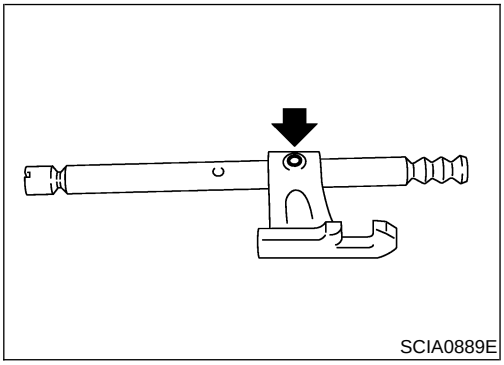

9. Install 1st-2nd fork rod bracket onto 1st-2nd fork rod, and then install retaining pin.

CAUTION:
Do not reuse retaining pin.

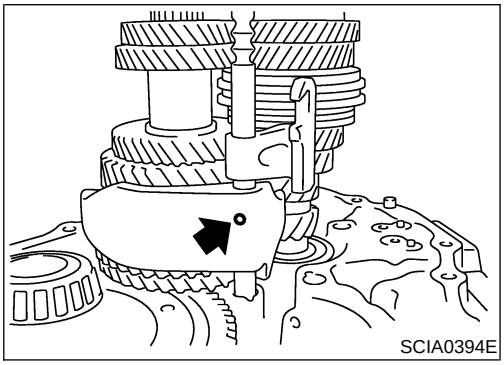

10. Install 1st-2nd fork rod and 1st-2nd shift fork, and then install retaining pin.

CAUTION:
Do not reuse retaining pin.

11. Install shift check sleeve.

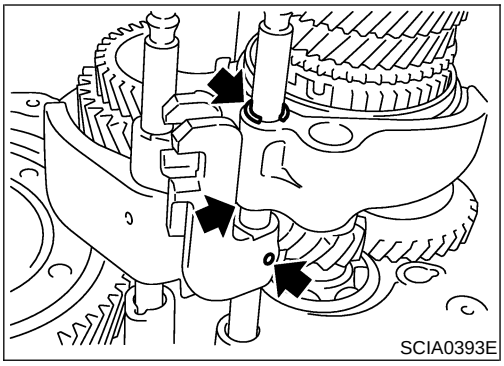

12. Install 3rd-4th bracket, 3rd-4th shift fork, and 3rd-4th fork rod with inter lock pin.
13. Install stopper ring onto 3rd-4th shift fork.

CAUTION:
Do not reuse stopper ring.

14. Install retaining pin onto 3rd-4th bracket.

CAUTION:
Do not reuse retaining pin.

15. Install 2 check balls.

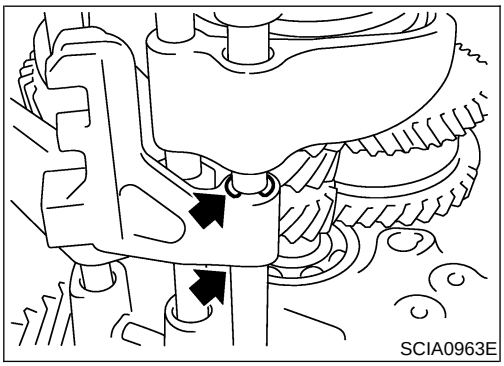

16. Install 5th-6th bracket, 5th-6th shift fork, and 5th-6th fork rod with inter lock pin.
17. Install stopper ring onto 5th-6th bracket.

CAUTION:
Do not reuse stopper ring.

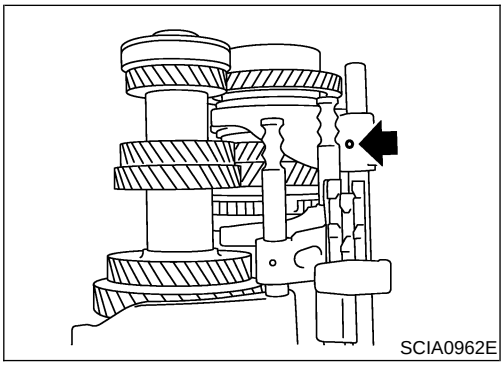

18. Install retaining pin onto 5th-6th shift fork.

CAUTION:
Do not reuse retaining pin.

19. Install 2 check balls.
20. Install check ball, 5th-6th shift check sleeve, 5th-6th check spring and 5th-6th check ball plug.

CAUTION:
- **Do not reuse check ball plug.**
- **Do not drop check ball.**

21. Install reverse bracket fork rod and reverse lever bracket.

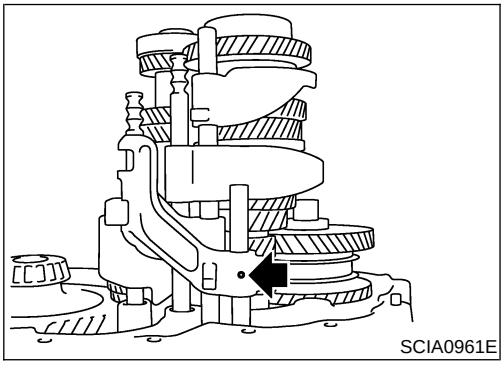

22. Install retaining pin onto reverse bracket.

CAUTION:
Do not reuse retaining pin.

23. Install reverse shift fork and reverse fork rod.
24. Install reverse lever assembly following procedures below.

a. Install shifter cap onto reverse lever assembly cam, and then install them onto reverse shift fork.

CAUTION:
Do not drop shifter cap.

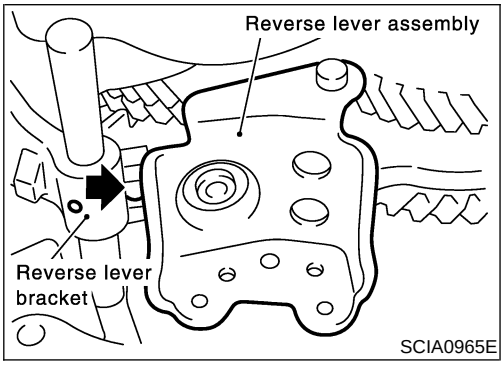

b. While lifting reverse shift fork, align cam with reverse bracket.

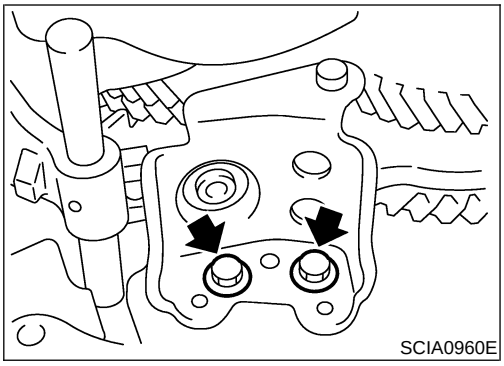

c. Tighten mounting bolts to specified torque, and then install reverse lever assembly.

25. Install check ball, reverse shift check sleeve, reverse check spring and reverse check ball plug.

CAUTION:

- **Do not reuse check ball plug.**
- **Do not drop check ball.**

26. Install the magnet onto clutch housing.

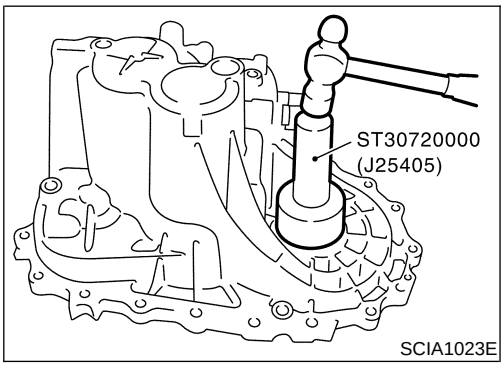

27. Using a drift, install differential oil seal until it is flush with end face of transaxle case.

CAUTION:

Do not reuse oil seal.

28. Install selected input shaft adjusting shim onto input shaft.

- For selection of adjusting shims. Refer to MT-46, “Input Shaft End Play”.

29. Install baffle plate and oil gutter.
30. Install transaxle case following procedures below.

a. Install selected mainshaft rear bearing adjusting shim into transaxle case.

- For selection of adjusting shims. Refer to MT-47, “Mainshaft End Play”.

b. Temporarily install snap ring of mainshaft rear bearing into transaxle case.

CAUTION:

Do not reuse the snap ring.

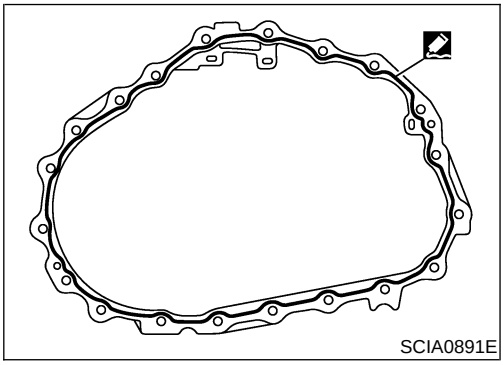

c. Apply Anaerobic Liquid Gasket (Refer to GI-51, “Recommended Chemical Products and Sealants”.) or equivalent to mating surfaces of transaxle case and clutch housing.

CAUTION:

Remove old sealant adhering to mounting surfaces. Also remove any moisture, oil, or foreign material adhering to application and mounting surfaces.

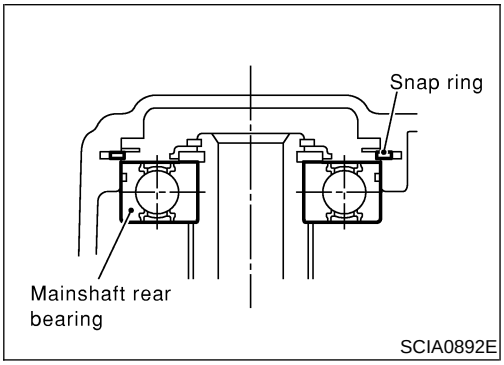

d. With snap ring of mainshaft rear bearing temporarily installed, place transaxle case over clutch housing.

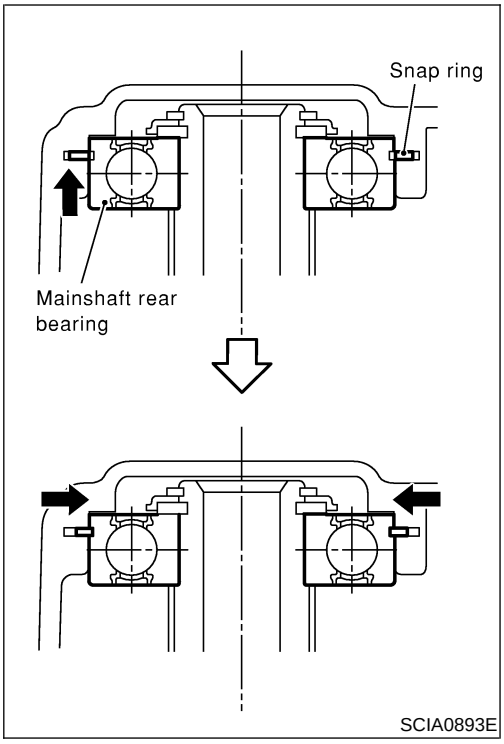

e. Through bore plug mounting hole, with snap ring stretched, and lift up mainshaft assembly from the control assembly mounting hole.

f. Securely install snap ring onto mainshaft rear bearing.

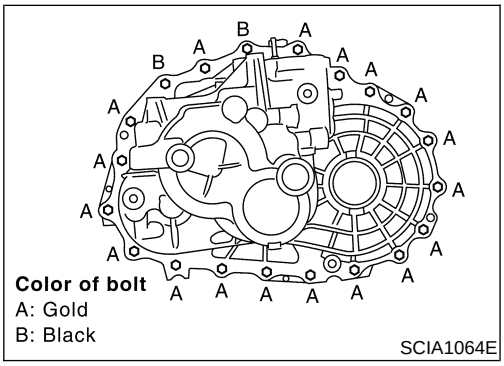

g. Tighten mounting bolts.

Bolt A:

: 50.0 - 53.9 N·m (5.1 - 5.4 kg-m, 37 - 39 ft-lb)

Bolt B:

: 63.0 - 66.9 N·m (6.5 - 6.8 kg-m, 47 - 49 ft-lb)

CAUTION:

Always replace bolts B as they are self-sealing bolts.

h. Install control assembly.

CAUTION:

Do not reuse the O-ring.

i. Install shift check and stopper bolt.

CAUTION:

Do not reuse shift check and stopper bolt.

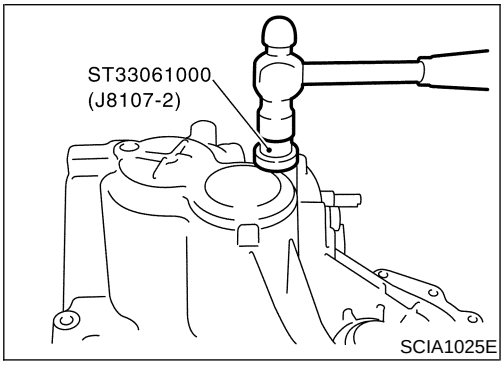

31. Using a drift, install bore plug.

CAUTION:

Do not reuse bore plug.

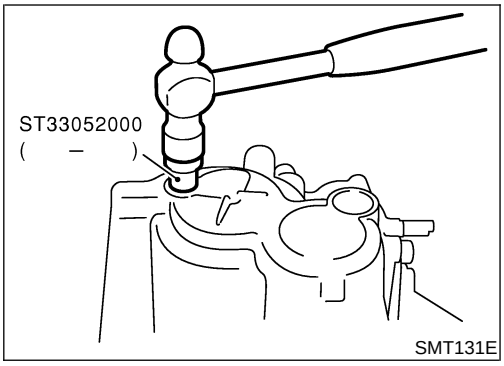

32. Using a drift, install welch plug.

CAUTION:

Do not reuse welch plug.

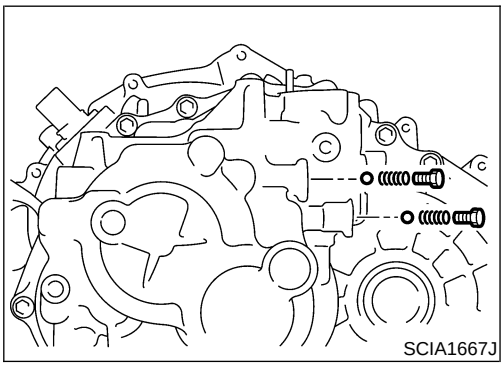

33. Install 2 check balls, 2 check springs, and 2 check ball plugs.

CAUTION:

Do not reuse check ball plug.

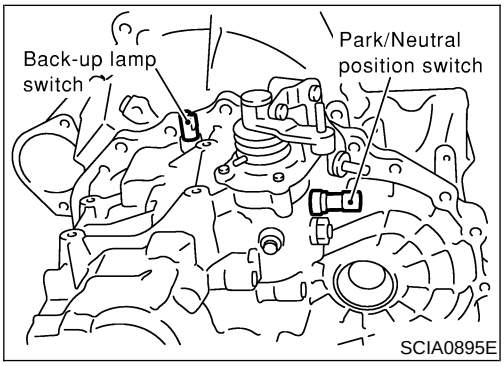

34. Apply Anaerobic Liquid Gasket (Refer to GI-51, “Recommended Chemical Products and Sealants”.) or equivalent to threads of neutral switch and reverse lamp switch. Then install them into transaxle case.
35. Install gaskets onto drain plug and filler plug, and then install them into transaxle case.

CAUTION:

- **Do not reuse gasket.**
- **After oil is filled, tighten filler plug to specified torque.**

General Specifications

NFMT0024

TRANSAXLE

NFMT0024S01

Engine			VQ35DE	
Transaxle model			RS6F51A	RS6F51H
Model code number			5Y764	5Y774
Number of speed			6	
Synchromesh type			Warner	
Shift pattern			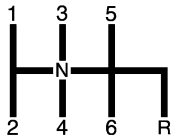 SCIA0955E	
Gear ratio	1st		3.153	
	2nd		1.944	
	3rd		1.392	
	4th		1.055	
	5th		0.809	
	6th		0.630	
	Reverse		3.002	
Number of teeth	Input gear	1st	13	
		2nd	18	
		3rd	28	
		4th	36	
		5th	42	
		6th	46	
		Reverse	13	
	Main gear	1st	41	
		2nd	35	
		3rd	39	
		4th	38	
		5th	34	
		6th	29	
		Reverse	38	
	Reverse idler gear	Front	37	
		Rear	38	
Oil capacity liter (US pt, Imp pt)			2.3 (4-7/8, 4)	
Remarks	Reverse synchronizer		Installed	
	Double baulk ring type synchronizer		1st & 2nd synchronizer	

FINAL GEAR

=NFMT0024S02

Engine		VQ35DE	
Transaxle model		RS6F51A	RS6F51H
Model code number		5Y764	5Y774
Final gear ratio		3.812	
Number of teeth	Final gear/Pinion	61/16	
	Side gear/Pinion mate gear	14/10	—

Gear End Play

NFMT0025

Unit: mm (in)

Gear	End play
1st main gear	0.20 - 0.30 (0.0079 - 0.0118)
2nd main gear	0.06 - 0.16 (0.0024 - 0.0063)
3rd input gear	0.18 - 0.31 (0.0071 - 0.0122)
4th input gear	0.20 - 0.30 (0.0079 - 0.0118)
5th input gear	0.06 - 0.16 (0.0024 - 0.0063)
6th input gear	0.06 - 0.16 (0.0024 - 0.0063)

Clearance Between Baulk Ring and Gear

NFMT0026

3RD, 4TH, 5TH, 6TH & REVERSE BAULK RING

NFMT0026S01

Unit: mm (in)

Standard		Wear limit
3rd	0.9 - 1.45 (0.0354 - 0.0571)	0.7 (0.0276)
4th	0.9 - 1.45 (0.0354 - 0.0571)	0.7 (0.0276)
5th	0.95 - 1.4 (0.0374 - 0.0551)	0.7 (0.0276)
6th	0.95 - 1.4 (0.0374 - 0.0551)	0.7 (0.0276)
Reverse	0.95 - 1.4 (0.0374 - 0.0551)	0.7 (0.0276)

1ST AND 2ND DOUBLE BAULK RING

NFMT0026S02

Unit: mm (in)

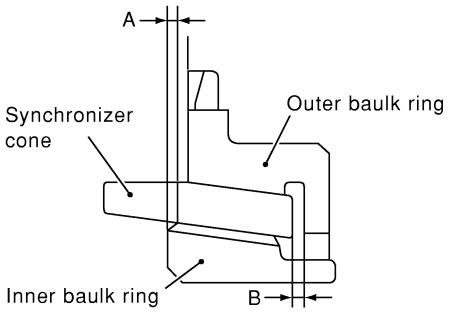

SMT138E

Dimension	Standard	Wear limit
A	0.6 - 0.8 (0.024 - 0.031)	0.2 (0.008)
B	0.6 - 1.1 (0.024 - 0.043)	0.2 (0.008)

Available Snap Rings

NFMT0027

6TH BUSHING

NFMT0027S01

End play		0 - 0.1 mm (0 - 0.004 in)	
Thickness mm (in)	Part number*	Thickness mm (in)	Part number*
1.76 (0.0693)	32204 8H511	2.01 (0.0791)	32204 8H516
1.81 (0.0713)	32204 8H512	2.06 (0.0811)	32204 8H517
1.86 (0.0732)	32204 8H513	2.11 (0.0831)	32204 8H518
1.91 (0.0752)	32204 8H514	2.16 (0.0850)	32204 8H519
1.96 (0.0772)	32204 8H515	2.21 (0.0870)	32204 8H520

*: Always check with the Parts Department for the latest parts information.

Available C-rings

NFMT0036

MAINSHAFT C-RING

NFMT0036S01

End play		0 - 0.06 mm (0 - 0.0024 in)	
Thickness mm (in)	Part number*	Thickness mm (in)	Part number*
2.535 (0.0998)	32348 8H800	2.835 (0.1116)	32348 8H810
2.565 (0.1010)	32348 8H801	2.865 (0.1128)	32348 8H811
2.595 (0.1022)	32348 8H802	2.895 (0.1140)	32348 8H812
2.625 (0.1033)	32348 8H803	2.925 (0.1152)	32348 8H813
2.655 (0.1045)	32348 8H804	2.955 (0.1163)	32348 8H814
2.685 (0.1057)	32348 8H805	2.985 (0.1175)	32348 8H815
2.715 (0.1069)	32348 8H806	3.015 (0.1187)	32348 8H816
2.745 (0.1081)	32348 8H807	3.045 (0.1199)	32348 8H817
2.775 (0.1093)	32348 8H808	3.075 (0.1211)	32348 8H818
2.805 (0.1104)	32348 8H809		

*: Always check with the Parts Department for the latest parts information.

Available Thrust Washer

NFMT0037

INPUT SHAFT THRUST WASHER

NFMT0037S01

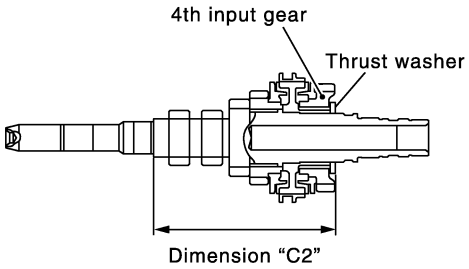

SCIA1008E

Standard length “C2”		154.7 - 154.8 mm (6.091 - 6.094 in)	
Thickness mm (in)	Part number*	Thickness mm (in)	Part number*
3.84 (0.1512)	32347 8H500	4.02 (0.1583)	32347 8H503
3.90 (0.1535)	32347 8H501	4.08 (0.1606)	32347 8H504
3.96 (0.1559)	32347 8H502	4.14 (0.1630)	32347 8H505

*: Always check with the Parts Department for the latest parts information.

DIFFERENTIAL SIDE GEAR THRUST WASHER —For RS6F51A Model—

NFMT0037S02

NFMT0037S0201

Allowable clearance between side gear and differential case with washer	0.1 - 0.2 mm (0.004 - 0.008 in)
Thickness mm (in)	Part number*
0.75 (0.0295)	38424 81X00
0.80 (0.0315)	38424 81X01
0.85 (0.0335)	38424 81X02
0.90 (0.0354)	38424 81X03
0.95 (0.0374)	38424 81X04

*: Always check with the Parts Department for the latest parts information.

Available Adjusting Shims

NFMT0038

MAINSHAFT ADJUSTING SHIM

NFMT0038S01

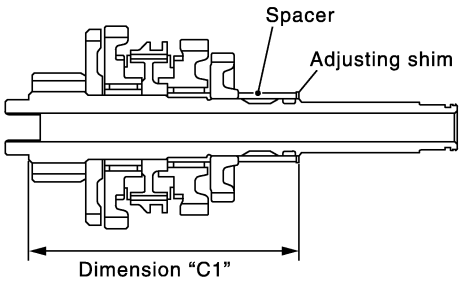

SCIA1009E

Standard length "C1"		173.85 - 173.95 mm (6.844 - 6.848 in)	
Thickness mm (in)	Part number*	Thickness mm (in)	Part number*
0.52 (0.0205)	32238 8H500	0.84 (0.0331)	32238 8H504
0.60 (0.0236)	32238 8H501	0.92 (0.0362)	32238 8H505
0.68 (0.0268)	32238 8H502	1.00 (0.0394)	32238 8H506
0.76 (0.0299)	32238 8H503	1.08 (0.0425)	32238 8H507

*: Always check with the Parts Department for the latest parts information.

INPUT SHAFT REAR BEARING ADJUSTING SHIM

NFMT0038S02

End play			0 - 0.06 mm (0 - 0.0024 in)		
Thickness mm (in)	Part number*	Thickness mm (in)	Part number*	Thickness mm (in)	Part number*
0.40 (0.0157)	32225 8H500	0.88 (0.0346)	32225 8H512	1.36 (0.0535)	32225 8H524
0.44 (0.0173)	32225 8H501	0.92 (0.0362)	32225 8H513	1.40 (0.0551)	32225 8H560
0.48 (0.0189)	32225 8H502	0.96 (0.0378)	32225 8H514	1.44 (0.0567)	32225 8H561
0.52 (0.0205)	32225 8H503	1.00 (0.0394)	32225 8H515	1.48 (0.0583)	32225 8H562
0.56 (0.0220)	32225 8H504	1.04 (0.0409)	32225 8H516	1.52 (0.0598)	32225 8H563
0.60 (0.0236)	32225 8H505	1.08 (0.0425)	32225 8H517	1.56 (0.0614)	32225 8H564
0.64 (0.0252)	32225 8H506	1.12 (0.0441)	32225 8H518	1.60 (0.0630)	32225 8H565
0.68 (0.0268)	32225 8H507	1.16 (0.0457)	32225 8H519	1.64 (0.0646)	32225 8H566
0.72 (0.0283)	32225 8H508	1.20 (0.0472)	32225 8H520		
0.76 (0.0299)	32225 8H509	1.24 (0.0488)	32225 8H521		
0.80 (0.0315)	32225 8H510	1.28 (0.0504)	32225 8H522		
0.84 (0.0331)	32225 8H511	1.32 (0.0520)	32225 8H523		

*: Always check with the Parts Department for the latest parts information.

MAINSHAFT REAR BEARING ADJUSTING SHIM

NFMT0038S03

End play		0 - 0.06 mm (0 - 0.0024 in)	
Thickness mm (in)	Part number*	Thickness mm (in)	Part number*
0.44 (0.0173)	32238 8H510	0.80 (0.0315)	32238 8H519
0.48 (0.0189)	32238 8H511	0.84 (0.0331)	32238 8H520
0.52 (0.0205)	32238 8H512	0.88 (0.0346)	32238 8H521
0.56 (0.0220)	32238 8H513	0.92 (0.0362)	32238 8H522
0.60 (0.0236)	32238 8H514	0.96 (0.0378)	32238 8H523
0.64 (0.0252)	32238 8H515	1.00 (0.0394)	32238 8H524
0.68 (0.0268)	32238 8H516	1.04 (0.0409)	32238 8H560
0.72 (0.0283)	32238 8H517	1.08 (0.0425)	32238 8H561
0.76 (0.0299)	32238 8H518		

*: Always check with the Parts Department for the latest parts information.

REVERSE IDLER GEAR ADJUSTING SHIM

NFMT0038S04

End play		0.04 - 0.10 mm (0.0016 - 0.0039 in)	
Thickness mm (in)	Part number*	Thickness mm (in)	Part number*
1.76 (0.0693)	32237 8H800	2.24 (0.0882)	32237 8H812
1.80 (0.0709)	32237 8H801	2.28 (0.0898)	32237 8H813
1.84 (0.0724)	32237 8H802	2.32 (0.0913)	32237 8H814
1.88 (0.0740)	32237 8H803	2.36 (0.0929)	32237 8H815
1.92 (0.0756)	32237 8H804	2.40 (0.0945)	32237 8H816
1.96 (0.0772)	32237 8H805	2.44 (0.0961)	32237 8H817
2.00 (0.0787)	32237 8H806	2.48 (0.0976)	32237 8H818
2.04 (0.0803)	32237 8H807	2.52 (0.0992)	32237 8H819
2.08 (0.0819)	32237 8H808	2.56 (0.1008)	32237 8H820
2.12 (0.0835)	32237 8H809	2.60 (0.1024)	32237 8H821
2.16 (0.0850)	32237 8H810	2.64 (0.1039)	32237 8H822
2.20 (0.0866)	32237 8H811		

*: Always check with the Parts Department for the latest parts information.

6TH MAIN GEAR ADJUSTING SHIM

NFMT0038S05

End play		0 - 0.1 mm (0 - 0.004 in)	
Thickness mm (in)	Part number*	Thickness mm (in)	Part number*
0.88 (0.0346)	32237 8H560	1.20 (0.0472)	32237 8H564
0.96 (0.0378)	32237 8H561	1.28 (0.0504)	32237 8H565
1.04 (0.0409)	32237 8H562	1.36 (0.0535)	32237 8H566
1.12 (0.0441)	32237 8H563		

*: Always check with the Parts Department for the latest parts information.

Available Shims — Differential Side Bearing Preload and Adjusting Shim

NFMT0039

BEARING PRELOAD

NFMT0039S01

Differential side bearing preload: L*	0.15 - 0.21 mm (0.0059 - 0.0083 in)

*: Install shims which are "deflection of differential case" + "L" in thickness.

Available Shims — Differential Side Bearing Preload and Adjusting Shim (Cont'd)

DIFFERENTIAL SIDE BEARING ADJUSTING SHIM(S)

NFMT0039S02

Thickness mm (in)	Part number*	Thickness mm (in)	Part number*
0.48 (0.0189)	31438 80X00	0.72 (0.0283)	31438 80X06
0.52 (0.0205)	31438 80X01	0.76 (0.0299)	31438 80X07
0.56 (0.0220)	31438 80X02	0.80 (0.0315)	31438 80X08
0.60 (0.0236)	31438 80X03	0.84 (0.0331)	31438 80X09
0.64 (0.0252)	31438 80X04	0.88 (0.0346)	31438 80X10
0.68 (0.0268)	31438 80X05	0.92 (0.0362)	31438 80X11

*: Always check with the Parts Department for the latest parts information.