SECTION CVT

CVT

CONTENTS

INDEX FOR DTC

PFP:00024

Alphabetical Index

UCS005D5

NOTE:
If DTC "U1000 CAN COMM CIRCUIT" is displayed with other DTCs, first perform the trouble diagnosis for "DTC U1000 CAN COMMUNICATION LINE". Refer to CVT-64 .

Items (CONSULT-II screen terms)	DTC		Reference page
	OBD-II	Except OBD-II	
	CONSULT-II GST*1	CONSULT-II only "TRANSMISSION"	
A/T TCC S/V FNCTN	P0744	P0744	CVT-105
ATF TEMP SEN/CIRC	P0710	P0710	CVT-80
BELT DAMG	—	P0730	CVT-98
BRAKE SW/CIRC	—	P0703	CVT-71
CAN COMM CIRCUIT	U1000	U1000	CVT-64
CVT SPD SEN/FNCTN	—	P1723	CVT-154
ENGINE SPEED SIG	—	P0725	CVT-96
ELEC TH CONTROL	—	P1726	CVT-156
ESTM VEH SPD SIG	—	P1722	CVT-152
INPUT SPD SEN/CIRC	P0715	P0715	CVT-85
L/PRESS CONTROL	—	P1745	CVT-163
L/PRESS SOL/CIRC	P0745	P0745	CVT-108
LU-SLCT SOL/CIRC	P1740	P1740	CVT-158
MANUAL MODE SWITCH	—	P0826	CVT-124
PNP SW/CIRC	P0705	P0705	CVT-73
PRESS SEN/FNCTN	—	P0841	CVT-134
PRS CNT SOL/A FCTN	P0746	P0746	CVT-113
PRS CNT SOL/B CIRC	P0778	P0778	CVT-119
PRS CNT SOL/B FCTN	P0776	P0776	CVT-116
SEC/PRESS DOWN	—	P0868	CVT-142
STARTER RELAY/CIRC	—	P0615	CVT-67
STEP MOTR CIRC	P1777	P1777	CVT-164
STEP MOTR/FNC	P1778	P1778	CVT-168
TCC SOLENOID/CIRC	P0740	P0740	CVT-100
TCM-POWER SUPPLY	—	P1701	CVT-145
TP SEN/CIRC A/T	—	P1705	CVT-150
TR PRS SENS/A CIRC	P0840	P0840	CVT-129
TR PRS SENS/B CIRC	P0845	P0845	CVT-137
VEH SPD SEN/CIR AT	P0720	P0720	CVT-90

*1: These numbers are prescribed by SAE J2012.

DTC No. Index

UCS005D6

NOTE:
If DTC "U1000 CAN COMM CIRCUIT" is displayed with other DTCs, first perform the trouble diagnosis for "DTC U1000 CAN COMMUNICATION LINE". Refer to CVT-64 .

DTC		Items (CONSULT-II screen terms)	Reference page
OBD-II	Except OBD-II		
CONSULT-II GST*1	CONSULT-II only "TRANSMISSION"		
—	P0615	STARTER RELAY/CIRC	CVT-67
—	P0703	BRAKE SW/CIRC	CVT-71
P0705	P0705	PNP SW/CIRC	CVT-73
P0710	P0710	ATF TEMP SEN/CIRC	CVT-80
P0715	P0715	INPUT SPD SEN/CIRC	CVT-85
P0720	P0720	VEH SPD SEN/CIR AT	CVT-90
—	P0725	ENGINE SPEED SIG	CVT-96
—	P0730	BELT DAMG	CVT-98
P0740	P0740	TCC SOLENOID/CIRC	CVT-100
P0744	P0744	A/T TCC S/V FNCTN	CVT-105
P0745	P0745	L/PRESS SOL/CIRC	CVT-108
P0746	P0746	PRS CNT SOL/A FCTN	CVT-113
P0776	P0776	PRS CNT SOL/B FCTN	CVT-116
P0778	P0778	PRS CNT SOL/B CIRC	CVT-119
—	P0826	MANUAL MODE SWITCH	CVT-124
P0840	P0840	TR PRS SENS/A CIRC	CVT-129
—	P0841	PRESS SEN/FNCTN	CVT-134
P0845	P0845	TR PRS SENS/B CIRC	CVT-137
—	P0868	SEC/PRESS DOWN	CVT-142
—	P1701	TCM-POWER SUPPLY	CVT-145
—	P1705	TP SEN/CIRC A/T	CVT-150
—	P1722	ESTM VEH SPD SIG	CVT-152
—	P1723	CVT SPD SEN/FNCTN	CVT-154
—	P1726	ELEC TH CONTROL	CVT-156
P1740	P1740	LU-SLCT SOL/CIRC	CVT-158
—	P1745	L/PRESS CONTROL	CVT-163
P1777	P1777	STEP MOTR CIRC	CVT-164
P1778	P1778	STEP MOTR/FNC	CVT-168
U1000	U1000	CAN COMM CIRCUIT	CVT-64

*1: These numbers are prescribed by SAE J2012.

PRECAUTIONS

PFP:00001

Precautions for Supplemental Restraint System (SRS) “AIR BAG” and “SEAT BELT PRE-TENSIONER”

UCS005D7

The Supplemental Restraint System such as “AIR BAG” and “SEAT BELT PRE-TENSIONER”, used along with a front seat belt, helps to reduce the risk or severity of injury to the driver and front passenger for certain types of collision. This system includes seat belt switch inputs and dual stage front air bag modules. The SRS system uses the seat belt switches to determine the front air bag deployment, and may only deploy one front air bag, depending on the severity of a collision and whether the front occupants are belted or unbelted.
Information necessary to service the system safely is included in the SRS and SB section of this Service Manual.

WARNING:

- **To avoid rendering the SRS inoperative, which could increase the risk of personal injury or death in the event of a collision which would result in air bag inflation, all maintenance must be performed by an authorized NISSAN/INFINITI dealer.**
- **Improper maintenance, including incorrect removal and installation of the SRS, can lead to personal injury caused by unintentional activation of the system. For removal of Spiral Cable and Air Bag Module, see the SRS section.**
- **Do not use electrical test equipment on any circuit related to the SRS unless instructed to in this Service Manual. SRS wiring harnesses can be identified by yellow and/or orange harnesses or harness connectors.**

Precautions for On Board Diagnostic (OBD) System of CVT and Engine

UCS005DA

The ECM has an on board diagnostic system. It will light up the malfunction indicator lamp (MIL) to warn the driver of a malfunction causing emission deterioration.

CAUTION:

- **Be sure to turn the ignition switch OFF and disconnect the battery cable from the negative terminal before any repair or inspection work. The open/short circuit of related switches, sensors, solenoid valves, etc. will cause the MIL to light up.**
- **Be sure to connect and lock the connectors securely after work. A loose (unlocked) connector will cause the MIL to light up due to an open circuit. (Be sure the connector is free from water, grease, dirt, bent terminals, etc.)**
- **Be sure to route and secure the harnesses properly after work. Interference of the harness with a bracket, etc. may cause the MIL to light up due to a short circuit.**
- **Be sure to connect rubber tubes properly after work. A misconnected or disconnected rubber tube may cause the MIL to light up due to a malfunction of the EVAP system or fuel injection system, etc.**
- **Be sure to erase the unnecessary malfunction information (repairs completed) from the TCM and ECM before returning the vehicle to the customer.**

Precautions for TCM and CVT Assembly Replacement

UCS005DB

When replacing CVT assembly or TCM, refer to the pattern table below and erase the EEPROM in the TCM if necessary.

CAUTION:

- **Check if new data (Unit ID) are entered correctly after replacing CVT assembly and erasing data in TCM. (Connect CONSULT-II, and then turn ignition switch OFF.)**
- **“TCM POWER SUPPLY [P1701]” may be indicated soon after replacing TCM or CVT assembly (after erasing the memory). Restart the self-diagnosis after erasing the self-diagnosis result. Check that no error is detected.**

EEPROM ERASING PATTERNS

CVT assembly	TCM	Erasing EEPROM in TCM	Remarks
Replaced	Replaced	Not required	Not required because the EEPROM in the TCM is in the default state. (CVT assembly must be replaced first.)
Not replaced	Replaced	Not required	Not required because the EEPROM in the TCM is in the default state.
Replaced	Not replaced	Required	Required because data has been written in the EEPROM in the TCM and because the TCM cannot write data from the ROM assembly in the transmission.

METHOD FOR ERASING THE EEPROM IN THE TCM

1. Connect CONSULT-II to data link connector. Refer to GI-37, "CONSULT-II Start Procedure" .
2. Turn ignition switch ON. Confirm that CONSULT-II is turned ON.
3. Move selector lever to “R” position.
4. Touch “START (NISSAN BASED VHCL)” on CONSULT-II.
5. Select “SELF-DIAG RESULTS” mode for “TRANSMISSION” with CONSULT-II.
6. Press the brake pedal and turn the brake switch ON.
7. Press the accelerator pedal (0.5/8 - 4/8 throttle) not to exceed the half, and hold it in the half or less open position. (This will set the closed throttle position signal to OFF and the wide open throttle position signal to OFF.)
8. Touch “ERASE” on CONSULT-II, and then touch “YES”.
9. Wait 3 seconds and then release the accelerator pedal.
10. Turn ignition switch OFF.

METHOD FOR WRITING DATA FROM THE ROM ASSEMBLY IN THE TRANSAXLE

In the following procedure, the TCM reads data from the ROM assembly and writes it to the EEPROM in the TCM.

1. Erase the EEPROM in the TCM.
2. Move selector lever to “P” position.
3. Turn ignition switch ON.

CHECK METHOD

- Standard: About 2 seconds after the ignition switch ON, the CVT indicator lamp lights up for 2 seconds.
- Non-standard: Even after the ignition switch ON, the CVT indicator lamp does not light up after 2 seconds or illuminates immediately.

  CAUTION:
  Perform in the “P” or “N” position.

Action for Non-standard

- Replace the CVT assembly.
- Replace the TCM.

Removal and Installation Procedure for CVT Unit Connector

UCS005DC

REMOVAL

Rotate bayonet ring counterclockwise, pull out CVT unit harness connector upward to disconnect it.

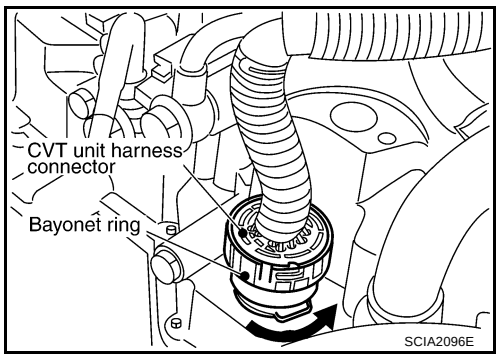

INSTALLATION

1. Align CVT unit harness connector terminal body marking with bayonet ring marking, insert CVT unit harness connector, and then rotate bayonet ring clockwise.

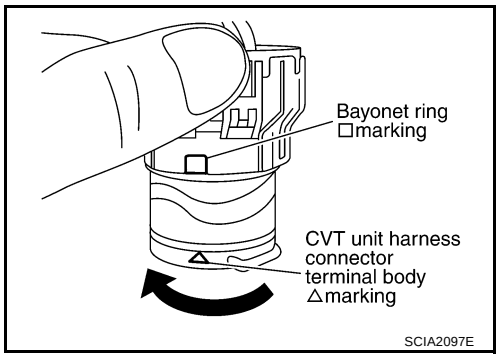

2. Rotate bayonet ring clockwise until CVT unit harness connector terminal body marking is aligned with the bayonet ring marking (linear slit) as shown

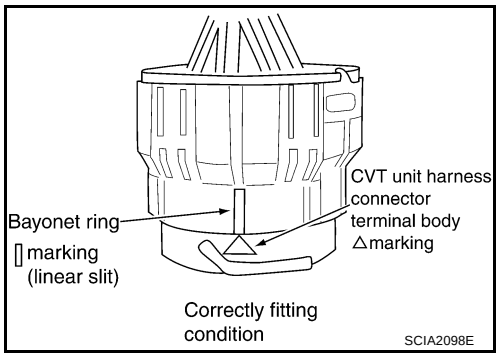

CAUTION:

- **Securely align CVT unit harness connector terminal body marking with bayonet ring marking (linear slit). Do not make a half fit condition as shown.**
- **Do not mistake the bayonet ring marking (linear slit) for other dent portion.**

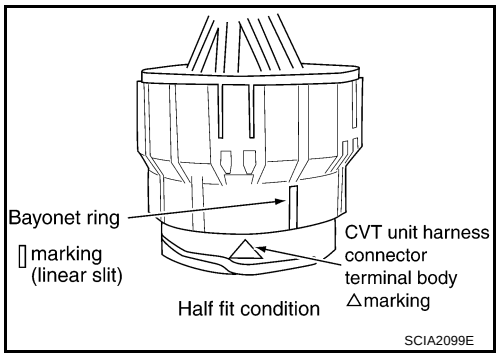

Precautions

UCS005DD

NOTE:

If any malfunction occurs in the RE0F09B model transaxle, replace the entire transaxle assembly.

- **Before connecting or disconnecting the TCM harness connector, turn ignition switch OFF and disconnect the battery cable from the negative terminal. Because battery voltage is applied to TCM even if ignition switch is turned OFF.**

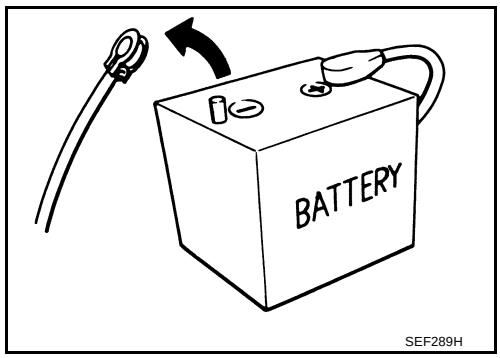

- **When connecting or disconnecting pin connectors into or from TCM, take care not to damage pin terminals (bend or break).**
  When connecting pin connectors make sure that there are not any bends or breaks on TCM pin terminal.

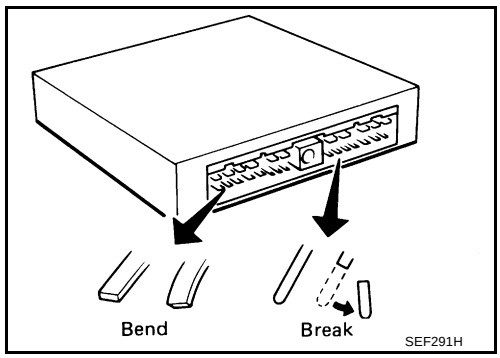

- **Before replacing TCM, perform TCM input/output signal inspection and make sure whether TCM functions properly or not.** **CVT-50, "TCM INSPECTION TABLE"**.

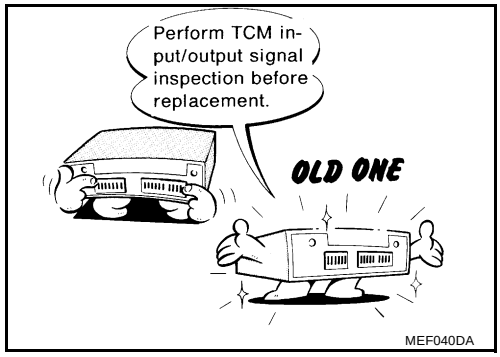

- **After performing each TROUBLE DIAGNOSIS, perform "DTC Confirmation Procedure".**
  If the repair is completed the DTC should not be displayed in the "DTC Confirmation Procedure".
- Always use the specified brand of CVT fluid. Refer to MA-9, "Fluids and Lubricants" .
- Use lint-free paper, not cloth rags, during work.
- After replacing the CVT fluid, dispose of the waste oil using the methods prescribed by law, ordinance, etc.

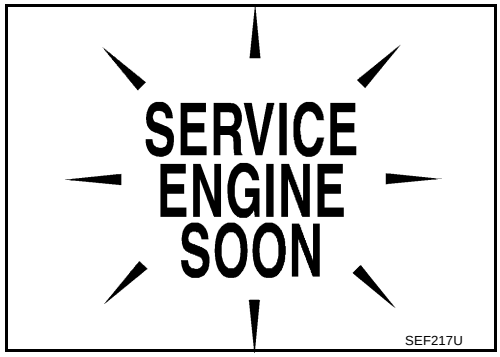

Service Notice or Precautions

UCS005DE

CVT FLUID COOLER SERVICE

If CVT fluid contains friction material (clutches, brakes, etc.), or if an CVT is replaced, inspect and clean the CVT fluid cooler mounted in the radiator or replace the radiator. Flush cooler lines using cleaning solvent and compressed air after repair. For CVT fluid cooler cleaning procedure, refer to CVT-16, "CVT Fluid Cooler Cleaning" . For radiator replacement, refer to CO-13, "RADIATOR" .

OBD-II SELF-DIAGNOSIS

- CVT self-diagnosis is performed by the TCM in combination with the ECM. The results can be read through the blinking pattern of the malfunction indicator lamp (MIL). Refer to the table on CVT-57, "Display Items List" for the indicator used to display each self-diagnostic result.

- The self-diagnostic results indicated by the MIL are automatically stored in both the ECM and TCM memories.
  Always perform the procedure on CVT-30, "HOW TO ERASE DTC" to complete the repair and avoid unnecessary blinking of the MIL.

For details of OBD-II, refer to EC-48, "ON BOARD DIAGNOSTIC (OBD) SYSTEM" .

- **Certain systems and components, especially those related to OBD, may use the new style slide-locking type harness connector. For description and how to disconnect, refer to PG-70, "HARNESS CONNECTOR" .**

PREPARATION

PFP:00002

Special Service Tools

UCS005DF

The actual shapes of Kent-Moore tools may differ from those of special service tools illustrated here.

Tool number (Kent-Moore No.) Tool name		Description
— (OTC3492) Oil pressure gauge set	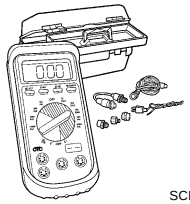 SCIA7531E	Measuring line pressure
— (J-47244) Drift a: 65.83 mm (2.59 in) dia. b: 53.85 mm (2.12 in) dia.	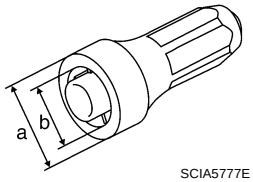 SCIA5777E	Installing differential side oil seal ● Transaxle case side (left)
ST33400001 (J-47005) Drift a: 69.85 mm (2.75 in) dia. b: 49.53 mm (1.95 in) dia.	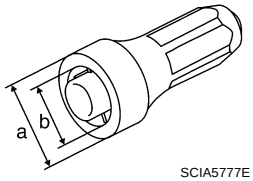 SCIA5777E	Installing differential side oil seal ● Converter housing side (right)

Commercial Service Tools

UCS005DG

Tool number Tool name	Description
31197CA000 Drive plate location guide a: 14 mm (0.55 in) dia. 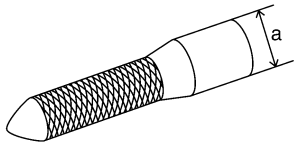 SCIA2013E	Installing transaxle assembly
Power tool 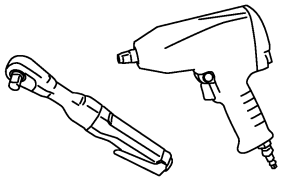 PBIC0190E	Loosening nuts and bolts

CVT FLUID

PFP:KLE50

Checking CVT Fluid

UCS005DH

FLUID LEVEL CHECK

Fluid level should be checked with the fluid warmed up to 50° – 80°C (122° – 176°F).

1. Check for fluid leakage.
2. With the engine warmed up, drive the vehicle to warm up the CVT fluid. When ambient temperature is 20°C (68°F), it takes about 10 minutes for the CVT fluid to warm up to 50° – 80°C (122° – 176°F).
3. Park the vehicle on a level surface and set the parking brake.
4. With engine at idle, while depressing brake pedal, move the selector lever throughout the entire shift range and return it to the “P” position.

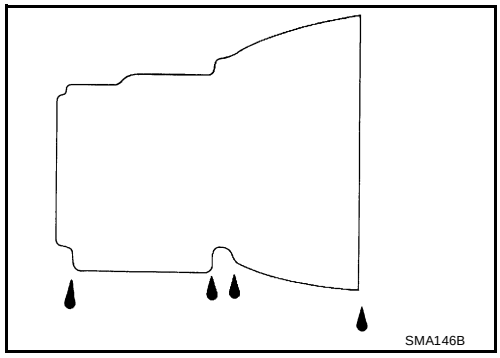

5. Press the tab on the CVT fluid level gauge to release the lock and pull out the CVT fluid level gauge from the CVT fluid charging pipe.

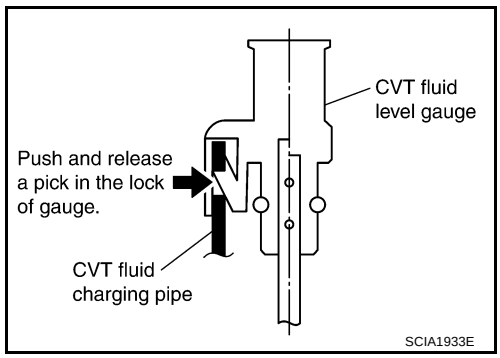

6. Wipe fluid off the CVT fluid level gauge. Then rotate the CVT fluid level gauge 180° and re-insert it into the CVT charging pipe as far as it will go.

   CAUTION:
   Always use lint free paper towels to wipe fluid off the CVT fluid level gauge.

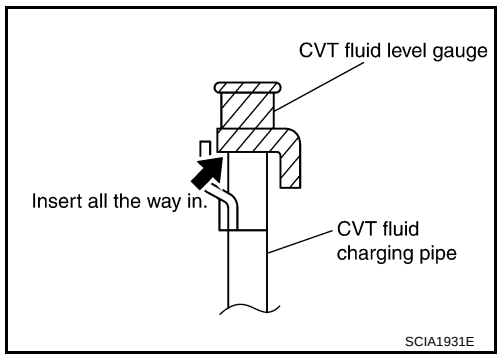

7. Remove the CVT fluid level gauge and check that the fluid level is within the specified range as shown. If the fluid level is at or below the low side of the range, add the necessary specified NISSAN CVT fluid through the CVT charging pipe.

   Fluid grade: **Refer to** **MA-9, "Fluids and Lubricants"** **.**

   CAUTION:
   - **Only use specified NISSAN CVT fluid.**
   - **Do not overfill the CVT.**

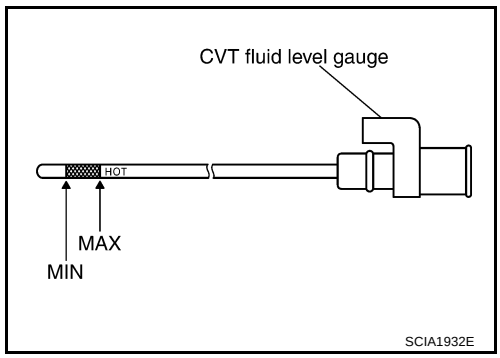

8. Install the CVT fluid level gauge to the CVT fluid charging pipe until it locks.

   CAUTION:
   When CVT fluid level gauge is installed into the CVT fluid charging pipe, make sure that the CVT fluid level gauge is securely locked in place.

FLUID CONDITION CHECK

Fluid status	Conceivable cause	Required operation
Varnished (viscous varnish state)	Clutch, brake scorched	Replace the CVT fluid and check the CVT main unit and the vehicle for malfunctions (wire harness, cooler pipes, etc.)
Milky white or cloudy	Water in the fluid	Replace the CVT fluid and check for places where water is getting in.
Large amount of metal powder mixed in fluid	Unusual wear of sliding parts within CVT	Replace the CVT fluid and check for improper operation of the CVT.

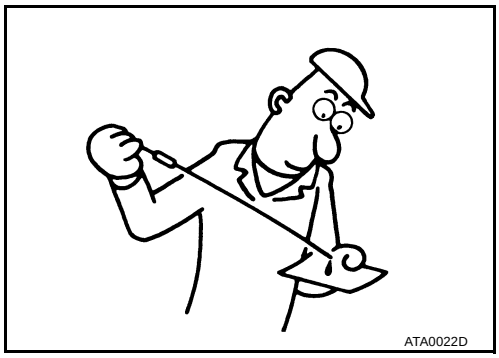

Changing CVT Fluid

UCS005DI

1. Warm up CVT fluid by driving the vehicle for 10 minutes.
2. Drain CVT fluid from CVT fluid cooler hose (return side) and refill with new specified NISSAN CVT fluid in the CVT fluid charging pipe with the engine running at idle speed.

   Fluid capacity and grade : Refer to MA-9, "Fluids and Lubricants" .

   CAUTION:
   Only use the specified NISSAN CVT fluid.
3. Refill until new CVT fluid comes out from CVT fluid cooler hose (return side).

   NOTE:
   About 30 - 50% extra fluid will be required for this procedure.
4. Check fluid level and condition. Refer to CVT-15, "Checking CVT Fluid" .

   CAUTION:
   Delete CVT fluid deterioration date with CONSULT-II after changing CVT fluid. Refer to CVT-56, "Check CVT Fluid Deterioration Date" .

CVT Fluid Cooler Cleaning

UCS005DJ

Whenever a CVT is repaired, overhauled, or replaced, the CVT fluid cooler mounted in the radiator must be inspected and cleaned.
Metal debris and friction material, if present, can be trapped or become deposit in the CVT fluid cooler. This debris can contaminate the newly serviced CVT or, in severe cases, can block or restrict the flow of CVT fluid. In either case, malfunction of the newly serviced CVT may occur.
Debris, if present, may deposit as CVT fluid enters the cooler inlet. It will be necessary to back flush the cooler through the cooler outlet in order to flush out any built up debris.

CVT FLUID COOLER CLEANING PROCEDURE

1. Identify the CVT inlet and outlet fluid cooler hoses.
2. Position an oil pan under the inlet and outlet cooler hoses.
3. Disconnect the fluid cooler inlet and outlet rubber hoses from the steel cooler tubes.

   NOTE:
   Replace the cooler hoses if rubber material from the hose remains on the tube fitting.
4. Allow any CVT fluid that remains in the cooler hoses to drain into the oil pan.

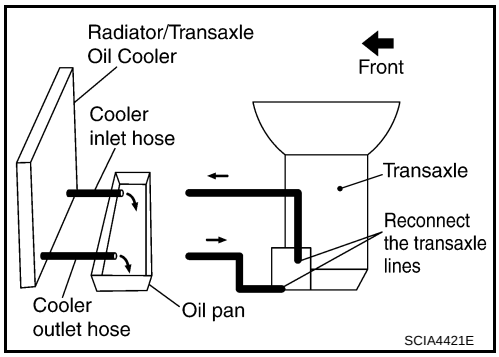

5. Insert the extension adapter hose of a can of Transmission Cooler Cleaner (Nissan P/N 999MP-AM006) into the cooler outlet hose.

CAUTION:

- **Wear safety glasses and rubber gloves when spraying the Transmission Cooler Cleaner.**
- **Spray Transmission Cooler Cleaner only with adequate ventilation.**
- **Avoid contact with eyes and skin.**
- **Do not breath vapors or spray mist.**

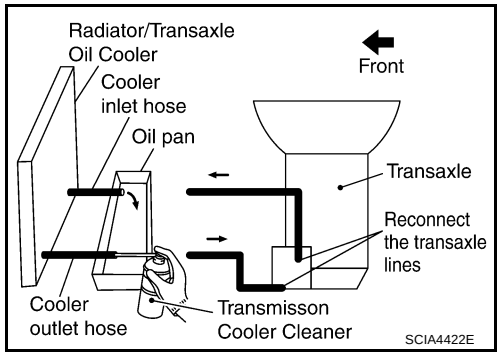

6. Hold the hose and can as high as possible and spray Transmission Cooler Cleaner in a continuous stream into the cooler outlet hose until CVT fluid flows out of the cooler inlet hose for 5 seconds.
7. Insert the tip of an air gun into the end of the cooler outlet hose.
8. Wrap a shop rag around the air gun tip and of the cooler outlet hose.
9. Blow compressed air regulated to 5 – 9 kg/cm^2 (70 – 130 psi) through the cooler outlet hose for 10 seconds to force out any remaining CVT fluid.
10. Repeat steps 5 through 9 three additional times.
11. Position an oil pan under the banjo bolts that connect the CVT fluid cooler steel lines to the transaxle.
12. Remove the banjo bolts.

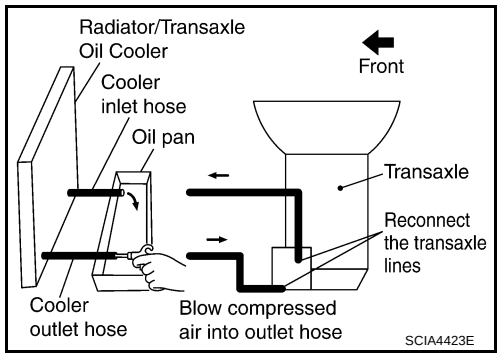

13. Flush each steel line from the cooler side back toward the transaxle by spraying Transmission Cooler Cleaner in a continuous stream for 5 seconds.
14. Blow compressed air regulated to 5 – 9 kg/cm^2 (70 – 130 psi) through each steel line from the cooler side back toward the transaxle for 10 seconds to force out any remaining CVT fluid.
15. Ensure all debris is removed from the steel cooler lines.
16. Ensure all debris is removed from the banjo bolts and fittings.
17. Perform CVT-18, "CVT FLUID COOLER DIAGNOSIS PROCEDURE" .

CVT FLUID COOLER DIAGNOSIS PROCEDURE

NOTE:

Insufficient cleaning of the cooler inlet hose exterior may lead to inaccurate debris identification.

1. Position an oil pan under the transaxle's inlet and outlet cooler hoses.
2. Clean the exterior and tip of the cooler inlet hose.
3. Insert the extension adapter hose of a can of Transmission Cooler Cleaner (Nissan P/N 999MP-AM006) into the cooler outlet hose.

   CAUTION:
   - **Wear safety glasses and rubber gloves when spraying the Transmission Cooler Cleaner.**
   - **Spray Transmission Cooler Cleaner only with adequate ventilation.**
   - **Avoid contact with eyes and skin.**
   - **Do not breath vapors or spray mist.**

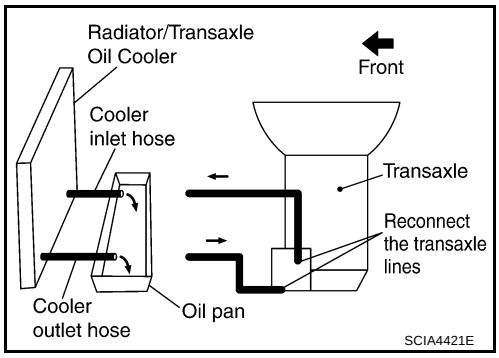

4. Hold the hose and can as high as possible and spray Transmission Cooler Cleaner in a continuous stream into the cooler outlet hose until CVT fluid flows out of the cooler inlet hose for 5 seconds.
5. Tie a common white, basket-type coffee filter to the end of the cooler inlet hose.

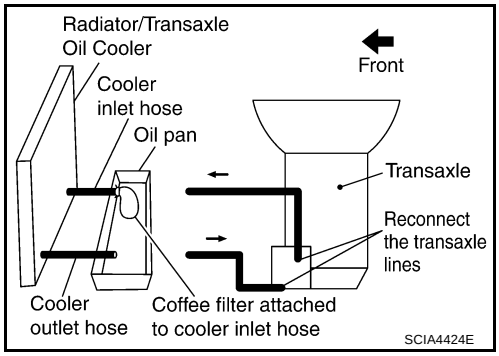

6. Insert the tip of an air gun into the end of the cooler outlet hose.
7. Wrap a shop rag around the air gun tip and end of cooler outlet hose.
8. Blow compressed air regulated to 5 – 9 kg/cm^2 (70 – 130 psi) through the cooler outlet hose to force any remaining CVT fluid into the coffee filter.
9. Remove the coffee filter from the end of the cooler inlet hose.
10. Perform CVT-19, "CVT FLUID COOLER INSPECTION PROCEDURE" .

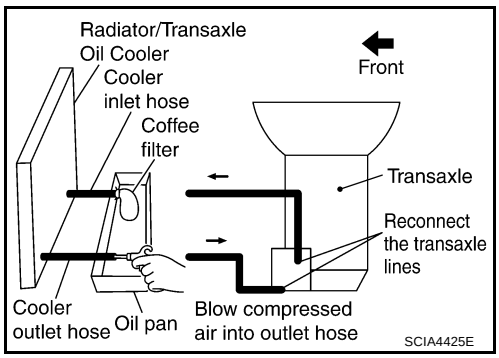

CVT FLUID COOLER INSPECTION PROCEDURE

1. Inspect the coffee filter for debris.

a. If small metal debris less than 1 mm (0.040 in) in size or metal powder is found in the coffee filter, this is normal. If normal debris is found, the CVT fluid cooler/radiator can be re-used and the procedure is ended.

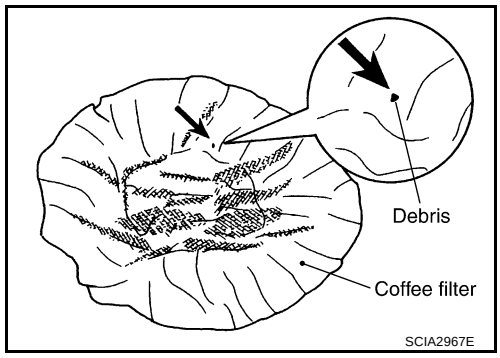

b. If one or more pieces of debris are found that are over 1 mm (0.040 in) in size and/or peeled clutch facing material is found in the coffee filter, the fluid cooler is not serviceable. The radiator/ fluid cooler must be replaced and the inspection procedure is ended.

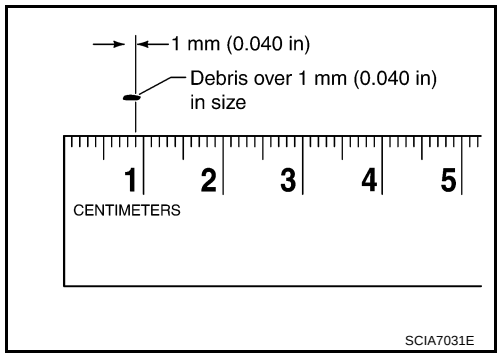

CVT FLUID COOLER FINAL INSPECTION

After performing all procedures, ensure that all remaining oil is cleaned from all components.

CVT SYSTEM

PFP:31036

Cross-sectional View - RE0F09B

UCS005DK

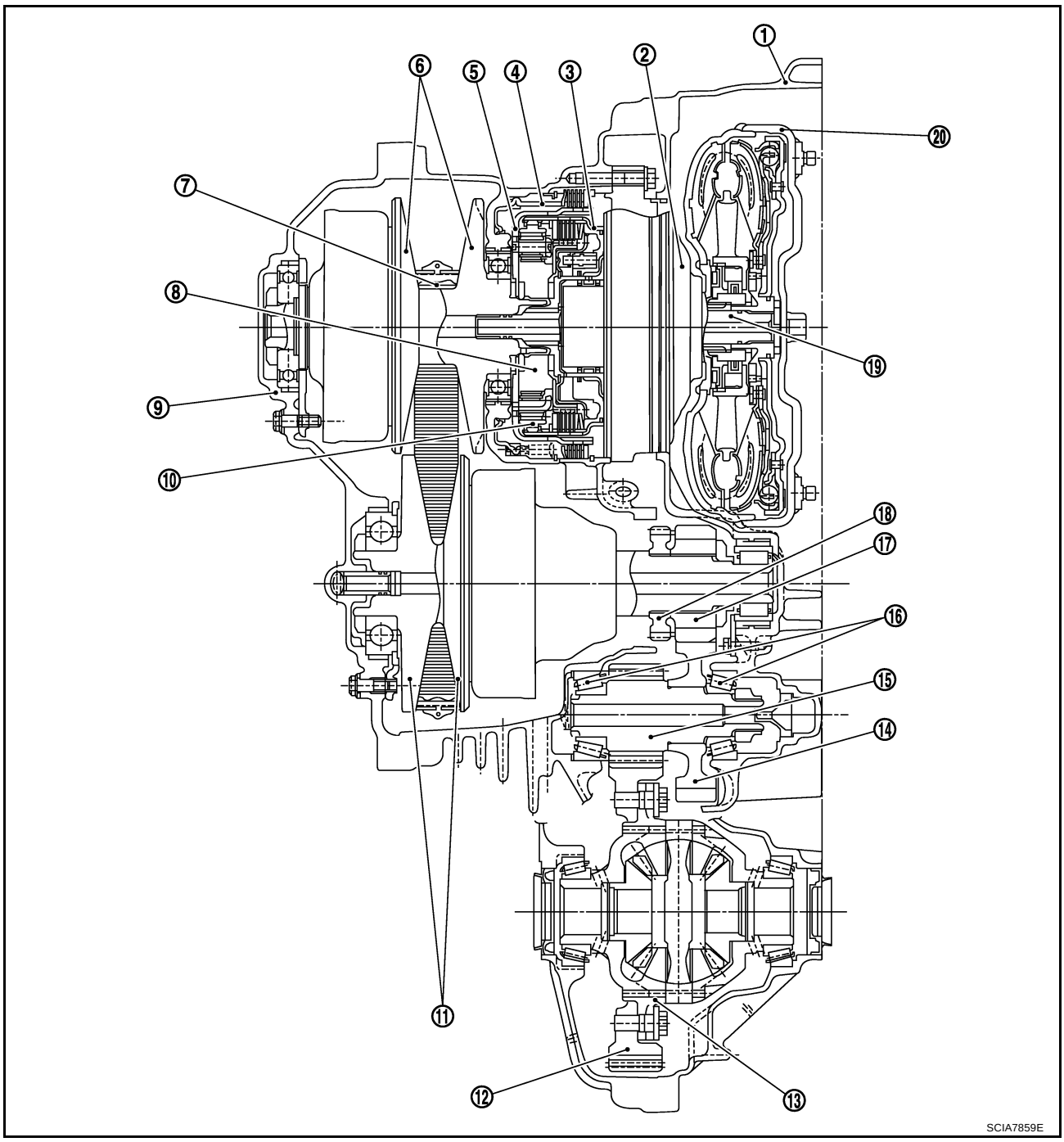

1. Converter housing	2. Oil pump	3. Forward clutch
4. Reverse brake	5. Planetary carrier	6. Primary pulley
7. Steel belt	8. Sun gear	9. Side cover
10. Internal gear	11. Secondary pulley	12. Final gear
13. Differential case	14. Idler gear	15. Reduction gear
16. Taper roller bearing	17. Output gear	18. Parking gear
19. Input shaft	20. Torque converter	

Control System

UCS005DL

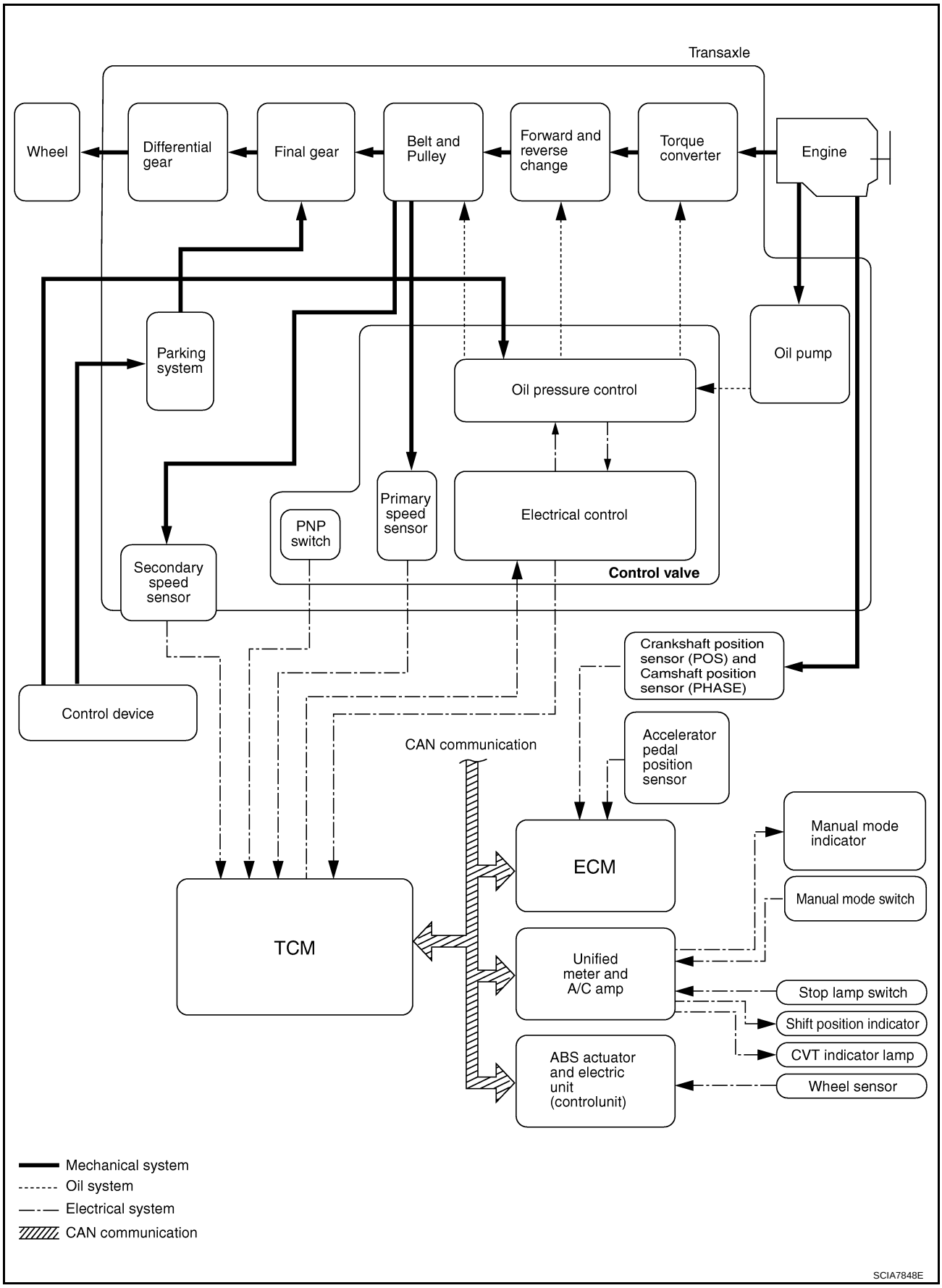

Hydraulic Control System

UCS005DM

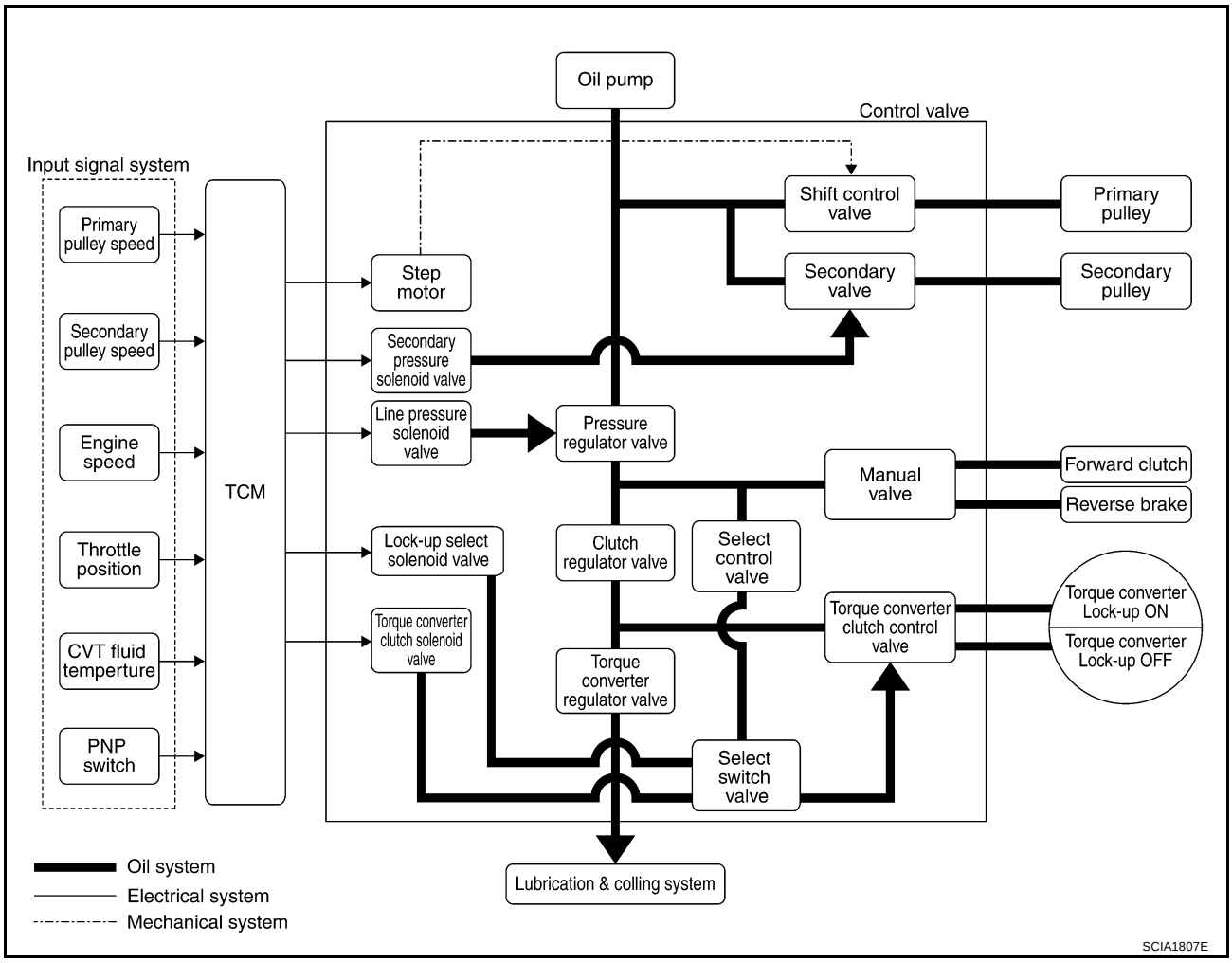

TCM Function

UCS005DN

The function of the TCM is to:

- Receive input signals sent from various switches and sensors.
- Determine required line pressure, shifting point, and lock-up operation.
- Send required output signals to the step motor and the respective solenoids.

CONTROL SYSTEM OUTLINE

The CVT senses vehicle operating conditions through various sensors. It always controls the optimum shift position and reduces shifting and lock-up shocks.

SENSORS (or SIGNAL)		TCM		ACTUATORS
PNP switch Accelerator pedal position signal Closed throttle position signal Engine speed signal CVT fluid temperature sensor Vehicle speed signal Manual mode signal Stop lamp switch signal Primary speed sensor Secondary speed sensor Primary pressure sensor Secondary pressure sensor	⇒	Shift control Line pressure control Primary pressure control Secondary pressure control Lock-up control Engine brake control Vehicle speed control Fail-safe control Self-diagnosis CONSULT-II communication line Duet-EA control CAN system On board diagnosis	⇒	Step motor Torque converter clutch solenoid valve Lock-up select solenoid valve Line pressure solenoid valve Secondary pressure solenoid valve Manual mode indicator Shift position indicator CVT indicator lamp Starter relay

CONTROL SYSTEM DIAGRAM

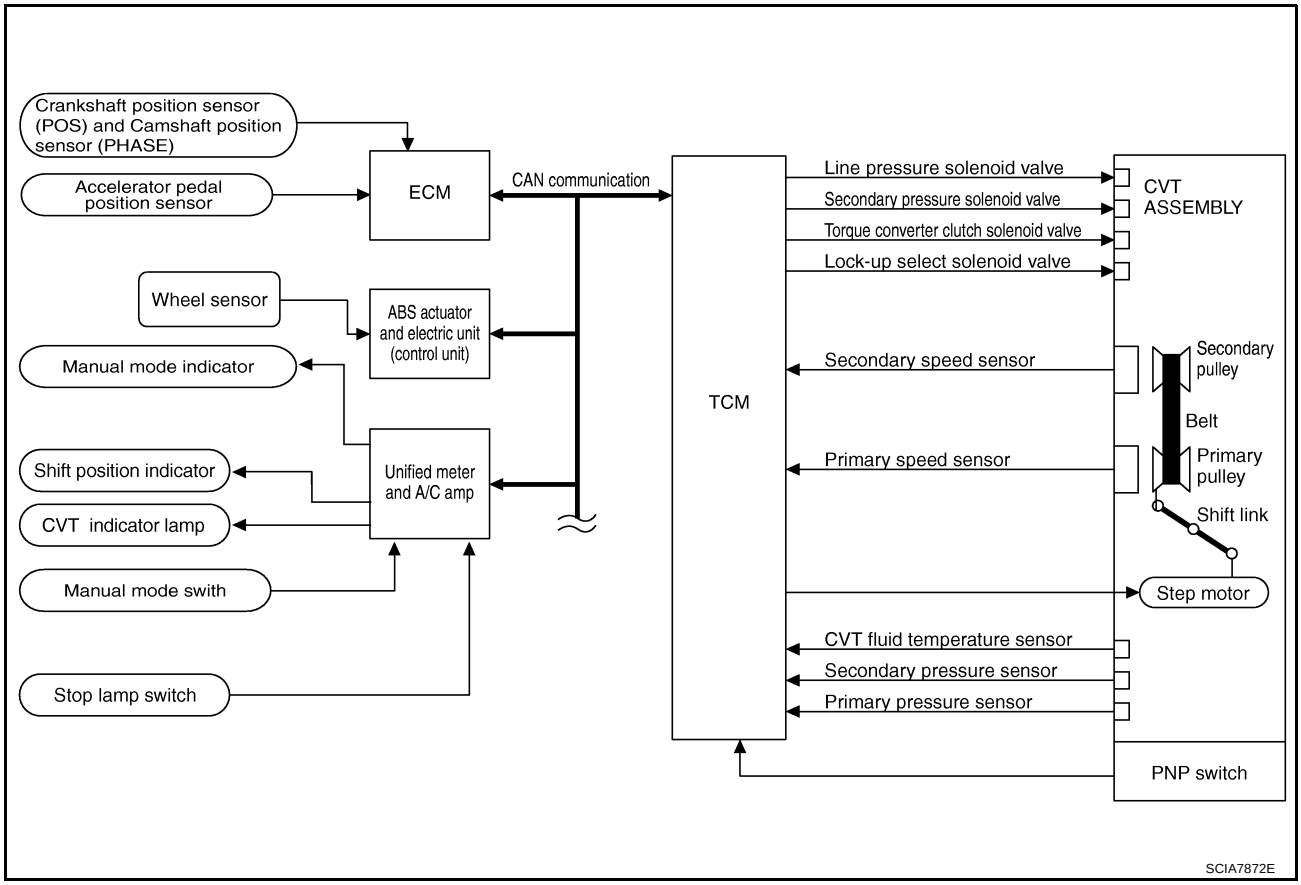

CAN Communication

UCS005DO

SYSTEM DESCRIPTION

CAN (Controller Area Network) is a serial communication line for real time application. It is an on-vehicle multiplex communication line with high data communication speed and excellent error detection ability. Many electronic control units are equipped onto a vehicle, and each control unit shares information and links with other control units during operation (not independent). In CAN communication, control units are connected with 2 communication lines (CAN-H line, CAN-L line) allowing a high rate of information transmission with less wiring. Each control unit transmits/receives data but selectively reads required data only. For details, refer to LAN-49, "CAN System Specification Chart" .

Input/Output Signal of TCM

UCS005DP

Control item		Fluid pressure control	Select control	Shift control	Lock-up control	CAN communication control	Fail-safe function (*2)
Input	PNP switch	X	X	X	X	X	X
	Accelerator pedal position signal (*1)	X	X	X	X	X	X
	Closed throttle position signal(*1)	X		X	X	X	
	Engine speed signal(*1)	X	X		X	X	X
	CVT fluid temperature sensor	X	X	X	X		X
	Manual mode signal(*1)	X		X	X	X	X
	Stop lamp switch signal(*1)	X		X	X	X	
	Primary speed sensor	X		X	X	X	X
	Secondary speed sensor	X	X	X	X	X	X
	Primary pressure sensor	X		X			
	Secondary pressure sensor	X		X			X
	TCM power supply voltage signal	X	X	X	X	X	X
Output	Step motor			X			X
	TCC solenoid valve		X		X		X
	Lock-up select solenoid valve		X		X		X
	Line pressure solenoid valve	X	X	X			X
	Secondary pressure solenoid valve	X		X			X

*1: Input by CAN communications.

*2: If these input and output signals are different, the TCM triggers the fail-safe function.

Line Pressure and Secondary Pressure Control

UCS005DQ

- When an input torque signal equivalent to the engine drive force is sent from the ECM to the TCM, the TCM controls the line pressure solenoid valve and secondary pressure solenoid valve.
- This line pressure solenoid controls the pressure regulator valve as the signal pressure and adjusts the pressure of the operating oil discharged from the oil pump to the line pressure most appropriate to the driving state. Secondary pressure is controlled by decreasing line pressure.

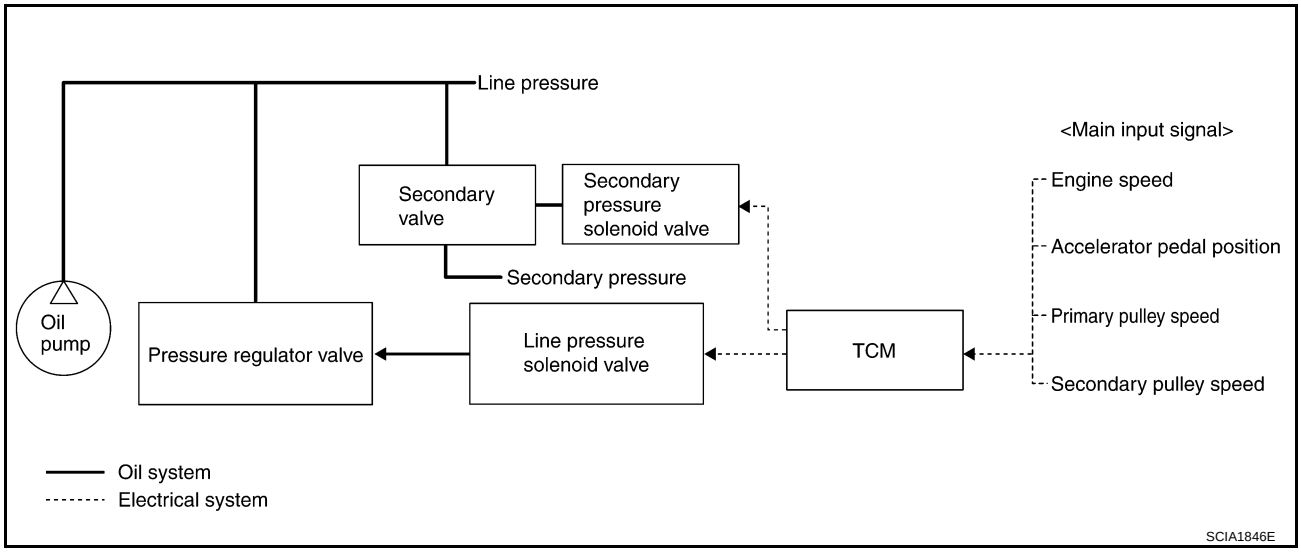

NORMAL CONTROL

Optimize the line pressure and secondary pressure, depending on driving conditions, on the basis of the throttle position, the engine speed, the primary pulley (input) revolution speed, the secondary pulley (output) revolution speed, the brake signal, the PNP switch signal, the lock-up signal, the voltage, the target gear ratio, the fluid temperature, and the fluid pressure.

FEEDBACK CONTROL

When controlling the normal fluid pressure or the selected fluid pressure, the secondary pressure can be set more accurately by using the fluid pressure sensor to detect the secondary pressure and controlling the feedback.

Shift Control

UCS005DR

In order to select the gear ratio which can obtain the driving force in accordance with driver's intention and the vehicle condition, TCM monitors the driving conditions, such as the vehicle speed and the throttle position and selects the optimum gear ratio, and determines the gear change steps to the gear ratio. Then send the command to the step motor, and control the flow-in/flow-out of line pressure from the primary pulley to determine the position of the moving-pulley and control the gear ratio.

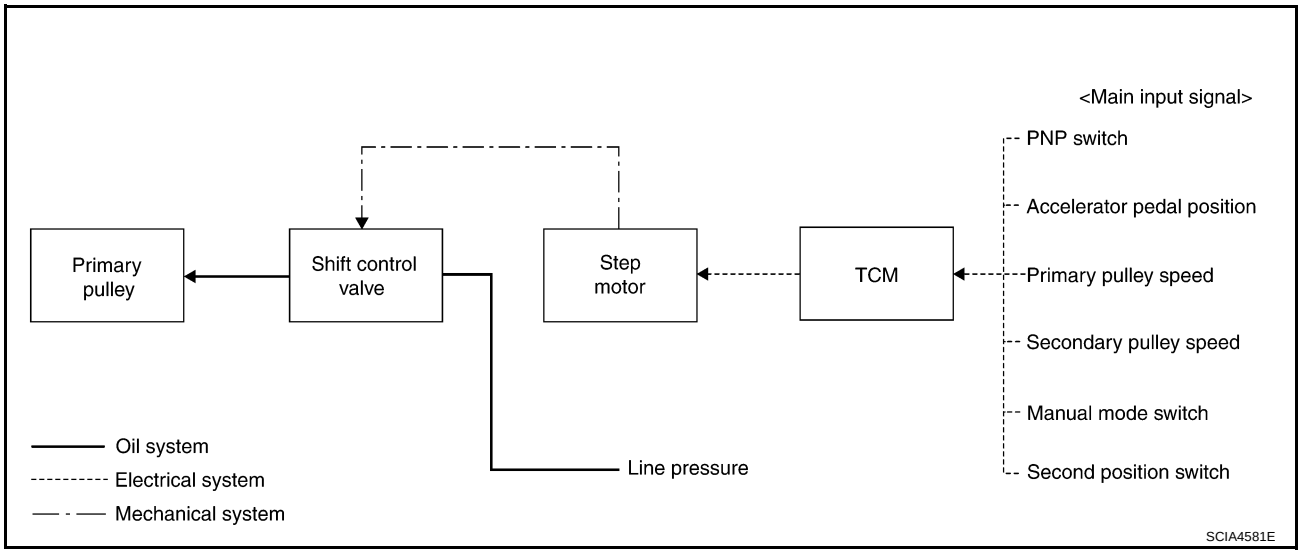

NOTE:
The gear ratio is set for every position separately.

"D" POSITION

Shifting over all the ranges of gear ratios from the lowest to the highest.

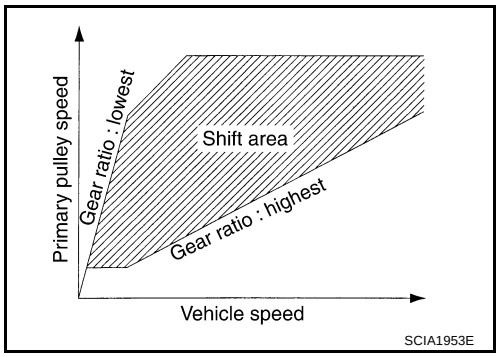

"M" POSITION

When the selector lever is put in the manual shift gate side, the fixed changing gear line is set. By moving the selector lever to + side or - side, the manual mode switch is changed over, and shift change like M/T becomes possible following the changing gear set line step by step.

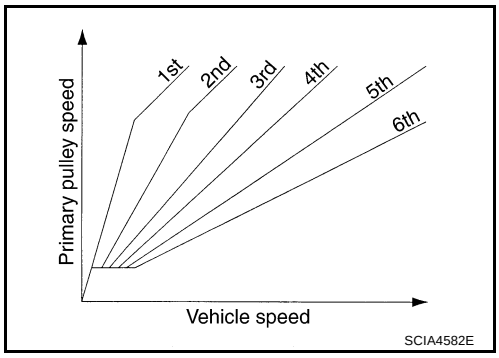

DOWNHILL ENGINE BRAKE CONTROL (AUTO ENGINE BRAKE CONTROL)

When downhill is detected with the accelerator pedal released, the engine brake will be strengthened up by downshifting so as not to accelerate the vehicle more than necessary.

ACCELERATION CONTROL

According to vehicle speed and a change of accelerator pedal angle, driver's request for acceleration and driving scene are judged. This function assists improvement in acceleration feeling by making the engine speed proportionate to the vehicle speed. And a shift map which can gain a larger driving force is available for compatibility of mileage with driveability.

Lock-up and Select Control

UCS005DS

- The torque converter clutch piston in the torque converter is engaged to eliminate torque converter slip to increase power transmission efficiency.
- The torque converter clutch control valve operation is controlled by the torque converter clutch solenoid valve, which is controlled by a signal from TCM. The torque converter clutch control valve engages or releases the torque converter clutch piston.
- When shifting between N (P) ⇔ D (R), torque converter clutch solenoid controls engagement power of forward clutch and reverse brake.
- The lock-up applied gear range was expanded by locking up the torque converter at a lower vehicle speed than conventional CVT models.

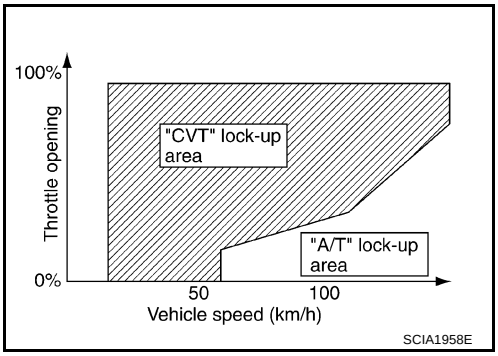

TORQUE CONVERTER CLUTCH AND SELECT CONTROL VALVE CONTROL

Lock-up and Select Control System Diagram

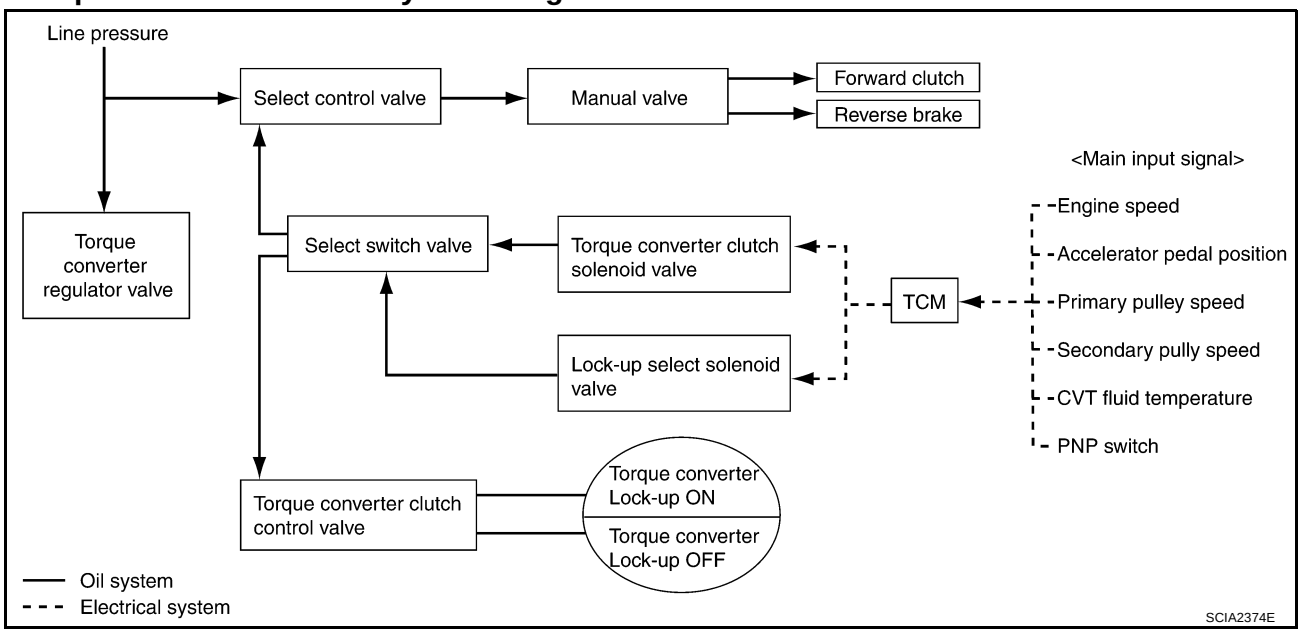

Lock-up Released

In the lock-up released state, the torque converter clutch control valve is set into the unlocked state by the torque converter clutch solenoid and the lock-up apply pressure is drained.
In this way, the torque converter clutch piston is not coupled.

Lock-up Applied

In the lock-up applied state, the torque converter clutch control valve is set into the locked state by the torque converter clutch solenoid and lock-up apply pressure is generated.
In this way, the torque converter clutch piston is pressed and coupled.

Select Control

When shifting between N (P)⇔D (R), optimize the operating pressure on the basis of the throttle position, the engine speed, and the secondary pulley (output) revolution speed to lessen the shift shock.

Control Valve

UCS005DT

FUNCTION OF CONTROL VALVE

Name	Function
Torque converter regulator valve	Optimizes the supply pressure for the torque converter depending on driving conditions.
Pressure regulator valve	Optimizes the discharge pressure from the oil pump depending on driving conditions.
TCC control valve	● Activates or deactivate the lock-up. ● Lock-up smoothly by opening lock-up operation excessively.
TCC solenoid valve	Controls the TCC control valve or select control valve.
Shift control valve	Controls flow-in/out of line pressure from the primary pulley depending on the stroke difference between the stepping motor and the primary pulley.
Secondary valve	Controls the line pressure from the secondary pulley depending on operating conditions.
Clutch regulator valve	Adjusts the clutch operating pressure depending on operating conditions.
Secondary pressure solenoid valve	Controls the secondary valve.
Line pressure solenoid valve	Controls the line pressure control valve.
Step motor	Controls the pulley ratio.
Manual valve	Transmits the clutch operating pressure to each circuit in accordance with the selected position.
Select control valve	Engages forward clutch, reverse brake smoothly depending on select operation.
Select switch valve	Switches torque converter clutch solenoid valve control pressure use to torque converter clutch control valve or select control valve.
Lock-up select solenoid valve	Controls the select switch valve.

ON BOARD DIAGNOSTIC (OBD) SYSTEM

PFP:00028

Introduction

UCS005DU

The CVT system has two self-diagnostic systems.
The first is the emission-related on board diagnostic system (OBD-II) performed by the TCM in combination with the ECM. The malfunction is indicated by the MIL (malfunction indicator lamp) and is stored as a DTC in the ECM memory, and the TCM memory.
The second is the TCM original self-diagnosis performed by the TCM. The malfunction is stored in the TCM memory. The detected items are overlapped with OBD-II self-diagnostic items. For detail, refer to CVT-57, "Display Items List" .

OBD-II Function for CVT System

UCS005DV

The ECM provides emission-related on board diagnostic (OBD-II) functions for the CVT system. One function is to receive a signal from the TCM used with OBD-related parts of the CVT system. The signal is sent to the ECM when a malfunction occurs in the corresponding OBD-related part. The other function is to indicate a diagnostic result by means of the MIL (malfunction indicator lamp) on the instrument panel. Sensors, switches and solenoid valves are used as sensing elements.
The MIL automatically illuminates in One or Two Trip Detection Logic when a malfunction is sensed in relation to CVT system parts.

One or Two Trip Detection Logic of OBD-II

UCS005DW

ONE TRIP DETECTION LOGIC

If a malfunction is sensed during the first test drive, the MIL will illuminate and the malfunction will be stored in the ECM memory as a DTC. The TCM is not provided with such a memory function.

TWO TRIP DETECTION LOGIC

When a malfunction is sensed during the first test drive, it is stored in the ECM memory as a 1st trip DTC (diagnostic trouble code) or 1st trip freeze frame data. At this point, the MIL will not illuminate. — 1st trip
If the same malfunction as that experienced during the first test drive is sensed during the second test drive, the MIL will illuminate. — 2nd trip
The “trip” in the “One or Two Trip Detection Logic” means a driving mode in which self-diagnosis is performed during vehicle operation.

OBD-II Diagnostic Trouble Code (DTC)

UCS005DX

HOW TO READ DTC AND 1ST TRIP DTC

DTC and 1st trip DTC can be read by the following methods.
(with CONSULT-II or GST GST) CONSULT-II or GST (Generic Scan Tool) Examples: P0705, P0720 etc.
These DTC are prescribed by SAE J2012.
(CONSULT-II also displays the malfunctioning component or system.)

- **1st trip DTC No. is the same as DTC No.**
- **Output of the diagnostic trouble code indicates that the indicated circuit has a malfunction. However, in case of the Mode II and GST, they do not indicate whether the malfunction is still occurring or occurred in the past and returned to normal.**
  CONSULT-II can identify them as shown below, therefore, CONSULT-II (if available) is recommended.

A sample of CONSULT-II display for DTC and 1st trip DTC is shown on the next page. DTC or 1st trip DTC of a malfunction is displayed in SELF-DIAGNOSTIC RESULTS mode for “ENGINE” with CONSULT-II. Time data indicates how many times the vehicle was driven after the last detection of a DTC.

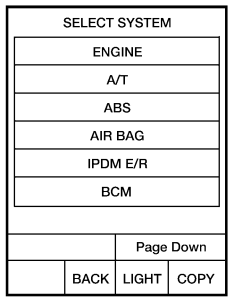

NOTE: EXAMPLE SHOWN. ACTUAL DISPLAY MAY DIFFER.
BCIA0030E

If the DTC is being detected currently, the time data will be “0”.

SELF-DIAG RESULTS	
DTC RESULTS	TIME
PNP SW/CIRC [P0705]	0

SAT015K

If a 1st trip DTC is stored in the ECM, the time data will be “1t”.

SELF-DIAG RESULTS	
DTC RESULTS	TIME
PNP SW/CIRC [P0705]	1 t

SAT016K

Freeze Frame Data and 1st Trip Freeze Frame Data

The ECM has a memory function, which stores the driving condition such as fuel system status, calculated load value, engine coolant temperature, short term fuel trim, long term fuel trim, engine speed and vehicle speed at the moment the ECM detects a malfunction.
Data which are stored in the ECM memory, along with the 1st trip DTC, are called 1st trip freeze frame data, and the data, stored together with the DTC data, are called freeze frame data and displayed on CONSULT-II or GST. The 1st trip freeze frame data can only be displayed on the CONSULT-II screen, not on the GST. For details, refer to EC-117, "CONSULT-II Function (ENGINE)" .
Only one set of freeze frame data (either 1st trip freeze frame data or freeze frame data) can be stored in the ECM. 1st trip freeze frame data is stored in the ECM memory along with the 1st trip DTC. There is no priority for 1st trip freeze frame data, and it is updated each time a different 1st trip DTC is detected. However, once freeze frame data (2nd trip detection/MIL on) is stored in the ECM memory, 1st trip freeze frame data is no longer stored. Remember, only one set of freeze frame data can be stored in the ECM. The ECM has the following priorities to update the data.

Priority	Items	
1	Freeze frame data	Misfire — DTC: P0300 - P0306 Fuel Injection System Function — DTC: P0171, P0172, P0174, P0175
2		Except the above items (Includes CVT related items)
3	1st trip freeze frame data	

Both 1st trip freeze frame data and freeze frame data (along with the DTC) are cleared when the ECM memory is erased.

HOW TO ERASE DTC

The diagnostic trouble code can be erased by CONSULT-II, GST or ECM DIAGNOSTIC TEST MODE as described following.

- **If the battery cable is disconnected, the diagnostic trouble code will be lost within 24 hours.**
- **When you erase the DTC, using CONSULT-II or GST is easier and quicker than switching the mode selector on the ECM.**

The following emission-related diagnostic information is cleared from the ECM memory when erasing DTC related to OBD-II. For details, refer to EC-49, "Emission-related Diagnostic Information" .

- **Diagnostic trouble codes (DTC)**
- **1st trip diagnostic trouble codes (1st trip DTC)**
- **Freeze frame data**

- **1st trip freeze frame data**
- **System readiness test (SRT) codes**
- **Test values**

HOW TO ERASE DTC (WITH CONSULT-II)

- **If a DTC is displayed for both ECM and TCM, it is necessary to be erased for both ECM and TCM.**

1. If the ignition switch stays ON after repair work, be sure to turn ignition switch OFF once. Wait at least 10 seconds and then turn it ON (engine stopped) again.
2. Turn CONSULT-II ON and touch “TRANSMISSION”.
3. Touch “SELF-DIAG RESULTS”.
4. Touch “ERASE”. (The DTC in the TCM will be erased.) Then touch “BACK” twice.
5. Touch “ENGINE”.
6. Touch “SELF-DIAG RESULTS”.
7. Touch “ERASE”. (The DTC in the ECM will be erased.)

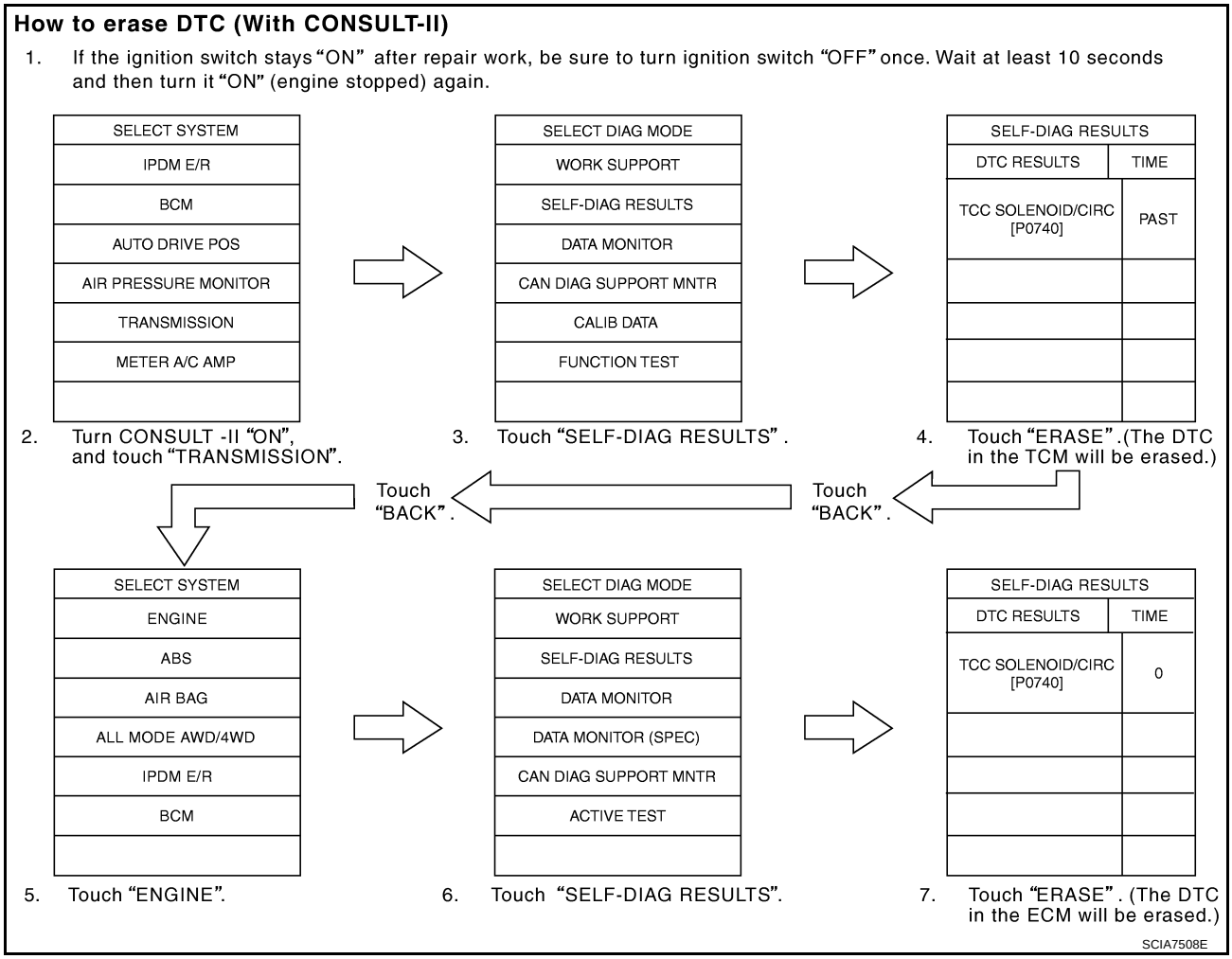

HOW TO ERASE DTC (WITH GST)

1. If the ignition switch stays ON after repair work, be sure to turn ignition switch OFF once. Wait at least 10 seconds and then turn it ON (engine stopped) again.
2. Select Mode 4 with GST (Generic Scan Tool). For details, refer to EC-129, "Generic Scan Tool (GST) Function" .

Malfunction Indicator Lamp (MIL)

UCS005DY

DESCRIPTION

The MIL is located on the instrument panel.

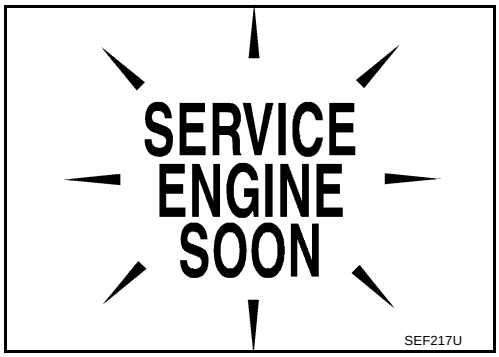

1. The MIL will light up when the ignition switch is turned ON without the engine running. This is a bulb check.
   - If the MIL does not light up, refer to DI-39, "WARNING LAMPS" , or see EC-662, "MIL AND DATA LINK CONNECTOR" .
2. When the engine is started, the MIL should go off.
   If the MIL remains on, the on board diagnostic system has detected an engine system malfunction.

TROUBLE DIAGNOSIS

PFP:00004

DTC Inspection Priority Chart

UCS005DZ

If some DTCs are displayed at the same time, perform inspections one by one based on the following priority chart.

NOTE:
If DTC "U1000 CAN COMM CIRCUIT" is displayed with other DTCs, first perform the trouble diagnosis for "DTC U1000 CAN COMMUNICATION LINE". Refer to CVT-64 .

Priority	Detected items (DTC)
1	U1000 CAN communication line
2	Except above

Fail-safe

UCS005E0

The TCM has an electrical fail-safe mode. This mode makes it possible to operate even if there is an error in a main electronic control input/output signal circuit.

FAIL-SAFE FUNCTION

If any malfunction occurs in a sensor or solenoid, this function controls the CVT to make driving possible.

Output Speed Sensor (Secondary Speed Sensor)

The shift pattern is changed in accordance with throttle position when an unexpected signal is sent from the output speed sensor (secondary speed sensor) to the TCM. The manual mode position is inhibited, and the transaxle is put in "D".

Input Speed Sensor (Primary Speed Sensor)

The shift pattern is changed in accordance with throttle position and secondary speed (vehicle speed) when an unexpected signal is sent from the input speed sensor (primary speed sensor) to the TCM. The manual mode position is inhibited, and the transaxle is put in "D".

PNP Switch

If an unexpected signal is sent from the PNP switch to the TCM, the transaxle is put in "D".

Manual Mode Switch

If an unexpected signal is sent from the manual mode switch to the TCM, the transaxle is put in "D".

CVT Fluid Temperature Sensor

If an unexpected signal is sent from the CVT fluid temperature sensor to the TCM, the gear ratio in use before receiving the unexpected signal is maintained or the gear ratio is controlled to keep engine speed under 3,400 rpm.

Transmission Fluid Pressure Sensor A (Secondary Pressure Sensor)

- If an unexpected signal is sent from the transmission fluid pressure sensor A (secondary pressure sensor) to the TCM, the secondary pressure feedback control is stopped and the offset value obtained before the non-standard condition occurs is used to control line pressure.
- If transmission fluid pressure sensor A (secondary pressure sensor) error signal is input to TCM, secondary pressure feedback control stops, but line pressure is controlled normally.

Pressure Control Solenoid A (Line Pressure Solenoid)

If an unexpected signal is sent from the solenoid to the TCM, the pressure control solenoid A (line pressure solenoid) is turned OFF to achieve the maximum fluid pressure.

Pressure Control Solenoid B (Secondary Pressure Solenoid)

If an unexpected signal is sent from the solenoid to the TCM, the pressure control solenoid B (secondary pressure solenoid) is turned OFF to achieve the maximum fluid pressure.

Torque Converter Clutch Solenoid

If an unexpected signal is sent from the solenoid to the TCM, the torque converter clutch solenoid is turned OFF to cancel the lock-up.

Step Motor

If an unexpected signal is sent from the step motor to the TCM, the step motor coil phases “A” through “D” are all turned OFF to hold the gear ratio used right before the non-standard condition occurred.

CVT Lock-up Select Solenoid

If an unexpected signal is sent from the solenoid to the TCM, the CVT lock-up select solenoid is turned OFF to cancel the lock-up.

TCM Power Supply (Memory Back-up)

Transaxle assembly is protected by limiting the engine torque when the memory back-up power supply (for controlling) from the battery is not supplied to TCM. Normal statues is restored when turning the ignition switch OFF to ON after the normal power supply.

How to Perform Trouble Diagnosis for Quick and Accurate Repair

UCS005E1

INTRODUCTION

The TCM receives a signal from the vehicle speed sensor, PNP switch and provides shift control or lock-up control via CVT solenoid valves.

The TCM also communicates with the ECM by means of a signal sent from sensing elements used with the OBD-related parts of the CVT system for malfunction-diagnostic purposes. The TCM is capable of diagnosing malfunctioning parts while the ECM can store malfunctions in its memory.

Input and output signals must always be correct and stable in the operation of the CVT system. The CVT system must be in good operating condition and be free of valve seizure, solenoid valve malfunction, etc.

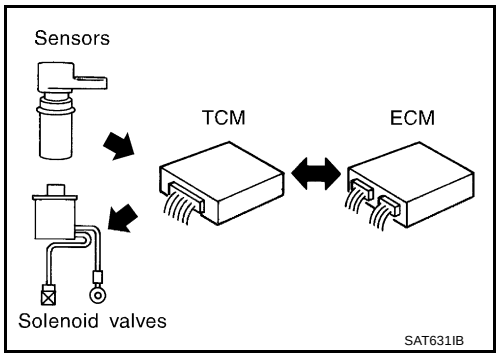

It is much more difficult to diagnose an error that occurs intermittently rather than continuously. Most intermittent errors are caused by poor electric connections or improper wiring. In this case, careful checking of suspected circuits may help prevent the replacement of good parts.

A visual check only may not find the cause of the errors. A road test with CONSULT-II (or GST) or a circuit tester connected should be performed. Follow the CVT-35, "WORK FLOW" .

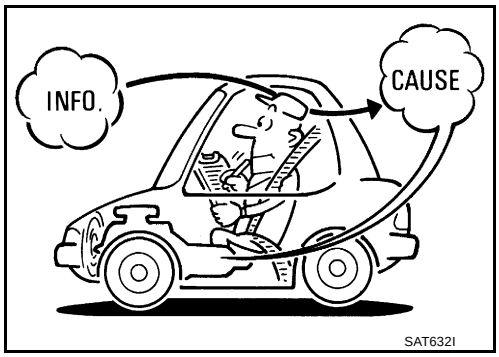

Before undertaking actual checks, take a few minutes to talk with a customer who approaches with a driveability complaint. The customer can supply good information about such errors, especially intermittent ones. Find out what symptoms are present and under what conditions they occur. A “DIAGNOSTIC WORKSHEET” as shown on the example (Refer to CVT-36) should be used.

Start your diagnosis by looking for “conventional” errors first. This will help troubleshoot driveability errors on an electronically controlled engine vehicle.

Also check related Service bulletins.

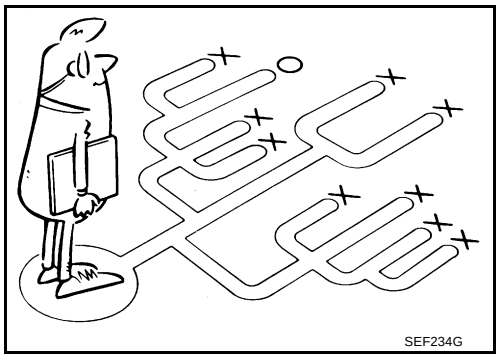

WORK FLOW

A good understanding of the malfunction conditions can make troubleshooting faster and more accurate.
In general, each customer feels differently about a malfunction. It is important to fully understand the symptoms or conditions for a customer complaint.
Make good use of the two sheets provided, CVT-36, "Information from Customer" and CVT-36, "Diagnostic Worksheet Chart" , to perform the best troubleshooting possible.

Work Flow Chart

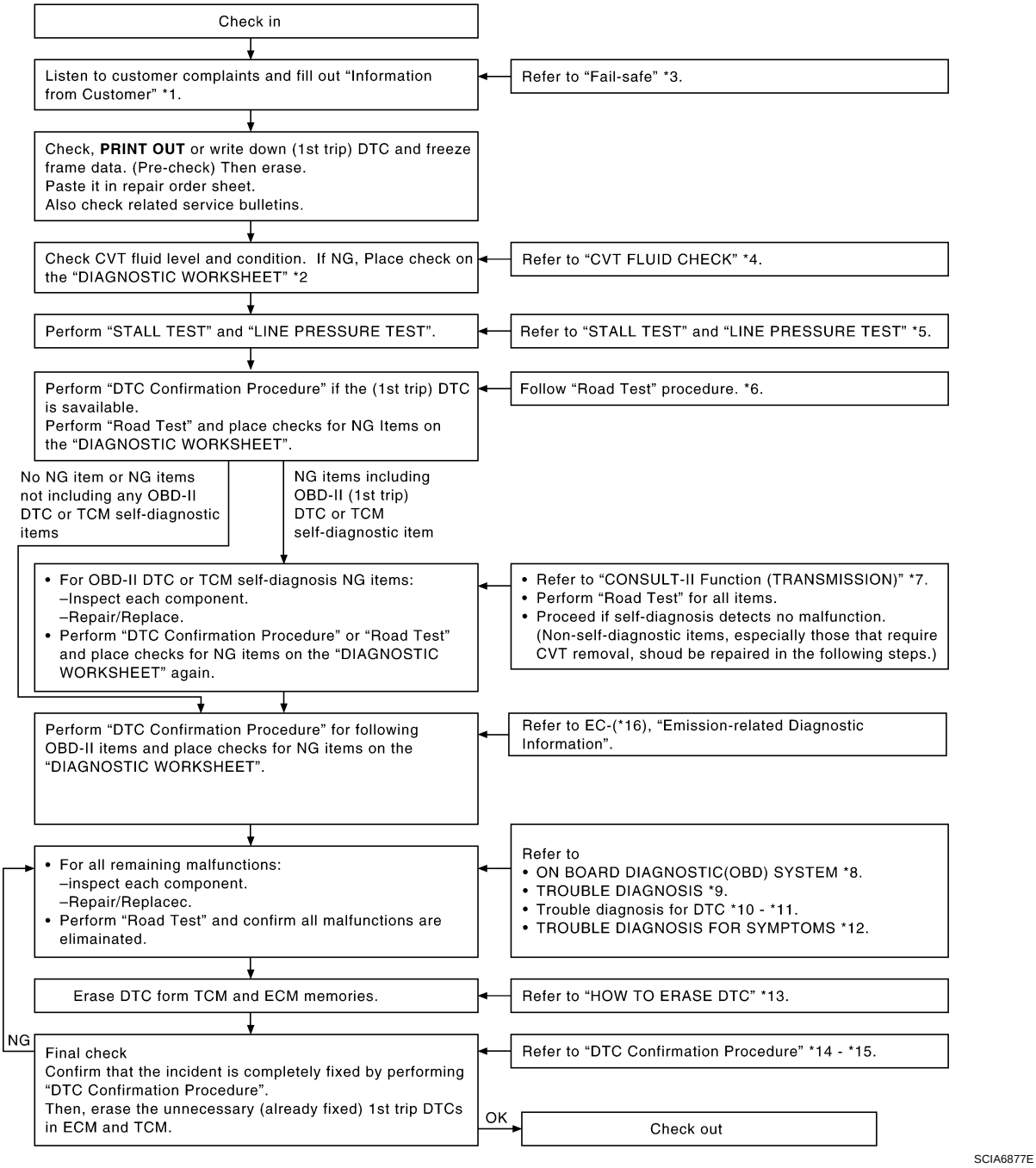

*1. CVT-36	*2. CVT-36	*3. CVT-33
*4. CVT-41	*5. CVT-41, CVT-42	*6. CVT-44
*7. CVT-53	*8. CVT-29	*9. CVT-33
*10. CVT-64	*11. CVT-168	*12. CVT-171
*13. CVT-30	*14. CVT-64	*15. CVT-168
*16. EC-49		

DIAGNOSTIC WORKSHEET

Information from Customer

KEY POINTS

- **WHAT**..... Vehicle & CVT model
- **WHEN**..... Date, Frequencies
- **WHERE**..... Road conditions
- **HOW**..... Operating conditions, Symptoms

Customer name MR/MS	Model & Year	VIN
Trans. Model	Engine	Mileage
malfunction Date	Manuf. Date	In Service Date
Frequency	❏ Continuous ❏ Intermittent (times a day)	
Symptoms	❏ Vehicle does not move. (❏ Any position ❏ Particular position)	
	❏ No shift	
	❏ Lock-up malfunction	
	❏ Shift shock or slip (❏ N → D ❏ N → R ❏ Lock-up ❏ Any drive position)	
	❏ Noise or vibration	
	❏ No pattern select	
	❏ Others ( )	
Malfunction indicator lamp (MIL)	❏ Continuously lit	❏ Not lit

Diagnostic Worksheet Chart

1	❏ Read the item on cautions concerning fail-safe and understand the customer's complaint.			CVT-33
2	❏ CVT fluid inspection			CVT-41
		❏ Leak (Repair leak location.) ❏ State ❏ Amount		
3	❏ Stall test and line pressure test			CVT-41, CVT-42
		❏ Stall test		
		❏ Torque converter one-way clutch ❏ Reverse brake ❏ Forward clutch ❏ Steel belt	❏ Engine ❏ Line pressure low ❏ Primary pulley ❏ Secondary pulley	
		❏ Line pressure inspection - Suspected part:		

4	4-1.	❏ Perform road test.		CVT-44
		Check before engine is started		CVT-46
		❏ CVT-175, "CVT Indicator Lamp Does Not Come On" ❏ Perform self-diagnosis. Enter checks for detected items. CVT-57		
			❏ CVT-64, "DTC U1000 CAN COMMUNICATION LINE" . ❏ CVT-67, "DTC P0615 START SIGNAL CIRCUIT" . ❏ CVT-71, "DTC P0703 STOP LAMP SWITCH CIRCUIT" . ❏ CVT-73, "DTC P0705 PARK/NEUTRAL POSITION SWITCH" . ❏ CVT-80, "DTC P0710 CVT FLUID TEMPERATURE SENSOR CIRCUIT" . ❏ CVT-85, "DTC P0715 INPUT SPEED SENSOR CIRCUIT (PRI SPEED SENSOR)" . ❏ CVT-90, "DTC P0720 VEHICLE SPEED SENSOR CVT (SECONDARY SPEED SENSOR)" . ❏ CVT-96, "DTC P0725 ENGINE SPEED SIGNAL" . ❏ CVT-98, "DTC P0730 BELT DAMAGE" . ❏ CVT-100, "DTC P0740 TORQUE CONVERTER CLUTCH SOLENOID VALVE" . ❏ CVT-105, "DTC P0744 A/T TCC S/V FUNCTION (LOCK-UP)" . ❏ CVT-108, "DTC P0745 LINE PRESSURE SOLENOID VALVE" . ❏ CVT-113, "DTC P0746 PRESSURE CONTROL SOLENOID A PERFORMANCE (LINE PRESSURE SOLENOID VALVE)" . ❏ CVT-116, "DTC P0776 PRESSURE CONTROL SOLENOID B PERFORMANCE (SEC PRESSURE SOLENOID VALVE)" . ❏ CVT-119, "DTC P0778 PRESSURE CONTROL SOLENOID B ELECTRICAL (SEC PRESSURE SOLENOID VALVE)" . ❏ CVT-124, "DTC P0826 MANUAL MODE SWITCH CIRCUIT" . ❏ CVT-129, "DTC P0840 TRANSMISSION FLUID PRESSURE SENSOR A CIRCUIT (SEC PRESSURE SENSOR)" . ❏ CVT-134, "DTC P0841 PRESSURE SENSOR FUNCTION" . ❏ CVT-137, "DTC P0845 TRANSMISSION FLUID PRESSURE SENSOR B CIRCUIT (PRI PRESSURE SENSOR)" . ❏ CVT-142, "DTC P0868 SECONDARY PRESSURE DOWN" . ❏ CVT-145, "DTC P1701 TRANSMISSION CONTROL MODULE (POWER SUPPLY)" . ❏ CVT-150, "DTC P1705 THROTTLE POSITION SENSOR" . ❏ CVT-152, "DTC P1722 ESTM VEHICLE SPEED SIGNAL" . ❏ CVT-154, "DTC P1723 CVT SPEED SENSOR FUNCTION" . ❏ CVT-156, "DTC P1726 ELECTRIC THROTTLE CONTROL SYSTEM" . ❏ CVT-158, "DTC P1740 LOCK-UP SELECT SOLENOID VALVE CIRCUIT" . ❏ CVT-164, "DTC P1777 STEP MOTOR - CIRCUIT" . ❏ CVT-168, "DTC P1778 STEP MOTOR - FUNCTION" .	
	4-2.	Check at idle		CVT-46
		❏ CVT-176, "Engine Cannot Be Started in “P” or “N” Position" . ❏ CVT-177, "In “P” Position, Vehicle Moves Forward or Backward When Pushed" . ❏ CVT-177, "In “N” Position, Vehicle Moves" . ❏ CVT-178, "Large Shock “N” → “R” Position" . ❏ CVT-179, "Vehicle Does Not Creep Backward in “R” Position" . ❏ CVT-180, "Vehicle Does Not Creep Forward in “D” Position" .		

4	4-3.	Cruise test		CVT-47
		❏ CVT-181, "CVT Does Not Shift" . ❏ CVT-182, "Cannot Be Changed to Manual Mode" . ❏ CVT-182, "CVT Does Not Shift in Manual Mode" . ❏ CVT-184, "Vehicle Does Not Decelerate by Engine Brake" . ❏ perform self-diagnosis. Enter checks for detected items. CVT-57		
			❏ CVT-64, "DTC U1000 CAN COMMUNICATION LINE" . ❏ CVT-67, "DTC P0615 START SIGNAL CIRCUIT" . ❏ CVT-71, "DTC P0703 STOP LAMP SWITCH CIRCUIT" . ❏ CVT-73, "DTC P0705 PARK/NEUTRAL POSITION SWITCH" . ❏ CVT-80, "DTC P0710 CVT FLUID TEMPERATURE SENSOR CIRCUIT" . ❏ CVT-85, "DTC P0715 INPUT SPEED SENSOR CIRCUIT (PRI SPEED SENSOR)" . ❏ CVT-90, "DTC P0720 VEHICLE SPEED SENSOR CVT (SECONDARY SPEED SENSOR)" . ❏ CVT-96, "DTC P0725 ENGINE SPEED SIGNAL" . ❏ CVT-98, "DTC P0730 BELT DAMAGE" . ❏ CVT-100, "DTC P0740 TORQUE CONVERTER CLUTCH SOLENOID VALVE" . ❏ CVT-105, "DTC P0744 A/T TCC S/V FUNCTION (LOCK-UP)" . ❏ CVT-108, "DTC P0745 LINE PRESSURE SOLENOID VALVE" . ❏ CVT-113, "DTC P0746 PRESSURE CONTROL SOLENOID A PERFORMANCE (LINE PRESSURE SOLENOID VALVE)" . ❏ CVT-116, "DTC P0776 PRESSURE CONTROL SOLENOID B PERFORMANCE (SEC PRESSURE SOLENOID VALVE)" . ❏ CVT-119, "DTC P0778 PRESSURE CONTROL SOLENOID B ELECTRICAL (SEC PRESSURE SOLENOID VALVE)" . ❏ CVT-124, "DTC P0826 MANUAL MODE SWITCH CIRCUIT" . ❏ CVT-129, "DTC P0840 TRANSMISSION FLUID PRESSURE SENSOR A CIRCUIT (SEC PRESSURE SENSOR)" . ❏ CVT-134, "DTC P0841 PRESSURE SENSOR FUNCTION" . ❏ CVT-137, "DTC P0845 TRANSMISSION FLUID PRESSURE SENSOR B CIRCUIT (PRI PRESSURE SENSOR)" . ❏ CVT-142, "DTC P0868 SECONDARY PRESSURE DOWN" . ❏ CVT-145, "DTC P1701 TRANSMISSION CONTROL MODULE (POWER SUPPLY)" . ❏ CVT-150, "DTC P1705 THROTTLE POSITION SENSOR" . ❏ CVT-152, "DTC P1722 ESTM VEHICLE SPEED SIGNAL" . ❏ CVT-154, "DTC P1723 CVT SPEED SENSOR FUNCTION" . ❏ CVT-156, "DTC P1726 ELECTRIC THROTTLE CONTROL SYSTEM" . ❏ CVT-158, "DTC P1740 LOCK-UP SELECT SOLENOID VALVE CIRCUIT" . ❏ CVT-164, "DTC P1777 STEP MOTOR - CIRCUIT" . ❏ CVT-168, "DTC P1778 STEP MOTOR - FUNCTION" .	
5	❏ Inspect each system for items found to be NG in the self-diagnosis and repair or replace the malfunctioning parts.			
6	❏ Perform all road tests and enter the checks again for the required items.			CVT-44
7	❏ For any remaining NG items, perform the “diagnosis procedure” and repair or replace the malfunctioning parts.			
8	❏ Erase the results of the self-diagnosis from the TCM.			CVT-31, CVT-31

CVT Electrical Parts Location

UCS005E2

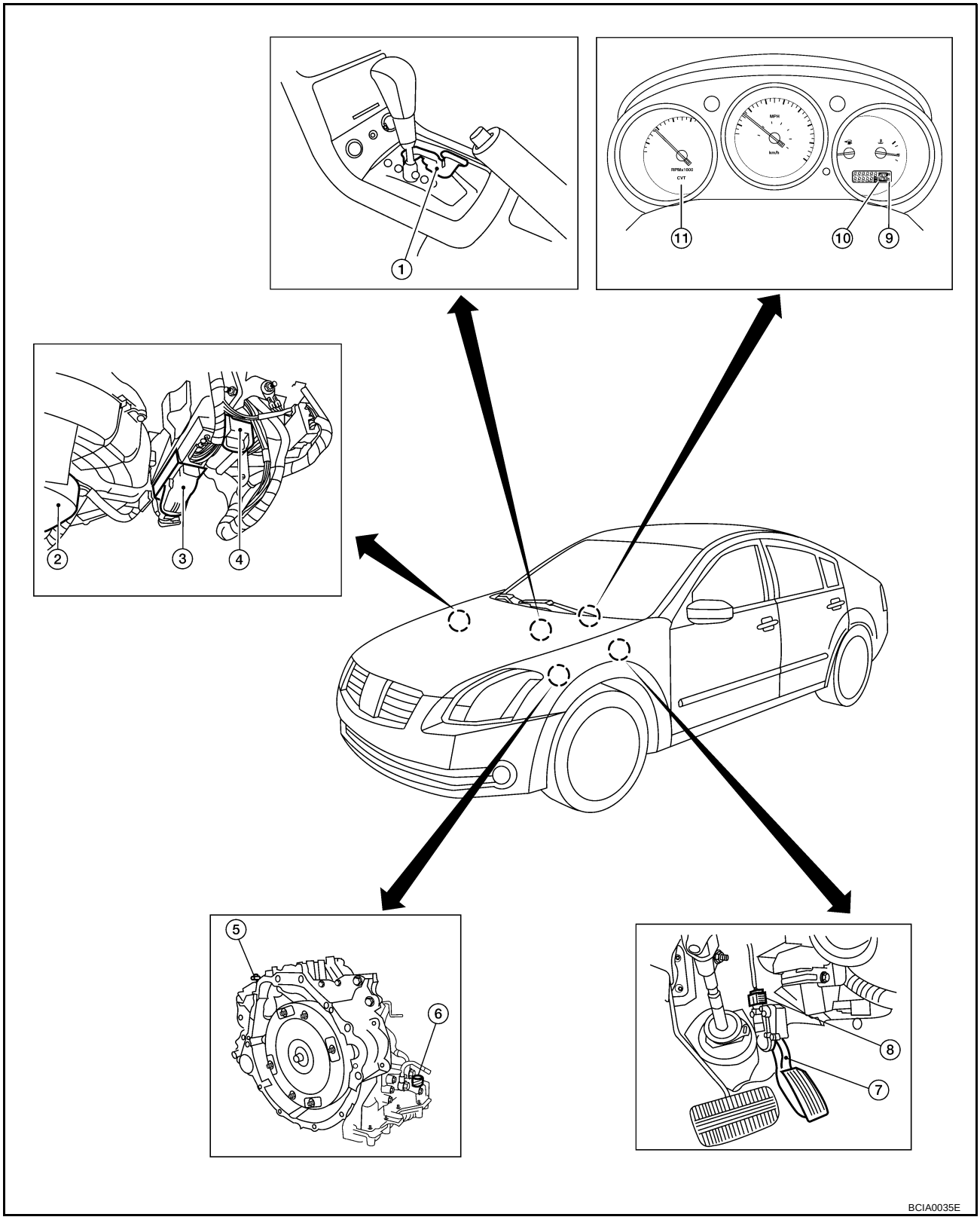

1. CVT control device (Manual mode select switch and manual mode position select switch)	2. Blower motor	3. ECM
4. TCM	5. Secondary speed sensor	6. CVT unit harness connector
7. Accelerator pedal	8. Accelerator pedal position sensor	9. Manual mode indicator
10. Shift position indicator	11. CVT indicator lamp	

Circuit Diagram

UCS005E4

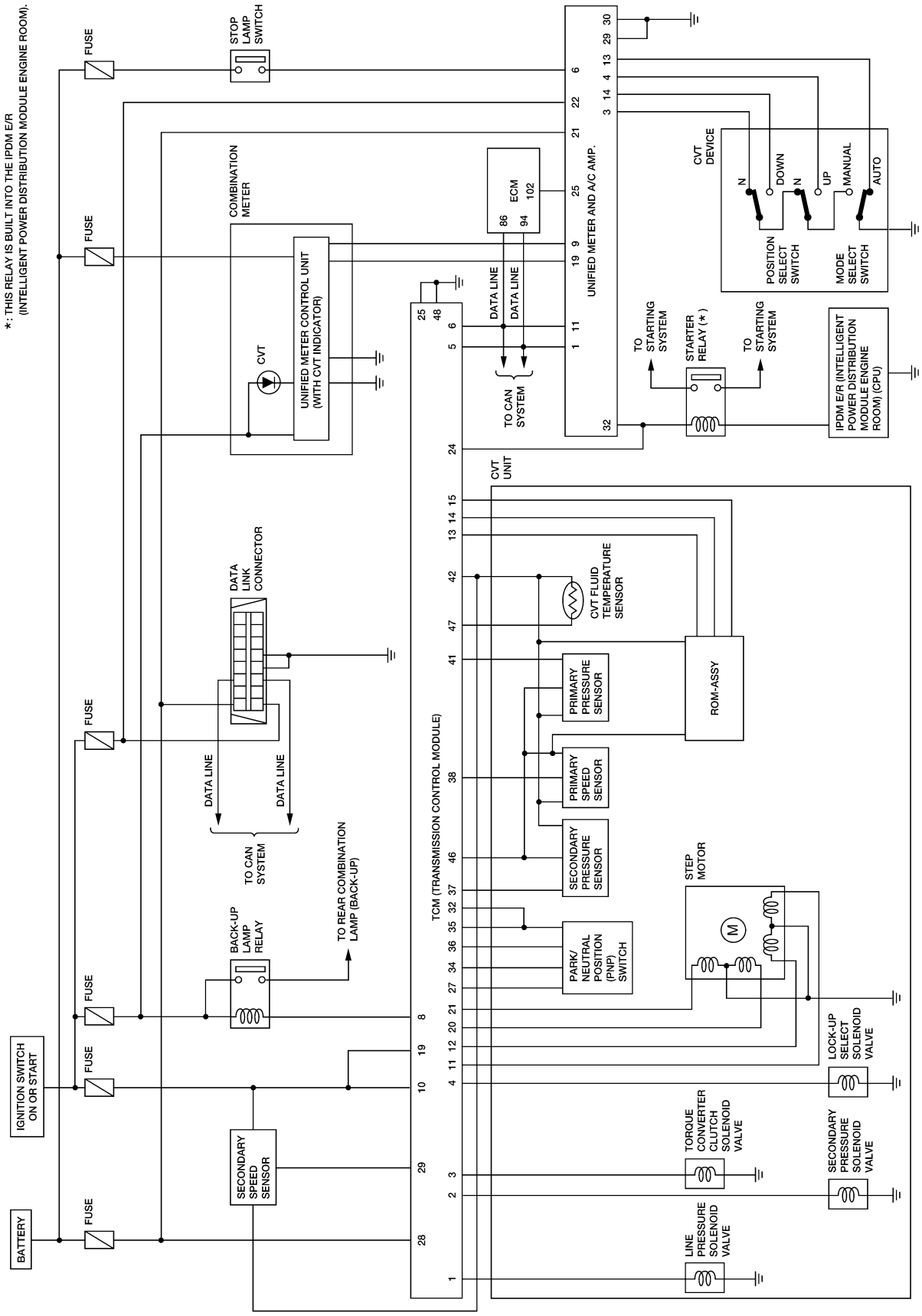

BCWA0619E

Inspections before Trouble Diagnosis

UCS005E5

CVT FLUID CHECK

Fluid Leakage and Fluid Level Check

Inspect for fluid leakage and check the fluid level. Refer to CVT-15, "Checking CVT Fluid" .

Fluid Condition Check

Inspect the fluid condition.

Fluid status	Conceivable cause	Required operation
Varnished (viscous varnish state)	Clutch, brake scorched	Replace the CVT fluid and check the CVT main unit and the vehicle for malfunctions (wire harnesses, cooler pipes, etc.)
Milky white or cloudy	Water in the fluid	Replace the CVT fluid and check for places where water is getting in.
Large amount of metal powder mixed in	Unusual wear of sliding parts within CVT	Replace the CVT fluid and check for improper operation of the CVT.

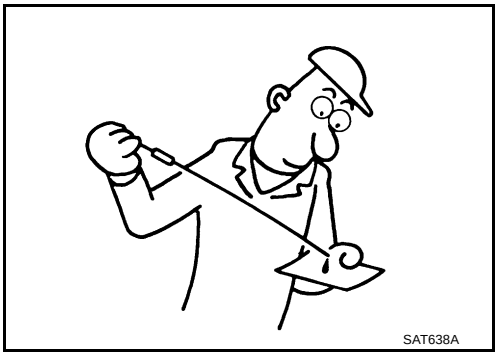
SAT638A

STALL TEST

Stall Test Procedure

1. Inspect the amount of engine oil. Replenish the engine oil if necessary.
2. Drive for about 10 minutes to warm up the vehicle so that the CVT fluid temperature is 50° – 80°C (122° – 176°F). Inspect the amount of CVT fluid. Replenish if necessary.

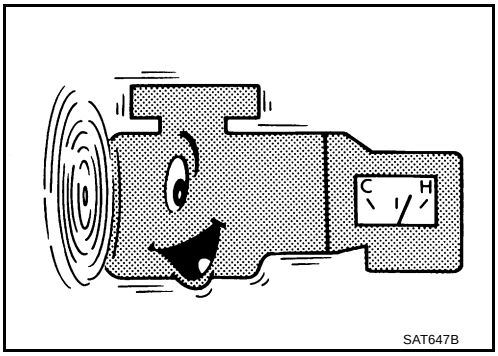

SAT647B

3. Securely engage the parking brake so that the tires do not turn.
4. Install a tachometer where it can be seen by driver during test.
   - **It is good practice to mark the point of specified engine rpm on indicator.**
5. Start engine, apply foot brake, and place selector lever in “D” position.

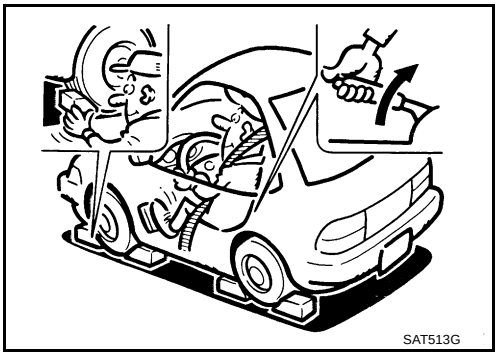
SAT513G

6. While holding down the foot brake, gradually press down the accelerator pedal.
7. Quickly read off the stall speed, and then quickly remove your foot from the accelerator pedal.

   CAUTION:
   Do not hold down the accelerator pedal for more than 5 seconds during this test.

   Stall speed: 2,700 - 3,250 rpm
8. Move the selector lever to the “N” position.
9. Cool down the CVT fluid.

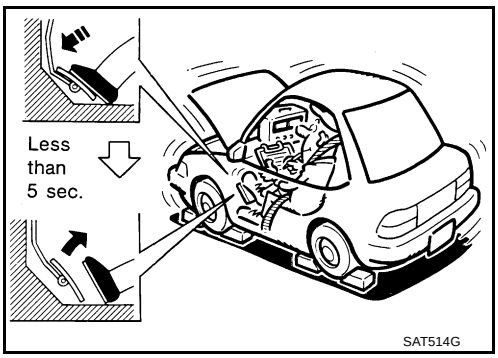

SAT514G

CAUTION:
Run the engine at idle for at least 1 minute.

10. Repeat steps 6 through 9 with selector lever in “R” position.

Judgement Stall Test

	Selector lever position		Expected problem location
	“D”	“R”	
Stall rotation	H	O	● Forward clutch
	O	H	● Reverse brake
	L	L	● Engine and torque converter one-way clutch
	H	H	● Line pressure low ● Primary pulley ● Secondary pulley ● Steel belt

O: Stall speed within standard value position.
H: Stall speed is higher than standard value.
L: Stall speed is lower than standard value.

LINE PRESSURE TEST

Line Pressure Test Port

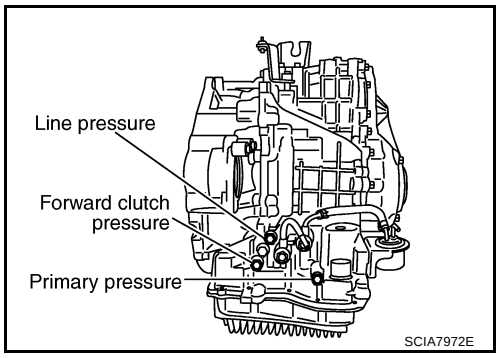

Line Pressure Test Procedure

1. Inspect the amount of engine oil and replenish if necessary.
2. Drive the car for about 10 minutes to warm it up so that the CVT fluid reaches in the range of 50° – 80°C (122° – 176°F), then inspect the amount of CVT fluid and replenish if necessary.

   NOTE:
   The CVT fluid temperature rises in the range of 50° – 80°C (122° – 176°F) during 10 minutes of driving.
3. After warming up CVT, remove the oil pressure detection plug and install the oil pressure gauge [special service tool: - (OTC3492)].

   CAUTION:
   When using the oil pressure gauge, be sure to use the O-ring attached to the oil pressure detection plug.
4. Securely engage the parking brake so that the tires do not turn.

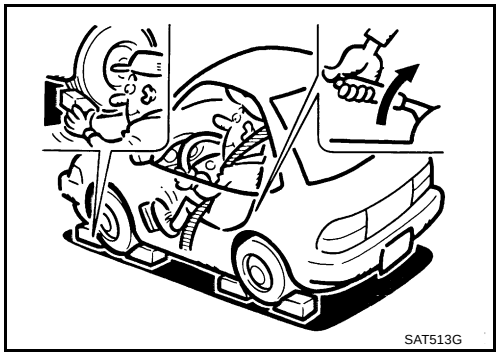

5. Start the engine, and then measure the line pressure at both idle and the stall speed.

   CAUTION:
   - **Keep the brake pedal pressed all the way down during measurement.**
   - **When measuring the line pressure at the stall speed, refer to CVT-41, "STALL TEST" .**

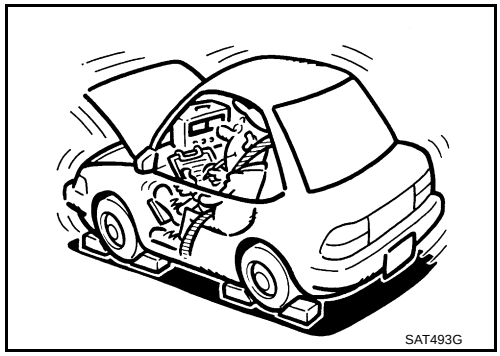

6. After the measurements are complete, install the oil pressure detection plug and tighten to the specified torque below.

   : 7.5 N·m (0.77 kg-m, 66 in-lb)

   CAUTION:
   - **Do not reuse O-ring.**
   - **Apply CVT fluid to O-ring.**

Line Pressure

Engine speed	Line pressure kPa (kg/cm^2 , psi)
	"R", "D" positions
At idle	750 (7.65, 108.8)
At stall	5,700 (58.14, 826.5)*1

*1: Reference values

Judgement of Line Pressure Test

Judgement		Possible cause
Idle speed	Low for all positions ("P", "R", "N", "D")	Possible causes include malfunctions in the pressure supply system and low oil pump output. For example ● Oil pump wear ● Pressure regulator valve or plug sticking or spring fatigue ● Oil strainer ⇒ oil pump ⇒ pressure regulator valve passage oil leak ● Engine idle speed too low
	Only low for a specific position	Possible causes include an oil pressure leak in a passage or device related to the position after the pressure is distributed by the manual valve.
	High	Possible causes include a sensor malfunction or malfunction in the line pressure adjustment function. For example ● Accelerator pedal position signal malfunction ● CVT fluid temperature sensor malfunction ● Pressure control solenoid A (line pressure solenoid) malfunction (sticking in OFF state, filter clog, cut line) ● Pressure regulator valve or plug sticking
Stall speed	Line pressure does not rise higher than the line pressure for idle.	Possible causes include a sensor malfunction or malfunction in the pressure adjustment function. For example ● Accelerator pedal position signal malfunction ● TCM malfunction ● Pressure control solenoid A (line pressure solenoid) malfunction (shorting, sticking in ON state) ● Pressure regulator valve or plug sticking
	The pressure rises, but does not enter the standard position.	Possible causes include malfunctions in the pressure supply system and malfunction in the pressure adjustment function. For example ● Accelerator pedal position signal malfunction ● Pressure control solenoid A (line pressure solenoid) malfunction (sticking, filter clog) ● Pressure regulator valve or plug sticking
	Only low for a specific position	Possible causes include an oil pressure leak in a passage or device related to the position after the pressure is distributed by the manual valve.

Road Test

UCS005E6

DESCRIPTION

- The purpose of the test is to determine overall performance of CVT and analyze causes of problems.
- The road test consists of the following three parts:

1. “Check Before Engine Is Started” CVT-46 .
2. “Check at Idle” CVT-46 .
3. “Cruise Test” CVT-47 .

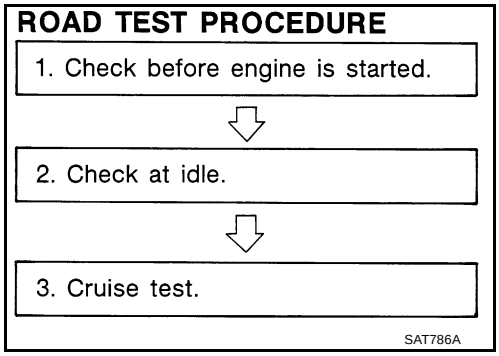

- Before road test, familiarize yourself with all test procedures and items to check.
- Perform tests on all items until specified symptom is found. Troubleshoot items which check out No Good after road test.

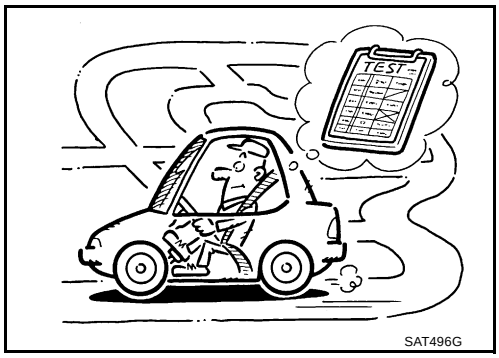

CONSULT-II OPERATION PROCEDURE

CAUTION:

If CONSULT-II is used with no connection of CONSULT-II CONVERTER, malfunctions might be detected in self-diagnosis depending on control unit which performs CAN communication.

- Using CONSULT-II, perform a cruise test and record the result.
- Print the result and ensure that shifts and lock-ups take place as per Shift Schedule.

1. Touch “DATA MONITOR” on “SELECT DIAG MODE” screen.

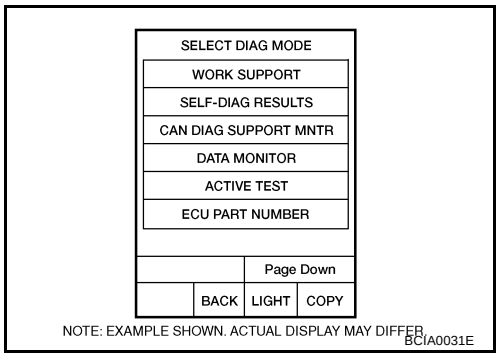

2. Touch “MAIN SIGNALS” to set recording condition.
3. See “Numerical Display”, “Barchart Display” or “Line Graph Display”.
4. Touch “START”.

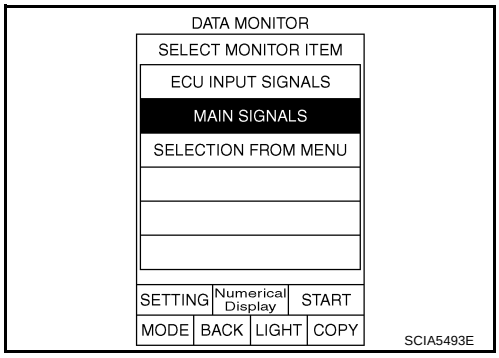

5. When performing cruise test. Refer to CVT-47, "Cruise Test" .
6. After finishing cruise test part, touch “RECORD”.

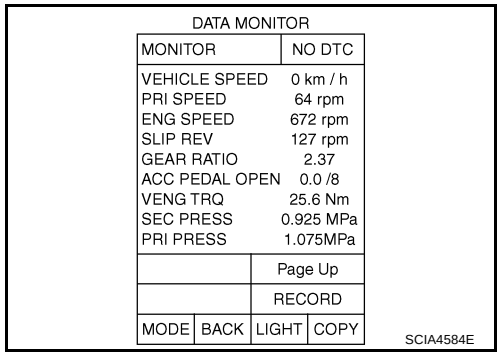

7. Touch “STORE”.

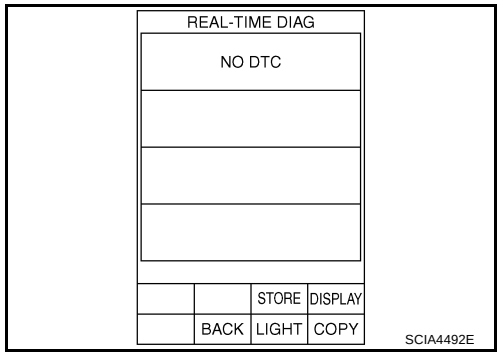

8. Touch “BACK”.

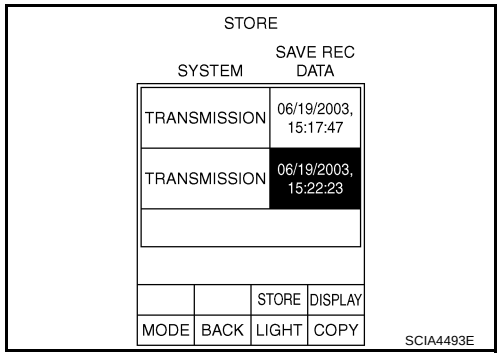

9. Touch “DISPLAY”.

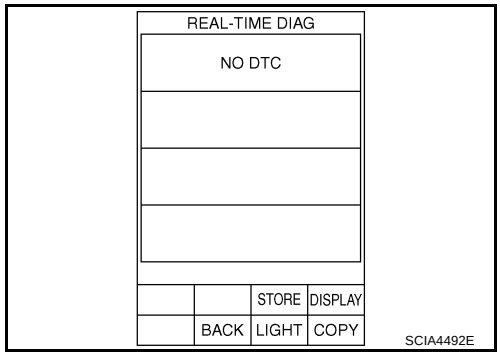

10. Touch “PRINT”.
11. Check the monitor data printed out.

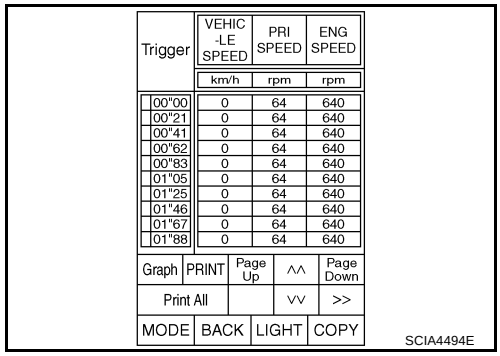

Check before Engine Is Started

UCS005E7

1. CHECK CVT INDICATOR LAMP

1. Park vehicle on flat surface.
2. Move selector lever to “P” position.
3. Turn ignition switch OFF. Wait at least 5 seconds.
4. Turn ignition switch ON. (Do not start engine.)

Does CVT indicator lamp come on for about 2 seconds?

YES >> 1. Turn ignition switch OFF.
2. Perform self-diagnosis and note NG items.
Refer to CVT-57, "SELF-DIAGNOSTIC RESULT MODE" .
3. Go to CVT-46, "Check at Idle" .

NO >> Stop “Road Test”. Go to CVT-175, "CVT Indicator Lamp Does Not Come On" .

Check at Idle

UCS005E8

1. CHECK STARTING THE ENGINE

1. Park vehicle on flat surface.
2. Move selector lever to “P” or “N” position.
3. Turn ignition switch OFF.
4. Turn ignition switch to “START” position.

Is engine started?

YES >> GO TO 2.

NO >> Stop “Road Test”. Mark the box on the CVT-36, "DIAGNOSTIC WORKSHEET" . Go to CVT-176, "Engine Cannot Be Started in “P” or “N” Position" .

2. CHECK STARTING THE ENGINE

1. Turn ignition switch ON.
2. Move selector lever to “D”, “M” or “R” position.
3. Turn ignition switch to “START” position.

Is engine started?

YES >> Stop “Road Test”. Mark the box on the CVT-36, "DIAGNOSTIC WORKSHEET" . Go to CVT-176, "Engine Cannot Be Started in “P” or “N” Position" .

NO >> GO TO 3.

3. CHECK “P” POSITION FUNCTION

1. Move selector lever to “P” position.
2. Turn ignition switch OFF.
3. Release parking brake.
4. Push vehicle forward or backward.
5. Apply parking brake.

Does vehicle move when it is pushed forward or backward?

YES >> Mark the box of CVT-177, "In “P” Position, Vehicle Moves Forward or Backward When Pushed" on the CVT-36, "DIAGNOSTIC WORKSHEET" . Continue “Road Test”.

NO >> GO TO 4.

4. CHECK "N" POSITION FUNCTION

1. Start engine.
2. Move selector lever to "N" position.
3. Release parking brake.

Does vehicle move forward or backward?

YES >> Mark the box of CVT-177, "In "N" Position, Vehicle Moves" on the CVT-36, "DIAGNOSTIC WORKSHEET" . Continue "Road Test".
NO >> GO TO 5.

5. CHECK SHIFT SHOCK

1. Apply foot brake.
2. Move selector lever to "R" position.

Is there large shock when changing from "N" to "R" position?

YES >> Mark the box of CVT-178, "Large Shock "N" → "R" Position" on the CVT-36, "DIAGNOSTIC WORKSHEET" . Continue "Road Test".
NO >> GO TO 6.

6. CHECK "R" POSITION FUNCTION

Release foot brake for several seconds.

Does vehicle creep backward when foot brake is released?

YES >> GO TO 7.
NO >> Mark the box of CVT-179, "Vehicle Does Not Creep Backward in "R" Position" on the CVT-36, "DIAGNOSTIC WORKSHEET" . Continue "Road Test".

7. CHECK "D" POSITION FUNCTION

With manual mode

Move selector lever to "D" position and check if vehicle creeps forward.

Does vehicle creep forward in all positions?

YES >> Go to CVT-47, "Cruise Test" .
NO >> Mark the box of CVT-180, "Vehicle Does Not Creep Forward in "D" Position" on the CVT-36, "DIAGNOSTIC WORKSHEET" . Continue "Road Test".

Cruise Test

UCS005E9

1. CHECK VEHICLE SPEED WHEN SHIFTING GEARS — PART 1

1. Drive vehicle for approximately 10 minutes to warm engine oil and CVT fluid up to operating temperature.

   CVT fluid operating temperature: 50 - 80°C (122 - 176°F)

2. Park vehicle on flat surface.
3. Move selector lever to "P" position.
4. Start engine.
5. Move selector lever to "D" position.
6. Accelerate vehicle to 2/8-way throttle depressing accelerator pedal constantly.

   Read vehicle speed and engine speed. Refer to CVT-48, "Vehicle Speed When Shifting Gears" .

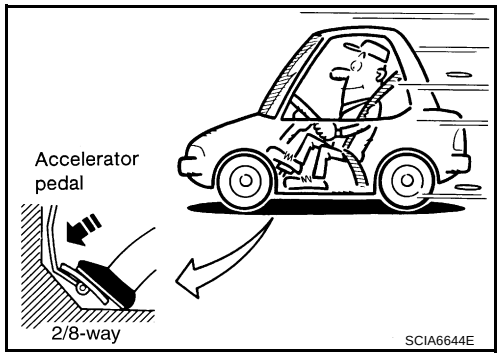

OK or NG

OK >> GO TO 2.
NG >> Mark the box of CVT-181, "CVT Does Not Shift" on the CVT-36, "DIAGNOSTIC WORKSHEET" . Continue "Road Test".

2. CHECK VEHICLE SPEED WHEN SHIFTING GEARS — PART 2

1. Park vehicle on flat surface.
2. Move selector lever to “D” position.
3. Accelerate vehicle to full depression depressing accelerator pedal constantly.

   Read vehicle speed and engine speed. Refer to CVT-48, "Vehicle Speed When Shifting Gears" .

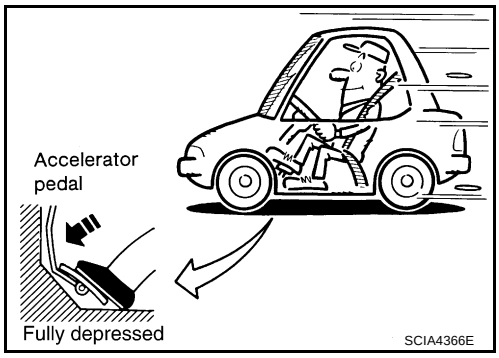

OK or NG

OK >> GO TO 3.

NG >> Mark the box of CVT-181, "CVT Does Not Shift" on the CVT-36, "DIAGNOSTIC WORKSHEET" . Continue “Road Test”.

3. CHECK MANUAL MODE FUNCTION

Move to manual mode from “D” position.

Does it switch to manual mode?

YES >> GO TO 4.

NO >> Mark the box of CVT-182, "Cannot Be Changed to Manual Mode" on the CVT-36, "DIAGNOSTIC WORKSHEET" . Continue “Road Test”.

4. CHECK SHIFT-UP FUNCTION

During manual mode driving, is upshift from M1 → M2 → M3 → M4 → M5 → M6 performed?

Read the gear position. Refer to CVT-60, "DATA MONITOR MODE" .

Is upshifting correctly performed?

YES >> GO TO 5.

NO >> Mark the box of CVT-182, "CVT Does Not Shift in Manual Mode" on the CVT-36, "DIAGNOSTIC WORKSHEET" . Continue “Road Test”.

5. CHECK SHIFT-DOWN FUNCTION

During manual mode driving, is downshift from M6 → M5 → M4 → M3 → M2 → M1 performed?

Read the gear position. Refer to CVT-60, "DATA MONITOR MODE" .

Is downshifting correctly performed?

YES >> GO TO 6.

NO >> Mark the box of CVT-182, "CVT Does Not Shift in Manual Mode" on the CVT-36, "DIAGNOSTIC WORKSHEET" . Continue “Road Test”.

6. CHECK ENGINE BRAKE FUNCTION

Check engine brake.

Does engine braking effectively reduce speed in M1 position?

YES >> 1. Stop the vehicle.
2. Perform self-diagnosis. Refer to CVT-57, "SELF-DIAGNOSTIC RESULT MODE" .

NO >> Mark the box of CVT-184, "Vehicle Does Not Decelerate by Engine Brake" on the CVT-36, "DIAGNOSTIC WORKSHEET" . then continue trouble diagnosis.

Vehicle Speed When Shifting Gears

UCS005EA

Numerical value data are reference values.

Engine type	Throttle position	Shift pattern	Engine speed (rpm)	
			At 40 km/h (25 MPH)	At 60 km/h (37 MPH)
VQ35DE	8/8	“D” position	2,900 - 4,000	3,900 - 5,600
	2/8	“D” position	1,100 - 3,100	1,200 - 3,400

CAUTION:

Lock-up clutch is engaged when vehicle speed is approximately 18 km/h (11 MPH) to 90 km/h (56 MPH).

TCM Input/Output Signal Reference Values

UCS005EB

TCM TERMINAL CONNECTOR LAYOUT

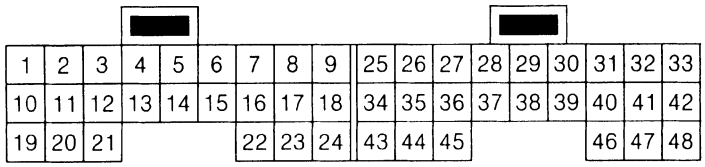

SCIA0495E

TCM INSPECTION TABLE

Data are reference values and are measured between each terminal and ground.

Terminal	Wire color	Item	Condition		Data (Approx.)
1	R/Y	Pressure control solenoid valve A (Line pressure solenoid valve)	 and 	Release your foot from the accelerator pedal.	5.0 - 7.0 V
				Press the accelerator pedal all the way down.	1.0 - 3.0 V
2	W/B	Pressure control solenoid valve B (Secondary pressure solenoid valve)		Release your foot from the accelerator pedal.	5.0 - 7.0 V
				Press the accelerator pedal all the way down.	3.0 - 4.0 V
3	L/W	Torque converter clutch solenoid valve		When vehicle cruises in “D” position. — When CVT performs lock-up.	6.0 V
				When vehicle cruises in “D” position. — When CVT does not perform lock-up.	1.0 V
4	L/Y	Lock-up select solenoid valve		Selector lever in “P” and “N” position	Battery voltage
				Wait at least for 5 seconds with the selector lever in “R” and “D” position	0 V
5	L	CAN-H	–		–
6	P	CAN-L	–		–
8	SB	Back-up lamp relay		Selector lever in “R” position.	0 V
				Selector lever in other positions.	Battery voltage
10	Y/L	Power supply		—	Battery voltage
				—	0 V
11	G/R	Step motor A	Within 2 seconds after ignition switch ON, the time measurement by using the pulse width measurement function (Hi level) of CONSULT-II.*1 **CAUTION:** **Connect the diagnosis data link cable to the vehicle diagnosis connector.** *1: A circuit tester cannot be used to test this item.		30.0 msec
12	O/B	Step motor B			10.0 msec
13	G/W	ROM assembly	—		—
14	L/R	ROM assembly	—		—
15	BR/R	ROM assembly	—		—

Terminal	Wire color	Item	Condition		Data (Approx.)
19	Y/L	Power supply		—	Battery voltage
				—	0 V
20	R	Step motor C	Within 2 seconds after ignition switch ON, the time measurement by using the pulse width measurement function (Hi level) of CONSULT-II.*1 **CAUTION:** **Connect the diagnosis data link cable to the vehicle diagnosis connector.** *1: A circuit tester cannot be used to test this item.		30.0 msec
21	R/G	Step motor D			10.0 msec
24	G/O	Starter relay		Selector lever in “N” and “P”position.	Battery voltage
				Selector lever in other positions.	0 V
25	B	Ground	Always		0 V
27	BR/W	PNP switch 1		Selector lever in “R”, “N” and “D” positions.	0 V
				Selector lever in “P” position.	Battery voltage
28	W/L	Power supply (memory back-up)	Always		Battery voltage
29	G	Output speed sensor (Secondary speed sensor)		When driving [M1 position, 20 km/h (12 MPH)].	400 Hz
32	GR	PNP switch 3 (monitor)		Selector lever in “D” position.	0 V
				Selector lever in “P”, “R” and “N” positions.	8.0 V - Battery voltage
34	P/B	PNP switch 2		Selector lever in “N” and “D” positions.	0 V
				Selector lever in “P” and “R” positions.	10.0 V - Battery voltage
35	P/L	PNP switch 3		Selector lever in “D” position.	0 V
				Selector lever in “P”, “R” and “N” positions.	8.0 V - Battery voltage
36	G	PNP switch 4		Selector lever in “R” and “D” positions.	0 V
				Selector lever in “P” and “N” positions.	10.0 V - Battery voltage
37	V/W	Transmission fluid pressure sensor A (Secondary pressure sensor)	 and 	“N” position idle	1.0 V
38	LG	Input speed sensor (Primary speed sensor)		When driving [M1 position, 20 km/h (12 MPH)].	660 Hz

Terminal	Wire color	Item	Condition		Data (Approx.)
41	V/O	Transmission fluid pressure sensor B (Primary pressure sensor)	 and 	“N” position idle	0.7 - 3.5 V
42	W/R	Sensor ground	Always		0 V
46	L/O	Sensor power		—	5.0 V
				—	0 V
47	V	CVT fluid temperature sensor		When CVT fluid temperature is 20°C (68°F)	2.0 V
				When CVT fluid temperature is 80°C (176°F)	1.0 V
48	B	Ground	Always		0 V

CONSULT-II Function (TRANSMISSION)

UCS005EC

CONSULT-II can display each diagnostic item using the diagnostic test modes shown below.

FUNCTION

Diagnostic test mode	Function	Reference page
Work support	This mode enables a technician to adjust some devices faster and more accurately by following the indications on CONSULT-II.	CVT-55
Self-diagnostic results	Self-diagnostic results can be read and erased quickly.	CVT-57
Data monitor	Input/Output data in the TCM can be read.	CVT-60
CAN diagnostic support monitor	The results of transmit/receive diagnosis of CAN communication can be read.	CVT-63
CALIB data	Characteristic information for TCM and CVT assembly can be read. Do not use, but displayed.	—
Function test	Performed by CONSULT-II instead of a technician to determine whether each system is “OK” or “NG”.	—
ECU part number	TCM part number can be read.	—

CONSULT-II REFERENCE VALUE

Item name	Condition	Display value (Approx.)
VSP SENSOR	During driving	Approximately matches the speedometer reading.
ESTM VSP SIG		
PRI SPEED SEN	During driving (lock-up ON)	Approximately matches the engine speed.
ENG SPEED SIG	Engine running	Closely matches the tachometer reading.
SEC HYDR SEN	“N” position idle	0.8 - 1.0 V
PRI HYDR SEN	“N” position idle	0.7 - 3.5 V
ATF TEMP SEN	When CVT fluid temperature is 20°C (68°F).	1.8 - 2.0 V
	When CVT fluid temperature is 80°C (176°F).	0.6 - 1.0 V
VIGN SEN	Ignition switch: ON	Battery voltage
VEHICLE SPEED	During driving	Approximately matches the speedometer reading.
PRI SPEED	During driving (lock-up ON)	Approximately matches the engine speed.
SEC SPEED	During driving	45 X Approximately matches the speed-ometer reading.
ENG SPEED	Engine running	Closely matches the tachometer reading.
GEAR RATIO	During driving	2.37 - 0.43
ACC PEDAL OPEN	Released accelerator pedal - Fully depressed accelerator pedal	0.0/8 - 8.0/8
SEC PRESS	“N” position idle	0.5 - 0.9 MPa
PRI PRESS	“N” position idle	0.3 - 0.9 MPa
STM STEP	During driving	-20 step – 190 step
ISOLT1	Lock-up OFF	0.0 A
	Lock-up ON	0.7 A
ISOLT2	Release your foot from the accelerator pedal.	0.8 A
	Press the accelerator pedal all the way down.	0.0 A
ISOLT3	Secondary pressure low - Secondary pressure high.	0.8 - 0.0 A
SOLMON1	Lock-up OFF	0.0 A
	Lock-up ON	0.6 - 0.7 A

Item name	Condition	Display value (Approx.)
SOLMON2	“N” position idle	0.8 A
	When stalled	0.3 - 0.6 A
SOLMON3	“N” position idle	0.6 - 0.7 A
	When stalled	0.4 - 0.6 A
INH SW3M	Selector lever in “D” position	ON
	Selector lever in “P”, “R” and “N” positions	OFF
INH SW4	Selector lever in “R” and “D” positions	ON
	Selector lever in “P” and “N” positions	OFF
INH SW3	Selector lever in “D” position	ON
	Selector lever in “P”, “R” and “N” positions	OFF
INH SW2	Selector lever in “N” and “D” positions	ON
	Selector lever in “P” and “R” positions	OFF
INH SW1	Selector lever in “R”, “N” and “D” positions	ON
	Selector lever in “P” position	OFF
BRAKE SW	Depressed brake pedal	ON
	Released brake pedal	OFF
FULL SW	Fully depressed accelerator pedal	ON
	Released accelerator pedal	OFF
IDLE SW	Released accelerator pedal	ON
	Fully depressed accelerator pedal	OFF
DOWNLVR	Selector lever: - side	ON
	Other than the above	OFF
UPLVR	Selector lever: + side	ON
	Other than the above	OFF
NON MMODE	Manual shift gate position (neutral, +side, -side)	OFF
	Other than the above	ON
MMODE	Manual shift gate position (neutral)	ON
	Other than the above	OFF
INDDRNG	Selector lever in “D” position	ON
	Selector lever in other positions	OFF
INDNRNG	Selector lever in “N” position	ON
	Selector lever in other positions	OFF
INDRRNG	Selector lever in “R” position	ON
	Selector lever in other positions	OFF
INDPRNG	Selector lever in “P” position	ON
	Selector lever in other positions	OFF
SMCOIL D	During driving	Changes ON ⇔ OFF.
SMCOIL C		
SMCOIL B		
SMCOIL A		
LUSEL SOL OUT	Selector lever in “P” and “N” positions	ON
	Wait at least for 5 seconds with the selector lever in “R” and “D” positions	OFF
STRTR RLY OUT	Selector lever in “P” and “N” positions	ON
	Selector lever in other positions	OFF

Item name	Condition	Display value (Approx.)
STRTR RLY MON	Selector lever in “P” and “N” positions	ON
	Selector lever in other positions	OFF
VDC ON	VDC operate	ON
	Other conditions	OFF
TCS ON	TCS operate	ON
	Other conditions	OFF
ABS ON	ABS operate	ON
	Other conditions	OFF
RANGE	Selector lever in “N” and “P” position.	N·P
	Selector lever in “R” position.	R
	Selector lever in “D” position.	D
M GEAR POS	During driving	1, 2, 3, 4, 5, 6

CONSULT-II SETTING PROCEDURE

Refer to GI-37, "CONSULT-II Start Procedure" .

WORK SUPPORT MODE

Display Item List

Item name	Description
ENGINE BRAKE ADJ.	The engine brake level setting can be canceled.
CONFORM CVTF DETERIORTN	The CVT fluid deterioration level can be checked.

Engine Brake Adjustment

1. Touch “WORK SUPPORT” on “SELECT DIAG MODE” screen.

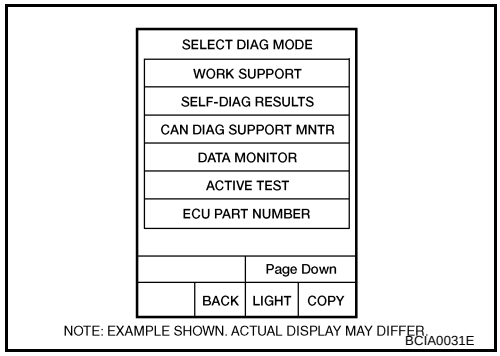

2. Touch “ENGINE BRAKE ADJ”.

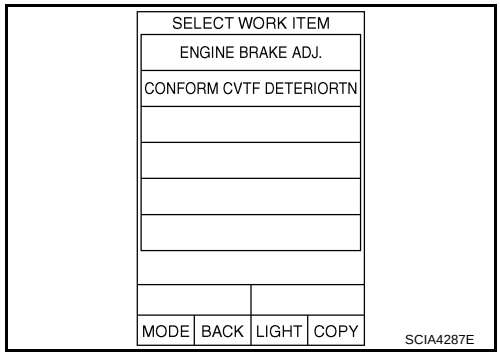

3. Touch “START”.

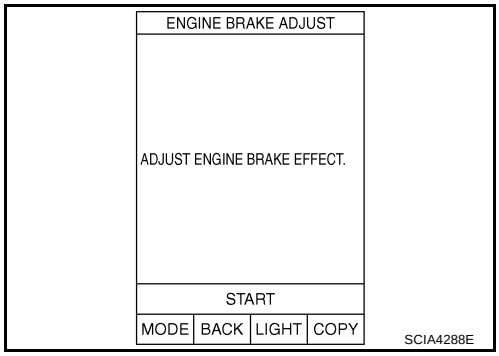

4. Set “ENGINE BRAKE LEVEL” by touching “UP” or “DOWN”.

   “ENGINE BRAKE LEVEL”

   0: Initial set value (Engine brake level control is activated)

   OFF: Engine brake level control is deactivated.

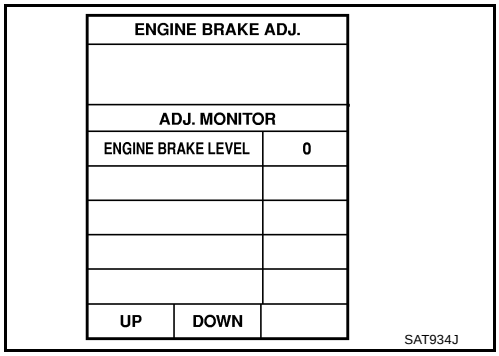

5. Turn ignition switch OFF, wait at least 5 seconds and then turn ignition switch ON.
6. Engine brake level set is completed.

   CAUTION:
   Mode of “+1” “0” “-1” “-2” “OFF” can be selected by pressing the “UP” “DOWN” on CONSULT-II screen. However, do not select mode other than “0” and “OFF”. If the “+1” or “-1” or “-2” is selected, that might cause the irregular driveability.

Check CVT Fluid Deterioration Date

1. Touch “WORK SUPPORT” on “SELECT DIAG MODE” screen.

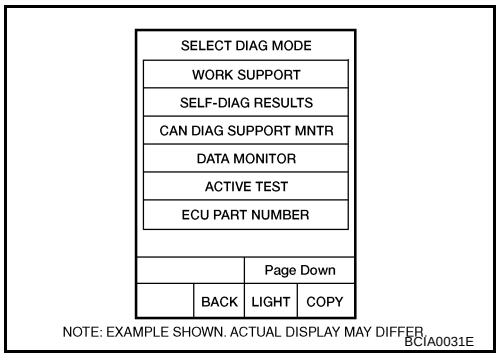

2. Touch “CONFORM CVTF DETERIORTN”.

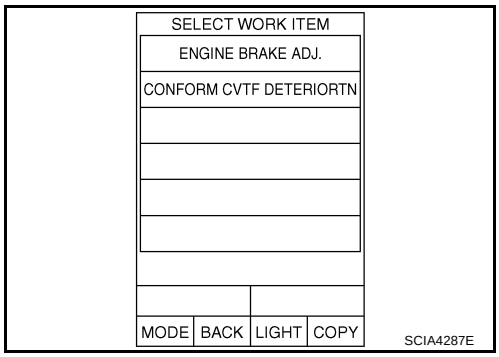

3. Check “CVTF DETERIORATION DATE”.

“CVTF DETERIORATION DATE”

More than 210000:

It is necessary to change CVT fluid.

Less than 210000:

It is not necessary to change CVT fluid.

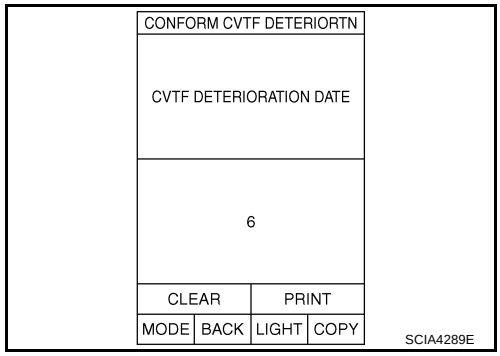

CAUTION:

Touch “CLEAR” after changing CVT fluid, and then erase “CVTF DETERIORATION DATE”.

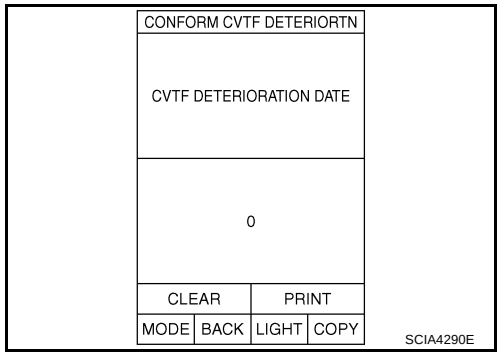

SELF-DIAGNOSTIC RESULT MODE

After performing self-diagnosis, place check marks for results on the CVT-36, "DIAGNOSTIC WORKSHEET" . Reference pages are provided following the items.

Operation Procedure

1. Touch “SELF-DIAG RESULTS” on “SELECT DIAG MODE” screen.
   Display shows malfunction experienced since the last erasing operation.

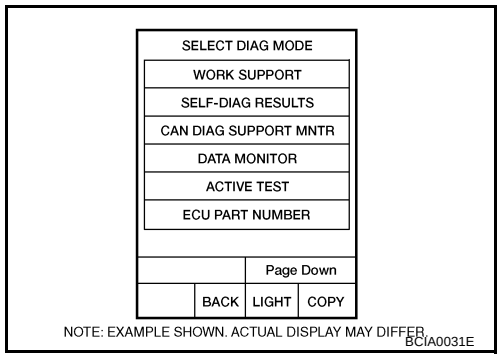

Display Items List

X: Applicable —: Not applicable

Items (CONSULT-II screen terms)	Malfunction is detected when...	TCM self-diagnosis	OBD-II (DTC)	Reference page
		“TRANS-MISSION” with CON-SULT-II	MIL indicator lamp*1, “ENGINE” with CONSULT-II or GST	
CAN COMM CIR-CUIT	● When the TCM is not transmitting or receiving CAN com-munication signal for 2 seconds or more.	U1000	U1000	CVT-64
STARTER RELAY/ CIRC	● If this signal is ON other than in P or N position, this is judged to be a malfunction. (And if it is OFF in P or N position, this is judged to be a malfunction too.)	P0615	—	CVT-67
BRAKE SW/CIRC	● When the brake switch does not switch to ON or OFF	P0703	—	CVT-71

Items (CONSULT-II screen terms)	Malfunction is detected when...	TCM self-diagnosis	OBD-II (DTC)	Reference page
		"TRANS-MISSION" with CON-SULT-II	MIL indicator lamp*1, "ENGINE" with CONSULT-II or GST	
PNP SW/CIRC	● PNP switch 1-4 signals input with impossible pattern ● PNP switch 3 monitor terminal open or short circuit	P0705	P0705	CVT-73
ATF TEMP SEN/ CIRC	● During running, the CVT fluid temperature sensor signal voltage is excessively high or low	P0710	P0710	CVT-80
INPUT SPD SEN/ CIRC	● Input speed sensor (primary speed sensor) signal is not input due to an open circuit. ● An unexpected signal is input when vehicle is being driven.	P0715	P0715	CVT-85
VEH SPD SEN/ CIR AT	● Signal from vehicle speed sensor CVT [Output speed sensor (Secondary speed sensor)] not input due to open or short circuit ● Unexpected signal input during running	P0720	P0720	CVT-90
ENGINE SPEED SIG	● TCM does not receive the CAN communication signal from the ECM. ● Engine speed is too low while driving.	P0725	—	CVT-96
BELT DAMG	● Unexpected gear ratio detected	P0730	—	CVT-98
TCC SOLENOID/ CIRC	● Normal voltage not applied to solenoid due to open or short circuit	P0740	P0740	CVT-100
A/T TCC S/V FNCTN	● CVT cannot perform lock-up even if electrical circuit is good. ● TCM detects as irregular by comparing difference value with slip rotation. ● There is a great difference between engine speed and primary speed when TCM lock-up signal is on.	P0744	P0744	CVT-105
L/PRESS SOL/ CIRC	● Normal voltage not applied to solenoid due to open or short circuit ● TCM detects as irregular by comparing target value with monitor value.	P0745	P0745	CVT-108
PRS CNT SOL/A FCTN	● Unexpected gear ratio was detected in the LOW side due to excessively low line pressure.	P0746	P0746	CVT-113
PRS CNT SOL/B FCTN	● Secondary pressure is too high or too low compared with the commanded value while driving.	P0776	P0776	CVT-116
PRS CNT SOL/B CIRC	● Normal voltage not applied to solenoid due to cut line, short, or the like ● TCM detects as irregular by comparing target value with monitor value.	P0778	P0778	CVT-119
MANUAL MODE SWITCH	● When an impossible pattern of switch signals is detected, a malfunction is detected.	P0826	—	CVT-124
TR PRS SENS/A CIRC	● Signal voltage of the transmission fluid pressure sensor A (secondary pressure sensor) is too high or too low while driving.	P0840	P0840	CVT-129
PRESS SEN/ FNCTN	● Correlation between the values of the transmission fluid pressure sensor A (secondary pressure sensor) and the transmission fluid pressure sensor B (primary pressure sensor) is out of specification.	P0841	—	CVT-134
TR PRS SENS/B CIRC	● Signal voltage of the transmission fluid pressure sensor B (primary pressure sensor) is too high or too low while driving.	P0845	P0845	CVT-137

Items (CONSULT-II screen terms)	Malfunction is detected when...	TCM self-diagnosis	OBD-II (DTC)	Reference page
		"TRANS-MISSION" with CON-SULT-II	MIL indicator lamp*1, "ENGINE" with CONSULT-II or GST	
SEC/PRESS DOWN	● Secondary fluid pressure is too low compared with the commanded value while driving.	P0868	—	CVT-142
TCM-POWER SUPPLY	● When the power supply to the TCM is cut OFF, for example because the battery is removed, and the self-diagnosis memory function stops ● This is not a malfunction message (Whenever shutting OFF a power supply to the TCM, this message appears on the screen.)	P1701	—	CVT-145
TP SEN/CIRC A/T	● TCM does not receive the proper accelerator pedal position signals (input by CAN communication) from ECM.	P1705	—	CVT-150
ESTM VEH SPD SIG	● CAN communication with the ABS actuator and electric unit (control unit) is malfunctioning. ● There is a great difference between the vehicle speed signal from the ABS actuator and electric unit (control unit), and the vehicle speed sensor signal.	P1722	—	CVT-152
CVT SPD SEN/ FNCTN	● A rotation sensor error is detected because the gear does not change in accordance with the position of the stepping motor. **CAUTION:** **One of the "P0720 VEH SPD SEN/CIR AT", the "P0715 INPUT SPD SEN/CIRC" or the "P0725 ENGINE SPEED SIG" is displayed with the DTC at the same time.**	P1723	—	CVT-154
ELEC TH CON-TROL	● The electronically controlled throttle for ECM is malfunctioning.	P1726	—	CVT-156
LU-SLCT SOL/ CIRC	● Normal voltage not applied to solenoid due to cut line, short, or the like ● TCM detects as irregular by comparing target value with monitor value.	P1740	P1740	CVT-158
L/PRESS CON-TROL	● TCM detects the unexpected line pressure.	P1745	—	CVT-163
STEP MOTR CIRC	● Each coil of the step motor is not energized properly due to an open or a short.	P1777	P1777	CVT-164
STEP MOTR/ FNCTN	● There is a great difference between the number of steps for the stepping motor and for the actual gear ratio.	P1778	P1778	CVT-168
NO DTC IS DETECTED: FUR-THER TESTING MAY BE REQUIRED	● No NG item has been detected.	X	X	—

*1: Refer to CVT-32, "Malfunction Indicator Lamp (MIL)" .

How to Erase Self-diagnostic Results

1. Touch “SELF-DIAG RESULTS” on “SELECT DIAG MODE” screen.

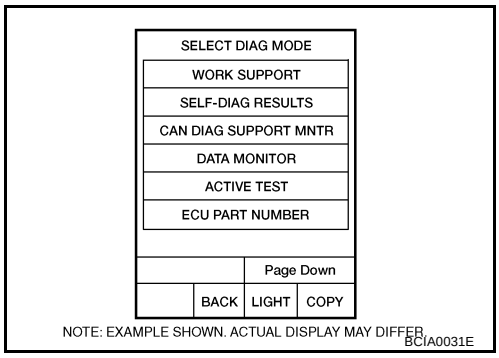

2. Touch “ERASE”. (The self-diagnostic results will be erased.)

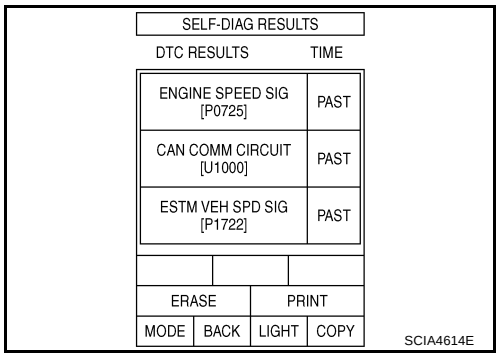

DATA MONITOR MODE

Operation Procedure

1. Touch “DATA MONITOR” on “SELECT DIAG MODE” screen.

   NOTE:
   When malfunction is detected, CONSULT-II performs “REAL-TIME DIAGNOSIS”. Also, any malfunction detected while in this mode will be displayed at real time.

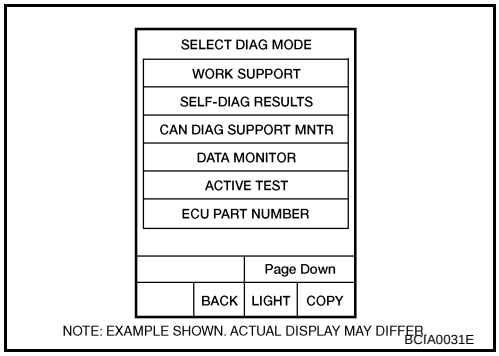

Display Items List

X: Standard, —: Not applicable, ▼: Option

Monitored item (Unit)	Monitor item selection			Remarks
	ECU INPUT SIGNALS	MAIN SIG-NALS	SELEC-TION FROM MENU	
VSP SENSOR (km/h)	X	—	▼	Output speed sensor (secondary speed sensor)
ESTM VSP SIG (km/h)	X	—	▼	
PRI SPEED SEN (rpm)	X	—	▼	
ENG SPEED SIG (rpm)	X	—	▼	
SEC HYDR SEN (V)	X	—	▼	
PRI HYDR SEN (V)	X	—	▼	
ATF TEMP SEN (V)	X	—	▼	CVT fluid temperature sensor
VIGN SEN (V)	X	—	▼	

Monitored item (Unit)	Monitor item selection			Remarks
	ECU INPUT SIGNALS	MAIN SIG-NALS	SELEC-TION FROM MENU	
VEHICLE SPEED (km/h)	—	X	▼	Vehicle speed recognized by the TCM
PRI SPEED (rpm)	—	X	▼	Primary pulley speed
SEC SPEED (rpm)	—	—	▼	Secondary pulley speed
ENG SPEED (rpm)	—	X	▼	
SLIP REV (rpm)	—	X	▼	Difference between engine speed and primary pulley speed
GEAR RATIO	—	X	▼	
G SPEED (G)	—	—	▼	
ACC PEDAL OPEN (0.0/8)	X	X	▼	Degree of opening for accelerator recognized by the TCM For fail-safe operation, the specific value used for control is displayed
TRQ RTO	—	—	▼	
SEC PRESS (MPa)	—	X	▼	
PRI PRESS (MPa)	—	X	▼	
ATF TEMP	—	X	▼	
DSR REV (rpm)	—	—	▼	
DGEAR RATIO	—	—	▼	
DSTM STEP (step)	—	—	▼	
STM STEP (step)	—	X	▼	
LU PRS (MPa)	—	—	▼	
LINE PRS (MPa)	—	—	▼	
TGT SEC PRESS (MPa)	—	—	▼	
ISOLT1 (A)	—	X	▼	Torque converter clutch solenoid valve output current
ISOLT2 (A)	—	X	▼	Pressure control solenoid valve A (line pressure solenoid valve) output current
ISOLT3 (A)	—	X	▼	Pressure control solenoid valve B (secondary pressure solenoid valve) output current
SOLMON1 (A)	X	X	▼	Torque converter clutch solenoid valve monitor current
SOLMON2 (A)	X	X	▼	Pressure control solenoid valve A (line pressure solenoid valve) monitor current
SOLMON3 (A)	X	X	▼	Pressure control solenoid valve B (secondary pressure solenoid valve) monitor current
INH SW3M (ON/OFF)	X	—	▼	PNP switch 3 ON-OFF status monitor
INH SW4 (ON/OFF)	X	—	▼	PNP switch 4 ON-OFF status
INH SW3 (ON/OFF)	X	—	▼	PNP switch 3 ON-OFF status
INH SW2 (ON/OFF)	X	—	▼	PNP switch 2 ON-OFF status
INH SW1 (ON/OFF)	X	—	▼	PNP switch 1 ON-OFF status

Monitored item (Unit)	Monitor item selection			Remarks
	ECU INPUT SIGNALS	MAIN SIG-NALS	SELEC-TION FROM MENU	
BRAKE SW (ON/OFF)	X	X	▼	Stop lamp switch (Signal input with CAN commu-nication)
FULL SW (ON/OFF)	X	X	▼	Signal input with CAN communications
IDLE SW (ON/OFF)	X	X	▼	
SPORT MODE SW (ON/OFF)	X	X	▼	Not mounted but displayed
STRDWNSW (ON/OFF)	X	—	▼	
STRUPSW (ON/OFF)	X	—	▼	
DOWNLVR (ON/OFF)	X	—	▼	
UPLVR (ON/OFF)	X	—	▼	
NONMMODE (ON/OFF)	X	—	▼	
MMODE (ON/OFF)	X	—	▼	
INDLRNG (ON/OFF)	—	—	▼	
INDDRNG (ON/OFF)	—	—	▼	“D” position indicator output
INDNRNG (ON/OFF)	—	—	▼	“N” position indicator output
INDRRNG (ON/OFF)	—	—	▼	“R” position indicator output
INDPRNG (ON/OFF)	—	—	▼	“P” position indicator output
CVT LAMP (ON/OFF)	—	—	▼	
SPORT MODE IND (ON/OFF)	—	—	▼	Not mounted but displayed
MMODE IND (ON/OFF)	—	—	▼	
SMCOIL D (ON/OFF)	—	—	▼	Step motor coil “D” energizing status
SMCOIL C (ON/OFF)	—	—	▼	Step motor coil “C” energizing status
SMCOIL B (ON/OFF)	—	—	▼	Step motor coil “B” energizing status
SMCOIL A (ON/OFF)	—	—	▼	Step motor coil “A” energizing status
LUSEL SOL OUT (ON/OFF)	—	—	▼	
REV LAMP (ON/OFF)	—	X	▼	
STRTR RLY OUT (ON/OFF)	—	—	▼	Starter relay
LUSEL SOL MON (ON/OFF)	—	—	▼	
STRTR RLY MON (ON/OFF)	—	—	▼	Starter relay
VDC ON (ON/OFF)	X	—	▼	
TCS ON (ON/OFF)	X	—	▼	
ABS ON (ON/OFF)	X	—	▼	
ACC ON (ON/OFF)	X	—	▼	Not mounted but displayed
RANGE	—	X	▼	Indicates position is recognized by TCM. Indi-cates a specific value required for control when fail-safe function is activated
M GEAR POS	—	X	▼	

Monitored item (Unit)	Monitor item selection			Remarks
	ECU INPUT SIGNALS	MAIN SIGNALS	SELECTION FROM MENU	
Voltage (V)	—	—	▼	Displays the value measured by the voltage probe
Frequency (Hz)	—	—	▼	The value measured by the pulse probe is displayed
DUTY-HI (high) (%)	—	—	▼	
DUTY-LOW (low) (%)	—	—	▼	
PLS WIDTH-HI (ms)	—	—	▼	
PLS WIDTH-LOW (ms)	—	—	▼	

CAN DIAGNOSTIC SUPPORT MONITOR MODE

Operation Procedure

1. Touch “CAN DAIG SUPPORT MNTR” on “SELECT DIAG MODE” screen. Refer to LAN-44, "CAN Diagnostic Support Monitor" .

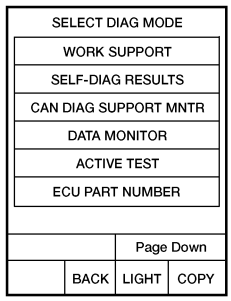

NOTE: EXAMPLE SHOWN. ACTUAL DISPLAY MAY DIFFER.

BCIA0031E

UCS005ED

Diagnostic Procedure without CONSULT-II

OBD-II SELF-DIAGNOSTIC PROCEDURE (WITH GST)

Refer to EC-129, "Generic Scan Tool (GST) Function" .

DTC U1000 CAN COMMUNICATION LINE

PFP:23710

Description

UCS005EE

CAN (Controller Area Network) is a serial communication line for real time application. It is an on-vehicle multiplex communication line with high data communication speed and excellent malfunction detection ability. Many electronic control units are equipped onto a vehicle, and each control unit shares information and links with other control units during operation (not independent). In CAN communication, control units are connected with 2 communication lines (CAN-H line, CAN-L line) allowing a high rate of information transmission with less wiring. Each control unit transmits/receives data but selectively reads required data only.

On Board Diagnosis Logic

UCS005EF

- This is an OBD-II self-diagnostic item.
- Diagnostic trouble code “U1000 CAN COMM CIRCUIT” with CONSULT-II is detected when TCM cannot communicate to other control units.

Possible Cause

UCS005EG

Harness or connectors
(CAN communication line is open or shorted.)

DTC Confirmation Procedure

UCS005EH

NOTE:
If “DTC Confirmation Procedure” has been previously performed, always turn ignition switch OFF and wait at least 10 seconds before performing the next test.
After the repair, touch “ERASE” on “SELF-DIAG RESULTS” and then perform the following procedure to confirm the malfunction is eliminated.

WITH CONSULT-II

1. Turn ignition switch ON. (Do not start engine.)
2. Select “DATA MONITOR” mode for “TRANSMISSION” with CONSULT-II.
3. Start engine and wait for at least 6 seconds.
4. If DTC is detected, go to CVT-66, "Diagnostic Procedure" .

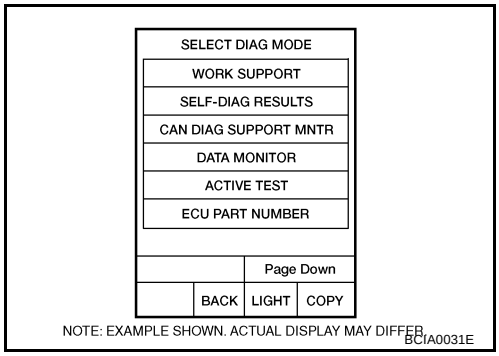

WITH GST

Follow the procedure “WITH CONSULT-II”.

Wiring Diagram — CVT — CAN

UCS005EI

CVT-CAN-01

: DETECTABLE LINE FOR DTC
: NON-DETECTABLE LINE FOR DTC
: DATA LINE

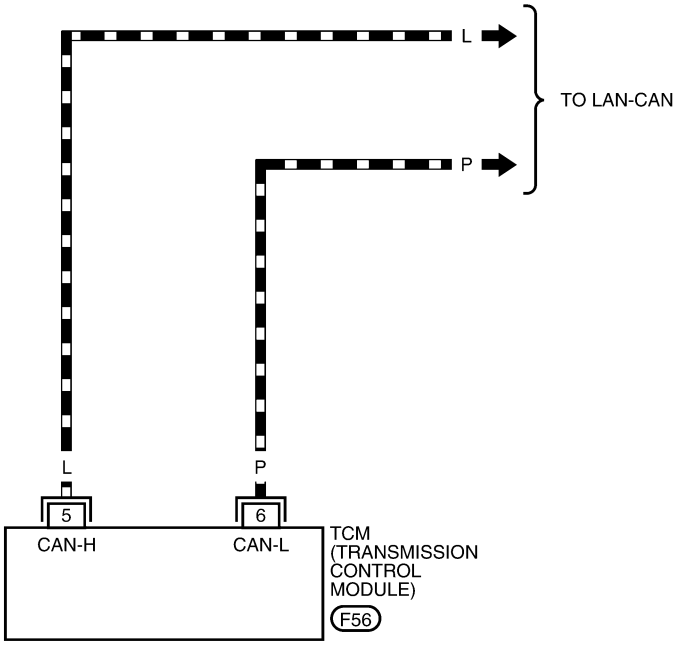

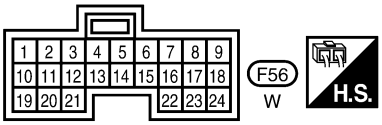

BCWA0620E

TCM terminal data are reference values, measured between each terminal and ground.

Terminal	Wire color	Item	Condition	Data (Approx.)
5	L	CAN-H	–	–
6	P	CAN-L	–	–

Diagnostic Procedure

UCS005EJ

1. CHECK CAN COMMUNICATION CIRCUIT

With CONSULT-II

1. Turn ignition switch ON and start engine.
2. Select “SELF-DIAG RESULTS” mode for “TRANSMISSION” with CONSULT-II.

Is any malfunction of the “U1000 CAN COMM CIRCUIT” indicated?

YES >> Print out CONSULT-II screen, go to LAN section. Refer to LAN-3, "Precautions When Using CONSULT-II" .

NO >> **INSPECTION END**

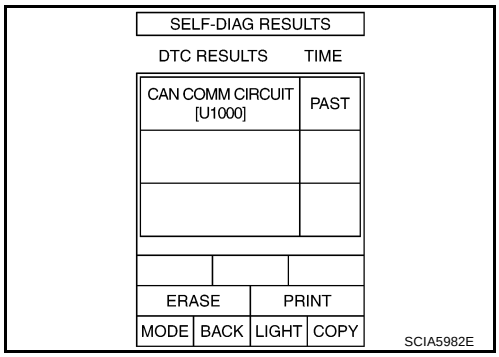

DTC P0615 START SIGNAL CIRCUIT

PFP:25230

Description

UCS005EK

- TCM controls starter relay in IPDM E/R.
- TCM switches starter relay ON at “P” or “N” position and allows to crank engine.
- Then it prohibits cranking other than at “P” or “N” position.

CONSULT-II Reference Value

UCS005EL

Item name	Condition	Display value
STRTR RLY OUT	Selector lever in “P” and “N” positions	ON
	Selector lever in other positions	OFF
STRTR RLY MON	Selector lever in “P” and “N” positions	ON
	Selector lever in other positions	OFF

On Board Diagnosis Logic

UCS005EM

- This is not an OBD-II self-diagnostic item.
- Diagnostic trouble code “P0615 STARTER RELAY/CIRC” with CONSULT-II is detected when starter relay switched ON other than at “P” or “N” position. (Or when switched OFF at “P” or “N” position).

Possible Cause

UCS005EN

- Harness or connectors
  (Starter relay and TCM circuit is open or shorted.)
- Starter relay

DTC Confirmation Procedure

UCS005EO

CAUTION:
Always drive vehicle at a safe speed.

NOTE:
If “DTC Confirmation Procedure” has been previously performed, always turn ignition switch OFF and wait at least 10 seconds before performing the next test.
After the repair, touch “ERASE” on “SELF-DIAG RESULTS” and then perform the following procedure to confirm the malfunction is eliminated.

WITH CONSULT-II

1. Turn ignition switch ON. (Do not start engine.)
2. Select “DATA MONITOR” mode for “TRANSMISSION” with CONSULT-II.
3. Start engine.
4. Drive vehicle for at least 2 consecutive seconds.
5. If DTC is detected, go to CVT-69, "Diagnostic Procedure" .

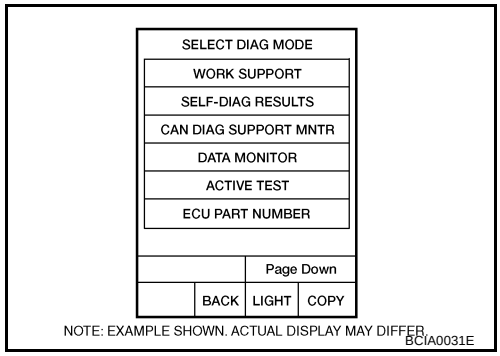

Wiring Diagram — CVT — STSIG

UCS005EP

CVT-STSIG-01

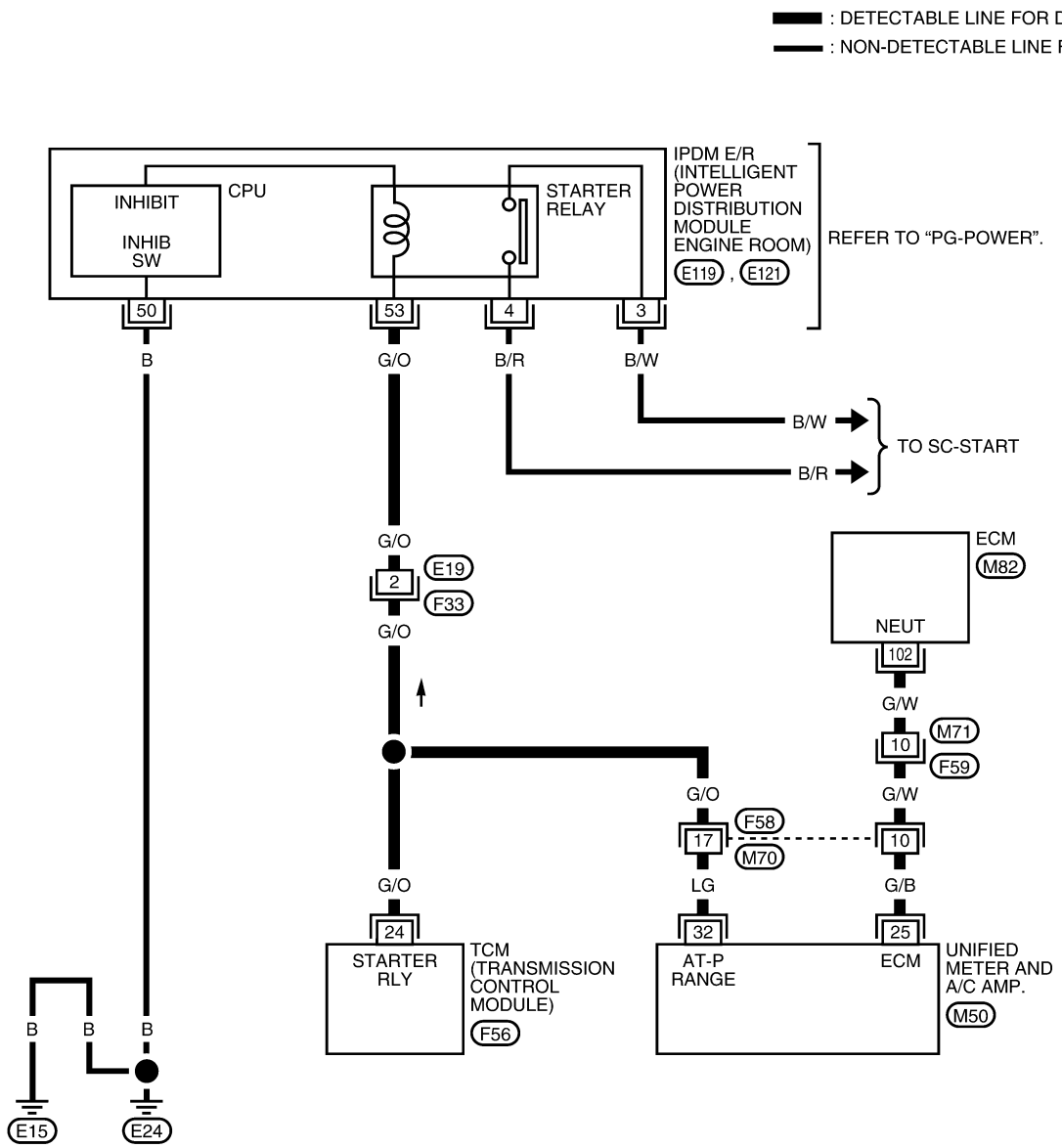

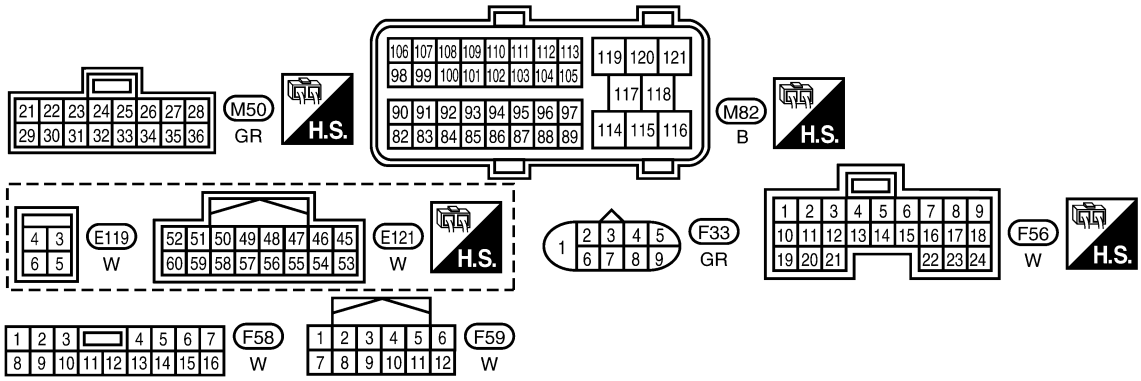

BCWA0621E

TCM terminal data are reference values, measured between each terminal and ground.

Terminal	Wire color	Item	Condition		Data (Approx.)
24	G/O	Starter relay	ON	Selector lever in “N” and “P” positions	Battery voltage
				Selector lever in other positions	0 V

Diagnostic Procedure

UCS005EQ

1. CHECK STARTER RELAY SIGNAL

With CONSULT-II

1. Turn ignition switch ON. (Do not start engine.)
2. Select “SELECTION FROM MENU” in “DATA MONITOR” mode for “TRANSMISSION” with CONSULT-II and check monitor “STRTR RLY OUT”, “STRTR RLY MON”(PNP relay) ON/OFF.

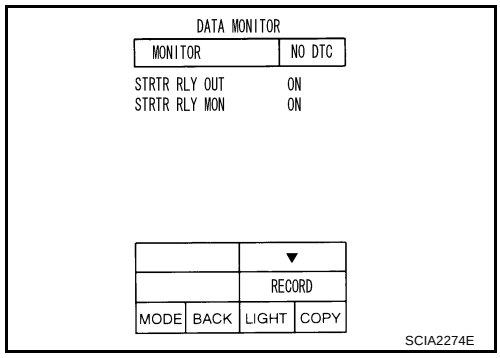

Item name	Condition	Display value
STRTR RLY OUT	Selector lever in “P” and “N” positions	ON
	Selector lever in other positions	OFF
STRTR RLY MON	Selector lever in “P” and “N” positions	ON
	Selector lever in other positions	OFF

Without CONSULT-II

1. Turn ignition switch ON. (Do not start engine.)
2. Check voltage between the TCM connector terminal and ground.

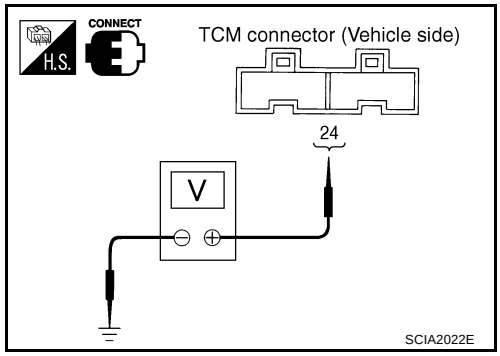

Terminal	Item	Condition		Data (Approx.)
24	Starter relay	ON	Selector lever in “N” and “P” positions	Battery voltage
			Selector lever in other positions	0 V

OK or NG

OK >> GO TO 3.
NG >> GO TO 2.

2. DETECT MALFUNCTIONING ITEM

Check the following:

- Starter relay. Refer to PG-75, "STANDARDIZED RELAY" .
- Open or short-circuit in the harness between TCM and the starter relay. Refer to CVT-68, "Wiring Diagram — CVT — STSIG" .
- Ground circuit for the starter relay. Refer to SC-11, "Wiring Diagram — START —" .

OK or NG

OK >> GO TO 3.
NG >> Repair or replace damaged parts.

3. CHECK DTC

Perform “DTC Confirmation Procedure”. Refer to CVT-67, "DTC Confirmation Procedure" .

OK or NG

OK >> **INSPECTION END**
NG >> GO TO 4.

4. CHECK TCM

1. Check TCM input/output signals. Refer to CVT-50, "TCM Input/Output Signal Reference Values" .
2. If NG, re-check TCM pin terminals for damage or loose connection with harness connector.

OK or NG

OK >> **INSPECTION END**
NG >> Repair or replace damaged parts.

DTC P0703 STOP LAMP SWITCH CIRCUIT

PFP:25320

Description

UCS005ER

ON, OFF status of the stop lamp switch is sent via the CAN communication from the unified meter and A/C amp to TCM using the signal.

CONSULT-II Reference Value

UCS005ES

Item name	Condition	Display value
BRAKE SW	Depressed brake pedal	ON
	Released brake pedal	OFF

On Board Diagnosis Logic

UCS005ET

- This is not an OBD-II self-diagnostic item.
- Diagnostic trouble code “P0703 BRAKE SW/CIRC” with CONSULT-II is detected when the stop lamp switch does not switch to ON and OFF.
  - The stop lamp switch does not switch to ON, OFF.

Possible Cause

UCS005EU

- Harness or connectors
  (Stop lamp switch, and unified meter and A/C amp circuit are open or shorted.)
  (CAN communication line is open or shorted.)
- Stop lamp switch

DTC Confirmation Procedure

UCS005EV

CAUTION:
Always drive vehicle at a safe speed.

NOTE:
If “DTC Confirmation Procedure” has been previously performed, always turn ignition switch OFF and wait at least 10 seconds before performing the next test.
After the repair, touch “ERASE” on “SELF-DIAG RESULTS” and then perform the following procedure to confirm the malfunction is eliminated.

WITH CONSULT-II

1. Turn ignition switch ON. (Do not start engine.)
2. Select “DATA MONITOR” mode for “TRANSMISSION” with CONSULT-II.
3. Start engine.
4. Start vehicle for at least 3 consecutive seconds.
5. If DTC is detected, go to CVT-72, "Diagnostic Procedure" .

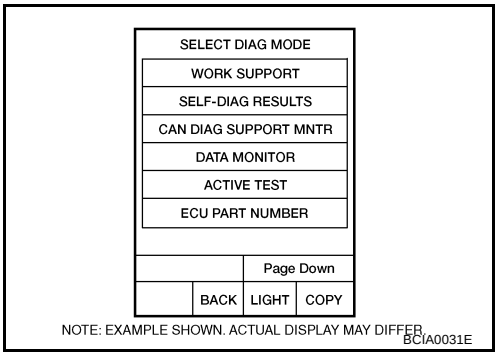

Diagnostic Procedure

UCS005EW

1. CHECK CAN COMMUNICATION LINE

Perform the self-diagnosis check. Refer to CVT-57, "SELF-DIAGNOSTIC RESULT MODE" .

Is any malfunction of the “U1000 CAN COMM CIRCUIT” indicated?

YES >> Check CAN communication line. Refer to CVT-64, "DTC U1000 CAN COMMUNICATION LINE" .
NO >> GO TO 2.

2. CHECK STOP LAMP SWITCH CIRCUIT

With CONSULT-II

1. Turn ignition switch ON. (Do not start engine.)
2. Select “ECU INPUT SIGNALS” in “DATA MONITOR” mode for “TRANSMISSION” with CONSULT-II.
3. Read out ON/OFF switching action of the “BRAKE SW”.

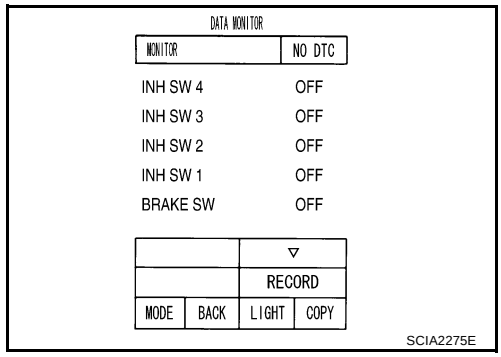

Item name	Condition	Display value
BRAKE SW	Depressed brake pedal	ON
	Released brake pedal	OFF

OK or NG

OK >> **INSPECTION END**
NG >> GO TO 3.

3. CHECK STOP LAMP SWITCH

Check continuity between stop lamp switch harness connector E38 terminals 1 and 2. Refer to CVT-171, "Wiring Diagram — CVT — NONDTC" .

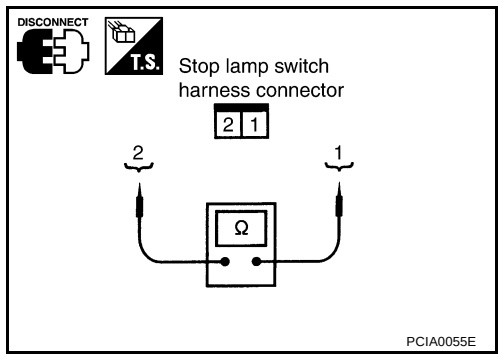

Condition	Continuity
When brake pedal is depressed	Yes
When brake pedal is released	No

Check stop lamp switch after adjusting brake pedal — refer to BR-6, "BRAKE PEDAL" .

OK or NG

OK >> Check the following. If NG, repair or replace damaged parts.
- Harness for short or open between battery and stop lamp switch.
- Harness for short or open between stop lamp switch and unified meter and A/C amp.

NG >> Repair or replace the stop lamp switch.

DTC P0705 PARK/NEUTRAL POSITION SWITCH

PFP:32006

Description

UCS005EX

- The PNP switch is included in the control valve assembly.
- The PNP switch includes 4 transmission position switches.
- TCM judges the selector lever position by the PNP switch signal.

Shift position	PNP switch 1	PNP switch 2	PNP switch 3	PNP switch 4	PNP switch 3 (monitor)
P	OFF	OFF	OFF	OFF	OFF
R	ON	OFF	OFF	ON	OFF
N	ON	ON	OFF	OFF	OFF
D	ON	ON	ON	ON	ON

CONSULT-II Reference Value

UCS005EY

Item name	Condition	Display value
INH SW3M	Selector lever in “D” position	ON
	Selector lever in “P”, “R” and “N” positions	OFF
INH SW4	Selector lever in “R” and “D” positions	ON
	Selector lever in “P” and “N” positions	OFF
INH SW3	Selector lever in “D” position	ON
	Selector lever in “P”, “R” and “N” positions	OFF
INH SW2	Selector lever in “N” and “D” positions	ON
	Selector lever in “P” and “R” positions	OFF
INH SW1	Selector lever in “R”, “N” and “D” positions	ON
	Selector lever in “P” position	OFF

On Board Diagnosis Logic

UCS005EZ

- This is an OBD-II self-diagnostic item.
- Diagnostic trouble code “P0705 PNP SW/CIRC” with CONSULT-II is detected under the following conditions.
  - When TCM does not receive the correct voltage signal from the PNP switches 1, 2, 3 and 4 based on the gear position.
  - When the signal from monitor terminal of PNP switch 3 is different from PNP switch 3.

Possible Cause

UCS005F0

- Harness or connectors
  (PNP switches 1, 2, 3, 4 and TCM circuit is open or shorted.)
- PNP switches 1, 2, 3, 4
- PNP switch 3 monitor terminal is open or shorted

DTC Confirmation Procedure

UCS005F1

CAUTION:
Always drive vehicle at a safe speed.

NOTE:
If "DTC Confirmation Procedure" has been previously performed, always turn ignition switch OFF and wait at least 10 seconds before performing the next test.
After the repair, touch "ERASE" on "SELF-DIAG RESULTS" and then perform the following procedure to confirm the malfunction is eliminated.

WITH CONSULT-II

1. Turn ignition switch ON. (Do not start engine.)
2. Select "DATA MONITOR" mode for "TRANSMISSION" with CONSULT-II.
3. Start engine.
4. Drive vehicle and maintain the following conditions for at least 2 consecutive seconds.
   VEHICLE SPEED: More than 10 km/h (6 MPH)
   ENG SPEED: More than 450 rpm
   ACC PEDAL OPEN: More than 1.0/8
5. If DTC is detected, go to CVT-77, "Diagnostic Procedure" .

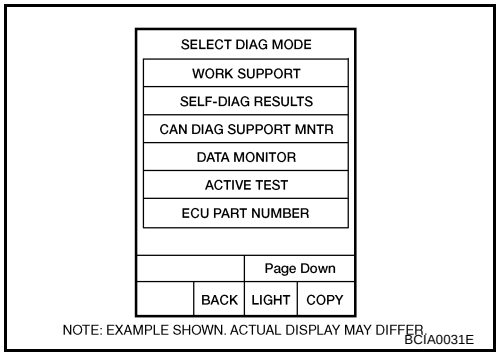

WITH GST

Follow the procedure "WITH CONSULT-II".

Wiring Diagram — CVT — PNP/SW

UCS005F2

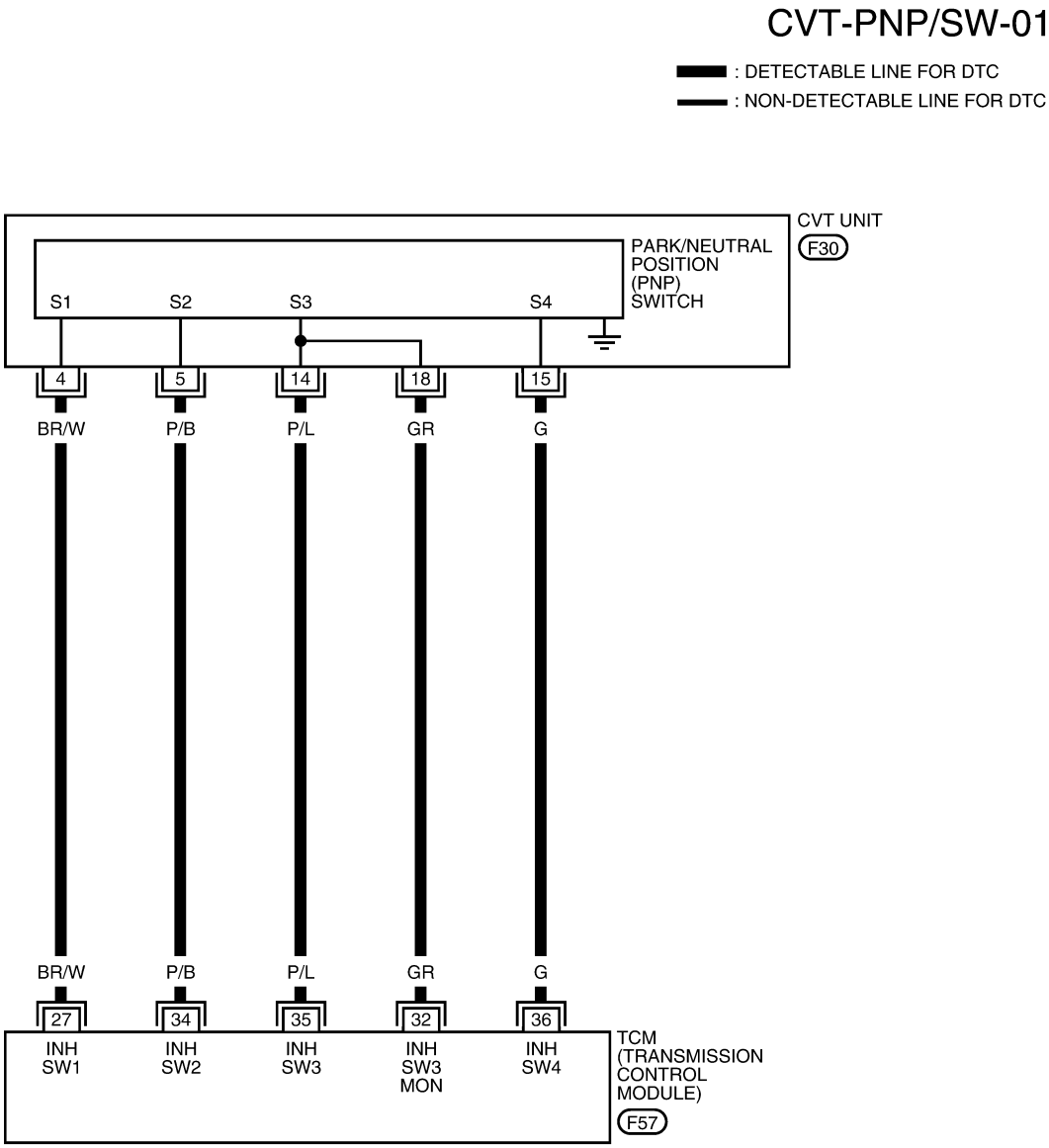

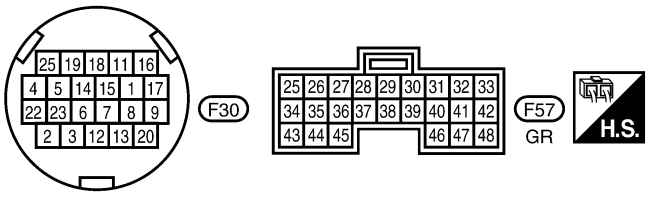

BCWA0622E

TCM terminal data are reference values, measured between each terminal and ground.

Terminal	Wire color	Item	Condition		Data (Approx.)
27	BR/W	PNP switch 1		Selector lever in “R”, “N” and “D” positions.	0 V
				Selector lever in “P” position.	Battery voltage
32	GR	PNP switch 3 (monitor)		Selector lever in “D” position.	0 V
				Selector lever in “P”, “R” and “N” positions.	8.0 V - Battery voltage
34	P/B	PNP switch 2		Selector lever in “N” and “D” positions.	0 V
				Selector lever in “P” and “R” positions.	10.0 V - Battery voltage
35	P/L	PNP switch 3		Selector lever in “D” position.	0 V
				Selector lever in “P”, “R” and “N” positions.	8.0 V - Battery voltage
36	G	PNP switch 4		Selector lever in “R” and “D” positions.	0 V
				Selector lever in “P” and “N” positions.	10.0 V - Battery voltage

Diagnostic Procedure

UCS005F3

1. CHECK PNP SW SIGNALS

With CONSULT-II

1. Turn ignition switch ON. (Do not start engine.)
2. Select “ECU INPUT SIGNALS” in “DATA MONITOR” mode for “TRANSMISSION” with CONSULT-II.
3. Change selector lever to “P”, “R”, “N” and “D” positions to check the value of “INH SW1” “INH SW2” “INH SW3” “INH SW4” and “INH SW3M”.

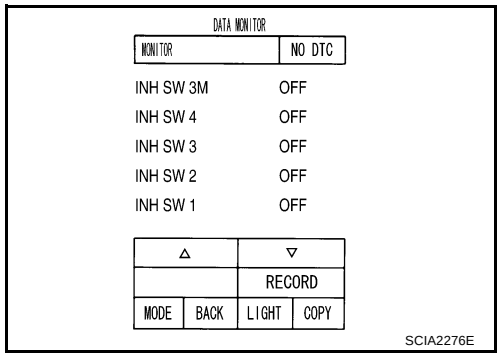

Shift position	“INH SW1”	“INH SW2”	“INH SW3”	“INH SW4”	“INH SW3M”
P	OFF	OFF	OFF	OFF	OFF
R	ON	OFF	OFF	ON	OFF
N	ON	ON	OFF	OFF	OFF
D	ON	ON	ON	ON	ON

Without CONSULT-II

1. Turn ignition switch ON. (Do not start engine.)
2. Change selector lever to “P“, “R”, “N” and “D” positions to check voltage between the TCM connector terminals and ground.

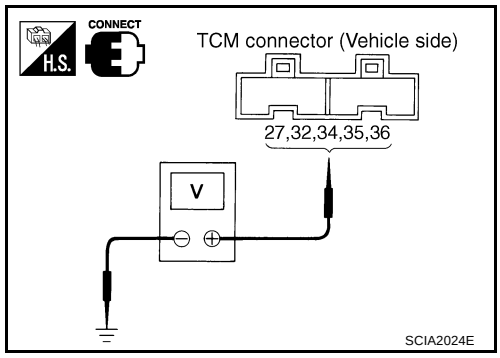

Shift position	Connector		F57		
	Terminal				
	27 - Ground	34 - Ground	35 - Ground	36 - Ground	32 - Ground
P	Battery voltage	10.0 V - Battery voltage	8.0 V - Battery voltage	10.0 V - Battery voltage	8.0 V - Battery voltage
R	0 V	10.0 V - Battery voltage	8.0 V - Battery voltage	0 V	8.0 V - Battery voltage
N	0 V	0 V	8.0 V - Battery voltage	10.0 V - Battery voltage	8.0 V - Battery voltage
D	0 V	0 V	0 V	0 V	0 V

OK or NG

OK >> GO TO 5.
NG >> GO TO 2.

2. CHECK PNP SWITCH CIRCUIT

1. Turn ignition switch OFF.
2. Disconnect TCM connector.
3. Check continuity between TCM connector terminals and ground.

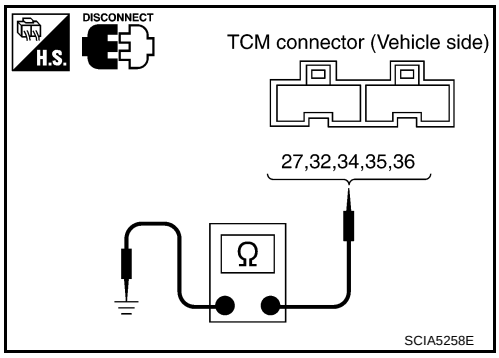

Connector	Terminal	Condition	Continuity
F57	27 - ground	Select lever in “P” position	No
		Select lever in other positions	Yes
	34 - ground	Select lever in “P” and “R” positions	No
		Select lever in other positions	Yes
	35 - ground	Select lever in “P”, “R” and “N” positions	No
		Select lever in other positions	Yes
	36 - ground	Select lever in “P” and “N” positions	No
		Select lever in other positions	Yes
	32 - ground	Select lever in “P”, “R” and “N” positions	No
		Select lever in other positions	Yes

4. If OK, check harness for short-circuit to ground or power supply.

OK or NG

OK >> GO TO 5.
NG >> GO TO 3.

3. CHECK HARNESS BETWEEN TCM AND PNP SWITCH

1. Turn ignition switch OFF.
2. Disconnect TCM connector and CVT unit harness connector.
3. Check continuity between TCM connector terminals and CVT unit harness connector terminals.

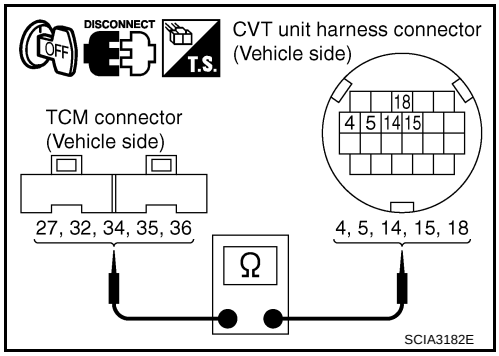

Item	Connector	Terminal	Continuity
TCM	F57	27	Yes
CVT unit harness connector	F30	4	
TCM	F57	34	Yes
CVT unit harness connector	F30	5	
TCM	F57	35	Yes
CVT unit harness connector	F30	14	
TCM	F57	32	Yes
CVT unit harness connector	F30	18	
TCM	F57	36	Yes
CVT unit harness connector	F30	15	

4. If OK, check harness for short to ground and short to power.
5. Reinstall any part removed.

OK or NG

OK >> GO TO 4.
NG >> Repair or replace damaged parts.

4. DETECT MALFUNCTIONING ITEM

Check the following.

- PNP switch. Refer to CVT-79, "Component Inspection" .

OK or NG

OK >> GO TO 5.
NG >> Repair or replace damaged parts.

5. CHECK DTC

Perform “DTC Confirmation Procedure”. Refer to CVT-74, "DTC Confirmation Procedure" .

OK or NG

OK >> **INSPECTION END**
NG >> GO TO 6.

6. CHECK TCM

1. Check TCM input/output signals. Refer to CVT-50, "TCM Input/Output Signal Reference Values" .
2. If NG, re-check TCM pin terminals for damage or loose connection with harness connector.

OK or NG

OK >> **INSPECTION END**
NG >> 1. Repair or replace damaged parts.
2. Replace the transaxle assembly. Refer to CVT-199, "Removal and Installation" .

Component Inspection

UCS005F4

PNP SWITCH

1. Change selector lever to various positions to check the continuity between terminals on the PNP switch and ground.

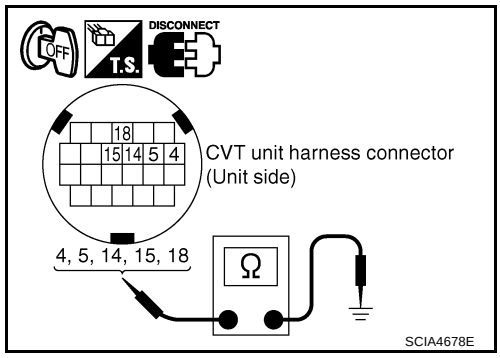

PNP SW	Shift position	Connector	Terminal	Continuity
SW 1	“R”, “N” and “D”	F30	4 - Ground	Yes
	“P”			No
SW 2	“N”, “D”		5 - Ground	Yes
	“P”, “R”			No
SW 3	“D”		14 - Ground	Yes
	“P”, “R” and “N”			No
SW 4	“R”, “D”		15 - Ground	Yes
	“P”, “N”			No
SW 3 Monitor	“D”		18 - Ground	Yes
	“P”, “R” and “N”			No

2. If NG, check continuity with control cable disconnected. (Refer to step 1 above.)
3. If OK, with the control cable disconnected, adjust the control cable. Refer to CVT-188, "Adjustment of CVT Position" .
4. If NG, even when the control cable is disconnected, replace the transaxle assembly. Refer to CVT-199, "Removal and Installation" .

DTC P0710 CVT FLUID TEMPERATURE SENSOR CIRCUIT

PFP:31020

Description

UCS005F5

- The CVT fluid temperature sensor is included in the control valve assembly.
- The CVT fluid temperature sensor detects the CVT fluid temperature and sends a signal to the TCM.

CONSULT-II Reference Value

UCS005F6

Remarks: Specification data are reference values.

Item name	Condition	Display value (Approx.)
ATF TEMP SEN	When CVT fluid temperature is 20°C (68°F).	1.8 - 2.0 V
	When CVT fluid temperature is 80°C (176°F).	0.6 - 1.0 V

On Board Diagnosis Logic

UCS005F7

- This is an OBD-II self-diagnostic item.
- Diagnostic trouble code “P0710 ATF TEMP SEN/CIRC” with CONSULT-II is detected when TCM receives an excessively low or high voltage from the sensor.

Possible Cause

UCS005F8

- Harness or connectors
  (Sensor circuit is open or shorted.)
- CVT fluid temperature sensor

DTC Confirmation Procedure

UCS005F9

CAUTION:
Always drive vehicle at a safe speed.

NOTE:
If “DTC Confirmation Procedure” has been previously performed, always turn ignition switch OFF and wait at least 10 seconds before performing the next test.
After the repair, touch “ERASE” on “SELF-DIAG RESULTS” and then perform the following procedure to confirm the malfunction is eliminated.

WITH CONSULT-II

1. Turn ignition switch ON. (Do not start engine.)
2. Select “DATA MONITOR” mode for “TRANSMISSION” with CONSULT-II.
3. Start engine and maintain the following conditions for at least 10 minutes (Total).
   VEHICLE SPEED: 10 km/h (6 MPH) or more
   ENG SPEED: 450 rpm more than
   ACC PEDAL OPEN: More than 1.0/8
   RANGE: “D” position
4. If DTC is detected, go to CVT-82, "Diagnostic Procedure" .

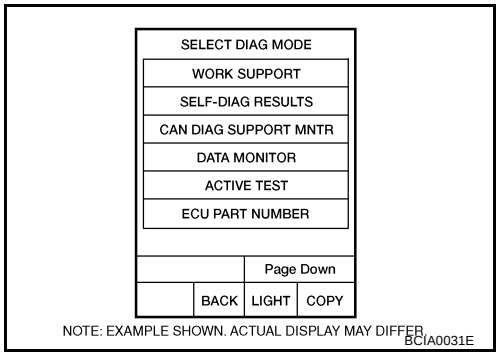

WITH GST

Follow the procedure “WITH CONSULT-II”.

Wiring Diagram — CVT — FTS

UCS005FA

CVT-FTS-01

: DETECTABLE LINE FOR DTC
: NON-DETECTABLE LINE FOR DTC

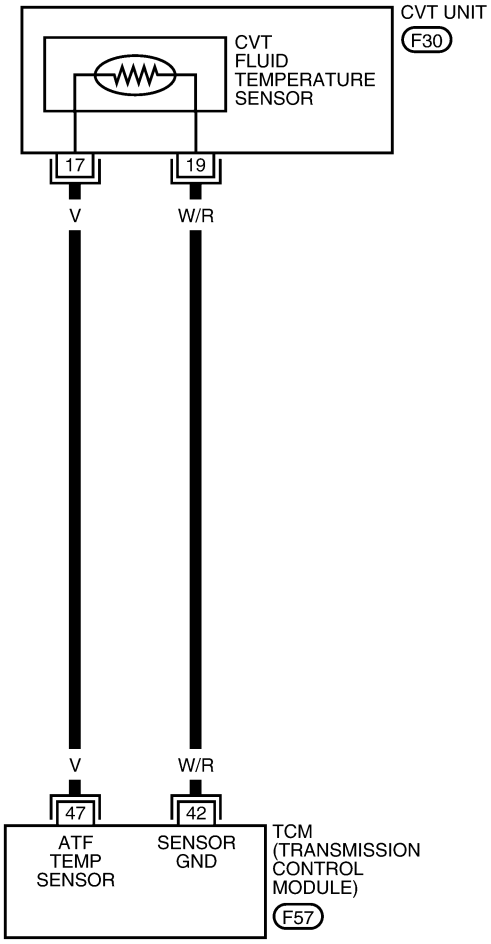

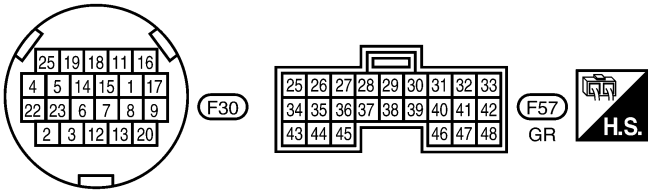

BCWA0623E

TCM terminal data are reference values, measured between each terminal and ground.

Terminal	Wire color	Item	Condition		Data (Approx.)
42	W/R	Sensor ground	Always		0 V
47	V	CVT fluid temperature sensor	ON	When CVT fluid temperature is 20°C (68°F).	2.0 V
				When CVT fluid temperature is 80°C (176°F).	1.0 V

Diagnostic Procedure

UCS005FB

1. CHECK CVT FLUID TEMPERATURE SENSOR SIGNAL

With CONSULT-II

1. Start engine.
2. Select “ECU INPUT SIGNALS” in “DATA MONITOR” mode for “TRANSMISSION” with CONSULT-II.
3. Read out the value of “ATF TEMP SEN”.

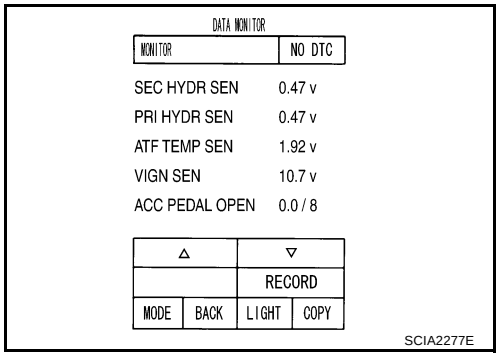

Item name	Condition	Display value (Approx.)
ATF TEMP SEN	When CVT fluid temperature is 20°C (68°F).	1.8 - 2.0 V
	When CVT fluid temperature is 80°C (176°F).	0.6 - 1.0 V

Without CONSULT-II

1. Start engine.
2. Check voltage between TCM connector terminals.

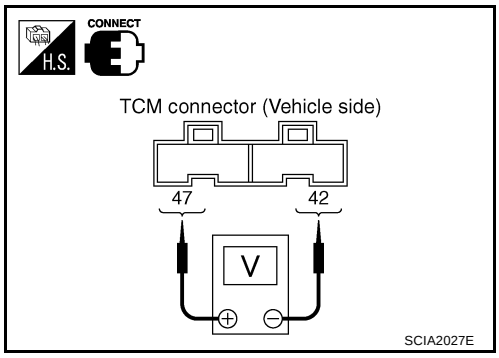

Name	Connector	Terminal	Temperature °C (°F)	Voltage (Approx.)
CVT fluid temperature sensor	F57	47 - 42	20 (68)	2.0 V
			80 (176)	1.0 V

3. Turn ignition switch OFF.
4. Disconnect TCM connector.
5. Check if there is continuity between connector terminal and ground.

OK or NG

OK >> GO TO 5.
NG >> GO TO 2.

2. CHECK CVT FLUID TEMPERATURE SENSOR CIRCUIT

1. Turn ignition switch OFF.
2. Disconnect the TCM connector.
3. Check resistance between TCM connector terminals.

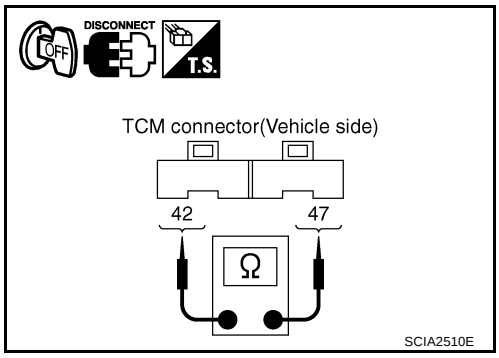

Name	Connector	Terminal	Temperature °C (°F)	Resistance (Approx.)
CVT fluid temperature sensor	F57	47 - 42	20 (68)	6.5 kΩ
			80 (176)	0.9 kΩ

OK or NG

OK >> GO TO 5.
NG >> GO TO 3.

3. CHECK CVT FLUID TEMPERATURE SENSOR

1. Turn ignition switch OFF.
2. Disconnect CVT unit harness connector.
3. Check resistance between CVT unit harness connector terminals.

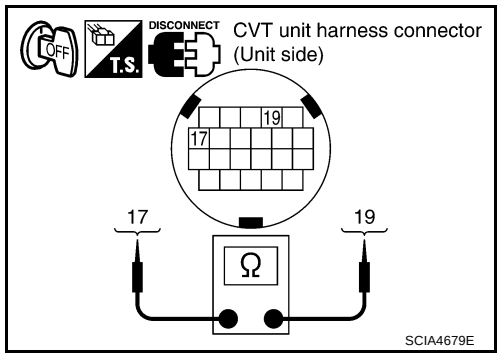

Name	Connector	Terminal	Temperature °C (°F)	Resistance (Approx.)
CVT fluid temperature sensor	F30	17 - 19	20 (68)	6.5 kΩ
			80 (176)	0.9 kΩ

4. Reinstall any part removed.

OK or NG

OK >> GO TO 4.
NG >> Replace the transaxle assembly. Refer to CVT-199, "Removal and Installation" .

4. CHECK HARNESS BETWEEN TCM AND CVT FLUID TEMPERATURE SENSOR

1. Turn ignition switch OFF.
2. Disconnect the TCM connector and CVT unit harness connector.
3. Check continuity between TCM connector terminals and CVT unit harness connector terminals.

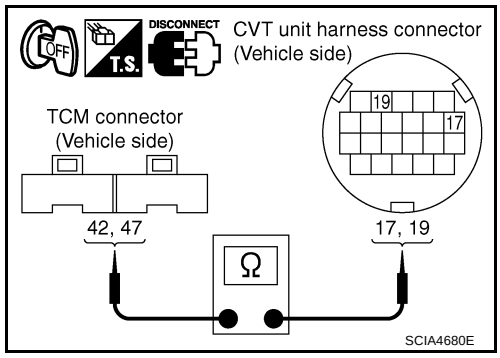

Item	Connector	Terminal	Continuity
TCM	F57	42	Yes
CVT unit harness connector	F30	19	
TCM	F57	47	Yes
CVT unit harness connector	F30	17	

4. If OK, check harness for short to ground and short to power.
5. Reinstall any part removed.

OK or NG

OK >> GO TO 5.
NG >> Repair or replace damaged parts.

5. CHECK DTC

Perform “DTC Confirmation Procedure”. Refer to CVT-80, "DTC Confirmation Procedure" .

OK or NG

OK >> **INSPECTION END**
NG >> GO TO 6.

6. CHECK TCM

1. Check TCM input/output signals. Refer to CVT-50, "TCM Input/Output Signal Reference Values" .
2. If NG, re-check TCM pin terminals for damage or loose connection with harness connector.

OK or NG

OK >> **INSPECTION END**
NG >> Repair or replace damaged parts.

Component Inspection

UCS005FC

CVT FLUID TEMPERATURE SENSOR

1. Turn ignition switch OFF.
2. Disconnect CVT unit harness connector.
3. Check resistance between CVT unit harness connector terminals.

Name	Connector	Terminal	Temperature °C (°F)	Resistance (Approx.)
CVT fluid temperature sensor	F30	17 - 19	20 (68)	6.5 kΩ
			80 (176)	0.9 kΩ

4. If NG, replace the transaxle assembly. Refer to CVT-199, "Removal and Installation" .

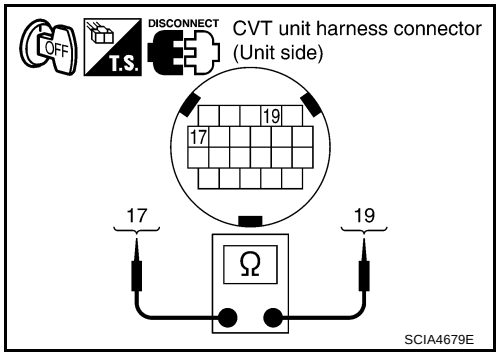

DTC P0715 INPUT SPEED SENSOR CIRCUIT (PRI SPEED SENSOR)

PFP:31935

Description

UCS005FD

- The input speed sensor (primary speed sensor) is included in the control valve assembly.
- The input speed sensor (primary speed sensor) detects the primary pulley revolution speed and sends a signal to the TCM.

CONSULT-II Reference Value

UCS005FE

Remarks: Specification data are reference values.

Item name	Condition	Display value
ENG SPEED SIG	Engine running	Closely matches the tachometer reading.
PRI SPEED SEN	During driving (lock-up ON)	Approximately matches the engine speed.

On Board Diagnosis Logic

UCS005FF

- This is an OBD-II self-diagnostic item.
- Diagnostic trouble code “P0715 INPUT SPD SEN/CIRC” with CONSULT-II is detected when TCM does not receive the proper signal from the sensor.

Possible Cause

UCS005FG

- Harness or connectors
  (Sensor circuit is open or shorted.)
- Input speed sensor (Primary speed sensor)

DTC Confirmation Procedure

UCS005FH

CAUTION:
Always drive vehicle at a safe speed.

NOTE:
If “DTC Confirmation Procedure” has been previously performed, always turn ignition switch OFF and wait at least 10 seconds before performing the next test.
After the repair, touch “ERASE” on “SELF-DIAG RESULTS” and then perform the following procedure to confirm the malfunction is eliminated.

WITH CONSULT-II

1. Turn ignition switch ON and select “DATA MONITOR” mode for “TRANSMISSION” with CONSULT-II.
2. Start engine and maintain the following conditions for at least 5 consecutive seconds.
   VEHICLE SPEED: 10 km/h (6 MPH) or more
   ACC PEDAL OPEN: More than 1.0/8
   RANGE: “D” position
   ENG SPEED: 450 rpm or more
   Driving location: Driving the vehicle uphill (increased engine load) will help maintain the driving conditions required for this test.
3. If DTC is detected, go to CVT-87, "Diagnostic Procedure" .

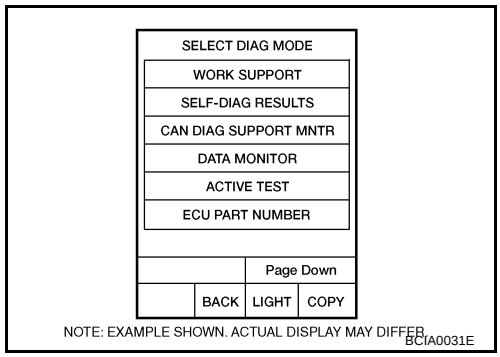

WITH GST

Follow the procedure “WITH CONSULT-II”.

Wiring Diagram — CVT — PRSCVT

UCS005FI

CVT-PRSCVT-01

: DETECTABLE LINE FOR DTC
: NON-DETECTABLE LINE FOR DTC

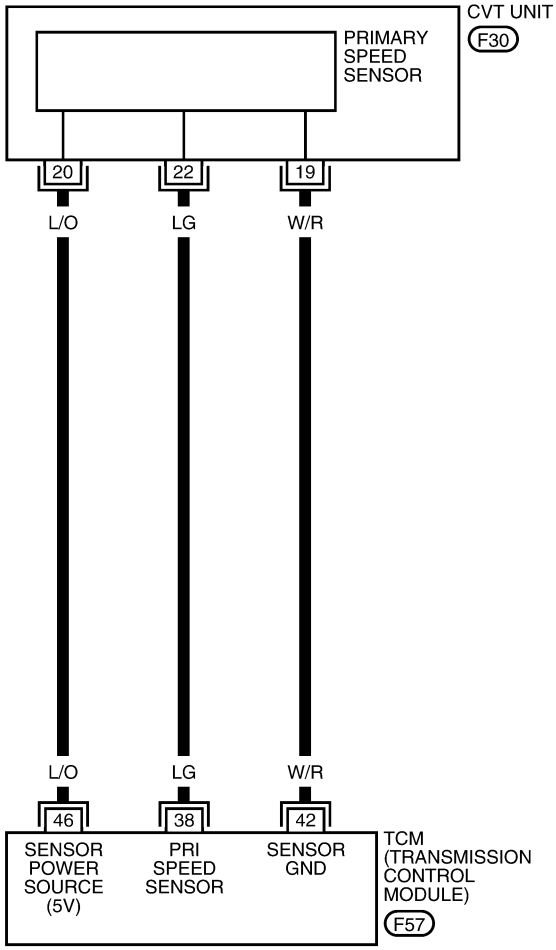

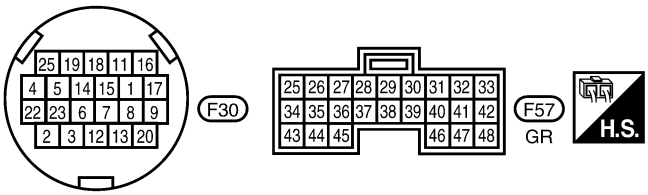

BCWA0624E

TCM terminal data are reference values, measured between each terminal and ground.

Terminal	Wire color	Item	Condition		Data (Approx.)
38	LG	Input speed sensor (Primary speed sensor)		When driving [M1 position, 20 km/h (12 MPH)].	660 Hz
42	W/R	Sensor ground	Always		0 V
46	L/O	Sensor power		—	5.0 V
				—	0 V

Diagnostic Procedure

UCS005FJ

1. CHECK INPUT SIGNALS

With CONSULT-II

1. Start engine.
2. Select “ECU INPUT SIGNALS” in “DATA MONITOR” mode for “TRANSMISSION” with CONSULT-II.
3. Start vehicle and read out the value of “PRI SPEED SEN”.

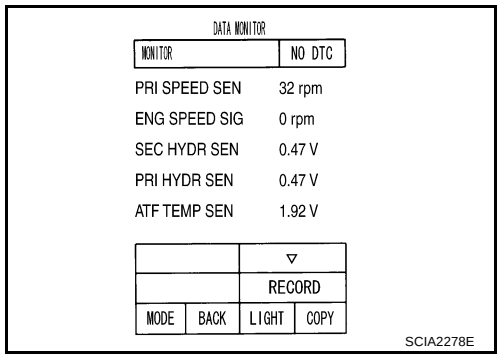

Item name	Condition	Display value
PRI SPEED SEN	During driving (lock-up ON)	Approximately matches the engine speed.

OK or NG

OK >> GO TO 6.
NG >> GO TO 2.

2. CHECK INPUT SPEED SENSOR (PRIMARY SPEED SENSOR)

1. Start engine.
2. Check voltage between TCM connector terminals.

Item	Connector	Terminal	Data (Approx.)
TCM	F57	46 - 42	5.0 V

3. Check the pulse with CONSULT-II or oscilloscope, when vehicle cruises.

Name	Condition
Input speed sensor (Primary speed sensor)	When running at 20 km/h (12 MPH) in M1 position with the closed throttle position signal OFF, use the CONSULT-II pulse frequency measuring function. **CAUTION:** **Connect the data link connector to the vehicle-side diagnosis connector.**

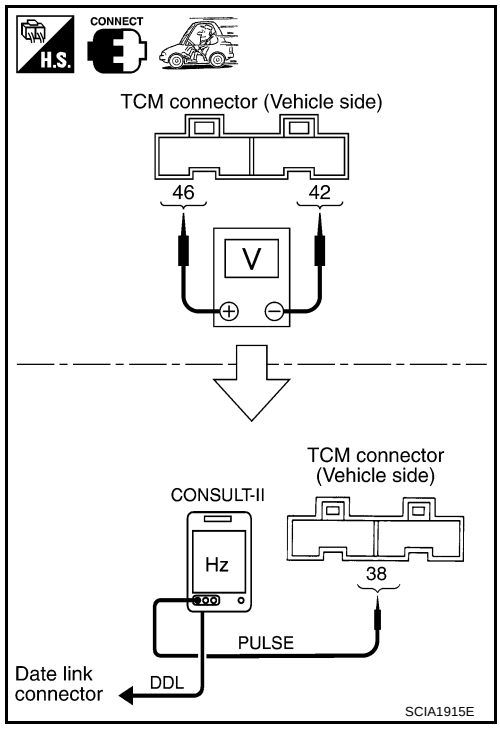

Item	Connector	Terminal	Name	Data (Approx.)
TCM	F57	38	Input speed sensor (Primary speed sensor)	660 Hz

OK or NG

OK >> GO TO 6.
NG - 1 >> Battery voltage is not supplied: GO TO 3.
NG - 2 >> Battery voltage is supplied, but there is a malfunction in the frequency: GO TO 4.

3. CHECK HARNESS BETWEEN TCM AND CVT UNIT HARNESS CONNECTOR (SENSOR POWER AND SENSOR GROUND)

1. Turn ignition switch OFF.
2. Disconnect TCM connector and CVT unit harness connector.
3. Check continuity between TCM connector terminals and CVT unit harness connector terminals.

Item	Connector	Terminal	Continuity
TCM	F57	42	Yes
CVT unit harness connector	F30	19	
TCM	F57	46	Yes
CVT unit harness connector	F30	20	

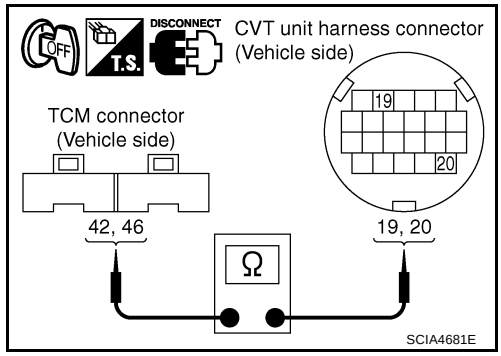

4. If OK, check harness for short to ground and short to power.
5. Reinstall any part removed.

OK or NG

OK >> GO TO 6.
NG >> Repair open circuit or short to ground or short to power in harness or connectors.

4. CHECK HARNESS BETWEEN TCM AND CVT UNIT HARNESS CONNECTOR [INPUT SPEED SENSOR (PRIMARY SPEED SENSOR)]

1. Turn ignition switch OFF.
2. Disconnect TCM connector and CVT unit harness connector.
3. Check continuity between TCM connector terminal and CVT unit harness connector terminal.

Item	Connector	Terminal	Continuity
TCM	F57	38	Yes
CVT unit harness connector	F30	22	

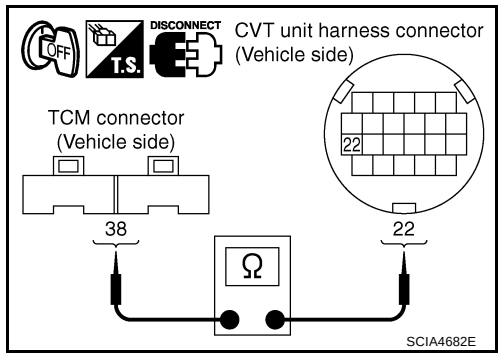

4. If OK, check harness for short to ground and short to power.
5. Reinstall any part removed.

OK or NG

OK >> GO TO 5.
NG >> Repair open circuit or short to ground or short to power in harness or connectors.

5. CHECK THE TCM SHORT

Replace same type TCM, perform self-diagnosis check. Erase self-diagnostic results and then drive the vehicle [10 km/h (6 MPH) or more], perform self-diagnosis check. Refer to CVT-85, "DTC Confirmation Procedure".

Is the “P0715 INPUT SPD SEN/CIRC” detected again?

YES >> Replace the transaxle assembly. Refer to CVT-199, "Removal and Installation".
NO >> Replace TCM. Refer to CVT-8, "Precautions for TCM and CVT Assembly Replacement".

6. CHECK DTC

Perform “DTC Confirmation Procedure”. Refer to CVT-85, "DTC Confirmation Procedure".

OK or NG

OK >> **INSPECTION END**
NG >> GO TO 7.

7. CHECK TCM

1. Check TCM input/output signals. Refer to CVT-50, "TCM Input/Output Signal Reference Values" .
2. If NG, re-check TCM pin terminals for damage or loose connection with harness connector.

OK or NG

OK >> **INSPECTION END**
NG >> Repair or replace damaged parts.

DTC P0720 VEHICLE SPEED SENSOR CVT (SECONDARY SPEED SENSOR)

PFP:31935

Description

UCS005FK

The vehicle speed sensor CVT [output speed sensor (secondary speed sensor)] detects the revolution of the CVT output shaft and emits a pulse signal. The pulse signal is sent to the TCM, which converts it into vehicle speed.

CONSULT-II Reference Value

UCS005FL

Remarks: Specification data are reference values.

Item name	Condition	Display value
VSP SENSOR	During driving	Approximately matches the speedometer reading.

On Board Diagnosis Logic

UCS005FM

- This is an OBD-II self-diagnostic item.
- Diagnostic trouble code “P0720 VEH SPD SEN/CIR AT” with CONSULT-II is detected TCM does not receive the proper signal from the sensor.

Possible Cause

UCS005FN

- Harness or connectors
  (Sensor circuit is open or shorted.)
- Output speed sensor (Secondary speed sensor)

DTC Confirmation Procedure

UCS005FO

CAUTION:
Always drive vehicle at a safe speed.

NOTE:
If “DTC Confirmation Procedure” has been previously performed, always turn ignition switch OFF and wait at least 10 seconds before performing the next test.
After the repair, touch “ERASE” on “SELF-DIAG RESULTS” and then perform the following procedure to confirm the malfunction is eliminated.

WITH CONSULT-II

1. Turn ignition switch ON and select “DATA MONITOR” mode for “TRANSMISSION” with CONSULT-II.
2. Start engine and maintain the following conditions for at least 12 consecutive seconds.
   ACC PEDAL OPEN: More than 1.0/8
   RANGE: “D” position
   Driving location: Driving the vehicle uphill (increased engine load) will help maintain the driving conditions required for this test.
3. If DTC is detected, go to CVT-92, "Diagnostic Procedure" .

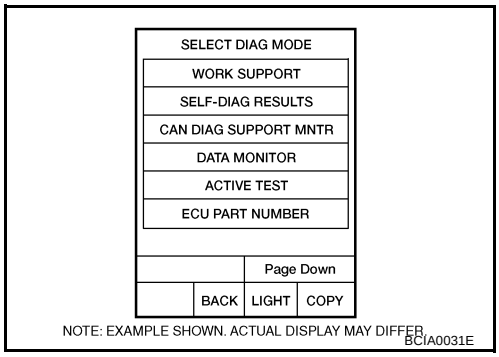

WITH GST

Follow the procedure “WITH CONSULT-II”.

Wiring Diagram — CVT — SESCVT

UCS005FP

CVT-SESCVT-01

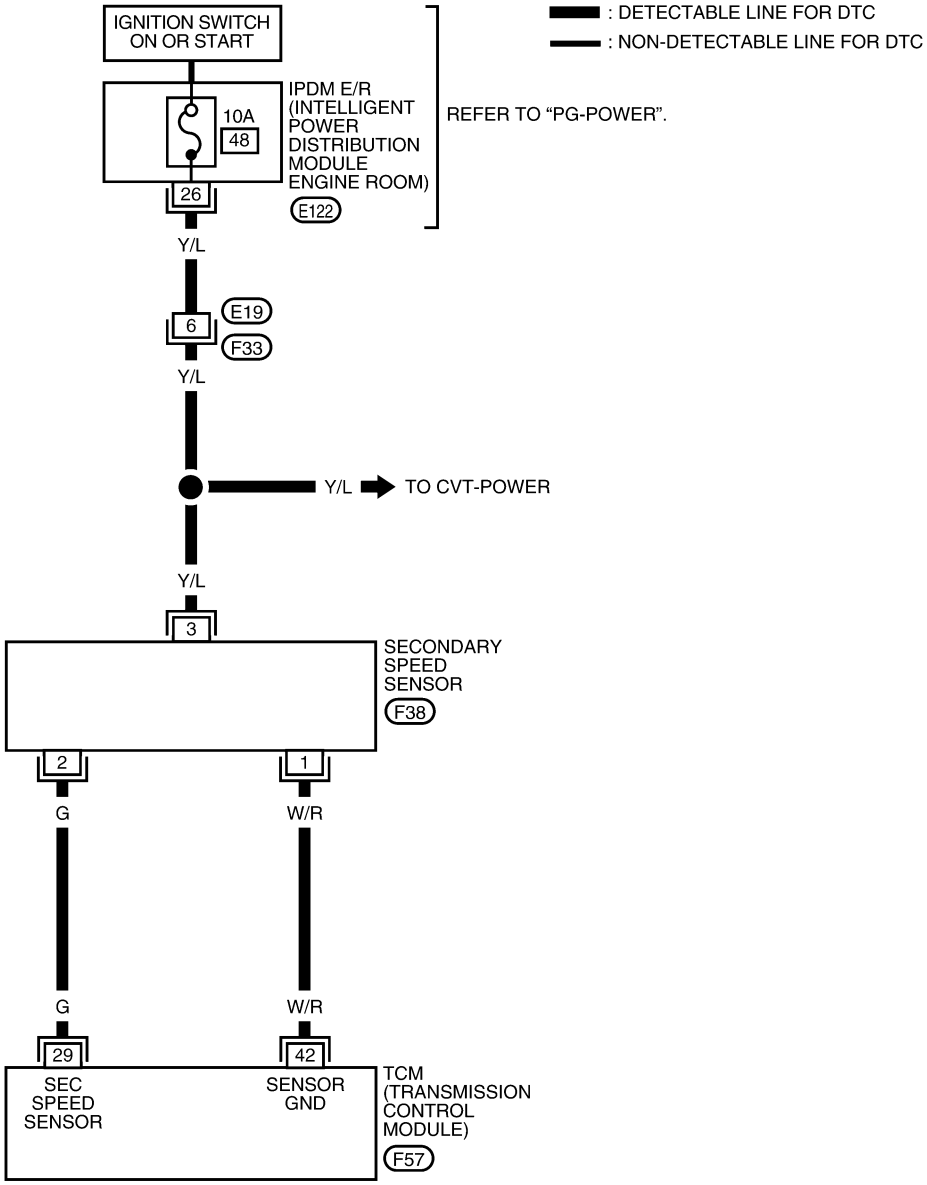

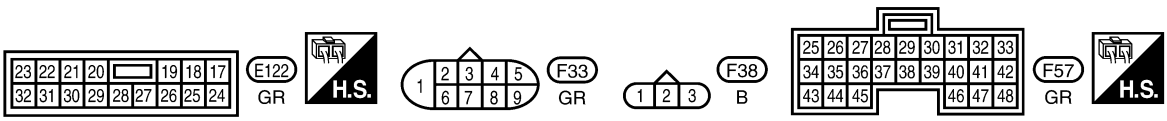

BCWA0625E

TCM terminal data are reference values, measured between each terminal and ground.

Terminal	Wire color	Item	Condition		Data (Approx.)
29	G	Output speed sensor (Secondary speed sensor)		When driving [M1 position, 20 km/h (12 MPH)].	400 Hz
42	W/R	Sensor ground	Always		0 V

Diagnostic Procedure

UCS005FQ

1. CHECK INPUT SIGNAL

With CONSULT-II

1. Start engine.
2. Select “ECU INPUT SIGNALS” in “DATA MONITOR” mode for “TRANSMISSION” with CONSULT-II.
3. Start vehicle and read out the value of “VSP SENSOR”.

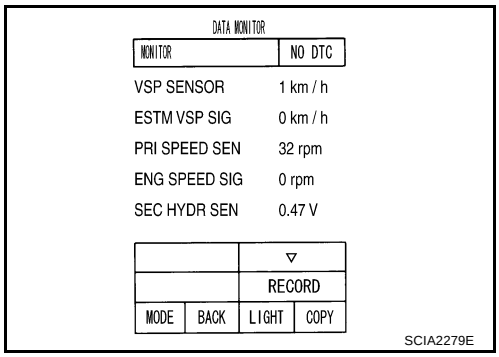

Item name	Condition	Display value
VSP SENSOR	During driving	Approximately matches the speedometer reading.

OK or NG

OK >> GO TO 8.
NG >> GO TO 2.

2. CHECK SECONDARY SPEED SENSOR

With CONSULT-II

1. Start engine.
2. Check power supply to output speed sensor (secondary speed sensor) by voltage between TCM connector terminals 10, 19 and 42. Refer to CVT-40, "Circuit Diagram" .

Item	Connector	Terminal	Data (Approx.)
TCM	F56, F57	10 - 42	Battery voltage
		19 - 42	

3. If OK, check the pulse when vehicle cruises.

Name	Condition
Output speed sensor (Secondary speed sensor)	When running at 20 km/h (12 MPH) in M1 position, use the CONSULT-II pulse frequency measuring function. **CAUTION:** **Connect the data link connector to the vehicle-side diagnosis connector.**

Item	Connector	Terminal	Name	Data (Approx.)
TCM	F57	29	Output speed sensor (Secondary speed sensor)	400 Hz

OK or NG

OK >> GO TO 8.
NG >> GO TO 3.

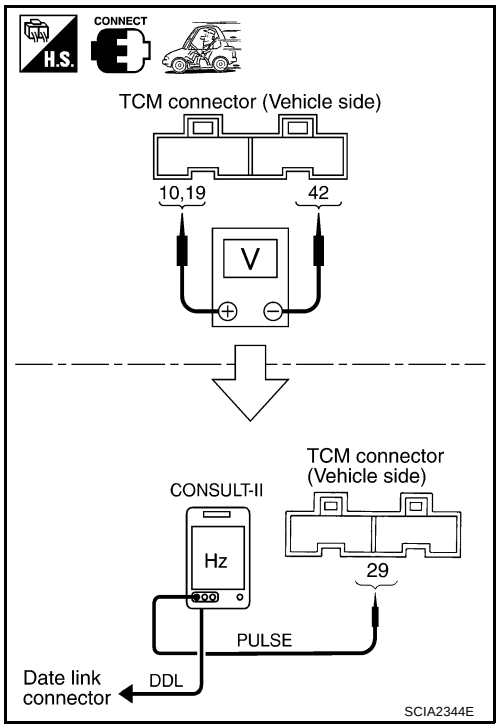

3. CHECK POWER AND SENSOR GROUND

1. Turn ignition switch OFF.
2. Disconnect the output speed sensor (secondary speed sensor) harness connector.
3. Turn ignition switch ON.
4. Check voltage between output speed sensor (secondary speed sensor) harness connector terminals.

Item	Connector	Terminal	Data (Approx.)
Output speed sensor (Secondary speed sensor)	F38	1 - 3	Battery voltage

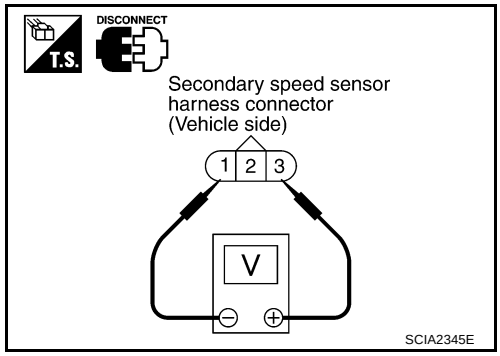

5. Check voltage between output speed sensor (secondary speed sensor) harness connector terminal and ground.

Item	Connector	Terminal	Data (Approx.)
Output speed sensor (Secondary speed sensor)	F38	3 - ground	Battery voltage

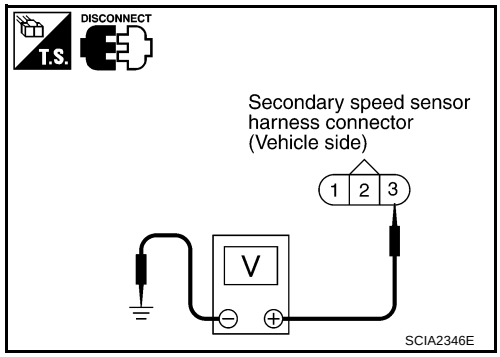

6. If OK, check harness for short to ground and short to power.
7. Reinstall any part removed.

OK or NG

OK >> GO TO 4.
NG - 1 >> Battery voltage is not supplied between terminals 1 and 3, terminals 1 and ground.: GO TO 6.
NG - 2 >> Battery voltage is not supplied between terminals 1 and 3 only.: GO TO 7.

4. CHECK HARNESS BETWEEN TCM AND OUTPUT SPEED SENSOR (SECONDARY SPEED SENSOR)

1. Turn ignition switch OFF.
2. Disconnect TCM connector and output speed sensor (secondary speed sensor) harness connector.
3. Check continuity between TCM connector terminal and output speed sensor (secondary speed sensor) harness connector terminal.

Item	Connector	Terminal	Continuity
TCM	F57	29	Yes
Output speed sensor (Secondary speed sensor)	F38	2	

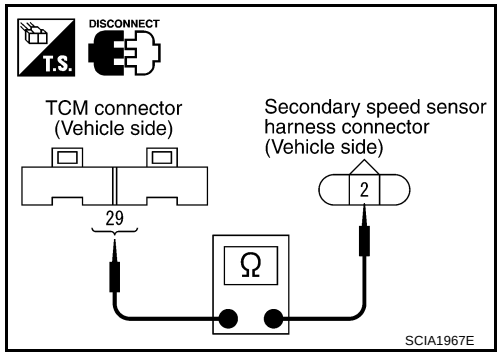

4. If OK, check harness for short to ground and short to power.
5. Reinstall any part removed.

OK or NG

OK >> GO TO 5.
NG >> Repair open circuit or short to ground or short to power in harness or connectors.

5. CHECK THE TCM SHORT

Replace same type TCM, perform self-diagnosis check. Erase self-diagnostic results and them drive the vehicle [more than 40 km/h (25 MPH)], perform self-diagnosis check. Refer to CVT-90, "DTC Confirmation Procedure" .

Is “P0720 VEH SPD SEN/CIR AT” detected again?

YES >> Replace the transaxle assembly. Refer to CVT-199, "Removal and Installation" .
NO >> Replace TCM. Refer to CVT-8, "Precautions for TCM and CVT Assembly Replacement" .

6. CHECK HARNESS BETWEEN TCM AND OUTPUT SPEED SENSOR (SECONDARY SPEED SENSOR) (POWER)

1. Turn ignition switch OFF.
2. Disconnect TCM connector and output speed sensor (secondary speed sensor) harness connector.
3. Check continuity between TCM connector terminals and output speed sensor (secondary speed sensor) harness connector terminal. Refer to CVT-40, "Circuit Diagram" .

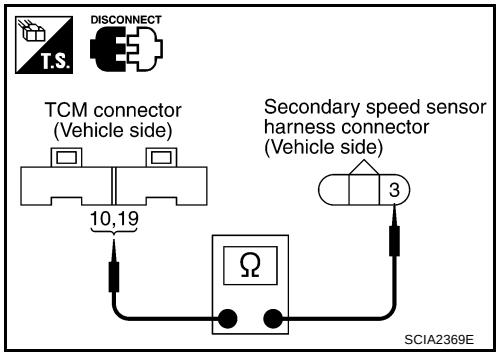

Item	Connector	Terminal	Continuity
TCM	F56	10	Yes
Output speed sensor (Secondary speed sensor)	F38	3	
TCM	F56	19	Yes
Output speed sensor (Secondary speed sensor)	F38	3	

4. If OK, check harness for short to ground and short to power.
5. Reinstall any part removed.

OK or NG

OK >> 10 A fuse (No. 48, located in the IPDM E/R) or ignition switch are malfunctioning.
NG >> Repair open circuit or short to ground or short to power in harness or connectors.

7. CHECK HARNESS BETWEEN TCM AND OUTPUT SPEED SENSOR (SECONDARY SPEED SENSOR) (SENSOR GROUND)

1. Turn ignition switch OFF.
2. Disconnect TCM connector and output speed sensor (secondary speed sensor) harness connector.
3. Check continuity between TCM connector terminal and output speed sensor (secondary speed sensor) harness connector terminal.

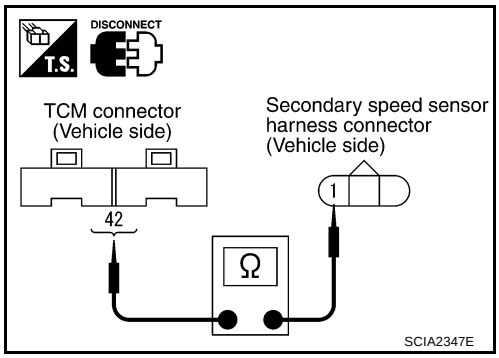

Item	Connector	Terminal	Continuity
TCM	F57	42	Yes
Output speed sensor (Secondary speed sensor)	F38	1	

4. If OK, check harness for short to ground and short to power.
5. Reinstall any part removed.

OK or NG

OK >> GO TO 8.
NG >> Repair open circuit or short to ground or short to power in harness or connectors.

8. CHECK DTC

Perform “DTC Confirmation Procedure”. Refer to CVT-90, "DTC Confirmation Procedure" .

OK or NG

OK >> **INSPECTION END**
NG >> GO TO 9.

9. CHECK TCM

1. Check TCM input/output signals. Refer to CVT-50, "TCM Input/Output Signal Reference Values" .
2. If NG, re-check TCM pin terminals for damage or loose connection with harness connector.

OK or NG

OK >> **INSPECTION END**
NG >> Repair or replace damaged parts.

DTC P0725 ENGINE SPEED SIGNAL

PFP:24825

Description

UCS005FR

The engine speed signal is sent from the ECM to the TCM.

CONSULT-II Reference Value

UCS005FS

Remarks: Specification data are reference values.

Item name	Condition	Display value
ENG SPEED SIG	Engine running	Closely matches the tachometer reading.
ACC PEDAL OPEN	Released accelerator pedal - Fully depressed accelerator pedal	0.0/8 - 8.0/8

On Board Diagnosis Logic

UCS005FT

- This is not an OBD-II self-diagnostic item.
- Diagnostic trouble code “P0725 ENGINE SPEED SIG” with CONSULT-II is detected when TCM does not receive the engine speed signal (input by CAN communication) from ECM.

Possible Cause

UCS005FU

Harness or connectors
(The ECM to the TCM circuit is open or shorted.)

DTC Confirmation Procedure

UCS005FV

CAUTION:
Be careful not to rev engine into the red zone on the tachometer.

NOTE:
If “DTC Confirmation Procedure” has been previously performed, always turn ignition switch OFF and wait at least 10 seconds before performing the next test.
After the repair, touch “ERASE” on “SELF-DIAG RESULTS” and then perform the following procedure to confirm the malfunction is eliminated.

WITH CONSULT-II

1. Turn ignition switch ON and select “DATA MONITOR” mode for “TRANSMISSION” with CONSULT-II.
2. Start engine and maintain the following conditions for at least 10 consecutive seconds.
   PRI SPEED SEN: More than 1000 rpm
3. If DTC is detected, go to CVT-96, "Diagnostic Procedure" .

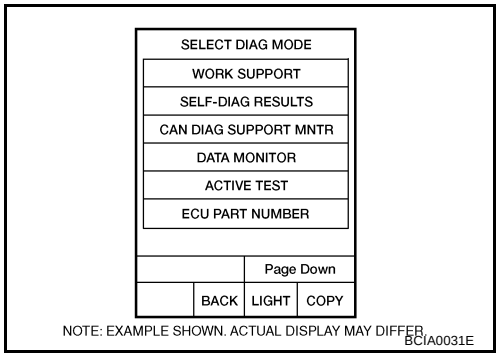

Diagnostic Procedure

UCS005FW

1. CHECK DTC WITH ECM

With CONSULT-II

1. Turn ignition switch ON. (Do not start engine.)
2. Select “SELF-DIAG RESULTS” mode for “ENGINE” with CONSULT-II. Refer to EC-120, "SELF-DIAG RESULTS MODE" .

OK or NG

OK >> GO TO 2.
NG >> Check the DTC detected item. Refer to EC-120, "SELF-DIAG RESULTS MODE" .

2. CHECK DTC WITH TCM

With CONSULT-II

1. Turn ignition switch ON. (Do not start engine.)
2. Select “SELF-DIAG RESULTS” mode for “TRANSMISSION” with CONSULT-II. Refer to CVT-57, "SELF-DIAGNOSTIC RESULT MODE" .

OK or NG

OK >> GO TO 3.
NG >> Check the DTC detected item. Refer to CVT-57, "SELF-DIAGNOSTIC RESULT MODE" .
- If DTC of CAN communication line is detected, go to CVT-64, "DTC U1000 CAN COMMUNICATION LINE" .

3. CHECK INPUT SIGNALS

With CONSULT-II

1. Start engine.
2. Select “ECU INPUT SIGNALS” in “DATA MONITOR” mode for “TRANSMISSION” with CONSULT-II.
3. While monitoring “ENG SPEED SIG”, check for engine speed change corresponding to “ACC PEDAL OPEN”.

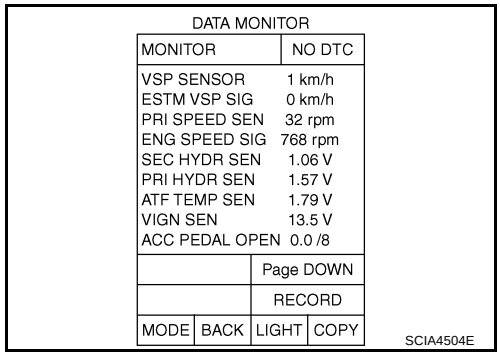

Item name	Condition	Display value
ENG SPEED SIG	Engine running	Closely matches the tachometer reading.
ACC PEDAL OPEN	Released accelerator pedal - Fully depressed accelerator pedal	0.0/8 - 8.0/8

OK or NG

OK >> GO TO 4.
NG >> Check ignition signal circuit. Refer to EC-636, "IGNITION SIGNAL" .

4. CHECK DTC

Perform “DTC Confirmation Procedure”. Refer to CVT-96, "DTC Confirmation Procedure" .

OK or NG

OK >> **INSPECTION END**
NG >> GO TO 5.

5. CHECK TCM

1. Check TCM input/output signals. Refer to CVT-50, "TCM Input/Output Signal Reference Values" .
2. If NG, re-check TCM pin terminals for damage or loose connection with harness connector.

OK or NG

OK >> **INSPECTION END**
NG >> Repair or replace damaged parts.

DTC P0730 BELT DAMAGE

PFP:31935

Description

UCS005FX

TCM selects the gear ratio using the engine load (throttle position), the primary pulley revolution speed, and the secondary pulley revolution speed as input signal. Then it changes the operating pressure of the primary pulley and the secondary pulley and changes the groove width of the pulley.

CONSULT-II Reference Value

UCS005FY

Remarks: Specification data are reference values.

Item name	Condition	Display value (Approx.)
GEAR RATIO	During driving	2.37 - 0.43

On Board Diagnosis Logic

UCS005FZ

- This is not an OBD-II self-diagnostic item.
- TCM calculates the actual gear ratio with input speed sensor (primary speed sensor) and output speed sensor (secondary speed sensor).
- Diagnostic trouble code “P0730 BELT DAMG” with CONSULT-II is detected, when TCM receives an unexpected gear ratio signal.

Possible Cause

UCS005G0

Transaxle assembly

DTC Confirmation Procedure

UCS005G1

CAUTION:
Always drive vehicle at a safe speed.

NOTE:
If “DTC Confirmation Procedure” has been previously performed, always turn ignition switch OFF and wait at least 10 seconds before performing the next test.
After the repair, perform the following procedure to confirm the malfunction is eliminated.

WITH CONSULT-II

1. Turn ignition switch ON and select “DATA MONITOR” mode for “TRANSMISSION” with CONSULT-II.
2. Make sure that output voltage of CVT fluid temperature sensor is within the range below.
   ATF TEMP SEN: 1.0 - 2.0 V
   If out of range, drive the vehicle to decrease the voltage (warm up the fluid) or stop engine to increase the voltage (cool down the fluid)
3. Select “DATA MONITOR” mode for “TRANSMISSION” with CONSULT-II.
4. Start engine and maintain the following conditions for at least 30 consecutive seconds.
   TEST START FROM 0 km/h (0 MPH)
   CONSTANT ACCELERATION: Keep 30 sec or more
   VEHICLE SPEED: 10 km/h (6 MPH) or more
   ACC PEDAL OPEN: More than 1.0/8
   RANGE: “D” position
   ENG SPEED: 450 rpm or more
5. If DTC is detected, go to CVT-99, "Diagnostic Procedure" .

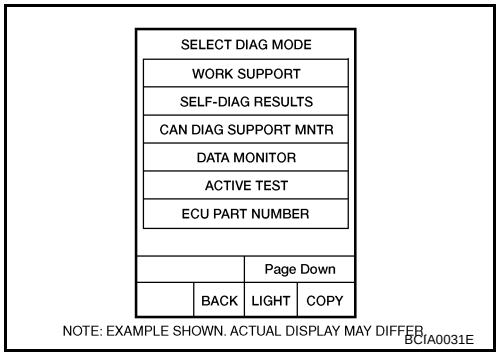

Diagnostic Procedure

UCS005G2

1. CHECK DTC

Perform “DTC Confirmation Procedure”. Refer to CVT-98, "DTC Confirmation Procedure" .

Are any DTC displayed?

YES - 1>> DTC except for “P0730 BELT DAMG” is displayed: Go to Check the DTC detected item. Refer to CVT-57, "SELF-DIAGNOSTIC RESULT MODE" .

YES - 2>> DTC for “P0730 BELT DAMG” is displayed: Replace the transaxle assembly. Refer to CVT-199, "Removal and Installation" .

NO >> **INSPECTION END**

DTC P0740 TORQUE CONVERTER CLUTCH SOLENOID VALVE

PFP:31940

Description

UCS005G3

- The torque converter clutch solenoid valve is included in the control valve assembly.
- The torque converter clutch solenoid valve is activated by the TCM in response to signals sent from the vehicle speed and accelerator pedal position sensors. Lock-up piston operation will then be controlled.
- Lock-up operation, however, is prohibited when CVT fluid temperature is too low.
- When the accelerator pedal is depressed (less than 2.0/8) in lock-up condition, the engine speed should not change abruptly. If there is a big jump in engine speed, there is no lock-up.

CONSULT-II Reference Value

UCS005G4

Remarks: Specification data are reference values.

Item name	Condition	Display value (Approx.)
ISOLT1	Lock-up OFF	0.0 A
	Lock-up ON	0.7 A

On Board Diagnosis Logic

UCS005G5

- This is an OBD-II self-diagnostic item.
- Diagnostic trouble code “P0740 TCC SOLENOID/CIRC” with CONSULT-II is detected under the following conditions.
  - TCM detects an improper voltage drop when it tries to operate the solenoid valve.

Possible Cause

UCS005G6

- Torque converter clutch solenoid valve
- Harness or connectors
  (Solenoid circuit is open or shorted.)

DTC Confirmation Procedure

UCS005G7

NOTE:
If “DTC Confirmation Procedure” has been previously performed, always turn ignition switch OFF and wait at least 10 seconds before performing the next test.
After the repair, touch “ERASE” on “SELF-DIAG RESULTS” and then perform the following procedure to confirm the malfunction is eliminated.

WITH CONSULT-II

1. Turn ignition switch ON. (Do not start engine.)
2. Select “DATA MONITOR” mode for “TRANSMISSION” with CONSULT-II and wait at least 10 consecutive seconds.
3. If DTC is detected, go to CVT-102, "Diagnostic Procedure" .

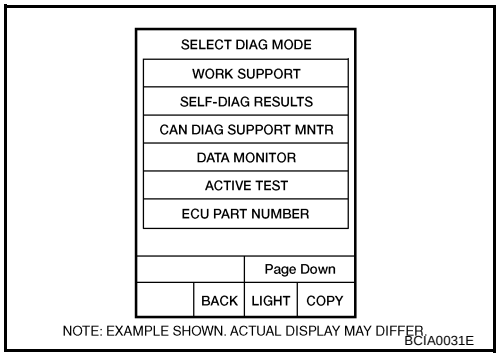

WITH GST

Follow the procedure “WITH CONSULT-II”.

Wiring Diagram — CVT — TCV

UCS005G8

CVT-TCV-01

: DETECTABLE LINE FOR DTC
: NON-DETECTABLE LINE FOR DTC

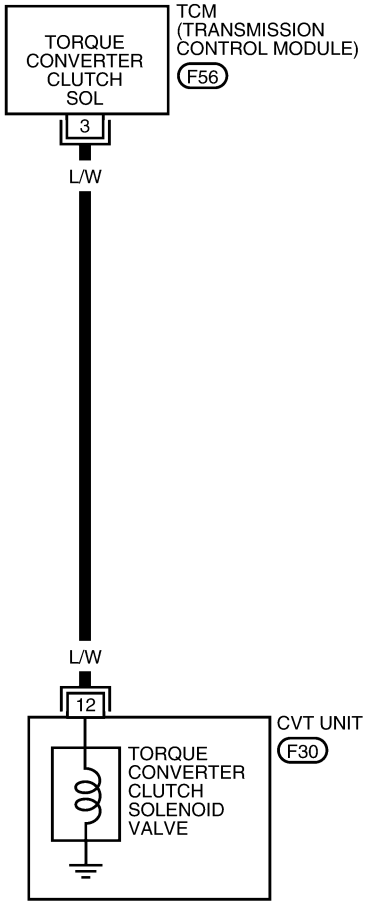

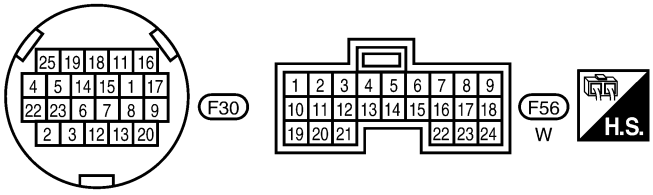

BCWA0626E

TCM terminal data are reference values, measured between each terminal and ground.

Terminal	Wire color	Item	Condition			Data (Approx.)
3	L/W	Torque converter clutch solenoid valve		When vehicle cruises in “D” position.	When CVT performs lock-up.	6.0 V
					When CVT does not perform lock-up.	1.0 V

Diagnostic Procedure

UCS005G9

1. CHECK INPUT SIGNAL

With CONSULT-II

1. Start engine.
2. Select “MAIN SIGNALS” in “DATA MONITOR” mode for “TRANSMISSION” with CONSULT-II.
3. Start vehicle and read out the value of “ISOLT1”.

Item name	Condition	Display value (Approx.)
ISOLT1	Lock-up OFF	0.0 A
	Lock-up ON	0.7 A

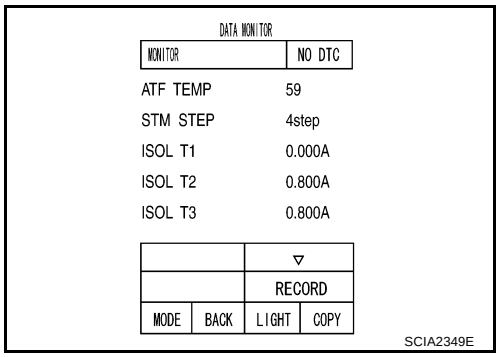

Without CONSULT-II

1. Start engine.
2. Check voltage between TCM connector terminal and ground.

Name	Connector	Terminal	Condition		Voltage (Approx.)
Torque converter clutch solenoid valve	F56	3 - ground	When vehicle cruises in “D” position	Lock-up ON	6.0 V
				Lock-up OFF	1.0 V

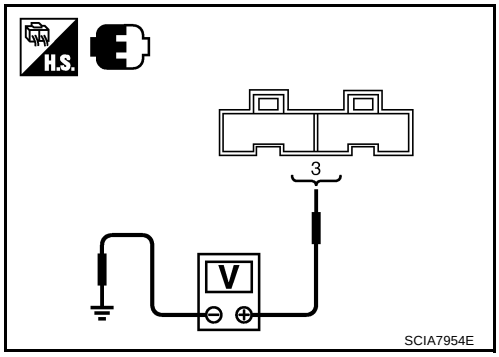

3. Turn ignition switch OFF.
4. Disconnect TCM connector.
5. Check if there is continuity between the connector terminal and ground.

OK or NG

OK >> GO TO 5.
NG >> GO TO 2.

2. CHECK TORQUE CONVERTER CLUTCH SOLENOID VALVE CIRCUIT

1. Turn ignition switch OFF.
2. Disconnect TCM connector.
3. Check resistance between TCM connector terminal and ground.

Solenoid valve	Connector	Terminal	Resistance (Approx.)
Torque converter clutch solenoid valve	F56	3 - Ground	3.0 - 9.0 Ω

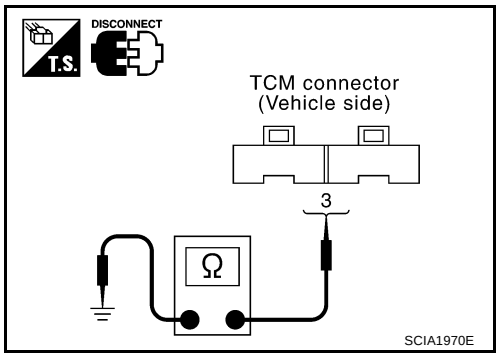

OK or NG

OK >> GO TO 5.
NG >> GO TO 3.

3. CHECK HARNESS BETWEEN TCM AND TORQUE CONVERTER CLUTCH SOLENOID VALVE

1. Turn ignition switch OFF.
2. Disconnect TCM connector and CVT unit harness connector.
3. Check continuity between TCM connector terminal and CVT unit harness connector terminal.

Item	Connector	Terminal	Continuity
TCM	F56	3	Yes
CVT unit harness connector	F30	12	

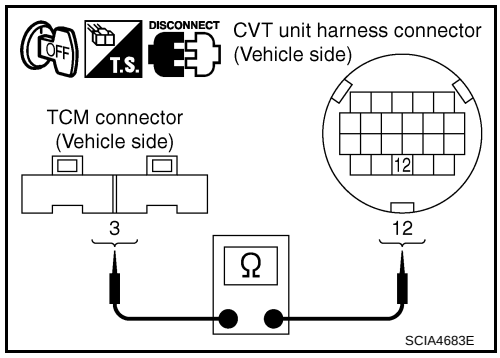

4. If OK, check harness for short to ground and short to power.
5. If OK, check continuity between ground and CVT assembly.
6. Reinstall any part removed.

OK or NG

OK >> GO TO 4.
NG >> Repair or replace damaged parts.

4. CHECK VALVE RESISTANCE

1. Turn ignition switch OFF.
2. Disconnect CVT unit harness connector.
3. Check resistance between CVT unit harness connector terminal and ground.

Solenoid Valve	Connector	Terminal	Resistance (Approx.)
Torque converter clutch solenoid valve	F30	12 - Ground	3.0 - 9.0 Ω

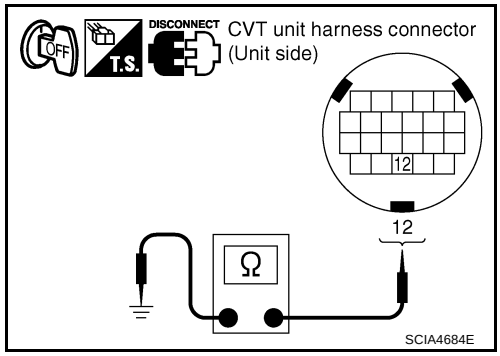

OK or NG

OK >> GO TO 5.
NG >> Repair or replace damaged parts.

5. CHECK DTC

Perform “DTC Confirmation Procedure”. Refer to CVT-100, "DTC Confirmation Procedure" .

OK or NG

OK >> **INSPECTION END**
NG >> GO TO 6.

6. CHECK TCM

1. Check TCM input/output signals. Refer to CVT-50, "TCM Input/Output Signal Reference Values" .
2. If NG, re-check TCM pin terminals for damage or loose connection with harness connector.

OK or NG

OK >> **INSPECTION END**
NG >> Repair or replace damaged parts.

Component Inspection

UCS005GA

TORQUE CONVERTER CLUTCH SOLENOID VALVE

1. Turn ignition switch OFF.
2. Disconnect CVT unit harness connector.
3. Check resistance between CVT unit harness connector terminal and ground.

Solenoid Valve	Connector	Terminal	Resistance (Approx.)
Torque converter clutch solenoid valve	F30	12 - Ground	3.0 - 9.0 Ω

4. If NG, replace the transaxle assembly. Refer to CVT-199, "Removal and Installation" .

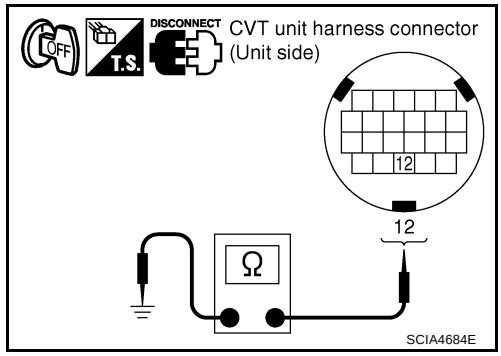

DTC P0744 A/T TCC S/V FUNCTION (LOCK-UP)

PFP:31940

Description

UCS005GB

- The torque converter clutch solenoid valve is included in the control valve assembly.
- This malfunction is detected when the torque converter clutch does not lock-up as instructed by the TCM. This is not only caused by electrical malfunction (circuits open or shorted), but also by mechanical malfunction such as control valve sticking, improper solenoid valve operation, etc.

CONSULT-II Reference Value

UCS005GC

Remarks: Specification data are reference values.

Item name	Condition	Display value
ENG SPEED SIG	Engine running	Closely matches the tachometer reading.
PRI SPEED SEN	During driving (lock-up ON)	Approximately matches the engine speed.

On Board Diagnosis Logic

UCS005GD

- This is an OBD-II self-diagnostic item.
- Diagnostic trouble code “P0744 A/T TCC S/V FNCTN” with CONSULT-II is detected under the following conditions.
  - When CVT cannot perform lock-up even if electrical circuit is good.
  - When TCM compares difference value with slip revolution and detects an irregularity.

Possible Cause

UCS005GE

- Torque converter clutch solenoid valve
- Hydraulic control circuit

DTC Confirmation Procedure

UCS005GF

CAUTION:
Always drive vehicle at a safe speed.

NOTE:
If “DTC Confirmation Procedure” has been previously performed, always turn ignition switch OFF and wait at least 10 seconds before performing the next test.
After the repair, touch “ERASE” on “SELF-DIAG RESULTS” and then perform the following procedure to confirm the malfunction is eliminated.

WITH CONSULT-II

1. Turn ignition switch ON. (Do not start engine.)
2. Select “DATA MONITOR” mode for “TRANSMISSION” with CONSULT-II.
3. Start engine and maintain the following condition for at least 30 seconds.
   ACC PEDAL OPEN: More than 1.0/8
   RANGE: “D” position
   [Vehicle speed: Constant speed of more than 40 km/h (25 MPH)]
4. If DTC is detected go to CVT-106, "Diagnostic Procedure" .

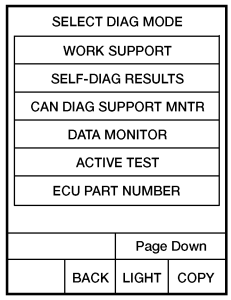

NOTE: EXAMPLE SHOWN. ACTUAL DISPLAY MAY DIFFER
BCIA0031E

WITH GST

Follow the procedure “WITH CONSULT-II”.

Diagnostic Procedure

UCS005GG

1. CHECK INPUT SIGNALS

With CONSULT-II

1. Start engine.
2. Select “ECU INPUT SIGNALS” in “DATA MONITOR” mode for “TRANSMISSION” with CONSULT-II.
3. Start vehicle.
4. Check if there is a great difference between “ENG SPEED SIG” and “PRI SPEED SEN”. (Lock-up ON.)

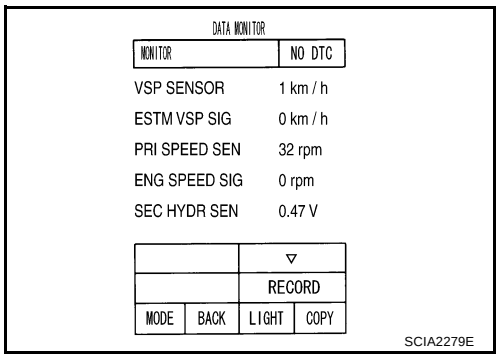

Item name	Condition	Display value
ENG SPEED SIG	Engine running	Closely matches the tachometer reading.
PRI SPEED SEN	During driving (lock-up ON)	Approximately matches the engine speed.

OK or NG

OK >> GO TO 5.
NG >> GO TO 2.

2. CHECK LINE PRESSURE

Perform line pressure test. Refer to CVT-42, "LINE PRESSURE TEST" .

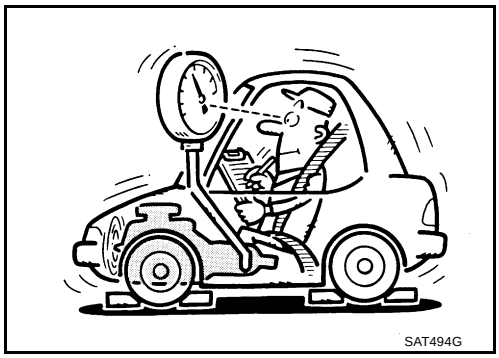

OK or NG

OK >> GO TO 3.
NG >> Repair or replace damaged parts. Refer to CVT-43, "Judgement of Line Pressure Test" .

3. DETECT MALFUNCTIONING ITEM

Check the following:

- Torque converter clutch solenoid valve. Refer to CVT-104, "Component Inspection" .
- Lock-up select solenoid valve. Refer to CVT-162, "Component Inspection" .

OK or NG

OK >> GO TO 4.
NG >> Repair or replace damaged parts.

4. CHECK OUTPUT SPEED SENSOR (SECONDARY SPEED SENSOR) SYSTEM AND INPUT SPEED SENSOR (PRIMARY SPEED SENSOR) SYSTEM

Check output speed sensor (secondary speed sensor) system and input speed sensor (primary speed sensor) system. Refer to CVT-90, "DTC P0720 VEHICLE SPEED SENSOR CVT (SECONDARY SPEED SENSOR)" , CVT-85, "DTC P0715 INPUT SPEED SENSOR CIRCUIT (PRI SPEED SENSOR)" .

OK or NG

OK >> GO TO 5.
NG >> Repair or replace damaged parts.

5. CHECK DTC

Perform “DTC Confirmation Procedure”. Refer to CVT-105, "DTC Confirmation Procedure" .

OK or NG

OK >> **INSPECTION END**
NG >> GO TO 6.

6. CHECK TCM

1. Check TCM input/output signals. Refer to CVT-50, "TCM Input/Output Signal Reference Values" .
2. If NG, re-check TCM pin terminals for damage or loose connection with harness connector.

OK or NG

OK >> **INSPECTION END**
NG >> 1. Repair or replace damaged parts.
2. Replace the transaxle assembly. Refer to CVT-199, "Removal and Installation" .

DTC P0745 LINE PRESSURE SOLENOID VALVE

PFP:31940

Description

UCS005GH

- The pressure control solenoid valve A (line pressure solenoid valve) in included in the control valve assembly.
- The pressure control solenoid valve A (line pressure solenoid valve) regulates the oil pump discharge pressure to suit the driving condition in response to a signal sent from the TCM.

CONSULT-II Reference Value

UCS005GI

Remarks: Specification data are reference values.

Item name	Condition	Display value (Approx.)
ISOLT2	Release your foot from the accelerator pedal.	0.8 A
	Press the accelerator pedal all the way down.	0.0 A

On Board Diagnosis Logic

UCS005GJ

- This is an OBD-II self-diagnostic item.
- Diagnostic trouble code “P0745 L/PRESS SOL/CIRC” with CONSULT-II is detected under the following conditions.
  - TCM detects an improper voltage drop when it tries to operate the solenoid valve.
  - When TCM compares target value with monitor value and detects an irregularity.

Possible Cause

UCS005GK

- Harness or connectors
  (Solenoid circuit is open or shorted.)
- Pressure control solenoid valve A (Line pressure solenoid valve)

DTC Confirmation Procedure

UCS005GL

NOTE:
If “DTC Confirmation Procedure” has been previously performed, always turn ignition switch OFF and wait at least 10 seconds before performing the next test.
After the repair, perform the following procedure to confirm the malfunction is eliminated.

WITH CONSULT-II

1. Turn ignition switch ON and select “DATA MONITOR” mode for “TRANSMISSION” with CONSULT-II.
2. Start engine and wait at least 5 seconds.
3. If DTC is detected, go to CVT-110, "Diagnostic Procedure" .

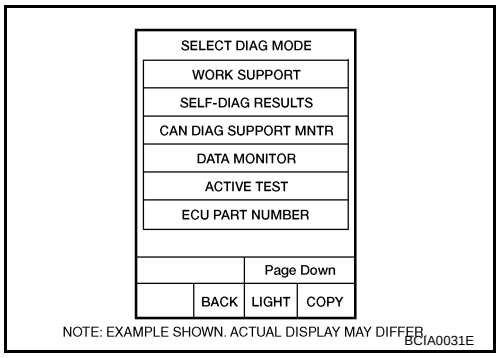

WITH GST

Follow the procedure “WITH CONSULT-II”.

Wiring Diagram — CVT — LPSV

UCS005GM

CVT-LPSV-01

: DETECTABLE LINE FOR DTC
: NON-DETECTABLE LINE FOR DTC

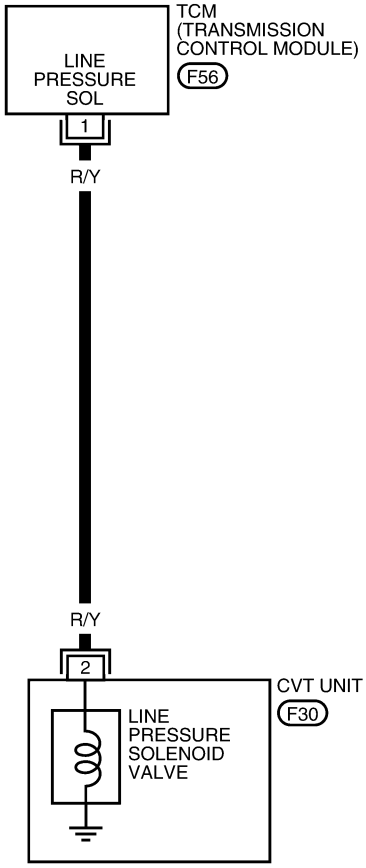

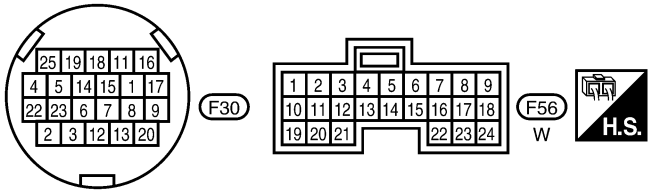

BCWA0627E

TCM terminal data are reference values, measured between each terminal and ground.

Terminal	Wire color	Item	Condition		Data (Approx.)
1	R/Y	Pressure control solenoid valve A (Line pressure solenoid valve)	 and 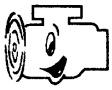	Release your foot from the accelerator pedal.	5.0 - 7.0 V
				Press the accelerator pedal all the way down.	1.0 - 3.0 V

Diagnostic Procedure

UCS005GN

1. CHECK INPUT SIGNAL

With CONSULT-II

1. Start engine.
2. Select “MAIN SIGNALS” in “DATA MONITOR” mode for “TRANSMISSION” with CONSULT-II.
3. Read out the value of “ISOLT2”.

Item name	Condition	Display value (Approx.)
ISOLT2	Release your foot from the accelerator pedal.	0.8 A
	Press the accelerator pedal all the way down.	0.0 A

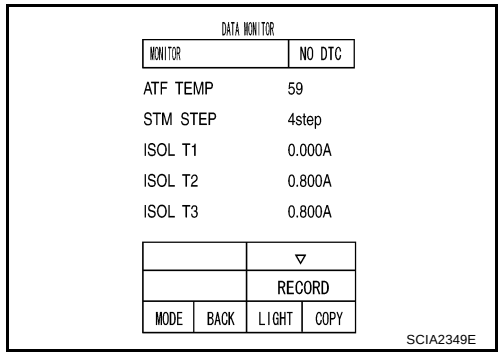

Without CONSULT-II

1. Start engine.
2. Check voltage between TCM connector terminal and ground.

Name	Connector	Terminal	Condition	Voltage (Approx.)
Pressure control solenoid valve A (Line pressure solenoid valve)	F56	1 - ground	Release your foot from the accelerator pedal.	5.0 - 7.0 V
			Press the accelerator pedal all the way down.	1.0 - 3.0 V

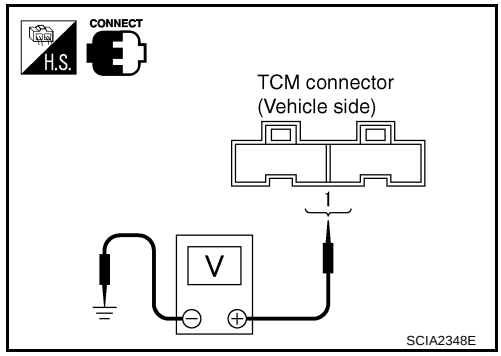

3. Turn ignition switch OFF.
4. Disconnect TCM connector.
5. Check if there is continuity between connector terminal and ground.

OK or NG

OK >> GO TO 5.
NG >> GO TO 2.

2. CHECK PRESSURE CONTROL SOLENOID VALVE A (LINE PRESSURE SOLENOID VALVE) CIRCUIT

1. Turn ignition switch OFF.
2. Disconnect TCM connector.
3. Check resistance between TCM connector terminal and ground.

Solenoid valve	Connector	Terminal	Resistance (Approx.)
Pressure control solenoid valve A (Line pressure solenoid valve)	F56	1 - ground	3.0 - 9.0 Ω

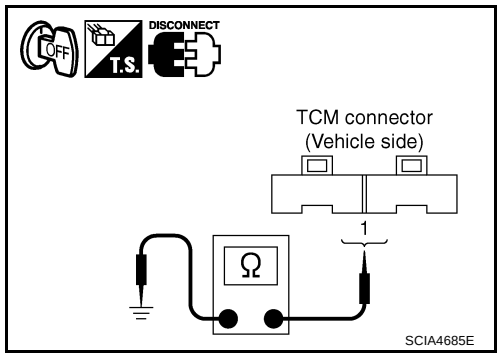

OK or NG

OK >> GO TO 5.
NG >> GO TO 3.

3. CHECK VALVE RESISTANCE

1. Turn ignition switch OFF.
2. Disconnect CVT unit harness connector.
3. Check resistance between CVT unit harness connector terminal and ground.

Solenoid valve	Connector	Terminal	Resistance (Approx.)
Pressure control solenoid valve A (Line pressure solenoid valve)	F30	2 - Ground	3.0 - 9.0 Ω

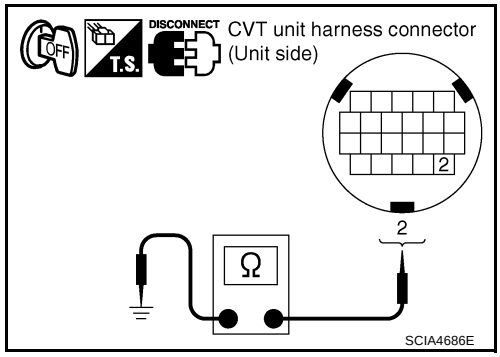

OK or NG

OK >> GO TO 4.
NG >> Replace the transaxle assembly. Refer to CVT-199, "Removal and Installation" .

4. CHECK HARNESS BETWEEN TCM AND PRESSURE CONTROL SOLENOID VALVE A (LINE PRESSURE SOLENOID VALVE)

1. Turn ignition switch OFF.
2. Disconnect CVT unit harness connector and TCM connector.
3. Check continuity between TCM connector terminal and CVT unit harness connector terminal.

Item	Connector	Terminal	Continuity
TCM	F56	1	Yes
CVT unit harness connector	F30	2	

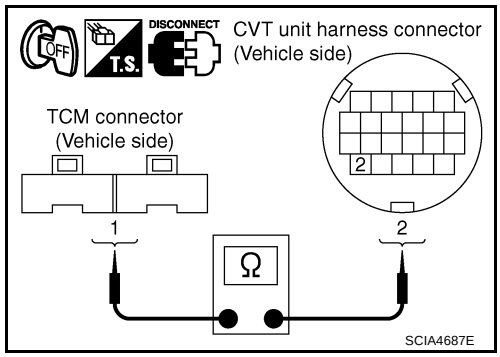

4. If OK, check harness for short to ground and short to power.
5. If OK, check continuity between ground and CVT assembly.
6. Reinstall any part removed.

OK or NG

OK >> GO TO 5.
NG >> Repair open circuit or short to ground or short to power in harness or connectors.

5. CHECK DTC

Perform “DTC Confirmation Procedure”. Refer to CVT-108, "DTC Confirmation Procedure" .

OK or NG

OK >> **INSPECTION END**
NG >> GO TO 6.

6. CHECK TCM

1. Check TCM input/output signals. Refer to CVT-50, "TCM Input/Output Signal Reference Values" .
2. If NG, re-check TCM pin terminals for damage or loose connection with harness connector.

OK or NG

OK >> **INSPECTION END**
NG >> 1. Repair or replace damaged parts.
2. Replace the transaxle assembly. Refer to CVT-199, "Removal and Installation" .

Component Inspection

UCS005GO

PRESSURE CONTROL SOLENOID VALVE A (LINE PRESSURE SOLENOID VALVE)

1. Turn ignition switch OFF.
2. Disconnect CVT unit harness connector.
3. Check resistance between CVT unit harness connector terminal and ground.

Solenoid valve	Connector	Terminal	Resistance (Approx.)
Pressure control solenoid valve A (Line pressure solenoid valve)	F30	2 - Ground	3.0 - 9.0 Ω

4. If NG, replace the transaxle assembly. Refer to CVT-199, "Removal and Installation" .

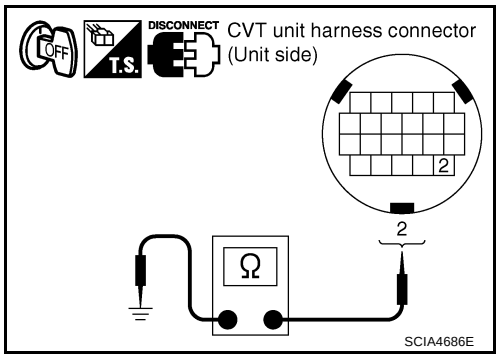

DTC P0746 PRESSURE CONTROL SOLENOID A PERFORMANCE (LINE PRESSURE SOLENOID VALVE)

PFP:31941

Description

UCS005GP

- The pressure control solenoid valve A (line pressure solenoid valve) are included in the control valve assembly.
- The pressure control solenoid valve A (line pressure solenoid valve) regulates the oil pump discharge pressure to suit the driving condition in response to a signal sent from the TCM.

CONSULT-II Reference Value

UCS005GQ

Remarks: Specification data are reference values.

Item name	Condition	Display value (Approx.)
PRI PRESS	“N” position idle	0.3 - 0.9 MPa

On Board Diagnosis Logic

UCS005GR

- This is an OBD-II self-diagnostic item.
- Diagnostic trouble code “P0746 PRS CNT SOL/A FCTN” with CONSULT-II is detected under the following conditions.
  - Unexpected gear ratio was detected in the LOW side due to excessively low line pressure.

Possible Cause

UCS005GS

- Line pressure control system
- Output speed sensor (Secondary speed sensor)
- Input speed sensor (Primary speed sensor)

DTC Confirmation Procedure

UCS005GT

CAUTION:
Always drive vehicle at a safe speed.

NOTE:
If “DTC Confirmation Procedure” has been previously performed, always turn ignition switch OFF and wait at least 10 seconds before performing the next test.
After the repair, touch “ERASE” on “SELF-DIAG RESULTS” and then perform the following procedure to confirm the malfunction is eliminated.

WITH CONSULT-II

1. Turn ignition switch ON and select “DATA MONITOR” mode for “TRANSMISSION” with CONSULT-II.
2. Start engine and maintain the following conditions for at least 10 consecutive seconds. Test start from 0 km/h (0 MPH).
   ATF TEMP SEN: 1.0 - 2.0 V
   ACC PEDAL OPEN: More than 1.0/8
   RANGE: “D” position
   VEHICLE SPEED: 10 km/h (6 MPH) More than
   Driving location: Driving the vehicle uphill (increased engine load) will help maintain the driving conditions required for this test.
3. If DTC is detected, go to CVT-114, "Diagnostic Procedure" .

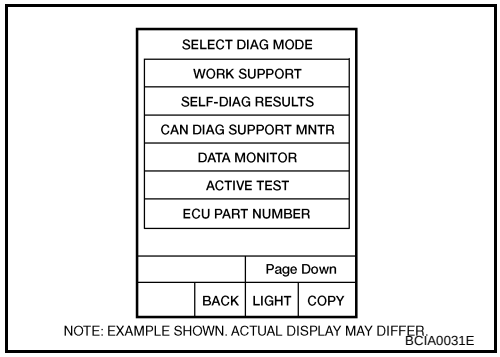

WITH GST

Follow the procedure “WITH CONSULT-II”.

Diagnostic Procedure

UCS005GU

1. CHECK INPUT SIGNAL

With CONSULT-II

1. Start engine.
2. Select “MAIN SIGNALS” in “DATA MONITOR” mode for “TRANSMISSION” with CONSULT-II.
3. Start vehicle and read out the value of “PRI PRESS”.

Item name	Condition	Display value (Approx.)
PRI PRESS	“N” position idle	0.3 - 0.9 MPa

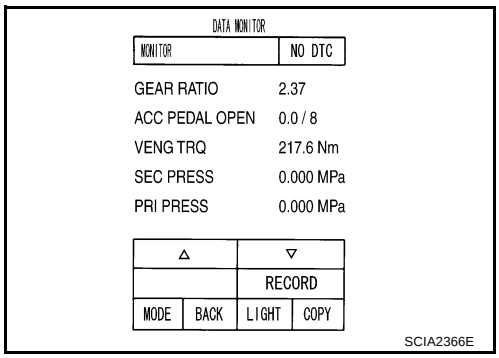

Without CONSULT-II

1. Start engine.
2. Check voltage between TCM connector terminal and ground.

Name	Connector	Terminal	Condition	Voltage (Approx.)
Transmission fluid pressure sensor B (Primary pressure sensor)	F57	41 - Ground	“N” position idle	0.7 - 3.5 V

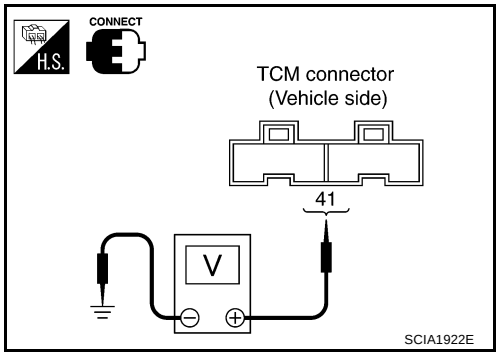

OK or NG

OK >> GO TO 5.
NG >> GO TO 2.

2. CHECK LINE PRESSURE

Perform line pressure test. Refer to CVT-42, "LINE PRESSURE TEST" .

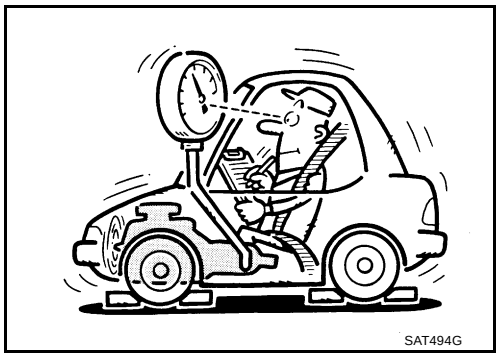

OK or NG

OK >> GO TO 3.
NG >> Repair or replace damaged parts. Refer to CVT-43, "Judgement of Line Pressure Test" .

3. DETECT MALFUNCTIONING ITEM

Check the following:

- Pressure control solenoid valve A (line pressure solenoid valve). Refer to CVT-112, "Component Inspection" .

OK or NG

OK >> GO TO 4.
NG >> Repair or replace damaged parts.

4. CHECK OUTPUT SPEED SENSOR (SECONDARY SPEED SENSOR) SYSTEM AND INPUT SPEED SENSOR (PRIMARY SPEED SENSOR) SYSTEM

Check output speed sensor (secondary speed sensor) system and input speed sensor (primary speed sensor) system. Refer to CVT-90, "DTC P0720 VEHICLE SPEED SENSOR CVT (SECONDARY SPEED SENSOR)" , CVT-85, "DTC P0715 INPUT SPEED SENSOR CIRCUIT (PRI SPEED SENSOR)" .

OK or NG

OK >> GO TO 5.
NG >> Repair or replace damaged parts.

5. DETECT MALFUNCTIONING ITEM

Check the following:

- Power supply and ground circuit for TCM. Refer to CVT-146, "Wiring Diagram — CVT — POWER" .
- The TCM pin terminals for damage or loose connection with harness connector.

OK or NG

OK >> GO TO 6.
NG >> Repair or replace damaged parts.

6. CHECK DTC

Perform “DTC Confirmation Procedure”. Refer to CVT-113, "DTC Confirmation Procedure" .

OK or NG

OK >> **INSPECTION END**
NG >> Replace the transaxle assembly or TCM. Refer to CVT-199, "Removal and Installation" .

DTC P0776 PRESSURE CONTROL SOLENOID B PERFORMANCE (SEC PRESSURE SOLENOID VALVE)

PFP:31941

Description

UCS005GV

- The pressure control solenoid valve B (secondary pressure solenoid valve) is included in the control valve assembly.
- The pressure control solenoid valve B (secondary pressure solenoid valve) regulates the secondary pressure to suit the driving condition in response to a signal sent from the TCM.

CONSULT-II Reference Value

UCS005GW

Remarks: Specification data are reference values.

Item name	Condition	Display value (Approx.)
SEC PRESS	“N” position idle	0.5 - 0.9 MPa

On Board Diagnosis Logic

UCS005GX

- This is an OBD-II self-diagnostic item.
- Diagnostic trouble code “P0776 PRS CNT SOL/B FCTN” with CONSULT-II is detected when secondary pressure is too high or too low compared with the commanded value while driving.

Possible Cause

UCS005GY

- Harness or connectors
  (Solenoid circuit is open or shorted.)
- Pressure control solenoid valve B (Secondary pressure solenoid valve system)
- Transmission fluid pressure sensor A (Secondary pressure sensor)
- Line pressure control system

DTC Confirmation Procedure

UCS005GZ

CAUTION:
Always drive vehicle at a safe speed.

NOTE:
If “DTC Confirmation Procedure” has been previously performed, always turn ignition switch OFF and wait at least 10 seconds before performing the next test.
After the repair, perform the following procedure to confirm the malfunction is eliminated.

WITH CONSULT-II

1. Turn ignition switch ON and select “DATA MONITOR” mode for “TRANSMISSION” with CONSULT-II.
2. Start engine and maintain the following conditions for at least 30 consecutive seconds.
   ATF TEMP SEN: 1.0 - 2.0 V
   ACC PEDAL OPEN: More than 1.0/8
   RANGE: “D” position
   VEHICLE SPEED: 10 km/h (6 MPH) More than
   Driving location: Driving the vehicle uphill (increased engine load) will help maintain the driving conditions required for this test.
3. If DTC is detected, go to CVT-117, "Diagnostic Procedure" .

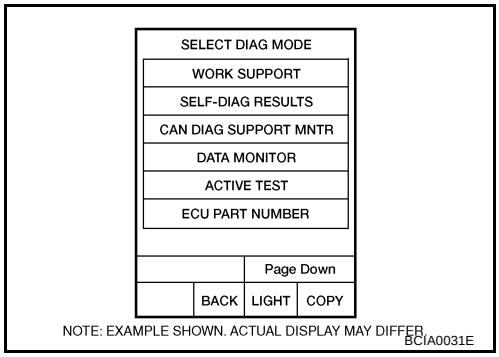

WITH GST

Follow the procedure “WITH CONSULT-II”.

Diagnostic Procedure

UCS005H0

1. CHECK INPUT SIGNAL

With CONSULT-II

1. Start engine.
2. Select “MAIN SIGNALS” in “DATA MONITOR” mode for “TRANSMISSION” with CONSULT-II.
3. Start vehicle and read out the value of “SEC PRESS”.

Item name	Condition	Display value (Approx.)
SEC PRESS	“N” position idle	0.5 - 0.9 MPa

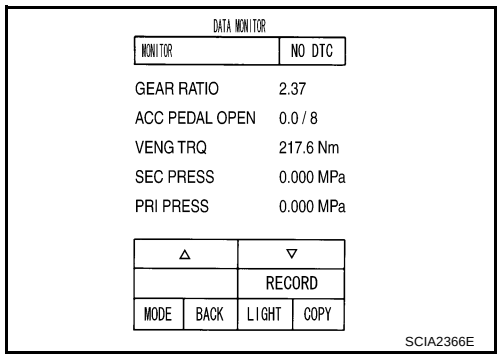

OK or NG

OK >> GO TO 5.
NG >> GO TO 2.

2. CHECK LINE PRESSURE

Perform line pressure test. Refer to CVT-42, "LINE PRESSURE TEST" .

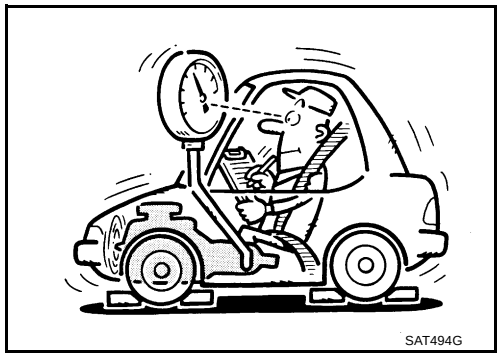

OK or NG

OK >> GO TO 3.
NG >> Repair or replace damaged parts. Refer to CVT-43, "Judgement of Line Pressure Test" .

3. DETECT MALFUNCTIONING ITEM

Check the following:

- Pressure control solenoid valve B (Secondary pressure solenoid valve). Refer to CVT-123, "Component Inspection" .
- Pressure control solenoid valve A (Line pressure solenoid valve). Refer to CVT-112, "Component Inspection" .

OK or NG

OK >> GO TO 4.
NG >> Repair or replace damaged parts.

4. CHECK TRANSMISSION FLUID PRESSURE SENSOR A (SECONDARY PRESSURE SENSOR) SYSTEM

Check transmission fluid pressure sensor A (secondary pressure sensor) system. Refer to CVT-129, "DTC P0840 TRANSMISSION FLUID PRESSURE SENSOR A CIRCUIT (SEC PRESSURE SENSOR)" .

OK or NG

OK >> GO TO 5.
NG >> Repair or replace damaged parts.

5. DETECT MALFUNCTIONING ITEM

Check the following:

- Power supply and ground circuit for TCM. Refer to CVT-146, "Wiring Diagram — CVT — POWER" .
- The TCM pin terminals for damage or loose connection with harness connector.

OK or NG

OK >> GO TO 6.
NG >> Repair or replace damaged parts.

6. CHECK DTC

Perform “DTC Confirmation Procedure”. Refer to CVT-116, "DTC Confirmation Procedure" .

OK or NG

OK >> **INSPECTION END**
NG >> Replace the transaxle assembly. Refer to CVT-199, "Removal and Installation" .

DTC P0778 PRESSURE CONTROL SOLENOID B ELECTRICAL (SEC PRESSURE SOLENOID VALVE)

PFP:31941

Description

UCS005H1

- The pressure control solenoid valve B (secondary pressure solenoid valve) is included in the control valve assembly.
- The pressure control solenoid valve B (secondary pressure solenoid valve) regulates the oil pump discharge pressure to suit the driving condition in response to a signal sent from the TCM.

CONSULT-II Reference Value

UCS005H2

Remarks: Specification data are reference values.

Item name	Condition	Display value (Approx.)
ISOLT3	Secondary pressure low - Secondary pressure high	0.8 - 0.0 A
SOLMON3	“N” position idle	0.6 - 0.7 A
	When stalled	0.4 - 0.6 A

On Board Diagnosis Logic

UCS005H3

- This is an OBD-II self-diagnostic item.
- Diagnostic trouble code “P0778 PRS CNT SOL/B CIRC” with CONSULT-II is detected under the following conditions.
  - TCM detects an improper voltage drop when it tries to operate the solenoid valve.
  - When TCM compares target value with monitor value and detects an irregularity.

Possible Cause

UCS005H4

- Harness or connectors
  (Solenoid circuit is open or shorted.)
- Pressure control solenoid valve B (Secondary pressure solenoid valve)

DTC Confirmation Procedure

UCS005H5

NOTE:
If “DTC Confirmation Procedure” has been previously performed, always turn ignition switch OFF and wait at least 10 seconds before performing the next test.
After the repair, perform the following procedure to confirm the malfunction is eliminated.

WITH CONSULT-II

1. Turn ignition switch ON.
2. Select “DATA MONITOR” mode for “TRANSMISSION” with CONSULT-II.
3. Start engine and wait at least 5 seconds.
4. If DTC is detected, go to CVT-121, "Diagnostic Procedure" .

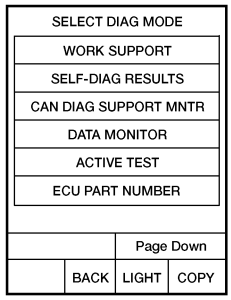

NOTE: EXAMPLE SHOWN. ACTUAL DISPLAY MAY DIFFER
BCIA0031E

WITH GST

Follow the procedure “WITH CONSULT-II”.

Wiring Diagram — CVT — SECPSV

UCS005H6

CVT-SECPSV-01

: DETECTABLE LINE FOR DTC
: NON-DETECTABLE LINE FOR DTC

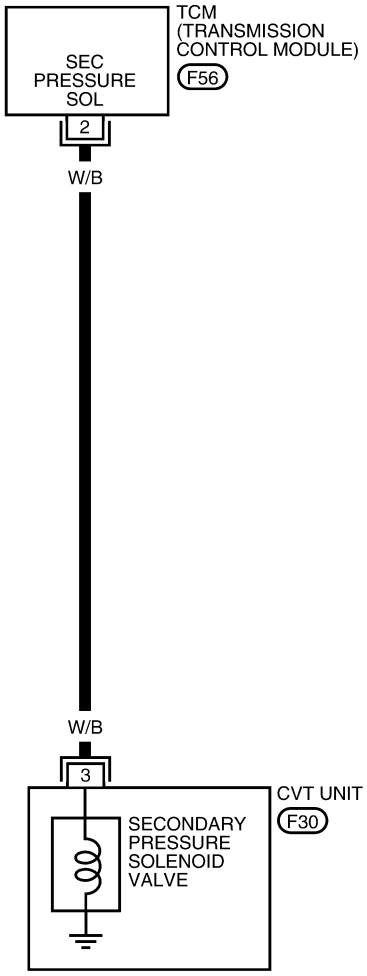

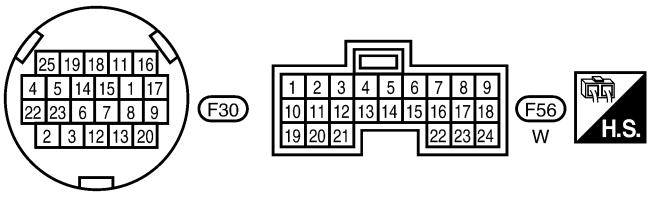

BCWA0628E

TCM terminal data are reference values, measured between each terminal and ground.

Terminal	Wire color	Item	Condition		Data (Approx.)
2	W/B	Pressure control solenoid valve B (Secondary pressure solenoid valve)	 and 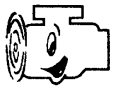	Release your foot from the accelerator pedal.	5.0 - 7.0 V
				Press the accelerator pedal all the way down.	3.0 - 4.0 V

Diagnostic Procedure

UCS005H7

1. CHECK INPUT SIGNAL

With CONSULT-II

1. Start engine.
2. Select “MAIN SIGNALS” in “DATA MONITOR” mode for “TRANSMISSION” with CONSULT-II.
3. Read out the value of “ISOLT3”.

Item name	Condition	Display value (Approx.)
ISOLT3	Secondary pressure low - Secondary pressure high	0.8 - 0.0 A

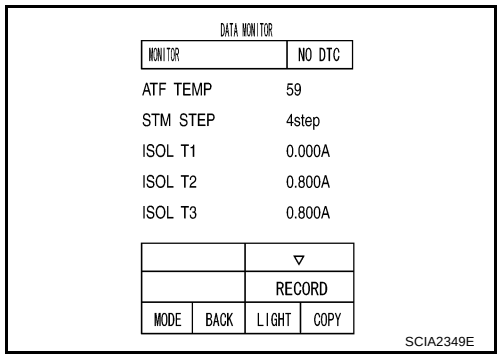

Without CONSULT-II

1. Start engine.
2. Check voltage between TCM connector terminal and ground.

Name	Connector	Terminal	Condition	Voltage (Approx.)
Pressure control solenoid valve B (Secondary pressure solenoid valve)	F56	2 - ground	Release your foot from the accelerator pedal.	5.0 - 7.0 V
			Press the accelerator pedal all the way down.	3.0 - 4.0 V

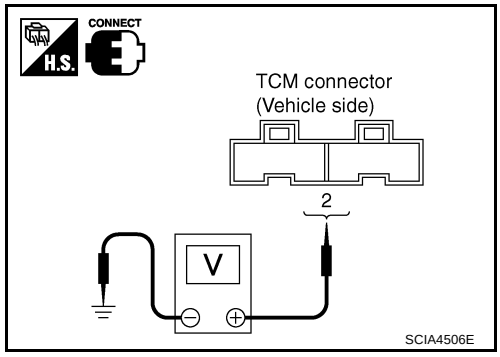

3. Turn ignition switch OFF.
4. Disconnect TCM connector.
5. Check if there is continuity between connector terminal and ground.

OK or NG

OK >> GO TO 5.
NG >> GO TO 2.

2. CHECK PRESSURE CONTROL SOLENOID VALVE B (SECONDARY PRESSURE SOLENOID VALVE) CIRCUIT

1. Turn ignition switch OFF.
2. Disconnect TCM connector.
3. Check resistance between TCM connector terminal and ground.

Solenoid valve	Connector	Terminal	Resistance (Approx.)
Pressure control solenoid valve B (Secondary pressure solenoid valve)	F56	2 - Ground	3.0 - 9.0 Ω

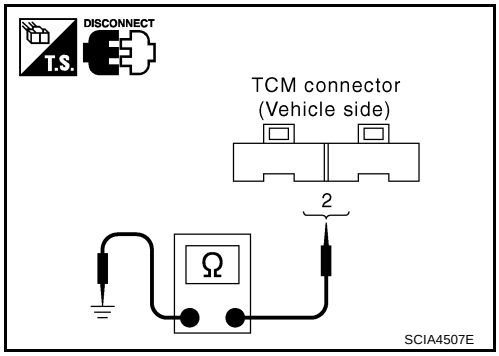

OK or NG

OK >> GO TO 5.
NG >> GO TO 3.

3. CHECK VALVE RESISTANCE

1. Turn ignition switch OFF.
2. Disconnect CVT unit harness connector.
3. Check resistance between CVT unit harness connector terminal and ground.

Solenoid valve	Connector	Terminal	Resistance (Approx.)
Pressure control solenoid valve B (Secondary pressure solenoid valve)	F30	3 - Ground	3.0 - 9.0 Ω

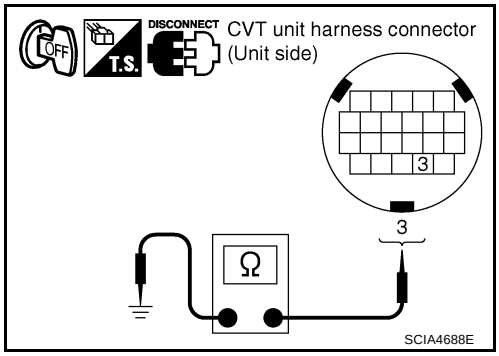

OK or NG

OK >> GO TO 4.
NG >> Repair or replace damaged parts.

4. CHECK HARNESS BETWEEN TCM AND PRESSURE CONTROL SOLENOID VALVE B (SECONDARY PRESSURE SOLENOID VALVE)

1. Turn ignition switch OFF.
2. Disconnect TCM connector and CVT unit harness connector.
3. Check continuity between TCM connector terminal and CVT unit harness connector terminal.

Item	Connector	Terminal	Continuity
TCM connector	F56	2	Yes
CVT unit harness connector	F30	3	

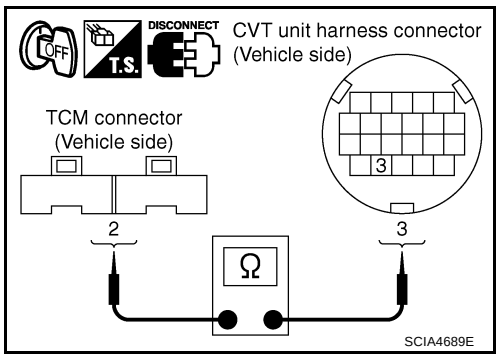

4. If OK, check harness for short to ground and short to power.
5. Reinstall any part removed.

OK or NG

OK >> GO TO 5.
NG >> Repair or replace damaged parts.

5. CHECK DTC

Perform “DTC Confirmation Procedure”. Refer to CVT-119, "DTC Confirmation Procedure" .

OK or NG

OK >> **INSPECTION END**
NG >> GO TO 6.

6. CHECK TCM

1. Check TCM input/output signals. Refer to CVT-50, "TCM Input/Output Signal Reference Values" .
2. If NG, re-check TCM pin terminals for damage or loose connection with harness connector.

OK or NG

OK >> **INSPECTION END**
NG >> 1. Repair or replace damaged parts.
2. Replace the transaxle assembly. Refer to CVT-199, "Removal and Installation" .

Component Inspection

UCS005H8

PRESSURE CONTROL SOLENOID VALVE B (SECONDARY PRESSURE SOLENOID VALVE)

1. Turn ignition switch OFF.
2. Disconnect CVT unit harness connector.
3. Check resistance between CVT unit harness connector terminal and ground.

Solenoid Valve	Connector	Terminal	Resistance (Approx.)
Pressure control solenoid valve B (Secondary pressure solenoid valve)	F30	3 - Ground	3.0 - 9.0 Ω

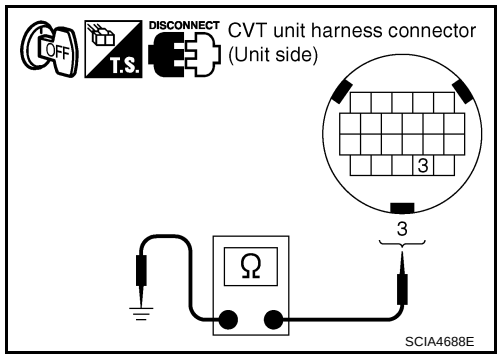

4. If NG, replace the transaxle assembly. Refer to CVT-199, "Removal and Installation" .

DTC P0826 MANUAL MODE SWITCH CIRCUIT

PFP:34901

Description

UCS005H9

Manual mode switch is installed in CVT control device. The manual mode switch sends shift up and shift down switch signals to TCM.
TCM sends the switch signals to unified meter and A/C amp via CAN communication line. Then manual mode switch position is indicated on the shift position indicator. For inspection, refer to CVT-170, "Diagnostic Procedure"

CONSULT-II Reference Value

UCS005HA

Item name	Condition	Display value
MMODE	Manual shift gate position (neutral)	ON
	Other than the above	OFF
NON MMODE	Manual shift gate position (neutral, +side, -side)	OFF
	Other than the above	ON
UPLVR	Selector lever: + side	ON
	Other than the above	OFF
DOWNLVR	Selector lever: - side	ON
	Other than the above	OFF

On Board Diagnosis Logic

UCS005HB

- This is not an OBD-II self-diagnostic item.
- Diagnostic trouble code “P0826 MANUAL MODE SWITCH” with CONSULT-II is detected when TCM monitors Manual mode, Non manual mode, Up or Down switch signal, and then detects irregular with impossible input pattern for 1 second or more.

Possible Cause

UCS005HC

- Harness or connectors
  (These switches circuit is open or shorted.)
  (TCM, and unified meter and A/C amp circuit are open or shorted.)
  (CAN communication line is open or shorted.)
- Manual mode select switch (Built into CVT control device)
- Manual mode position select switch (Built into CVT control device)

DTC Confirmation Procedure

UCS005HD

CAUTION:
Always drive vehicle at a safe speed.

NOTE:
If “DTC Confirmation Procedure” has been previously conducted, always turn ignition switch OFF and wait at least 10 seconds before conducting the next test.
After the repair, perform the following procedure to confirm the malfunction is eliminated.

WITH CONSULT-II

1. Turn ignition switch ON. (Do not start engine.)
2. Select “DATA MONITOR” mode for “TRANSMISSION” with CONSULT-II.
3. Start engine.
4. Move selector lever to “M” position.
5. Drive vehicle for at least 2 consecutive seconds.
6. If DTC is detected, go to CVT-126, "Diagnostic Procedure" .

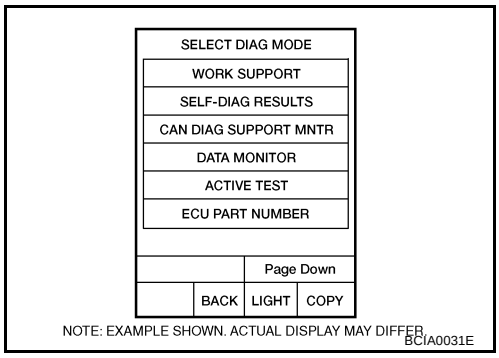

Wiring Diagram — CVT — MMSW

UCS005HE

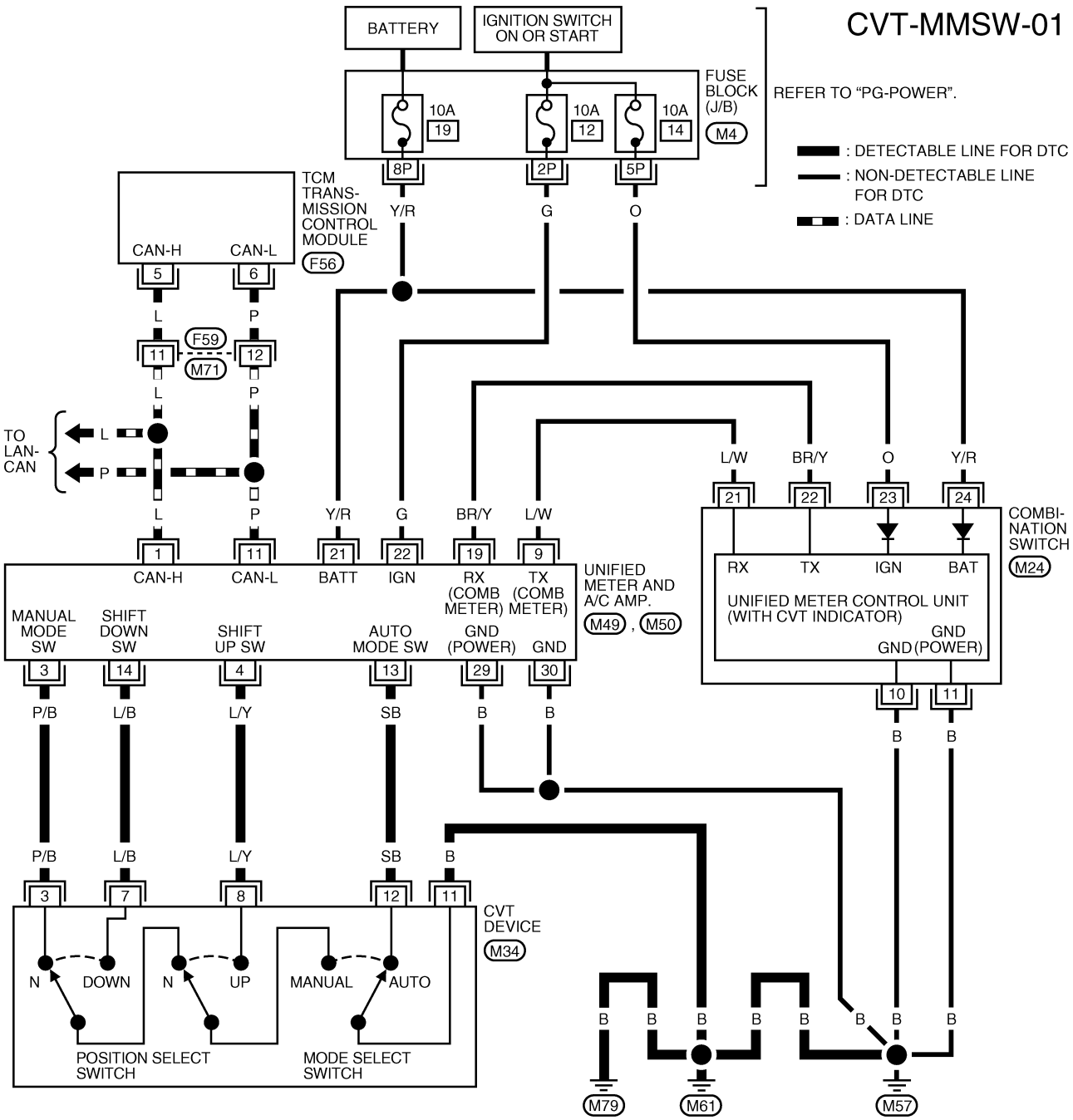

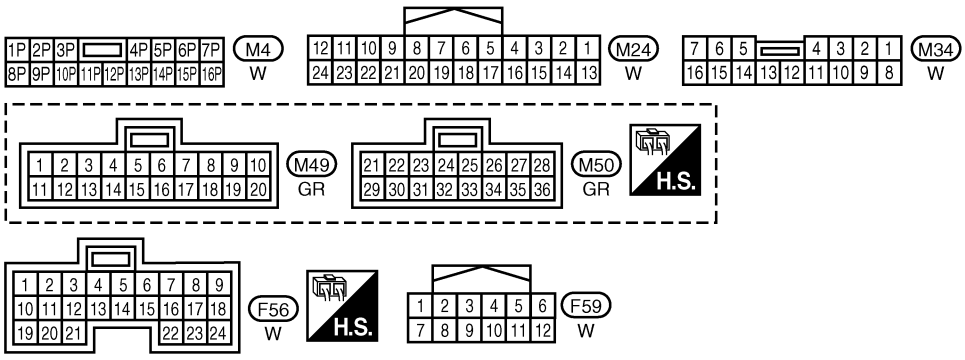

BCWA0629E

TCM terminal data are reference values, measured between each terminal and ground.

Terminal	Wire color	Item	Condition	Data (Approx.)
5	L	CAN-H	–	–
6	P	CAN-L	–	–

Diagnostic Procedure

UCS005HF

1. CHECK CAN COMMUNICATION LINE

Perform the self-diagnosis check. Refer to CVT-57, "SELF-DIAGNOSTIC RESULT MODE" .

Is any malfunction of the “U1000 CAN COMM CIRCUIT” indicated?

YES >> Check CAN communication line. Refer to CVT-64, "DTC U1000 CAN COMMUNICATION LINE" .
NO >> GO TO 2.

2. CHECK MANUAL MODE SWITCH SIGNALS

With CONSULT-II

1. Turn ignition switch ON. (Do not start engine.)
2. Select “ECU INPUT SIGNALS” in “DATA MONITOR” mode for “TRANSMISSION” with CONSULT-II.
3. Read out ON/OFF switching action of the “MMODE”, “NON M-MODE”, “UPLVR”, “DOWNLVR”.

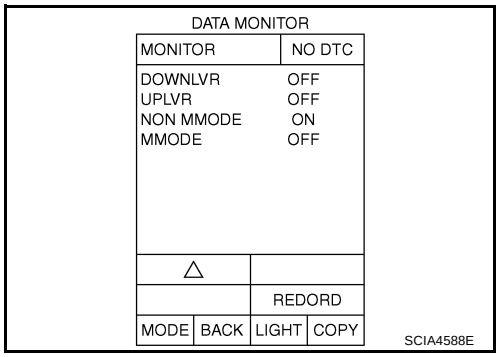

Item name	Condition	Display value
MMODE	Manual shift gate position (neutral)	ON
	Other than the above	OFF
NON MMODE	Manual shift gate position (neutral, +side, -side)	OFF
	Other than the above	ON
UPLVR	Selector lever: + side	ON
	Other than the above	OFF
DOWNLVR	Selector lever: - side	ON
	Other than the above	OFF

Without CONSULT-II

Drive vehicle in the manual mode, and confirm that the actual gear position and the meter's indication of the position mutually coincide when the selector lever is shifted to the “+ (up)” or “- (down)” side (1st ⇔ 6th gear).

OK or NG

OK >> GO TO 7.
NG >> GO TO 3.

3. CHECK MANUAL MODE SWITCH

Check manual mode switch. Refer to CVT-128, "Component Inspection" .

OK or NG

OK >> GO TO 4.
NG >> Repair or replace damaged parts.

4. CHECK SELF-DIAGNOSTIC RESULTS (UNIFIED METER AND A/C AMP)

Perform self-diagnosis check. Refer to DI-32, "CONSULT-II Function (METER A/C AMP)" .

Is any malfunction detected by self-diagnosis?

YES >> Check the malfunctioning system.
NO >> GO TO 5.

5. CHECK SELF-DIAGNOSTIC RESULTS (COMBINATION METER)

Perform self-diagnosis check. Refer to DI-13, "Self-Diagnosis Mode of Combination Meter" .

Is any malfunction detected by self-diagnosis?

YES >> Check the malfunctioning system.
NO >> GO TO 6.

6. CHECK MANUAL MODE SWITCH CIRCUIT

1. Turn ignition switch OFF.
2. Disconnect CVT device connector and unified meter and A/C amp connector.
3. Check continuity between CVT device harness connector terminals and unified meter and A/C amp harness connector terminals.

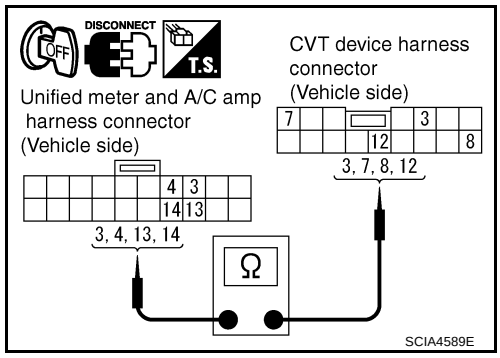

Item	Connector	Terminal	Continuity
CVT device harness connector	M34	3	Yes
Unified meter and A/C amp harness connector	M49	3	
CVT device harness connector	M34	7	Yes
Unified meter and A/C amp harness connector	M49	14	
CVT device harness connector	M34	8	Yes
Unified meter and A/C amp harness connector	M49	4	
CVT device harness connector	M34	12	Yes
Unified meter and A/C amp harness connector	M49	13	

4. Check continuity between CVT device harness connector terminal and ground.

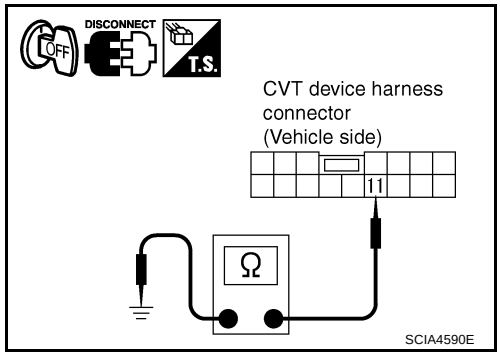

Item	Connector	Terminal	Continuity
CVT device harness connector	M34	11	Yes

5. If OK, check harness for short to ground and short to power.
6. Reinstall any part removed.

OK or NG

OK >> GO TO 7.
NG >> Repair open circuit or short to ground or short to power in harness or connectors.

7. CHECK DTC

Perform “DTC Confirmation Procedure”. Refer to CVT-124, "DTC Confirmation Procedure" .

OK or NG

OK >> **INSPECTION END**
NG >> GO TO 8.

8. CHECK TCM

1. Check TCM input/output signals. Refer to CVT-50, "TCM Input/Output Signal Reference Values" .
2. If NG, re-check TCM pin terminals for damage or loose connection with harness connector.

OK or NG

OK >> **INSPECTION END**
NG >> Repair or replace damaged parts.

Component Inspection

UCS005HG

MANUAL MODE SWITCH

Check continuity between CVT device harness connector terminals.

Item	Position	Connector	Terminal	Continuity
Manual mode select switch	Auto	M34	12 - 11	Yes
	Manual		3 - 11	
Manual mode position select switch	Up		8 - 11	
	Down		7 - 11	

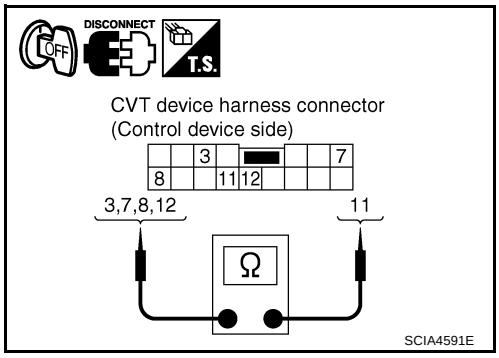

DTC P0840 TRANSMISSION FLUID PRESSURE SENSOR A CIRCUIT (SEC PRESSURE SENSOR)

PFP:31936

Description

UCS005HH

- The transmission fluid pressure sensor A (secondary pressure sensor) is included in the control valve assembly.
- The transmission fluid pressure sensor A (secondary pressure sensor) detects secondary pressure of CVT and sends TCM the signal.

CONSULT-II Reference Value

UCS005HI

Remarks: Specification data are reference values.

Item name	Condition	Display value (Approx.)
SEC HYDR SEN	“N” position idle	0.8 - 1.0 V
SEC PRESS		0.5 - 0.9 MPa

On Board Diagnosis Logic

UCS005HJ

- This is an OBD-II self-diagnostic item.
- Diagnostic trouble code “P0840 TR PRS SENS/A CIRC” with CONSULT-II is detected when TCM detects an improper voltage drop when it receives the sensor signal.

Possible Cause

UCS005HK

- Transmission fluid pressure sensor A (Secondary pressure sensor)
- Harness or connectors
  (Switch circuit is open or shorted.)

DTC Confirmation Procedure

UCS005HL

NOTE:
If “DTC Confirmation Procedure” has been previously performed, always turn ignition switch OFF and wait at least 10 seconds before performing the next test.
After the repair, perform the following procedure to confirm the malfunction is eliminated.

WITH CONSULT-II

1. Turn ignition switch ON and select “DATA MONITOR” mode for “TRANSMISSION” with CONSULT-II.
2. Make sure that output voltage of line temperature sensor is within the range below.
   ATF TEMP SEN: 1.0 - 2.0 V
   If out of range, drive the vehicle to decrease the voltage (warm up the fluid) or stop engine to increase the voltage (cool down the fluid)
3. Start engine and wait for at least 5 consecutive seconds.
4. If DTC is detected, go to CVT-131, "Diagnostic Procedure" .

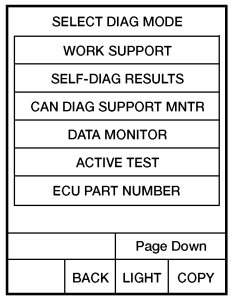

NOTE: EXAMPLE SHOWN. ACTUAL DISPLAY MAY DIFFER.
BCIA0031E

WITH GST

Follow the procedure “WITH CONSULT-II”.

Wiring Diagram — CVT — SECPS

UCS005HM

CVT-SECPS-01

: DETECTABLE LINE FOR DTC
: NON-DETECTABLE LINE FOR DTC

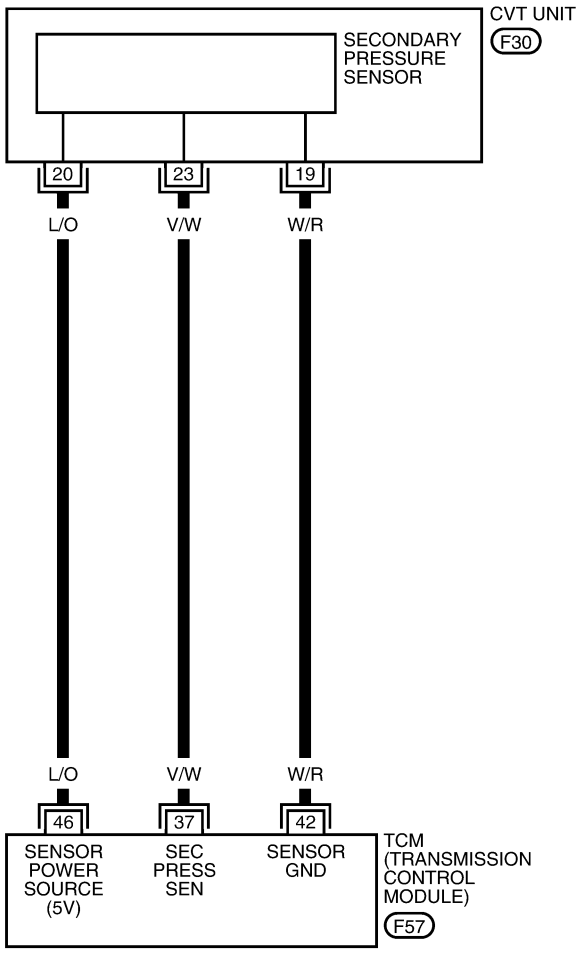

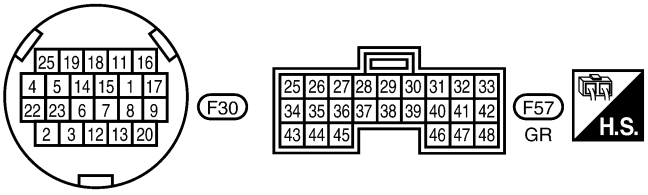

BCWA0630E

TCM terminal data are reference values, measured between each terminal and ground.

Terminal	Wire color	Item	Condition		Data (Approx.)
37	V/W	Transmission fluid pressure sensor A (Secondary pressure sensor)	 and 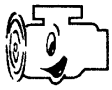	“N” position idle	1.0 V
42	W/R	Sensor ground	Always		0 V
46	L/O	Sensor power		—	5.0 V
				—	0 V

Diagnostic Procedure

UCS005HN

1. CHECK INPUT SIGNAL

With CONSULT-II

1. Start engine.
2. Select “ECU INPUT SIGNALS” in “DATA MONITOR” mode for “TRANSMISSION” with CONSULT-II.
3. Start vehicle and read out the value of “SEC HYDR SEN”.

Item name	Condition	Display value (Approx.)
SEC HYDR SEN	“N” position idle	0.8 - 1.0 V

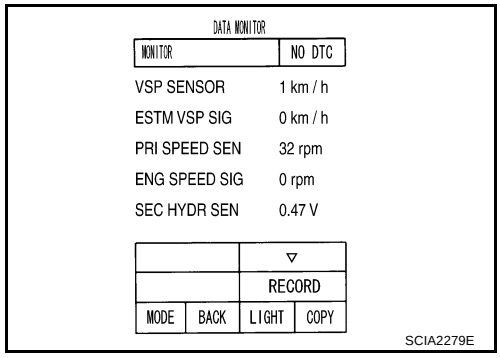

Without CONSULT-II

1. Start engine.
2. Check voltage between TCM connector terminal and ground.

Name	Connector	Terminal	Condition	Voltage (Approx.)
Transmission fluid pressure sensor A (Secondary pressure sensor)	F57	37 - Ground	“N” position idle	1.0 V

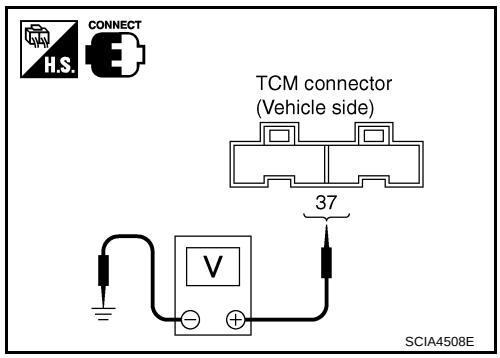

OK or NG

OK >> GO TO 5.
NG >> GO TO 2.

2. CHECK SENSOR POWER AND SENSOR GROUND

1. Turn ignition switch ON. (Do not start engine)
2. Check voltage between TCM connector terminals.

Item	Connector	Terminal	Data (Approx.)
TCM connector	F57	46 - 42	5.0 V

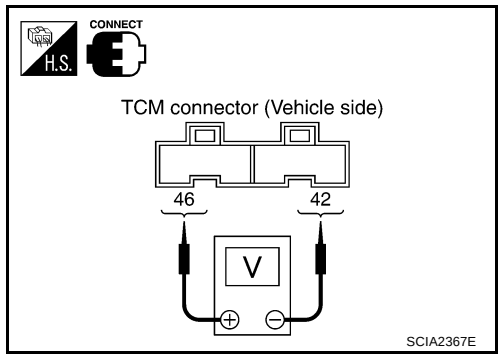

OK or NG

OK >> GO TO 4.
NG >> GO TO 3.

3. CHECK HARNESS BETWEEN TCM AND CVT UNIT HARNESS CONNECTOR (SENSOR POWER AND SENSOR GROUND)

1. Turn ignition switch OFF.
2. Disconnect TCM connector and CVT unit harness connector.
3. Check continuity between TCM connector terminals and CVT unit harness connector terminals.

Item	Connector	Terminal	Continuity
TCM	F57	42	Yes
CVT unit harness connector	F30	19	
TCM	F57	46	Yes
CVT unit harness connector	F30	20	

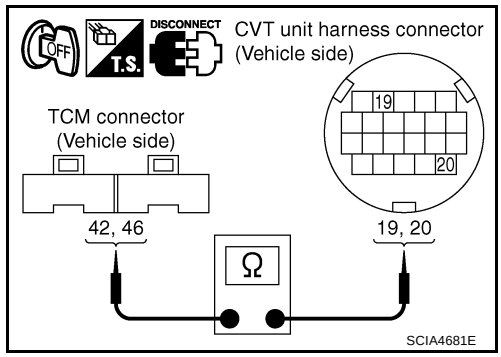

4. If OK, check harness for short to ground and short to power.
5. Reinstall any part removed.

OK or NG

OK >> Replace TCM. Refer to CVT-8, "Precautions for TCM and CVT Assembly Replacement" .
NG >> Repair open circuit or short to ground or short to power in harness or connectors.

4. CHECK HARNESS BETWEEN TCM AND TRANSMISSION FLUID PRESSURE SENSOR A (SECONDARY PRESSURE SENSOR)

1. Turn ignition switch OFF.
2. Disconnect TCM connector and CVT unit harness connector.
3. Check continuity between TCM connector terminal and CVT unit harness connector terminal.

Item	Connector	Terminal	Continuity
TCM	F57	37	Yes
CVT unit harness connector	F30	23	

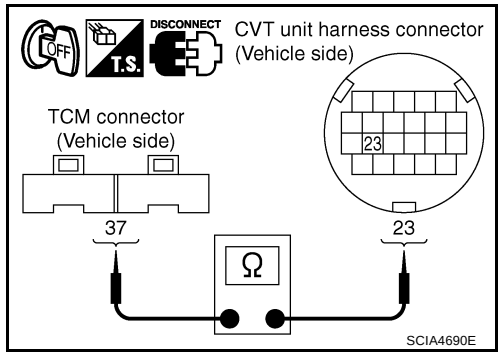

4. If OK, check harness for short to ground and short to power.
5. Reinstall any part removed.

OK or NG

OK >> GO TO 5.
NG >> Repair open circuit or short to ground or short to power in harness or connectors.

5. CHECK DTC

Perform “DTC Confirmation Procedure”. Refer to CVT-129, "DTC Confirmation Procedure" .

OK or NG

OK >> **INSPECTION END**
NG >> GO TO 6.

6. CHECK TCM

1. Check TCM input/output signals. Refer to CVT-50, "TCM Input/Output Signal Reference Values" .
2. If NG, re-check TCM pin terminals for damage or loose connection with harness connector.

OK or NG

OK >> Replace the transaxle assembly. Refer to CVT-199, "Removal and Installation" .
NG >> Repair or replace damaged parts.

DTC P0841 PRESSURE SENSOR FUNCTION

PFP:31936

Description

UCS005HO

Using the engine load (throttle position), the primary pulley revolution speed, and the secondary pulley revolution speed as input signal, TCM changes the operating pressure of the primary pulley and the secondary pulley and changes the groove width of the pulley to control the gear ratio.

CONSULT-II Reference Value

UCS005HP

Remarks: Specification data are reference values.

Item name	Condition	Display value (Approx.)
PRI HYDR SEN	“N” position idle	0.7 - 3.5 V
SEC HYDR SEN		0.8 - 1.0 V

On Board Diagnosis Logic

UCS005HQ

- This is not an OBD-II self-diagnostic item.
- Diagnostic trouble code “P0841 PRESS SEN/FNCTN” with CONSULT-II is detected when correlation between the values of the secondary pressure sensor and the primary pressure sensor is out of specification.

Possible Cause

UCS005HR

- Transmission fluid pressure sensor A (Secondary pressure sensor)
- Transmission fluid pressure sensor B (Primary pressure sensor)
- Harness or connectors
  (Sensor circuit is open or shorted.)

DTC Confirmation Procedure

UCS005HS

CAUTION:
Always drive vehicle at a safe speed.

NOTE:
If “DTC Confirmation Procedure” has been previously performed, always turn ignition switch OFF and wait at least 10 seconds before performing the next test.
After the repair, perform the following procedure to confirm the malfunction is eliminated.

WITH CONSULT-II

1. Turn ignition switch ON and select “DATA MONITOR” mode for “TRANSMISSION” with CONSULT-II.
2. Start engine and maintain the following conditions for at least 12 consecutive seconds.
   VEHICLE SPEED: 40 km/h (25 MPH) More than
   RANGE: “D” position
3. If DTC is detected, go to CVT-135, "Diagnostic Procedure" .

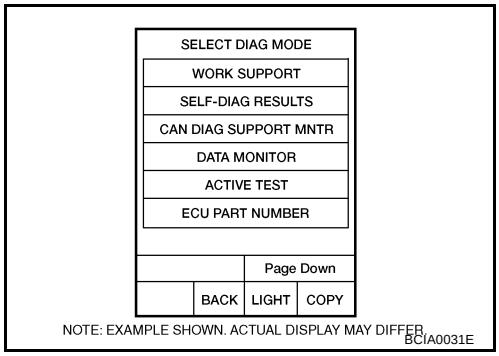

Diagnostic Procedure

UCS005HT

1. CHECK CAN COMMUNICATION LINE

Perform the self-diagnosis. Refer to CVT-57, "SELF-DIAGNOSTIC RESULT MODE" .

Is any malfunction of the “U1000 CAN COMM CIRCUIT” indicated?

YES >> Check CAN communication line. Refer to CVT-64, "DTC U1000 CAN COMMUNICATION LINE" .
NO >> GO TO 2.

2. CHECK INPUT SIGNALS

With CONSULT-II

1. Start engine.
2. Select “ECU INPUT SIGNALS” in “DATA MONITOR” mode for “TRANSMISSION” with CONSULT-II.
3. Start vehicle and read out the value of “SEC HYDR SEN” and “PRI HYDR SEN”.

Item name	Condition	Display value (Approx.)
PRI HYDR SEN	“N” position idle	0.7 - 3.5 V
SEC HYDR SEN		0.8 - 1.0 V

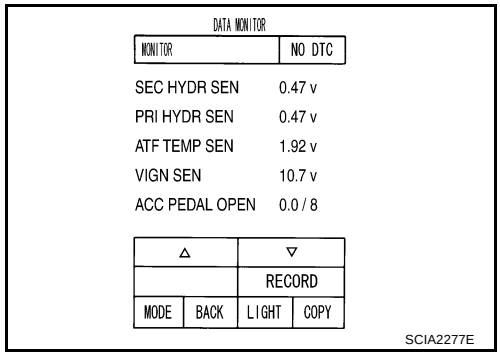

Without CONSULT-II

1. Start engine.
2. Check voltage between TCM connector terminals and ground.

Name	Connector	Terminal	Condition	Voltage (Approx.)
Transmission fluid pressure sensor B (Primary pressure sensor)	F57	41 - Ground	“N” position idle	0.7 - 3.5 V
Transmission fluid pressure sensor A (Secondary pressure sensor)		37 - Ground		1.0 V

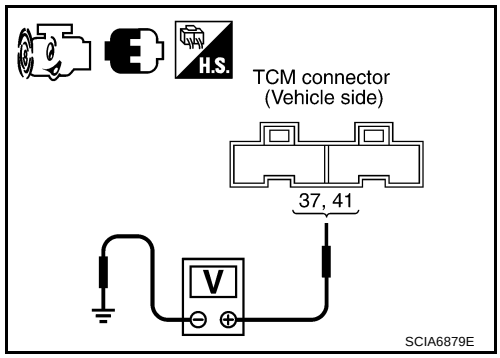

OK or NG

OK >> GO TO 6.
NG >> GO TO 3.

3. CHECK LINE PRESSURE

Perform line pressure test. Refer to CVT-42, "LINE PRESSURE TEST" .

OK or NG

OK >> GO TO 4.
NG >> Repair or replace damaged parts. Refer to CVT-43, "Judgement of Line Pressure Test" .

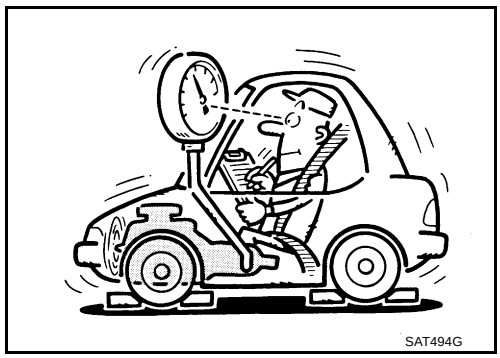

4. CHECK TRANSMISSION FLUID PRESSURE SENSOR A (SECONDARY PRESSURE SENSOR) SYSTEM AND TRANSMISSION FLUID PRESSURE SENSOR B (PRIMARY PRESSURE SENSOR) SYSTEM

Check transmission fluid pressure sensor A (secondary pressure sensor) system and transmission fluid pressure sensor B (primary pressure sensor) system. Refer to CVT-129, "DTC P0840 TRANSMISSION FLUID PRESSURE SENSOR A CIRCUIT (SEC PRESSURE SENSOR)" , CVT-137, "DTC P0845 TRANSMISSION FLUID PRESSURE SENSOR B CIRCUIT (PRI PRESSURE SENSOR)" .

OK or NG

OK >> GO TO 5.
NG >> Repair or replace damaged parts.

5. DETECT MALFUNCTIONING ITEM

Check the following:

- Line pressure solenoid valve. Refer to CVT-112, "Component Inspection" .
- Secondary pressure solenoid valve. Refer to CVT-123, "Component Inspection" .
- Step motor. Refer to CVT-167, "Component Inspection" .

OK or NG6

OK >> GO TO 6.
NG >> Repair or replace damaged parts.

6. CHECK DTC

Perform “DTC Confirmation Procedure”. Refer to CVT-134, "DTC Confirmation Procedure" .

OK or NG

OK >> **INSPECTION END**
NG >> Replace TCM or transaxle assembly. Refer to CVT-199, "Removal and Installation" .

DTC P0845 TRANSMISSION FLUID PRESSURE SENSOR B CIRCUIT (PRI PRESSURE SENSOR)

PFP:31936

Description

UCS005HU

- The transmission fluid pressure sensor (primary pressure sensor) is included in the control valve assembly.
- The transmission fluid pressure sensor (primary pressure sensor) detects primary pressure of CVT and sends TCM the signal.

CONSULT-II Reference Value

UCS005HV

Remarks: Specification data are reference values.

Item name	Condition	Display value (Approx.)
PRI HYDR SEN	“N” position idle	0.7 - 3.5 V

On Board Diagnosis Logic

UCS005HW

- This is an OBD-II self-diagnostic item.
- Diagnostic trouble code “P0845 TR PRS SENS/B CIRC” with CONSULT-II is detected under the following conditions.
  - When TCM detects an improper voltage drop when it receives the sensor signal.
  - When TCM compares target value with monitor value and detects an irregularity.

Possible Cause

UCS005HX

- Transmission fluid pressure sensor B (Primary pressure sensor)
- Harness or connectors
  (Sensor circuit is open or shorted.)

DTC Confirmation Procedure

UCS005HY

NOTE:
If “DTC Confirmation Procedure” has been previously performed, always turn ignition switch OFF and wait at least 10 seconds before performing the next test.
After the repair, perform the following procedure to confirm the malfunction is eliminated.

WITH CONSULT-II

1. Turn ignition switch ON and select “DATA MONITOR” mode for “TRANSMISSION” with CONSULT-II.
2. Make sure that output voltage of line temperature sensor is within the range below.
   ATF TEMP SEN: 1.0 - 2.0 V
   If out of range, drive the vehicle to decrease the voltage (warm up the fluid) or stop engine to increase the voltage (cool down the fluid)
3. Start engine and wait for at least 5 consecutive seconds.
4. If DTC is detected, go to CVT-139, "Diagnostic Procedure" .

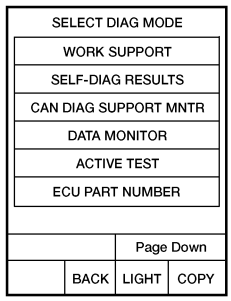

NOTE: EXAMPLE SHOWN. ACTUAL DISPLAY MAY DIFFER.
BCIA0031E

WITH GST

Follow the procedure “WITH CONSULT-II”.

Wiring Diagram — CVT — PRIPS

UCS005HZ

CVT-PRIPS-01

: DETECTABLE LINE FOR DTC
: NON-DETECTABLE LINE FOR DTC

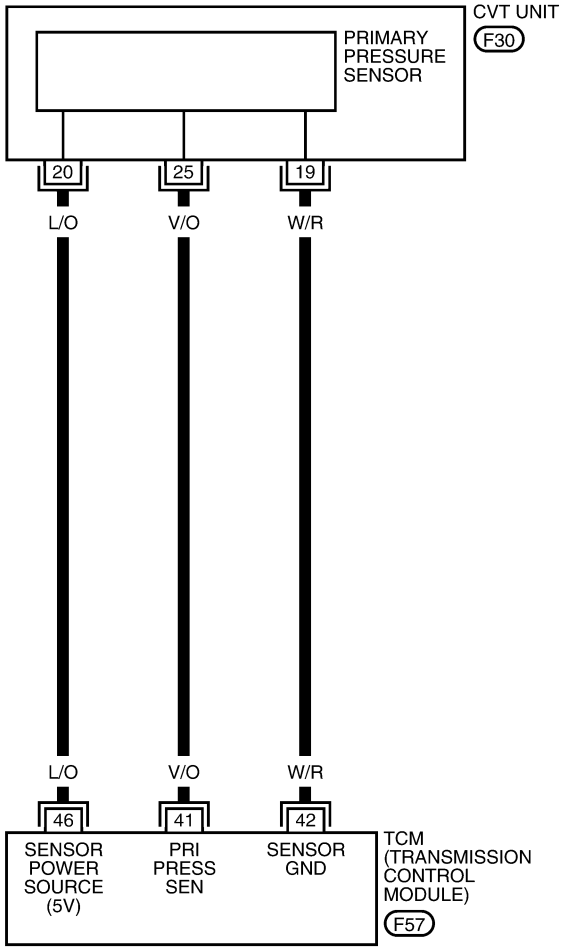

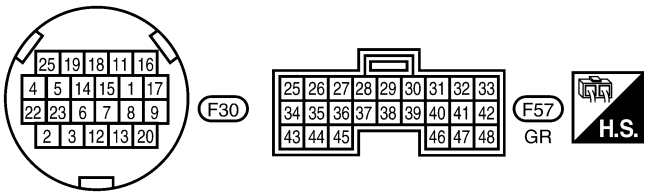

BCWA0631E

TCM terminal data are reference values, measured between each terminal and ground.

Terminal	Wire color	Item	Condition		Data (Approx.)
41	V/O	Transmission fluid pressure sensor B (Primary pressure sensor)	 and 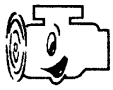	“N” position idle	0.7 - 3.5 V
42	W/R	Sensor ground	Always		0 V
46	L/O	Sensor power		—	5.0 V
				—	0 V

Diagnostic Procedure

UCS005I0

1. CHECK INPUT SIGNAL

With CONSULT-II

1. Start engine.
2. Select “ECU INPUT SIGNALS” in “DATA MONITOR” mode for “TRANSMISSION” with CONSULT-II.
3. Start vehicle and read out the value of “PRI HYDR SEN”.

Item name	Condition	Display value (Approx.)
PRI HYDR SEN	“N” position idle	0.7 - 3.5 V

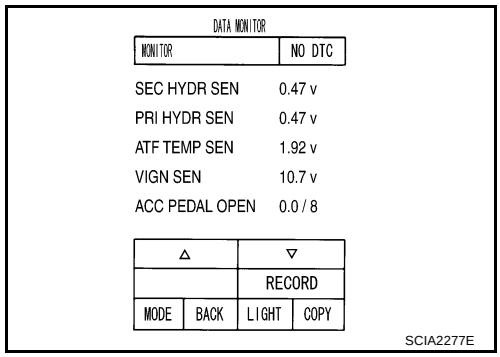

Without CONSULT-II

1. Start engine.
2. Check voltage between TCM connector terminal and ground.

Name	Connector	Terminal	Condition	Voltage (Approx.)
Transmission fluid pressure sensor B (Primary pressure sensor)	F57	41 - Ground	“N” position idle	0.7 - 3.5 V

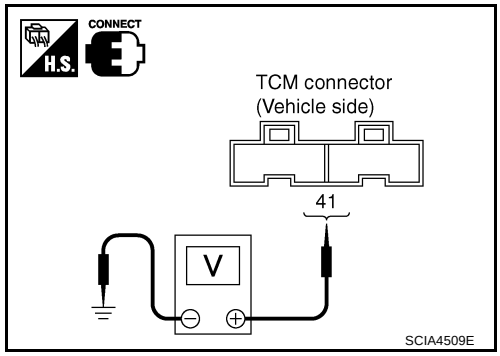

OK or NG

OK >> GO TO 5.
NG >> GO TO 2.

2. CHECK SENSOR POWER AND SENSOR GROUND

1. Turn ignition switch ON. (Do not start engine)
2. Check voltage between TCM connector terminals.

Item	Connector	Terminal	Data (Approx.)
TCM connector	F57	46 - 42	5.0 V

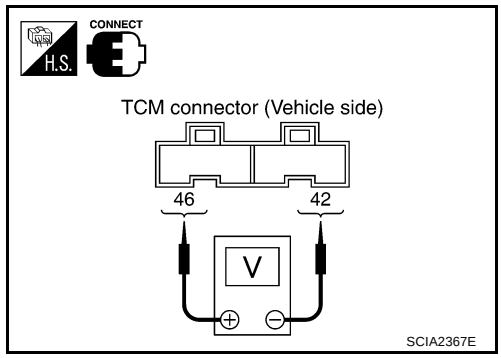

OK or NG

OK >> GO TO 4.
NG >> GO TO 3.

3. CHECK HARNESS BETWEEN TCM AND CVT UNIT HARNESS CONNECTOR (SENSOR POWER AND SENSOR GROUND)

1. Turn ignition switch OFF.
2. Disconnect TCM connector and CVT unit harness connector.
3. Check continuity between TCM connector terminals and CVT unit harness connector terminals.

Item	Connector	Terminal	Continuity
TCM	F57	42	Yes
CVT unit harness connector	F30	19	
TCM	F57	46	Yes
CVT unit harness connector	F30	20	

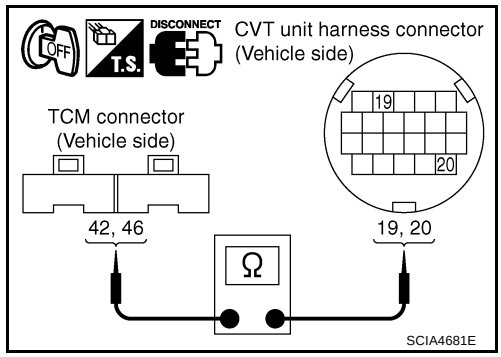

4. If OK, check harness for short to ground and short to power.
5. Reinstall any part removed.

OK or NG

OK >> Replace TCM. Refer to CVT-8, "Precautions for TCM and CVT Assembly Replacement" .
NG >> Repair open circuit or short to ground or short to power in harness or connectors.

4. CHECK HARNESS BETWEEN TCM AND TRANSMISSION FLUID PRESSURE SENSOR B (PRIMARY PRESSURE SENSOR)

1. Turn ignition switch OFF.
2. Disconnect TCM connector and CVT unit harness connector.
3. Check continuity between TCM connector terminal and CVT unit harness connector terminal.

Item	Connector	Terminal	Continuity
TCM	F57	41	Yes
CVT unit harness connector	F30	25	

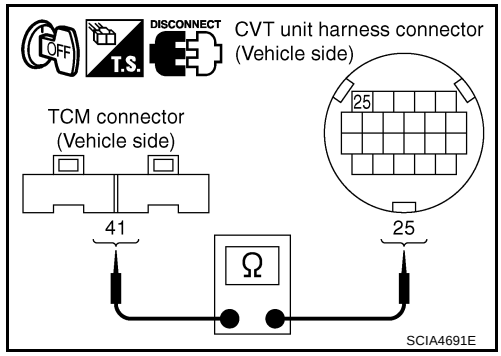

4. If OK, check harness for short to ground and short to power.
5. Reinstall any part removed.

OK or NG

OK >> GO TO 5.
NG >> Repair open circuit or short to ground or short to power in harness or connectors.

5. CHECK DTC

Perform “DTC Confirmation Procedure”. Refer to CVT-137, "DTC Confirmation Procedure" .

OK or NG

OK >> **INSPECTION END**
NG >> GO TO 6.

6. CHECK TCM

1. Check TCM input/output signals. Refer to CVT-50, "TCM Input/Output Signal Reference Values" .
2. If NG, re-check TCM pin terminals for damage or loose connection with harness connector.

OK or NG

OK >> Replace the transaxle assembly. Refer to CVT-199, "Removal and Installation" .
NG >> Repair or replace damaged parts.

DTC P0868 SECONDARY PRESSURE DOWN

PFP:31941

Description

UCS005I1

- The pressure control solenoid valve B (secondary pressure solenoid valve) is included in the control valve assembly.
- The pressure control solenoid valve B (secondary pressure solenoid valve) regulates the secondary pressure to suit the driving condition in response to a signal sent from the TCM.

CONSULT-II Reference Value

UCS005I2

Remarks: Specification data are reference values.

Item name	Condition	Display value (Approx.)
SEC PRESS	“N” position idle	0.5 - 0.9 MPa

On Board Diagnosis Logic

UCS005I3

- This is not an OBD-II self-diagnostic item.
- Diagnostic trouble code “P0868 SEC/PRESS DOWN” with CONSULT-II is detected when secondary fluid pressure is too low compared with the commanded value while driving.

Possible Cause

UCS005I4

- Harness or connectors
  (Solenoid circuit is open or shorted.)
- Pressure control solenoid valve B (Secondary pressure solenoid valve) system
- Transmission fluid pressure sensor A (Secondary pressure sensor)
- Line pressure control system

DTC Confirmation Procedure

UCS005I5

CAUTION:
Always drive vehicle at a safe speed.

NOTE:
If “DTC Confirmation Procedure” has been previously performed, always turn ignition switch OFF and wait at least 10 seconds before performing the next test.
After the repair, perform the following procedure to confirm the malfunction is eliminated.

WITH CONSULT-II

1. Turn ignition switch ON and select “DATA MONITOR” mode for “TRANSMISSION” with CONSULT-II.
2. Make sure that output voltage of CVT fluid temperature sensor is within the range below.
   ATF TEMP SEN: 1.0 - 2.0 V
   If out of range, drive the vehicle to decrease the voltage (warm up the fluid) or stop engine to increase the voltage (cool down the fluid)
3. Start engine and maintain the following conditions for at least 10 consecutive seconds.
   VEHICLE SPEED (accelerate slowly): 0 → 50 km/h (31 MPH)
   ACC PEDAL OPEN: 0.5/8 - 1.0/8
   RANGE: “D” position
4. If DTC is detected, go to CVT-143, "Diagnostic Procedure" .

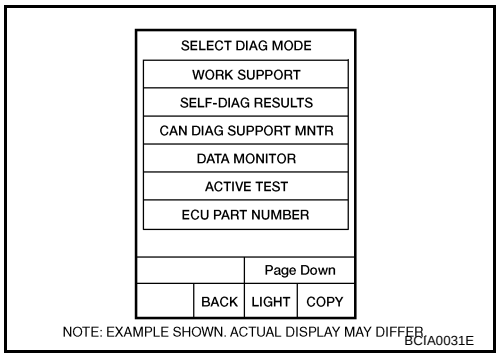

Diagnostic Procedure

UCS005I6

1. CHECK INPUT SIGNAL

With CONSULT-II

1. Start engine.
2. Select “MAIN SIGNALS” in “DATA MONITOR” mode for “TRANSMISSION” with CONSULT-II.
3. Start vehicle and read out the value of “SEC PRESS”.

Item name	Condition	Display value (Approx.)
SEC PRESS	“N” position idle	0.5 - 0.9 MPa

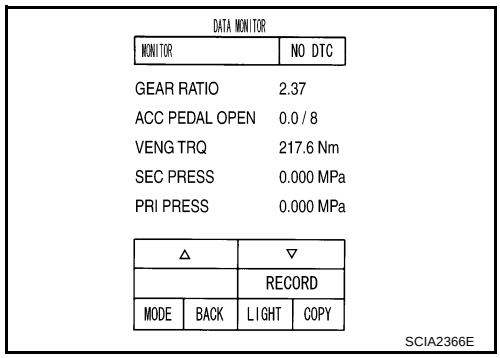

OK or NG

OK >> GO TO 5.
NG >> GO TO 2.

2. CHECK LINE PRESSURE

Perform line pressure test. Refer to CVT-42, "LINE PRESSURE TEST" .

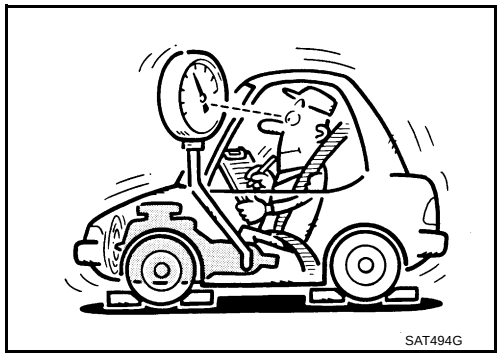

OK or NG

OK >> GO TO 3.
NG >> Repair or replace damaged parts. Refer to CVT-43, "Judgement of Line Pressure Test" .

3. DETECT MALFUNCTIONING ITEM

Check the following:

- Pressure control solenoid valve B (Secondary pressure solenoid valve). Refer to CVT-123, "Component Inspection" .
- Pressure control solenoid valve A (Line pressure solenoid valve). Refer to CVT-112, "Component Inspection" .

OK or NG

OK >> GO TO 4.
NG >> Repair or replace damaged parts.

4. CHECK TRANSMISSION FLUID PRESSURE SENSOR A (SECONDARY PRESSURE SENSOR) SYSTEM

Check transmission fluid pressure sensor A (secondary pressure sensor) system. Refer to CVT-129, "DTC P0840 TRANSMISSION FLUID PRESSURE SENSOR A CIRCUIT (SEC PRESSURE SENSOR)" .

OK or NG

OK >> GO TO 5.
NG >> Repair or replace damaged parts.

5. DETECT MALFUNCTIONING ITEM

Check the following:

- Power supply and ground circuit for TCM. Refer to CVT-146, "Wiring Diagram — CVT — POWER" .
- The TCM pin terminals for damage or loose connection with harness connector.

OK or NG

OK >> GO TO 6.
NG >> Repair or replace damaged parts.

6. CHECK DTC

Perform “DTC Confirmation Procedure”. Refer to CVT-142, "DTC Confirmation Procedure" .

OK or NG

OK >> **INSPECTION END**
NG >> Replace the transaxle assembly. Refer to CVT-199, "Removal and Installation" .

DTC P1701 TRANSMISSION CONTROL MODULE (POWER SUPPLY)

PFP:31036

Description

UCS005I7

When the power supply to the TCM is cut OFF, for example because the battery is removed, and the self-diagnosis memory function stops, malfunction is detected.

NOTE:
Since "P1701 TCM-POWER SUPPLY" will be indicated when replacing TCM, perform diagnosis after erasing "SELF-DIAG RESULTS"

On Board Diagnosis Logic

UCS005I8

- This is not an OBD-II self-diagnostic item.
- Diagnostic trouble code "P1701 TCM-POWER SUPPLY" with CONSULT-II is detected when TCM does not receive the voltage signal from the battery power supply.
- This is not a malfunction message. (Whenever shutting OFF a power supply to the TCM, this message appears on the screen.)

Possible Cause

UCS005I9

Harness or connectors
(Battery and TCM circuit is open or shorted.)

DTC Confirmation Procedure

UCS005IA

NOTE:
If "DTC Confirmation Procedure" has been previously conducted, always turn ignition switch OFF and wait at least 10 seconds before conducting the next test.
After the repair, perform the following procedure to confirm the malfunction is eliminated.

WITH CONSULT-II

1. Turn ignition switch ON. (Do not start engine.)
2. Select "DATA MONITOR" mode for "TRANSMISSION" with CONSULT-II.
3. Wait for at least 2 consecutive seconds.
4. If DTC is detected, go to CVT-147, "Diagnostic Procedure" .

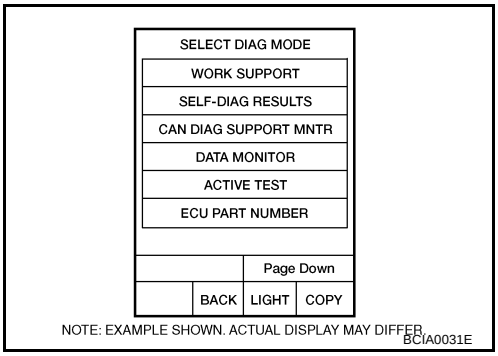

Wiring Diagram — CVT — POWER

UCS005IB

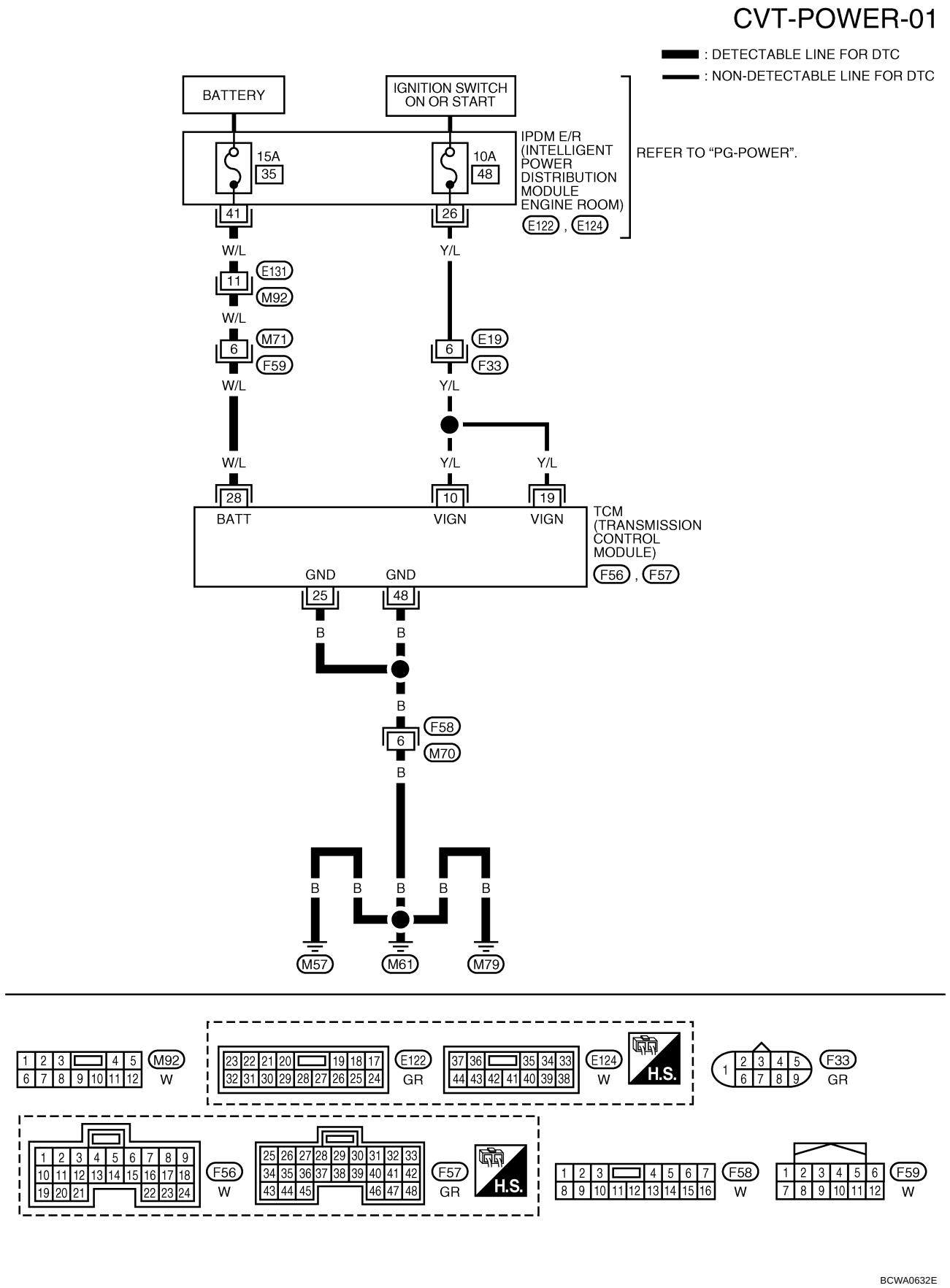

TCM terminals data are reference values, measured between each terminal and ground.

Terminal	Wire color	Item	Condition		Data (Approx.)
10	Y/L	Power supply	ON	–	Battery voltage
			OFF	–	0 V
19	Y/L	Power supply	ON	–	Battery voltage
			OFF	–	0 V
25	B	Ground	Always		0 V
28	W/L	Power supply (memory back-up)	Always		Battery voltage
48	B	Ground	Always		0 V

Diagnostic Procedure

UCS005IC

1. CHECK DTC

1. Turn ignition switch ON. (Do not start engine.)
2. Select “SELF-DIAG RESULTS” mode for “TRANSMISSION” with CONSULT-II.
3. Erase self-diagnostic results. Refer to CVT-31, "HOW TO ERASE DTC (WITH CONSULT-II)" .
4. Turn ignition switch OFF, and wait for 5 seconds or more.
5. Start engine.
6. Confirm self-diagnostic results again. Refer to CVT-57, "SELF-DIAGNOSTIC RESULT MODE" .

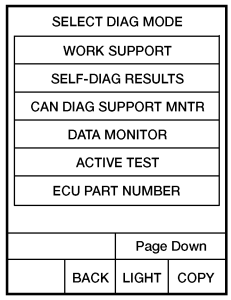

NOTE: EXAMPLE SHOWN. ACTUAL DISPLAY MAY DIFFER.
BCIA0031E

Is the “P1701 TCM-POWER SUPPLY” displayed?

YES >> GO TO 2.
NO >> **INSPECTION END**

2. CHECK TCM POWER SOURCE, STEP 1

1. Turn ignition switch OFF.
2. Check voltage between TCM connector terminal and ground.

Name	Connector	Terminal	Condition	Voltage (Approx.)
Power supply (memory back-up)	F57	28 - Ground	Always	Battery voltage

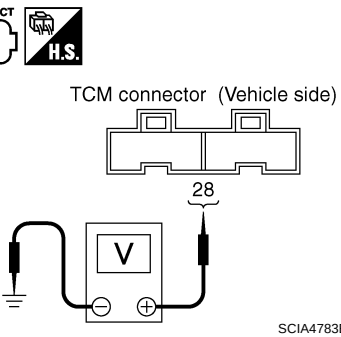

SCIA4783E

OK or NG

OK >> GO TO 3.
NG >> GO TO 4.

3. CHECK TCM POWER SOURCE, STEP 2

1. Turn ignition switch ON. (Do not start engine.)
2. Check voltage between TCM connector terminals and ground.

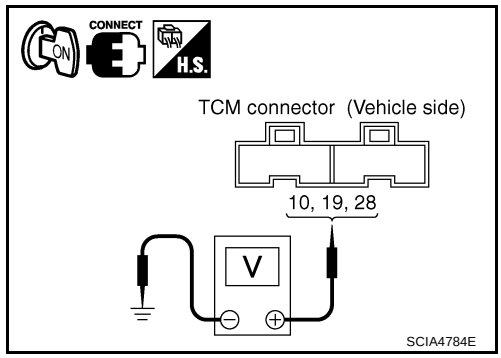

Name	Connector	Terminal	Condition	Voltage (Approx.)
Power supply	F56	10 - Ground	ON	Battery voltage
			OFF	0 V
Power supply		19 - Ground	ON	Battery voltage
			OFF	0 V
Power supply (memory back-up)	F57	28 - Ground	Always	Battery voltage

OK or NG

OK >> GO TO 5.
NG >> GO TO 4.

4. DETECT MALFUNCTIONING ITEM

Check the following.

- Harness for short or open between battery and TCM connector terminal 28
- Harness for short or open between ignition switch and TCM connector terminal 10, 19
- 15 A fuse (No.35, located in the IPDM E/R) and 10 A fuse(No.48, located in the IPDM E/R)
- Ignition switch. Refer to PG-4, "POWER SUPPLY ROUTING CIRCUIT" .

OK or NG

OK >> GO TO 5.
NG >> Repair or replace damaged parts.

5. CHECK TCM GROUND CIRCUIT

1. Turn ignition switch OFF.
2. Disconnect TCM connector.
3. Check continuity between TCM connector terminals and ground.

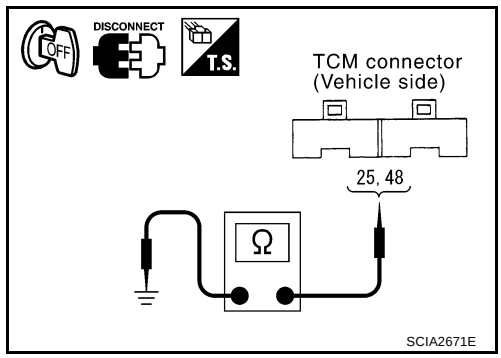

Name	Connector	Terminal	Continuity
Ground	F57	25	Yes
		48	

OK or NG

OK >> GO TO 6.
NG >> Repair open circuit or short to ground or short to power in harness or connectors.

6. CHECK DTC

Check again. Refer to CVT-147, "Diagnostic Procedure" .

OK or NG

OK >> **INSPECTION END**
NG >> GO TO 7.

7. CHECK TCM

1. Check TCM input/output signals. Refer to CVT-50, "TCM Input/Output Signal Reference Values" .
2. If NG, re-check TCM pin terminals for damage or loose connection with harness connector.

OK or NG

OK >> **INSPECTION END**
NG >> Repair or replace damaged parts.

DTC P1705 THROTTLE POSITION SENSOR

PFP:22620

Description

UCS005ID

Electric throttle control actuator consists of throttle control motor, accelerator pedal position sensor, throttle position sensor etc. The actuator sends a signal to the ECM, and ECM sends the signal to TCM with CAN communication.

CONSULT-II Reference Value

UCS005IE

Remarks: Specification data are reference values.

Item name	Condition	Display value (Approx.)
ACC PEDAL OPEN	Released accelerator pedal - Fully depressed accelerator pedal	0.0/8 - 8.0/8

On Board Diagnosis Logic

UCS005IF

- This is not an OBD-II self-diagnostic item.
- Diagnostic trouble code “P1705 TP SEN/CIRC A/T” with CONSULT-II is detected when TCM does not receive the proper accelerator pedal position signals (input by CAN communication) from ECM.

Possible Cause

UCS005IG

- ECM
- Harness or connectors
  (CAN communication line is open or shorted.)

DTC Confirmation Procedure

UCS005IH

NOTE:
If “DTC Confirmation Procedure” has been previously performed, always turn ignition switch OFF and wait at least 10 seconds before performing the next test.
After the repair, perform the following procedure to confirm the malfunction is eliminated.

WITH CONSULT-II

1. Turn ignition switch ON. (Do not start engine.)
2. Select “DATA MONITOR” mode for “TRANSMISSION” with CONSULT-II.
3. Depress accelerator pedal fully and release it, then wait for 5 seconds.
4. If DTC is detected, go to CVT-151, "Diagnostic Procedure" .

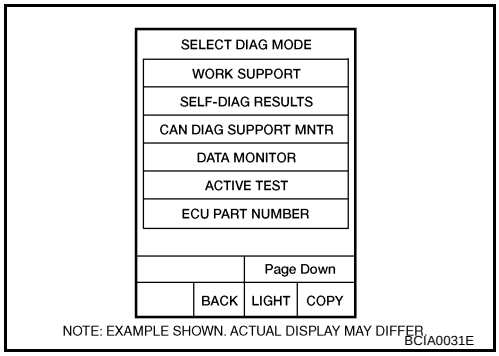

Diagnostic Procedure

UCS005II

1. CHECK CAN COMMUNICATION LINE

Perform the self-diagnosis check. Refer to CVT-57, "SELF-DIAGNOSTIC RESULT MODE" .

Is any malfunction of the “U1000 CAN COMM CIRCUIT” indicated?

YES >> Check the CAN communication line. Refer to CVT-64, "DTC U1000 CAN COMMUNICATION LINE" .

NO >> GO TO 2.

2. CHECK INPUT SIGNAL

With CONSULT-II

1. Turn ignition switch ON. (Do not start engine.)
2. Select “ECU INPUT SIGNALS” in “DATA MONITOR” mode for “TRANSMISSION” with CONSULT-II.
3. Read out the value of “ACC PEDAL OPEN”.

Item name	Condition	Display value (Approx.)
ACC PEDAL OPEN	Release accelerator pedal. ↓ Fully depressed accelerator pedal	0.0/8 ↓ 8.0/8

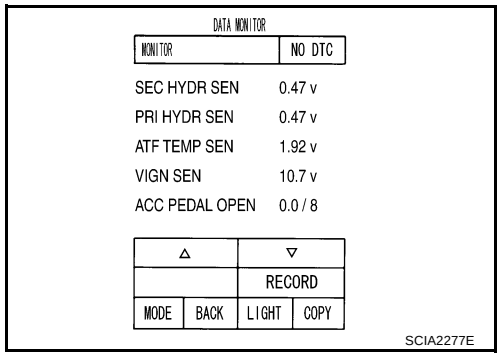

OK or NG

OK >> GO TO 4.

NG >> GO TO 3.

3. CHECK DTC WITH ECM

With CONSULT-II

1. Turn ignition switch ON. (Do not start engine.)
2. Select “SELF-DIAG RESULTS” mode for “ENGINE” with CONSULT-II. Refer to EC-120, "SELF-DIAG RESULTS MODE" .

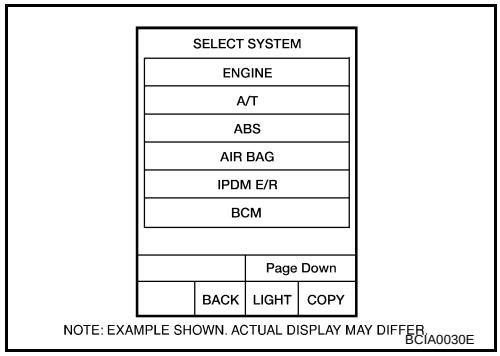

OK or NG

OK >> GO TO 4.

NG >> Check the DTC Detected Item. Go to EC-120, "SELF-DIAG RESULTS MODE" .

4. CHECK DTC

Perform “DTC Confirmation Procedure”. Refer to CVT-150, "DTC Confirmation Procedure" .

OK or NG

OK >> **INSPECTION END**

NG >> Repair or replace damaged parts.

DTC P1722 ESTM VEHICLE SPEED SIGNAL

PFP:47660

Description

UCS005IJ

The vehicle speed signal is transmitted from ABS actuator and electric unit (control unit) to TCM by CAN communication line.

CONSULT-II Reference Value

UCS005IK

Remarks: Specification data are reference values.

Item name	Condition	Display value
ESTM VSP SIG	During driving	Approximately matches the speedometer reading.
VEHICLE SPEED		

On Board Diagnosis Logic

UCS005IL

- This is not an OBD-II self-diagnostic item.
- Diagnostic trouble code “P1722 ESTM VEH SPD SIG” with CONSULT-II is detected when TCM does not receive the proper vehicle speed signal (input by CAN communication) from ABS actuator and electric unit (control unit).

Possible Cause

UCS005IM

- Harness or connectors
  (Sensor circuit is open or shorted.)
- ABS actuator and electric unit (control unit)

DTC Confirmation Procedure

UCS005IN

CAUTION:
Always drive vehicle at a safe speed.

NOTE:
If “DTC Confirmation Procedure” has been previously performed, always turn ignition switch OFF and wait at least 10 seconds before performing the next test.
After the repair, touch “ERASE” on “SELF-DIAG RESULTS” and then perform the following procedure to confirm the malfunction is eliminated.

WITH CONSULT-II

1. Turn ignition switch ON. (Do not start engine.)
2. Select “DATA MONITOR” mode for “TRANSMISSION” with CONSULT-II.
3. Start engine and maintain the following conditions for at least 5 consecutive seconds.
   ACC PEDAL OPEN: 1.0/8 or less
   VEHICLE SPEED SE: 30 km/h (17 MPH) or more
4. If DTC is detected, go to CVT-153, "Diagnostic Procedure" .

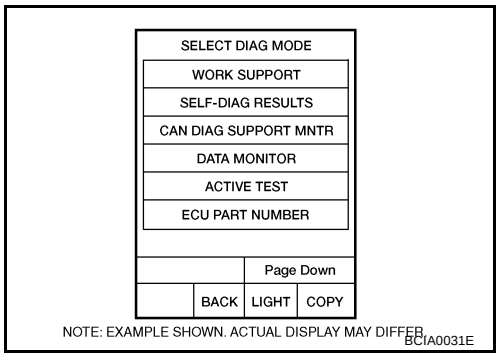

Diagnostic Procedure

UCS005IO

1. CHECK CAN COMMUNICATION LINE

Perform the self-diagnosis check. Refer to CVT-57, "SELF-DIAGNOSTIC RESULT MODE" .

Is any malfunction of the “U1000 CAN COMM CIRCUIT” indicated?

YES >> Check CAN communication line. Refer to CVT-64, "DTC U1000 CAN COMMUNICATION LINE" .
NO >> GO TO 2.

2. CHECK ABS ACTUATOR AND ELECTRIC UNIT (CONTROL UNIT)

Perform ABS actuator and electric unit (control unit) self-diagnosis check. Refer to BRC-23, "SELF-DIAGNOSIS" (TCS/ABS models) or BRC-70, "SELF-DIAGNOSIS" (VDC/TCS/ABS models).

OK or NG

OK >> GO TO 3.
NG >> Repair or replace damaged parts.

3. CHECK INPUT SIGNALS

With CONSULT-II

1. Start engine.
2. Select “SELECTION FROM MENU” in “DATA MONITOR” mode for “TRANSMISSION” with CONSULT-II.
3. Drive vehicle and read out the value of “VEHICLE SPEED” and “ESTM VSP SIG”.

Item name	Condition	Display value
ESTM VSP SIG	During driving	Approximately matches the speedometer reading.
VEHICLE SPEED		

4. Check if there is a great difference between the two values.

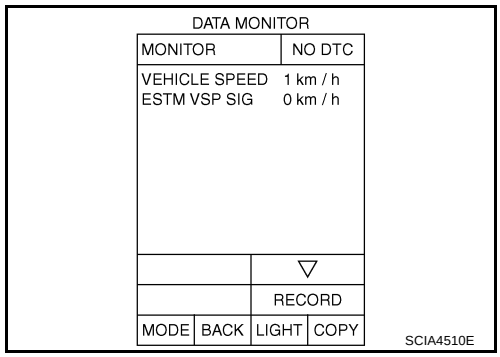

OK or NG

OK >> GO TO 5.
NG >> GO TO 4.

4. CHECK TCM

Check TCM input/output signals. Refer to CVT-50, "TCM Input/Output Signal Reference Values" .

OK or NG

OK >> GO TO 5.
NG >> Repair or replace damaged parts.

5. CHECK DTC

Perform “DTC Confirmation Procedure”. Refer to CVT-152, "DTC Confirmation Procedure" .

OK or NG

OK >> **INSPECTION END**
NG >> GO TO 2.

DTC P1723 CVT SPEED SENSOR FUNCTION

PFP:31907

Description

UCS005IP

- The input speed sensor (primary speed sensor) is included in the control valve assembly.
- The vehicle speed sensor CVT [output speed sensor (secondary speed sensor)] detects the revolution of the parking gear and generates a pulse signal. The pulse signal is sent to the TCM, which converts it into vehicle speed.
- The input speed sensor (primary speed sensor) detects the primary pulley revolution speed and sends a signal to the TCM.

On Board Diagnosis Logic

UCS005IQ

- This is not an OBD-II self-diagnostic item.
- Diagnostic trouble code “P1723 CVT SPD SEN/FNCTN” with CONSULT-II is detected when there is a great difference between the vehicle speed signal and the secondary speed sensor signal.

CAUTION:
One of the “P0720 VEH SPD SEN/CIR AT”, the “P0715 INPUT SPD SEN/CIRC” or the “P0725 ENGINE SPEED SIG“ is displayed with the DTC at the same time.

Possible Cause

UCS005IR

- Harness or connectors
  (Sensor circuit is open or shorted.)
- Output speed sensor (Secondary speed sensor)
- Input speed sensor (Primary speed sensor)
- Engine speed signal system

DTC Confirmation Procedure

UCS005IS

CAUTION:
Always drive vehicle at a safe speed.

NOTE:
If “DTC Confirmation Procedure” has been previously performed, always turn ignition switch OFF and wait at least 10 seconds before performing the next test.
After the repair, touch “ERASE” on “SELF-DIAG RESULTS” and then perform the following procedure to confirm the malfunction is eliminated.

WITH CONSULT-II

1. Turn ignition switch ON and select “DATA MONITOR” mode for “TRANSMISSION” with CONSULT-II.
2. Start engine and maintain the following conditions for at least 5 consecutive seconds.
   VEHICLE SPEED SE: 10 km/h (6 MPH) or more
   ACC PEDAL OPEN: More than 1.0/8
   RANGE: “D” position
   ENG SPEED: 450 rpm or more
   Driving location: Driving the vehicle uphill (increased engine load) will help maintain the driving conditions required for this test.
3. If DTC is detected, go to CVT-155, "Diagnostic Procedure" .

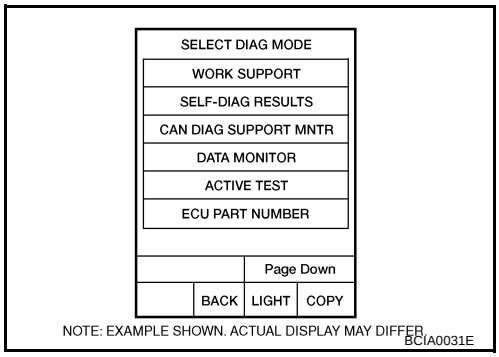

Diagnostic Procedure

UCS005IT

1. CHECK STEP MOTOR FUNCTION

Perform the self-diagnosis check. Refer to CVT-57, "SELF-DIAGNOSTIC RESULT MODE" .

Is a malfunction in the step motor function indicated in the results?

YES >> Repair or replace damaged parts. (Check the step motor function. Refer to CVT-168, "DTC P1778 STEP MOTOR - FUNCTION" .)

NO >> GO TO 2.

2. CHECK OUTPUT SPEED SENSOR (SECONDARY SPEED SENSOR SYSTEM) AND INPUT SPEED SENSOR (PRIMARY SPEED SENSOR) SYSTEM

Check output speed sensor (secondary speed sensor) system and input speed sensor (primary speed sensor) system. Refer to CVT-90, "DTC P0720 VEHICLE SPEED SENSOR CVT (SECONDARY SPEED SENSOR)" , CVT-85, "DTC P0715 INPUT SPEED SENSOR CIRCUIT (PRI SPEED SENSOR)" .

OK or NG

OK >> GO TO 3.

NG >> Repair or replace damaged parts.

3. CHECK ENGINE SPEED SIGNAL SYSTEM

Check engine speed signal system. Refer to CVT-96, "DTC P0725 ENGINE SPEED SIGNAL" .

OK or NG

OK >> GO TO 4.

NG >> Repair or replace damaged parts. Refer to EC-636, "IGNITION SIGNAL" .

4. DETECT MALFUNCTIONING ITEM

Check the following:

- Power supply and ground circuit for TCM. Refer to CVT-145, "DTC P1701 TRANSMISSION CONTROL MODULE (POWER SUPPLY)" .
- The TCM pin terminals for damage or loose connection with harness connector.

OK or NG

OK >> GO TO 5.

NG >> Repair or replace damaged parts.

5. CHECK DTC

Perform “DTC Confirmation Procedure”. Refer to CVT-154, "DTC Confirmation Procedure" .

OK or NG

OK >> **INSPECTION END**

NG >> Replace TCM or transaxle assembly. Refer to CVT-8, "Precautions for TCM and CVT Assembly Replacement" , CVT-199, "Removal and Installation" .

DTC P1726 ELECTRIC THROTTLE CONTROL SYSTEM

PFP:23710

Description

UCS005IU

Electric throttle control actuator consists of throttle control motor, accelerator pedal position sensor, throttle position sensor etc. The actuator sends a signal to the ECM, and ECM sends the signal to TCM with CAN communication.

On Board Diagnosis Logic

UCS005IV

- This is not an OBD-II self-diagnostic item.
- Diagnostic trouble code “P1726 ELEC TH CONTROL” with CONSULT-II is detected when the electronically controlled throttle for ECM is malfunctioning.

Possible Cause

UCS005IW

Harness or connectors
(Sensor circuit is open or shorted.)

DTC Confirmation Procedure

UCS005IX

NOTE:
If “DTC Confirmation Procedure” has been previously performed, always turn ignition switch OFF and wait at least 10 seconds before performing the next test.
After the repair, touch “ERASE” on “SELF-DIAG RESULTS” and then perform the following procedure to confirm the malfunction is eliminated.

WITH CONSULT-II

1. Turn ignition switch ON. (Do not start engine.)
2. Select “DATA MONITOR” mode for “TRANSMISSION” with CONSULT-II.
3. Start engine and let it idle for 5 second.
4. If DTC is detected, go to CVT-157, "Diagnostic Procedure" .

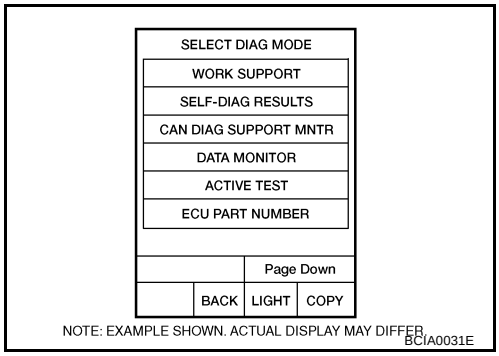

Diagnostic Procedure

UCS005IY

1. CHECK DTC WITH ECM

With CONSULT-II

1. Turn ignition switch ON. (Do not start engine.)
2. Select “SELF-DIAG RESULTS” mode for “ENGINE” with CONSULT-II. Refer to EC-120, "SELF-DIAG RESULTS MODE" .

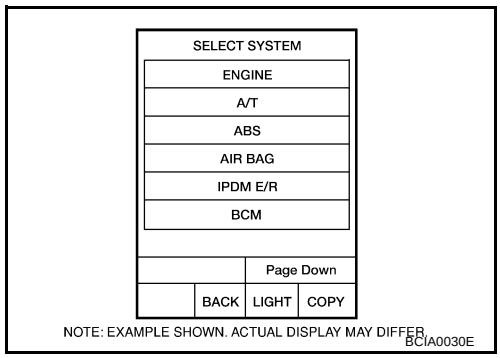

OK or NG

OK >> GO TO 2.
NG >> Check the DTC Detected Item. Refer to EC-120, "SELF-DIAG RESULTS MODE" .
- If CAN communication line is detected, go to CVT-64, "DTC U1000 CAN COMMUNICATION LINE" .

2. CHECK DTC

Perform “DTC Confirmation Procedure”. Refer to CVT-156, "DTC Confirmation Procedure" .

OK or NG

OK >> **INSPECTION END**
NG >> GO TO 3.

3. DETECT MALFUNCTIONING ITEM

Check the following:

- The TCM pin terminals for damage or loose connection with harness connector.

OK or NG

OK >> Replace TCM. Refer to CVT-8, "Precautions for TCM and CVT Assembly Replacement" .
NG >> Repair or replace damaged parts.

DTC P1740 LOCK-UP SELECT SOLENOID VALVE CIRCUIT

PFP:31941

Description

UCS005IZ

- The lock-up select solenoid valve is included in the control valve assembly.
- The lock-up select solenoid valve controls lock-up clutch pressure or forward clutch pressure (reverse brake pressure).
- When controlling lock-up clutch, the valve is turned OFF. When controlling forward clutch, it is turned ON.

CONSULT-II Reference Value

UCS005J0

Item name	Condition	Display value
LUSEL SOL OUT	Selector lever in “P” and “N” positions	ON
	Wait at least for 5 seconds with the selector lever in “R” and “D” positions	OFF

On Board Diagnosis Logic

UCS005J1

- This is an OBD-II self-diagnostic item.
- Diagnostic trouble code “P1740 LU-SLCT SOL/CIRC” with CONSULT-II is detected under the following conditions.
  - When TCM compares target value with monitor value and detects an irregularity.

Possible Cause

UCS005J2

- Lock-up select solenoid valve
- Harness or connectors
  (Solenoid circuit is open or shorted.)

DTC Confirmation Procedure

UCS005J3

CAUTION:
Always drive vehicle at a safe speed.

NOTE:
If “DTC Confirmation Procedure” has been previously performed, always turn ignition switch OFF and wait at least 10 seconds before performing the next test.
After the repair, touch “ERASE” on “SELF-DIAG RESULTS” and then perform the following procedure to confirm the malfunction is eliminated.

WITH CONSULT-II

1. Turn ignition switch ON. (Do not start engine.)
2. Select “DATA MONITOR” mode for “TRANSMISSION” with CONSULT-II.
3. Start engine and maintain the following conditions for at least 5 consecutive seconds.
   RANGE: “D” position and “N” position
   (At each time, wait for 5 seconds.)
4. If DTC is detected, go to CVT-160, "Diagnostic Procedure" .

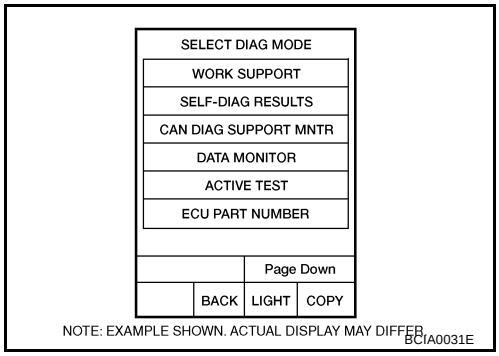

WITH GST

Follow the procedure “WITH CONSULT-II”.

Wiring Diagram — CVT — L/USSV

UCS005J4

CVT-L/USSV-01

: DETECTABLE LINE FOR DTC
: NON-DETECTABLE LINE FOR DTC

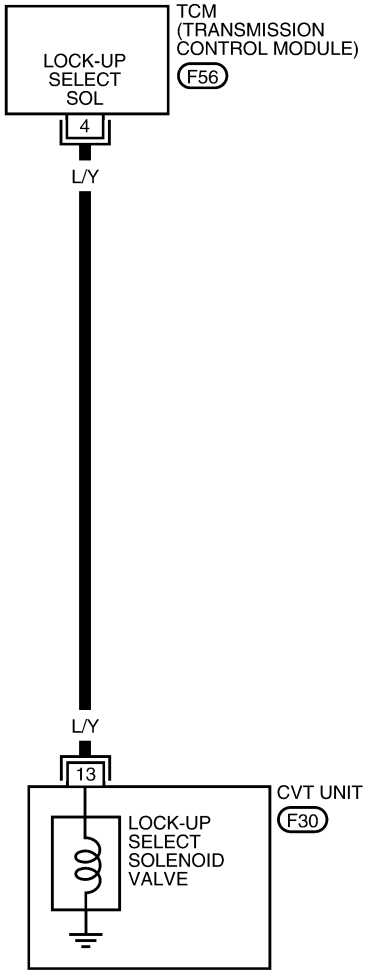

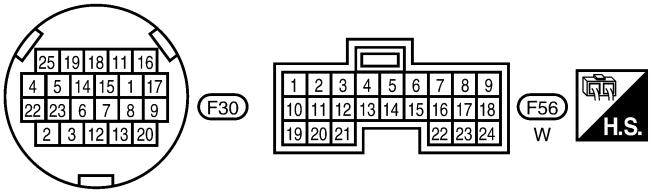

BCWA0633E

TCM terminal data are reference values, measured between each terminal and ground.

Terminal	Wire color	Item	Condition		Data (Approx.)
4	L/Y	Lock-up select solenoid valve		Selector lever in “P” and “N” positions	Battery voltage
				Wait at least for 5 seconds with the selector lever in “R” and “D” positions	0 V

Diagnostic Procedure

UCS005J5

1. CHECK INPUT SIGNAL

With CONSULT-II

1. Turn ignition switch ON.
2. Select “SELECTION FROM MENU” in “DATA MONITOR” mode for “TRANSMISSION” with CONSULT-II.
3. Read out the value of “LUSEL SOL OUT”.

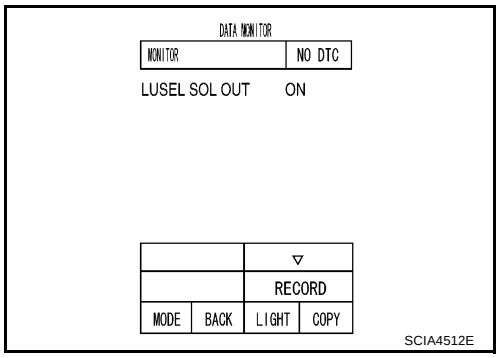

Item name	Condition	Display value
LUSEL SOL OUT	Selector lever in “P” and “N” positions	ON
	Wait at least for 5 seconds with the selector lever in “R” and “D” positions	OFF

Without CONSULT-II

1. Turn ignition switch ON.
2. Check voltage between TCM connector terminal and ground.

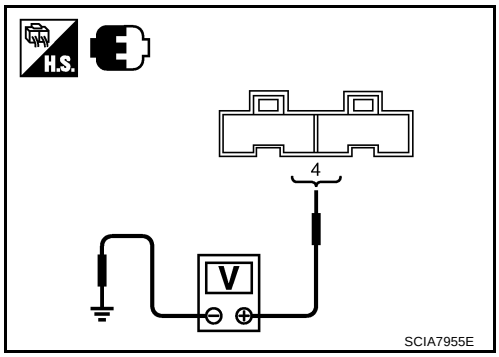

Name	Connector	Terminal	Condition	Voltage (Approx.)
Lock-up select solenoid valve	F56	4 - Ground	Selector lever in “P” and “N” positions	Battery voltage
			Wait at least for 5 seconds with the selector lever in “R” and “D” positions	0 V

3. Turn ignition switch OFF.
4. Disconnect the TCM connector.
5. Check if there is continuity between connector terminal and ground.

OK or NG

OK >> GO TO 5.
NG >> GO TO 2.

2. CHECK LOCK-UP SELECT SOLENOID VALVE CIRCUIT

1. Turn ignition switch OFF.
2. Disconnect TCM connector.
3. Check resistance between TCM connector terminal and ground.

Solenoid valve	Connector	Terminal	Resistance (Approx.)
Lock-up select solenoid valve	F56	4 - Ground	6 - 19 Ω

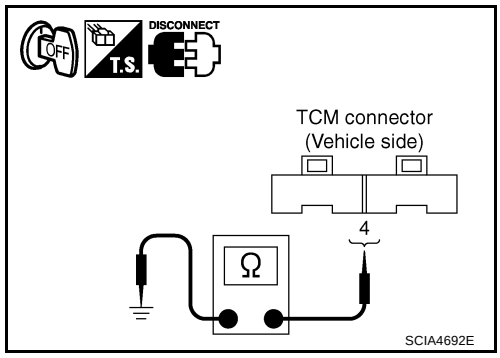

OK or NG

OK >> GO TO 5.
NG >> GO TO 3.

3. CHECK VALVE RESISTANCE

1. Turn ignition switch OFF.
2. Disconnect CVT unit harness connector.
3. Check resistance between CVT unit harness connector terminal and ground.

Solenoid valve	Connector	Terminal	Resistance (Approx.)
Lock-up select solenoid valve	F30	13 - Ground	6 - 19 Ω

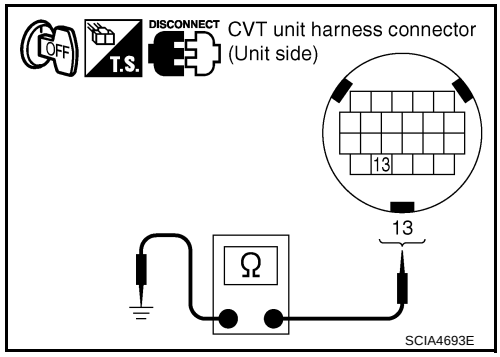

OK or NG

OK >> GO TO 4.
NG >> Replace the transaxle assembly. Refer to CVT-199, "Removal and Installation" .

4. CHECK HARNESS BETWEEN TCM AND LOCK-UP SELECT SOLENOID VALVE

1. Turn ignition switch OFF.
2. Disconnect TCM connector.
3. Check continuity between TCM connector terminal and CVT unit harness connector terminal.

Item	Connector	Terminal	Continuity
TCM	F56	4	Yes
CVT unit harness connector	F30	13	

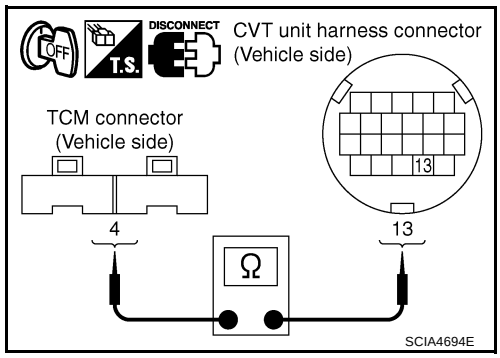

4. If OK, check harness for short to ground and short to power.
5. Reinstall any part removed.

OK or NG

OK >> GO TO 5.
NG >> Repair open circuit or short to ground or short to power in harness or connectors.

5. CHECK DTC

Perform “DTC Confirmation Procedure”. Refer to CVT-158, "DTC Confirmation Procedure" .

OK or NG

OK >> **INSPECTION END**
NG >> GO TO 6.

6. CHECK TCM

1. Check TCM input/output signals. Refer to CVT-50, "TCM Input/Output Signal Reference Values" .
2. If NG, re-check TCM pin terminals for damage or loose connection with harness connector.

OK or NG

OK >> **INSPECTION END**
NG >> 1. Repair or replace damaged parts.
2. Replace TCM. Refer to CVT-8, "Precautions for TCM and CVT Assembly Replacement" .

Component Inspection

UCS005J6

LOCK-UP SELECT SOLENOID VALVE

1. Turn ignition switch OFF.
2. Disconnect CVT unit harness connector.
3. Check resistance between CVT unit harness connector terminal and ground.

Solenoid valve	Connector	Terminal	Resistance (Approx.)
Lock-up select solenoid valve	F30	13 - Ground	6 - 19 Ω

4. If NG, replace the transaxle assembly. Refer to CVT-199, "Removal and Installation" .

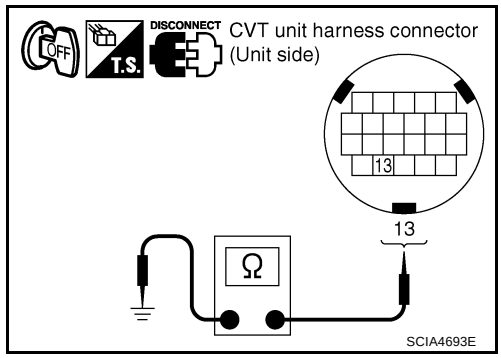

DTC P1745 LINE PRESSURE CONTROL

PFP:31036

Description

UCS005J7

The pressure control solenoid valve A (line pressure solenoid valve) regulates the oil pump discharge pressure to suit the driving condition in response to a signal sent from the TCM.

On Board Diagnosis Logic

UCS005J8

- This is not an OBD-II self-diagnostic item.
- Diagnostic trouble code “P1745 L/PRESS CONTROL” with CONSULT-II is detected when TCM detects the unexpected line pressure.

Possible Cause

UCS005J9

TCM

DTC Confirmation Procedure

UCS005JA

NOTE:
If “DTC Confirmation Procedure” has been previously performed, always turn ignition switch OFF and wait at least 10 seconds before performing the next test.
After the repair, touch “ERASE” on “SELF-DIAG RESULTS” and then perform the following procedure to confirm the malfunction is eliminated.

WITH CONSULT-II

1. Turn ignition switch ON and select “DATA MONITOR” mode for “TRANSMISSION” with CONSULT-II.
2. Make sure that output voltage of CVT fluid temperature sensor is within the range below.
   ATF TEMP SEN: 1.0 - 2.0 V
   If out of range, drive the vehicle to decrease the voltage (warm up the fluid) or stop engine to increase the voltage (cool down the fluid)
3. If DTC is detected, go to CVT-163, "Diagnostic Procedure" .

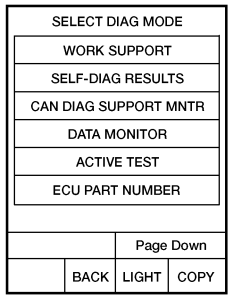

NOTE: EXAMPLE SHOWN. ACTUAL DISPLAY MAY DIFFER.
BCIA0031E

Diagnostic Procedure

UCS005JB

1. CHECK DTC

1. Turn ignition switch ON. (Do not start engine.)
2. Select “SELF-DIAG RESULTS” mode for “TRANSMISSION” with CONSULT-II.
3. Erase self-diagnostic results. Refer to CVT-60, "How to Erase Self-diagnostic Results" .
4. Turn ignition switch OFF, and wait for 5 seconds or more.
5. Start engine.
6. Confirm self-diagnostic results again. Refer to CVT-57, "SELF-DIAGNOSTIC RESULT MODE" .

Is the “P1745 L/PRESS CONTROL” displayed?

YES >> Replace TCM. Refer to CVT-8, "Precautions for TCM and CVT Assembly Replacement" .
NO >> **INSPECTION END**

DTC P1777 STEP MOTOR - CIRCUIT

PFP:31020

Description

UCS005JC

- The step motor is included in the control valve assembly.
- The step motor changes the step with turning 4 coils ON/OFF according to the signal from TCM. As a result, the flow of line pressure to primary pulley is changed and pulley ratio is controlled

CONSULT-II Reference Value

UCS005JD

Remarks: Specification data are reference values.

Item name	Condition	Display value (Approx.)
STM STEP	During driving	-20 step – 190 step
SMCOIL A		Changes ON⇔OFF.
SMCOIL B		
SMCOIL C		
SMCOIL D		

On Board Diagnosis Logic

UCS005JE

- This is an OBD-II self-diagnostic item.
- Diagnostic trouble code “P1777 STEP MOTR CIRC” with CONSULT-II is detected under the following conditions.
  - When operating step motor ON and OFF, there is no proper change in the voltage of TCM terminal which corresponds to it.

Possible Cause

UCS005JF

- Step motor
- Harness or connectors
  (Step motor circuit is open or shorted.)

DTC Confirmation Procedure

UCS005JG

CAUTION:
Always drive vehicle at a safe speed.

NOTE:
If “DTC Confirmation Procedure” has been previously performed, always turn ignition switch OFF and wait at least 10 seconds before performing the next test.
After the repair, touch “ERASE” on “SELF-DIAG RESULTS” and then perform the following procedure to confirm the malfunction is eliminated.

WITH CONSULT-II

1. Turn ignition switch ON and select “DATA MONITOR” mode for “TRANSMISSION” with CONSULT-II.
2. Drive vehicle for at least 5 consecutive seconds.
3. If DTC is detected, go to CVT-166, "Diagnostic Procedure" .

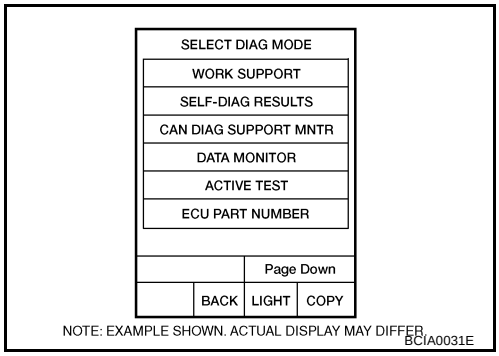

WITH GST

Follow the procedure “WITH CONSULT-II”.

Wiring Diagram — CVT — STM

UCS005JH

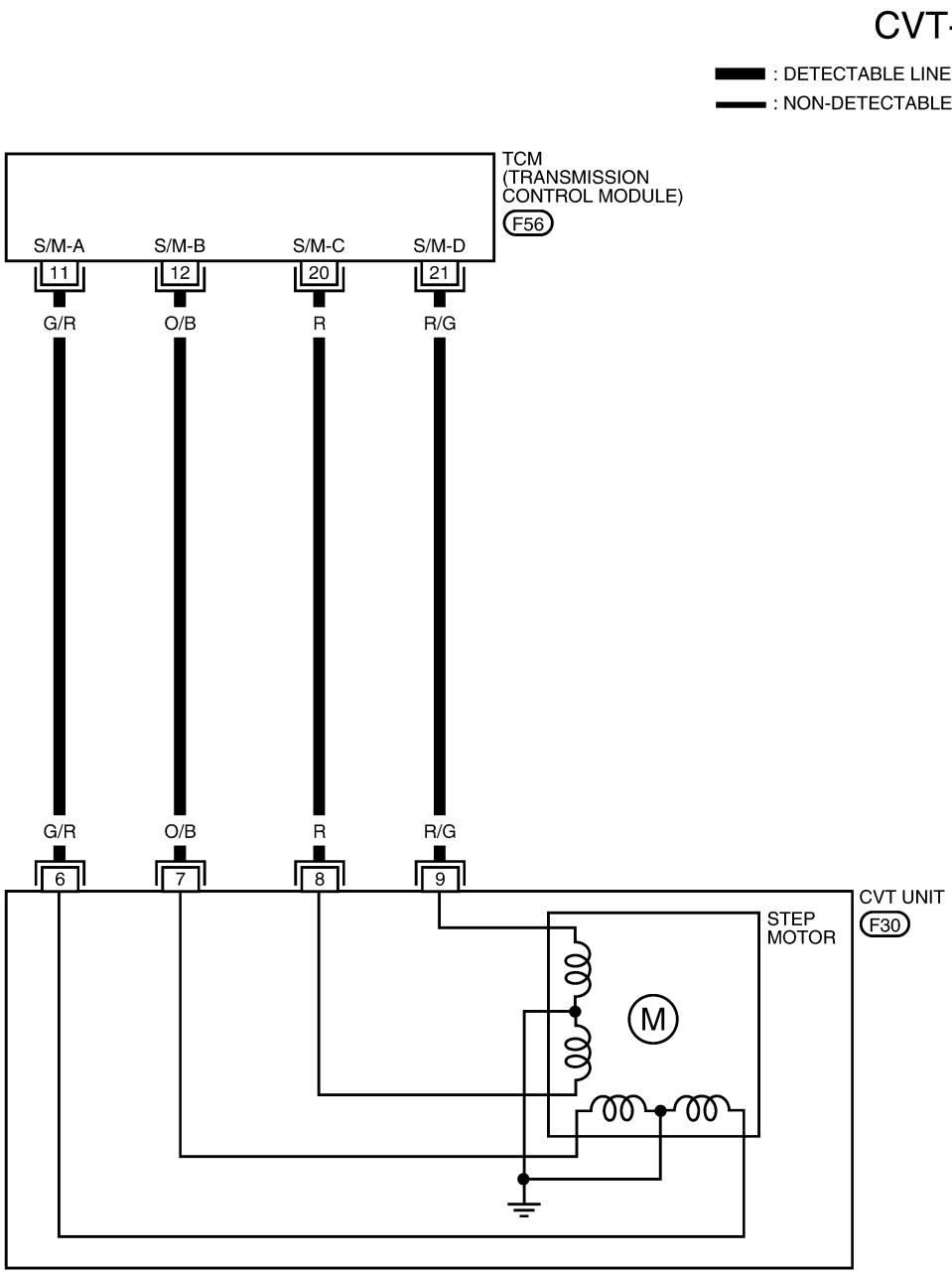

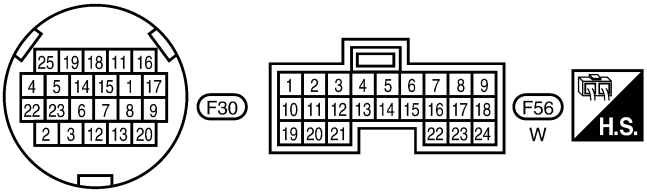

BCWA0634E

TCM terminals data are reference values, measured between each terminal and ground.

Terminal	Wire color	Item	Condition	Data (Approx.)
11	G/R	Step motor A	Within 2 seconds after ignition switch ON, the time measurement by using the pulse width measurement function (Hi level) of CONSULT-II.*1 **CAUTION:** **Connect the diagnosis data link cable to the vehicle diagnosis connector.** *1: A circuit tester cannot be used to test this item.	30.0 msec
12	O/B	Step motor B		10.0 msec
20	R	Step motor C		30.0 msec
21	R/G	Step motor D		10.0 msec

Diagnostic Procedure

UCS005JI

1. CHECK INPUT SIGNALS

With CONSULT-II

1. Start engine.
2. Select “SELECTION FROM MENU” in “DATA MONITOR” mode for “TRANSMISSION” with CONSULT-II.
3. Start vehicle and read out the value of “STM STEP”, “SMCOIL A”, “SMCOIL B”, “SMCOIL C”, and “SMCOIL D”.

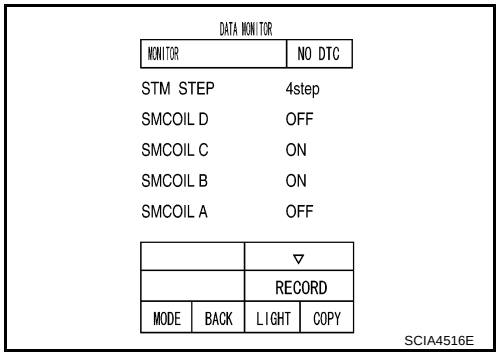

Item name	Condition	Display value (Approx.)
STM STEP	During driving	-20 step – 190 step
SMCOIL A		Changes ON⇔OFF.
SMCOIL B		
SMCOIL C		
SMCOIL D		

OK or NG

OK >> GO TO 4.
NG >> GO TO 2.

2. CHECK HARNESS BETWEEN TCM AND STEP MOTOR

1. Turn ignition switch OFF.
2. Disconnect CVT unit connector and TCM connector.
3. Check continuity between TCM connector terminals and CVT unit harness connector terminals.

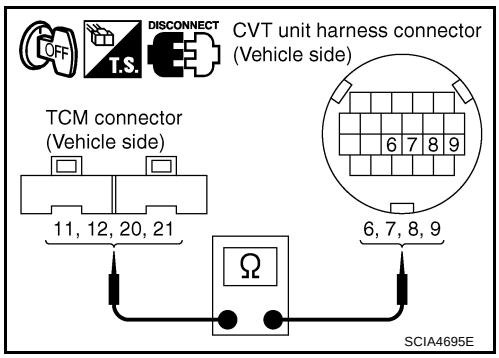

Item	Connector	Terminal	Continuity
TCM	F56	11	Yes
CVT unit harness connector	F30	6	
TCM	F56	12	Yes
CVT unit harness connector	F30	7	
TCM	F56	20	Yes
CVT unit harness connector	F30	8	
TCM	F56	21	Yes
CVT unit harness connector	F30	9	

4. If OK, check harness for short to ground and short to power.
5. If OK, check continuity between body ground and CVT assembly.
6. Reinstall any part removed.

OK or NG

OK >> GO TO 3.
NG >> Repair open circuit or short to ground or short to power in harness or connectors.

3. CHECK STEP MOTOR

Check step motor. Refer to CVT-167, "Component Inspection" .

OK or NG

OK >> GO TO 4.
NG >> Repair or replace damaged parts.

4. CHECK DTC

Perform “DTC Confirmation Procedure”. Refer to CVT-164, "DTC Confirmation Procedure" .

OK or NG

OK >> **INSPECTION END**
NG >> GO TO 5.

5. CHECK TCM

1. Check TCM input/output signals. Refer to CVT-50, "TCM Input/Output Signal Reference Values" .
2. If NG, re-check TCM pin terminals for damage or loose connection with harness connector.

OK or NG

OK >> **INSPECTION END**
NG >> Repair or replace damaged parts.

Component Inspection

UCS005JJ

STEP MOTOR

1. Turn ignition switch OFF.
2. Disconnect CVT unit harness connector.
3. Check resistance between CVT unit harness connector terminals and ground.

Name	Connector	Terminal	Resistance (Approx.)
Step motor	F30	6 - 7	30 Ω
		8 - 9	
		6 - Ground	15 Ω
		7 - Ground	
		8 - Ground	
		9 - Ground	

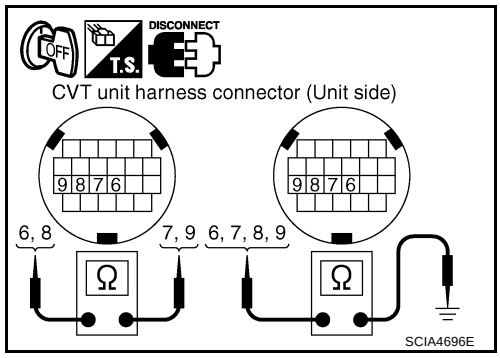

4. If NG, replace the transaxle assembly. Refer to CVT-199, "Removal and Installation" .

DTC P1778 STEP MOTOR - FUNCTION

PFP:31947

Description

UCS005JK

- The step motor is included in the control valve assembly.
- The step motor's 4 aspects of ON/OFF change according to the signal from TCM. As a result, the flow of line pressure to primary pulley is changed and pulley ratio is controlled.
- This diagnosis item is detected when electrical system is OK, but mechanical system is NG.
- This diagnosis item is detected when the state of the changing the speed mechanism in unit does not operate normally.

CONSULT-II Reference Value

UCS005JL

Remarks: Specification data are reference values.

Item name	Condition	Display value (Approx.)
STM STEP	During driving	-20 step – 190 step
GEAR RATIO		2.37 - 0.43

On Board Diagnosis Logic

UCS005JM

- This is an OBD-II self-diagnostic item.
- Diagnostic trouble code “P1778 STEP MOTR/FNCTN” with CONSULT-II is detected under the following conditions.
  - When not changing the pulley ratio according to the instruction of TCM.

Possible Cause

UCS005JN

Step motor

DTC Confirmation Procedure

UCS005JO

CAUTION:

- **Always drive vehicle at a safe speed.**
- **Before starting “DTC Confirmation Procedure”, confirm “Hi” or “Mid” or “Low” fixation by “PRI SPEED” and “VEHICLE SPEED” on “DATA MONITOR MODE”.**
- **If hi-geared fixation occurred, go to CVT-169, "Diagnostic Procedure" .**

NOTE:

If “DTC Confirmation Procedure” has been previously performed, always turn ignition switch OFF and wait at least 10 seconds before performing the next test.

After the repair, touch “ERASE” on “SELF-DIAG RESULTS” and then perform the following procedure to confirm the malfunction is eliminated.

WITH CONSULT-II

1. Turn ignition switch ON and select “DATA MONITOR” mode for “TRANSMISSION” with CONSULT-II.
2. Make sure that output voltage of CVT fluid temperature sensor is within the range below.
   ATF TEMP SEN: 1.0 - 2.0 V
   If out of range, drive the vehicle to decrease the voltage (warm up the fluid) or stop engine to increase the voltage (cool down the fluid)
3. Select “DATA MONITOR” mode for “TRANSMISSION” with CONSULT-II.
4. Start engine and maintain the following conditions for at least 30 consecutive seconds.
   TEST START FROM 0 km/h (0 MPH)
   CONSTANT ACCELERATION: Keep 30 sec or more
   VEHICLE SPEED: 10 km/h (6 MPH) or more
   ACC PEDAL OPEN: More than 1.0/8
   RANGE: “D” position
   ENG SPEED: 450 rpm or more
5. If DTC is detected, go to CVT-169, "Diagnostic Procedure" .

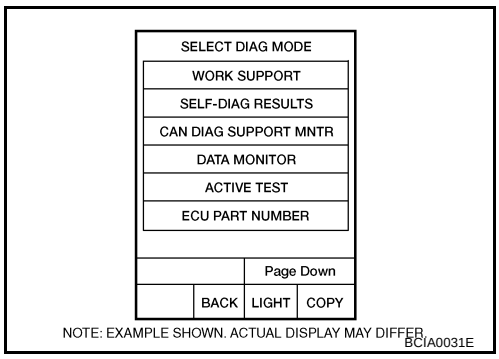

WITH GST

Follow the procedure “WITH CONSULT-II”.

Diagnostic Procedure

UCS005JP

1. CHECK STEP MOTOR

With CONSULT-II

It is monitoring whether “GEAR RATIO: 2.37 - 0.43” changes similarly to “STM STEP: -20 – 190” by DATA MONITOR mode. Refer to CVT-60, "DATA MONITOR MODE" .

Without CONSULT-II

Inspect the engine speed (rise and descend), vehicle speed, throttle position, and check shift change. Refer to CVT-204, "Vehicle Speed When Shifting Gears" .

OK or NG

OK >> **INSPECTION END**

NG >> Replace the transaxle assembly. Refer to CVT-199, "Removal and Installation" .

SHIFT POSITION INDICATOR CIRCUIT

PFP:24810

Description

UCS006L0

TCM sends the switch signals to unified meter and A/C amp via CAN communication line. Then manual mode switch position is indicated on the shitf position indicator.

CONSULT-II Reference Value

UCS006L1

Item name	Condition	Display value
M GEAR POS	During driving	1, 2, 3, 4, 5, 6

Diagnostic Procedure

UCS006L2

1. CHECK INPUT SIGNALS

With CONSULT-II

1. Start engine.
2. Select “MAIN SIGNALS” in “DATA MONITOR” mode for “TRANSMISSION” with CONSULT-II and read out the value of “M GEAR POS”.
3. Drive vehicle in the manual mode, and confirm that the actual gear position and the meter's indication of the position mutually coincide when the select lever is shifted to the “+ (up)” or “- (down)” side (1st ⇔ 6th gear).

OK or NG

OK >> **INSPECTION END**
NG >> Check the following.

CVT INDICATOR SYMPTOM CHART

Items	Presumed location of trouble
The actual gear position does not change, or shifting into the manual mode is not possible (no gear shifting in the manual mode possible). The shift position indicator is not indicated.	● Manual mode switch Refer to CVT-124, "DTC P0826 MANUAL MODE SWITCH CIRCUIT" . ● CVT main system (Fail-safe function actuated) Refer to CVT-57, "SELF-DIAGNOSTIC RESULT MODE" .
The actual gear position changes, but the shift position indicator is not indicated.	Perform the self-diagnosis function. Refer to CVT-57, "SELF-DIAGNOSTIC RESULT MODE" .
The actual gear position and the indication on the shift position indicator do not coincide.	Perform the self-diagnosis function. Refer to CVT-57, "SELF-DIAGNOSTIC RESULT MODE" .
Only a specific position or positions is/are not indicated on the shift position indicator.	Check the meter control unit. Refer to DI-5, "COMBINATION METERS" .

TROUBLE DIAGNOSIS FOR SYMPTOMS

PFP:00007

Wiring Diagram — CVT — NONDTC

UCS005JY

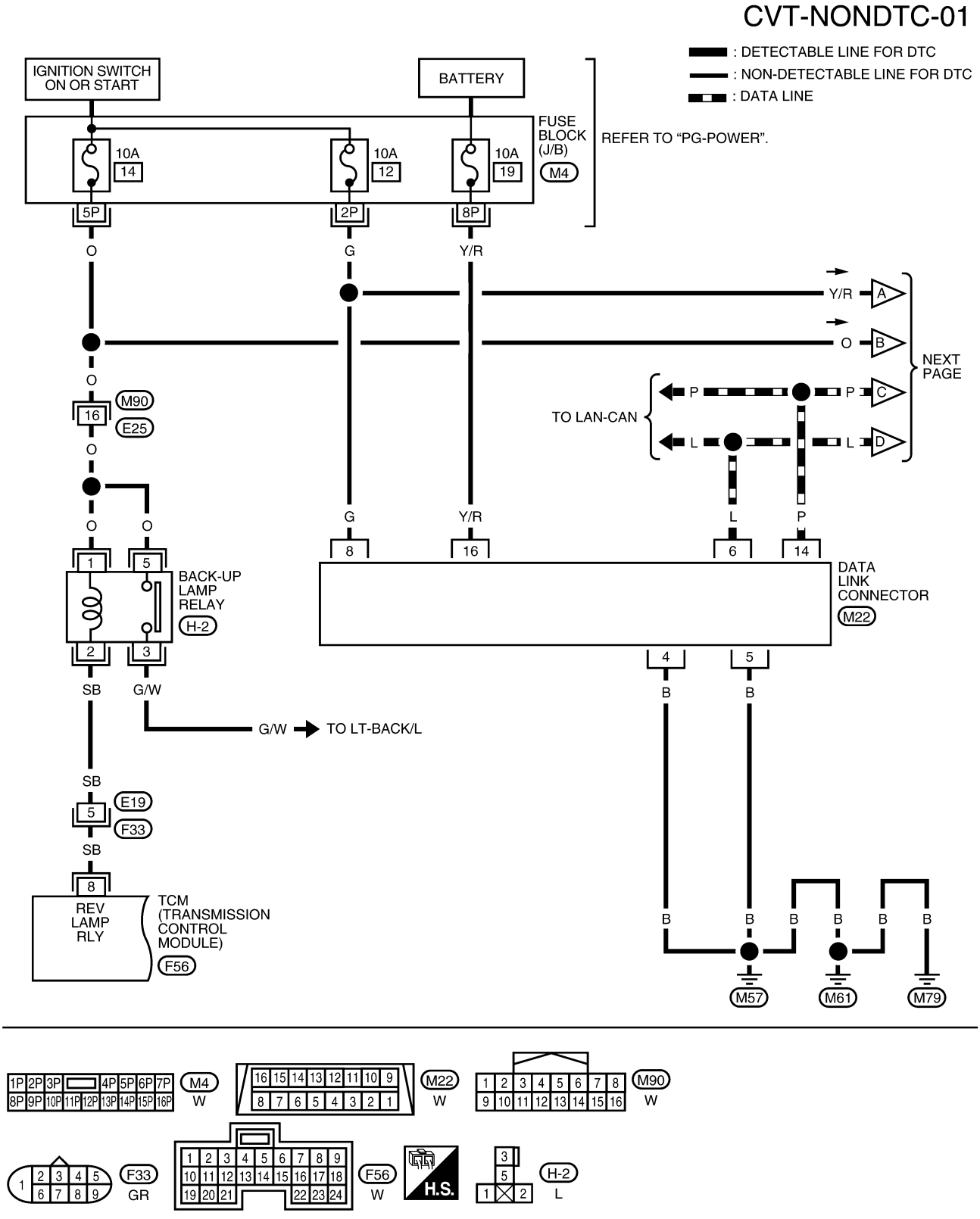

BCWA0635E

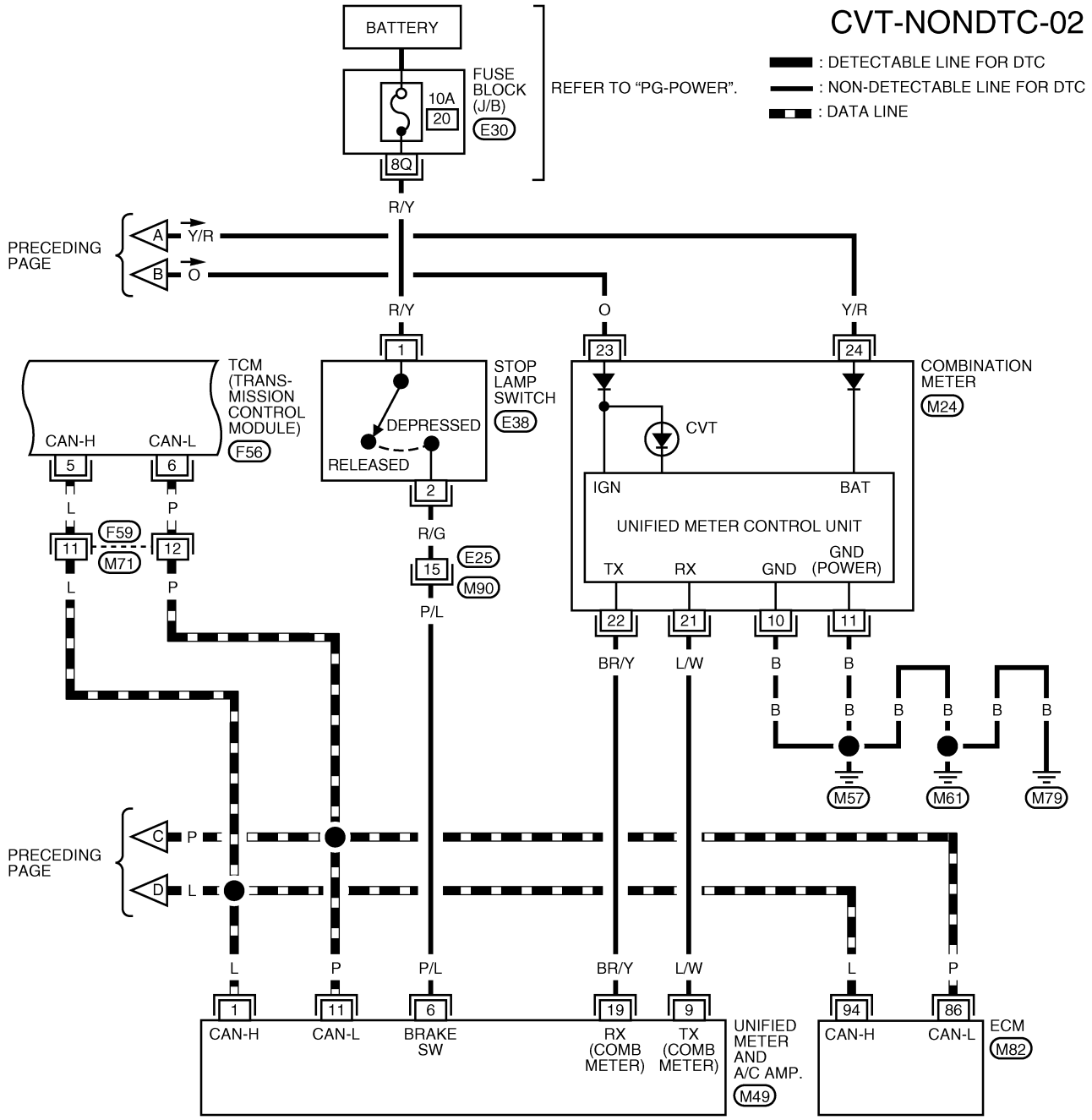
CVT-NONDTC-02
: DETECTABLE LINE FOR DTC
: NON-DETECTABLE LINE FOR DTC
: DATA LINE
BATTERY
FUSE BLOCK (J/B)
E30
10A
20
8Q
REFER TO "PG-POWER".
R/Y
PRECEDING PAGE
A
B
Y/R
O
TCM (TRANS-MISSION CONTROL MODULE)
F56
CAN-H
CAN-L
5
6
STOP LAMP SWITCH
E38
DEPRESSED
RELEASED
1
2
R/G
E25
15
M90
P/L
COMBINATION METER
M24
23
24
CVT
IGN
BAT
UNIFIED METER CONTROL UNIT
TX
RX
GND
GND (POWER)
22
21
10
11
BR/Y
L/W
B
F59
M71
12
M57
M61
M79
C
D
P
L
1
11
6
19
9
94
86
CAN-H
CAN-L
BRAKE SW
RX (COMB METER)
TX (COMB METER)
UNIFIED METER AND A/C AMP.
M49
ECM
M82
M24
W
M49
GR
H.S.
M82
B
M90
W
E30
W
E38
B
F56
W
F59
W
BCWA0636E

CVT-NONDTC-03

: DETECTABLE LINE FOR DTC
: NON-DETECTABLE LINE FOR DTC

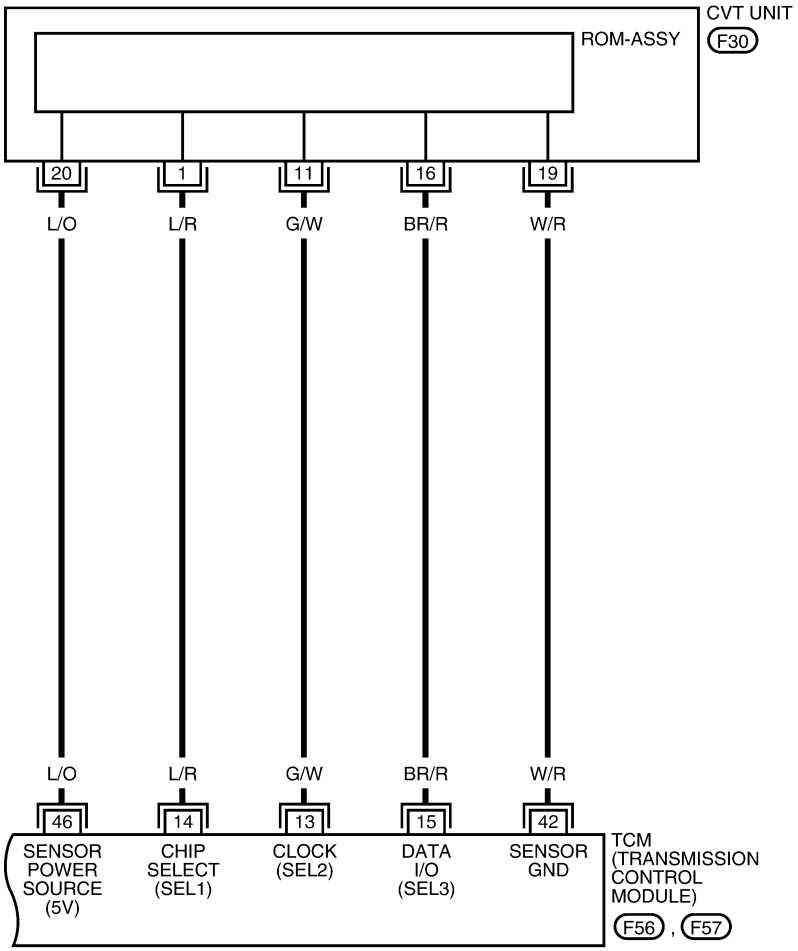

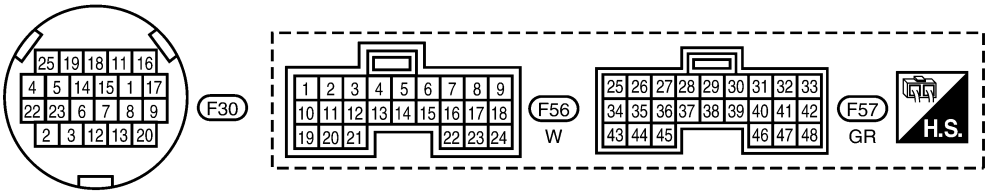

BCWA0637E

TCM terminal data are reference values, measured between each terminal and ground.

Terminal	Wire color	Item	Condition		Data (Approx.)
5	L	CAN-H	–		–
6	P	CAN-L	–		–
8	SB	Back-up lamp relay		Selector lever in “R” position.	0 V
				Selector lever in other positions.	Battery voltage
13	G/W	ROM assembly	—		—
14	L/R	ROM assembly	—		—
15	BR/R	ROM assembly	—		—
42	W/R	Sensor ground	Always		0 V
46	L/O	Sensor power		—	5.0 V
				—	0 V

CVT Indicator Lamp Does Not Come On

UCS005JZ

SYMPTOM:

CVT indicator lamp does not come on for about 2 seconds when turning ignition switch ON.

DIAGNOSTIC PROCEDURE

1. CHECK CAN COMMUNICATION LINE

Perform the self-diagnosis check. Refer to CVT-57, "SELF-DIAGNOSTIC RESULT MODE" .

Is any malfunction of the “U1000 CAN COMM CIRCUIT” indicated in the results?

YES >> Check CAN communication line. Refer to CVT-64, "DTC U1000 CAN COMMUNICATION LINE" .
NO >> GO TO 2.

2. CHECK TCM POWER SOURCE

1. Turn ignition switch ON.
2. Check voltage between TCM connector terminals and ground. Refer to CVT-146, "Wiring Diagram — CVT — POWER" .

Name	Connec-tor	Terminal	Voltage (Approx.)
Power supply	F56	10	Battery voltage
		19	Battery voltage

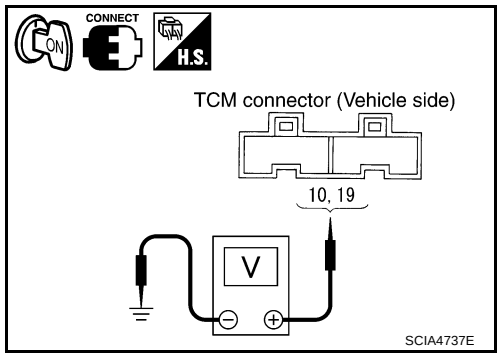

OK or NG

OK >> GO TO 4.
NG >> GO TO 3.

3. DETECT MALFUNCTIONING ITEM

Check the following.

- Harness for short or open between ignition switch and TCM connector terminal 10, 19 Refer to CVT-146, "Wiring Diagram — CVT — POWER" .
- 10 A fuse (No.48, located in the IPDM E/R). Refer to CVT-146, "Wiring Diagram — CVT — POWER" .
- Ignition switch. Refer to PG-4, "POWER SUPPLY ROUTING CIRCUIT" .

OK or NG

OK >> GO TO 4.
NG >> Repair or replace damaged parts.

4. CHECK TCM GROUND CIRCUIT

1. Turn ignition switch OFF.
2. Disconnect TCM connector.
3. Check continuity between TCM connector terminals and ground. Refer to CVT-146, "Wiring Diagram — CVT — POWER" .

Name	Connec-tor	Terminal	Continuity
Ground	F57	25	Yes
		48	

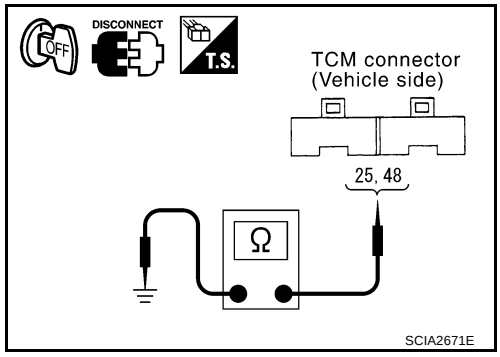

OK or NG

OK >> GO TO 5.
NG >> Repair open circuit or short to ground or short to power in harness or connectors.

5. DETECT MALFUNCTIONING ITEM

Check the following.

- Harness and fuse for short or open between ignition switch and CVT indicator lamp

OK or NG

OK >> GO TO 6.
NG >> Repair or replace damaged parts.

6. CHECK SYMPTOM

Check again. Refer to CVT-46, "Check before Engine Is Started" .

OK or NG

OK >> **INSPECTION END**
NG >> GO TO 7.

7. CHECK COMBINATION METERS

Check combination meters. Refer to DI-5, "COMBINATION METERS"

OK or NG

OK >> **INSPECTION END**
NG >> Repair or replace damaged parts.

Engine Cannot Be Started in “P” or “N” Position

UCS005K0

SYMPTOM:

- **Engine cannot be started with selector lever in “P” or “N” position.**
- **Engine can be started with selector lever in “D”, “M” or “R” position.**

DIAGNOSTIC PROCEDURE

1. CHECK SELF-DIAGNOSTIC RESULTS

Perform self-diagnosis check. Refer to CVT-57, "SELF-DIAGNOSTIC RESULT MODE" .

Do the self-diagnostic results indicate PNP switch circuit or start signal circuit?

YES >> Check PNP switch circuit or start signal circuit. Refer to CVT-73, "DTC P0705 PARK/NEUTRAL POSITION SWITCH" or CVT-67, "DTC P0615 START SIGNAL CIRCUIT" .
NO >> GO TO 2.

2. CHECK CVT POSITION

Check CVT position. Refer to CVT-190, "Checking of CVT Position"

OK or NG

OK >> GO TO 3.
NG >> Adjust CVT position. Refer to CVT-188, "Adjustment of CVT Position" .

3. CHECK STARTING SYSTEM

Check starting system. Refer to SC-10, "STARTING SYSTEM" .

OK or NG

OK >> **INSPECTION END**
NG >> Repair or replace damaged parts.

In “P” Position, Vehicle Moves Forward or Backward When Pushed

UCS005K1

SYMPTOM:

Vehicle moves when it is pushed forward or backward with selector lever in “P” position.

DIAGNOSTIC PROCEDURE

1. CHECK SELF-DIAGNOSTIC RESULTS

Perform self-diagnosis check. Refer to CVT-57, "SELF-DIAGNOSTIC RESULT MODE" .

Do the self-diagnostic results indicate PNP switch circuit?

YES >> Check PNP switch circuit. Refer to CVT-73, "DTC P0705 PARK/NEUTRAL POSITION SWITCH" .
NO >> GO TO 2.

2. CHECK CVT POSITION

Check CVT position. Refer to CVT-190, "Checking of CVT Position"

OK or NG

OK >> GO TO 3.
NG >> Adjust CVT position. Refer to CVT-188, "Adjustment of CVT Position" .

3. CHECK SYMPTOM

Check again. Refer to CVT-46, "Check at Idle" .

OK or NG

OK >> **INSPECTION END**
NG >> Replace the transaxle assembly. Refer to CVT-199, "Removal and Installation" .

In “N” Position, Vehicle Moves

UCS005K2

SYMPTOM:

Vehicle moves forward or backward when selecting “N” position.

DIAGNOSTIC PROCEDURE

1. CHECK SELF-DIAGNOSTIC RESULTS

Perform self-diagnosis check. Refer to CVT-57, "SELF-DIAGNOSTIC RESULT MODE" .

Do the self-diagnostic results indicate PNP switch circuit?

YES >> Check PNP switch circuit. Refer to CVT-73, "DTC P0705 PARK/NEUTRAL POSITION SWITCH" .
NO >> GO TO 2.

2. CHECK CVT POSITION

Check CVT position. Refer to CVT-190, "Checking of CVT Position"

OK or NG

OK >> GO TO 3.
NG >> Adjust CVT position. Refer to CVT-188, "Adjustment of CVT Position" .

3. CHECK CVT FLUID LEVEL

Check CVT fluid level. Refer to CVT-15, "Checking CVT Fluid" .

OK or NG

OK >> GO TO 4.
NG >> Refill CVT fluid.

4. CHECK SYMPTOM

Check again. Refer to CVT-46, "Check at Idle" .

OK or NG

OK >> **INSPECTION END**
NG >> GO TO 5.

5. CHECK TCM

1. Check TCM input/output signals. Refer to CVT-50, "TCM Input/Output Signal Reference Values" .
2. If NG, re-check TCM pin terminals for damage or loose connection with harness connector.

OK or NG

OK >> Replace the transaxle assembly. Refer to CVT-199, "Removal and Installation" .
NG >> Repair or replace damaged parts.

Large Shock “N” → “R” Position

UCS005K3

SYMPTOM:

There is large shock when shifting from “N” to “R” position.

DIAGNOSTIC PROCEDURE

1. CHECK SELF-DIAGNOSTIC RESULTS

Perform self-diagnosis check. Refer to CVT-57, "SELF-DIAGNOSTIC RESULT MODE" .

Is any malfunction detected by self-diagnosis?

YES >> Check the malfunctioning system. Refer to CVT-57, "Display Items List" .
NO >> GO TO 2.

2. CHECK ENGINE IDLE SPEED

Check the engine idle speed. Refer to EC-77, "Idle Speed and Ignition Timing Check" .

OK or NG

OK >> GO TO 3.
NG >> Repair.

3. CHECK CVT FLUID LEVEL

Check CVT fluid level. Refer to CVT-15, "Checking CVT Fluid" .

OK or NG

OK >> GO TO 4.
NG >> Refill CVT fluid.

4. CHECK LINE PRESSURE

Check line pressure at idle. Refer to CVT-42, "LINE PRESSURE TEST" .

OK or NG

OK >> GO TO 5.
NG >> Check the malfunctioning item. Refer to CVT-43, "Judgement of Line Pressure Test" .

5. CHECK SYMPTOM

Check again. Refer to CVT-46, "Check at Idle" .

OK or NG

OK >> **INSPECTION END**
NG >> GO TO 6.

6. CHECK TCM

1. Check TCM input/output signals. Refer to CVT-50, "TCM Input/Output Signal Reference Values" .
2. If NG, re-check TCM pin terminals for damage or loose connection with harness connector.

OK or NG

OK >> Replace the transaxle assembly. Refer to CVT-199, "Removal and Installation" .
NG >> Repair or replace damaged parts.

Vehicle Does Not Creep Backward in “R” Position

UCS005K4

SYMPTOM:

Vehicle does not creep backward when selecting “R” position.

DIAGNOSTIC PROCEDURE

1. CHECK SELF-DIAGNOSTIC RESULTS

Perform self-diagnosis check. Refer to CVT-57, "SELF-DIAGNOSTIC RESULT MODE" .

Is any malfunction detected by self-diagnosis

YES >> Check the malfunctioning system. Refer to CVT-57, "Display Items List" .
NO >> GO TO 2.

2. CHECK CVT POSITION

Check CVT position. Refer to CVT-190, "Checking of CVT Position"

OK or NG

OK >> GO TO 3.
NG >> Adjust CVT position. Refer to CVT-188, "Adjustment of CVT Position" .

3. CHECK CVT FLUID LEVEL

Check CVT fluid level. Refer to CVT-15, "Checking CVT Fluid" .

OK or NG

OK >> GO TO 4.
NG >> Refill CVT fluid.

4. CHECK LINE PRESSURE

Check line pressure at idle. Refer to CVT-42, "LINE PRESSURE TEST" .

OK or NG

OK >> GO TO 5.
NG >> Check the malfunctioning item. Refer to CVT-43, "Judgement of Line Pressure Test" .

5. CHECK SYMPTOM

Check again. Refer to CVT-46, "Check at Idle" .

OK or NG

OK >> **INSPECTION END**
NG >> GO TO 6.

6. CHECK TCM

1. Check TCM input/output signals. Refer to CVT-50, "TCM Input/Output Signal Reference Values" .
2. If NG, re-check TCM pin terminals for damage or loose connection with harness connector.

OK or NG

OK >> Replace the transaxle assembly. Refer to CVT-199, "Removal and Installation" .
NG >> Repair or replace damaged parts.

Vehicle Does Not Creep Forward in “D” Position

UCS005K5

SYMPTOM:

Vehicle does not creep forward when selecting “D” position.

DIAGNOSTIC PROCEDURE

1. CHECK SELF-DIAGNOSTIC RESULTS

Perform self-diagnosis check. Refer to CVT-57, "SELF-DIAGNOSTIC RESULT MODE" .

Is any malfunction detected by self-diagnosis?

YES >> Check the malfunctioning system. Refer to CVT-57, "Display Items List" .
NO >> GO TO 2.

2. CHECK CVT POSITION

Check CVT position. Refer to CVT-190, "Checking of CVT Position"

OK or NG

OK >> GO TO 3.
NG >> Adjust CVT position. Refer to CVT-188, "Adjustment of CVT Position" .

3. CHECK CVT FLUID LEVEL

Check CVT fluid level. Refer to CVT-15, "Checking CVT Fluid" .

OK or NG

OK >> GO TO 4.
NG >> Refill CVT fluid.

4. CHECK LINE PRESSURE

Check line pressure at idle. Refer to CVT-42, "LINE PRESSURE TEST" .

OK or NG

OK >> GO TO 5.
NG >> Check the malfunctioning item. Refer to CVT-43, "Judgement of Line Pressure Test" .

5. CHECK SYMPTOM

Check again. Refer to CVT-46, "Check at Idle" .

OK or NG

OK >> **INSPECTION END**
NG >> GO TO 6.

6. CHECK TCM

1. Check TCM input/output signals. Refer to CVT-50, "TCM Input/Output Signal Reference Values" .
2. If NG, re-check TCM pin terminals for damage or loose connection with harness connector.

OK or NG

OK >> Replace the transaxle assembly. Refer to CVT-199, "Removal and Installation" .
NG >> Repair or replace damaged parts.

CVT Does Not Shift

UCS005K6

SYMPTOM:

CVT does not shift at the specified speed on “Cruise Test”.

DIAGNOSTIC PROCEDURE

1. CHECK SELF-DIAGNOSTIC RESULTS

Perform self-diagnosis check. Refer to CVT-57, "SELF-DIAGNOSTIC RESULT MODE" .

Is any malfunction detected by self-diagnosis?

YES >> Check the malfunctioning system. Refer to CVT-57, "Display Items List" .
NO >> GO TO 2.

2. CHECK CVT POSITION

Check CVT position. Refer to CVT-190, "Checking of CVT Position"

OK or NG

OK >> GO TO 3.
NG >> Adjust CVT position. Refer to CVT-188, "Adjustment of CVT Position" .

3. CHECK CVT FLUID LEVEL

Check CVT fluid level. Refer to CVT-15, "Checking CVT Fluid" .

OK or NG

OK >> GO TO 4.
NG >> Refill CVT fluid.

4. CHECK LINE PRESSURE

Check line pressure at idle. Refer to CVT-42, "LINE PRESSURE TEST" .

OK or NG

OK >> GO TO 5.
NG >> Check the malfunctioning item. Refer to CVT-43, "Judgement of Line Pressure Test" .

5. CHECK SYMPTOM

Check again. Refer to CVT-47, "Cruise Test" .

OK or NG

OK >> **INSPECTION END**
NG >> GO TO 6.

6. CHECK TCM

1. Check TCM input/output signals. Refer to CVT-50, "TCM Input/Output Signal Reference Values" .
2. If NG, re-check TCM pin terminals for damage or loose connection with harness connector.

OK or NG

OK >> Replace the transaxle assembly. Refer to CVT-199, "Removal and Installation" .
NG >> Repair or replace damaged parts.

Cannot Be Changed to Manual Mode

UCS005K7

SYMPTOM:

Does not change to manual mode when manual shift gate is used.

DIAGNOSTIC PROCEDURE

1. CHECK SELF-DIAGNOSTIC RESULTS

Perform self-diagnosis check. Refer to CVT-57, "SELF-DIAGNOSTIC RESULT MODE" .

Is any malfunction detected by self-diagnosis?

YES >> Check the malfunctioning system. Refer to CVT-57, "Display Items List" .
NO >> GO TO 2.

2. CHECK MANUAL MODE SWITCH

Check the manual mode switch circuit. Refer to CVT-124, "DTC P0826 MANUAL MODE SWITCH CIRCUIT" .

OK or NG

OK >> GO TO 3.
NG >> Repair or replace damaged parts.

3. SYMPTOM CHECK

Check again. Refer to CVT-47, "Cruise Test" .

OK or NG

OK >> **INSPECTION END**
NG >> GO TO 4.

4. CHECK TCM

1. Check TCM input/output signals. Refer to CVT-50, "TCM Input/Output Signal Reference Values" .
2. If NG, re-check TCM pin terminals for damage or loose connection with harness connector.

OK or NG

OK >> **INSPECTION END**
NG >> Repair or replace damaged parts.

CVT Does Not Shift in Manual Mode

UCS005K8

SYMPTOM:

Speed does not change even if the selector lever is put in the manual shift gate position and the selector lever is operated to + side or to - side.

DIAGNOSTIC PROCEDURE

1. CHECK SELF-DIAGNOSTIC RESULTS

Perform self-diagnosis check. Refer to CVT-57, "SELF-DIAGNOSTIC RESULT MODE" .

Is any malfunction detected by self-diagnosis?

YES >> Check the malfunctioning system. Refer to CVT-57, "Display Items List" .
NO >> GO TO 2.

2. CHECK MANUAL MODE SWITCH

Check the manual mode switch circuit. Refer to CVT-124, "DTC P0826 MANUAL MODE SWITCH CIRCUIT" .

OK or NG

OK >> GO TO 3.
NG >> Repair or replace damaged parts.

3. CHECK CVT POSITION

Check CVT position. Refer to CVT-190, "Checking of CVT Position"

OK or NG

OK >> GO TO 4.
NG >> Adjust CVT position. Refer to CVT-188, "Adjustment of CVT Position" .

4. CHECK CVT FLUID LEVEL

Check CVT fluid level. Refer to CVT-15, "Checking CVT Fluid" .

OK or NG

OK >> GO TO 5.
NG >> Refill CVT fluid.

5. CHECK LINE PRESSURE

Check line pressure at idle. Refer to CVT-42, "LINE PRESSURE TEST" .

OK or NG

OK >> GO TO 6.
NG >> Check the malfunctioning item. Refer to CVT-43, "Judgement of Line Pressure Test" .

6. CHECK SYMPTOM

Check again. Refer to CVT-47, "Cruise Test" .

OK or NG

OK >> **INSPECTION END**
NG >> GO TO 7.

7. CHECK TCM

1. Check TCM input/output signals. Refer to CVT-50, "TCM Input/Output Signal Reference Values" .
2. If NG, re-check TCM pin terminals for damage or loose connection with harness connector.

OK or NG

OK >> Replace the transaxle assembly. Refer to CVT-199, "Removal and Installation" .
NG >> Repair or replace damaged parts.

Vehicle Does Not Decelerate by Engine Brake

UCS005KB

SYMPTOM:

No engine brake is applied when the gear is shifted from the “M2” to “M1” position.

DIAGNOSTIC PROCEDURE

1. CHECK SELF-DIAGNOSTIC RESULTS

Perform self-diagnosis check. Refer to CVT-57, "SELF-DIAGNOSTIC RESULT MODE" .

Is any malfunction detected by self-diagnosis?

YES >> Check the malfunctioning system. Refer to CVT-57, "Display Items List" .
NO >> GO TO 2.

2. CHECK CVT POSITION

Check CVT position. Refer to CVT-190, "Checking of CVT Position"

OK or NG

OK >> GO TO 3.
NG >> Adjust CVT position. Refer to CVT-188, "Adjustment of CVT Position" .

3. CHECK CVT FLUID LEVEL

Check CVT fluid level. Refer to CVT-15, "Checking CVT Fluid" .

OK or NG

OK >> GO TO 4.
NG >> Refill CVT fluid.

4. CHECK LINE PRESSURE

Check line pressure at idle. Refer to CVT-42, "LINE PRESSURE TEST" .

OK or NG

OK >> GO TO 5.
NG >> Check the malfunctioning item. Refer to CVT-43, "Judgement of Line Pressure Test" .

5. CHECK MANUAL MODE SWITCH

Check the manual mode switch circuit. Refer to CVT-124, "DTC P0826 MANUAL MODE SWITCH CIRCUIT" .

OK or NG

OK >> GO TO 6.
NG >> Repair or replace damaged parts.

6. CHECK SYMPTOM

Check again. Refer to CVT-47, "Cruise Test" .

OK or NG

OK >> **INSPECTION END**
NG >> GO TO 7.

7. CHECK TCM

1. Check TCM input/output signals. Refer to CVT-50, "TCM Input/Output Signal Reference Values" .
2. If NG, re-check TCM pin terminals for damage or loose connection with harness connector.

OK or NG

OK >> Replace the transaxle assembly. Refer to CVT-199, "Removal and Installation" .
NG >> Repair or replace damaged parts.

TRANSMISSION CONTROL MODULE

PFP:31036

Removal and Installation

UCS006XL

REMOVAL

1. Disconnect the battery cable from the negative terminal.
2. Remove the glove box assembly and housing. Refer to IP-15, "REMOVAL AND INSTALLATION" .
3. Disconnect the harness retainers from the TCM bracket.
4. Disconnect the TCM connectors.
5. Remove the TCM bracket nuts (A) and the TCM (1).

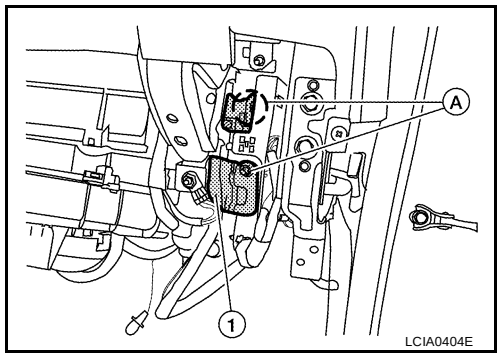

INSTALLATION

Note the following, and Install in the reverse order of removal.

TCM bracket nuts

: 5.5 N.m (0.56 kg-m, 49 in-lb)

SHIFT CONTROL SYSTEM

PFP:34901

Removal and Installation

UCS005KC

CONTROL DEVICE COMPONENTS

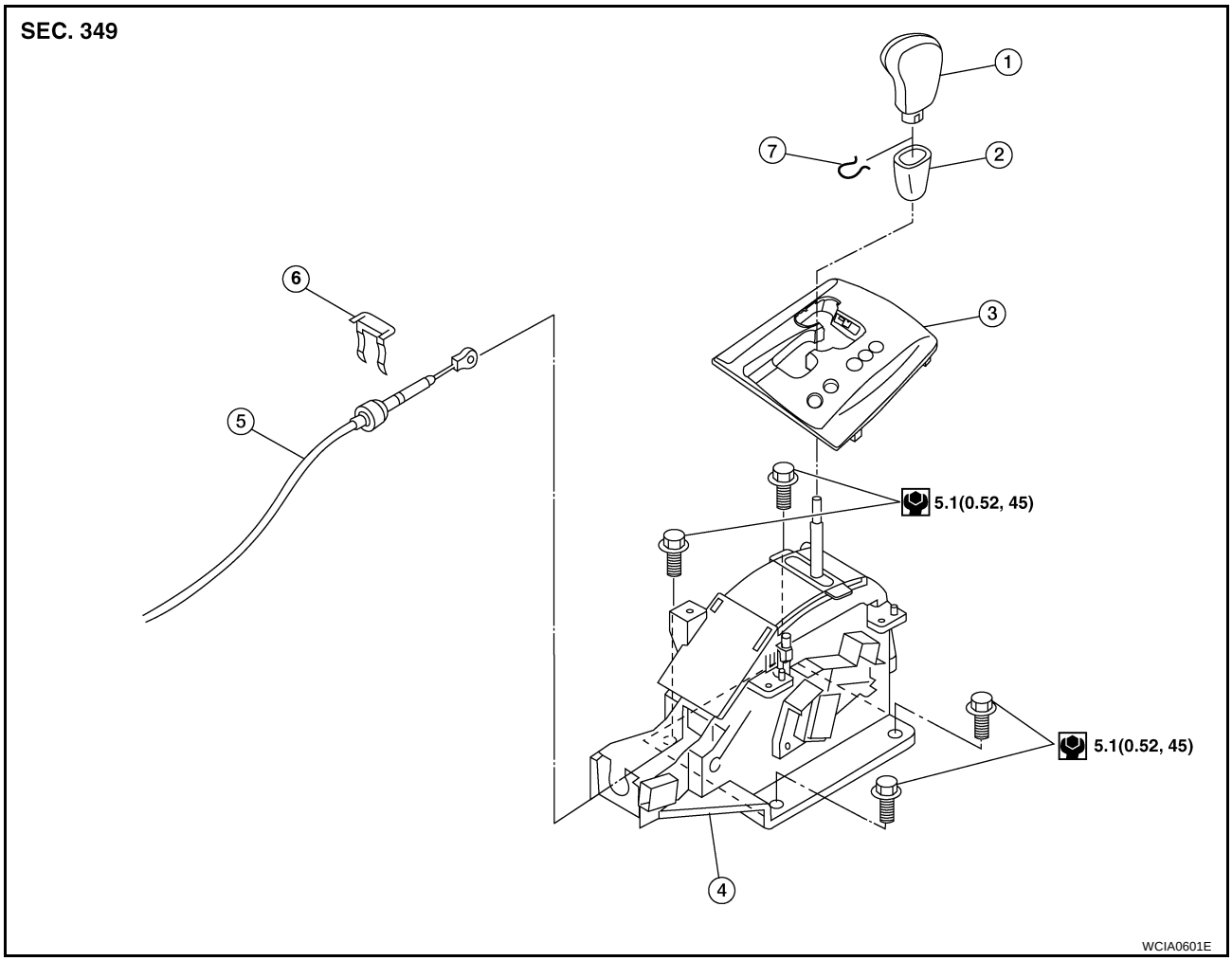

1.	Selector lever knob	2.	Knob cover	3.	CVT console finisher
4.	Control device assembly	5.	Control cable	6.	Lock plate
7.	Lock pin				

Refer to GI section to make sure icons (symbol marks) in the figure. Refer to GI-9, "Components" .

CONTROL CABLE COMPONENTS

Refer to the figure below for control cable removal and installation procedure.

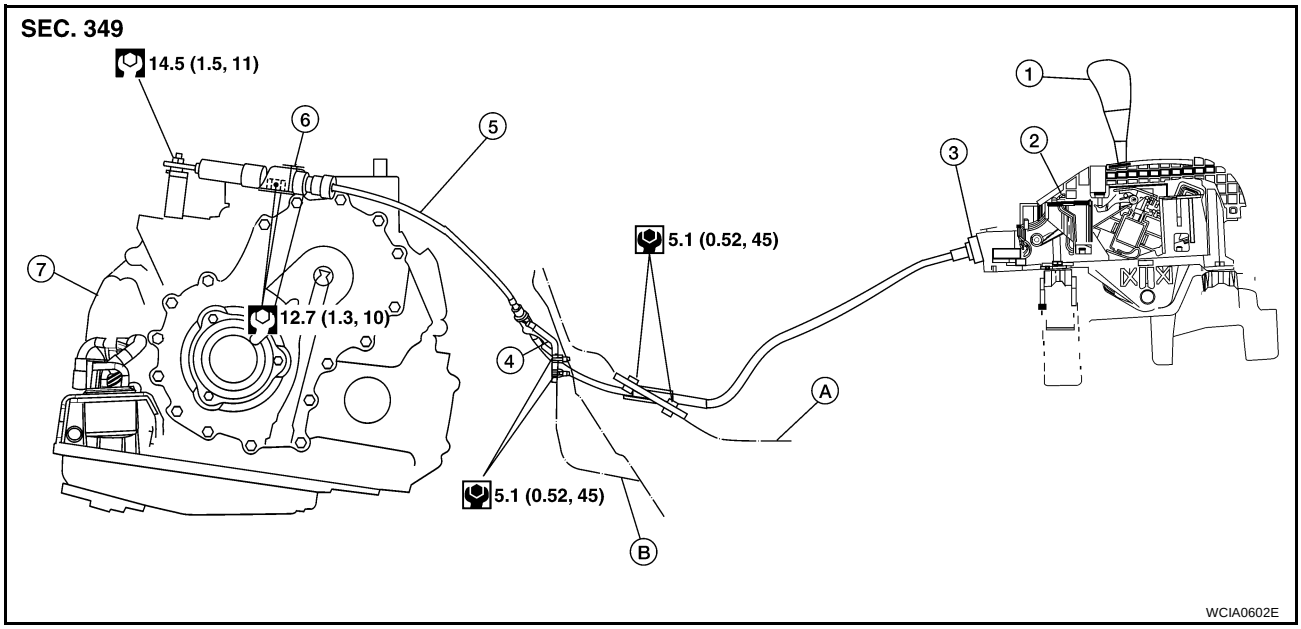

1.	Selector lever knob	2.	Control device assembly	3.	Lock plate
4.	Bracket	5.	Control cable	6.	Lock plate
7.	Transaxle assembly	A.	Floor	B.	Dash lower crossmember

Refer to GI section to make sure icons (symbol marks) in the figure. Refer to GI-9, "Components" .

REMOVAL

1. Push the knob cover downward and pull the lock pin out of the selector lever knob as shown.

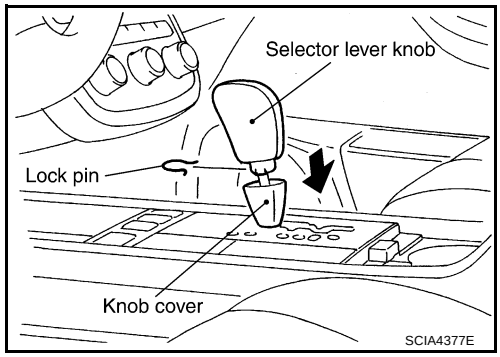

2. Pull the selector lever knob (1) and knob cover (2) upward to remove them.
3. Pull up on the CVT finisher to release the clips and remove it.
4. Remove the front center console.
   - Refer to IP-17, "Front Center Console" .

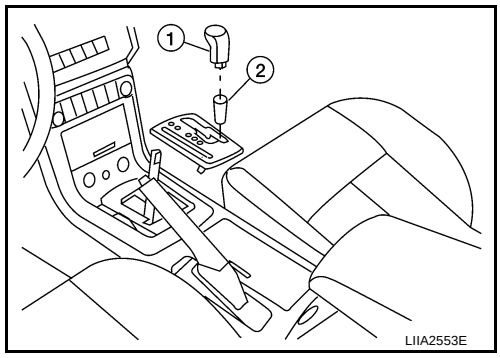

5. Remove the lock plate and disconnect the control cable from the control device.
6. Disconnect the control device harness connector.

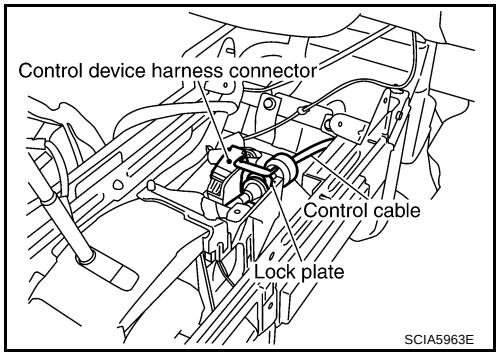

7. Remove the control device assembly.
   - ⬅ : Bolt (4)

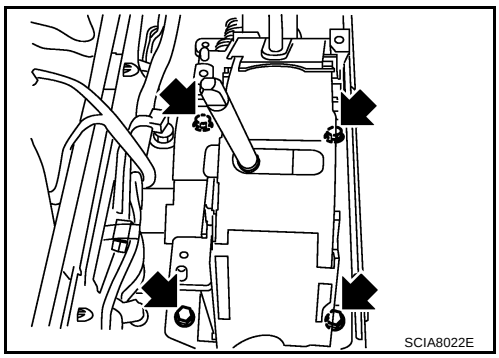

INSTALLATION

Note the following, and install in the reverse order of removal.

- The knurled surface of rib should be upward when installing the control cable to the control device assembly. And insert the control cable securely.
- After installation is completed, adjust and check CVT position. Refer to CVT-188, "Adjustment of CVT Position" and CVT-190, "Checking of CVT Position" .

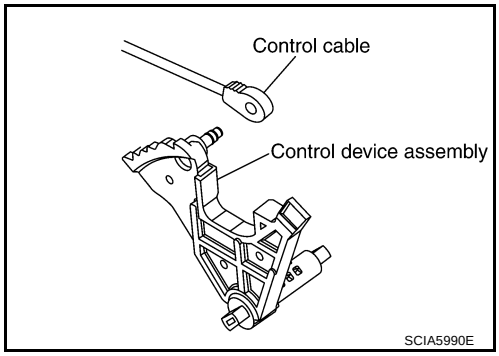

Adjustment of CVT Position

UCS005KD

1. Set the parking brake.

   CAUTION:
   Make sure the vehicle cannot move with parking brake set.
2. Loosen the control cable nut and place the manual lever in “P” position.
3. Place the selector lever in “P” position.
4. Push the control cable in with a load of 9.8 N (approximately 1 kg, 2.2 lb). Release the cable and temporarily tighten the control cable nut.

   NOTE:
   Do not move the manual lever. Make sure the manual lever stays in the “P” position.
5. Tighten the control cable nut.

   CAUTION:
   Secure the manual lever when tightening nut.

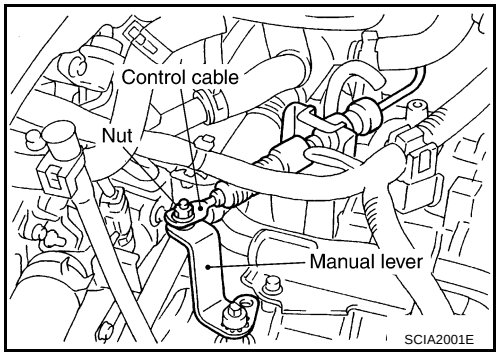

Control cable nut: **Refer to** **CVT-187, "CONTROL CABLE COMPONENTS"**

6. Check the operation of the CVT. Refer to CVT-190, "Checking of CVT Position" .

Checking of CVT Position

UCS005KE

1. Place selector lever in “P” position, and turn ignition switch ON. (Do not start engine.)
2. Make sure selector lever can be shifted to other than “P” position when brake pedal is depressed. Also make sure selector lever can be shifted from “P” position only when brake pedal is depressed.
3. Move the selector lever and check for excessive effort, sticking, noise or rattle.
4. Confirm the selector lever stops at each position with the feel of engagement when it is moved through all the positions. Check whether or not the actual position the selector lever is in matches the position shown by the shift position indicator and the transaxle body.
5. The method of operating the selector lever to individual positions correctly should be as shown in the figure.
6. Confirm the back-up lamps illuminate only when selector lever is placed in the “R” position. Confirm the back-up lamps do not illuminate when the selector lever is pushed toward the “R” position side with the gear position remained in the “P” or “N” position.

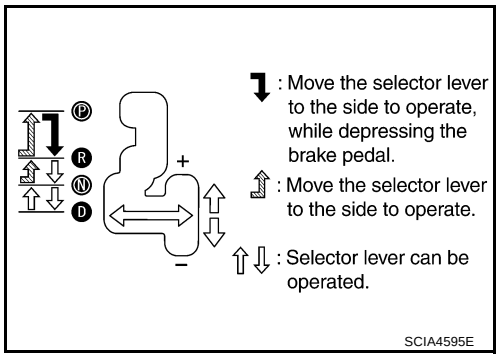

7. Confirm the engine can only be started with the selector lever in the “P” and “N” positions.
8. Make sure transaxle is locked completely in “P” position.
9. Check the operation of manual mode.
   1. When selector lever is set to manual shift gate, make sure manual mode is displayed on combination meter.
   2. Shift selector lever to “+” and “-” sides, and make sure set shift position changes.

CVT SHIFT LOCK SYSTEM

PFP:00000

Description

UCS005KF

- The electrical key interlock mechanism also operates as a shift lock:
  With the ignition switch turned to ON, the selector lever cannot be shifted from “P” position to any other position unless the brake pedal is depressed.
  With the key removed, the selector lever cannot be shifted from “P” position to any other position.
  The key cannot be removed unless the selector lever is placed in “P” position.
- The shift lock and key interlock mechanisms are controlled by the ON-OFF operation of the shift lock solenoid and by the operation of the rotator and slider located inside the key cylinder, respectively.

Shift Lock System Electrical Parts Location

UCS005KG

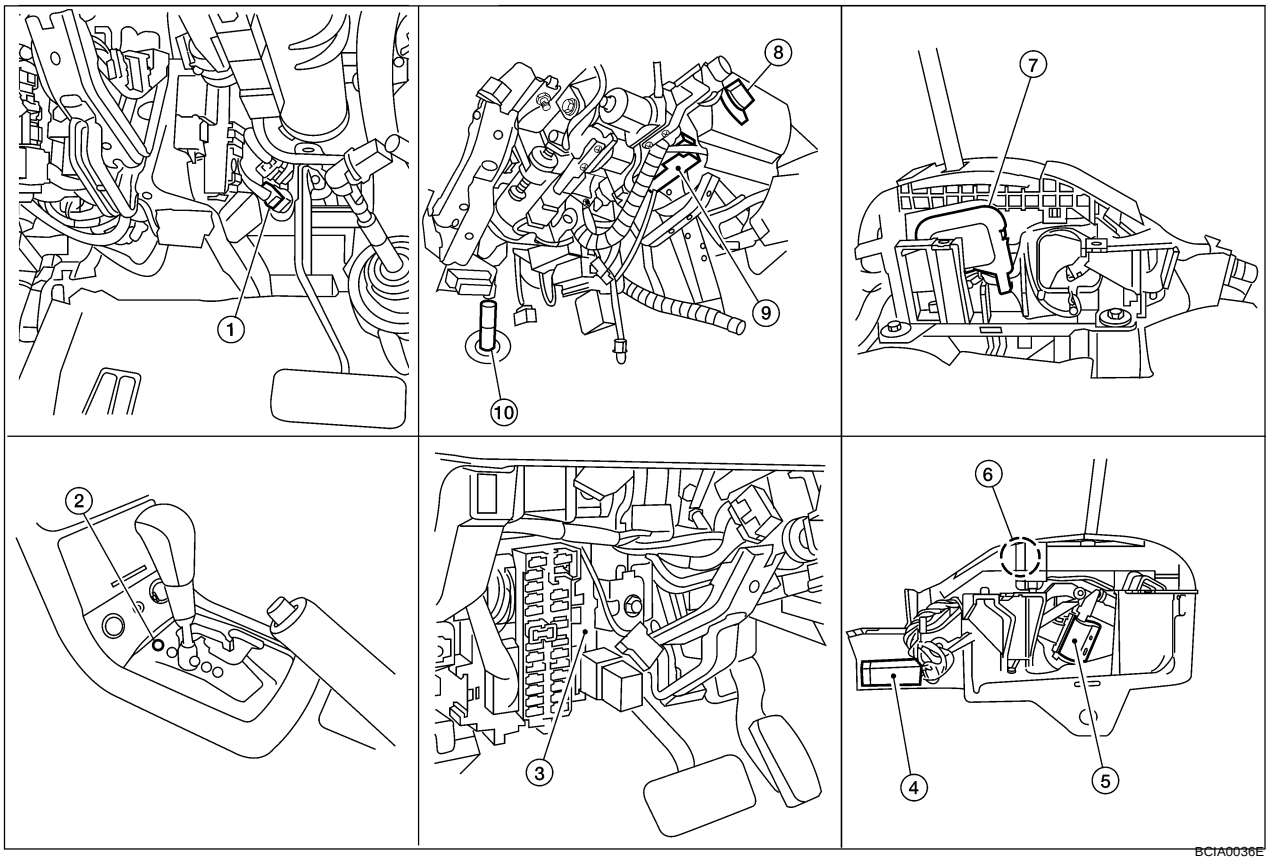

1.	Stop lamp switch	2.	Shift lock release button	3.	Shift lock control unit
4.	CVT device (manual mode switch) connector	5.	Shift lock solenoid	6.	Detention switch (Key)
7.	Detention switch (Shift)	8.	Key switch	9.	Key lock solenoid
10.	Steering column				

NOTE:
This emergency lever can be used when battery is off ignition key cannot be removed. In the situation like this, by operating this lever, ignition key can be removed.

Wiring Diagram — CVT — SHIFT

UCS005KH

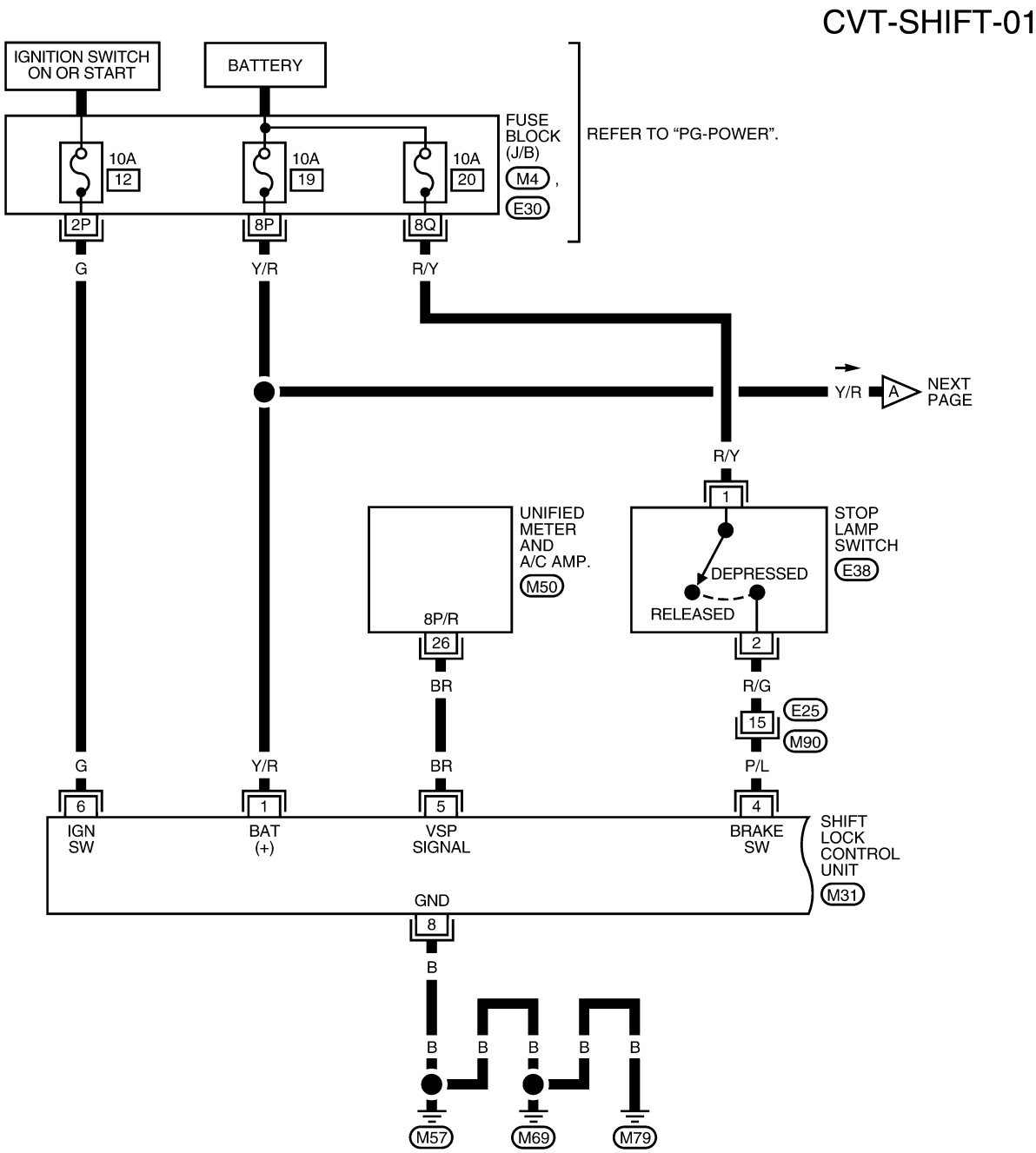

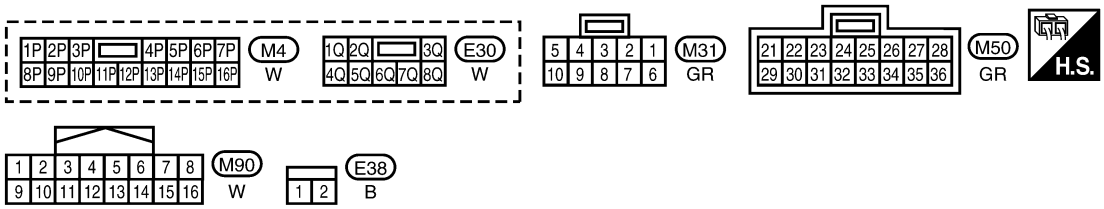

BCWA0638E

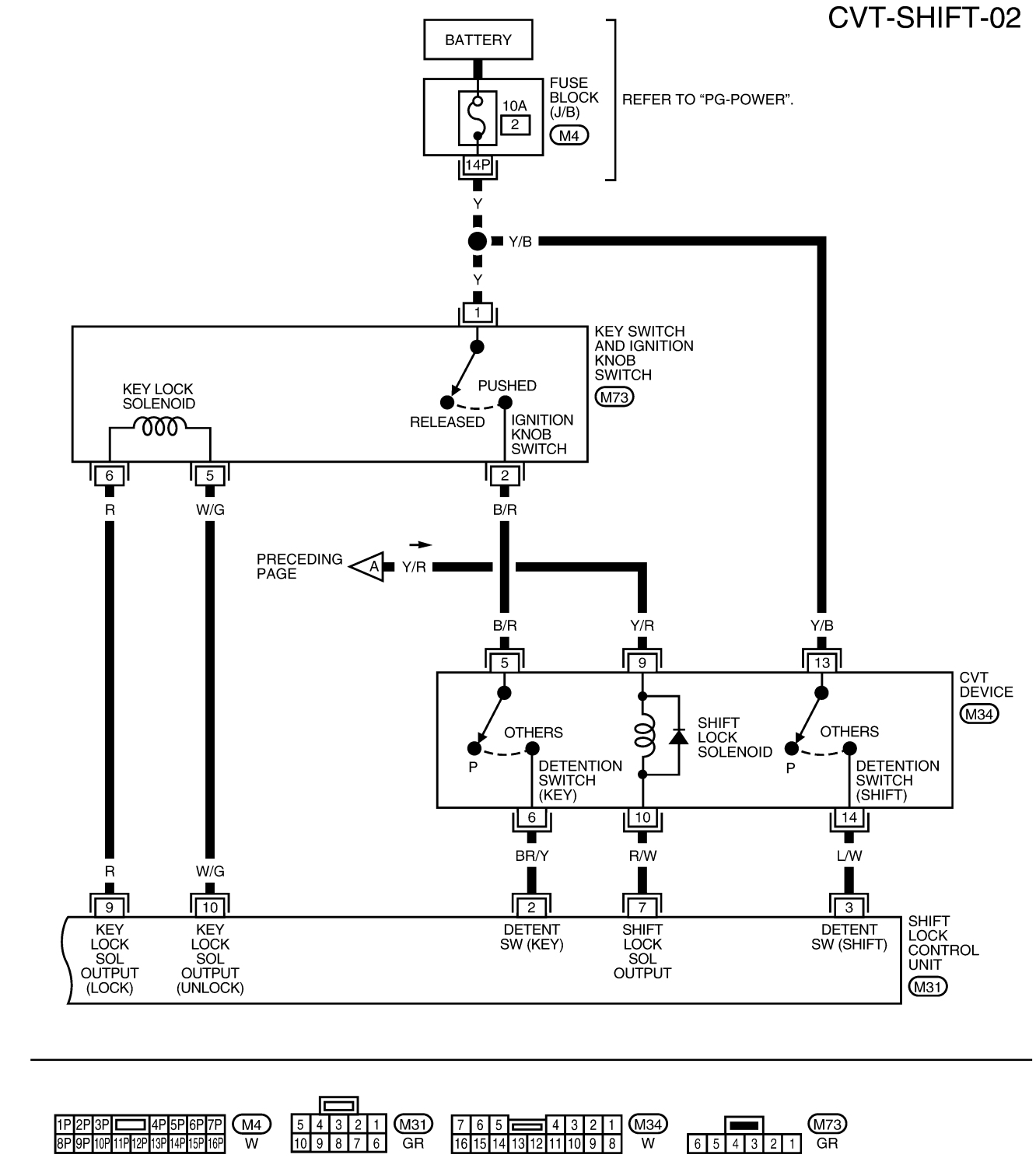
CVT-SHIFT-02
BATTERY
FUSE BLOCK (J/B)
M4
10A
2
14P
REFER TO “PG-POWER”.
Y
Y/B
Y
1
KEY SWITCH AND IGNITION KNOB SWITCH
M73
KEY LOCK SOLENOID
PUSHED
RELEASED
IGNITION KNOB SWITCH
6
5
2
R
W/G
B/R
PRECEDING PAGE
A
Y/R
B/R
Y/R
Y/B
5
9
13
CVT DEVICE
M34
OTHERS
P
DETENTION SWITCH (KEY)
SHIFT LOCK SOLENOID
OTHERS
P
DETENTION SWITCH (SHIFT)
6
10
14
BR/Y
R/W
L/W
R
W/G
9
10
2
7
3
KEY LOCK SOL OUTPUT (LOCK)
KEY LOCK SOL OUTPUT (UNLOCK)
DETENT SW (KEY)
SHIFT LOCK SOL OUTPUT
DETENT SW (SHIFT)
SHIFT LOCK CONTROL UNIT
M31

1P 2P 3P 4P 5P 6P 7P
8P 9P 10P 11P 12P 13P 14P 15P 16P
M4
W
5 4 3 2 1
10 9 8 7 6
M31
GR
7 6 5 4 3 2 1
16 15 14 13 12 11 10 9 8
M34
W
6 5 4 3 2 1
M73
GR

BCWA0639E

Shift Lock Control Unit Reference Values

UCS005KJ

SHIFT LOCK HARNESS CONNECTOR TERMINALS LAYOUT

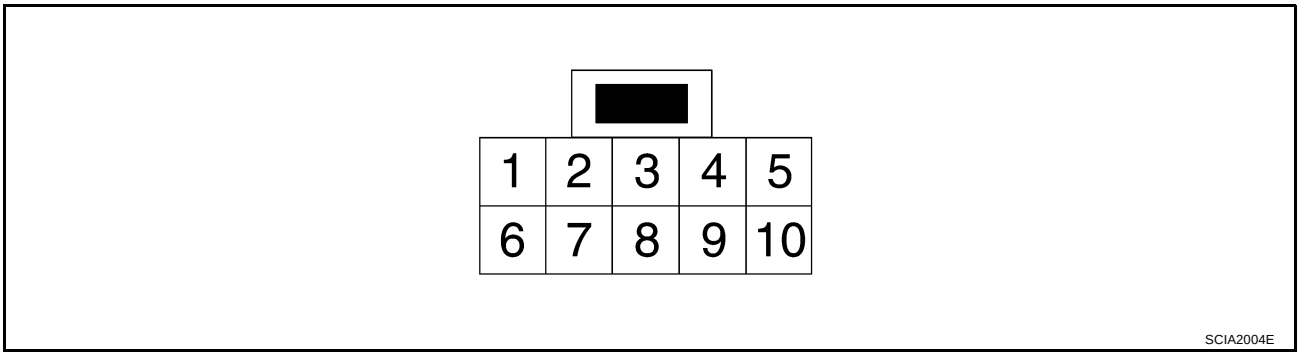

SHIFT LOCK CONTROL UNIT INSPECTION TABLE

Shift lock control unit terminal data are reference values, measured between each terminal and ground.

Terminal (Wire color)	Item	Condition	Judgement standard
1 (Y/R)	Power source	Always	Battery voltage
2 (BR/Y)	Detention switch (for key)	When selector lever is not in “P” position with key inserted or ignition knob switch pushed.	Battery voltage
		When selector lever is in “P” position with key inserted.	Approx. 0 V
3 (L/W)	Detention switch (for shift)	When selector lever is not in “P” position.	Battery voltage
		When selector lever is in “P” position.	Approx. 0 V
4 (P/L)	Stop lamp switch	When brake pedal is depressed	Battery voltage
		When brake pedal is released	Approx. 0 V
5 (BR)	Vehicle speed signal (8pulse signal)	Speed meter is operated	Refer to DI-30, "Terminals and Reference Value for Unified Meter and A/C Amp." .
6 (G)	Ignition signal	Ignition switch: OFF	Approx. 0 V
		Ignition switch: ON	Battery voltage
7 (R/W)	Shift lock solenoid	● When selector lever is in “P” position, brake pedal is depressed, and ignition switch is ON. ● When selector lever is not in “P” position, ignition switch is ON, and vehicle speed is 10 km/h (6 MPH) or less. ● For 3 minutes after selector lever is not in “P” position, vehicle speed is 10 km/h (6 MPH) or less, and ignition switch is ON → OFF.	Approx. 0 V
		Except the above	Battery voltage
8 (B)	Ground	—	Approx. 0 V
9 (R)	Key lock solenoid	When selector lever is not in “P” position.	Battery voltage for approx. 0.1 sec. (Note)
		When selector lever is in “P” position.	Approx. 0 V
10 (W/G)	Key unlock solenoid	When selector lever is in “P” position with ignition switch OFF.	Battery voltage for approx. 0.1 sec. (Note)
		When selector lever is not in “P” position with ignition switch OFF.	Approx. 0 V

NOTE:

Take care that the pointer swings only momentarily because the output time is so short. If the inspection is done with an oscilloscope, it should be observed that the power source voltage lasts for 3.5 to 10 ms.

Component Inspection

UCS005KK

SHIFT LOCK SOLENOID

Check operation by applying battery voltage to the CVT device harness connector.

CAUTION:

Be sure to apply the voltage of the correct polarity to the respective terminals. Otherwise, the part may be damaged.

Connector	Terminal
M34	9 (Battery voltage) - 10 (Ground)

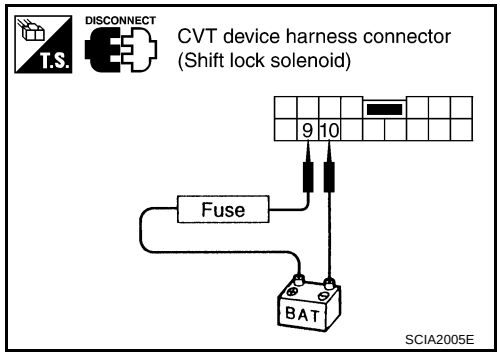

DETENTION SWITCH (FOR KEY)

Check continuity between terminals of the CVT device harness connector.

Condition	Connector	Terminal	Continuity
When selector lever is in “P” position.	M34	5 - 6	No
When selector lever is not in “P” position.			Yes

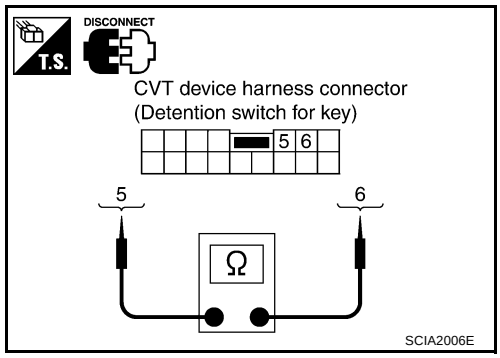

DETENTION SWITCH (FOR SHIFT)

Check continuity between terminals of the CVT device harness connector.

Condition	Connector	Terminal	Continuity
When selector lever is in “P” position.	M34	13 - 14	No
When selector lever is not in “P” position.			Yes

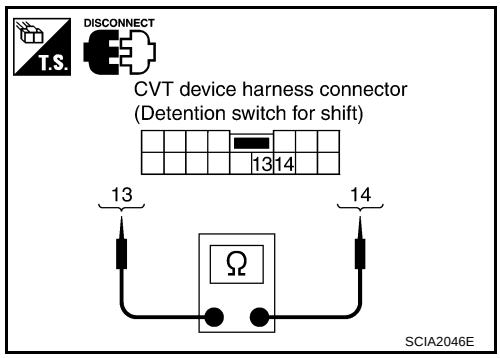

KEY LOCK SOLENOID

Key Lock

Check operation by applying battery voltage to key switch and ignition knob switch harness connector.

CAUTION:

Be careful not to cause burnout of the harness.

Connector	Terminal
M73	6 (Battery voltage) - 5 (Ground)

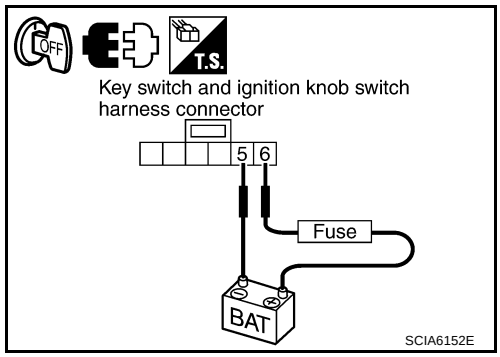

Key Unlock

Check operation by applying battery voltage to key switch and ignition knob switch harness connector.

CAUTION:
Be careful not to cause burnout of the harness.

Connector	Terminal
M73	5 (Battery voltage) - 6 (Ground)

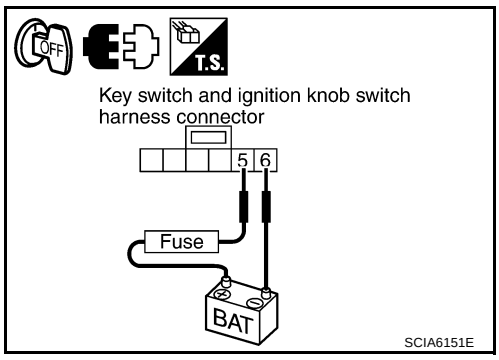

IGNITION KNOB SWITCH

Check continuity between terminals of the key switch and ignition knob switch harness connector.

Condition	Connector	Terminal	Continuity
Pushed	M73	1 - 2	Yes
Released			No

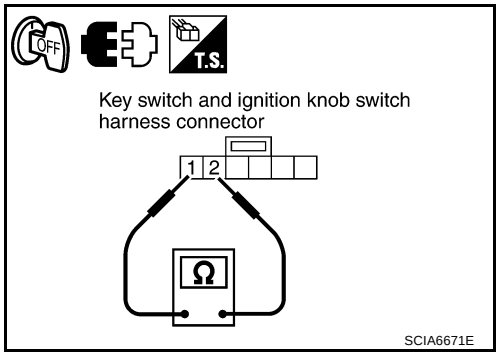

STOP LAMP SWITCH

Check continuity between terminals of the stop lamp switch harness connector.

Condition	Connector	Terminal	Continuity
When brake pedal is depressed	E38	1 - 2	Yes
When brake pedal is released			No

Check stop lamp switch after adjusting brake pedal. Refer to BR-6, "Inspection and Adjustment" .

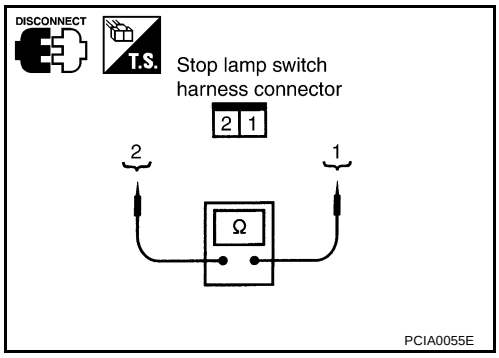

AIR BREATHER HOSE

PFP:31098

Removal and Installation

UCS005KL

SEC. 380

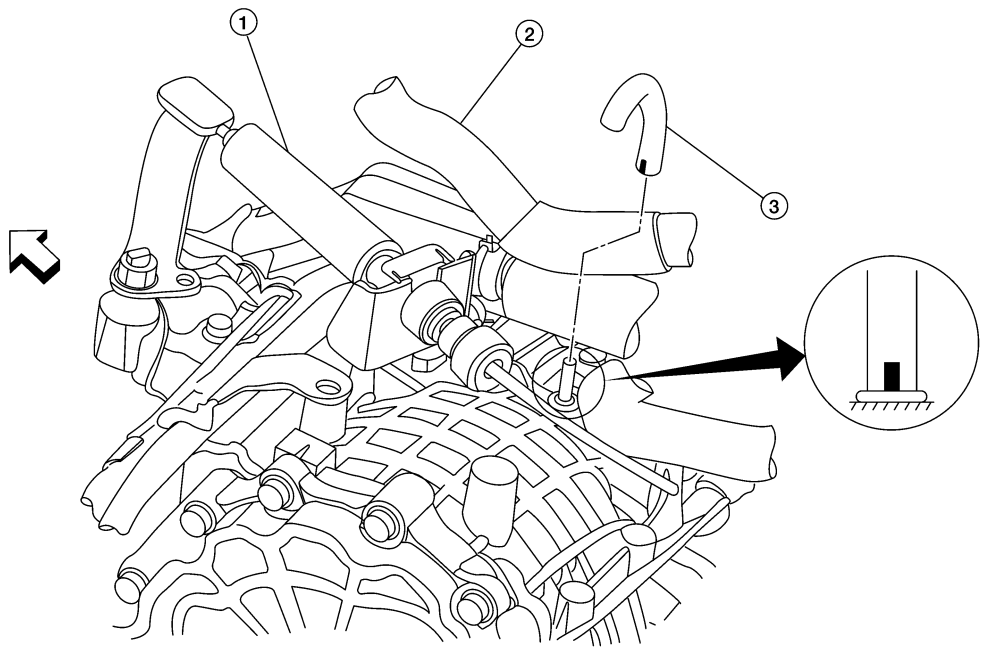

WCIA0603E

CAUTION:

- **Securely insert the air breather hose onto the CVT air breather tube until it reaches the bottom.**
- **Install air breather hose with paint mark at the vehicle left side as shown.**

DIFFERENTIAL SIDE OIL SEAL

PFP:33111

Removal and Installation

UCS005KM

COMPONENTS

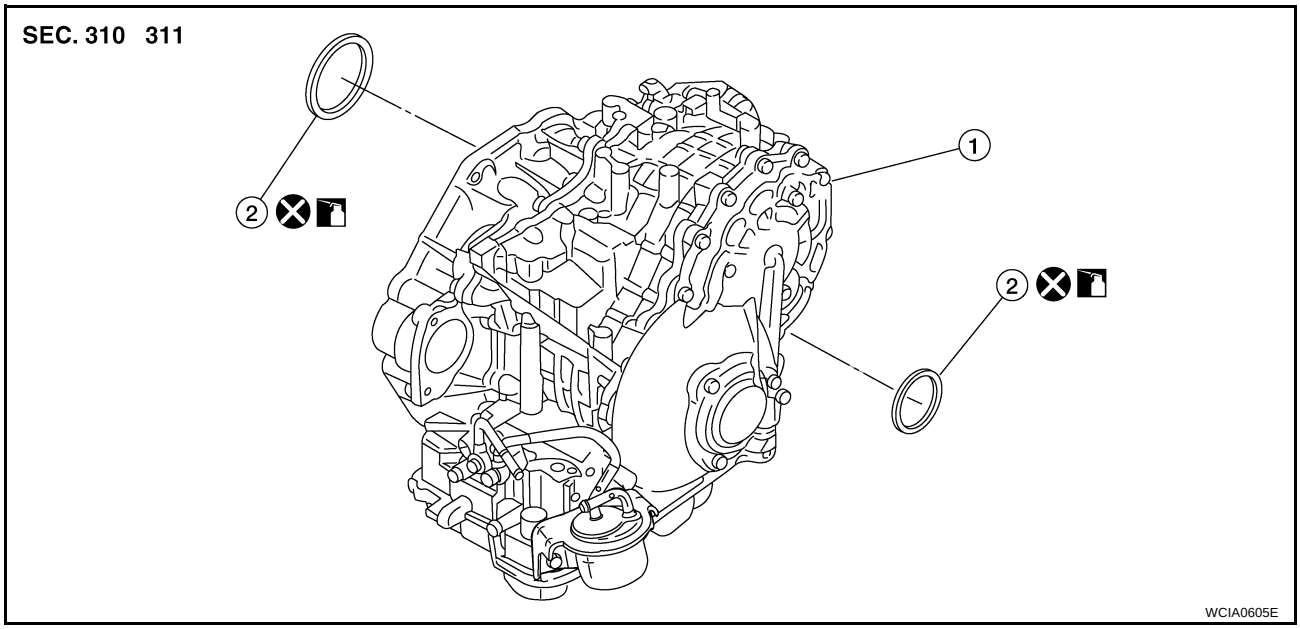

1. Transaxle assembly
2. Differential side oil seal

: NISSAN CVT Fluid NS-2

Refer to GI section to make sure icons (symbol marks) in the figure. Refer to GI-9, "Components" .

REMOVAL

1. Remove drive shaft assembly. Refer to FAX-11, "FRONT DRIVE SHAFT" .
2. Remove differential side oil seals using suitable tool.

   CAUTION:
   Do not scratch transaxle case or converter housing.

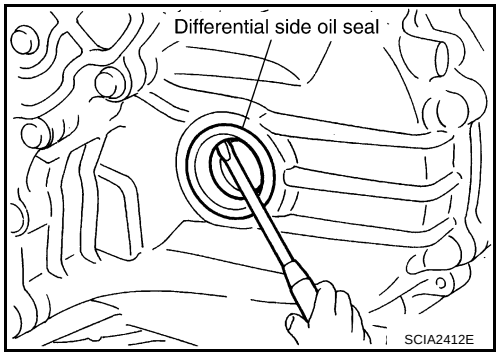

INSTALLATION

1. Drive the new differential side oil seal into the transaxle case side (B) and converter housing side (C) until it is flush using tool.

   Tool number

   Transaxle case side (B) : — (J-47244)

   Converter housing side (C) : ST33400001 (J-47005)

   Dimension A : 0 ± 0.5 (0 ± 0.020)

   CAUTION:
   - **Do not reuse differential side oil seals.**
   - **Apply specified NISSAN CVT fluid to side oil seals.**

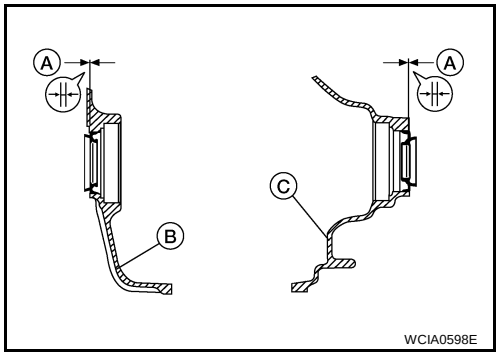

2. Install drive shaft assembly. Refer to FAX-11, "FRONT DRIVE SHAFT" .
3. Check CVT fluid level. Refer to CVT-15, "Checking CVT Fluid" .

TRANSAXLE ASSEMBLY

PFP:32020

Removal and Installation

UCS005KP

COMPONENTS

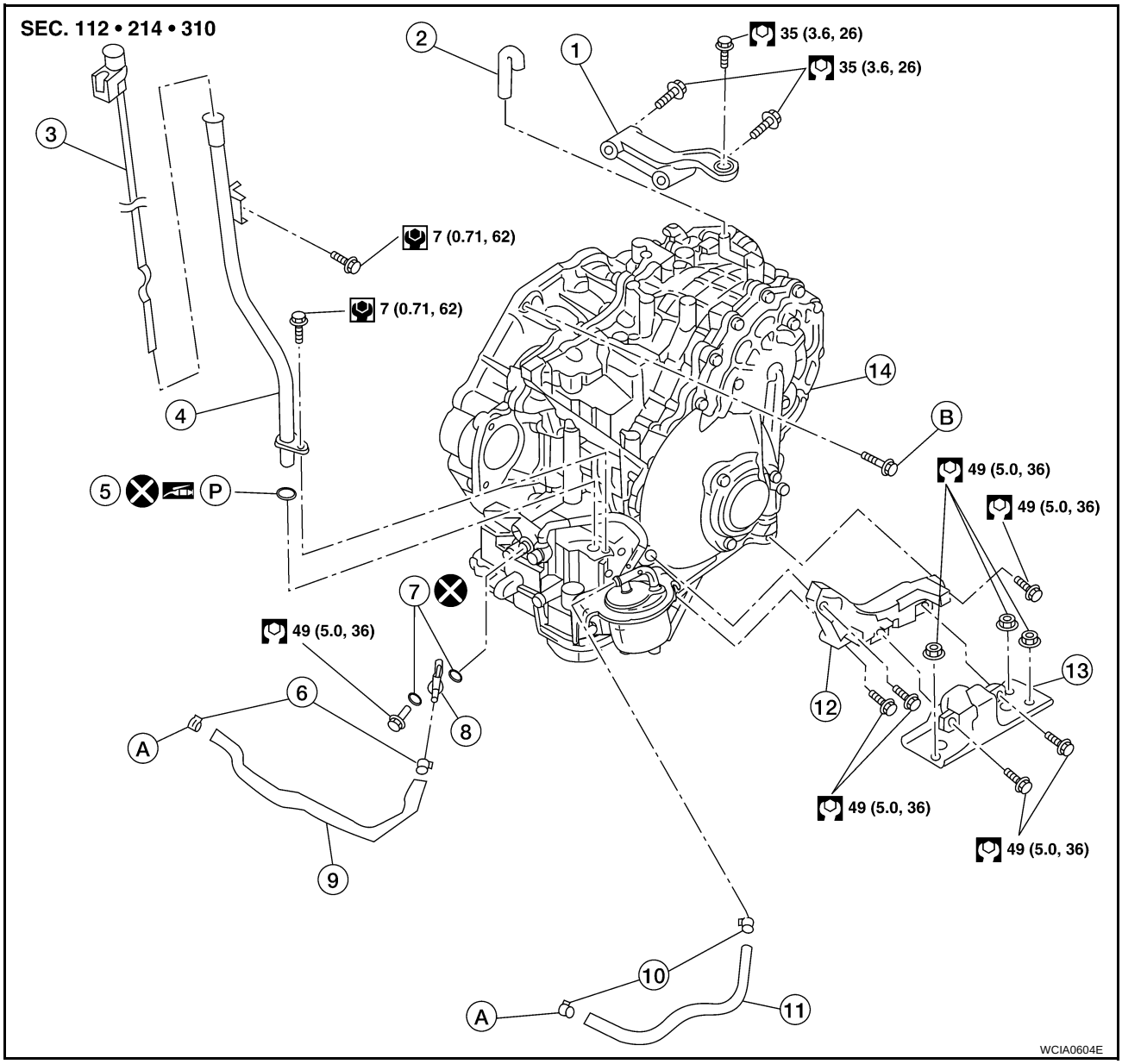

1.	Rear gusset	2.	Air breather hose	3.	CVT fluid level gauge
4.	CVT fluid charging pipe	5.	O-ring	6.	Hose clamp
7.	Copper washer	8.	Fluid cooler tube	9.	CVT fluid cooler hose
10.	Hose clamp	11.	CVT fluid cooler hose	12.	LH engine mounting bracket
13.	LH engine mounting insulator	14.	Transaxle assembly	A.	To radiator
B.	Refer to CVT-202, "INSTALLATION" .				

Refer to GI section to make sure icons (symbol marks) in the figure. Refer to GI-9, "Components" .

REMOVAL

1. Remove the battery, tray and bracket. Refer to SC-9, "Removal and Installation" .
2. Remove the air cleaner and air duct assembly. Refer to EM-16, "Removal and Installation" .
3. Remove the grille top cover. Refer to EI-18, "Removal and Installation" .
4. Remove the hoodledge and engine cover.
5. Disconnect the following:
   - CVT unit harness connector. Refer to CVT-10, "Removal and Installation Procedure for CVT Unit Connector" .
   - Secondary speed sensor connector
   - Ground strap connector (1)
   - Ground cable nut (2)
6. Remove the harness from the transaxle.

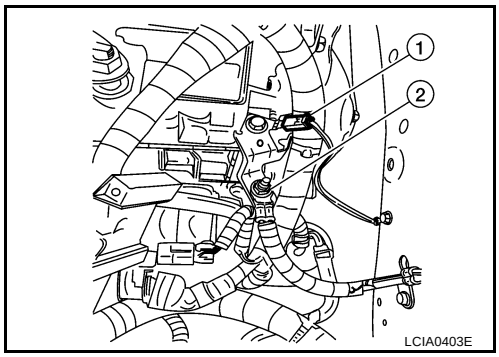

7. Remove the CVT fluid charging pipe.
8. Remove the starter motor from the transaxle. Refer to SC-16, "Removal and Installation" .
9. Disconnect the control cable from the transaxle. Refer to CVT-186, "Removal and Installation" .

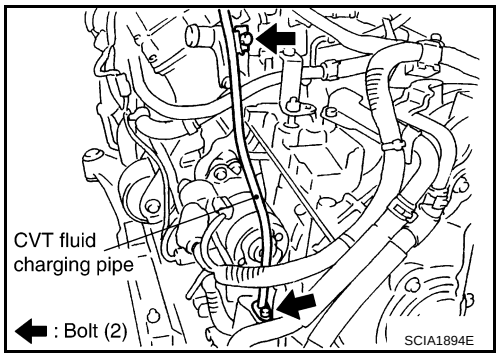

10. Remove the bolt (1) from the rear gusset (2).
11. Drain the CVT fluid.
12. Disconnect the CVT fluid cooler hoses from the CVT assembly.
13. Install engine slingers to the rear of both cylinder heads and support the engine using suitable engine support.
14. Remove the upper transaxle to engine bolts.
15. Remove the front exhaust. Refer to EX-3, "Removal and Installation" .

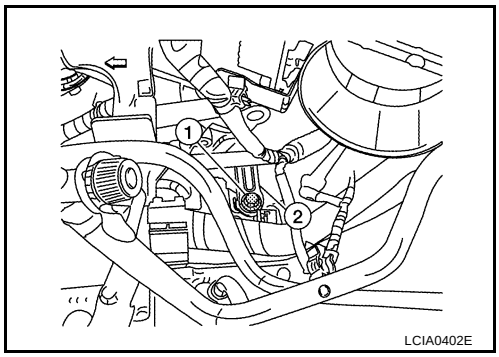

16. Remove the crankshaft position sensor (POS) (1) from engine. Refer to EM-31, "Removal and Installation" .

    CAUTION:
    - **Do not subject it to impact by dropping or hitting it.**
    - **Do not disassemble.**
    - **Do not allow metal filings, etc. to get on the sensor's front edge magnetic area.**
    - **Do not place in an area affected by magnetism.**
17. Disconnect the drive shafts. Refer to FAX-11, "Removal and Installation" .
18. Remove the front suspension member. Refer to FSU-16, "Removal and Installation" .
19. Support transaxle using a suitable jack.

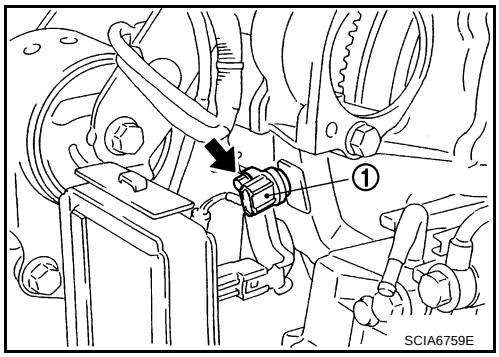

20. Remove the rear cover plate.

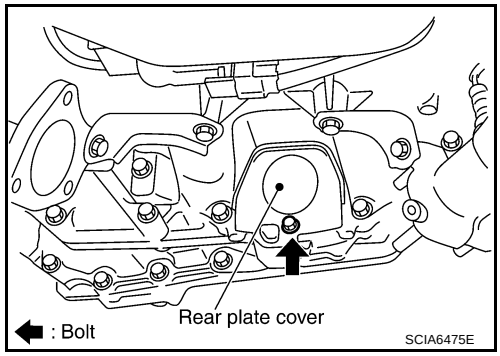

21. Remove the four drive plate to torque converter nuts.

    NOTE:
    Rotate the crankshaft clockwise as viewed from front of engine for access to drive plate to torque converter nuts.
22. Remove the lower engine to transaxle bolts.
23. Lower the transaxle while supporting it with a jack.
24. If necessary, remove the following from the transaxle.
    - Transaxle mount
    - Fluid cooler tube
    - Air breather hose
    - Any necessary brackets

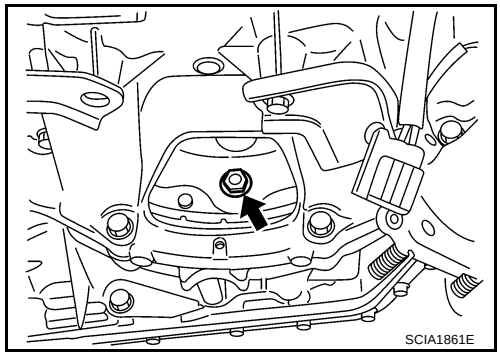

INSPECTION

Installation and Inspection of Torque Converter

- After inserting a torque converter to a transaxle, be sure to check distance A to ensure it is within the reference value limit.

Distance A: 14.0 mm (0.55 in) or more

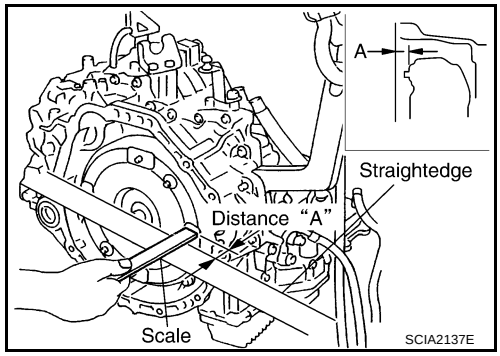

INSTALLATION

Installation is in the reverse order of removal.

CAUTION:

- **When replacing an engine or transmission you must make sure any dowels are installed correctly during re-assembly.**
- **Improper alignment caused by missing dowels may cause vibration, oil leaks or breakage of drive train components.**
- **Do not reuse O-ring and copper washers.**
- **When turning crankshaft, turn it clockwise as viewed from the front of the engine.**
- **When tightening the tightening nuts for the torque converter after fixing the crankshaft pulley bolts, be sure to confirm the tightening torque of the crankshaft pulley mounting bolts. Refer to EM-64, "Installation" .**
- **After converter is installed to drive plate, rotate crankshaft several turns and check to be sure that transaxle rotates freely without binding.**
- Rotate the torque converter for the locate to go down.

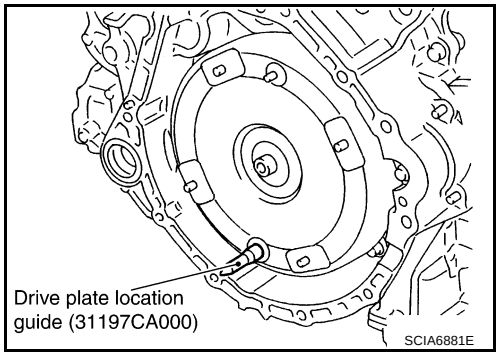

- Rotate the drive plate for the hole of the drive plate locate to go down.

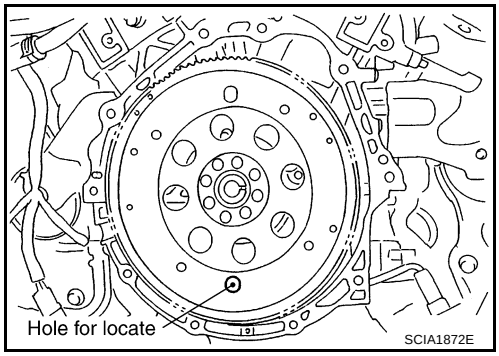

- When installing fluid cooler tube to transaxle assembly, assemble the part with the tube aligned with the rib.

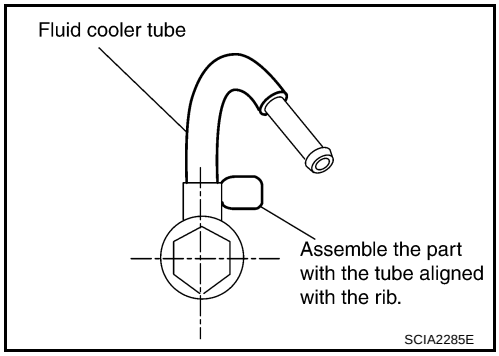

- When installing transaxle to the engine, attach the fixing bolts in accordance with the following standard.

Bolt No.	1	2	3	4
Number of bolts	1	2	2	4
Bolt length "ℓ"mm (in)	52 (2.05)	36 (1.42)	105 (4.13)	35 (1.38)
Tightening torque N·m (kg-m, ft-lb)	75 (7.7, 55)			47 (4.8, 35)

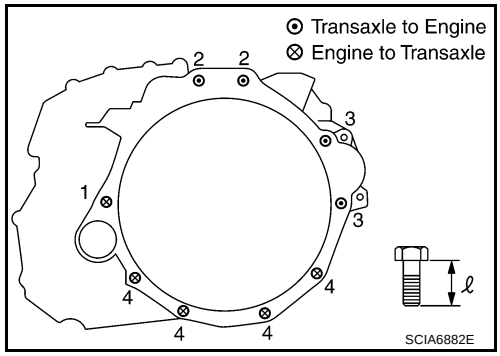

- When installing the drive plate to torque converter nuts, tighten them temporarily. Then tighten the nuts to the specified torque.

  Converter nuts

  : 51 N·m (5.2 kg-m, 38 ft-lb)

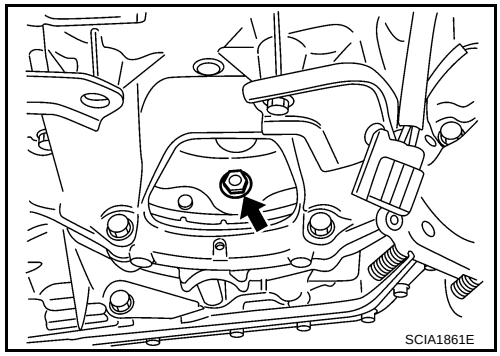

- After completing installation, check for fluid leakage, fluid level, and the positions of CVT. Refer to CVT-15, "Checking CVT Fluid" , CVT-188, "Adjustment of CVT Position" , CVT-190, "Checking of CVT Position" .
- When replacing the CVT assembly, erase EEP ROM in TCM. Refer to CVT-8, "Precautions for TCM and CVT Assembly Replacement" .

SERVICE DATA AND SPECIFICATIONS (SDS)

PFP:00030

General Specifications

UCS005KQ

Applied model		VQ35DE engine
		2WD
CVT model		RE0F09B
CVT assembly	Model code number	1XE0A
Transmission gear ratio	D range	Variable
	Reverse	1.767
	Final drive	5.173
Recommended fluid		NISSAN CVT Fluid NS-2*1
Fluid capacity		10 ℓ (10 5/8 US qt, 8 3/4 Imp qt)

CAUTION:

- **Use only Genuine NISSAN CVT Fluid NS-2. Do not mix with other fluid.**
- **Using CVT fluid other than Genuine NISSAN CVT Fluid NS-2 will deteriorate in driveability and CVT durability, and may damage the CVT, which is not covered by the warranty.**

*1: Refer to MA-9, "Fluids and Lubricants" .

Vehicle Speed When Shifting Gears

UCS005KR

Numerical value data are reference values.

Engine type	Throttle position	Shift pattern	Engine speed (rpm)	
			At 40 km/h (25 MPH)	At 60 km/h (37 MPH)
VQ35DE	8/8	“D” position	2,900 - 4,000	3,900 - 5,600
	2/8	“D” position	1,100 - 3,100	1,200 - 3,400

CAUTION:

Lock-up clutch is engaged when vehicle speed is approximately 18 km/h (11 MPH) to 90 km/h (56 MPH).

Stall Speed

UCS005KS

Stall speed	2,700 - 3,250 rpm

Line Pressure

UCS005KT

Engine speed	Line pressure kPa (kg/cm^2 , psi)
	“R”, “D” positions
At idle	750 (7.65, 108.8)
At stall	5,700 (58.14, 826.5)*1

*1: Reference values

Solenoid Valves

UCS005KU

Name	Resistance (Approx.) (Ω)	Terminal
Pressure control solenoid valve B (secondary pressure solenoid valve)	3.0 - 9.0	3
Pressure control solenoid valve A (line pressure solenoid valve)		2
Torque converter clutch solenoid valve		12
Lock-up select solenoid valve	6 - 19	13

CVT Fluid Temperature Sensor

UCS005KV

Name	Condition	CONSULT-II “DATA MONITOR” (Approx.) (V)	Resistance (Approx.)
ATF TEMP SEN	20°C (68°F)	1.8 - 2.0	6.5 kΩ
	80°C (176°F)	0.6 - 1.0	0.9 kΩ

Primary Speed Sensor

UCS005KW

Name	Condition	Data (Approx.)
Primary speed sensor	When driving [M1 position, 20 km/h (12 MPH)].	660 Hz

Secondary Speed Sensor

UCS005KX

Name	Condition	Data (Approx.)
Secondary speed sensor	When driving [M1 position, 20 km/h (12 MPH)].	400 Hz

Removal and Installation

UCS005KY

Distance between end of converter housing and torque converter	14.0 mm (0.55 in) or more