SECTION MT

CONTENTS

Special Service Tools

The actual shapes of Kent-Moore tools may differ from those of special service tools illustrated here.

Tool number (Kent-Moore No.) Tool name	Description	
KV38105900·For F31A (J33201) KV38107700·For F32V (J39027) Preload adapter	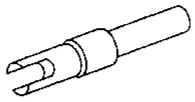 NT087	Measuring turning torque of final drive assembly Measuring total turning torque (F31A) Selecting differential side bearing adjusting shim (Use with KV38106000.)
KV38106000 (J34291-A) Height gauge adapter (differential side bearing)	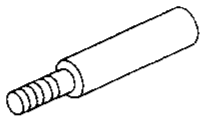 NT089	Selecting differential side bearing adjusting shim (Use with KV38105900 or KV38107700.)
KV32101000 (J25689-A) Pin punch	 NT410	Removing and installing retaining pin **a: 4 mm (0.16 in) dia.**
ST22730000 (J25681) Puller	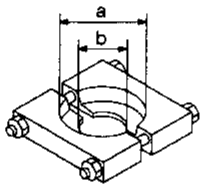 NT411	Removing mainshaft front and rear bearing inner race (F31A) Removing 5th main gear **a: 82 mm (3.23 in) dia.** **b: 30 mm (1.18 in) dia.**
ST30031000 (J22912-01) Puller	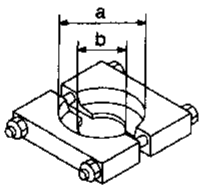 NT411	Removing differential side bearing inner race (F31A) Removing 3rd and 4th synchronizer Measuring wear of 2nd & 3rd baulk ring (F32V) **a: 90 mm (3.54 in) dia.** **b: 50 mm (1.97 in) dia.**
ST30021000 (J22912-01) Puller	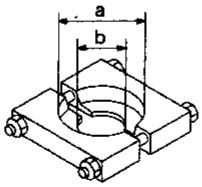 NT411	Removing 5th synchronizer **a: 110 mm (4.33 in) dia.** **b: 68 mm (2.68 in) dia.**
ST33290001 (J34286) Puller	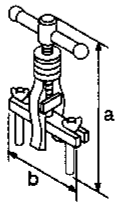 NT414	Removing differential oil seal Removing mainshaft front bearing outer race (F31A) Removing differential side bearing outer race **a: 250 mm (9.84 in)** **b: 160 mm (6.30 in)**

Special Service Tools (Cont'd)

Tool number (Kent-Moore No.) Tool name	Description	
ST33400001 (J26082) Drift handle	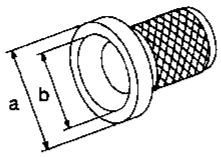 NT086	Installing differential oil seal (Except for F32V left side) **a: 60 mm (2.36 in) dia.** **b: 47 mm (1.85 in) dia.**
KV38102100 (J25803-01) Drift	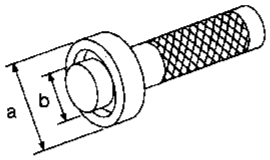 NT084	Installing input shaft rear bearing **a: 44 mm (1.73 in) dia.** **b: 24.5 mm (0.965 in) dia.**
ST33200000 (J26082) Drift	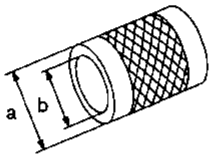 NT091	Installing mainshaft front bearing outer race (F31A) Installing mainshaft front bearing (F32V) **a: 60 mm (2.36 in) dia.** **b: 44.5 mm (1.752 in) dia.**
ST22350000 (J25678-01) Drift	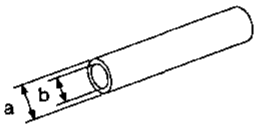 NT065	Installing input shaft front bearing **a: 34 mm (1.34 in) dia.** **b: 28 mm (1.10 in) dia.**
ST22452000 (—) Drift	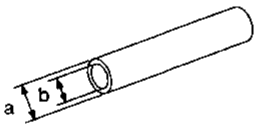 NT065	Installing 1st & 2nd synchronizer Installing 3rd & 4th synchronizer (F32V) **a: 45 mm (1.77 in) dia.** **b: 36 mm (1.42 in) dia.**
ST37750000 (J25863-01) Drift	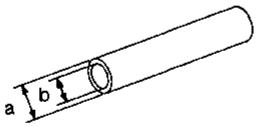 NT065	Installing 5th main gear Installing 3rd & 4th synchronizer (F31A) Installing input shaft oil seal Installing 5th synchronizer Installing mainshaft rear bearing (F32V) **a: 40 mm (1.57 in) dia.** **b: 31 mm (1.22 in) dia.**
ST22360002 (J25679-01) Drift	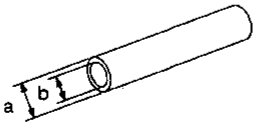 NT065	Installing mainshaft rear bearing inner race (F31A) **a: 29 mm (1.14 in) dia.** **b: 23 mm (0.91 in) dia.**

Special Service Tools (Cont'd)

Tool number (Kent-Moore No.) Tool name	Description	
ST30621000 (J25742-5) Drift	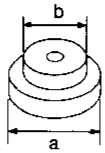 NT073	Installing differential side bearing outer race (F31A and right side of F32V) (Use with ST30611000.) **a: 79 mm (3.11 in) dia.** **b: 59 mm (2.32 in) dia.**
ST30611000 (J25742-1) Drift handle	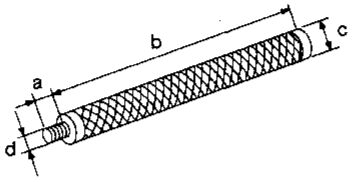 NT419	(Use with ST30621000.) **a: 15 mm (0.59 in)** **b: 335 mm (13.19 in)** **c: 25 mm (0.98 in) dia.** **d: M12 x 1.5P**

Commercial Service Tools

Tool name	Description	
Puller	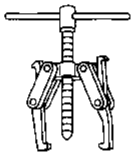 NT077	Removing input shaft front bearing Removing mainshaft rear bearing (F32V)
Drift	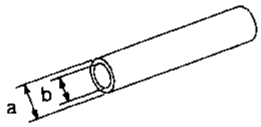 NT065	Installing mainshaft front bearing inner race (F31A) **a: 31 mm (1.22 in) dia.** **b: 26 mm (1.02 in) dia.**
Drift	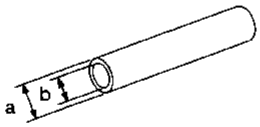 NT065	Installing differential side bearing inner race (F31A and right side of F32V) **a: 56 mm (2.20 in) dia.** **b: 50.5 mm (1.988 in) dia.**
Drift	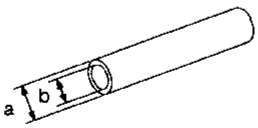 NT065	Installing striking rod oil seal **a: 38 mm (1.50 in) dia.** **b: 32 mm (1.26 in) dia.**
Drift	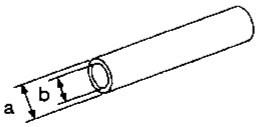 NT065	Installing differential oil seal (F32V left side) **a: 88 mm (3.46 in) dia.** **b: 72 mm (2.83 in) dia.**

Commercial Service Tools (Cont'd)

Tool name	Description	
Drift	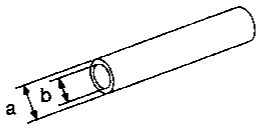 NT065	Installing differential side bearing outer race (F32V left side) **a: 104 mm (4.09 in) dia.** **b: 98 mm (3.86 in) dia.**
Drift	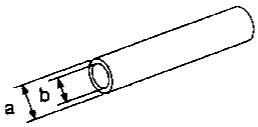 NT065	Installing differential side bearing inner race (F32V left side) **a: 91 mm (3.58 in) dia.** **b: 81 mm (3.19 in) dia.**

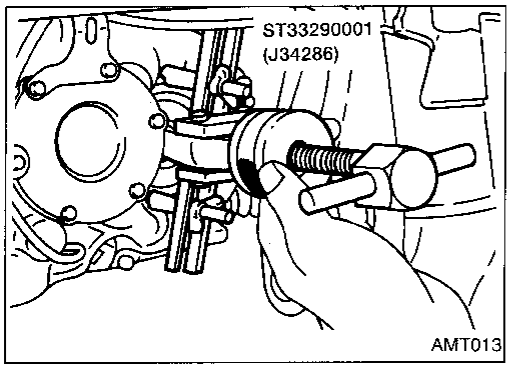

Replacing Oil Seal

DIFFERENTIAL OIL SEAL

1. Drain gear oil from transaxle.
2. Remove drive shafts. Refer to FA section ("Removal", "FRONT AXLE — Drive Shaft").
3. Remove differential oil seal with Tool.

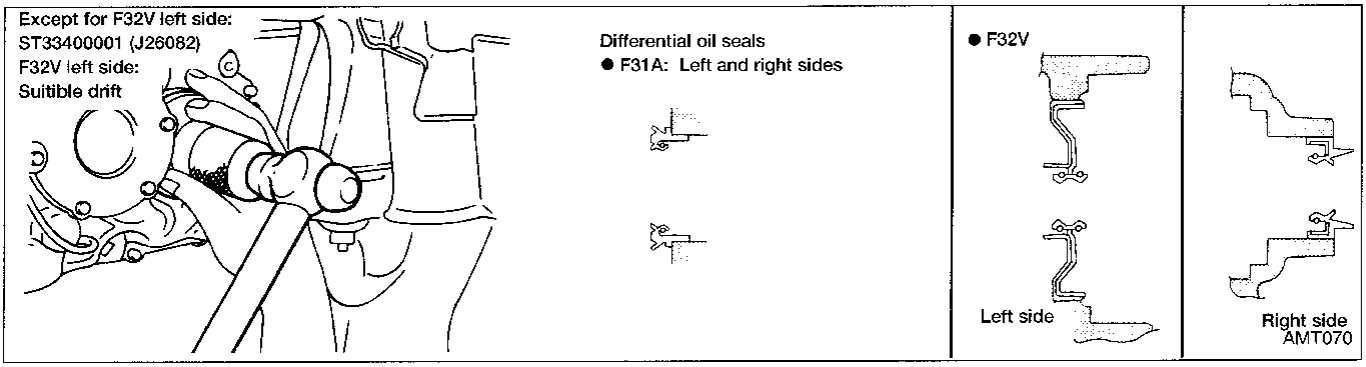

4. Install differential oil seal. Suitable drift sizes are shown in "PREPARATION".
- **Apply multi-purpose grease to seal lip of oil seal before installing.**
5. Install drive shafts. Refer to FA section ("Installation", "FRONT AXLE — Drive Shaft").

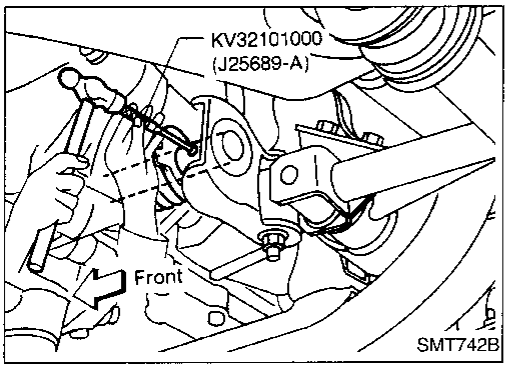

STRIKING ROD OIL SEAL

1. Remove transaxle control rod from yoke.
2. Remove retaining pin.
- **Be careful not to damage boot.**

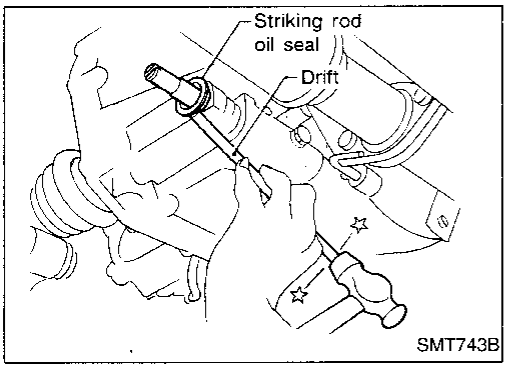

3. Remove striking rod oil seal.

Replacing Oil Seal (Cont'd)

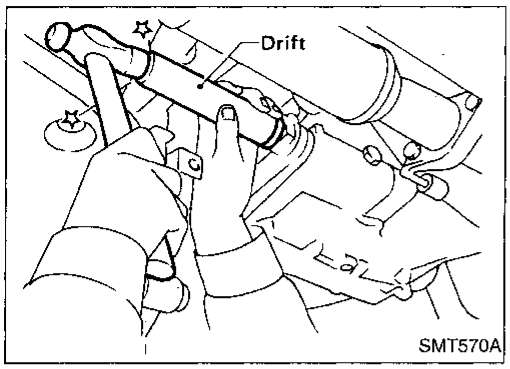

4. Install striking rod oil seal.
- **Apply multi-purpose grease to seal lip of oil seal before installing.**

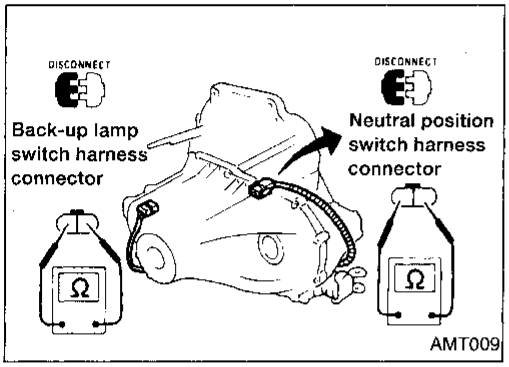

Position Switch Check

- Check continuity.

Switch	Gear position	Continuity
Back-up lamp switch	Reverse	Yes
	Except reverse	No
Neutral position switch	Neutral	Yes
	Except neutral	No

Removal

CAUTION:
Before separating transaxle from engine, remove the crankshaft position sensor (OBD) from transaxle.
Be careful not to damage sensor edge.

1. Remove battery negative terminal.
2. Remove air cleaner housing.

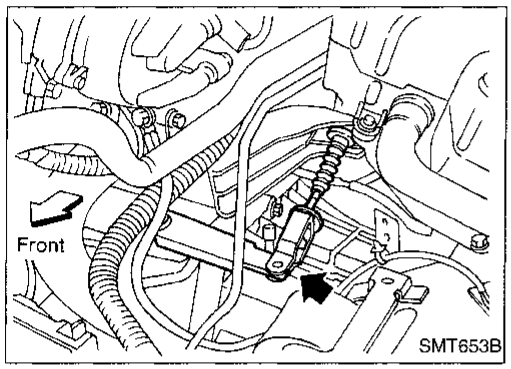

3. Disconnect clutch control cable.
4. Disconnect back-up lamp switch, neutral position switch, vehicle speed sensor and ground harness connectors.
5. Remove starter motor from transaxle.
6. Remove vehicle speed sensor from transaxle.
7. Remove crankshaft position sensor (OBD) from transaxle.

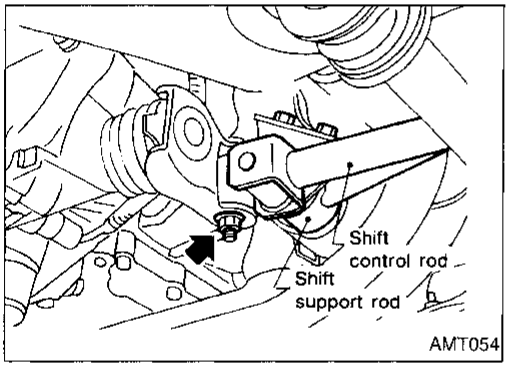

8. Remove shift control rod from transaxle.
9. Drain gear oil from transaxle.
10. Remove drive shafts from transaxle. Refer to FA section ("Removal", "FRONT AXLE — Drive Shaft").
11. Remove LH mounts.
12. Support the transaxle with a jack.
13. Remove bolts securing transaxle.
14. Lower transaxle.

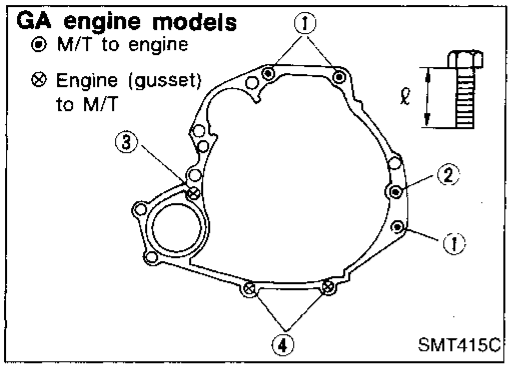

Installation

Install transaxle and any part removed.
Check clutch cable adjustment. Refer to CL section ("Adjusting Clutch Pedal", "INSPECTION AND ADJUSTMENT").

- **GA engine models**

Bolt No.	Tightening torque N·m (kg-m, ft-lb)	"ℓ" mm (in)
①	30 - 40 (3.1 - 4.1, 22 - 30)	70 (2.76)
②	30 - 40 (3.1 - 4.1, 22 - 30)	85 (3.35)
③	30 - 40 (3.1 - 4.1, 22 - 30)	30 (1.18)
④	16 - 21 (1.6 - 2.1, 12 - 15)	25 (0.98)
Front gusset to engine	30 - 40 (3.1 - 4.1, 22 - 30)	20 (0.79)
Rear gusset to engine	16 - 21 (1.6 - 2.1, 12 - 15)	16 (0.63)

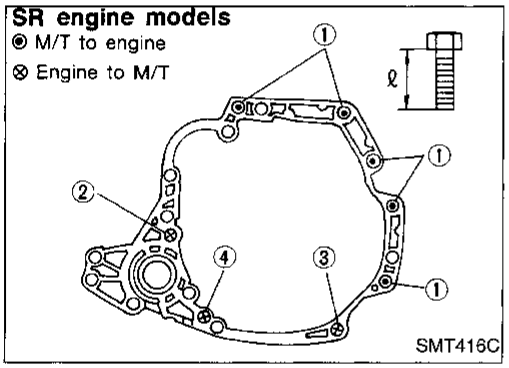

- **SR engine models**

Bolt No.	Tightening torque N·m (kg-m, ft-lb)	"ℓ" mm (in)
①	70 - 79 (7.1 - 8.1, 51 - 59)	55 (2.17)
②	70 - 79 (7.1 - 8.1, 51 - 59)	65 (2.56)
③	30 - 40 (3.1 - 4.1, 22 - 30)	35 (1.38)
④	30 - 40 (3.1 - 4.1, 22 - 30)	45 (1.77)

SEC. 341

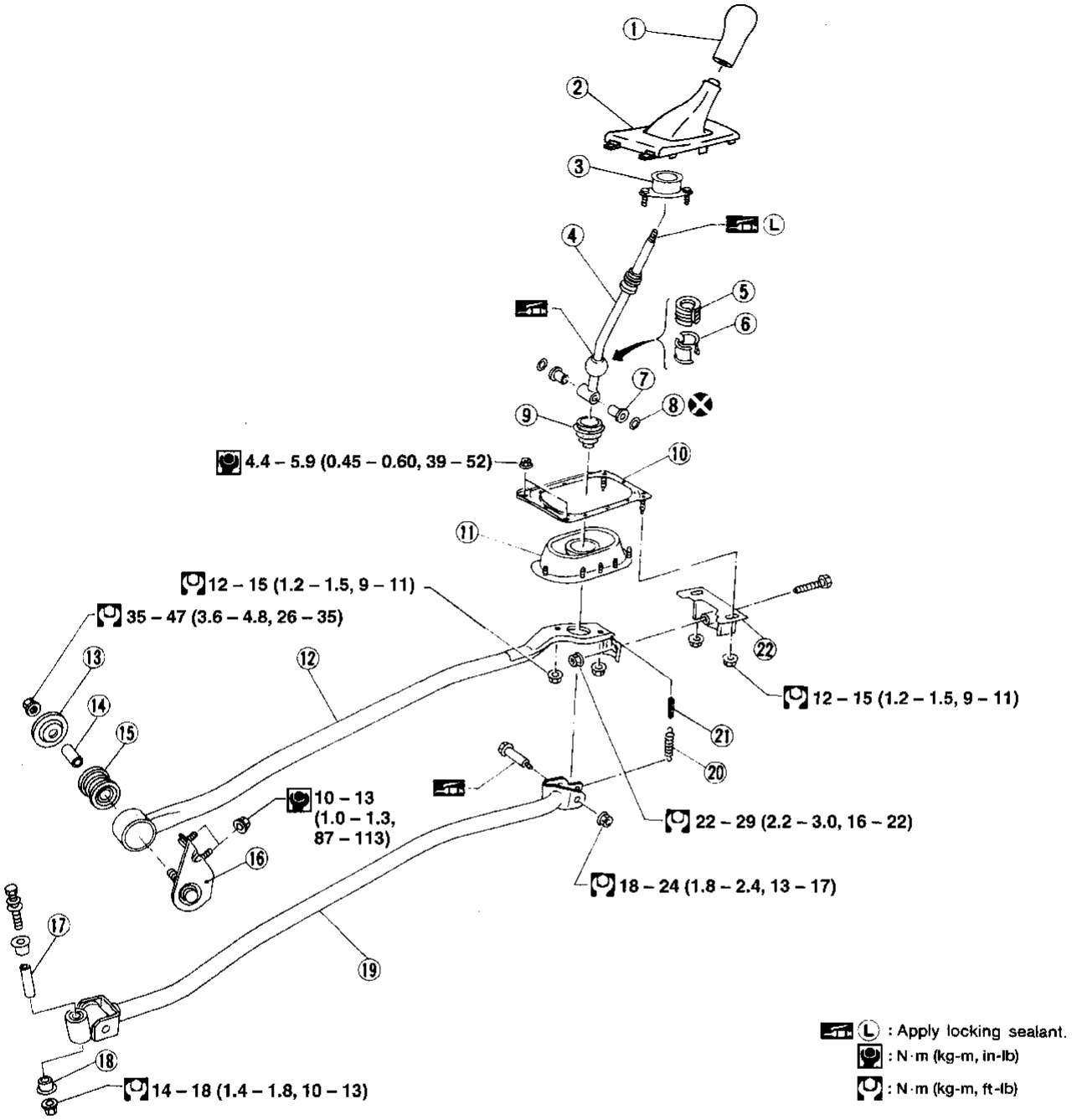

1. Control lever knob
2. Boot
3. Control lever socket
4. Control lever
5. Insulator
6. Seat
7. Bushing
8. O-ring
9. Dust boot
10. Plate bolt
11. Transaxle hole cover
12. Support rod
13. Plate
14. Collar
15. Bushing
16. Support rod bracket
17. Collar
18. Bushing
19. Shift control rod
20. Return spring
21. Return spring rubber
22. Holder bracket

Case Components

SEC. 320

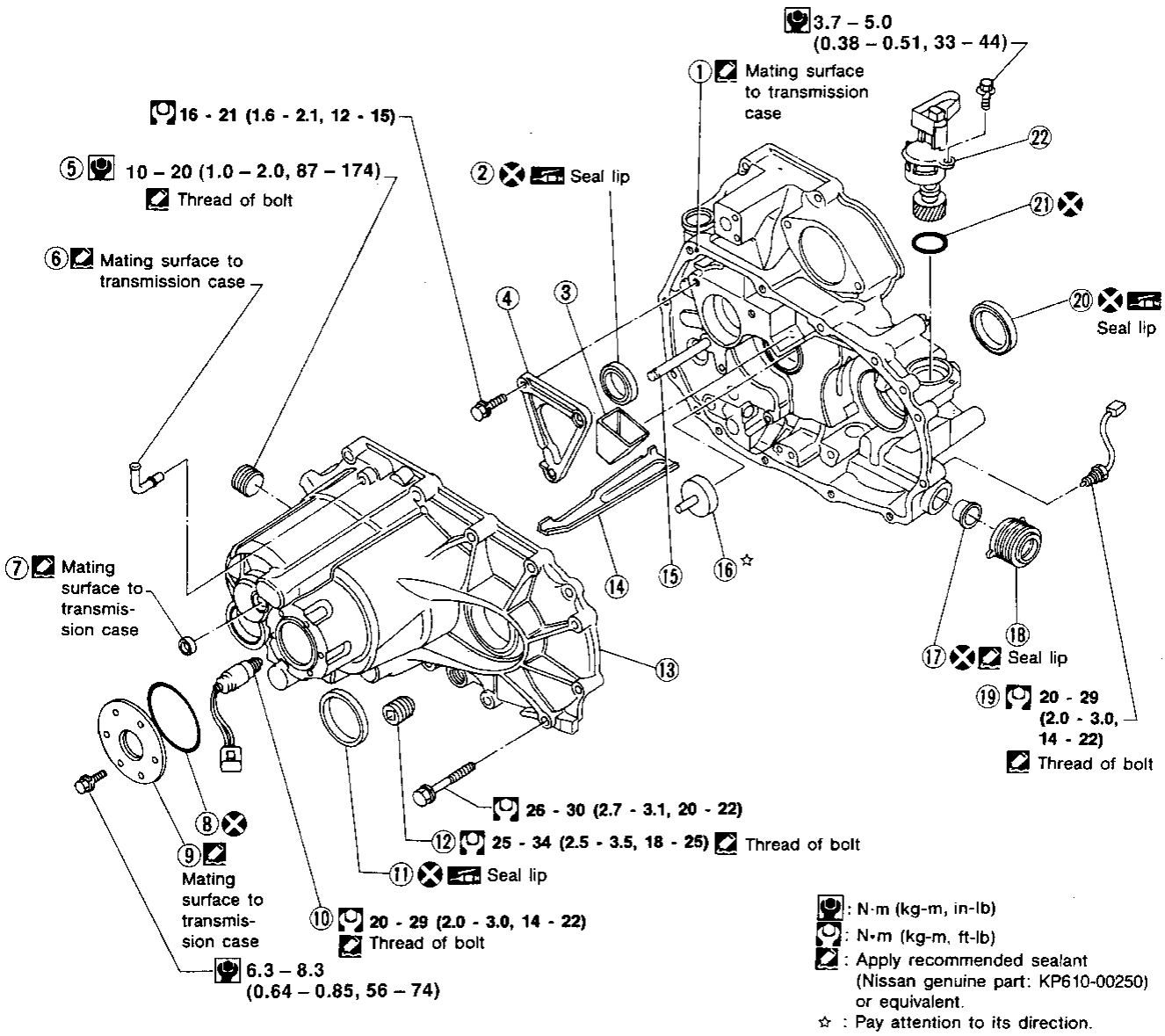

① Clutch housing
② Input shaft oil seal
③ Oil pocket
④ Bearing retainer
⑤ Filler plug
⑥ Air breather
⑦ Welch plug
⑧ O-ring
⑨ Case cover
⑩ Reverse lamp switch
⑪ Differential oil seal
⑫ Drain plug
⑬ Transmission case
⑭ Oil gutter
⑮ Reverse idler shaft
⑯ Oil channel
⑰ Striking rod oil seal
⑱ Boot
⑲ Neutral position switch
⑳ Differential oil seal
㉑ O-ring
㉒ Vehicle speed sensor

Gear Components

SEC. 322

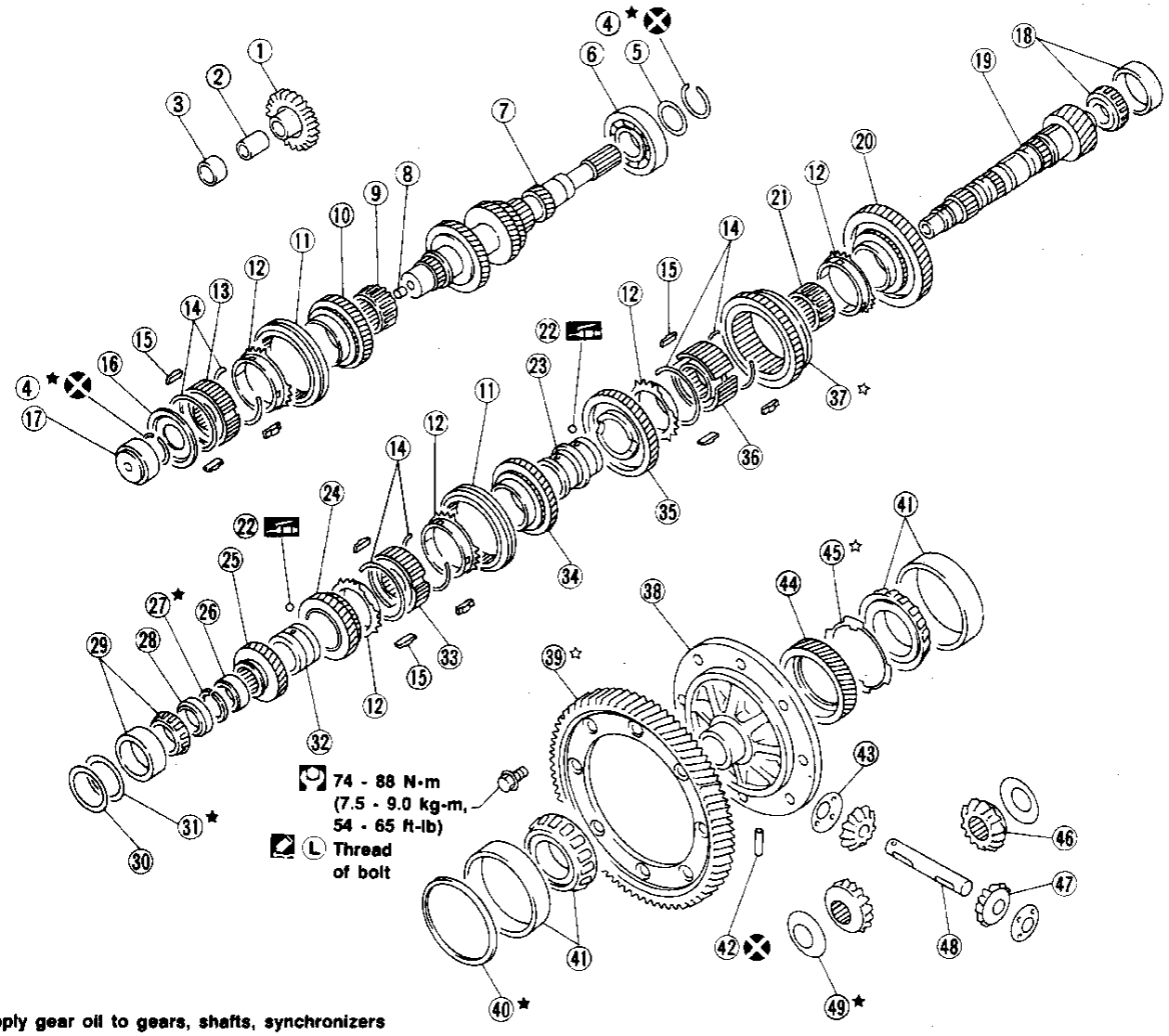

Apply gear oil to gears, shafts, synchronizers and bearings when assembling.

Ⓛ : Apply locking sealant.
★ : Select proper thickness.
☆ : Pay attention to its direction.

AMT078

1. Reverse idler gear
2. Reverse idler bushing
3. Reverse idler spacer
4. Snap ring
5. Spacer
6. Input shaft front bearing
7. Input shaft
8. Oil plug
9. 5th gear needle bearing
10. 5th input gear
11. Coupling sleeve
12. Baulk ring
13. 5th synchronizer hub
14. Spread spring
15. Shifting insert
16. 5th stopper
17. Input shaft rear bearing
18. Mainshaft front bearing
19. Mainshaft
20. 1st main gear
21. 1st gear needle bearing
22. Steel ball
23. 2nd & 3rd bushing
24. 4th main gear
25. 5th main gear
26. Thrust washer
27. Mainshaft C-ring
28. C-ring holder
29. Mainshaft rear bearing
30. Spacer
31. Mainshaft bearing adjusting shim
32. 4th bushing
33. 3rd & 4th synchronizer hub
34. 3rd main gear
35. 2nd main gear
36. 1st & 2nd synchronizer hub
37. Reverse main gear (Coupling sleeve)
38. Differential case
39. Final gear
40. Differential side bearing adjusting shim
41. Differential side bearing
42. Retaining pin
43. Pinion mate thrust washer
44. Speedometer drive gear
45. Speedometer stopper
46. Side gear
47. Pinion mate gear
48. Pinion mate shaft
49. Side gear thrust washer

Shift Control Components

SEC. 328

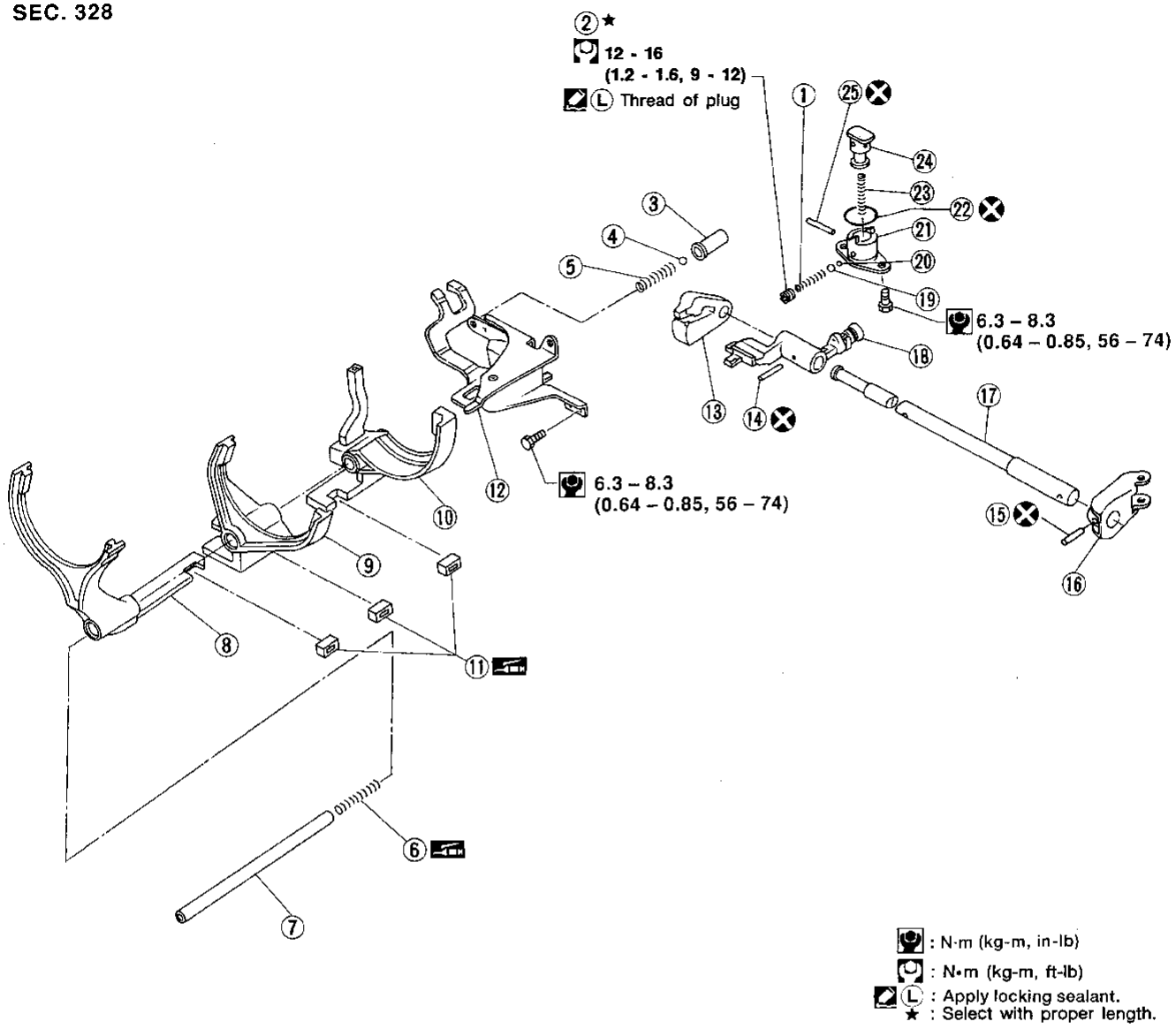

AMT073

① Reverse check spring
② Reverse check plug
③ Check ball plug
④ Shift check ball
⑤ Shift check spring
⑥ Fork shaft support spring
⑦ Fork shaft
⑧ 5th shift fork
⑨ 3rd & 4th shift fork
⑩ 1st & 2nd shift fork
⑪ Shifter cap
⑫ Control bracket
⑬ Striking interlock
⑭ Retaining pin
⑮ Retaining pin
⑯ Yoke
⑰ Striking rod
⑱ Striking lever
⑲ Check ball (Large)
⑳ Check ball (Small)
㉑ Check sleeve
㉒ O-ring
㉓ Select return spring
㉔ Check plunger
㉕ Stopper pin

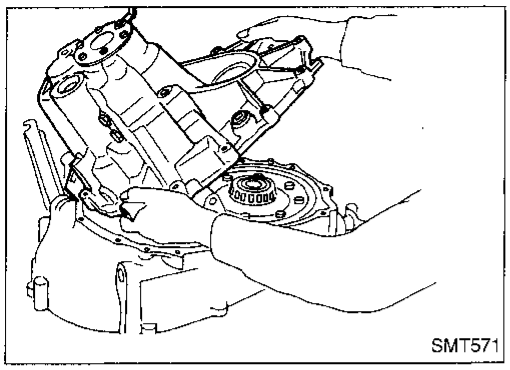

1. Remove transmission case while slightly tilting it to prevent 5th shift fork from interfering with case.

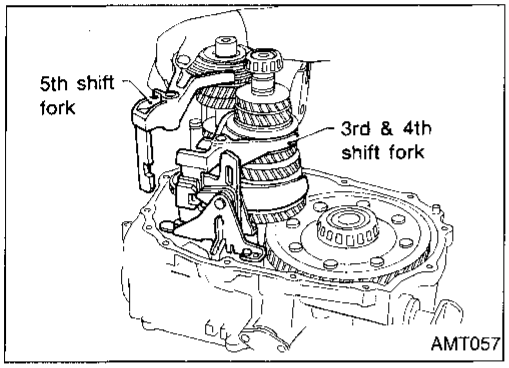

2. Draw out reverse idler spacer and fork shaft, then remove 5th and 3rd & 4th shift forks.
- **Be careful not to lose shifter cap.**

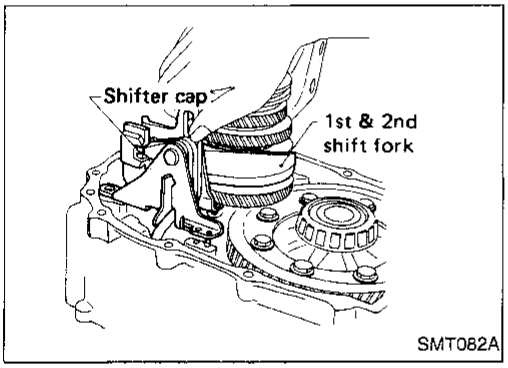

3. Remove control bracket with 1st & 2nd shift fork.
- **Be careful not to lose shifter cap.**

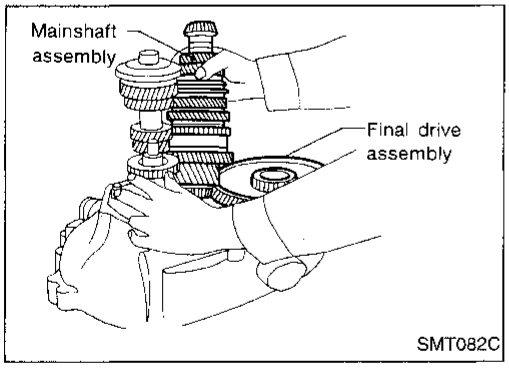

4. Remove gear components from clutch housing.

a. Remove mainshaft and final drive assembly.
- **Always withdraw mainshaft straight out. Failure to do so can damage resin oil channel on clutch housing side.**

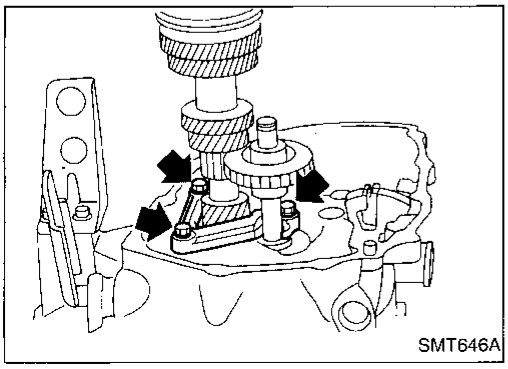

b. Remove bearing retainer securing bolts.

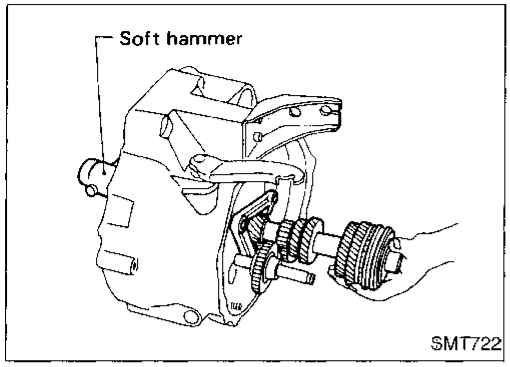

c. Remove input shaft together with bearing retainer and reverse idler gear by tapping lightly.

- **Do not draw out reverse idler shaft from clutch housing because these fittings will be loose.**
- **Be careful not to scratch oil seal lip with shaft spline when removing input shaft.**

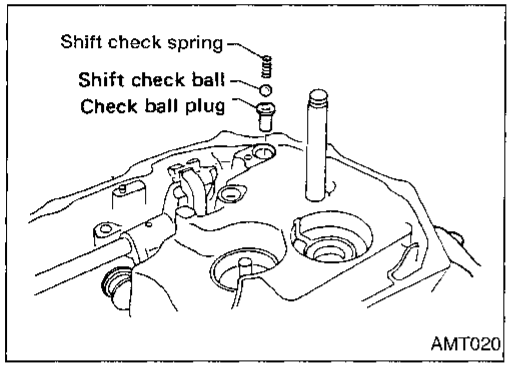

5. Remove oil pocket, shift check ball, shift check spring and check ball plug.

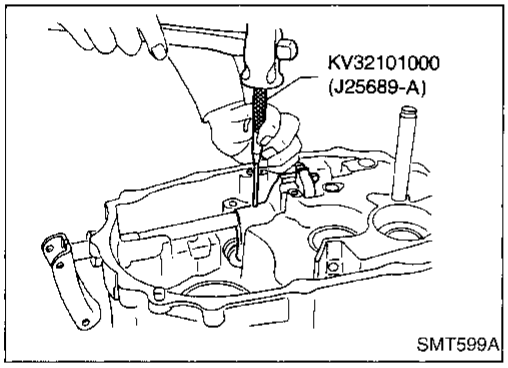

6. Drive retaining pin out of striking lever with Tool, then remove striking rod, striking lever and striking interlock.

- **Select a position where retaining pin does not interfere with clutch housing when removing retaining pin.**

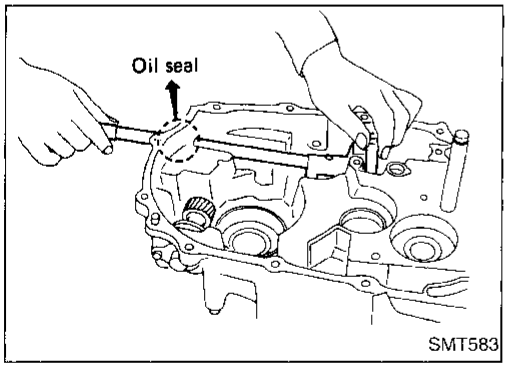

- **Be careful not to damage oil seal lip, when removing striking rod. If necessary, tape edges of striking rod.**

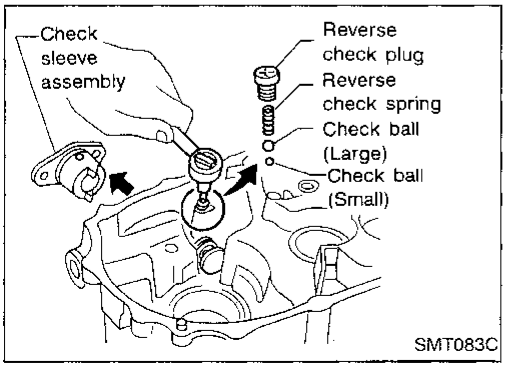

7. Remove reverse check plug, then detach reverse check spring and check balls.
8. Remove check sleeve assembly.

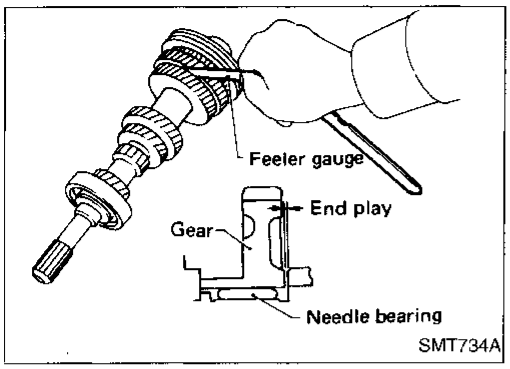

Input Shaft and Gears

DISASSEMBLY

1. Before disassembly, check 5th input gear end play.
   Gear end play:
   0.18 - 0.31 mm (0.0071 - 0.0122 in)

- If not within specification, disassemble and check contact surface of gear, shaft and hub. Then check clearance of snap ring groove. Refer to "ASSEMBLY", MT-17.

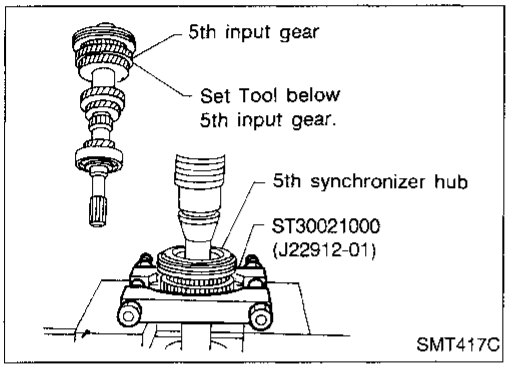

2. Remove snap ring and 5th stopper.
3. Remove 5th synchronizer, 5th input gear and 5th gear needle bearing with Tool.

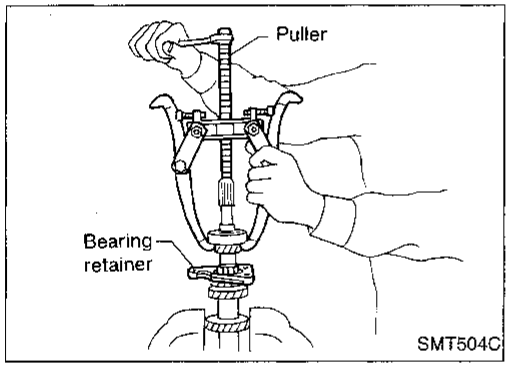

4. Remove snap ring of input shaft front bearing and spacer.
5. Pull out input shaft front bearing.
6. Remove bearing retainer.

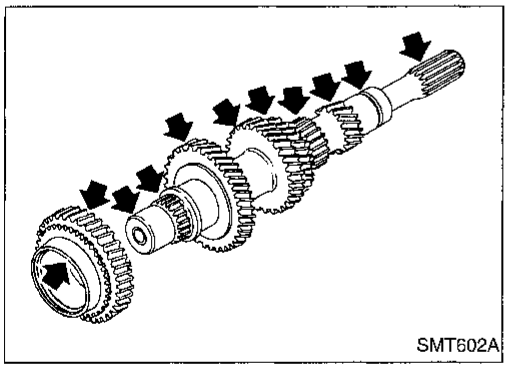

INSPECTION

Gear and shaft

- Check shaft for cracks, wear or bending.
- Check gears for excessive wear, chips or cracks.

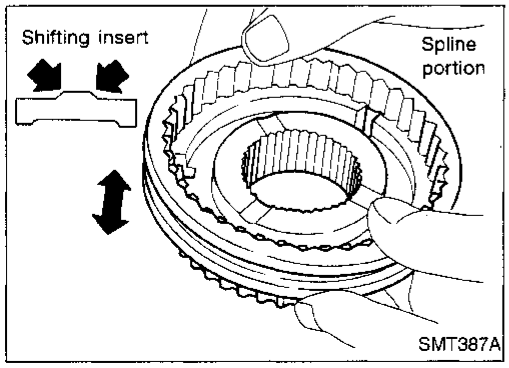

Synchronizer

- Check spline portion of coupling sleeves, hubs and gears for wear or cracks.
- Check baulk rings for cracks or deformation.
- Check shifting inserts for wear or deformation.

Input Shaft and Gears (Cont'd)

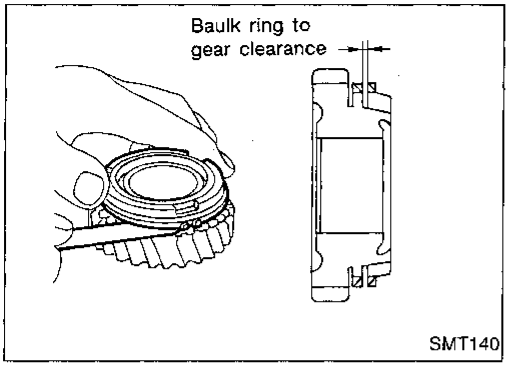

- Measure clearance between baulk ring and gear.
  Clearance between baulk ring and gear:
  Standard
  1.0 - 1.35 mm (0.0394 - 0.0531 in)
  Wear limit
  0.7 mm (0.028 in)

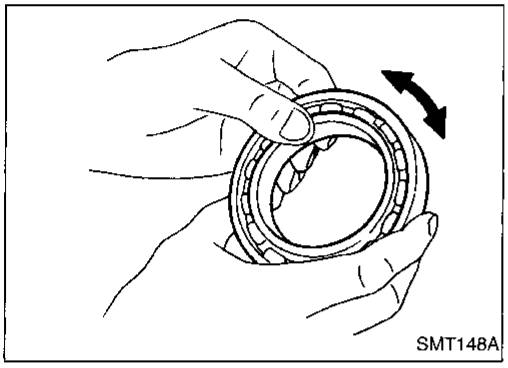

Bearing

- Make sure bearings roll freely and are free from noise, cracks, pitting or wear.

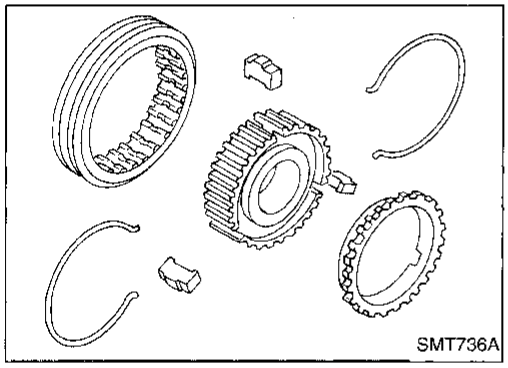

ASSEMBLY

1. Assemble 5th synchronizer.

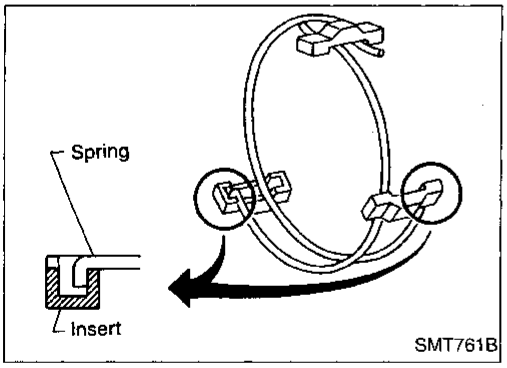

- **Be careful not to hook front and rear ends of spread spring to the same insert.**

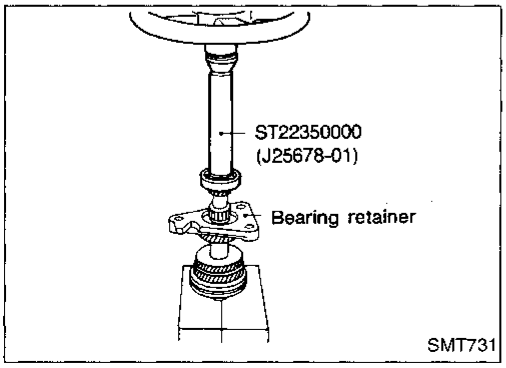

2. Install bearing retainer.
3. Press on input shaft front bearing.
4. Install spacer.

Input Shaft and Gears (Cont'd)

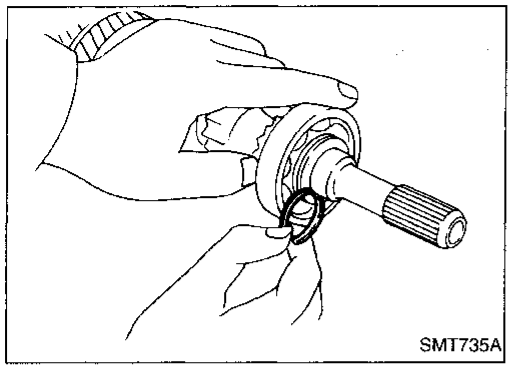

5. Select and install snap ring that gives the proper clearance of input shaft groove.
   Allowable clearance of groove:
   0 - 0.1 mm (0 - 0.004 in)
   Snap ring of input shaft front bearing:
   Refer to SDS, MT-60.

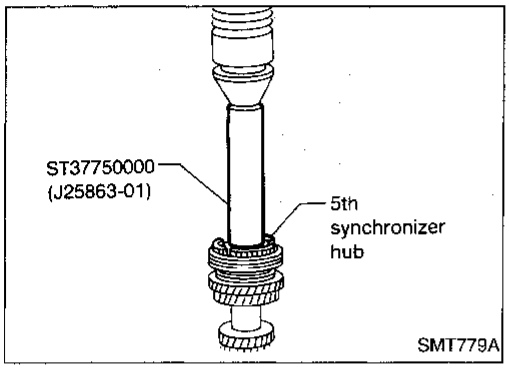

6. Install 5th gear needle bearing, 5th input gear, 5th synchronizer and 5th stopper with Tool.
7. Measure gear end play as the final check. Refer to "DISASSEMBLY", MT-16.

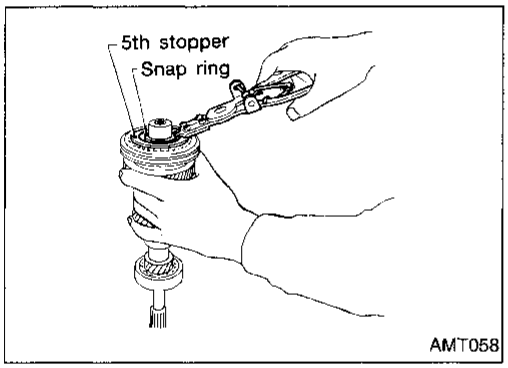

8. Select and install snap ring that gives the proper clearance of input shaft groove.
   Allowable clearance of groove:
   0 - 0.1 mm (0 - 0.004 in)
   Snap ring of 5th synchronizer:
   Refer to SDS, MT-60.

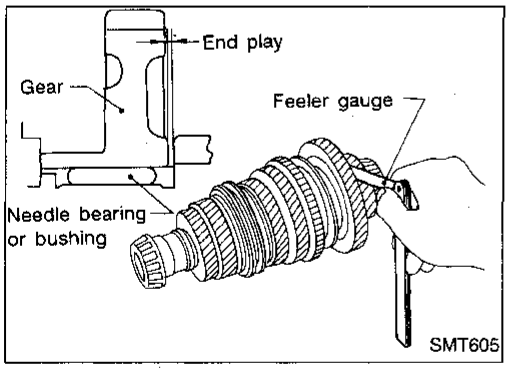

Mainshaft and Gears

DISASSEMBLY

1. Before disassembly, measure gear end plays.
   Gear end play:
   1st main gear
   0.18 - 0.31 mm (0.0071 - 0.0122 in)
   2nd, 3rd, 4th main gear
   0.20 - 0.30 mm (0.0079 - 0.0118 in)

- If end play is not within the specified limit, disassemble and check the parts. Refer to "ASSEMBLY", MT-20.

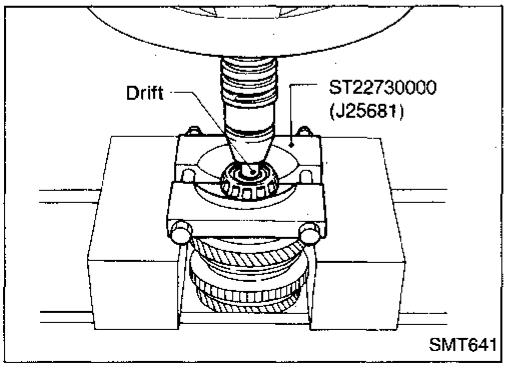

2. Press out mainshaft front and rear bearing with Tool.

Mainshaft and Gears (Cont'd)

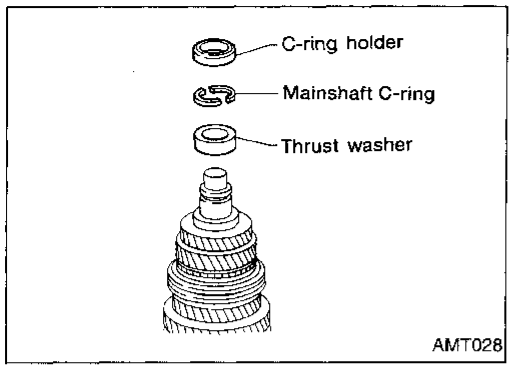

3. Remove C-ring holder, mainshaft C-rings and thrust washer.

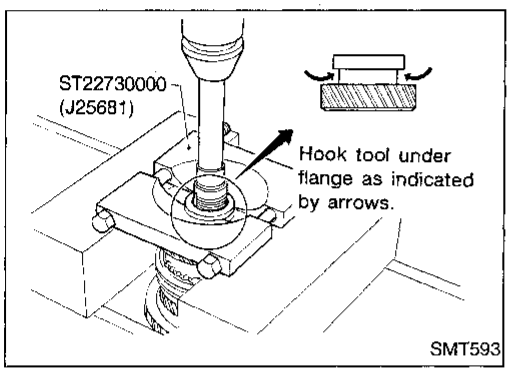

4. Press out 5th main gear with Tool.

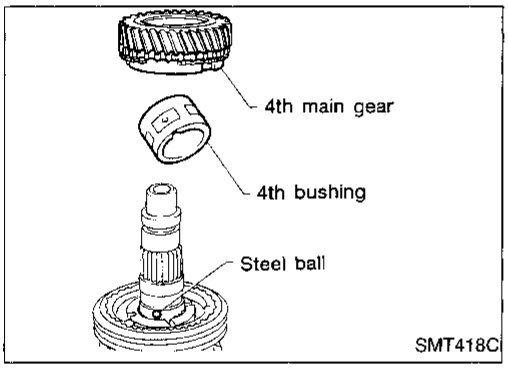

5. Remove 4th main gear, 4th bushing and steel ball.
- **Be careful not to lose steel ball.**

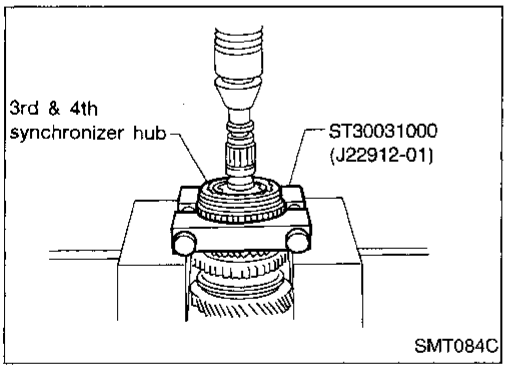

6. Remove 3rd & 4th synchronizer, 3rd main gear, 2nd & 3rd bushing, steel ball and 2nd main gear with Tool.
- **Be careful not to lose steel ball.**

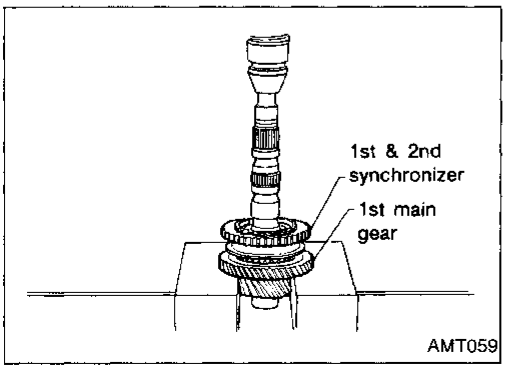

7. Remove 1st & 2nd synchronizer and 1st main gear, then remove 1st gear needle bearing.

Mainshaft and Gears (Cont'd)

INSPECTION

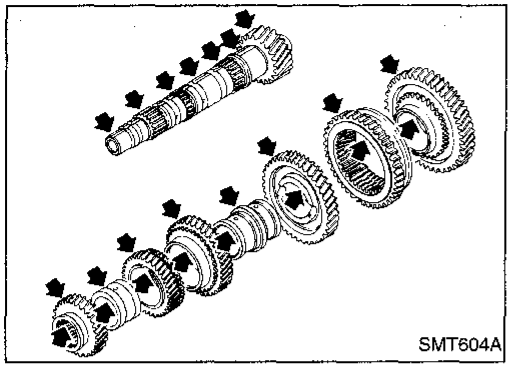

Gear and shaft

- Check shaft for cracks, wear or bending.
- Check gears for excessive wear, chips or cracks.

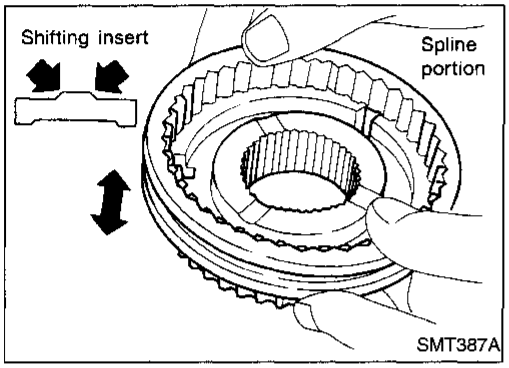

Synchronizer

- Check spline portion of coupling sleeves, hubs and gears for wear or cracks.
- Check baulk rings for cracks or deformation.
- Check shifting inserts for wear or deformation.

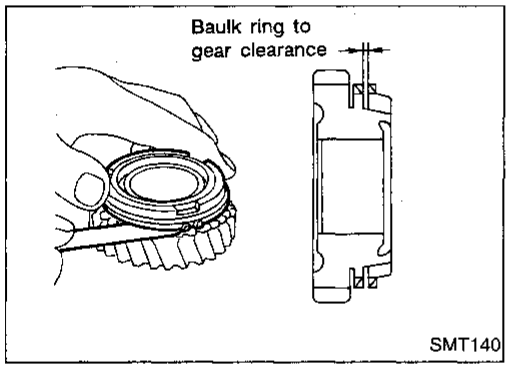

- Measure clearance between baulk ring and gear.
  Clearance between baulk rings and 1st-4th main gears:
  Standard
  1.0 - 1.35 mm (0.0394 - 0.0531 in)
  Wear limit
  0.7 mm (0.028 in)

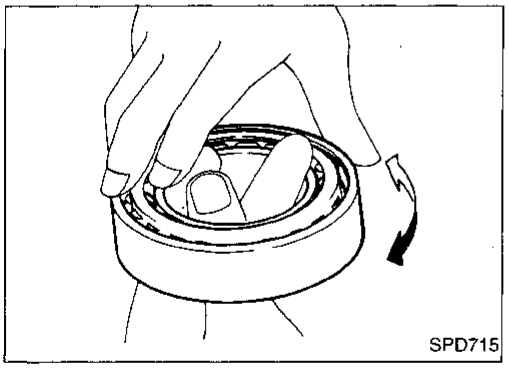

Bearing

- Make sure bearings roll freely and are free from noise, cracks, pitting or wear.
- **When replacing tapered roller bearing, replace outer and inner race as a set.**

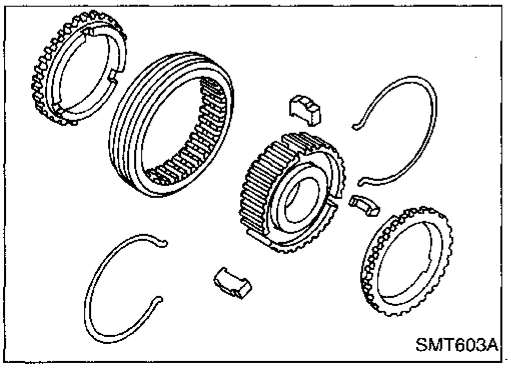

ASSEMBLY

1. Assemble 1st & 2nd and 3rd & 4th synchronizers.

Mainshaft and Gears (Cont'd)

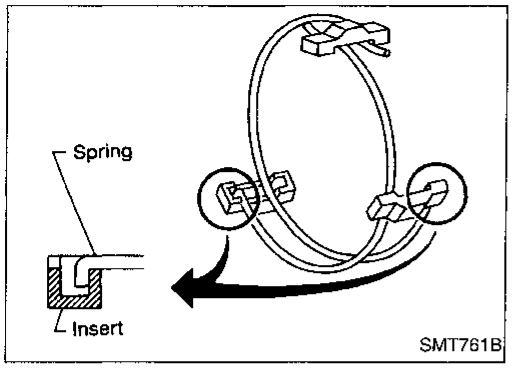

- **Be careful not to hook front and rear ends of spread spring to the same insert.**

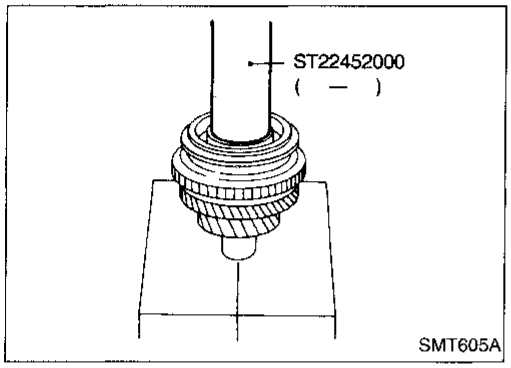

2. Install 1st gear needle bearing and 1st main gear.
3. Press on 1st & 2nd synchronizer.

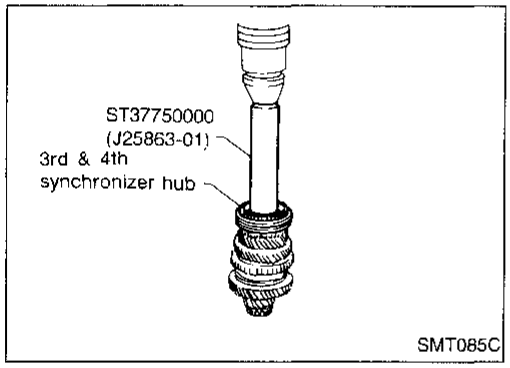

4. Install steel ball, 2nd main gear, 2nd & 3rd bushing, 3rd main gear and 3rd & 4th synchronizer with Tool.
- **Apply multi-purpose grease to steel ball before installing it.**
- **2nd & 3rd bushing has a groove in which steel ball fits.**

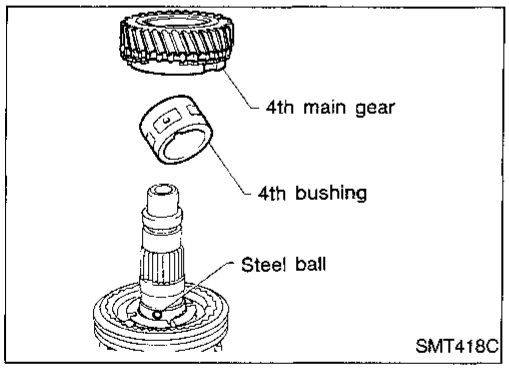

5. Install steel ball, 4th bushing and 4th main gear.
- **Apply multi-purpose grease to steel ball before installing it.**
- **4th bushing has a groove in which steel ball fits.**

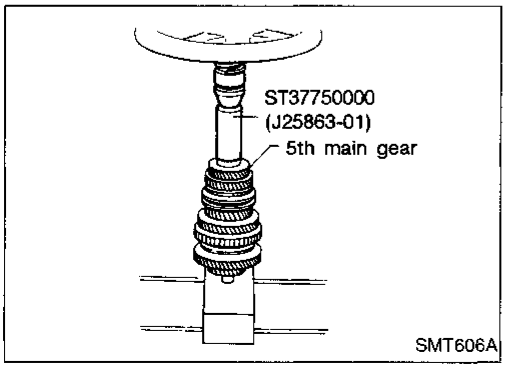

6. Press on 5th main gear.

Mainshaft and Gears (Cont'd)

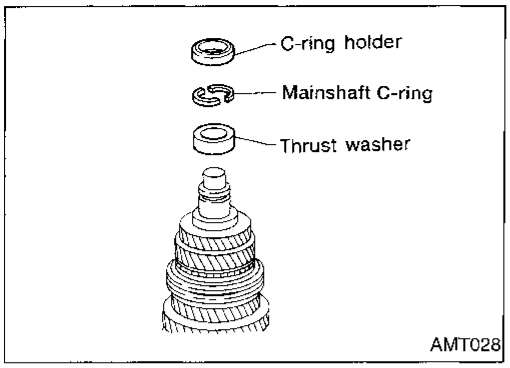

7. Install thrust washer.
8. Select and install mainshaft C-ring that gives proper clearance of groove in mainshaft.
   Allowable clearance of groove:
   0 - 0.1 mm (0 - 0.004 in)
   Mainshaft C-ring:
   Refer to SDS, MT-60.
9. Install C-ring holder.

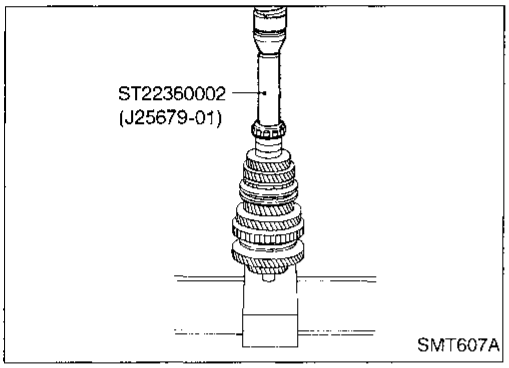

10. Press on mainshaft rear bearing with Tool.

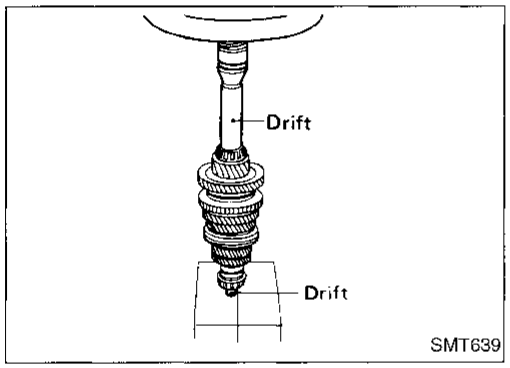

11. Press on mainshaft front bearing.
12. Measure gear end play as the final check. Refer to "DISASSEMBLY", MT-18.

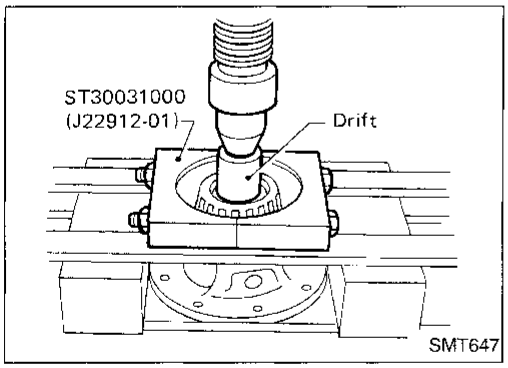

Final Drive

DISASSEMBLY

1. Remove final gear.
2. Remove speedometer drive gear by cutting it.
3. Press out differential side bearings with Tool.

- **Be careful not to mix up the right and left bearings.**

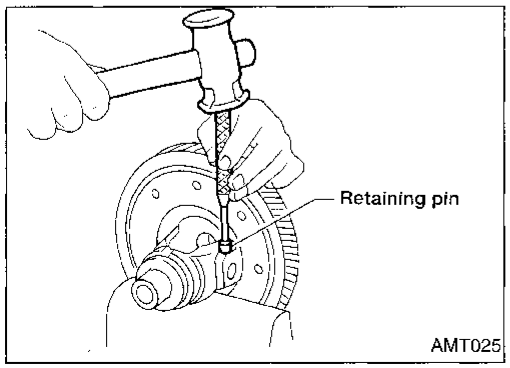

4. Drive out retaining pin and draw out pinion mate shaft.
5. Remove pinion mate gears and side gears.

Final Drive (Cont'd)

INSPECTION

Gear, washer, shaft and case

- Check mating surfaces of differential case, side gears and pinion mate gears.
- Check washers for wear.

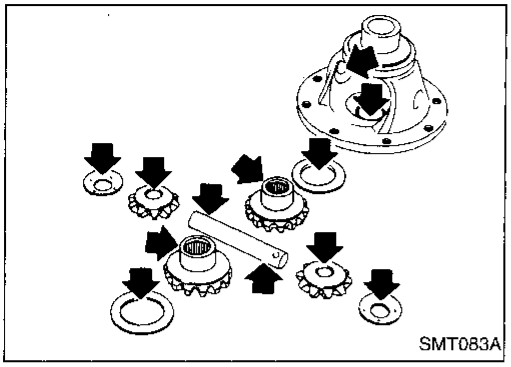
SMT083A

Bearing

- Make sure bearings roll freely and are free from noise, cracks, pitting or wear.
- **When replacing tapered roller bearing, replace outer and inner race as a set.**

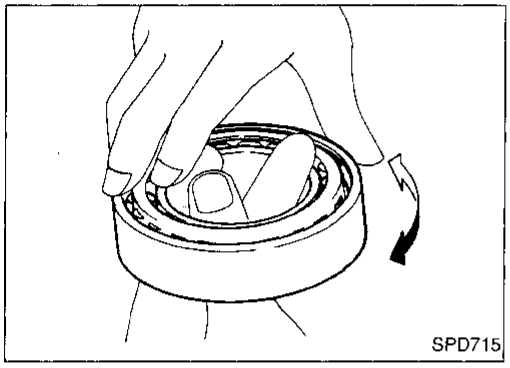
SPD715

ASSEMBLY

1. Attach side gear thrust washers to side gears and install in differential case.
2. Install pinion mate washers and pinion mate gears.

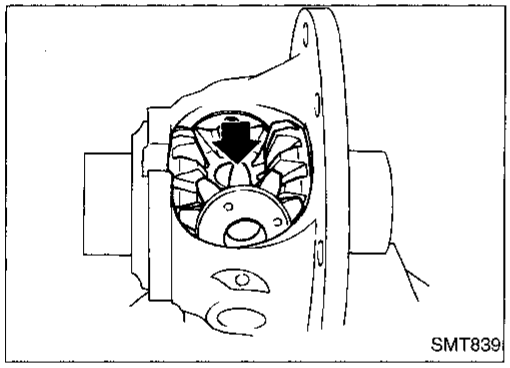
SMT839

3. Insert pinion mate shaft.
- **When inserting, be careful not to damage pinion mate thrust washers.**

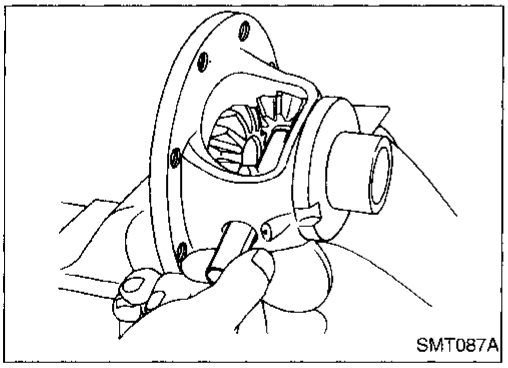
SMT087A

4. Measure clearance between side gear and differential case with washers following the procedure below:

a. Set Tool and dial indicator on side gear.

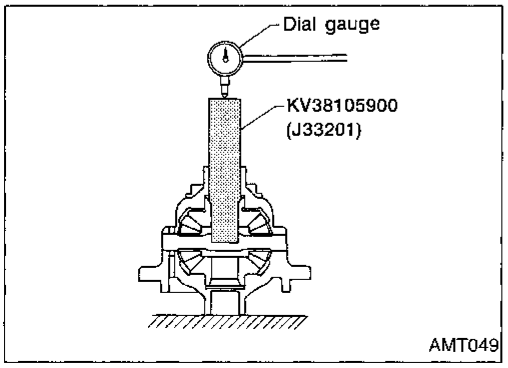

AMT049

Final Drive (Cont'd)

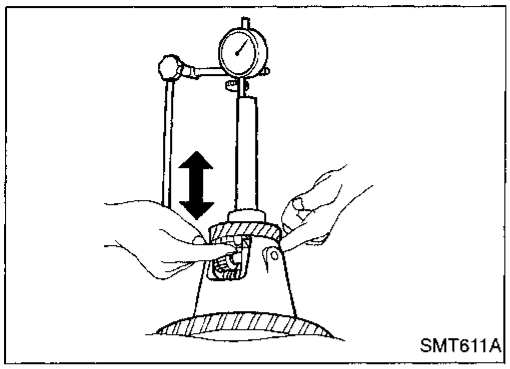

b. Move side gear up and down to measure dial indicator deflection. Always measure indicator deflection on both side gears.
   Clearance between side gear and differential case with washers:
   0.1 - 0.2 mm (0.004 - 0.008 in) or less
c. If not within specification, adjust clearance by changing thickness of side gear thrust washers.
   Side gear thrust washer:
   Refer to SDS, MT-60.

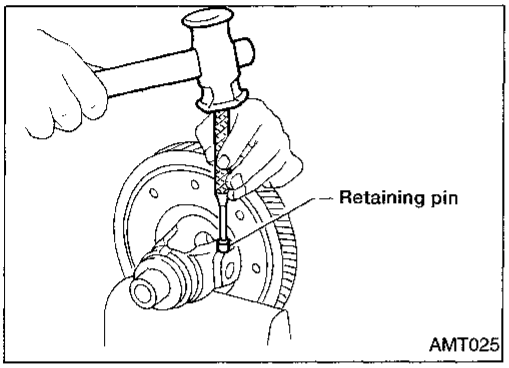

5. Install retaining pin.
- **Make sure that retaining pin is flush with case.**

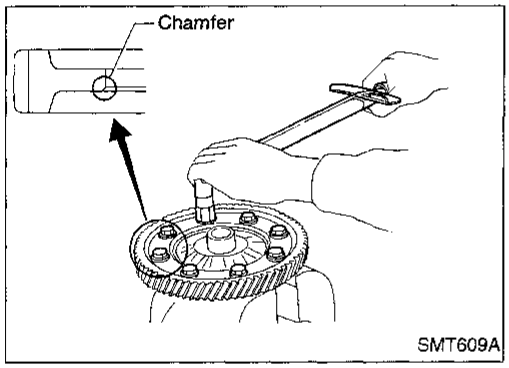

6. Install final gear.
- **Apply locking sealant to final gear fixing bolts before installing them.**
7. Install speedometer drive gear and stopper.

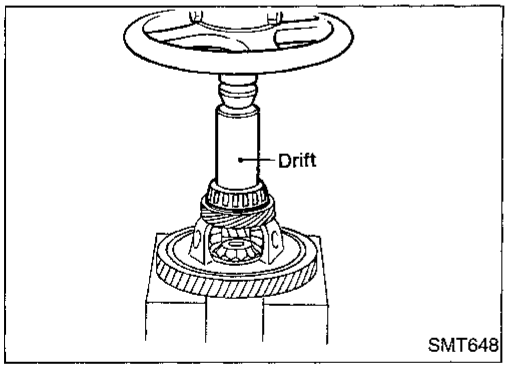

8. Press on differential side bearings.

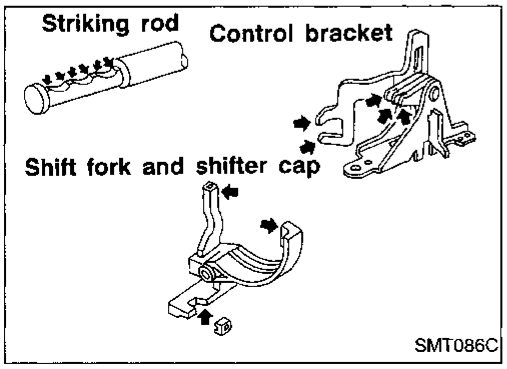

Shift Control Components

INSPECTION

- Check contact surface and sliding surface for wear, scratches, projections or other damage.

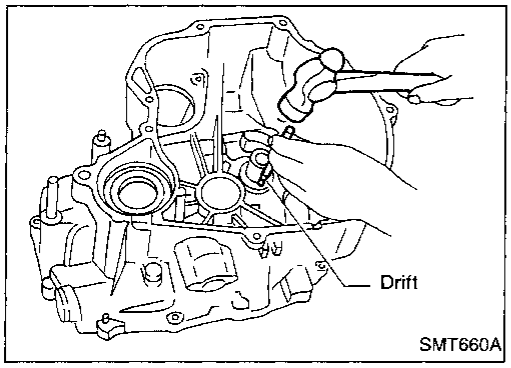

Case Components

Input shaft oil seal

1. Drive out input shaft oil seal.

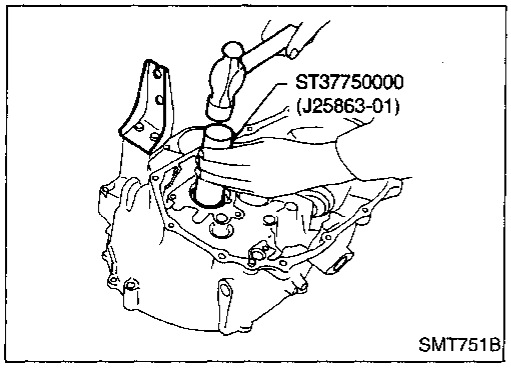

2. Install input shaft oil seal with Tool.
- **Apply multi-purpose grease to seal lip of oil seal before installing.**

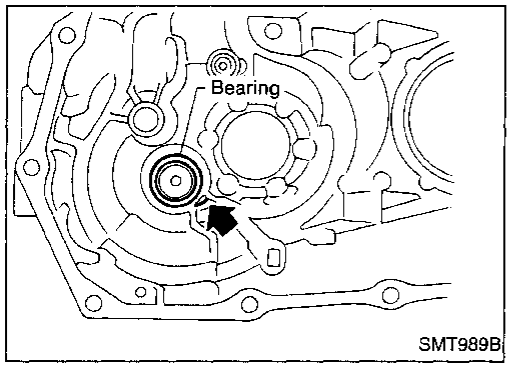

Input shaft rear bearing

1. Remove welch plug from transmission case.

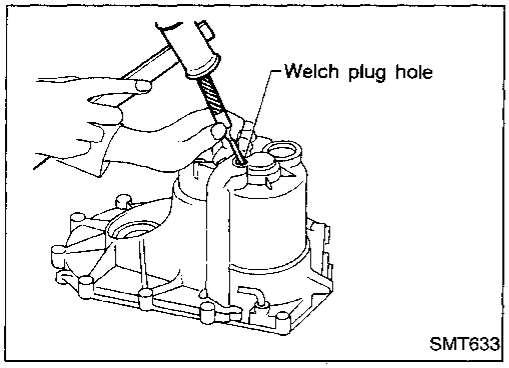

2. Remove input shaft rear bearing by tapping it from welch plug hole.

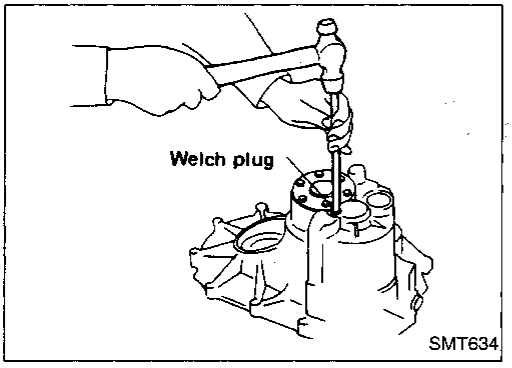

3. Install welch plug.
- **Apply recommended sealant to mating surface of transmission case.**

Case Components (Cont'd)

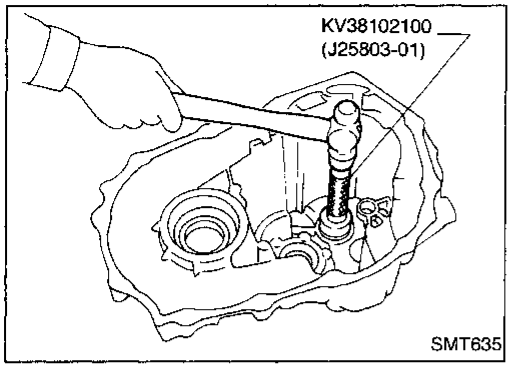

4. Install input shaft rear bearing with Tool.

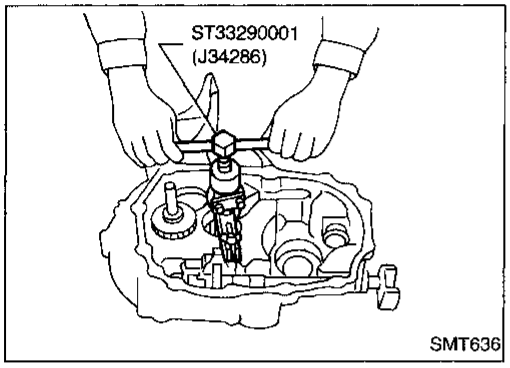

Mainshaft front bearing outer race and oil channel

1. Remove mainshaft front bearing outer race with Tool.
2. Remove oil channel.

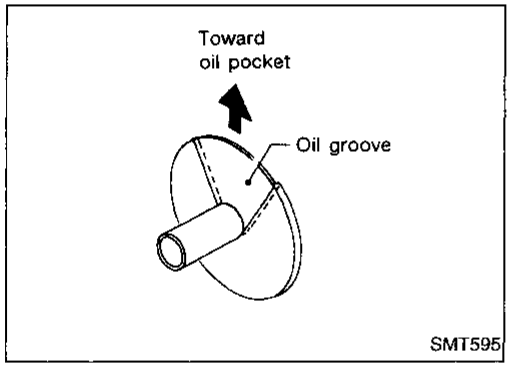

3. Install oil channel.
- **Ensure the oil groove faces the oil pocket.**

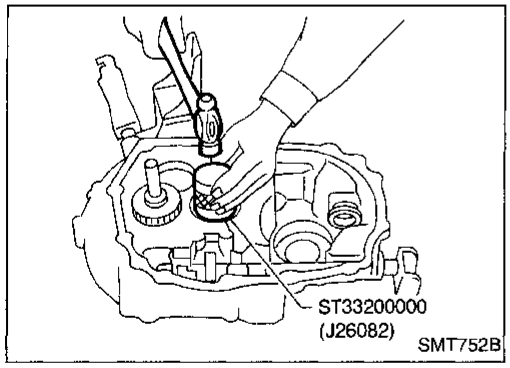

4. Install mainshaft front bearing outer race with Tool.

Differential side bearing outer race

- **Refer to "Differential Side Bearing Preload", MT-27.**

Mainshaft rear bearing outer race

- **Refer to "Mainshaft Bearing Preload", MT-28.**

Differential Side Bearing Preload

If any of the following parts are replaced, adjust differential side bearing preload.

- **Differential case**
- **Differential side bearing**
- **Clutch housing**
- **Transmission case**

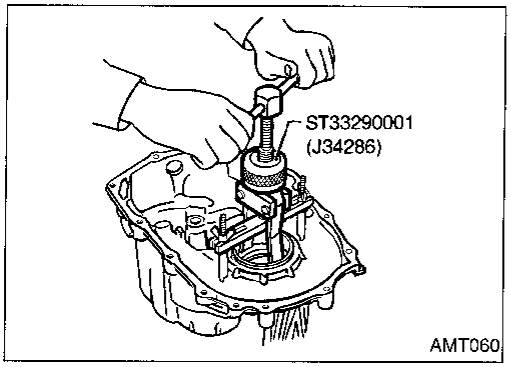

1. Remove differential side bearing outer race with Tool (transmission case side) and shim(s).

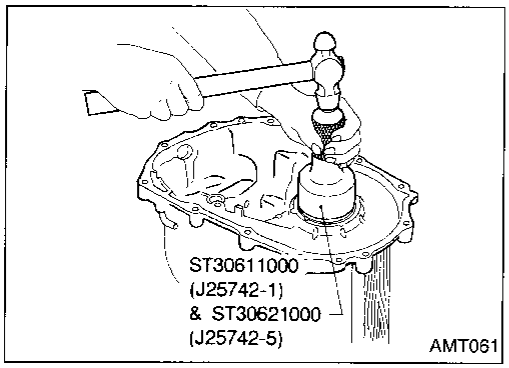

2. Install differential side bearing outer race without shim(s).
3. Install final drive assembly on clutch housing.
4. Install transmission case on clutch housing.

- **Tighten transmission case fixing bolts to the specified torque. Refer to MT-11.**

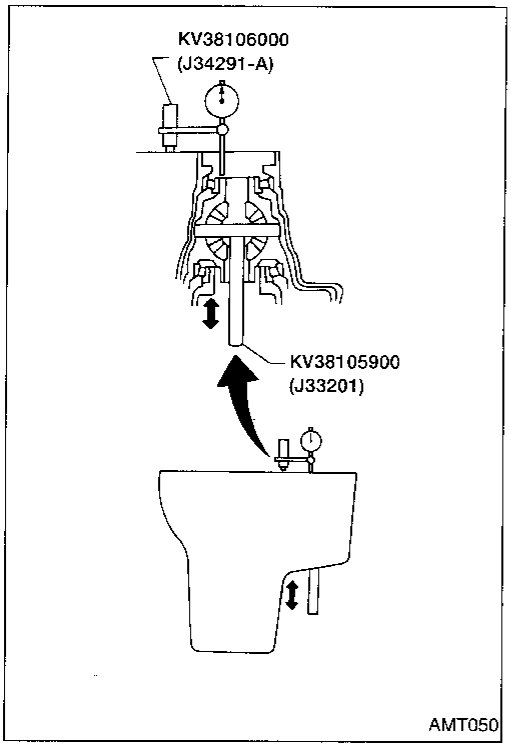

5. Set dial indicator on front end of differential case.
6. Insert Tool all the way into differential side gear.
7. Move Tool up and down and measure dial indicator deflection.
8. Select shim considering bearing preload.

- **Suitable shim thickness = Dial indicator deflection + specified bearing preload**
- **Differential side bearing adjusting shims and preload: Refer to SDS, MT-61.**

9. Install selected shim(s) and differential side bearing outer race.
10. Check differential side bearing turning torque.

a. Install final drive assembly on clutch housing.
b. Install transmission case on clutch housing.

- **Tighten transmission case fixing bolts to the specified torque. Refer to MT-11.**

Differential Side Bearing Preload (Cont'd)

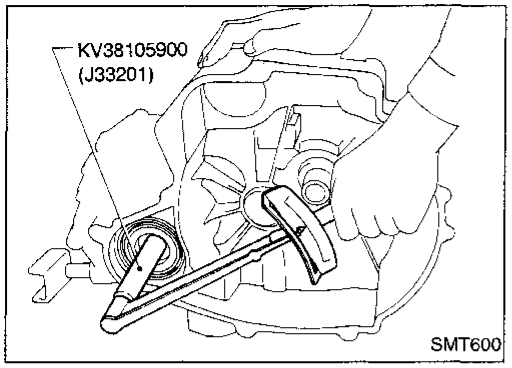

c. Measure turning torque of final drive assembly.
   Turning torque of final drive assembly (New bearing):
   2.0 - 7.8 N·m (20 - 80 kg-cm, 17 - 69 in-lb)

- **When old bearing is used again, turning torque will be slightly less than the above.**
- **Make sure torque is close to the specified range.**
- **Changes in turning torque of final drive assembly per revolution should be within 1.0 N·m (10 kg-cm, 8.7 in-lb) without binding.**

Mainshaft Bearing Preload

If any of the following parts are replaced, adjust mainshaft bearing preload.

- **Mainshaft**
- **Mainshaft bearings**
- **Clutch housing**
- **Transmission case**

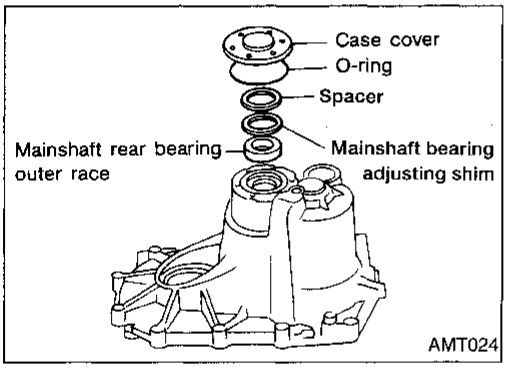

1. Remove case cover, O-ring, mainshaft bearing adjusting shim, spacer and mainshaft rear bearing outer race from transmission case.
2. Install mainshaft assembly on clutch housing.
3. Install transmission case on clutch housing.

- **Tighten transmission case fixing bolts to the specified torque. Refer to MT-11.**

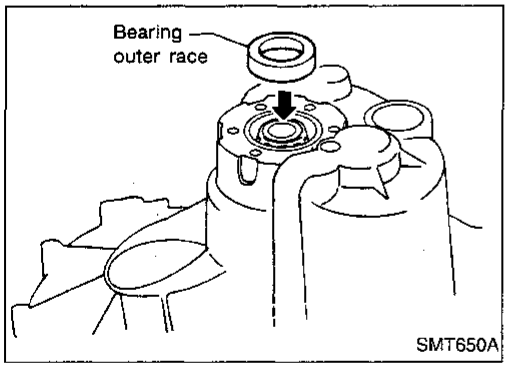

4. Install mainshaft rear bearing outer race on inner race.

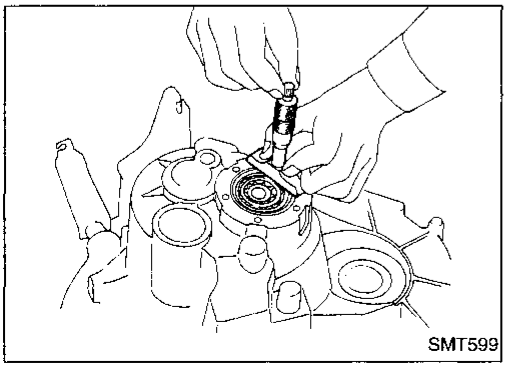

5. Measure distance from transmission case to bearing outer race.

- **Make sure that bearing is properly seated.**

6. Select shim. Refer to SDS, MT-61.
7. Check total turning torque after assembling. Refer to "ASSEMBLY", MT-29.

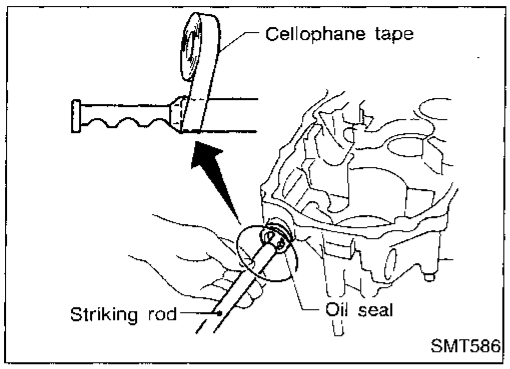

1. Install striking rod, lever and interlock.
- **Tape edges of striking rod to avoid damaging oil seal lip during installation. When taped edges of striking rod are past the oil seal, remove tape.**

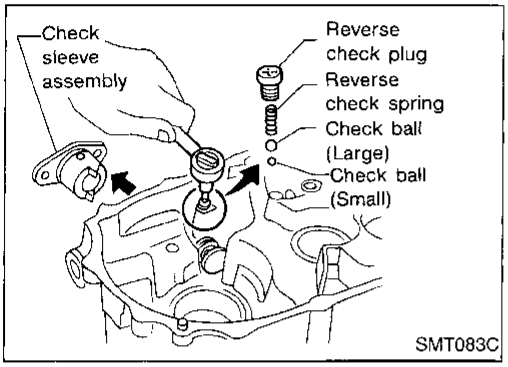

2. Install reverse check sleeve assembly.
3. Install check balls, reverse check spring and check plug.

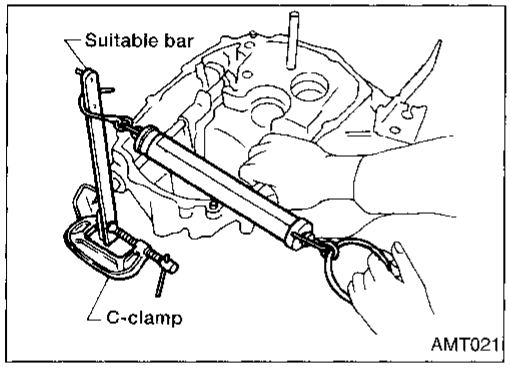

4. Check reverse check turning torque (At striking rod).
   Reverse check turning torque (At striking rod):
   Refer to SDS, MT-60.
- If not within specification, select another check plug having a different length and reinstall it.
   Reverse check plug:
   Refer to SDS, MT-60.
5. Install selected reverse check plug.
- **Apply locking sealant to thread of plug before installing it.**

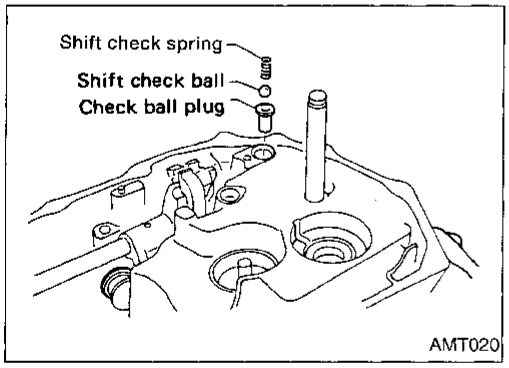

6. Install check ball plug, shift check ball and shift check spring.
7. Install oil pocket.

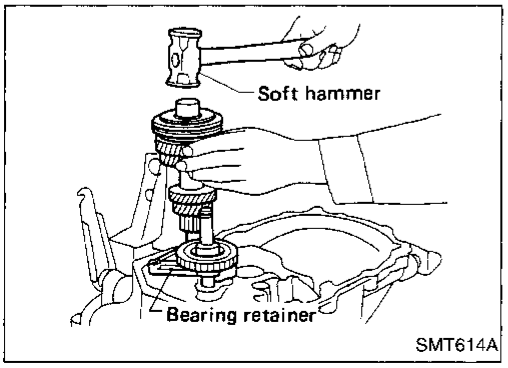

8. Install gear components onto clutch housing.
a. Install input shaft assembly and reverse idler gear.
- **Be careful not to damage oil seal lip with splines of input shaft.**

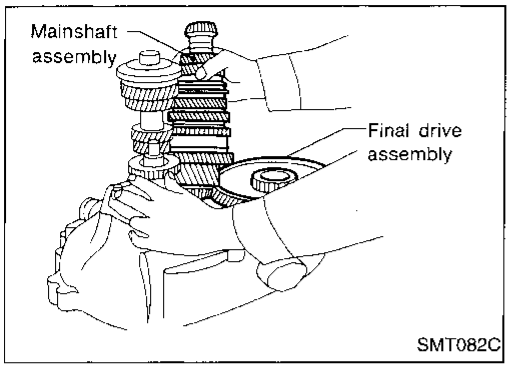

b. Install final drive assembly.
c. Install mainshaft assembly.

- **Take care not to damage oil channel when inserting mainshaft into clutch housing.**

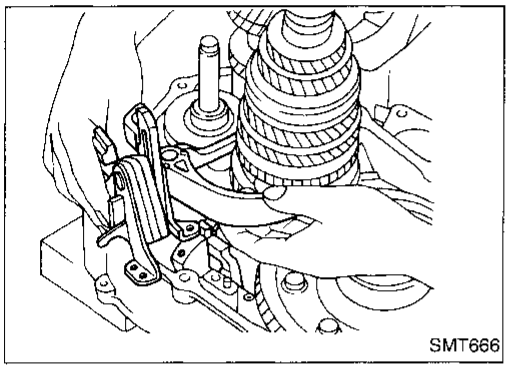

9. Apply grease to shifter caps, then install it to control bracket. Install control bracket with 1st & 2nd shift fork.
10. Install 3rd & 4th and 5th shift forks.

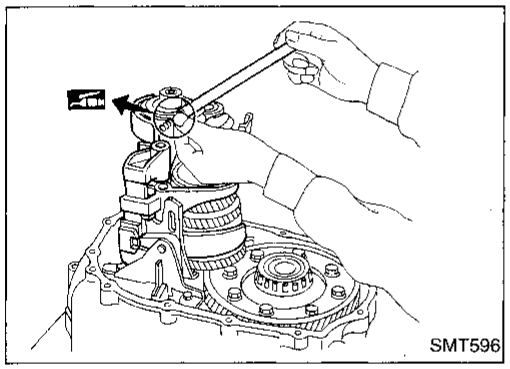

11. Insert fork shaft.

- **Apply multi-purpose grease to support spring before installing.**

12. Install reverse idler spacer.

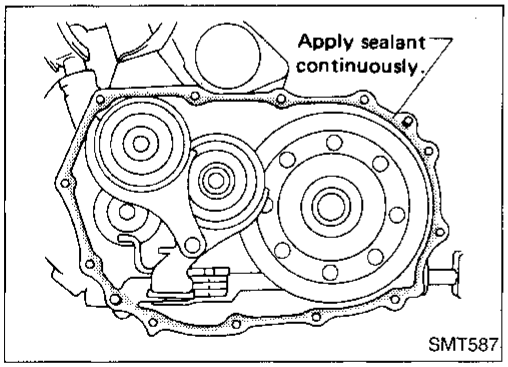

13. Apply recommended sealant to mating surface of clutch housing.
14. Install transmission case on clutch housing.

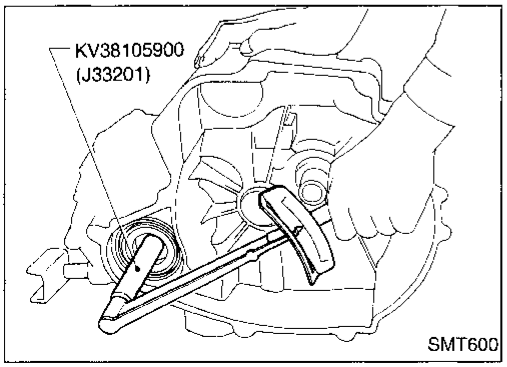

15. Measure total turning torque.

    Total turning torque (New bearing):
    3.9 - 13.7 N·m (40 - 140 kg-cm, 35 - 122 in-lb)

- **When old bearing is used again, turning torque will be slightly less than the above.**
- **Make sure torque is close to the specified range.**

Case Components

SEC. 320

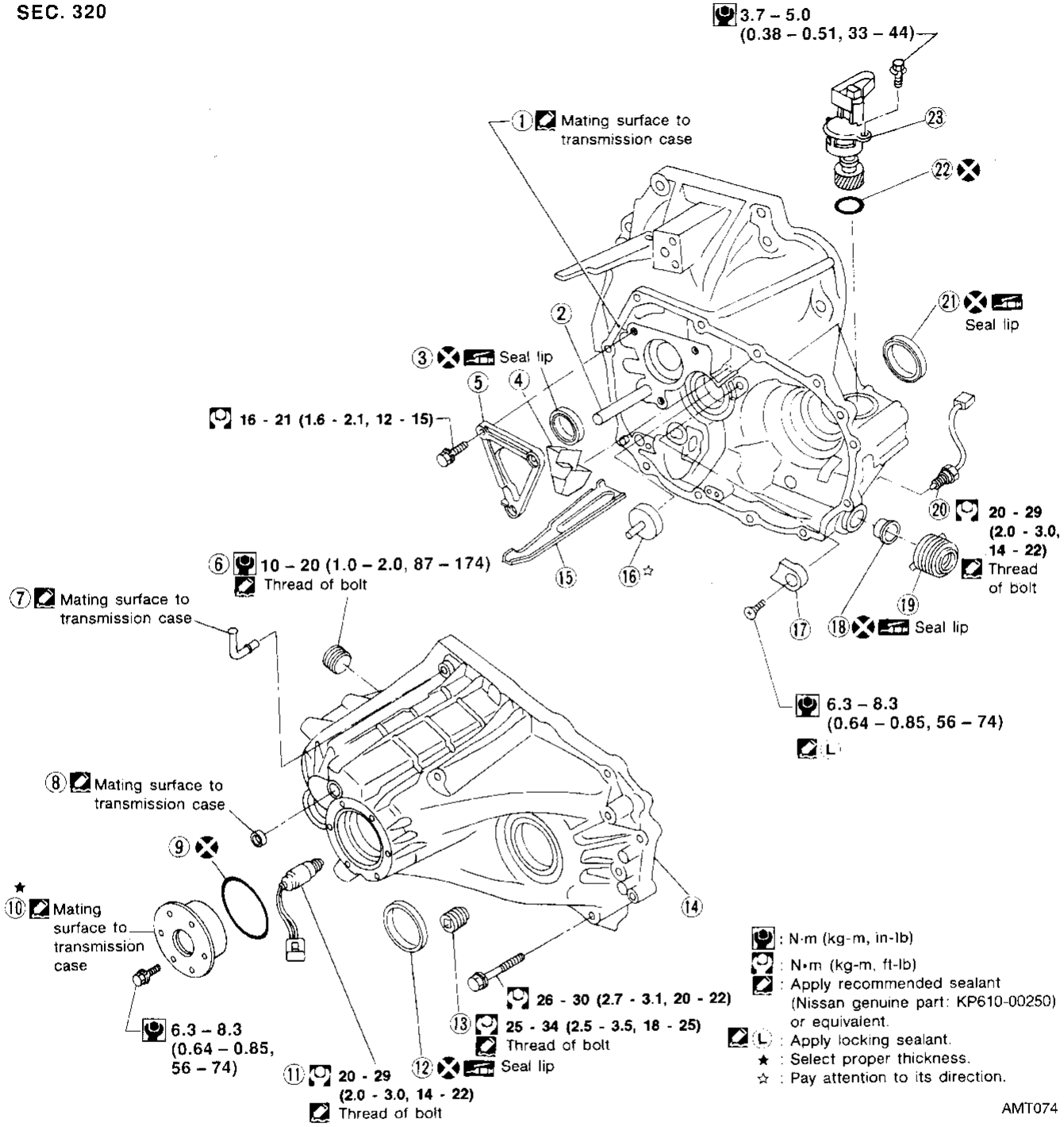

① Clutch housing
② Reverse idler shaft
③ Input shaft oil seal
④ Oil pocket
⑤ Bearing retainer
⑥ Filler plug
⑦ Air breather
⑧ Welch plug
⑨ O-ring
⑩ Case cover
⑪ Reverse lamp switch
⑫ Differential oil seal
⑬ Drain plug
⑭ Transmission case
⑮ Oil gutter
⑯ Oil channel
⑰ Bearing retainer
⑱ Striking rod oil seal
⑲ Boot
⑳ Neutral position switch
㉑ Differential oil seal
㉒ O-ring
㉓ Vehicle speed sensor

Gear Components

SEC. 322

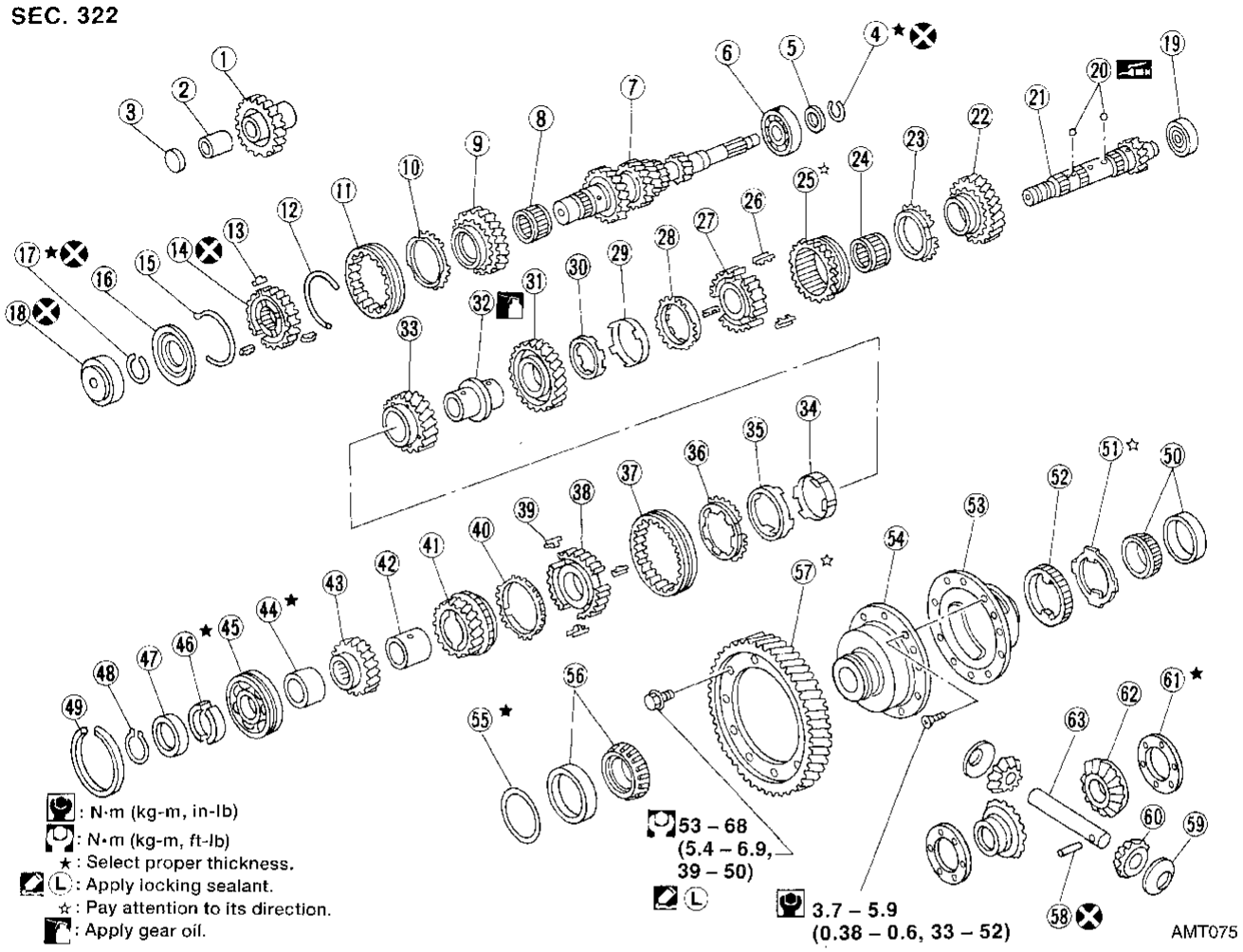

1. Reverse idler gear
2. Reverse idler bushing
3. Reverse idler spacer
4. Snap ring
5. Spacer
6. Input shaft front bearing
7. Input shaft
8. 5th gear needle bearing
9. 5th input gear
10. Baulk ring
11. Coupling sleeve
12. Spread spring
13. Shifting insert
14. 5th synchronizer hub
15. Spread spring
16. 5th stopper
17. Snap ring
18. Input shaft rear bearing
19. Mainshaft front bearing
20. Steel ball
21. Mainshaft
22. 1st main gear
23. Baulk ring
24. 1st gear needle bearing
25. Reverse main gear (Coupling sleeve)
26. Shifting insert
27. 1st & 2nd synchronizer hub
28. 2nd outer baulk ring
29. 2nd synchronizer cone
30. 2nd inner baulk ring
31. 2nd main gear
32. 2nd & 3rd bushing
33. 3rd main gear
34. 3rd inner baulk ring
35. 3rd synchronizer cone
36. 3rd outer baulk ring
37. Coupling sleeve
38. 3rd & 4th synchronizer hub
39. Shifting insert
40. Baulk ring
41. 4th main gear
42. 4th bushing
43. 5th main gear
44. Spacer
45. Mainshaft rear bearing
46. Mainshaft C-ring
47. C-ring holder
48. Snap ring
49. Snap ring
50. Differential side bearing
51. Speedometer stopper
52. Speedometer drive gear
53. Differential case
54. Viscous coupling
55. Differential side bearing adjusting shim
56. Differential side bearing
57. Final gear
58. Retaining pin
59. Thrust washer
60. Pinion mate gear
61. Thrust washer
62. Side gear
63. Pinion mate shaft

Shift Control Components

SEC. 328

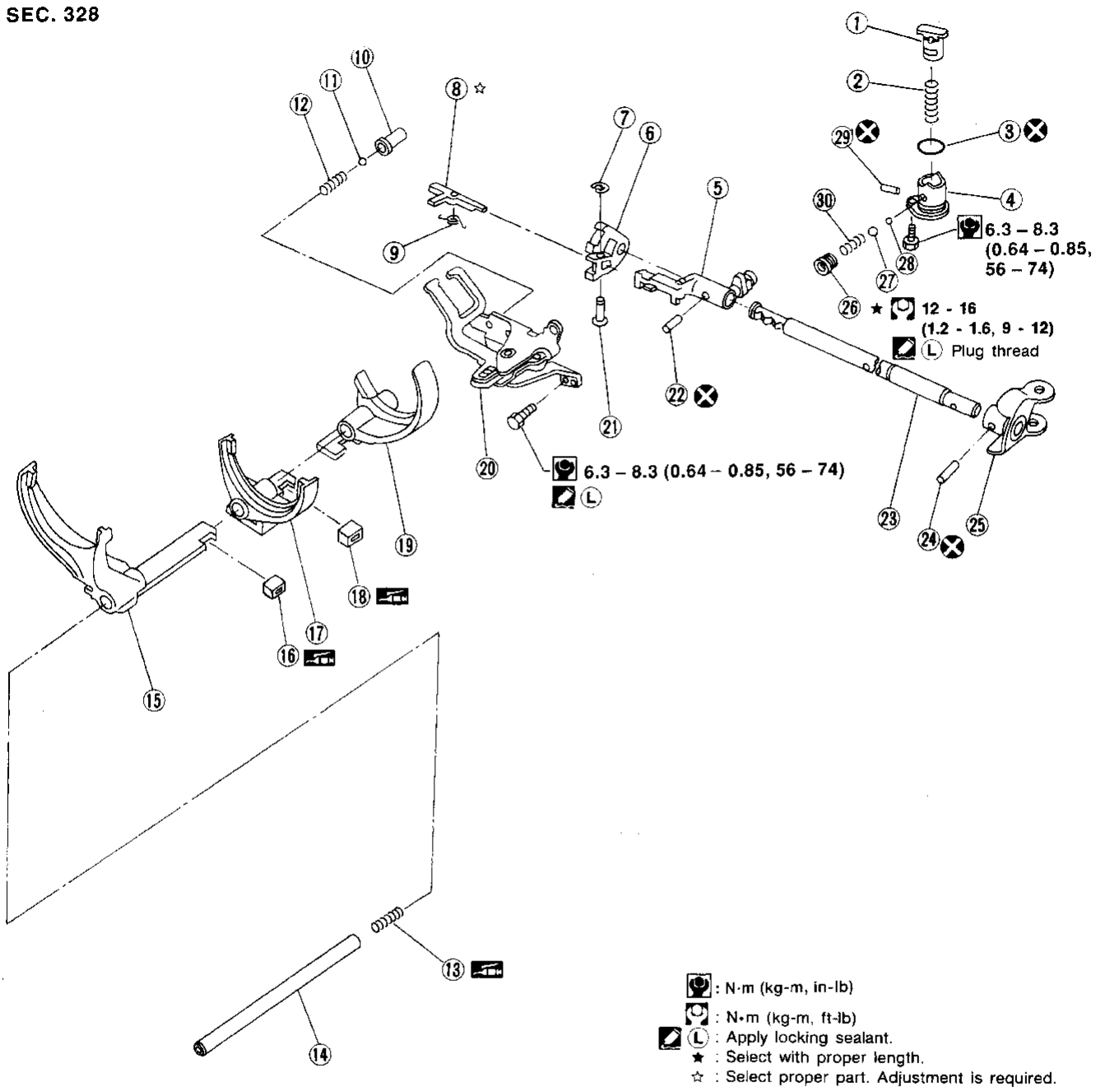

① Check plunger
② Select return spring
③ O-ring
④ Check sleeve
⑤ Striking lever
⑥ Striking interlock
⑦ Snap ring
⑧ Reverse brake cam
⑨ Reverse check cam spring
⑩ Check ball plug
⑪ Shift check ball
⑫ Shift check spring
⑬ Fork shaft support spring
⑭ Fork shaft
⑮ 5th shift fork
⑯ Shifter cap
⑰ 3rd & 4th shift fork
⑱ Shifter cap
⑲ 1st & 2nd shift fork
⑳ Control bracket
㉑ Interlock pin
㉒ Retaining pin
㉓ Striking rod
㉔ Retaining pin
㉕ Yoke
㉖ Reverse check plug
㉗ Check ball (Large)
㉘ Check ball (Small)
㉙ Stopper pin
㉚ Reverse check spring

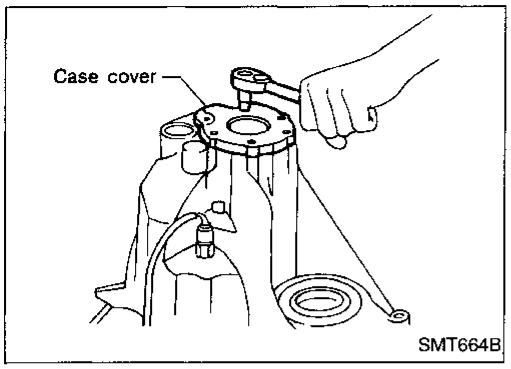

1. Remove case cover.

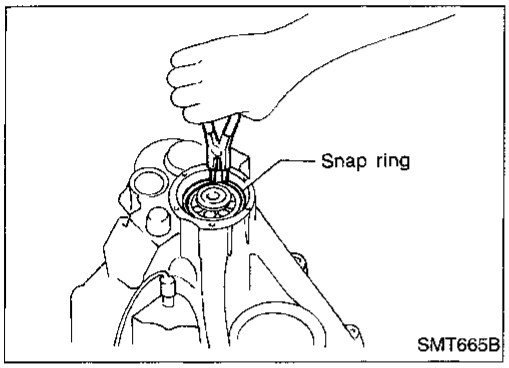

2. Remove mainshaft bearing snap ring.

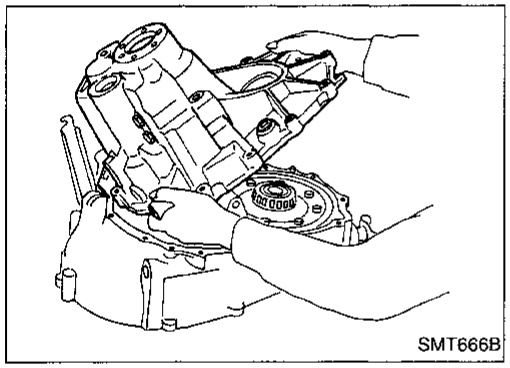

3. Remove transmission case while slightly tilting it to prevent 5th shift fork from interfering with transmission case.

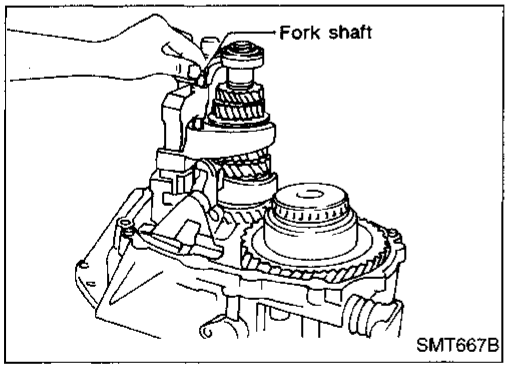

4. Draw out reverse idler spacer and fork shaft.

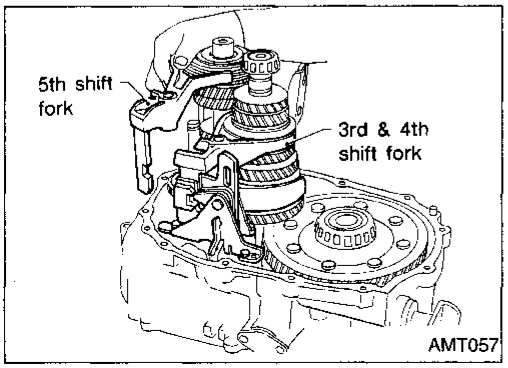

5. Remove 5th and 3rd & 4th shift forks.
- **Be careful not to lose shifter caps.**

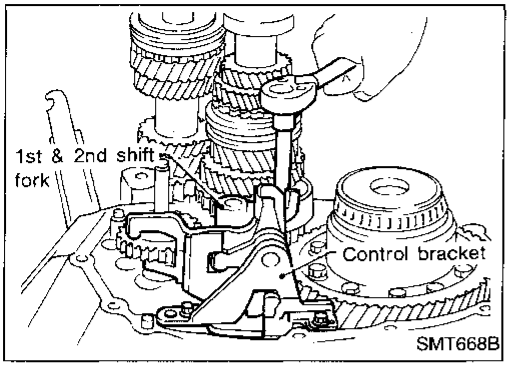

6. Remove control bracket with 1st & 2nd shift fork.

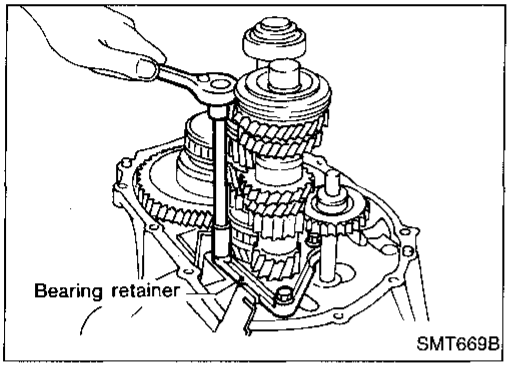

7. Remove gear components from clutch housing.
a. Remove input shaft front bearing retainer securing bolts.

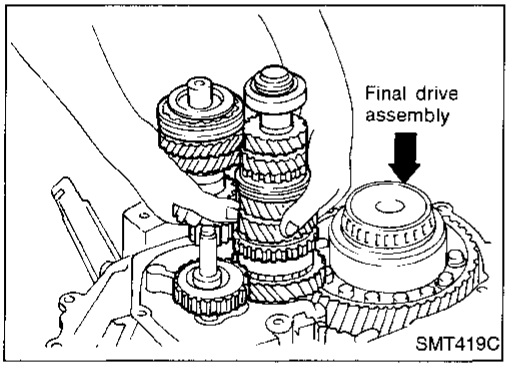

b. Remove input shaft with bearing retainer, mainshaft assembly and reverse idler gear.
- **Always withdraw mainshaft straight out. Failure to do so can damage resin oil channel on clutch housing side.**
- **Do not draw out reverse idler shaft from clutch housing because these fittings will be loose.**
  When removing input shaft, be careful not to scratch oil seal lip with shaft spline.

c. Remove final drive assembly.

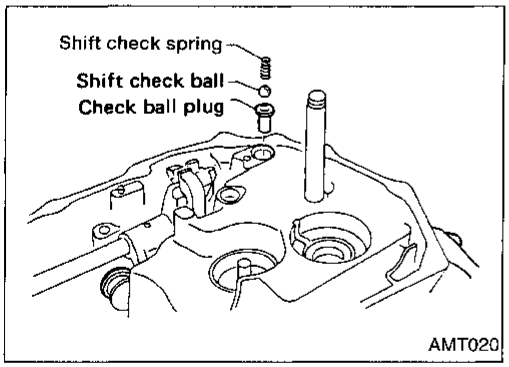

8. Remove oil pocket, shift check ball, shift check spring and check ball plug.

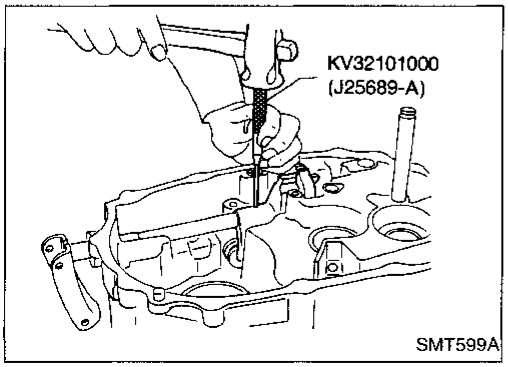

9. Drive retaining pin out of striking lever with Tool. Remove striking rod, striking lever and striking interlock.
- **Select a position where retaining pin does not interfere with clutch housing when removing retaining pin.**

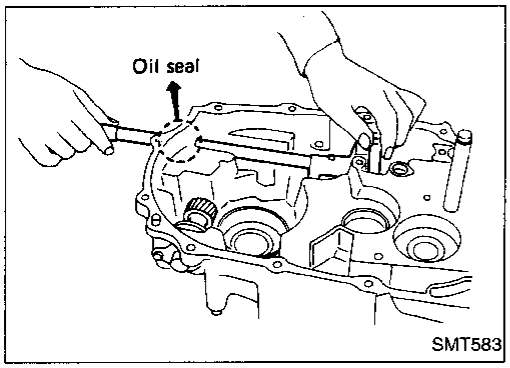

- **Be careful not to damage oil seal lip, when removing striking rod. If necessary, tape edges of striking rod.**

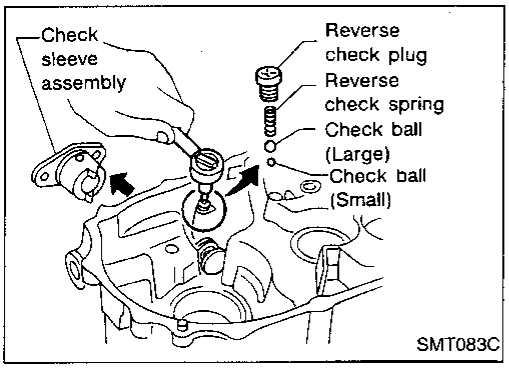

10. Remove reverse check plug, then detach reverse check spring and check balls.
- **If the smaller ball does not come out, remove it together with check sleeve assembly.**
11. Remove check sleeve assembly.

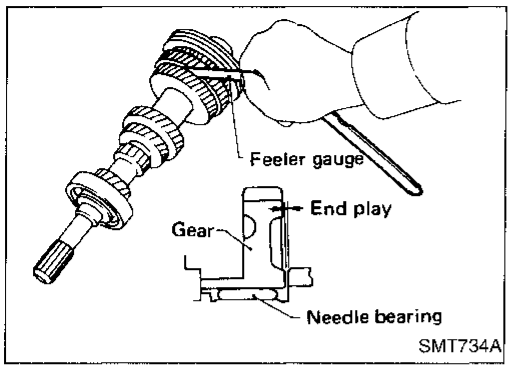

Input Shaft and Gears

DISASSEMBLY

1. Before disassembly, check 5th input gear end play.
   Gear end play:
   0.18 - 0.31 mm (0.0071 - 0.0122 in)

- If not within specification, disassemble and check contact surface of gear, shaft and hub. Check clearance of snap ring groove. Refer to "ASSEMBLY", MT-38.

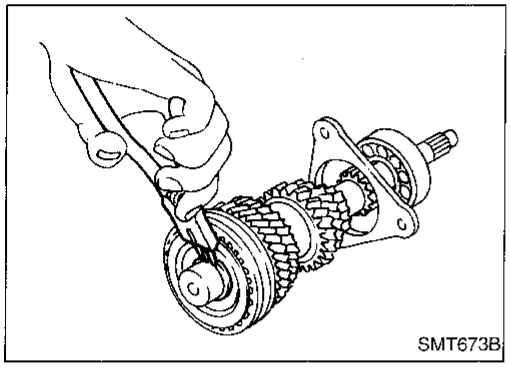

2. Remove snap ring and 5th stopper.

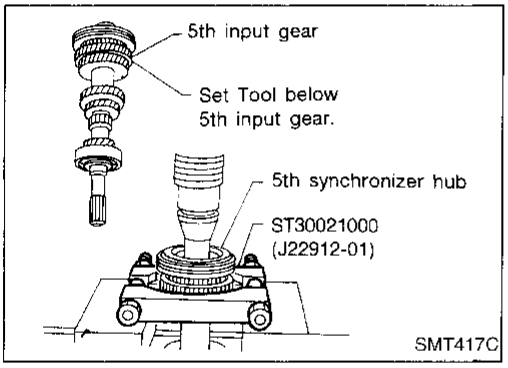

3. Remove 5th synchronizer, 5th input gear and 5th gear needle bearing with Tool.

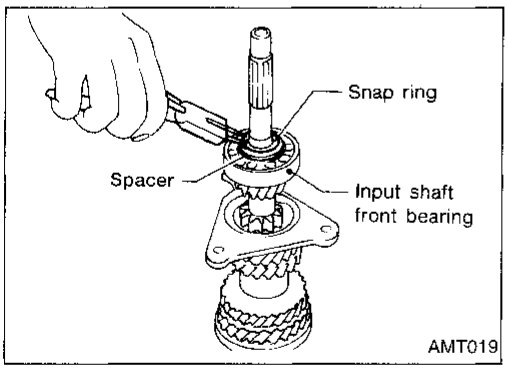

4. Remove snap ring of input shaft front bearing and spacer.

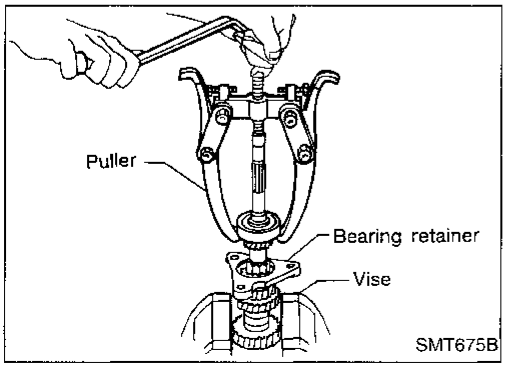

5. Remove input shaft front bearing.
6. Remove bearing retainer.

Input Shaft and Gears (Cont'd)

INSPECTION

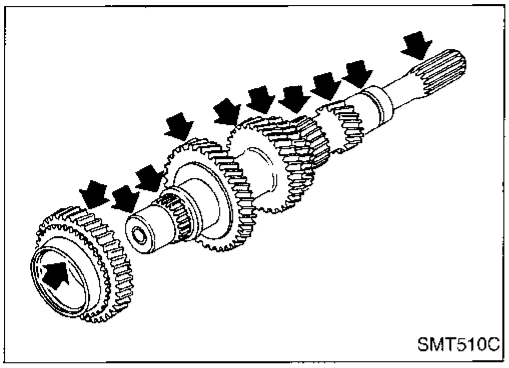

Gear and shaft

- Check shaft for cracks, wear or bending.
- Check gears for excessive wear, chips or cracks.

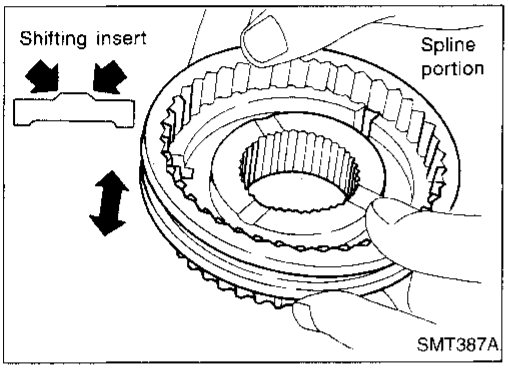

5th synchronizer

- Check spline portion of coupling sleeves, hubs and gears for wear or cracks.
- Check baulk rings for cracks or deformation.
- Check insert springs for wear or deformation.

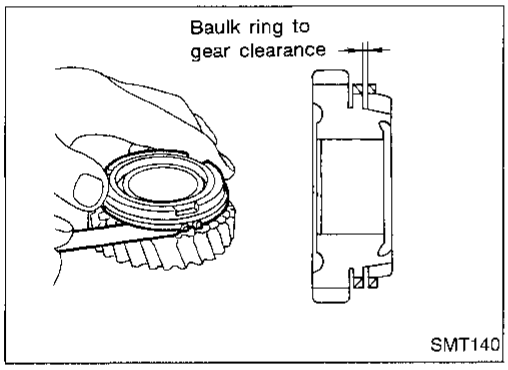

- Measure clearance between baulk ring and gear.
  Clearance between baulk ring and gear:
  Standard
  0.9 - 1.5 mm (0.035 - 0.059 in)
  Wear limit
  0.7 mm (0.028 in)

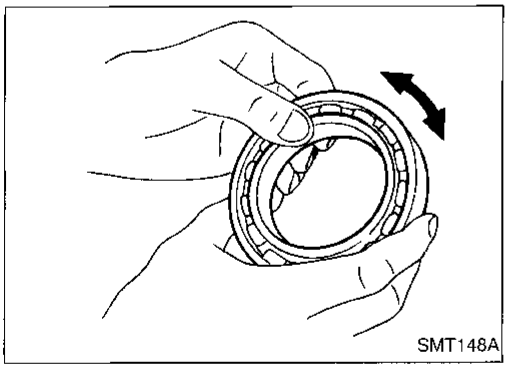

Bearing

- Make sure bearings roll freely and are free from noise, cracks, pitting or wear.

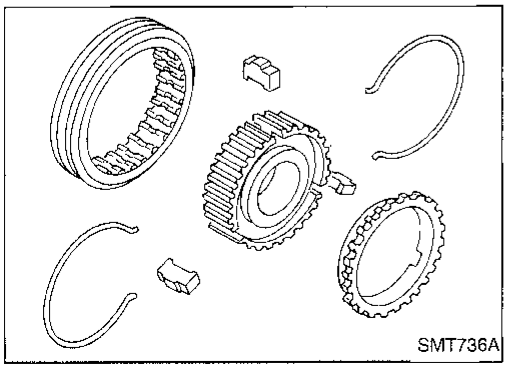

ASSEMBLY

1. Assemble 5th synchronizer.

Input Shaft and Gears (Cont'd)

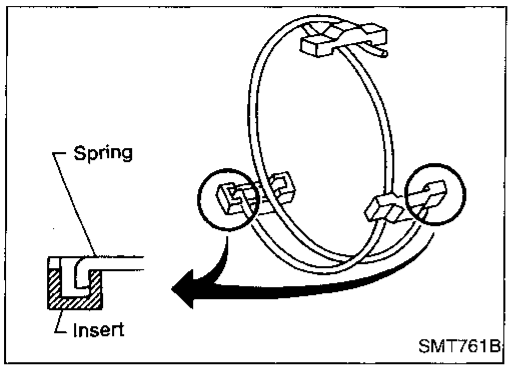

- **Be careful not to hook front and rear ends of spread spring to the same insert.**

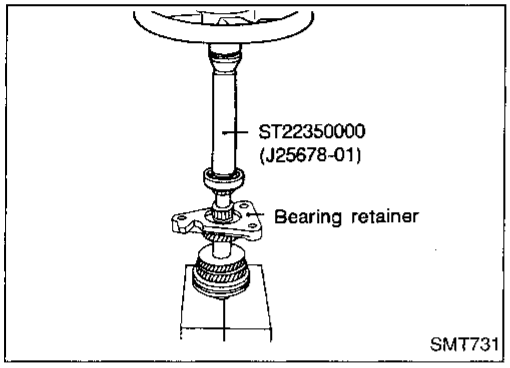

2. Install bearing retainer.
3. Press on input shaft front bearing with Tool.
4. Install spacer.

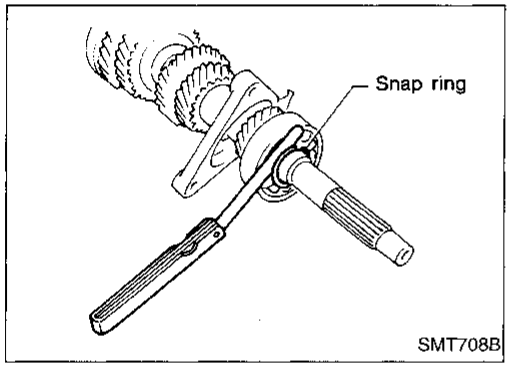

5. Select and install snap ring that gives proper clearance of input shaft groove.
   Allowable clearance of groove:
   0 - 0.1 mm (0 - 0.004 in)
   Snap rings of input shaft front bearing:
   Refer to SDS, MT-62.

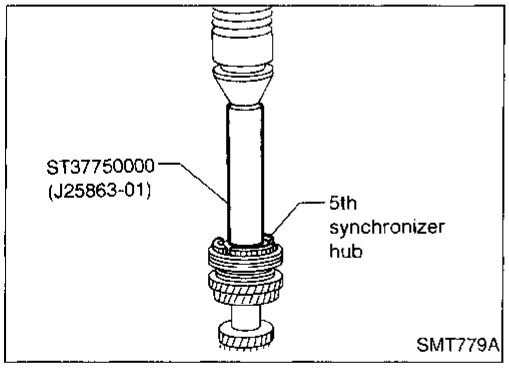

- **Be sure to replace 5th gear synchronizer hub with new one when it is removed.**

6. Install 5th gear needle bearing, 5th input gear, 5th synchronizer and 5th stopper.

- **Input shaft must be vertical to press on synchronizer hub.**

7. Measure gear end play as a final check. Refer to "DISASSEMBLY", MT-37.

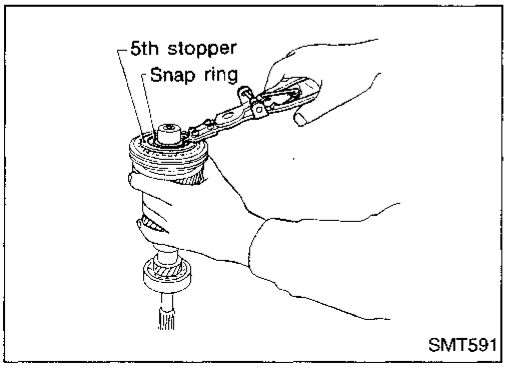

8. Select and install snap ring that gives proper clearance of input shaft groove.
   Allowable clearance of groove:
   0 - 0.1 mm (0 - 0.004 in)
   Snap ring of 5th synchronizer:
   Refer to SDS, MT-62.

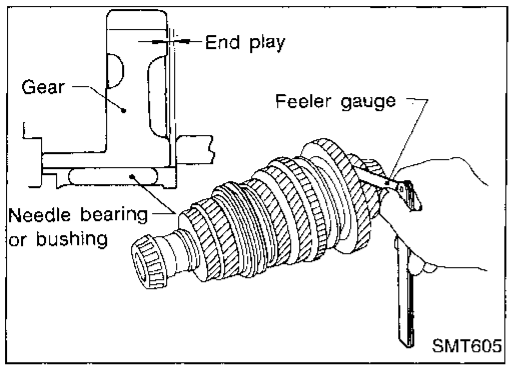

Mainshaft and Gears

DISASSEMBLY

1. Before disassembly, measure gear end play.
   Gear end play:
   1st main gear
   0.18 - 0.31 mm (0.0071 - 0.0122 in)
   2nd, 3rd, 4th main gear
   0.20 - 0.30 mm (0.0079 - 0.0118 in)

- If end play is not within the specified limit, disassemble and check the parts. Refer to "ASSEMBLY", MT-43.

2. Remove mainshaft rear bearing snap ring, C-ring holder and mainshaft C-rings.

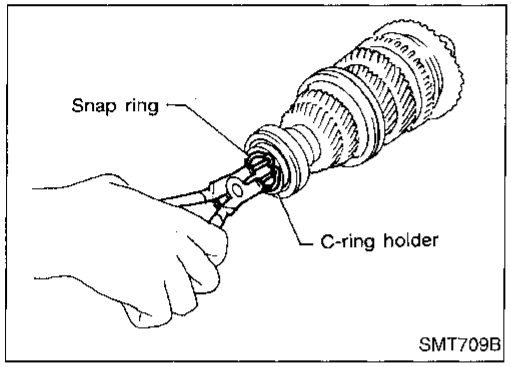

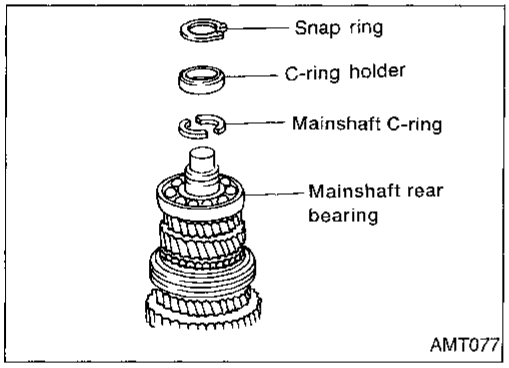

3. Remove mainshaft rear bearing and spacer.

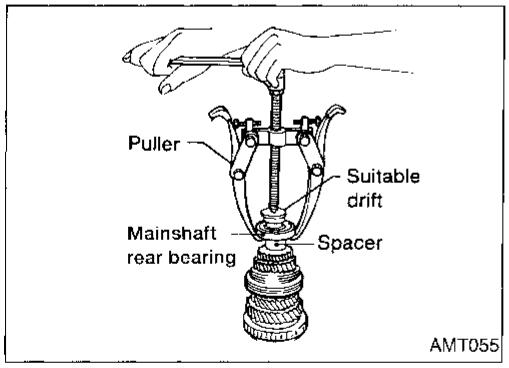

4. Remove 5th main gear with Tool.

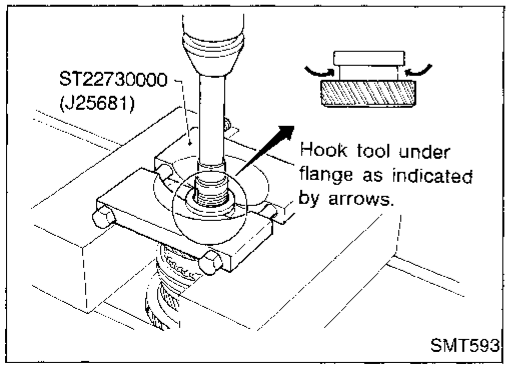

Mainshaft and Gears (Cont'd)

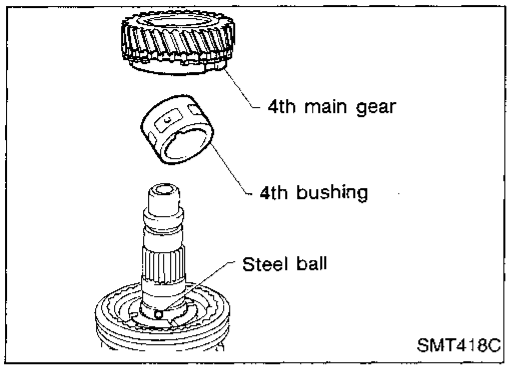

5. Remove 4th main gear, 4th bushing and steel ball.
- **Be careful not to lose steel ball.**

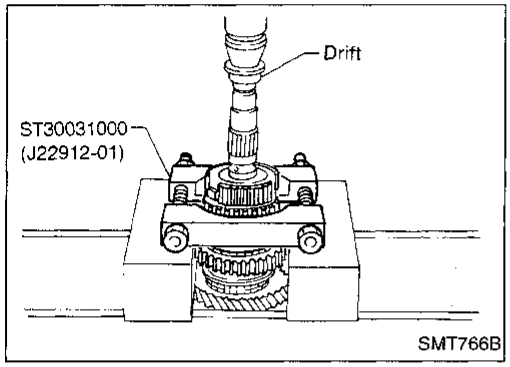

6. Remove 3rd & 4th synchronizer and 3rd main gear with Tool.

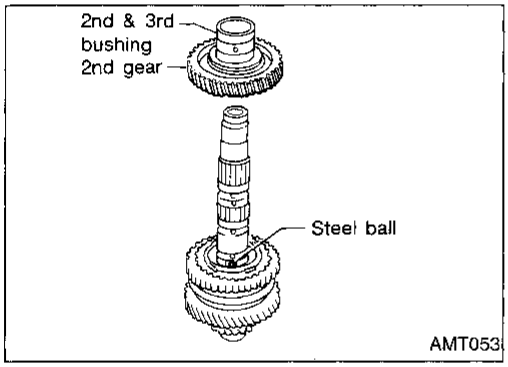

7. Remove 2nd & 3rd bushing and 2nd main gear.
- **Be careful not to lose the steel ball.**

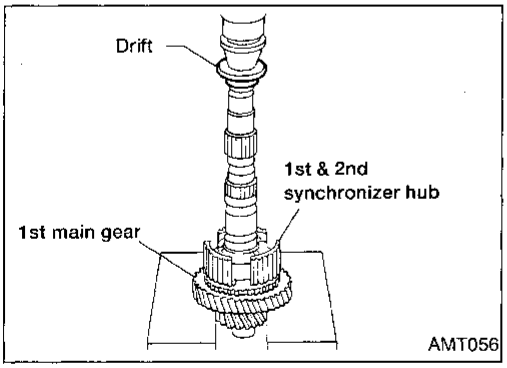

8. Remove 1st & 2nd synchronizer hub and 1st main gear.

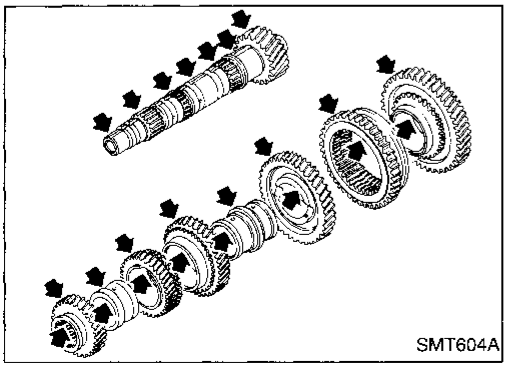

INSPECTION

Gear and shaft

- Check shaft for cracks, wear or bending.
- Check gears for excessive wear, chips or cracks.

Mainshaft and Gears (Cont'd)

Synchronizer

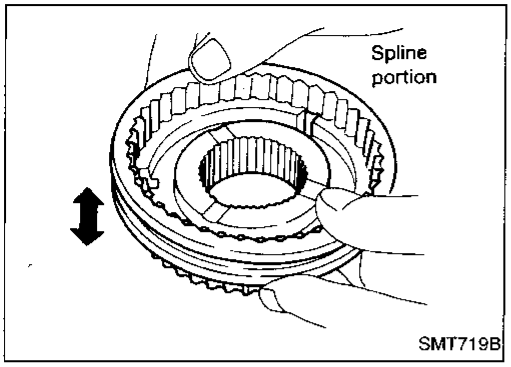

- Check spline portion of coupling sleeves, hubs and gears for wear or cracks.
- Check baulk rings for cracks or deformation.
- Check insert springs for deformation.

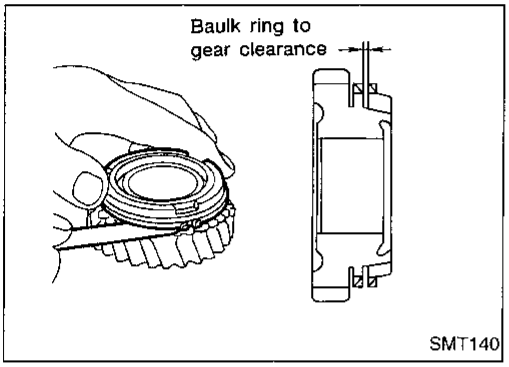

- Measure clearance between baulk ring and gear.
  Clearance between baulk rings and gears, for 1st and 4th gear only:
  Standard
  1st 0.95 - 1.45 mm (0.0374 - 0.0571 in)
  4th 0.9 - 1.45 mm (0.0354 - 0.0571 in)
  Wear limit
  0.7 mm (0.028 in)
- **2nd and 3rd gears have inner and outer baulk rings and so have different measurements.**

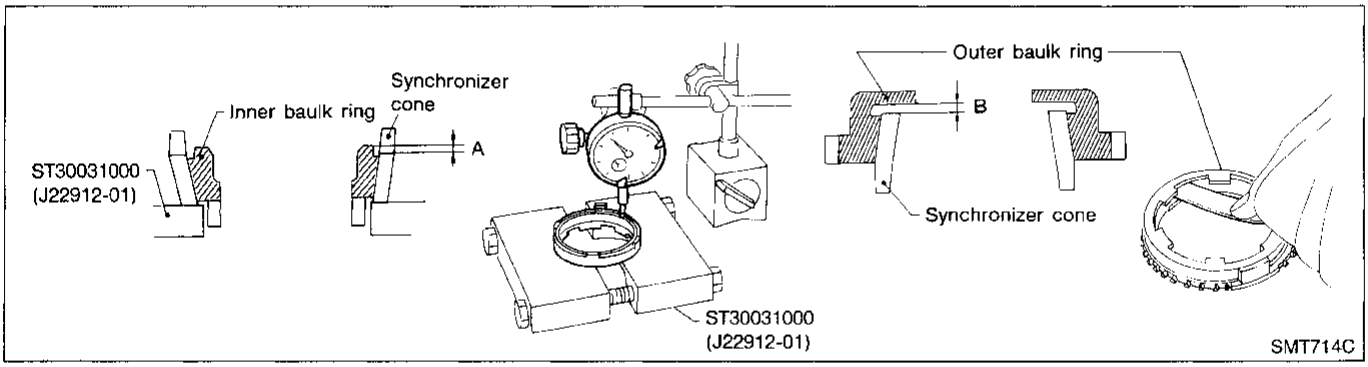

- Measure wear of 2nd and 3rd baulk rings.

a. Place inner baulk ring in position on synchronizer cone.
b. Hold baulk ring evenly against synchronizer cone and measure distance "A".
c. Place outer baulk ring in position on synchronizer cone.
d. Hold baulk ring evenly against synchronizer cone and measure distance "B".
   Standard:
   Inner-A 0.7 - 0.9 mm (0.028 - 0.035 in)
   Outer-B 0.6 - 1.1 mm (0.024 - 0.043 in)
   Wear limit:
   0.2 mm (0.008 in)
e. If distance "A" or "B" is smaller than the wear limit, replace baulk ring.

Mainshaft and Gears (Cont'd)

Bearing

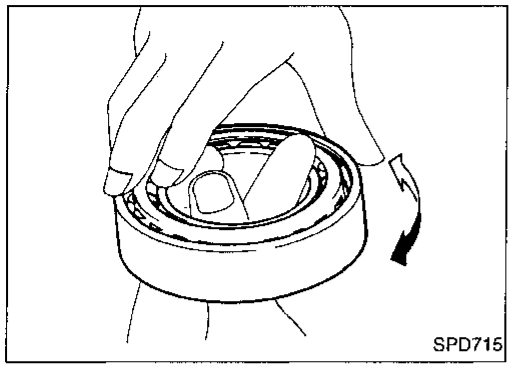

- Make sure bearings roll freely and are free from noise, cracks, pitting or wear.
- **The mainshaft front bearing cannot be re-used. It must be replaced once removed.**

ASSEMBLY

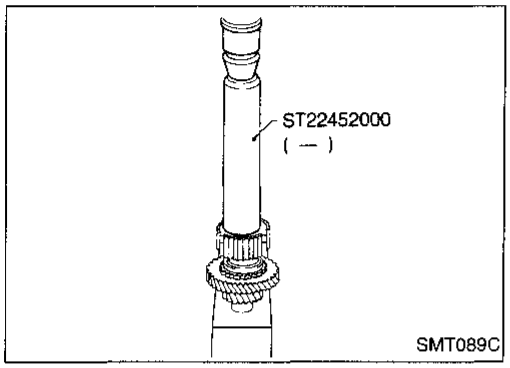

1. Install 1st gear needle bearing, 1st main gear and baulk ring.
2. Press on 1st & 2nd synchronizer hub.

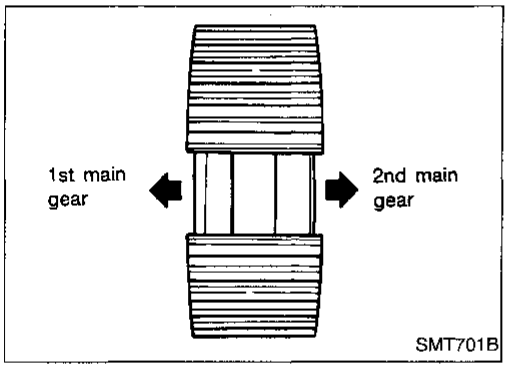

- **Ensure correct fitting of 1st & 2nd synchronizer hub.**

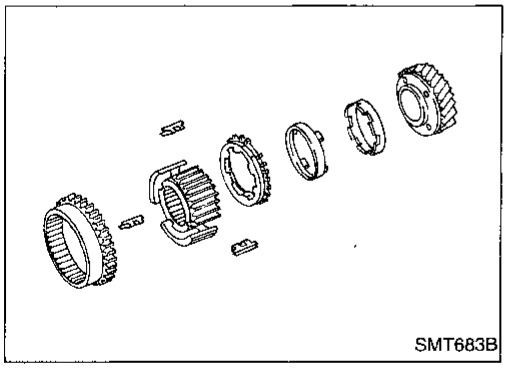

3. Install 2nd synchronizer cone, outer & inner baulk ring and reverse main gear (coupling sleeve).

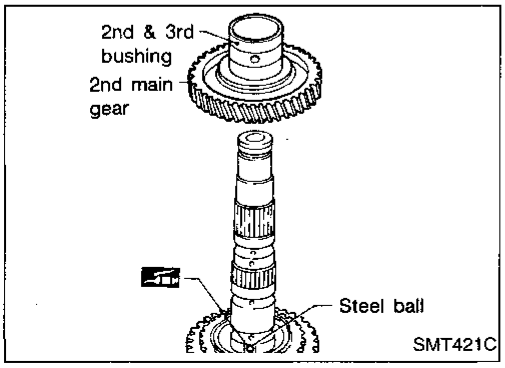

4. Install steel ball, 2nd main gear, 2nd & 3rd bushing.
- **Apply gear oil to 2nd & 3rd bushing before installing it.**
- **Apply multi-purpose grease to steel ball before installing it.**
- **2nd & 3rd bushing has a groove in which steel ball fits.**

Mainshaft and Gears (Cont'd)

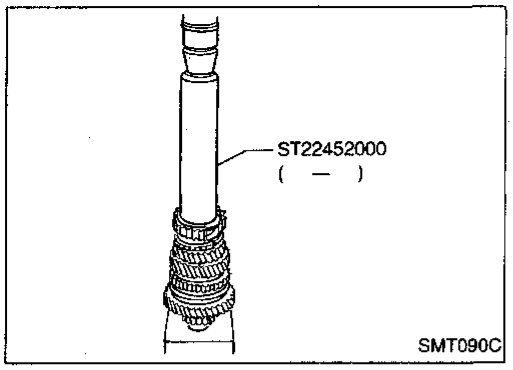

5. Install 3rd main gear, synchronizer cone, outer & inner baulk ring.
6. Press on 3rd & 4th synchronizer hub.

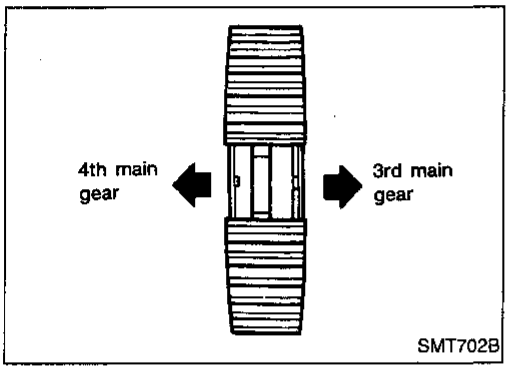

- **Ensure correct fitting of 3rd & 4th synchronizer hub.**

7. Install 3rd & 4th coupling sleeve and 4th baulk ring.

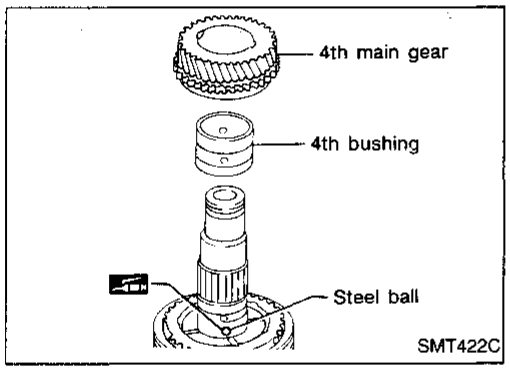

8. Install steel ball, 4th bushing and 4th main gear.

- **Apply multi-purpose grease to steel ball before installing it.**
- **4th bushing has a groove in which steel ball fits.**

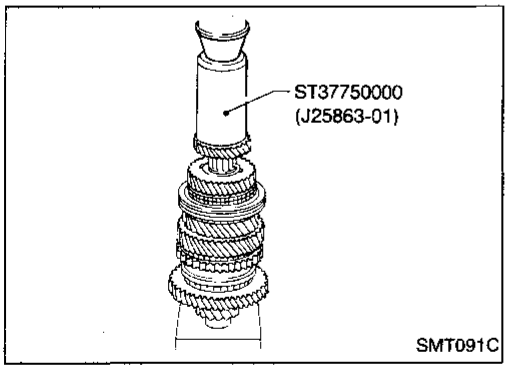

9. Press on 5th main gear.

Mainshaft and Gears (Cont'd)

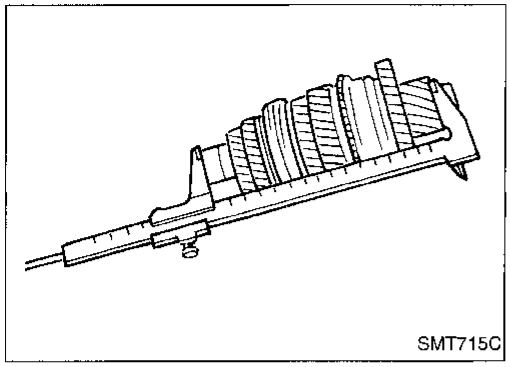
SMT715C

10. Select proper mainshaft bearing spacer to give correct bearing distance.
    Bearing distance "C":
    230.15 - 230.25 mm (9.0610 - 9.0649 in)
    Spacers available:
    Refer to SDS, AT-63.

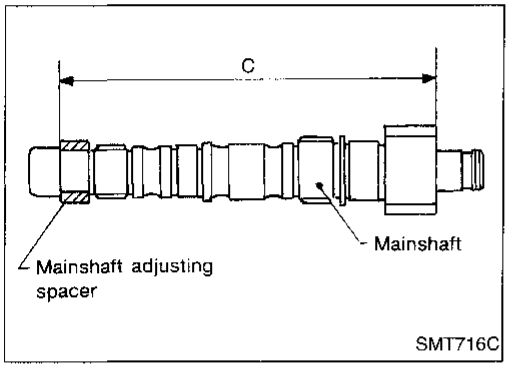

SMT716C

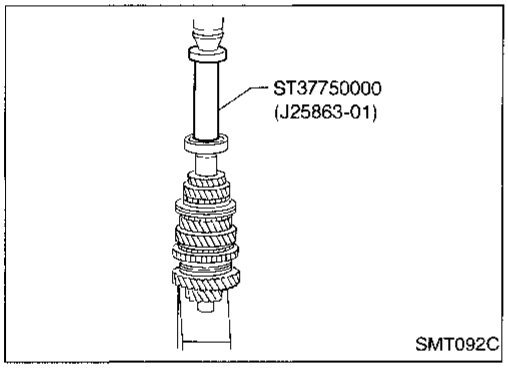

SMT092C

11. Press on mainshaft rear bearing with Tool.

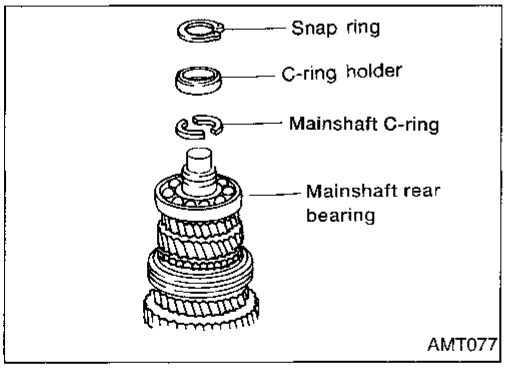

AMT077

12. Select and install mainshaft C-ring that gives proper clearance of groove in mainshaft.
    Allowable clearance of groove:
    0 - 0.1 mm (0 - 0.004 in)
    Mainshaft C-rings:
    Refer to SDS, AT-62.

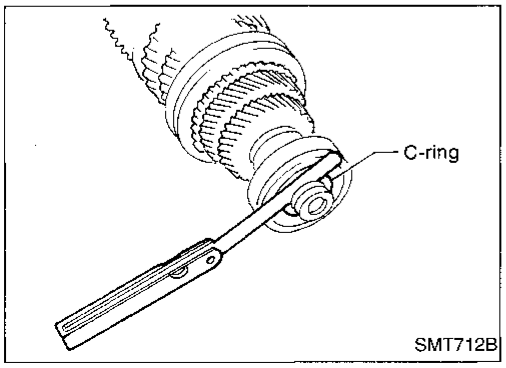

SMT712B

13. Install C-ring holder and snap ring.
14. Measure gear end play as the final check. Refer to "DISASSEMBLY", MT-40.

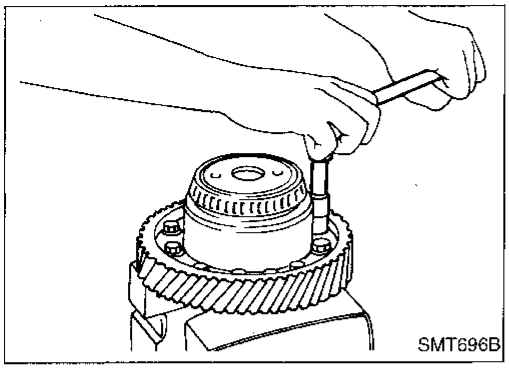

Final Drive

DISASSEMBLY

1. Remove final gear.

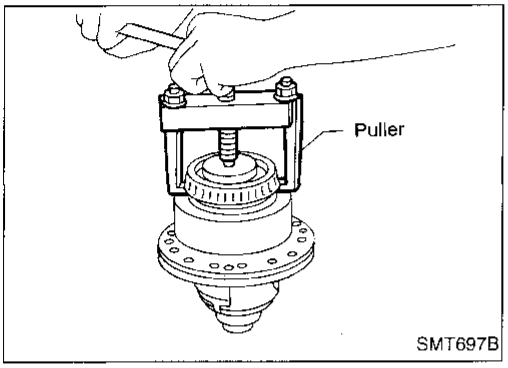

2. Remove speedometer drive gear by cutting it.
3. Press out differential side bearings.
4. Remove viscous coupling.

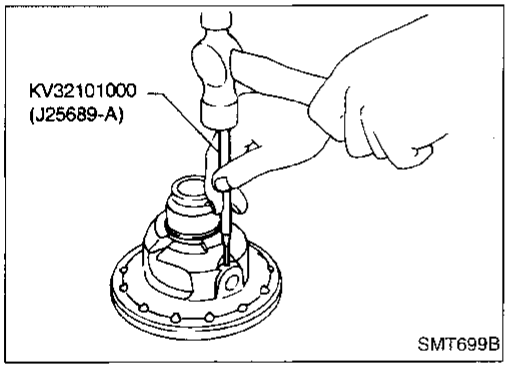

5. Drive out retaining pin with Tool and draw out pinion mate shaft with Tool.
6. Remove pinion mate gears and side gears.

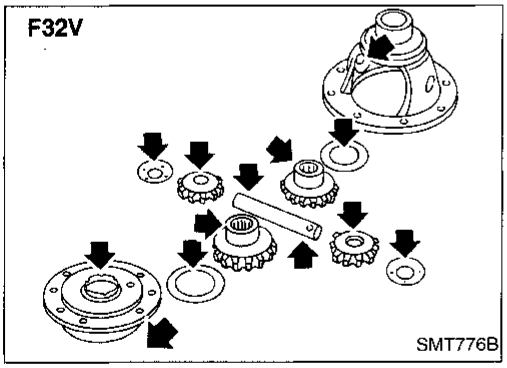

INSPECTION

Gear, washer, shaft and case

- Check mating surfaces of differential case, side gears and pinion mate gears.
- Check washers for wear.

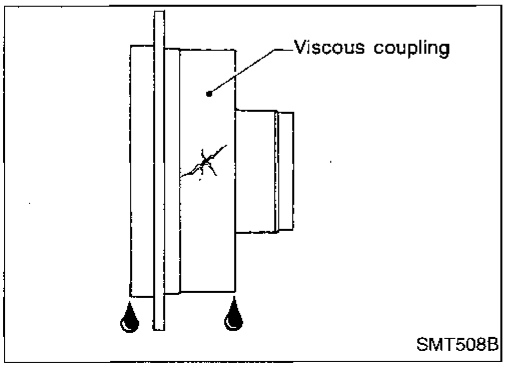

Viscous coupling

- Check case for cracks.
- Check silicone oil for leakage.

Final Drive (Cont'd)

Bearing

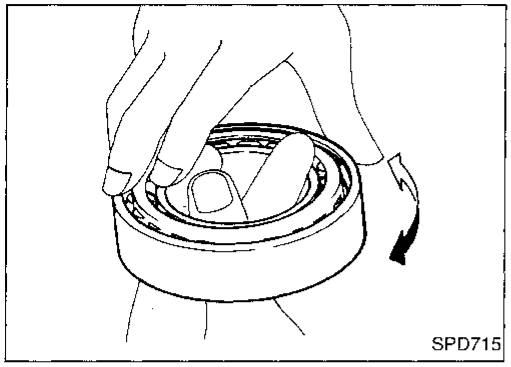
SPD715

- Make sure bearings roll freely and are free from noise, cracks, pitting or wear.
- **When replacing tapered roller bearing, replace outer and inner race as a set.**

ASSEMBLY

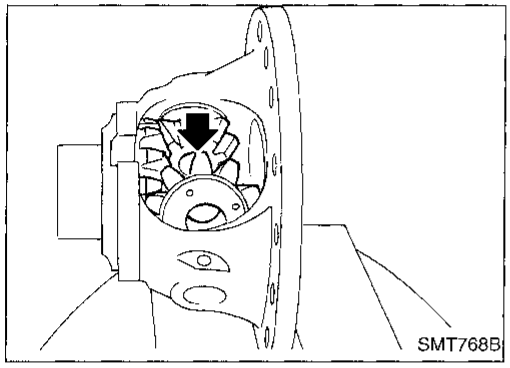
SMT768B

1. Attach side gear thrust washer to side gear and install them in differential case.
2. Install pinion mate washers and pinion mate gears in place.

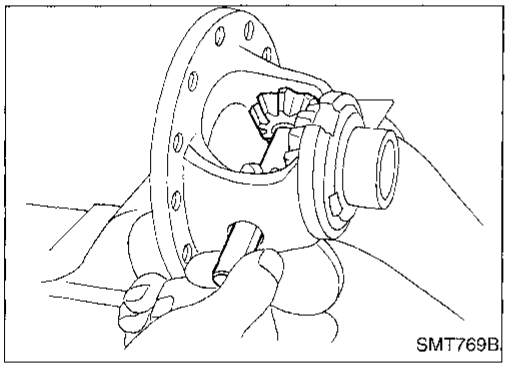
SMT769B

3. Insert pinion mate shaft.
- **When inserting, be careful not to damage pinion mate thrust washers.**

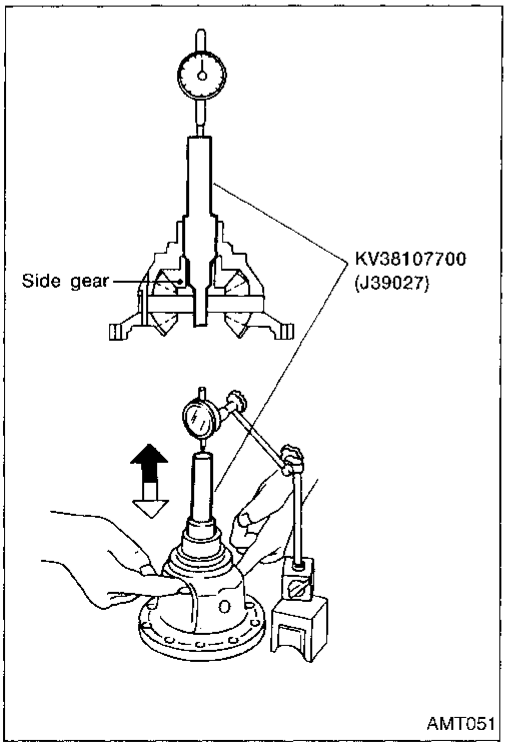

AMT051

4. Measure clearance between side gear and differential case with washers following the procedure below:

a. Set Tool and dial indicator on side gear.

b. Move side gear up and down to measure dial indicator deflection.

Clearance between side gear and differential case with washers:

0.1 - 0.2 mm (0.004 - 0.008 in)

c. If not within specification, adjust clearance by changing thickness of side gear thrust washers.

Side gear thrust washers for differential case side:

Refer to SDS, MT-63.

Final Drive (Cont'd)

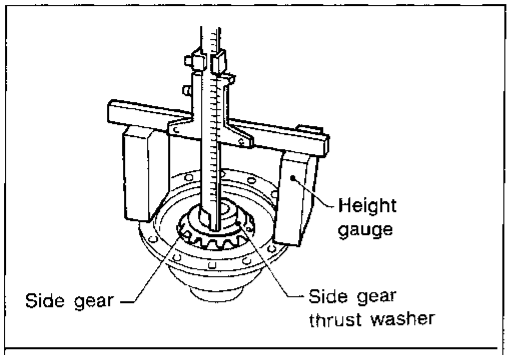

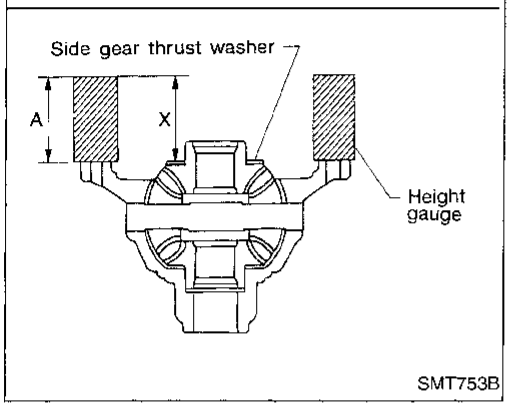

5. Measure clearance between side gear and viscous coupling with washers following the procedure below.
a. Set remaining side gear with washer on pinion mate gears.
b. Measure distance "X".
- **Measure in at least 4 places around the edge of the side gear and take an average. At least 4 measurements are needed because the side gear may be uneven.**

c. Measure dimension "Y".
Clearance between side gear and viscous coupling with washers can be obtained by "X + Y – 2A".
Specification:
0.1 - 0.2 mm (0.004 - 0.008 in)

d. If not within specification, adjust clearance by changing thickness of side gear thrust washer.
Side gear thrust washers for viscous coupling side:
Refer to SDS, MT-63.

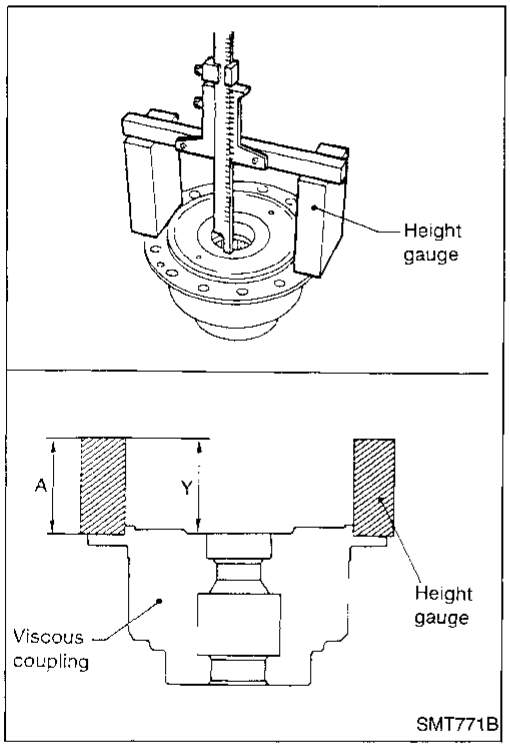

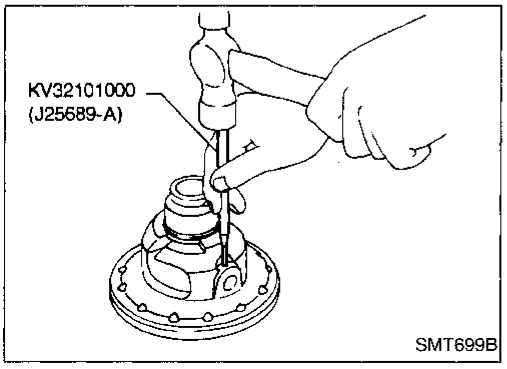

6. Install retaining pin with Tool.
- **Make sure that retaining pin is flush with case.**

Final Drive (Cont'd)

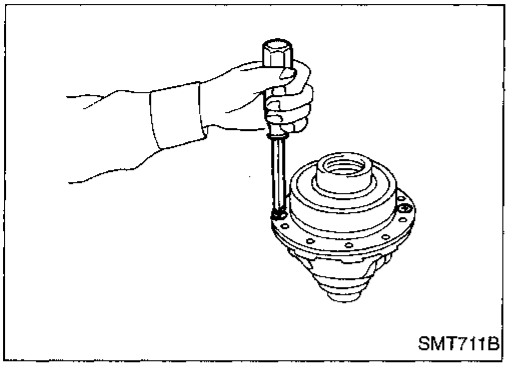

7. Install viscous coupling.

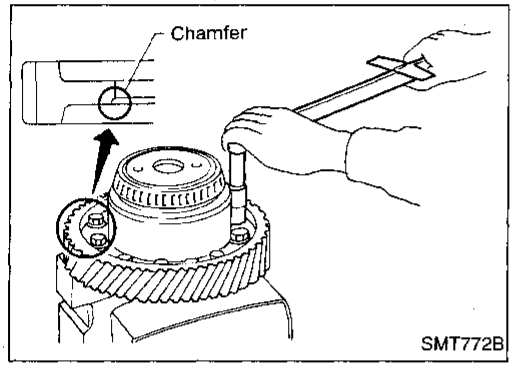

8. Install final gear.
- **Apply locking sealant to final gear fixing bolts before installing them.**

9. Install speedometer drive gear.

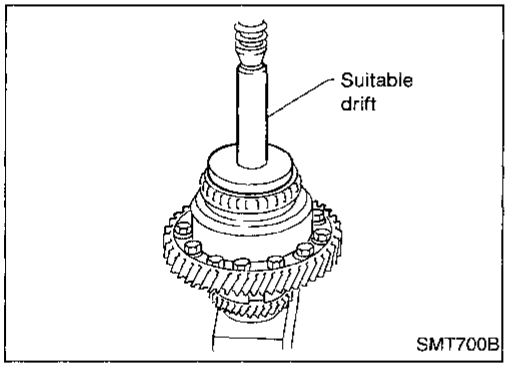

10. Press on differential side bearings.

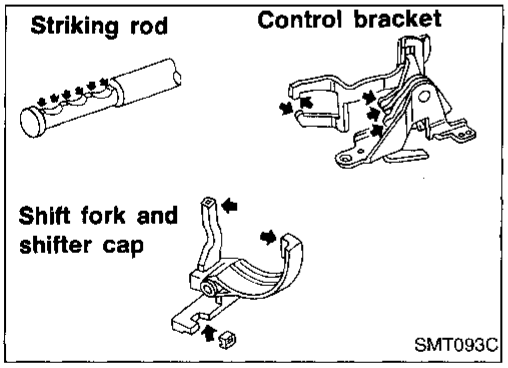

Shift Control Components

INSPECTION

- Check contact surface and sliding surface for wear, scratches, projections or other damage.

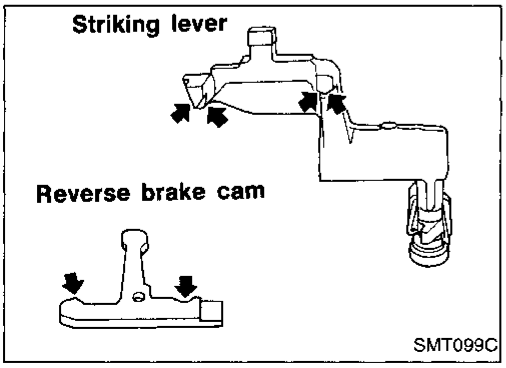

Shift Control Components (Cont'd)

ADJUSTMENT OF INPUT SHAFT BRAKING MECHANISM

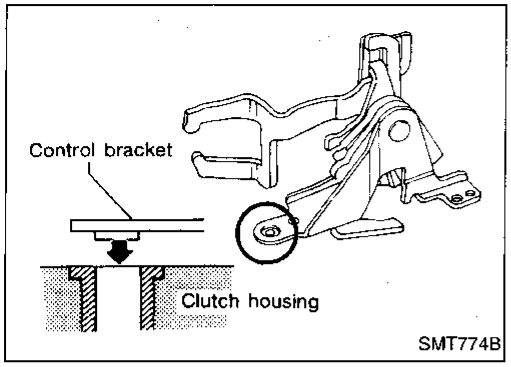

1. Install striking lever and rod, striking interlock assembly and control bracket on clutch housing as shown.

- **When installing control bracket on clutch housing, assure protrusion beneath bracket is correctly seated.**

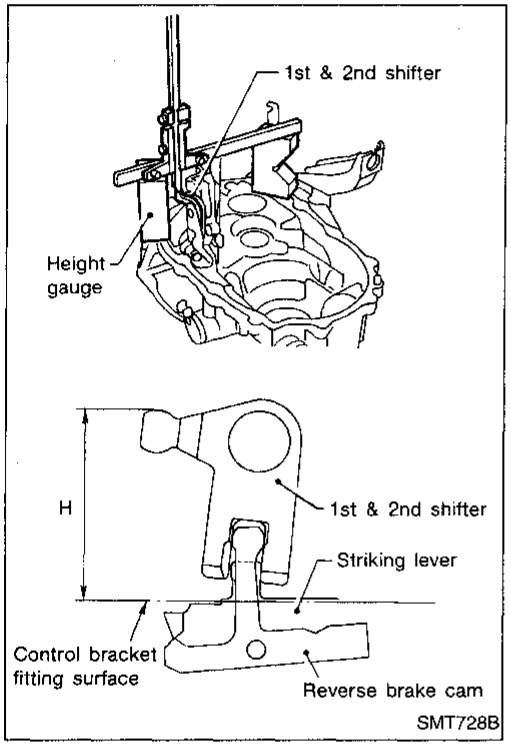

2. Measure maximum height "H" while shifting from neutral to reverse position.

   Maximum height "H":

   67.16 - 67.64 mm (2.6441 - 2.6630 in)

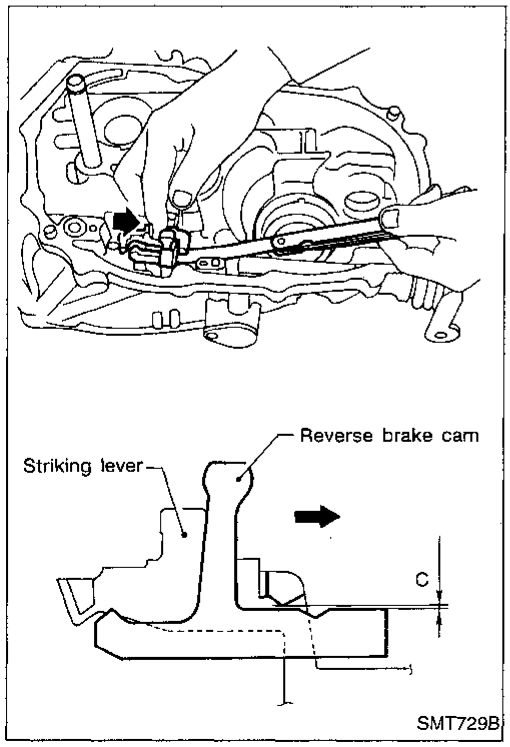

3. Measure clearance "C" between reverse brake cam and striking lever while shifting to reverse position.

   Clearance "C":

   0.05 - 0.20 mm (0.0020 - 0.0079 in)

   If "H" or "C" is not within specification, replace the following parts as a set.

   - Striking lever assembly
   - Striking interlock assembly (This includes reverse brake cam.)
   - Control bracket assembly

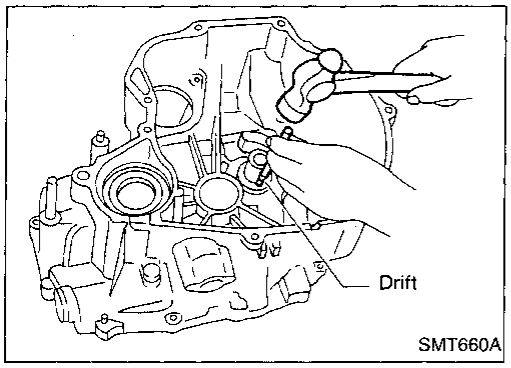

Case Components

REMOVAL AND INSTALLATION

Input shaft oil seal

1. Drive out input shaft oil seal.

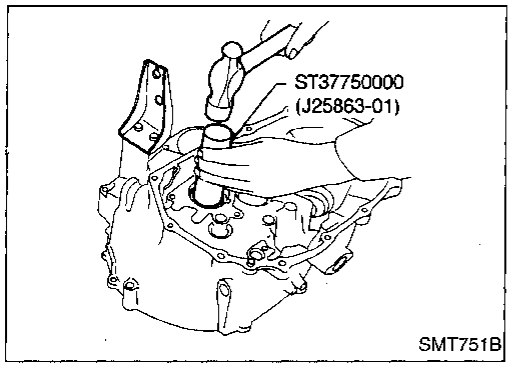

2. Install input shaft oil seal.
- **Apply multi-purpose grease to seal lip of oil seal before installing.**

Input shaft rear bearing

1. Remove welch plug from transmission case.

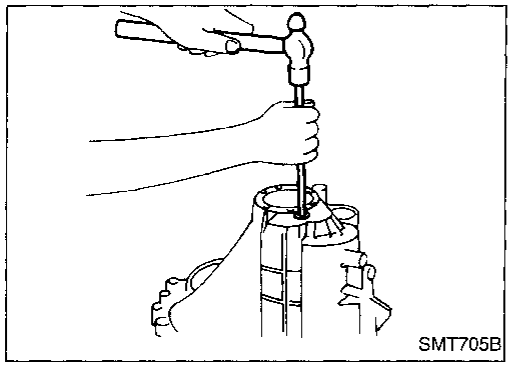

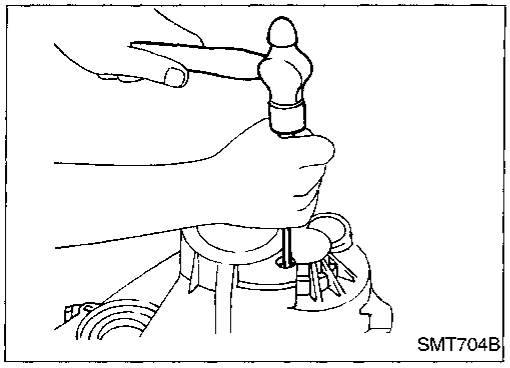

2. Remove input shaft rear bearing by tapping it from welch plug hole.

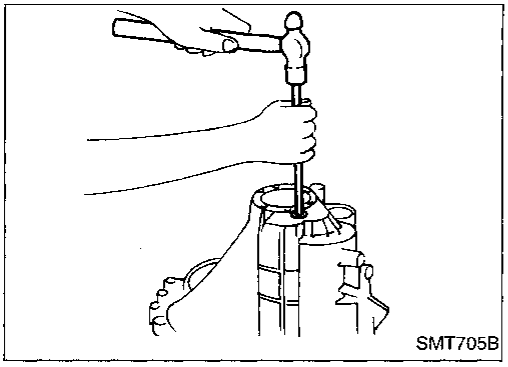

3. Install welch plug.
- **Apply recommended sealant to mating surface of transmission case.**

Case Components (Cont'd)

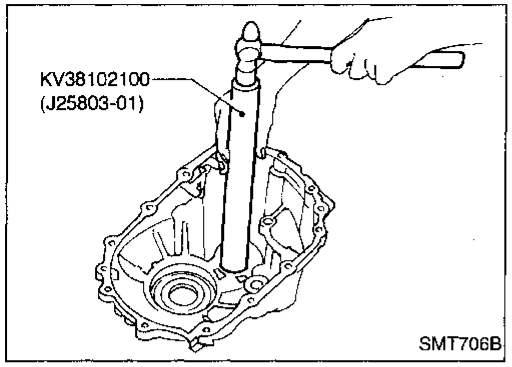

4. Install input shaft rear bearing.

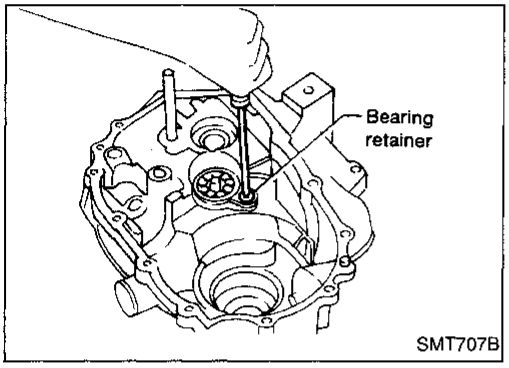

Mainshaft front bearing and oil channel

1. Remove mainshaft front bearing retainer.

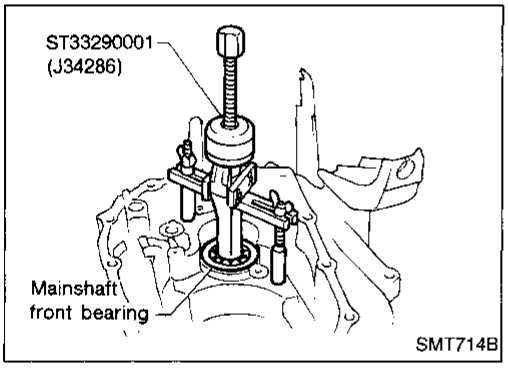

2. Remove mainshaft front bearing.
3. Remove oil channel.

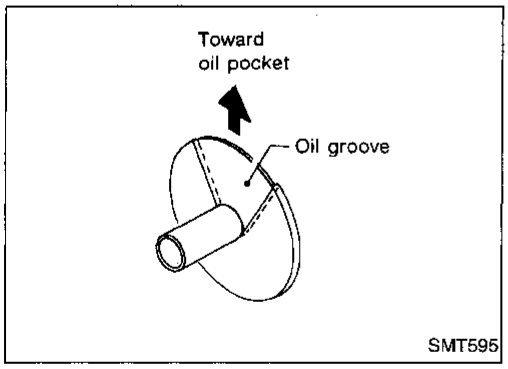

4. Install oil channel.
- **Ensure the oil groove faces the oil pocket.**

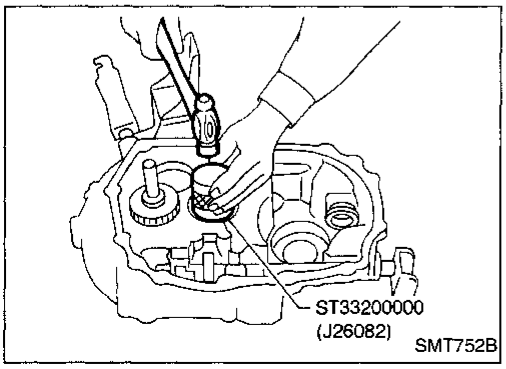

5. Install mainshaft front bearing with Tool.
6. Install mainshaft front bearing retainer.
- **Apply locking sealant to thread of screw before installation.**

Differential Side Bearing Preload

If any of the following parts are replaced, adjust differential side bearing preload.

- **Differential case**
- **Differential side bearing**
- **Clutch housing**
- **Transmission case**

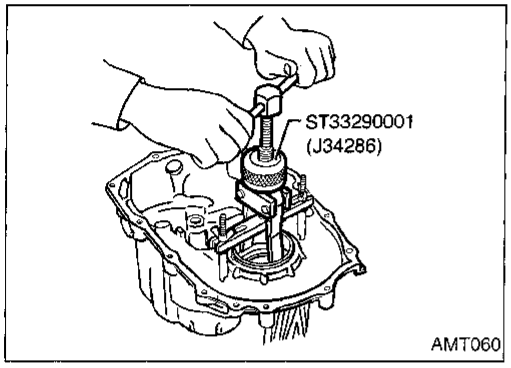

1. Remove differential side bearing outer race (transmission case side) and shim.

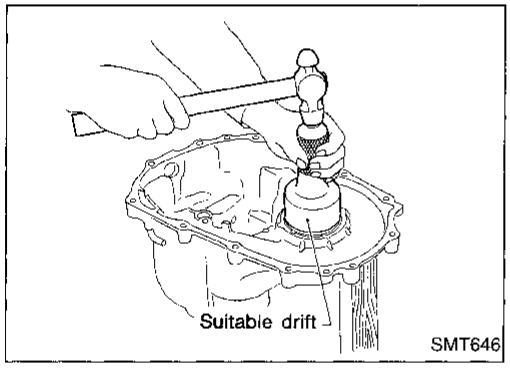

2. Install differential side bearing outer race without shim.
3. Install final drive assembly on clutch housing.
4. Install transmission case on clutch housing.

- **Tighten transmission case fixing bolts to the specified torque. Refer to MT-31.**

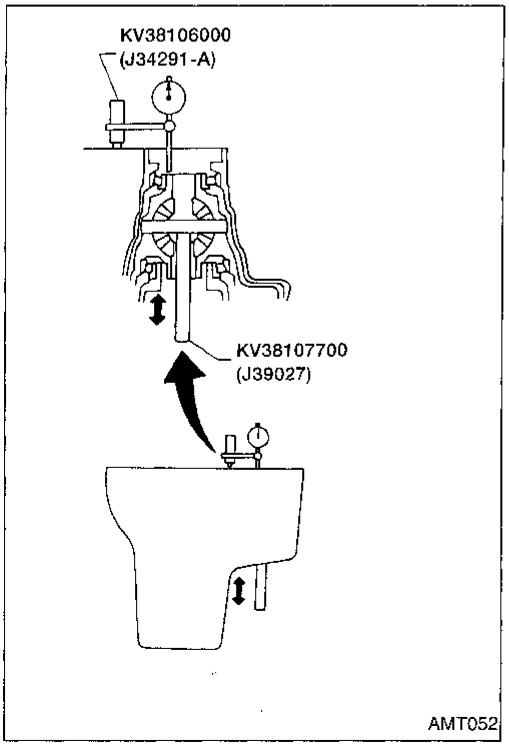

5. Set dial indicator on front end of differential case.
6. Insert Tool all the way into differential side gear.
7. Move Tool up and down and measure dial indicator deflection.
8. Select shim considering bearing preload.

- **Suitable shim thickness = dial indicator deflection + specified bearing preload**

  Differential side bearing adjusting shims:
  Refer to SDS, MT-64.
  Bearing preload:
  0.25 - 0.30 mm (0.0098 - 0.0118 in)

9. Install selected shim and differential side bearing outer race on transmission case.
10. Check differential side bearing turning torque.

a. Install final drive assembly on clutch housing.
b. Install transmission case on clutch housing.

- **Tighten transmission case fixing bolts to the specified torque. Refer to MT-31.**

Differential Side Bearing Preload (Cont'd)

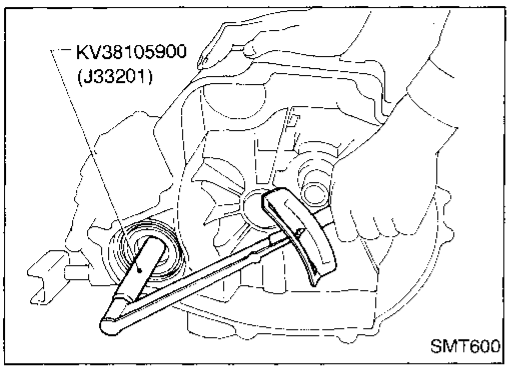

c. Measure turning torque of final drive assembly with Tool.

Turning torque of final drive assembly (New bearing):

2.9 - 6.9 N·m (30 - 70 kg-cm, 26 - 61 in-lb)

- **When old bearing is used again, turning torque will be slightly less than the above.**
- **Make sure torque is close to the specified range.**
- **Changes in turning torque of final drive assembly per revolution should be within 1.0 N·m (10 kg-cm, 8.7 in-lb) without binding.**

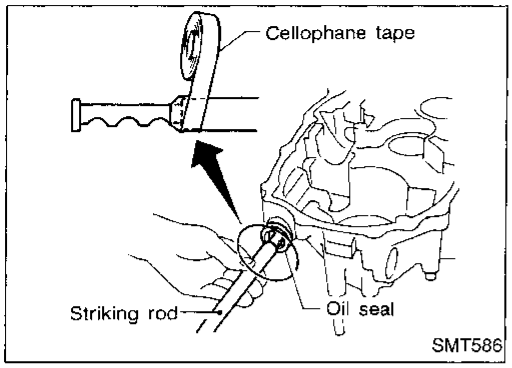

1. Install striking rod, lever and interlock.
- **Tape edges of striking rod to avoid damaging oil seal lip during installation. When taped edges of striking rod are past the oil seal, remove tape.**

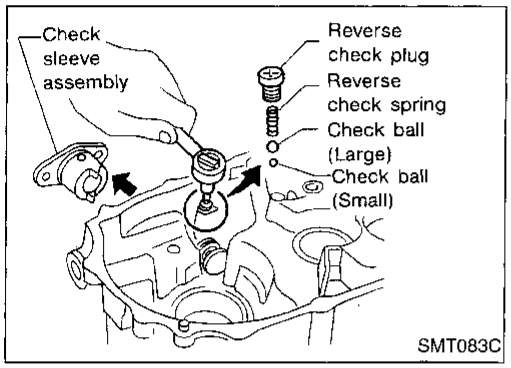

2. Install reverse check sleeve assembly.
3. Install check balls, reverse check spring and reverse check plug.

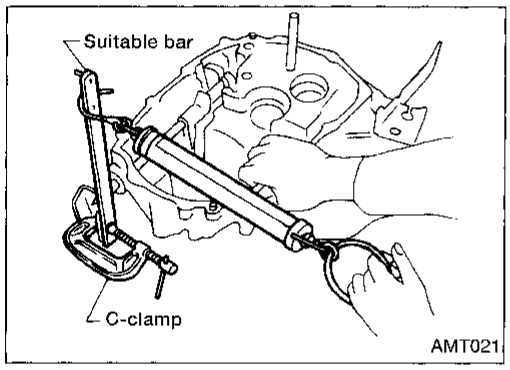

4. Check reverse turning torque (At striking rod).
   Reverse check turning torque (At striking rod):
   4.9 - 7.4 N·m (50 - 75 kg-cm, 43 - 65 in-lb)
- If not within specification, select another check plug having a different length and reinstall it.
   Reverse check plugs:
   Refer to SDS, MT-62.
5. Install selected reverse check plug.
- **Apply locking sealant to thread of plug before installing it.**

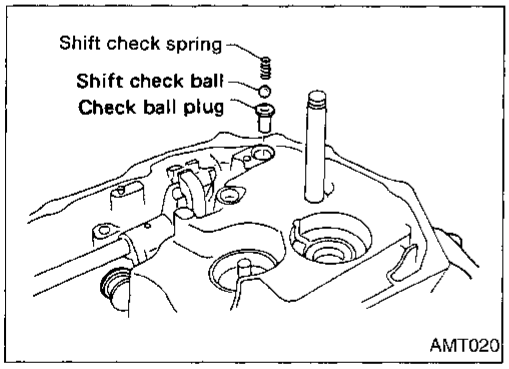

6. Install check ball plug, shift check ball and shift check spring.
7. Install oil pocket.

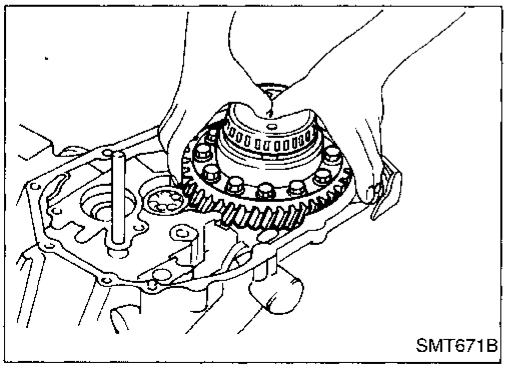

8. Install gear components onto clutch housing.
a. Install final drive assembly.

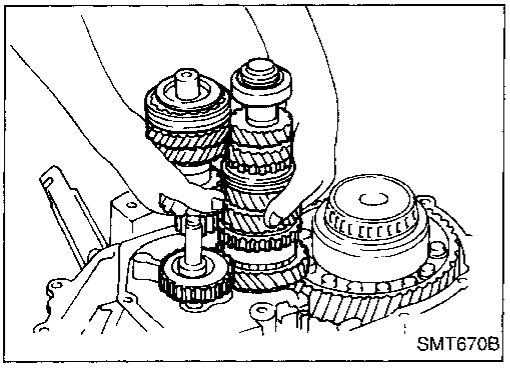

b. Install input shaft assembly with bearing retainer, mainshaft assembly and reverse idler gear.

- **Be careful not to damage oil seal lip with splines of input shaft.**
- **Be careful not to damage oil channel when inserting mainshaft into clutch housing.**

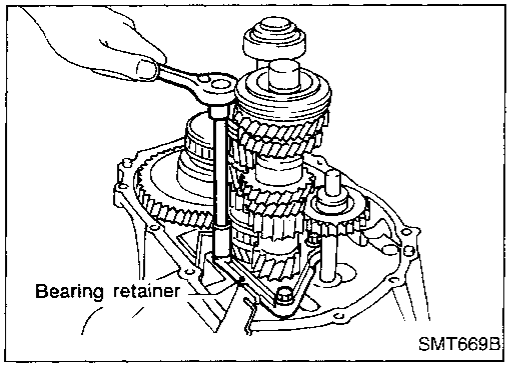

c. Install input shaft front bearing retainer.

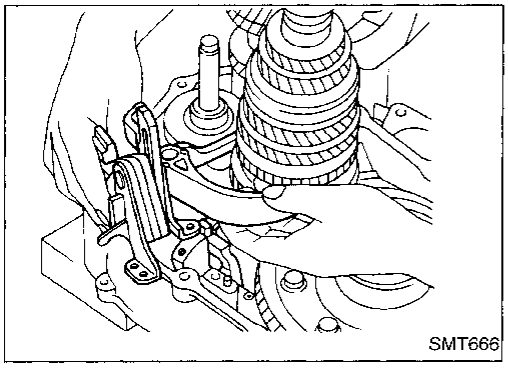

9. Apply grease to shifter caps and install to control bracket. Install control bracket with 1st & 2nd shift fork.

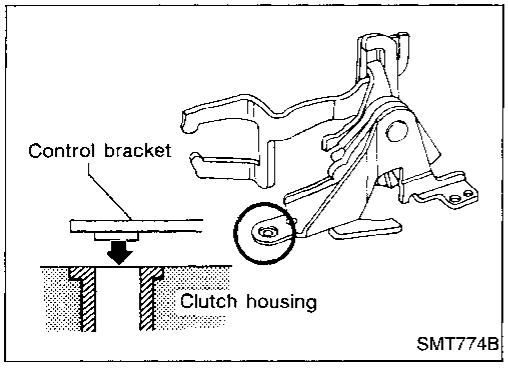

- When installing control bracket on clutch housing, ensure bracket is correctly seated.

10. Install 3rd & 4th and 5th shift forks.

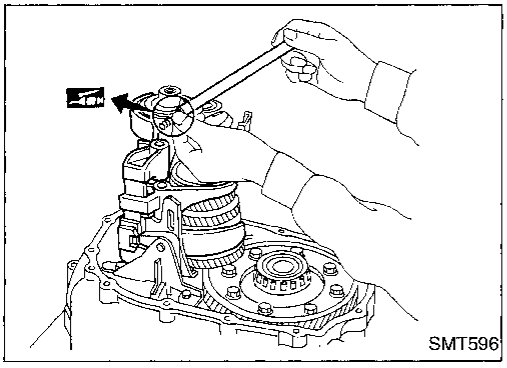

11. Insert fork shaft.

- **Apply multi-purpose grease to support spring before installing.**

12. Install reverse idler spacer.

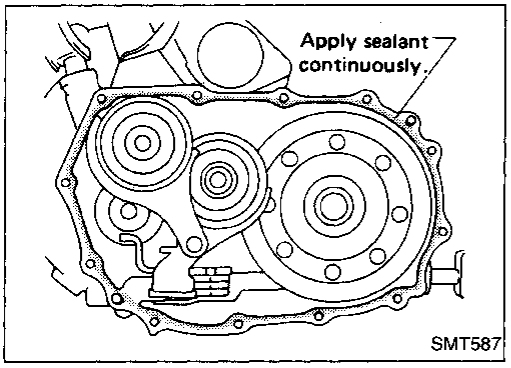

13. Apply recommended sealant to mating surface of clutch housing.

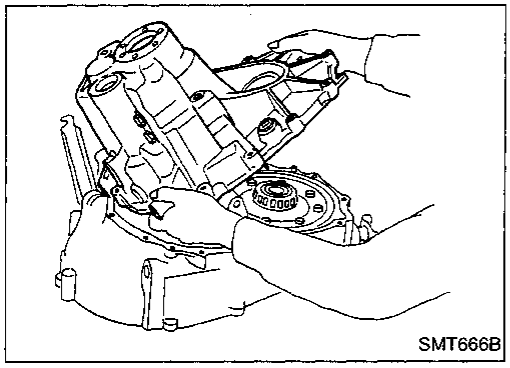

14. Install transmission case on clutch housing.

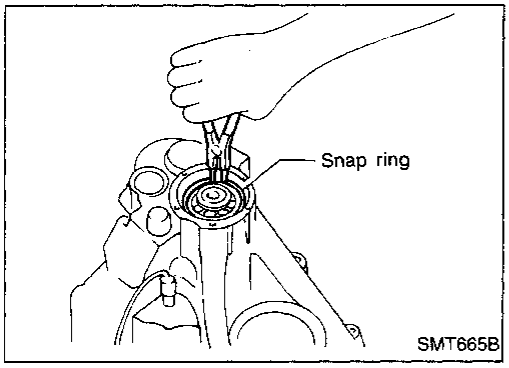

15. Install mainshaft front bearing snap ring.

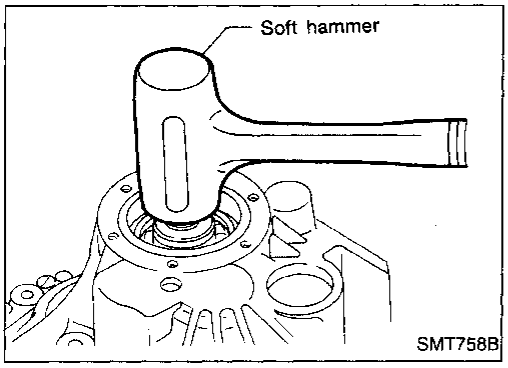

16. Tap mainshaft with a soft hammer to ensure mainshaft is properly seated.

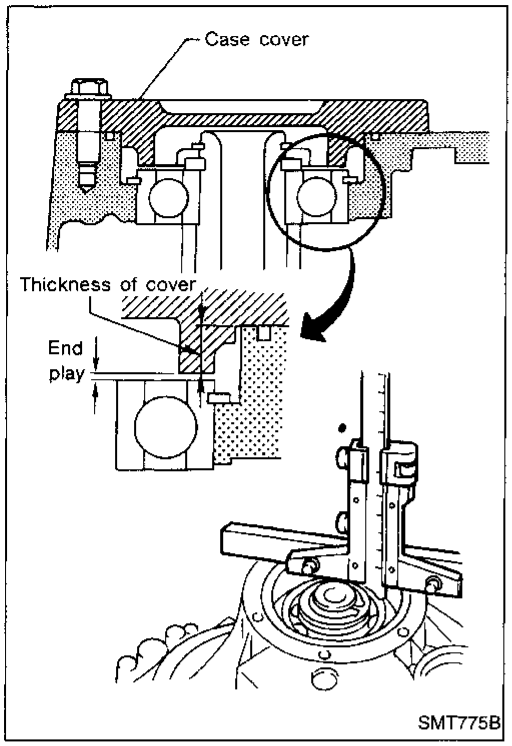

17. Check mainshaft bearing end play.
    Mainshaft bearing end play:
    0 - 0.1 mm (0 - 0.004 in)
- If not within specification, select another case cover having a different thickness.
    Available case covers:
    Refer to SDS, MT-62.

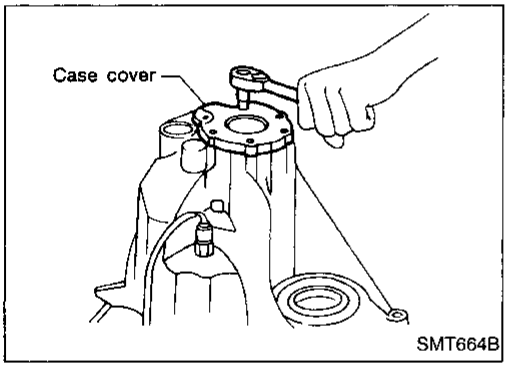

18. Install O-ring and case cover on transmission case.
- **Apply recommended sealant to mating surface of transmission case.**

General Specifications

TRANSAXLE

Engine			GA16DE	SR20DE
Transaxle model			RS5F31A	RS5F32V
Synchromesh type			Warner	
Shift pattern			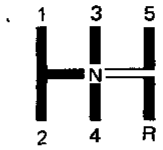	
Gear ratio	1st		3.333	3.063
	2nd		1.955	1.826
	3rd		1.286	1.286
	4th		0.926	0.975
	5th		0.733	0.756
	Reverse		3.417	3.153
Number of teeth	Input gear	1	15	16
		2	22	23
		3	28	28
		4	41	40
		5	45	45
		Rev.	12	13
	Main gear	1	50	49
		2	43	42
		3	36	36
		4	38	39
		5	33	34
		Rev.	41	41
	Reverse idler gear		30	31
Oil capacity		ℓ (US pt, Imp pt)	2.9 - 3.2 (6-1/8 - 6-3/4, 5-1/8 - 5-5/8)	3.7 - 3.9 (7-7/8 - 8-1/4, 6-1/2 - 6-7/8)
Oil level*		mm (in)	57 - 66 (2.24 - 2.60)	34 - 40 (1.34 - 1.57)
Remarks			—	2nd and 3rd double baulk ring type synchronizer

*Refer to MA section.

FINAL GEAR

Engine		GA16DE	SR20DE
Final gear ratio		3.789	4.176
Number of teeth	Final gear/Pinion	72/19	71/17
	Side gear/Pinion mate gear	16/10	14/10

Inspection and Adjustment

GEAR END PLAY

Gear	End play mm (in)
1st main gear	0.18 - 0.31 (0.0071 - 0.0122)
2nd main gear	0.20 - 0.30 (0.0079 - 0.0118)
3rd main gear	0.20 - 0.30 (0.0079 - 0.0118)
4th main gear	0.20 - 0.30 (0.0079 - 0.0118)
5th input gear	0.18 - 0.31 (0.0071 - 0.0122)

CLEARANCE BETWEEN BAULK RING AND GEAR

Unit: mm (in)

	Standard	Wear limit
1st & 2nd	1.0 - 1.35 (0.0394 - 0.0531)	0.7 (0.028)
3rd & 4th	1.0 - 1.35 (0.0394 - 0.0531)	0.7 (0.028)
5th	1.0 - 1.35 (0.0394 - 0.0531)	0.7 (0.028)

AVAILABLE CHECK PLUGS

Reverse check plug

Reverse check turning torque (At striking rod) N·m (kg-cm, in-lb)	4.9 - 7.4 (50 - 75, 43 - 65)
Thickness mm (in)	Part number
8.3 (0.327)	32188-M8001*
7.1 (0.280)	32188-M8002
7.7 (0.303)	32188-M8003
8.9 (0.350)	32188-M8004

* Standard size check plug

AVAILABLE SNAP RINGS

Input shaft front bearing

Allowable clearance	0 - 0.1 mm (0 - 0.004 in)
Thickness mm (in)	Part number
1.27 (0.0500)	32204-M8004
1.33 (0.0524)	32204-M8005
1.39 (0.0547)	32204-M8006
1.45 (0.0571)	32204-M8007

Input shaft 5th synchronizer hub

Allowable clearance	0 - 0.1 mm (0 - 0.004 in)
Thickness mm (in)	Part number
2.00 (0.0787)	32311-M8812
2.05 (0.0807)	32311-M8813
2.10 (0.0827)	32311-M8814
2.15 (0.0846)	32311-M8815
2.20 (0.0866)	32311-M8816
2.25 (0.0886)	32311-M8817
2.30 (0.0906)	32311-M8818

AVAILABLE C-RINGS

Mainshaft C-ring

Allowable clearance		0 - 0.1 mm (0 - 0.004 in)	
Thickness mm (in)	Part number	Thickness mm (in)	Part number
3.63 (0.1429)	32348-M8800	4.12 (0.1622)	32348-M8807
3.70 (0.1457)	32348-M8801	4.19 (0.1650)	32348-M8808
3.77 (0.1484)	32348-M8802	4.26 (0.1677)	32348-M8809
3.84 (0.1512)	32348-M8803	4.33 (0.1705)	32348-M8810
3.91 (0.1539)	32348-M8804	4.40 (0.1732)	32348-M8811
3.98 (0.1567)	32348-M8805	4.47 (0.1760)	32348-M8812
4.05 (0.1594)	32348-M8806	4.54 (0.1787)	32348-M8813

AVAILABLE WASHERS

Differential side gear thrust washer

Allowable clearance between side gear and differential case with washer	0.1 - 0.2 mm (0.004 - 0.008 in) or less
Thickness mm (in)	Part number
0.75 - 0.80 (0.0295 - 0.0315)	38424-D2111
0.80 - 0.85 (0.0315 - 0.0335)	38424-D2112
0.85 - 0.90 (0.0335 - 0.0354)	38424-D2113
0.90 - 0.95 (0.0354 - 0.0374)	38424-D2114
0.95 - 1.00 (0.0374 - 0.0394)	38424-D2115

Inspection and Adjustment (Cont'd)

AVAILABLE SHIMS
— MAINSHAFT AND DIFFERENTIAL SIDE BEARING PRELOAD AND ADJUSTING SHIM

Bearing preload (Reused bearing)

Unit: mm (in)

Mainshaft bearing	Differential side bearing
0.18 - 0.27 (0.0071 - 0.0106)	0.24 - 0.32 (0.0094 - 0.0126)

Turning torque (New bearing)

Unit: N·m (kg-cm, in-lb)

Final drive only	Total
2.0 - 7.8 (20 - 80, 17 - 69)	3.9 - 13.7 (40 - 140, 35 - 122)

Mainshaft bearing adjusting shims

Thickness mm (in)	Part number
0.10 (0.0039)	32137-M8000
0.15 (0.0059)	32137-M8001
0.20 (0.0079)	32137-M8002
0.25 (0.0098)	32137-M8003
0.30 (0.0118)	32137-M8004
0.35 (0.0138)	32137-M8005
0.40 (0.0157)	32137-M8006
0.45 (0.0177)	32137-M8007
0.50 (0.0197)	32137-M8008
0.55 (0.0217)	32137-M8009
0.60 (0.0236)	32137-M8010
0.65 (0.0256)	32137-M8011
0.70 (0.0276)	32137-M8012
0.75 (0.0295)	32137-M8013
0.80 (0.0315)	32137-M8014
0.85 (0.0335)	32137-M8015
0.90 (0.0354)	32137-M8016
0.95 (0.0374)	32137-M8017
1.00 (0.0394)	32137-M8018

Table for selecting mainshaft bearing adjusting shim

Unit: mm (in)

Measured distance	Suitable shim thickness
2.35 - 2.40 (0.0925 - 0.0945)	0.10 (0.0039)
2.40 - 2.45 (0.0945 - 0.0965)	0.15 (0.0059)
2.45 - 2.50 (0.0965 - 0.0984)	0.20 (0.0079)
2.50 - 2.55 (0.0984 - 0.1004)	0.25 (0.0098)
2.55 - 2.60 (0.1004 - 0.1024)	0.30 (0.0118)
2.60 - 2.65 (0.1024 - 0.1043)	0.35 (0.0138)
2.65 - 2.70 (0.1043 - 0.1063)	0.40 (0.0157)
2.70 - 2.75 (0.1063 - 0.1083)	0.45 (0.0177)
2.75 - 2.80 (0.1083 - 0.1102)	0.50 (0.0197)
2.80 - 2.85 (0.1102 - 0.1122)	0.55 (0.0217)
2.85 - 2.90 (0.1122 - 0.1142)	0.60 (0.0236)
2.90 - 2.95 (0.1142 - 0.1161)	0.65 (0.0256)
2.95 - 3.00 (0.1161 - 0.1181)	0.70 (0.0276)
3.00 - 3.05 (0.1181 - 0.1201)	0.75 (0.0295)
3.05 - 3.10 (0.1201 - 0.1220)	0.80 (0.0315)
3.10 - 3.15 (0.1220 - 0.1240)	0.85 (0.0335)
3.15 - 3.20 (0.1240 - 0.1260)	0.90 (0.0354)
3.20 - 3.25 (0.1260 - 0.1280)	0.95 (0.0374)
3.25 - 3.30 (0.1280 - 0.1299)	1.00 (0.0394)

Differential side bearing adjusting shims

Thickness mm (in)	Part number
0.44 (0.0173)	38454-M8000
0.48 (0.0189)	38454-M8001
0.56 (0.0220)	38454-M8003
0.60 (0.0236)	38454-M8004
0.64 (0.0252)	38454-M8005
0.68 (0.0268)	38454-M8006
0.72 (0.0283)	38454-M8007
0.76 (0.0299)	38454-M8008
0.80 (0.0315)	38454-M8009
0.84 (0.0331)	38454-M8010
0.88 (0.0346)	38454-M8011

Inspection and Adjustment

GEAR END PLAY

Gear	End play mm (in)
1st main gear	0.18 - 0.31 (0.0071 - 0.0122)
2nd main gear	0.20 - 0.30 (0.0079 - 0.0118)
3rd main gear	0.20 - 0.30 (0.0079 - 0.0118)
4th main gear	0.20 - 0.30 (0.0079 - 0.0118)
5th input gear	0.18 - 0.31 (0.0071 - 0.0122)

CLEARANCE BETWEEN BAULK RING AND GEAR

1st, 4th, 5th baulk ring

Unit: mm (in)

	Standard	Wear limit
1st	0.95 - 1.45 (0.0374 - 0.0571)	0.7 (0.028)
4th	0.9 - 1.45 (0.0354 - 0.0571)	
5th	0.9 - 1.5 (0.035 - 0.059)	

2nd and 3rd baulk ring

Unit: mm (in)

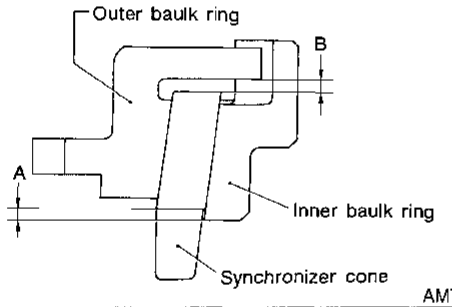

AMT062

Dimension	Standard	Wear limit
A	0.7 - 0.9 (0.028 - 0.035)	0.2 (0.008)
B	0.6 - 1.1 (0.024 - 0.043)	

AVAILABLE REVERSE CHECK PLUGS AND CASE COVERS

Reverse check plug

Reverse check turning torque (At striking rod)	4.9 - 7.4 N·m (50 - 75 kg-cm, 43 - 65 in-lb)
Length mm (in)	Part number
7.1 (0.280)	32188-M8002
7.7 (0.303)	32188-M8003
8.3 (0.327)	32188-M8001*
8.9 (0.350)	32188-M8004

* Standard size check plug

Case cover

Main shaft bearing end play	0 - 0.1 mm (0 - 0.004 in)
Thickness mm (in)	Part number
10.78 (0.4244)	32131-50J00
10.83 (0.4264)	32131-50J01
10.88 (0.4283)	32131-50J02
10.93 (0.4303)	32131-50J03
10.98 (0.4323)	32131-50J04
11.03 (0.4343)	32131-50J05

AVAILABLE SNAP RINGS

Input shaft front bearing

Allowable clearance	0 - 0.1 mm (0 - 0.004 in)
Thickness mm (in)	Part number
1.27 (0.0500)	32204-M8004
1.33 (0.0524)	32204-M8005
1.39 (0.0547)	32204-M8006
1.45 (0.0571)	32204-M8007

Input shaft 5th synchronizer hub

Allowable clearance	0 - 0.1 mm (0 - 0.004 in)
Thickness mm (in)	Part number
2.00 (0.0787)	32311-M8812
2.05 (0.0807)	32311-M8813
2.10 (0.0827)	32311-M8814
2.15 (0.0846)	32311-M8815
2.20 (0.0866)	32311-M8816
2.25 (0.0886)	32311-M8817
2.30 (0.0906)	32311-M8818

MAINSHAFT C-RING

Allowable clearance	0 - 0.1 mm (0 - 0.004 in)
Thickness mm (in)	Part number
4.45 (0.1752)	32348-50J00
4.52 (0.1780)	32348-50J01
4.59 (0.1807)	32348-50J02
4.66 (0.1835)	32348-50J03
4.73 (0.1862)	32348-50J04
4.80 (0.1890)	32348-50J05
4.87 (0.1917)	32348-50J06
4.94 (0.1945)	32348-50J07

Inspection and Adjustment (Cont'd)

MAINSHAFT BEARING ADJUSTING SPACER

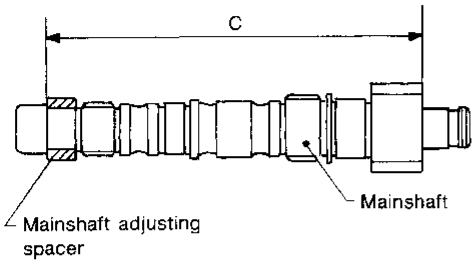

SMT716C

Bearing distance "C"	230.15 - 230.25 mm (9.0610 - 9.0649 in)
Thickness mm (in)	Part number
18.91 (0.7445)	32347-50J00
18.98 (0.7472)	32347-50J01
19.05 (0.7500)	32347-50J02
19.12 (0.7528)	32347-50J03
19.19 (0.7555)	32347-50J04
19.26 (0.7583)	32347-50J05
19.33 (0.7610)	32347-50J06
19.40 (0.7638)	32347-50J07
19.47 (0.7665)	32347-50J08

DIFFERENTIAL SIDE GEAR THRUST WASHER

Allowable clearance between side gear and differential case or viscous coupling with washer		0.1 - 0.2 mm (0.004 - 0.008 in)
	Thickness mm (in)	Part number
Differential case side	0.75 - 0.80 (0.0295 - 0.0315)	38424-D2111
	0.80 - 0.85 (0.0315 - 0.0335)	38424-D2112
	0.85 - 0.90 (0.0335 - 0.0354)	38424-D2113
	0.90 - 0.95 (0.0354 - 0.0374)	38424-D2114
	0.95 - 1.00 (0.0374 - 0.0394)	38424-D2115
Viscous coupling side	0.70 - 0.75 (0.0276 - 0.0295)	38424-D2110
	0.75 - 0.80 (0.0295 - 0.0315)	38424-D2111
	0.80 - 0.85 (0.0315 - 0.0335)	38424-D2112
	0.85 - 0.90 (0.0335 - 0.0354)	38424-D2113
	0.90 - 0.95 (0.0354 - 0.0374)	38424-D2114
	0.95 - 1.00 (0.0374 - 0.0394)	38424-D2115
	1.00 - 1.05 (0.0394 - 0.0413)	38424-D2116
	1.05 - 1.10 (0.0413 - 0.0433)	38424-D2117
	1.10 - 1.15 (0.0433 - 0.0453)	38424-D2118
	1.15 - 1.20 (0.0453 - 0.0472)	38424-D2119
	1.20 - 1.25 (0.0472 - 0.0492)	38424-D2120
	1.25 - 1.30 (0.0492 - 0.0512)	38424-D2121
	1.30 - 1.35 (0.0512 - 0.0531)	38424-D2122

Inspection and Adjustment (Cont'd)

INPUT SHAFT BRAKING MECHANISM

Reverse brake cam

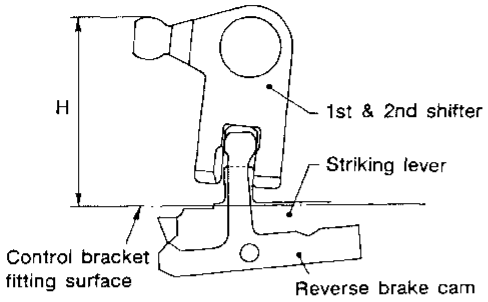

SMT735B

Maximum height "H" between the control bracket fitting surface and 1-2 shifter mm (in)	67.16 - 67.64 (0.6441 - 2.6630)

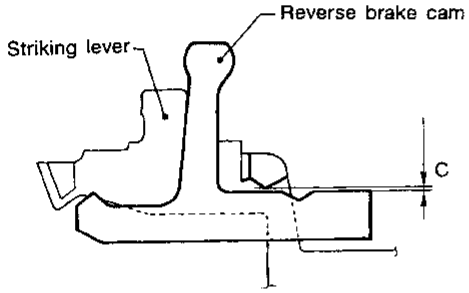

SMT736B

Clearance "C" between reverse brake cam and striking lever mm (in)	0.05 - 0.20 (0.0020 - 0.0079)

AVAILABLE SHIMS — DIFFERENTIAL SIDE BEARING PRELOAD AND ADJUSTING SHIM

Bearing preload (Reused bearing)

Unit: mm (in)

Differential side bearing	0.25 - 0.30 (0.0098 - 0.0118)

Turning torque (New bearing)

Unit: N·m (kg-cm, in-lb)

Final drive	2.9 - 6.9 (30 - 70, 26 - 61)

Differential side bearing adjusting shims

Thickness mm (in)	Part number
0.28 (0.0110)	31439-31X00
0.32 (0.0126)	31439-31X01
0.36 (0.0142)	31439-31X02
0.40 (0.0157)	31439-31X03
0.44 (0.0173)	31439-31X04
0.48 (0.0189)	31439-31X05
0.52 (0.0205)	31439-31X06
0.56 (0.0220)	31439-31X07
0.60 (0.0236)	31439-31X08
0.64 (0.0252)	31439-31X09
0.68 (0.0268)	31439-31X10
0.72 (0.0283)	31439-31X11
0.76 (0.0299)	31439-31X12
0.80 (0.0315)	31439-31X13
0.84 (0.0331)	31439-31X14
0.88 (0.0346)	31439-31X15
0.92 (0.0362)	31439-31X16
0.96 (0.0378)	31439-31X17
1.44 (0.0567)	31439-31X18

Inspection and Adjustment (Cont'd)

Table for selecting differential side bearing adjusting shims

Unit: mm (in)

Dial indicator deflection	Suitable shim thickness	Appropriate shim(s) (Examples)
0 - 0.02 (0 - 0.0008)	0.28 (0.0110)	0.28 (0.0110)
0.02 - 0.06 (0.0008 - 0.0024)	0.32 (0.0126)	0.32 (0.0126)
0.06 - 0.10 (0.0024 - 0.0039)	0.36 (0.0142)	0.36 (0.0142)
0.10 - 0.14 (0.0039 - 0.0055)	0.40 (0.0157)	0.40 (0.0157)
0.14 - 0.18 (0.0055 - 0.0071)	0.44 (0.0173)	0.44 (0.0173)
0.18 - 0.22 (0.0071 - 0.0087)	0.48 (0.0189)	0.48 (0.0189)
0.22 - 0.26 (0.0087 - 0.0102)	0.52 (0.0205)	0.52 (0.0205)
0.26 - 0.30 (0.0102 - 0.0118)	0.56 (0.0220)	0.56 (0.0220)
0.30 - 0.34 (0.0118 - 0.0134)	0.60 (0.0236)	0.60 (0.0236)
0.34 - 0.38 (0.0134 - 0.0150)	0.64 (0.0252)	0.64 (0.0252)
0.38 - 0.42 (0.0150 - 0.0165)	0.68 (0.0268)	0.68 (0.0268)
0.42 - 0.46 (0.0165 - 0.0181)	0.72 (0.0283)	0.72 (0.0283)
0.46 - 0.50 (0.0181 - 0.0197)	0.76 (0.0299)	0.76 (0.0299)
0.50 - 0.54 (0.0197 - 0.0213)	0.80 (0.0315)	0.80 (0.0315)
0.54 - 0.58 (0.0213 - 0.0228)	0.84 (0.0331)	0.84 (0.0331)
0.58 - 0.62 (0.0228 - 0.0244)	0.88 (0.0346)	0.88 (0.0346)
0.62 - 0.66 (0.0244 - 0.0260)	0.92 (0.0362)	0.92 (0.0362)
0.66 - 0.70 (0.0260 - 0.0276)	0.96 (0.0378)	0.96 (0.0378)
0.70 - 0.74 (0.0276 - 0.0291)	1.00 (0.0394)	0.48 (0.0189) + 0.52 (0.0205)
0.74 - 0.78 (0.0291 - 0.0307)	1.04 (0.0409)	0.52 (0.0205) + 0.52 (0.0205)
0.78 - 0.82 (0.0307 - 0.0323)	1.08 (0.0425)	0.52 (0.0205) + 0.56 (0.0220)
0.82 - 0.86 (0.0323 - 0.0339)	1.12 (0.0441)	0.56 (0.0220) + 0.56 (0.0220)
0.86 - 0.90 (0.0339 - 0.0354)	1.16 (0.0457)	0.56 (0.0220) + 0.60 (0.0236)
0.90 - 0.94 (0.0354 - 0.0370)	1.20 (0.0472)	0.60 (0.0236) + 0.60 (0.0236)
0.94 - 0.98 (0.0370 - 0.0386)	1.24 (0.0488)	0.60 (0.0236) + 0.64 (0.0252)
0.98 - 1.02 (0.0386 - 0.0402)	1.28 (0.0504)	0.64 (0.0252) + 0.64 (0.0252)
1.02 - 1.06 (0.0402 - 0.0417)	1.32 (0.0520)	0.64 (0.0252) + 0.68 (0.0268)
1.06 - 1.10 (0.0417 - 0.0433)	1.36 (0.0535)	0.68 (0.0268) + 0.68 (0.0268)
1.10 - 1.14 (0.0433 - 0.0449)	1.40 (0.0551)	0.68 (0.0268) + 0.72 (0.0283)
1.14 - 1.18 (0.0449 - 0.0465)	1.44 (0.0567)	1.44 (0.0567)
1.18 - 1.22 (0.0465 - 0.0480)	1.48 (0.0583)	0.72 (0.0283) + 0.76 (0.0299)
1.22 - 1.26 (0.0480 - 0.0496)	1.52 (0.0598)	0.76 (0.0299) + 0.76 (0.0299)
1.26 - 1.30 (0.0496 - 0.0512)	1.56 (0.0614)	0.76 (0.0299) + 0.80 (0.0315)
1.30 - 1.34 (0.0512 - 0.0528)	1.60 (0.0630)	0.80 (0.0315) + 0.80 (0.0315)
1.34 - 1.38 (0.0528 - 0.0543)	1.64 (0.0646)	0.80 (0.0315) + 0.84 (0.0331)
1.38 - 1.42 (0.0543 - 0.0559)	1.68 (0.0661)	0.84 (0.0331) + 0.84 (0.0331)
1.42 - 1.46 (0.0559 - 0.0575)	1.72 (0.0677)	0.84 (0.0331) + 0.88 (0.0346)
1.46 - 1.50 (0.0575 - 0.0591)	1.76 (0.0693)	0.88 (0.0346) + 0.88 (0.0346)