SECTION MT

CONTENTS

Special Service Tools

The actual shapes of Kent-Moore tools may differ from those of special service tools illustrated here.

Tool number (Kent-Moore No.) Tool name	Description	
KV38107700 (J39027) Preload adapter	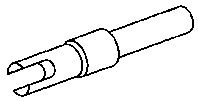 NT087	Measuring turning torque of final drive assembly Selecting differential side bearing adjusting shim (Use with KV38106000.)
KV38106000 (J34291-A) Height gauge adapter (differential side bearing)	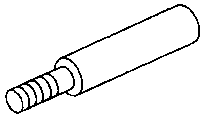 NT089	Selecting differential side bearing adjusting shim (Use with KV38107700.)
KV32101000 (J25689-A) Pin punch	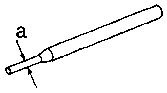 NT410	Removing and installing retaining pin **a: 4 mm (0.16 in) dia.**
ST22730000 (J25681) Puller	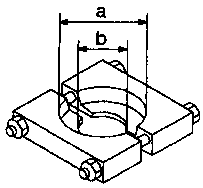 NT411	Removing 5th main gear **a: 82 mm (3.23 in) dia.** **b: 30 mm (1.18 in) dia.**
ST30031000 (J22912-01) Puller	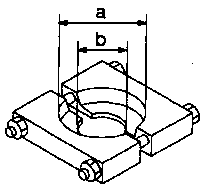 NT411	Removing 3rd and 4th synchronizer Measuring wear of 2nd & 3rd baulk ring **a: 90 mm (3.54 in) dia.** **b: 50 mm (1.97 in) dia.**
ST30021000 (J22912-01) Puller	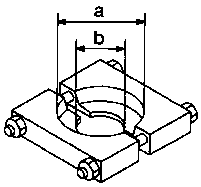 NT411	Removing 5th synchronizer **a: 110 mm (4.33 in) dia.** **b: 68 mm (2.68 in) dia.**
ST33290001 (J34286) Puller	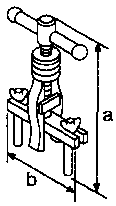 NT414	Removing differential oil seal Removing differential side bearing outer race **a: 250 mm (9.84 in)** **b: 160 mm (6.30 in)**

Special Service Tools (Cont'd)

Tool number (Kent-Moore No.) Tool name	Description	
KV31103000 (—) Drift	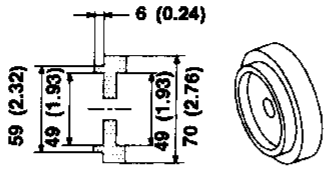 NT106	Installing differential oil seal (Use with ST35325000.) **Unit: mm (in)**
ST35325000 (—) Drift handle	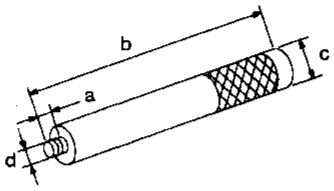 NT416	Installing differential oil seal (Use with KV31103000.)
KV38102100 (J25803-01) Drift	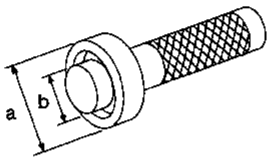 NT084	Installing input shaft rear bearing **a: 44 mm (1.73 in) dia.** **b: 24.5 mm (0.965 in) dia.**
ST33200000 (J26082) Drift	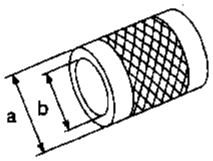 NT091	Installing mainshaft front bearing **a: 60 mm (2.36 in) dia.** **b: 44.5 mm (1.752 in) dia.**
ST22350000 (J25678-01) Drift	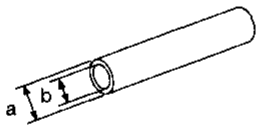 NT065	Installing input shaft front bearing **a: 34 mm (1.34 in) dia.** **b: 28 mm (1.10 in) dia.**
ST22452000 (—) Drift	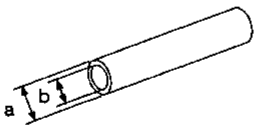 NT065	Installing 1st & 2nd synchronizer Installing 3rd & 4th synchronizer **a: 45 mm (1.77 in) dia.** **b: 36 mm (1.42 in) dia.**
ST37750000 (J25863-01) Drift	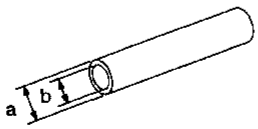 NT065	Installing 5th main gear Installing input shaft oil seal Installing 5th synchronizer Installing mainshaft rear bearing **a: 40 mm (1.57 in) dia.** **b: 31 mm (1.22 in) dia.**

Special Service Tools (Cont'd)

Tool number (Kent-Moore No.) Tool name	Description	
ST30621000 (J25742-5) Drift	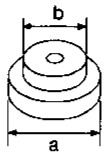 NT073	Installing differential side bearing outer race (Use with ST30611000.) **a: 79 mm (3.11 in) dia.** **b: 59 mm (2.32 in) dia.**
ST30611000 (J25742-1) Drift handle	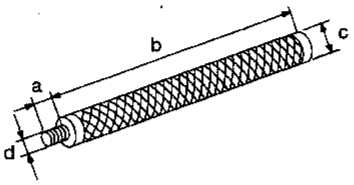 NT419	(Use with ST30621000.) **a: 15 mm (0.59 in)** **b: 335 mm (13.19 in)** **c: 25 mm (0.98 in) dia.** **d: M12 x 1.5P**

Commercial Service Tools

Tool name	Description	
Puller	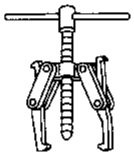 NT077	Removing input shaft front bearing Removing mainshaft rear bearing
Drift	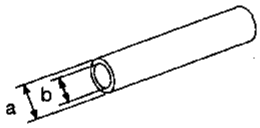 NT065	Installing differential side bearing inner race **a: 56 mm (2.20 in) dia.** **b: 50.5 mm (1.988 in) dia.**
Drift	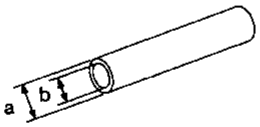 NT065	Installing striking rod oil seal **a: 38 mm (1.50 in) dia.** **b: 32 mm (1.26 in) dia.**

NVH Troubleshooting Chart

Use the chart below to help you find the cause of the symptom. The numbers indicate the order of inspection. If necessary, repair or replace these parts.

MANUAL TRANSAXLE

Reference page		Refer to MA section ("Checking M/T Oil", "CHASSIS AND BODY MAINTENANCE").			MT-11	MT-11	MT-11	MT-10	MT-13	MT-13	MT-12	MT-12	MT-12	MT-12
SUSPECTED PARTS (Possible cause)		OIL (Level low)	OIL (Wrong)	OIL (Level too high)	GASKET (Damaged)	OIL SEAL (Worn or damaged)	O-RING (Worn or damaged)	CONTROL ROD (Worn)	CHECK PLUG RETURN SPRING AND CHECK BALL (Worn or damaged)	SHIFT FORK (Worn)	GEAR (Worn or damaged)	BEARING (Worn or damaged)	BAULK RING (Worn or damaged)	INSERT SPRING (Damaged)
Symptom	Noise	1	2								3	3		
	Oil leakage		3	1	2	2	2							
	Hard to shift or will not shift		1	1				2					3	3
	Jumps out of gear							1	2	3	3			

Cross-sectional View

RS5F32A

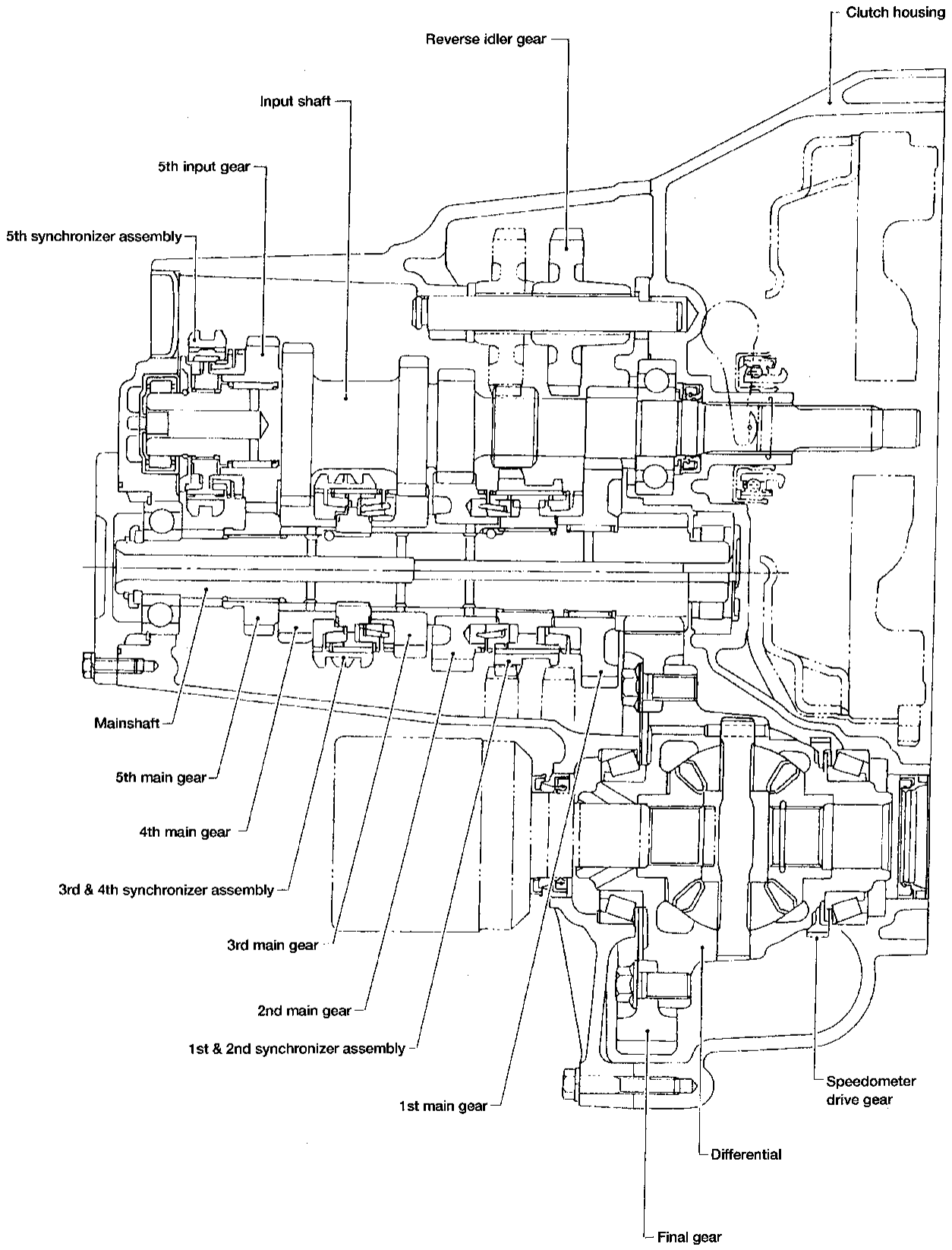

AMT152

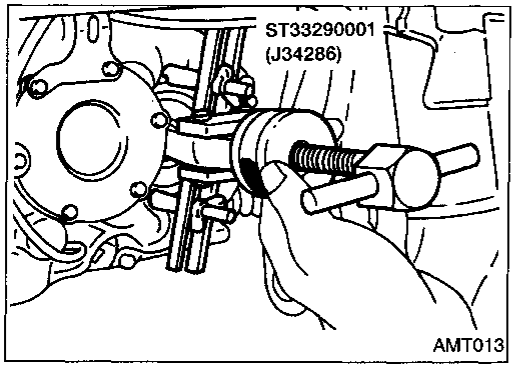

Replacing Oil Seal

DIFFERENTIAL OIL SEAL

1. Drain gear oil from transaxle.
2. Remove drive shafts. Refer to FA section ("REMOVAL", "FRONT AXLE — Drive Shaft").
3. Remove differential oil seal with Tool.

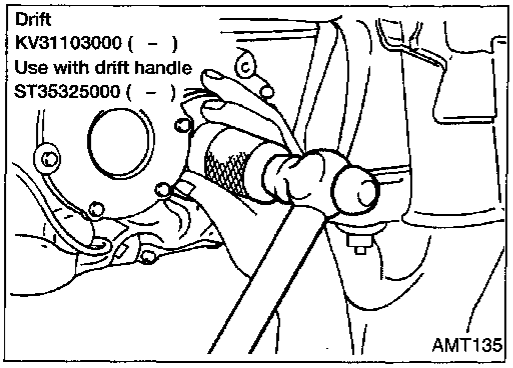

4. Install differential oil seal.
- **Apply multi-purpose grease to seal lip of oil seal before installing.**
5. Install drive shafts. Refer to FA section ("INSTALLATION", "FRONT AXLE — Drive Shaft").

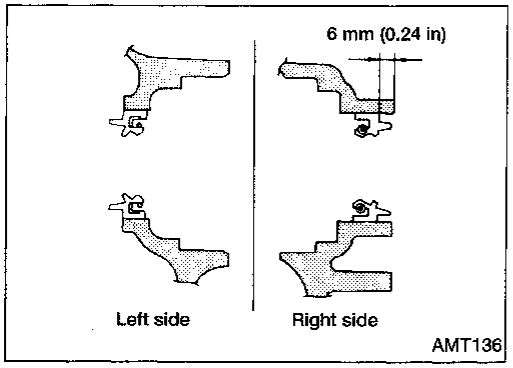

STRIKING ROD OIL SEAL

1. Remove transaxle control rod from yoke.
2. Remove retaining pin.
- **Be careful not to damage boot.**

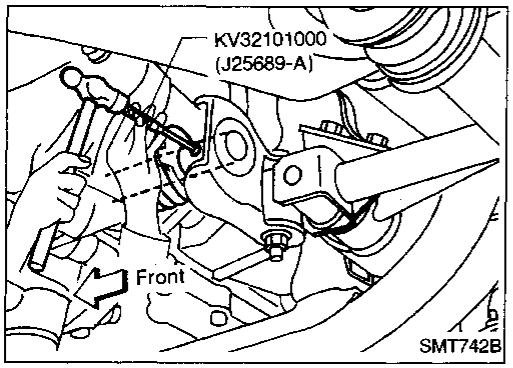

3. Remove striking rod oil seal.

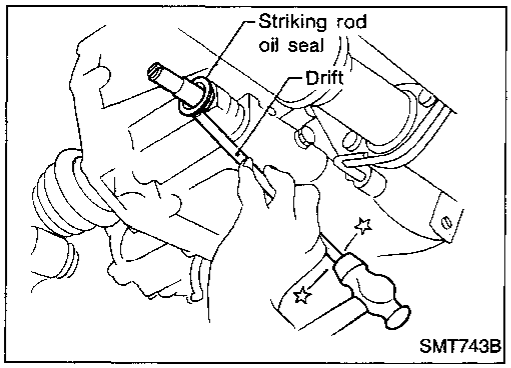

Replacing Oil Seal (Cont'd)

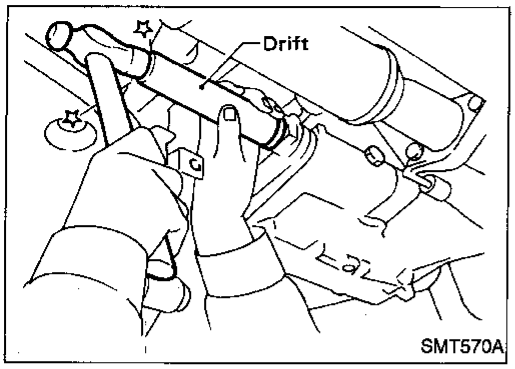

4. Install striking rod oil seal.
- **Apply multi-purpose grease to seal lip of oil seal before installing.**

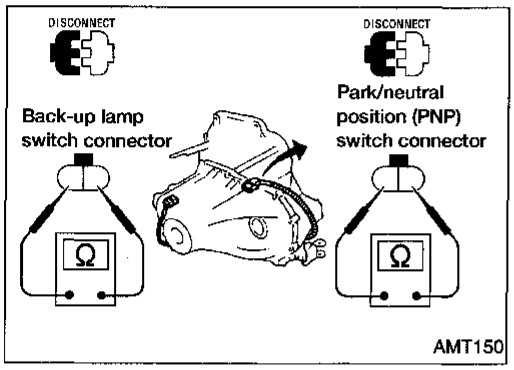

Position Switch Check

- Check continuity.

Switch	Gear position	Continuity
Back-up lamp switch	Reverse	Yes
	Except reverse	No
Park/neutral position (PNP) switch	Neutral	Yes
	Except neutral	No

Removal

CAUTION:
Before separating transaxle from engine, remove the crankshaft position sensor (OBD) from transaxle.
Be careful not to damage sensor edge or ring gear teeth.

1. Remove battery negative terminal.
2. Remove air cleaner housing.

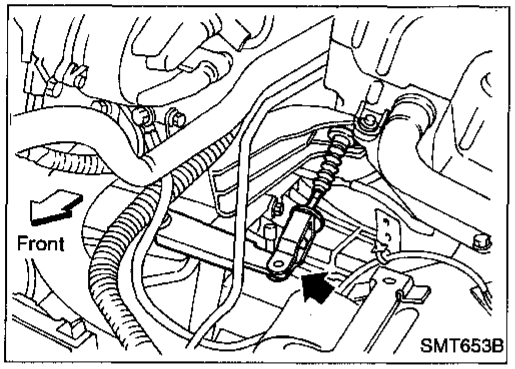

3. Disconnect clutch control cable.
4. Disconnect back-up lamp switch, park/neutral position (PNP) switch, vehicle speed sensor and ground harness connectors.
5. Remove starter motor from transaxle.
6. Remove crankshaft position sensor (OBD) from transaxle.
   - **Be careful not to damage sensor tip.**

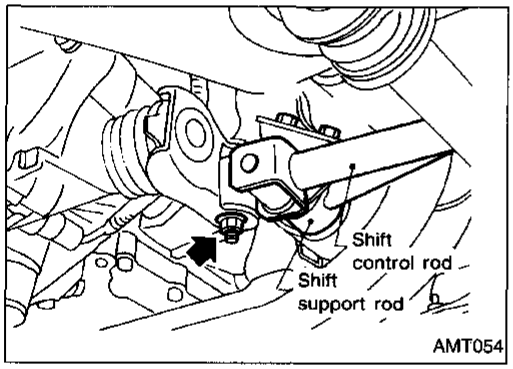

7. Remove shift control rod from transaxle.
8. Drain gear oil from transaxle.
9. Remove drive shafts from transaxle. Refer to FA section ("REMOVAL", "FRONT AXLE — Drive Shaft").
10. Support the transaxle with a jack.

CAUTION:
Do not place jack under oil pan drain plug.

11. Remove LH and rear mounts.
12. Remove bolts securing transaxle.
13. Lower transaxle.

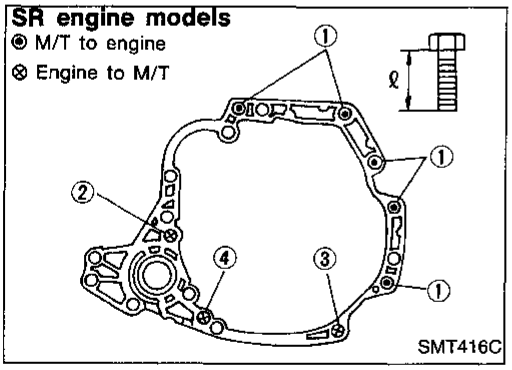

Installation

- Tighten starter motor to transaxle.
  : 41 - 52 N·m (4.2 - 5.3 kg-m, 30 - 38 ft-lb)
- Tighten LH and rear mounts to the specified torque. Refer to EM section ("ENGINE REMOVAL").
- Install transaxle and any part removed.
- Check clutch cable adjustment. Refer to CL section ("Adjusting Clutch Pedal", "INSPECTION AND ADJUSTMENT").

Bolt No.	Tightening torque N·m (kg-m, ft-lb)	"ℓ" mm (in)
①	70 - 79 (7.1 - 8.1, 51 - 59)	55 (2.17)
②	70 - 79 (7.1 - 8.1, 51 - 59)	65 (2.56)
③	31 - 42 (3.2 - 4.3, 23 - 31)	35 (1.38)
④	31 - 42 (3.2 - 4.3, 23 - 31)	45 (1.77)

SEC. 341

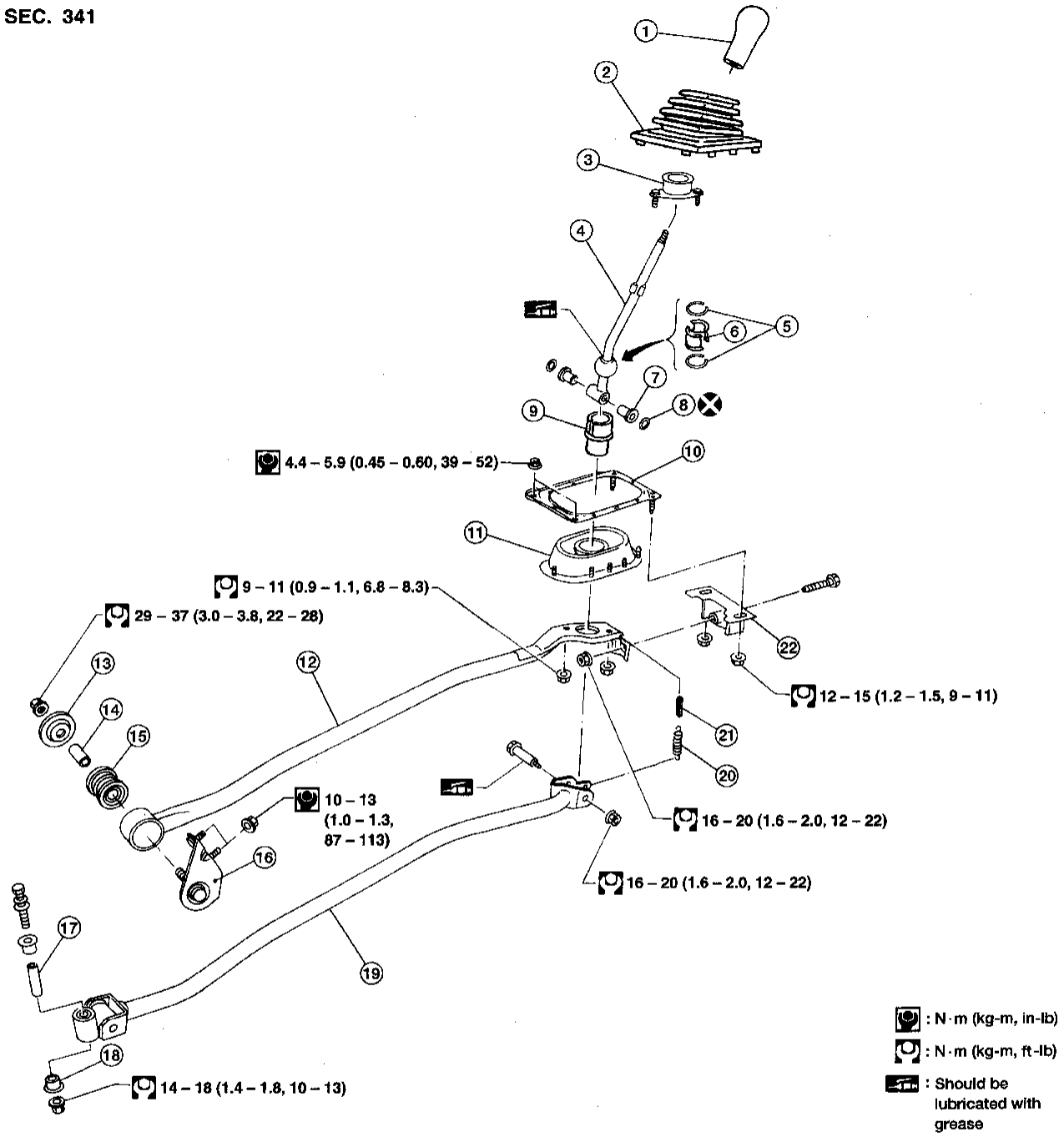

AMT124

① Shift lever knob
② Boot
③ Shift lever socket
④ Shift lever
⑤ Bearing seat spring
⑥ Seat
⑦ Bushing
⑧ O-ring
⑨ Hand lever socket
⑩ Plate bolt
⑪ Transaxle hole cover
⑫ Support rod
⑬ Plate
⑭ Collar
⑮ Bushing
⑯ Support rod bracket
⑰ Collar
⑱ Bushing
⑲ Shift control rod
⑳ Return spring
㉑ Return spring rubber
㉒ Holder bracket

Case Components

SEC. 320

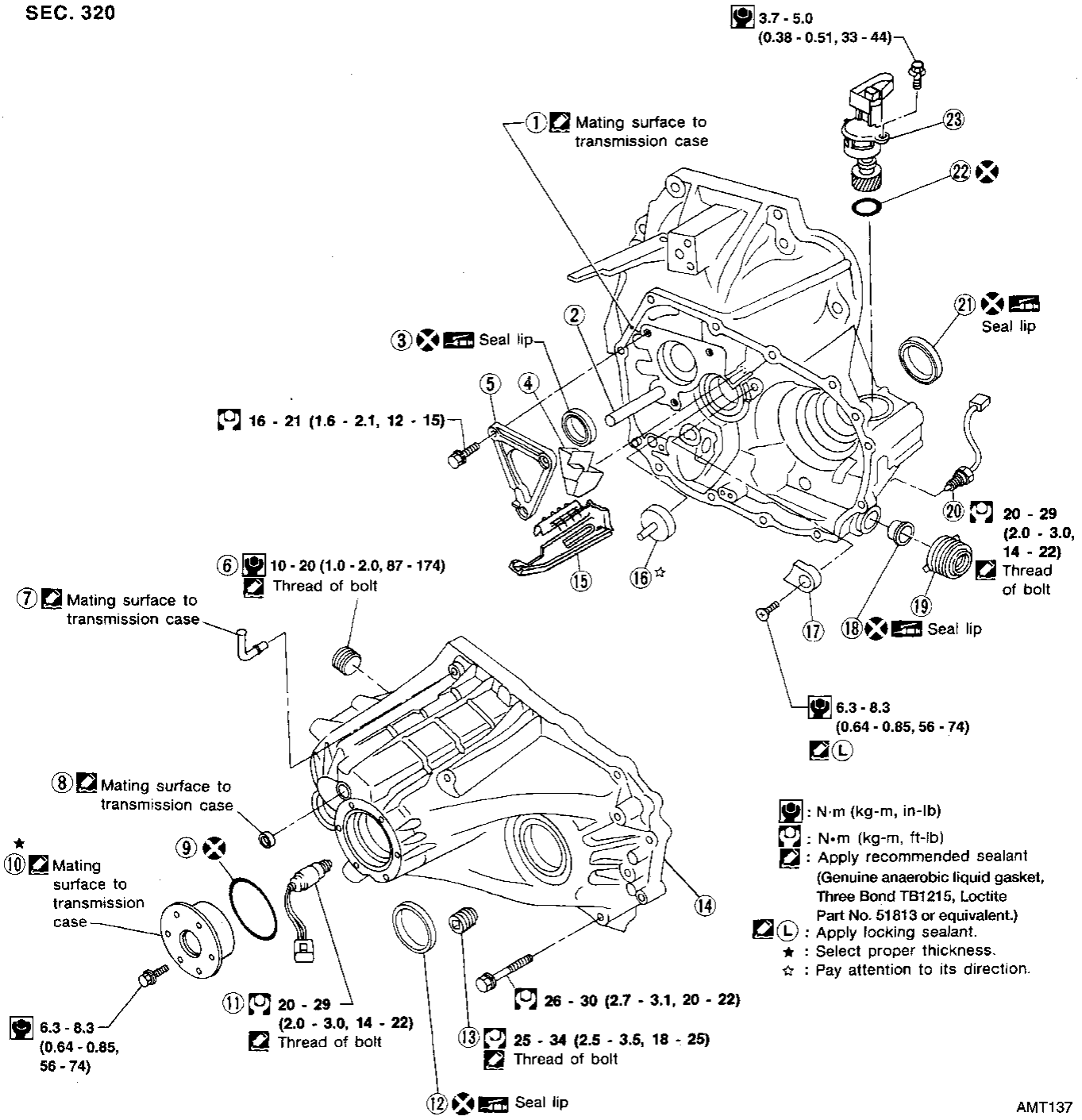

① Clutch housing
② Reverse idler shaft
③ Input shaft oil seal
④ Oil pocket
⑤ Bearing retainer
⑥ Filler plug
⑦ Air breather
⑧ Welch plug
⑨ O-ring
⑩ Case cover
⑪ Back-up lamp switch
⑫ Differential oil seal
⑬ Drain plug
⑭ Transmission case
⑮ Oil gutter
⑯ Oil channel
⑰ Bearing retainer
⑱ Striking rod oil seal
⑲ Boot
⑳ Park/neutral position (PNP) switch
㉑ Differential oil seal
㉒ O-ring
㉓ Vehicle speed sensor

Gear Components

SEC. 322

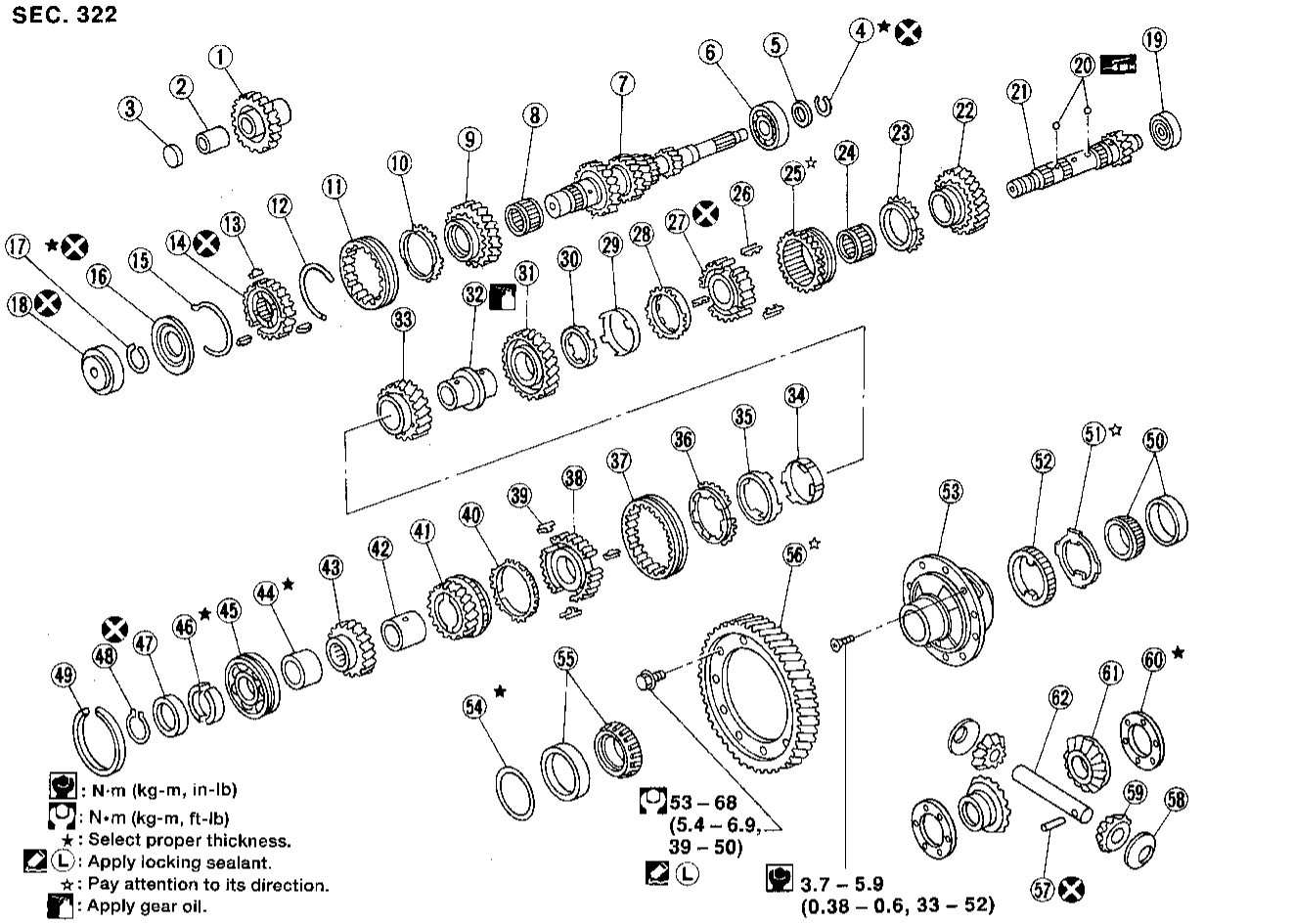

① Reverse idler gear
② Reverse idler bushing
③ Reverse idler spacer
④ Snap ring
⑤ Spacer
⑥ Input shaft front bearing
⑦ Input shaft
⑧ 5th gear needle bearing
⑨ 5th input gear
⑩ Baulk ring
⑪ Coupling sleeve
⑫ Spread spring
⑬ Shifting insert
⑭ 5th synchronizer hub
⑮ Spread spring
⑯ 5th stopper
⑰ Snap ring
⑱ Input shaft rear bearing
⑲ Mainshaft front bearing
⑳ Steel ball
㉑ Mainshaft
㉒ 1st main gear
㉓ Baulk ring
㉔ 1st gear needle bearing
㉕ Reverse main gear (Coupling sleeve)
㉖ Insert spring
㉗ 1st & 2nd synchronizer hub
㉘ 2nd outer baulk ring
㉙ 2nd synchronizer cone
㉚ 2nd inner baulk ring
㉛ 2nd main gear
㉜ 2nd & 3rd bushing
㉝ 3rd main gear
㉞ 3rd inner baulk ring
㉟ 3rd synchronizer cone
㊱ 3rd outer baulk ring
㊲ Coupling sleeve
㊳ 3rd & 4th synchronizer hub
㊴ Insert spring
㊵ Baulk ring
㊶ 4th main gear
㊷ 4th bushing
㊸ 5th main gear
㊹ Spacer
㊺ Mainshaft rear bearing
㊻ Mainshaft C-ring
㊼ C-ring holder
㊽ Snap ring
㊾ Snap ring
㊿ Differential side bearing
(51) Speedometer stopper
(52) Speedometer drive gear
(53) Differential case
(54) Differential side bearing adjusting shim
(55) Differential side bearing
(56) Final gear
(57) Lock pin
(58) Pinion mate thrust washer
(59) Pinion mate gear
(60) Side gear thrust washer
(61) Side gear
(62) Pinion mate shaft

Shift Control Components

SEC. 328

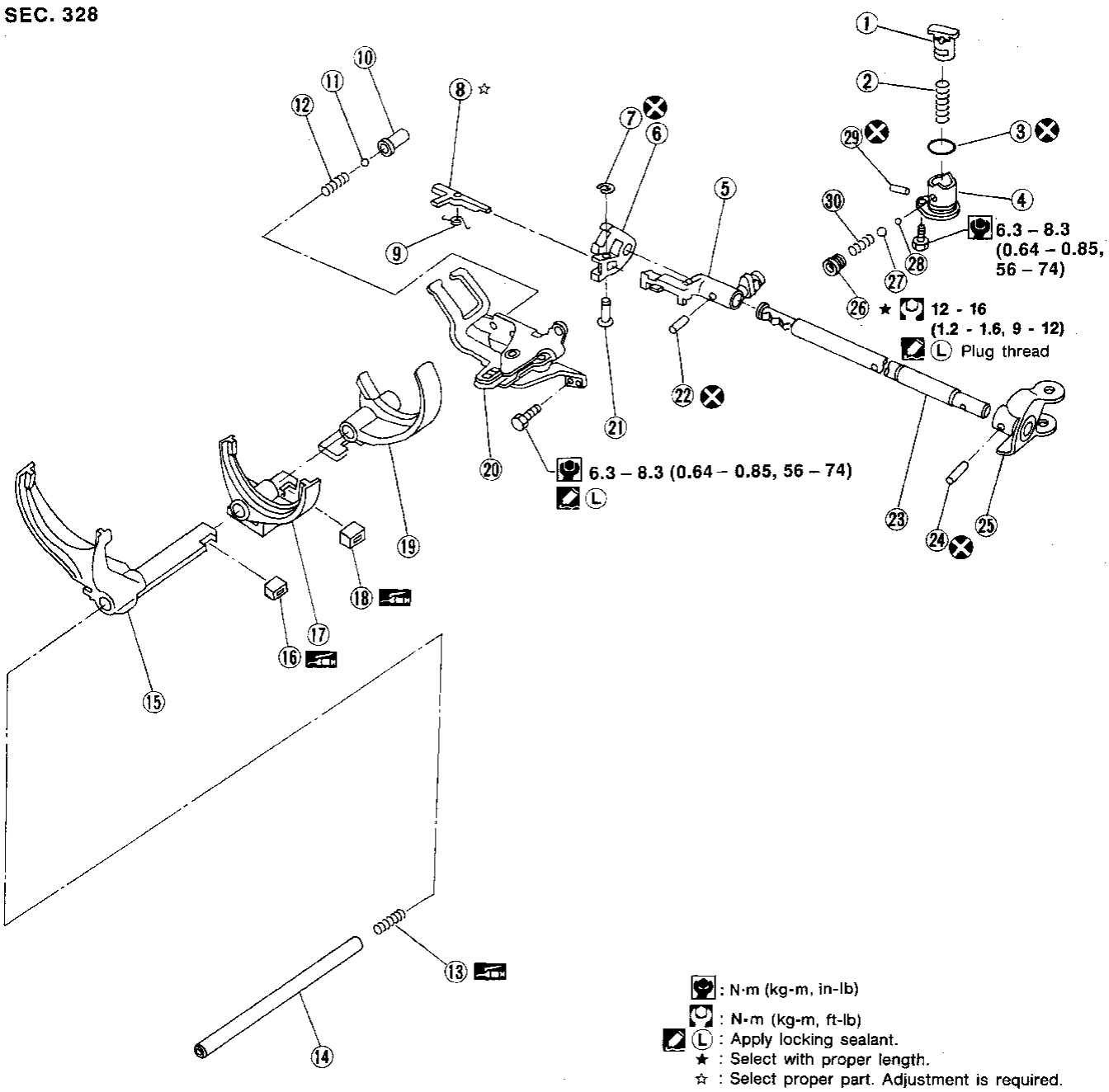

① Check plunger
② Select return spring
③ O-ring
④ Check sleeve
⑤ Striking lever
⑥ Striking interlock
⑦ E-ring
⑧ Reverse brake cam
⑨ Reverse brake cam spring
⑩ Check ball plug
⑪ Shift check ball
⑫ Shift check spring
⑬ Fork shaft support spring
⑭ Fork shaft
⑮ 5th shift fork
⑯ Shifter cap
⑰ 3rd & 4th shift fork
⑱ Shifter cap
⑲ 1st & 2nd shift fork
⑳ Control bracket
㉑ Interlock pin
㉒ Retaining pin
㉓ Striking rod
㉔ Retaining pin
㉕ Yoke
㉖ Reverse check plug
㉗ Check ball (Large)
㉘ Check ball (Small)
㉙ Stopper pin
㉚ Reverse check spring

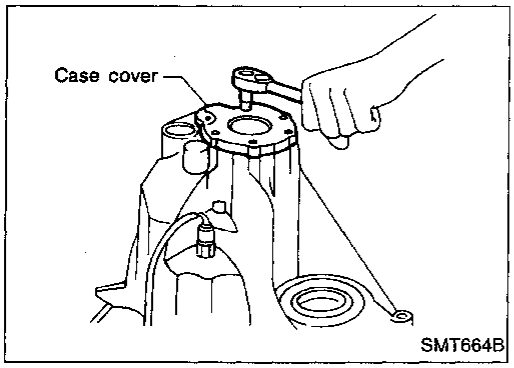

1. Remove case cover.

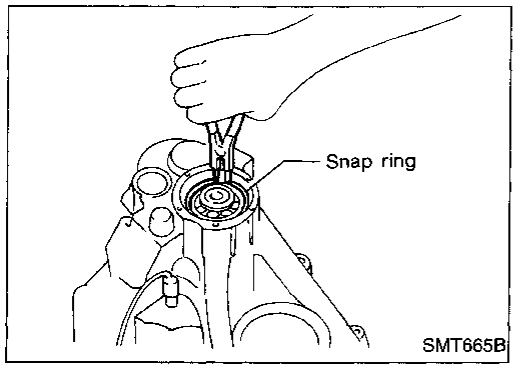

2. Remove mainshaft bearing snap ring.

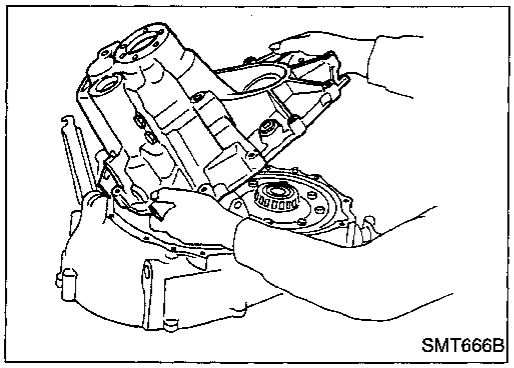

3. Remove transmission case while slightly tilting it to prevent 5th shift fork from interfering with transmission case.

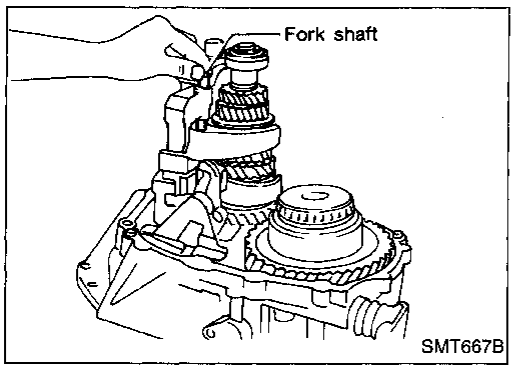

4. Draw out reverse idler spacer and fork shaft.

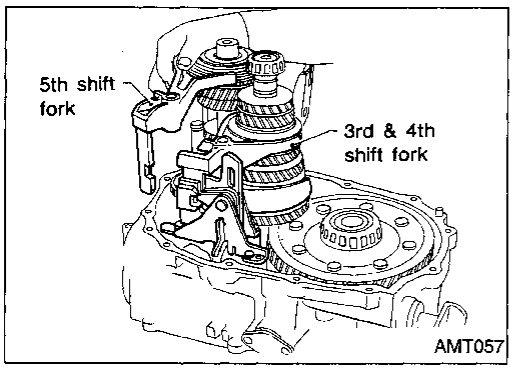

5. Remove 5th and 3rd & 4th shift forks.
- **Be careful not to lose shifter caps.**

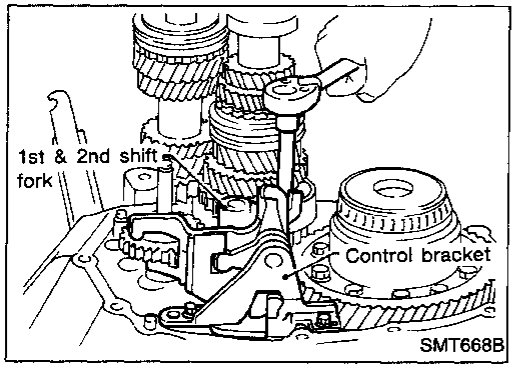

6. Remove control bracket with 1st & 2nd shift fork.

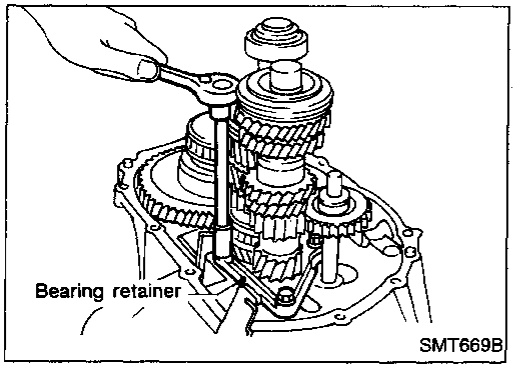

7. Remove gear components from clutch housing.
a. Remove input shaft front bearing retainer securing bolts.

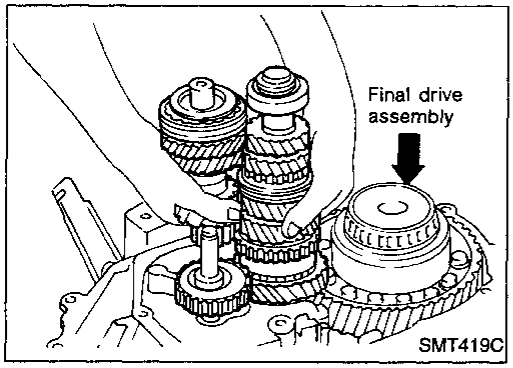

b. Remove input shaft with bearing retainer, mainshaft assembly and reverse idler gear.
- **Always withdraw mainshaft straight out. Failure to do so can damage resin oil channel on clutch housing side.**
- **Do not draw out reverse idler shaft from clutch housing because these fittings will be loose.**
- **When removing input shaft, be careful not to scratch oil seal lip with shaft spline.**

c. Remove final drive assembly.

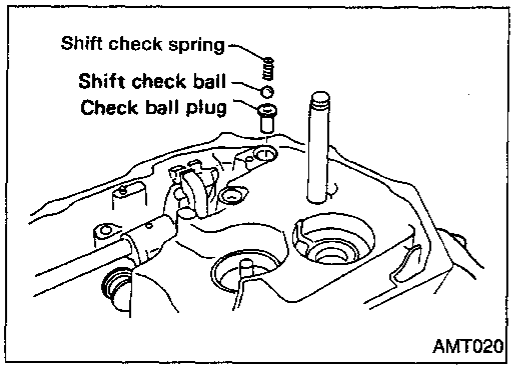

8. Remove oil pocket, shift check ball, shift check spring and check ball plug.
- **Be careful not to lose check ball.**

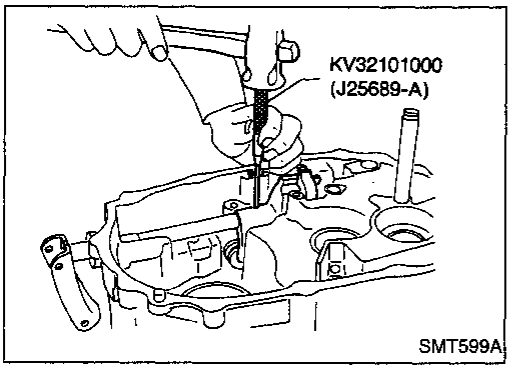

9. Drive retaining pin out of striking lever. Remove striking rod, striking lever and striking interlock.
- **Select a position where retaining pin does not interfere with clutch housing when removing retaining pin.**

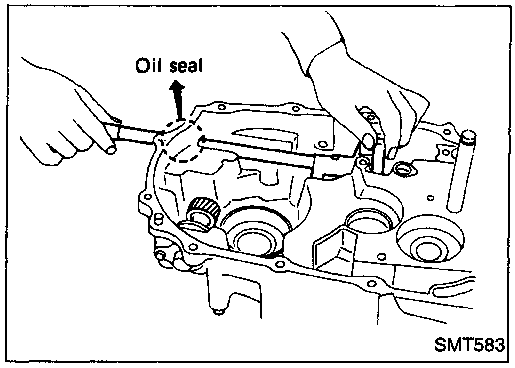

- **Be careful not to damage oil seal lip when removing striking rod. If necessary, tape edges of striking rod.**

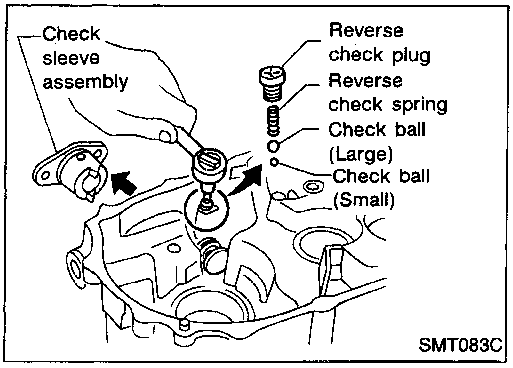

10. Remove reverse check plug, then detach reverse check spring and check balls.
- **Be careful not to lose check balls.**
- **If the smaller ball does not come out, remove it together with check sleeve assembly.**

11. Remove check sleeve assembly.

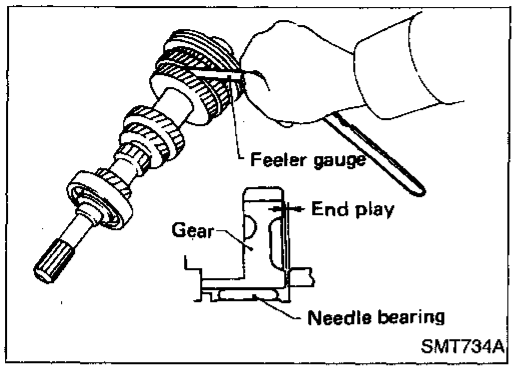

Input Shaft and Gears

DISASSEMBLY

1. Before disassembly, check 5th input gear end play.
   Gear end play:
   0.18 - 0.31 mm (0.0071 - 0.0122 in)
   - If not within specification, disassemble and check contact surface of gear, shaft and hub. Check clearance of snap ring groove. Refer to "ASSEMBLY", MT-18.

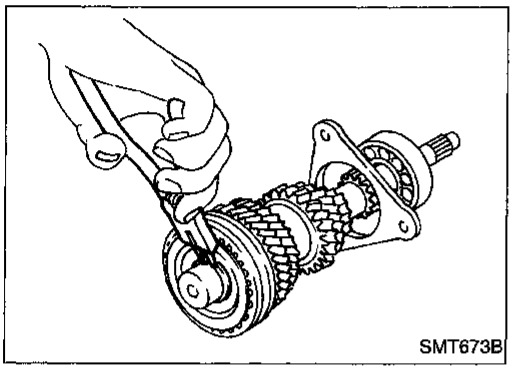

2. Remove snap ring and 5th stopper.

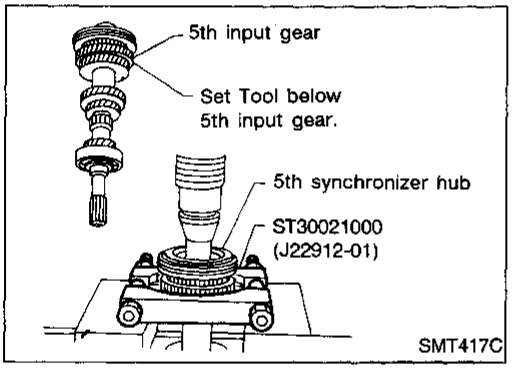

3. Remove 5th synchronizer, 5th input gear and 5th gear needle bearing.

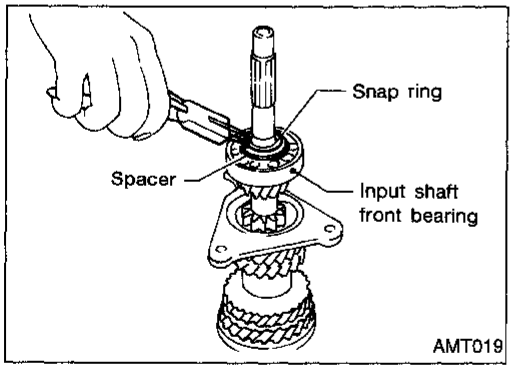

4. Remove snap ring of input shaft front bearing and spacer.

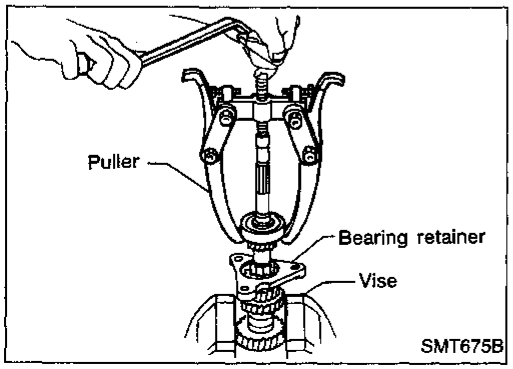

5. Remove input shaft front bearing.
6. Remove bearing retainer.

Input Shaft and Gears (Cont'd)

INSPECTION

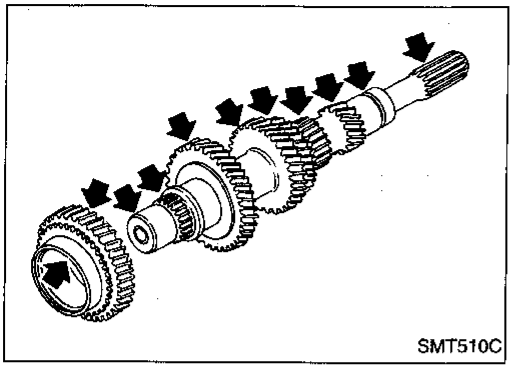

Gear and shaft

- Check shaft for cracks, wear or bending.
- Check gears for excessive wear, chips or cracks.

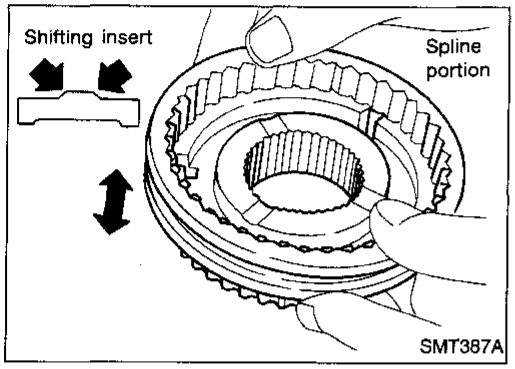

5th synchronizer

- Check spline portion of coupling sleeves, hubs and gears for wear or cracks.
- Check baulk rings for cracks or deformation.
- Check insert springs for wear or deformation.

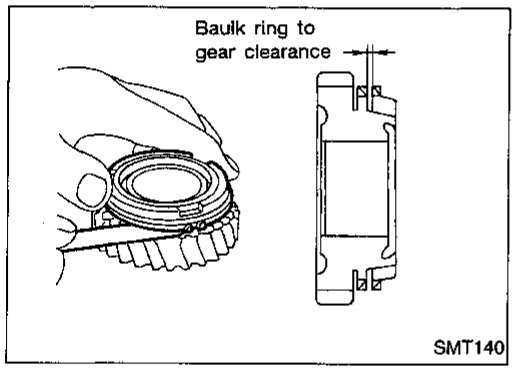

- Measure clearance between baulk ring and gear.
  Clearance between baulk ring and gear:
  Standard
  0.9 - 1.5 mm (0.035 - 0.059 in)
  Wear limit
  0.7 mm (0.028 in)

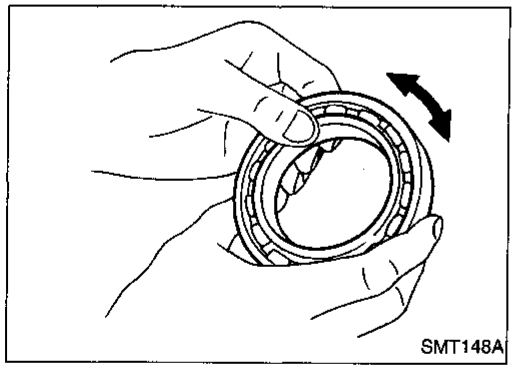

Bearing

- Make sure bearings roll freely and are free from noise, cracks, pitting or wear.

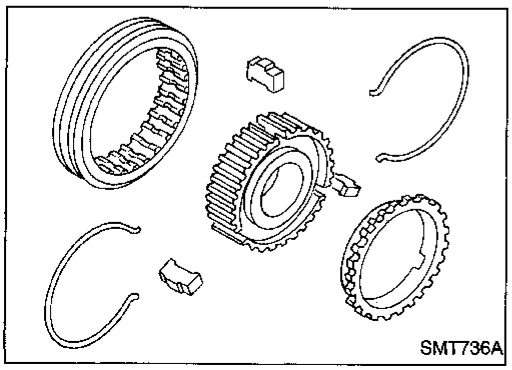

ASSEMBLY

1. Assemble 5th synchronizer.

Input Shaft and Gears (Cont'd)

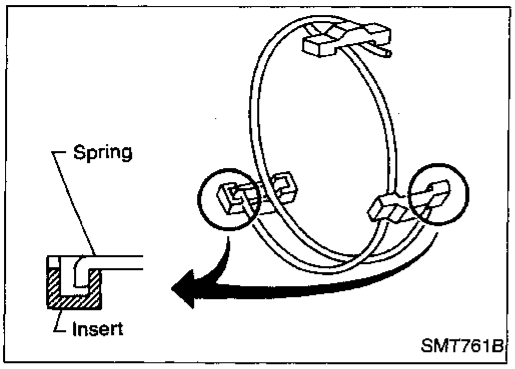

- **Be careful not to hook front and rear ends of spread spring to the same insert.**

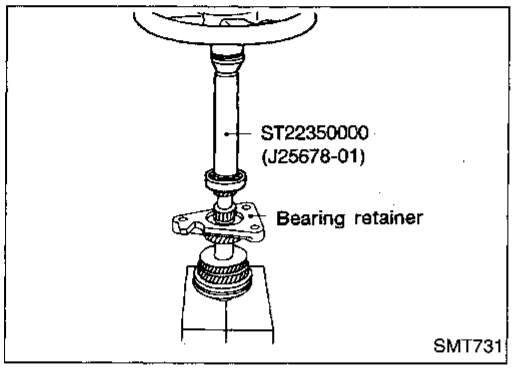

2. Install bearing retainer.
3. Press on input shaft front bearing.
4. Install spacer.

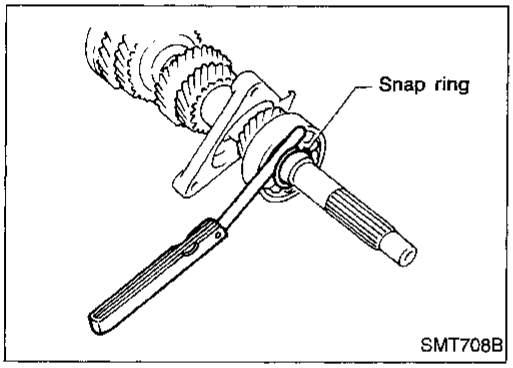

5. Select and install snap ring that gives proper clearance of input shaft groove.
   Allowable clearance of groove:
   0 - 0.1 mm (0 - 0.004 in)
   Snap rings of input shaft front bearing:
   Refer to SDS, MT-39.

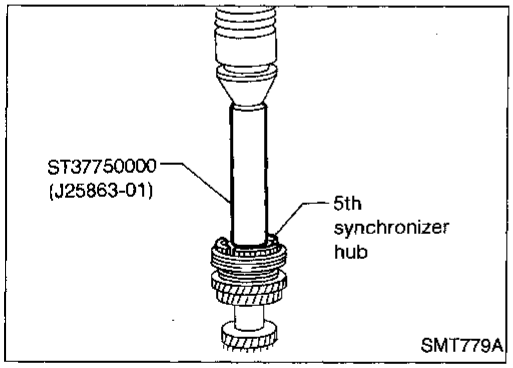

- **Be sure to replace 5th synchronizer hub with new one when it is removed.**

6. Install 5th gear needle bearing, 5th input gear, 5th synchronizer and 5th stopper.

- **Input shaft must be vertical to press on synchronizer hub.**

7. Measure gear end play as a final check. Refer to "DISASSEMBLY", MT-17.

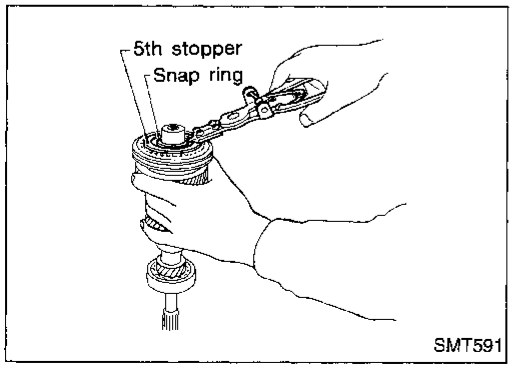

8. Select and install snap ring that gives proper clearance of input shaft groove.
   Allowable clearance of groove:
   0 - 0.1 mm (0 - 0.004 in)
   Snap ring of 5th synchronizer:
   Refer to SDS, MT-39.

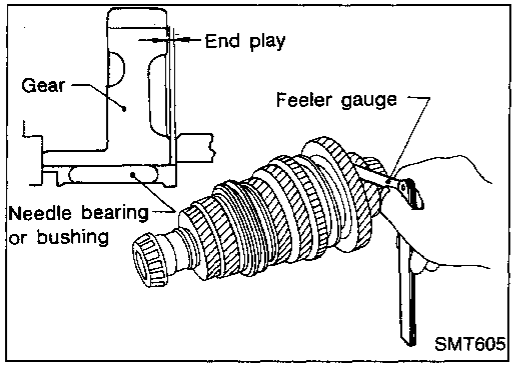

Mainshaft and Gears

DISASSEMBLY

1. Before disassembly, measure gear end play.
   Gear end play:
   1st main gear
   0.18 - 0.31 mm (0.0071 - 0.0122 in)
   2nd, 3rd, 4th main gear
   0.20 - 0.30 mm (0.0079 - 0.0118 in)

- If end play is not within the specified limit, disassemble and check the parts. Refer to "ASSEMBLY", MT-23.

2. Remove mainshaft rear bearing snap ring, C-ring holder and mainshaft C-rings.

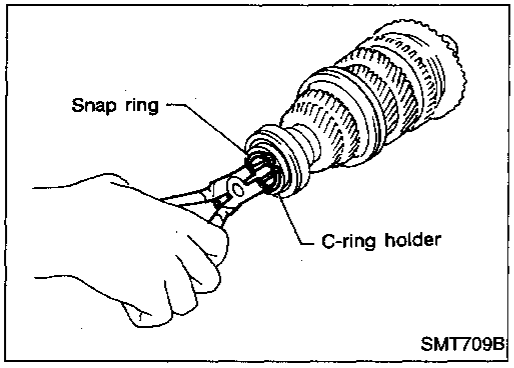

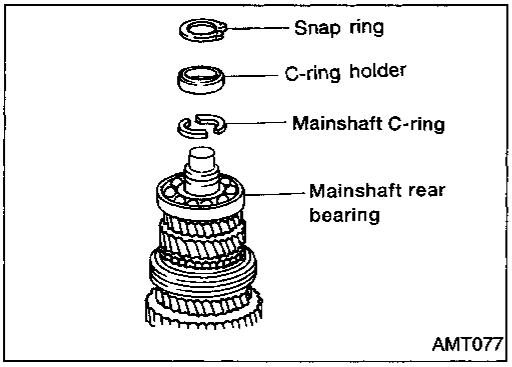

3. Remove mainshaft rear bearing and spacer.

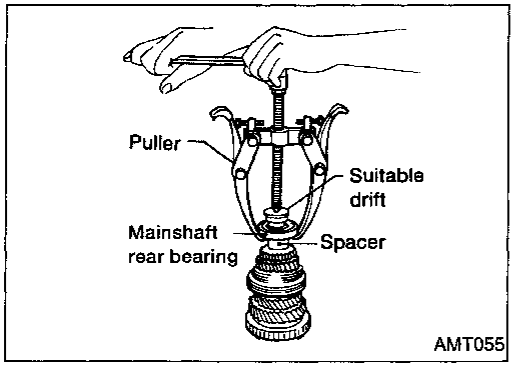

4. Remove 5th main gear.

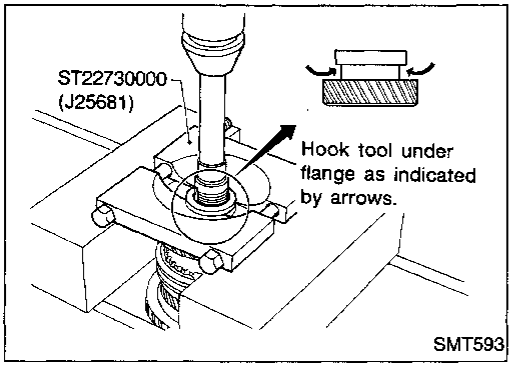

Mainshaft and Gears (Cont'd)

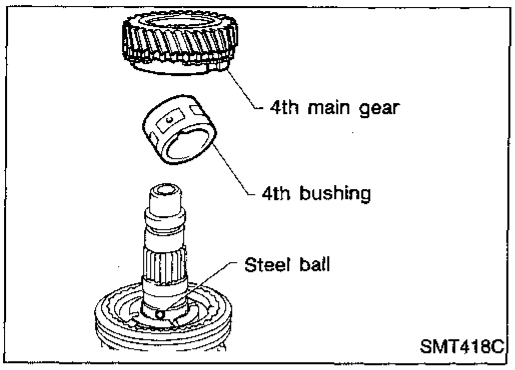

5. Remove 4th main gear, 4th bushing and steel ball.
- **Be careful not to lose steel ball.**

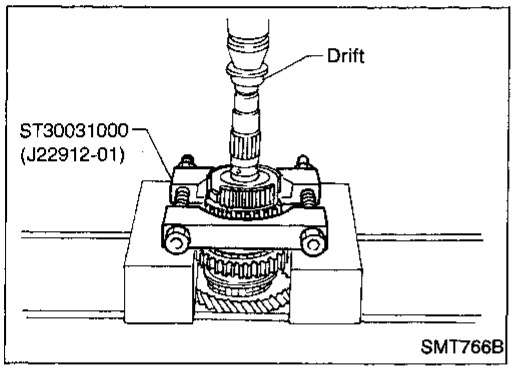

6. Remove 3rd & 4th synchronizer and 3rd main gear.

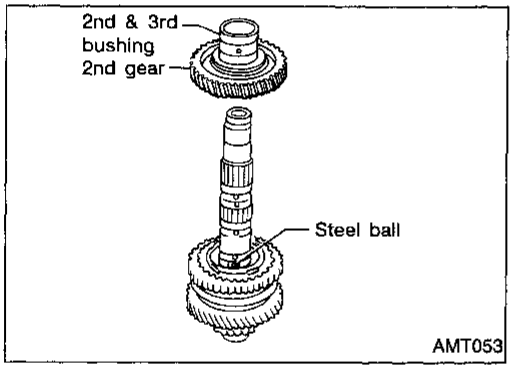

7. Remove 2nd & 3rd bushing and 2nd main gear.
- **Be careful not to lose the steel ball.**

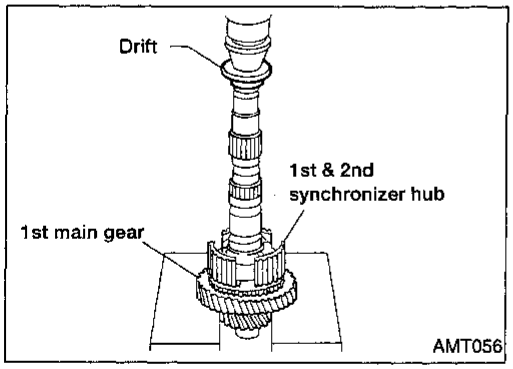

8. Remove 1st & 2nd synchronizer hub and 1st main gear.

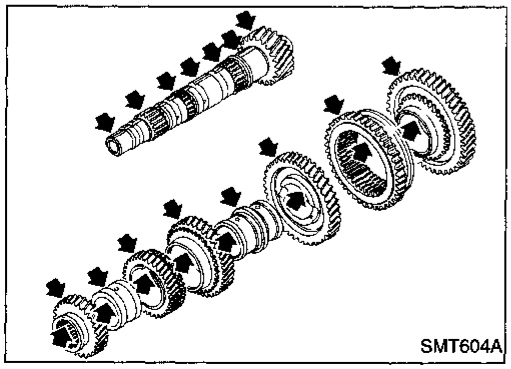

INSPECTION

Gear and shaft

- Check shaft for cracks, wear or bending.
- Check gears for excessive wear, chips or cracks.

Mainshaft and Gears (Cont'd)

Synchronizer

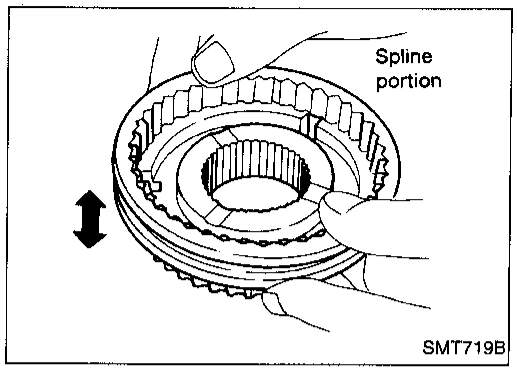

- Check spline portion of coupling sleeves, hubs and gears for wear or cracks.
- Check baulk rings for cracks or deformation.
- Check insert springs for deformation.

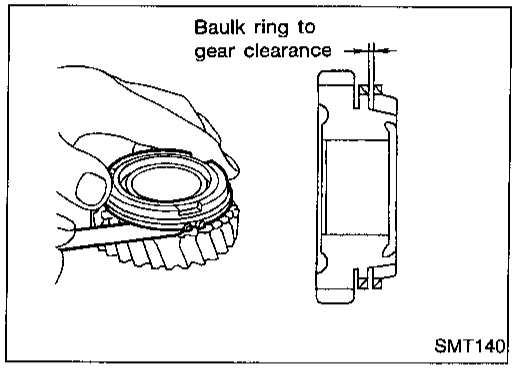

- Measure clearance between baulk ring and gear.
  Clearance between baulk rings and gears, for 1st and 4th gear only:
  Standard
  1st 0.95 - 1.45 mm (0.0374 - 0.0571 in)
  4th 0.9 - 1.45 mm (0.0354 - 0.0571 in)
  Wear limit
  0.7 mm (0.028 in)
- **2nd and 3rd gears have inner and outer baulk rings and so have different measurements.**

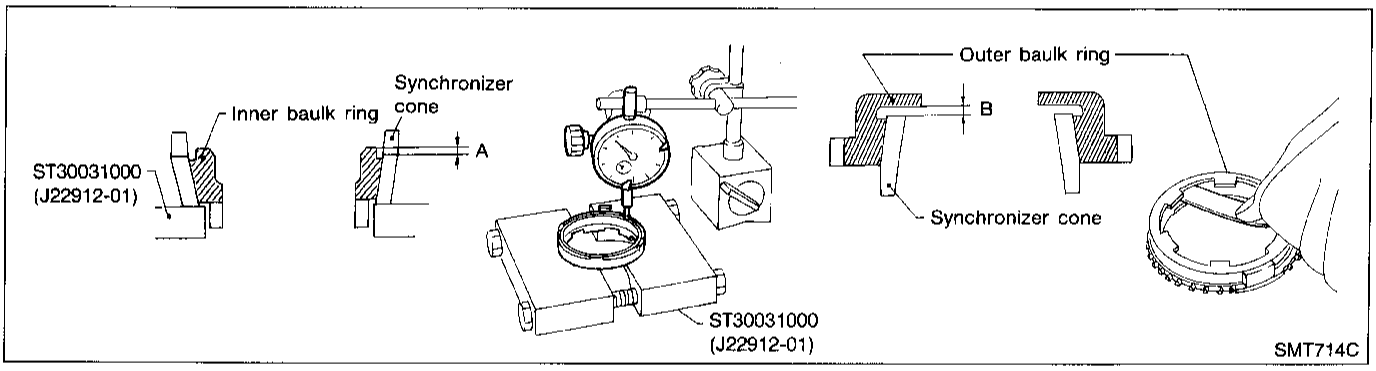

- Measure wear of 2nd and 3rd baulk rings.

a. Place inner baulk ring in position on synchronizer cone.
b. Hold baulk ring evenly against synchronizer cone and measure distance "A".
c. Place outer baulk ring in position on synchronizer cone.
d. Hold baulk ring evenly against synchronizer cone and measure distance "B".
   Standard:
   Inner-A 0.7 - 0.9 mm (0.028 - 0.035 in)
   Outer-B 0.6 - 1.1 mm (0.024 - 0.043 in)
   Wear limit:
   0.2 mm (0.008 in)
e. If distance "A" or "B" is smaller than the wear limit, replace baulk ring.

Mainshaft and Gears (Cont'd)

Bearing

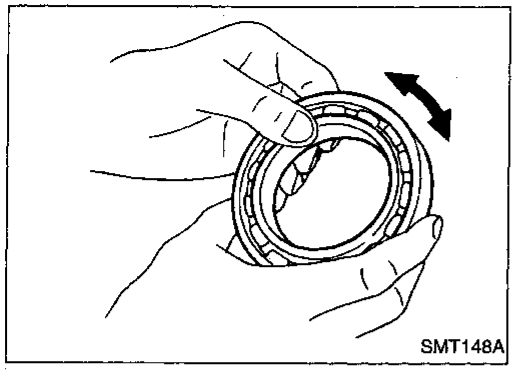

- Make sure bearings roll freely and are free from noise, cracks, pitting or wear.

ASSEMBLY

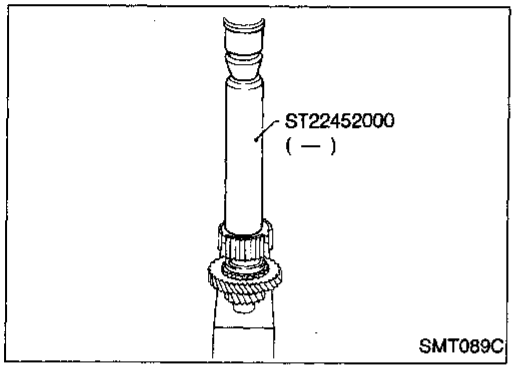

1. Install 1st gear needle bearing, 1st main gear and baulk ring.
- **Be sure to replace 1st & 2nd synchronizer hub with new one when it is removed.**
2. Press on 1st & 2nd synchronizer hub.

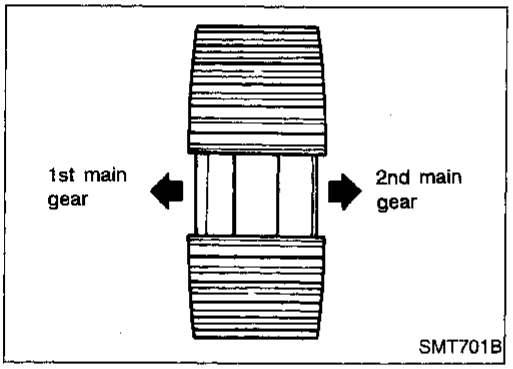

- **Ensure correct fitting of 1st & 2nd synchronizer hub.**

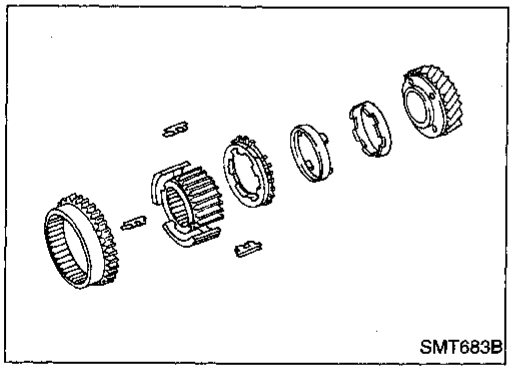

3. Install 2nd synchronizer cone, outer & inner baulk ring and reverse main gear (coupling sleeve).

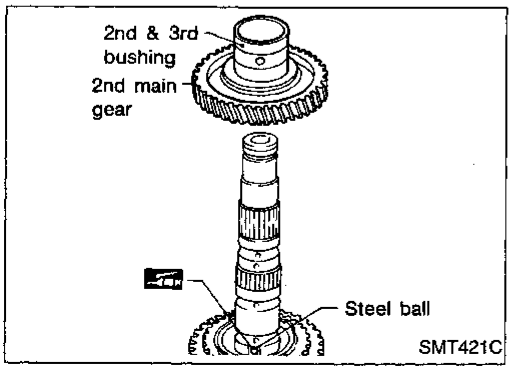

4. Install steel ball, 2nd main gear, 2nd & 3rd bushing.
- **Apply gear oil to 2nd & 3rd bushing before installing it.**
- **Apply multi-purpose grease to steel ball before installing it.**
- **2nd & 3rd bushing has a groove in which steel ball fits.**

Mainshaft and Gears (Cont'd)

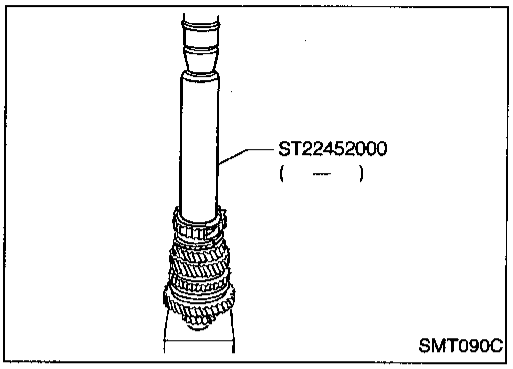

5. Install 3rd main gear, synchronizer cone, outer & inner baulk ring.
6. Press on 3rd & 4th synchronizer hub.

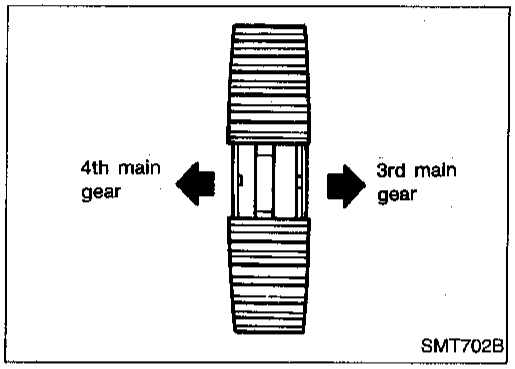

- **Ensure correct fitting of 3rd & 4th synchronizer hub.**

7. Install 3rd & 4th coupling sleeve and 4th baulk ring.

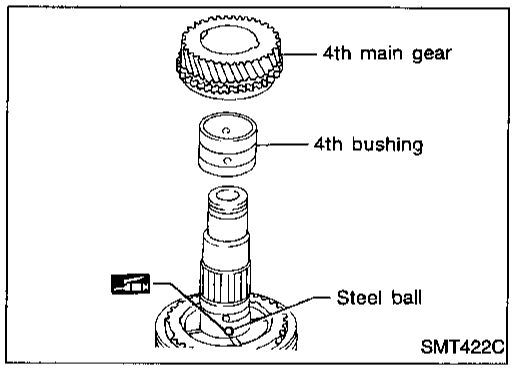

8. Install steel ball, 4th bushing and 4th main gear.

- **Apply multi-purpose grease to steel ball before installing it.**
- **4th bushing has a groove in which steel ball fits.**

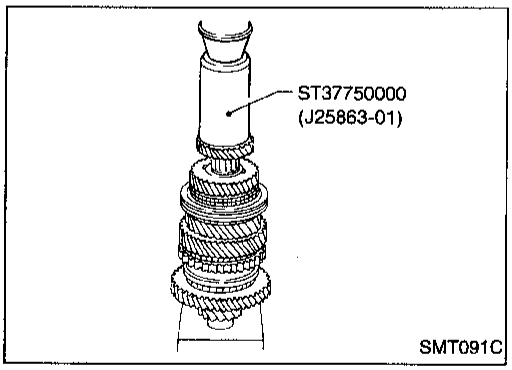

9. Press on 5th main gear.

Mainshaft and Gears (Cont'd)

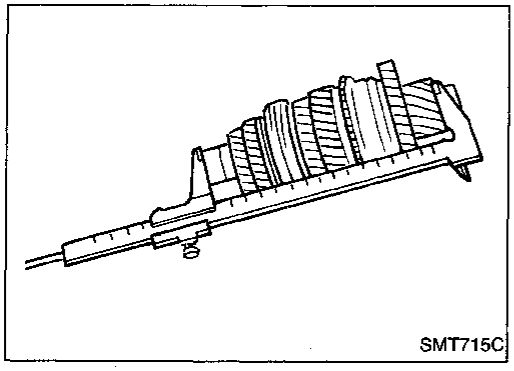
SMT715C

10. Select proper mainshaft bearing spacer to give correct bearing distance.
    Bearing distance "C":
    230.15 - 230.25 mm (9.0610 - 9.0649 in)
    Spacers available:
    Refer to SDS, MT-40.

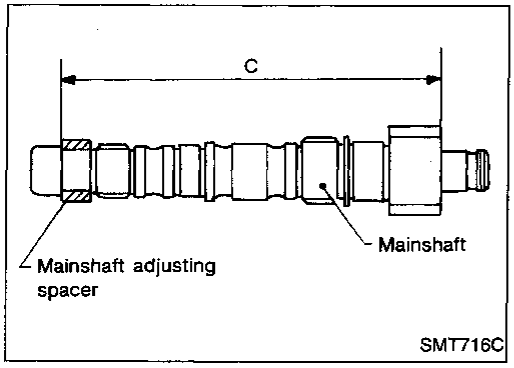

SMT716C

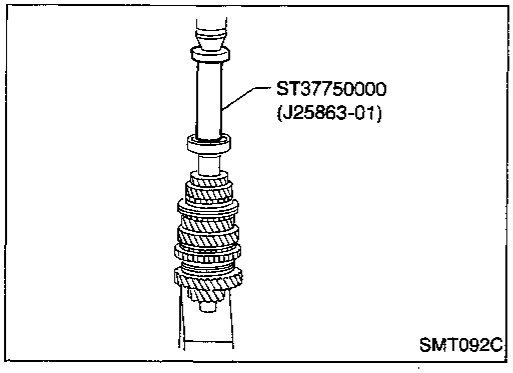

SMT092C

11. Press on mainshaft rear bearing.

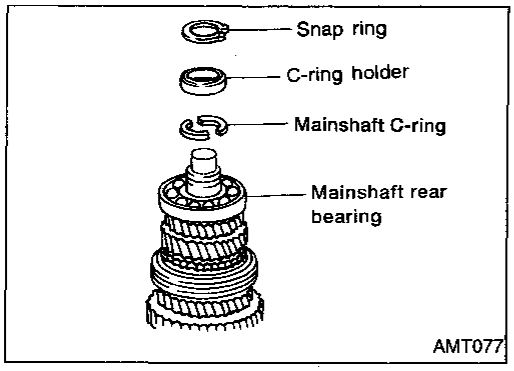

AMT077

12. Select and install mainshaft C-ring that gives proper clearance of groove in mainshaft.
    Allowable clearance of groove:
    0 - 0.1 mm (0 - 0.004 in)
    Mainshaft C-rings:
    Refer to SDS, MT-39.

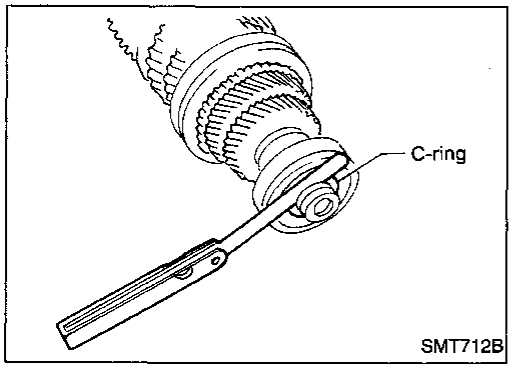

SMT712B

13. Install C-ring holder and snap ring.
14. Measure gear end play as the final check. Refer to "DISASSEMBLY", MT-20.

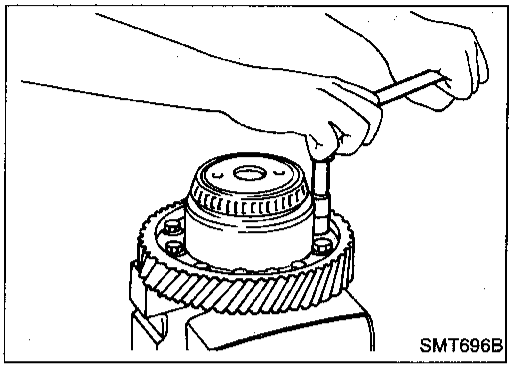

Final Drive

DISASSEMBLY

1. Remove final gear.
2. Remove speedometer drive gear by cutting it.
3. Press out differential side bearings.

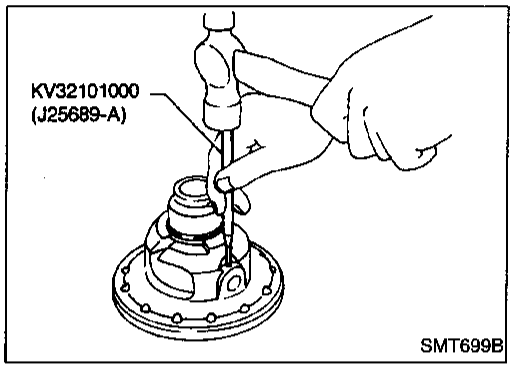

4. Drive out retaining pin and draw out pinion mate shaft.
5. Remove pinion mate gears and side gears.

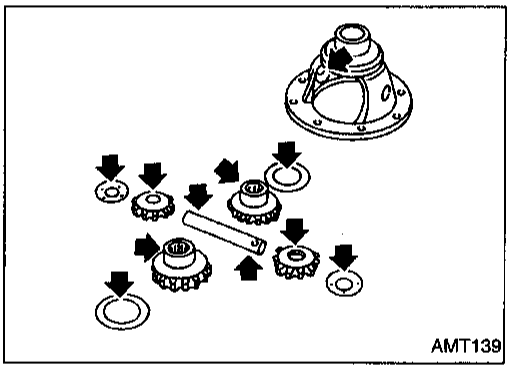

INSPECTION

Gear, washer, shaft and case

- Check mating surfaces of differential case, side gears and pinion mate gears.
- Check washers for wear.

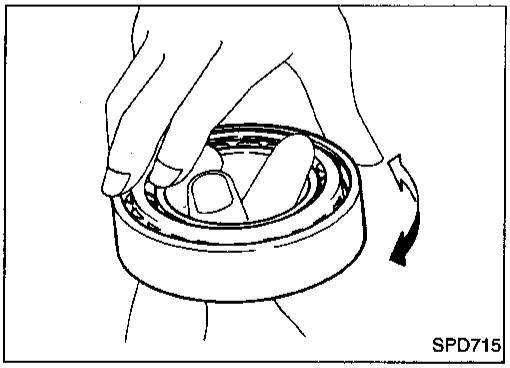

Bearing

- Make sure bearings roll freely and are free from noise, cracks, pitting or wear.
- **When replacing tapered roller bearing, replace outer and inner race as a set.**

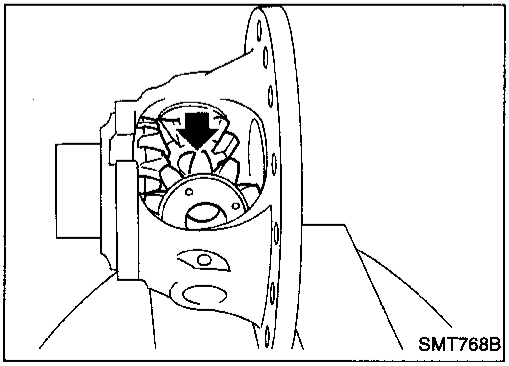

ASSEMBLY

1. Attach side gear thrust washer to side gear and install both of them in differential case.
2. Install pinion mate washers and pinion mate gears in place.

Final Drive (Cont'd)

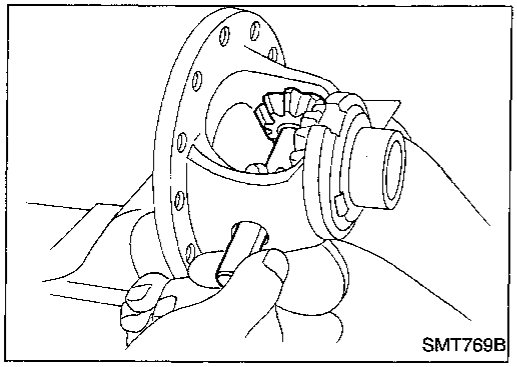

3. Insert pinion mate shaft.
- **When inserting, be careful not to damage pinion mate thrust washers.**

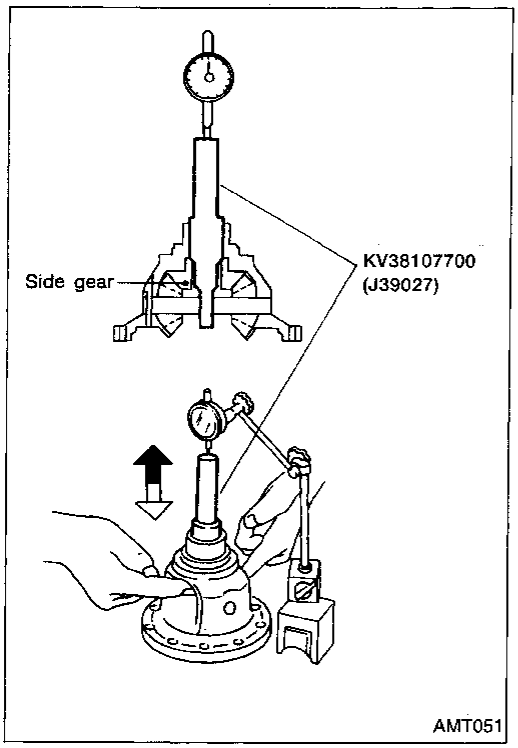

4. Measure clearance between side gear and differential case with washers following the procedure below:
a. Set Tool and dial indicator on side gear.
b. Move side gear up and down to measure dial indicator deflection.
   Clearance between side gear and differential case with washers:
   0.1 - 0.2 mm (0.004 - 0.008 in)
c. If not within specification, adjust clearance by changing thickness of side gear thrust washers.
   Side gear thrust washers for differential case side:
   Refer to SDS, MT-40.

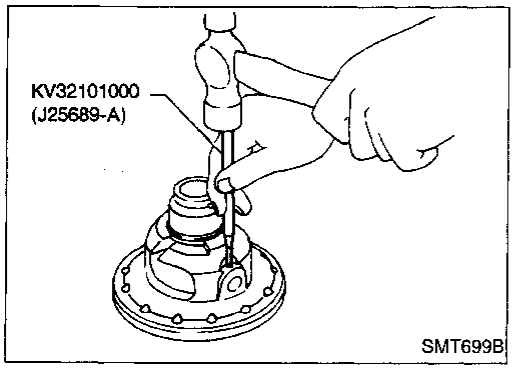

5. Install retaining pin.
- **Make sure that retaining pin is flush with case.**

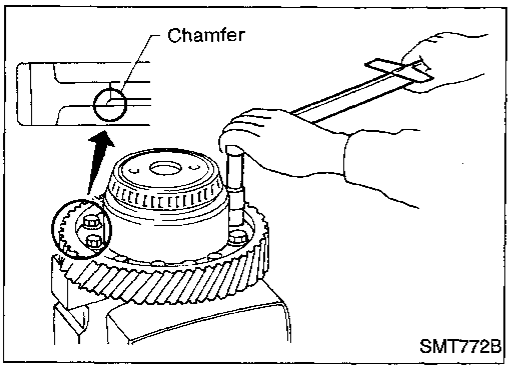

6. Install final gear.
- **Apply locking sealant to final gear fixing bolts before installing them.**
7. Install speedometer drive gear.

Final Drive (Cont'd)

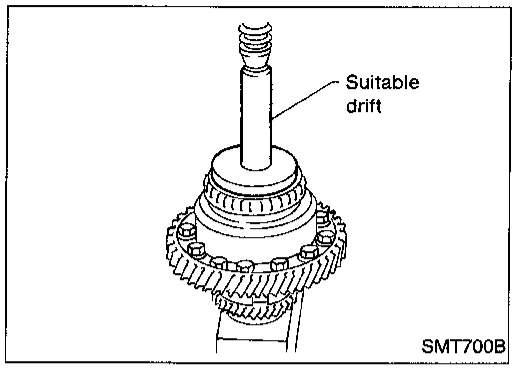

8. Press on differential side bearings.

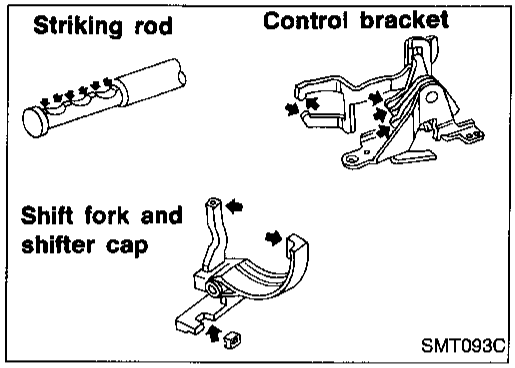

Shift Control Components

INSPECTION

- Check contact surface and sliding surface for wear, scratches, projections or other damage.

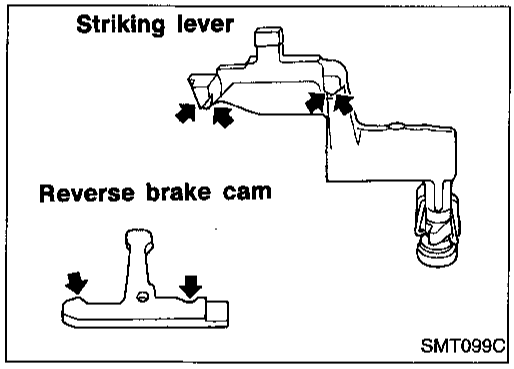

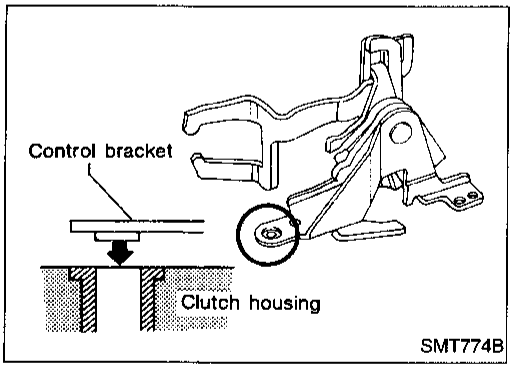

ADJUSTMENT OF INPUT SHAFT BRAKING MECHANISM

1. Install striking lever and rod, striking interlock assembly and control bracket on clutch housing as shown.

- **When installing control bracket on clutch housing, assure protrusion beneath bracket is correctly seated.**

Shift Control Components (Cont'd)

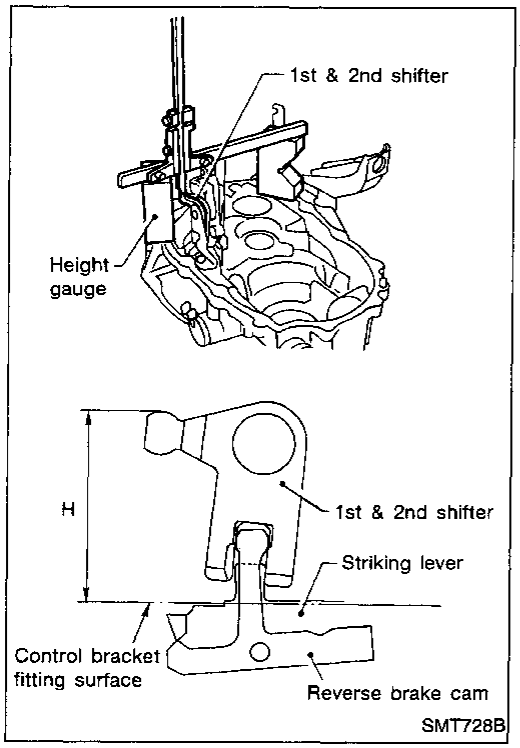

2. Measure maximum height "H" while shifting from neutral to reverse position.
   Maximum height "H":
   67.16 - 67.64 mm (2.6441 - 2.6630 in)

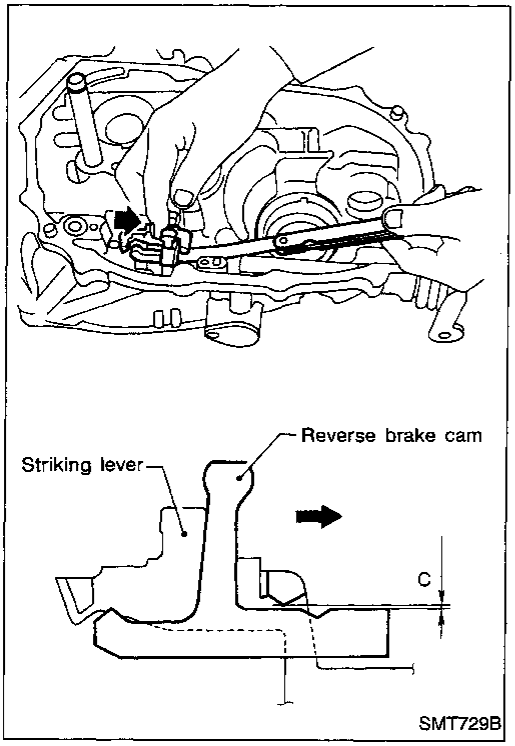

3. Measure clearance "C" between reverse brake cam and striking lever while shifting to reverse position.
   Clearance "C":
   0.05 - 0.125 mm (0.0020 - 0.0049 in)
   - If "H" or "C" is not within specification, replace the following parts as a set.
   - Striking lever assembly
   - Striking interlock assembly (This includes reverse brake cam.)
   - Control bracket assembly

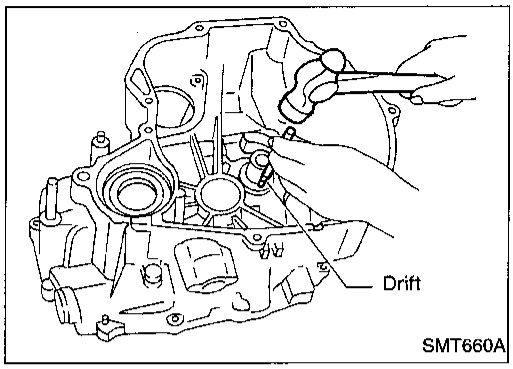

Case Components

REMOVAL AND INSTALLATION

Input shaft oil seal

1. Drive out input shaft oil seal.

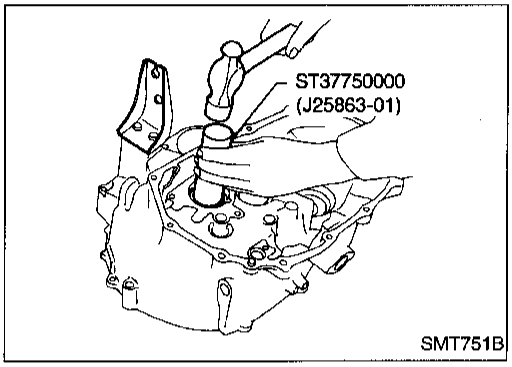

2. Install input shaft oil seal.
- **Apply multi-purpose grease to seal lip of oil seal before installing.**

Input shaft rear bearing

1. Remove welch plug from transmission case.

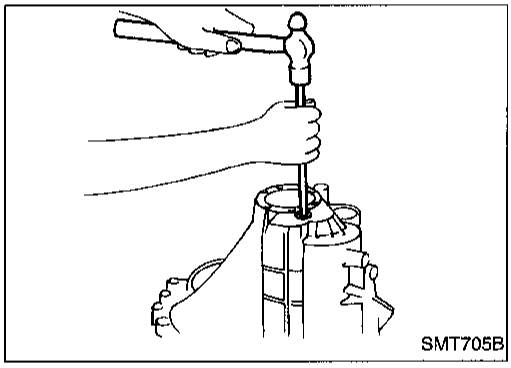

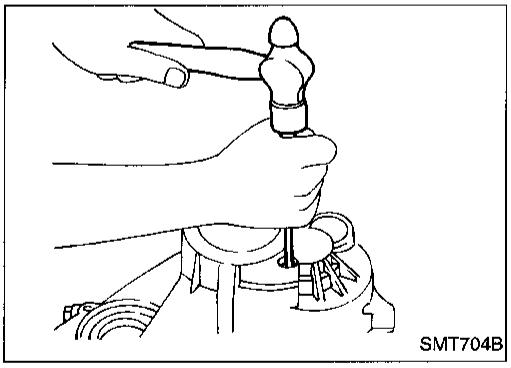

2. Remove input shaft rear bearing by tapping it from welch plug hole.

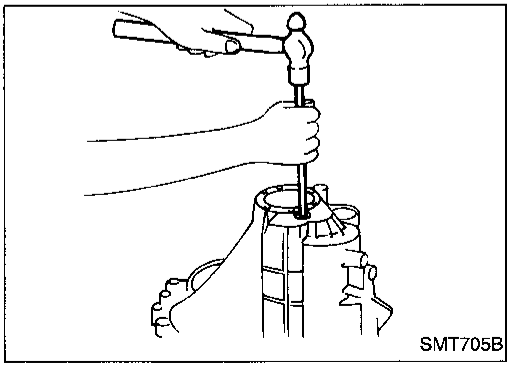

3. Install welch plug.
- **Apply recommended sealant to mating surface of transmission case. Refer to MT-11.**

Case Components (Cont'd)

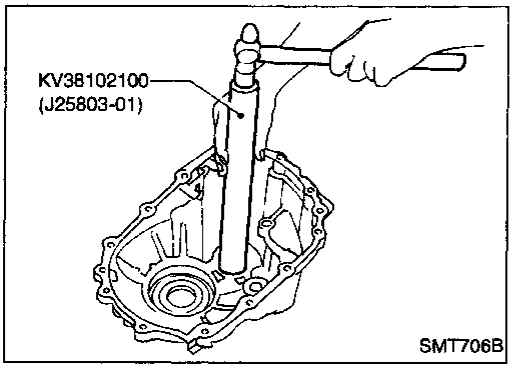

4. Install input shaft rear bearing.

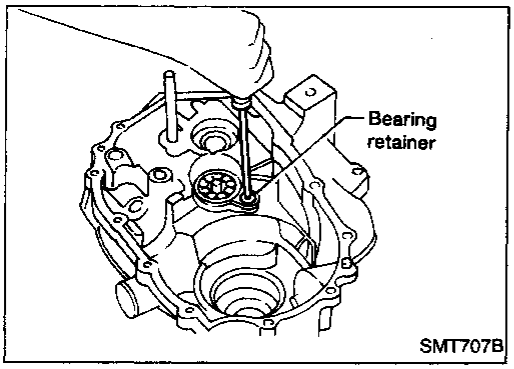

Mainshaft front bearing and oil channel

1. Remove mainshaft front bearing retainer.

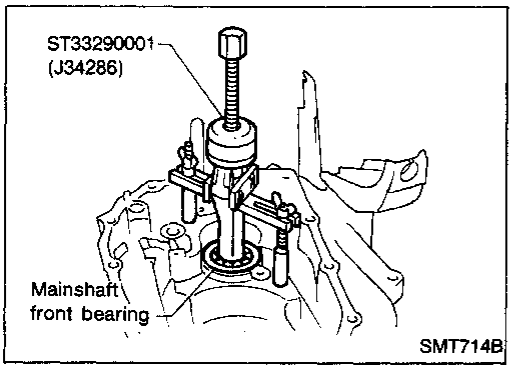

2. Remove mainshaft front bearing.
3. Remove oil channel.

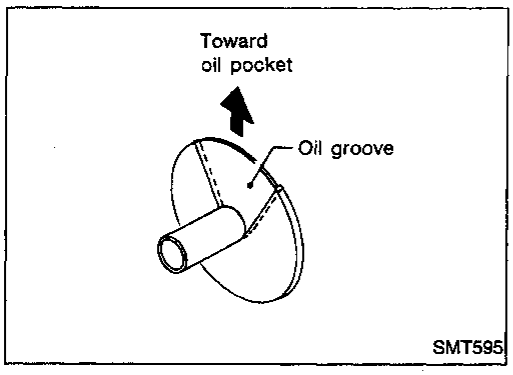

4. Install oil channel.
- **Ensure that the oil groove faces the oil pocket.**

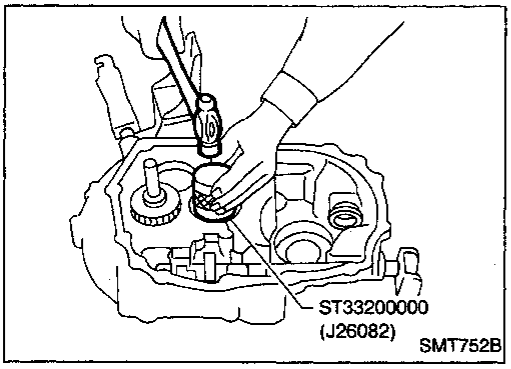

5. Install mainshaft front bearing.
6. Install mainshaft front bearing retainer.
- **Apply locking sealant to thread of screw before installation.**

Differential Side Bearing Preload

If any of the following parts are replaced, adjust differential side bearing preload.

- **Differential case**
- **Differential side bearing**
- **Clutch housing**
- **Transmission case**

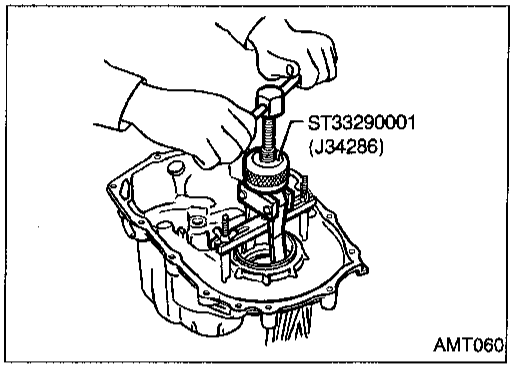

1. Remove differential side bearing outer race (transmission case side) and shim.

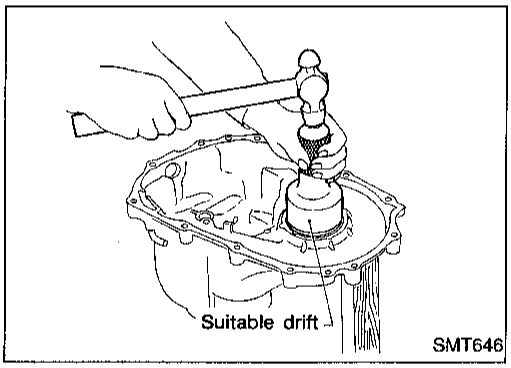

2. Install differential side bearing outer race without shim.
3. Install final drive assembly on clutch housing.
4. Install transmission case on clutch housing.

- **Tighten transmission case fixing bolts to the specified torque. Refer to MT-11.**

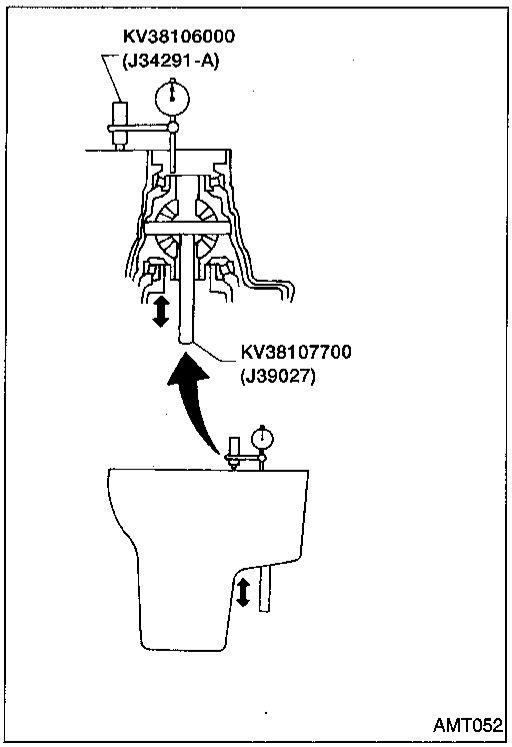

5. Set dial indicator on front end of differential case.
6. Insert Tool all the way into differential side gear.
7. Move Tool up and down and measure dial indicator deflection.
8. Select shim considering bearing preload.

- **Suitable shim thickness = dial indicator deflection + specified bearing preload**

  Differential side bearing adjusting shims:
  Refer to SDS, MT-41.

  Bearing preload:
  0.25 - 0.30 mm (0.0098 - 0.0118 in)

9. Install selected shim and differential side bearing outer race on transmission case.
10. Check differential side bearing turning torque.

a. Install final drive assembly on clutch housing.
b. Install transmission case on clutch housing.

- **Tighten transmission case fixing bolts to the specified torque. Refer to MT-11.**

Differential Side Bearing Preload (Cont'd)

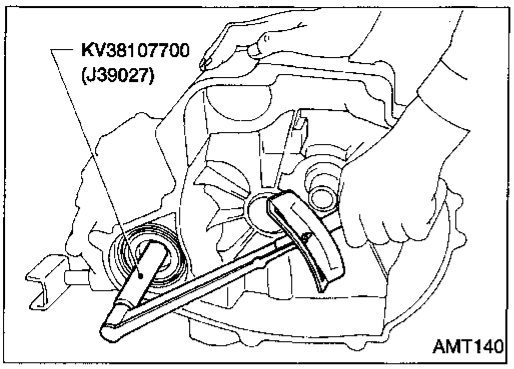

c. Measure turning torque of final drive assembly.

Turning torque of final drive assembly (New bearing):

2.9 - 6.9 N·m (30 - 70 kg-cm, 26 - 61 in-lb)

- **When old bearing is reused, turning torque will be slightly less than the above.**
- **Make sure torque is close to the specified range.**
- **Changes in turning torque of final drive assembly per revolution should be within 1.0 N·m (10 kg-cm, 8.7 in-lb) without binding.**

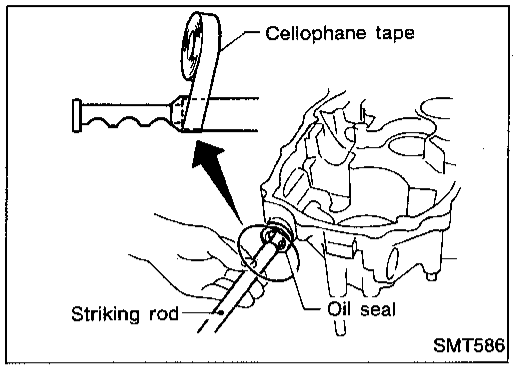

1. Install striking rod, lever and interlock.
- **Tape edges of striking rod to avoid damaging oil seal lip during installation. When taped edges of striking rod are past the oil seal, remove tape.**

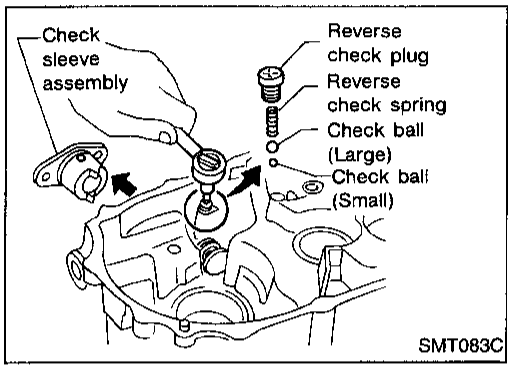

2. Install reverse check sleeve assembly.
3. Install check balls, reverse check spring and reverse check plug.

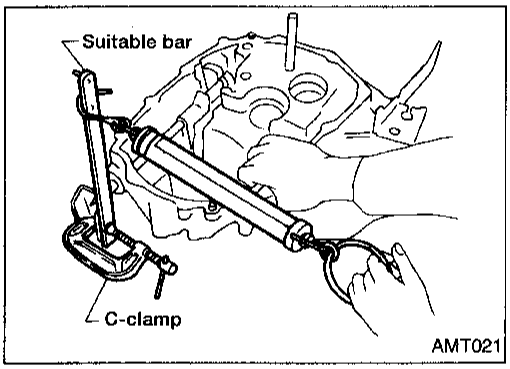

4. Check reverse turning torque (at striking rod).
   Reverse check turning torque (at striking rod):
   4.9 - 7.4 N·m (50 - 75 kg-cm, 43 - 65 in-lb)
- If not within specification, select another check plug having a different length and reinstall it.
   Reverse check plugs:
   Refer to SDS, MT-39.
5. Install selected reverse check plug.
- **Apply locking sealant to thread of plug before installing it.**

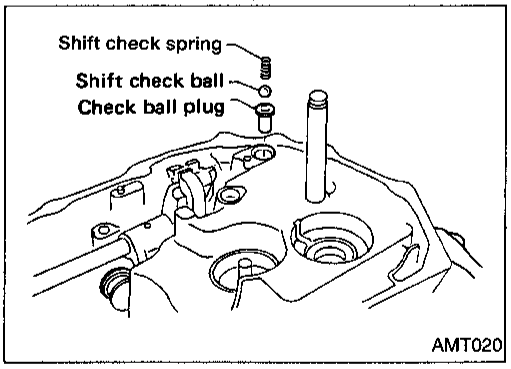

6. Install check ball plug, shift check ball and shift check spring.
7. Install oil pocket.

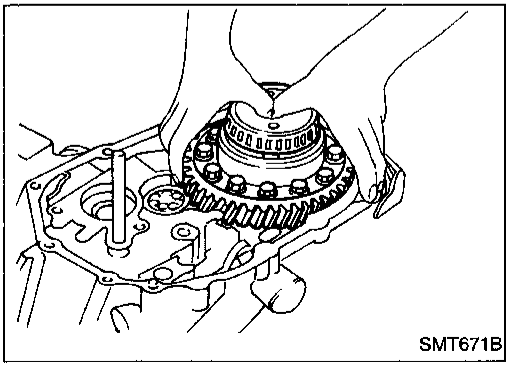

8. Install gear components onto clutch housing.
a. Install final drive assembly.

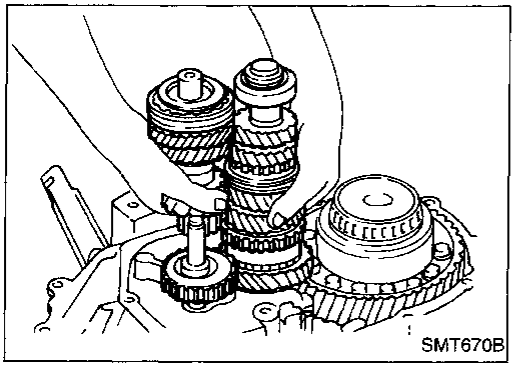

b. Install input shaft assembly with bearing retainer, mainshaft assembly and reverse idler gear.

- **Be careful not to damage oil seal lip with splines of input shaft.**
- **Be careful not to damage oil channel when inserting mainshaft into clutch housing.**

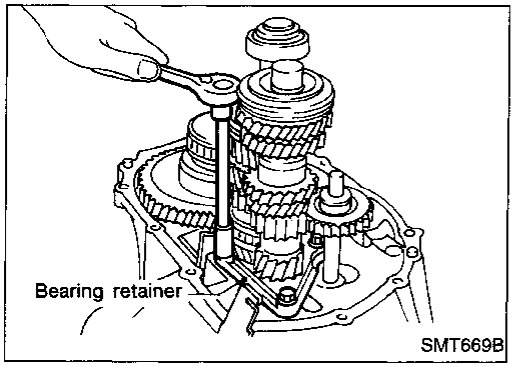

c. Install input shaft front bearing retainer.

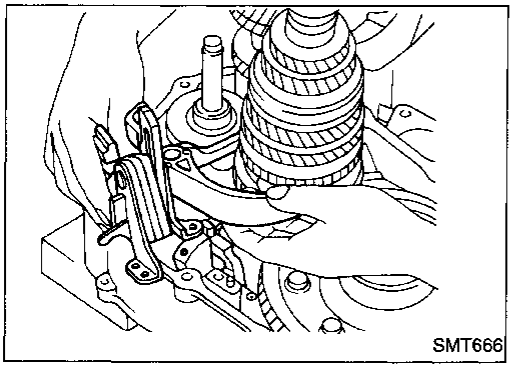

9. Apply grease to shifter caps and install to control bracket. Install control bracket with 1st & 2nd shift fork.

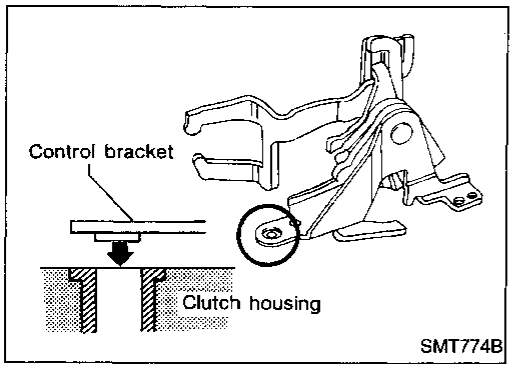

- When installing control bracket on clutch housing, ensure bracket is correctly seated.

10. Install 3rd & 4th and 5th shift forks.

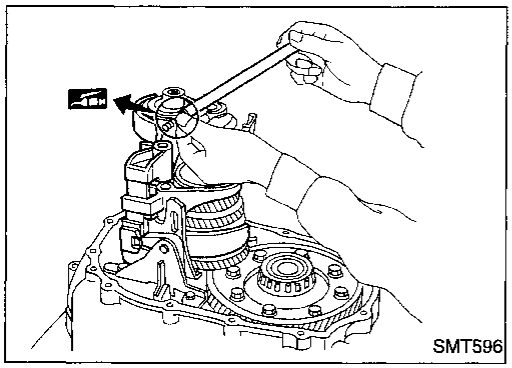

11. Insert fork shaft.

- **Apply multi-purpose grease to support spring before installing.**

12. Install reverse idler spacer.

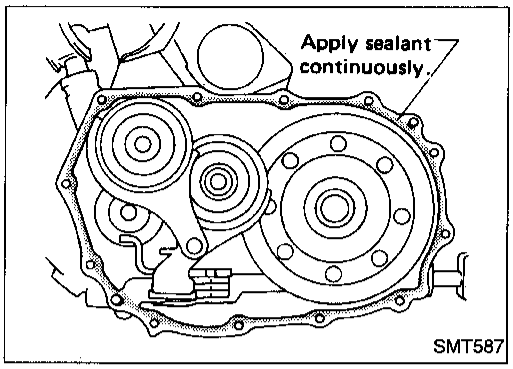

13. Apply recommended sealant to mating surface of clutch housing. Refer to MT-11.

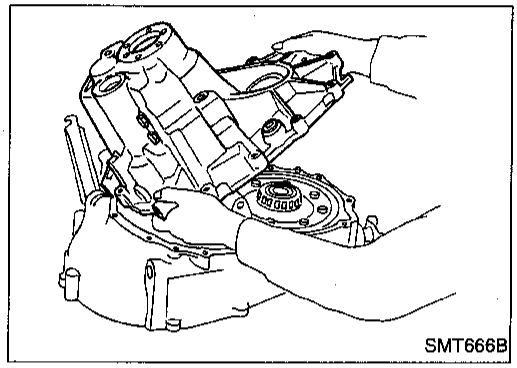

14. Install transmission case on clutch housing.

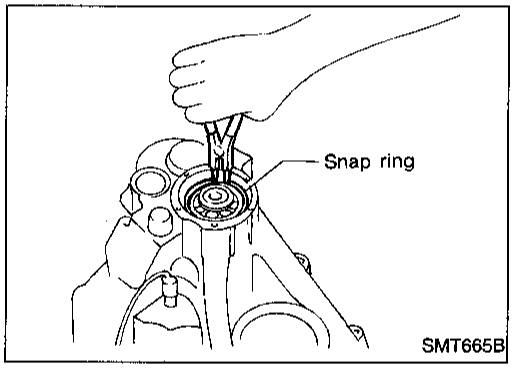

15. Install mainshaft front bearing snap ring.

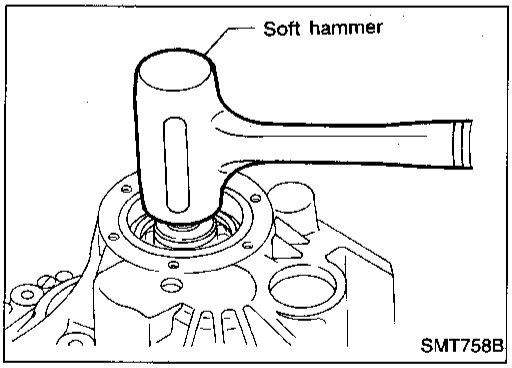

16. Tap mainshaft with a soft hammer to ensure mainshaft is properly seated.

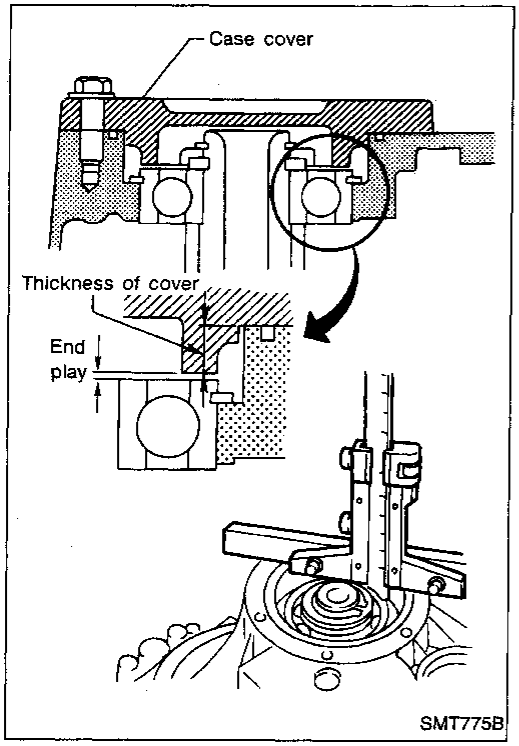

17. Check mainshaft bearing end play.
    Mainshaft bearing end play:
    0 - 0.1 mm (0 - 0.004 in)
- If not within specification, select another case cover having a different thickness.
    Available case covers:
    Refer to SDS, MT-39.

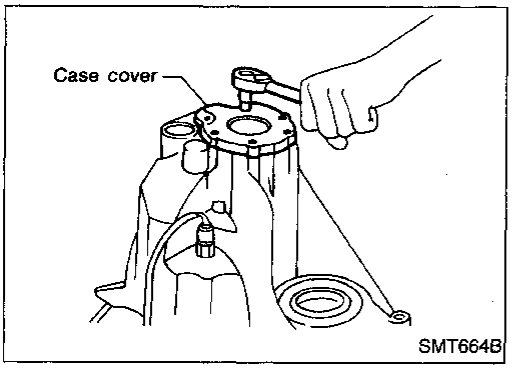

18. Install O-ring and case cover on transmission case.
- **Apply recommended sealant to mating surface of transmission case. Refer to MT-11.**

General Specifications

TRANSAXLE

Engine			SR20DE
Transaxle model			RS5F32A
Synchromesh type			Warner
Shift pattern			
Gear ratio	1st		3.063
	2nd		1.826
	3rd		1.286
	4th		0.975
	5th		0.756
	Reverse		3.153
Number of teeth	Input gear	1	16
		2	23
		3	28
		4	40
		5	45
		Rev.	13
	Main gear	1	49
		2	42
		3	36
		4	39
		5	34
		Rev.	41
	Reverse idler gear		31
Oil level*		mm (in)	40 - 45 (1.57 - 1.77)
Oil capacity (Reference)		(ℓ) (US pt, Imp pt)	3.6 - 3.8 (7-5/8 - 8, 6-3/8 - 6-3/4)
Remarks			2nd and 3rd double baulk ring type synchronizer

*Refer to MA section ("Checking M/T Oil" - "CHASSIS AND BODY MAINTENANCE").

FINAL GEAR

Engine		SR20DE
Final gear ratio		4.176
Number of teeth	Final gear/Pinion	71/17
	Side gear/Pinion mate gear	14/10

Inspection and Adjustment

GEAR END PLAY

Gear	End play mm (in)
1st main gear	0.18 - 0.31 (0.0071 - 0.0122)
2nd main gear	0.20 - 0.30 (0.0079 - 0.0118)
3rd main gear	0.20 - 0.30 (0.0079 - 0.0118)
4th main gear	0.20 - 0.30 (0.0079 - 0.0118)
5th input gear	0.18 - 0.31 (0.0071 - 0.0122)

CLEARANCE BETWEEN BAULK RING AND GEAR

1st, 4th, 5th baulk ring

Unit: mm (in)

	Standard	Wear limit
1st	0.95 - 1.45 (0.0374 - 0.0571)	0.7 (0.028)
4th	0.9 - 1.45 (0.0354 - 0.0571)	
5th	0.9 - 1.5 (0.035 - 0.059)	

2nd and 3rd baulk ring

Unit: mm (in)

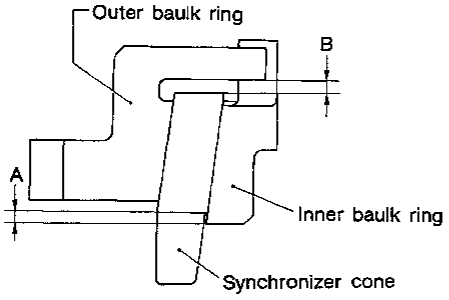

AMT141

Dimension	Standard	Wear limit
A	0.7 - 0.9 (0.028 - 0.035)	0.2 (0.008)
B	0.6 - 1.1 (0.024 - 0.043)	

AVAILABLE REVERSE CHECK PLUGS AND CASE COVERS

Reverse check plug

Reverse check turning torque (At striking rod)	4.9 - 7.4 N·m (50 - 75 kg-cm, 43 - 65 in-lb)
Length mm (in)	Part number
7.1 (0.280)	32188-M8002
7.7 (0.303)	32188-M8003
8.3 (0.327)	32188-M8001*
8.9 (0.350)	32188-M8004

* Standard size check plug

Case cover

Main shaft bearing end play	0 - 0.1 mm (0 - 0.004 in)
Thickness mm (in)	Part number
10.78 (0.4244)	32131-50J00
10.83 (0.4264)	32131-50J01
10.88 (0.4283)	32131-50J02
10.93 (0.4303)	32131-50J03
10.98 (0.4323)	32131-50J04
11.03 (0.4343)	32131-50J05

AVAILABLE SNAP RINGS

Input shaft front bearing

Allowable clearance	0 - 0.1 mm (0 - 0.004 in)
Thickness mm (in)	Part number
1.27 (0.0500)	32204-M8004
1.33 (0.0524)	32204-M8005
1.39 (0.0547)	32204-M8006
1.45 (0.0571)	32204-M8007

Input shaft 5th synchronizer hub

Allowable clearance	0 - 0.1 mm (0 - 0.004 in)
Thickness mm (in)	Part number
2.00 (0.0787)	32311-M8812
2.05 (0.0807)	32311-M8813
2.10 (0.0827)	32311-M8814
2.15 (0.0846)	32311-M8815
2.20 (0.0866)	32311-M8816
2.25 (0.0886)	32311-M8817
2.30 (0.0906)	32311-M8818

MAINSHAFT C-RING

Allowable clearance	0 - 0.1 mm (0 - 0.004 in)
Thickness mm (in)	Part number
4.45 (0.1752)	32348-50J00
4.52 (0.1780)	32348-50J01
4.59 (0.1807)	32348-50J02
4.66 (0.1835)	32348-50J03
4.73 (0.1862)	32348-50J04
4.80 (0.1890)	32348-50J05
4.87 (0.1917)	32348-50J06
4.94 (0.1945)	32348-50J07

Inspection and Adjustment (Cont'd)

MAINSHAFT BEARING ADJUSTING SPACER

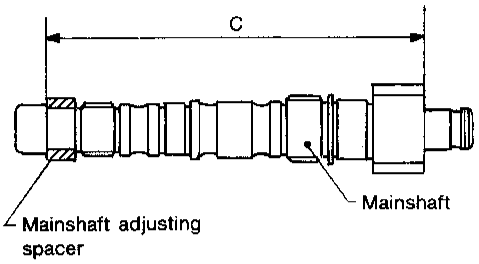

SMT716C

Bearing distance "C"	230.15 - 230.25 mm (9.0610 - 9.0649 in)
Thickness mm (in)	Part number
18.91 (0.7445)	32347-50J00
18.98 (0.7472)	32347-50J01
19.05 (0.7500)	32347-50J02
19.12 (0.7528)	32347-50J03
19.19 (0.7555)	32347-50J04
19.26 (0.7583)	32347-50J05
19.33 (0.7610)	32347-50J06
19.40 (0.7638)	32347-50J07
19.47 (0.7665)	32347-50J08

DIFFERENTIAL SIDE GEAR THRUST WASHER

Allowable clearance between side gear and differential case with washer	0.1 - 0.2 mm (0.004 - 0.008 in)
Thickness mm (in)	Part number
0.75 - 0.80 (0.0295 - 0.0315)	38424-D2111
0.80 - 0.85 (0.0315 - 0.0335)	38424-D2112
0.85 - 0.90 (0.0335 - 0.0354)	38424-D2113
0.90 - 0.95 (0.0354 - 0.0374)	38424-D2114
0.95 - 1.00 (0.0374 - 0.0394)	38424-D2115

Inspection and Adjustment (Cont'd)

INPUT SHAFT BRAKING MECHANISM

Reverse brake cam

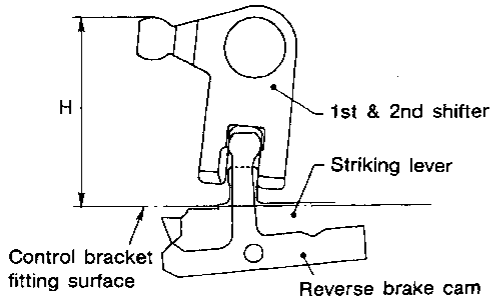

SMT735B

Maximum height "H" between the control bracket fitting surface and 1-2 shifter mm (in)	67.16 - 67.64 (2.6441 - 2.6630)

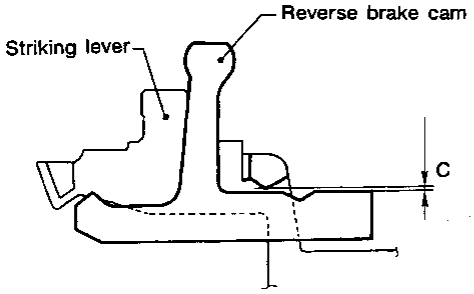

SMT736B

Clearance "C" between reverse brake cam and striking lever mm (in)	0.05 - 0.125 (0.0020 - 0.0049)

AVAILABLE SHIMS — DIFFERENTIAL SIDE BEARING PRELOAD AND ADJUSTING SHIM

Bearing preload (Reused bearing)

Unit: mm (in)

Differential side bearing	0.25 - 0.30 (0.0098 - 0.0118)

Turning torque (New bearing)

Unit: N·m (kg-cm, in-lb)

Final drive	2.9 - 6.9 (30 - 70, 26 - 61)

Differential side bearing adjusting shims

Thickness mm (in)	Part number
0.44 (0.0173)	38454-M8000
0.48 (0.0189)	38454-M8001
0.56 (0.0220)	38454-M8003
0.60 (0.0236)	38454-M8004
0.64 (0.0252)	38454-M8005
0.68 (0.0268)	38454-M8006
0.72 (0.0283)	38454-M8007
0.76 (0.0299)	38454-M8008
0.80 (0.0315)	38454-M8009
0.84 (0.0331)	38454-M8010
0.88 (0.0346)	38454-M8011