SECTION CL

CONTENTS

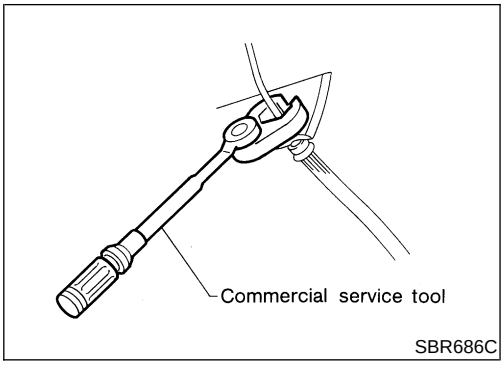

Precautions

NICL0001

- **Recommended fluid is brake fluid “DOT 3”.**
- **Do not reuse drained brake fluid.**
- **Be careful not to splash brake fluid on painted areas; it may cause paint damage. If brake fluid is splashed on painted areas, wash it away with water immediately.**
- **Use flare nut wrench when removing or installing clutch hydraulic tubes.**
- **Use new brake fluid to clean or wash all parts of master cylinder and operating cylinder.**
- **Never use mineral oils such as gasoline or kerosene. It will ruin the rubber parts of the hydraulic system.**

WARNING:
After cleaning clutch disc, wipe it with a dust collector. Do not use compressed air.

Special Service Tools

NICL0002

The actual shapes of Kent-Moore tools may differ from those of special service tools illustrated here.

Tool number (Kent-Moore No.) Tool name	Description	
KV30101600 (New) KV30101000 (Former) (J33213) Clutch aligning bar	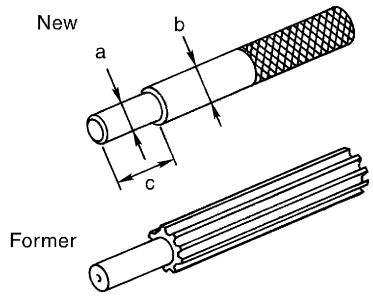 NT641	Installing clutch cover and clutch disc **a: 15.9 mm (0.626 in) dia.** **b: 17.9 mm (0.705 in) dia.** **c: 40 mm (1.57 in)**
ST20050240 (—) Diaphragm spring adjusting wrench	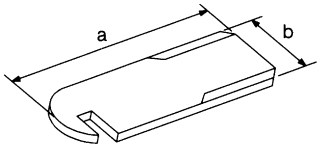 NT404	Adjusting unevenness of diaphragm spring of clutch cover **a: 150 mm (5.91 in)** **b: 25 mm (0.98 in)**
KV32101000 (J25689-A) Pin punch	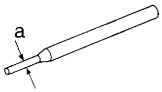 NT410	Removing and installing spring pin **a: 4 mm (0.16 in) dia.**

Commercial Service Tools

NICL0003

Tool name	Description	
1 Flare nut crowfoot 2 Torque wrench	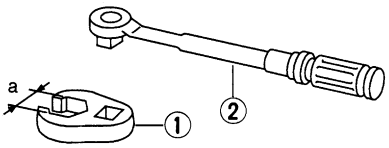 NT360	Removing and installing clutch piping **a: 10 mm (0.39 in)**

NVH Troubleshooting Chart

NICL0004S01

Use the chart below to help you find the cause of the symptom. The numbers indicate the order of inspection. Check each part in order. If necessary, repair or replace these parts.

Reference page		CL-6	CL-7	CL-8	CL-11	Refer to ***EM-49***, (QG18DE), ***EM-127***, (SR20DE).	CL-14	CL-17	CL-17	CL-17	CL-17	CL-17	CL-17	CL-17	CL-17	CL-17	CL-17	CL-17	CL-18
SUSPECTED PARTS (Possible cause)		CLUTCH PEDAL (Free play out of adjustment)	CLUTCH LINE (Air in line)	MASTER CYLINDER PISTON CUP (Damaged)	OPERATING CYLINDER PISTON CUP (Damaged)	ENGINE MOUNTING (Loose)	RELEASE BEARING (Worn, dirty or damaged)	CLUTCH DISC (Out of true)	CLUTCH DISC (Runout is excessive)	CLUTCH DISC (Lining broken)	CLUTCH DISC (Dirty or burned)	CLUTCH DISC (Oily)	CLUTCH DISC (Worn out)	CLUTCH DISC (Hardened)	CLUTCH DISC (Lack of spline grease)	DIAPHRAGM SPRING (Damaged)	DIAPHRAGM SPRING (Out of tip alignment)	CLUTCH COVER (Distortion)	FLYWHEEL (Distortion)
Symptom	Clutch grabs/chatters					1			2			2	2	2			2		
	Clutch pedal spongy		1	2	2														
	Clutch noisy						1												
	Clutch slips	1										2	2			3		4	5
	Clutch does not disengage	1	2	3	4			5	5	5	5	5			5	6	6	7	

Components

NICL0005

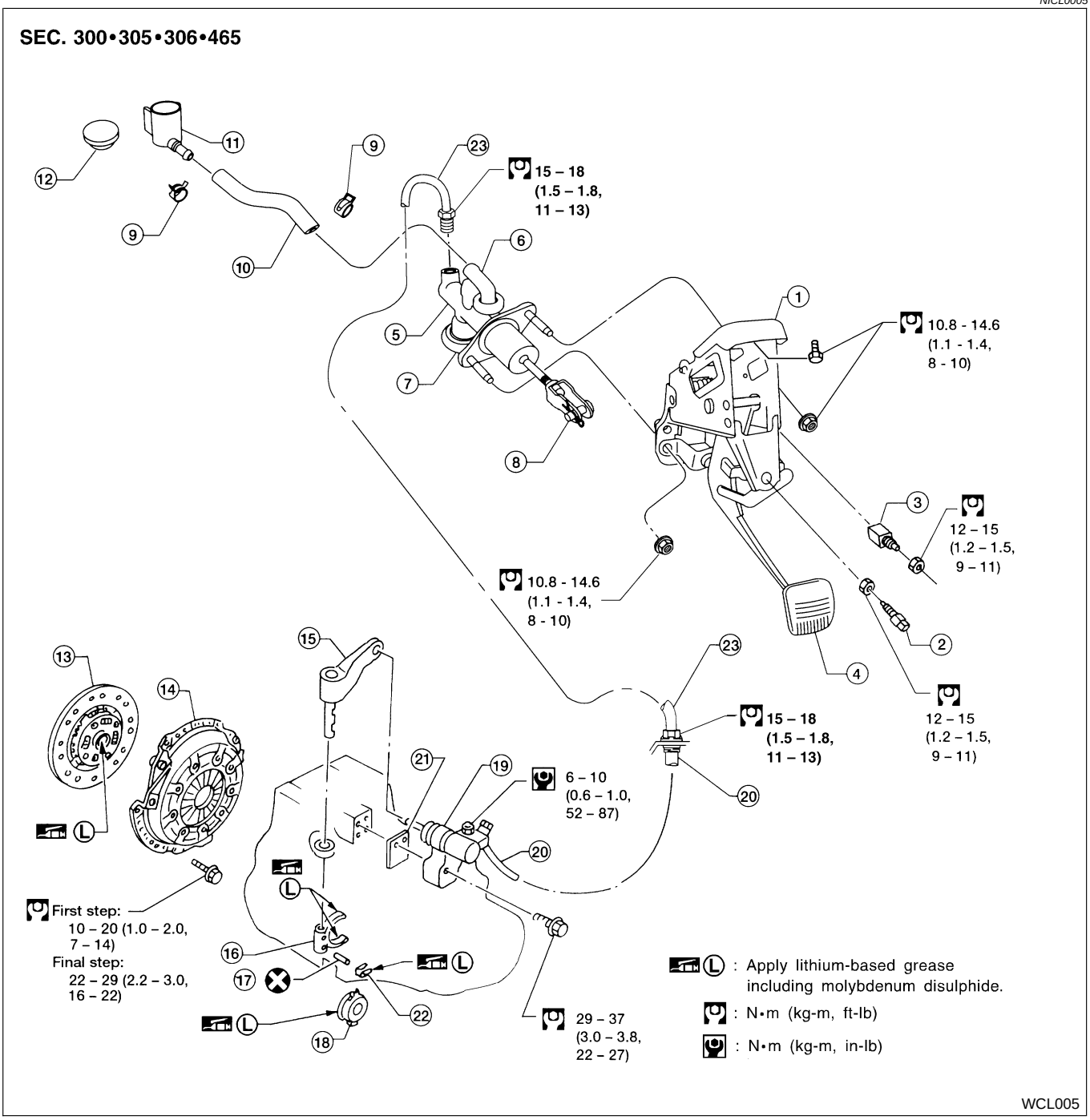

1. Clutch pedal bracket
2. ASCD clutch switch
3. Clutch interlock switch
4. Clutch pedal
5. Clutch master cylinder
6. Nipple
7. Clutch damper
8. Clevis
9. Hose clamp
10. Reservoir hose
11. Reservoir tank
12. Reservoir cap
13. Clutch disc
14. Clutch cover
15. Withdrawal lever
16. Clutch lever
17. Spring pin
18. Release bearing
19. Operating cylinder
20. Clutch hose
21. Spacer
22. Release bearing spring
23. Clutch tube

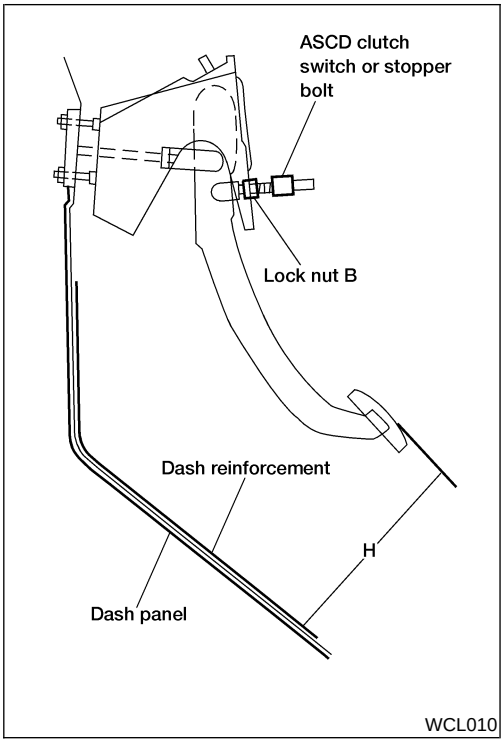

Inspection and Adjustment

NICL0006

ADJUSTING CLUTCH PEDAL

NICL0006S01

Pedal Height

NICL0006S0101

1. Verify that clutch pedal height “H” is within specification.

- Measure distance between the upper surface of dash reinforcement and pedal.

Pedal height “H”:
156.1 - 166.1 mm (6.146 - 6.539 in)

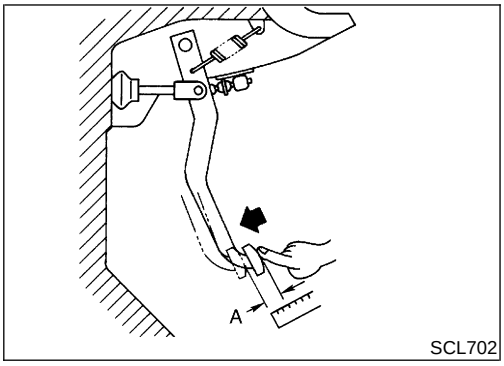

2. Adjust pedal free play with master cylinder push rod. Then tighten lock nut.

Pedal free play “A”:
9 - 16 mm (0.35 - 0.63 in)

- Push or step on clutch pedal until resistance is felt, and check the distance the pedal moves.

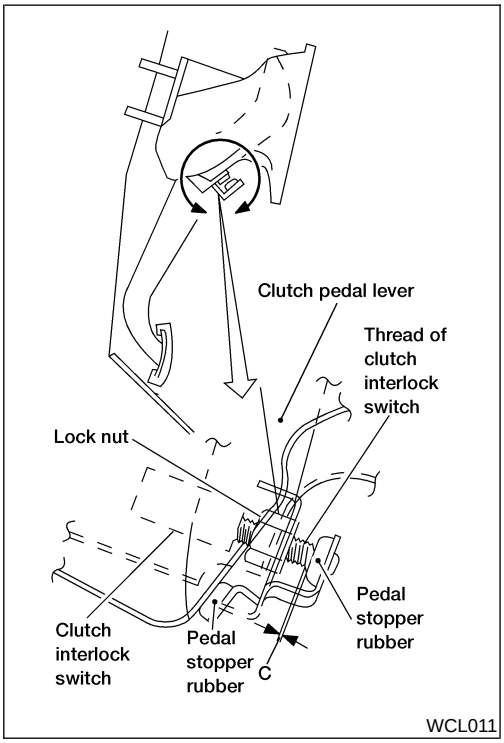

3. Adjust clearance “C” shown in the figure while fully depressing clutch pedal.

Clearance C:
0.1 - 1.0 mm (0.004 - 0.039 in)

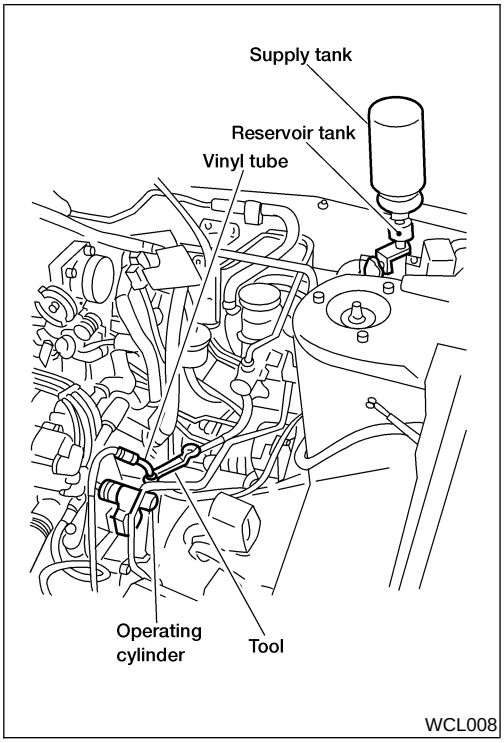

BLEEDING PROCEDURE

NICL0006S02

1. Bleed air from clutch operating cylinder according to the following procedure.

- **Carefully monitor fluid level at master cylinder during bleeding operation.**

a. Top off reservoir with recommended brake fluid.

CAUTION:

Be careful not to splash brake fluid on painted areas; it may cause paint damage. If brake fluid is splashed on painted areas, wash it away with water immediately.

b. Connect a transparent vinyl tube to air bleeder valve.

c. Slowly depress the clutch pedal to its full stroke and release it completely. Repeat this operation several times at 2 to 3 seconds intervals.

d. Open the air bleeder with the clutch pedal fully depressed.

e. Close the air bleeder.

f. Release the clutch pedal and wait at least 5 seconds.

g. Repeat steps c through f mentioned above, then air bubbles will no longer appear at the damper in the brake fluid.

2.

Air bleeder valve tightening torque:

: 6 - 10 N·m (0.6 - 1.0 kg-m, 52 - 87 in-lb)

Components

NICL0007

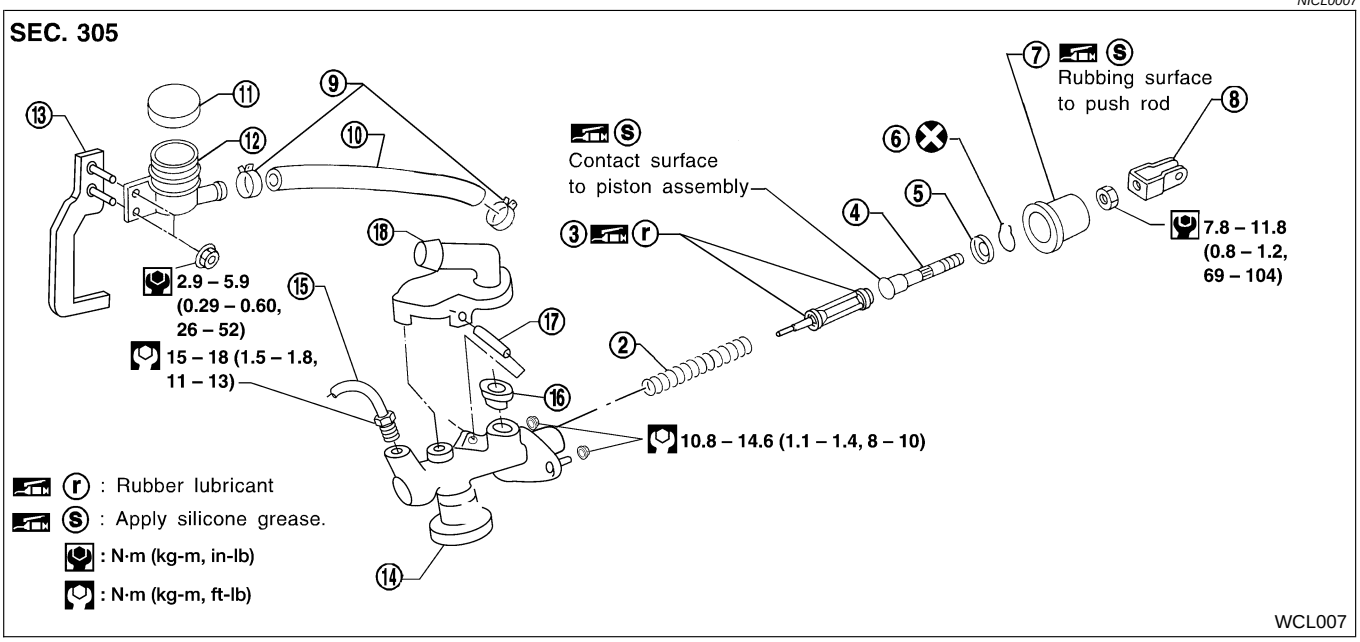

1. Clutch master cylinder
2. Return spring
3. Piston assembly seals
4. Push rod
5. Stopper
6. Stopper ring
7. Dust cover
8. Clevis
9. Hose clamps
10. Reservoir hose
11. Reservoir cap
12. Reservoir tank
13. Bracket
14. Damper
15. Clutch tube
16. Seal
17. Pin
18. Nipple

Removal

NICL0008

1. Drain brake fluid.

CAUTION:

Be careful not to splash brake fluid on painted areas; it may cause paint damage. If brake fluid is splashed on painted areas, wash it away with water immediately.

2. Remove clutch tube flare nut using a flare nut wrench.
3. Remove reservoir hose.
4. Remove the snap pin from the clevis pin and remove the clutch pedal from the clevis.
5. Unscrew master cylinder assembly mounting nuts and reservoir tank bracket mounting bolts to remove master cylinder assembly from vehicle.

Installation

NICL0009

1. Install reservoir hose.
2. Connect clutch tube to master cylinder assembly, and hand-tighten flare nut.
3. Install master cylinder assembly to vehicle, and tighten mounting nuts to the specified torque.
   : 10.8 - 14.6 N·m (1.1 - 1.4 kg-m, 8 - 10 ft-lb)
4. Tighten reservoir tank bracket mounting bolts.
   : 2.9 - 5.9 N·m (0.29 - 0.60 kg-m, 26 - 52 in-lb)
5. Tighten clutch tube flare nut using a flare nut torque wrench.
   : 15 - 18 N·m (1.5 - 1.8 kg-m, 11 - 13 ft-lb)
6. After installing clevis pin, install snap pin to connect clutch pedal to push rod.
7. After finishing the operation, bleed air from clutch piping. (Refer to “BLEEDING PROCEDURE”, CL-7.)

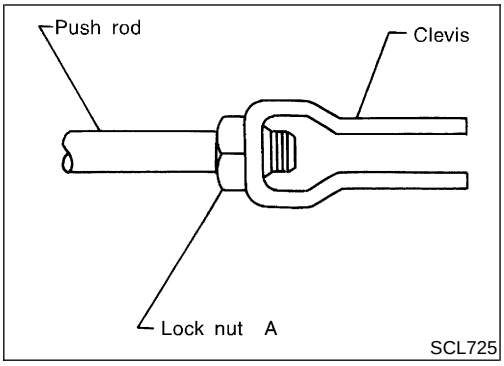

Disassembly

NICL0010

1. Loosen push rod lock nut A to remove clevis and lock nut A.
2. Remove dust cover.
3. Remove stopper ring and stopper, and remove push rod from cylinder body. During removal, keep push rod depressed, to prevent piston inside master cylinder from popping out.
4. Remove piston assembly from cylinder body.
5. Remove spring.
6. Remove pin using pin punch then remove nipple and seal.

Inspection

NICL0011

Inspect for the following, and replace parts if necessary.

- Damage, wear, rust, and pinholes on the cylinder inner wall
- Damage and deformation of the reservoir tank
- Weak spring
- Crack or deformation of the dust cover

Assembly

NICL0012

1. Install spring.
2. Apply rubber lubricant to the sliding part of piston assembly, and insert piston assembly into cylinder body.
3. After installing stopper to push rod, install stopper ring while keeping piston assembly depressed by hand, so that piston assembly will not pop out.

CAUTION:

Stopper ring cannot be reused. Always use a new stopper ring for assembly.

4. Install dust cover.

5. Install clevis to push rod, and tighten lock nut A to the specified torque.

   : 7.8 - 11.8 N·m (0.8 - 1.2 kg-m, 69 - 104 in-lb)

6. Install seal and nipple to cylinder body, and install pin using a pin punch.

Components

NICL0019

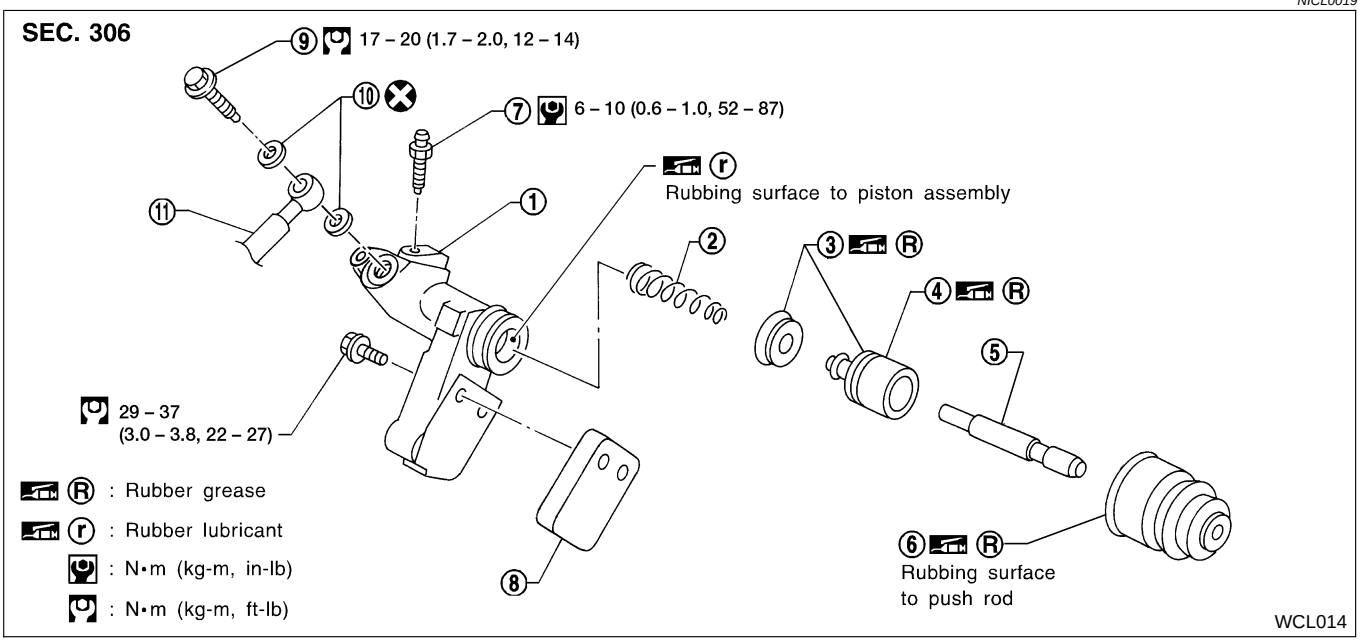

1. Cylinder body
2. Piston spring
3. Piston cup
4. Piston
5. Push rod
6. Dust cover
7. Air bleeder
8. Spacer
9. Union bolt
10. Copper washer
11. Clutch hose

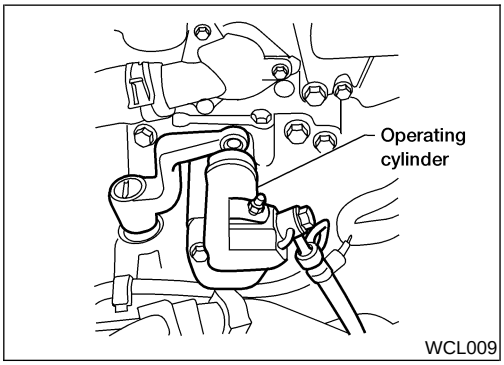

Removal

NICL0020

1. Drain brake fluid.

CAUTION:

Be careful not to splash brake fluid on painted areas; it may cause paint damage. If brake fluid is splashed on painted areas, wash it away with water immediately.

2. Remove union bolt and clutch hose from operating cylinder.
3. Remove operating cylinder mounting bolts, and remove cylinder from vehicle.

Disassembly

NICL0021

Remove dust cover, and remove piston assembly from cylinder body.

Inspection

NICL0022

Inspect for the following, and replace parts if necessary.

- Damage, foreign material, wear, rust, and pinholes on the cylinder inner surface, piston, and sliding part of piston cup
- Weak spring
- Crack or deformation of dust cover

Assembly

NICL0023

1. Apply rubber lubricant to the overall inside surface of the cylinder body. Also, apply rubber grease to the piston. Then insert the piston assembly into the cylinder body.
2. Install dust cover.

Installation

NICL0024

Install the components in the reverse order of removal. Adhere to the operations described below.

CAUTION:

Install the hose without twisting it.

- **The copper washer of the union bolt should not be reused. Always use a new copper washer for installation.**
- **After finishing the operation, bleed air from the clutch piping. Refer to “BLEEDING PROCEDURE”, CL-7.**

Removal

NICL0025

1. Remove air cleaner and air duct.
2. Drain brake fluid.

CAUTION:

Be careful not to splash brake fluid on painted areas; it may cause paint damage. If brake fluid is splashed on painted areas, wash it away with water immediately.

3. Remove flare nut from cylinder body using a flare nut wrench.
4. Remove clutch hose from operating cylinder.
5. Remove clutch hose and clutch tube from bracket by removing lock plate.

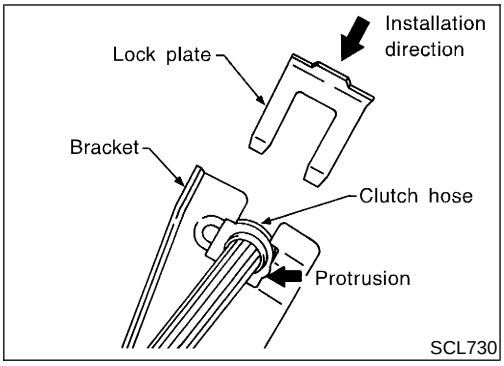

Installation

NICL0026

1. When installing clutch hose to bracket, face lock plate in the correct direction as shown to secure clutch hose.

CAUTION:

Install clutch hose without twisting or bending it.

2. Tighten flare nut to the specified torque, using a flare nut wrench.

   : 15 - 18 N·m (1.5 - 1.8 kg-m, 11 - 13 ft-lb)

CAUTION:

Be careful not to damage flare nut and clutch tube.

3. Install clutch hose to operating cylinder, and tighten mounting bolt to the specified torque.

   : 17 - 19 N·m (1.7 - 2.0 kg-m, 13 - 14 ft-lb)

4. Bleed air from the clutch piping. Refer to “BLEEDING PROCEDURE”, CL-7.
5. Install air cleaner and air duct.

Components

NICL0027

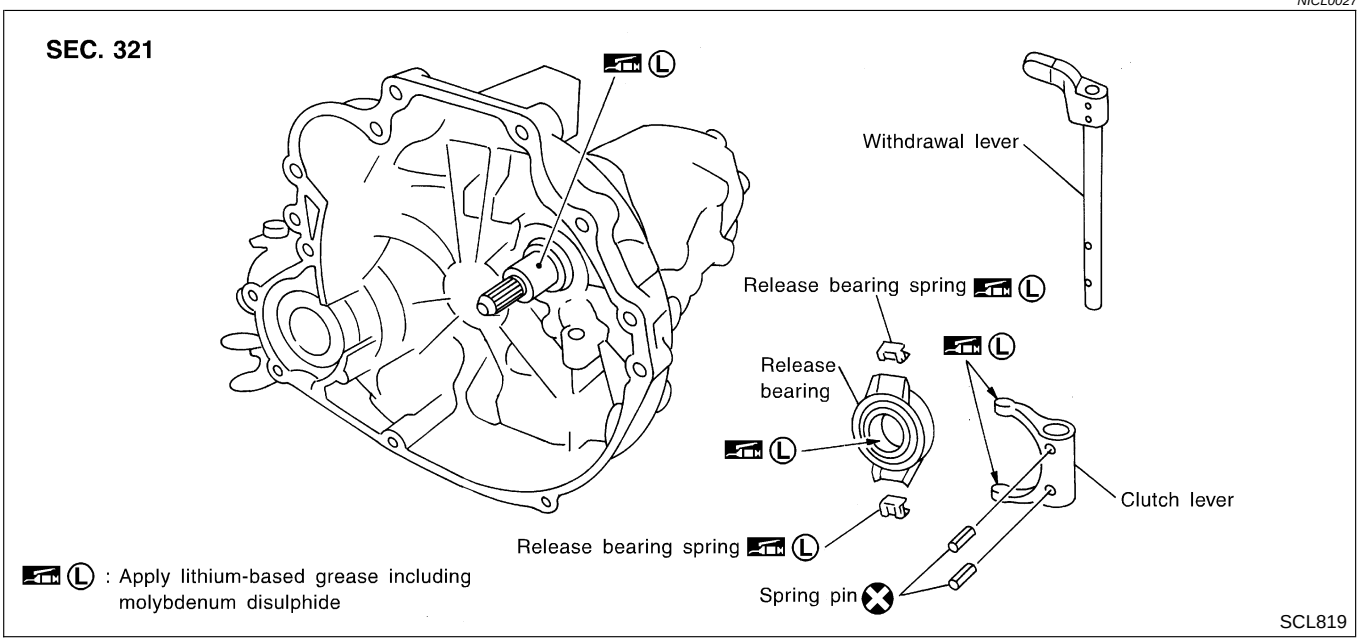

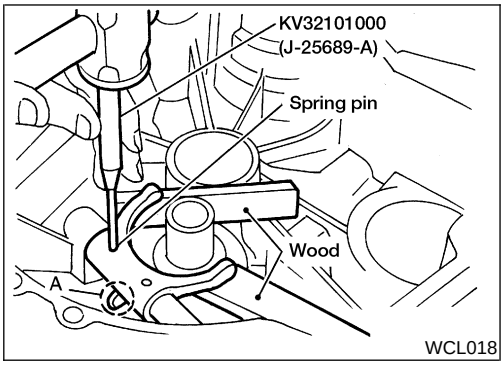

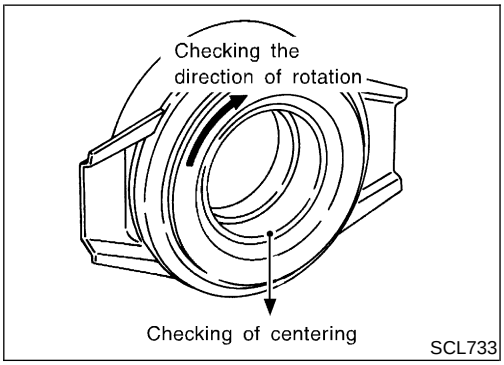

Removal

NICL0028

1. Remove manual transaxle from vehicle. Refer to ***MT-12***, “Removal”.
2. Move withdrawal lever enough to remove release bearing and release bearing spring, and remove release bearing from clutch lever.
3. Support clutch lever claws with an appropriate wood block, align retaining pin with A in the figure, and drive out spring pins using a pin punch (J25689-A).
4. Pull out withdrawal lever and remove clutch lever from clutch housing.

Inspection

NICL0029

- Replace the release bearing if it is seized, damaged, faulty in rotation direction, or has poor aligning function.
- Replace the withdrawal lever if its contact surface is worn abnormally.
- Replace the clutch lever if its contact surface is worn abnormally.

Installation

NICL0030

CAUTION:

- **Be sure to apply grease to the clutch components. Otherwise, abnormal noise, poor clutch disengagement, or clutch damage may occur. Wipe the excess grease off completely, because it may cause the clutch components to slip and shudder.**
- **Keep the clutch disc facing, pressure plate, and flywheel free of oil and grease.**

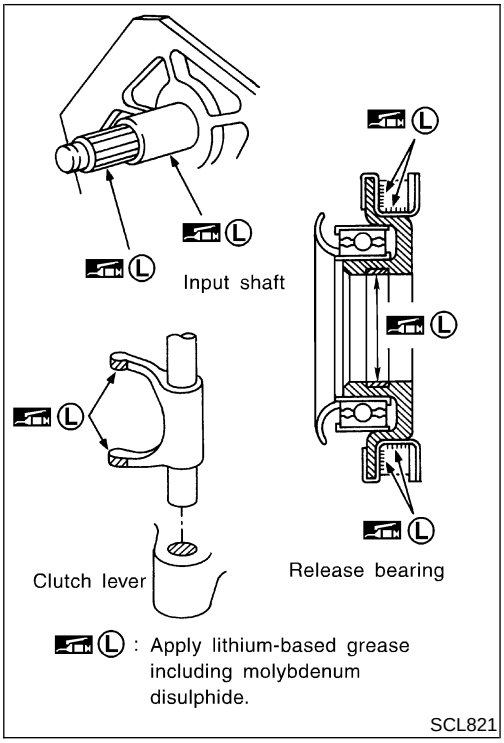

- **Clean old grease and abrasive materials off the grease application area.**
- **Apply approximately 1 mm (0.04 in)-thick clutch sleeve grease evenly on the sliding part of the clutch lever and the release bearing spring.**
- **Apply just enough clutch sleeve grease to fill up the release bearing inner groove.**
- **Apply the clutch grease to the clutch disc and the input shaft spline. Install the clutch disc to the input shaft, remove the excess grease around the shaft, and remove the clutch disc.**
- **Lightly and evenly apply the clutch sleeve grease on the sliding part of the release bearing, install the release bearing, remove the excess grease around the bearing, and remove the release bearing.**

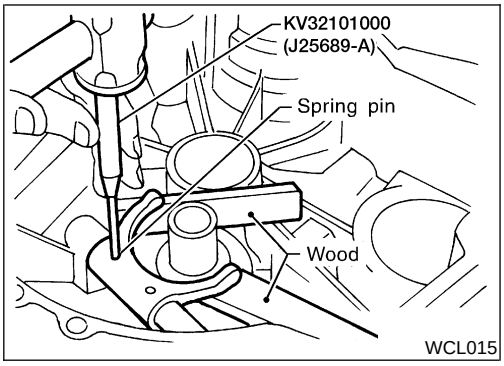

1. Assemble clutch lever to clutch housing, and insert withdrawal lever.
2. Support clutch lever claws with an appropriate wood block, and install new spring pins using a pin punch.

CAUTION:
Spring pins cannot be reused.

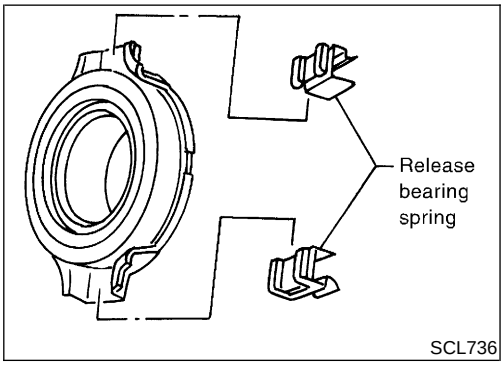

3. Install release bearing springs to release bearing as shown in the figure.

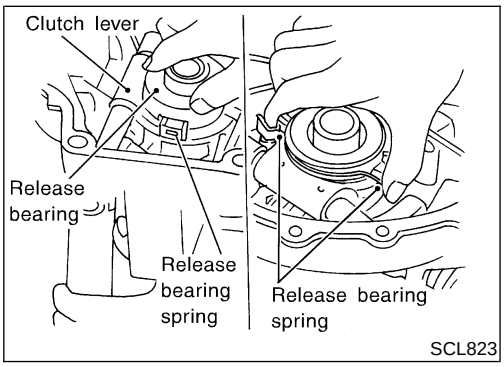

4. Operate withdrawal lever manually, press clutch spring from both sides, and install release bearing to clutch lever securely.
5. Make sure a click is heard when release bearing spring is pressed from both sides.

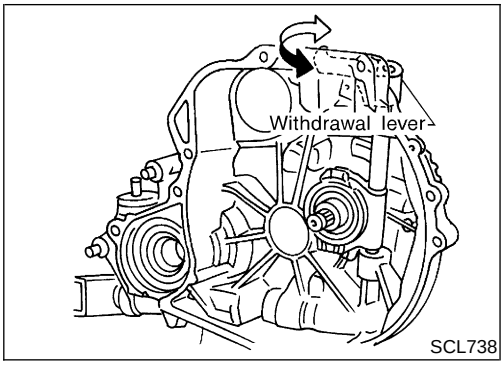

6. Make sure all parts operate smoothly when operating withdrawal lever.
7. Install manual transaxle. Refer to ***MT-14***, "Installation".

CAUTION:

Remove any excess grease with a shop towel.

Components

NICL0031

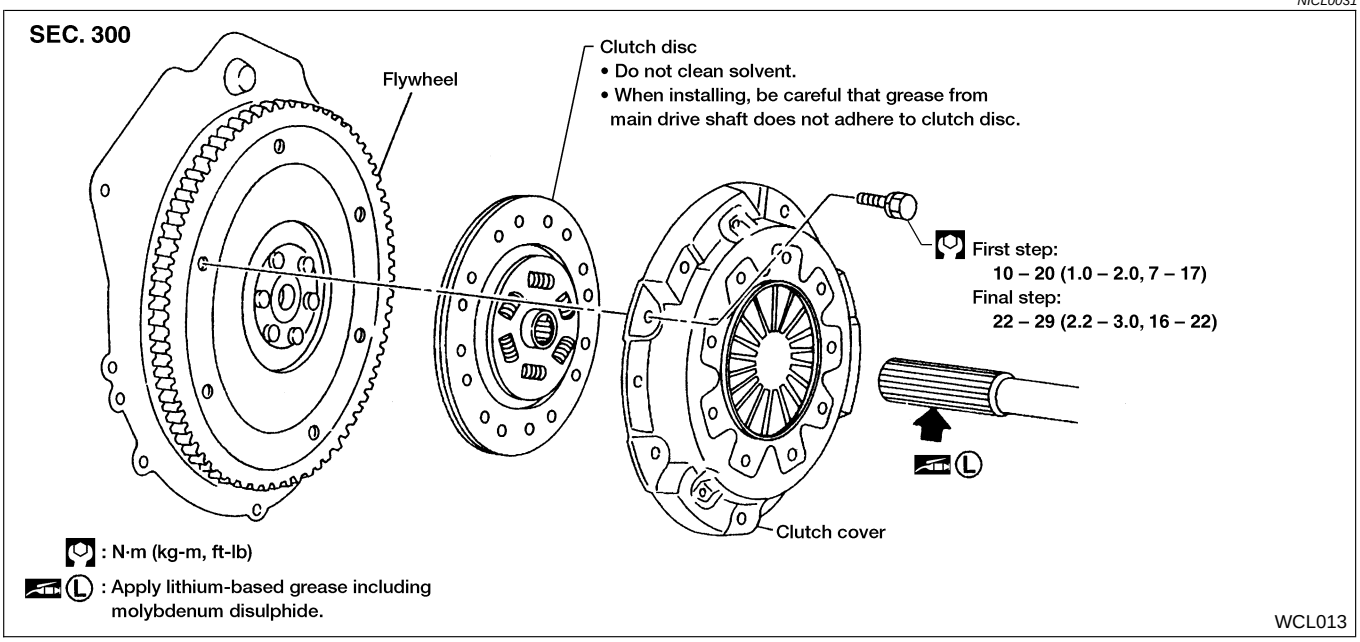

NOTE:
The following operations are with manual transaxle removed from vehicle.

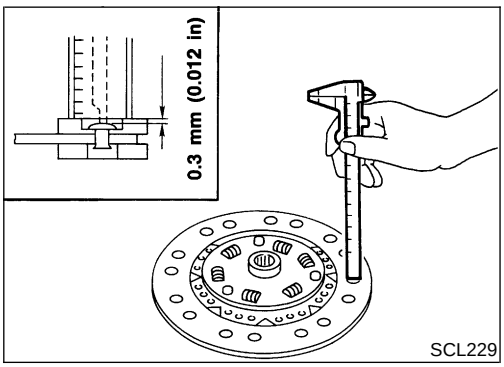

Inspection and Adjustment

NICL0032

CLUTCH DISC

NICL0032S01

Check clutch disc for wear of facing.

Wear limit of facing surface to rivet head:
0.3 mm (0.012 in)

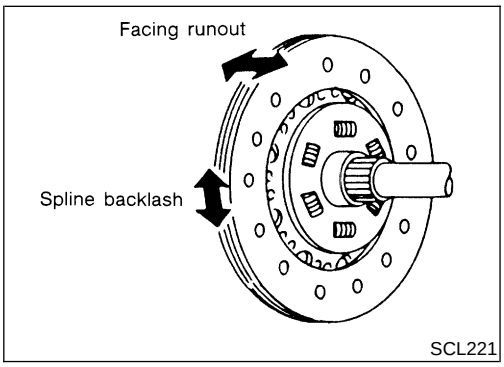

- Check clutch disc for backlash of spline and runout of facing.
  Maximum backlash of spline (at outer edge of disc):
  0.9 mm (0.035 in)
  Runout limit:
  1.0 mm (0.039 in)
  Distance of runout check point (from hub center):
  102.5 mm (4.04 in)
- Check clutch disc for burns, discoloration or oil or grease leakage. Replace if necessary.

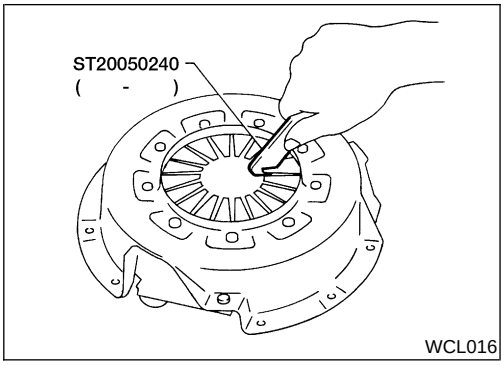

CLUTCH COVER AND FLYWHEEL

NICL0032S02

- Check clutch cover installed on vehicle for unevenness of diaphragm spring toe height.

  Uneven limit:

  QG18DE 0.88 mm (0.0346 in)

  SR20DE 0.7 mm (0.028 in)

- If out of limit, adjust the height with Tool.

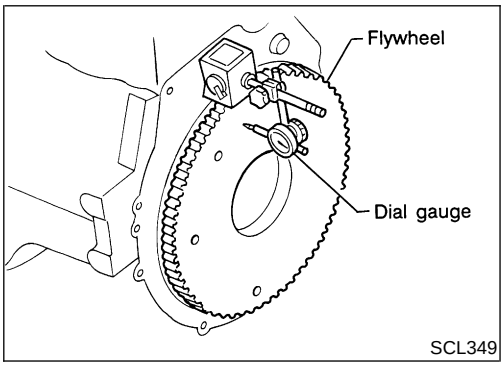

FLYWHEEL INSPECTION

NICL0032S03

- Check contact surface of flywheel for slight burns or discoloration. Clean flywheel with emery paper.
- Check flywheel runout.

  Maximum allowable runout:

  Refer to *EM-61*, (QG18DE), *EM-139*, (SR20DE), "FLYWHEEL/DRIVE PLATE RUNOUT".

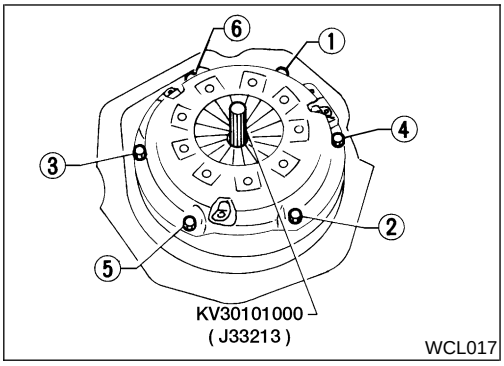

Installation

NICL0033

- Insert Tool into clutch disc hub when installing clutch cover and disc.
- **Be careful not to allow grease to contaminate clutch facing.**
- Tighten bolts in numerical order by 2 steps.

  First step:

  : 10 - 20 N·m (1.0 - 2.0 kg-m, 7 - 14 ft-lb)

  Final step:

  : 22 - 29 N·m (2.2 - 3.0 kg-m, 16 - 22 ft-lb)

Clutch Control System

NICL0034

Type of clutch control	Hydraulic

Clutch Master Cylinder

NICL0035
Unit: mm (in)

Inner diameter	15.87 (5/8)

Clutch Operating Cylinder

NICL0036
Unit: mm (in)

Inner diameter	19.05 (3/4)

Clutch Disc

NICL0038
Unit: mm (in)

Engine model	QG18DE	SR20DE
Model	215	
Facing size (Outer dia. × inner dia. × thickness)	215 × 145 × 3.5 (8.46 × 5.71 × 0.138)	215 × 140 × 3.5 (8.46 × 5.51 × 0.138)
Thickness of disc assembly With load	7.7 - 8.3 (0.303 - 0.327) with 4,900 N (499.8 kg, 1,101.5 lb)	7.6 - 8.0 (0.299 - 0.315) with 4,900 N (499.8 kg, 1101.5 lb)
Wear limit of facing surface to rivet head	0.3 (0.012)	
Runout limit of facing	1.0 (0.039)	
Distance of runout check point (from the hub center)	102.5 (4.04)	
Maximum backlash of spline (at outer edge disc)	0.9 (0.035)	

Clutch Cover

NICL0039
Unit: mm (in)

Engine model	QG18DE	SR20DE
Model	215	
Full-load	4,900 N (499.8 kg, 1,101.5 lb)	
Uneven limit of diaphragm spring toe height	0.88 (0.0346)	0.7 (0.028)

Clutch Pedal

NICL0040
Unit: mm (in)

Pedal height “H_1”*	156.1 - 166.1 (6.146 - 6.539)
Pedal free play “A” (at pedal pad)	9 - 16 (0.35 - 0.63)
Clearance “C” between pedal stopper rubber and clutch interlock switch threaded end while clutch pedal is fully depressed.	0.1 - 1.0 (0.004 - 0.039)

*: Measured from surface of dash reinforcement panel

NOTES