SECTION PG

POWER SUPPLY, GROUND & CIRCUIT ELEMENTS

CONTENTS

POWER SUPPLY ROUTING

PFP:24110

Schematic

EKS003AZ

For detailed ground distribution information, refer to PG-12, "Ground Distribution" .

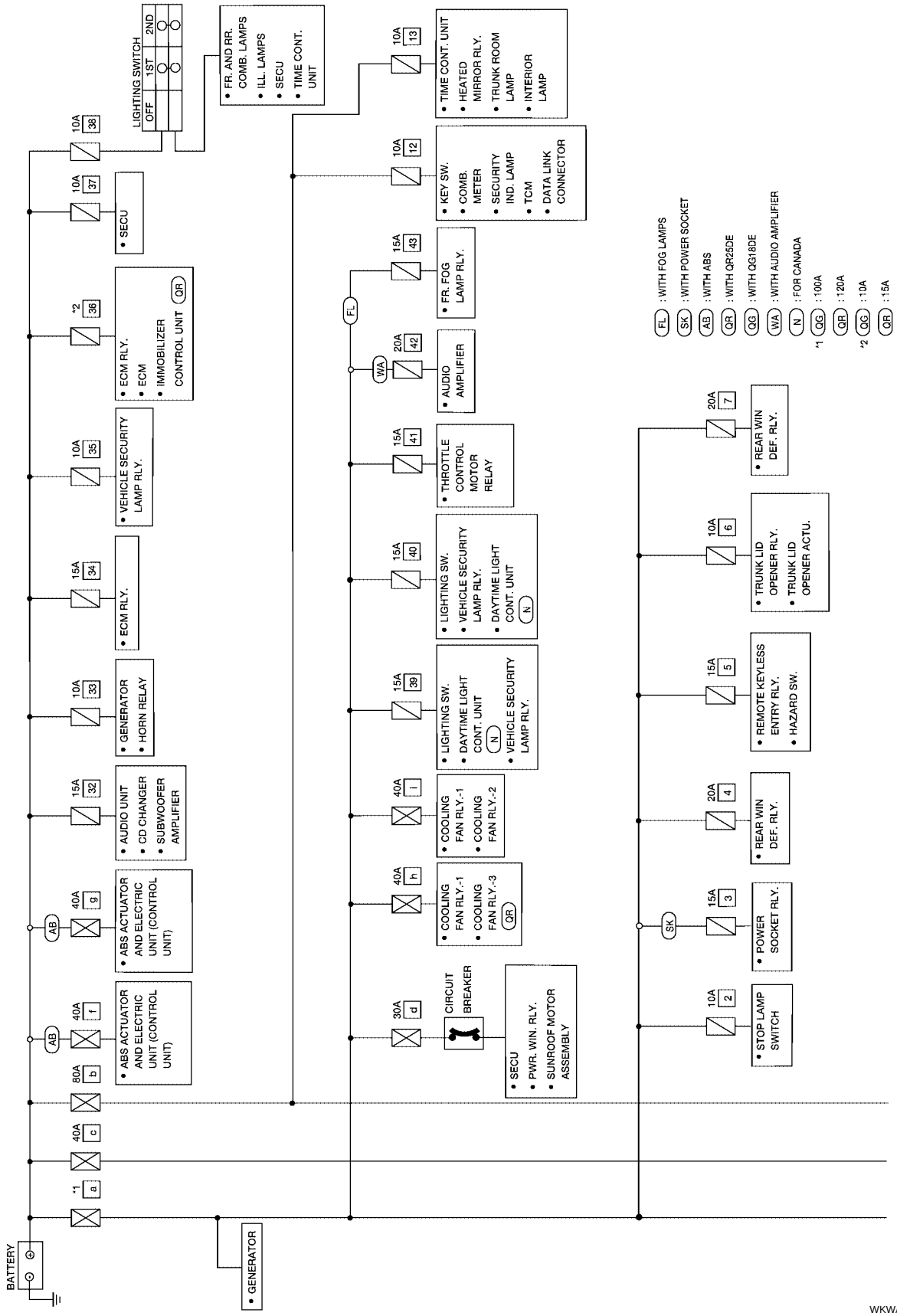

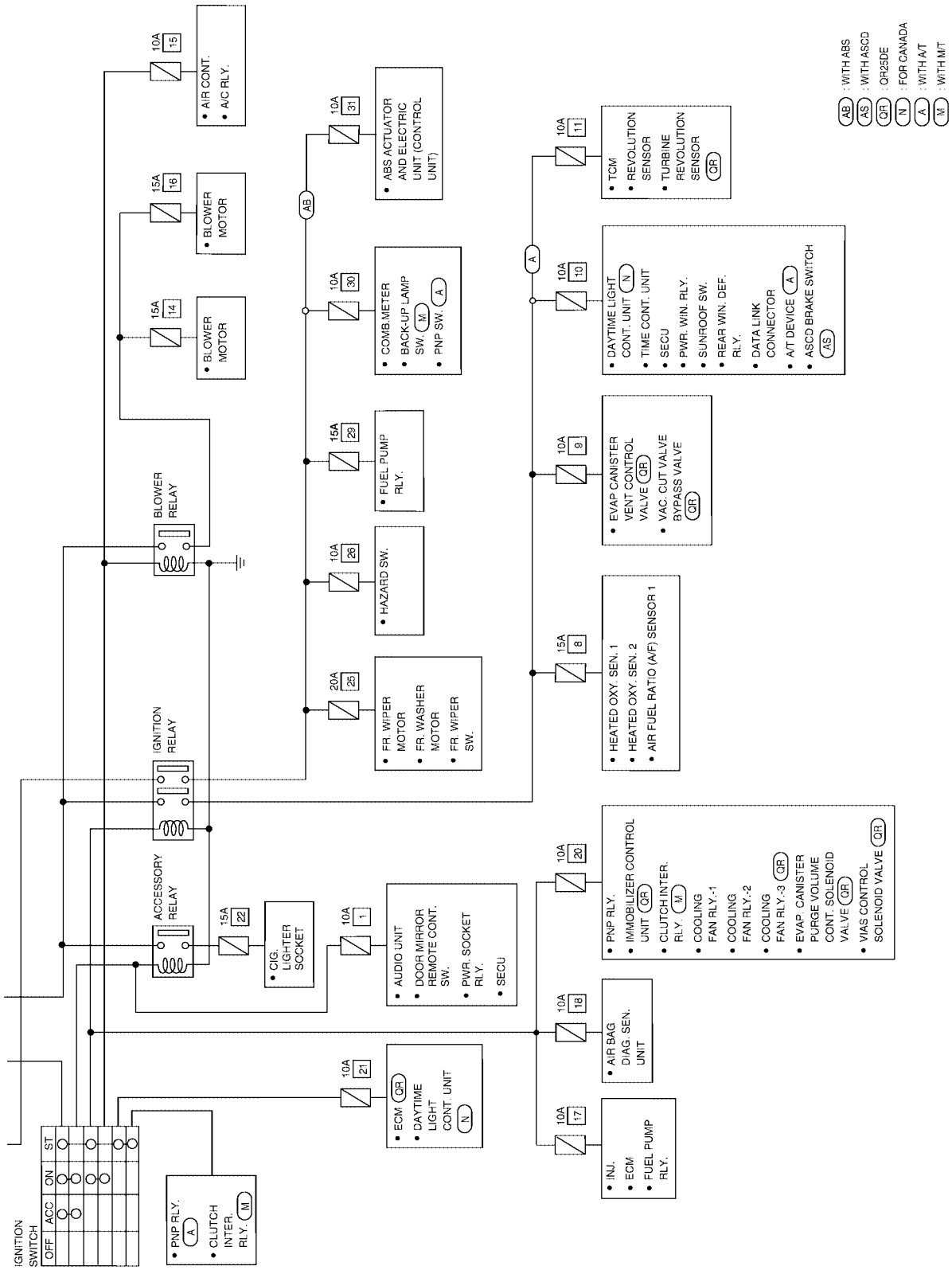
IGNITION SWITCH
OFF
ACC
ON
ST
BLOWER RELAY
IGNITION RELAY
ACCESSORY RELAY
10A 15
• A/R CONT.
• A/C RLY.
15A 16
• BLOWER MOTOR
15A 14
• BLOWER MOTOR
10A 31
• ABS ACTUATOR AND ELECTRIC UNIT (CONTROL UNIT)
10A 30
• COMB.METER
• BACK-UP LAMP SW. (M)
• PNP SW. (A)
15A 29
• FUEL PUMP RLY.
10A 26
• HAZARD SW.
20A 25
• FR. WIPER MOTOR
• FR. WASHER MOTOR
• FR. WIPER SW.
15A 22
• CIG. LIGHTER SOCKET
10A 1
• AUDIO UNIT
• DOOR MIRROR REMOTE CONT. SW.
• PWR. SOCKET RLY.
• SECU
10A 21
• ECM (QR)
• DAYTIME LIGHT CONT UNIT (N)
• PNP RLY. (A)
• CLUTCH INTER. RLY. (M)
AB
A
10A 11
• TCM
• REVOLUTION SENSOR
• TURBINE REVOLUTION SENSOR (QR)
10A 10
• DAYTIME LIGHT CONT. UNIT (N)
• TIME CONT. UNIT
• SECU
• PWR. WIN. RLY.
• SUNROOF SW.
• REAR WIN. DEF. RLY.
• DATA LINK CONNECTOR
• A/T DEVICE (A)
• ASCD BRAKE SWITCH (AS)
10A 9
• EVAP CANISTER VENT CONTROL VALVE (QR)
• VAC. CUT VALVE BYPASS VALVE (QR)
15A 8
• HEATED OXY. SEN. 1
• HEATED OXY. SEN. 2
• AIR FUEL RATIO (A/F) SENSOR 1
10A 20
• PNP RLY.
• IMMOBILIZER CONTROL UNIT (QR)
• CLUTCH INTER. RLY. (M)
• COOLING FAN RLY.-1
• COOLING FAN RLY.-2
• COOLING FAN RLY.-3 (QR)
• EVAP. CANISTER PURGE VOLUME CONT. SOLENOID VALVE (QR)
• VIAS CONTROL SOLENOID VALVE (QR)
10A 18
• AIR BAG DIAG. SEN. UNIT
10A 17
• INJ.
• ECM
• FUEL PUMP RLY.
(AB) : WITH ABS
(AS) : WITH ASCD
(QR) : QR25DE
(N) : FOR CANADA
(A) : WITH A/T
(M) : WITH M/T

WKWA0502E

Wiring Diagram — POWER —

EKS003B0

BATTERY POWER SUPPLY — IGNITION SW. IN ANY POSITION

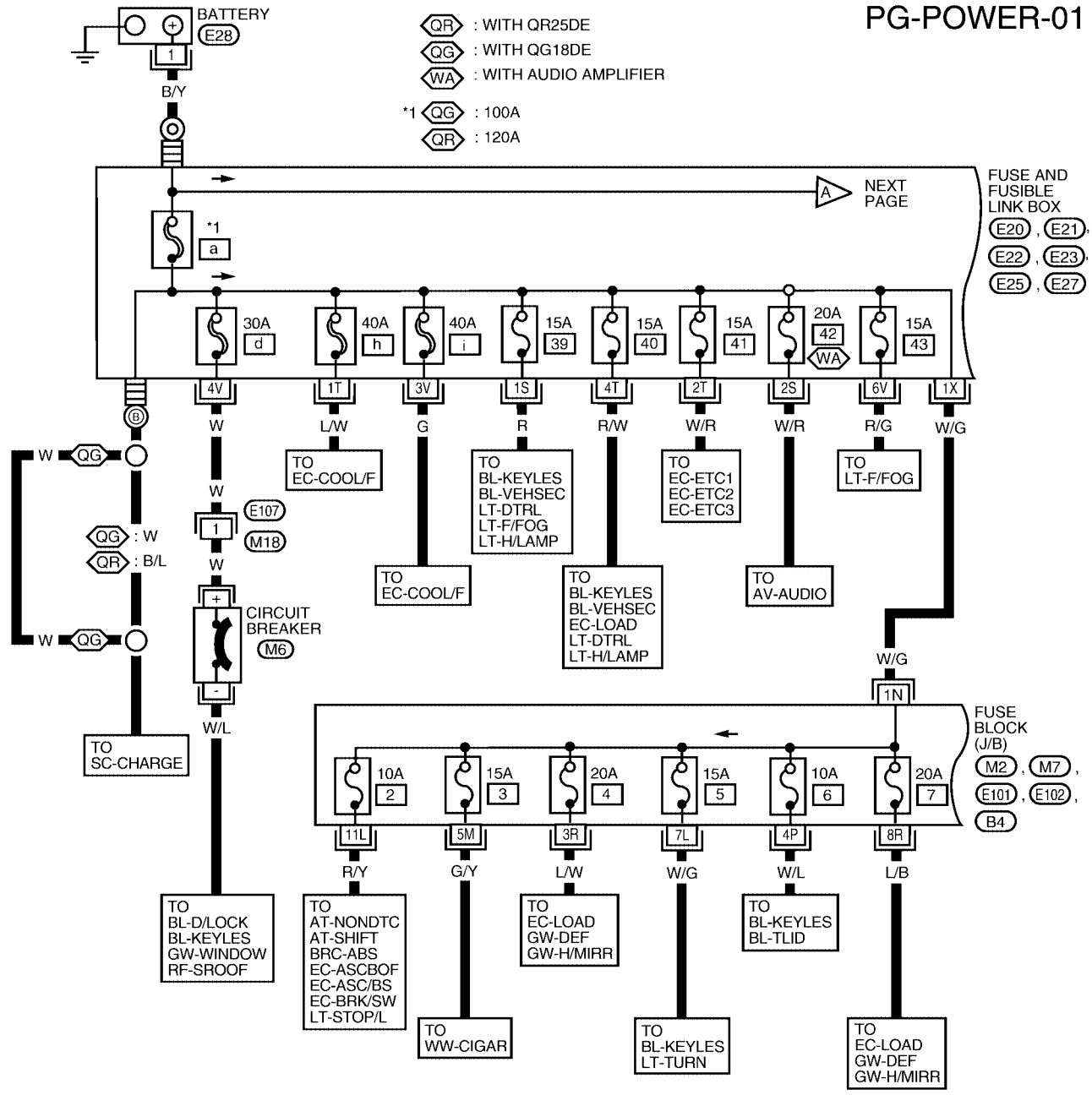

PG-POWER-02

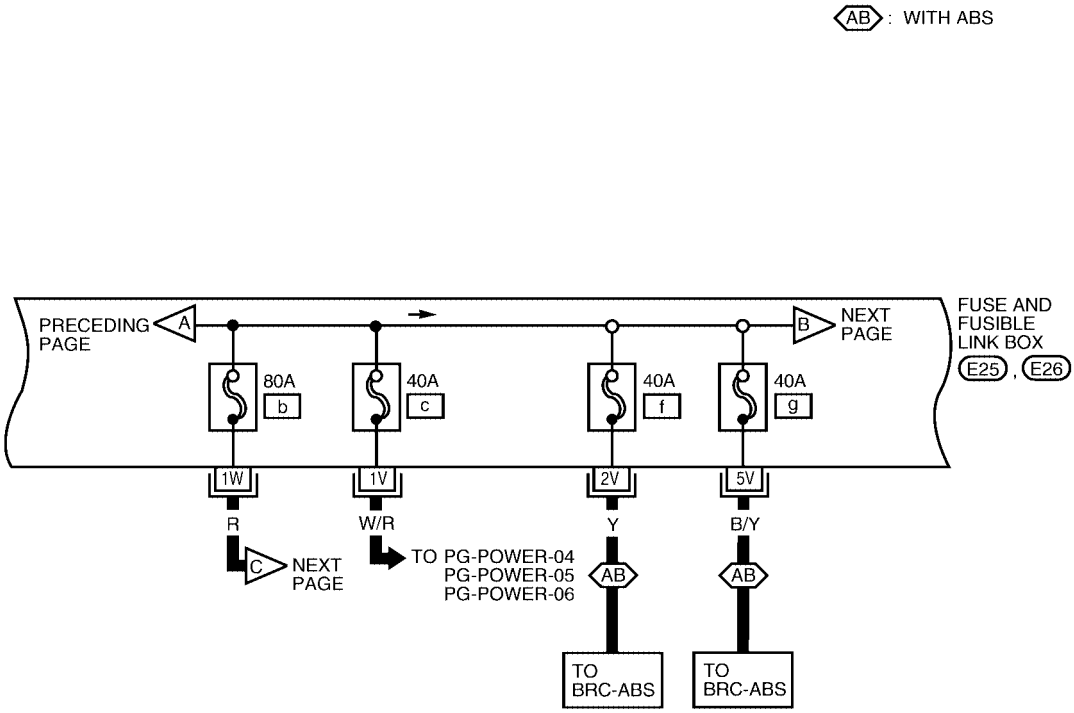

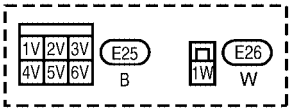

WKWA0057E

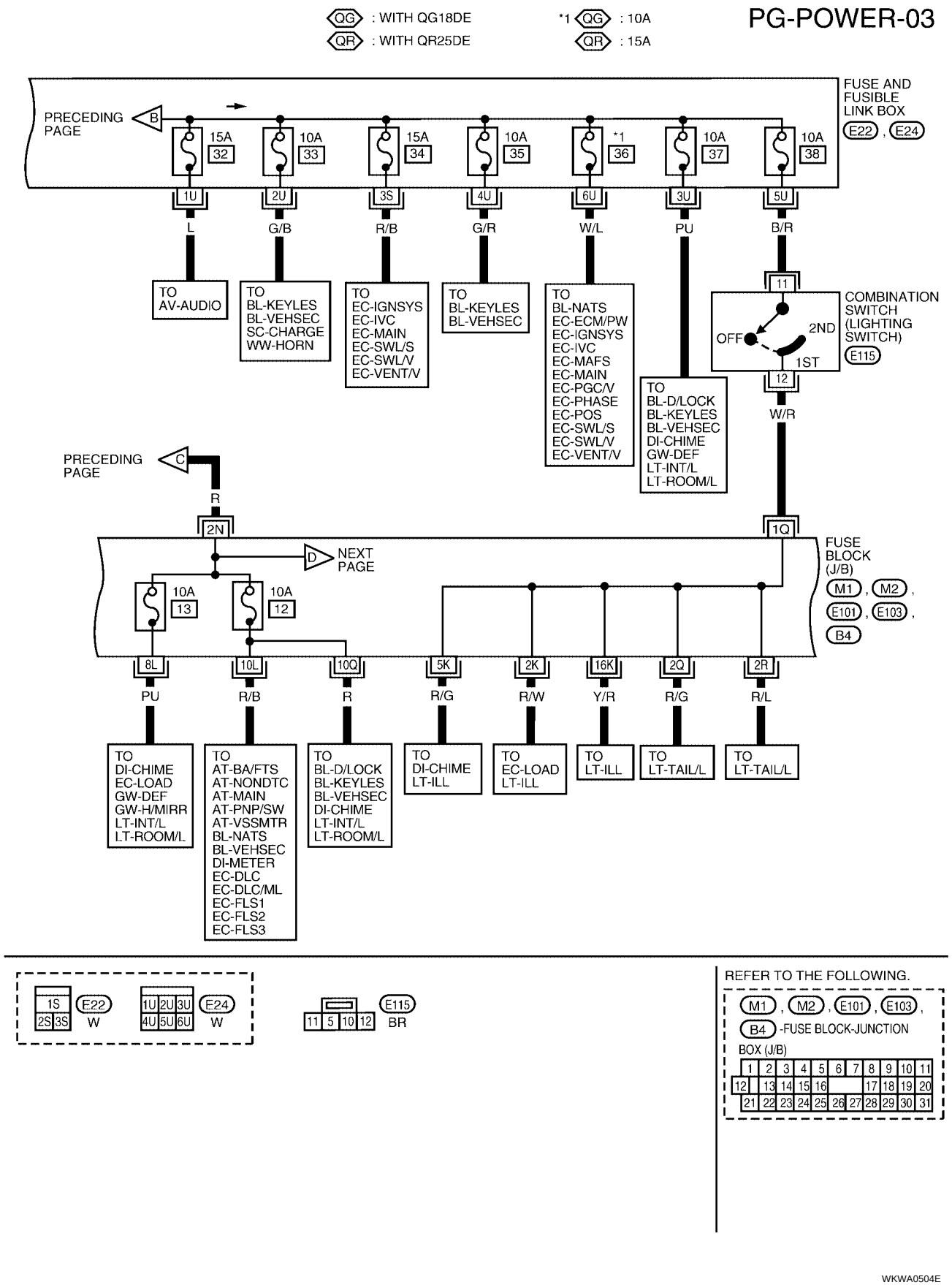
QG : WITH QG18DE
QR : WITH QR25DE
*1 QG : 10A
QR : 15A
PG-POWER-03
FUSE AND FUSIBLE LINK BOX
E22 , E24
PRECEDING PAGE
B
15A 32
10A 33
15A 34
10A 35
*1 36
10A 37
10A 38
1U
2U
3S
4U
6U
3U
5U
L
G/B
R/B
G/R
W/L
PU
B/R
TO AV-AUDIO
TO BL-KEYLES BL-VEHSEC SC-CHARGE WW-HORN
TO EC-IGNSYS EC-IVC EC-MAIN EC-SWL/S EC-SWL/V EC-VENT/V
TO BL-KEYLES BL-VEHSEC
TO BL-NATS EC-ECM/PW EC-IGNSYS EC-IVC EC-MAFS EC-MAIN EC-PGC/V EC-PHASE EC-POS EC-SWL/S EC-SWL/V EC-VENT/V
TO BL-D/LOCK BL-KEYLES BL-VEHSEC DI-CHIME GW-DEF LT-INT/L LT-ROOM/L
11
COMBINATION SWITCH (LIGHTING SWITCH)
E115
OFF
2ND
1ST
12
W/R
PRECEDING PAGE
C
R
2N
1Q
FUSE BLOCK (J/B)
M1 , M2 , E101 , E103 , B4
D
NEXT PAGE
10A 13
10A 12
8L
10L
10Q
5K
2K
16K
2Q
2R
PU
R/B
R
R/G
R/W
Y/R
R/G
R/L
TO DI-CHIME EC-LOAD GW-DEF GW-H/MIRR LT-INT/L LT-ROOM/L
TO AT-BA/FTS AT-NONDTC AT-MAIN AT-PNP/SW AT-VSSMTR BL-NATS BL-VEHSEC DI-METER EC-DLC EC-DLC/ML EC-FLS1 EC-FLS2 EC-FLS3
TO BL-D/LOCK BL-KEYLES BL-VEHSEC DI-CHIME LT-INT/L LT-ROOM/L
TO DI-CHIME LT-ILL
TO EC-LOAD LT-ILL
TO LT-ILL
TO LT-TAIL/L
TO LT-TAIL/L
1S 2S 3S E22 W
1U 2U 3U 4U 5U 6U E24 W
11 5 10 12 E115 BR
REFER TO THE FOLLOWING.
M1 , M2 , E101 , E103 , B4 -FUSE BLOCK-JUNCTION BOX (J/B)
1 2 3 4 5 6 7 8 9 10 11
12 13 14 15 16 17 18 19 20
21 22 23 24 25 26 27 28 29 30 31
WKWA0504E

ACCESSORY POWER SUPPLY — IGNITION SW. IN “ACC” OR “ON”

PG-POWER-04

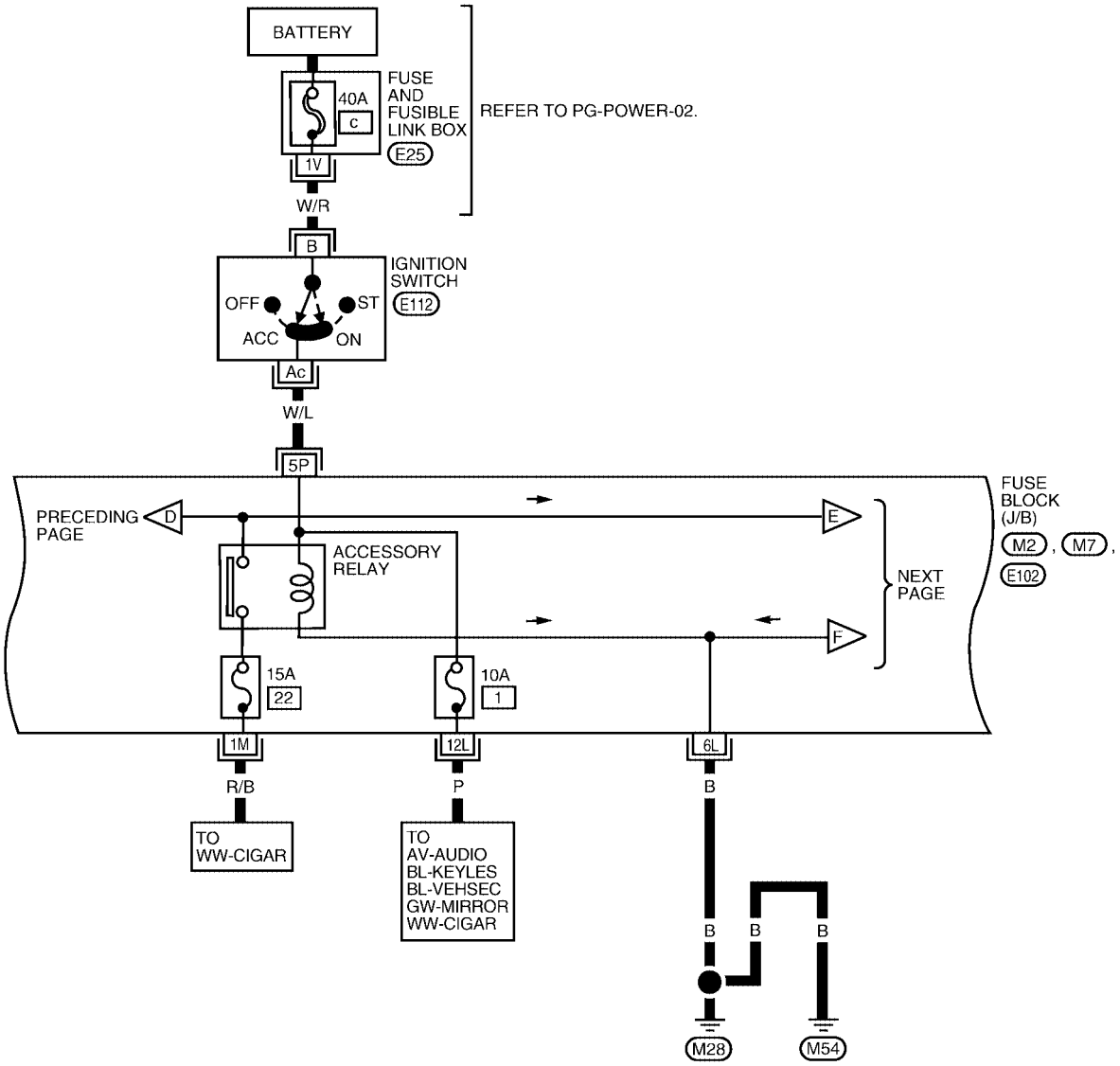

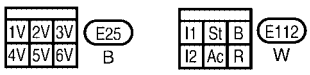

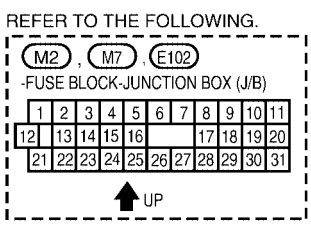

WKWA0250E

IGNITION POWER SUPPLY — IGNITION SW. IN “ON”

PG-POWER-05

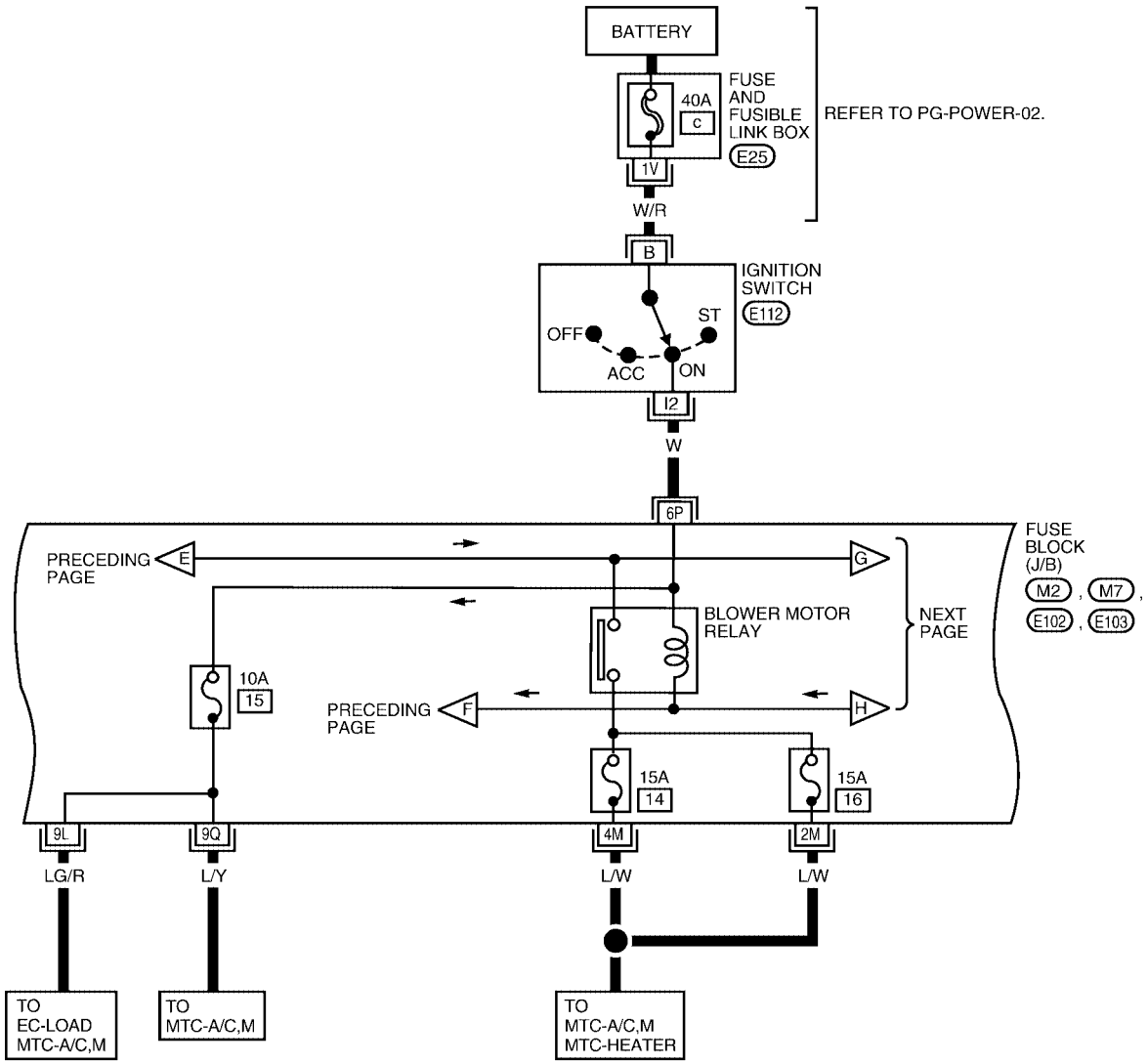

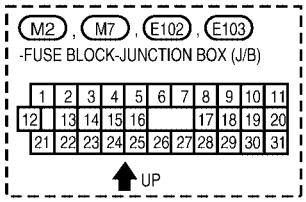

WKWA0493E

IGNITION POWER SUPPLY — IGNITION SW. IN “ON” AND/OR “START”

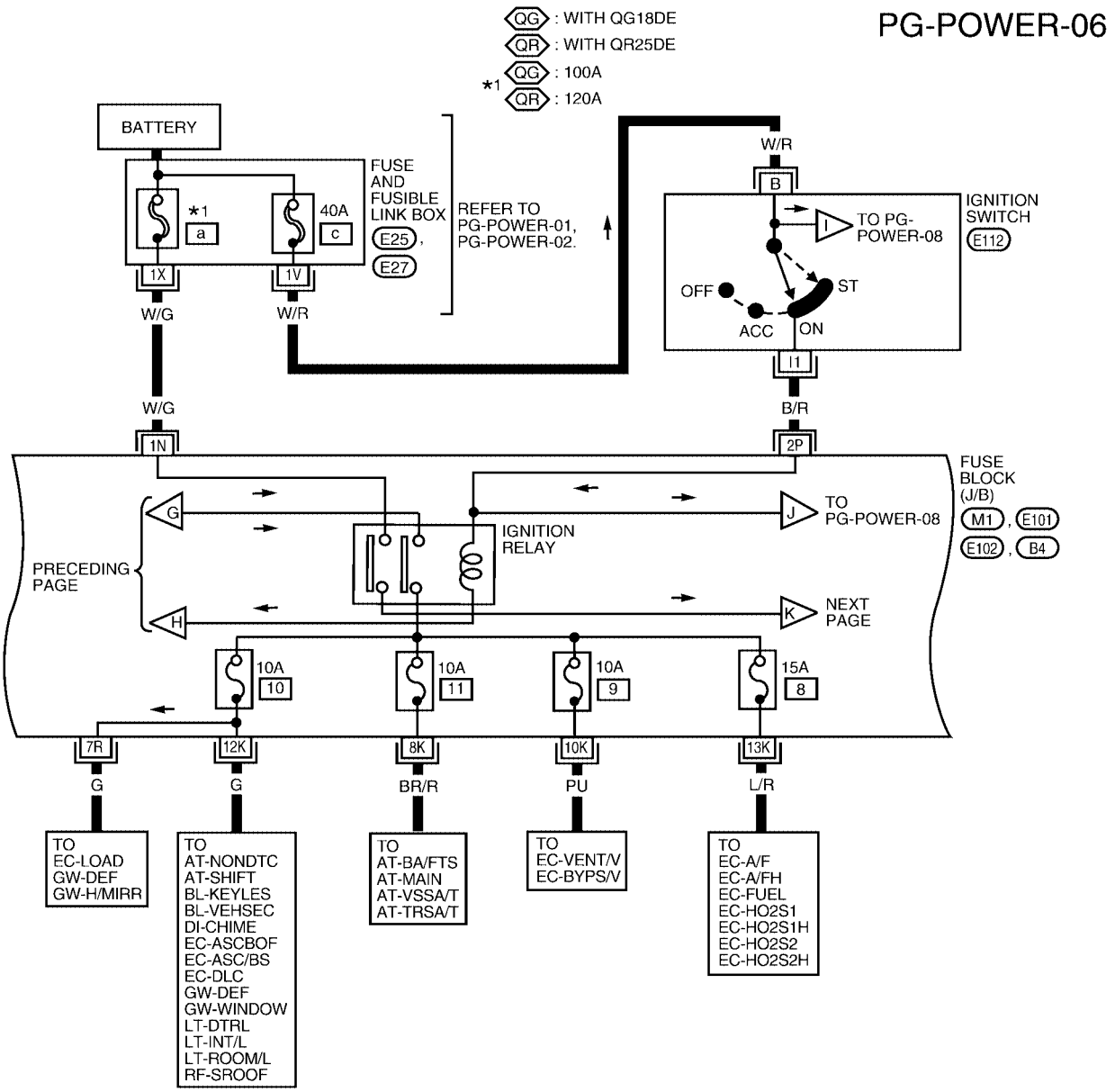

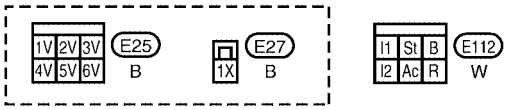

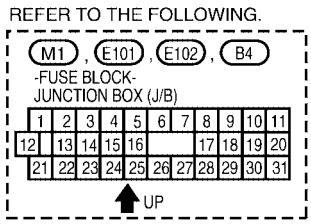

WKWA0252E

PG-POWER-07

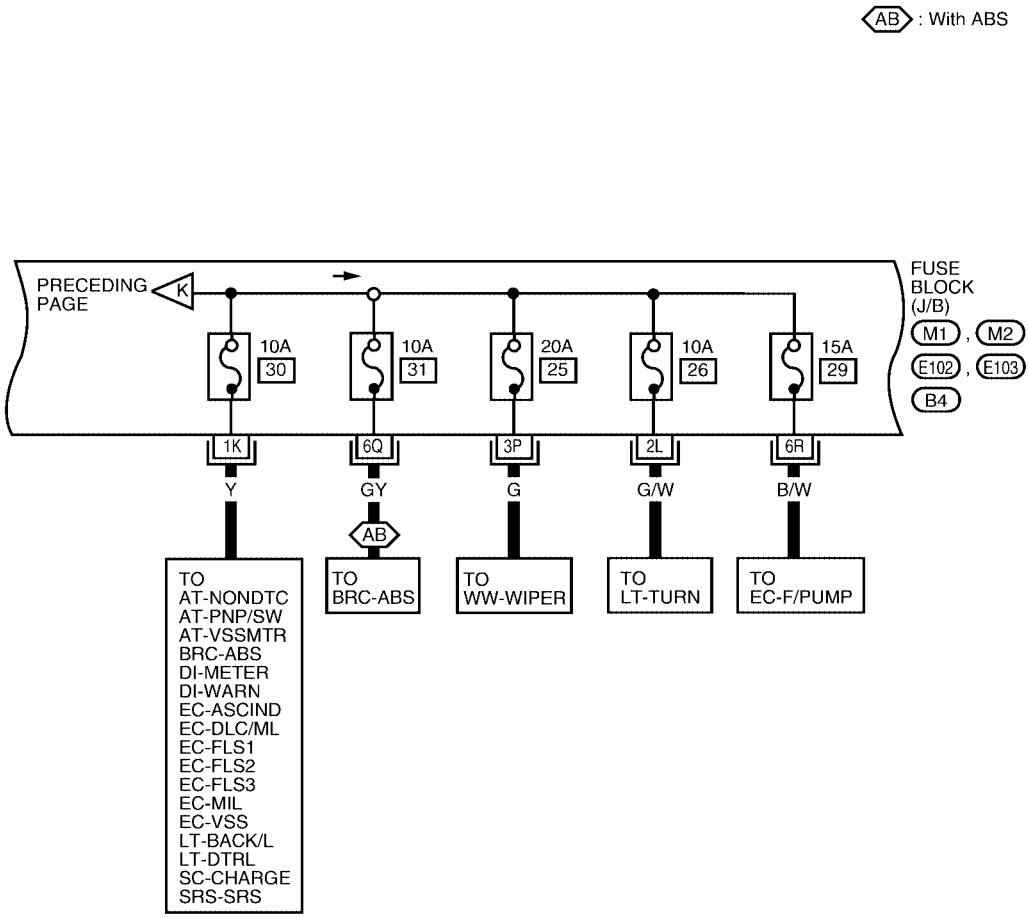
AB : With ABS
PRECEDING PAGE
K
FUSE BLOCK (J/B)
M1 , M2
E102 , E103
B4
10A 30
10A 31
20A 25
10A 26
15A 29
1K
6Q
3P
2L
6R
Y
GY
G
G/W
B/W
AB
TO AT-NONDTC AT-PNP/SW AT-VSSMTR BRC-ABS DI-METER DI-WARN EC-ASCIND EC-DLC/ML EC-FLS1 EC-FLS2 EC-FLS3 EC-MIL EC-VSS LT-BACK/L LT-DTRL SC-CHARGE SRS-SRS
TO BRC-ABS
TO WW-WIPER
TO LT-TURN
TO EC-F/PUMP

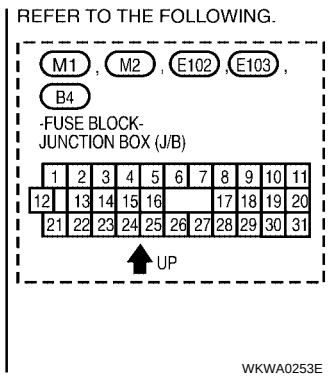
REFER TO THE FOLLOWING.
M1 , M2 , E102 , E103 ,
B4
-FUSE BLOCK-
JUNCTION BOX (J/B)
1 2 3 4 5 6 7 8 9 10 11
12 13 14 15 16 17 18 19 20
21 22 23 24 25 26 27 28 29 30 31
UP
WKWA0253E

PG-POWER-08

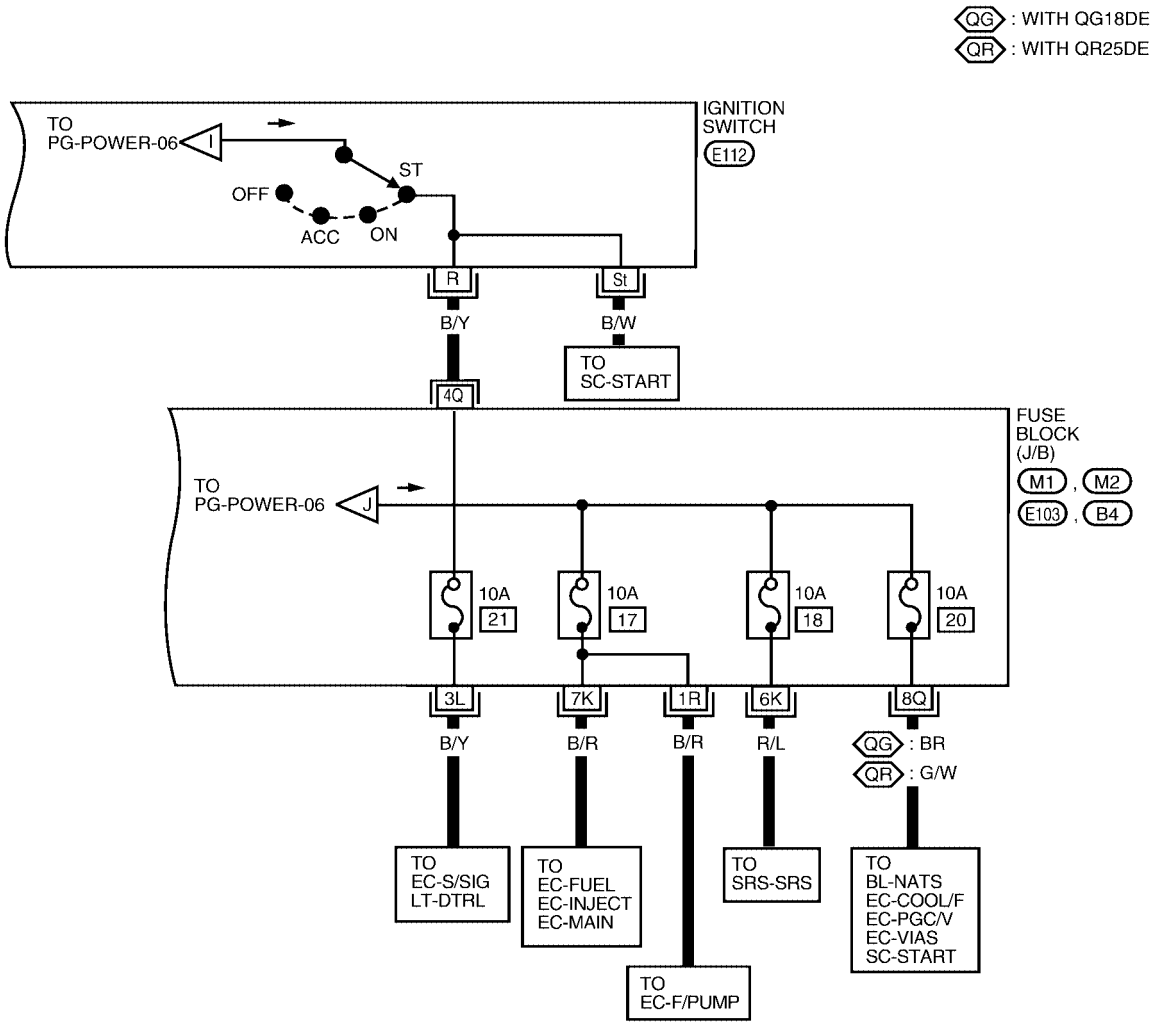

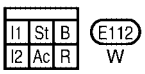

REFER TO THE FOLLOWING.

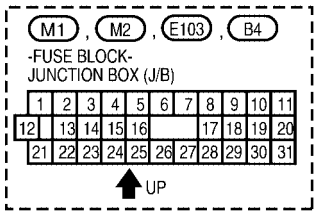

WKWA0254E

GROUND

PFP:24080

Ground Distribution

EKS003B1

MAIN HARNESS

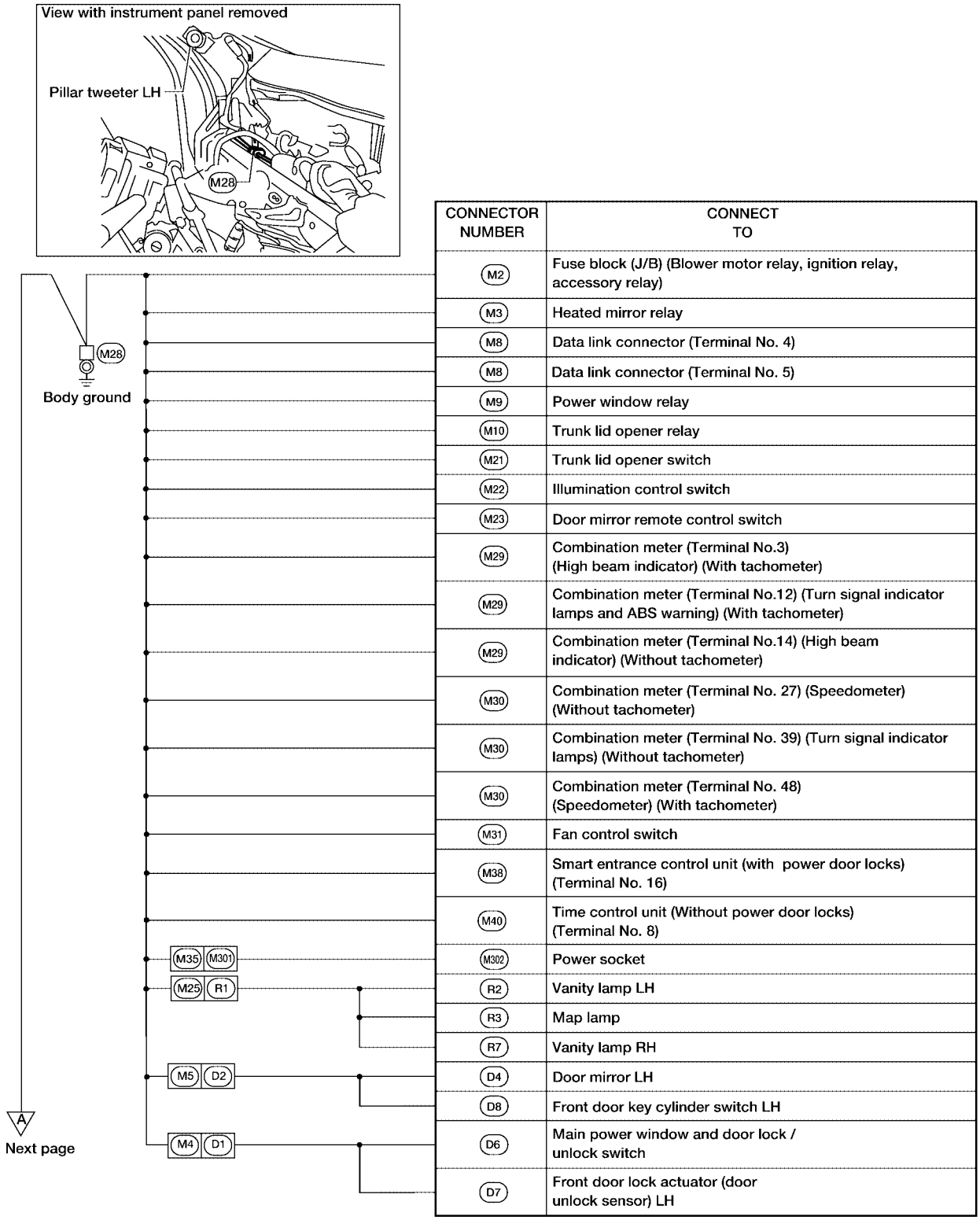

CONNECTOR NUMBER	CONNECT TO
M2	Fuse block (J/B) (Blower motor relay, ignition relay, accessory relay)
M3	Heated mirror relay
M8	Data link connector (Terminal No. 4)
M8	Data link connector (Terminal No. 5)
M9	Power window relay
M10	Trunk lid opener relay
M21	Trunk lid opener switch
M22	Illumination control switch
M23	Door mirror remote control switch
M29	Combination meter (Terminal No.3) (High beam indicator) (With tachometer)
M29	Combination meter (Terminal No.12) (Turn signal indicator lamps and ABS warning) (With tachometer)
M29	Combination meter (Terminal No.14) (High beam indicator) (Without tachometer)
M30	Combination meter (Terminal No. 27) (Speedometer) (Without tachometer)
M30	Combination meter (Terminal No. 39) (Turn signal indicator lamps) (Without tachometer)
M30	Combination meter (Terminal No. 48) (Speedometer) (With tachometer)
M31	Fan control switch
M38	Smart entrance control unit (with power door locks) (Terminal No. 16)
M40	Time control unit (Without power door locks) (Terminal No. 8)
M302	Power socket
R2	Vanity lamp LH
R3	Map lamp
R7	Vanity lamp RH
D4	Door mirror LH
D8	Front door key cylinder switch LH
D6	Main power window and door lock / unlock switch
D7	Front door lock actuator (door unlock sensor) LH

WKIA0213E

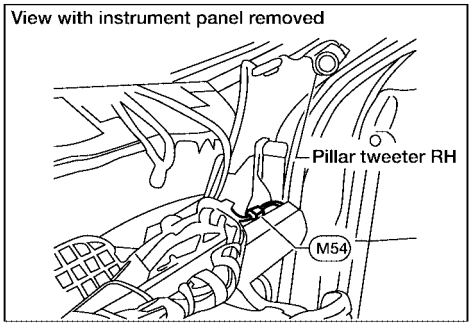

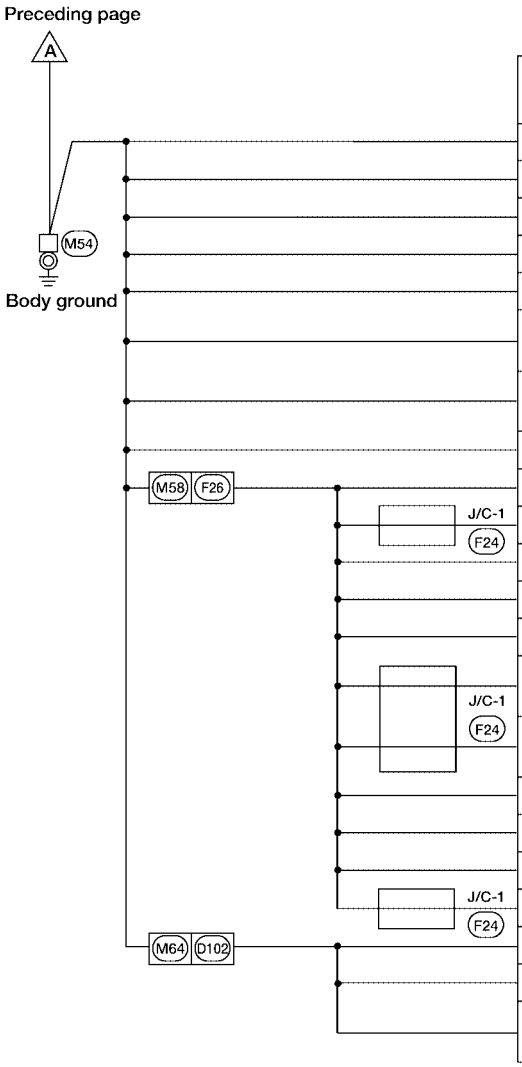

CONNECTOR NUMBER	CONNECT TO
M12	Power socket relay
M32	Air control (Rear window defogger switch)
M33	Cigarette lighter socket
M34	Air bag diagnosis sensor unit (Terminal No. 2)
M42	Combination flasher unit
M44	A/T device (Terminal No. 2) (Overdrive control switch)
M44	A/T device (Terminal No. 6) (Shift lock)
M49	Intake sensor
F16	Camshaft position sensor (PHASE) (QG18DE)
F31	Knock sensor (Shield wire) (QG18DE)
F52	Crankshaft position sensor (POS) (QG18DE)
F57	TCM (Terminal No. 25) (QG18DE)
F57	TCM (Terminal No. 48) (QG18DE)
F58	Electric throttle control actuator (Throttle control motor) (Shield wire) (QG18DE)
F58	Electric throttle control actuator (Throttle position sensor) (Shield wire) (QG18DE)
F59	ECM (Terminal No. 115) (QG18DE)
F59	ECM (Terminal No. 116) (QG18DE)
F60	ECM (Terminal No. 1) (QG18DE)
F63	Swirl control valve position sensor (Shield wire) (QG18DE SULEV)
D104	Door mirror RH
D107	Door lock / unlock switch RH
D109	Front door lock actuator RH (Door unlock sensor)

WKIA0989E

ENGINE ROOM HARNESS

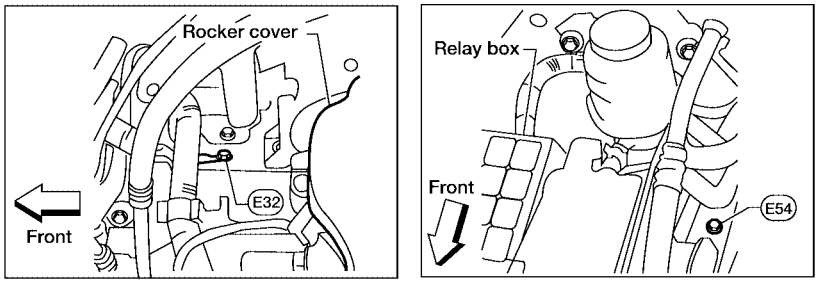

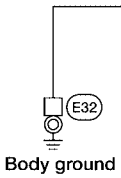

CONNECTOR NUMBER	CONNECT TO
E33	Generator

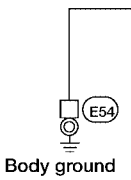

CONNECTOR NUMBER	CONNECT TO
E11	Front wheel sensor LH (Shield wire)
E55	ABS actuator and electrical unit (Control unit) (Terminal No. 16)
E55	ABS actuator and electrical unit (Control unit) (Terminal No. 19)

WKIA0215E

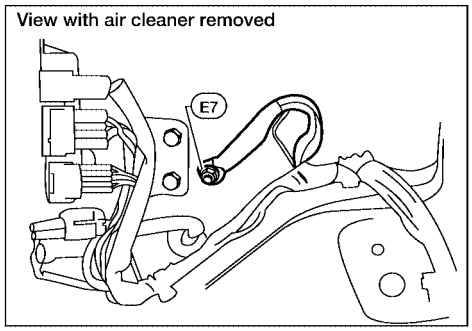

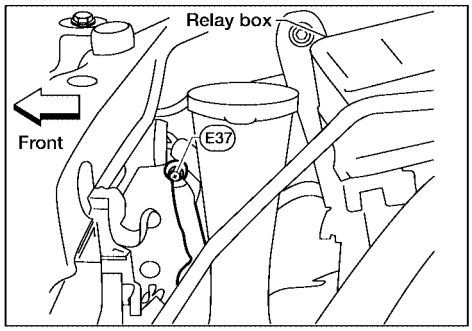

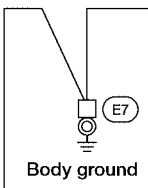

CONNECTOR NUMBER	CONNECT TO
E1	Brake fluid level switch
E3	Front wiper motor
E4	Front combination lamp (Parking) LH
E14	Hood switch (If equipped)
E18	Cooling fan motor-2
E30	Front fog lamp RH
E31	Headlamp RH
E38	Front combination lamp (Parking) RH
E40	Washer fluid level switch
E44	Cooling fan relay-3 (HI-relay) (QR25DE)
E105	Daytime light control unit (For Canada)
E110	Clutch interlock switch (With M/T)
E116	Combination switch (Front wiper switch)
E117	Combination switch (Front fog lamp switch)

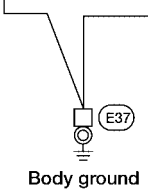

CONNECTOR NUMBER	CONNECT TO
E13	Headlamp LH (For USA)
E15	Front fog lamp LH
E17	Cooling fan motor-1
E52	Cooling fan relay-2

WKIA0990E

ENGINE CONTROL HARNESS
QG18DE

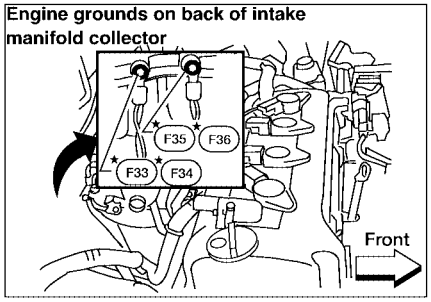

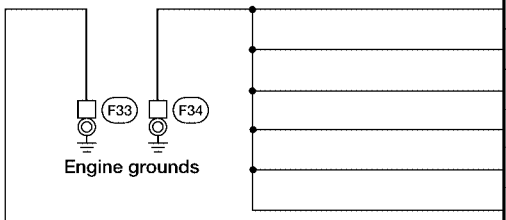

CONNECTOR NUMBER	CONNECT TO
F7	Ignition coil No. 4
F9	Ignition coil No. 3
F11	Ignition coil No. 2
F13	Ignition coil No. 1
F19	Condenser
F43	Vehicle speed sensor

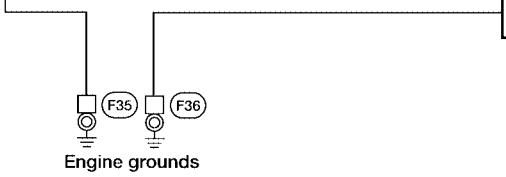

CONNECTOR NUMBER	CONNECT TO
F49	Park/neutral position (PNP) switch

WKIA0217E

QR25DE

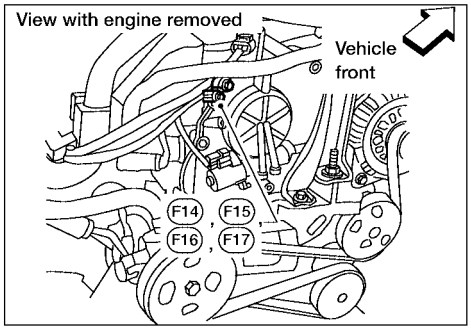

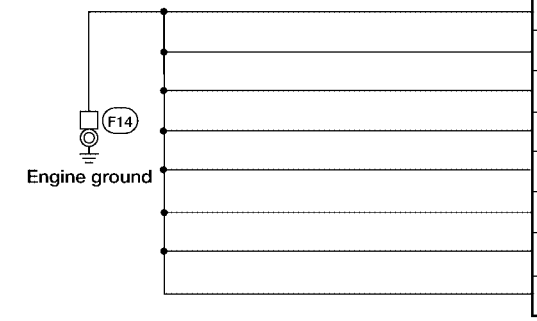

CONNECTOR NUMBER	CONNECT TO
F5	Ignition coil No.1 (With power transistor)
F6	Ignition coil No. 2 (With power transistor)
F7	Ignition coil No. 4 (With power transistor)
F8	Ignition coil No. 3 (With power transistor)
F21	Condenser
F29	Park/neutral position (PNP) switch (Terminal No.2) (With A/T)
F54	ECM (Terminal No. 106)
F54	ECM (Terminal No. 108)

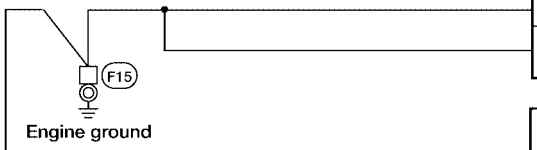

CONNECTOR NUMBER	CONNECT TO
F42	Park/neutral position (PNP) switch (Terminal No. 2) (With M/T)
F54	ECM (Terminal No. 115)

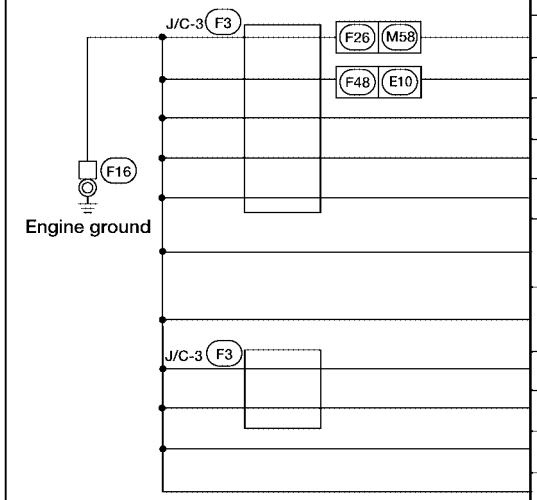

CONNECTOR NUMBER	CONNECT TO
M8	Data link connector (Terminal No. 5)
E111	Immobilizer control unit
F9	Camshaft position sensor (PHASE)
F11	Crankshaft position sensor (POS)
F23	Heated oxygen sensor 2
F50	Electric throttle control actuator (Throttle position sensor) (Shield wire)
F50	Electric throttle control actuator (Throttle control motor) (Shield wire)
F54	ECM (Terminal No. 59)
F54	ECM (Terminal No. 60)
F57	TCM (Terminal No. 25)
F57	TCM (Terminal No. 48)

CONNECTOR NUMBER	CONNECT TO
F22	Heated oxygen sensor 1

WKIA0218E

BODY HARNESS

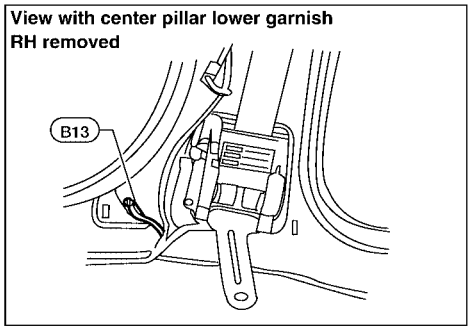

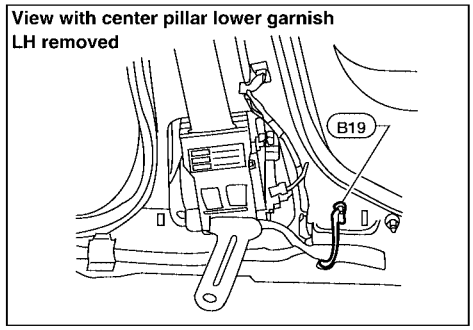

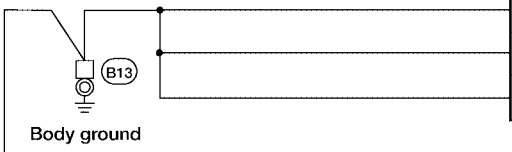

CONNECTOR NUMBER	CONNECT TO
B8	Seat belt buckle switch LH
B29	High-mounted stop lamp (Without rear air spoiler)
B53	Audio amplifier (With premium audio)

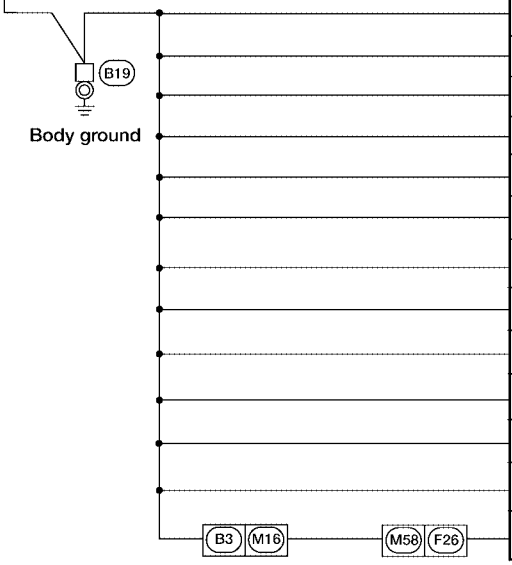

CONNECTOR NUMBER	CONNECT TO
B23	Front door switch LH
B25	Fuel level sensor unit and fuel pump
B28	Subwoofer amplifier (With mid level audio)
B38	Back-up lamp LH
B39	High-mounted stop lamp (With rear air spoiler)
B40	License plate lamp LH
B41	License plate lamp RH
B42	Back-up lamp RH
B43	Trunk lid key cylinder switch
B44	Rear combination lamp LH
B48	Trunk room lamp switch
B49	Rear combination lamp RH
F54	ECM (Terminal No. 77) (QR25DE)

WKIA0991E

REAR WINDOW DEFOGGER GROUND HARNESS

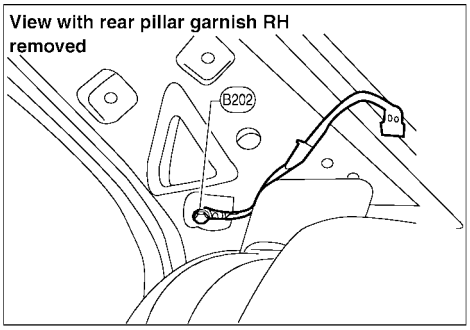

CONNECTOR NUMBER	CONNECT TO
B201	Rear window defogger

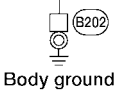

LEL434

ROOM HARNESS

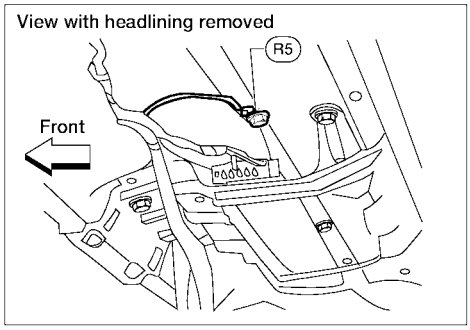

CONNECTOR NUMBER	CONNECT TO
R4	Sunroof motor assembly

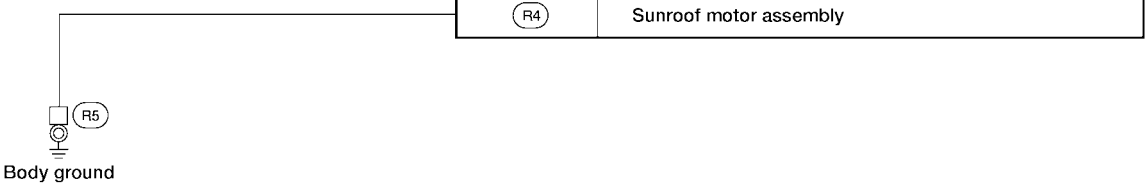

LEL433

HARNESS

PFP:24010

Harness Layout

EKS003B2

HOW TO READ HARNESS LAYOUT

The following Harness Layouts use a map style grid to help locate connectors on the drawings:

- Main Harness
- Engine Room Harness
- Engine Control Harness
- Body Harness

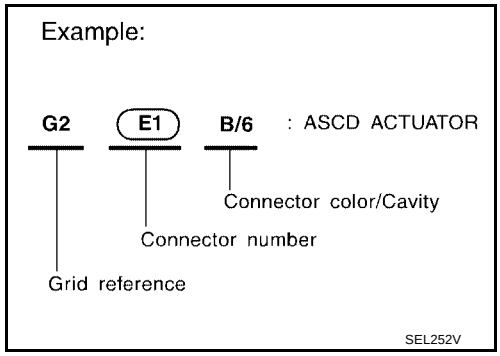

TO USE THE GRID REFERENCE

1. Find the desired connector number on the connector list.
2. Find the grid reference.
3. On the drawing, find the crossing of the grid reference letter column and number row.
4. Find the connector number in the crossing zone.
5. Follow the line (if used) to the connector.

CONNECTOR SYMBOL

Main symbols of connector (in Harness Layout) are indicated in the below.

Connector type	Water proof type		Standard type	
	Male	Female	Male	Female
● Cavity: Less than 4 ● Relay connector				
● Cavity: From 5 to 8				
● Cavity: More than 9				
● Ground terminal etc.	—			

OUTLINE

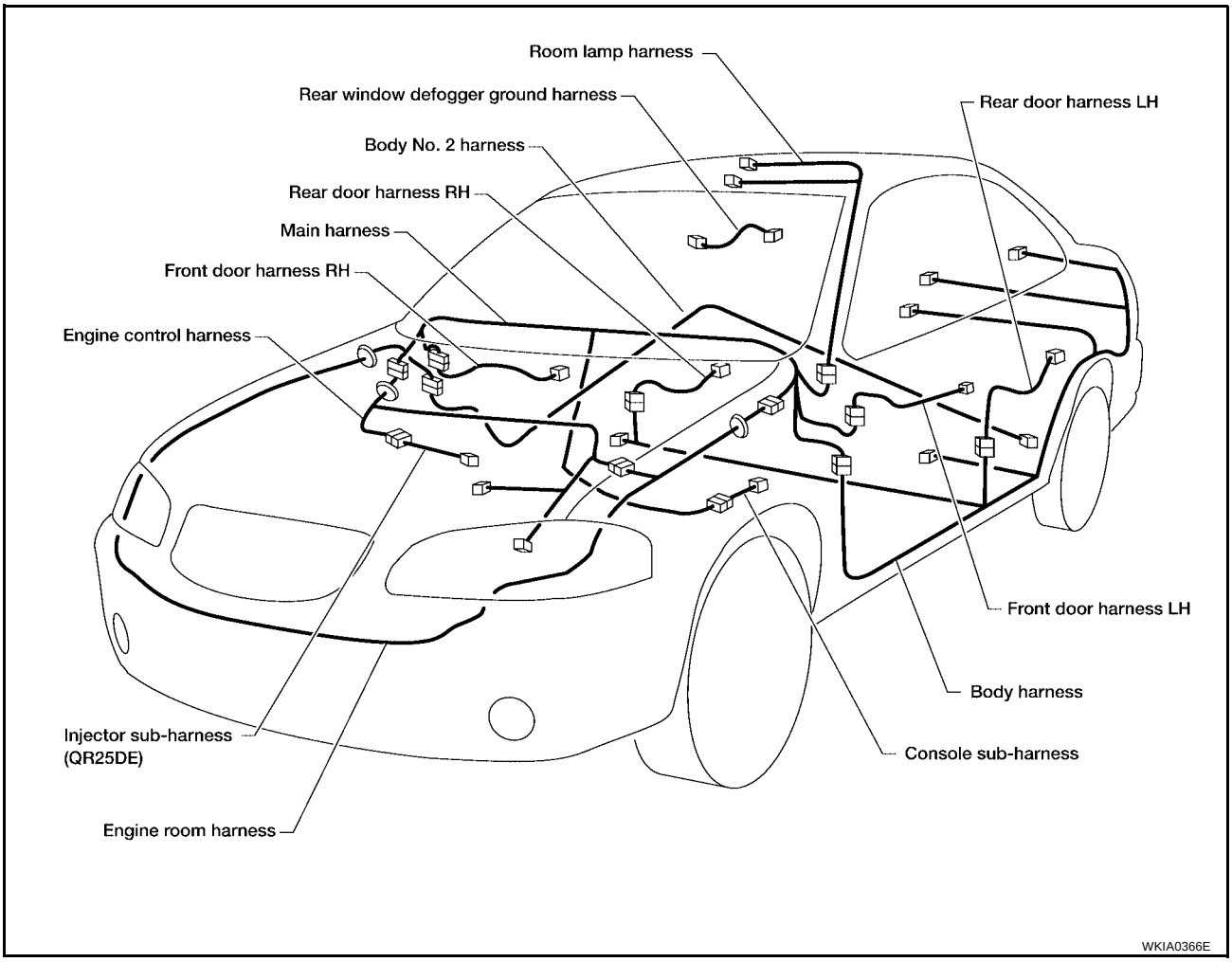

NOTE:
For detailed ground distribution information, refer to PG-12, "Ground Distribution" .

MAIN HARNESS

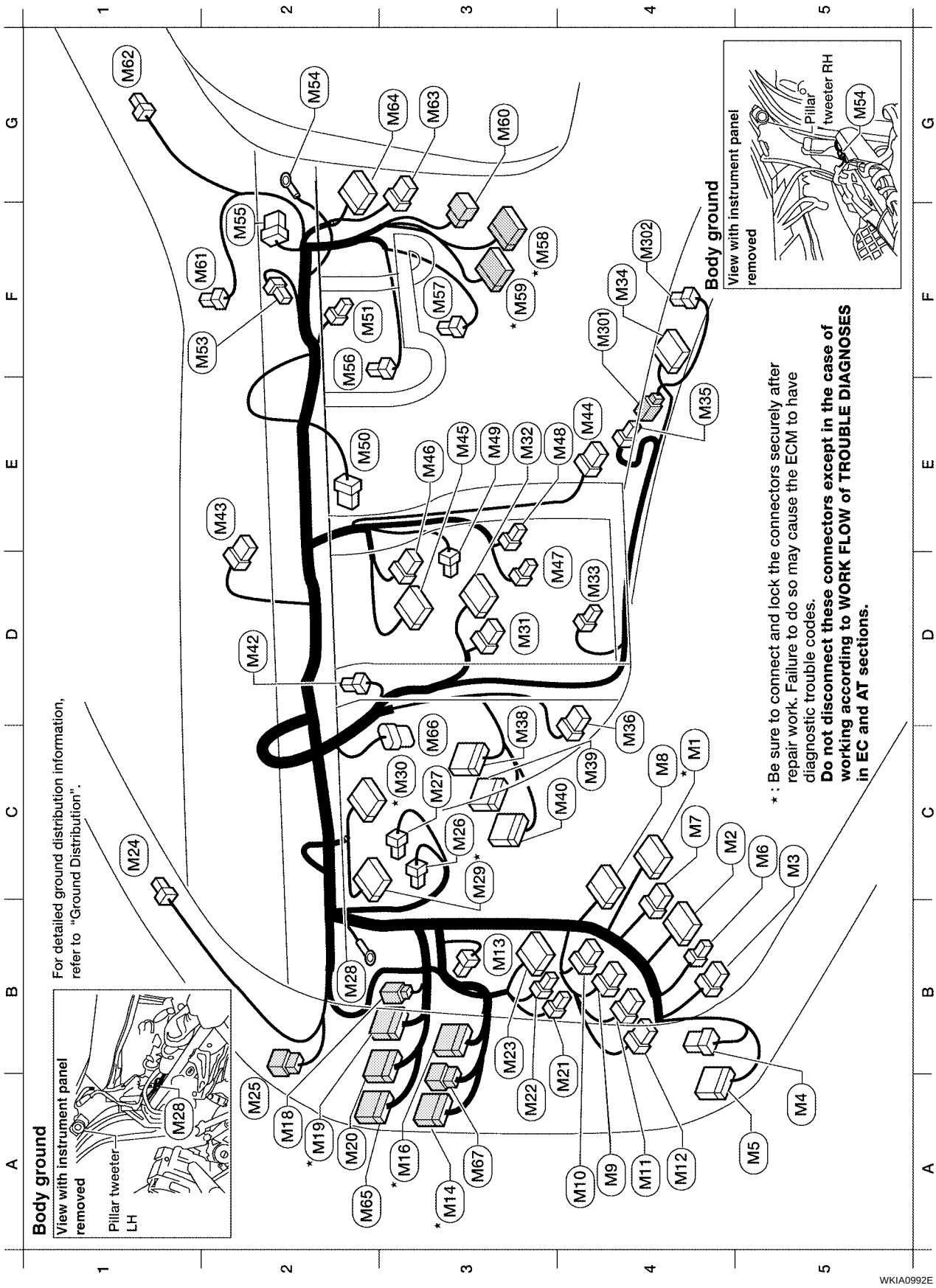

Main harness

C4 *M1 W/16 : Fuse block (J/B)
C4 M2 W/12 : Fuse block (J/B)
C5 M3 L/4 : Heated mirror relay
A5 M4 W/8 : To D1
A5 M5 W/16 : To D2
C5 M6 W/2 : Circuit breaker
C4 M7 W/6 : Fuse block (J/B)
C4 M8 W/16 : Data link connector
A4 M9 L/4 : Power window relay
A4 M10 L/4 : Trunk lid opener relay
A4 M11 BR/6 : Remote keyless entry relay
A4 M12 L/4 : Power socket relay
B3 M13 L/2 : ASCD clutch switch (M/T with ASCD)
A3 *M14 BR/16 : To B1
A3 *M16 W/20 : To B3
A2 M18 W/2 : To E107
A2 *M19 W/16 : To E108
A2 M20 W/10 : To E109 (QG18DE)
A2 M20 W/16 : To E109 (QR25DE)
A4 M21 B/2 : Trunk lid opener switch
A3 M22 W/3 : Illumination control switch
B3 M23 W/10 : Door mirror remote control switch
C1 M24 BR/2 : Pillar tweeter LH
A2 M25 W/6 : To R1
C3 M26 B/2 : Stop lamp switch (With M/T)
C3 M26 W/4 : Stop lamp switch (With A/T)
C3 M27 BR/2 : ASCD brake switch
B2 *M28 - : Body ground
C3 M29 W/24 : Combination meter (Without tachometer)
C3 *M29 BR/24 : Combination meter (With tachometer)
C3 *M30 BR/20 : Combination meter (Without tachometer)
C3 *M30 W/24 : Combination meter (With tachometer)
D3 M31 W/6 : Fan control switch
E3 M32 W/12 : Air control
D4 M33 W/3 : Cigarette lighter socket
F4 M34 Y/20 : Air bag diagnosis sensor unit
E4 M35 W/2 : To M301
C4 M36 Y/7 : Spiral cable
C3 M38 W/18 : Smart entrance control unit (With power door locks)
C4 M39 B/24 : Smart entrance control unit (With power door locks)
C4 M40 W/10 : Time control unit (Without power door locks)
D2 M42 B/3 : Combination flasher unit
E2 M43 W/8 : Hazard switch
E4 M44 W/8 : A/T device
E3 M45 W/10 : Audio unit
E3 M46 W/6 : Audio unit
D3 M47 W/4 : CD changer
E3 M48 B/2 : CD changer
E3 M49 W/2 : Intake sensor
E3 M50 B/6 : Intake door motor
F3 M51 Y/2 : Front passenger air bag module
F2 M53 GY/2 : Diode-2
G2 M54 - : Body ground
F2 M55 L/3 : Diode-3
F2 M56 BR/4 : Fan resistor
F3 M57 W/2 : Blower motor
F3 *M58 W/16 : To F26
F3 *M59 BR/16 : To F27 (With QG18DE)
F3 *M59 W/24 : To F27 (With QR25DE)
G3 M60 W/6 : To F28
F2 M61 BR/2 : Security indicator lamp
G1 M62 BR/2 : Pillar tweeter RH
G3 M63 W/8 : To D101
G3 M64 W/16 : To D102
A2 M65 W/12 : To B50
C3 M66 B/6 : Accelerator pedal position sensor
A3 M67 W/2 : To B51

Console Sub-harness

F4 M301 W/2 : To M35
F4 M302 B/3 : Power socket

M53 : Diode-2

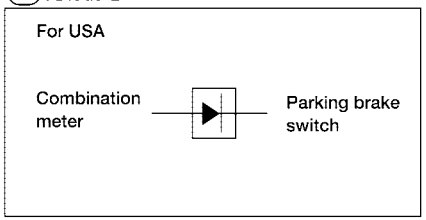

M55 : Diode-3 (For Canada QG18DE models and all QR25DE models)

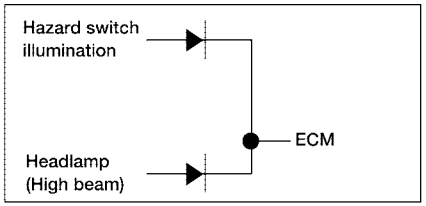

*: Be sure to connect and lock the connectors securely after repair work. Failure to do so may cause the ECM to have diagnostic trouble codes.
Do not disconnect these connectors except in the case of working according to WORK FLOW of TROUBLE DIAGNOSES in EC and AT sections.

WKIA0993E

ENGINE ROOM HARNESS

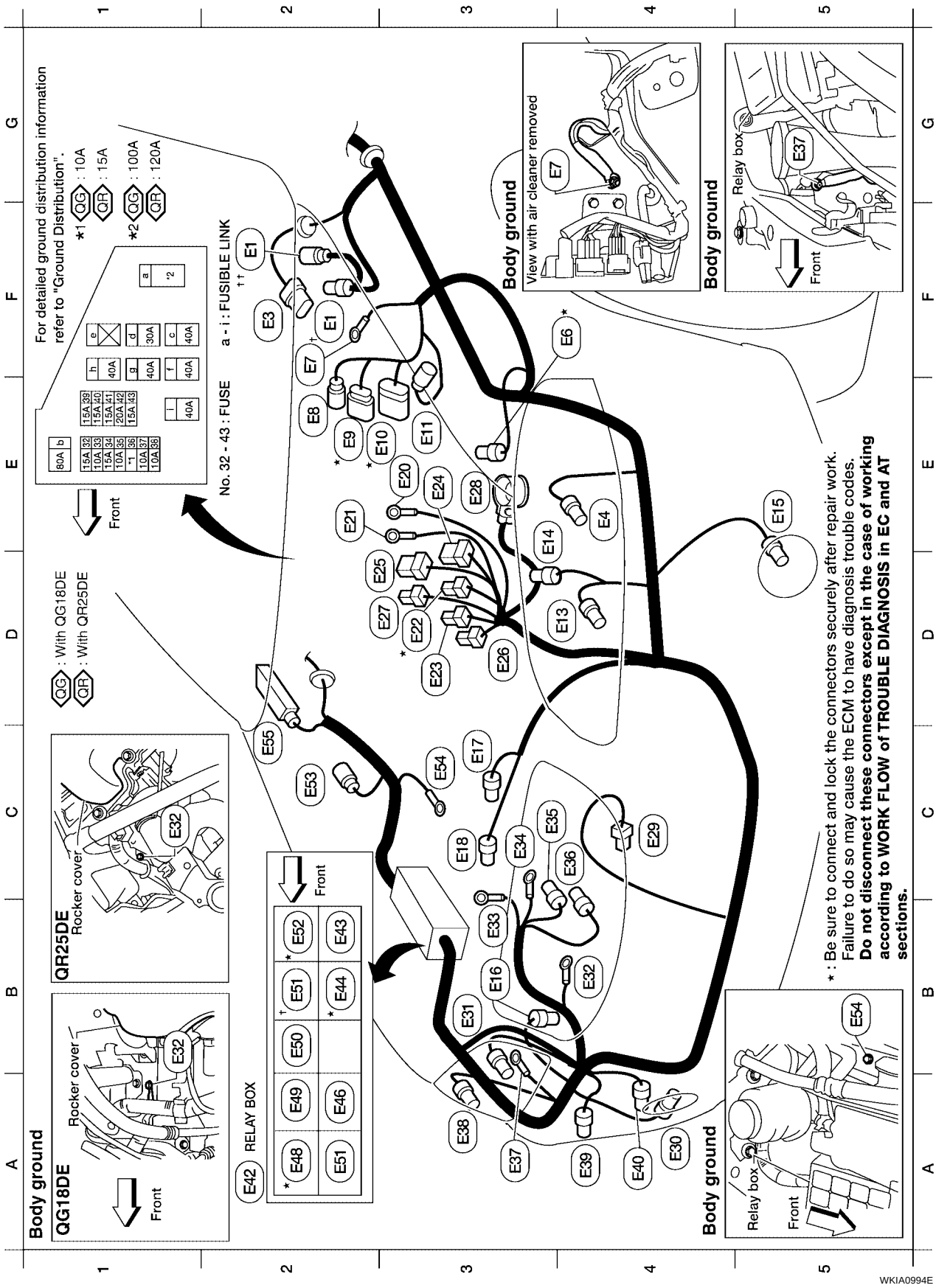

F2	† E1	GY/2	: Brake fluid level switch (with QG18DE)
F2	†† E1	GY/2	: Brake fluid level switch (with QR25DE)
F2	E3	GY/6	: Front wiper motor
E4	E4	GY/3	: Front combination lamp LH
F4	★ E6	GY/2	: Dropping resistor
F3	E7	-	: Body ground
E3	E8	GY/1	: To F46
E3	★ E9	GY/8	: To F47
E4	★ E10	GY/10	: To F48
E4	E11	BR/2	: Front wheel sensor LH
D4	E13	B/3	: Headlamp LH
E3	E14	GY/2	: Hood switch (if equipped)
D5	E15	GY/2	: Front fog lamp LH
B4	E16	B/3	: Refrigerant pressure sensor
C3	E17	GY/4	: Cooling fan motor 1
C3	E18	GY/2	: Cooling fan motor 2 (with QG18DE)
C3	E18	GY/4	: Cooling fan motor 2 (with QR25DE)
E3	E20	-	: Fuse and fusible link box
E3	E21	-	: Fuse and fusible link box
D3	★ E22	W/3	: Fuse and fusible link box
D3	E23	W/4	: Fuse and fusible link box
E3	E24	W/6	: Fuse and fusible link box
D3	E25	B/6	: Fuse and fusible link box
D3	E26	W/1	: Fuse and fusible link box
D3	E27	B/1	: Fuse and fusible link box
E3	E28	-	: Battery (positive)
C4	E29	B/1	: Horn
A4	E30	GY/2	: Front fog lamp RH
B3	E31	B/3	: Headlamp RH
B4	E32	-	: Body ground
B3	E33	-	: Generator
C3	E34	-	: Generator
C3	E35	GY/2	: Generator
C4	E36	B/1	: A/C compressor
A3	E37	-	: Body ground
A3	E38	GY/3	: Front combination lamp RH
A4	E39	GY/2	: Front washer motor
A4	E40	BR/2	: Washer fluid level switch
A2	E42	-	: Relay box
B2	E43	BR/6	: Vehicle security lamp relay
B2	E44	BR/6	: Cooling fan relay-3 (with QR25DE)
A2	E46	L/4	: Front fog lamp relay
A2	E48	BR/6	: Cooling fan relay-1
A2	E49	W/3	: Horn relay
A2	E50	L/4	: A/C relay
A2	E51	L/4	: Clutch interlock relay (M/T)
B2	† E51	L/4	: Park/neutral position (PNP) relay (A/T)
B2	E52	BR/6	: Cooling fan relay-2
C2	E53	GY/2	: Front wheel sensor RH
C3	E54	-	: Body ground
C2	E55	B/31	: ABS actuator and electric unit (control unit)

★ : Be sure to connect and lock the connectors securely after repair work. Failure to do so may cause the ECM to have diagnostic trouble codes.
Do not disconnect these connectors except in the case of working according to WORK FLOW of TROUBLE DIAGNOSES in EC and AT sections.

WKIA0995E

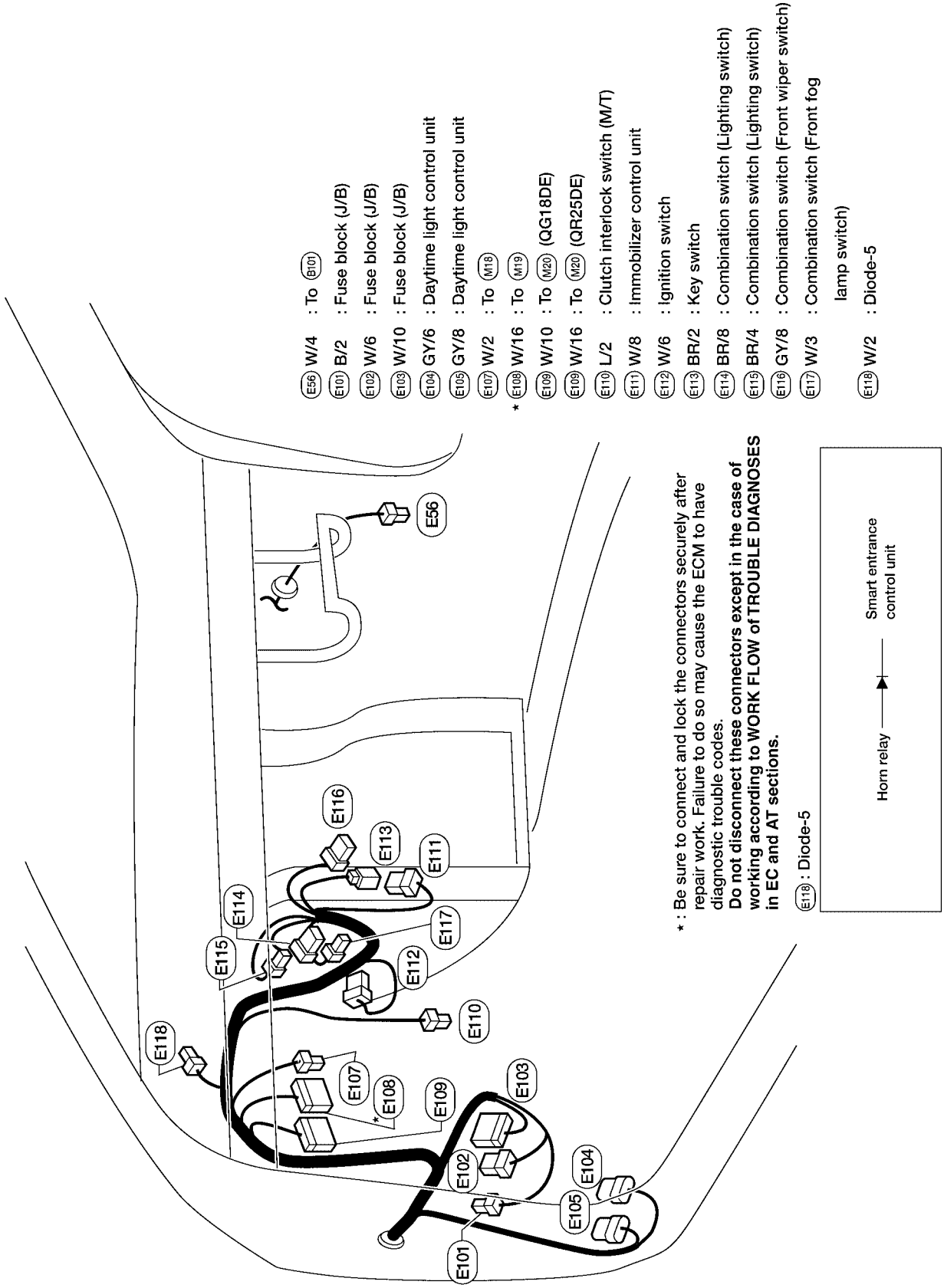
E56 W/4 : To B101
E101 B/2 : Fuse block (J/B)
E102 W/6 : Fuse block (J/B)
E103 W/10 : Fuse block (J/B)
E104 GY/6 : Daytime light control unit
E105 GY/8 : Daytime light control unit
E107 W/2 : To M18
* E108 W/16 : To M19
E109 W/10 : To M20 (QG18DE)
E109 W/16 : To M20 (QR25DE)
E110 L/2 : Clutch interlock switch (M/T)
E111 W/8 : Immobilizer control unit
E112 W/6 : Ignition switch
E113 BR/2 : Key switch
E114 BR/8 : Combination switch (Lighting switch)
E115 BR/4 : Combination switch (Lighting switch)
E116 GY/8 : Combination switch (Front wiper switch)
E117 W/3 : Combination switch (Front fog lamp switch)
E118 W/2 : Diode-5
* : Be sure to connect and lock the connectors securely after repair work. Failure to do so may cause the ECM to have diagnostic trouble codes.
Do not disconnect these connectors except in the case of working according to WORK FLOW of TROUBLE DIAGNOSES in EC and AT sections.
E118 : Diode-5
Horn relay
Smart entrance control unit
E56
E116
E113
E111
E114
E117
E115
E112
E110
E118
E107
E108
E109
E103
E102
E104
E105
E101

WKIA0242E

ENGINE CONTROL HARNESS
QG18DE (ULEV)

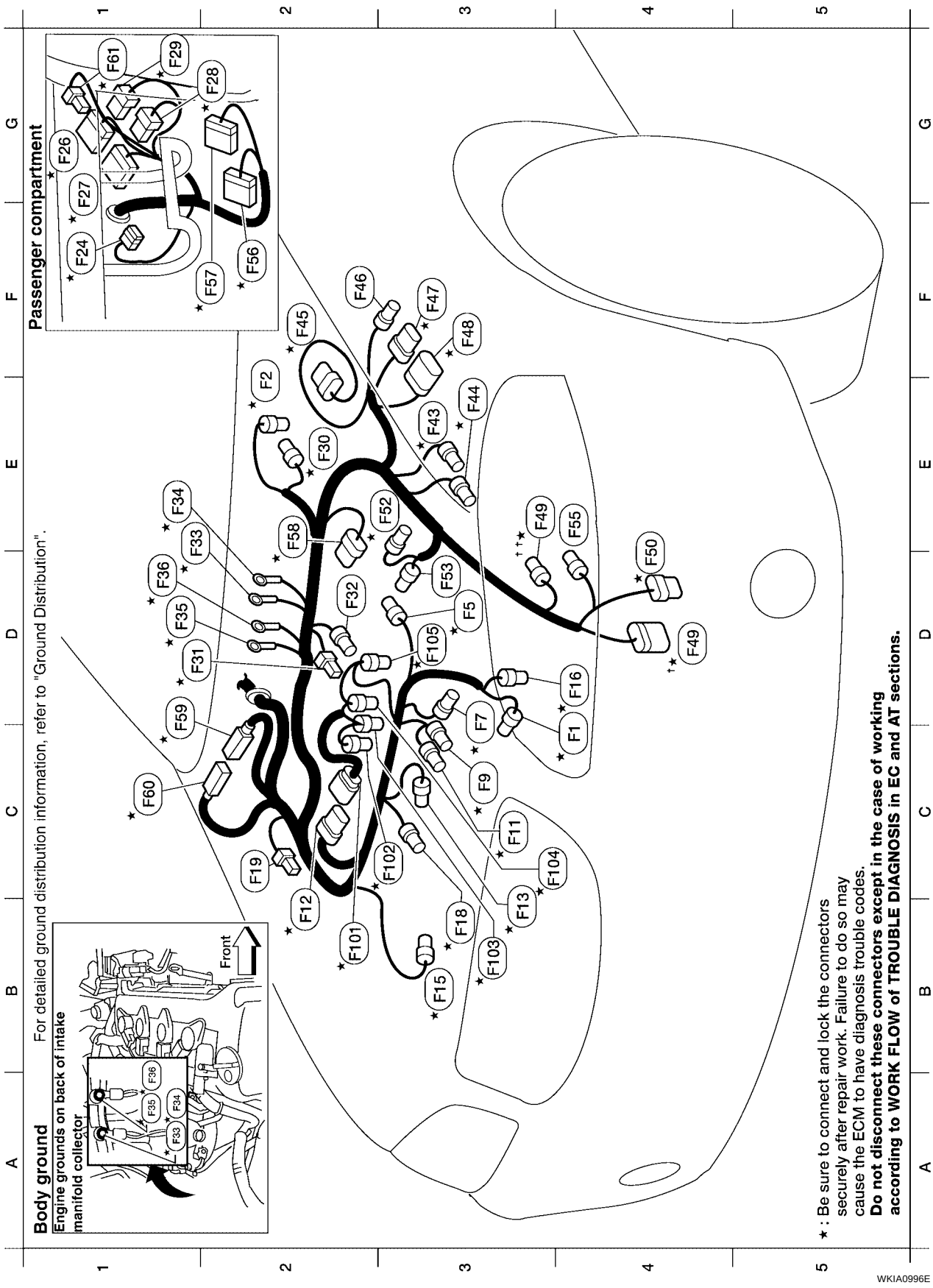

★ : Be sure to connect and lock the connectors securely after repair work. Failure to do so may cause the ECM to have diagnosis trouble codes.
Do not disconnect these connectors except in the case of working according to WORK FLOW of TROUBLE DIAGNOSIS in EC and AT sections.

Engine control harness

D3	*	F1	G/4	: Heated oxygen sensor 1
E2	*	F2	G/4	: Heated oxygen sensor 2
D3	*	F5	L/2	: EVAP canister purge volume control solenoid valve
D3	*	F7	GY/3	: Ignition coil No. 4
C3	*	F9	GY/3	: Ignition coil No. 3
C3	*	F11	GY/3	: Ignition coil No. 2
B2	*	F12	GY/6	: To F101
B3	*	F13	GY/3	: Ignition coil No. 1
B3	*	F15	GY/2	: Engine coolant temperature sensor
D4	*	F16	B/3	: Camshaft position sensor (PHASE)
B3	*	F18	G/2	: Intake valve timing control solenoid valve
C2		F19	GY/2	: Condenser
D1	*	F24	BR/20	: Joint connector-1
G1	*	F26	W/16	: To M58
F1	*	F27	BR/16	: To M59
G2	*	F28	W/6	: To M60
G1	*	F29	BR/6	: ECM Relay
E2	*	F30	B/3	: Power steering pressure sensor
D1	*	F31	B/2	: Knock sensor
D2		F32	GY/1	: Oil pressure switch
E1	*	F33	-	: Engine ground
E1	*	F34	-	: Engine ground
D1	*	F35	-	: Engine ground
D1	*	F36	-	: Engine ground
E3	*	F43	GY/2	: Vehicle speed sensor
E3	*	F44	BR/3	: Revolution sensor (A/T)
F2	*	F45	GY/5	: Mass air flow sensor
F2		F46	GY/1	: To E8
F3	*	F47	GY/8	: To E9
F3	*	F48	GY/10	: To E10
E3 ††	*	F49	B/2	: Park/neutral position (PNP) switch (M/T)
D4 †	*	F49	B/10	: Park/neutral position (PNP) switch (A/T)
D4	*	F50	B/8	: Terminal cord assembly (A/T)
E3	*	F52	B/3	: Crankshaft position sensor (POS)
D3		F53	GY/1	: Starter motor
E4		F55	B/2	: Back-up lamp switch (M/T)
F2	*	F56	W/24	: TCM (Transmission control module) (A/T)
F2	*	F57	GY/24	: TCM (Transmission control module) (A/T)
E2	*	F58	G/6	: Electric throttle control actuator
D1	*	F59	SMJ	: ECM
C1	*	F60	SMJ	: ECM
G1	*	F61	L/4	: Throttle control motor relay

Engine control sub-harness

B2	*	F101	GY/6	: To F12
C2	*	F102	GY/2	: Injector No. 1
B3	*	F103	GY/2	: Injector No. 2
C4	*	F104	GY/2	: Injector No. 3
D3	*	F105	GY/2	: Injector No. 4

⋆ : Be sure to connect and lock the connectors securely after repair work. Failure to do so may cause the ECM to have diagnostic trouble codes.
Do not disconnect these connectors except in the case of working according to WORK FLOW of TROUBLE DIAGNOSES in EC and AT sections.

WKIA0997E

QG18DE (SULEV)

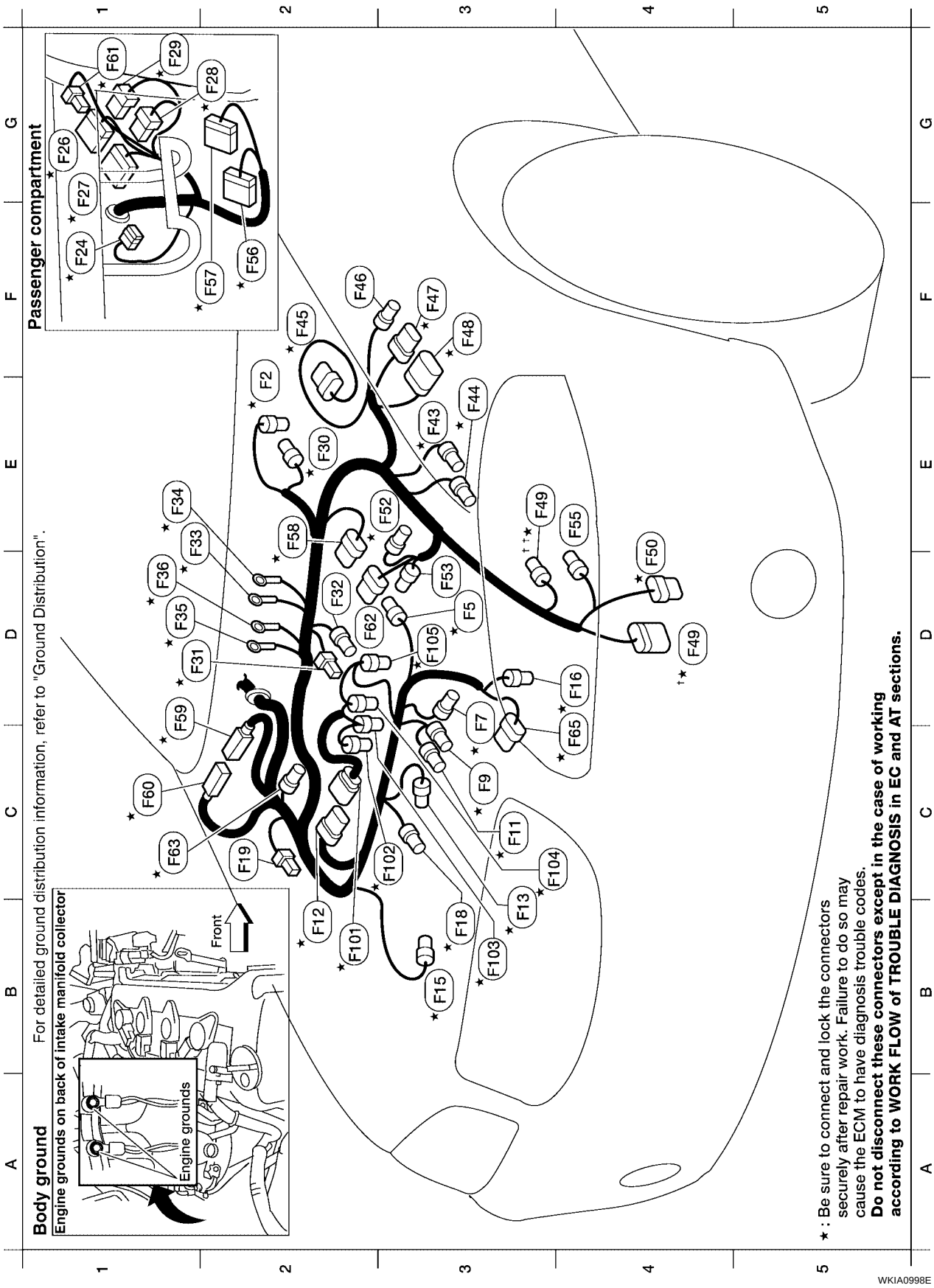

E2	*	F2	G/4	: Heated oxygen sensor 2
D3	*	F5	L/2	: EVAP canister purge volume control solenoid valve
D3	*	F7	GY/3	: Ignition coil No. 4
C3	*	F9	GY/3	: Ignition coil No. 3
C3	*	F11	GY/3	: Ignition coil No. 2
B2	*	F12	GY/6	: To F101
B3	*	F13	GY/3	: Ignition coil No. 1
B3	*	F15	GY/2	: Engine coolant temperature sensor
D4	*	F16	B/3	: Camshaft position sensor (PHASE)
B3	*	F18	G/2	: Intake valve timing control solenoid valve
C2		F19	GY/2	: Condenser
D1	*	F24	BR/20	: Joint connector-1
G1	*	F26	W/16	: To M58
F1	*	F27	BR/16	: To M59
G2	*	F28	W/6	: To M60
G1	*	F29	BR/6	: ECM Relay
E2	*	F30	B/3	: Power steering pressure sensor
D1	*	F31	B/2	: Knock sensor
D2		F32	GY/1	: Oil pressure switch
E1	*	F33	-	: Engine ground
E1	*	F34	-	: Engine ground
D1	*	F35	-	: Engine ground
D1	*	F36	-	: Engine ground
E3	*	F43	GY/2	: Vehicle speed sensor
E3	*	F44	BR/3	: Revolution sensor (A/T)
F2	*	F45	GY/5	: Mass air flow sensor
F2		F46	GY/1	: To E8
F3	*	F47	GY/8	: To E9
F3	*	F48	GY/10	: To E10
E3	†† *	F49	B/2	: Park/neutral position (PNP) switch (M/T)
D4	† *	F49	B/10	: Park/neutral position (PNP) switch (A/T)
D4	*	F50	B/8	: Terminal cord assembly (A/T)
E3	*	F52	B/3	: Crankshaft position sensor (POS)
D3		F53	GY/1	: Starter motor
E4		F55	B/2	: Back-up lamp switch (M/T)
F2	*	F56	W/24	: TCM (Transmission control module) (A/T)
F2	*	F57	GY/24	: TCM (Transmission control module) (A/T)
E2	*	F58	G/6	: Electric throttle control actuator
D1	*	F59	SMJ	: ECM
C1	*	F60	SMJ	: ECM
G1	*	F61	L/4	: Throttle control motor relay
D2	*	F62	GY/6	: Swirl control valve
C2	*	F63	BR/3	: Swirl control valve position sensor
D4	*	F65	B/6	: Air fuel ratio (A/F) sensor 1

Engine control sub-harness

B2	*	F101	GY/6	: To F12
C2	*	F102	GY/2	: Injector No. 1
B3	*	F103	GY/2	: Injector No. 2
C4	*	F104	GY/2	: Injector No. 3
D3	*	F105	GY/2	: Injector No. 4

⋆ : Be sure to connect and lock the connectors securely after repair work. Failure to do so may cause the ECM to have diagnostic trouble codes.
Do not disconnect these connectors except in the case of working according to WORK FLOW of TROUBLE DIAGNOSES in EC and AT sections.

WKIA0999E

QR25DE

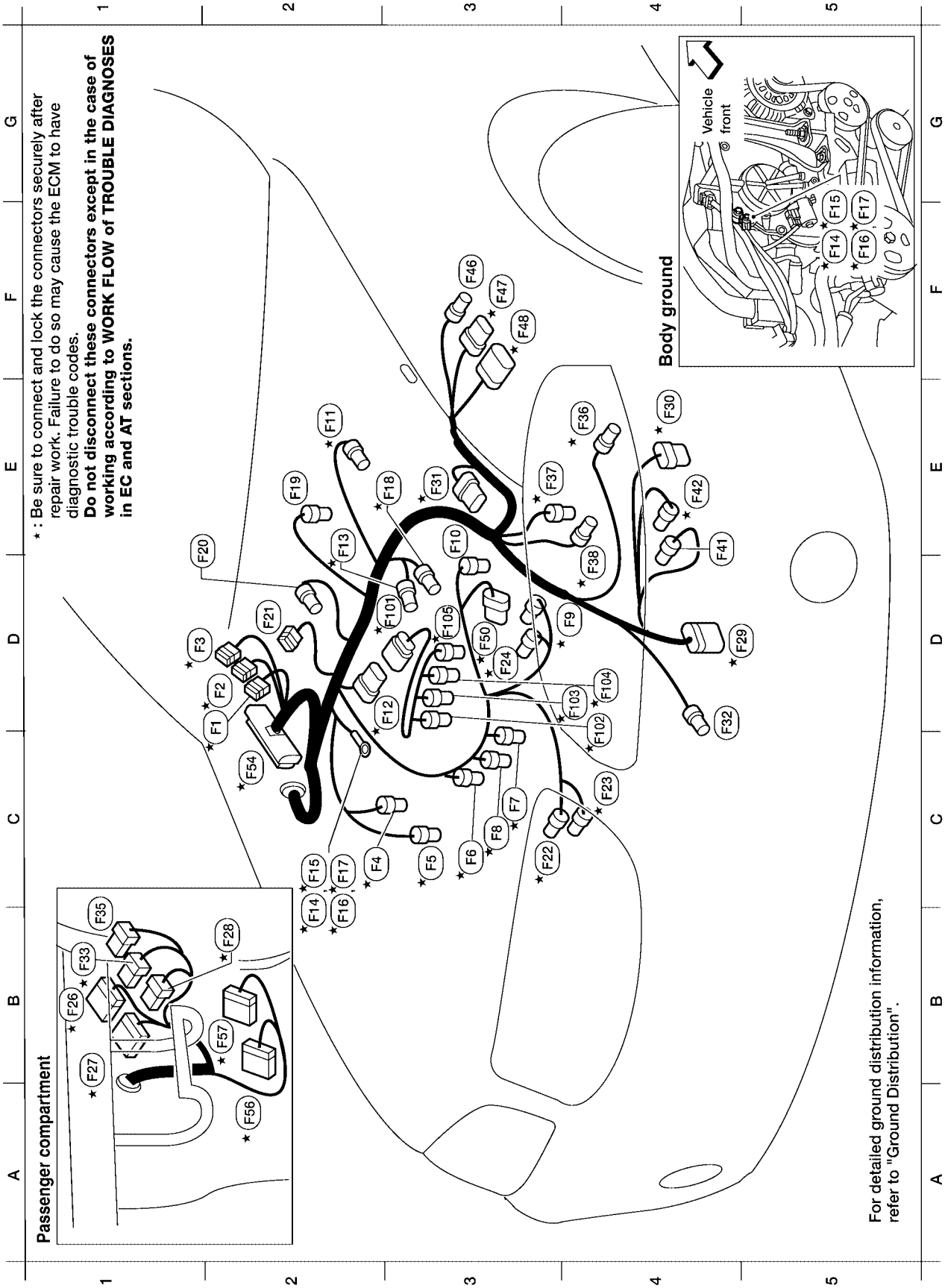

WKIA1000E

C2	*	F1	GY/6	: Joint connector-1
D2	*	F2	L/12	: Joint connector-2
D2	*	F3	GY/6	: Joint connector-3
C2	*	F4	G/2	: Intake valve timing control solenoid valve
C3	*	F5	GY/3	: Ignition coil No. 1
C3	*	F6	GY/3	: Ignition coil No. 2
C3	*	F7	GY/3	: Ignition coil No. 4
C3	*	F8	GY/3	: Ignition coil No. 3
D4	*	F9	B/3	: Camshaft position sensor (PHASE)
E3	*	F10	L/2	: EVAP canister purge volume control solenoid valve
E2	*	F11	B/3	: Crankshaft position sensor
D3	*	F12	B/6	: To F101
E2	*	F13	BR/2	: VIAS control solenoid valve
B2	*	F14	-	: Engine ground
C2	*	F15	-	: Engine ground
B2	*	F16	-	: Engine ground
B2	*	F17	-	: Engine ground
C2	*	F18	GY/2	: Knock sensor
E2		F19	GY/1	: Oil presure switch
E2		F20	B/1	: Power steering oil pressure switch
D2		F21	GY/2	: Condenser
C3	*	F22	G/4	: Heated oxygen sensor 1
C4	*	F23	L/4	: Heated oxygen sensor 2
D3	*	F24	GY/2	: Engine coolant temperature sensor
B1	*	F26	W/16	: To M58
B1	*	F27	W/24	: To M59
B2	*	F28	W/6	: To M60
D4	*	F29	B/10	: Park/neutral position (PNP) switch (with A/T)
E4	*	F30	B/8	: Terminal cord assembly (with A/T)
E3	*	F31	GY/5	: Mass air flow sensor
D4		F32	GY/1	: Starter motor
B1	*	F33	L/5	: Throttle control motor relay
B1	*	F35	BR/6	: ECM relay
E4	*	F36	GY/2	: Vehicle speed sensor
E4	*	F37	B/3	: Turbine revolution sensor (with A/T)
D4	*	F38	B/3	: Revolution sensor (with A/T)
E4		F41	B/2	: Back-up lamp switch (with M/T)
E4	*	F42	B/2	: Park/neutral position (PNP) switch (with M/T)
F3		F46	GY/1	: To E8
F3	*	F47	GY/8	: To E9
F3	*	F48	GY/10	: To E10
D3	*	F50	G/6	: Electric throttle control actuator
C2	*	F54	SMJ	: ECM
A2	*	F56	W/24	: TCM (transmission control module) (with A/T)
B2	*	F57	GY/24	: TCM (transmission control module) (with A/T)

Engine Control Sub-harness

D3	*	F101	B/6	: To F12
D4	*	F102	GY/2	: Injector No. 1
D4	*	F103	GY/2	: Injector No. 2
D4	*	F104	GY/2	: Injector No. 3
D3	*	F105	GY/2	: Injector No. 4

*: Be sure to connect and lock the connectors securely after repair work. Failure to do so may cause the ECM to have diagnostic trouble codes. **Do not disconnect these connectors except in the case of working according to WORK FLOW of TROUBLE DIAGNOSES in EC and AT sections.**

WKIA1001E

BODY HARNESS

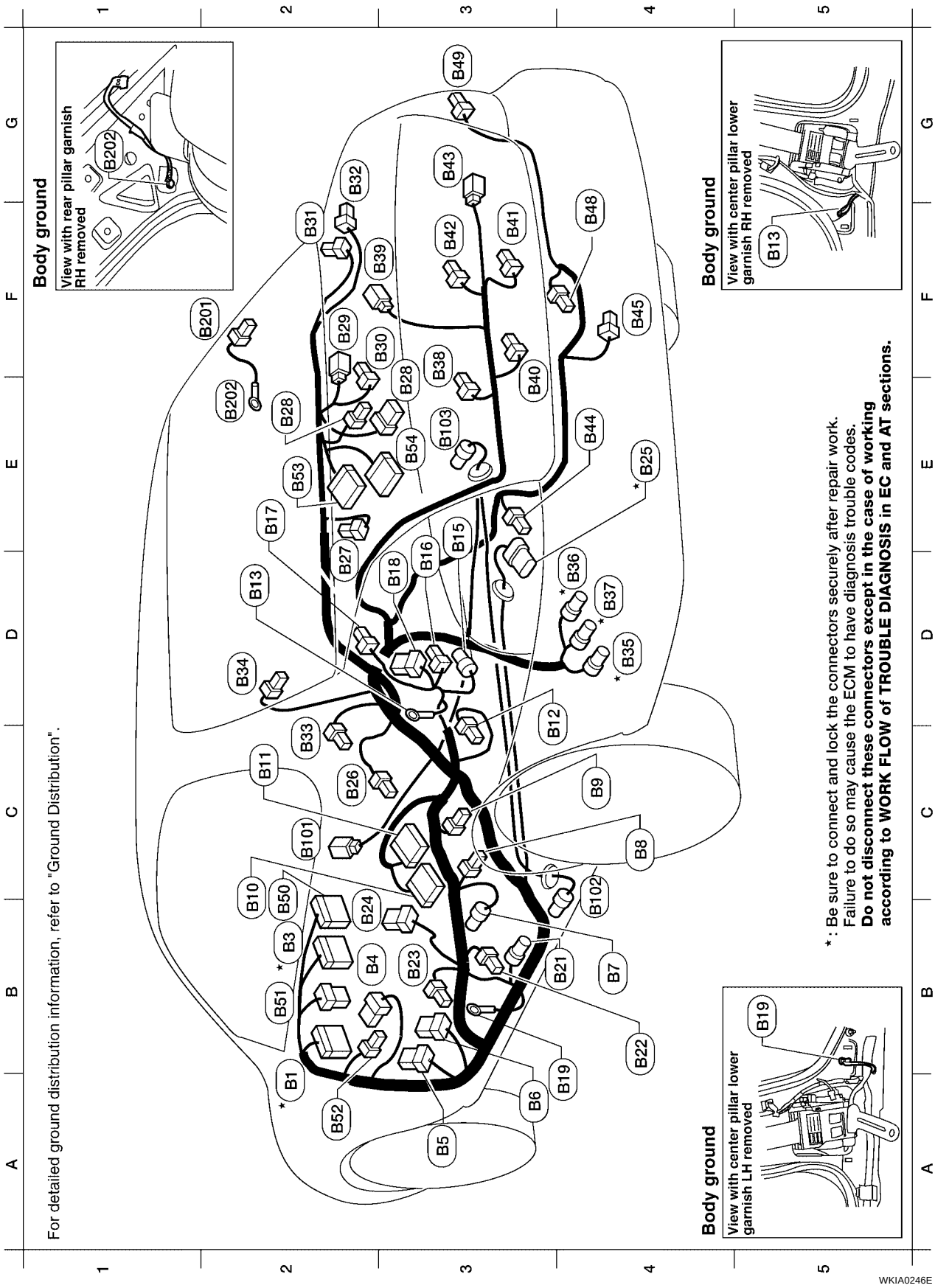

A2 *	B1	BR/16	: To M14
B2 *	B3	W/20	: To M16
B2	B4	W/8	: Fuse block (J/B)
A3	B5	L/5	: Fuel pump relay
A3	B6	BR/6	: Rear window defogger relay
B4	B7	Y/2	: Front LH side air bag module
C4	B8	W/3	: Seat belt buckle switch LH
C4	B9	B/1	: Parking brake switch
C2	B10	Y/12	: Air bag diagnosis sensor unit
C2	B11	Y/12	: Air bag diagnosis sensor unit
D4	B12	Y/2	: Front RH side air bag module
D2	B13	–	: Body ground
E3	B15	Y/2	: RH side air bag (Satellite) sensor
E3	B16	Y/2	: Front RH seat belt pre-tensioner
E2	B17	W/3	: Front door switch RH
D3	B18	W/8	: To D301
A4	B19	–	: Body ground
B3	B21	Y/2	: LH side air bag (Satellite) sensor
B4	B22	Y/2	: Front LH seat belt pre-tensioner
B3	B23	W/3	: Front door switch LH
B2	B24	W/8	: To D201
E4 *	B25	GY/5	: Fuel level sensor unit and fuel pump
C2	B26	W/1	: Rear door switch LH
E2	B27	BR/2	: Rear speaker LH
E3	B28	W/8	: Subwoofer (With mid level audio system)
E2	B28	W/4	: Subwoofer (With premium audio system)
F2	B29	W/2	: High-mounted stop lamp (Without rear air spoiler)
F3	B30	W/2	: Trunk room lamp

* : Be sure to connect and lock the connectors securely after repair work. Failure to do so may cause the ECM to have diagnostic trouble codes.
Do not disconnect these connectors except in the case of working according to WORK FLOW of TROUBLE DIAGNOSES in EC and AT sections.

F2	B31	BR/2	: Rear speaker RH
F2	B32	W/1	: Rear door switch RH
C2	B33	W/2	: Diode-4
D2	B34	B/1	: Rear window defogger
D4 *	B35	B/2	: EVAP canister vent control valve
D4 *	B36	GY/3	: EVAP control system pressure sensor
D4 *	B37	G/2	: Vacuum cut valve bypass valve (QR25DE)
F3	B38	W/2	: Back-up lamp LH
F2	B39	BR/2	: High-mounted stop lamp (With rear air spoiler)
E3	B40	W/2	: License plate lamp LH
F3	B41	W/2	: License plate lamp RH
F3	B42	W/2	: Back-up lamp RH
G3	B43	W/2	: Trunk lid key cylinder switch (Unlock switch) (With vehicle security system)
E4	B44	W/4	: Rear combination lamp LH
F4	B45	W/4	: Trunk lid opener actuator
F3	B48	W/2	: Trunk room lamp switch
G3	B49	W/4	: Rear combination lamp RH
B2	B50	W/12	: To M65
B2	B51	W/2	: To M67
A2	B52	W/4	: To D9
E2	B53	W/12	: Audio amplifier (With premium audio system)
E3	B54	W/12	: Audio amplifier (With premium audio system)

Body No. 2 harness

C2	B101	W/4	: To E56
C4	B102	BR/2	: Rear wheel sensor LH
E3	B103	GY/2	: Rear wheel sensor RH

Rear window defogger ground sub-harness

F2	B201	B/1	: Rear window defogger
F2	B202	–	: Body ground

B33 : Diode-4

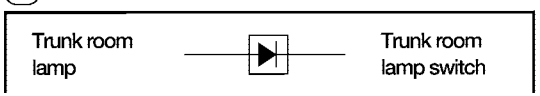

WKIA1002E

ROOM LAMP HARNESS

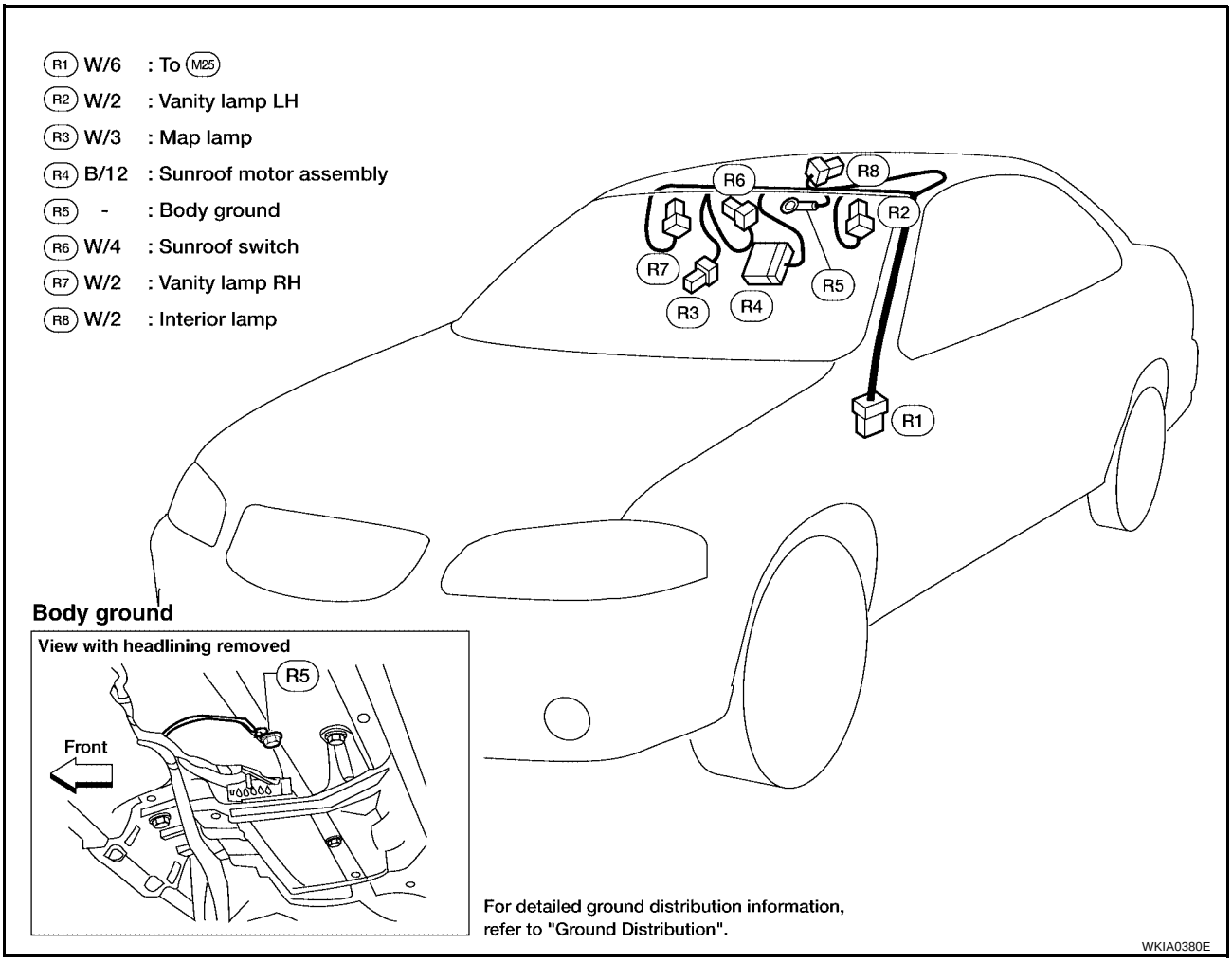

FRONT DOOR HARNESS

LH SIDE

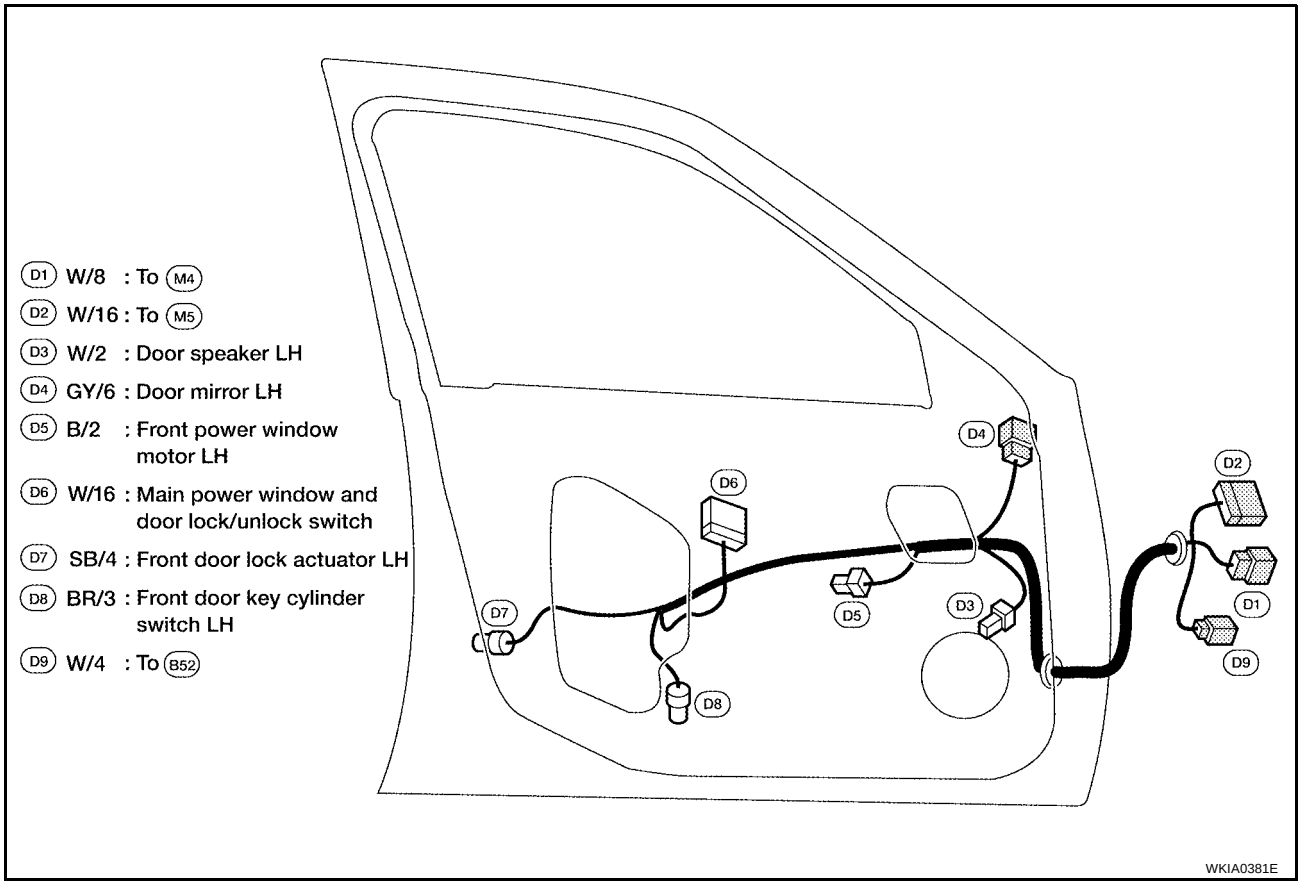

RH SIDE

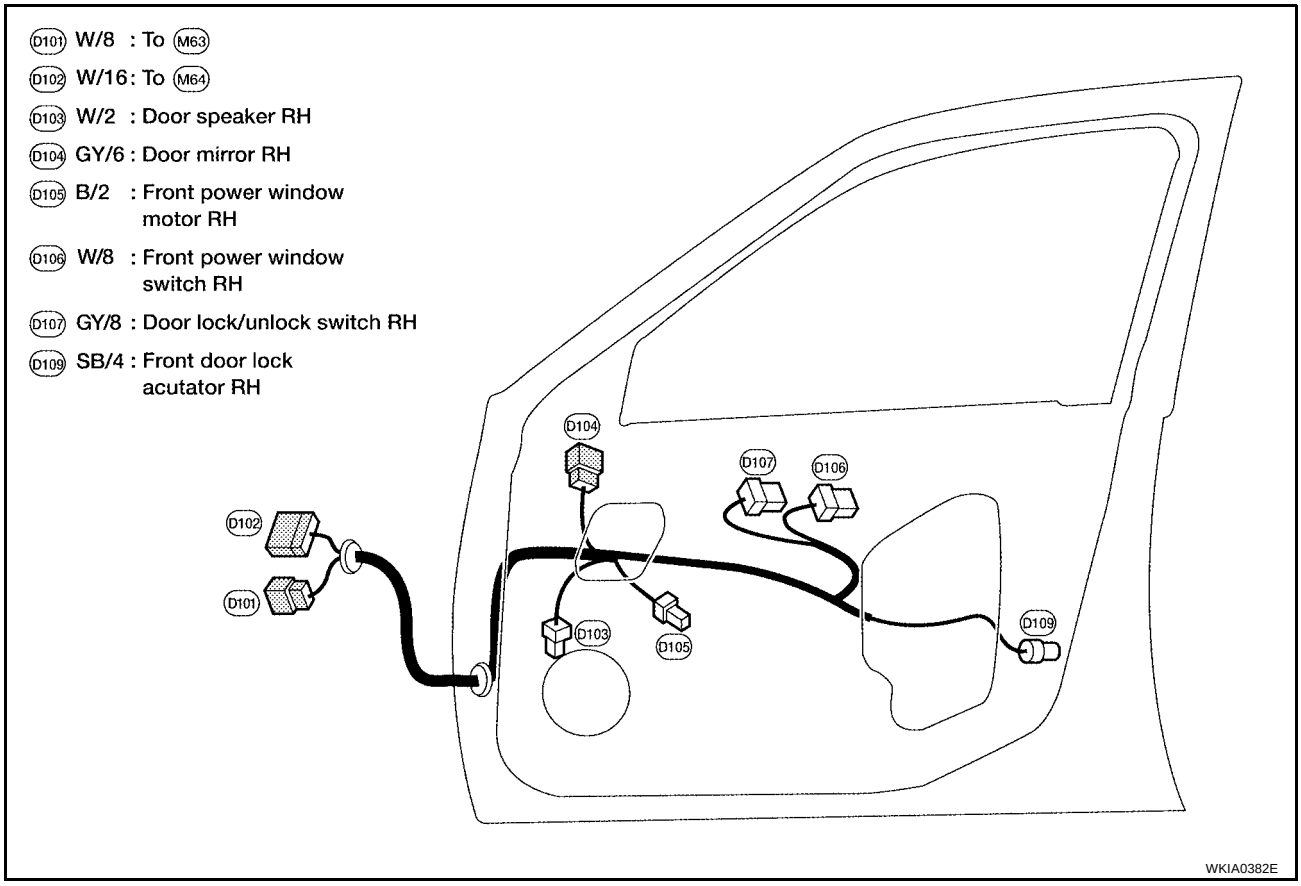

REAR DOOR HARNESS

LH SIDE

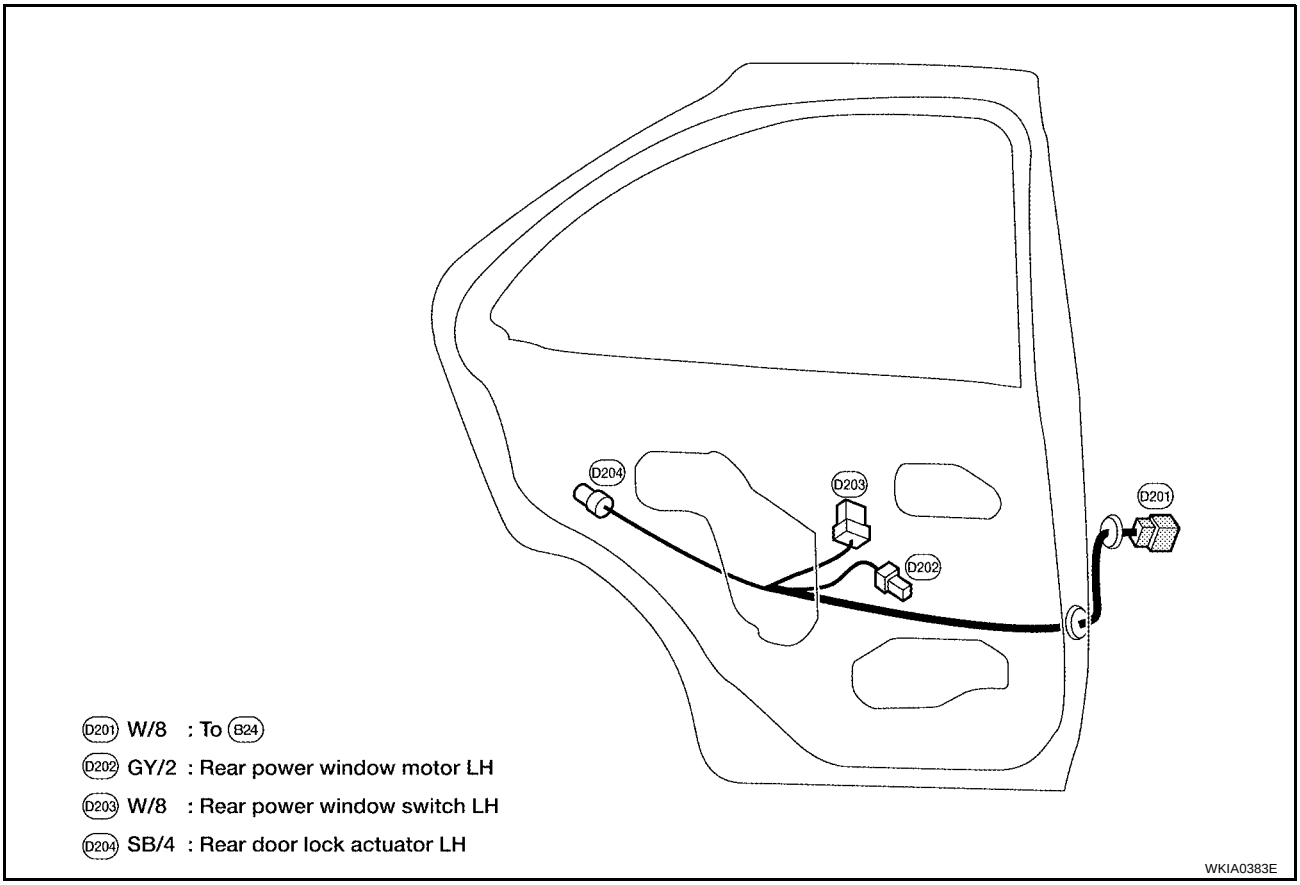

RH SIDE

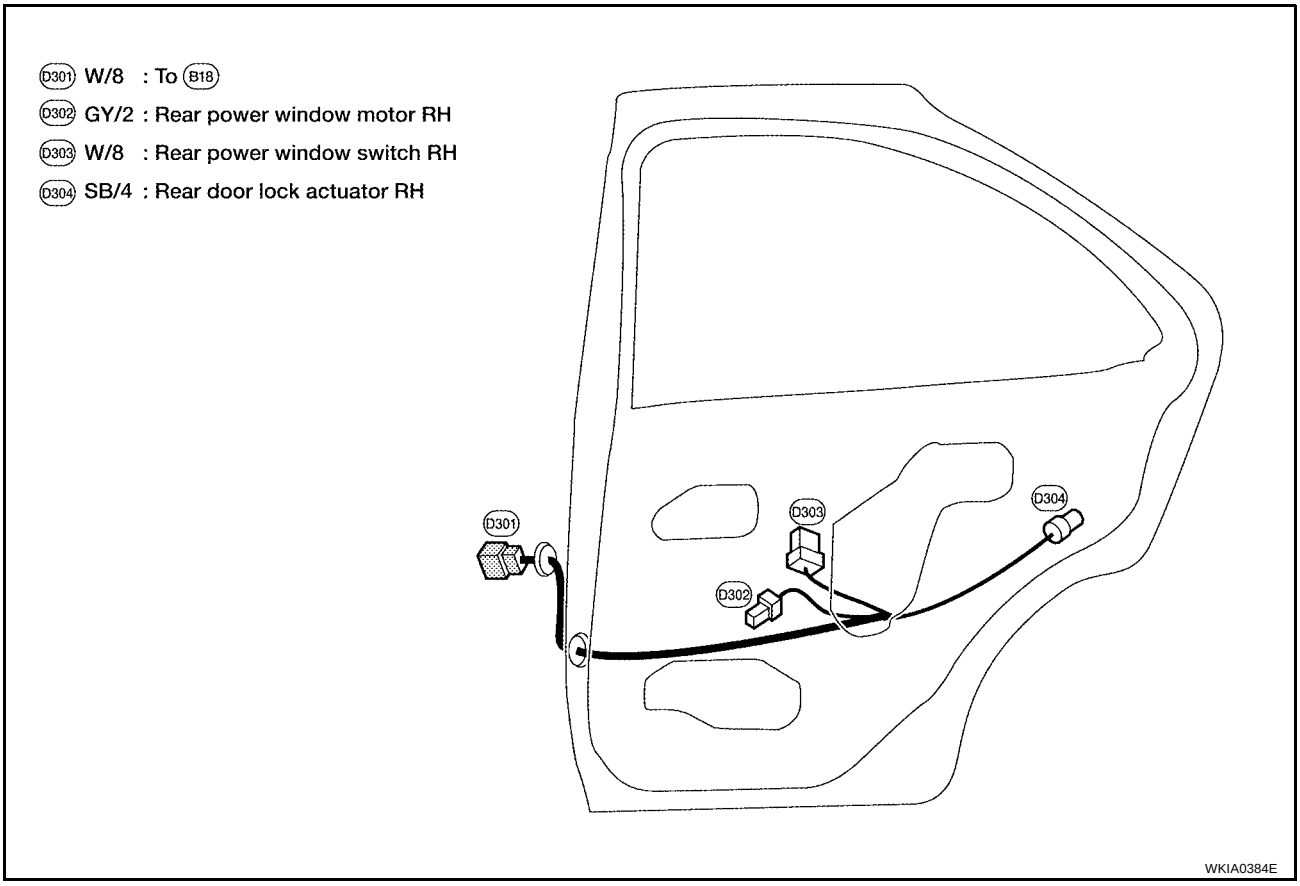

Wiring Diagram Codes (Cell Codes)

EKS003B3

Use the chart below to find out what each wiring diagram code stands for.
Refer to the wiring diagram code in the alphabetical index to find the location (page number) of each wiring diagram.

Code	Section	Wiring Diagram Name
1STSIG	AT	A/T 1ST Signal
2NDSIG	AT	A/T 2ND Signal
3RDSIG	AT	A/T 3RD Signal
4THSIG	AT	A/T 4TH Signal
ABS	BRC	Anti-lock Brake System
A/C,M	MTC	Air Conditioner
A/F	EC	Air Fuel Ratio (A/F) Sensor 1 [QG18DE (SULEV)]
A/FH	EC	Air Fuel Ratio (A/F) Sensor 1 Heater [QG18DE (SULEV)]
APPS1	EC	Accelerator Pedal Position Sensor
APPS2	EC	Accelerator Pedal Position Sensor
APPS3	EC	Accelerator Pedal Position Sensor
ASC/BS	EC	ASCD Brake Switch
ASCBOF	EC	ASCD Brake Switch
ASCIND	EC	ASCD Indicator
ASC/SW	EC	ASCD Steering Switch
AUDIO	AV	Audio
BACK/L	LT	Back-up Lamp
BA/FTS	AT	A/T Fluid Temperature Sensor and TCM Power Supply
BRK/SW	EC	Brake Switch
BYPS/V	EC	Vacuum Cut Valve Bypass Valve (QR25DE Models)
CAN	AT	CAN Communication Line
CAN	EC	CAN Communication Line
CAN	LAN	CAN Communication Line
CHARGE	SC	Charging System
CHIME	DI	Warning Chime
CIGAR	WW	Cigarette Lighter
COOL/F	EC	Cooling Fan Control
DEF	GW	Rear Window Defogger
DLC	EC	Data Link Connector
D/LOCK	BL	Power Door Lock
DTRL	LT	Headlamp - With Daytime Light System (For Canada)
ECM/PW	EC	ECM Power Supply
ECTS	EC	Engine Coolant Temperature Sensor
ENGSS	AT	Engine Speed Signal
ETC1	EC	Electric Throttle Control Function
ETC2	EC	Throttle Control Motor Relay
ETC3	EC	Throttle Control Motor
F/FOG	LT	Front Fog Lamp
FLS1	EC	Fuel Level Sensor Circuit (Slosh)
FLS2	EC	Fuel Level Sensor Circuit
FLS3	EC	Fuel Level Sensor Circuit (Ground Signal)

Code	Section	Wiring Diagram Name
F/PUMP	EC	Fuel Pump Control
FTS	AT	A/T Fluid Temperature Sensor
FTTS	EC	Fuel Tank Temperature Sensor
FUEL	EC	Fuel Injection System Function
HEATER	MTC	Heater System
H/LAMP	LT	Headlamp
H/MIRR	GW	Heated Mirror
HO2S1	EC	Heated Oxygen Sensor 1
HO2S1H	EC	Heated Oxygen Sensor 1 Heater
HO2S2	EC	Heated Oxygen Sensor 2
HO2S2H	EC	Heated Oxygen Sensor 2 Heater
HORN	WW	Horn
IATS	EC	Intake Air Temperature Sensor
IGNSYS	EC	Ignition Signal
ILL	LT	Illumination
INJECT	EC	Injector
INT/L	LT	Interior, Step, Spot, Vanity Mirror and Trunk Room Lamps
IVC	EC	Intake Valve Timing Control Solenoid Valve
IVCS	EC	Intake Valve Timing Control Position Sensor
KEYLES	BL	Remote Keyless Entry System
KS	EC	Knock Sensor
LOAD	EC	Load Signal
LPSV	AT	Line Pressure Solenoid Valve
MAFS	EC	Mass Air Flow Sensor
MAIN	AT	Main Power Supply and Ground Circuit
MAIN	EC	Main Power Supply and Ground Circuit
METER	DI	Speedometer, Tachometer, Temp., Oil, and Fuel Gauges
MIL	EC	Malfunction Indicator Lamp
MIRROR	GW	Power Door Mirror
NATS	BL	NVIS (Nissan Vehicle Immobilizer System — NATS)
NONDTC	AT	Non-detectable Items
OVRCSV	AT	Overrun Clutch Solenoid Valve
PGC/V	EC	EVAP Canister Purge Volume Control Solenoid Valve
PHASE	EC	Camshaft Position Sensor (PHASE)
PNP/SW	AT	Park/Neutral Position Switch
PNP/SW	EC	Park/Neutral Position Switch
POS	EC	Crankshaft Position Sensor (POS)
POWER	PG	Power Supply Routing
PRE/SE	EC	EVAP Control System Pressure Sensor
PS/SEN	EC	Power Steering Pressure Sensor (QG18DE Model)
PST/SW	EC	Power Steering Oil Pressure Switch (QR25DE Model)
ROOM/L	LT	Room Lamp
RP/SEN	EC	Refrigerant Pressure Sensor
SEN/PW	EC	Sensor Power Supply

Code	Section	Wiring Diagram Name
SHIFT	AT	A/T Shift Lock System
SROOF	RF	Sunroof
SRS	SRS	Supplemental Restraint System
S/SIG	EC	Start Signal (QR25DE Model)
SSV/A	AT	Shift Solenoid Valve A
SSV/B	AT	Shift Solenoid Valve B
START	SC	Starting System
STOP/L	LT	Stop Lamp
SWL/S	EC	Swirl Control Valve Position Sensor [QG18DE (SULEV)]
SWL/V	EC	Swirl Control Valve [QG18DE (SULEV)]
TAIL/L	LT	Parking, License and Tail Lamps
TCCSIG	AT	A/T TCC Signal (Lock Up)
TCV	AT	Torque Converter Clutch Solenoid Valve
TLID	BL	Trunk Lid Opener
TPS	AT	Throttle Position Sensor
TPS1	EC	Throttle Position Sensor
TPS2	EC	Throttle Position Sensor
TPS3	EC	Throttle Position Sensor
TRSA/T	AT	Turbine Revolution Sensor (QR25DE Model)
TURN	LT	Turn Signal and Hazard Warning Lamps
VIAS	EC	Variable Air Induction Control System (QR25DE Model)
VEHSEC	BL	Vehicle Security System
VENT/V	EC	EVAP Canister Vent Control Valve
VIAS	EC	Variable Air Induction Control System
VSS	EC	Vehicle Speed Sensor
VSSA/T	AT	Vehicle Speed Sensor A/T (Revolution Sensor)
VSSMTR	AT	Vehicle Speed Sensor MTR
WARN	DI	Warning Lamps
WINDOW	GW	Power Window
WIPER	WW	Front Wiper and Washer

ELECTRICAL UNITS LOCATION

PFP:25230

Electrical Units Location

EKS003B4

ENGINE COMPARTMENT

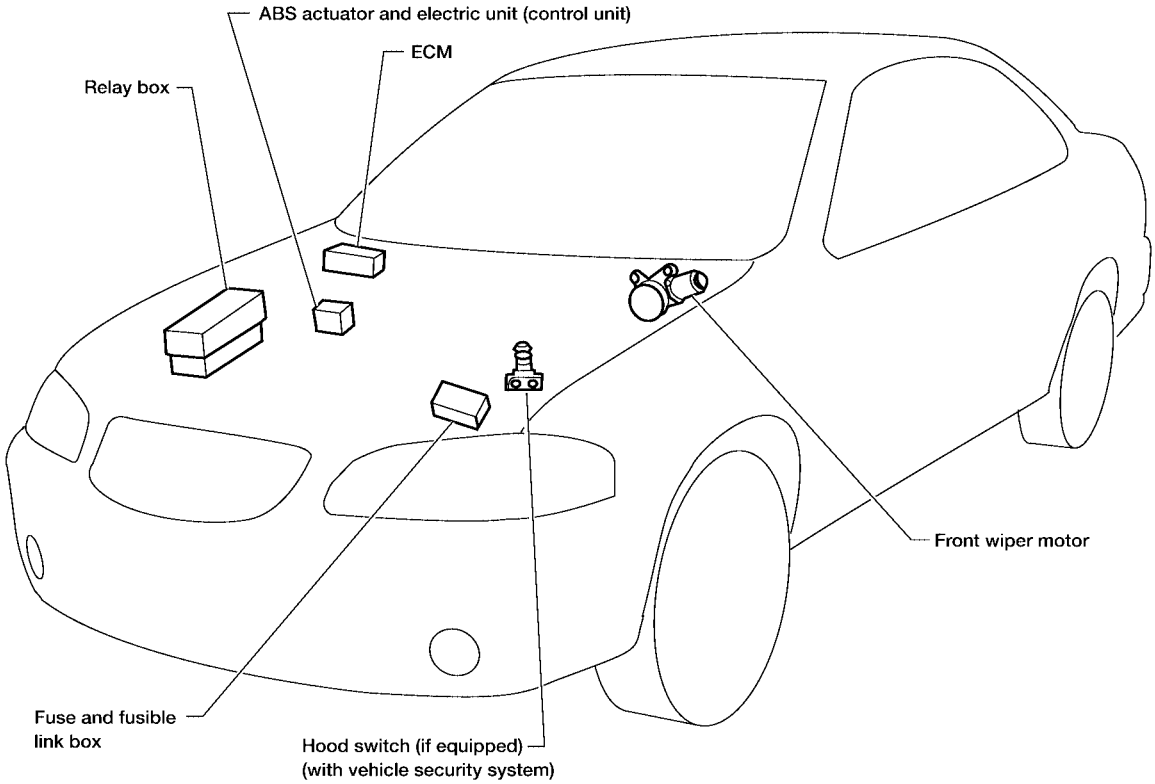

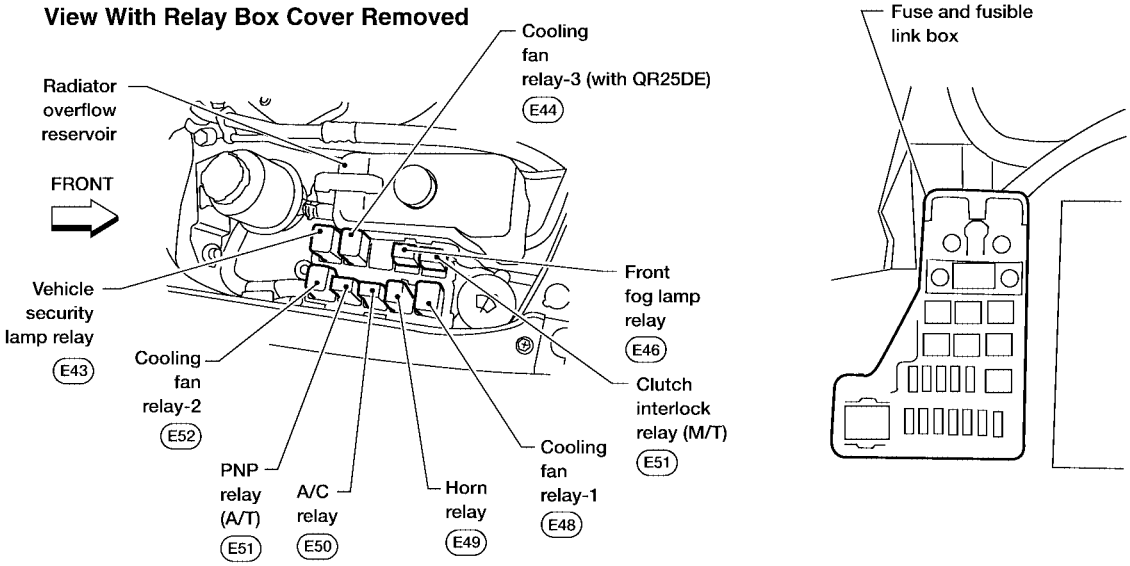

WKIA1003E

PASSENGER COMPARTMENT

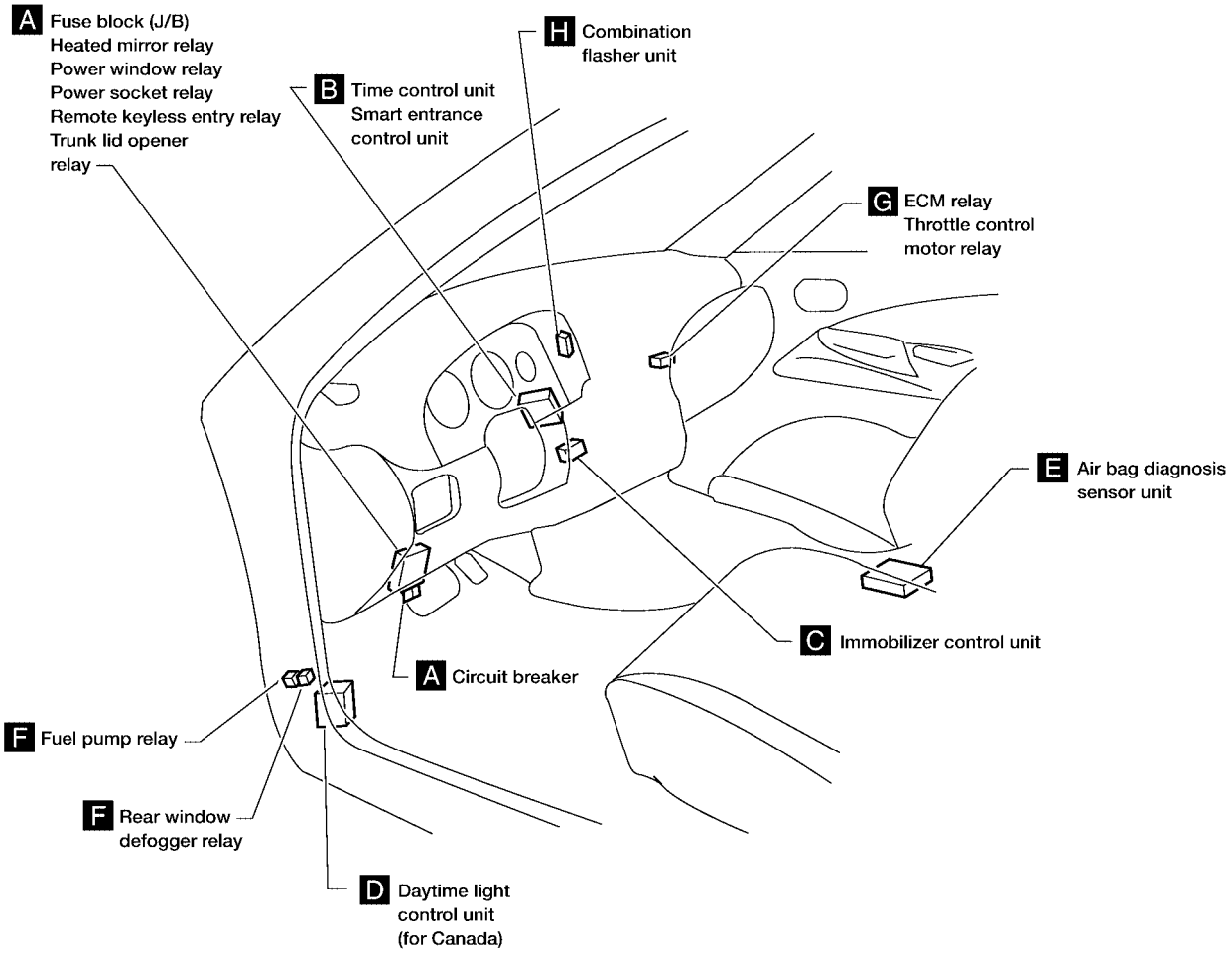

A Instrument panel LH side

View with instrument panel removed

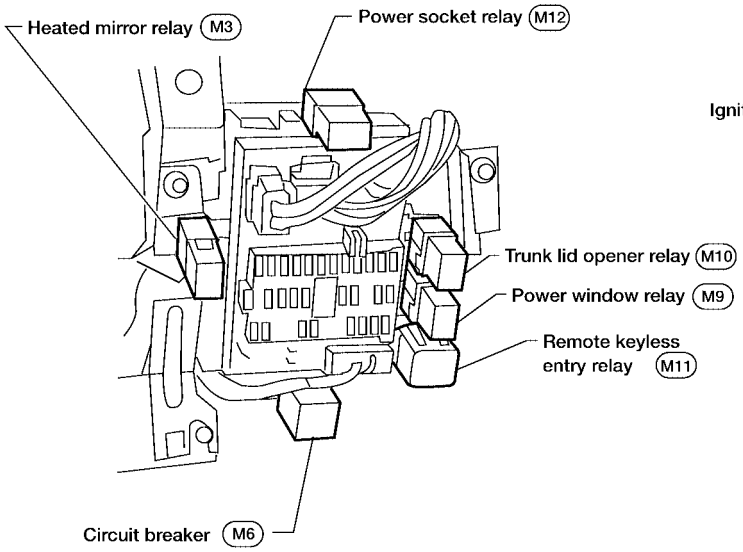

View of rear of fuse block (J/B)

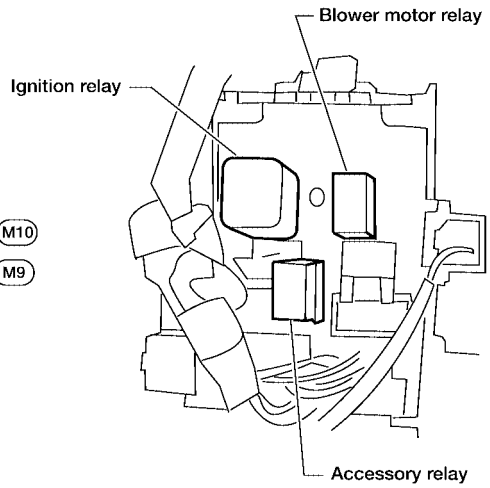

WKIA0249E

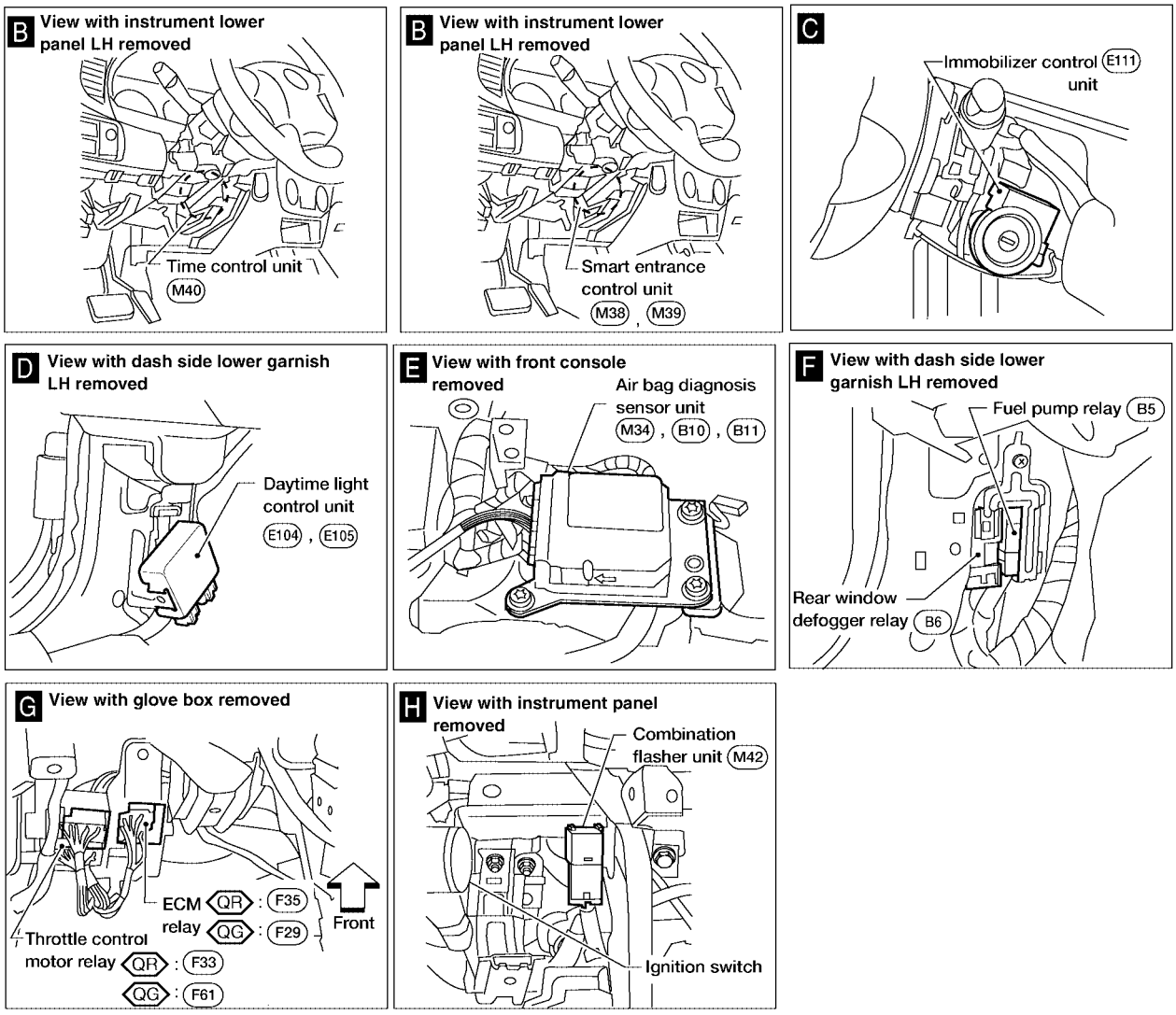

QR : WITH QR25DE
QG : WITH QG18DE

WKIA0981E

Fuse

EKS003B5

- If fuse is blown, be sure to eliminate cause of incident before installing new fuse.
- Use fuse of specified rating. Never use fuse of more than specified rating.
- Do not partially install fuse; always insert it into fuse holder properly.
- Remove fuse for “ELECTRICAL PARTS (BAT)” if vehicle is not used for a long period of time.

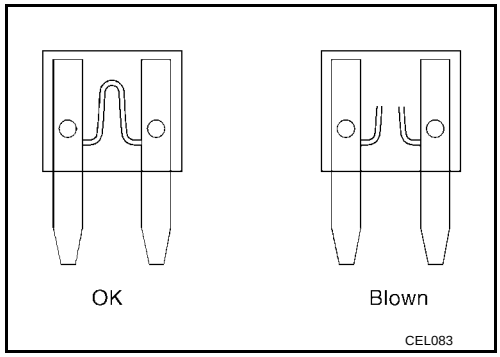

Fusible Link

EKS003B6

A melted fusible link can be detected either by visual inspection or by feeling with finger tip. If its condition is questionable, use circuit tester or test lamp.

CAUTION:

- **If fusible link should melt, it is possible that critical circuit (power supply or large current carrying circuit) is shorted. In such a case, carefully check and eliminate cause of incident.**
- **Never wrap outside of fusible link with vinyl tape. Important: Never let fusible link touch any other wiring harness, vinyl or rubber parts.**

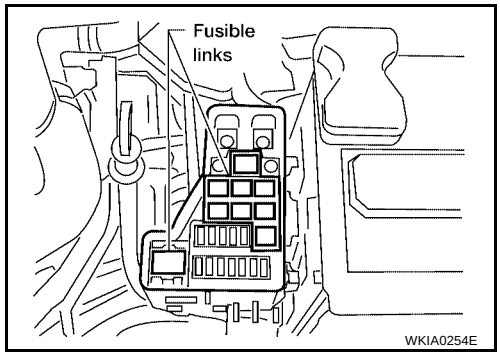

Circuit Breaker

EKS003B7

For example, when current is 30A, the circuit is broken within 8 to 20 seconds.
A circuit breaker is used for the following systems:

- Power door locks
- Power sunroof
- Power windows
- Remote keyless entry system

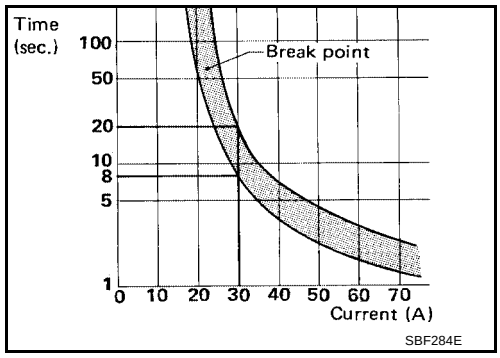

HARNESS CONNECTOR

PFP:24010

Description

EKS003B8

HARNESS CONNECTOR (TAB-LOCKING TYPE)

- The tab-locking type connectors help prevent accidental looseness or disconnection.
- The tab-locking type connectors are disconnected by pushing or lifting the locking tab(s). Refer to the illustration below.

Refer to the next page for description of the slide-locking type connector.

CAUTION:

Do not pull the harness or wires when disconnecting the connector.

[Example]

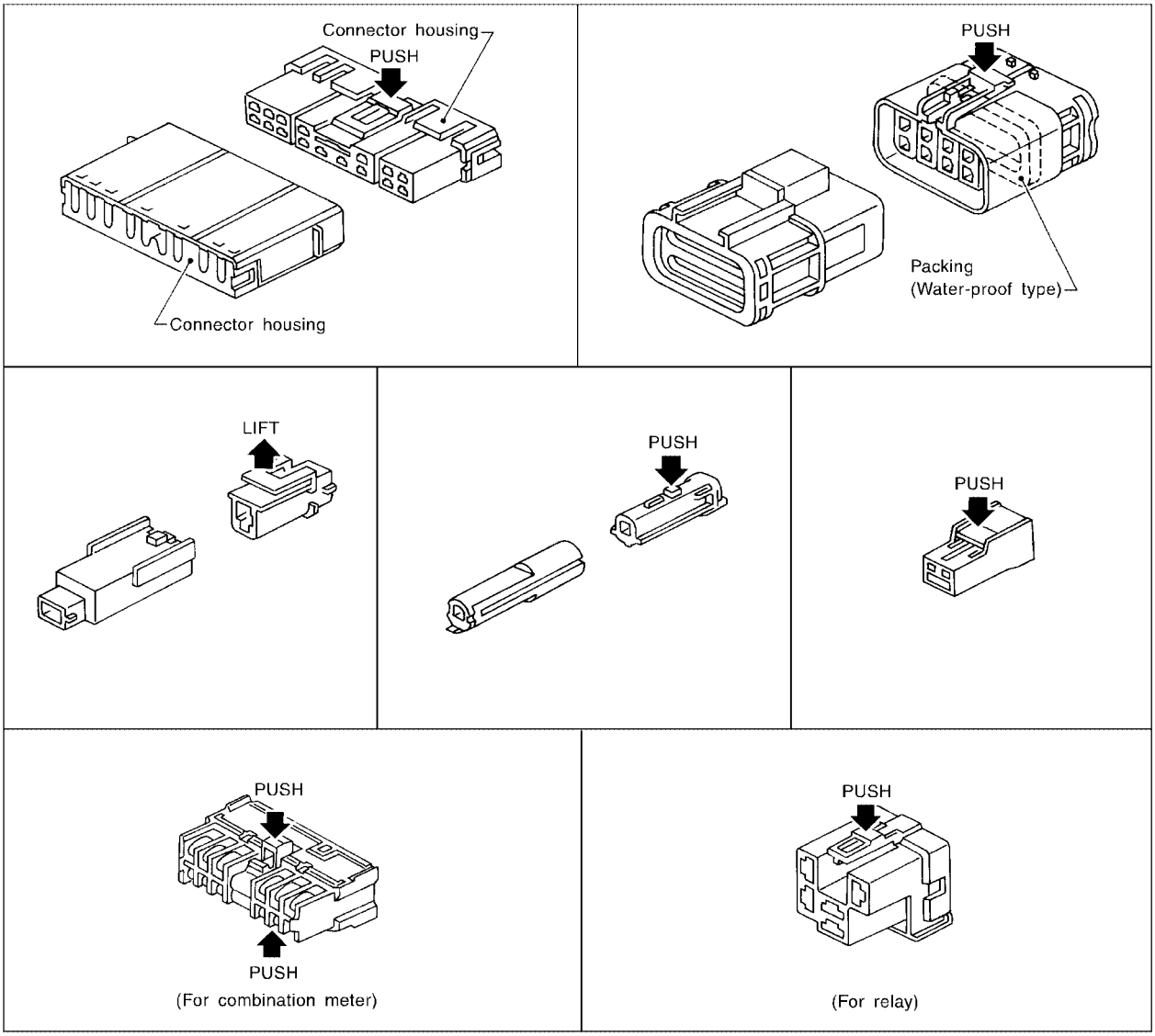

SEL769DA

HARNESS CONNECTOR (SLIDE-LOCKING TYPE)

- A new style slide-locking type connector is used on certain systems and components, especially those related to OBD.
- The slide-locking type connectors help prevent incomplete locking and accidental looseness or disconnection.
- The slide-locking type connectors are disconnected by pushing or pulling the slider. Refer to the illustration below.

CAUTION:

- **Do not pull the harness or wires when disconnecting the connector.**
- **Be careful not to damage the connector support bracket when disconnecting the connector.**

[Example]

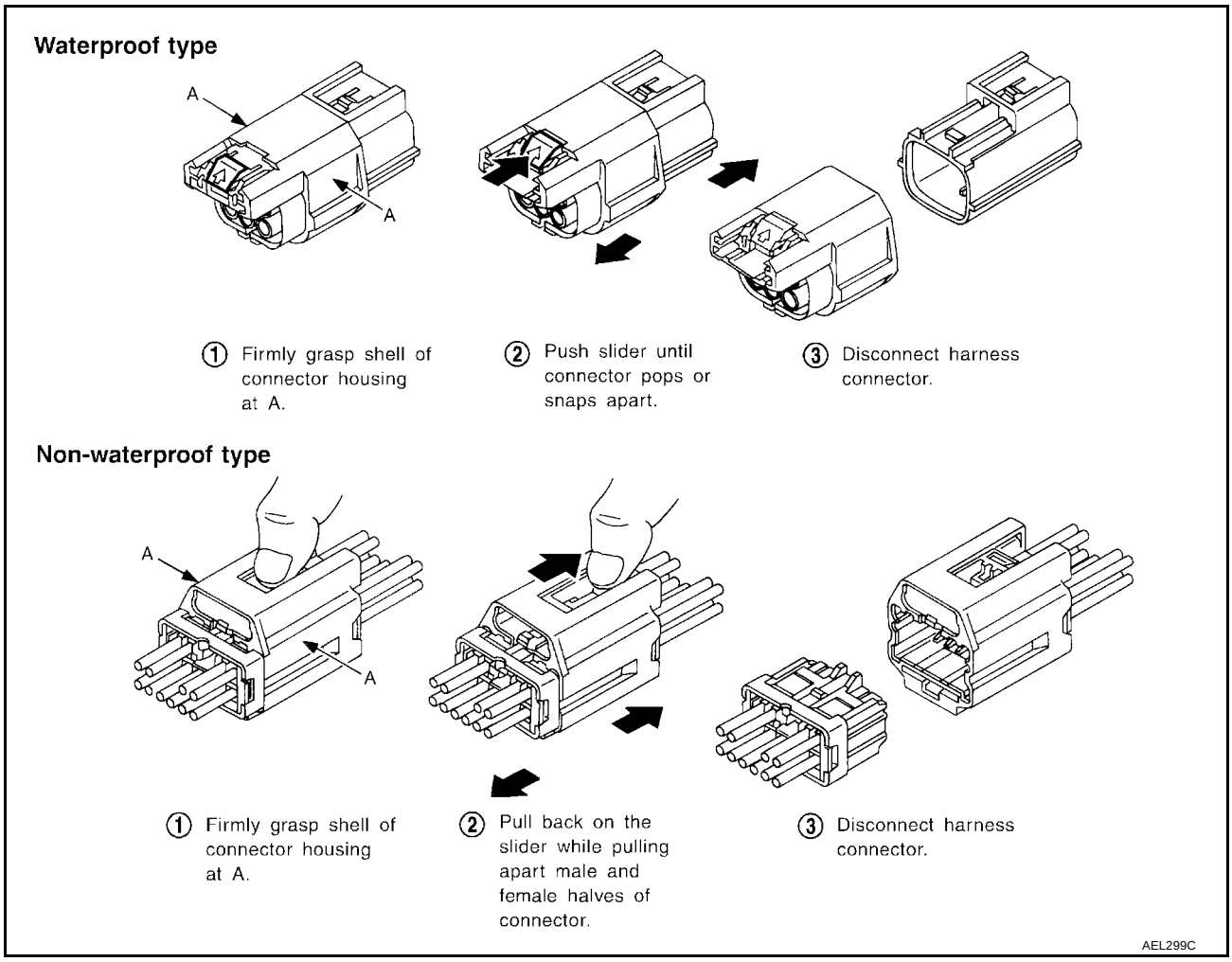

HARNESS CONNECTOR (DIRECT-CONNECT SRS COMPONENT TYPE)

- SRS direct-connect type harness connectors are used on certain SRS components such as air bag modules and seat belt pre-tensioners.
- Always pull up to release black locking tab prior to removing connector from SRS component.
- Always push down to lock black locking tab after installing connector to SRS component. When locked, the black locking tab is level with the connector housing.

CAUTION:

- **Do not pull the harness or wires when removing connectors from SRS components.**

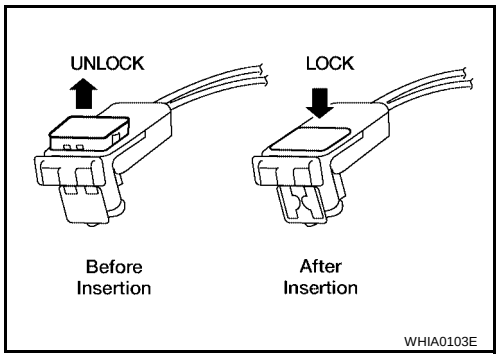

JOINT CONNECTOR

PFP:B4341

Terminal Arrangement

EKS003B9

QG18DE

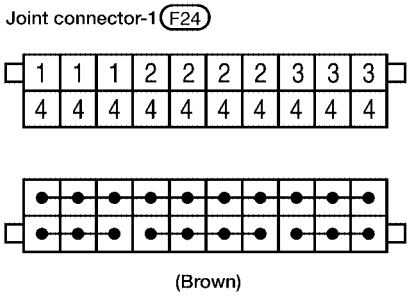

WKIA0251E

QR25DE

JOINT CONNECTOR - 1 (F1)

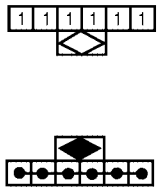

(GRAY)

JOINT CONNECTOR - 2 (F2)

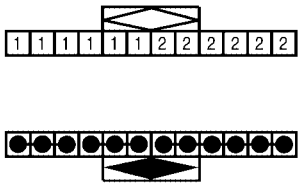

(BLUE)

JOINT CONNECTOR - 3 (F3)

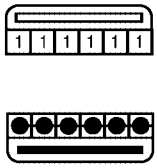

(GRAY)

WKIA0029E

ELECTRICAL UNITS

PFP:23710

Terminal Arrangement

EKS003BA

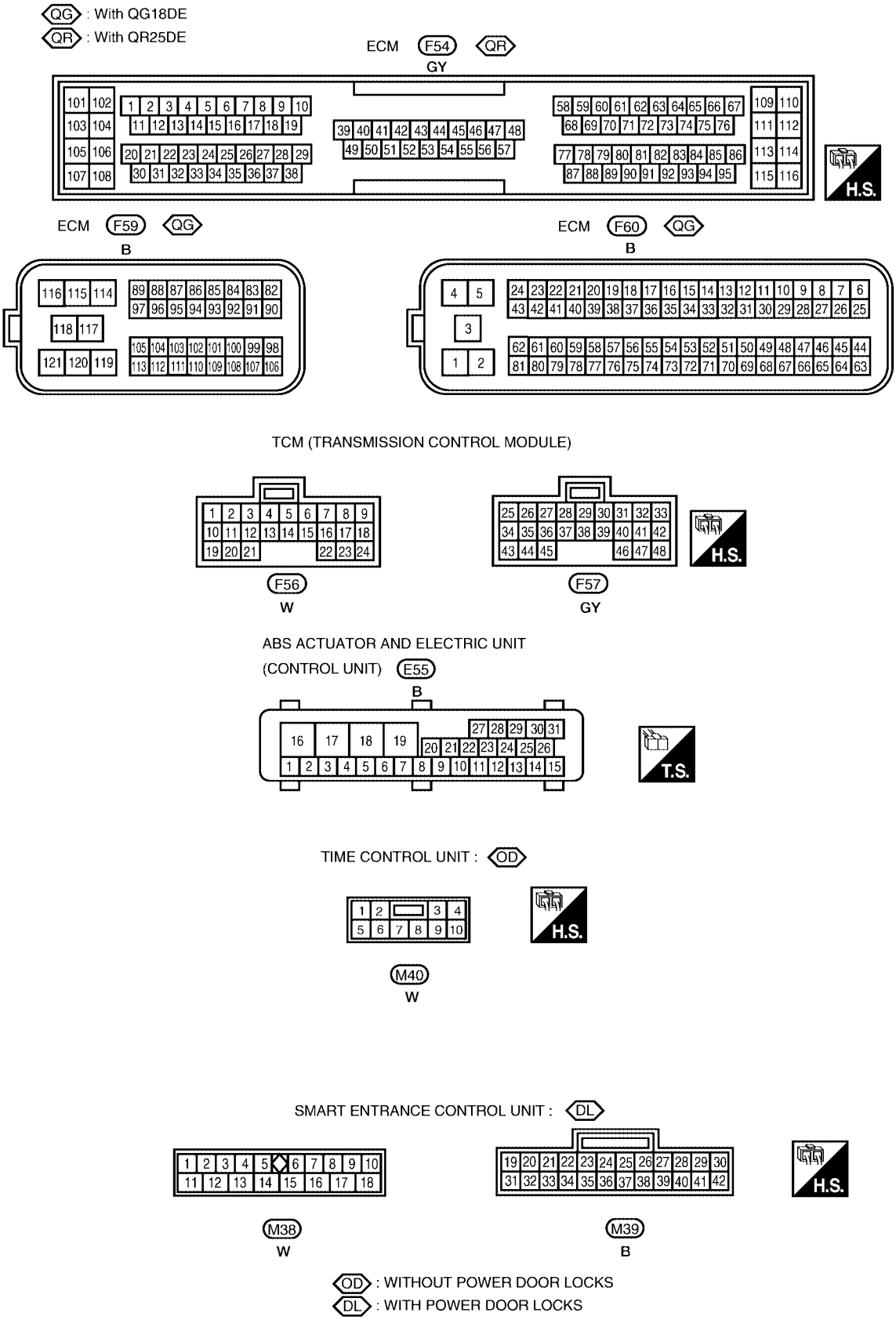

WKIA1004E

STANDARDIZED RELAY

PFP:25230

Description

EKS003BB

NORMAL OPEN, NORMAL CLOSED AND MIXED TYPE RELAYS

Relays can mainly be divided into three types: normal open, normal closed and mixed type relays.

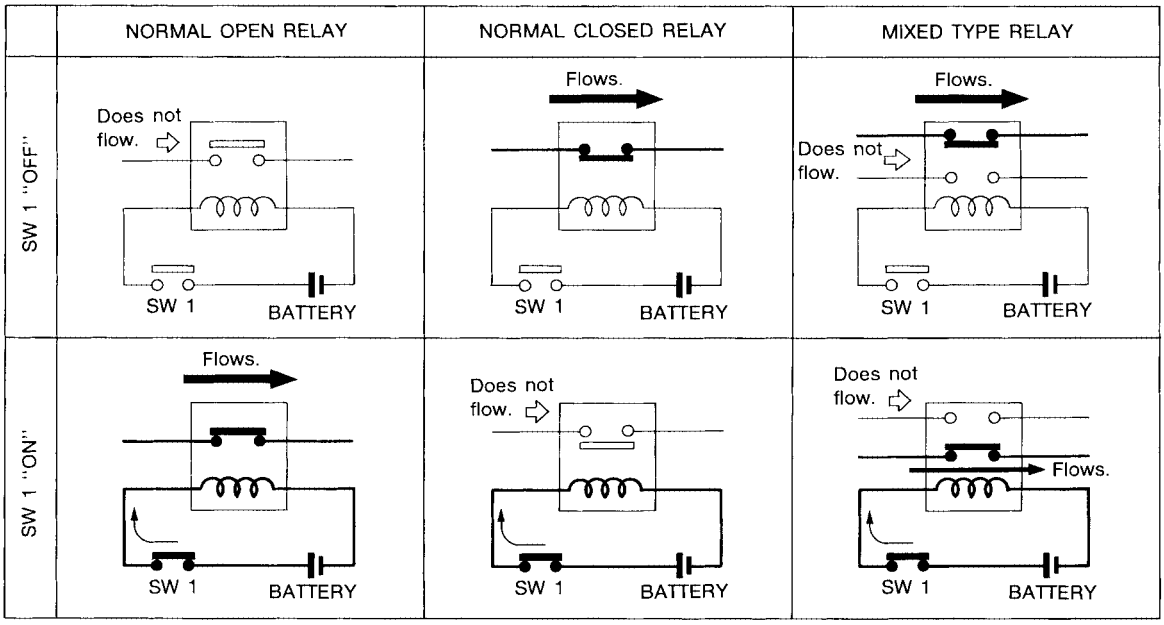

SEL881H

TYPE OF STANDARDIZED RELAYS

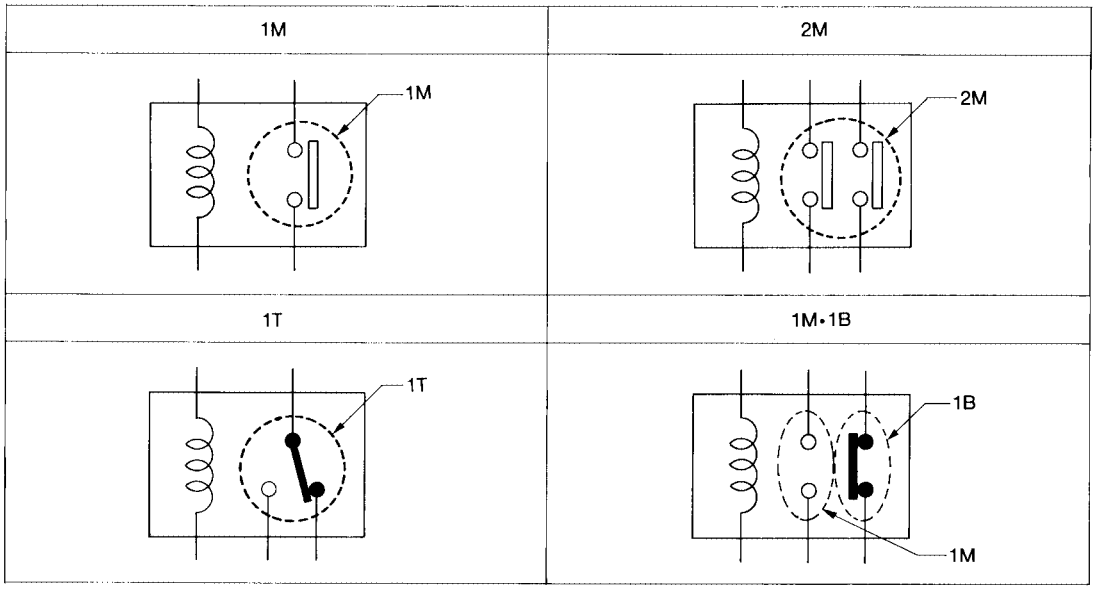

SEL882H

1M	1 Make	2M	2 Make
1T	1 Transfer	1M·1B	1 Make 1 Break

Type	Outer view	Circuit	Connector Symbol and connection	Case color
1T	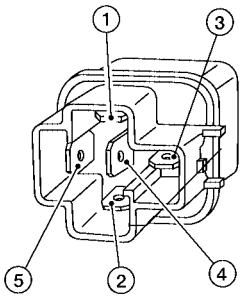	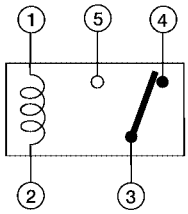	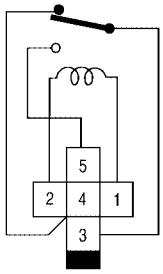	BLACK
2M	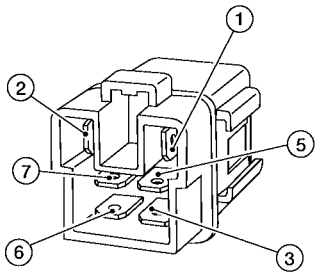	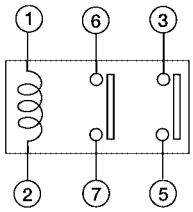	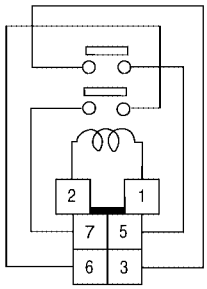	BROWN
1M -1B	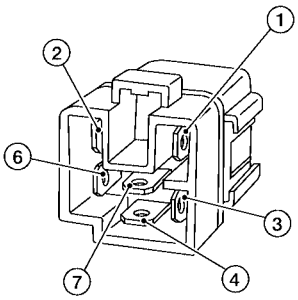	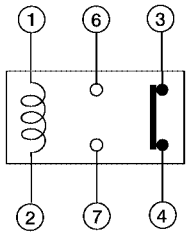	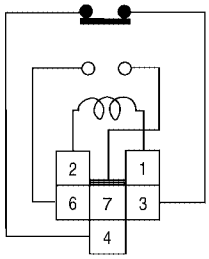	GRAY
1M	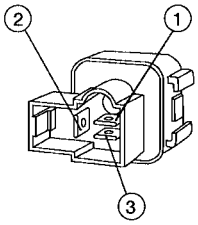	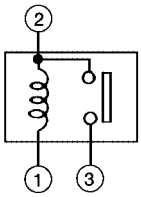	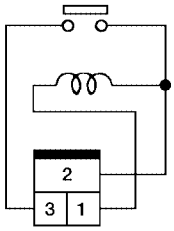	BLACK
	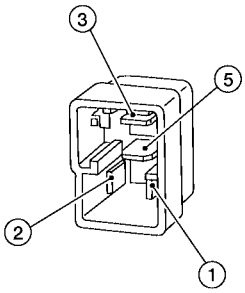	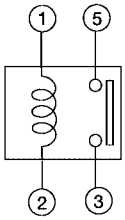	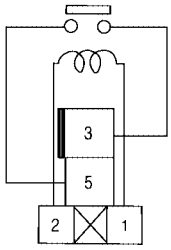	BLUE

The arrangement of terminal numbers on the actual relays may differ from those shown above.

WKIA0253E

FUSE BLOCK — JUNCTION BOX (J/B)

PFP:24350

Terminal Arrangement

EKS003BC

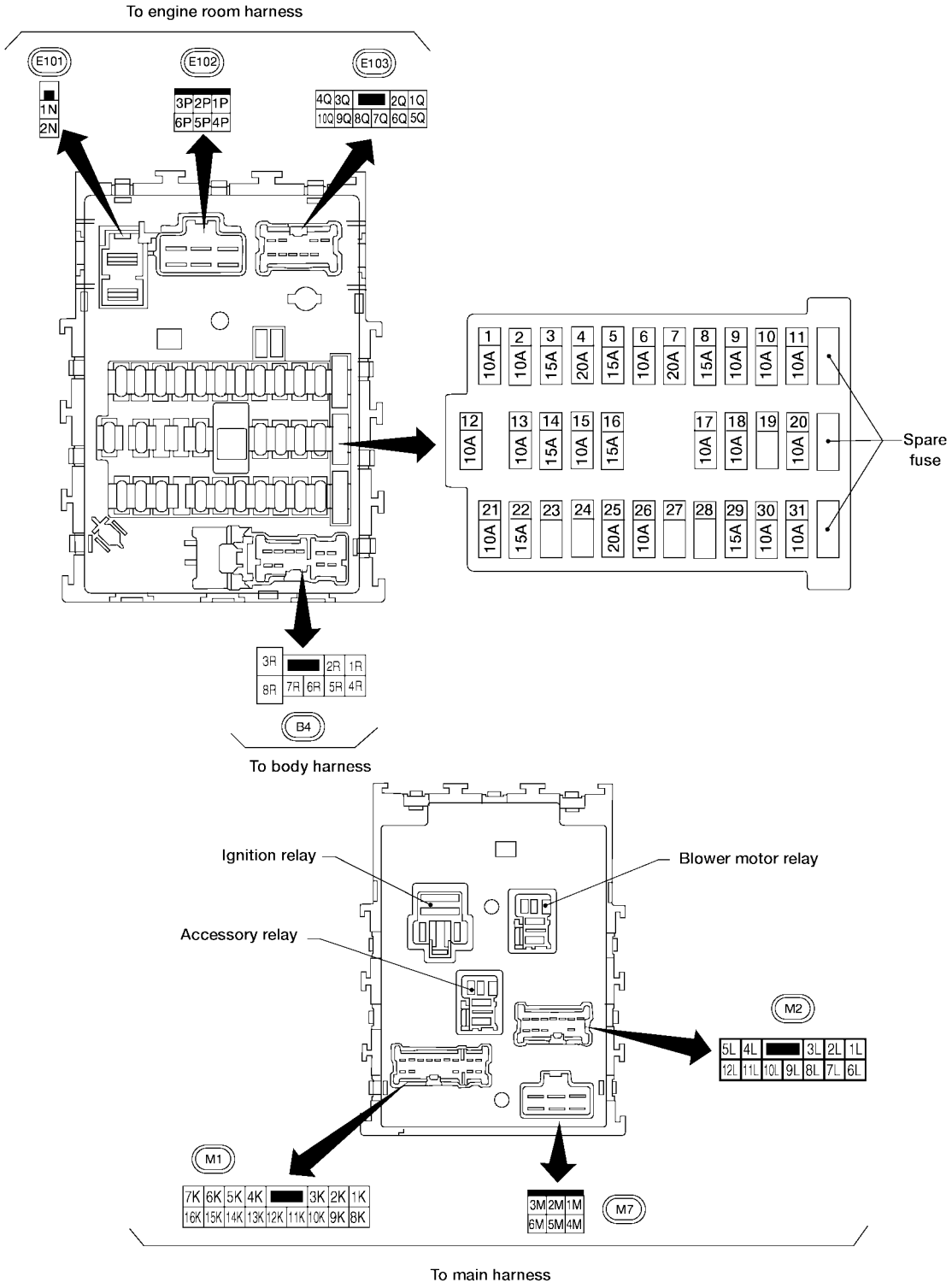

WEL473

FUSE AND FUSIBLE LINK BOX

PFP:24381

Terminal Arrangement

EKS003BD

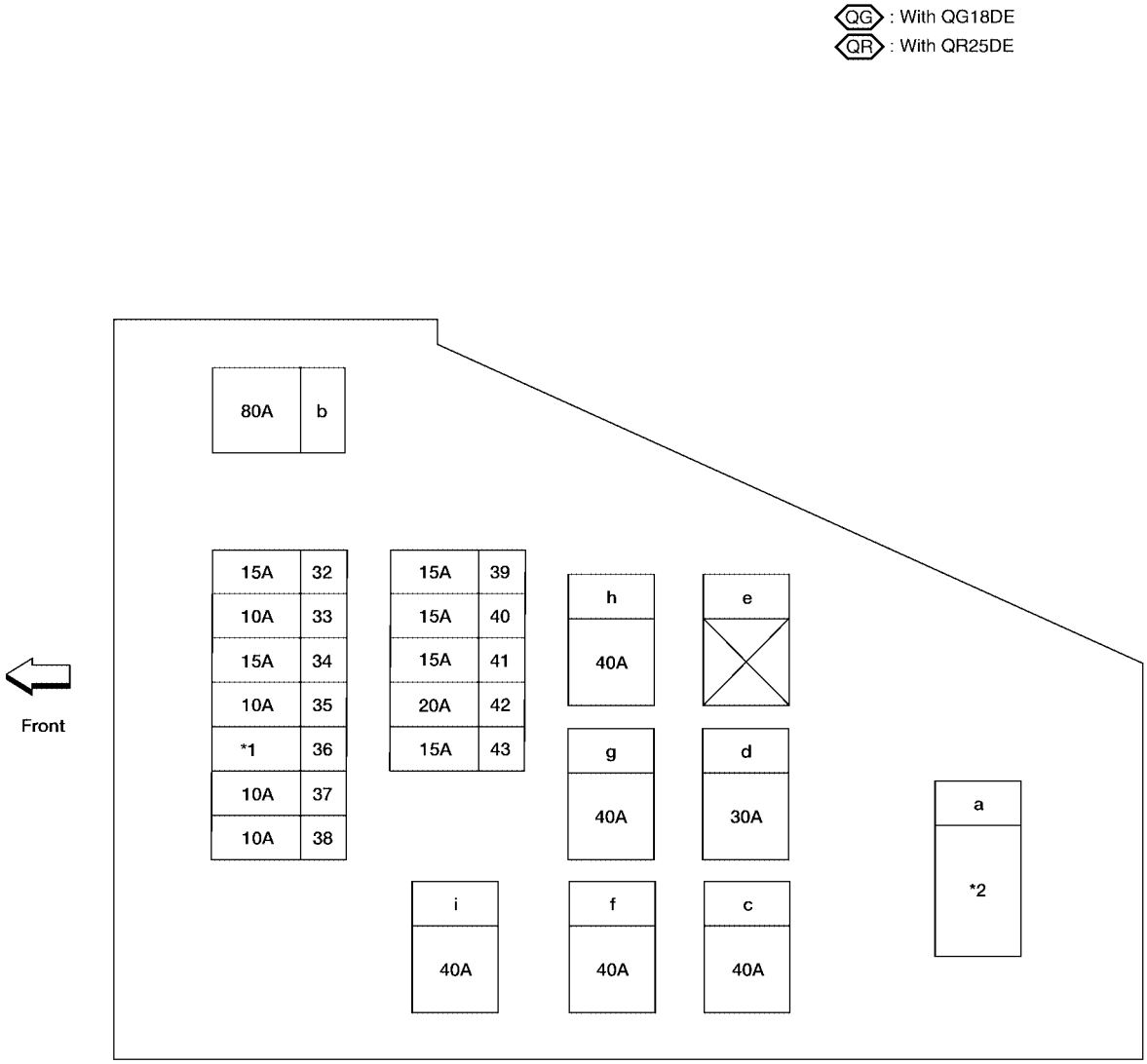

No. 32 - 43 : FUSE

a - i : FUSIBLE LINK

*1 QG : 10A
QR : 15A

*2 QG : 100A
QR : 120A

WKIA0030E