SECTION EC
ENGINE CONTROL SYSTEM

CONTENTS

QG18DE

QR25DE

INDEX FOR DTC

PFP:00024

DTC No. Index

UBS00JRB

NOTE:
If DTC U1000 or U1001 is displayed with other DTC, first perform the trouble diagnosis for DTC U1000, U1001. Refer to EC-173, "DTC U1000, U1001 CAN COMMUNICATION LINE" .

×: Applicable —: Not applicable

DTC*1		Items (CONSULT-II screen terms)	Reference page
CONSULT-II GST*2	ECM*3		
U1000	1000*4	CAN COMM CIRCUIT	EC-173
U1001	1001*4	CAN COMM CIRCUIT	EC-173
P0000	**0000**	**NO DTC IS DETECTED. FURTHER TESTING MAY BE REQUIRED.**	**—**
P0011	0011	INT/V TIM CONT-B1	EC-176
P0037	0037	HO2S2 HTR (B1)	EC-180
P0038	0038	HO2S2 HTR (B1)	EC-180
P0101	0101	MAF SEN/CIRCUIT	EC-186
P0102	0102	MAF SEN/CIRCUIT	EC-196
P0103	0103	MAF SEN/CIRCUIT	EC-196
P0112	0112	IAT SEN/CIRCUIT	EC-204
P0113	0113	IAT SEN/CIRCUIT	EC-204
P0117	0117	ECT SEN/CIRCUIT	EC-208
P0118	0118	ECT SEN/CIRCUIT	EC-208
P0122	0122	TP SEN 2/CIRC	EC-213
P0123	0123	TP SEN 2/CIRC	EC-213
P0125	0125	ECT SENSOR	EC-220
P0127	0127	IAT SENSOR	EC-223
P0128	0128	THERMSTAT FNCTN	EC-226
P0138	0138	HO2S2 (B1)	EC-228
P0139	0139	HO2S2 (B1)	EC-234
P0171	0171	FUEL SYS-LEAN-B1	EC-242
P0172	0172	FUEL SYS-RICH-B1	EC-249
P0181	0181	FTT SENSOR	EC-256
P0182	0182	FTT SEN/CIRCUIT	EC-261
P0183	0183	FTT SEN/CIRCUIT	EC-261
P0222	0222	TP SEN 1/CIRC	EC-265
P0223	0223	TP SEN 1/CIRC	EC-265
P0300	0300	MULTI CYL MISFIRE	EC-272
P0301	0301	CYL 1 MISFIRE	EC-272
P0302	0302	CYL 2 MISFIRE	EC-272
P0303	0303	CYL 3 MISFIRE	EC-272
P0304	0304	CYL 4 MISFIRE	EC-272
P0327	0327	KNOCK SEN/CIRC-B1	EC-279
P0328	0328	KNOCK SEN/CIRC-B1	EC-279
P0335	0335	CKP SEN/CIRCUIT	EC-284

DTC*1		Items (CONSULT-II screen terms)	Reference page
CONSULT-II GST*2	ECM*3		
P0340	0340	CMP SEN/CIRC-B1	EC-291
P0420	0420	TW CATALYST SYS-B1	EC-298
P0441	0441	EVAP PURG FLOW/MON	EC-303
P0442	0442	EVAP SMALL LEAK	EC-309
P0444	0444	PURG VOLUME CONT/V	EC-318
P0445	0445	PURG VOLUME CONT/V	EC-318
P0447	0447	VENT CONTROL VALVE	EC-325
P0451	0451	EVAP SYS PRES SEN	EC-332
P0452	0452	EVAP SYS PRES SEN	EC-335
P0453	0453	EVAP SYS PRES SEN	EC-341
P0455	0455	EVAP GROSS LEAK	EC-348
P0456	0456	EVAP VERY SML LEAK	EC-356
P0460	0460	FUEL LEV SEN SLOSH	EC-365
P0461	0461	FUEL LEVEL SENSOR	EC-367
P0462	0462	FUEL LEVL SEN/CIRC	EC-369
P0463	0463	FUEL LEVL SEN/CIRC	EC-369
P0500	0500	VEH SPEED SEN/CIRC*5	EC-371
P0506	0506	ISC SYSTEM	EC-373
P0507	0507	ISC SYSTEM	EC-375
P0550	0550	PW ST P SEN/CIRC	EC-377
P0605	0605	ECM	EC-382
P0705	0705	PNP SW/CIRC	AT-115
P0710	0710	ATF TEMP SEN/CIRC	AT-120
P0720	0720	VEH SPD SEN/CIR AT*5	AT-126
P0725	0725	ENGINE SPEED SIG	AT-131
P0731	0731	A/T 1ST GR FNCTN	AT-135
P0732	0732	A/T 2ND GR FNCTN	AT-140
P0733	0733	A/T 3RD GR FNCTN	AT-145
P0734	0734	A/T 4TH GR FNCTN	AT-150
P0740	0740	TCC SOLENOID/CIRC	AT-159
P0744	0744	A/T TCC S/V FNCTN	AT-163
P0745	0745	L/PRESS SOL/CIRC	AT-173
P0750	0750	SFT SOL A/CIRC	AT-179
P0755	0755	SFT SOL B/CIRC	AT-183
P1031	1031	A/F SEN1 HTR (B1)	EC-385
P1032	1032	A/F SEN1 HTR (B1)	EC-385
P1065	1065	ECM BACK UP/CIRC	EC-390
P1111	1111	INT/V TIM V/CIR-B1	EC-394
P1121	1121	ETC ACTR	EC-398
P1122	1122	ETC FUNCTION/CIRC	EC-400
P1124	1124	ETC MOT PWR	EC-407
P1126	1126	ETC MOT PWR	EC-407

DTC*1		Items (CONSULT-II screen terms)	Reference page
CONSULT-II GST*2	ECM*3		
P1128	1128	ETC MOT	EC-412
P1132	1132	VARI SWL CON/SV-B1*6	EC-417
P1137	1137	SWL CON/V POSI SEN*6	EC-422
P1138	1138	SWIRL CONT VALVE*6	EC-430
P1146	1146	HO2S2 (B1)	EC-438
P1147	1147	HO2S2 (B1)	EC-446
P1148	1148	CLOSED LOOP-B1	EC-454
P1217	1217	ENG OVER TEMP	EC-455
P1225	1225	CTP LEARNING	EC-470
P1226	1226	CTP LEARNING	EC-472
P1229	1229	SENSOR POWER/CIRC	EC-474
P1271	1271	A/F SENSOR1 (B1)	EC-479
P1272	1272	A/F SENSOR1 (B1)	EC-485
P1273	1273	A/F SENSOR1 (B1)	EC-491
P1274	1274	A/F SENSOR1 (B1)	EC-498
P1276	1276	A/F SENSOR1 (B1)	EC-505
P1278	1278	A/F SENSOR1 (B1)	EC-511
P1279	1279	A/F SENSOR1 (B1)	EC-519
P1444	1444	PURG VOLUME CONT/V	EC-527
P1446	1446	VENT CONTROL VALVE	EC-535
P1564	1564	ASCD SW	EC-542
P1572	1572	ASCD BRAKE SW	EC-549
P1574	1574	ASCD VHL SPD SEN	EC-561
P1610 - P1615	1610 - 1615	NATS MALFUNCTION	BL-96
P1705	1705	TP SEN/CIRC A/T	AT-187
P1706	1706	P-N POS SW/CIRCUIT	EC-563
P1760	1760	O/R CLTCH SOL/CIRC	AT-193
P1805	1805	BRAKE SW/CIRCUIT	EC-567
P2122	2122	APP SEN 1/CIRC	EC-573
P2123	2123	APP SEN 1/CIRC	EC-573
P2127	2127	APP SEN 2/CIRC	EC-580
P2128	2128	APP SEN 2/CIRC	EC-580
P2135	2135	TP SENSOR	EC-587
P2138	2138	APP SENSOR	EC-594

*1: 1st trip DTC No. is the same as DTC No.
*2: This number is prescribed by SAE J2012.
*3: In Diagnostic Test Mode II (Self-diagnostic results), this number is controlled by NISSAN.
*4: The troubleshooting for this DTC needs CONSULT-II.
*5: When the fail-safe operations for both self-diagnoses occur, the MIL illuminates.
*6: SULEV models.

Alphabetical Index

UBS00JRC

NOTE:
If DTC U1000 or U1001 is displayed with other DTC, first perform the trouble diagnosis for DTC U1000, U1001. Refer to EC-842, "DTC U1000, U1001 CAN COMMUNICATION LINE" .

×: Applicable —: Not applicable

Items (CONSULT-II screen terms)	DTC*1		Reference page
	CONSULT-II GST*2	ECM*3	
A/F SENSOR1 (B1)	P1271	1271	EC-479
A/F SENSOR1 (B1)	P1272	1272	EC-485
A/F SENSOR1 (B1)	P1273	1273	EC-491
A/F SENSOR1 (B1)	P1274	1274	EC-498
A/F SENSOR1 (B1)	P1276	1276	EC-505
A/F SENSOR1 (B1)	P1278	1278	EC-511
A/F SENSOR1 (B1)	P1279	1279	EC-519
A/F SEN1 HTR (B1)	P1031	1031	EC-385
A/F SEN1 HTR (B1)	P1032	1032	EC-385
A/T 1ST GR FNCTN	P0731	0731	AT-135
A/T 2ND GR FNCTN	P0732	0732	AT-140
A/T 3RD GR FNCTN	P0733	0733	AT-145
A/T 4TH GR FNCTN	P0734	0734	AT-150
A/T TCC S/V FNCTN	P0744	0744	AT-163
APP SEN 1/CIRC	P2122	2122	EC-573
APP SEN 1/CIRC	P2123	2123	EC-573
APP SEN 2/CIRC	P2127	2127	EC-580
APP SEN 2/CIRC	P2128	2128	EC-580
APP SENSOR	P2138	2138	EC-594
ASCD BRAKE SW	P1572	1572	EC-549
ASCD SW	P1564	1564	EC-542
ASCD VHL SPD SEN	P1574	1574	EC-561
ATF TEMP SEN/CIRC	P0710	0710	AT-120
BRAKE SW/CIRCUIT	P1805	1805	EC-567
CAN COMM CIRCUIT	U1000	1000*4	EC-173
CAN COMM CIRCUIT	U1001	1001*4	EC-173
CKP SEN/CIRCUIT	P0335	0335	EC-284
CLOSED LOOP-B1	P1148	1148	EC-454
CMP SEN/CIRC-B1	P0340	0340	EC-291
CTP LEARNING	P1225	1225	EC-470
CTP LEARNING	P1226	1226	EC-472
CYL 1 MISFIRE	P0301	0301	EC-272
CYL 2 MISFIRE	P0302	0302	EC-272
CYL 3 MISFIRE	P0303	0303	EC-272
CYL 4 MISFIRE	P0304	0304	EC-272
ECM	P0605	0605	EC-382
ECM BACK UP/CIRC	P1065	1065	EC-390
ECT SEN/CIRCUIT	P0117	0117	EC-208
ECT SEN/CIRCUIT	P0118	0118	EC-208
ECT SENSOR	P0125	0125	EC-220
ENG OVER TEMP	P1217	1217	EC-455

Items (CONSULT-II screen terms)	DTC*1		Reference page
	CONSULT-II GST*2	ECM*3	
ENGINE SPEED SIG	P0725	0725	AT-131
ETC ACTR	P1121	1121	EC-398
ETC FUNCTION/CIRC	P1122	1122	EC-400
ETC MOT	P1128	1128	EC-412
ETC MOT PWR	P1124	1124	EC-407
ETC MOT PWR	P1126	1126	EC-407
EVAP GROSS LEAK	P0455	0455	EC-348
EVAP PURG FLOW/MON	P0441	0441	EC-303
EVAP SMALL LEAK	P0442	0442	EC-309
EVAP SYS PRES SEN	P0451	0451	EC-332
EVAP SYS PRES SEN	P0452	0452	EC-335
EVAP SYS PRES SEN	P0453	0453	EC-341
EVAP VERY SML LEAK	P0456	0456	EC-356
FTT SEN/CIRCUIT	P0182	0182	EC-261
FTT SEN/CIRCUIT	P0183	0183	EC-261
FTT SENSOR	P0181	0181	EC-256
FUEL LEV SEN SLOSH	P0460	0460	EC-365
FUEL LEVEL SENSOR	P0461	0461	EC-367
FUEL LEVL SEN/CIRC	P0462	0462	EC-369
FUEL LEVL SEN/CIRC	P0463	0463	EC-369
FUEL SYS-LEAN-B1	P0171	0171	EC-242
FUEL SYS-RICH-B1	P0172	0172	EC-249
HO2S2 (B1)	P0138	0138	EC-228
HO2S2 (B1)	P0139	0139	EC-234
HO2S2 (B1)	P1146	1146	EC-438
HO2S2 (B1)	P1147	1147	EC-446
HO2S2 HTR (B1)	P0037	0037	EC-180
HO2S2 HTR (B1)	P0038	0038	EC-180
IAT SEN/CIRCUIT	P0112	0112	EC-204
IAT SEN/CIRCUIT	P0113	0113	EC-204
IAT SENSOR	P0127	0127	EC-223
INT/V TIM CONT-B1	P0011	0011	EC-176
INT/V TIM V/CIR-B1	P1111	1111	EC-394
ISC SYSTEM	P0506	0506	EC-373
ISC SYSTEM	P0507	0507	EC-375
KNOCK SEN/CIRC-B1	P0327	0327	EC-279
KNOCK SEN/CIRC-B1	P0328	0328	EC-279
L/PRESS SOL/CIRC	P0745	0745	AT-173
MAF SEN/CIRCUIT	P0101	0101	EC-186
MAF SEN/CIRCUIT	P0102	0102	EC-196
MAF SEN/CIRCUIT	P0103	0103	EC-196
MULTI CYL MISFIRE	P0300	0300	EC-272

Items (CONSULT-II screen terms)	DTC*1		Reference page
	CONSULT-II GST*2	ECM*3	
NATS MALFUNCTION	P1610 - P1615	1610 - 1615	BL-96
NO DTC IS DETECTED. FURTHER TESTING MAY BE REQUIRED.	**P0000**	**0000**	**—**
O/R CLTCH SOL/CIRC	P1760	1760	AT-193
P-N POS SW/CIRCUIT	P1706	1706	EC-563
PNP SW/CIRC	P0705	0705	AT-115
PURG VOLUME CONT/V	P0444	0444	EC-318
PURG VOLUME CONT/V	P0445	0445	EC-318
PURG VOLUME CONT/V	P1444	1444	EC-527
PW ST P SEN/CIRC	P0550	0550	EC-377
SENSOR POWER/CIRC	P1229	1229	EC-474
SFT SOL A/CIRC	P0750	0750	AT-179
SFT SOL B/CIRC	P0755	0755	AT-183
SWIRL CONT VALVE*6	P1138	1138	EC-430
SWL CON/V POSI SEN*6	P1137	1137	EC-422
TCC SOLENOID/CIRC	P0740	0740	AT-159
THERMSTAT FNCTN	P0128	0128	EC-226
TP SEN 1/CIRC	P0222	0222	EC-265
TP SEN 1/CIRC	P0223	0223	EC-265
TP SEN 2/CIRC	P0122	0122	EC-213
TP SEN 2/CIRC	P0123	0123	EC-213
TP SENSOR	P2135	2135	EC-587
TP SEN/CIRC A/T	P1705	1705	AT-187
TW CATALYST SYS-B1	P0420	0420	EC-298
VARI SWL CON/SV-B1*6	P1132	1132	EC-417
VEH SPD SEN/CIR AT*5	P0720	0720	AT-126
VEH SPEED SEN/CIRC*5	P0500	0500	EC-371
VENT CONTROL VALVE	P0447	0447	EC-325
VENT CONTROL VALVE	P1446	1446	EC-535

*1: 1st trip DTC No. is the same as DTC No.
*2: This number is prescribed by SAE J2012.
*3: In Diagnostic Test Mode II (Self-diagnostic results), this number is controlled by NISSAN.
*4: The troubleshooting for this DTC needs CONSULT-II.
*5: When the fail-safe operations for both self-diagnoses occur, the MIL illuminates.
*6: SULEV models.

PRECAUTIONS

PFP:00001

Precautions for Supplemental Restraint System (SRS) “AIR BAG” and “SEAT BELT PRE-TENSIONER”

UBS00K2R

The Supplemental Restraint System such as “AIR BAG” and “SEAT BELT PRE-TENSIONER”, used along with a front seat belt, helps to reduce the risk or severity of injury to the driver and front passenger for certain types of collision. Information necessary to service the system safely is included in the SRS and SB section of this Service Manual.

WARNING:

- **To avoid rendering the SRS inoperative, which could increase the risk of personal injury or death in the event of a collision which would result in air bag inflation, all maintenance must be performed by an authorized NISSAN/INFINITI dealer.**
- **Improper maintenance, including incorrect removal and installation of the SRS, can lead to personal injury caused by unintentional activation of the system. For removal of Spiral Cable and Air Bag Module, see the SRS section.**
- **Do not use electrical test equipment on any circuit related to the SRS unless instructed to in this Service Manual. SRS wiring harnesses can be identified by yellow and/or orange harnesses or harness connectors.**

On Board Diagnostic (OBD) System of Engine and A/T

UBS00JRE

The ECM has an on board diagnostic system. It will light up the malfunction indicator lamp (MIL) to warn the driver of a malfunction causing emission deterioration.

CAUTION:

- **Be sure to turn the ignition switch OFF and disconnect the battery ground cable before any repair or inspection work. The open/short circuit of related switches, sensors, solenoid valves, etc. will cause the MIL to light up.**
- **Be sure to connect and lock the connectors securely after work. A loose (unlocked) connector will cause the MIL to light up due to the open circuit. (Be sure the connector is free from water, grease, dirt, bent terminals, etc.)**
- **Certain systems and components, especially those related to OBD, may use a new style slide-locking type harness connector. For description and how to disconnect, refer to PG-47, "HARNESS CONNECTOR" .**
- **Be sure to route and secure the harnesses properly after work. The interference of the harness with a bracket, etc. may cause the MIL to light up due to the short circuit.**
- **Be sure to connect rubber tubes properly after work. A misconnected or disconnected rubber tube may cause the MIL to light up due to the malfunction of the fuel injection system, etc.**
- **Be sure to erase the unnecessary malfunction information (repairs completed) from the ECM and TCM (Transmission control module) before returning the vehicle to the customer.**

Precaution

UBS00JRF

- **Always use a 12 volt battery as power source.**
- **Do not attempt to disconnect battery cables while engine is running.**
- **Before connecting or disconnecting the ECM harness connector, turn ignition switch OFF and disconnect battery ground cable. Failure to do so may damage the ECM because battery voltage is applied to ECM even if ignition switch is turned off.**
- **Before removing parts, turn ignition switch OFF and then disconnect battery ground cable.**

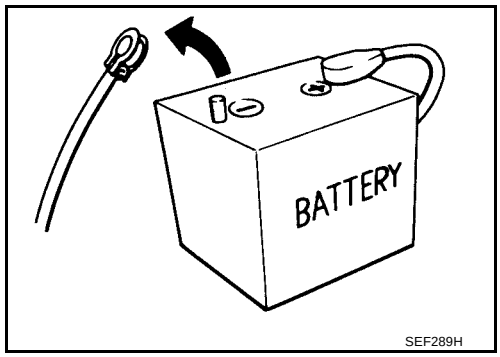

SEF289H

- **Do not disassemble ECM.**
- **If battery cable is disconnected, the memory will return to the initial ECM values.**
  The ECM will now start to self-control at its initial values. Engine operation can vary slightly when the cable is disconnected. However, this is not an indication of a malfunction. Do not replace parts because of a slight variation.
- **If the battery is disconnected, the following emission-related diagnostic information will be lost within 24 hours.**
  - **Diagnostic trouble codes**
  - **1st trip diagnostic trouble codes**
  - **Freeze frame data**
  - **1st trip freeze frame data**
  - **System readiness test (SRT) codes**
  - **Test values**

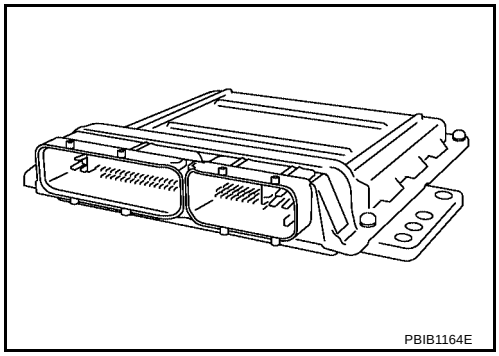
PBIB1164E

- **When connecting ECM harness connector, fasten it securely with a lever as far as it will go as shown in the figure.**

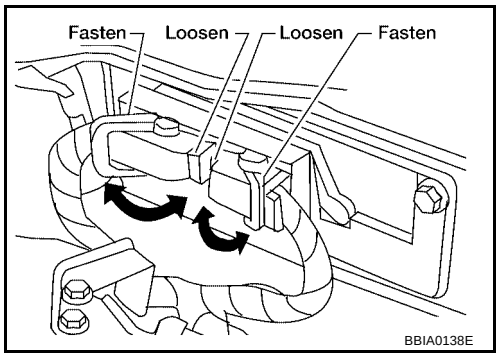

BBIA0138E

- **When connecting or disconnecting pin connectors into or from ECM, take care not to damage pin terminals (bend or break).**
  Make sure that there are not any bends or breaks on ECM pin terminal, when connecting pin connectors.
- **Securely connect ECM harness connectors.**
  A poor connection can cause an extremely high (surge) voltage to develop in coil and condenser, thus resulting in damage to ICs.
- **Keep engine control system harness at least 10 cm (4 in) away from adjacent harness, to prevent engine control system malfunctions due to receiving external noise, degraded operation of ICs, etc.**
- **Keep engine control system parts and harness dry.**

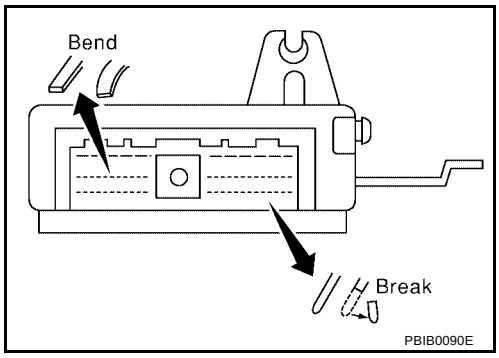

PBIB0090E

- **Before replacing ECM, perform "ECM Terminals and Reference Value" inspection and make sure ECM functions properly. Refer to EC-126 .**
- **Handle mass air flow sensor carefully to avoid damage.**
- **Do not disassemble mass air flow sensor.**
- **Do not clean mass air flow sensor with any type of detergent.**
- **Do not disassemble electric throttle control actuator.**
- **Even a slight leak in the air intake system can cause serious incidents.**
- **Do not shock or jar the camshaft position sensor (PHASE), crankshaft position sensor (POS).**

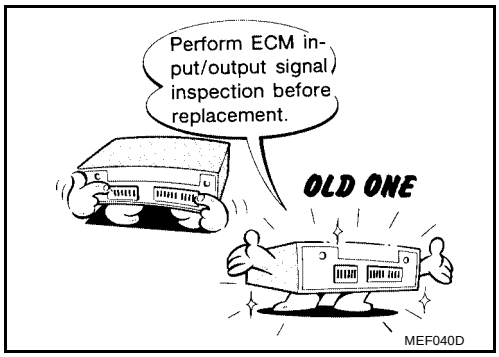

MEF040D

- **After performing each TROUBLE DIAGNOSIS, perform DTC Confirmation Procedure or Overall Function Check.**
  The DTC should not be displayed in the DTC Confirmation Procedure if the repair is completed. The Overall Function Check should be a good result if the repair is completed.

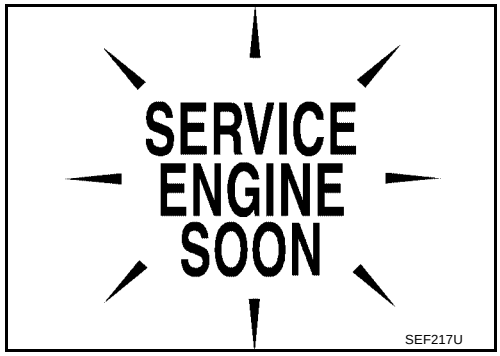

- **When measuring ECM signals with a circuit tester, never allow the two tester probes to contact.**
  Accidental contact of probes will cause a short circuit and damage the ECM power transistor.
- **Do not use ECM ground terminals when measuring input/output voltage. Doing so may result in damage to the ECM's transistor. Use a ground other than ECM terminals, such as the ground.**

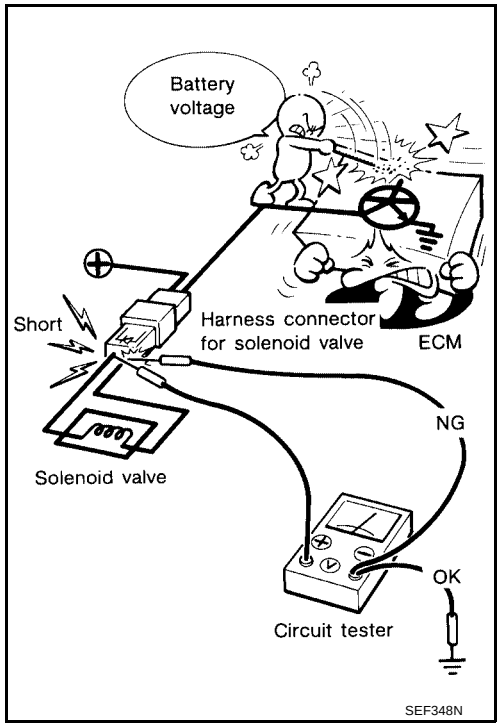

- **Do not operate fuel pump when there is no fuel in lines.**
- **Tighten fuel hose clamps to the specified torque.**

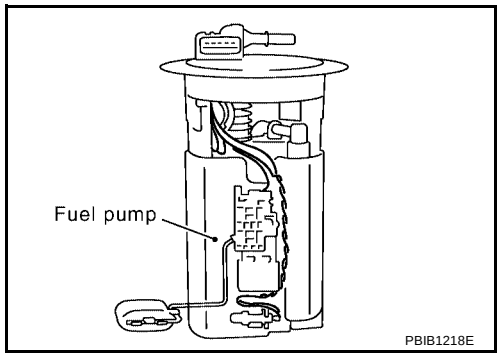

- **Do not depress accelerator pedal when starting.**
- **Immediately after starting, do not rev up engine unnecessarily.**
- **Do not rev up engine just prior to shutdown.**

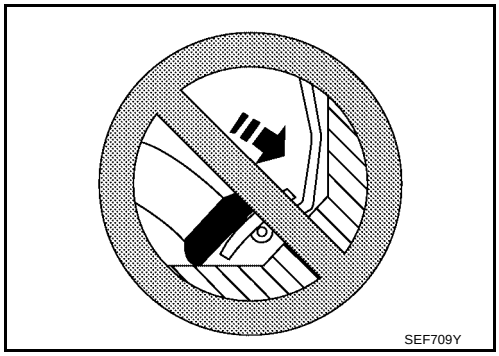

- **When installing C.B. ham radio or a mobile phone, be sure to observe the following as it may adversely affect electronic control systems depending on installation location.**
  - **Keep the antenna as far as possible from the electronic control units.**
  - **Keep the antenna feeder line more than 20 cm (8 in) away from the harness of electronic controls.**
    Do not let them run parallel for a long distance.
  - **Adjust the antenna and feeder line so that the standing-wave radio can be kept smaller.**
  - **Be sure to ground the radio to vehicle body.**

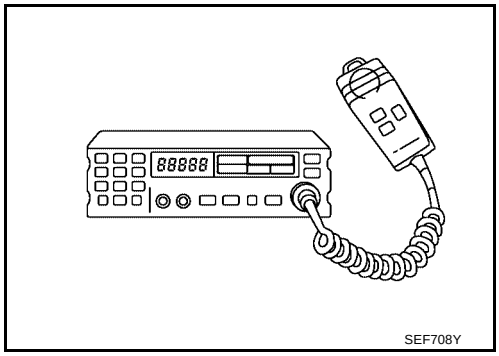

Wiring Diagrams and Trouble Diagnosis

UBS00JRG

When you read wiring diagrams, refer to the following:

- GI-15, "How to Read Wiring Diagrams"
- PG-3, "POWER SUPPLY ROUTING" for power distribution circuit

When you perform trouble diagnosis, refer to the following:

- GI-11, "HOW TO FOLLOW TEST GROUPS IN TROUBLE DIAGNOSES"
- GI-27, "How to Perform Efficient Diagnosis for an Electrical Incident"

PREPARATION

PFP:00002

Special Service Tools

UBS00K2S

The actual shapes of Kent-Moore tools may differ from those of special service tools illustrated here.

Tool number (Kent-Moore No.) Tool name	Description	
EG17650301 (J-33984-A) Radiator cap tester adapter	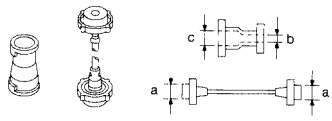 S-NT564	Adapting radiator cap tester to radiator cap and radiator filler neck **a: 28 (1.10) dia.** **b: 31.4 (1.236) dia.** **c: 41.3 (1.626) dia.** Unit: mm (in)
KV10114400 (J-38365) Heated oxygen sensor wrench	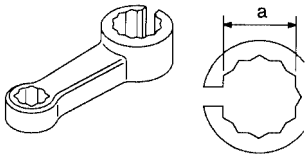 NT636	Loosening or tightening heated oxygen sensor **a: 22 mm (0.87 in)**
KV109E0010 (J-46209) Break-out box	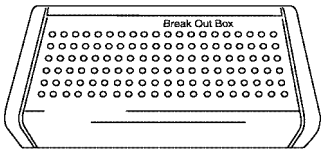 S-NT825	Measuring the ECM signals with a circuit tester
KV109E0080 (J-45819) Y-cable adapter	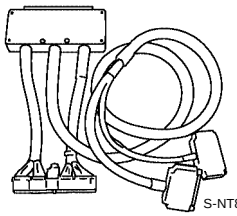 S-NT826	Measuring the ECM signals with a circuit tester
(J-44321) Fuel pressure gauge kit	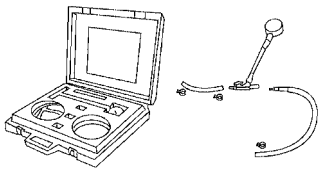 LEC642	Checking fuel pressure
(J-45356) Fuel filler cap adapter	 NT815	Checking fuel tank vacuum relief valve opening pressure
(J-44626) Air fuel ratio (A/F) sensor wrench	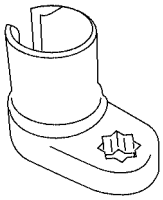 LEM054	Loosening or tightening air fuel ratio (A/F) sensor 1

Commercial Service Tools

UBS00K2T

Tool name	Description	
Leak detector i.e.: (J-41416)	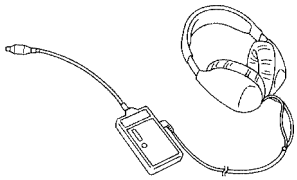 NT703	Locating the EVAP leak
EVAP service port adapter i.e.: (J-41413-OBD)	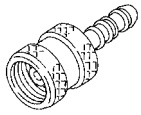 NT704	Applying positive pressure through EVAP service port
Oxygen sensor thread cleaner i.e.: (J-43897-18) (J-43897-12)	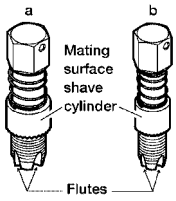 AEM488	Reconditioning the exhaust system threads before installing a new oxygen sensor or A/F sensor. Use with anti-seize lubricant shown below. **a: J-43897-18 18 mm with 1.5 mm pitch dia., for Zirconia Oxygen Sensor or A/F sensor** **b: J-43897-12 12 mm with 1.25 mm pitch dia., for Titania Oxygen Sensor**
Anti-seize lubricant i.e: (Permatex™ 133AR or equivalent meeting MIL specification MIL-A-907)	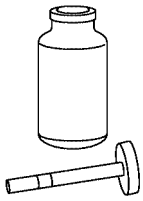 NT779	Lubricating oxygen sensor thread cleaning tool when reconditioning exhaust system threads.
Fuel tube removal tool	 LEC643	For disconnecting fuel tube quick connectors **a: 7.9 mm (5/16 in)**

ENGINE CONTROL SYSTEM

PFP:23710

System Diagram

UBS00JRJ

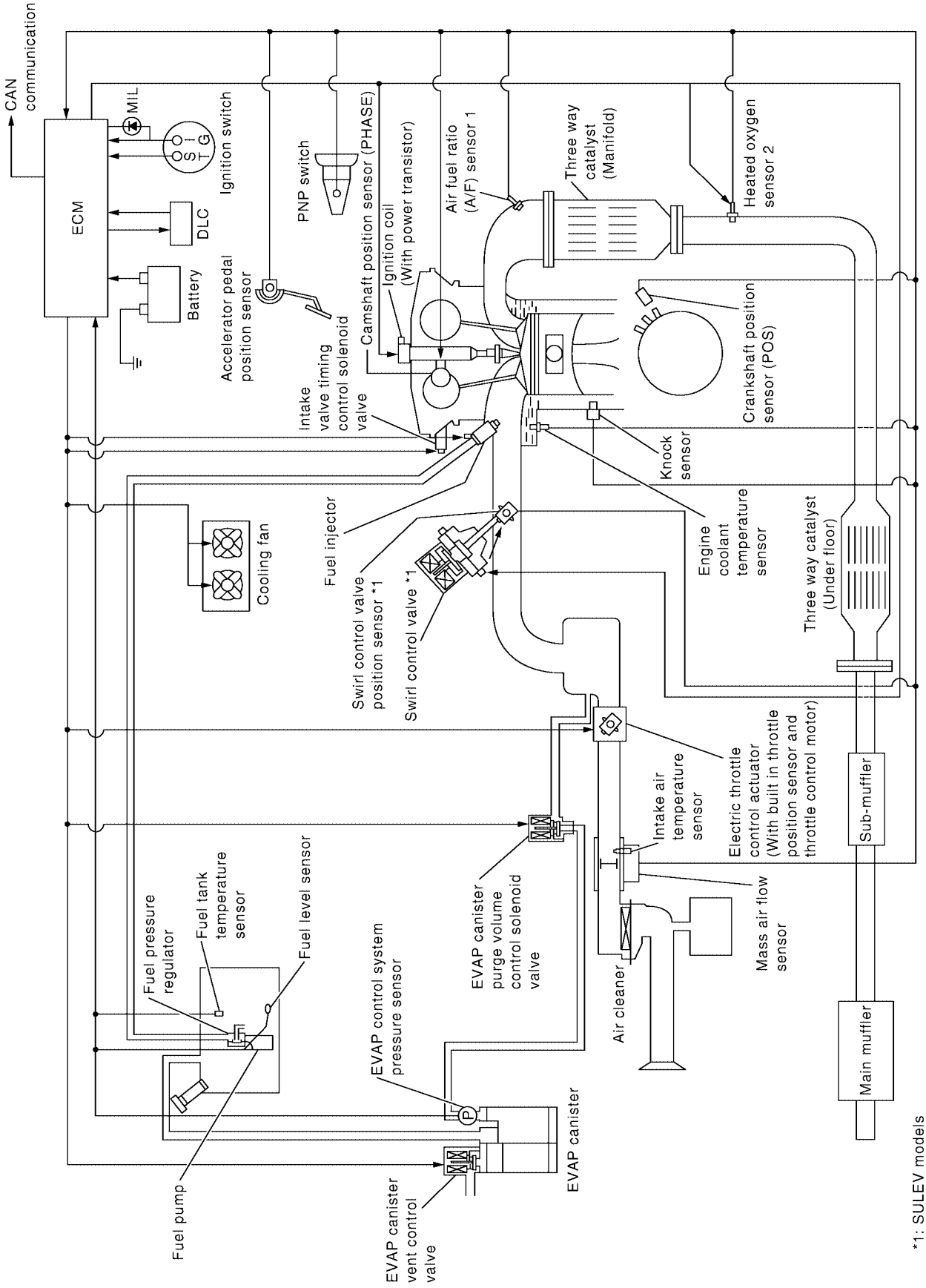

PBIB2579E

Multiport Fuel Injection (MFI) System

UBS00JRK

INPUT/OUTPUT SIGNAL CHART

Sensor	Input Signal to ECM	ECM function	Actuator
Crankshaft position sensor (POS)	Engine speed*3	Fuel injection & mixture ratio control	Fuel injector
Camshaft position sensor (PHASE)	Piston position		
Mass air flow sensor	Amount of intake air		
Engine coolant temperature sensor	Engine coolant temperature		
Throttle position sensor	Throttle position		
Accelerator pedal position sensor	Accelerator pedal position		
Park/neutral position (PNP) switch	Gear position		
Knock sensor	Engine knocking condition		
Power steering pressure sensor	Power steering operation		
Air fuel ratio (A/F) sensor 1	Density of oxygen in exhaust gas		
Heated oxygen sensor 2*1	Density of oxygen in exhaust gas		
Vehicle speed sensor*2	Vehicle speed		
Air conditioner switch	Air conditioner operation		
Electrical load	Electrical load signal		
Battery	Battery voltage*3		

*1: This sensor is not used to control the engine system under normal conditions.
*2: This signal is sent to the ECM through CAN communication line.
*3: ECM determines the start signal status by the signal of engine speed and battery voltage.

SYSTEM DESCRIPTION

The amount of fuel injected from the fuel injector is determined by the ECM. The ECM controls the length of time the valve remains open (injection pulse duration). The amount of fuel injected is a program value in the ECM memory. The program value is preset by engine operating conditions. These conditions are determined by input signals (for engine speed and intake air) from both the crankshaft position sensor and the mass air flow sensor.

VARIOUS FUEL INJECTION INCREASE/DECREASE COMPENSATION

In addition, the amount of fuel injected is compensated to improve engine performance under various operating conditions as listed below.

<Fuel increase>

- During warm-up
- When starting the engine
- During acceleration
- Hot-engine operation
- When selector lever is changed from N to D (A/T models)
- High-load, high-speed operation

<Fuel decrease>

- During deceleration
- During high engine speed operation

MIXTURE RATIO FEEDBACK CONTROL (CLOSED LOOP CONTROL)

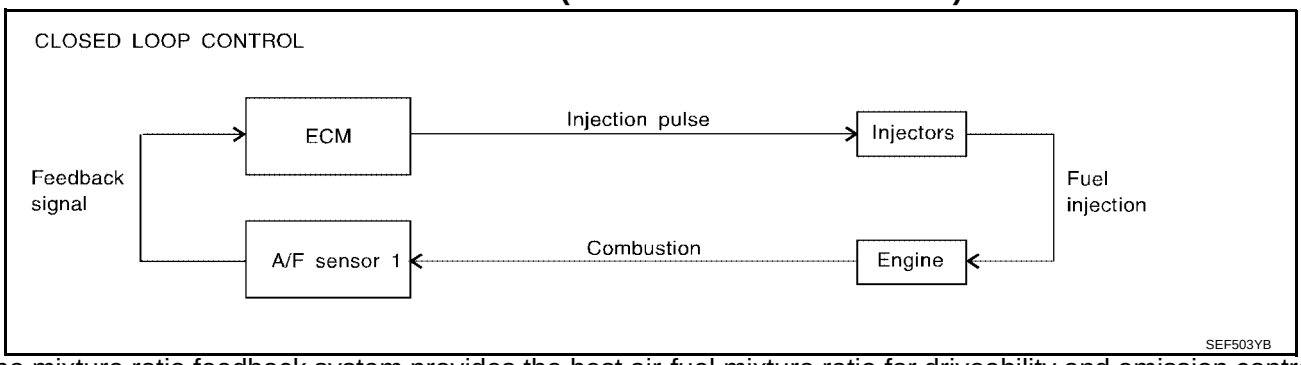

The mixture ratio feedback system provides the best air-fuel mixture ratio for driveability and emission control. The three way catalyst (manifold) can then better reduce CO, HC and NOx emissions. This system uses air fuel ratio (A/F) sensor 1 in the exhaust manifold to monitor whether the engine operation is rich or lean. The ECM adjusts the injection pulse width according to the sensor voltage signal. For more information about air fuel ratio (A/F) sensor 1, refer to EC-479, "DTC P1271 A/F SENSOR 1" . This maintains the mixture ratio within the range of stoichiometric (ideal air-fuel mixture).
This stage is referred to as the closed loop control condition.
Heated oxygen sensor 2 is located downstream of the three way catalyst (manifold). Even if the switching characteristics of air fuel ratio (A/F) sensor 1 shift, the air-fuel ratio is controlled to stoichiometric by the signal from heated oxygen sensor 2.

Open Loop Control

The open loop system condition refers to when the ECM detects any of the following conditions. Feedback control stops in order to maintain stabilized fuel combustion.

- Deceleration and acceleration
- High-load, high-speed operation
- Malfunction of air fuel ratio (A/F) sensor 1 or its circuit
- Insufficient activation of air fuel ratio (A/F) sensor 1 at low engine coolant temperature
- High engine coolant temperature
- During warm-up
- After shifting from N to D (A/T models)
- When starting the engine

MIXTURE RATIO SELF-LEARNING CONTROL

The mixture ratio feedback control system monitors the mixture ratio signal transmitted from air fuel ratio (A/F) sensor 1. This feedback signal is then sent to the ECM. The ECM controls the basic mixture ratio as close to the theoretical mixture ratio as possible. However, the basic mixture ratio is not necessarily controlled as originally designed. Both manufacturing differences (i.e., mass air flow sensor hot wire) and characteristic changes during operation (i.e., injector clogging) directly affect mixture ratio.
Accordingly, the difference between the basic and theoretical mixture ratios is monitored in this system. This is then computed in terms of “injection pulse duration” to automatically compensate for the difference between the two ratios.
“Fuel trim” refers to the feedback compensation value compared against the basic injection duration. Fuel trim includes short term fuel trim and long term fuel trim.
“Short term fuel trim” is the short-term fuel compensation used to maintain the mixture ratio at its theoretical value. The signal from air fuel ratio (A/F) sensor 1 indicates whether the mixture ratio is RICH or LEAN compared to the theoretical value. The signal then triggers a reduction in fuel volume if the mixture ratio is rich, and an increase in fuel volume if it is lean.
“Long term fuel trim” is overall fuel compensation carried out long-term to compensate for continual deviation of the short term fuel trim from the central value. Such deviation will occur due to individual engine differences, wear over time and changes in the usage environment.

FUEL INJECTION TIMING

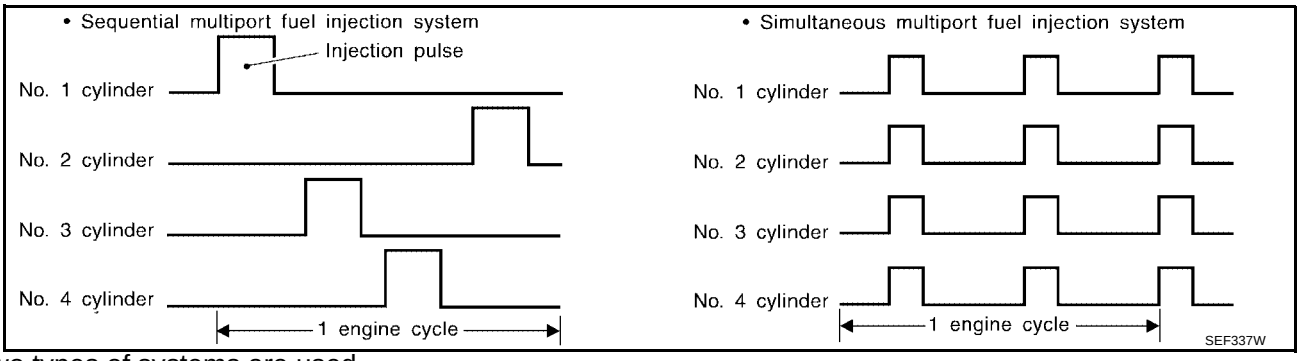

Two types of systems are used.

Sequential Multiport Fuel Injection System

Fuel is injected into each cylinder during each engine cycle according to the firing order. This system is used when the engine is running.

Simultaneous Multiport Fuel Injection System

Fuel is injected simultaneously into all four cylinders twice each engine cycle. In other words, pulse signals of the same width are simultaneously transmitted from the ECM.
The four injectors will then receive the signals two times for each engine cycle.
This system is used when the engine is being started and/or if the fail-safe system (CPU) is operating.

FUEL SHUT-OFF

Fuel to each cylinder is cut off during deceleration, operation of the engine at excessively high speeds or operation of the vehicle at excessively high speeds.

Electronic Ignition (EI) System

UBS00JRL

INPUT/OUTPUT SIGNAL CHART

Sensor	Input Signal to ECM	ECM function	Actuator
Crankshaft position sensor (POS)	Engine speed*2	Ignition timing control	Power transistor
Camshaft position sensor (PHASE)	Piston position		
Mass air flow sensor	Amount of intake air		
Engine coolant temperature sensor	Engine coolant temperature		
Throttle position sensor	Throttle position		
Accelerator pedal position sensor	Accelerator pedal position		
Knock sensor	Engine knocking		
Park/neutral position (PNP) switch	Gear position		
Vehicle speed sensor*1	Vehicle speed		
Battery	Battery voltage*2		

*1: This signal is sent to the ECM through CAN communication line.
*2: ECM determines the start signal status by the signal of engine speed and battery voltage.

SYSTEM DESCRIPTION

Firing order: 1 - 3 - 4 - 2
The ignition timing is controlled by the ECM to maintain the best air-fuel ratio for every running condition of the engine. The ignition timing data is stored in the ECM.
The ECM receives information such as the injection pulse width and camshaft position sensor signal. Computing this information, ignition signals are transmitted to the power transistor.
During the following conditions, the ignition timing is revised by the ECM according to the other data stored in the ECM.

- At starting
- During warm-up
- At idle

- At low battery voltage
- During acceleration

The knock sensor retard system is designed only for emergencies. The basic ignition timing is programmed within the anti-knocking zone, if recommended fuel is used under dry conditions. The retard system does not operate under normal driving conditions. If engine knocking occurs, the knock sensor monitors the condition. The signal is transmitted to the ECM. The ECM retards the ignition timing to eliminate the knocking condition.

Fuel Cut Control (at No Load and High Engine Speed)

UBS00JRM

INPUT/OUTPUT SIGNAL CHART

Sensor	Input Signal to ECM	ECM function	Actuator
Park/neutral position (PNP) switch	Neutral position	Fuel cut control	Fuel injector
Accelerator pedal position sensor	Accelerator pedal position		
Engine coolant temperature sensor	Engine coolant temperature		
Crankshaft position sensor (POS) Camshaft position sensor (PHASE)	Engine speed		
Vehicle speed sensor*	Vehicle speed		

*: This signal is sent to the ECM through CAN communication line.

SYSTEM DESCRIPTION

If the engine speed is above 2,500 rpm under no load (for example, the shift position is neutral and engine speed is over 2,500 rpm) fuel will be cut off after some time. The exact time when the fuel is cut off varies based on engine speed.
Fuel cut will be operated until the engine speed reaches 2,000 rpm, then fuel cut will be cancelled.

NOTE:
This function is different from deceleration control listed under “Multiport Fuel Injection (MFI) System”, EC-28 .

AIR CONDITIONING CUT CONTROL

PFP:23710

Input/output Signal Chart

UBS00JRN

Sensor	Input Signal to ECM	ECM function	Actuator
Air conditioner switch	Air conditioner ON signal	Air conditioner cut control	Air conditioner relay
Park/neutral position (PNP) switch	Neutral position		
Throttle position sensor	Throttle position		
Accelerator pedal position sensor	Accelerator pedal position		
Crankshaft position sensor (POS) Camshaft position sensor (PHASE)	Engine speed*2		
Engine coolant temperature sensor	Engine coolant temperature		
Refrigerant pressure sensor	Refrigerant pressure		
Power steering pressure sensor	Power steering operation		
Vehicle speed sensor*1	Vehicle speed		
Battery	Battery voltage*2		

*1: This signal is sent to the ECM through CAN communication line.
*2: ECM determines the start signal status by the signal of engine speed and battery voltage.

System Description

UBS00JRO

This system improves engine operation when the air conditioner is used.
Under the following conditions, the air conditioner is turned off.

- When the accelerator pedal is fully depressed.
- When cranking the engine.
- At high engine speeds.
- When the engine coolant temperature becomes excessively high.
- When operating power steering during low engine speed or low vehicle speed.
- When engine speed is excessively low.
- When refrigerant pressure is excessively low or high.

AUTOMATIC SPEED CONTROL DEVICE (ASCD)

PFP:18930

System Description

UBS00JRP

INPUT/OUTPUT SIGNAL CHART

Sensor	Input signal to ECM	ECM function	Actuator
ASCD brake switch	Brake pedal operation	ASCD vehicle speed control	Electric throttle control actuator
Stop lamp switch	Brake pedal operation		
ASCD clutch switch (M/T models)	Clutch pedal operation		
ASCD steering switch	ASCD steering switch operation		
Park/Neutral position (PNP) switch (A/T models)	Gear position		
Combination meter*	Vehicle speed		
TCM*	Powertrain revolution		

*: This signal is sent to the ECM through CAN communication line.

BASIC ASCD SYSTEM

Refer to Owner's Manual for ASCD operating instructions.
Automatic Speed Control Device (ASCD) allows a driver to keep vehicle at predetermined constant speed without depressing accelerator pedal. Driver can set vehicle speed in advance between approximately 40 km/h (25 MPH) and 144 km/h (89 MPH).
ECM controls throttle angle of electric throttle control actuator to regulate engine speed.
Operation status of ASCD is indicated by CRUISE indicator and SET indicator in combination meter. If any malfunction occurs in ASCD system, it automatically deactivates control.

NOTE:
Always drive vehicle in safe manner according to traffic conditions and obey all traffic laws.

SET OPERATION

Press MAIN switch. (The CRUISE indicator in combination meter illuminates.)
When vehicle speed reaches a desired speed between approximately 40 km/h (25 MPH) and 144 km/h (89 MPH), press SET/COAST switch. (Then SET indicator in combination meter illuminates.)

ACCEL OPERATION

If the RESUME/ACCELERATE switch is pressed during cruise control driving, increase the vehicle speed until the switch is released or vehicle speed reaches maximum speed controlled by the system.
And then ASCD will keep the new set speed.

CANCEL OPERATION

When any of following conditions exist, cruise operation will be canceled.

- CANCEL switch is pressed
- More than 2 switches at ASCD steering switch are pressed at the same time (Set speed will be cleared)
- Brake pedal is depressed
- Clutch pedal is depressed or gear position is changed to the neutral position (M/T models)
- Selector lever is changed to N, P, R position (A/T models)
- Vehicle speed decreased to 13km/h(8MPH) lower than the set speed

When the ECM detects any of the following conditions, the ECM will cancel the cruise operation and inform the driver by blinking indicator lamp.

- Engine coolant temperature is slightly higher than the normal operating temperature, CRUISE lamp may blink slowly.
  When the engine coolant temperature decreases to the normal operating temperature, CRUISE lamp will stop blinking and the cruise operation will be able to work by pressing SET/COAST switch or RESUME/ACCELERATE switch.
- Malfunction for some self-diagnoses regarding ASCD control: SET lamp will blink quickly.

COAST OPERATION

When the SET/COAST switch is pressed during cruise control driving, decrease vehicle set speed until the switch is released. And then ASCD will keep the new set speed.

RESUME OPERATION

When the RESUME/ACCELERATE switch is pressed after cancel operation other than pressing MAIN switch is performed, vehicle speed will return to last set speed. To resume vehicle set speed, vehicle condition must meet following conditions.

- Brake pedal is released.
- Clutch pedal is released (M/T models)
- A/T selector lever is in other than P and N positions (A/T models)
- Vehicle speed is greater than 40 km/h (25 MPH) and less than 144 km/h (89 MPH)

Component Description

UBS00JRQ

ASCD STEERING SWITCH

Refer to EC-542 .

ASCD BRAKE SWITCH

Refer to EC-549 and EC-643 .

ASCD CLUTCH SWITCH

Refer to EC-567 .

STOP LAMP SWITCH

Refer to EC-567 .

ELECTRIC THROTTLE CONTROL ACTUATOR

Refer to EC-398 and EC-400 .

ASCD INDICATOR

Refer to EC-652 .

CAN COMMUNICATION

PFP:23710

System Description

UBS00JRR

CAN (Controller Area Network) is a serial communication line for real time application. It is an on-vehicle multiplex communication line with high data communication speed and excellent error detection ability. Many electronic control units are equipped onto a vehicle, and each control unit shares information and links with other control units during operation (not independent). In CAN communication, control units are connected with 2 communication lines (CAN H line, CAN L line) allowing a high rate of information transmission with less wiring. Each control unit transmits/receives data but selectively reads required data only.
Refer to LAN-4 , about CAN communication for detail.

EVAPORATIVE EMISSION SYSTEM

PFP:14950

Description

UBS00JRS

SYSTEM DESCRIPTION

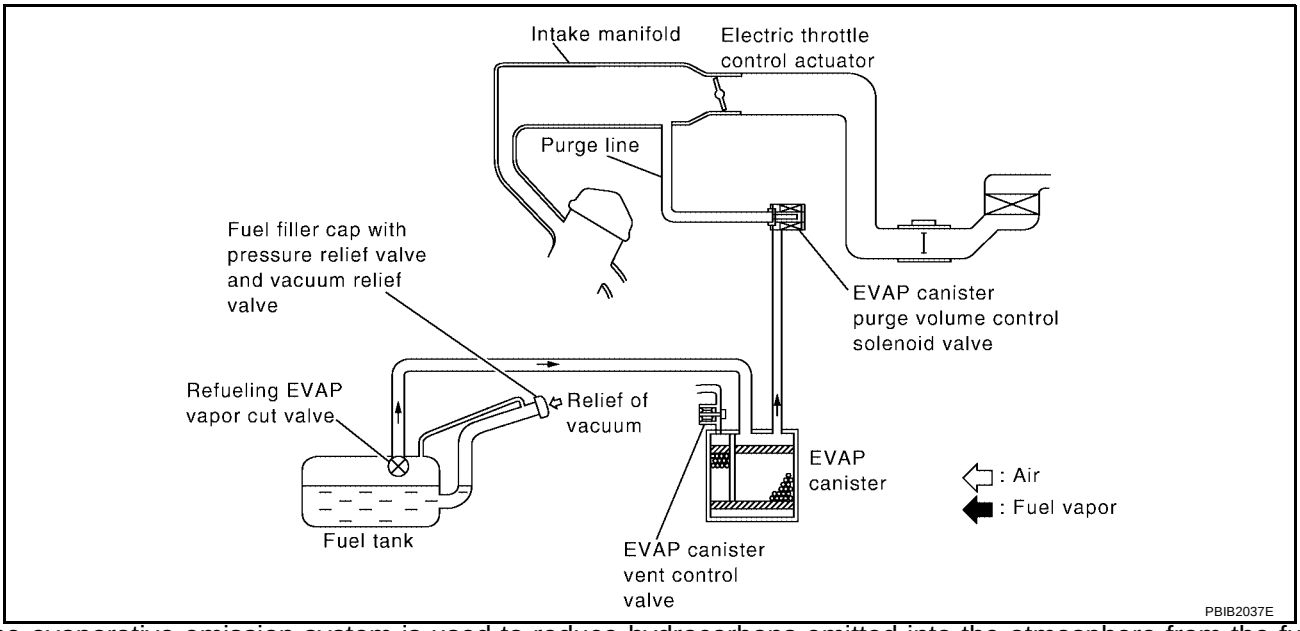

The evaporative emission system is used to reduce hydrocarbons emitted into the atmosphere from the fuel system. This reduction of hydrocarbons is accomplished by activated charcoals in the EVAP canister.

The fuel vapor in the sealed fuel tank is led into the EVAP canister which contains activated carbon and the vapor is stored there when the engine is not operating or when refueling to the fuel tank.

The vapor in the EVAP canister is purged by the air through the purge line to the intake manifold when the engine is operating. EVAP canister purge volume control solenoid valve is controlled by ECM. When the engine operates, the flow rate of vapor controlled by EVAP canister purge volume control solenoid valve is proportionally regulated as the air flow increases.

EVAP canister purge volume control solenoid valve also shuts off the vapor purge line during decelerating and idling.

EVAPORATIVE EMISSION LINE DRAWING

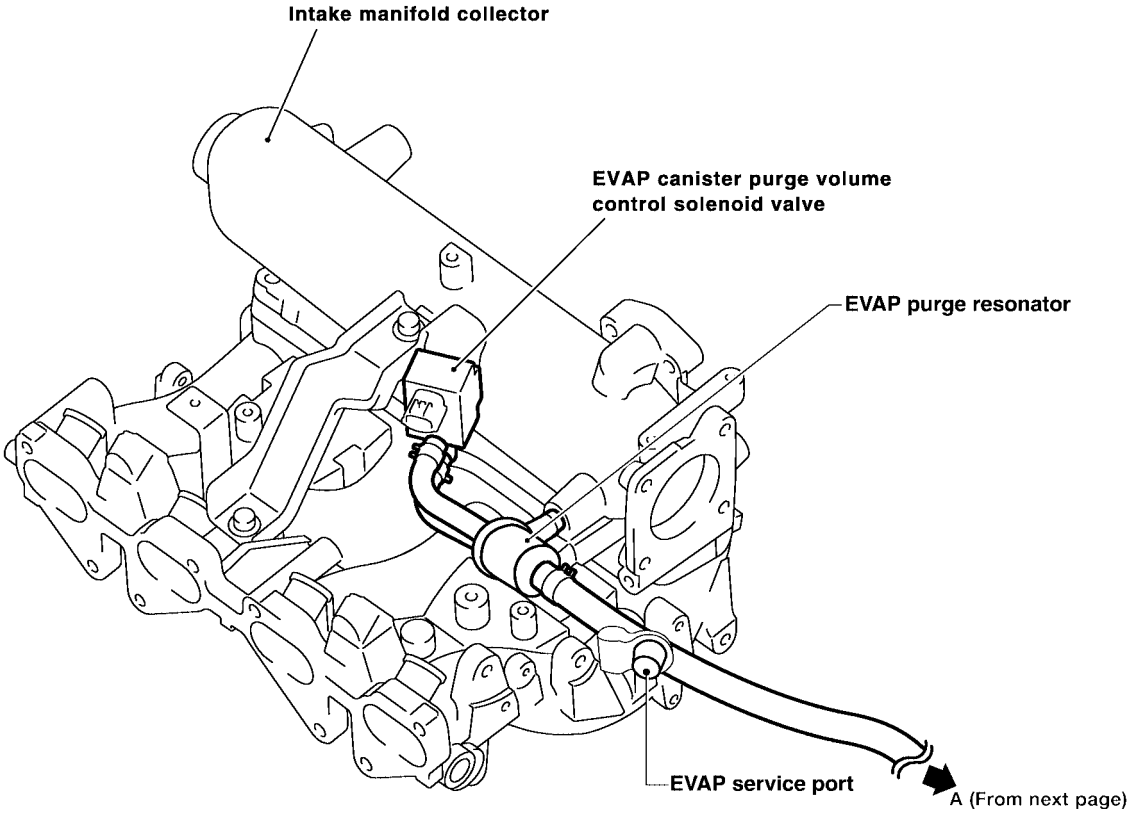

NOTE : Do not use soapy water or any type of solvent while installing vacuum hose or purge hoses.

BBIA0524E

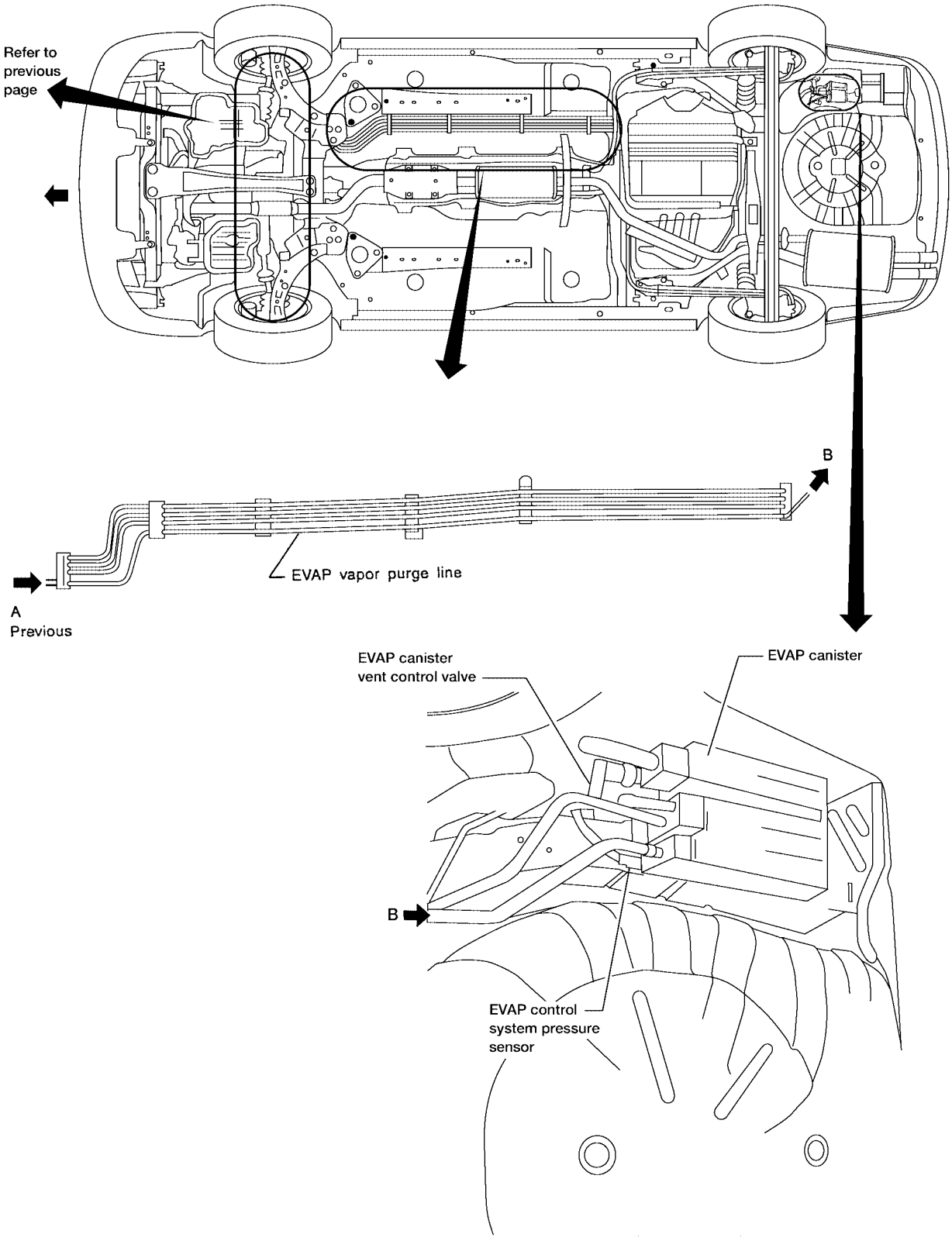
Refer to previous page
B
EVAP vapor purge line
A
Previous
EVAP canister vent control valve
EVAP canister
B
EVAP control system pressure sensor
BBIA0294E

Component Inspection

UBS00JRT

EVAP CANISTER

Check EVAP canister as follows:

1. Block port **B** .
2. Blow air into port **A** and check that it flows freely out of port **C** .
3. Release blocked port **B** .
4. Apply vacuum pressure to port **B** and check that vacuum pressure exists at the ports **A** and **C** .
5. Block port **A** and **B** .
6. Apply pressure to port **C** and check that there is no leakage.

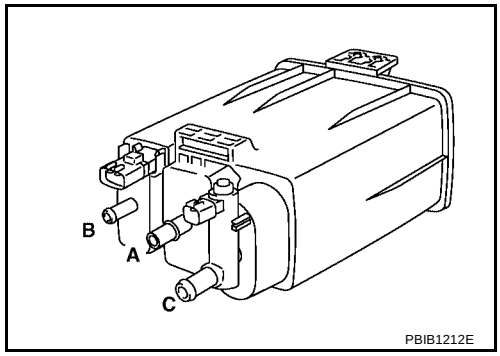

FUEL TANK VACUUM RELIEF VALVE (BUILT INTO FUEL FULLER CAP)

1. Wipe clean valve housing.

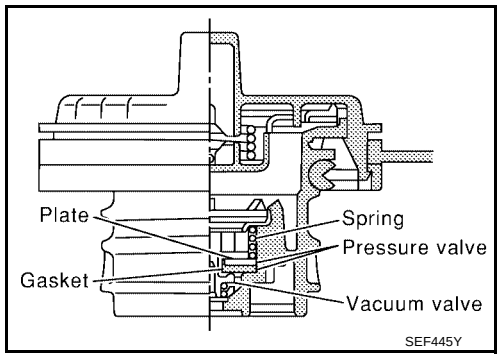

2. Check valve opening pressure and vacuum.

   Pressure: 15.3 - 20.0 kPa
   (0.156 - 0.204 kg/cm^2 , 2.22 - 2.90 psi)
   Vacuum: –6.0 to –3.4 kPa
   (–0.061 to –0.035 kg/cm^2 , –0.87 to –0.48 psi)

3. If out of specification, replace fuel filler cap as an assembly.

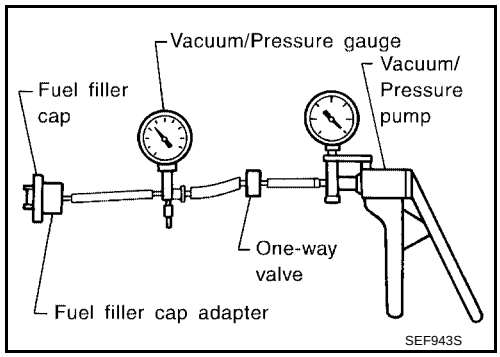

CAUTION:
Use only a genuine fuel filler cap as a replacement. If an incorrect fuel filler cap is used, the MIL may come on.

EVAP CANISTER PURGE VOLUME CONTROL SOLENOID VALVE

Refer toEC-323

FUEL TANK TEMPERATURE SENSOR

Refer to EC-260 .

EVAP CANISTER VENT CONTROL VALVE

Refer to EC-330 .

EVAP CONTROL SYSTEM PRESSURE SENSOR

Refer to EC-334 .

EVAP SERVICE PORT

Positive pressure is delivered to the EVAP system through the EVAP service port. If fuel vapor leakage in the EVAP system occurs, use a leak detector to locate the leak.

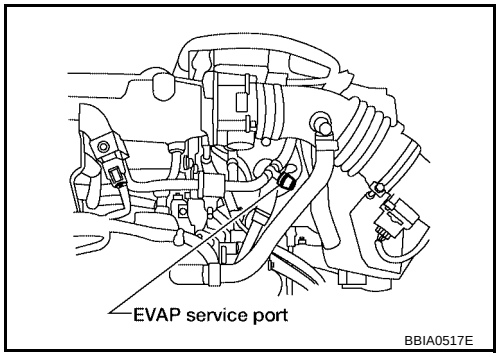

Removal and Installation

UBS00JRU

EVAP CANISTER

Tighten EVAP canister as shown in the figure.

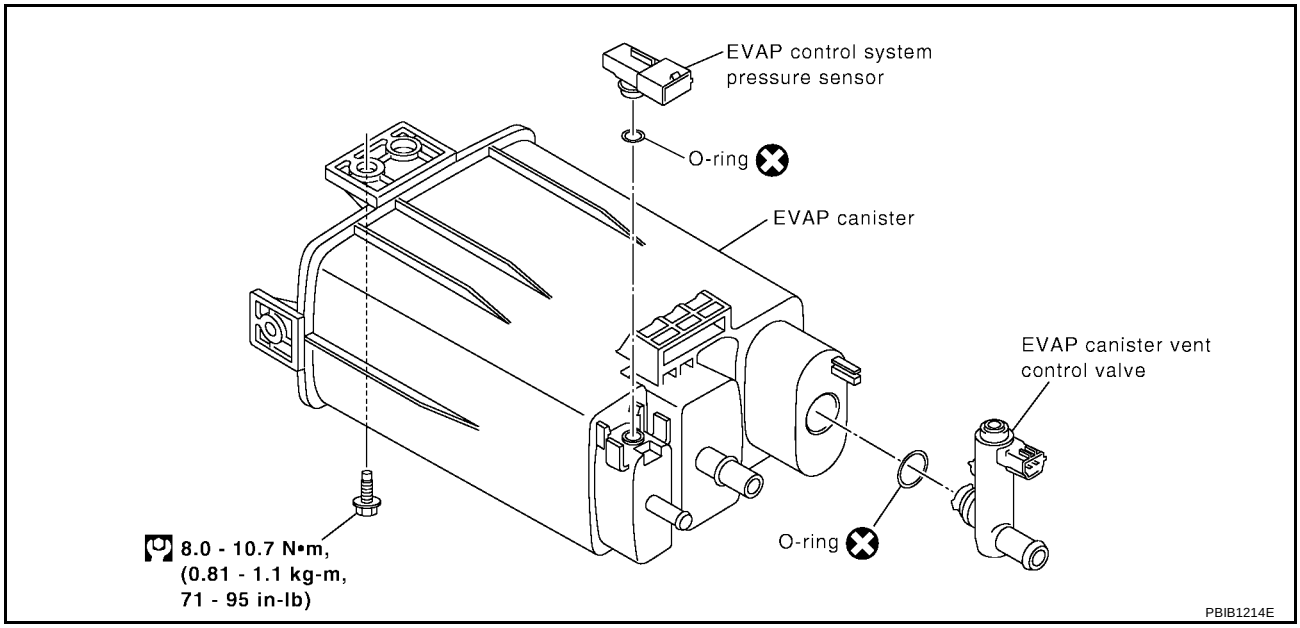

EVAP CANISTER VENT CONTROL VALVE

1. Turn EVAP canister vent control valve clockwise.
2. Remove the EVAP canister vent control valve.

Do not reuse the O-ring, replace it with a new one.

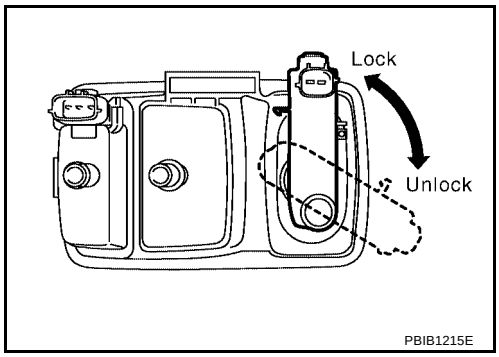

How to Detect Fuel Vapor Leakage

UBS00JRV

CAUTION:

- **Never use compressed air or a high pressure pump.**
- **Do not exceed 4.12 kPa (0.042 kg/cm^2 , 0.6 psi) of pressure in EVAP system.**

NOTE:

- Do not start engine.
- Improper installation of EVAP service port adapter to the EVAP service port may cause a leak.

WITH CONSULT-II

1. Attach the EVAP service port adapter securely to the EVAP service port.
2. Also attach the pressure pump and hose to the EVAP service port adapter.
3. Turn ignition switch ON.
4. Select the “EVAP SYSTEM CLOSE” of “WORK SUPPORT MODE” with CONSULT-II.
5. Touch “START”. A bar graph (Pressure indicating display) will appear on the screen.

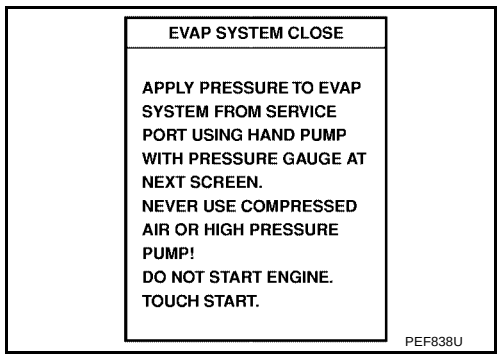

6. Apply positive pressure to the EVAP system until the pressure indicator reaches the middle of the bar graph.
7. Remove EVAP service port adapter and hose with pressure pump.

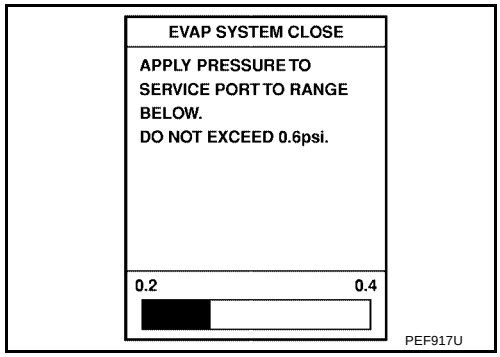

8. Locate the leak using a leak detector. Refer to EC-37, "EVAPORATIVE EMISSION LINE DRAWING" .

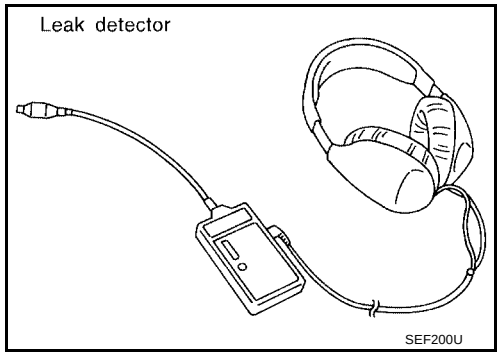

WITHOUT CONSULT-II

1. Attach the EVAP service port adapter securely to the EVAP service port.
2. Also attach the pressure pump with pressure gauge to the EVAP service port adapter.

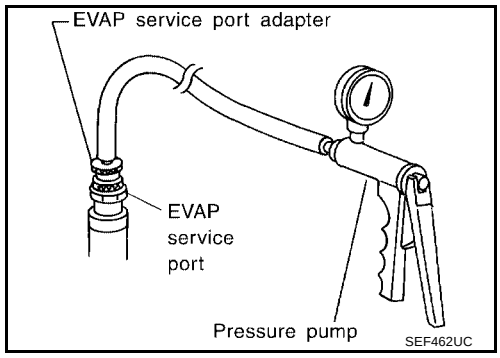

3. Apply battery voltage to between the terminals of both EVAP canister vent control valve to make a closed EVAP system.
4. To locate the leak, deliver positive pressure to the EVAP system until pressure gauge points reach 1.38 to 2.76 kPa (0.014 to 0.028 kg/cm^2 , 0.2 to 0.4 psi).
5. Remove EVAP service port adapter and hose with pressure pump.
6. Locate the leak using a leak detector. Refer to EC-37, "EVAPORATIVE EMISSION LINE DRAWING" .

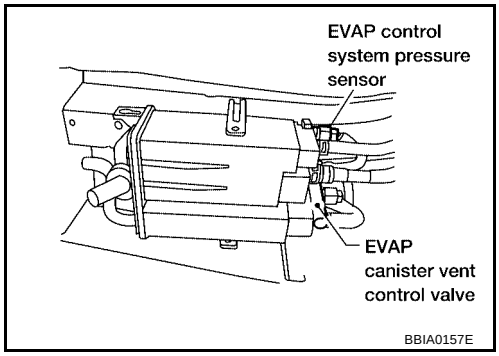

ON BOARD REFUELING VAPOR RECOVERY (ORVR)

PFP:00032

System Description

UBS00JRW

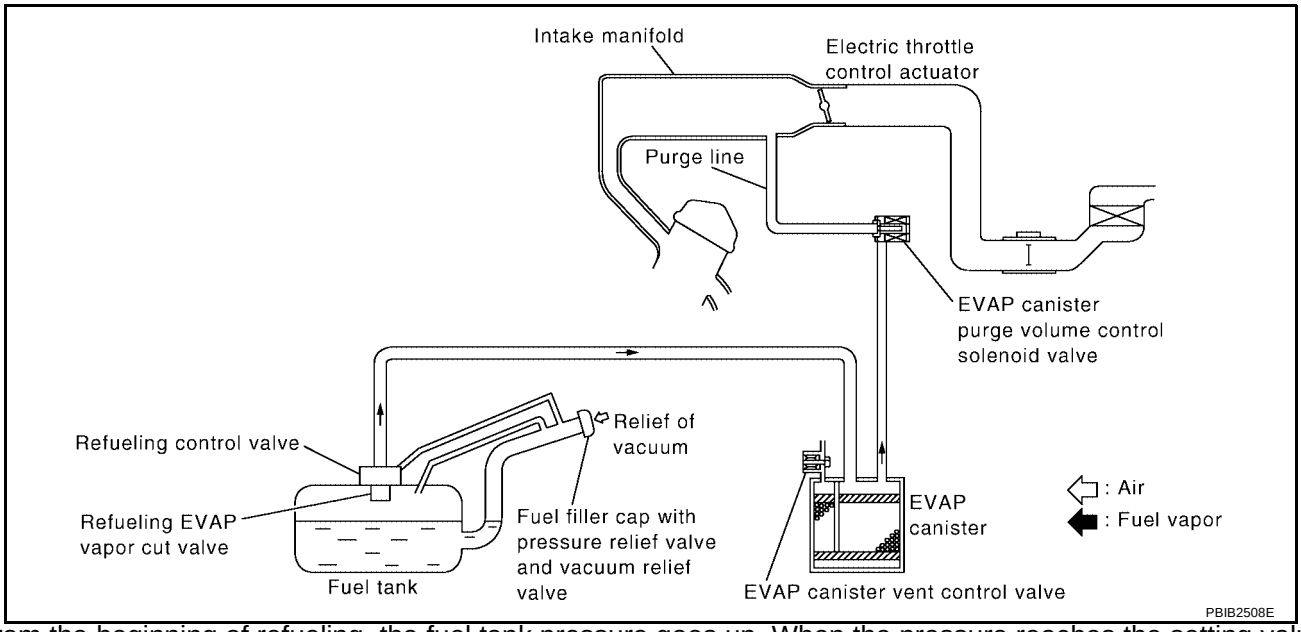

From the beginning of refueling, the fuel tank pressure goes up. When the pressure reaches the setting value of the refueling control valve (RCV) opening pressure, the RCV is opened. After RCV opens, the air and vapor inside the fuel tank go through refueling EVAP vapor cut valve, RCV and EVAP/ORVR line to the EVAP canister. The vapor is absorbed by the EVAP canister and the air is released to the atmosphere.

When the refueling has reached the full level of the fuel tank, the refueling EVAP vapor cut valve is closed and refueling is stopped because of auto shut-off. The vapor which was absorbed by the EVAP canister is purged during driving.

The RCV is always closed during driving and the evaporative emission control system is operated the same as conventional system.

WARNING:

When conducting inspections below, be sure to observe the following:

- **Put a “CAUTION: INFLAMMABLE” sign in workshop.**
- **Do not smoke while servicing fuel system. Keep open flames and sparks away from work area.**
- **Be sure to furnish the workshop with a CO_2 fire extinguisher.**

CAUTION:

- **Before removing fuel line parts, carry out the following procedures:**
  - **Put drained fuel in an explosion-proof container and put lid on securely.**
  - **Release fuel pressure from fuel line. Refer to EC-94, "FUEL PRESSURE RELEASE" .**
  - **Disconnect battery ground cable.**
- **Always replace O-ring when the fuel gauge retainer is removed.**
- **Do not kink or twist hose and tube when they are installed.**
- **Do not tighten hose and clamps excessively to avoid damaging hoses.**
- **After installation, run engine and check for fuel leaks at connection.**
- **Do not attempt to top off the fuel tank after the fuel pump nozzle shuts off automatically. Continued refueling may cause fuel overflow, resulting in fuel spray and possibly a fire.**

Diagnostic Procedure

UBS00JRX

SYMPTOM: FUEL ODOR FROM EVAP CANISTER IS STRONG.

1. CHECK EVAP CANISTER

1. Remove EVAP canister with EVAP canister vent control valve and EVAP control system pressure sensor attached.
2. Weigh the EVAP canister with EVAP canister vent control valve and EVAP control system pressure sensor attached.
   The weight should be less than 1.9 kg (4.2 lb).

OK or NG

OK >> GO TO 2.
NG >> GO TO 3.

2. CHECK IF EVAP CANISTER SATURATED WITH WATER

Does water drain from the EVAP canister?

Yes or No

Yes >> GO TO 3.
No >> GO TO 5.

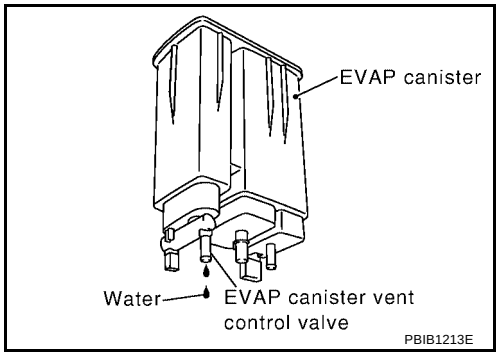

3. REPLACE EVAP CANISTER

Replace EVAP canister with a new one.

>> GO TO 4.

4. DETECT MALFUNCTIONING PART

Check the EVAP hose between EVAP canister and vehicle frame for clogging or poor connection.

>> Repair or replace EVAP hose.

5. CHECK REFUELING CONTROL VALVE

Refer to EC-48, "REFUELING CONTROL VALVE" .

OK or NG

OK >> GO TO 6.
NG >> Replace refueling control valve.

6. CHECK REFUELING EVAP VAPOR CUT VALVE

Refer to EC-47, "REFUELING EVAP VAPOR CUT VALVE" .

OK or NG

OK >> **INSPECTION END**
NG >> Replace refueling EVAP vapor cut valve with fuel tank.

SYMPTOM: CANNOT REFUEL/FUEL ODOR FROM THE FUEL FILLER OPENING IS STRONG WHILE REFUELING.

1. CHECK EVAP CANISTER

1. Remove EVAP canister with EVAP canister vent control valve and EVAP control system pressure sensor attached.
2. Weigh the EVAP canister with EVAP canister vent control valve and EVAP control system pressure sensor attached.
   The weight should be less than 1.9 kg (4.2 lb).

OK or NG

OK >> GO TO 2.
NG >> GO TO 3.

2. CHECK IF EVAP CANISTER SATURATED WITH WATER

Does water drain from the EVAP canister?

Yes or No

Yes >> GO TO 3.
No >> GO TO 5.

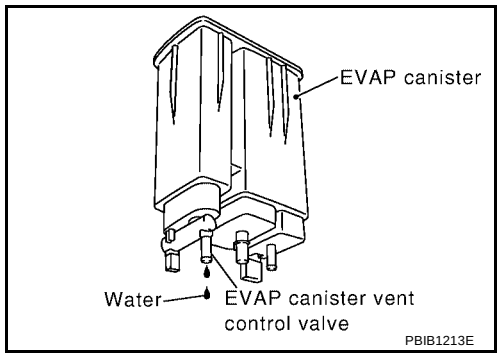

3. REPLACE EVAP CANISTER

Replace EVAP canister with a new one.

>> GO TO 4.

4. DETECT MALFUNCTIONING PART

Check the EVAP hose between EVAP canister and vehicle frame for clogging or poor connection.

>> Repair or replace EVAP hose.

5. CHECK VENT HOSES AND VENT TUBES

Check hoses and tubes between EVAP canister and refueling EVAP vapor cut valve for clogging, kink, looseness and improper connection.

OK or NG

OK >> GO TO 6.
NG >> Repair or replace hoses and tubes.

6. CHECK FILLER NECK TUBE

Check signal line and recirculation line for clogging, dents and cracks.

OK or NG

OK >> GO TO 7.
NG >> Replace filler neck tube.

7. CHECK REFUELING CONTROL VALVE

Refer to EC-48, "REFUELING CONTROL VALVE" .

OK or NG

OK >> GO TO 8.
NG >> Replace refueling control valve.

8. CHECK REFUELING EVAP VAPOR CUT VALVE

Refer to EC-48, "REFUELING CONTROL VALVE" .

OK or NG

OK >> GO TO 9.
NG >> Replace refueling EVAP vapor cut valve with fuel tank.

9. CHECK FUEL FILLER TUBE

Check filler neck tube and hose connected to the fuel tank for clogging, dents and cracks.

OK or NG

OK >> GO TO 10.
NG >> Replace fuel filler tube.

10. CHECK ONE-WAY FUEL VALVE-I

Check one-way valve for clogging.

OK or NG

OK >> GO TO 11.
NG >> Repair or replace one-way fuel valve with fuel tank.

11. CHECK ONE-WAY FUEL VALVE-II

1. Make sure that fuel is drained from the tank.
2. Remove fuel filler tube and hose.
3. Check one-way fuel valve for operation as follows.
   When a stick is inserted, the valve should open, when removing stick it should close.
   Do not drop any material into the tank.

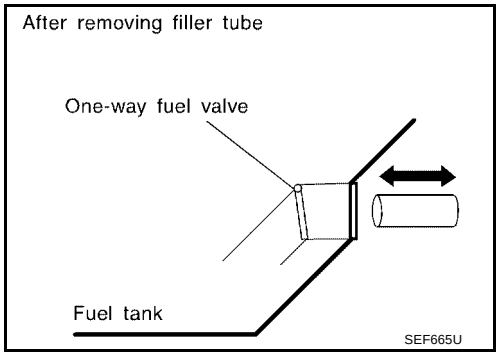

OK or NG

OK >> **INSPECTION END**
NG >> Replace fuel filler tube or replace one-way fuel valve with fuel tank.

Component Inspection

UBS00JRY

REFUELING EVAP VAPOR CUT VALVE

With CONSULT-II

1. Remove fuel tank. Refer to FL-7, "FUEL TANK" .
2. Drain fuel from the tank as follows:

a. Remove fuel feed hose located on the fuel level sensor unit retainer.

b. Connect a spare fuel hose, one side to fuel level sensor unit retainer where the hose was removed and the other side to a fuel container.

c. Drain fuel using “FUEL PUMP RELAY” in “ACTIVE TEST” mode with CONSULT-II.

3. Check refueling EVAP vapor cut valve for being stuck to close as follows.
Blow air into the refueling EVAP vapor cut valve (from the hose end B), and check that the air flows freely into the tank.
4. Check refueling EVAP vapor cut valve for being stuck to open as follows.

a. Connect vacuum pump to hose ends A and B using suitable 3-way connector.

b. Remove fuel level sensor unit retainer with fuel level sensor unit.
Always replace O-ring with new one.

c. Put fuel tank upside down.

d. Apply vacuum pressure to both hose ends A and B [–13.3 kPa (–100 mmHg, –3.94 inHg)] with fuel level sensor unit retainer remaining open and check that the pressure is applicable.

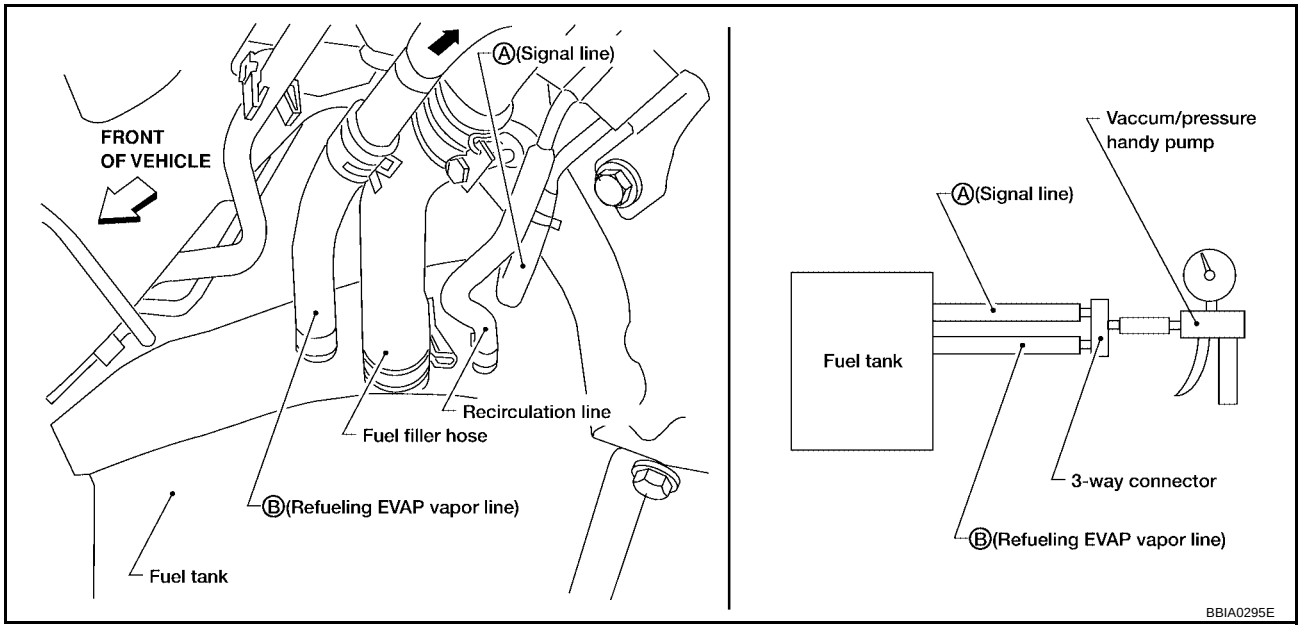

Without CONSULT-II

1. Remove fuel tank. Refer to FL-7, "FUEL TANK" .
2. Drain fuel from the tank as follows:

a. Remove fuel level sensor unit retainer.

b. Drain fuel from the tank using a handy pump into a fuel container.

3. Check refueling EVAP vapor cut valve for being stuck to close as follows.
Blow air into the refueling EVAP vapor cut valve (from hose end B), and check that the air flows freely into the tank.
4. Check EVAP vapor cut valve for being stuck to open as follows.

a. Connect vacuum pump to hose ends A and B using a suitable 3-way connector.

b. Remove fuel level sensor unit retainer with fuel level sensor unit.
Always replace O-ring with new one.

c. Put fuel tank upside down.

d. Apply vacuum pressure to both hose ends A and B [–13.3 kPa (–100 mmHg, –3.94 inHg)] with fuel level sensor unit retainer remaining open and check that the pressure is applicable.

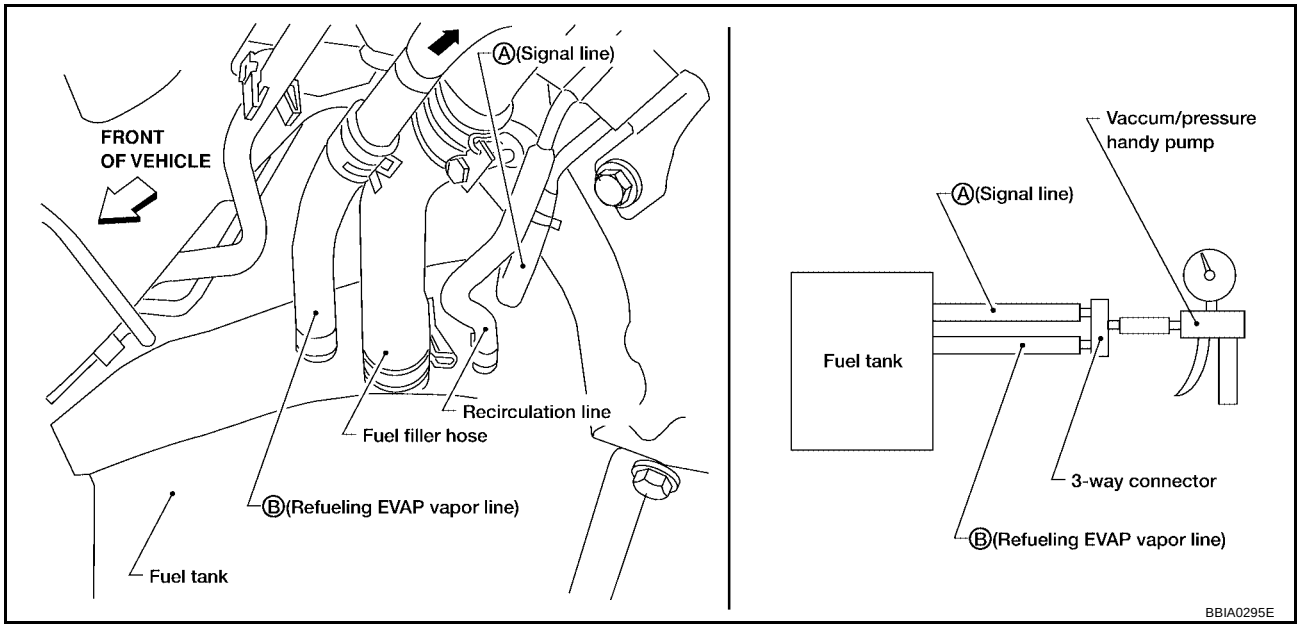

REFUELING CONTROL VALVE

1. Remove fuel filler cap.
2. Check air continuity between hose ends A and B.
   Blow air into the hose end B. Air should flow freely into the fuel tank.
3. Blow air into hose end A and check there is no leakage.
4. Apply pressure to both hose ends A and B [20 kPa (150 mmHg, 5.91 inHg)] using a pressure pump and a suitable 3-way connector. Check that there is no leakage.

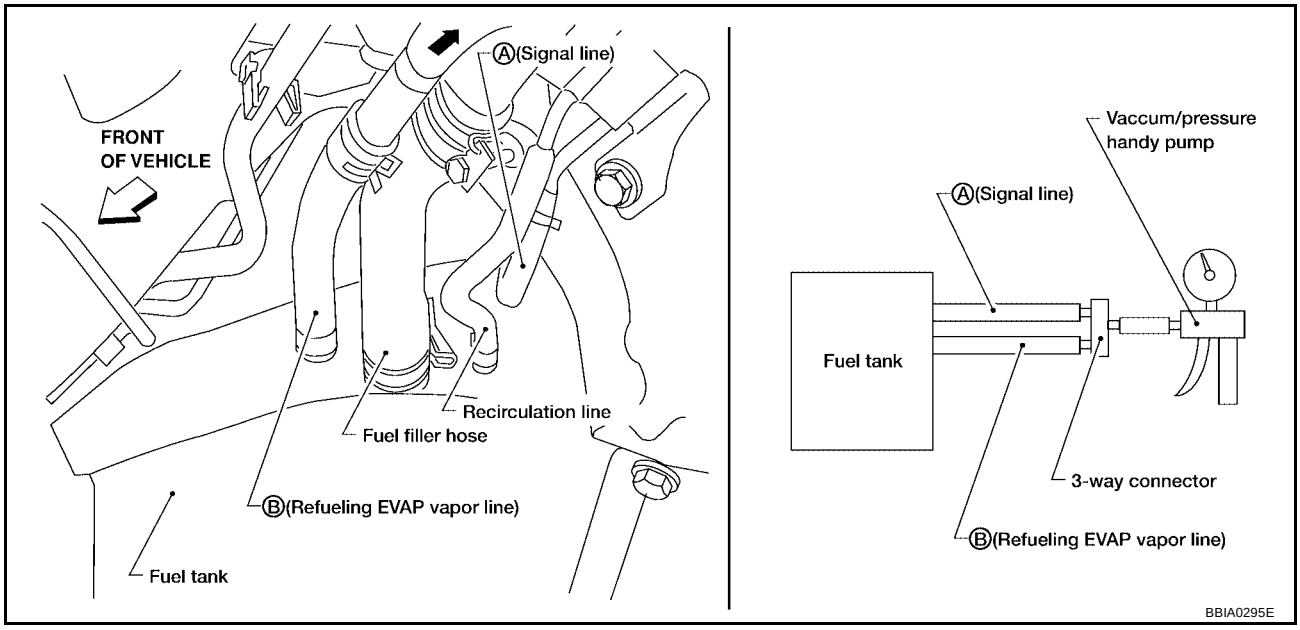

POSITIVE CRANKCASE VENTILATION

PFP:11810

Description

UBS00JRZ

SYSTEM DESCRIPTION

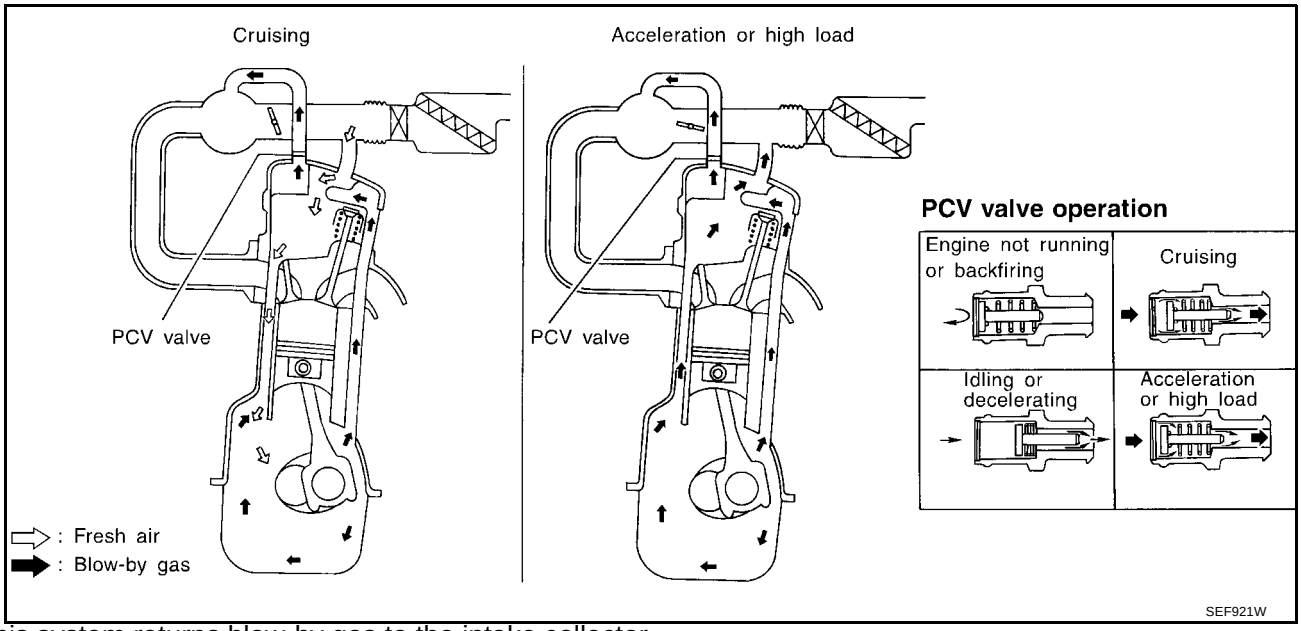

This system returns blow-by gas to the intake collector.

The positive crankcase ventilation (PCV) valve is provided to conduct crankcase blow-by gas to the intake manifold. During partial throttle operation of the engine, the intake manifold sucks the blow-by gas through the PCV valve. Normally, the capacity of the valve is sufficient to handle any blow-by and a small amount of ventilating air. The ventilating air is then drawn from the air inlet tubes into the crankcase. In this process the air passes through the hose connecting air inlet tubes to rocker cover. Under full-throttle condition, the manifold vacuum is insufficient to draw the blow-by flow through the valve. The flow goes through the hose connection in the reverse direction.

On vehicles with an excessively high blow-by, the valve does not meet the requirement. This is because some of the flow will go through the hose connection to the air inlet tubes under all conditions.

Component Inspection

UBS00JS0

PCV (POSITIVE CRANKCASE VENTILATION) VALVE

With engine running at idle, remove PCV valve from rocker cover. A properly working valve makes a hissing noise as air passes through it. A strong vacuum should be felt immediately when a finger is placed over valve inlet.

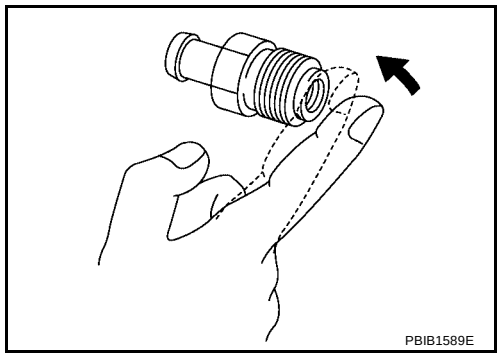

PCV VALVE VENTILATION HOSE

1. Check hoses and hose connections for leaks.
2. Disconnect all hoses and clean with compressed air. If any hose cannot be freed of obstructions, replace.

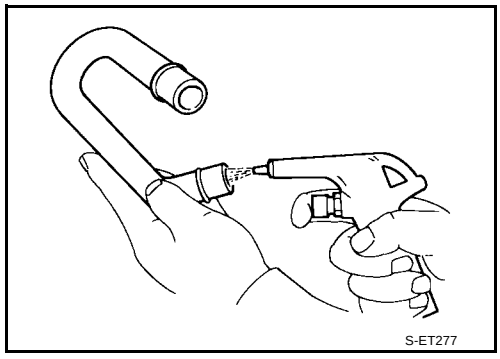

NVIS (NISSAN VEHICLE IMMOBILIZER SYSTEM-NATS)

PFP:25386

Description

UBS00JS1

- **If the security indicator lights up with the ignition switch in the ON position or "NATS MALFUNCTION" is displayed on "SELF-DIAG RESULTS" screen, perform self-diagnostic results mode with CONSULT-II using NATS program card. Refer to BL-96, "NVIS (NISSAN VEHICLE IMMOBILIZER SYSTEM — NATS)" .**
- **Confirm no self-diagnostic results of NVIS (NATS) is displayed before touching "ERASE" in "SELF-DIAG RESULTS" mode with CONSULT-II.**
- **When replacing ECM, initialization of NVIS (NATS) system and registration of all NVIS (NATS) ignition key IDs must be carried out with CONSULT-II using NATS program card.**
  Therefore, be sure to receive all keys from vehicle owner. Regarding the procedures of NVIS (NATS) initialization and NVIS (NATS) ignition key ID registration, refer to CONSULT-II operation manual, IVIS/NVIS.

SELF DIAG RESULTS	
DTC RESULTS	TIME
NATS MALFUNCTION [P1610]	0

SEF543X

ON BOARD DIAGNOSTIC (OBD) SYSTEM

PFP:00028

Introduction

UBS00JS2

The ECM has an on board diagnostic system, which detects malfunctions related to engine sensors or actuators. The ECM also records various emission-related diagnostic information including:

Emission-related diagnostic information	Diagnostic service
Diagnostic Trouble Code (DTC)	Service $03 of SAE J1979
Freeze Frame data	Service $02 of SAE J1979
System Readiness Test (SRT) code	Service $01 of SAE J1979
1st Trip Diagnostic Trouble Code (1st Trip DTC)	Service $07 of SAE J1979
1st Trip Freeze Frame data	
Test values and Test limits	Service $06 of SAE J1979
Calibration ID	Service $09 of SAE J1979

The above information can be checked using procedures listed in the table below.

×: Applicable —: Not applicable

	DTC	1st trip DTC	Freeze Frame data	1st trip Freeze Frame data	SRT status	SRT code	Test value
CONSULT-II	×	×	×	×	×	×	—
GST	×	×	×	—	×	×	×
ECM	×	×*	—	—	×	—	—

*: When DTC and 1st trip DTC simultaneously appear on the display, they cannot be clearly distinguished from each other.

The malfunction indicator lamp (MIL) on the instrument panel lights up when the same malfunction is detected in two consecutive trips (Two trip detection logic), or when the ECM enters fail-safe mode. (Refer to EC-105 .)

Two Trip Detection Logic

UBS00JS3

When a malfunction is detected for the first time, 1st trip DTC and 1st trip Freeze Frame data are stored in the ECM memory. The MIL will not light up at this stage. <1st trip>
If the same malfunction is detected again during the next drive, the DTC and Freeze Frame data are stored in the ECM memory, and the MIL lights up. The MIL lights up at the same time when the DTC is stored. <2nd trip> The “trip” in the “Two Trip Detection Logic” means a driving mode in which self-diagnosis is performed during vehicle operation. Specific on board diagnostic items will cause the ECM to light up or blink the MIL, and store DTC and Freeze Frame data, even in the 1st trip, as shown below.

×: Applicable —: Not applicable

Items	MIL				DTC		1st trip DTC	
	1st trip		2nd trip		1st trip displaying	2nd trip displaying	1st trip displaying	2nd trip displaying
	Blinking	Lighting up	Blinking	Lighting up				
Misfire (Possible three way catalyst damage) — DTC: P0300 - P0304 is being detected	×	—	—	—	—	—	×	—
Misfire (Possible three way catalyst damage) — DTC: P0300 - P0304 is being detected	—	—	×	—	—	×	—	—
One trip detection diagnoses (Refer to EC-52 .)	—	×	—	—	×	—	—	—
Except above	—	—	—	×	—	×	×	—

When there is an open circuit on MIL circuit, the ECM cannot warn the driver by lighting up MIL when there is malfunction on engine control system.
Therefore, when electrical controlled throttle and part of ECM related diagnoses are continuously detected as NG for 5 trips, ECM warns the driver that engine control system malfunctions and MIL circuit is open by means of operating fail-safe function.

The fail-safe function also operates when above diagnoses except MIL circuit are detected, and demands the driver to repair the malfunction.

Engine operating condition in fail-safe mode	Engine speed will not rise more than 2,500 rpm due to the fuel cut

Emission-related Diagnostic Information

UBS00JS4

EMISSION-RELATED DIAGNOSTIC INFORMATION ITEMS

×: Applicable —: Not applicable

Items (CONSULT-II screen terms)	DTC*1		SRT code	Test value/ Test limit (GST only)	Trip	MIL lighting up	Reference page
	CONSULT-II GST*2	ECM*3					
CAN COMM CIRCUIT	U1000	1000*6	—	—	1 or 2	× or —	EC-173
CAN COMM CIRCUIT	U1001	1001*6	—	—	2	—	EC-173
NO DTC IS DETECTED. FURTHER TESTING MAY BE REQUIRED.	**P0000**	**0000**	—	—	—	**Flashing*7**	EC-66
INT/V TIM CONT-B1	P0011	0011	—	—	2	×	EC-176
HO2S2 HTR (B1)	P0037	0037	×	×	2	×	EC-180
HO2S2 HTR (B1)	P0038	0038	×	×	2	×	EC-180
MAF SEN/CIRCUIT	P0101	0101	—	—	2	×	EC-186
MAF SEN/CIRCUIT	P0102	0102	—	—	1	×	EC-196
MAF SEN/CIRCUIT	P0103	0103	—	—	1	×	EC-196
IAT SEN/CIRCUIT	P0112	0112	—	—	2	×	EC-204
IAT SEN/CIRCUIT	P0113	0113	—	—	2	×	EC-204
ECT SEN/CIRCUIT	P0117	0117	—	—	1	×	EC-208
ECT SEN/CIRCUIT	P0118	0118	—	—	1	×	EC-208
TP SEN 2/CIRC	P0122	0122	—	—	1	×	EC-213
TP SEN 2/CIRC	P0123	0123	—	—	1	×	EC-213
ECT SENSOR	P0125	0125	—	—	1	×	EC-220
IAT SENSOR	P0127	0127	—	—	2	×	EC-223
THERMSTAT FNCTN	P0128	0128	—	—	2	×	EC-226
HO2S2 (B1)	P0138	0138	—	×	2	×	EC-228
HO2S2 (B1)	P0139	0139	×	×	2	×	EC-234
FUEL SYS-LEAN-B1	P0171	0171	—	—	2	×	EC-242
FUEL SYS-RICH-B1	P0172	0172	—	—	2	×	EC-249
FTT SENSOR	P0181	0181	—	—	2	×	EC-256
FTT SEN/CIRCUIT	P0182	0182	—	—	2	×	EC-261
FTT SEN/CIRCUIT	P0183	0183	—	—	2	×	EC-261
TP SEN 1/CIRC	P0222	0222	—	—	1	×	EC-265
TP SEN 1/CIRC	P0223	0223	—	—	1	×	EC-265
MULTI CYL MISFIRE	P0300	0300	—	—	2	×	EC-272
CYL 1 MISFIRE	P0301	0301	—	—	2	×	EC-272
CYL 2 MISFIRE	P0302	0302	—	—	2	×	EC-272
CYL 3 MISFIRE	P0303	0303	—	—	2	×	EC-272
CYL 4 MISFIRE	P0304	0304	—	—	2	×	EC-272
KNOCK SEN/CIRC-B1	P0327	0327	—	—	2	—	EC-279
KNOCK SEN/CIRC-B1	P0328	0328	—	—	2	—	EC-279
CKP SEN/CIRCUIT	P0335	0335	—	—	2	×	EC-284

Items (CONSULT-II screen terms)	DTC*1		SRT code	Test value/ Test limit (GST only)	Trip	MIL lighting up	Reference page
	CONSULT-II GST*2	ECM*3					
CMP SEN/CIRC-B1	P0340	0340	—	—	2	×	EC-291
TW CATALYST SYS-B1	P0420	0420	×	×	2	×	EC-298
EVAP PURG FLOW/MON	P0441	0441	×	×	2	×	EC-303
EVAP SMALL LEAK	P0442	0442	×	×	2	×	EC-309
PURG VOLUME CONT/V	P0444	0444	—	—	2	×	EC-318
PURG VOLUME CONT/V	P0445	0445	—	—	2	×	EC-318
VENT CONTROL VALVE	P0447	0447	—	—	2	×	EC-325
EVAP SYS PRES SEN	P0451	0451	—	—	2	×	EC-332
EVAP SYS PRES SEN	P0452	0452	—	—	2	×	EC-335
EVAP SYS PRES SEN	P0453	0453	—	—	2	×	EC-341
EVAP GROSS LEAK	P0455	0455	—	—	2	×	EC-348
EVAP VERY SML LEAK	P0456	0456	×*4	×	2	×	EC-356
FUEL LEV SEN SLOSH	P0460	0460	—	—	2	×	EC-365
FUEL LEVEL SENSOR	P0461	0461	—	—	2	×	EC-367
FUEL LEVL SEN/CIRC	P0462	0462	—	—	2	×	EC-369
FUEL LEVL SEN/CIRC	P0463	0463	—	—	2	×	EC-369
VEH SPEED SEN/CIRC*5	P0500	0500	—	—	2	×	EC-371
ISC SYSTEM	P0506	0506	—	—	2	×	EC-373
ISC SYSTEM	P0507	0507	—	—	2	×	EC-375
PW STP SEN/CIRC	P0550	0550	—	—	2	—	EC-377
ECM	P0605	0605	—	—	1 or 2	× or —	EC-382
PNP SW/CIRC	P0705	0705	—	—	2	×	AT-115
ATF TEMP SEN/CIRC	P0710	0710	—	—	2	×	AT-120
VEH SPD SEN/CIR AT*5	P0720	0720	—	—	2	×	AT-126
ENGINE SPEED SIG	P0725	0725	—	—	2	×	AT-131
A/T 1ST GR FNCTN	P0731	0731	—	—	2	×	AT-135
A/T 2ND GR FNCTN	P0732	0732	—	—	2	×	AT-140
A/T 3RD GR FNCTN	P0733	0733	—	—	2	×	AT-145
A/T 4TH GR FNCTN	P0734	0734	—	—	2	×	AT-150
TCC SOLENOID/CIRC	P0740	0740	—	—	2	×	AT-159
A/T TCC S/V FNCTN	P0744	0744	—	—	2	×	AT-163
L/PRESS SOL/CIRC	P0745	0745	—	—	2	×	AT-173
SFT SOL A/CIRC	P0750	0750	—	—	1	×	AT-179
SFT SOL B/CIRC	P0755	0755	—	—	1	×	AT-183
A/F SEN1 HTR (B1)	P1031	1031	×	×	2	×	EC-385
A/F SEN1 HTR (B1)	P1032	1032	×	×	2	×	EC-385
ECM BACK UP/CIRC	P1065	1065	—	—	2	×	EC-390
INT/V TIM V/CIR-B1	P1111	1111	—	—	2	×	EC-394
ETC ACTR	P1121	1121	—	—	1	×	EC-398
ETC FUNCTION/CIRC	P1122	1122	—	—	1	×	EC-400
ETC MOT PWR	P1124	1124	—	—	1	×	EC-407
ETC MOT PWR	P1126	1126	—	—	1	×	EC-407

Items (CONSULT-II screen terms)	DTC*1		SRT code	Test value/ Test limit (GST only)	Trip	MIL lighting up	Reference page
	CONSULT-II GST*2	ECM*3					
ETC MOT	P1128	1128	—	—	1	×	EC-412
VARI SWL CON/SV-B1*8	P1132	1132	—	—	2	×	EC-417
SWL CON/V POSI SEN*8	P1137	1137	—	—	2	×	EC-422
SWIRL CONT VALVE*8	P1138	1138	—	—	2	×	EC-430
HO2S2 (B1)	P1146	1146	×	×	2	×	EC-438
HO2S2 (B1)	P1147	1147	×	×	2	×	EC-446
CLOSED LOOP-B1	P1148	1148	—	—	1	×	EC-454
ENG OVER TEMP	P1217	1217	—	—	1	×	EC-455
CTP LEARNING	P1225	1225	—	—	2	—	EC-470
CTP LEARNING	P1226	1226	—	—	2	—	EC-472
SENSOR POWER/CIRC	P1229	1229	—	—	1	×	EC-474
A/F SENSOR1 (B1)	P1271	1271	—	×	2	×	EC-479
A/F SENSOR1 (B1)	P1272	1272	—	×	2	×	EC-485
A/F SENSOR1 (B1)	P1273	1273	—	×	2	×	EC-491
A/F SENSOR1 (B1)	P1274	1274	—	×	2	×	EC-498
A/F SENSOR1 (B1)	P1276	1276	—	×	2	×	EC-505
A/F SENSOR1 (B1)	P1278	1278	×	×	2	×	EC-511
A/F SENSOR1 (B1)	P1279	1279	×	×	2	×	EC-519
PURG VOLUME CONT/V	P1444	1444	—	—	2	×	EC-527
VENT CONTROL VALVE	P1446	1446	—	—	2	×	EC-535
ASCD SW	P1564	1564	—	—	1	—	EC-542
ASCD BRAKE SW	P1572	1572	—	—	1	—	EC-549
ASCD VHL SPD SEN	P1574	1574	—	—	1	—	EC-561
NATS MALFUNCTION	P1610 - P1615	1610 - 1615	—	—	2	—	BL-96
TPV SEN/CIRC A/T	P1705	1705	—	—	1	×	AT-187
P-N POS SW/CIRCUIT	P1706	1706	—	—	2	×	EC-563
O/R CLTCH SOL/CIRC	P1760	1760	—	—	2	×	AT-193
BRAKE SW/CIRCUIT	P1805	1805	—	—	2	—	EC-567
APP SEN 1/CIRC	P2122	2122	—	—	1	×	EC-573
APP SEN 1/CIRC	P2123	2123	—	—	1	×	EC-573
APP SEN 2/CIRC	P2127	2127	—	—	1	×	EC-580
APP SEN 2/CIRC	P2128	2128	—	—	1	×	EC-580
TP SENSOR	P2135	2135	—	—	1	×	EC-587
APP SENSOR	P2138	2138	—	—	1	×	EC-594

*1: 1st trip DTC No. is the same as DTC No.
*2: This number is prescribed by SAE J2012.
*3: In Diagnostic Test Made II (Self-diagnostic results), this number is controlled by NISSAN.
*4: SRT code will not be set if the self-diagnostic result is NG.
*5: When the fail-safe operations for both self-diagnoses occur at the same time, the MIL illuminates.
*6: The troubleshooting for this DTC needs CONSULT-II.
*7: When the ECM is in the mode of displaying SRT status, MIL may flash. For the details, refer to EC-60, "How to Display SRT Status" .
*8: SULEV models.

DTC AND 1ST TRIP DTC

The 1st trip DTC (whose number is the same as the DTC number) is displayed for the latest self-diagnostic result obtained. If the ECM memory was cleared previously, and the 1st trip DTC did not reoccur, the 1st trip DTC will not be displayed.

If a malfunction is detected during the 1st trip, the 1st trip DTC is stored in the ECM memory. The MIL will not light up (two trip detection logic). If the same malfunction is not detected in the 2nd trip (meeting the required driving pattern), the 1st trip DTC is cleared from the ECM memory. If the same malfunction is detected in the 2nd trip, both the 1st trip DTC and DTC are stored in the ECM memory and the MIL lights up. In other words, the DTC is stored in the ECM memory and the MIL lights up when the same malfunction occurs in two consecutive trips. If a 1st trip DTC is stored and a non-diagnostic operation is performed between the 1st and 2nd trips, only the 1st trip DTC will continue to be stored. For malfunctions that blink or light up the MIL during the 1st trip, the DTC and 1st trip DTC are stored in the ECM memory.

Procedures for clearing the DTC and the 1st trip DTC from the ECM memory are described in EC-64, "HOW TO ERASE EMISSION-RELATED DIAGNOSTIC INFORMATION" .

For malfunctions in which 1st trip DTCs are displayed, refer to EC-52, "EMISSION-RELATED DIAGNOSTIC INFORMATION ITEMS" . These items are required by legal regulations to continuously monitor the system/component. In addition, the items monitored non-continuously are also displayed on CONSULT-II.

1st trip DTC is specified in Service $07 of SAE J1979. 1st trip DTC detection occurs without lighting up the MIL and therefore does not warn the driver of a malfunction. However, 1st trip DTC detection will not prevent the vehicle from being tested, for example during Inspection/Maintenance (I/M) tests.

When a 1st trip DTC is detected, check, print out or write down and erase (1st trip) DTC and Freeze Frame data as specified in Work Flow procedure Step II, refer to EC-98, "WORK FLOW" . Then perform DTC Confirmation Procedure or Overall Function Check to try to duplicate the malfunction. If the malfunction is duplicated, the item requires repair.

How to Read DTC and 1st Trip DTC

DTC and 1st trip DTC can be read by the following methods.

WITH CONSULT-II

WITH GST

CONSULT-II or GST (Generic Scan Tool) Examples: P0340, P1148, P1706, etc.

These DTCs are prescribed by SAE J2012.

(CONSULT-II also displays the malfunctioning component or system.)

NO TOOLS

The number of blinks of the MIL in the Diagnostic Test Mode II (Self-Diagnostic Results) indicates the DTC. Example: 0340, 1148, 1706, etc.

These DTCs are controlled by NISSAN.

- **1st trip DTC No. is the same as DTC No.**
- **Output of a DTC indicates a malfunction. However, GST or the Diagnostic Test Mode II do not indicate whether the malfunction is still occurring or has occurred in the past and has returned to normal. CONSULT-II can identify malfunction status as shown below. Therefore, using CONSULT-II (if available) is recommended.**

A sample of CONSULT-II display for DTC and 1st trip DTC is shown below. DTC or 1st trip DTC of a malfunction is displayed in SELF-DIAGNOSTIC RESULTS mode of CONSULT-II. Time data indicates how many times the vehicle was driven after the last detection of a DTC.

If the DTC is being detected currently, the time data will be 0.

If a 1st trip DTC is stored in the ECM, the time data will be [1t].

DTC display

SELF DIAG RESULTS	
DTC RESULTS	TIME
CKP SEN/CIRCUIT [P0335]	0

1st trip DTC display

SELF DIAG RESULTS	
DTC RESULTS	TIME
CKP SEN/CIRCUIT [P0335]	1t

PBIB0911E

FREEZE FRAME DATA AND 1ST TRIP FREEZE FRAME DATA

The ECM records the driving conditions such as fuel system status, calculated load value, engine coolant temperature, short term fuel trim, long term fuel trim, engine speed, vehicle speed, base fuel schedule and intake air temperature at the moment a malfunction is detected.
Data which are stored in the ECM memory, along with the 1st trip DTC, are called 1st trip freeze frame data. The data, stored together with the DTC data, are called freeze frame data and displayed on CONSULT-II or GST. The 1st trip freeze frame data can only be displayed on the CONSULT-II screen, not on the GST. For details, see EC-56, "FREEZE FRAME DATA AND 1ST TRIP FREEZE FRAME DATA" .
Only one set of freeze frame data (either 1st trip freeze frame data or freeze frame data) can be stored in the ECM. 1st trip freeze frame data is stored in the ECM memory along with the 1st trip DTC. There is no priority for 1st trip freeze frame data and it is updated each time a different 1st trip DTC is detected. However, once freeze frame data (2nd trip detection/MIL on) is stored in the ECM memory, 1st trip freeze frame data is no longer stored. Remember, only one set of freeze frame data can be stored in the ECM. The ECM has the following priorities to update the data.

Priority	Items	
1	Freeze frame data	Misfire — DTC: P0300 - P0304 Fuel Injection System Function — DTC: P0171, P0172
2		Except the above items (Includes A/T related items)
3	1st trip freeze frame data	

For example, the EGR malfunction (Priority: 2) was detected and the freeze frame data was stored in the 2nd trip. After that when the misfire (Priority: 1) is detected in another trip, the freeze frame data will be updated from the EGR malfunction to the misfire. The 1st trip freeze frame data is updated each time a different malfunction is detected. There is no priority for 1st trip freeze frame data. However, once freeze frame data is stored in the ECM memory, 1st trip freeze data is no longer stored (because only one freeze frame data or 1st trip freeze frame data can be stored in the ECM). If freeze frame data is stored in the ECM memory and freeze frame data with the same priority occurs later, the first (original) freeze frame data remains unchanged in the ECM memory.
Both 1st trip freeze frame data and freeze frame data (along with the DTCs) are cleared when the ECM memory is erased. Procedures for clearing the ECM memory are described in EC-52, "EMISSION-RELATED DIAGNOSTIC INFORMATION ITEMS" .

SYSTEM READINESS TEST (SRT) CODE

System Readiness Test (SRT) code is specified in Service $01 of SAE J1979.
As part of an enhanced emissions test for Inspection & Maintenance (I/M), certain states require the status of SRT be used to indicate whether the ECM has completed self-diagnosis of major emission systems and components. Completion must be verified in order for the emissions inspection to proceed.
If a vehicle is rejected for a State emissions inspection due to one or more SRT items indicating “INCMP”, use the information in this Service Manual to set the SRT to “CMPLT”.
In most cases the ECM will automatically complete its self-diagnosis cycle during normal usage, and the SRT status will indicate “CMPLT” for each application system. Once set as “CMPLT”, the SRT status remains “CMPLT” until the self-diagnosis memory is erased.
Occasionally, certain portions of the self-diagnostic test may not be completed as a result of the customer's normal driving pattern; the SRT will indicate “INCMP” for these items.

NOTE:
The SRT will also indicate “INCMP” if the self-diagnosis memory is erased for any reason or if the ECM memory power supply is interrupted for several hours.
If, during the state emissions inspection, the SRT indicates “CMPLT” for all test items, the inspector will continue with the emissions test. However, if the SRT indicates “INCMP” for one or more of the SRT items the vehicle is returned to the customer untested.

NOTE:
If MIL is ON during the state emissions inspection, the vehicle is also returned to the customer untested even though the SRT indicates “CMPLT” for all test items. Therefore, it is important to check SRT (“CMPLT”) and DTC (No DTCs) before the inspection.

SRT Item

The table below shows required self-diagnostic items to set the SRT to “CMPLT”.

SRT item (CONSULT-II indication)	Performance Priority*1	Required self-diagnostic items to set the SRT to “CMPLT”	Corresponding DTC No.
CATALYST	2	Three way catalyst function	P0420
EVAP SYSTEM	1	EVAP control system	P0442
	2	EVAP control system	P0456
	2	EVAP control system purge flow monitoring	P0441
HO2S	2	Air fuel ratio (A/F) sensor 1	P1278, P1279
		Heated oxygen sensor 2	P0139
		Heated oxygen sensor 2	P1146
		Heated oxygen sensor 2	P1147
HO2S HTR	2	Air fuel ratio (A/F) sensor heater	P1031, P1032
		Heated oxygen sensor 2 heater	P0037, P0038

*1: If completion of several SRTs is required, perform driving patterns (DTC confirmation procedure), one by one based on the priority for models with CONSULT-II.

SRT Set Timing

SRT is set as “CMPLT” after self-diagnosis has been performed one or more times. Completion of SRT is done regardless of whether the result is OK or NG. The set timing is different between OK and NG results and is shown in the table below.

Self-diagnosis result		Example				
		Diagnosis	Ignition cycle ← ON → OFF	← ON → OFF	← ON → OFF	← ON →
All OK	Case 1	P0400	OK (1)	— (1)	OK (2)	— (2)
		P0402	OK (1)	— (1)	— (1)	OK (2)
		P1402	OK (1)	OK (2)	— (2)	— (2)
		SRT of EGR	“CMPLT”	“CMPLT”	“CMPLT”	“CMPLT”
	Case 2	P0400	OK (1)	— (1)	— (1)	— (1)
		P0402	— (0)	— (0)	OK (1)	— (1)
		P1402	OK (1)	OK (2)	— (2)	— (2)
		SRT of EGR	“INCMP”	“INCMP”	“CMPLT”	“CMPLT”
NG exists	Case 3	P0400	OK	OK	—	—
		P0402	—	—	—	—
		P1402	NG	—	NG	NG (Consecutive NG)
		(1st trip) DTC	1st trip DTC	—	1st trip DTC	DTC (= MIL “ON”)
		SRT of EGR	“INCMP”	“INCMP”	“INCMP”	“CMPLT”

OK: Self-diagnosis is carried out and the result is OK.
NG: Self-diagnosis is carried out and the result is NG.
—: Self-diagnosis is not carried out.

When all SRT related self-diagnoses showed OK results in a single cycle (Ignition OFF-ON-OFF), the SRT will indicate “CMPLT”. → Case 1 above
When all SRT related self-diagnoses showed OK results through several different cycles, the SRT will indicate “CMPLT” at the time the respective self-diagnoses have at least one OK result. → Case 2 above
If one or more SRT related self-diagnoses showed NG results in 2 consecutive cycles, the SRT will also indicate “CMPLT”. → Case 3 above

The table above shows that the minimum number of cycles for setting SRT as “INCMP” is one (1) for each self-diagnosis (Case 1 & 2) or two (2) for one of self-diagnoses (Case 3). However, in preparation for the state emissions inspection, it is unnecessary for each self-diagnosis to be executed twice (Case 3) for the following reasons:

- The SRT will indicate “CMPLT” at the time the respective self-diagnoses have one (1) OK result.
- The emissions inspection requires “CMPLT” of the SRT only with OK self-diagnosis results.
- When, during SRT driving pattern, 1st trip DTC (NG) is detected prior to “CMPLT” of SRT, the self-diagnosis memory must be erased from ECM after repair.
- If the 1st trip DTC is erased, all the SRT will indicate “INCMP”.

  NOTE:
  SRT can be set as “CMPLT” together with the DTC(s). Therefore, DTC check must always be carried out prior to the state emission inspection even though the SRT indicates “CMPLT”.

SRT Service Procedure

If a vehicle has failed the state emissions inspection due to one or more SRT items indicating “INCMP”, review the flowchart diagnostic sequence on the next page.

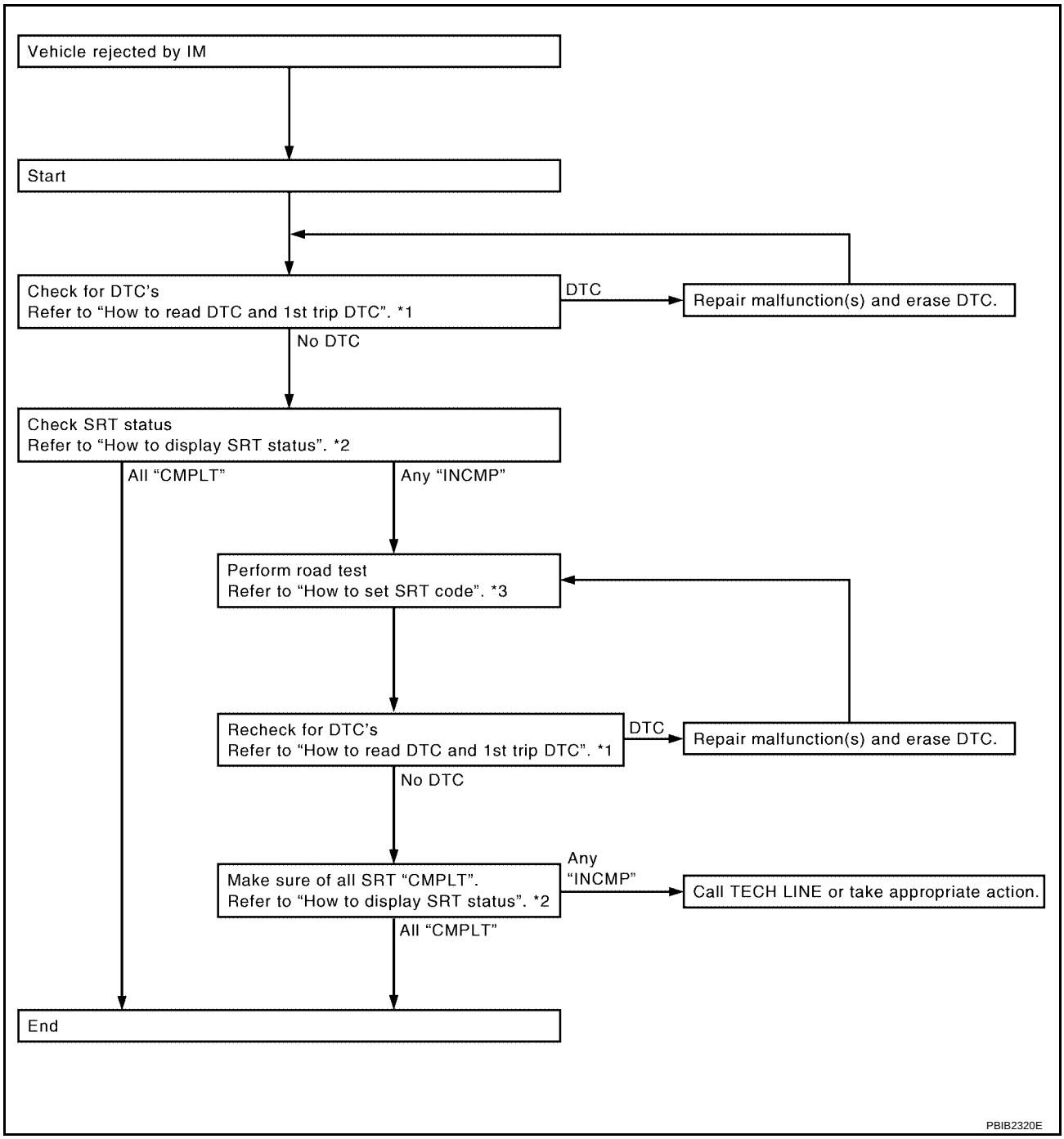

*1 EC-55 *2 EC-60 *3 EC-60

How to Display SRT Status

WITH CONSULT-II

Selecting “SRT STATUS” in “DTC CONFIRMATION” mode with CONSULT-II.

For items whose SRT codes are set, a “CMPLT” is displayed on the CONSULT-II screen; for items whose SRT codes are not set, “INCMP” is displayed.

A sample of CONSULT-II display for SRT code is shown in the figure.

“INCMP” means the self-diagnosis is incomplete and SRT is not set.

“CMPLT” means the self-diagnosis is complete and SRT is set.

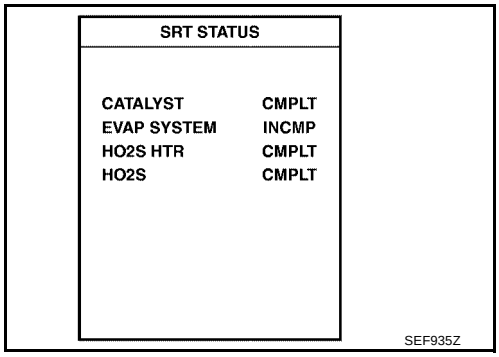

WITH GST

Selecting Service $01 with GST (Generic Scan Tool)

NO TOOLS

A SRT code itself can not be displayed while only SRT status can be.

1. Turn ignition switch ON and wait 20 seconds.
2. SRT status is indicated as shown below.
   - When all SRT codes are set, MIL lights up continuously.
   - When any SRT codes are not set, MIL will flash periodically for 10 seconds.

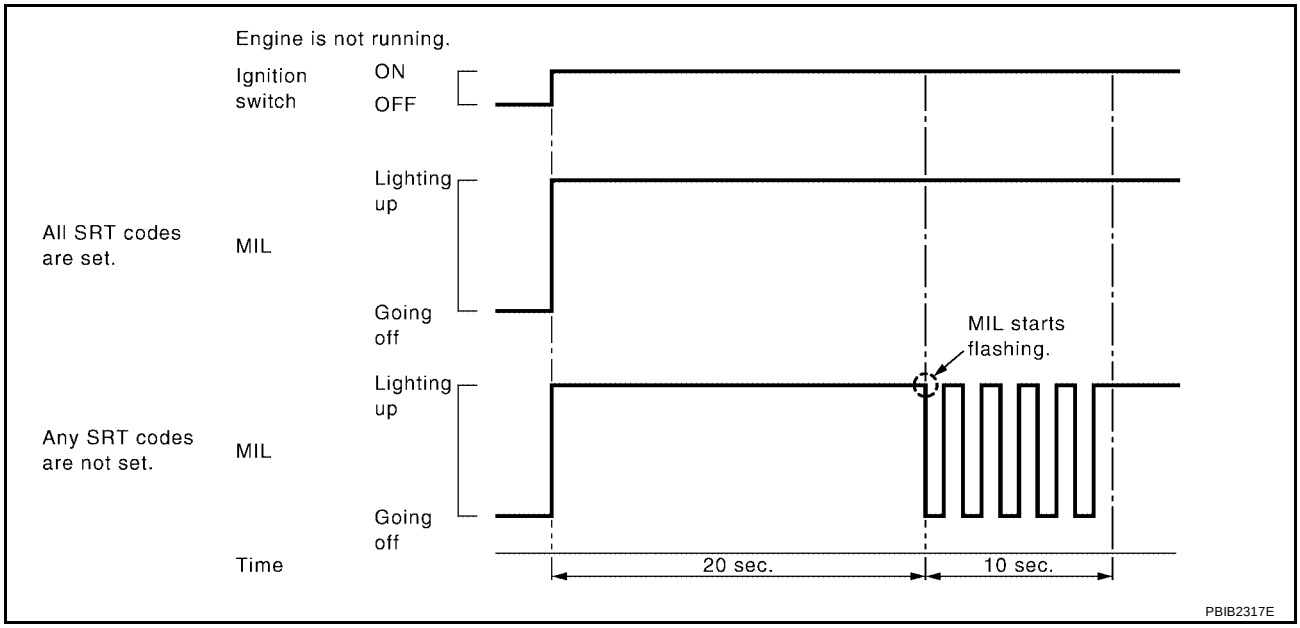

How to Set SRT Code

To set all SRT codes, self-diagnosis for the items indicated above must be performed one or more times. Each diagnosis may require a long period of actual driving under various conditions.

WITH CONSULT-II

Perform corresponding DTC Confirmation Procedure one by one based on “Performance Priority” in the table on EC-57, "SRT Item" .

WITHOUT CONSULT-II

The most efficient driving pattern in which SRT codes can be properly set is explained on the next page. The driving pattern should be performed one or more times to set all SRT codes.

Driving Pattern

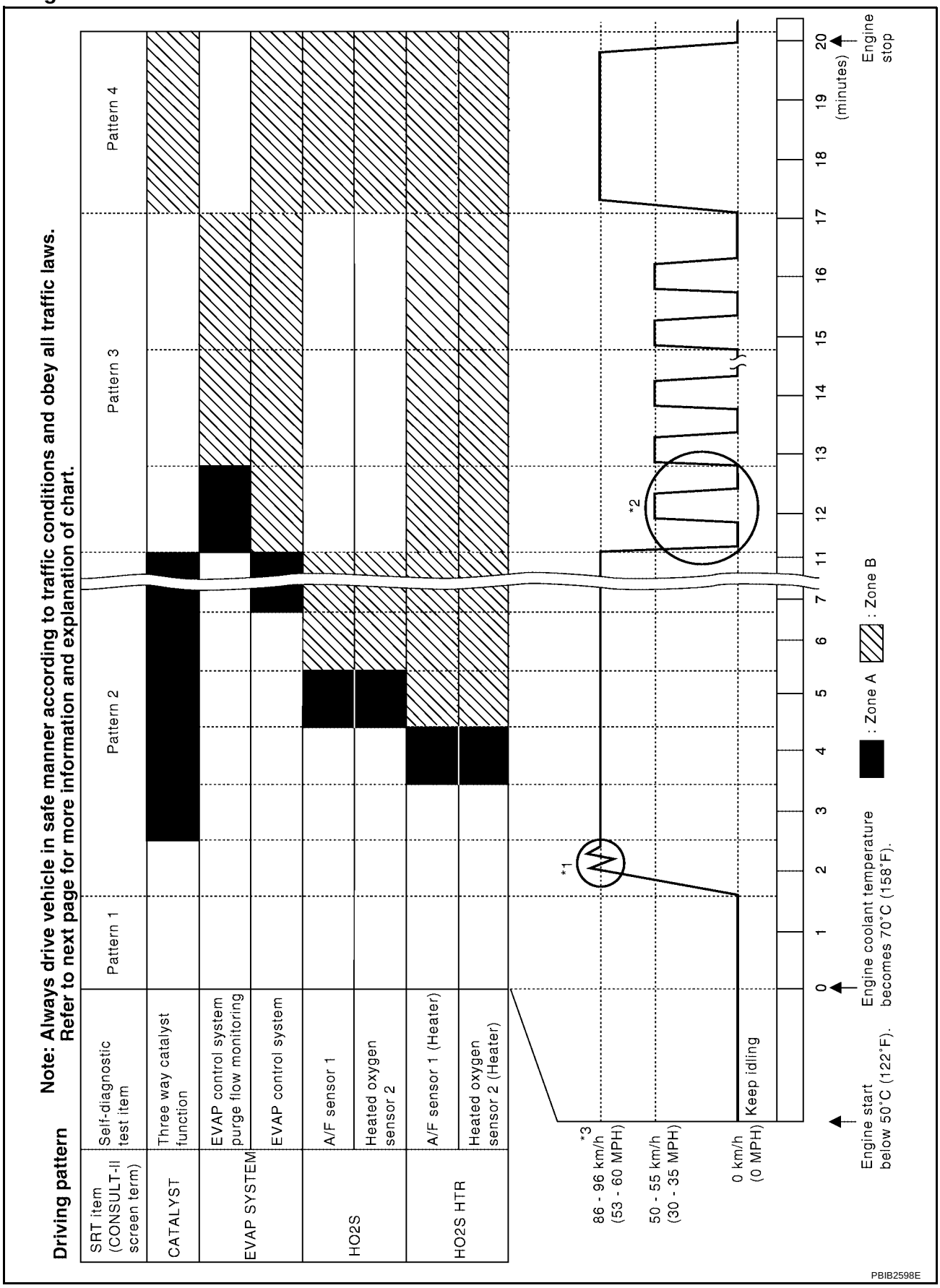

- The time required for each diagnosis varies with road surface conditions, weather, altitude, individual driving habits, etc.
  Zone A refers to the range where the time, required for the diagnosis under normal conditions*, is the shortest.
  Zone B refers to the range where the diagnosis can still be performed if the diagnosis is not completed within zone A.

*: Normal conditions refer to the following:

- Sea level
- Flat road
- Ambient air temperature: 20 - 30°C (68 - 86°F)
- Diagnosis is performed as quickly as possible under normal conditions.
  Under different conditions [For example: ambient air temperature other than 20 - 30°C (68 - 86°F)], diagnosis may also be performed.

Pattern 1:

- **The engine is started at the engine coolant temperature of –10 to 35°C (14 to 95°F) (where the voltage between the ECM terminal 73 and ground is 3.0 - 4.3V).**
- **The engine must be operated at idle speed until the engine coolant temperature is greater than 70°C (158°F) (where the voltage between the ECM terminal 73 and ground is lower than 1.4V).**
- **The engine is started at the fuel tank temperature of warmer than 0°C (32°F) (where the voltage between the ECM terminal 107 and ground is less than 4.1V).**

Pattern 2:

- When steady-state driving is performed again even after it is interrupted, each diagnosis can be conducted. In this case, the time required for diagnosis may be extended.

Pattern 3:

- The driving pattern outlined in *2 must be repeated at least 3 times.

Pattern 4:

- Tests are performed after the engine has been operated for at least 17 minutes.
- The accelerator pedal must be held very steady during steady-state driving.
- If the accelerator pedal is moved, the test must be conducted all over again.

*1: Depress the accelerator pedal until vehicle speed is 90 km/h (56 MPH), then release the accelerator pedal and keep it released for more than 10 seconds. Depress the accelerator pedal until vehicle speed is 90 km/h (56 MPH) again.

*2: Operate the vehicle in the following driving pattern.

1. Decelerate vehicle to 0 km/h (0 MPH) and let engine idle.
2. Repeat driving pattern shown below at least 10 times.

– **During acceleration, hold the accelerator pedal as steady as possible.**

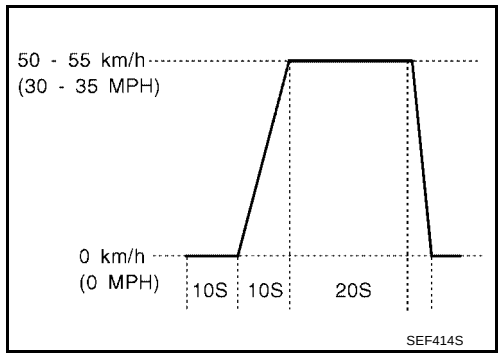

Suggested Transmission Gear Position for A/T Models

Set the selector lever in the D position with the overdrive switch turned ON.

Suggested upshift speeds for M/T models

Shown below are suggested vehicle speeds for shifting into a higher gear. These suggestions relate to fuel economy and vehicle performance. Actual upshift speeds will vary according to road conditions, the weather and individual driving habits.

	For normal acceleration in low altitude areas [less than 1,219 m (4,000 ft)]:	For quick acceleration in low altitude areas and high attitude areas [over 1,219m (4,000 ft)]:
Gear change	ACCEL shift point km/h (MPH)	km/h (MPH)
1st to 2nd	24 (15)	24 (15)

	For normal acceleration in low altitude areas [less than 1,219 m (4,000 ft)]:	For quick acceleration in low altitude areas and high attitude areas [over 1,219m (4,000 ft)]:
2nd to 3rd	40 (25)	40 (25)
3rd to 4th	65 (40)	65 (40)
4th to 5th	75 (45)	75 (45)

Suggested Maximum Speed in Each Gear

Downshift to a lower gear if the engine is not running smoothly, or if you need to accelerate.
Do not exceed the maximum suggested speed (shown below) in any gear. For level road driving, use the highest gear suggested for that speed. Always observe posted speed limits and drive according to the road conditions to ensure safe operation. Do not over-rev the engine when shifting to a lower gear as it may cause engine damage or loss of vehicle control.

Gear	km/h (MPH)
1st	50 (30)
2nd	90 (55)
3rd	130 (80)
4th	—
5th	—

TEST VALUE AND TEST LIMIT (GST ONLY — NOT APPLICABLE TO CONSULT-II)

The following is the information specified in Service $06 of SAE J1979.
The test value is a parameter used to determine whether a system/circuit diagnostic test is “OK” or “NG” while being monitored by the ECM during self-diagnosis. The test limit is a reference value which is specified as the maximum or minimum value and is compared with the test value being monitored.
These data (test value and test limit) are specified by Test ID (TID) and Component ID (CID) and can be displayed on the GST screen.

Item	Self-diagnostic test item	DTC	Test value (GST display)		Test limit	Conversion
			TID	CID		
CATALYST	Three way catalyst function	P0420	01H	01H	Max.	1/128
		P0420	02H	81H	Min.	1
EVAP SYSTEM	EVAP control system (Small leak)	P0442	05H	03H	Max.	1/128 mm^2
	EVAP control system purge flow monitoring	P0441	06H	83H	Min.	20 mV
	EVAP control system (Very small leak)	P0456	07H	03H	Max.	1/128 mm^2
HO2S	A/F sensor 1	P1271	41H	8EH	Min.	5 mV
		P1272	42H	0EH	Max.	5 mV
		P1273	43H	0EH	Max.	0.002
		P1274	44H	8EH	Min.	0.002
		P1278	45H	8EH	Min.	0.004
		P1276	46H	0EH	Max.	5 mV
		P1276	47H	8EH	Min.	5 mV
		P1279	48H	8EH	Min.	0.004
	Heated oxygen sensor 2	P0139	19H	86H	Min.	10mV/500 ms
		P1147	1AH	86H	Min.	10 mV
		P1146	1BH	06H	Max.	10 mV
		P0138	1CH	06H	Max.	10 mV
HO2S HEATER	A/F sensor 1 heater	P1032	57H	10H	Max.	5 mV
		P1031	58H	90H	Min.	5 mV
	Heated oxygen sensor 2 heater	P0038	2DH	0AH	Max.	20 mV
		P0037	2EH	8AH	Min.	20 mV

HOW TO ERASE EMISSION-RELATED DIAGNOSTIC INFORMATION

How to Erase DTC

With CONSULT-II

The emission related diagnostic information in the ECM can be erased by selecting “ERASE” in the “SELF-DIAG RESULTS” mode with CONSULT-II.
If DTCs are displayed for both ECM and TCM (Transmission control module), they need to be erased individually from the ECM and TCM (Transmission control module).

NOTE:
If the DTC is not for A/T related items (see EC-15, "INDEX FOR DTC"), skip steps 2 through 4.

1. If the ignition switch stays ON after repair work, be sure to turn ignition switch OFF once. Wait at least 10 seconds and then turn it ON (engine stopped) again.
2. Turn CONSULT-II ON and touch “A/T”.
3. Touch “SELF-DIAG RESULTS”.
4. Touch “ERASE”. [The DTC in the TCM (Transmission control module) will be erased.] Then touch “BACK” twice.
5. Touch “ENGINE”.
6. Touch “SELF-DIAG RESULTS”.
7. Touch “ERASE”. (The DTC in the ECM will be erased.)

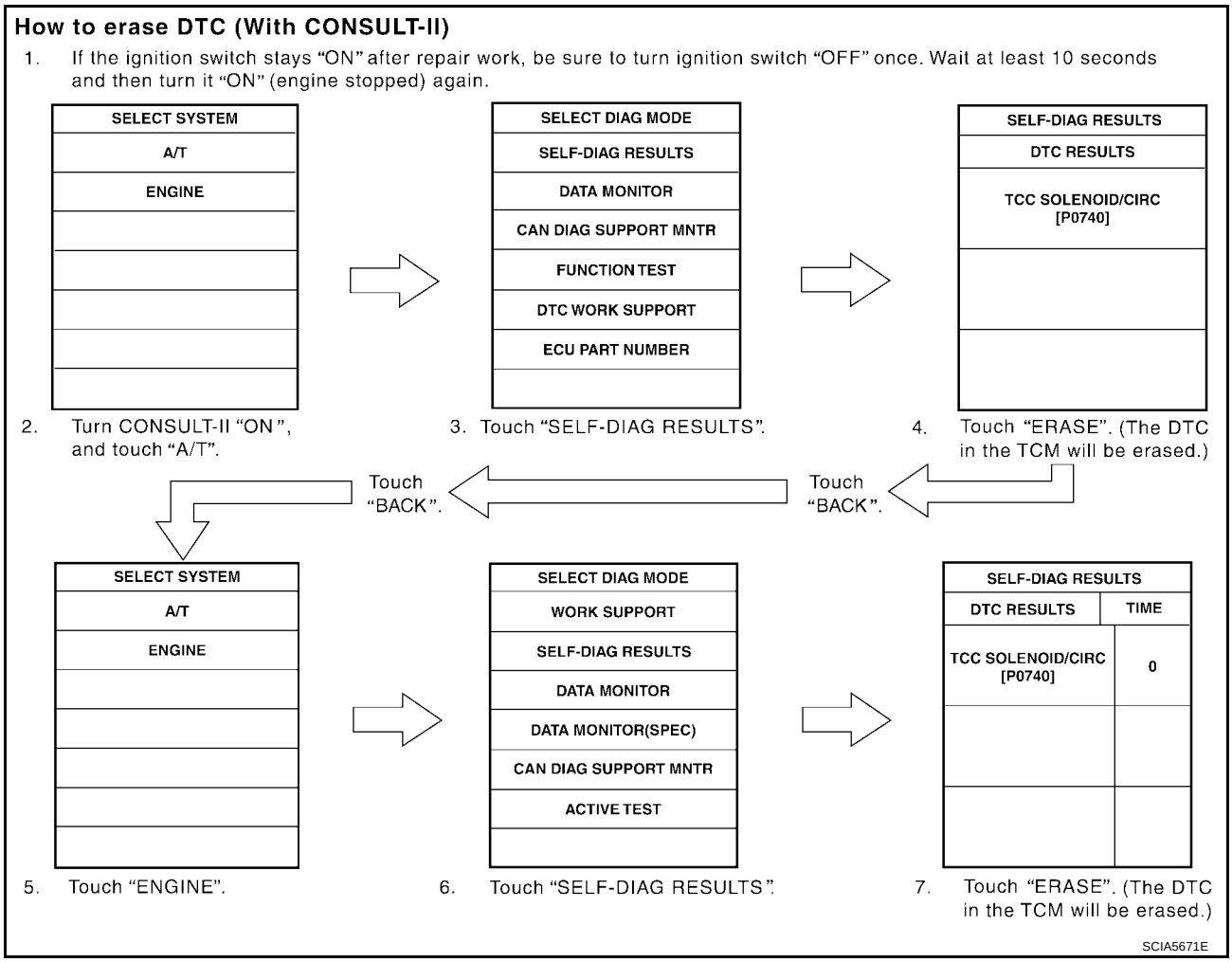

With GST

The emission related diagnostic information in the ECM can be erased by selecting Service $04 with GST.

NOTE:
If the DTC is not for A/T related items (see EC-15, "INDEX FOR DTC" , skip step 2.

1. If the ignition switch stays ON after repair work, be sure to turn ignition switch OFF once.
   Wait at least 10 seconds and then turn it ON (engine stopped) again.

2. Perform AT-41, "HOW TO ERASE DTC (WITH GST)" . (The DTC in the TCM will be erased.)
3. Select “Service $04” with GST (Generic Scan Tool).

No Tools

NOTE:
If the DTC is not for A/T related items (see EC-15, "INDEX FOR DTC"), skip step 2.

1. If the ignition switch stays ON after repair work, be sure to turn ignition switch OFF once. Wait at least 10 seconds and then turn it ON (engine stopped) again.
2. Perform AT-41, "HOW TO ERASE DTC (NO TOOLS)" . (The DTC in the TCM will be erased.)
3. Change the diagnostic test mode from Mode II to Mode I by depressing the accelerator pedal. Refer to EC-66, "HOW TO SWITCH DIAGNOSTIC TEST MODE" .

- **If the battery is disconnected, the emission-related diagnostic information will be lost within 24 hours.**
- **The following data are cleared when the ECM memory is erased.**
  - Diagnostic trouble codes
  - 1st trip diagnostic trouble codes
  - Freeze frame data
  - 1st trip freeze frame data
  - System readiness test (SRT) codes
  - Test values

Actual work procedures are explained using a DTC as an example. Be careful so that not only the DTC, but all of the data listed above, are cleared from the ECM memory during work procedures.

Malfunction Indicator Lamp (MIL)

UBS00JS5

DESCRIPTION

The MIL is located on the instrument panel.

1. The MIL will light up when the ignition switch is turned ON without the engine running. This is a bulb check.
   If the MIL does not light up, refer to DI-27, "WARNING LAMPS" , or see EC-655, "MIL & DATA LINK CONNECTORS" .
2. When the engine is started, the MIL should go off.
   If the MIL remains on, the on board diagnostic system has detected an engine system malfunction.

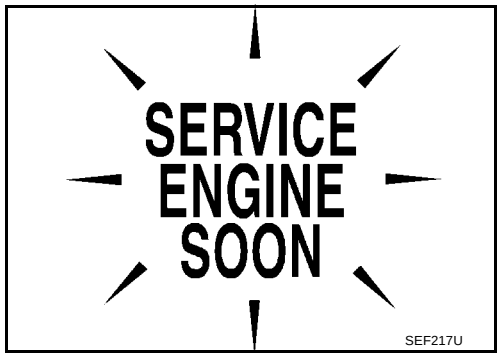

ON BOARD DIAGNOSTIC SYSTEM FUNCTION

The on board diagnostic system has the following 3 functions.

Diagnostic Test Mode	KEY and ENG. Status	Function	Explanation of Function
Mode I	Ignition switch in ON position  Engine stopped 	BULB CHECK	This function checks the MIL bulb for damage (blown, open circuit, etc.). If the MIL does not come on, check MIL circuit.
	Engine running 	MALFUNCTION WARNING	This is a usual driving condition. When a malfunction is detected twice in two consecutive driving cycles (two trip detection logic), the MIL will light up to inform the driver that a malfunction has been detected. The following malfunctions will light up or blink the MIL in the 1st trip. ● Misfire (Possible three way catalyst damage) ● One trip detection diagnoses
Mode II	Ignition switch in ON position  Engine stopped 	SELF-DIAGNOSTIC RESULTS	This function allows DTCs and 1st trip DTCs to be read.

When there is an open circuit on MIL circuit, the ECM cannot warn the driver by lighting up MIL when there is malfunction on engine control system.
Therefore, when electrical controlled throttle and part of ECM related diagnoses are continuously detected as NG for 5 trips, ECM warns the driver that engine control system malfunctions and MIL circuit is open by means of operating fail-safe function.
The fail-safe function also operates when above diagnoses except MIL circuit are detected, and demands the driver to repair the malfunction.

Engine operating condition in fail-safe mode	Engine speed will not rise more than 2,500 rpm due to the fuel cut

MIL Flashing Without DTC

When any SRT codes are not set, MIL may flash without DTC. For the details, refer to EC-60, "How to Display SRT Status" .

HOW TO SWITCH DIAGNOSTIC TEST MODE

NOTE:

- **It is better to count the time accurately with a clock.**
- **It is impossible to switch the diagnostic mode when an accelerator pedal position sensor circuit has a malfunction.**
- **Always ECM returns to Diagnostic Test Mode I after ignition switch is turned OFF.**

How to Set Diagnostic Test Mode II (Self-diagnostic Results)

1. Confirm that accelerator pedal is fully released, turn ignition switch ON and wait 3 seconds.
2. Repeat the following procedure quickly five times within 5 seconds.

a. Fully depress the accelerator pedal.
b. Fully release the accelerator pedal.

3. Wait 7 seconds, fully depress the accelerator pedal and keep it for approx. 10 seconds until the MIL starts blinking.

NOTE:
Do not release the accelerator pedal for 10 seconds if MIL may start blinking on the halfway of this 10 seconds. This blinking is displaying SRT status and is continued for another 10 seconds. For the details, refer to EC-60 .

4. Fully release the accelerator pedal.
   ECM has entered to Diagnostic Test Mode II (Self-diagnostic results).

   NOTE:
   Wait until the same DTC (or 1st trip DTC) appears to confirm all DTCs certainly.

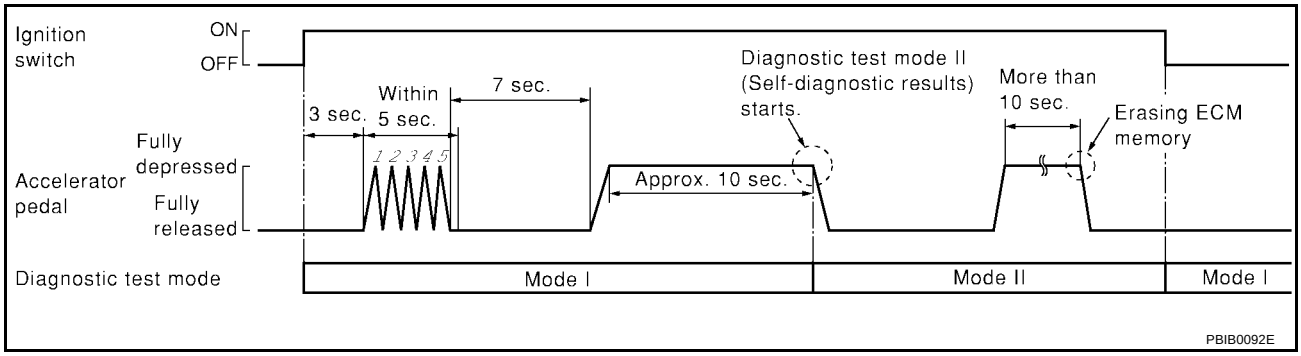

How to Erase Diagnostic Test Mode II (Self-diagnostic Results)

1. Set ECM in Diagnostic Test Mode II (Self-diagnostic results). Refer to EC-66, "How to Set Diagnostic Test Mode II (Self-diagnostic Results)" .
2. Fully depress the accelerator pedal and keep it for more than 10 seconds.
   The emission-related diagnostic information has been erased from the backup memory in the ECM.
3. Fully release the accelerator pedal, and confirm the DTC 0000 is displayed.

DIAGNOSTIC TEST MODE I — BULB CHECK

In this mode, the MIL on the instrument panel should stay ON. If it remains OFF, check the bulb. Refer to DI-27, "WARNING LAMPS" .

DIAGNOSTIC TEST MODE I — MALFUNCTION WARNING

MIL	Condition
ON	When the malfunction is detected.
OFF	No malfunction

These DTC numbers are clarified in Diagnostic Test Mode II (SELF-DIAGNOSTIC RESULTS)

DIAGNOSTIC TEST MODE II — SELF-DIAGNOSTIC RESULTS

In this mode, the DTC and 1st trip DTC are indicated by the number of blinks of the MIL as shown below.
The DTC and 1st trip DTC are displayed at the same time. If the MIL does not illuminate in diagnostic test mode I (Malfunction warning), all displayed items are 1st trip DTCs. If only one code is displayed when the MIL illuminates in diagnostic test mode II (SELF-DIAGNOSTIC RESULTS), it is a DTC; if two or more codes are displayed, they may be either DTCs or 1st trip DTCs. DTC No. is same as that of 1st trip DTC. These unidentified codes can be identified by using the CONSULT-II or GST. A DTC will be used as an example for how to read a code.

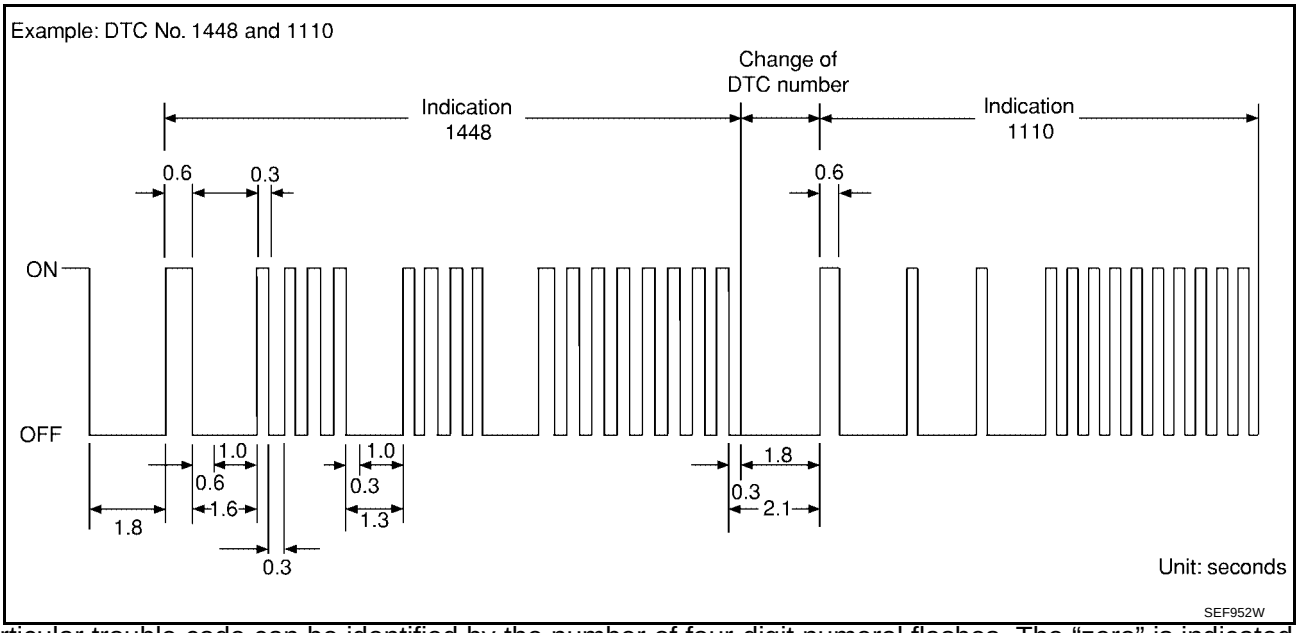

A particular trouble code can be identified by the number of four-digit numeral flashes. The “zero” is indicated by the number of ten flashes. The length of time the 1,000th-digit numeral flashes on and off is 1.2 seconds consisting of an ON (0.6-second) - OFF (0.6-second) cycle.
The 100th-digit numeral and lower digit numerals consist of a 0.3-second ON and 0.3-second OFF cycle.
A change from one digit numeral to another occurs at an interval of 1.0-second OFF. In other words, the later numeral appears on the display 1.3 seconds after the former numeral has disappeared.
A change from one trouble code to another occurs at an interval of 1.8-second OFF.
In this way, all the detected malfunctions are classified by their DTC numbers. The DTC 0000 refers to no malfunction. (See EC-15, "INDEX FOR DTC")

How to Erase Diagnostic Test Mode II (Self-diagnostic Results)

The DTC can be erased from the back-up memory in the ECM by depressing accelerator pedal. Refer to EC-67, "How to Erase Diagnostic Test Mode II (Self-diagnostic Results)" .

- **If the battery is disconnected, the DTC will be lost from the backup memory within 24 hours.**
- **Be careful not to erase the stored memory before starting trouble diagnoses.**

OBD System Operation Chart

UBS00JS6

RELATIONSHIP BETWEEN MIL, 1ST TRIP DTC, DTC, AND DETECTABLE ITEMS

- When a malfunction is detected for the first time, the 1st trip DTC and the 1st trip freeze frame data are stored in the ECM memory.
- When the same malfunction is detected in two consecutive trips, the DTC and the freeze frame data are stored in the ECM memory, and the MIL will come on. For details, refer to EC-51, "Two Trip Detection Logic" .
- The MIL will go off after the vehicle is driven 3 times with no malfunction. The drive is counted only when the recorded driving pattern is met (as stored in the ECM). If another malfunction occurs while counting, the counter will reset.
- The DTC and the freeze frame data will be stored until the vehicle is driven 40 times (driving pattern A) without the same malfunction recurring (except for Misfire and Fuel Injection System). For Misfire and Fuel Injection System, the DTC and freeze frame data will be stored until the vehicle is driven 80 times (driving pattern C) without the same malfunction recurring. The “TIME” in “SELF-DIAGNOSTIC RESULTS” mode of CONSULT-II will count the number of times the vehicle is driven.
- The 1st trip DTC is not displayed when the self-diagnosis results in OK for the 2nd trip.

SUMMARY CHART

Items	Fuel Injection System	Misfire	Other
MIL (goes off)	3 (pattern B)	3 (pattern B)	3 (pattern B)
DTC, Freeze Frame Data (no display)	80 (pattern C)	80 (pattern C)	40 (pattern A)

Items	Fuel Injection System	Misfire	Other
1st Trip DTC (clear)	1 (pattern C), *1	1 (pattern C), *1	1 (pattern B)
1st Trip Freeze Frame Data (clear)	*1, *2	*1, *2	1 (pattern B)

For details about patterns B and C under “Fuel Injection System” and “Misfire”, see EC-71 .
For details about patterns A and B under “Other”, see EC-73 .
*1: Clear timing is at the moment OK is detected.
*2: Clear timing is when the same malfunction is detected in the 2nd trip.

RELATIONSHIP BETWEEN MIL, DTC, 1ST TRIP DTC AND DRIVING PATTERNS FOR “MISFIRE <EXHAUST QUALITY DETERIORATION>”, “FUEL INJECTION SYSTEM”

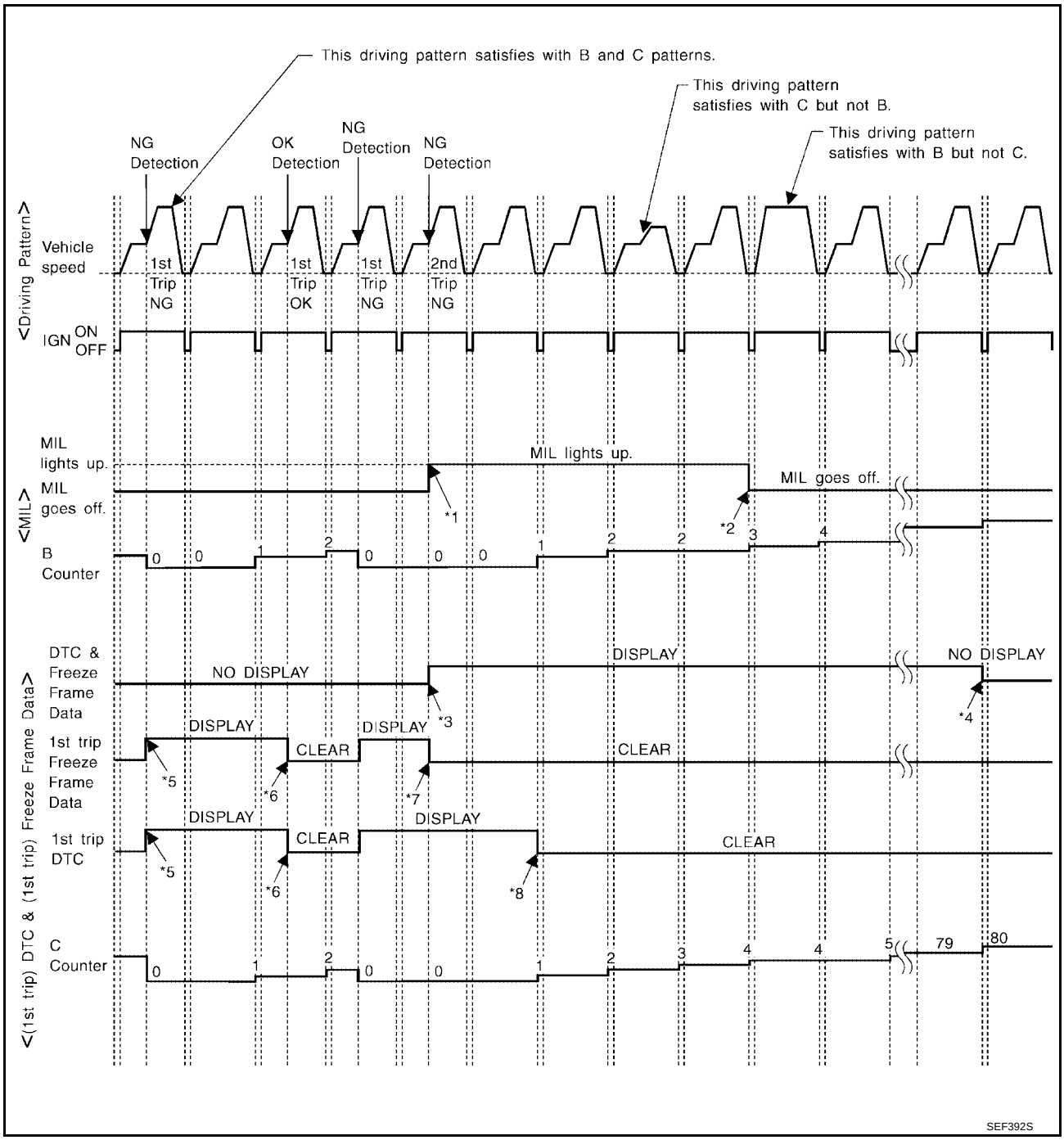

*1: When the same malfunction is detected in two consecutive trips, MIL will light up.

*2: MIL will go off after vehicle is driven 3 times (pattern B) without any malfunctions.

*3: When the same malfunction is detected in two consecutive trips, the DTC and the freeze frame data will be stored in ECM.

*4: The DTC and the freeze frame data will not be displayed any longer after vehicle is driven 80 times (pattern C) without the same malfunction. (The DTC and the freeze frame data still remain in ECM.)

*5: When a malfunction is detected for the first time, the 1st trip DTC and the 1st trip freeze frame data will be stored in ECM.

*6: The 1st trip DTC and the 1st trip freeze frame data will be cleared at the moment OK is detected.

*7: When the same malfunction is detected in the 2nd trip, the 1st trip freeze frame data will be cleared.

*8: 1st trip DTC will be cleared when vehicle is driven once (pattern C) without the same malfunction after DTC is stored in ECM.

EXPLANATION FOR DRIVING PATTERNS FOR “MISFIRE <EXHAUST QUALITY DETERIORATION>”, “FUEL INJECTION SYSTEM”

<Driving Pattern B>

Driving pattern B means the vehicle operation as follows:
All components and systems should be monitored at least once by the OBD system.

- The B counter will be cleared when the malfunction is detected once regardless of the driving pattern.
- The B counter will be counted up when driving pattern B is satisfied without any malfunction.
- The MIL will go off when the B counter reaches 3. (*2 in “OBD SYSTEM OPERATION CHART”)

<Driving Pattern C>

Driving pattern C means the vehicle operation as follows:
The following conditions should be satisfied at the same time:
Engine speed: (Engine speed in the freeze frame data) ±375 rpm
Calculated load value: (Calculated load value in the freeze frame data) x (1±0.1) [%]
Engine coolant temperature (T) condition:

- When the freeze frame data shows lower than 70°C (158°F), “T” should be lower than 70°C (158°F).
- When the freeze frame data shows higher than or equal to 70°C (158°F), “T” should be higher than or equal to 70°C (158°F).

Example:
If the stored freeze frame data is as follows:
Engine speed: 850 rpm, Calculated load value: 30%, Engine coolant temperature: 80°C (176°F)
To be satisfied with driving pattern C, the vehicle should run under the following conditions:
Engine speed: 475 - 1,225 rpm, Calculated load value: 27 - 33%, Engine coolant temperature: more than 70°C (158°F)

- The C counter will be cleared when the malfunction is detected regardless of vehicle conditions above.
- The C counter will be counted up when vehicle conditions above is satisfied without the same malfunction.
- The DTC will not be displayed after C counter reaches 80.
- The 1st trip DTC will be cleared when C counter is counted once without the same malfunction after DTC is stored in ECM.

RELATIONSHIP BETWEEN MIL, DTC, 1ST TRIP DTC AND DRIVING PATTERNS EXCEPT FOR "MISFIRE <EXHAUST QUALITY DETERIORATION>", "FUEL INJECTION SYSTEM"

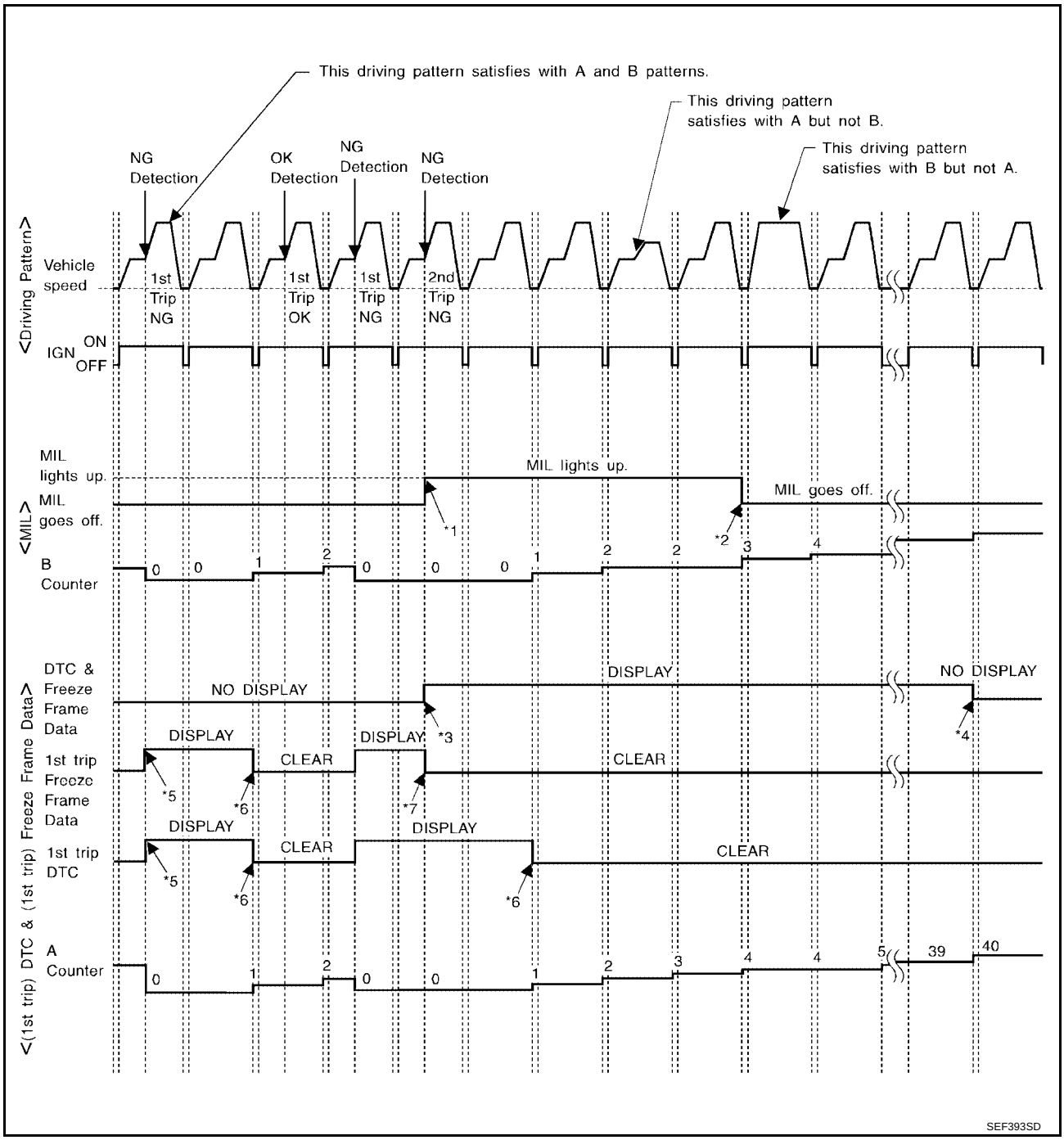

*1: When the same malfunction is detected in two consecutive trips, MIL will light up.

*2: MIL will go off after vehicle is driven 3 times (pattern B) without any malfunctions.

*3: When the same malfunction is detected in two consecutive trips, the DTC and the freeze frame data will be stored in ECM.

*4: The DTC and the freeze frame data will not be displayed any longer after vehicle is driven 40 times (pattern A) without the same malfunction. (The DTC and the freeze frame data still remain in ECM.)

*5: When a malfunction is detected for the first time, the 1st trip DTC and the 1st trip freeze frame data will be stored in ECM.

*6: 1st trip DTC will be cleared after vehicle is driven once (pattern B) without the same malfunction.

*7: When the same malfunction is detected in the 2nd trip, the 1st trip freeze frame data will be cleared.

EXPLANATION FOR DRIVING PATTERNS EXCEPT FOR "MISFIRE <EXHAUST QUALITY DETERIORATION>", "FUEL INJECTION SYSTEM"

<Driving Pattern A>

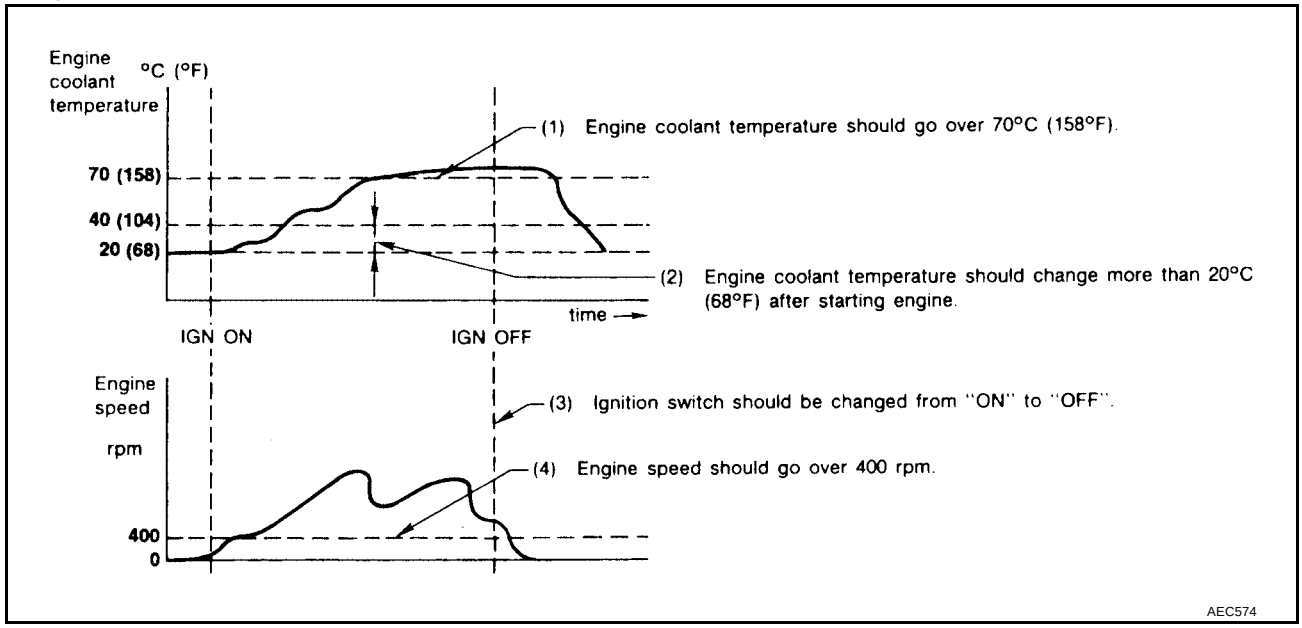

- The A counter will be cleared when the malfunction is detected regardless of (1) - (4).
- The A counter will be counted up when (1) - (4) are satisfied without the same malfunction.
- The DTC will not be displayed after the A counter reaches 40.

<Driving Pattern B>

Driving pattern B means the vehicle operation as follows:
All components and systems should be monitored at least once by the OBD system.

- The B counter will be cleared when the malfunction is detected once regardless of the driving pattern.
- The B counter will be counted up when driving pattern B is satisfied without any malfunctions.
- The MIL will go off when the B counter reaches 3 (*2 in "OBD SYSTEM OPERATION CHART").

BASIC SERVICE PROCEDURE

PFP:00018

Basic Inspection

UBS00JS7

1. INSPECTION START

1. Check service records for any recent repairs that may indicate a related malfunction, or a current need for scheduled maintenance.
2. Open engine hood and check the following:
- Harness connectors for improper connections
- Wiring harness for improper connections, pinches and cut
- Vacuum hoses for splits, kinks and improper connections
- Hoses and ducts for leaks
- Air cleaner clogging
- Gasket
3. Confirm that electrical or mechanical loads are not applied.
- Headlamp switch is OFF.
- Air conditioner switch is OFF.
- Rear window defogger switch is OFF.
- Steering wheel is in the straight-ahead position, etc.

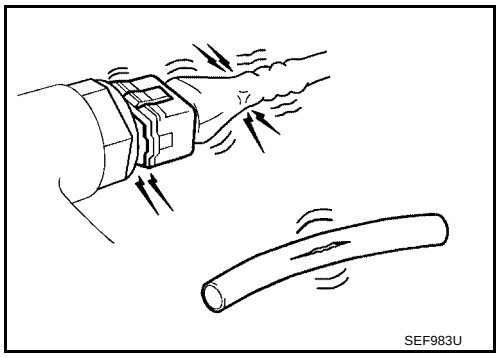

4. Start engine and warm it up until engine coolant temperature indicator points the middle of gauge.
   Ensure engine stays below 1,000 rpm.

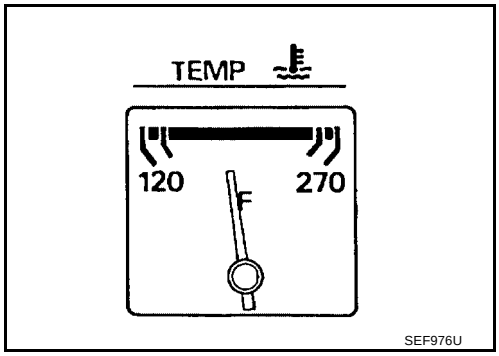

5. Run engine at about 2,000 rpm for about 2 minutes under no-load.
6. Make sure that no DTC is displayed with CONSULT-II or GST.

OK or NG

OK >> GO TO 3.
NG >> GO TO 2.

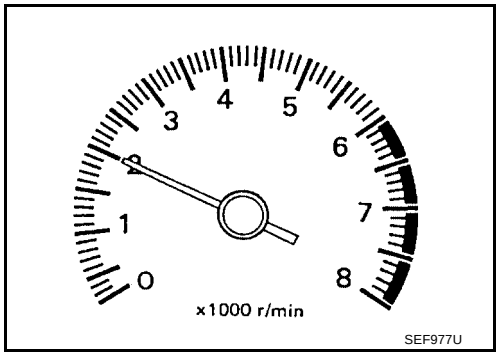

2. REPAIR OR REPLACE

Repair or replace components as necessary according to corresponding Diagnostic Procedure.

>> GO TO 3.

3. CHECK TARGET IDLE SPEED

With CONSULT-II

1. Run engine at about 2,000 rpm for about 2 minutes under no-load.
2. Rev engine (2,000 to 3,000 rpm) two or three times under no-load, then run engine at idle speed for about 1 minute.

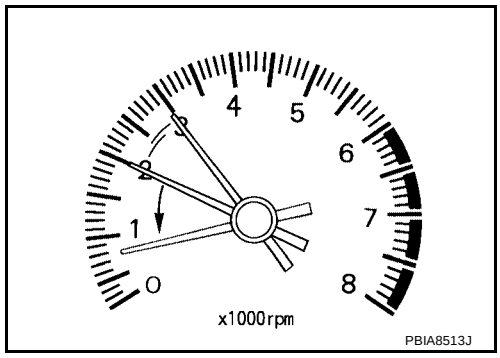

3. Read idle speed in “DATA MONITOR” mode with CONSULT-II. Refer to EC-138 .

   M/T: 650 ± 50 rpm
   A/T: 800 ± 50 rpm (in P or N position)

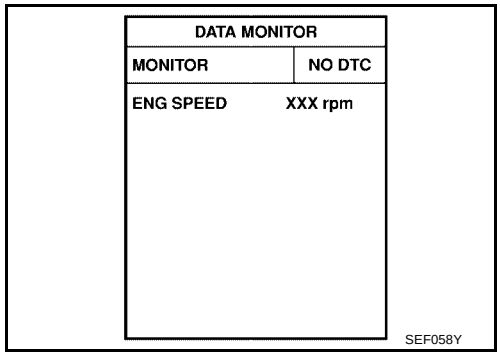

Without CONSULT-II

1. Run engine at about 2,000 rpm for about 2 minutes under no-load.
2. Rev engine (2,000 to 3,000 rpm) two or three times under no-load, then run engine at idle speed for about 1 minute.
3. Check idle speed. Refer to EC-79 .

   M/T: 650 ± 50 rpm
   A/T: 800 ± 50 rpm (in P or N position)

OK or NG

OK >> GO TO 10.
NG >> GO TO 4.

4. PERFORM ACCELERATOR PEDAL RELEASED POSITION LEARNING

1. Stop engine.
2. Perform EC-92, "Accelerator Pedal Released Position Learning" .

>> GO TO 5.

5. PERFORM THROTTLE VALVE CLOSED POSITION LEARNING

Perform EC-92, "Throttle Valve Closed Position Learning" .

>> GO TO 6.

6. PERFORM IDLE AIR VOLUME LEARNING

Refer to EC-92, "Idle Air Volume Learning" .
Is Idle Air Volume Learning carried out successfully?

Yes or No

Yes >> GO TO 7.
No >> 1. Follow the instruction of Idle Air Volume Learning.
2. GO TO 4.

7. CHECK TARGET IDLE SPEED AGAIN

With CONSULT-II

1. Start engine and warm it up to normal operating temperature.
2. Read idle speed in “DATA MONITOR” mode with CONSULT-II. Refer to EC-79 .

M/T: 650 ± 50 rpm
A/T: 800 ± 50 rpm (in P or N position)

Without CONSULT-II

1. Start engine and warm it up to normal operating temperature.
2. Check idle speed. Refer to EC-79 .

M/T: 650 ± 50 rpm
A/T: 800 ± 50 rpm (in P or N position)

OK or NG

OK >> GO TO 10.
NG >> GO TO 8.

8. DETECT MALFUNCTIONING PART

Check the following.

- Check camshaft position sensor (PHASE) and circuit. Refer to EC-291 .
- Check crankshaft position sensor (POS) and circuit. Refer to EC-284 .

OK or NG

OK >> GO TO 9.
NG >> 1. Repair or replace.
2. GO TO 4.

9. CHECK ECM FUNCTION

1. Substitute another known-good ECM to check ECM function. (ECM may be the cause of an incident, but this is a rare case.)
2. Perform initialization of NVIS (NATS) system and registration of all NVIS (NATS) ignition key IDs. Refer to BL-96, "NVIS (NISSAN VEHICLE IMMOBILIZER SYSTEM — NATS)" .

>> GO TO 4.

10. CHECK IGNITION TIMING

1. Run engine at idle.
2. Check ignition timing with a timing light. Refer to EC-79 .

M/T: 7 ± 5° BTDC
A/T: 18 ± 5° BTDC (in P or N position)

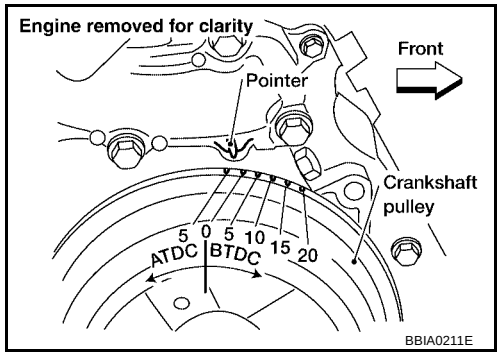

OK or NG

OK >> GO TO 19.
NG >> GO TO 11.

11. PERFORM ACCELERATOR PEDAL RELEASED POSITION LEARNING

1. Stop engine.
2. Perform EC-92, "Accelerator Pedal Released Position Learning" .

>> GO TO 12.

12. PERFORM THROTTLE VALVE CLOSED POSITION LEARNING

PerformEC-92, "Throttle Valve Closed Position Learning" .

>> GO TO 13.

13. PERFORM IDLE AIR VOLUME LEARNING

Refer to EC-92, "Idle Air Volume Learning" .
Is Idle Air Volume Learning carried out successfully?

Yes or No

Yes >> GO TO 14.
No >> 1. Follow the instruction of Idle Air Volume Learning.
2. GO TO 4.

14. CHECK TARGET IDLE SPEED AGAIN

With CONSULT-II

1. Start engine and warm it up to normal operating temperature.
2. Read idle speed in “DATA MONITOR” mode with CONSULT-II. Refer toEC-79 .

M/T: 650 ± 50 rpm
A/T: 800 ± 50 rpm (in P or N position)

Without CONSULT-II

1. Start engine and warm it up to normal operating temperature.
2. Check idle speed. Refer to EC-79 .

M/T: 650 ± 50 rpm
A/T: 800 ± 50 rpm (in P or N position)

OK or NG

OK >> GO TO 15.
NG >> GO TO 17.

15. CHECK IGNITION TIMING AGAIN

1. Run engine at idle.
2. Check ignition timing with a timing light. Refer to EC-79 .

M/T: 7 ± 5° BTDC
A/T: 18 ± 5° BTDC (in P or N position)

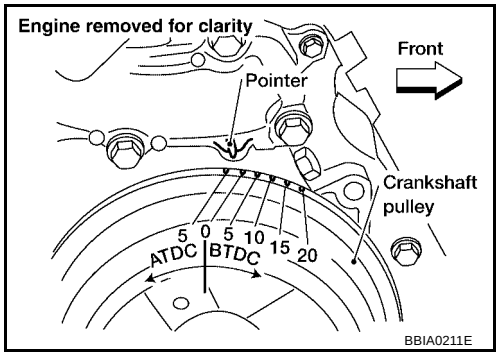

OK or NG

OK >> GO TO 19
NG >> GO TO 16.

16. CHECK TIMING CHAIN INSTALLATION

Check timing chain installation. Refer to EM-42, "TIMING CHAIN" .

OK or NG

OK >> GO TO 17.
NG >> 1. Repair the timing chain installation.
2. GO TO 4.

17. DETECT MALFUNCTIONING PART

Check the following.

- Check camshaft position sensor (PHASE) and circuit. Refer to EC-291 .
- Check crankshaft position sensor (POS) and circuit. Refer to EC-284 .

OK or NG

OK >> GO TO 18.
NG >> 1. Repair or replace.
2. GO TO 4.

18. CHECK ECM FUNCTION

1. Substitute another known-good ECM to check ECM function. (ECM may be the cause of an incident, but this is a rare case.)
2. Perform initialization of NVIS (NATS) system and registration of all NVIS (NATS) ignition key IDs. Refer to BL-96, "NVIS (NISSAN VEHICLE IMMOBILIZER SYSTEM — NATS)" .

>> GO TO 4.

19. INSPECTION END

Did you replace ECM, referring this Basic Inspection procedure?

Yes or No

Yes >> 1. Perform EC-91, "VIN Registration" .
2. **INSPECTION END**
No >> **INSPECTION END**

Idle Speed and Ignition Timing Check

UBS00JS8

IDLE SPEED

With CONSULT-II

Check idle speed in “DATA MONITOR” mode with CONSULT-II.

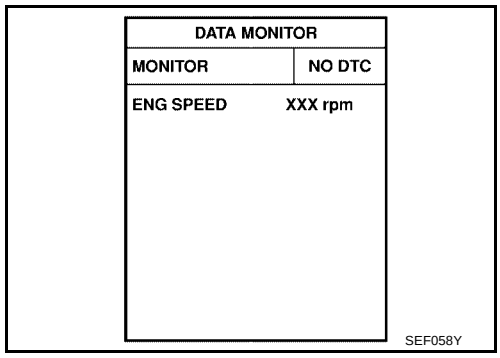

With GST

Check idle speed in “Service $01” with GST.

IGNITION TIMING

Any of following two methods may be used.

Method A

1. Slide the harness protector of ignition coil No.1 to clear the wires.
2. Attach timing light to the ignition coil No.1 wires as shown in the figure.
3. Check ignition timing.

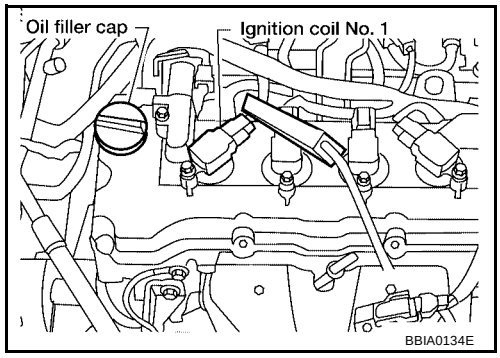

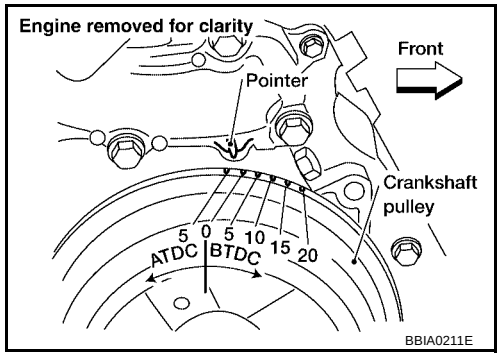

Method B

1. Remove ignition coil No.1.

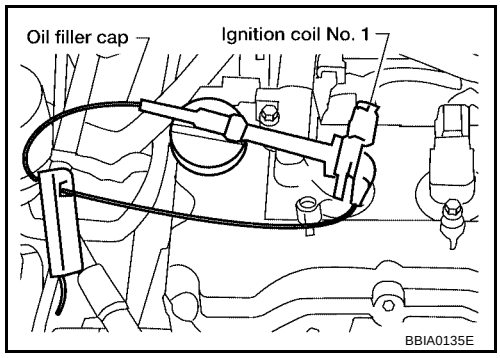

2. Connect ignition coil No.1 and spark plug No.1 with suitable high-tension wire as shown, and attach timing light clamp to this wire.

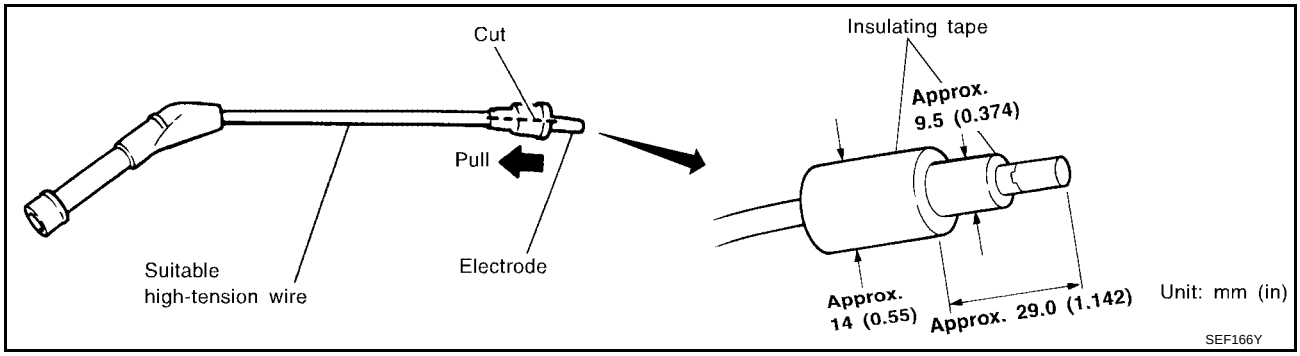

3. Check ignition timing.

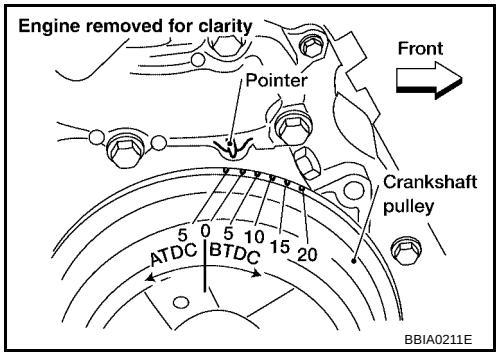

Idle Mixture Ratio Adjustment

UBS00JS9

PREPARATION

1. Make sure that the following parts are in good order.
   - Battery
   - Ignition system
   - Engine oil and coolant levels
   - Fuses
   - ECM harness connector
   - Vacuum hoses
   - Air intake system
     (Oil filler cap, oil level gauge, etc.)
   - Fuel pressure
   - Engine compression
   - Throttle valve
   - Evaporative emission system
2. On air conditioner equipped models, checks should be carried out while the air conditioner is OFF.
3. On automatic transaxle equipped models, when checking idle rpm, ignition timing and mixture ratio, checks should be carried out while shift lever is in P or N position.
4. When measuring CO percentage, insert probe more than 40 cm (15.7 in) into tail pipe.
5. Turn off headlamps, heater blower, rear window defogger.
6. Keep front wheels pointed straight ahead.
7. Make the check after the cooling fans has stopped.

OVERALL SEQUENCE

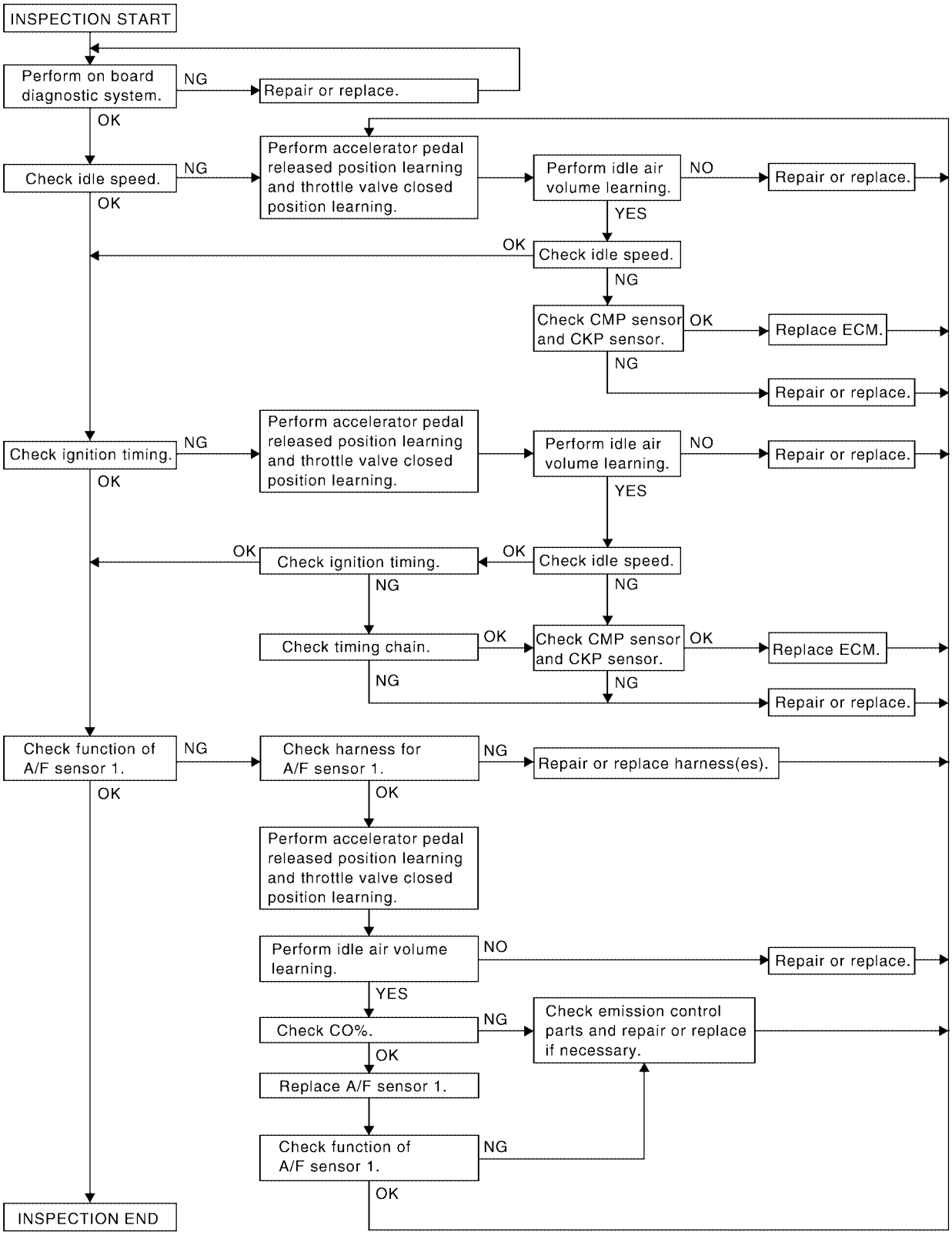

NOTE:
If a vehicle contains a part which is operating outside of design specifications with no MIL illumination, the part shall not be replaced prior to emission testing unless it is determined that the part has been tampered with or abused in such a way that the diagnostic system cannot reasonably be expected to detect the resulting malfunction.

PBIB2061E

DETAILED PROCEDURE

1. INSPECTION START

1. Check service records for any recent repairs that may indicate a related malfunction, or a current need for scheduled maintenance.
2. Open engine hood and check the following:
- Harness connectors for improper connections
- Wiring harness for improper connections, pinches and cut
- Vacuum hoses for splits, kinks and improper connections
- Hoses and ducts for leaks
- Air cleaner clogging
- Gasket
3. Confirm that electrical or mechanical loads are not applied.
- Headlamp switch is OFF.
- Air conditioner switch is OFF.
- Rear window defogger switch is OFF.
- Steering wheel is in the straight-ahead position, etc.

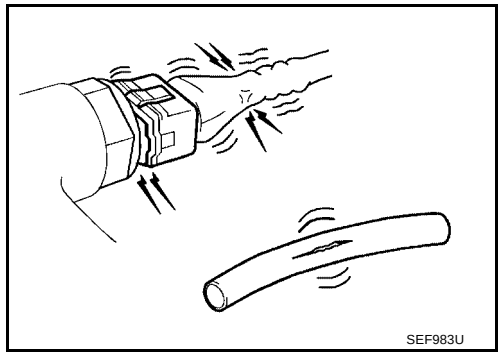

4. Start engine and warm it up until engine coolant temperature indicator points the middle of gauge.
   Ensure engine stays below 1,000 rpm.

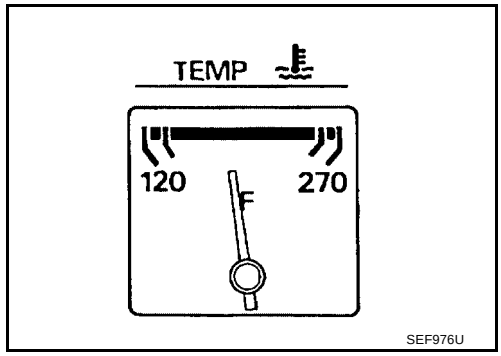

5. Run engine at about 2,000 rpm for about 2 minutes under no-load.
6. Make sure that no DTC is displayed with CONSULT-II or GST.

OK or NG

OK >> GO TO 3.
NG >> GO TO 2.

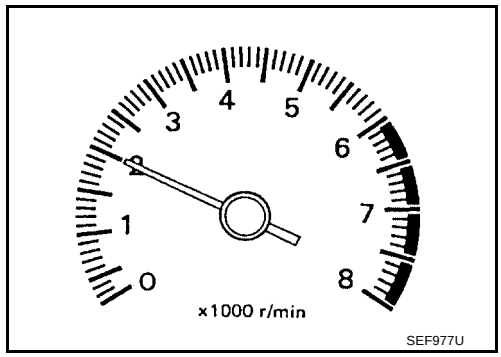

2. REPAIR OR REPLACE

Repair or replace components as necessary according to corresponding Diagnostic Procedure.

>> GO TO 3.

3. CHECK TARGET IDLE SPEED

With CONSULT-II

1. Run engine at about 2,000 rpm for about 2 minutes under no-load.
2. Rev engine (2,000 to 3,000 rpm) two or three times under no-load, then run engine at idle speed for about 1 minute.

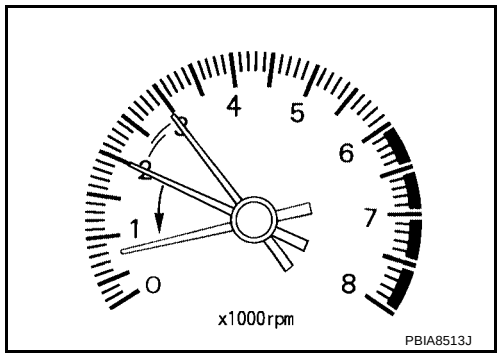

3. Read idle speed in “DATA MONITOR” mode with CONSULT-II. Refer to EC-79 .

   M/T: 650 ± 50 rpm

   A/T: 800 ± 50 rpm (in P or N position)

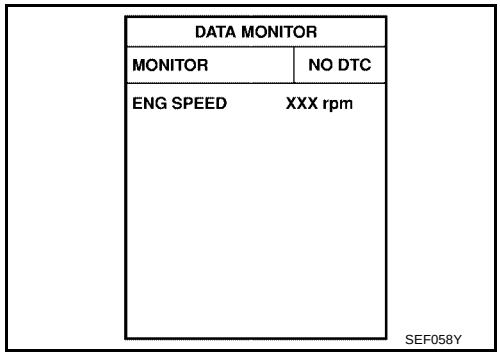

Without CONSULT-II

1. Run engine at about 2,000 rpm for about 2 minutes under no-load.
2. Rev engine (2,000 to 3,000 rpm) two or three times under no-load, then run engine at idle speed for about 1 minute.
3. Check idle speed. Refer to EC-79 .

   M/T: 650 ± 50 rpm

   A/T: 800 ± 50 rpm (in P or N position)

OK or NG

OK >> GO TO 10.
NG >> GO TO 4.

4. PERFORM ACCELERATOR PEDAL RELEASED POSITION LEARNING

1. Stop engine.
2. Perform EC-92, "Accelerator Pedal Released Position Learning" .

>> GO TO 5.

5. PERFORM THROTTLE VALVE CLOSED POSITION LEARNING

Perform EC-92, "Throttle Valve Closed Position Learning" .

>> GO TO 6.

6. PERFORM IDLE AIR VOLUME LEARNING

Perform EC-92, "Idle Air Volume Learning" .

Is Idle Air Volume Learning carried out successfully?

Yes or No

Yes >> GO TO 7.
No >> 1. Follow the instruction of Idle Air Volume Learning.
2. GO TO 4.

7. CHECK TARGET IDLE SPEED AGAIN

With CONSULT-II

1. Start engine and warm it up to normal operating temperature.
2. Read idle speed in “DATA MONITOR” mode with CONSULT-II. Refer to EC-79

M/T: 650 ± 50 rpm

A/T: 800 ± 50 rpm (in P or N position)

Without CONSULT-II

1. Start engine and warm it up to normal operating temperature.
2. Check idle speed. Refer to EC-79 .

M/T: 650 ± 50 rpm

A/T: 800 ± 50 rpm (in P or N position)

OK or NG

OK >> GO TO 10.
NG >> GO TO 8.

8. DETECT MALFUNCTIONING PART

Check the following.

- Check camshaft position sensor (PHASE) and circuit. Refer to EC-291 .
- Check crankshaft position sensor (POS) and circuit. Refer to EC-284 .

OK or NG

OK >> GO TO 9.
NG >> 1. Repair or replace.
2. GO TO 4.

9. CHECK ECM FUNCTION

1. Substitute another known-good ECM to check ECM function. (ECM may be the cause of an incident, but this is a rare case.)
2. Perform initialization of NVIS (NATS) system and registration of all NVIS (NATS) ignition key IDs. Refer to BL-96, "NVIS (NISSAN VEHICLE IMMOBILIZER SYSTEM — NATS)" (if so equipped).

>> GO TO 4.

10. CHECK IGNITION TIMING

1. Run engine at idle.
2. Check ignition timing with a timing light. Refer to EC-79

M/T: 7 ± 5° BTDC

A/T: 18 ± 5° BTDC (in P or N position)

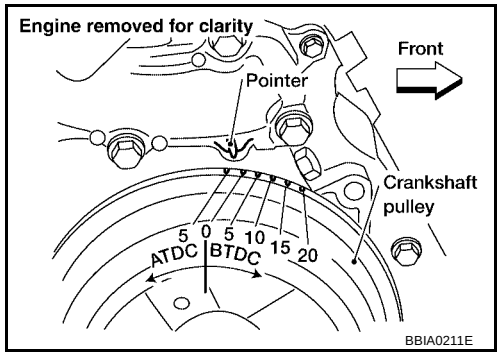

OK or NG

OK (With CONSULT-II)>>GO TO 19.
OK (Without CONSULT-II)>>GO TO 20.
NG >> GO TO 11.

11. PERFORM ACCELERATOR PEDAL RELEASED POSITION LEARNING

1. Stop engine.
2. Perform EC-92, "Accelerator Pedal Released Position Learning" .

>> GO TO 12.

12. PERFORM THROTTLE VALVE CLOSED POSITION LEARNING

Perform EC-92, "Throttle Valve Closed Position Learning" .

>> GO TO 13.

13. PERFORM IDLE AIR VOLUME LEARNING

Perform EC-92, "Idle Air Volume Learning" .

Is Idle Air Volume Learning carried out successfully?

Yes or No

Yes >> GO TO 14.
No >> 1. Follow the instruction of Idle Air Volume Learning.
2. GO TO 4.

14. CHECK TARGET IDLE SPEED AGAIN

With CONSULT-II

1. Start engine and warm it up to normal operating temperature.
2. Read idle speed in “DATA MONITOR” mode with CONSULT-II. Refer to EC-727 .

M/T: 650 ± 50 rpm

A/T: 800 ± 50 rpm (in P or N position)

Without CONSULT-II

1. Start engine and warm it up to normal operating temperature.
2. Check idle speed. Refer to EC-79 .

M/T: 650 ± 50 rpm

A/T: 800 ± 50 rpm (in P or N position)

OK or NG

OK >> GO TO 15.
NG >> GO TO 17.

15. CHECK IGNITION TIMING AGAIN

1. Run engine at idle.
2. Check ignition timing with a timing light. Refer to EC-79 .

M/T: 7 ± 5° BTDC

A/T: 18 ± 5° BTDC (in P or N position)

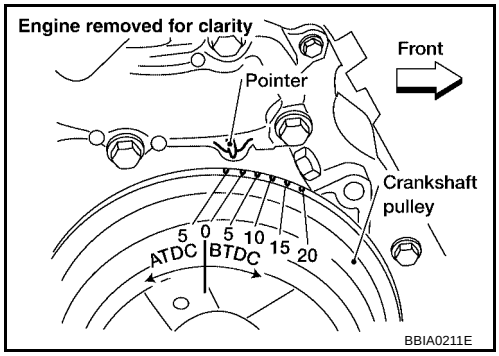

OK or NG

OK (With CONSULT-II)>>GO TO 19.
OK (Without CONSULT-II)>>GO TO 20.
NG >> GO TO 16.

16. CHECK TIMING CHAIN INSTALLATION

Check timing chain installation. Refer to EM-42, "TIMING CHAIN" .

OK or NG

OK >> GO TO 17.
NG >> 1. Repair the timing chain installation.
2. GO TO 4.

17. DETECT MALFUNCTIONING PART

Check the following.

- Check camshaft position sensor (PHASE) and circuit. Refer to EC-291 .
- Check crankshaft position sensor (POS) and circuit. Refer to EC-284 .

OK or NG

OK >> GO TO 18.
NG >> 1. Repair or replace.
2. GO TO 4.

18. CHECK ECM FUNCTION

1. Substitute another known-good ECM to check ECM function. (ECM may be the cause of an incident, but this is a rare case.)
2. Perform initialization of NVIS (NATS) system and registration of all NVIS (NATS) ignition key IDs. Refer to BL-96, "NVIS (NISSAN VEHICLE IMMOBILIZER SYSTEM — NATS)" (if so equipped).

>> GO TO 4.

19. CHECK AIR FUEL RATIO (A/F) SENSOR 1 FUNCTION

With CONSULT-II

1. Turn ignition switch OFF and wait at a least 10 seconds.
2. Start engine and warm it up to normal operating temperature.
3. Drive the vehicle at a speed of 80 km/h (50 MPH) for a few minutes in D position with OD OFF (A/T models) or 4th position (M/T models).

   NOTE:
   Keep the accelerator pedal as steady as possible during the cruising.
4. Set OD ON, then release the accelerator pedal fully until the vehicle speed decreases to 50 km/h (30 MPH).

   NOTE:
   Never apply brake during releasing the accelerator pedal.
5. Repeat steps 3 to 4 for five times.
6. Stop the vehicle and connect CONSULT-II to the vehicle.
7. Make sure that no (1st trip) DTC is displayed in “SELF-DIAG RESULTS” mode.

OK or NG

OK >> **INSPECTION END**
NG >> GO TO 21.

20. CHECK AIR FUEL RATIO (A/F) SENSOR 1 FUNCTION

With GST

1. Turn ignition switch OFF and wait at a least 10 seconds.
2. Start engine and warm it up to normal operating temperature.
3. Drive the vehicle at a speed of 80 km/h (50 MPH) for a few minutes in D position with OD OFF (A/T models) or 4th position (M/T models).

   NOTE:
   Keep the accelerator pedal as steady as possible during the cruising.
4. Set OD ON, then release the accelerator pedal fully until the vehicle speed decreases to 50 km/h (30 MPH).

   NOTE:
   Never apply brake during releasing the accelerator pedal.
5. Repeat steps 3 to 4 for five times.
6. Stop the vehicle and connect GST to the vehicle.
7. Make sure that no (1st trip) DTC is displayed.

OK or NG

OK >> **INSPECTION END**
NG >> GO TO 21.

21. CHECK AIR FUEL RATIO (A/F) SENSOR 1 HARNESS

1. Turn ignition switch OFF and disconnect battery ground cable.
2. Disconnect ECM harness connector.
3. Disconnect A/F sensor 1 harness connector.
4. Check harness continuity between the following terminals. Refer to EC-482, "Wiring Diagram" .

A/F sensor 1 terminal	ECM terminal
4	2
1	16
5	35
6	56
2	75

Continuity should exist.

5. Also check harness for short to ground and short to power.

OK or NG

OK >> GO TO 22.
NG >> 1. Repair open circuit or short to ground or short to power in harness or connectors between ECM and A/F sensor 1.
2. GO TO 4.

22. PERFORM ACCELERATOR PEDAL RELEASED POSITION LEARNING

1. Reconnect ECM harness connector.
2. Perform EC-92, "Accelerator Pedal Released Position Learning" .

>> GO TO 23.

23. PERFORM THROTTLE VALVE CLOSED POSITION LEARNING

Perform EC-92, "Throttle Valve Closed Position Learning" .

>> GO TO 24.

24. PERFORM IDLE AIR VOLUME LEARNING

Refer to EC-92, "Idle Air Volume Learning" .
Is Idle Air Volume Learning carried out successfully?

Yes or No

Yes (With CONSULT-II)>>GO TO 25.
Yes (Without CONSULT-II)>>GO TO 26.
No >> 1. Follow the instruction of Idle Air Volume Learning.
2. GO TO 4.

25. CHECK CO%

With CONSULT-II

1. Start engine and warm it up until engine coolant temperature indicator points the middle of gauge.
2. Turn ignition switch OFF, wait at least 10 seconds and then turn ON.
3. Select “ENG COOLANT TEMP” in “ACTIVE TEST” mode.
4. Set “ENG COOLANT TEMP” to 5°C (41°F) by touching “DWN” and “Qd”.
5. Start engine and rev it (2,000 to 3,000 rpm) two or three times under no load, then run engine at idle speed.
6. Check CO%.

Idle CO: 3 – 11% and engine runs smoothly.

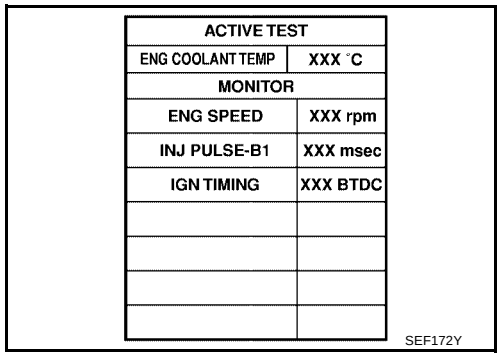

ACTIVE TEST	
ENG COOLANT TEMP	XXX °C
MONITOR	
ENG SPEED	XXX rpm
INJ PULSE-B1	XXX msec
IGN TIMING	XXX BTDC

SEF172Y

OK or NG

OK >> GO TO 28.
NG >> GO TO 27.

26. CHECK CO%

Without CONSULT-II

1. Start engine and warm it up until engine coolant temperature indicator points to the middle of gauge.
2. Turn ignition switch OFF.
3. Disconnect engine coolant temperature sensor harness connector.
4. Connect a resistor (4.4 kΩ) between terminals of engine coolant temperature sensor harness connector.
5. Start engine and rev it (2,000 to 3,000 rpm) two or three times under no load, then run engine at idle speed.
6. Check CO%.

Idle CO: 3 – 11% and engine runs smoothly.

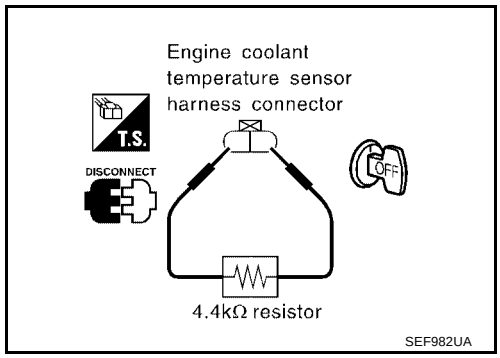

7. After checking CO%, turn ignition switch OFF, disconnect the resistor from the terminals of engine coolant temperature sensor harness connector, and then connect engine coolant temperature sensor harness connector to engine coolant temperature sensor.

OK or NG

OK >> GO TO 28.
NG >> GO TO 27.

27. RECONNECT AIR FUEL RATIO (A/F) SENSOR 1 HARNESS CONNECTOR

1. Turn ignition switch OFF.
2. Reconnect A/F sensor 1 harness connector.

>> GO TO 31.

28. REPLACE AIR FUEL RATIO (A/F) SENSOR 1

1. Stop engine.
2. Replace A/F sensor 1.

With CONSULT-II>>GO TO 29.
Without CONSULT-II>>GO TO 30.

29. CHECK AIR FUEL RATIO (A/F) SENSOR 1 FUNCTION

With CONSULT-II

1. Turn ignition switch OFF and wait at a least 10 seconds.
2. Start engine and warm it up to normal operating temperature.
3. Drive the vehicle at a speed of 80 km/h (50 MPH) for a few minutes in D position with OD OFF (A/T models) or 4th position (M/T models).

   NOTE:
   Keep the accelerator pedal as steady as possible during the cruising.
4. Set OD ON, then release the accelerator pedal fully until the vehicle speed decreases to 50 km/h (30 MPH).

   NOTE:
   Never apply brake during releasing the accelerator pedal.
5. Repeat steps 3 to 4 for five times.
6. Stop the vehicle and connect CONSULT-II to the vehicle.
7. Make sure that no (1st trip) DTC is displayed in “SELF-DIAG RESULTS” mode.

OK or NG

OK >> GO TO 4.
NG >> GO TO 31.

30. CHECK AIR FUEL RATIO (A/F) SENSOR 1 FUNCTION

With GST

1. Turn ignition switch OFF and wait at a least 10 seconds.
2. Start engine and warm it up to normal operating temperature.
3. Drive the vehicle at a speed of 80 km/h (50 MPH) for a few minutes in D position with OD OFF (A/T models) or 4th position (M/T models).

   NOTE:
   Keep the accelerator pedal as steady as possible during the cruising.
4. Set OD ON, then release the accelerator pedal fully until the vehicle speed decreases to 50 km/h (30 MPH).

   NOTE:
   Never apply brake during releasing the accelerator pedal.
5. Repeat steps 3 to 4 for five times.
6. Stop the vehicle and connect GST to the vehicle.
7. Make sure that no (1st trip) DTC is displayed.

OK or NG

OK >> GO TO 4.
NG >> GO TO 31.

31. DETECT MALFUNCTIONING PART

Check the following.

- Check fuel pressure regulator, and repair or replace if necessary.
  Refer toEC-94, "Fuel Pressure Check"
- Check mass air flow sensor and its circuit, and repair or replace if necessary.
  Refer to EC-186, "DTC P0101 MAF SENSOR" and EC-196, "DTC P0102, P0103 MAF SENSOR" .
- Check injector and its circuit, and repair or replace if necessary.
  Refer to EC-615, "INJECTOR" .
- Check engine coolant temperature sensor and its circuit, and repair or replace if necessary.
  Refer to EC-208, "DTC P0117, P0118 ECT SENSOR" and EC-220, "DTC P0125 ECT SENSOR" .

OK or NG

OK >> GO TO 33.
NG >> 1. Repair or replace.
2. GO TO 32.

32. ERASE UNNECESSARY DTC

After this inspection, unnecessary DTC might be displayed.
Erase the stored memory in ECM and TCM.
Refer to EC-64, "How to Erase DTC" and EC-64, "HOW TO ERASE EMISSION-RELATED DIAGNOSTIC INFORMATION" .

>> GO TO 4.

33. CHECK ECM FUNCTION

1. Substitute another known-good ECM to check ECM function. (ECM may be the cause of an incident, but this is a rare case.)
2. Perform initialization of NVIS (NATS) system and registration of all NVIS (NATS) ignition key IDs.
   Refer to BL-96, "NVIS (NISSAN VEHICLE IMMOBILIZER SYSTEM — NATS)" (if so equipped).

>> GO TO 4.

VIN Registration

UBS00JSA

DESCRIPTION

VIN Registration is an operation to registering VIN in ECM. It must be performed each time ECM is replaced.

NOTE:
Accurate VIN which is registered in ECM may be required for Inspection & Maintenance (I/M).

OPERATION PROCEDURE

With CONSULT-II

1. Check the VIN of the vehicle and note it. Refer to GI-47, "IDENTIFICATION INFORMATION" .
2. Turn ignition switch ON and engine stopped.
3. Select “VIN REGISTRATION” in “WORK SUPPORT” mode.
4. Follow the instruction of CONSULT-II display.

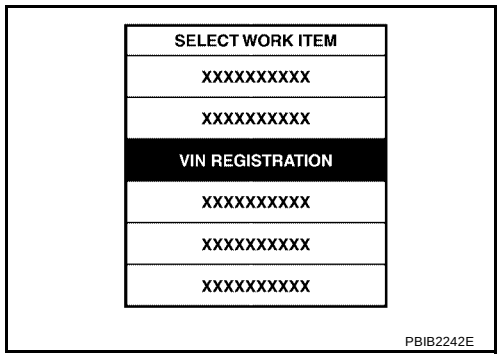

Accelerator Pedal Released Position Learning

UBS00JSB

DESCRIPTION

Accelerator Pedal Released Position Learning is an operation to learn the fully released position of the accelerator pedal by monitoring the accelerator pedal position sensor output signal. It must be performed each time harness connector of accelerator pedal position sensor or ECM is disconnected.

OPERATION PROCEDURE

1. Make sure that accelerator pedal is fully released.
2. Turn ignition switch ON and wait at least 2 seconds.
3. Turn ignition switch OFF wait at least 10 seconds.
4. Turn ignition switch ON and wait at least 2 seconds.
5. Turn ignition switch OFF wait at least 10 seconds.

Throttle Valve Closed Position Learning

UBS00JSC

DESCRIPTION

Throttle Valve Closed Position Learning is an operation to learn the fully closed position of the throttle valve by monitoring the throttle position sensor output signal. It must be performed each time harness connector of electric throttle control actuator or ECM is disconnected.

OPERATION PROCEDURE

1. Make sure that accelerator pedal is fully released.
2. Turn ignition switch ON.
3. Turn ignition switch OFF wait at least 10 seconds.
   Make sure that throttle valve moves during above 10 seconds by confirming the operating sound.

Idle Air Volume Learning

UBS00JSD

DESCRIPTION

Idle Air Volume Learning is an operation to learn the idle air volume that keeps each engine within the specific range. It must be performed under any of the following conditions:

- Each time electric throttle control actuator or ECM is replaced.
- Idle speed or ignition timing is out of specification.

PREPARATION

Before performing Idle Air Volume Learning, make sure that all of the following conditions are satisfied.
Learning will be cancelled if any of the following conditions are missed for even a moment.

- Battery voltage: More than 12.9V (At idle)
- Engine coolant temperature: 70 - 95°C (158 - 203°F)
- PNP switch: ON
- Electric load switch: OFF
  (Air conditioner, headlamp, rear window defogger)
  On vehicles equipped with daytime light systems, if the parking brake is applied before the engine is started the headlamp will not be illuminated.
- Steering wheel: Neutral (Straight-ahead position)
- Vehicle speed: Stopped
- Transmission: Warmed-up
  For A/T models with CONSULT-II, drive vehicle until “FLUID TEMP SE” in “DATA MONITOR” mode of “A/T” system indicates less than 0.9V.
  For A/T models without CONSULT-II and M/T models, drive vehicle for 10 minutes.

OPERATION PROCEDURE

With CONSULT-II

1. Perform EC-92, "Accelerator Pedal Released Position Learning" .
2. Perform EC-92, "Throttle Valve Closed Position Learning" .
3. Start engine and warm it up to normal operating temperature.
4. Check that all items listed under the topic PREPARATION (previously mentioned) are in good order.

5. Select “IDLE AIR VOL LEARN” in “WORK SUPPORT” mode.

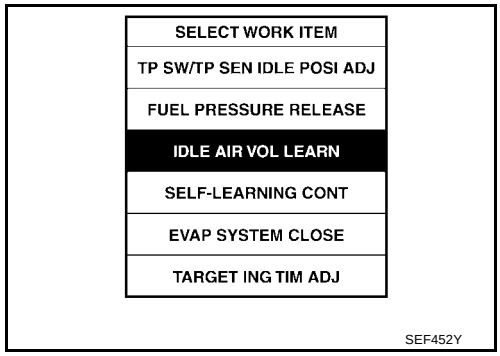

6. Touch “START” and wait 20 seconds.

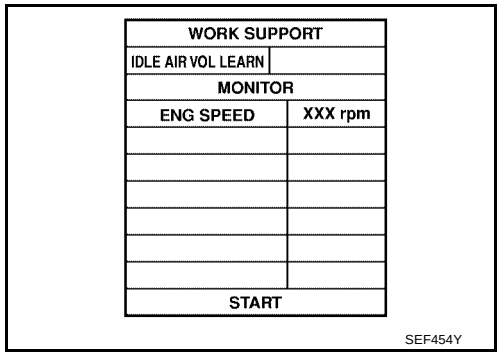

7. Make sure that “CMPLT” is displayed on CONSULT-II screen. If “CMPLT” is not displayed, Idle Air Volume Learning will not be carried out successfully. In this case, find the cause of the incident by referring to the Diagnostic Procedure below.
8. Rev up the engine two or three times and make sure that idle speed and ignition timing are within the specifications. Refer to EC-79 .

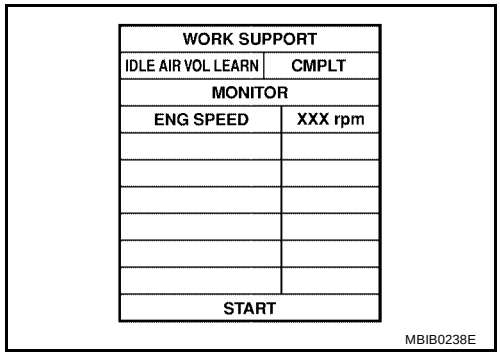

ITEM	SPECIFICATION
Idle speed	M/T: 650 ± 50 rpm A/T: 800 ± 50 rpm (in P or N position)
Ignition timing	M/T: 7 ± 5° BTDC A/T: 18 ± 5° BTDC (in P or N position)

Without CONSULT-II

NOTE:

- **It is better to count the time accurately with a clock.**
- **It is impossible to switch the diagnostic mode when an accelerator pedal position sensor circuit has a malfunction.**

1. Perform EC-92, "Accelerator Pedal Released Position Learning" .
2. Perform EC-92, "Throttle Valve Closed Position Learning" .
3. Start engine and warm it up to normal operating temperature.
4. Check that all items listed under the topic PREPARATION (previously mentioned) are in good order.
5. Turn ignition switch OFF and wait at least 10 seconds.
6. Confirm that accelerator pedal is fully released, turn ignition switch ON and wait 3 seconds.
7. Repeat the following procedure quickly five times within 5 seconds.

a. Fully depress the accelerator pedal.
b. Fully release the accelerator pedal.

8. Wait 7 seconds, fully depress the accelerator pedal and keep it for approx. 20 seconds until the MIL stops blinking and turned ON.
9. Fully release the accelerator pedal within 3 seconds after the MIL turned ON.

10. Start engine and let it idle.
11. Wait 20 seconds.

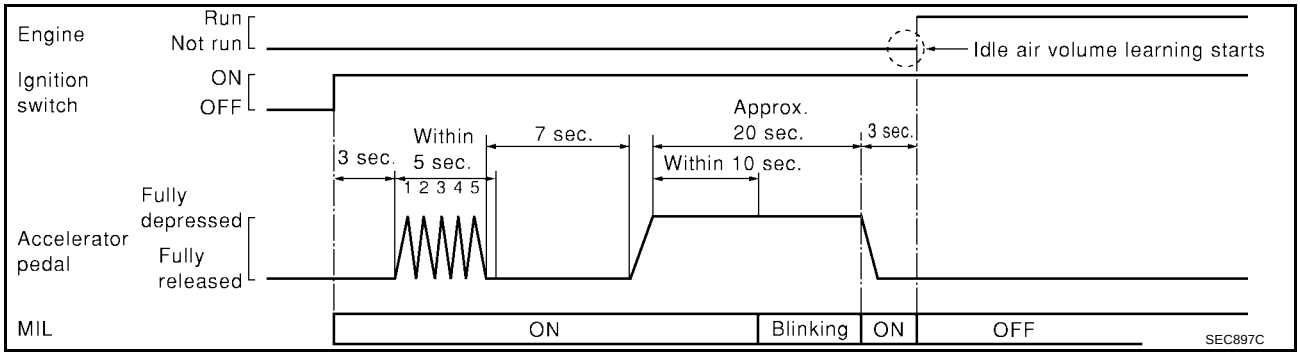

12. Rev up the engine two or three times and make sure that idle speed and ignition timing are within the specifications. Refer to EC-79 .

ITEM	SPECIFICATION
Idle speed	M/T: 650 ± 50 rpm A/T: 800 ± 50 rpm (in P or N position)
Ignition timing	M/T: 7 ± 5° BTDC A/T: 18 ± 5° BTDC (in P or N position)

13. If idle speed and ignition timing are not within the specification, Idle Air Volume Learning will not be carried out successfully. In this case, find the cause of the incident by referring to the Diagnostic Procedure below.

DIAGNOSTIC PROCEDURE

If idle air volume learning cannot be performed successfully, proceed as follows:

1. **Check that throttle valve is fully closed.**
2. **Check PCV valve operation.**
3. **Check that downstream of throttle valve is free from air leakage.**
4. **When the above three items check out OK, engine component parts and their installation condition are questionable. Check and eliminate the cause of the incident.**
   It is useful to perform EC-154, "TROUBLE DIAGNOSIS - SPECIFICATION VALUE" .
5. **If any of the following conditions occur after the engine has started, eliminate the cause of the incident and perform Idle air volume learning all over again:**

- **Engine stalls.**
- **Erroneous idle.**

Fuel Pressure Check

UBS00JSE

FUEL PRESSURE RELEASE

With CONSULT-II

1. Turn ignition switch ON.
2. Perform “FUEL PRESSURE RELEASE” in “WORK SUPPORT” mode with CONSULT-II.
3. Start engine.
4. After engine stalls, crank it two or three times to release all fuel pressure.
5. Turn ignition switch OFF.

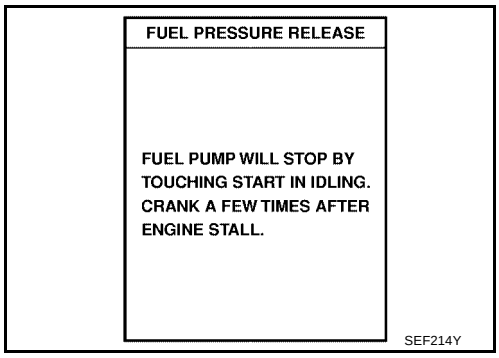

Without CONSULT-II

1. Remove fuse for fuel pump.
2. Start engine.
3. After engine stalls, crank it two or three times to release all fuel pressure.
4. Turn ignition switch OFF and reconnect fuel pump fuse.
5. Reinstall fuel pump fuse after servicing fuel system.

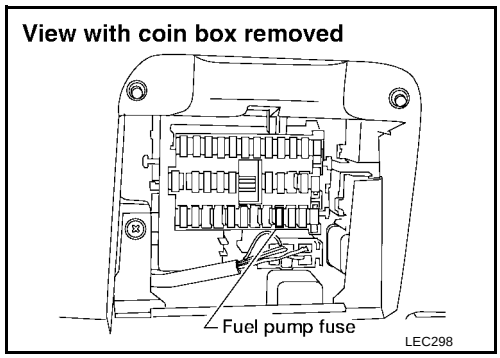

FUEL PRESSURE CHECK

Before disconnecting fuel line, release fuel pressure from fuel line to eliminate danger.

NOTE:
Prepare pans or saucers under the disconnected fuel line because the fuel may spill out. The fuel pressure cannot be completely released because B15 models do not have fuel return system.

Method A

CAUTION:

- **Before disconnecting fuel line, release fuel pressure from fuel line to eliminate danger.**
- **Be careful not to scratch or get the fuel hose connection area dirty when servicing, so that the quick connector o-ring maintains sealability.**
- **When reconnecting fuel line, always use new clamps.**
- **Make sure that clamp screws do not contact adjacent parts.**
- **Use a torque driver to tighten clamps.**
- **Use Fuel Pressure Gauge Kit J-44321 to check fuel pressure.**

1. Release fuel pressure to zero.
2. Disconnect fuel hose from fuel feed tube (engine side) using fuel tube quick connect removal tool.

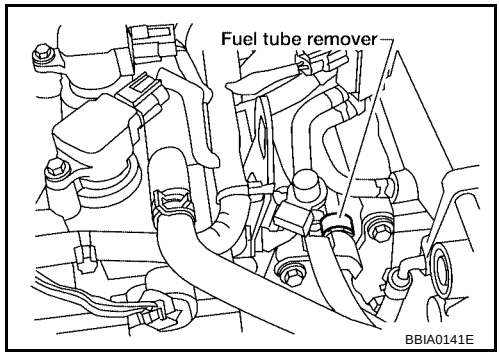

3. Release quick connector and disconnect fuel hose from fuel feed tube (underbody side). Remove fuel hose assembly.

   CAUTION:
   Do not install hose clamps over flared portions of fuel feed tubes or damage to fuel feed tubes may result.
4. Install fuel pressure gauge from kit J-44321 between fuel tubes using hose and clamps from kit.
5. Turn ignition switch ON and check for fuel leakage.
6. Start engine and read the indication on fuel pressure gauge.

   At idle speed:

   Approximately 350 kPa (3.57 kg/cm^2 , 51 psi)

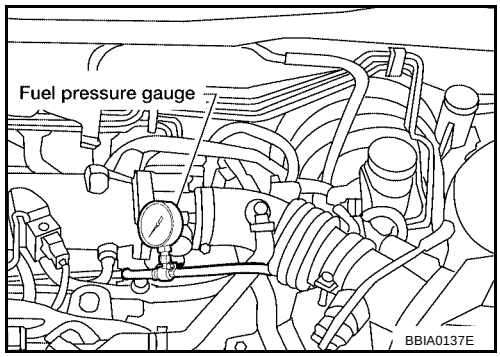

If results are unsatisfactory, check for fuel leakage in fuel line between fuel tank and injector.
If OK, replace fuel level sensor unit and fuel pump assembly. Refer to FL-3, "Removal and Installation" .

Method B

CAUTION:

- **Be careful not to scratch or get the fuel hose connection area dirty when servicing, so that the quick connector o-ring maintains sealability.**
- **Use Fuel Pressure Gauge Kit J-44321 and Fuel Pressure Adapter J-44321-6 to check fuel pressure.**

1. Release fuel pressure to zero. Refer to EC-94, "FUEL PRESSURE RELEASE" .
2. Remove fuel hose using Quick Connector Release J-45488. Refer to EM-121, "FUEL INJECTOR AND FUEL TUBE" .
   - Do not twist or kink fuel hose because it is plastic hose.
   - Do not remove fuel hose from quick connector.
   - Keep fuel hose connections clean.
3. Install Fuel Pressure Adapter J-44321-6 and Fuel Pressure Gauge (from kit J-44321).
   - Do not distort or bend fuel rail tube when installing fuel pressure gauge adapter.
   - When reconnecting fuel hose, check the original fuel hose for damage and abnormality.
4. Turn ignition switch ON (reactivate fuel pump), and check for fuel leakage.
5. Start engine and check for fuel leakage.
6. Read the indication of fuel pressure gauge.
   - During fuel pressure check, check for fuel leakage from fuel connection every 3 minutes.

   At idling: Approximately 350 kPa (3.57 kg/cm^2 , 51 psi)
7. If result is unsatisfactory, go to next step.
8. Check the following.
   - Fuel hoses and fuel tubes for clogging
   - Fuel filter for clogging
   - Fuel pump
   - Fuel pressure regulator for clogging

   If OK, replace fuel pressure regulator.
   If NG, repair or replace.
9. Before disconnecting Fuel Pressure Gauge and Fuel Pressure Adapter J-44321-6, release fuel pressure to zero. Refer to EC-94, "FUEL PRESSURE RELEASE" .

TROUBLE DIAGNOSIS

PFP:00004

Trouble Diagnosis Introduction

UBS00JSF

INTRODUCTION

The engine has an ECM to control major systems such as fuel control, ignition control, idle air control system, etc. The ECM accepts input signals from sensors and instantly drives actuators. It is essential that both input and output signals are proper and stable. At the same time, it is important that there are no malfunctions such as vacuum leaks, fouled spark plugs, or other malfunctions with the engine.

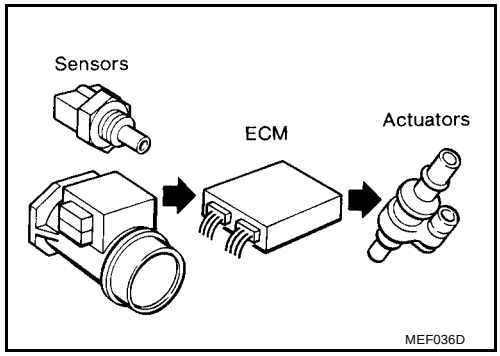

It is much more difficult to diagnose an incident that occurs intermittently rather than continuously. Most intermittent incidents are caused by poor electric connections or improper wiring. In this case, careful checking of suspected circuits may help prevent the replacement of good parts.

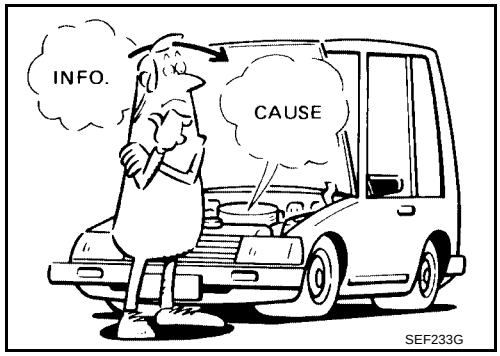

A visual check only may not find the cause of the incidents. A road test with CONSULT-II (or GST) or a circuit tester connected should be performed. Follow the Work Flow on EC-98 .
Before undertaking actual checks, take a few minutes to talk with a customer who approaches with a driveability complaint. The customer can supply good information about such incidents, especially intermittent ones. Find out what symptoms are present and under what conditions they occur. A Diagnostic Worksheet like the example on EC-101 should be used.
Start your diagnosis by looking for conventional malfunctions first. This will help troubleshoot driveability malfunctions on an electronically controlled engine vehicle.

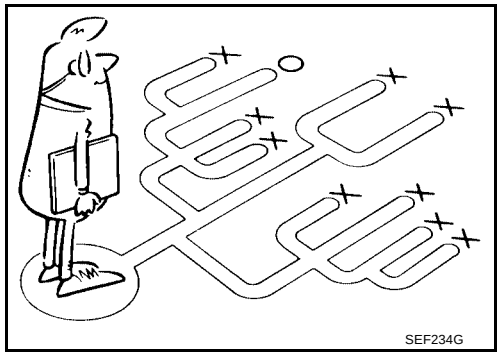

WORK FLOW
Overall Sequence

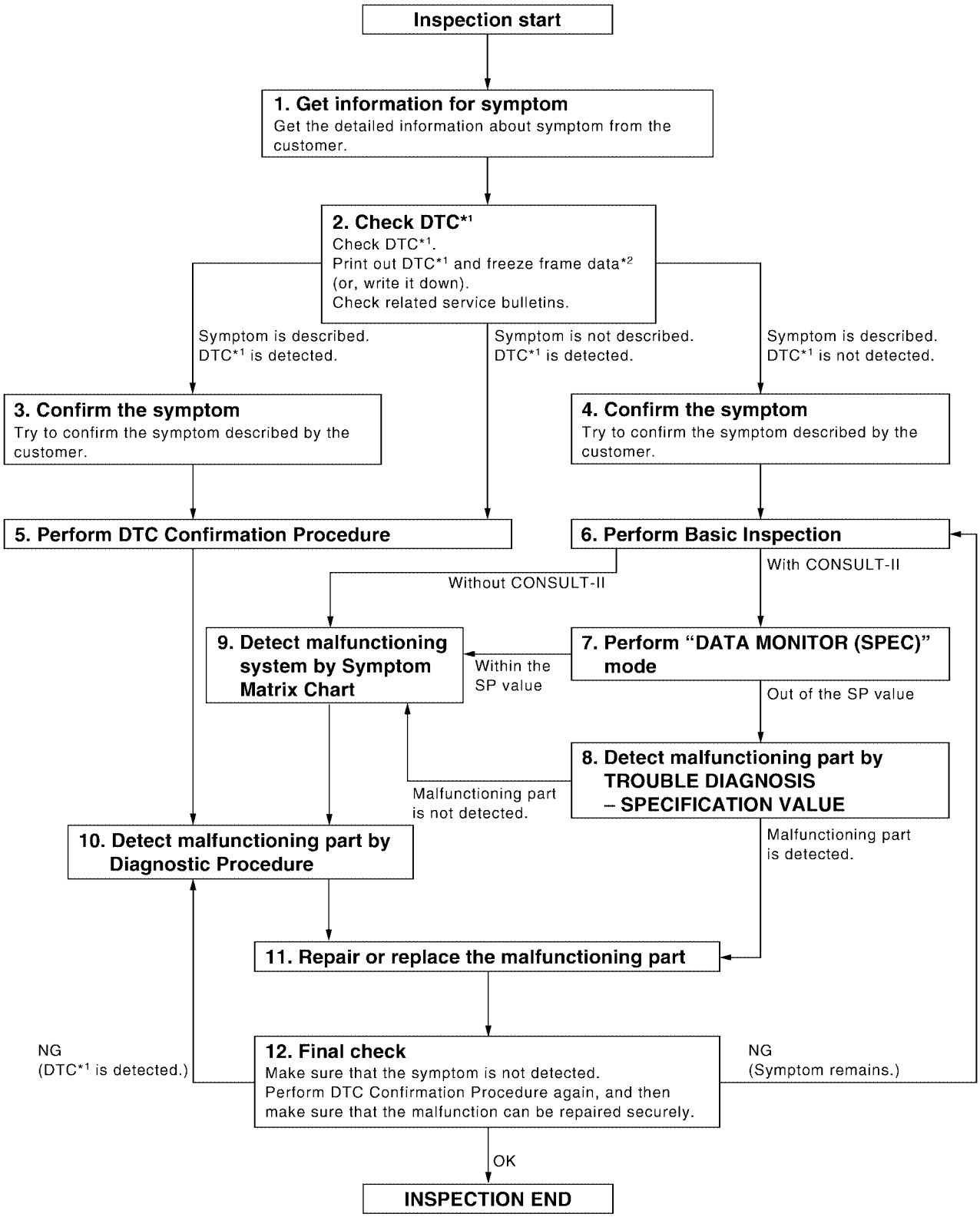

*1: Include 1st trip DTC.
*2: Include 1st trip freeze frame data.

PBIB2267E

Detailed Flow

1. GET INFORMATION FOR SYMPTOM

Get the detailed information from the customer about the symptom (the condition and the environment when the incident/malfunction occurred) using the EC-101, "DIAGNOSTIC WORKSHEET" .

>> GO TO 2.

2. CHECK DTC*1

1. Check DTC*1 .
2. Perform the following procedure if DTC*1 is displayed.

- Record DTC*1 and freeze frame data*2 . (Print them out with CONSULT-II or GST.)
- Erase DTC*1 . (Refer to EC-64, "HOW TO ERASE EMISSION-RELATED DIAGNOSTIC INFORMATION" .)
- Study the relationship between the cause detected by DTC*1 and the symptom described by the customer. (Symptom Matrix Chart is useful. Refer to EC-106 .)

3. Check related service bulletins for information.

Is any symptom described and any DTC detected?

Symptom is described, DTC*1 is displayed>>GO TO 3.
Symptom is described, DTC*1 is not displayed>>GO TO 4.
Symptom is not described, DTC*1 is displayed>>GO TO 5.

3. CONFIRM THE SYMPTOM

Try to confirm the symptom described by the customer (except MIL ON).
DIAGNOSIS WORK SHEET is useful to verify the incident.
Connect CONSULT-II to the vehicle in DATA MONITOR (AUTO TRIG) mode and check real time diagnosis results.
Verify relation between the symptom and the condition when the symptom is detected.

>> GO TO 5.

4. CONFIRM THE SYMPTOM

Try to confirm the symptom described by the customer.
DIAGNOSIS WORK SHEET is useful to verify the incident.
Connect CONSULT-II to the vehicle in DATA MONITOR (AUTO TRIG) mode and check real time diagnosis results.
Verify relation between the symptom and the condition when the symptom is detected.

>> GO TO 6.

5. PERFORM DTC CONFIRMATION PROCEDURE

Perform DTC Confirmation Procedure for the displayed DTC*1 , and then make sure that DTC*1 is detected again.
At this time, always connect CONSULT-II to the vehicle, and check diagnostic results in real time on “DATA MONITOR (AUTO TRIG)”.

If two or more DTCs*1 are detected, refer to EC-103, "DTC Inspection Priority Chart" and determine trouble diagnosis order.

NOTE:

- Freeze frame data*2 is useful if the DTC*1 is not detected.
- Perform Overall Function Check if DTC Confirmation Procedure is not included on Service Manual. This simplified check procedure is an effective alternative though DTC*1 cannot be detected during this check. If the result of Overall Function Check is NG, it is the same as the detection of DTC*1 by DTC Confirmation Procedure.

Is DTC*1 detected?

Yes >> GO TO 10.
No >> Check according to EC-164, "TROUBLE DIAGNOSIS FOR INTERMITTENT INCIDENT" .

6. PERFORM BASIC INSPECTION

Perform EC-74, "Basic Inspection" .

With CONSULT-II>>GO TO 7.
Without CONSULT-II>>GO TO 9.

7. PERFORM DATA MONITOR (SPEC) MODE

With CONSULT-II
Make sure that “MAS A/F SE-B1”, “B/FUEL SCHDL”, and “A/F ALPHA-B1” are within the SP value using CONSULT-II “DATA MONITOR (SPEC)” mode. Refer to EC-155, "Diagnostic Procedure" .

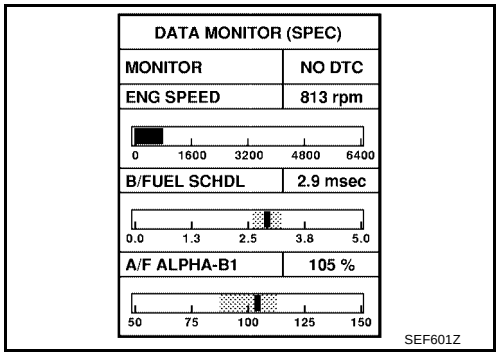

Are they within the SP value?

Yes >> GO TO 9.
No >> GO TO 8.

8. DETECT MALFUNCTIONING PART BY TROUBLE DIAGNOSIS - SPECIFICATION VALUE

Detect malfunctioning part according toEC-154, "TROUBLE DIAGNOSIS - SPECIFICATION VALUE" .

Is malfunctioning part detected?

Yes >> GO TO 11.
No >> GO TO 9.

9. DETECT MALFUNCTIONING SYSTEM BY SYMPTOM MATRIX CHART

Detect malfunctioning system according toEC-106, "Symptom Matrix Chart" based on the confirmed symptom in step 4, and determine the trouble diagnosis order based on possible causes and symptom.

>> GO TO 10.

10. DETECT MALFUNCTIONING PART BY DIAGNOSTIC PROCEDURE

Inspect according to Diagnostic Procedure of the system.

NOTE:
The Diagnostic Procedure in EC section described based on open circuit inspection. A short circuit inspection is also required for the circuit check in the Diagnostic Procedure. For details, refer to Circuit Inspection in GI-27, "How to Perform Efficient Diagnosis for an Electrical Incident" .

Is malfunctioning part detected?

Yes >> GO TO 11.
No >> Monitor input data from related sensors or check voltage of related ECM terminals using CONSULT-II. Refer to EC-148, "CONSULT-II Reference Value in Data Monitor" , EC-126, "ECM Terminals and Reference Value" .

11. REPAIR OR REPLACE THE MALFUNCTIONING PART

1. Repair or replace the malfunctioning part.
2. Reconnect parts or connectors disconnected during Diagnostic Procedure again after repair and replacement.
3. Check DTC. If DTC is displayed, erase it, refer to EC-64, "HOW TO ERASE EMISSION-RELATED DIAGNOSTIC INFORMATION" .

>> GO TO 12.

12. FINAL CHECK

When DTC was detected in step 2, perform DTC Confirmation Procedure or Overall Function Check again, and then make sure that the malfunction have been repaired securely.
When symptom was described from the customer, refer to confirmed symptom in step 3 or 4, and make sure that the symptom is not detected.

OK or NG

NG (DTC*1 is detected)>>GO TO 10.
NG (Symptom remains)>>GO TO 6.
OK >> 1. Before returning the vehicle to the customer, make sure to erase unnecessary DTC*1 in ECM and TCM (Transmission Control Module). (Refer to EC-64, "HOW TO ERASE EMISSION-RELATED DIAGNOSTIC INFORMATION" and EC-64, "How to Erase DTC" .)
2. If the completion of SRT is needed, drive vehicle under the specific driving pattern. Refer to EC-61, "Driving Pattern" .
3. **INSPECTION END**

*1: Include 1st trip DTC.
*2: Include 1st trip freeze frame data.

DIAGNOSTIC WORKSHEET

Description

There are many operating conditions that lead to the malfunction of engine components. A good grasp of such conditions can make troubleshooting faster and more accurate.
In general, each customer feels differently about an incident. It is important to fully understand the symptoms or conditions for a customer complaint.
Utilize a diagnostic worksheet like the one on the next page in order to organize all the information for troubleshooting.
Some conditions may cause the MIL to come on steady or blink and DTC to be detected. Examples:

- Vehicle ran out of fuel, which caused the engine to misfire.
- Fuel filler cap was left off or incorrectly screwed on, allowing fuel to evaporate into the atmosphere.

KEY POINTS

WHAT ..... Vehicle & engine model
WHEN ..... Date, Frequencies
WHERE..... Road conditions
HOW ..... Operating conditions, Weather conditions, Symptoms

SEF907L

Worksheet Sample

Customer name MR/MS		Model & Year	VIN
Engine #		Trans.	Mileage
Incident Date		Manuf. Date	In Service Date
Fuel and fuel filler cap		☐ Vehicle ran out of fuel causing misfire ☐ Fuel filler cap was left off or incorrectly screwed on.	
Symptoms	☐ Startability	☐ Impossible to start ☐ No combustion ☐ Partial combustion ☐ Partial combustion affected by throttle position ☐ Partial combustion NOT affected by throttle position ☐ Possible but hard to start ☐ Others [ ]	
	☐ Idling	☐ No fast idle ☐ Unstable ☐ High idle ☐ Low idle ☐ Others [ ]	
	☐ Driveability	☐ Stumble ☐ Surge ☐ Knock ☐ Lack of power ☐ Intake backfire ☐ Exhaust backfire ☐ Others [ ]	
	☐ Engine stall	☐ At the time of start ☐ While idling ☐ While accelerating ☐ While decelerating ☐ Just after stopping ☐ While loading	
Incident occurrence		☐ Just after delivery ☐ Recently ☐ In the morning ☐ At night ☐ In the daytime	
Frequency		☐ All the time ☐ Under certain conditions ☐ Sometimes	
Weather conditions		☐ Not affected	
	Weather	☐ Fine ☐ Raining ☐ Snowing ☐ Others [ ]	
	Temperature	☐ Hot ☐ Warm ☐ Cool ☐ Cold ☐ Humid °F	
Engine conditions		☐ Cold ☐ During warm-up ☐ After warm-up Engine speed 0 2,000 4,000 6,000 8,000 rpm	
Road conditions		☐ In town ☐ In suburbs ☐ Highway ☐ Off road (up/down)	
Driving conditions		☐ Not affected ☐ At starting ☐ While idling ☐ At racing ☐ While accelerating ☐ While cruising ☐ While decelerating ☐ While turning (RH/LH) Vehicle speed 0 10 20 30 40 50 60 MPH	
Malfunction indicator lamp		☐ Turned on ☐ Not turned on	

MTBL0017

DTC Inspection Priority Chart

UBS00JSG

If some DTCs are displayed at the same time, perform inspections one by one based on the following priority chart.

NOTE:
If DTC U1000 and/or U1001 is displayed with other DTC, first perform the trouble diagnosis for DTC U1000 and U1001. Refer to EC-173 .

Priority	Detected items (DTC)
1	● U1000 U1001 CAN communication line ● P0101 P0102 P0103 Mass air flow sensor ● P0112 P0113 P0127 Intake air temperature sensor ● P0117 P0118 P0125 Engine coolant temperature sensor ● P0122 P0123 P0222 P0223 P1225 P1226 P2135 Throttle position sensor ● P0128 Thermostat function ● P0181 P0182 P0183 Fuel tank temperature sensor ● P0327 P0328 Knock sensor ● P0335 Crankshaft position sensor (POS) ● P0340 Camshaft position sensor (PHASE) ● P0460 P0461 P0462 P0463 Fuel level sensor ● P0500 Vehicle speed sensor ● P0605 ECM ● P1229 Sensor power supply ● P1610-P1615 NATS ● P1705 Park/Neutral position (PNP) switch ● P1706 Park/Neutral position (PNP) switch ● P2122 P2123 P2127 P2128 P2138 Accelerator pedal position sensor

Priority	Detected items (DTC)
2	● P0037 P0038 Heated oxygen sensor 2 heater ● P0138 P0139 P1146 P1147 Heated oxygen sensor 2 ● P0441 EVAP control system purge flow monitoring ● P0444 P0445 P1444 EVAP canister purge volume control solenoid valve ● P0447 P1446 EVAP canister vent control valve ● P0451 P0452 P0453 EVAP control system pressure sensor ● P0550 power steering pressure sensor ● P0705-P0725, P0740-P0755, P1705, P1706, P1760 A/T related sensors and solenoid valves and switches ● P1031 P1032 A/F sensor 1 heater ● P1065 ECM power supply ● P1122 Electric throttle control function ● P1124 P1126 P1128 Electric throttle control actuator ● P1137 Swirl control valve control position sensor ● P1138 Swirl control valve ● P1217 Engine over temperature (OVERHEAT) ● P1271 P1272 P1273 P1274 P1276 P1278 P1279 A/F sensor 1 ● P1805 Brake switch
3	● P0011 Intake valve timing control ● P0171 P0172 Fuel injection system function ● P0300 - P0304 Misfire ● P0420 Three way catalyst function ● P0442 P0456 EVAP control system (SMALL LEAK, VERY SMALL LEAK) ● P0455 EVAP control system (GROSS LEAK) ● P0731-P0734 A/T function ● P1111 Intake valve timing control solenoid valve ● P1121 Electric throttle control actuator ● P1132 Swirl control valve ● P1148 Closed loop control ● P1564 ASCD steering switch ● P1572 ASCD brake switch ● P1574 ASCD vehicle speed sensor

Fail-safe Chart

UBS00JSH

When the DTC listed below is detected, the ECM enters fail-safe mode and the MIL lights up.

DTC No.	Detected items	Engine operating condition in fail-safe mode
P0102 P0103	Mass air flow sensor circuit	Engine speed will not rise more than 2,400 rpm due to the fuel cut.
P0117 P0118	Engine coolant temperature sensor circuit	Engine coolant temperature will be determined by ECM based on the time after turning ignition switch ON or START. CONSULT-II displays the engine coolant temperature decided by ECM.
		Condition: Engine coolant temperature decided (CONSULT-II display)
		Just as ignition switch is turned ON or Start: 40°C (104°F)
		More than approx. 4 minutes after ignition ON or Start: 80°C (176°F)
		Except as shown above: 40 - 80°C (104 - 176°F) (Depends on the time)
		When the fail-safe system for engine coolant temperature sensor is activated, the cooling fan operates while engine is running.
P0122 P0123 P0222 P0223 P2135	Throttle position sensor	The ECM controls the electric throttle control actuator in regulating the throttle opening in order for the idle position to be within +10 degrees. The ECM regulates the opening speed of the throttle valve to be slower than the normal condition. So, the acceleration will be poor.
P1121	Electric throttle control actuator	(When electric throttle control actuator does not function properly due to the return spring malfunction:) ECM controls the electric throttle actuator by regulating the throttle opening around the idle position. The engine speed will not rise more than 2,000 rpm.
		(When throttle valve opening angle in fail-safe mode is not in specified range:) ECM controls the electric throttle control actuator by regulating the throttle opening to 20 degrees or less.
		(When ECM detects the throttle valve is stuck open:) While the vehicle is driving, it slows down gradually by fuel cut. After the vehicle stops, the engine stalls. The engine can restart in N or P position, and engine speed will not exceed 1,000 rpm or more.
P1122	Electric throttle control function	ECM stops the electric throttle control actuator control, throttle valve is maintained at a fixed opening (approx. 5 degrees) by the return spring.
P1124 P1126	Throttle control relay	ECM stops the electric throttle control actuator control, throttle valve is maintained at a fixed opening (approx. 5 degrees) by the return spring.
P1128	Throttle control motor	ECM stops the electric throttle control actuator control, throttle valve is maintained at a fixed opening (approx. 5 degrees) by the return spring.
P1229	Sensor power supply	ECM stops the electric throttle control actuator control, throttle valve is maintained at a fixed opening (approx. 5 degrees) by the return spring.
P2122 P2123 P2127 P2128 P2138	Accelerator pedal position sensor	The ECM controls the electric throttle control actuator in regulating the throttle opening in order for the idle position to be within +10 degrees. The ECM regulates the opening speed of the throttle valve to be slower than the normal condition. So, the acceleration will be poor.

- When there is an open circuit on MIL circuit, the ECM cannot warn the driver by lighting up MIL when there is malfunction on engine control system.
  Therefore, when electrical controlled throttle and part of ECM related diagnoses are continuously detected as NG for 5 trips, ECM warns the driver that engine control system malfunctions and MIL circuit is open by means of operating fail-safe function.
  The fail-safe function also operates when above diagnoses except MIL circuit are detected, and demands the driver to repair the malfunction.

Engine operating condition in fail-safe mode	Engine speed will not rise more than 2,500 rpm due to the fuel cut

Symptom Matrix Chart

UBS00JSI

SYSTEM — BASIC ENGINE CONTROL SYSTEM

		SYMPTOM													Reference page
		HARD/NO START/RESTART (EXCP. HA)	ENGINE STALL	HESITATION/SURGING/FLAT SPOT	SPARK KNOCK/DETONATION	LACK OF POWER/POOR ACCELERATION	HIGH IDLE/LOW IDLE	ROUGH IDLE/HUNTING	IDLING VIBRATION	SLOW/NO RETURN TO IDLE	OVERHEATS/WATER TEMPERATURE HIGH	EXCESSIVE FUEL CONSUMPTION	EXCESSIVE OIL CONSUMPTION	BATTERY DEAD (UNDER CHARGE)	
Warranty symptom code		AA	AB	AC	AD	AE	AF	AG	AH	AJ	AK	AL	AM	HA	
Fuel	Fuel pump circuit	1	1	2	3	2		2	2			3		2	EC-621
	Fuel pressure regulator system	3	3	4	4	4	4	4	4	4		4			EC-94
	Injector circuit	1	1	2	3	2		2	2			2			EC-615
	Evaporative emission system	3	3	4	4	4	4	4	4	4		4			EC-36
Air	Positive crankcase ventilation system	3	3	4	4	4	4	4	4	4		4	1		EC-49
	Incorrect idle speed adjustment	3	3				1	1	1	1		1			EC-74
	Electric throttle control actuator	1	1	2	3	3	2	2	2	2		2		2	EC-398EC-398, EC-407 , EC-412
Ignition	Incorrect ignition timing adjustment	3	3	1	1	1		1	1			1			EC-79
	Ignition circuit	1	1	2	2	2		2	2			2			EC-602
Main power supply and ground circuit		2	2	3	3	3		3	3		2	3		2	EC-165
Mass air flow sensor circuit		1	1	2	2	2		2	2			2			EC-186, EC-196
Engine coolant temperature sensor circuit		1	1	2	2	2	3	2	2	3	1	2			EC-208, EC-220
Throttle position sensor circuit			1	2		2	2	2	2	2		2			EC-213, EC-265 , EC-470 , EC-472 , EC-587
Accelerator pedal position sensor circuit				3	2	1	2			2					EC-474, EC-573 , EC-580 , EC-594
A/F sensor 1 circuit			1	2	3	2		2	2			2			EC-479, EC-485 , EC-491 , EC-498 , EC-505 , EC-511 , EC-519
Knock sensor circuit				2	2							3			EC-279
Crankshaft position sensor (POS) circuit		2	2												EC-284

	SYMPTOM													Reference page
	HARD/NO START/RESTART (EXCP. HA)	ENGINE STALL	HESITATION/SURGING/FLAT SPOT	SPARK KNOCK/DETONATION	LACK OF POWER/POOR ACCELERATION	HIGH IDLE/LOW IDLE	ROUGH IDLE/HUNTING	IDLING VIBRATION	SLOW/NO RETURN TO IDLE	OVERHEATS/WATER TEMPERATURE HIGH	EXCESSIVE FUEL CONSUMPTION	EXCESSIVE OIL CONSUMPTION	BATTERY DEAD (UNDER CHARGE)	
Warranty symptom code	AA	AB	AC	AD	AE	AF	AG	AH	AJ	AK	AL	AM	HA	
Camshaft position sensor (PHASE) circuit	2	2												EC-291
Vehicle speed signal circuit		2	3		3						3			EC-371
Power steering pressure sensor circuit						3	3	3	3					EC-377
ECM	2	2	3	3	3	3	3	3	3	3	3			EC-382, EC-390
Intake valve timing control solenoid valve circuit		3	3		3		3				3			EC-176
Swirl control valve circuit	3	3						2						EC-417
PNP switch circuit			3		3	3	3	3	3		3			EC-563
Refrigerant pressure sensor circuit		2				3	3	3	3		4			EC-626
Electrical load signal circuit						3	3	3	3					EC-631
Air conditioner circuit	2	2	3	3	3	3	3	3	3		3		2	MTC-33

1 - 6: The numbers refer to the order of inspection.

(continued on next page)

SYSTEM — ENGINE MECHANICAL & OTHER

		SYMPTOM													Reference page
		HARD/NO START/RESTART (EXCP. HA)	ENGINE STALL	HESITATION/SURGING/FLAT SPOT	SPARK KNOCK/DETONATION	LACK OF POWER/POOR ACCELERATION	HIGH IDLE/LOW IDLE	ROUGH IDLE/HUNTING	IDLING VIBRATION	SLOW/NO RETURN TO IDLE	OVERHEATS/WATER TEMPERATURE HIGH	EXCESSIVE FUEL CONSUMPTION	EXCESSIVE OIL CONSUMPTION	BATTERY DEAD (UNDER CHARGE)	
Warranty symptom code		AA	AB	AC	AD	AE	AF	AG	AH	AJ	AK	AL	AM	HA	
Fuel	Fuel tank	5	5												FL-7
	Fuel piping			5	5	5		5	5			5			EM-21
	Vapor lock														—
	Valve deposit	5		5	5	5		5	5			5			—
	Poor fuel (Heavy weight gasoline, Low octane)														—
Air	Air duct		5	5		5		5	5			5			—
	Air cleaner														—
	Air leakage from air duct (Mass air flow sensor —electric throttle control actuator)	5			5		5			5					—
	Electric throttle control actuator														EM-15
	Air leakage from intake manifold/ Collector/Gasket														EM-15
Cranking	Battery	1	1	1		1		1	1			1		1	SC-4
	Generator circuit														SC-22
	Starter circuit	3													SC-9
	Signal plate/Flywheel/Drive plate	6													EM-92
	PNP switch	4													MT-12 or AT-115
Engine	Cylinder head	5	5	5	5	5		5	5			5			EM-55
	Cylinder head gasket										4		3		
	Cylinder block	6	6	6	6	6		6	6			6	4		EM-69
	Piston														
	Piston ring														
	Connecting rod														
	Bearing														
	Crankshaft														

		SYMPTOM													Reference page
		HARD/NO START/RESTART (EXCP. HA)	ENGINE STALL	HESITATION/SURGING/FLAT SPOT	SPARK KNOCK/DETONATION	LACK OF POWER/POOR ACCELERATION	HIGH IDLE/LOW IDLE	ROUGH IDLE/HUNTING	IDLING VIBRATION	SLOW/NO RETURN TO IDLE	OVERHEATS/WATER TEMPERATURE HIGH	EXCESSIVE FUEL CONSUMPTION	EXCESSIVE OIL CONSUMPTION	BATTERY DEAD (UNDER CHARGE)	
Warranty symptom code		AA	AB	AC	AD	AE	AF	AG	AH	AJ	AK	AL	AM	HA	
Valve mechanism	Timing chain	5	5	5	5	5		5	5			5			EM-42
	Camshaft														EM-28
	Intake valve timing control														EC-394
	Intake valve												3		EM-55
	Exhaust valve														
Exhaust	Exhaust manifold/Tube/Muffler/Gasket	5	5	5	5	5		5	5			5			EX-3, EM-15
	Three way catalyst														
Lubrication	Oil pan/Oil strainer/Oil pump/Oil filter/Oil gallery	5	5	5	5	5		5	5			5	2		EM-18, LU-8 , LU-7 , LU-4
	Oil level (Low)/Filthy oil														MA-20
Cooling	Radiator/Hose/Radiator filler cap	5	5	5	5	5		5	5		2	5			CO-14
	Thermostat									5					CO-12
	Water pump														CO-10
	Water gallery														EM-15, CO-14
	Cooling fan									5					CO-19
	Coolant level (low)/Contaminated coolant														MA-16
NVIS (NISSAN Vehicle Immobilizer System — NATS)		1	1												BL-96

1 - 6: The numbers refer to the order of inspection.

Engine Control Component Parts Location

UBS00JSJ

SULEV MODELS

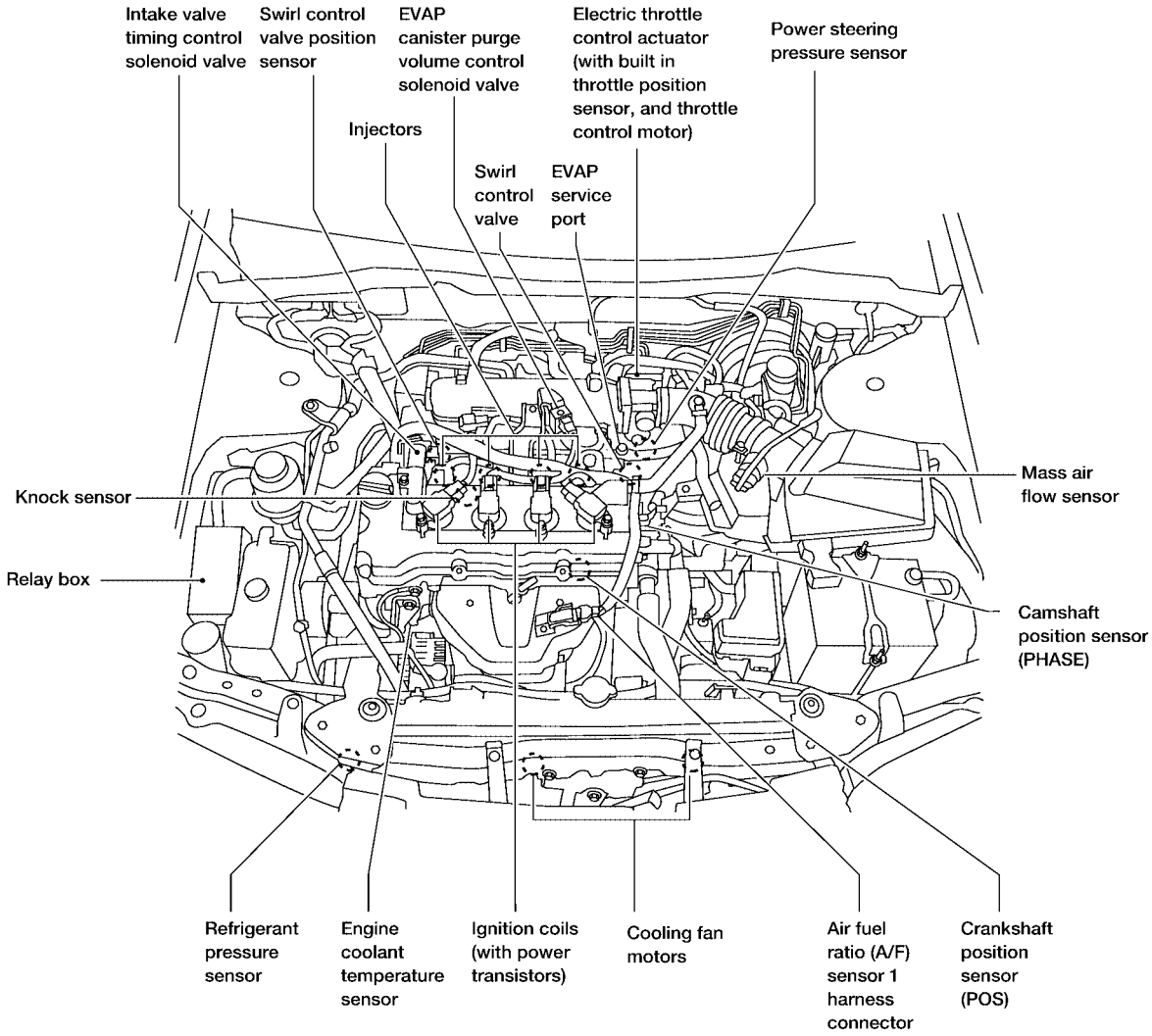

BBIA0168E

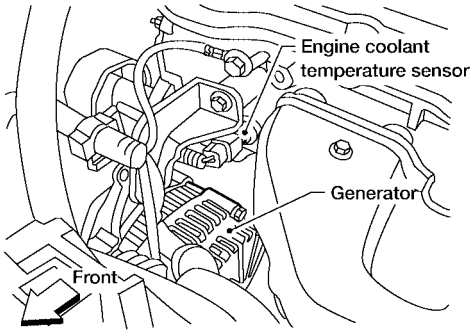
Engine coolant
temperature sensor
Generator
Front

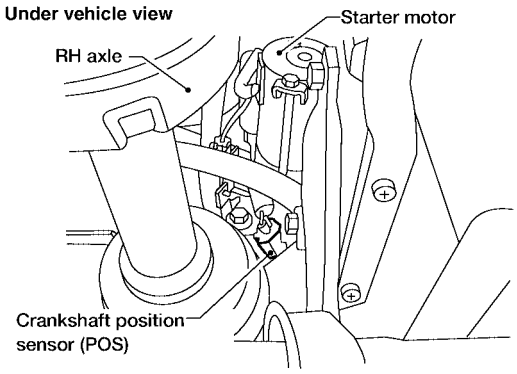
Under vehicle view
Starter motor
RH axle
Crankshaft position
sensor (POS)

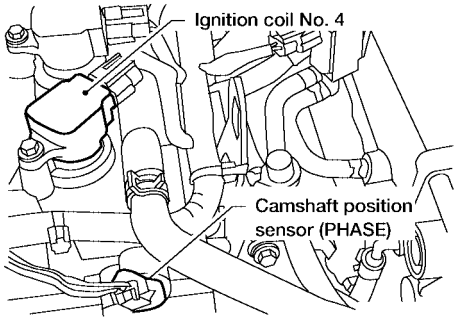
Ignition coil No. 4
Camshaft position
sensor (PHASE)

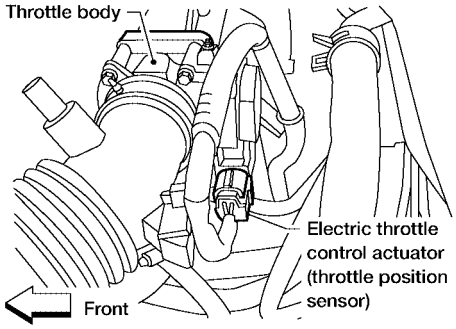
Throttle body
Electric throttle
control actuator
(throttle position
sensor)
Front

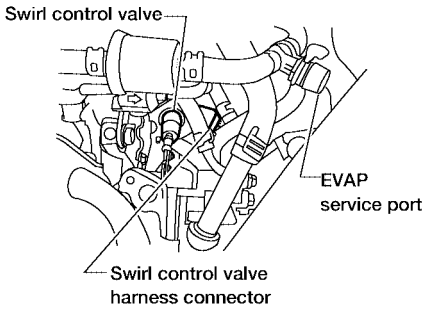
Swirl control valve
EVAP
service port
Swirl control valve
harness connector

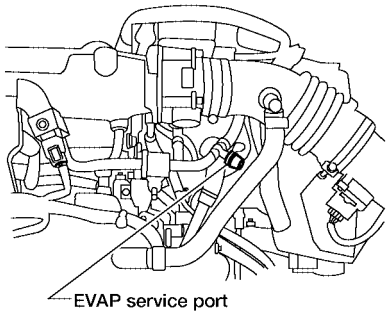
EVAP service port

BBIA0520E

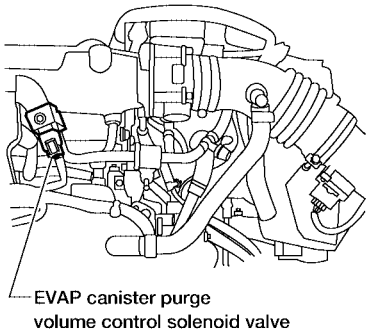

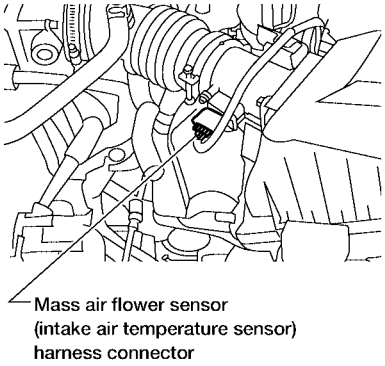

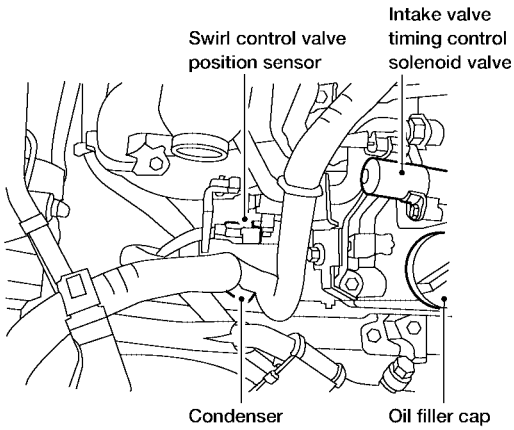

View With Relay Box Cover Removed

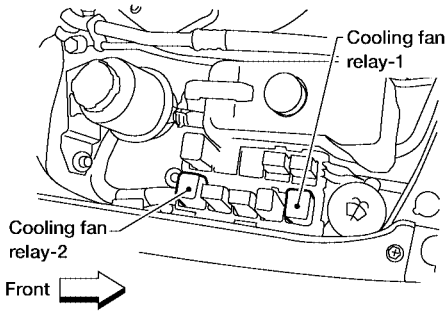

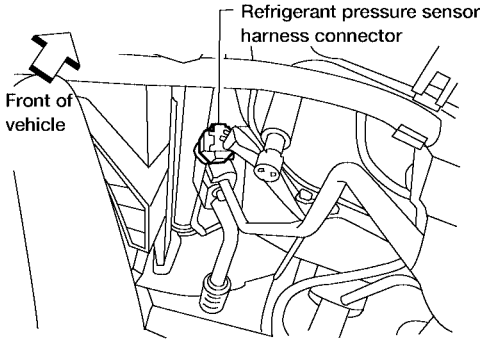

BBIA0521E

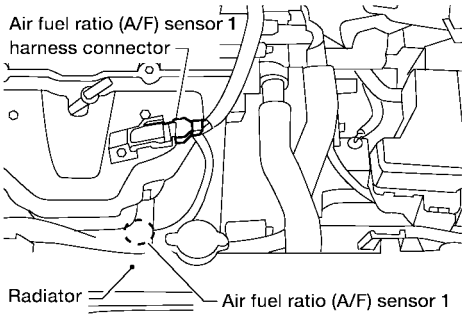
Air fuel ratio (A/F) sensor 1
harness connector
Radiator
Air fuel ratio (A/F) sensor 1

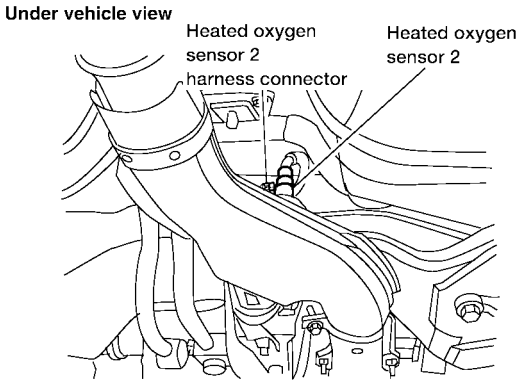
Under vehicle view
Heated oxygen
sensor 2
harness connector
Heated oxygen
sensor 2

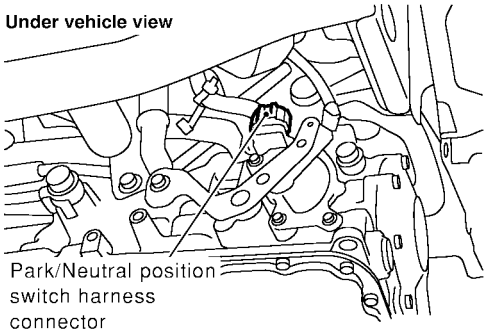
Under vehicle view
Park/Neutral position
switch harness
connector

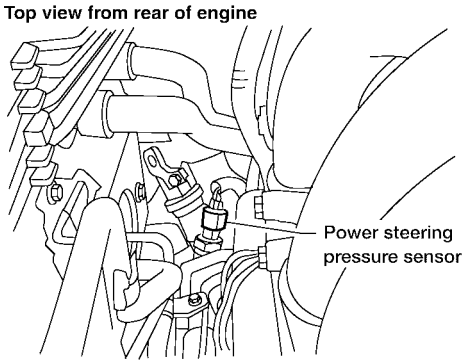
Top view from rear of engine
Power steering
pressure sensor

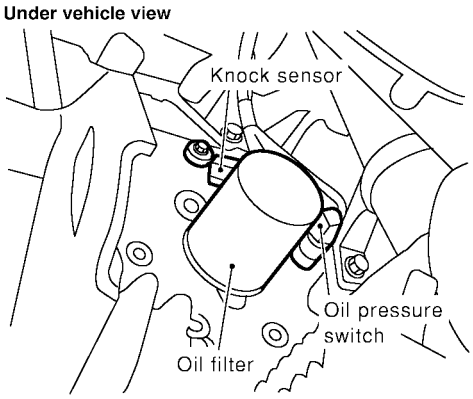
Under vehicle view
Knock sensor
Oil pressure
switch
Oil filter

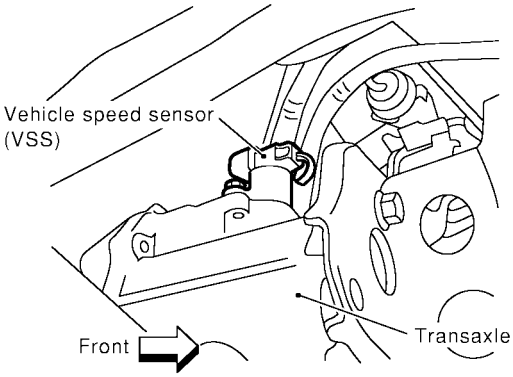
Vehicle speed sensor
(VSS)
Front
Transaxle

BBIA0139E

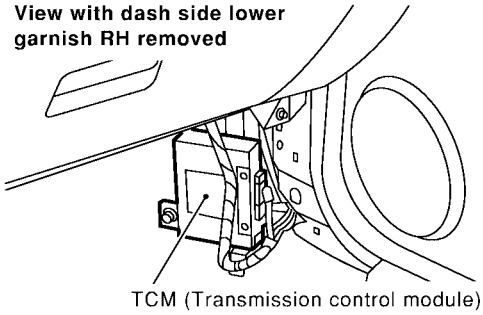
View with dash side lower garnish RH removed
TCM (Transmission control module)

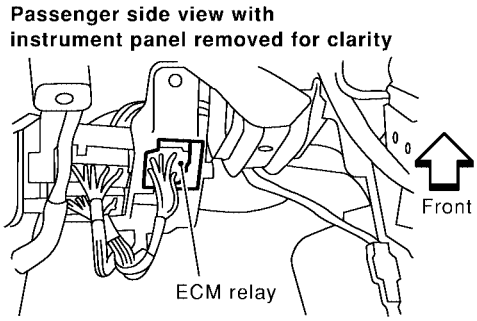
Passenger side view with instrument panel removed for clarity
Front
ECM relay

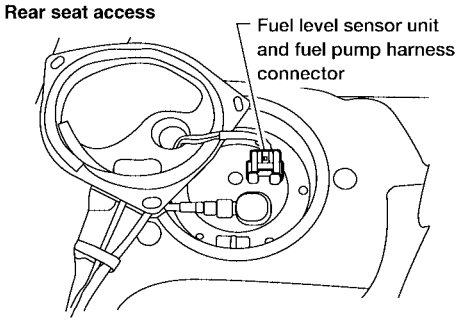
Rear seat access
Fuel level sensor unit and fuel pump harness connector

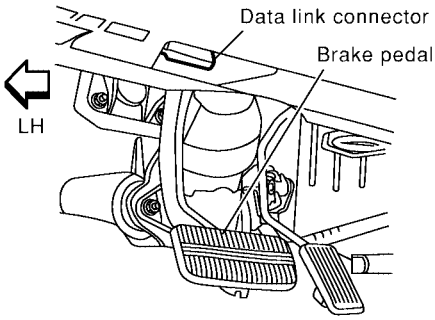
Data link connector
Brake pedal
LH

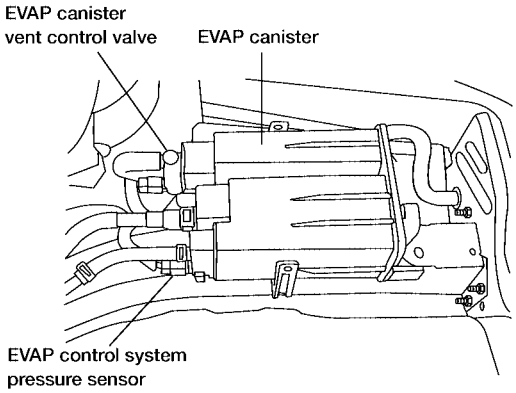
EVAP canister vent control valve
EVAP canister
EVAP control system pressure sensor

BBIA0171E

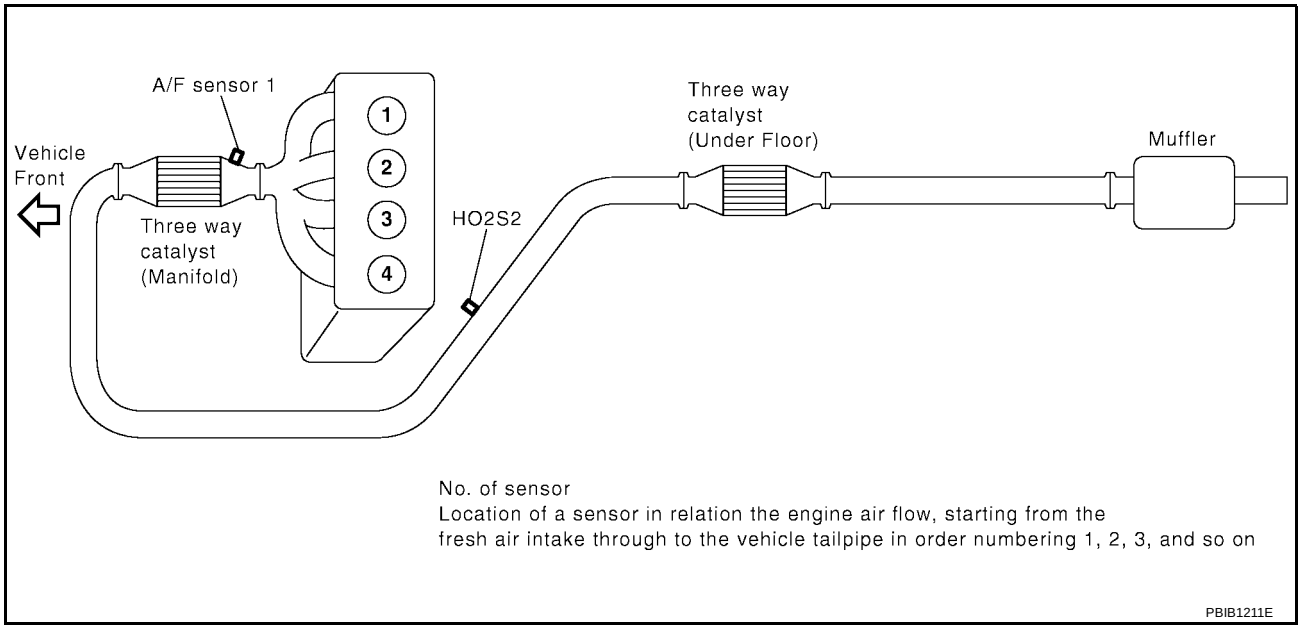
A/F sensor 1
Vehicle Front
Three way catalyst (Manifold)
1
2
3
4
HO2S2
Three way catalyst (Under Floor)
Muffler
No. of sensor
Location of a sensor in relation the engine air flow, starting from the fresh air intake through to the vehicle tailpipe in order numbering 1, 2, 3, and so on
PBIB1211E

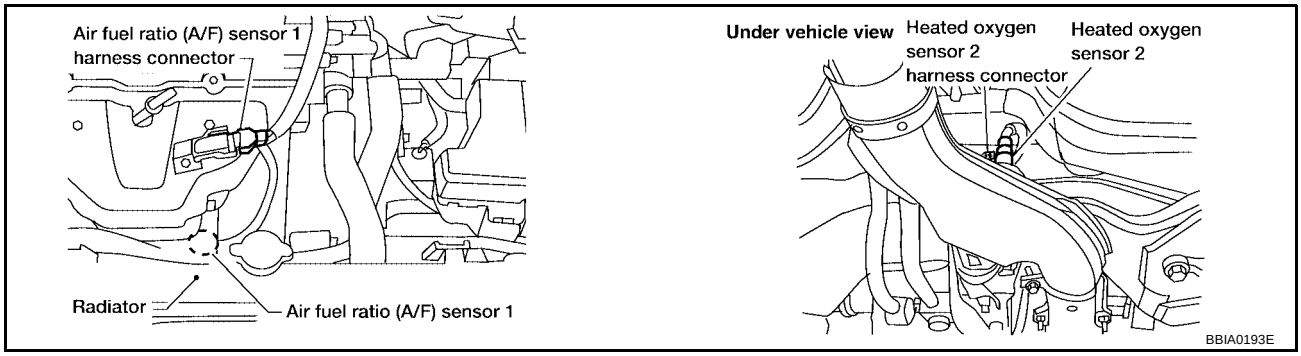
Air fuel ratio (A/F) sensor 1 harness connector
Radiator
Air fuel ratio (A/F) sensor 1
Under vehicle view
Heated oxygen sensor 2 harness connector
Heated oxygen sensor 2
BBIA0193E

EXCEPT SULEV MODELS

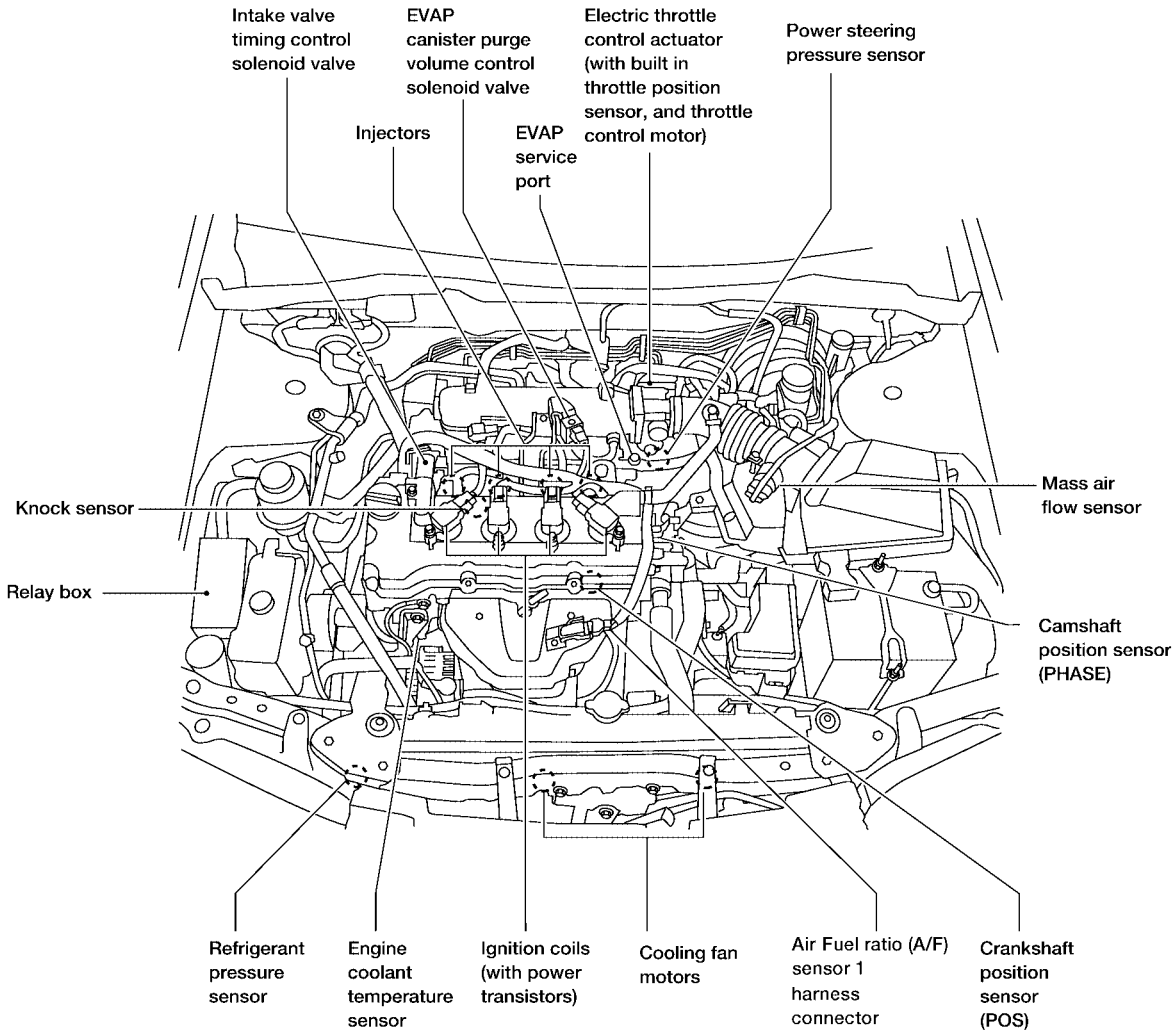

BBIA0297E

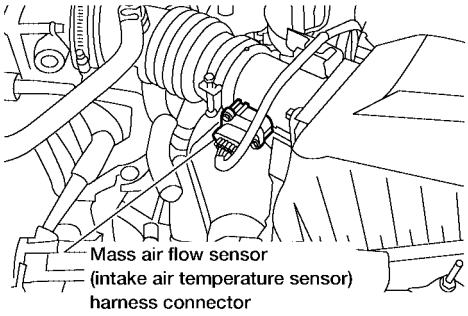
Mass air flow sensor
(intake air temperature sensor)
harness connector

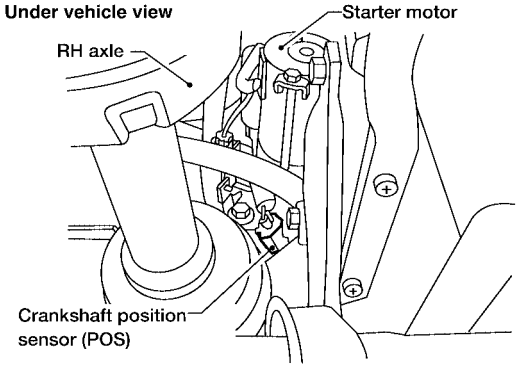
Under vehicle view
Starter motor
RH axle
Crankshaft position
sensor (POS)

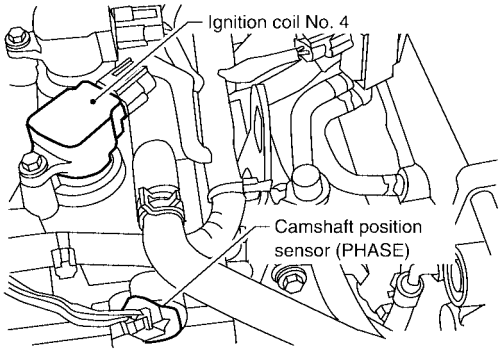
Ignition coil No. 4
Camshaft position
sensor (PHASE)

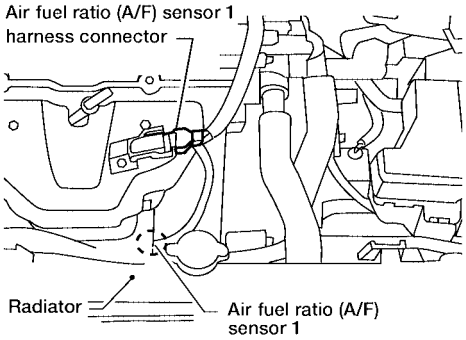
Air fuel ratio (A/F) sensor 1
harness connector
Radiator
Air fuel ratio (A/F)
sensor 1

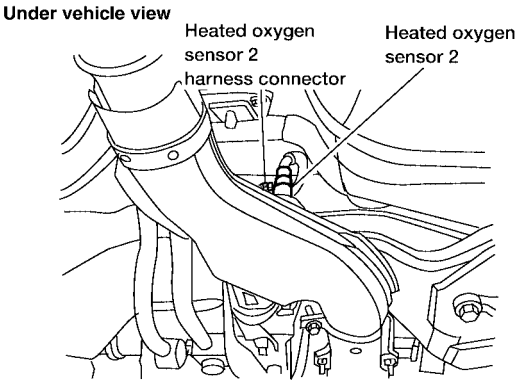
Under vehicle view
Heated oxygen
sensor 2
harness connector
Heated oxygen
sensor 2

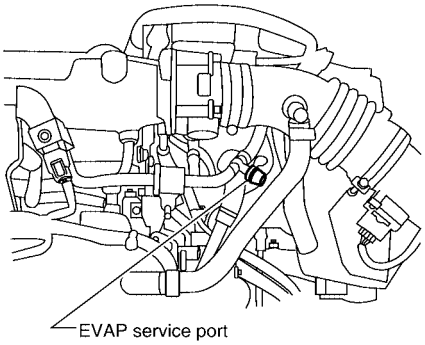
EVAP service port

BBIA0522E

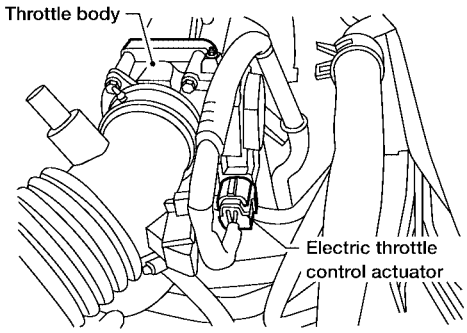

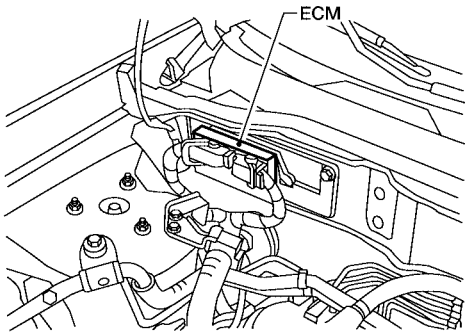

Rear seat access

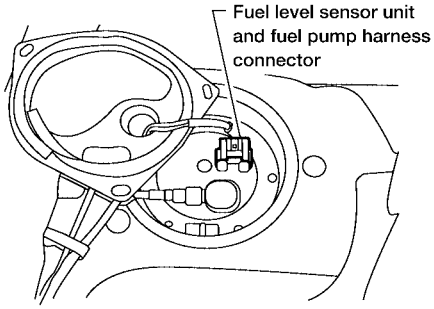

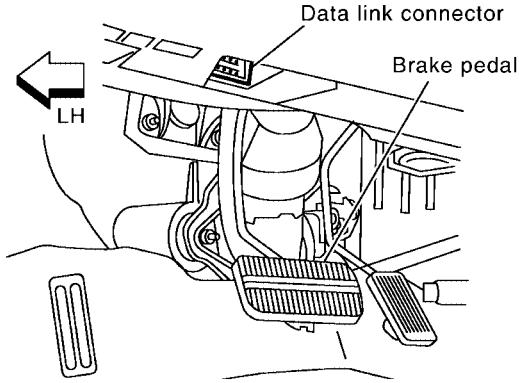

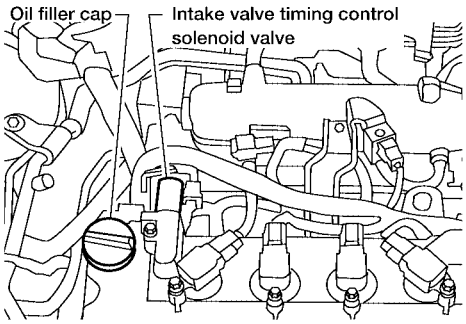

Instrument panel removed for clarity

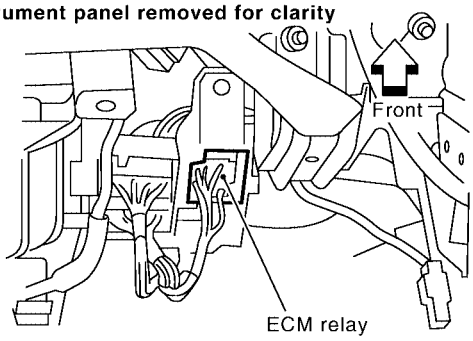

BBIA0143E

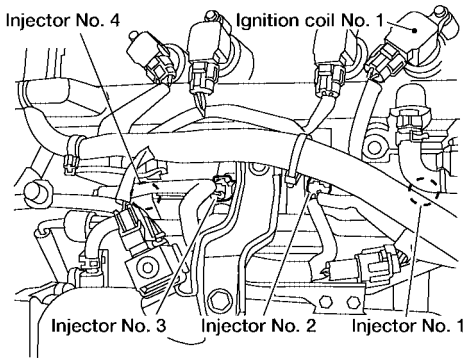
Injector No. 4
Ignition coil No. 1
Injector No. 3
Injector No. 2
Injector No. 1

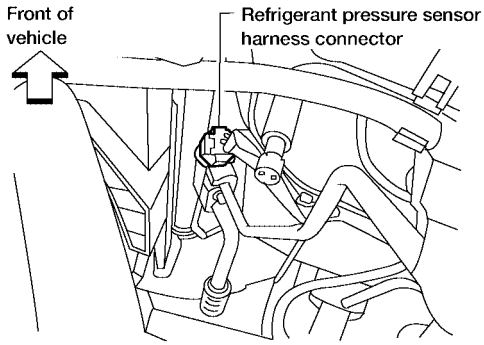
Front of vehicle
Refrigerant pressure sensor harness connector

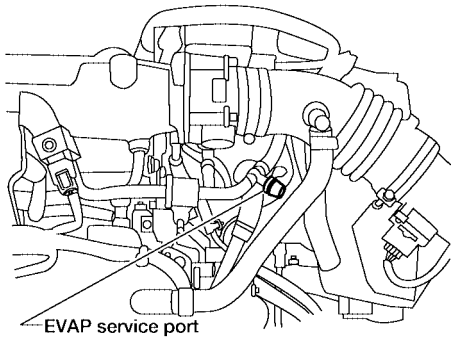
EVAP service port

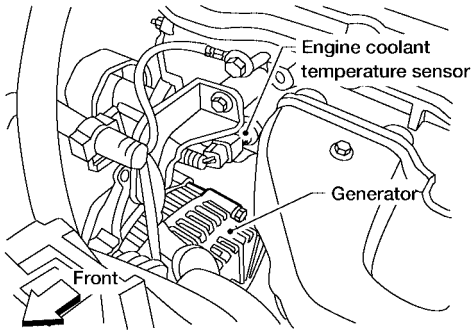
Engine coolant temperature sensor
Generator
Front

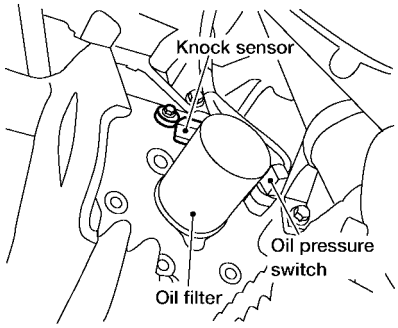
Knock sensor
Oil pressure switch
Oil filter

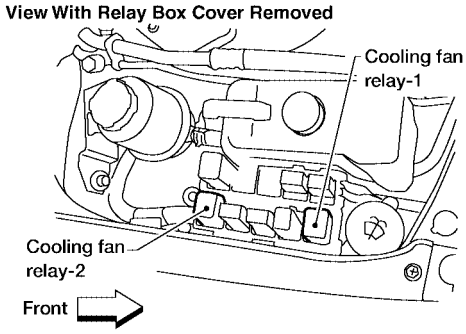
View With Relay Box Cover Removed
Cooling fan relay-1
Cooling fan relay-2
Front

BBIA0523E

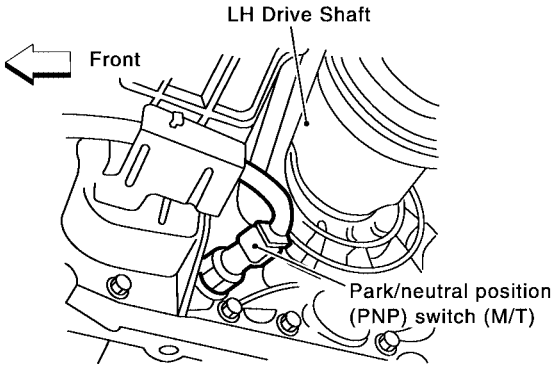
LH Drive Shaft
Front
Park/neutral position
(PNP) switch (M/T)

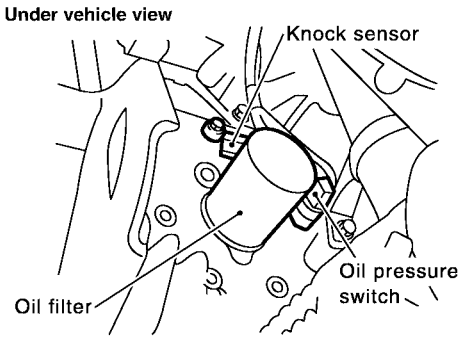
Under vehicle view
Knock sensor
Oil filter
Oil pressure
switch

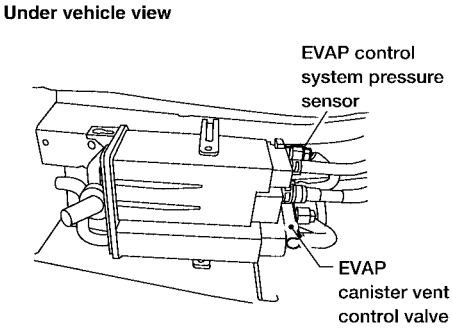
Under vehicle view
EVAP control
system pressure
sensor
EVAP
canister vent
control valve

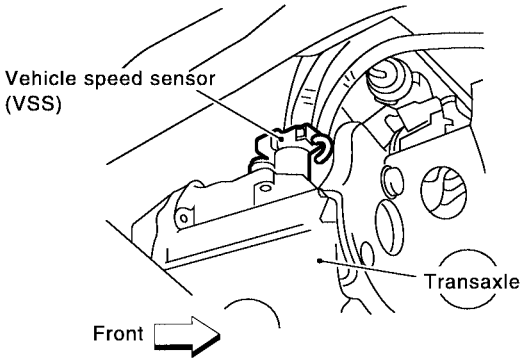
Vehicle speed sensor
(VSS)
Transaxle
Front

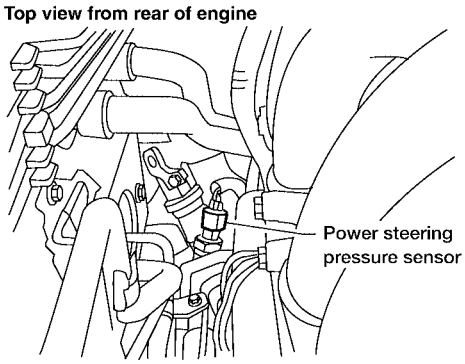
Top view from rear of engine
Power steering
pressure sensor

BBIA0145E

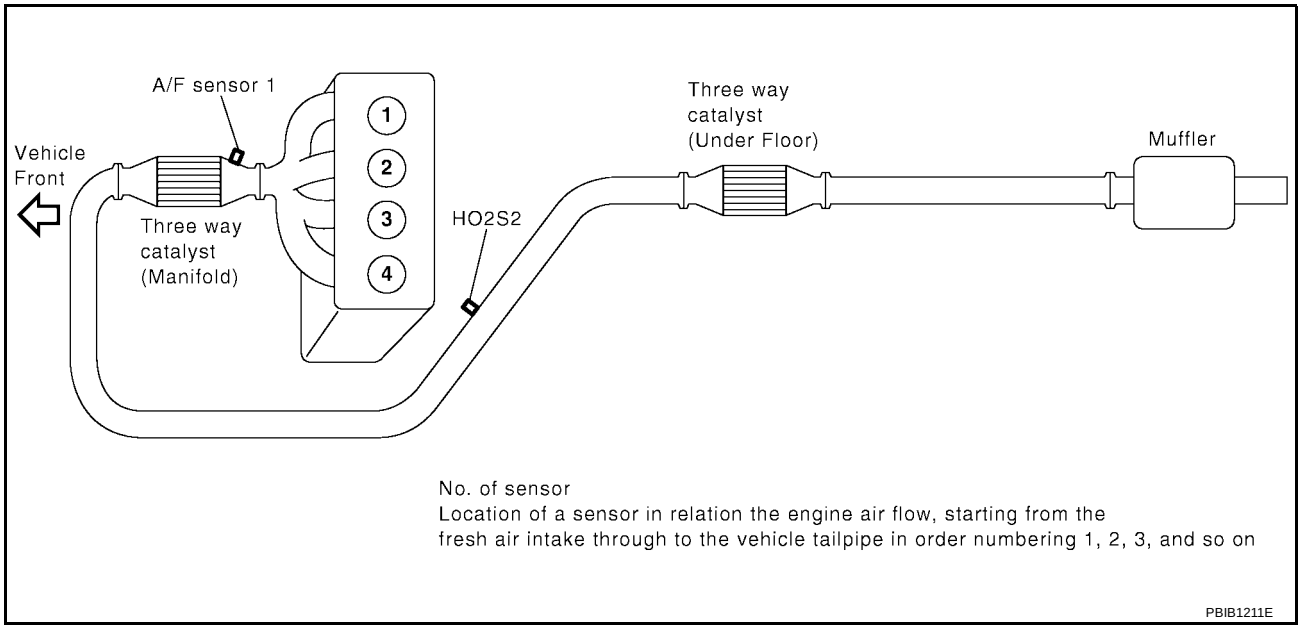
A/F sensor 1
Vehicle Front
Three way catalyst (Manifold)
1
2
3
4
HO2S2
Three way catalyst (Under Floor)
Muffler
No. of sensor
Location of a sensor in relation the engine air flow, starting from the fresh air intake through to the vehicle tailpipe in order numbering 1, 2, 3, and so on
PBIB1211E

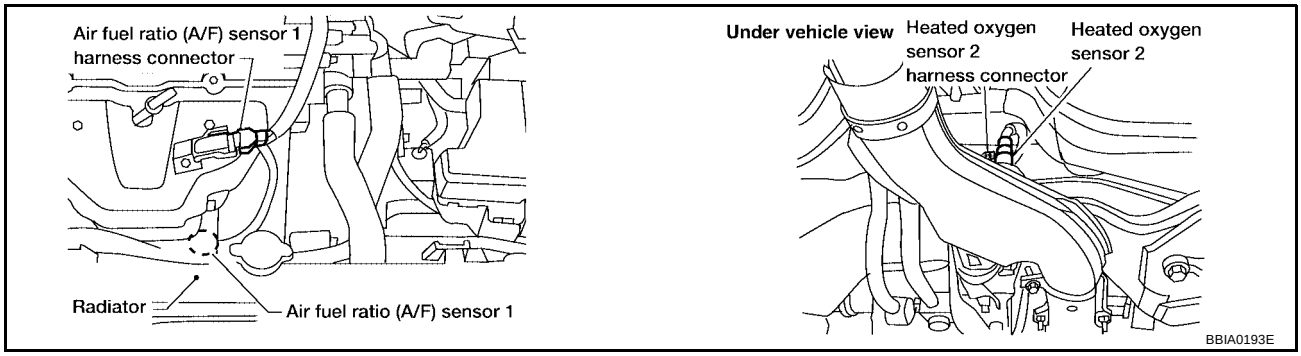
Air fuel ratio (A/F) sensor 1 harness connector
Radiator
Air fuel ratio (A/F) sensor 1
Under vehicle view
Heated oxygen sensor 2 harness connector
Heated oxygen sensor 2
BBIA0193E

Circuit Diagram
SULEV MODELS

UBS00JSL

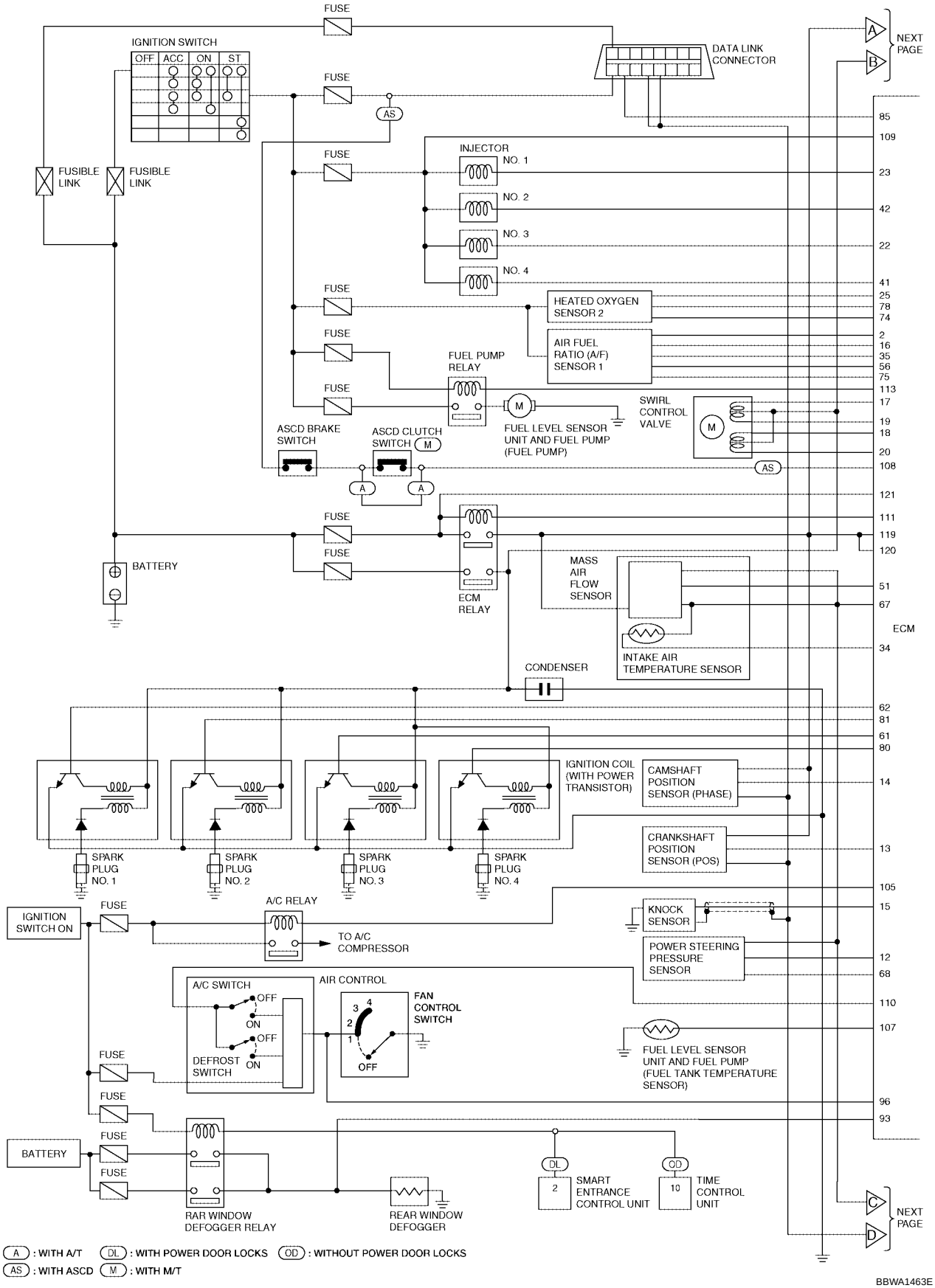

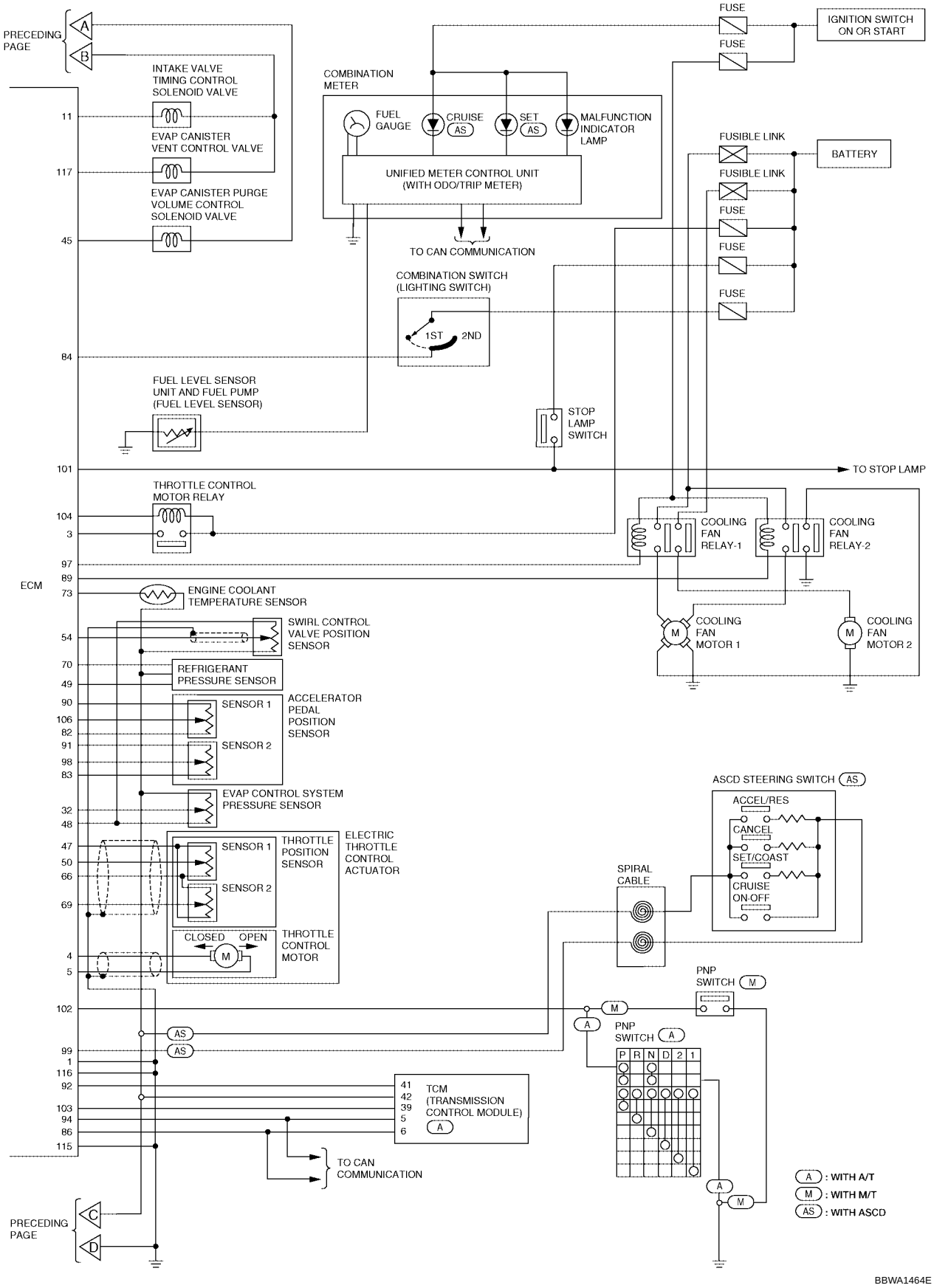
PRECEDING PAGE
A
B
INTAKE VALVE TIMING CONTROL SOLENOID VALVE
11
EVAP CANISTER VENT CONTROL VALVE
117
EVAP CANISTER PURGE VOLUME CONTROL SOLENOID VALVE
45
COMBINATION METER
FUEL GAUGE
CRUISE
AS
SET
AS
MALFUNCTION INDICATOR LAMP
UNIFIED METER CONTROL UNIT (WITH ODO/TRIP METER)
TO CAN COMMUNICATION
FUSE
IGNITION SWITCH ON OR START
FUSE
FUSIBLE LINK
BATTERY
FUSIBLE LINK
FUSE
FUSE
FUSE
COMBINATION SWITCH (LIGHTING SWITCH)
1ST
2ND
84
FUEL LEVEL SENSOR UNIT AND FUEL PUMP (FUEL LEVEL SENSOR)
STOP LAMP SWITCH
101
TO STOP LAMP
THROTTLE CONTROL MOTOR RELAY
104
3
97
89
ECM
73
ENGINE COOLANT TEMPERATURE SENSOR
COOLING FAN RELAY-1
COOLING FAN RELAY-2
M
COOLING FAN MOTOR 1
M
COOLING FAN MOTOR 2
54
SWIRL CONTROL VALVE POSITION SENSOR
70
REFRIGERANT PRESSURE SENSOR
49
90
106
82
91
98
83
SENSOR 1
SENSOR 2
ACCELERATOR PEDAL POSITION SENSOR
32
48
EVAP CONTROL SYSTEM PRESSURE SENSOR
47
50
66
69
SENSOR 1
SENSOR 2
THROTTLE POSITION SENSOR
ELECTRIC THROTTLE CONTROL ACTUATOR
CLOSED
OPEN
M
THROTTLE CONTROL MOTOR
4
5
ASCD STEERING SWITCH
AS
ACCEL/RES
CANCEL
SET/COAST
CRUISE ON-OFF
SPIRAL CABLE
PNP SWITCH
M
102
M
A
PNP SWITCH
A
AS
AS
99
1
116
92
103
94
86
115
P R N D 2 1
41
42
39
5
6
TCM (TRANSMISSION CONTROL MODULE)
A
TO CAN COMMUNICATION
A
M
A : WITH A/T
M : WITH M/T
AS : WITH ASCD
PRECEDING PAGE
C
D
BBWA1464E

EXCEPT SULEV MODELS

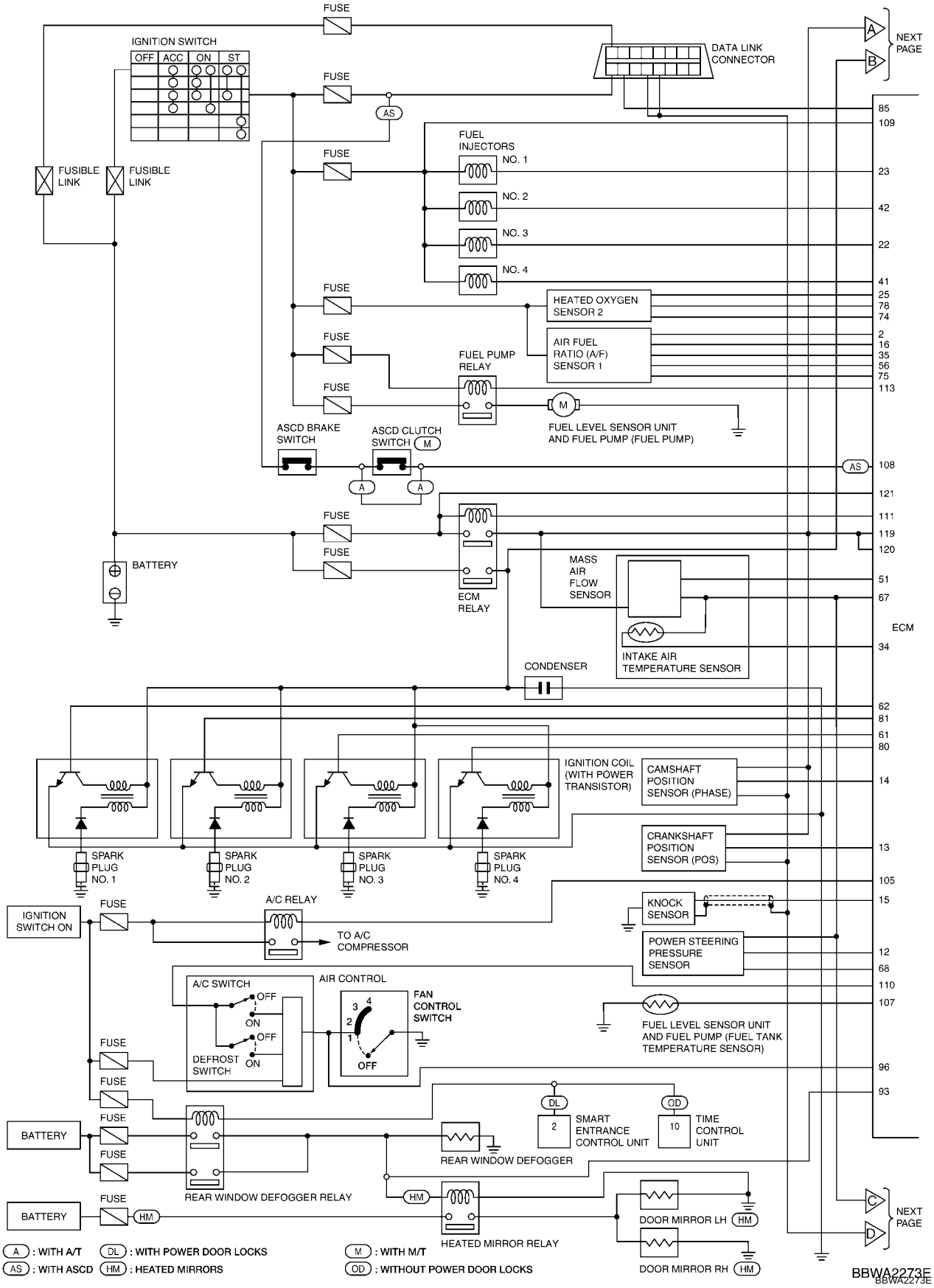

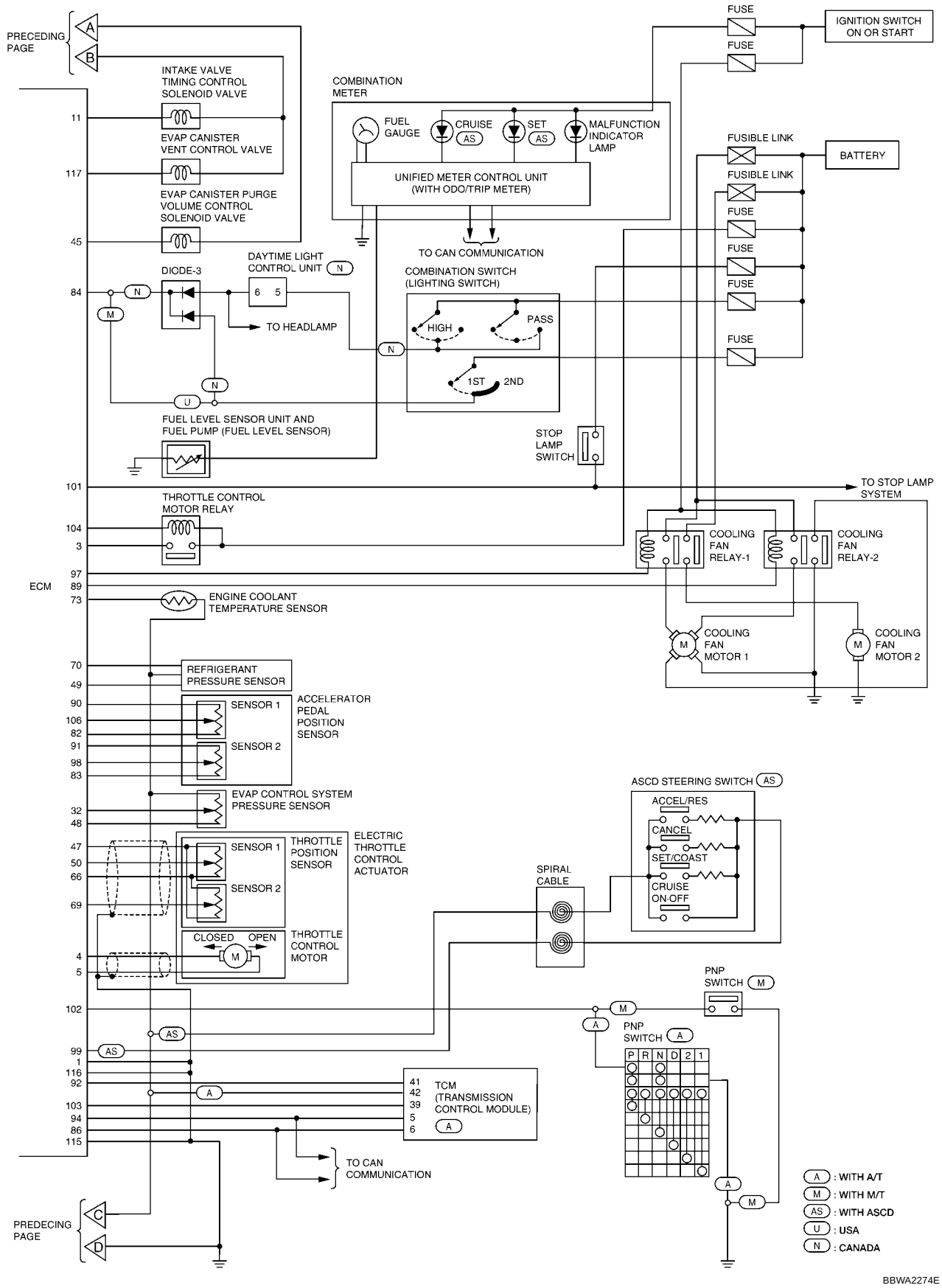
PRECEDING PAGE
A
B
INTAKE VALVE TIMING CONTROL SOLENOID VALVE
11
EVAP CANISTER VENT CONTROL VALVE
117
EVAP CANISTER PURGE VOLUME CONTROL SOLENOID VALVE
45
DIODE-3
DAYTIME LIGHT CONTROL UNIT
N
84
M
6 5
TO HEADLAMP
COMBINATION METER
FUEL GAUGE
CRUISE
AS
SET
MALFUNCTION INDICATOR LAMP
UNIFIED METER CONTROL UNIT (WITH ODO/TRIP METER)
TO CAN COMMUNICATION
COMBINATION SWITCH (LIGHTING SWITCH)
HIGH
PASS
1ST
2ND
U
FUEL LEVEL SENSOR UNIT AND FUEL PUMP (FUEL LEVEL SENSOR)
STOP LAMP SWITCH
FUSE
IGNITION SWITCH ON OR START
FUSIBLE LINK
BATTERY
101
TO STOP LAMP SYSTEM
THROTTLE CONTROL MOTOR RELAY
104
3
97
ECM
89
73
ENGINE COOLANT TEMPERATURE SENSOR
COOLING FAN RELAY-1
COOLING FAN RELAY-2
COOLING FAN MOTOR 1
COOLING FAN MOTOR 2
70
49
REFRIGERANT PRESSURE SENSOR
90
106
82
91
98
83
SENSOR 1
SENSOR 2
ACCELERATOR PEDAL POSITION SENSOR
32
48
EVAP CONTROL SYSTEM PRESSURE SENSOR
47
50
66
69
THROTTLE POSITION SENSOR
ELECTRIC THROTTLE CONTROL ACTUATOR
CLOSED
OPEN
4
5
THROTTLE CONTROL MOTOR
ASCD STEERING SWITCH
ACCEL/RES
CANCEL
SET/COAST
CRUISE ON·OFF
SPIRAL CABLE
PNP SWITCH
102
99
1
116
92
103
94
86
115
TCM (TRANSMISSION CONTROL MODULE)
41
42
39
5
6
TO CAN COMMUNICATION
P R N D 2 1
PREDECING PAGE
C
D
A : WITH A/T
M : WITH M/T
AS : WITH ASCD
U : USA
N : CANADA
BBWA2274E

ECM Harness Connector Terminal Layout

UBS00JSM

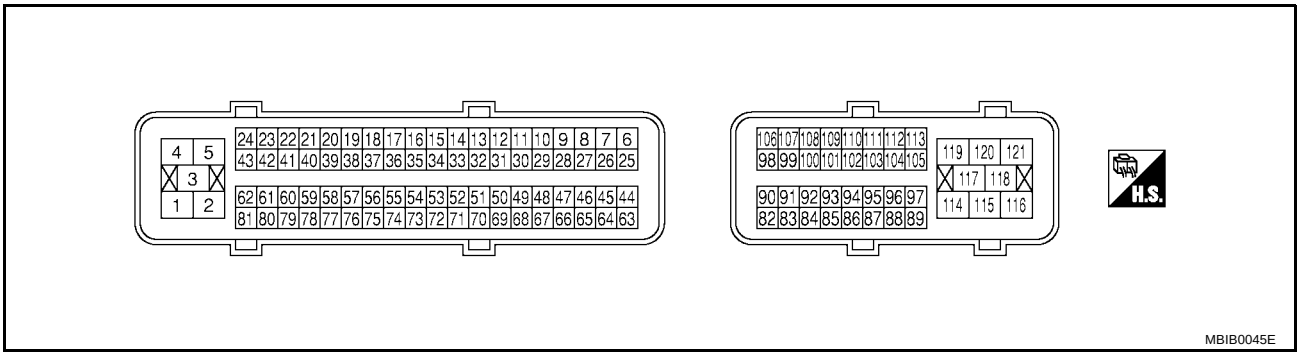

ECM Terminals and Reference Value

UBS00JSN

PREPARATION

1. ECM is located in the right side of the cowl top (behind the strut tower).
2. Remove ECM harness protector.

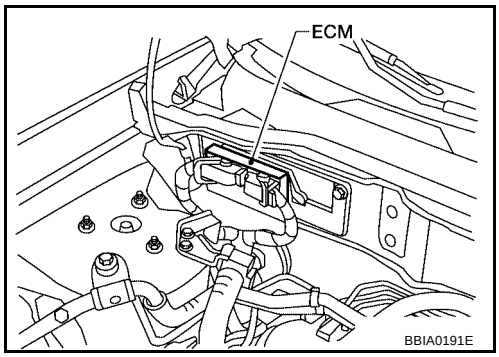

3. When disconnecting ECM harness connector, loosen it with levers as far as they will go as show at right.
4. Connect a bread-out box (SST) and Y-cable adapter (SST) between the ECM and ECM harness connector.
   - Use extreme care not to touch 2 pins at one time.
   - Data is for comparison and may not be exact.

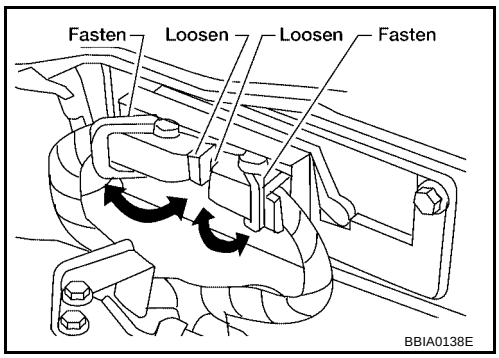

ECM INSPECTION TABLE

Specification data are reference values and are measured between each terminal and ground.
Pulse signal is measured by CONSULT-II.

CAUTION:

Do not use ECM ground terminals when measuring input/output voltage. Doing so may result in damage to the ECM's transistor. Use a ground other than ECM terminals, such as the ground.

TERMINAL NO.	WIRE COLOR	ITEM	CONDITION	DATA (DC Voltage)
1	B	ECM ground	**[Engine is running]** ● Idle speed	Body ground
2	R	A/F sensor 1 heater	**[Engine is running]** ● **Warm-up condition** ● Idle speed	Approximately 5V★ 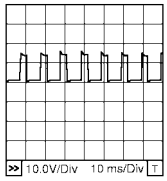 PBIB1584E

TERMINAL NO.	WIRE COLOR	ITEM	CONDITION	DATA (DC Voltage)
3	R/W	Throttle control motor power supply	**[Ignition switch: ON]**	BATTERY VOLTAGE (11 - 14V)
4	P	Throttle control motor (Close)	**[Ignition switch: ON]** ● Engine stopped ● Shift lever: D (A/T), 1st (M/T) ● Accelerator pedal: Fully released	0 - 14V★ 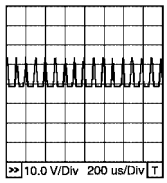 PBIB0534E
5	L	Throttle control motor (Open)	**[Ignition switch: ON]** ● Engine stopped ● Shift lever: D (A/T), 1st (M/T) ● Accelerator pedal: Fully depressed	0 - 14V★ 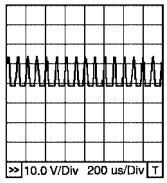 PBIB0533E
11	G/Y	Intake valve timing control solenoid valve	**[Engine is running]** ● **Warm-up condition** ● Idle speed	BATTERY VOLTAGE (11 - 14V)
			[Engine is running] ● **Warm-up condition** ● When revving engine up to 2,500 rpm-quickly.	7 - 10V★ 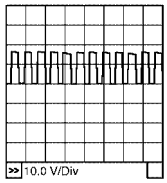 PBIB1790E
12	P	Power steering pressure sensor	**[Engine is running]** ● Steering wheel is being turned	0.5 - 4.0V
			[Engine is running] ● Steering wheel is not being turned	0.4 - 0.8V
13	Y	Crankshaft position sensor (POS)	**[Engine is running]** ● **Warm-up condition** ● Idle speed **NOTE:** The pulse cycle changes depending on rpm at idle.	Approximately 3.0V★ 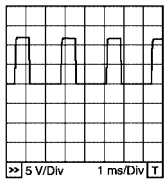 PBIB0527E
			[Engine is running] ● Engine speed is 2,000 rpm	Approximately 3.0V★ 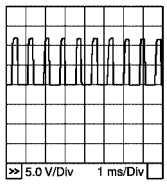 PBIB0528E

TERMINAL NO.	WIRE COLOR	ITEM	CONDITION	DATA (DC Voltage)
14	W/R	Camshaft position sensor (PHASE)	**[Engine is running]** ● **Warm-up condition** ● Idle speed **NOTE:** The pulse cycle changes depending on rpm at idle.	1.0 - 4.0V★ 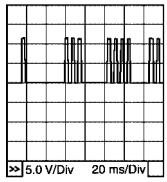 PBIB0525E
			[Engine is running] ● Engine speed is 2,000 rpm.	1.0 - 4.0V★ 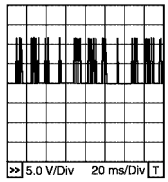 PBIB0526E
15	W	Knock sensor	**[Engine is running]** ● Idle speed	Approximately 2.5V
16	OR/L	A/F sensor 1	**[Engine is running]** ● **Warm-up condition** ● Idle speed	Approximately 3.1V
35	B/Y			Approximately 2.6V
56	OR			2 - 3V
75	W/L			2 - 3V
17 18 19 20	LG R/W PU/W L/Y	Swirl control valve	**[Engine is running]** ● Idle speed	0.1 - 14V
22 23 41 42	G/B R/B L/B Y/B	Injector No. 3 Injector No. 1 Injector No. 4 Injector No. 2	**[Engine is running]** ● **Warm-up condition** ● Idle speed **NOTE:** The pulse cycle changes depending on rpm at idle.	BATTERY VOLTAGE (11 - 14V)★ 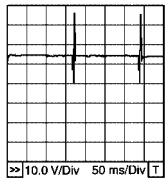 PBIB0529E
			[Engine is running] ● **Warm-up condition** ● Engine speed is 2,000 rpm	BATTERY VOLTAGE (11 - 14V)★ 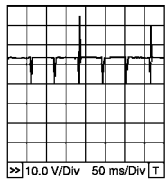 PBIB0530E

TERMINAL NO.	WIRE COLOR	ITEM	CONDITION	DATA (DC Voltage)
25	W/B	Heated oxygen sensor 2 heater	**[Engine is running]** ● **Warm-up condition** ● Engine speed: Below 3,600 rpm after the following conditions are met. ● Keeping the engine speed between 3,500 and 4,000 rpm for 1 minute and at idle for 1 minute under on load	0 - 1.0V
			[Ignition switch: ON] ● Engine stopped. **[Engine is running]** ● Engine speed is above 3,600 rpm.	BATTERY VOLTAGE (11 - 14V)
32	L	EVAP control system pressure sensor	**[Ignition switch: ON]**	Approximately 1.8 - 4.8V
34	Y/G	Intake air temperature sensor	**[Engine is running]**	Approximately 0 - 4.8V Output voltage varies with intake air temperature.
45	GY/L	EVAP canister purge volume control solenoid valve	**[Engine is running]** ● Idle speed ● Accelerator pedal is not depressed even slightly, after engine starting.	BATTERY VOLTAGE (11 - 14V)★ 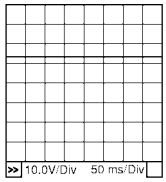 PBIB0050E
			[Engine is running] ● Engine speed is about 2,000 rpm (More than 100 seconds after starting engine)	Approximately 10V★ 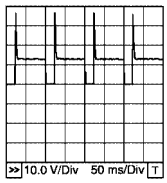 PBIB0520E
47	B	Sensor power supply (Throttle position sensor)	**[Ignition switch: ON]**	Approximately 5V
48	R/W	Sensor power supply (EVAP control system pressure sensor)	**[Ignition switch: ON]**	Approximately 5V
49	R/Y	Sensor power supply (Refrigerant pressure sensor)	**[Ignition switch: ON]**	Approximately 5V
50	W	Throttle position sensor 1	**[Ignition switch: ON]** ● Engine stopped ● Shift lever: D (A/T), 1st (M/T) ● Accelerator pedal: Fully released	More than 0.36V
			[Ignition switch: ON] ● Engine stopped ● Shift lever: D (A/T), 1st (M/T) ● Accelerator pedal: Fully depressed	Less than 4.75V

TERMI-NAL NO.	WIRE COLOR	ITEM	CONDITION	DATA (DC Voltage)
51	L/R	Mass air flow sensor	**[Engine is running]** ● **Warm-up condition** ● Idle speed	0.9 - 1.2V
			[Engine is running] ● **Warm-up condition** ● Engine speed is 2,500 rpm.	1.4 - 1.8V
54	Y	Swirl control valve position sensor	**[Engine is running]** ● Idle speed ● Engine coolant temperature is below 44°C (111°F).	Approximately 5V
			[Engine is running] ● **Warm-up condition** ● Idle speed ● Engine coolant temperature is above 45°C (113°F).	0 - 1.0V
61 62 80 81	L/W BR GY/R PU	Ignition signal No. 3 Ignition signal No. 1 Ignition signal No. 4 Ignition signal No. 2	**[Engine is running]** ● **Warm-up condition** ● Idle speed **NOTE:** The pulse cycle changes depending on rpm at idle.	0 - 0.1V★ 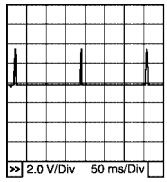 PBIB0521E
			[Engine is running] ● **Warm-up condition** ● Engine speed is 2,000 rpm.	0 - 0.2V★ 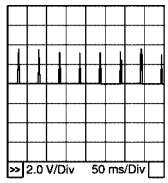 PBIB0522E
66	R	Sensor ground (Throttle position sensor)	**[Engine is running]** ● **Warm-up condition** ● Idle speed	Approximately 0V
67	B/W	Sensor ground	**[Engine is running]** ● **Warm-up condition** ● Idle speed	Approximately 0V
68	G/R	Sensor power supply (Power steering pressure sensor)	**[Ignition switch: ON]**	Approximately 5V
69	G	Throttle position sensor 2	**[Ignition switch: ON]** ● Engine stopped ● Shift lever: D (A/T), 1st (M/T) ● Accelerator pedal: Fully released	Less than 4.75V
			[Ignition switch: ON] ● Engine stopped ● Shift lever: D (A/T), 1st (M/T) ● Accelerator pedal: Fully depressed	More than 0.36V

TERMINAL NO.	WIRE COLOR	ITEM	CONDITION	DATA (DC Voltage)
70	L	Refrigerant pressure sensor	**[Engine is running]** ● **Warm-up condition** ● Both A/C switch and blower switch are ON (Compressor operates.)	1.0 - 4.0V
73	BR/W	Engine coolant temperature sensor	**[Engine is running]**	Approximately 0 - 4.8V Output voltage varies with engine coolant temperature.
74	R/L	Heated oxygen sensor 2	**[Engine is running]** ● **Warm-up condition** ● Revving engine from idle up to 3,000 rpm quickly after the following conditions are met. ● Keeping the engine speed between 3,500 and 4,000 rpm for 1 minute and at idle for 1 minute under no load.	0 - Approximately 1.0V
78	B	Sensor ground (Heated oxygen sensor)	**[Engine is running]** ● **Warm-up condition** ● Idle speed	Approximately 0V
82	B/Y	Sensor ground (Accelerator pedal position sensor 1)	**[Engine is running]** ● **Warm-up condition** ● Idle speed	Approximately 0V
83	G	Sensor ground (Accelerator pedal position sensor 2)	**[Engine is running]** ● **Warm-up condition** ● Idle speed	Approximately 0V
84	PU	Electrical load signal (Headlamp signal)	**[Lighting switch: ON]** ● Lighting switch is 2nd position	BATTERY VOLTAGE (11 - 14V)
			[Lighting switch: ON] ● Lighting switch is OFF	Approximately 0V
85	LG	DATA link connector	**[Ignition switch: ON]** ● CONSULT-II or GST is disconnected.	BATTERY VOLTAGE (11 - 14V)
86	Y	CAN communication line	**[Ignition switch: ON]**	Approximately 2.3V
89	LG/B	Cooling fan relay-2 (High)	**[Engine is running]** ● Cooling fan is not operating	BATTERY VOLTAGE (11 - 14V)
			[Engine is running] ● Cooling fan is high speed operating	0 - 1.0V
90	R	Sensor power supply (Accelerator pedal position sensor 1)	**[Ignition switch: ON]**	Approximately 5V
91	R/G	Sensor power supply (Accelerator pedal position sensor 2)	**[Ignition switch: ON]**	Approximately 5V
93	L/W	Electrical load signal (Rear window defogger signal)	**[Ignition switch: ON]** ● Rear window defogger switch: ON	BATTERY VOLTAGE (11 - 14V)
			[Ignition switch: ON] ● Rear window defogger switch: OFF	Approximately 0V
94	L	CAN communication line	**[Ignition switch: ON]**	Approximately 2.8V

TERMI-NAL NO.	WIRE COLOR	ITEM	CONDITION	DATA (DC Voltage)
96	Y/G	Electrical load signal (Heater fan signal)	**[Engine is running]** ● Heater fan switch: ON	Approximately 0V
			[Engine is running] ● Heater fan switch: OFF	Approximately 5V
97	LG/R	Cooling fan relay-1 (Low)	**[Ignition switch: ON]** ● Cooling fan is not operating	BATTERY VOLTAGE (11 - 14V)
			[Ignition switch: ON] ● Cooling fan is operating	0 - 1.0V
98	R/B	Accelerator pedal position sensor 2	**[Ignition switch: ON]** ● Engine stopped ● Accelerator pedal: Fully released	0.28 - 0.48V
			[Ignition switch: ON] ● Engine stopped ● Accelerator pedal: Fully depressed	More than 2.0V
99	W/R	ASCD steering switch	**[Ignition switch: ON]** ● ASCD steering switch: OFF	Approximately 4V
			[Ignition switch: ON] ● MAIN switch: Pressed	Approximately 0V
			[Ignition switch: ON] ● CANCEL switch: Pressed	Approximately 1V
			[Ignition switch: ON] ● RESUME/ACCELERATE switch: Pressed	Approximately 3V
			[Ignition switch: ON] ● SET/COAST switch: Pressed	Approximately 2V
101	R/G	Stop lamp switch	**[Ignition switch: ON]** ● Brake pedal: Fully released	Approximately 0V
			[Ignition switch: ON] ● Brake pedal: Depressed	BATTERY VOLTAGE (11 - 14V)
102	G/OR	PNP switch	**[Ignition switch: ON]** ● Gear position: P or N	Approximately 0V
			[Ignition switch: ON] ● Except the above gear position	**A/T models** BATTERY VOLTAGE (11 - 14V) **M/T models** Approximately 5V
104	P	Throttle control motor relay	**[Ignition switch: OFF]**	BATTERY VOLTAGE (11 - 14V)
			[Ignition switch: ON]	0 - 1.0V
106	W	Accelerator pedal position sensor 1	**[Ignition switch: ON]** ● Engine stopped ● Accelerator pedal: Fully released	0.65 - 0.87V
			[Ignition switch: ON] ● Engine stopped ● Accelerator pedal: Fully depressed	More than 4.3V
107	OR	Fuel tank temperature sen-sor	**[Engine is running]**	Approximately 0 - 4.8V Output voltage varies with fuel tank temperature.

TERMINAL NO.	WIRE COLOR	ITEM	CONDITION	DATA (DC Voltage)
108	P/L	ASCD brake switch	**[Ignition switch: ON]** ● Brake pedal: Slightly depressed ● Clutch pedal and/or brake pedal: Slightly depressed (M/T models)	Approximately 0V
			[Ignition switch: ON] ● Brake pedal: Fully released ● Clutch pedal and brake pedal: Fully released (M/T models)	BATTERY VOLTAGE (11 - 14V)
109	B/R	Ignition switch	**[Ignition switch: OFF]**	0V
			[Ignition switch: ON]	BATTERY VOLTAGE (11 - 14V)
111	W/G	ECM relay (Self shut-off)	**[Engine is running]** **[Ignition switch: OFF]** ● For a few seconds after turning ignition switch OFF	0 - 1.0V
			[Ignition switch: OFF] ● More than a few seconds after turning ignition switch OFF	BATTERY VOLTAGE (11 - 14V)
113	B/P	Fuel pump relay	**[Ignition switch: ON]** ● For 1 second after turning ignition switch ON **[Engine is running]**	0 - 1.0V
			[Ignition switch: ON] ● More than 1 second after turning ignition switch ON.	BATTERY VOLTAGE (11 - 14V)
115 116	B	ECM ground	**[Engine is running]** ● Idle speed	Body ground
117	L/Y	EVAP canister vent control valve	**[Ignition switch: ON]**	BATTERY VOLTAGE (11 - 14V)
119 120	R/G	Power supply for ECM	**[Ignition switch: ON]**	BATTERY VOLTAGE (11 - 14V)
121	W/L	Power supply for ECM (Buck-up)	**[Ignition switch: OFF]**	BATTERY VOLTAGE (11 - 14V)

★: Average voltage for pulse signal (Actual pulse signal can be confirmed by oscilloscope.)

CONSULT-II Function (ENGINE)

UBS00JSO

Diagnostic test mode	Function
Work support	This mode enables a technician to adjust some devices faster and more accurately by following the indications on the CONSULT-II unit.
Self-diagnostic results	Self-diagnostic results such as 1st trip DTC, DTCs and 1st trip freeze frame data or freeze frame data can be read and erased quickly.*
Data monitor	Input/Output data in the ECM can be read.
Data monitor (SPEC)	Input/Output of the specification for Basic fuel schedule, AFM, A/F feedback control value and the other data monitor items can be read.
CAN diagnostic support monitor	The results of transmit/receive diagnosis of CAN communication can be read.
Active test	Diagnostic Test Mode in which CONSULT-II drives some actuators apart from the ECMs and also shifts some parameters in a specified range.
Function test	This mode is used to inform customers when their vehicle condition requires periodic maintenance.
DTC & SRT confirmation	The status of system monitoring tests and the self-diagnosis status/result can be confirmed.
ECM part number	ECM part number can be read.

*: The following emission-related diagnostic information is cleared when the ECM memory is erased.

1. Diagnostic trouble codes
2. 1st trip diagnostic trouble codes
3. Freeze frame data
4. 1st trip freeze frame data
5. System readiness test (SRT) codes
6. Test values

ENGINE CONTROL COMPONENT PARTS/CONTROL SYSTEMS APPLICATION

Item			DIAGNOSTIC TEST MODE							
			WORK SUP-PORT	SELF-DIAGNOSTIC RESULTS		DATA MONI-TOR	DATA MONI-TOR (SPEC)	ACTIVE TEST	DTC & SRT CONFIRMATION	
				DTC*1	FREEZE FRAME DATA*2				SRT STATUS	DTC WORK SUP-PORT
ENGINE CONTROL COMPONENT PARTS	INPUT	Crankshaft position sensor (POS)		×	×	×	×			
		Camshaft position sensor (PHASE)		×		×	×			
		Mass air flow sensor		×		×	×			
		Engine coolant temperature sensor		×	×	×	×	×		
		A/F sensor 1		×		×			×	×
		Heated oxygen sensor 2		×		×	×		×	×
		Vehicle speed sensor		×	×	×	×			
		Accelerator pedal position sensor		×		×	×			
		Throttle position sensor		×		×	×			
		Fuel tank temperature sensor		×		×	×	×		
		EVAP control system pressure sensor		×		×	×			
		Intake air temperature sensor		×		×	×			
		Knock sensor		×						
		Refrigerant pressure sensor				×	×			
		Closed throttle position switch (accelerator pedal position sensor signal)				×	×			
		Air conditioner switch				×	×			
		Park/neutral position (PNP) switch		×		×	×			
		Stop lamp switch		×		×	×			
		Power steering pressure sensor		×		×	×			
		Battery voltage				×	×			
		Load signal				×	×			
		Swirl control valve position sensor		×		×	×			
		Fuel level sensor		×		×	×			
		ASCD steering switch		×		×	×			
		ASCD brake switch		×		×	×			
		ASCD clutch switch		×		×	×			

Item			DIAGNOSTIC TEST MODE							
			WORK SUP-PORT	SELF-DIAGNOSTIC RESULTS		DATA MONI-TOR	DATA MONI-TOR (SPEC)	ACTIVE TEST	DTC & SRT CONFIRMATION	
				DTC*1	FREEZE FRAME DATA*2				SRT STATUS	DTC WORK SUP-PORT
ENGINE CONTROL COMPONENT PARTS	OUTPUT	Injector				×	×	×		
		Power transistor (Ignition timing)				×	×	×		
		Throttle control motor relay		×		×	×			
		Throttle control motor		×						
		EVAP canister purge volume control solenoid valve		×		×	×	×		×
		Air conditioner relay				×	×			
		Fuel pump relay	×			×	×	×		
		Cooling fan relay		×		×	×	×		
		A/F sensor 1 heater		×		×	×		×	
		Heated oxygen sensor 2 heater		×		×	×		×	
		EVAP canister vent control valve	×	×		×	×	×		
		Swirl control valve		×		×	×	×		
		Intake valve timing control solenoid valve		×		×	×	×		
		Calculated load value			×	×	×			

X: Applicable
*1: This item includes 1st trip DTCs.
*2: This mode includes 1st trip freeze frame data or freeze frame data. The items appear on CONSULT-II screen in freeze frame data mode only if a 1st trip DTC or DTC is detected. For details, refer to EC-55 .

INSPECTION PROCEDURE

1. Turn ignition switch OFF.
2. Connect CONSULT-II and CONSULT-II CONVERTER to data link connector, which is located under LH dash panel near the fuse box cover.
3. Turn ignition switch ON.

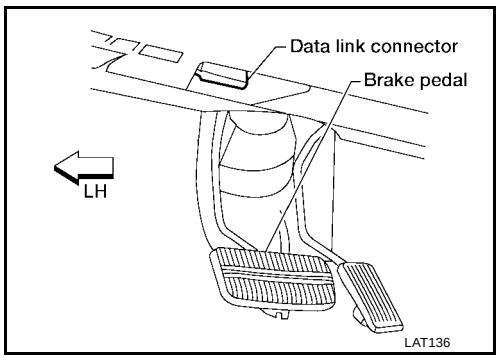

4. Touch “START” (NISSAN BASED VHCL).

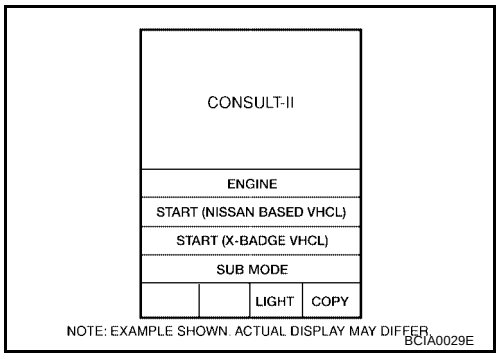

5. Touch “ENGINE”.
If “ENGINE” is not indicated, go to GI-39, "CONSULT-II Data Link Connector (DLC) Circuit" .

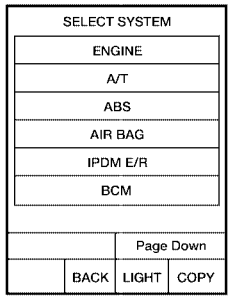

NOTE: EXAMPLE SHOWN. ACTUAL DISPLAY MAY DIFFER.
BCIA0030E

6. Perform each diagnostic test mode according to each service procedure.

For further information, see the CONSULT-II Operation Manual.

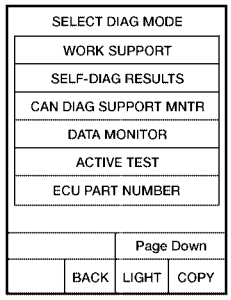

NOTE: EXAMPLE SHOWN. ACTUAL DISPLAY MAY DIFFER.
BCIA0031E

WORK SUPPORT MODE

Work Item

WORK ITEM	CONDITION	USAGE
FUEL PRESSURE RELEASE	● FUEL PUMP WILL STOP BY TOUCHING “START” DURING IDLING. CRANK A FEW TIMES AFTER ENGINE STALLS.	When releasing fuel pressure from fuel line
IDLE AIR VOL LEARN	● THE IDLE AIR VOLUME THAT KEEPS THE ENGINE WITHIN THE SPECIFIED RANGE IS MEMORIZED IN ECM.	When learning the idle air volume
SELF-LEARNING CONT	● THE COEFFICIENT OF SELF-LEARNING CONTROL MIXTURE RATIO RETURNS TO THE ORIGINAL COEFFICIENT.	When clearing the coefficient of self-learning control value
EVAP SYSTEM CLOSE	CLOSE THE EVAP CANISTER VENT CONTROL VALVE IN ORDER TO MAKE EVAP SYSTEM CLOSE UNDER THE FOLLOWING CONDITIONS. ● IGN SW ON ● ENGINE NOT RUNNING ● AMBIENT TEMPERATURE IS ABOVE 0°C (32°F). ● NO VACUUM AND NO HIGH PRESSURE IN EVAP SYSTEM ● FUEL TANK TEMP. IS MORE THAN 0°C (32°F). ● WITHIN 10 MINUTES AFTER STARTING “EVAP SYSTEM CLOSE” ● WHEN TRYING TO EXECUTE “EVAP SYSTEM CLOSE” UNDER THE CONDITION EXCEPT ABOVE, CONSULT-II WILL DISCONTINUE IT AND DISPLAY APPROPRIATE INSTRUCTION. **NOTE:** **WHEN STARTING ENGINE, CONSULT-II MAY DISPLAY “BATTERY VOLTAGE IS LOW. CHARGE BATTERY”, EVEN IN USING CHARGED BATTERY.**	When detecting EVAP vapor leak point of EVAP system
VIN REGISTRATION	● IN THIS MODE, VIN IS REGISTERED IN ECM	When registering VIN in ECM

WORK ITEM	CONDITION	USAGE
TARGET IDLE RPM ADJ*	● IDLE CONDITION	When setting target idle speed
TARGET IGN TIM ADJ*	● IDLE CONDITION	When adjusting target ignition timing

*: This function is not necessary in the usual service procedure.

SELF-DIAG RESULTS MODE

Self Diagnostic Item

Regarding items of “DTC and 1st trip DTC”, refer to EC-15, "INDEX FOR DTC" .

Freeze Frame Data and 1st Trip Freeze Frame Data

Freeze frame data item*	Description
DIAG TROUBLE CODE [PXXXX]	● The engine control component part/control system has a trouble code, it is displayed as “PXXXX”. (Refer to EC-15, "INDEX FOR DTC" .)
FUEL SYS-B1	● “Fuel injection system status” at the moment a malfunction is detected is displayed. ● One mode in the following is displayed. “Mode 2”: Open loop due to detected system malfunction “Mode 3”: Open loop due to driving conditions (power enrichment, deceleration enleanment) “Mode 4”: Closed loop - using oxygen sensor(s) as feedback for fuel control “Mode 5”: Open loop - has not yet satisfied condition to go to closed loop
CAL/LD VALUE [%]	● The calculated load value at the moment a malfunction is detected is displayed.
COOLANT TEMP [°C] or [°F]	● The engine coolant temperature at the moment a malfunction is detected is displayed.
L-FUEL TRM-B1 [%]	● “Long-term fuel trim” at the moment a malfunction is detected is displayed. ● The long-term fuel trim indicates much more gradual feedback compensation to the base fuel schedule than short-term fuel trim.
S-FUEL TRM-B1 [%]	● “Short-term fuel trim” at the moment a malfunction is detected is displayed. ● The short-term fuel trim indicates dynamic or instantaneous feedback compensation to the base fuel schedule.
ENGINE SPEED [rpm]	● The engine speed at the moment a malfunction is detected is displayed.
VEHICL SPEED [km/h] or [mph]	● The vehicle speed at the moment a malfunction is detected is displayed.
B/FUEL SCHDL [msec]	● The base fuel schedule at the moment a malfunction is detected is displayed.
INT/A TEMP SE [°C] or [°F]	● The intake air temperature at the moment a malfunction is detected is displayed.

*: The items are the same as those of 1st trip freeze frame data.

DATA MONITOR MODE

Monitored Item

×: Applicable

Monitored item [Unit]	ECM INPUT SIGNALS	MAIN SIGNALS	Description	Remarks
ENG SPEED [rpm]	×	×	● Indicates the engine speed computed from the signals of the crankshaft position sensor (POS) and camshaft position sensor (PHASE).	● Accuracy becomes poor if engine speed drops below the idle rpm. ● If the signal is interrupted while the engine is running, an abnormal value may be indicated.
MAS A/F SE-B1 [V]	×	×	● The signal voltage of the mass air flow sensor is displayed.	● When the engine is stopped, a certain value is indicated.

Monitored item [Unit]	ECM INPUT SIG-NALS	MAIN SIG-NALS	Description	Remarks
B/FUEL SCHDL [msec]		×	● "Base fuel schedule" indicates the fuel injection pulse width programmed into ECM, prior to any learned on board correction.	
A/F ALPHA-B1 [%]		×	● The mean value of the air-fuel ratio feedback correction factor per cycle is indicated.	● When the engine is stopped, a certain value is indicated. ● This data also includes the data for the air-fuel ratio learning control.
COOLAN TEMP/S [°C] or [°F]	×	×	● The engine coolant temperature (determined by the signal voltage of the engine coolant temperature sensor) is displayed.	● When the engine coolant temperature sensor is open or short-circulated, ECM enters fail-safe mode. The engine coolant temperature determined by the ECM is displayed.
A/F SEN1 (B1) [V]	×	×	● The A/F signal computed from the input signal of the A/F sensor 1 is displayed.	
HO2S2 (B1) [V]	×		● The signal voltage of the heated oxygen sensor 2 is displayed.	
HO2S2 MNTR (B1) [RICH/LEAN]	×		● Display of heated oxygen sensor 2 signal: RICH... means the amount of oxygen after three way catalyst is relatively small. LEAN... means the amount of oxygen after three way catalyst is relatively large.	● When the engine is stopped, a certain value is indicated.
VHCL SPEED SE [km/h] or [mph]	×	×	● The vehicle speed computed from the vehicle speed signal sent from combination meter is displayed.	
BATTERY VOLT [V]	×	×	● The power supply voltage of ECM is displayed.	
ACCEL SEN 1 [V]	×	×	● The accelerator pedal position sensor signal voltage is displayed.	● ACCEL SEN 2 signal is converted by ECM internally. Thus, it differs from ECM terminal voltage signal.
ACCEL SEN 2 [V]	×			
THRTL SEN 1 [V]	×	×	● The throttle position sensor signal voltage is displayed.	● THRTL SEN 2 signal is converted by ECM internally. Thus, it differs from ECM terminal voltage signal.
THRTL SEN 2 [V]	×			
FUEL T/TMP SE [°C] or [°F]	×		● The fuel temperature (determined by the signal voltage of the fuel tank temperature sensor) is displayed.	
VEHICLE SPEED [km/h] or [MPH]	×	×	● Indicates the vehicle speed computed from the revolution sensor signal.	
INT/A TEMP SE [°C] or [°F]	×	×	● The intake air temperature (determined by the signal voltage of the intake air temperature sensor) is indicated.	
EVAP SYS PRES [V]	×		● The signal voltage of EVAP control system pressure sensor is displayed.	
FUEL LEVEL SE [V]	×		● The signal voltage of the fuel level sensor is displayed.	
START SIGNAL [ON/OFF]	×	×	● Indicates [ON/OFF] condition from the starter signal.	● After starting the engine, [OFF] is displayed regardless of the starter signal.
CLSD THL POS [ON/OFF]	×	×	● Indicates idle position [ON/OFF] computed by ECM according to the accelerator pedal position sensor signal.	

Monitored item [Unit]	ECM INPUT SIG-NALS	MAIN SIG-NALS	Description	Remarks
AIR COND SIG [ON/OFF]	×	×	● Indicates [ON/OFF] condition of the air conditioner switch as determined by the air conditioner signal.	
P/N POSI SW [ON/OFF]	×	×	● Indicates [ON/OFF] condition from the park/neutral position (PNP) switch signal.	
PW/ST SIGNAL [ON/OFF]	×	×	● [ON/OFF] condition of the power steering pressure sensor as determined by the power steering pressure sensor signal is indicated.	
LOAD SIGNAL [ON/OFF]	×	×	● Indicates [ON/OFF] condition from the electrical load signal. ON... Rear window defogger switch is ON and/or lighting switch is in 2nd position. OFF... Both rear window defogger switch and lighting switch are OFF.	
IGNITION SW [ON/OFF]	×	×	● Indicates [ON/OFF] condition from ignition switch.	
HEATER FAN SW [ON/OFF]	×		● Indicates [ON/OFF] condition from the heater fan switch signal.	
BRAKE SW [ON/OFF]	×		● Indicates [ON/OFF] condition from the stop lamp switch signal.	
INJ PULSE-B1 [msec]		×	● Indicates the actual fuel injection pulse width compensated by ECM according to the input signals.	● When the engine is stopped, a certain computed value is indicated.
IGN TIMING [BTDC]		×	● Indicates the ignition timing computed by ECM according to the input signals.	● When the engine is stopped, a certain value is indicated.
CAL/LD VALUE [%]			● “Calculated load value” indicates the value of the current airflow divided by peak airflow.	
MASS AIRFLOW [g·m/s]			● Indicates the mass airflow computed by ECM according to the signal voltage of the mass air flow sensor.	
PURG VOL C/V [%]			● Indicates the EVAP canister purge volume control solenoid valve control value computed by the ECM according to the input signals. ● The opening becomes larger as the value increases.	
SWRL C/V (B1) [STEP]			● Indicates the swirl control valve computed by the ECM according to the input signal. ● The opening becomes larger as the valve increases.	
INT/V TIM (B1) [°CA]			● Indicates [°CA] of intake camshaft advanced angle.	
INT/V SOL (B1) [%]			● The control value of the intake valve timing control solenoid valve (determined by ECM according to the input signal) is indicated. ● The advance angle becomes larger as the value increases.	

Monitored item [Unit]	ECM INPUT SIG-NALS	MAIN SIG-NALS	Description	Remarks
AIR COND RLY [ON/OFF]		×	● The air conditioner relay control condition (determined by ECM according to the input signals) is indicated.	
FUEL PUMP RLY [ON/OFF]		×	● Indicates the fuel pump relay control condition determined by ECM according to the input signals.	
VENT CONT/V [ON/OFF]			● The control condition of the EVAP canister vent control valve (determined by ECM according to the input signals) is indicated. ON... Closed OFF... Open	
THRTL RELAY [ON/OFF]		×	● Indicates the throttle control motor relay control condition determined by the ECM according to the input signals.	
COOLING FAN [HI/LOW/OFF]			● Indicates the condition of the cooling fan (determined by ECM according to the input signals). HI... High speed operation LOW... Low speed operation OFF... Stop	
HO2S2 HTR (B1) [ON/OFF]			● Indicates [ON/OFF] condition of heated oxygen sensor 2 heater determined by ECM according to the input signals.	
IDL A/V LEARN [YET/CMPLT]			● Display the condition of idle air volume learning YET... Idle air volume learning has not been performed yet. CMPLT... Idle air volume learning has already been performed successfully.	
TRVL AFTER MIL [km] or [mile]			● Distance traveled while MIL is activated.	
A/F S1 HTR (B1) [%]			● Indicates A/F sensor 1 heater control value computed by ECM according to the input signals. ● The current flow to the heater becomes larger as the value increases.	
AC PRESS SEN [V]	×		● The signal voltage from the refrigerant pressure sensor is displayed.	
VHCL SPEED SE [km/h] or [mph]			● The vehicle speed computed from the vehicle speed signal sent from TCM is displayed.	
SET VHCL SPD [km/h] or [mph]			● The preset vehicle speed is displayed.	
MAIN SW [ON/OFF]			● Indicates [ON/OFF] condition from MAIN switch signal.	
CANCEL SW [ON/OFF]			● Indicates [ON/OFF] condition from CANCEL switch signal.	
RESUME/ACC SW [ON/OFF]			● Indicates [ON/OFF] condition from RESUME/ACCELERATE switch signal.	
SET SW [ON/OFF]			● Indicates [ON/OFF] condition from SET/COAST switch signal.	

Monitored item [Unit]	ECM INPUT SIG-NALS	MAIN SIG-NALS	Description	Remarks
BRAKE SW1 [ON/OFF]			● Indicates [ON/OFF] condition from ASCD brake switch signal, and ASCD clutch switch signal (M/T models).	
BRAKE SW2 [ON/OFF]			● Indicates [ON/OFF] condition of stop lamp switch signal.	
VHCL SPD CUT [NON/CUT]			● Indicates the vehicle cruise condition. NON... Vehicle speed is maintained at the ASCD set speed. CUT...Vehicle speed increased to excessively high compared with the ASCD set speed, and ASCD operation is cut off.	
LO SPEED CUT [NON/CUT]			● Indicates the vehicle cruise condition. NON... Vehicle speed is maintained at the ASCD set speed. CUT...Vehicle speed decreased to excessively low compared with the ASCD set speed, and ASCD operation is cut off.	
AT OD MONITOR [ON/OFF]			● Indicates [ON/OFF] condition of A/T O/D according to the input signal from the TCM.	● For M/T models always “OFF” is displayed.
AT OD CANCEL [ON/OFF]			● Indicates [ON/OFF] condition of A/T O/D cancel signal sent from the TCM.	● For M/T models always “OFF” is displayed.
CRUISE LAMP [ON/OFF]			● Indicates [ON/OFF] condition of CRUISE lamp determined by the ECM according to the input signals.	
SWL/C POSI SE [degree]			● Indicates the swirl control valve opening angle computed by ECM according to signal voltage of the swirl control valve position sensor.	
SET LAMP [ON/OFF]			● Indicates [ON/OFF] condition of SET lamp determined by the ECM according to the input signals.	
Voltage [V]			● Voltage, frequency, duty cycle or pulse width measured by the probe.	● Only “#” is displayed if item is unable to be measured. ● Figures with “#”s are temporary ones. They are the same figures as an actual piece of data which was just previously measured.
Frequency [msec], [Hz] or [%]				
DUTY-HI				
DUTY-LOW				
PLS WIDTH-HI				
PLS WIDTH-LOW				

DATA MONITOR (SPEC) MODE

Monitored Item

Monitored item [Unit]	ECM INPUT SIG-NALS	MAIN SIG-NALS	Description	Remarks
ENG SPEED [rpm]	×		● Indicates the engine speed computed from the signal of the crankshaft position sensor (POS) and camshaft position sensor (PHASE).	
MAS A/F SE-B1 [V]	×	×	● The signal voltage of the mass air flow sensor specification is displayed.	● When engine is running specification range is indicated.

Monitored item [Unit]	ECM INPUT SIGNALS	MAIN SIGNALS	Description	Remarks
B/FUEL SCHDL [msec]			● “Base fuel schedule” indicates the fuel injection pulse width programmed into ECM, prior to any learned on board correction.	● When engine is running specification range is indicated.
A/F ALPHA-B1 [%]		×	● The mean value of the air-fuel ratio feedback correction factor per cycle is indicated.	● When engine is running specification range is indicated. ● This data also includes the data for the air-fuel ratio learning control.

NOTE:
Any monitored item that does not match the vehicle being diagnosed is deleted from the display automatically.

ACTIVE TEST MODE

Test Item

TEST ITEM	CONDITION	JUDGEMENT	CHECK ITEM (REMEDY)
FUEL INJECTION	● Engine: Return to the original trouble condition ● Change the amount of fuel injection using CONSULT-II.	If trouble symptom disappears, see CHECK ITEM.	● Harness and connectors ● Fuel injector ● A/F sensor 1
IGNITION TIMING	● Engine: Return to the original trouble condition ● Timing light: Set ● Retard the ignition timing using CONSULT-II.	If trouble symptom disappears, see CHECK ITEM.	● Perform Idle Air Volume Learning.
POWER BALANCE	● Engine: After warming up, idle the engine. ● A/C switch OFF ● Shift lever: P or N ● Cut off each injector signal one at a time using CONSULT-II.	Engine runs rough or dies.	● Harness and connectors ● Compression ● Fuel injector ● Power transistor ● Spark plug ● Ignition coil
COOLING FAN	● Ignition switch: ON ● Turn the cooling fan “HI”, “LOW” and “OFF” with CONSULT-II.	Cooling fan moves and stops.	● Harness and connectors ● Cooling fan relay ● Cooling fan motor
ENG COOLANT TEMP	● Engine: Return to the original trouble condition ● Change the engine coolant temperature using CONSULT-II.	If trouble symptom disappears, see CHECK ITEM.	● Harness and connectors ● Engine coolant temperature sensor ● Fuel injector
FUEL PUMP RELAY	● Ignition switch: ON (Engine stopped) ● Turn the fuel pump relay “ON” and "OFF" using CONSULT-II and listen to operating sound.	Fuel pump relay makes the operating sound.	● Harness and connectors ● Fuel pump relay
VALVE TIMING SOL	● Ignition switch: ON (Engine stopped) ● Turn solenoid valve “ON” and “OFF” with the CONSULT-II and listen to operating sound.	Solenoid valve makes an operating sound.	● Harness and connectors ● Solenoid valve
PURG VOL CONT/V	● Engine: After warming up, run engine at 1,500 rpm. ● Change the EVAP canister purge volume control solenoid valve opening percent using CONSULT-II.	Engine speed changes according to the opening percent.	● Harness and connectors ● Solenoid valve

TEST ITEM	CONDITION	JUDGEMENT	CHECK ITEM (REMEDY)
FUEL/T TEMP SEN	● Change the fuel tank temperature using CONSULT-II.		
VENT CONTROL/V	● Ignition switch: ON (Engine stopped) ● Turn solenoid valve “ON” and “OFF” with the CONSULT-II and listen to operating sound.	Solenoid valve makes an operating sound.	● Harness and connectors ● Solenoid valve
SWIRL CONTROL VALVE	● Ignition switch: ON (Engine stopped) ● Changes swirl control valve opening step using CONSULT-II.	Swirl control valve makes an operating sound.	● Harness and connectors ● Swirl control valve

DTC & SRT CONFIRMATION MODE

SRT STATUS Mode

For details, refer to EC-56, "SYSTEM READINESS TEST (SRT) CODE" .

SRT WORK SUPPORT Mode

This mode enables a technician to drive a vehicle to set the SRT while monitoring the SRT status.

DTC WORK SUPPORT Mode

Test mode	Test item	Condition	Reference page
EVAPORATIVE SYSTEM	PURGE FLOW P0441	Refer to corresponding trouble diagnosis for DTC.	EC-303
	EVAP SML LEAK P0442/P1442*		EC-309
	EVAP V/S SML LEAK P0456/P1456*		EC-356
	PURG VOL CN/V P1444		EC-527
A/F SEN1	A/F SEN 1 (B1) P1273		EC-491
	A/F SEN 1 (B1) P1274		EC-491
	A/F SEN1 (B1) P1276		EC-505
	A/F SEN1 (B1) P1278		EC-511
	A/F SEN1 (B1) P1279		EC-519
HO2S2	HO2S2 (B1) P0139		EC-234
	HO2S2 (B1) P1146		EC-438
	HO2S2 (B1) P1147		EC-446

*: DTC P1442 and P1456 does not apply to B15 models but appears in DTC Work Support Mode screens.

REAL TIME DIAGNOSIS IN DATA MONITOR MODE (RECORDING VEHICLE DATA)

Description

CONSULT-II has two kinds of triggers and they can be selected by touching “SETTING” in “DATA MONITOR” mode.

1. “AUTO TRIG” (Automatic trigger):
   - The malfunction will be identified on the CONSULT-II screen in real time.
     In other words, DTC/1st trip DTC and malfunction item will be displayed if the malfunction is detected by ECM.
     At the moment a malfunction is detected by ECM, “MONITOR” in “DATA MONITOR” screen is changed to “Recording Data ... xx%” as shown at right, and the data after the malfunction detection is recorded. Then when the percentage reached 100%, “REAL-TIME DIAG” screen is displayed. If “STOP” is touched on the screen during “Recording Data ... xx%”, “REAL-TIME DIAG” screen is also displayed.
     The recording time after the malfunction detection and the recording speed can be changed by “TRIGGER POINT” and “Recording Speed”. Refer to CONSULT-II OPERATION MANUAL.

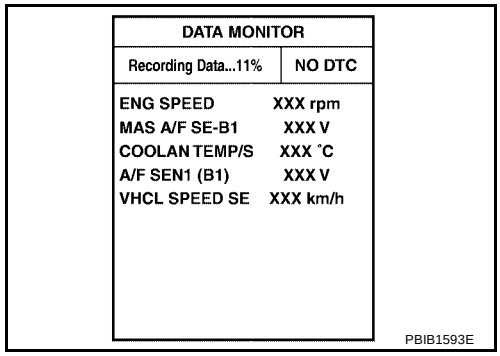

2. “MANU TRIG” (Manual trigger):
   - DTC/1st trip DTC and malfunction item will not be displayed automatically on CONSULT-II screen even though a malfunction is detected by ECM.
     DATA MONITOR can be performed continuously even though a malfunction is detected.

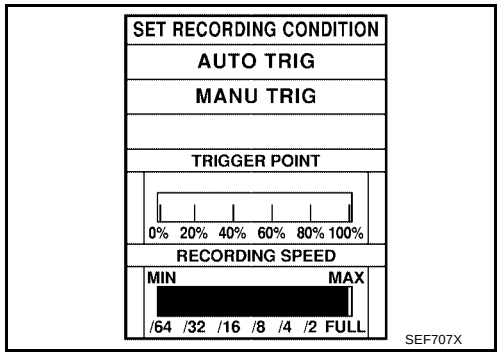

Operation

1. “AUTO TRIG”
   - While trying to detect the DTC/1st trip DTC by performing the DTC Confirmation Procedure, be sure to select to “DATA MONITOR (AUTO TRIG)” mode. You can confirm the malfunction at the moment it is detected.
   - While narrowing down the possible causes, CONSULT-II should be set in “DATA MONITOR (AUTO TRIG)” mode, especially in case the incident is intermittent.
     When you are inspecting the circuit by gently shaking (or twisting) the suspicious connectors, components and harness in the DTC Confirmation Procedure, the moment a malfunction is found the DTC/1st trip DTC will be displayed. (Refer to “Incident Simulation Tests” in GI-27, "How to Perform Efficient Diagnosis for an Electrical Incident" .)
2. “MANU TRIG”
   - If the malfunction is displayed as soon as “DATA MONITOR” is selected, reset CONSULT-II to “MANU TRIG”. By selecting “MANU TRIG” you can monitor and store the data. The data can be utilized for further diagnosis, such as a comparison with the value for the normal operating condition.

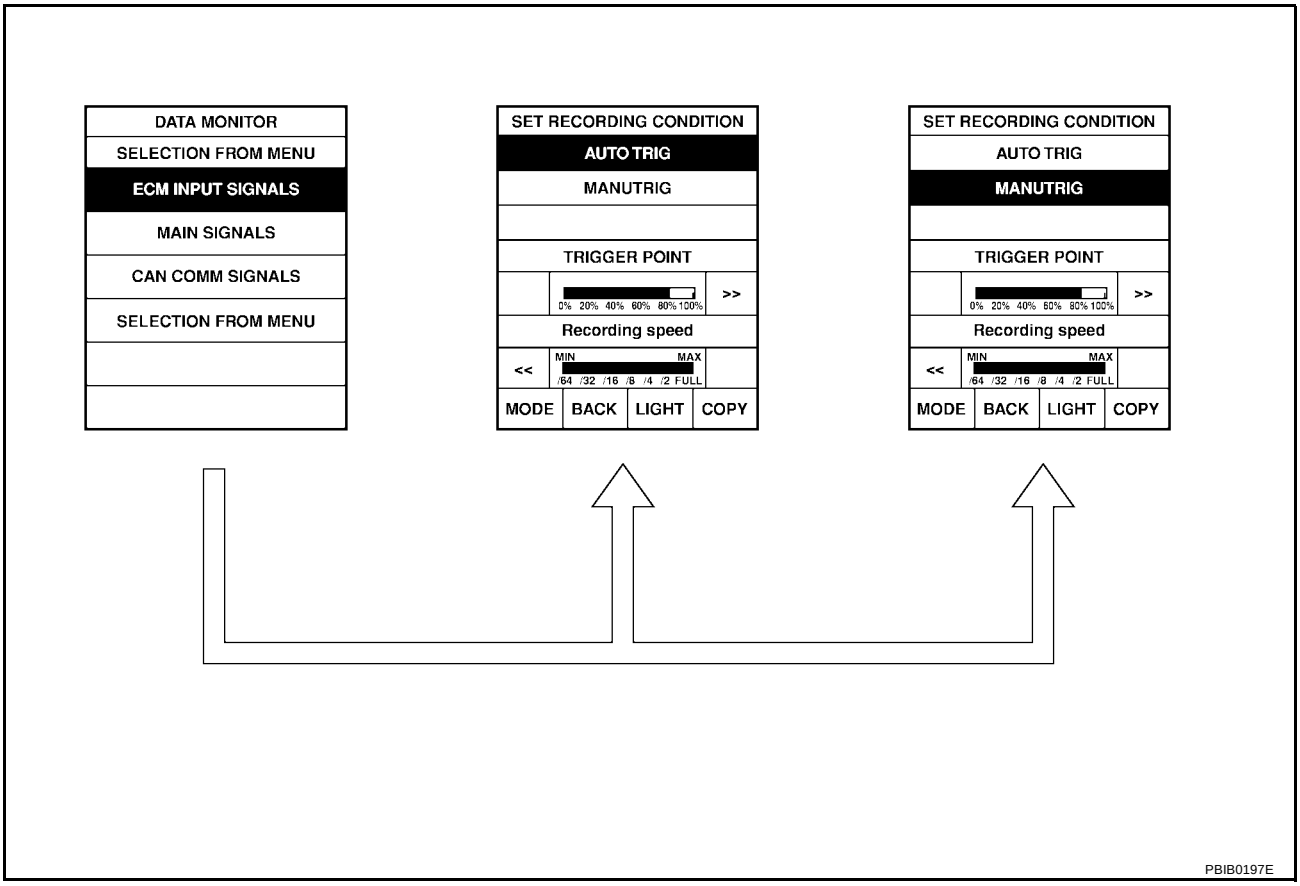

Generic Scan Tool (GST) Function

UBS00JSP

DESCRIPTION

Generic Scan Tool (OBDII scan tool) complying with SAE J1978 has 8 different functions explained below.
ISO9141 is used as the protocol.
The name “GST” or “Generic Scan Tool” is used in this service manual.

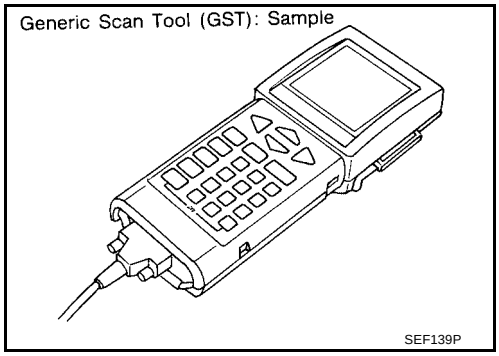

FUNCTION

Diagnostic service		Function
Service $01	READINESS TESTS	This diagnostic service gains access to current emission-related data values, including analog inputs and outputs, digital inputs and outputs, and system status information.
Service $02	(FREEZE DATA)	This diagnostic service gains access to emission-related data value which were stored by ECM during the freeze frame. For details, refer to EC-56, "FREEZE FRAME DATA AND 1ST TRIP FREEZE FRAME DATA" .
Service $03	DTCs	This diagnostic service gains access to emission-related power train trouble codes which were stored by ECM.

Diagnostic service		Function
Service $04	CLEAR DIAG INFO	This diagnostic service can clear all emission-related diagnostic information. This includes: ● Clear number of diagnostic trouble codes (Service $01) ● Clear diagnostic trouble codes (Service $03) ● Clear trouble code for freeze frame data (Service $01) ● Clear freeze frame data (Service $02) ● Reset status of system monitoring test (Service $01) ● Clear on board monitoring test results (Service $06 and $07)
Service $06	(ON BOARD TESTS)	This diagnostic service accesses the results of on board diagnostic monitoring tests of specific components/systems that are not continuously monitored.
Service $07	(ON BOARD TESTS)	This diagnostic service enables the off board test drive to obtain test results for emission-related powertrain components/systems that are continuously monitored during normal driving conditions.
Service $08	—	This diagnostic service can close EVAP system in ignition switch ON position (Engine stopped). When this diagnostic service is performed, EVAP canister vent control valve can be closed. In the following conditions, this diagnostic service cannot function. ● Low ambient temperature ● Low battery voltage ● Engine running ● Ignition switch OFF ● Low fuel temperature ● Too much pressure is applied to EVAP system
Service $09	(CALIBRATION ID)	This diagnostic service enables the off-board test device to request specific vehicle information such as Vehicle Identification Number (VIN) and Calibration IDs.

INSPECTION PROCEDURE

1. Turn ignition switch OFF.
2. Connect GST to data link connector, which is located under LH dash panel near the fuse box cover.
3. Turn ignition switch ON.

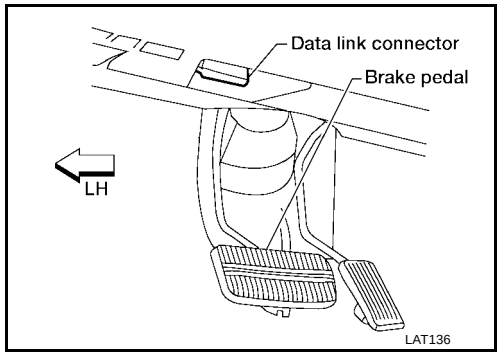

4. Enter the program according to instruction on the screen or in the operation manual.

(*: Regarding GST screens in this section, sample screens are shown.)

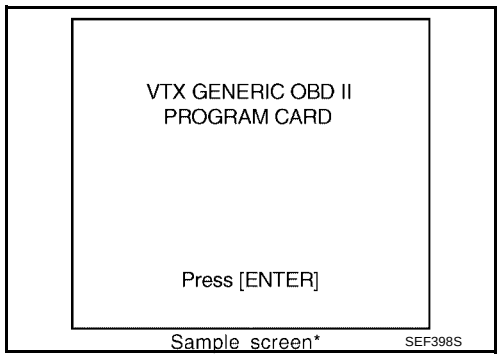

5. Perform each diagnostic service according to each service procedure.

For further information, see the GST Operation Manual of the tool maker.

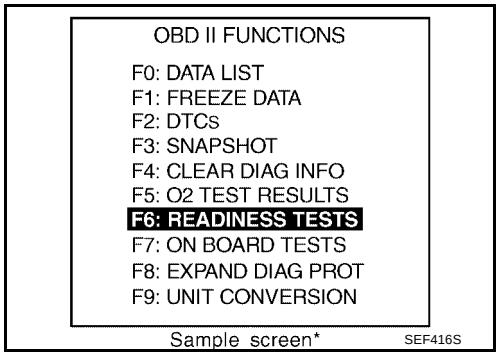

CONSULT-II Reference Value in Data Monitor

UBS00JSQ

Remarks:
- Specification data are reference values.
- Specification data are output/input values which are detected or supplied by the ECM at the connector.
  * Specification data may not be directly related to their components signals/values/operations.
  (i.e., Adjust ignition timing with a timing light before monitoring IGN TIMING. Specification data might be displayed even when ignition timing is not adjusted to specification. This IGN TIMING monitors the data calculated by the ECM according to the input signals from the camshaft position sensor and other ignition timing related sensors.)

MONITOR ITEM	CONDITION		SPECIFICATION
ENG SPEED	● Run engine and compare CONSULT-II value with the tachometer indication.		Almost the same speed as the tachometer indication.
MAS A/F SE-B1	See EC-154, "TROUBLE DIAGNOSIS - SPECIFICATION VALUE" .		
B/FUEL SCHDL	See EC-154, "TROUBLE DIAGNOSIS - SPECIFICATION VALUE" .		
A/F ALPHA-B1	See EC-154, "TROUBLE DIAGNOSIS - SPECIFICATION VALUE" .		
COOLAN TEMP/S	● Engine: After warming up		More than 70°C (158°F)
A/F SEN1 (B1)	● Engine: After warming up	Maintaining engine speed at 2,000 rpm	Fluctuates around 1.5V
HO2S2 (B1)	● Engine: After warming up ● Keeping the engine speed between 3,500 and 4,000 rpm for 1 minute and at idle for 1 minute under no load	Revving engine from idle to 3,000 rpm quickly	0 - 0.3V ←→ 0.6 - 1.0V
HO2S2 MNTR (B1)	● Engine: After warming up ● Keeping the engine speed between 3,500 and 4,000 rpm for 1 minute and at idle for 1 minute under no load	Revving engine from idle to 3,000 rpm quickly	LEAN ←→ RICH
VHCL SPEED SE	● Turn drive wheels and compare CONSULT-II value with the speedometer indication.		Almost the same speed as the speedometer indication.
BATTERY VOLT	● Ignition switch: ON (Engine stopped)		11 - 14V
ACCEL SEN1	● Ignition switch: ON (Engine stopped)	Accelerator pedal: Fully released	0.65 - 0.87V
		Accelerator pedal: Fully depressed	More than 4.3V
ACCEL SEN2*	● Ignition switch: ON (Engine stopped)	Accelerator pedal: Fully released	0.56 - 0.96V
		Accelerator pedal: Fully depressed	More than 4.0V
THRTL SEN 1 THRTL SEN 2*	● Ignition switch: ON (Engine stopped) ● Shift lever: D(A/T), 1st (M/T)	Accelerator pedal: Fully released	More than 0.36V
		Accelerator pedal: Fully depressed	Less than 4.75V
EVAP SYS PRES	● Ignition switch: ON		1.8 - 4.8V
START SIGNAL	● Ignition switch: ON → START → ON		OFF → ON → OFF
CLSD THL POS	● Ignition switch: ON (Engine stopped)	Accelerator pedal: Fully released	ON
		Accelerator pedal: Slightly depressed	OFF

MONITOR ITEM	CONDITION		SPECIFICATION
AIR COND SIG	● Engine: After warming up, idle the engine	A/C switch: OFF	OFF
		A/C switch: ON (Compressor operates)	ON
P/N POSI SW	● Ignition switch: ON	Shift lever: P or N (A/T), Neutral (M/T)	ON
		Except above	OFF
PW/ST SIGNAL	● Engine: After warming up, idle the engine	Steering wheel in neutral position (Forward direction)	OFF
		The steering wheel being is turned	ON
LOAD SIGNAL	● Ignition switch: ON	Rear window defogger switch and/or lighting switch is in 2nd	ON
		Rear window defogger switch is OFF and lighting switch is OFF	OFF
IGNITION SW	● Ignition switch: ON → OFF → ON		ON → OFF → ON
HEATER FAN SW	● Engine: After warming up, idle the engine	Heater fan is operating	ON
		Heater fan is not operating	OFF
BRAKE SW	● Ignition switch: ON	Brake pedal: Fully released	OFF
		Brake pedal: Slightly depressed	ON
INJ PULSE-B1	● Engine: After warming up ● Air conditioner switch: OFF ● Shift lever: N (A/T), Neutral (M/T) ● No-load	Idle	2.4 - 3.2 msec
		2,000 rpm	1.9 - 3.2 msec
IGN TIMING	● Engine: After warming up ● Air conditioner switch: OFF ● Shift lever: N (A/T), Neutral (M/T) ● No-load	Idle	A/T 18°+5° BTDC M/T 7°±5° BTDC
		2,000 rpm	More than 25° BTDC
CAL/LD VALUE	● Engine: After warming up ● Air conditioner switch: OFF ● Shift lever: N (A/T), Neutral (M/T) ● No-load	Idle	20.0 - 35.5%
		2,500 rpm	12.0 - 30.0%
MASS AIRFLOW	● Engine: After warming up ● Air conditioner switch: OFF ● Shift lever: N (A/T), Neutral (M/T) ● No-load	Idle	1.4 - 4.0 g·m/s
		2,500 rpm	5.0 - 10.0 g·m/s
PURG VOL C/V	● Engine: After warming up ● Air conditioner switch: OFF ● Shift lever: N (A/T), Neutral (M/T) ● No-load	Idle (Accelerator pedal is not depressed even slightly, after engine starting.)	0%
		2,000 rpm	—
SWL C/V (B1)	● Engine: Idle the engine	Engine coolant temperature is below 44°C (111°F)	0 - 5 step
		Engine coolant temperature is above 45°C (113°F)	115 - 120 step
INT/V SOL (B1)	● Engine: After warming up ● Shift lever: N (A/T), Neutral (M/T) ● Air conditioner switch: OFF ● No - load	Idle	0% - 2%
		When revving engine up to 2,000 rpm quickly	Approx. 0% - 80%
AIR COND RLY	● Air conditioner switch: OFF → ON		OFF → ON

MONITOR ITEM	CONDITION		SPECIFICATION
FUEL PUMP RLY	● Ignition switch is turned to ON (Operates for 1 seconds) ● Engine running and cranking ● When engine is stopped (Stops in 1 seconds)		ON
	● Except as shown above		OFF
VENT CONT/V	● Ignition switch: ON		OFF
THRTL RELAY	● Ignition switch: ON		ON
INT/V TIM (B1)	● Engine: After warming up ● Shift lever: N (A/T), Neutral (M/T) ● Air conditioner switch: OFF ● No - load	Idle	–5° - 5°CA
		When revving engine up to 2,000 rpm quickly	Approx. 0° - 30°CA
COOLING FAN	● After warming up engine, idle the engine. ● Air conditioner switch: OFF	Engine coolant temperature is 94°C (201°F) or less	OFF
		Engine coolant temperature is between 95°C (203°F) and 104°C (219°F)	LOW
		Engine coolant temperature is 105°C (221°F) or more	HIGH
HO2S2 HTR (B1)	● Engine speed: Above 3,600 rpm		OFF
	● Engine speed is below 3,600 rpm after the following conditions are met. – Engine: After warming up – Keeping the engine speed between 3,500 and 4,000 rpm for 1 minute and at idle for 1 minute under no load.		ON
TRVL AFTER MIL	● Ignition switch: ON	Vehicle has traveled after MIL has turned ON	0 - 65,535 km (0 - 40,723 mile)
A/F S1 HTR (B1)	● Engine: After warming up, idle the engine		0 - 100%
SWL/C POSI SE	● Engine: Idle the engine	Engine coolant temperature is below 44°C (111°F)	Approx. 0 deg.
		Engine coolant temperature is above 45°C (113°F)	Approx. 80 deg.
AC PRESS SEN	● Ignition switch: ON (Engine stopped)		Approx. 0V
	● Engine: Idle ● Air conditioner switch: OFF		1.0 - 4.0V
VHCL SPEED SE	● Turn drive wheels and compare CONSULT-II value with the speedometer indication.		Almost the same speed as the speedometer indication.
SET VHCL SPD	● Engine: Running	ASCD: Operating	The preset vehicle speed is displayed.
MAIN SW	● Ignition switch: ON	MAIN switch: Pressed	ON
		MAIN switch: Released	OFF
CANCEL SW	● Ignition switch: ON	CANCEL switch: Pressed	ON
		CANCEL switch: Released	OFF
RESUME/ACC SW	● Ignition switch: ON	RESUME/ACCELERATE switch: Pressed	ON
		RESUME/ACCELERATE switch: Released	OFF
SET SW	● Ignition switch: ON	SET/COAST switch: Pressed	ON
		SET/COAST switch: Released	OFF
BRAKE SW1	● Ignition switch: ON	Clutch pedal (M/T) and brake pedal: Fully released	ON
		Clutch pedal (M/T) and/or brake pedal: Depressed	OFF

MONITOR ITEM	CONDITION		SPECIFICATION
BRAKE SW2	● Ignition switch: ON	Brake pedal: Fully released	OFF
		Brake pedal: Slightly Depressed	ON
CRUISE LAMP	● Ignition switch: ON	MAIN switch: Pressed	ON
		MAIN switch: Released	OFF
SET LAMP	● MAIN switch: ON ● When vehicle speed is between 40 km/h (25 MPH) and 144 km/h (89 MPH)	ASCD is operating	ON
		ASCD is not operating	OFF

*: Accelerator pedal position sensor 2 signal and throttle position sensor 2 signal are converted by ECM internally. Thus, they differ from ECM terminals voltage signal.

Major Sensor Reference Graph in Data Monitor Mode

UBS00JSR

The following are the major sensor reference graphs in “DATA MONITOR” mode.

CLSD THL POS, ACCEL SEN 1, THRTL SEN 1

Below is the data for “CLSD THL POS”, “ACCEL SEN 1” and “THRTL SEN 1” when depressing the accelerator pedal with the ignition switch ON and with selector lever in D position (A/T models) or with shift lever in 1st position (M/T models).
The signal of “ACCEL SEN 1” and “THRTL SEN 1” should rise gradually without any intermittent drop or rise after “CLSD THL POS” is changed from ON to OFF.

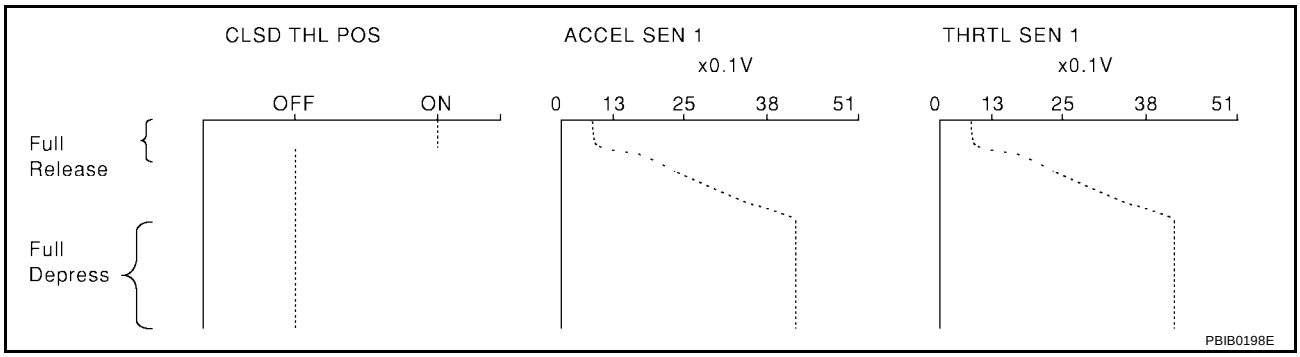

ENG SPEED, MAS A/F SE-B1, THRTL SEN 1, HO2S2 (B1), INJ PULSE-B1

Below is the data for “ENG SPEED”, “MAS A/F SE-B1”, “THRTL SEN 1”, “HO2S2 (B1)” and “INJ PULSE-B1” when revving engine quickly up to 4,800 rpm under no load after warming up engine sufficiently.
Each value is for reference, the exact value may vary.

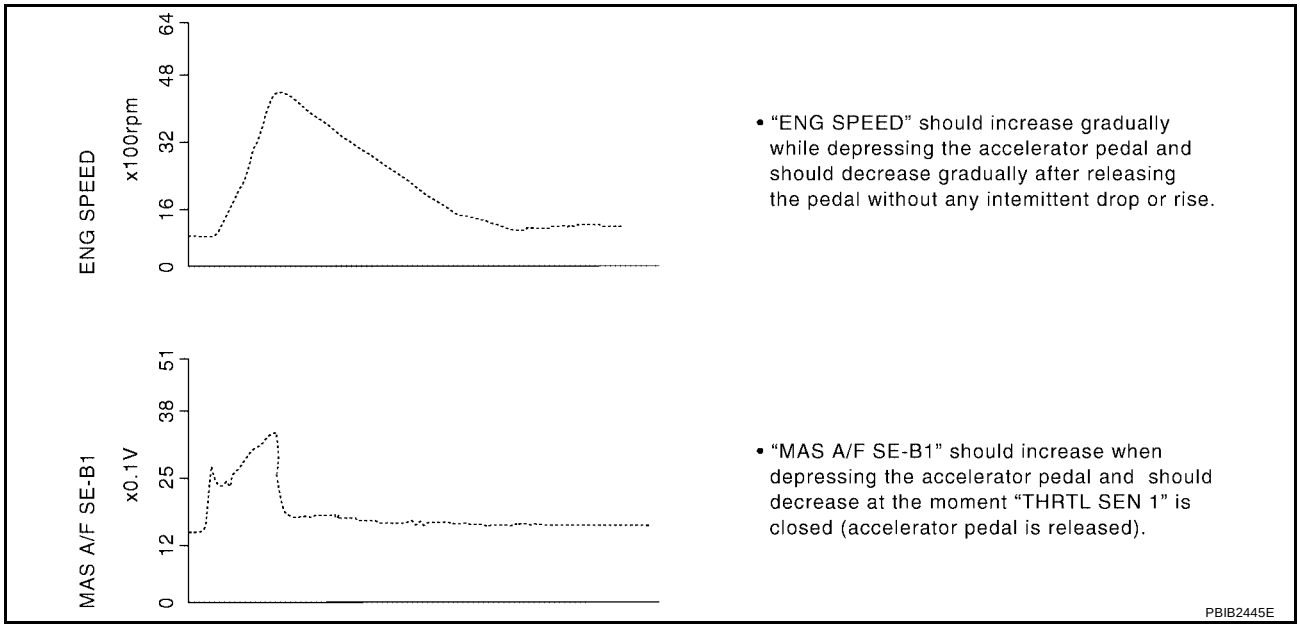

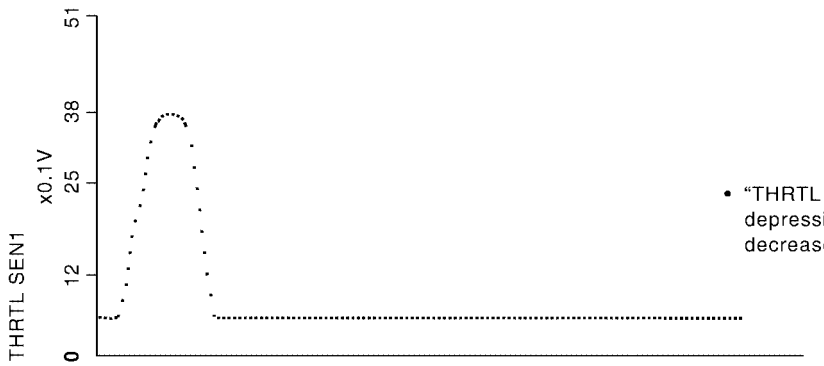

- "THRTL SEN1" should increase while depressing the accelerator pedal and should decrease while releasing it.

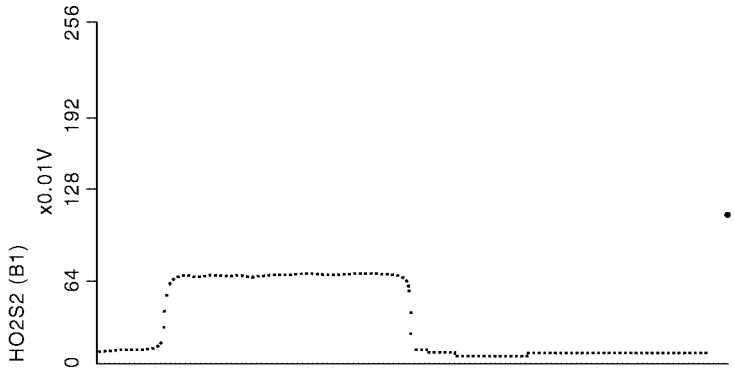

- "HO2S2 (B1)" may increase immediately after depressing the accelerator pedal and may decrease after releasing the pedal.

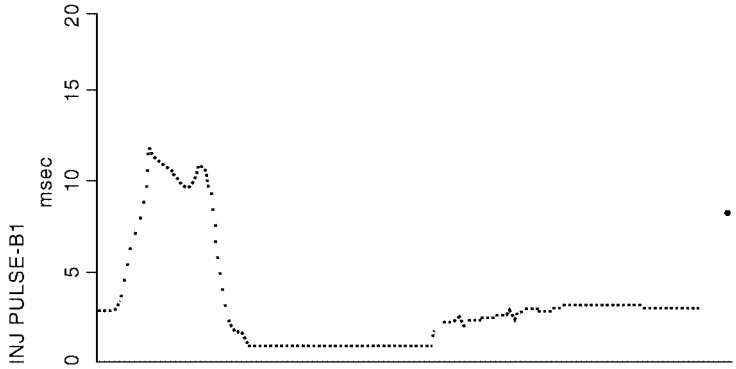

- "INJ PULSE-B1" should increase when depressing the accelerator pedal and should decrease when the pedal is released.

PBIB2099E

TROUBLE DIAGNOSIS - SPECIFICATION VALUE

PFP:00031

Description

UBS00JSS

The specification (SP) value indicates the tolerance of the value that is displayed in “DATA MONITOR (SPEC)” mode of CONSULT-II during normal operation of the Engine Control System. When the value in “DATA MONITOR (SPEC)” mode is within the SP value, the Engine Control System is confirmed OK. When the value in “DATA MONITOR (SPEC)” mode is NOT within the SP value, the Engine Control System may have one or more malfunctions.
The SP value is used to detect malfunctions that may affect the Engine Control System, but will not light the MIL.
The SP value will be displayed for the following three items:

- B/FUEL SCHDL (The fuel injection pulse width programmed into ECM prior to any learned on board correction)
- A/F ALPHA-B1 (The mean value of air-fuel ratio feedback correction factor per cycle)
- MAS A/F SE-B1 (The signal voltage of the mass air flow sensor)

Testing Condition

UBS00JST

- Vehicle driven distance: More than 5,000 km (3,017 miles)
- Barometric pressure: 98.3 - 104.3 kPa (1.003 - 1.064 kg/cm^2 , 14.25 - 15.12 psi)
- Atmospheric temperature: 20 - 30°C (68 - 86°F)
- Engine coolant temperature: 75 - 95°C (167 - 203°F)
- Transmission: Warmed-up*1
- Electrical load: Not applied*2
- Engine speed: Idle

*1: For A/T models, after the engine is warmed up to normal operating temperature, drive vehicle until “FLUID TEMP SE” (A/T fluid temperature sensor signal) indicates more than 60°C (140°F).
For M/T models, after the engine is warmed up to normal operating temperature, drive vehicle for 5 minutes.
*2: Rear window defogger switch, air conditioner switch, lighting switch are OFF. Steering wheel is straight ahead.

Inspection Procedure

UBS00JSU

NOTE:
Perform “DATA MONITOR (SPEC)” mode in maximum scale display.

1. Perform EC-74, "Basic Inspection" .
2. Confirm that the testing conditions indicated above are met.
3. Select “B/FUEL SCHDL”, “A/F ALPHA-B1” and “MAS A/F SE-B1” in “DATA MONITOR (SPEC)” mode with CONSULT-II.
4. Make sure that monitor items are within the SP value.
5. If NG, go toEC-155, "Diagnostic Procedure" .

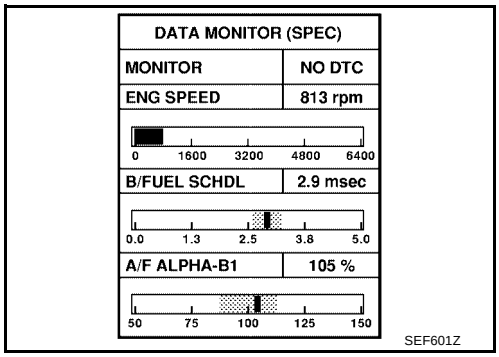

Diagnostic Procedure

UBS00JSV

OVERALL SEQUENCE

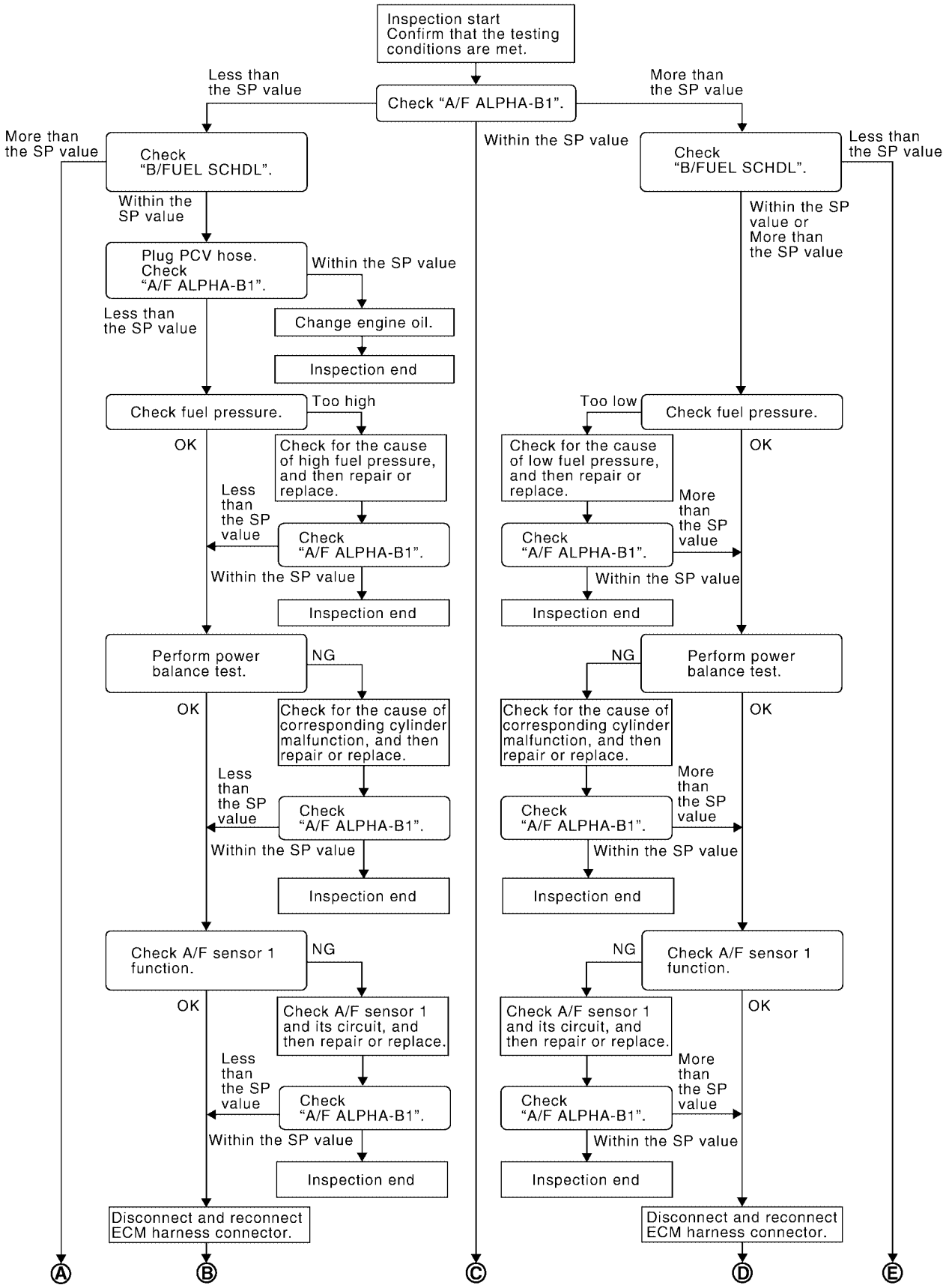

PBIB2318E

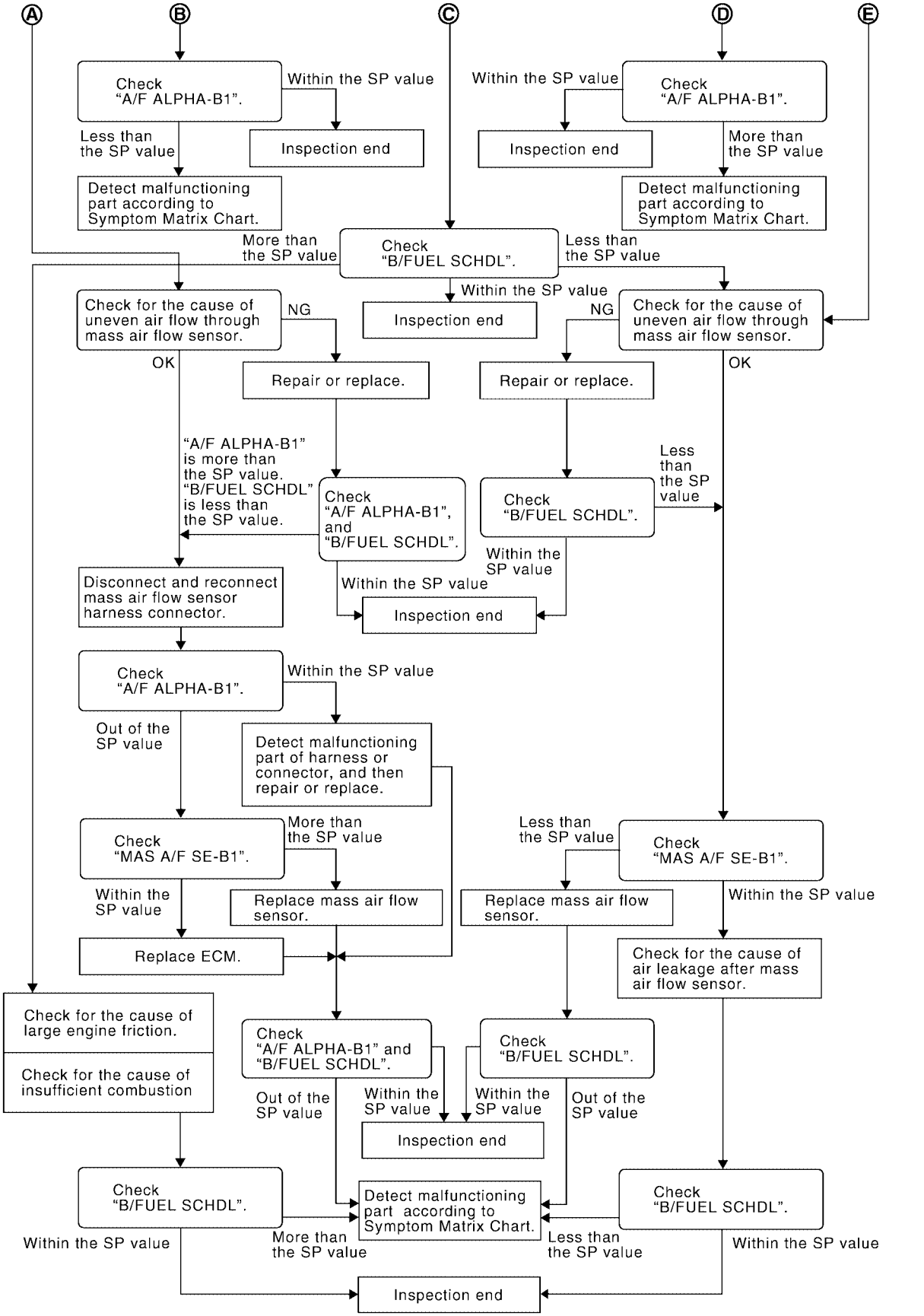
Ⓐ
Ⓑ
Ⓒ
Ⓓ
Ⓔ
Check "A/F ALPHA-B1".
Within the SP value
Inspection end
Less than the SP value
Detect malfunctioning part according to Symptom Matrix Chart.
Check "A/F ALPHA-B1".
Within the SP value
Inspection end
More than the SP value
Detect malfunctioning part according to Symptom Matrix Chart.
More than the SP value
Check "B/FUEL SCHDL".
Less than the SP value
Within the SP value
Inspection end
Check for the cause of uneven air flow through mass air flow sensor.
NG
OK
Repair or replace.
Check for the cause of uneven air flow through mass air flow sensor.
NG
OK
Repair or replace.
"A/F ALPHA-B1" is more than the SP value. "B/FUEL SCHDL" is less than the SP value.
Check "A/F ALPHA-B1", and "B/FUEL SCHDL".
Check "B/FUEL SCHDL".
Less than the SP value
Within the SP value
Within the SP value
Inspection end
Disconnect and reconnect mass air flow sensor harness connector.
Check "A/F ALPHA-B1".
Within the SP value
Out of the SP value
Detect malfunctioning part of harness or connector, and then repair or replace.
Check "MAS A/F SE-B1".
More than the SP value
Within the SP value
Replace mass air flow sensor.
Replace ECM.
Less than the SP value
Check "MAS A/F SE-B1".
Replace mass air flow sensor.
Within the SP value
Check for the cause of air leakage after mass air flow sensor.
Check for the cause of large engine friction.
Check for the cause of insufficient combustion
Check "A/F ALPHA-B1" and "B/FUEL SCHDL".
Check "B/FUEL SCHDL".
Out of the SP value
Within the SP value
Within the SP value
Out of the SP value
Inspection end
Check "B/FUEL SCHDL".
Detect malfunctioning part according to Symptom Matrix Chart.
Check "B/FUEL SCHDL".
Within the SP value
More than the SP value
Less than the SP value
Within the SP value
Inspection end
PBIB2509E

DETAILED PROCEDURE

1. CHECK “A/F ALPHA-B1”

1. Start engine.
2. Confirm that the testing conditions are met. Refer to EC-154, "Testing Condition" .
3. Select “A/F ALPHA-B1” in “DATA MONITOR (SPEC)” mode, and make sure that the indication is within the SP value.

   NOTE:
   Check “A/F ALPHA-B1” for approximately 1 minute because they may fluctuate. It is NG if the indication is out of the SP value even a little.

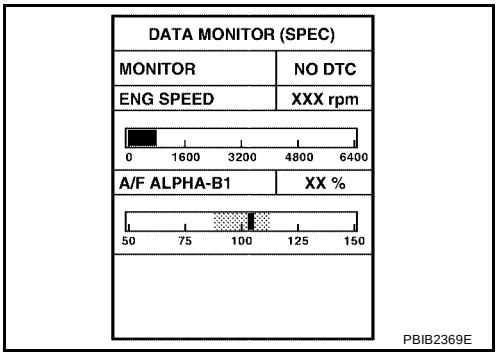

OK or NG

OK >> GO TO 17.
NG (Less than the SP value)>>GO TO 2.
NG (More than the SP value)>>GO TO 3.

2. CHECK “B/FUEL SCHDL”

Select “B/FUEL SCHDL” in “DATA MONITOR (SPEC)” mode, and make sure that the indication is within the SP value.

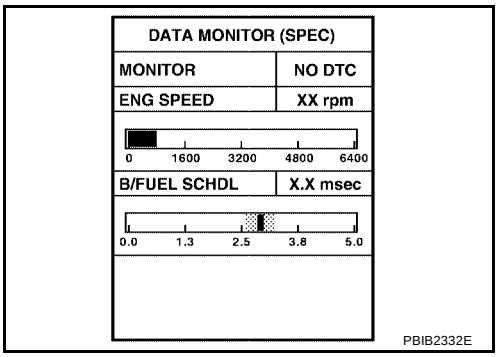

OK or NG

OK >> GO TO 4.
NG (More than the SP value)>>GO TO 19.

3. CHECK “B/FUEL SCHDL”

Select “B/FUEL SCHDL” in “DATA MONITOR (SPEC)” mode, and make sure that the indication is within the SP value.

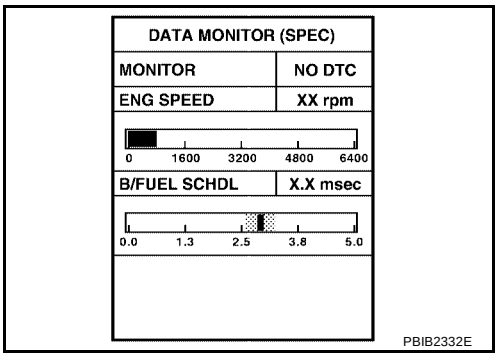

OK or NG

OK >> GO TO 6.
NG (More than the SP value)>>GO TO 6.
NG (Less than the SP value)>>GO TO 25.

4. CHECK “A/F ALPHA-B1”

1. Stop the engine.
2. Disconnect PCV hose, and then plug it.
3. Start engine.
4. Select “A/F ALPHA-B1” in “DATA MONITOR (SPEC)” mode, and make sure that the indication is within the SP value.

OK or NG

OK >> GO TO 5.
NG >> GO TO 6.

5. CHANGE ENGINE OIL

1. Stop the engine.
2. Change engine oil.

NOTE:
This symptom may occur when a large amount of gasoline is mixed with engine oil because of driving conditions (such as when engine oil temperature does not rise enough since a journey distance is too short during winter). The symptom will not be detected after changing engine oil or changing driving condition.

>> **INSPECTION END**

6. CHECK FUEL PRESSURE

Check fuel pressure. (Refer to EC-94, "Fuel Pressure Check" .)

OK or NG

OK >> GO TO 9.
NG (Fuel pressure is too high)>>Replace fuel pressure regulator, refer to EM-21 . GO TO 8.
NG (Fuel pressure is too low)>>GO TO 7.

7. DETECT MALFUNCTIONING PART

1. Check the following.

- Clogged and bent fuel hose and fuel tube
- Clogged fuel filter
- Fuel pump and its circuit (Refer to EC-621 .)

2. If NG, repair or replace the malfunctioning part. (Refer to EC-94 .)
If OK, replace fuel pressure regulator.

>> GO TO 8.

8. CHECK “A/F ALPHA-B1”

1. Start engine.
2. Select “A/F ALPHA-B1” in “DATA MONITOR (SPEC)” mode, and make sure that the indication is within the SP value.

OK or NG

OK >> **INSPECTION END**
NG >> GO TO 9.

9. PERFORM POWER BALANCE TEST

1. Perform “POWER BALANCE” in “ACTIVE TEST” mode.
2. Make sure that the each cylinder produces a momentary engine speed drop.

OK or NG

OK >> GO TO 12.
NG >> GO TO 10.

ACTIVE TEST	
POWER BALANCE	
MONITOR	
ENG SPEED	XXX rpm
MAS A/F SE-B1	XXX V

PBIB0133E

10. DETECT MALFUNCTIONING PART

1. Check the following.
- Ignition coil and its circuit (Refer to EC-602 .)
- Fuel injector and its circuit (Refer to EC-615 .)
- Intake air leakage
- Low compression pressure (Refer to EM-55 .)
2. If NG, repair or replace the malfunctioning part.
   If OK, replace fuel injector. (It may be caused by leakage from fuel injector or clogging.)

>> GO TO 11.

11. CHECK “A/F ALPHA-B1”

1. Start engine.
2. Select “A/F ALPHA-B1” in “DATA MONITOR (SPEC)” mode, and make sure that the indication is within the SP value.

OK or NG

OK >> **INSPECTION END**
NG >> GO TO 12.

12. CHECK A/F SENSOR 1 FUNCTION

Perform all DTC Confirmation Procedure related with A/F sensor 1.
- For DTC P1271, refer to EC-479, "DTC Confirmation Procedure" .
- For DTC P1272, refer to EC-485, "DTC Confirmation Procedure" .
- For DTC P1273, refer to EC-491, "DTC Confirmation Procedure" .
- For DTC P1274, refer to EC-498, "DTC Confirmation Procedure" .
- For DTC P1276, refer to EC-505, "DTC Confirmation Procedure" .
- For DTC P1278, refer to EC-512, "DTC Confirmation Procedure" .
- For DTC P1279, refer to EC-519, "DTC Confirmation Procedure" .

OK or NG

OK >> GO TO 15.
NG >> GO TO 13.

13. CHECK A/F SENSOR 1 CIRCUIT

Perform Diagnostic Procedure according to corresponding DTC.

>> GO TO 14.

14. CHECK “A/F ALPHA-B1”

1. Start engine.
2. Select “A/F ALPHA-B1” in “DATA MONITOR (SPEC)” mode, and make sure that the indication is within the SP value.

OK or NG

OK >> **INSPECTION END**
NG >> GO TO 15.

15. DISCONNECT AND RECONNECT ECM HARNESS CONNECTOR

1. Stop the engine.
2. Disconnect ECM harness connector. Check pin terminal and connector for damage, and then reconnect it.

>> GO TO 16.

16. CHECK “A/F ALPHA-B1”

1. Start engine.
2. Select “A/F ALPHA-B1” in “DATA MONITOR (SPEC)” mode, and make sure that the indication is within the SP value.

OK or NG

OK >> **INSPECTION END**
NG >> Detect malfunctioning part according to EC-106, "Symptom Matrix Chart" .

17. CHECK “B/FUEL SCHDL”

Select “B/FUEL SCHDL” in “DATA MONITOR (SPEC)” mode, and make sure that the indication is within the SP value.

OK or NG

OK >> **INSPECTION END**
NG (More than the SP value)>>GO TO 18.
NG (Less than the SP value)>>GO TO 25.

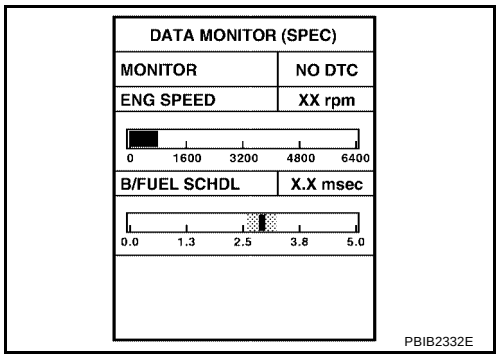

18. DETECT MALFUNCTIONING PART

1. Check for the cause of large engine friction. Refer to the following.
- Engine oil level is too high
- Engine oil viscosity
- Belt tension of power steering, alternator, A/C compressor, etc. is excessive
- Noise from engine
- Noise from transmission, etc.
2. Check for the cause of insufficient combustion. Refer to the following.
- Valve clearance malfunction
- Intake valve timing control function malfunction
- Camshaft sprocket installation malfunction, etc.

>> Repair or replace malfunctioning part, and then GO TO 30.

19. CHECK INTAKE SYSTEM

Check for the cause of uneven air flow through mass air flow sensor. Refer to the following.

- Crushed air ducts
- Malfunctioning seal of air cleaner element
- Uneven dirt of air cleaner element
- Improper specification of intake air system

OK or NG

OK >> GO TO 21.
NG >> Repair or replace malfunctioning part, and then GO TO 20.

20. CHECK “A/F ALPHA-B1” AND “B/FUEL SCHDL”

Select “A/F ALPHA-B1” and “B/FUEL SCHDL” in “DATA MONITOR (SPEC)” mode, and make sure that the each indication is within the SP value.

OK or NG

OK >> **INSPECTION END**
NG (“B/FUEL SCHDL” is more, “A/F ALPHA-B1” is less than the SP value)>>GO TO 21.

21. DISCONNECT AND RECONNECT MASS AIR FLOW SENSOR HARNESS CONNECTOR

1. Stop the engine.
2. Disconnect mass air flow sensor harness connector. Check pin terminal and connector for damage and then reconnect it again.

>> GO TO 22.

22. CHECK “A/F ALPHA-B1”

1. Start engine.
2. Select “A/F ALPHA-B1” in “DATA MONITOR (SPEC)” mode, and make sure that the indication is within the SP value.

OK or NG

OK >> 1. Detect malfunctioning part of mass air flow sensor circuit and repair it. Refer to EC-186 .
2. GO TO 29.
NG >> GO TO 23.

23. CHECK “MAS A/F SE-B1”

Select “MAS A/F SE-B1” in “DATA MONITOR (SPEC)” mode, and make sure that the indication is within the SP value.

OK or NG

OK >> GO TO 24.
NG (More than the SP value)>>Replace mass air flow sensor, and then GO TO 29.

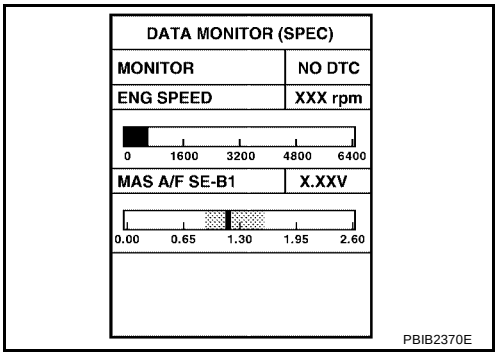

24. REPLACE ECM

1. Replace ECM.
2. Perform initialization of NVIS(NATS) system and registration of all NVIS(NATS) ignition key IDs. Refer to BL-96, "NVIS (NISSAN VEHICLE IMMOBILIZER SYSTEM — NATS)" .
3. Perform EC-91, "VIN Registration" .
4. Perform EC-92, "Accelerator Pedal Released Position Learning" .
5. Perform EC-92, "Throttle Valve Closed Position Learning" .
6. Perform EC-92, "Idle Air Volume Learning" .

>> GO TO 29.

25. CHECK INTAKE SYSTEM

Check for the cause of uneven air flow through mass air flow sensor. Refer to the following.

- Crushed air ducts
- Malfunctioning seal of air cleaner element
- Uneven dirt of air cleaner element
- Improper specification of intake air system

OK or NG

OK >> GO TO 27.
NG >> Repair or replace malfunctioning part, and then GO TO 26.

26. CHECK "B/FUEL SCHDL"

Select "B/FUEL SCHDL" in "DATA MONITOR (SPEC)" mode, and make sure that the indication is within the SP value.

OK or NG

OK >> **INSPECTION END**
NG (Less than the SP value)>>GO TO 27.

27. CHECK "MAS A/F SE-B1"

Select "MAS A/F SE-B1" in "DATA MONITOR (SPEC)" mode, and make sure that the indication is within the SP value.

OK or NG

OK >> GO TO 28.
NG (Less than the SP value)>>Replace mass air flow sensor, and then GO TO 30.

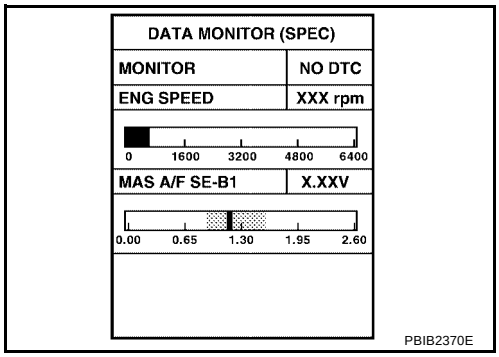

28. CHECK INTAKE SYSTEM

Check for the cause of air leak after the mass air flow sensor. Refer to the following.

- Disconnection, looseness, and cracks in air duct
- Looseness of oil filler cap
- Disconnection of oil level gauge
- Open stuck, breakage, hose disconnection, or cracks of PCV valve
- Disconnection or cracks of EVAP purge hose, open stuck of EVAP canister purge volume control solenoid valve
- Malfunctioning seal of rocker cover gasket
- Disconnection, looseness, or cracks of hoses, such as vacuum hose, connecting to intake air system parts
- Malfunctioning seal of intake air system, etc.

>> GO TO 30.

29. CHECK "A/F ALPHA-B1" AND "B/FUEL SCHDL"

Select "A/F ALPHA-B1" and "B/FUEL SCHDL" in "DATA MONITOR (SPEC)" mode, and make sure that the each indication is within the SP value.

OK or NG

OK >> **INSPECTION END**
NG >> Detect malfunctioning part according to EC-106, "Symptom Matrix Chart" .

30. CHECK “B/FUEL SCHDL”

Select “B/FUEL SCHDL” in “DATA MONITOR (SPEC)” mode, and then make sure that the indication is within the SP value.

OK or NG

OK >> **INSPECTION END**
NG >> Detect malfunctioning part according to EC-106, "Symptom Matrix Chart" .

TROUBLE DIAGNOSIS FOR INTERMITTENT INCIDENT

PFP:00006

Description

UBS00JSW

Intermittent incidents (I/I) may occur. In many cases, the malfunction resolves itself (the part or circuit function returns to normal without intervention). It is important to realize that the symptoms described in the customer's complaint often do not recur on (1st trip) DTC visits. Realize also that the most frequent cause of I/I occurrences is poor electrical connections. Because of this, the conditions under which the incident occurred may not be clear. Therefore, circuit checks made as part of the standard diagnostic procedure may not indicate the specific malfunctioning area.

Common I/I Report Situations

STEP in Work Flow	Situation
II	The CONSULT-II is used. The SELF-DIAG RESULTS screen shows time data other than 0 or [1t].
III	The symptom described by the customer does not recur.
IV	(1st trip) DTC does not appear during the DTC Confirmation Procedure.
VI	The Diagnostic Procedure for PXXXX does not indicate the malfunctioning area.

Diagnostic Procedure

UBS00JSX

1. INSPECTION START

Erase (1st trip) DTCs. Refer to EC-64, "HOW TO ERASE EMISSION-RELATED DIAGNOSTIC INFORMATION" .

>> GO TO 2.

2. CHECK GROUND TERMINALS

Check ground terminals for corroding or loose connection.
Refer to GI-27, "How to Perform Efficient Diagnosis for an Electrical Incident" , “CIRCUIT INSPECTION”, “Ground Inspection”.

OK or NG

OK >> GO TO 3.
NG >> Repair or replace.

3. SEARCH FOR ELECTRICAL INCIDENT

Perform GI-27, "How to Perform Efficient Diagnosis for an Electrical Incident" , “INCIDENT SIMULATION TESTS”.

OK or NG

OK >> GO TO 4.
NG >> Repair or replace.

4. CHECK CONNECTOR TERMINALS

Refer to GI-24, "How to Check Terminal" , “HOW TO PROBE CONNECTORS”, “How to Check Enlarged Contact Spring of Terminal”.

OK or NG

OK >> **INSPECTION END**
NG >> Repair or replace connector.

POWER SUPPLY AND GROUND CIRCUIT

PFP:24110

Wiring Diagram

UBS00JSY

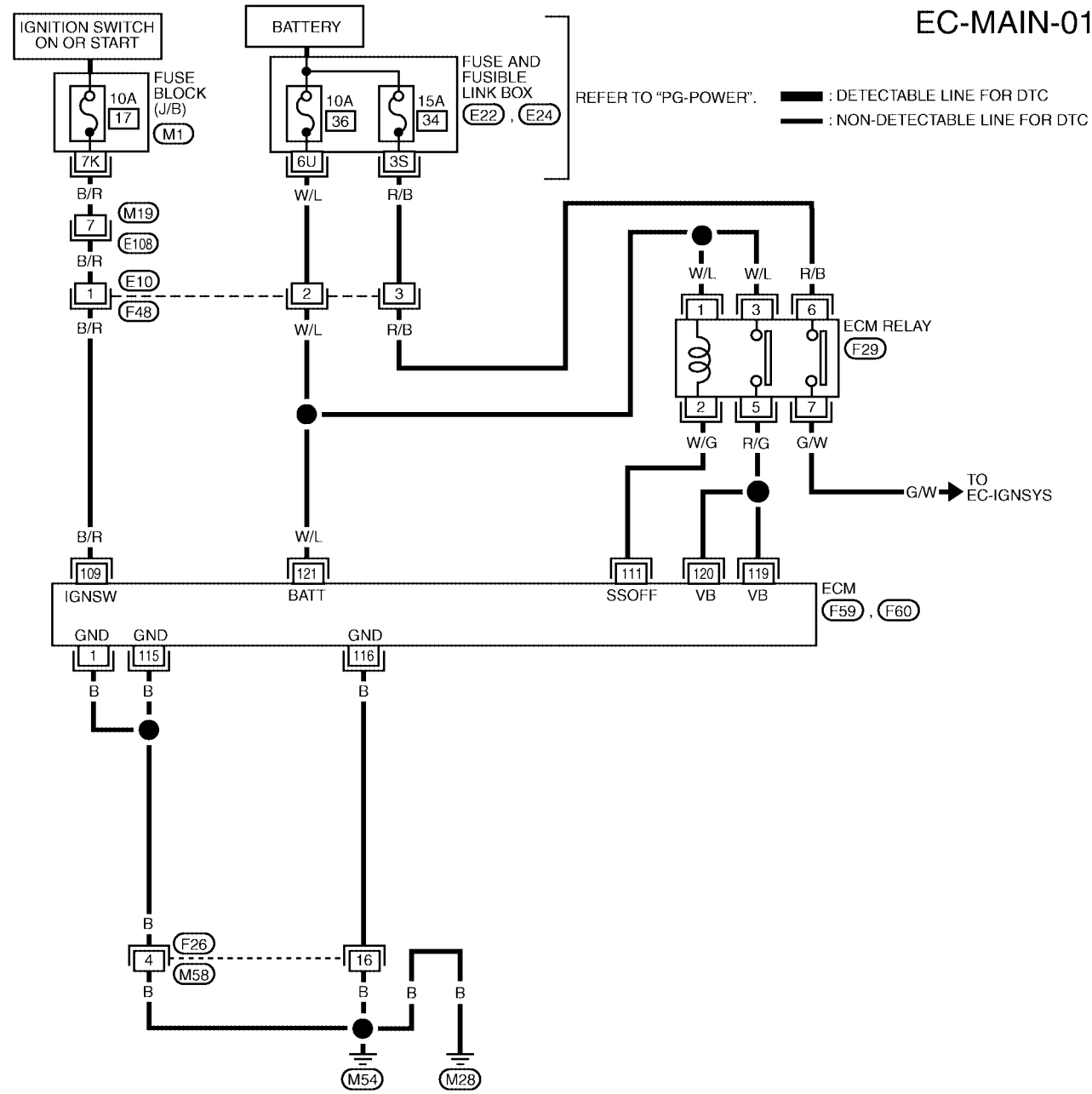

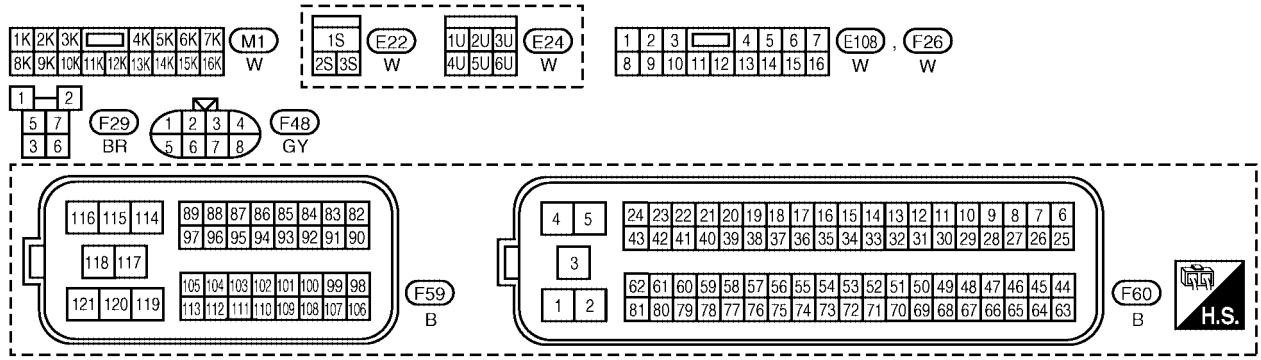

BBWA1422E

Specification data are reference values and are measured between each terminal and ground.

CAUTION:

Do not use ECM ground terminals when measuring input/output voltage. Doing so may result in damage to the ECM's transistor. Use a ground other than ECM terminals, such as the ground.

TERMINAL NO.	WIRE COLOR	ITEM	CONDITION	DATA (DC Voltage)
1	B	ECM ground	**[Engine is running]** ● Idle speed	Body ground
109	B/R	Ignition switch	**[Ignition switch: OFF]**	0V
			[Ignition switch: ON]	BATTERY VOLTAGE (11 - 14V)
111	W/G	ECM relay (Self shut-off)	**[Engine is running]** **[Ignition switch: OFF]** ● For a few seconds after turning ignition switch OFF	0 - 1.0V
			[Ignition switch: OFF] ● More than a few seconds after turning ignition switch OFF	BATTERY VOLTAGE (11 - 14V)
115 116	B	ECM ground	**[Engine is running]** ● Idle speed	Body ground
119 120	R/G	Power supply for ECM	**[Ignition switch: ON]**	BATTERY VOLTAGE (11 - 14V)

Diagnostic Procedure

UBS00KJU

1. INSPECTION START

Start engine.

Is engine running?

Yes or No

Yes >> GO TO 10.
No >> GO TO 2.

2. CHECK ECM POWER SUPPLY CIRCUIT-I

1. Turn ignition switch OFF and then ON.
2. Check voltage between ECM terminal 109 and ground with CONSULT-II or tester.

Voltage: Battery voltage

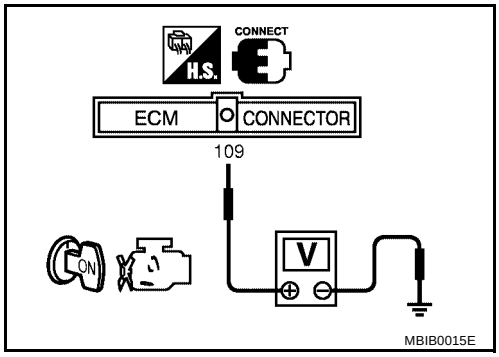

OK or NG

OK >> GO TO 4.
NG >> GO TO 3.

3. DETECT MALFUNCTIONING PART

Check the following.

- Harness connectors E10, F48
- Harness connectors M19, E108
- Fuse block (J/B) connector M1
- 10A fuse
- Harness for open or short between ECM and fuse

>> Repair open circuit or short to ground or short to power in harness or connectors.

4. CHECK GROUND CONNECTIONS

1. Turn ignition switch OFF.
2. Loosen and retighten two ground screws on the body. Refer to EC-171 .

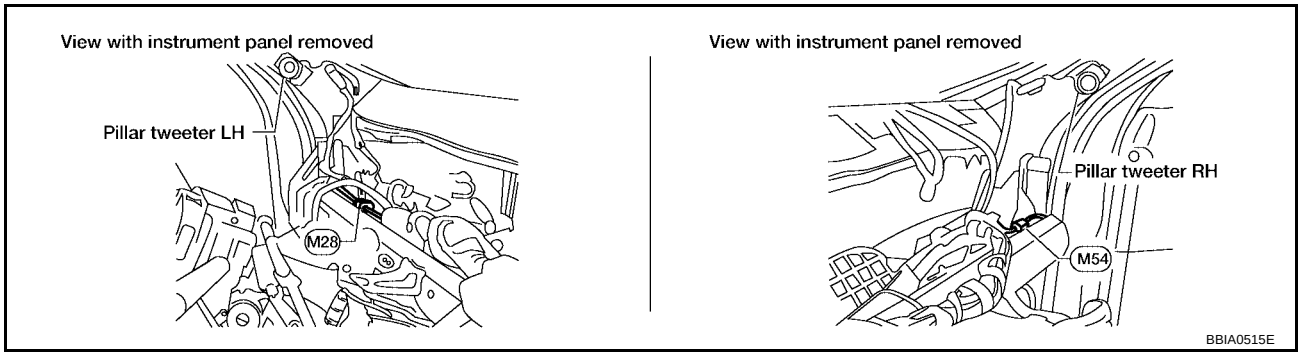

OK or NG

OK >> GO TO 5.
NG >> Repair or replace ground connections.

5. CHECK ECM GROUND CIRCUIT FOR OPEN AND SHORT

1. Turn ignition switch OFF.
2. Disconnect ECM harness connector.
3. Check harness continuity between ECM terminals 1, 115, 116, and ground.
   Refer to Wiring Diagram.

   Continuity should exist.

4. Also check harness for short to power.

OK or NG

OK >> GO TO 7.
NG >> GO TO 6.

6. DETECT MALFUNCTIONING PART

Check the following.

- Harness connectors F26, M58
- Harness for open or short between ECM and ground

>> Repair open circuit or short to power in harness or connectors.

7. CHECK ECM POWER SUPPLY CIRCUIT-II

1. Disconnect ECM relay.

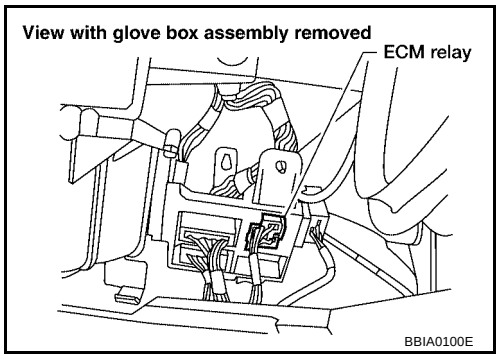

2. Check voltage between ECM relay terminals 1, 6 and ground with CONSULT-II or tester.

Voltage: Battery voltage

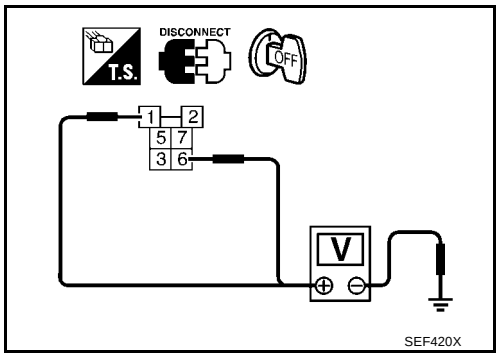

OK or NG

OK >> GO TO 9.
NG >> GO TO 8.

8. DETECT MALFUNCTIONING PART

Check the following.

- Harness connectors E10, F48
- Fuse and fusible link box connectors E22, E24
- 10A fuse
- 15A fuse
- Harness for open or short between ECM relay and battery

>> Repair open circuit or short to ground or short to power in harness or connectors.

9. CHECK ECM RELAY OUTPUT SIGNAL CIRCUIT FOR OPEN AND SHORT-I

1. Check harness continuity between ECM terminal 111 and ECM relay terminal 2.

Continuity should exist.

2. Also check harness for short to ground and short to power.

OK or NG

OK >> Go to EC-602, "IGNITION SIGNAL" .
NG >> Repair open circuit or short to ground or short to power in harness or connectors.

10. CHECK ECM POWER SUPPLY CIRCUIT-III

1. Stop engine.
2. Turn ignition switch ON and then OFF.
3. Check voltage between ECM terminals 119, 120 and ground with CONSULT-II or tester.

Voltage: After turning ignition switch OFF, battery voltage will exist for a few seconds, then drop to approximately 0V.

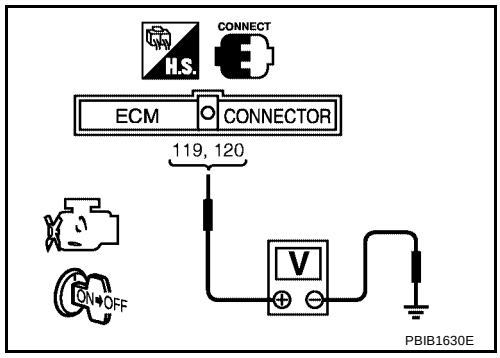

OK or NG

OK >> GO TO 16.
NG (Battery voltage does not exist.)>>GO TO 11.
NG (Battery voltage exists for more than a few seconds.)>>GO TO 13.

11. CHECK ECM POWER SUPPLY CIRCUIT-IV

1. Disconnect ECM harness connector.
2. Disconnect ECM relay.

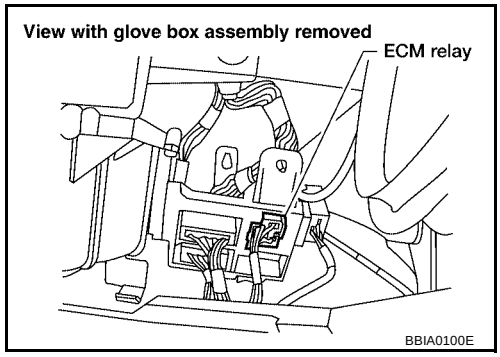

3. Check voltage between ECM relay terminal 3 and ground with CONSULT-II or tester.

Voltage: Battery voltage

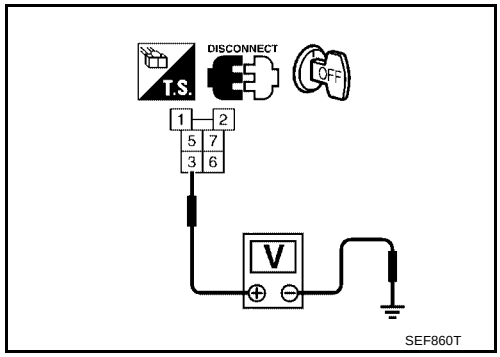

OK or NG

OK >> GO TO 13.
NG >> GO TO 12.

12. DETECT MALFUNCTIONING PART

Check the harness for open or short between ECM relay and harness connector F48.

>> Repair harness or connectors.

13. CHECK ECM POWER SUPPLY CIRCUIT-V

1. Check harness continuity between ECM terminals 119, 120 and ECM relay terminal 5.
   Refer to Wiring Diagram.

   Continuity should exist.

2. Also check harness for short to ground and short to power.

OK or NG

OK >> GO TO 14.
NG >> Repair open circuit or short to ground or short to power in harness or connectors.

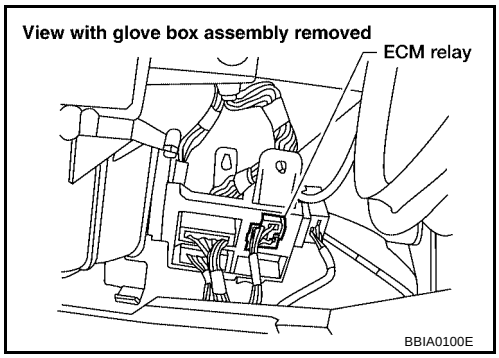

14. CHECK ECM RELAY OUTPUT SIGNAL CIRCUIT FOR OPEN AND SHORT-II

1. Check harness continuity between ECM terminal 111 and ECM relay terminal 2.
   Refer to Wiring Diagram.

   Continuity should exist.

2. Also check harness for short to ground and short to power.

OK or NG

OK >> GO TO 15.
NG >> Repair open circuit or short to ground or short to power in harness or connectors.

15. CHECK ECM RELAY

1. Apply 12V direct current between ECM relay terminals 1 and 2.
2. Check continuity between ECM relay terminals 3 and 5, 6 and 7.

Condition	Continuity
12V direct current supply between terminals 1 and 2	Yes
OFF	No

OK or NG

OK >> GO TO 16.
NG >> Replace ECM relay.

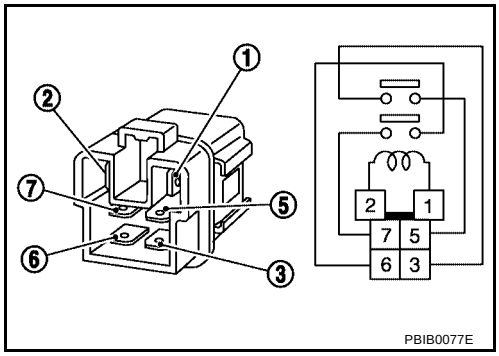

16. CHECK GROUND CONNECTIONS

1. Turn ignition switch OFF.
2. Loosen and retighten two ground screws on the body. Refer to EC-171 .

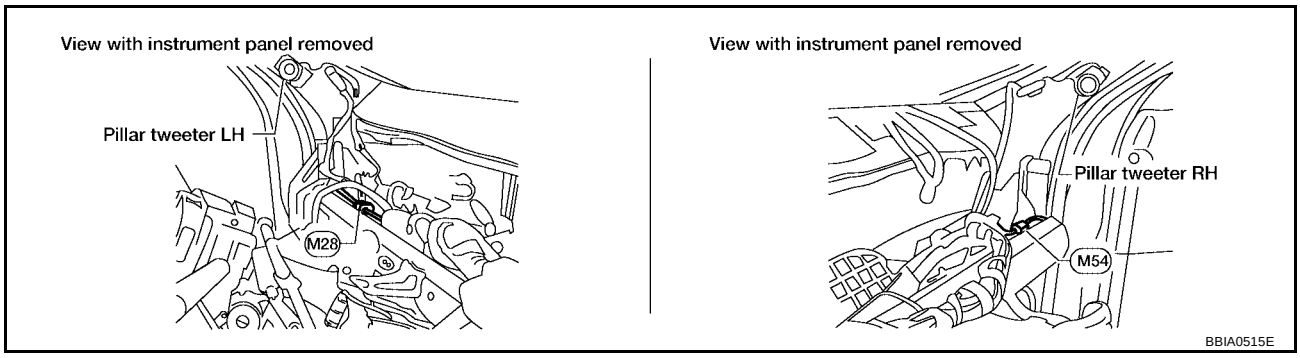

OK or NG

OK >> GO TO 17.
NG >> Repair or replace ground connections.

17. CHECK ECM GROUND CIRCUIT FOR OPEN AND SHORT

1. Turn ignition switch OFF.
2. Disconnect ECM harness connector.
3. Check harness continuity between ECM terminals 1, 115, 116, and ground.
   Refer to Wiring Diagram.

   Continuity should exist.

4. Also check harness for short to power.

OK or NG

OK >> GO TO 19.
NG >> GO TO 18.

18. DETECT MALFUNCTIONING PART

Check the following.

- Harness connectors F26, M58
- Harness for open or short between ECM and ground

>> Repair open circuit or short to power in harness or connectors.

19. CHECK INTERMITTENT INCIDENT

Perform EC-164, "TROUBLE DIAGNOSIS FOR INTERMITTENT INCIDENT" .

>> **INSPECTION END**

Ground Inspection

UBS00JT0

Ground connections are very important to the proper operation of electrical and electronic circuits. Ground connections are often exposed to moisture, dirt and other corrosive elements. The corrosion (rust) can become an unwanted resistance. This unwanted resistance can change the way a circuit works.
Electronically controlled circuits are very sensitive to proper grounding. A loose or corroded ground can drastically affect an electronically controlled circuit. A poor or corroded ground can easily affect the circuit. Even when the ground connection looks clean, there can be a thin film of rust on the surface.
When inspecting a ground connection follow these rules:PG-13, "Ground Distribution"

- Remove the ground bolt or screw.
- Inspect all mating surfaces for tarnish, dirt, rust, etc.
- Clean as required to assure good contact.
- Reinstall bolt or screw securely.
- Inspect for “add-on” accessories which may be interfering with the ground circuit.
- If several wires are crimped into one ground eyelet terminal, check for proper crimps. Make sure all of the wires are clean, securely fastened and providing a good ground path. If multiple wires are cased in one eyelet make sure no ground wires have excess wire insulation.

For detailed ground distribution information, refer to PG-13, "Ground Distribution" .

Ground Inspection

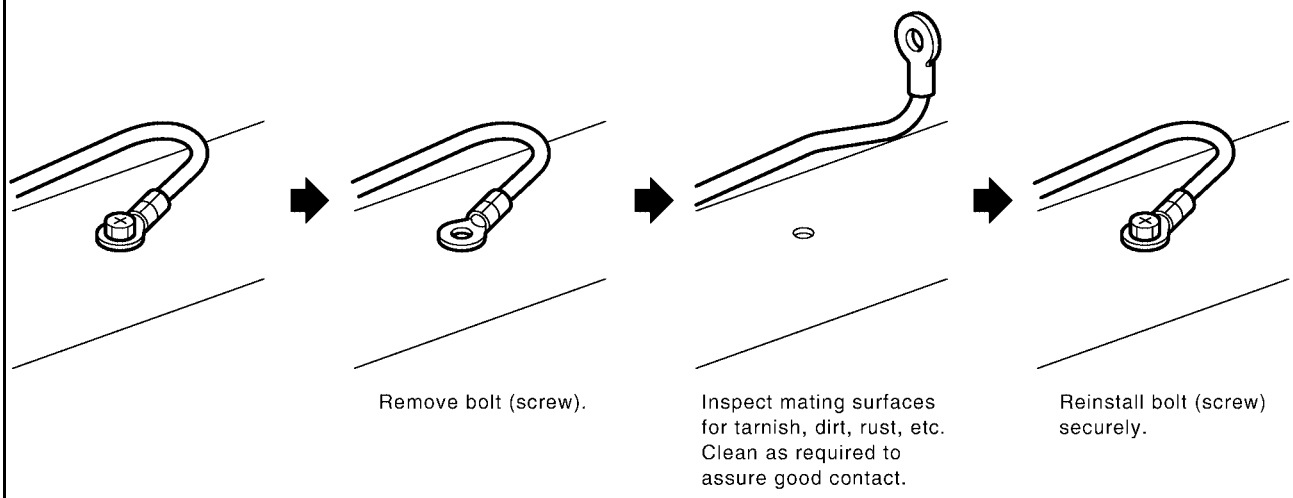

DTC U1000, U1001 CAN COMMUNICATION LINE

PFP:23710

Description

UBS00B3P

CAN (Controller Area Network) is a serial communication line for real time application. It is an on-vehicle multiplex communication line with high data communication speed and excellent error detection ability. Many electronic control units are equipped onto a vehicle, and each control unit shares information and links with other control units during operation (not independent). In CAN communication, control units are connected with 2 communication lines (CAN H line, CAN L line) allowing a high rate of information transmission with less wiring. Each control unit transmits/receives data but selectively reads required data only.

On Board Diagnosis Logic

UBS00B3Q

DTC No.	Trouble diagnosis name	DTC detecting condition	Possible cause
U1000*1 1000*1	CAN communication line	● ECM cannot communicate to other control units. ● ECM cannot communicate for more than the specified time.	● Harness or connectors (CAN communication line is open or shorted)
U1001*2 1001*2			

*1: **This self-diagnosis has the one trip detection logic.**
*2: **The MIL will not light up for this diagnosis.**

DTC Confirmation Procedure

UBS00B3R

1. Turn ignition switch ON and wait at least 3 seconds.
2. Select “DATA MONITOR” mode with CONSULT-II.
3. If 1st trip DTC is detected, go to EC-175, "Diagnostic Procedure" .

Wiring Diagram

UBS00B3S

EC-CAN-01

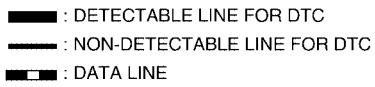

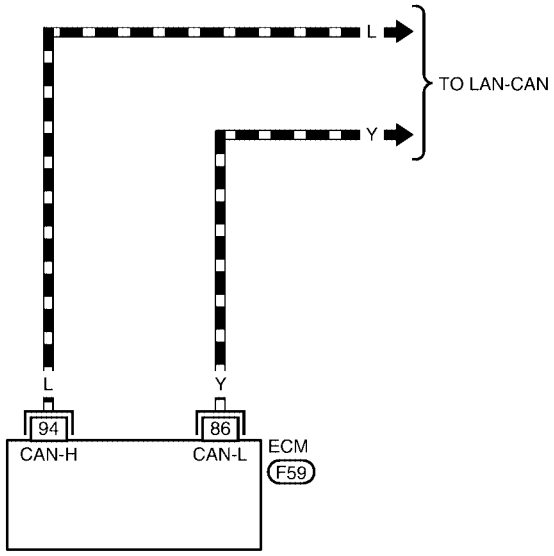

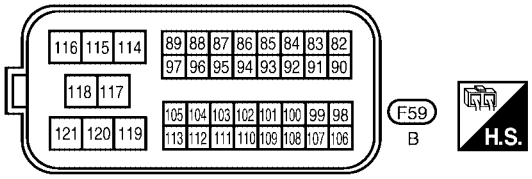

BBWA0274E

Diagnostic Procedure

UBS00B3T

Go to LAN-4, "CAN COMMUNICATION"

DTC P0011 IVT CONTROL

PFP:23796

Description

UBS00B3U

SYSTEM DESCRIPTION

Sensor	Input Signal to ECM	ECM Function	Actuator
Crankshaft position sensor (POS)	Engine speed	Intake valve timing control	Intake valve timing control solenoid valve
Camshaft position sensor (PHASE)			
Engine coolant temperature sensor	Engine coolant temperature		
Vehicle speed signal*	Vehicle speed		

*: This signal is sent to the ECM through CAN communication line.

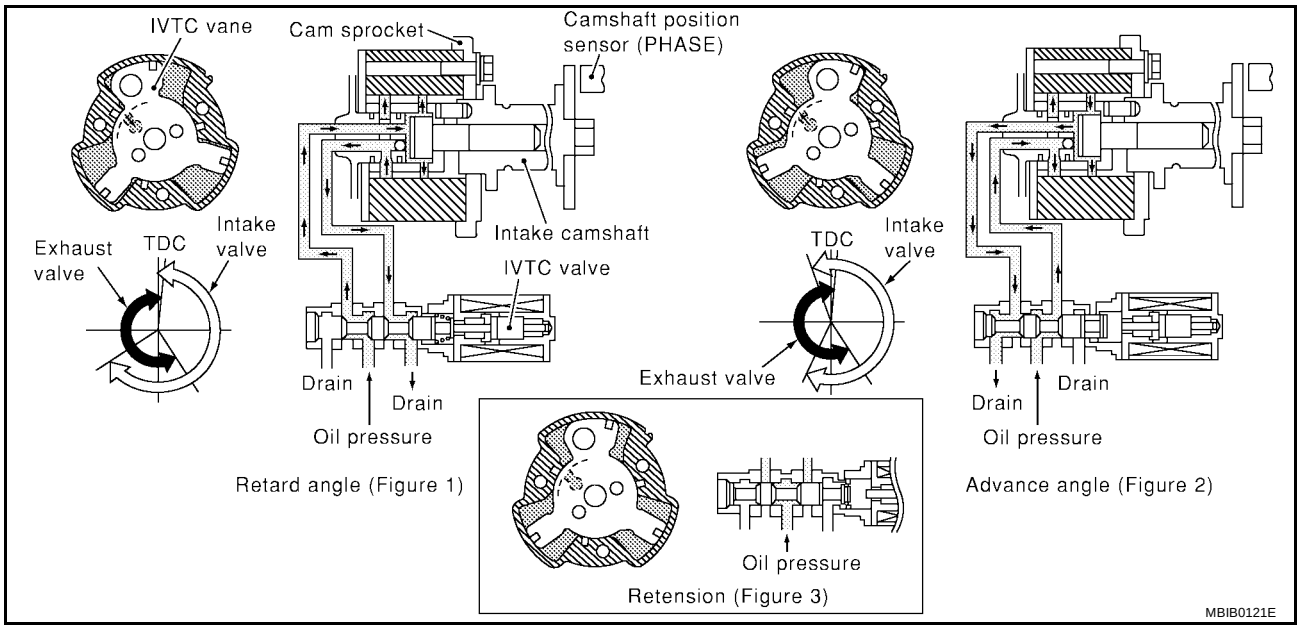

This mechanism hydraulically controls cam phases continuously with the fixed operating angle of the intake valve.

The ECM receives signals such as crankshaft position, camshaft position, engine speed, and engine coolant temperature. Then, the ECM sends ON/OFF pulse duty signals to the intake valve timing control solenoid valve depending on driving status. This makes it possible to control the shut/open timing of the intake valve to increase engine torque in low/mid speed range and output in high-speed range.

CONSULT-II Reference Value in Data Monitor Mode

UBS00B3V

Specification data are reference values.

MONITOR ITEM	CONDITION		SPECIFICATION
INT/V TIM (B1)	● Engine: After warming up ● Shift lever: N (A/T), Neutral (M/T) ● Air conditioner switch: OFF ● No-load	Idle	–5° - 5°CA
		When revving engine up to 2,000 rpm quickly	Approx. 0° - 30°CA
INT/V SOL (B1)	● Engine: After warming up ● Shift lever: N (A/T), Neutral (M/T) ● Air conditioner switch: OFF ● No-load	Idle	0% - 2%
		When revving engine up to 2,000 rpm quickly	Approx. 0% - 80%

On Board Diagnosis Logic

UBS00B3W

DTC No.	Trouble diagnosis name	Detecting condition	Possible cause
P0011 0011	Intake valve timing control performance	There is a gap between angle of target and phase-control angle degree.	● Crankshaft position sensor (POS) ● Camshaft position sensor (PHASE) ● Intake valve control solenoid valve ● Accumulation of debris to the signal pick-up portion of the camshaft ● Timing chain installation ● Foreign matter caught in the oil groove for intake valve timing control

FAIL-SAFE MODE

When the malfunction is detected, the ECM enters fail-safe mode.

Detected items	Engine operating condition in fail-safe mode
Intake valve timing control	The signal is not energized to the solenoid valve and the valve control does not function

DTC Confirmation Procedure

UBS00B3X

CAUTION:
Always drive at a safe speed.

NOTE:

- **If DTC P0011 is displayed with DTC P1111, first perform trouble diagnosis for DTC P1111. Refer to EC-394, "DTC P1111 IVT CONTROL SOLENOID VALVE" .**
- If DTC Confirmation Procedure has been previously conducted, always turn ignition switch OFF and wait at least 10 seconds before conducting the next test.

TESTING CONDITION:
Before performing the following procedure, confirm that battery voltage is between 10V and 16V at idle.

WITH CONSULT-II

1. Turn ignition switch ON and select “DATA MONITOR” mode with CONSULT-II.
2. Start engine and warm it up to the normal operating temperature.
3. Maintain the following conditions for at least 6 consecutive seconds.
   Hold the accelerator pedal as steady as possible.

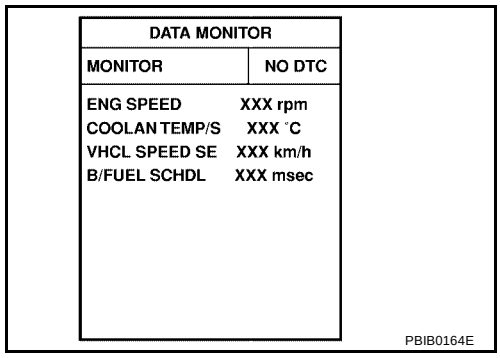

VHCL SPEED SE	100 - 120 km/h (63 - 75 MPH)
ENG SPEED	600 - 2,000 rpm
COOLANT TEMP/S	60 - 120 °C (140 - 248 °F)
B/FUEL SCHDL	More than 6.0 msec
Selector lever	AT models: D position MT models: 5th position

4. Stop vehicle with engine running and let engine idle for 10 seconds.
5. If 1st trip DTC is detected, go to EC-178, "Diagnostic Procedure" .
   If 1st trip DTC is not detected, go to next step.
6. Maintain the following conditions for at least 10 consecutive seconds.

ENG SPEED	1,800 - 3,175 rpm (A constant rotation is maintained.)
COOLANT TEMP/S	More than 70 °C
Selector lever	1st or 2nd position
Driving location uphill	Driving vehicle uphill (Increased engine load will help maintain the driving conditions required for this test.)

7. If 1st trip DTC is detected, go to EC-178, "Diagnostic Procedure" .

WITH GST

Follow the procedure “WITH CONSULT-II” above.

Diagnostic Procedure

UBS00B3Y

1. CHECK OIL PRESSURE WARNING LAMP

1. Start engine.
2. Check oil pressure warning lamp and confirm it is not illuminated.

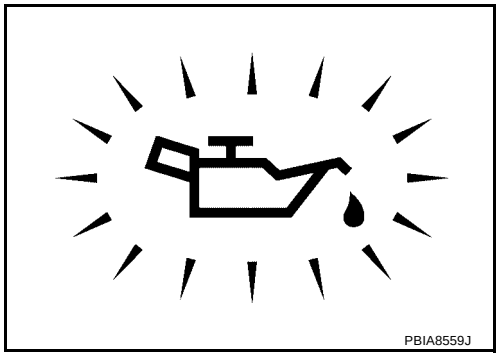

OK or NG

OK >> GO TO 2.
NG >> Go to DI-27 .

2. CHECK INTAKE VALVE TIMING CONTROL SOLENOID VALVE

Refer to EC-176 .

OK or NG

OK >> GO TO 3.
NG >> Replace intake valve timing control solenoid valve.

3. CHECK CRANKSHAFT POSITION SENSOR (POS)

Refer to EC-297, "Component Inspection" .

OK or NG

OK >> GO TO 4.
NG >> Replace crankshaft position sensor (POS).

4. CHECK CAMSHAFT POSITION SENSOR (PHASE)

Refer to EC-297, "Component Inspection" .

OK or NG

OK >> GO TO 5.
NG >> Replace camshaft position sensor (PHASE).

5. CHECK CAMSHAFT (INTAKE)

Check the following.

- Accumulation of debris to the signal plate of camshaft rear end
- Chipping signal plate of camshaft rear end

OK or NG

OK >> GO TO 8.
NG >> Remove debris and clean the signal plate of camshaft rear end or replace camshaft.

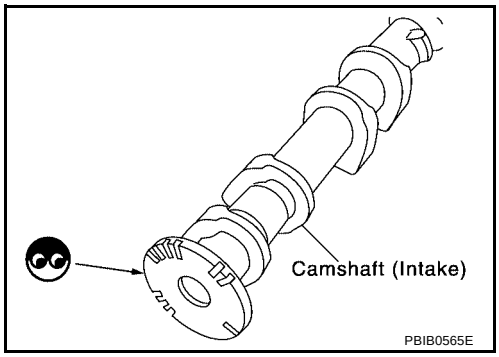

6. CHECK TIMING CHAIN INSTALLATION

Check service records for any recent repairs that may cause timing chain misaligned.

OK or NG

OK >> Check timing chain installation. Refer to EM-48 .
NG >> GO TO 7.

7. CHECK LUBRICATION CIRCUIT

Refer to EM-37, "INSPECTION OF CAMSHAFT SPROCKET (INT) OIL GROOVE" .

OK or NG

OK >> GO TO 8.
NG >> Clean lubrication line.

8. CHECK INTERMITTENT INCIDENT

Refer to EC-164, "TROUBLE DIAGNOSIS FOR INTERMITTENT INCIDENT" .
For wiring diagram refer to EC-286, "Wiring Diagram" for CKP sensor (POS) and EC-293, "Wiring Diagram" for CMP sensor (PHASE).

>> **INSPECTION END**

Component Inspection

UBS00KJZ

INTAKE VALVE TIMING CONTROL SOLENOID VALVE

1. Disconnect intake valve timing control solenoid valve harness connector.
2. Check resistance between intake valve timing control solenoid valve as follows.

Terminal	Resistance
1 and 2	Approximately 8Ω at 20°C (68°F)
1 or 2 and ground	(Continuity should not exist.)

If NG, replace intake valve timing control solenoid valve.
If OK, go to next step.

3. Remove intake valve timing control solenoid valve.

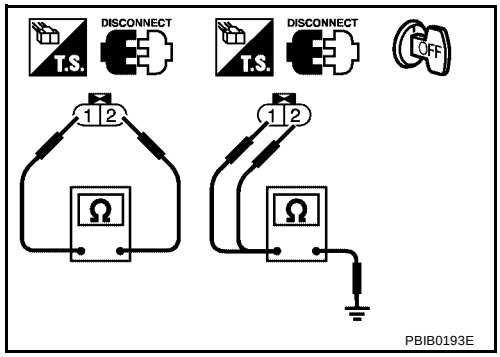

4. Provide 12V DC between intake valve timing control solenoid valve terminals and then interrupt it. Make sure that the plunger moves as shown in the figure.

CAUTION:
Do not apply 12V DC continuously for 5 seconds or more. Doing so may result in damage to the coil in intake valve timing control solenoid valve.
If NG, replace intake valve timing control solenoid valve.

NOTE:
Always replace O-ring when intake valve timing control solenoid valve is removed.

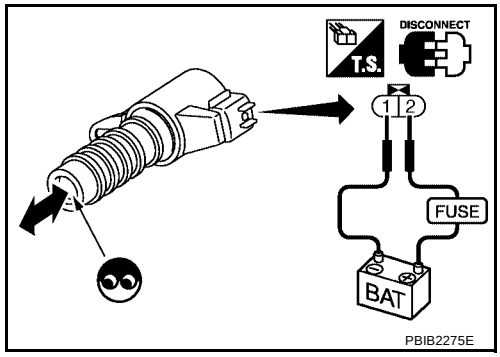

Removal and Installation

UBS00KK0

INTAKE VALVE TIMING CONTROL SOLENOID VALVE

Refer to EM-42, "TIMING CHAIN" .

DTC P0037, P0038 HO2S2 HEATER

PFP:226A0

Description

UBS00B3Z

SYSTEM DESCRIPTION

Sensor	Input Signal to ECM	ECM Function	Actuator
Camshaft position sensor (PHASE)	Engine speed	Heated oxygen sensor 2 heater control	Heated oxygen sensor 2 heater
Crankshaft position sensor (POS)			
Engine coolant temperature sensor	Engine coolant temperature		
Mass air flow sensor	Amount of intake air		

The ECM performs ON/OFF control of the heated oxygen sensor 2 heater corresponding to the engine speed, amount of intake air and engine coolant temperature.

OPERATION

Engine speed rpm	Heated oxygen sensor 2 heater
Above 3,600	OFF
● Below 3,600 rpm after the following conditions are met. ● Engine: After warming up ● Keeping the engine speed between 3,500 and 4,000 rpm for 1 minute and at idle for 1 minute under no load	ON

CONSULT-II Reference Value in Data Monitor Mode

UBS00B40

Specification data are reference values.

MONITOR ITEM	CONDITION	SPECIFICATION
HO2S2 HTR (B1)	● Engine speed: Below 3,600 rpm after the following conditions are met. ● Engine: After warming up ● Keeping the engine speed between 3,500 and 4,000 rpm for 1 minute and at idle for 1 minute under no load.	ON
	● Engine speed: Above 3,600 rpm	OFF

On Board Diagnosis Logic

UBS00B41

DTC No.	Trouble diagnosis name	DTC detecting condition	Possible cause
P0037 0037	Heated oxygen sensor 2 heater control circuit low	The current amperage in the heated oxygen sensor 2 heater circuit is out of the normal range. (An excessively low voltage signal is sent to ECM through the heated oxygen sensor 2 heater.)	● Harness or connectors (The heated oxygen sensor 2 heater circuit is open or shorted.) ● Heater oxygen sensor 2 heater
P0038 0038	Heated oxygen sensor 2 heater control circuit high	The current amperage in the heated oxygen sensor 2 heater circuit is out of the normal range. (An excessively high voltage signal is sent to ECM through the heated oxygen sensor 2 heater.)	● Harness or connectors (The heated oxygen sensor 2 heater circuit is shorted.) ● Heater oxygen sensor 2 heater

DTC Confirmation Procedure

UBS00B42

NOTE:
If DTC Confirmation Procedure has been previously conducted, always turn ignition switch OFF and wait at least 10 seconds before conducting the next test.

TESTING CONDITION:
Before performing the following procedure, confirm that battery voltage is between 10.5V and 16V at idle.

WITH CONSULT-II

1. Turn ignition switch ON and select “DATA MONITOR” mode with CONSULT-II.
2. Start engine and warm it up to the normal operating temperature.
3. Turn ignition switch OFF and wait at least 10 seconds.

4. Start engine and keep the engine speed between 3,500 and 4,000 rpm for at least 1 minute under no load.
5. Let engine idle for 1 minute.
6. If 1st trip DTC is detected, go to EC-183, "Diagnostic Procedure".

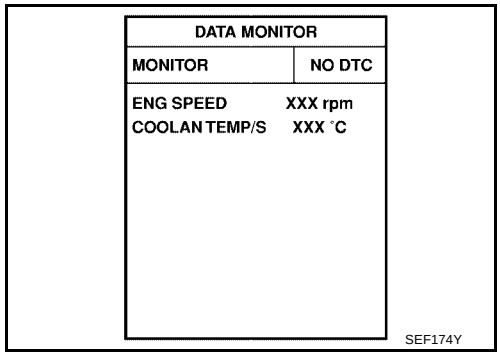

WITH GST

Follow the procedure “WITH CONSULT-II” above.

Wiring Diagram

UBS00B43

EC-HO2S2H-01

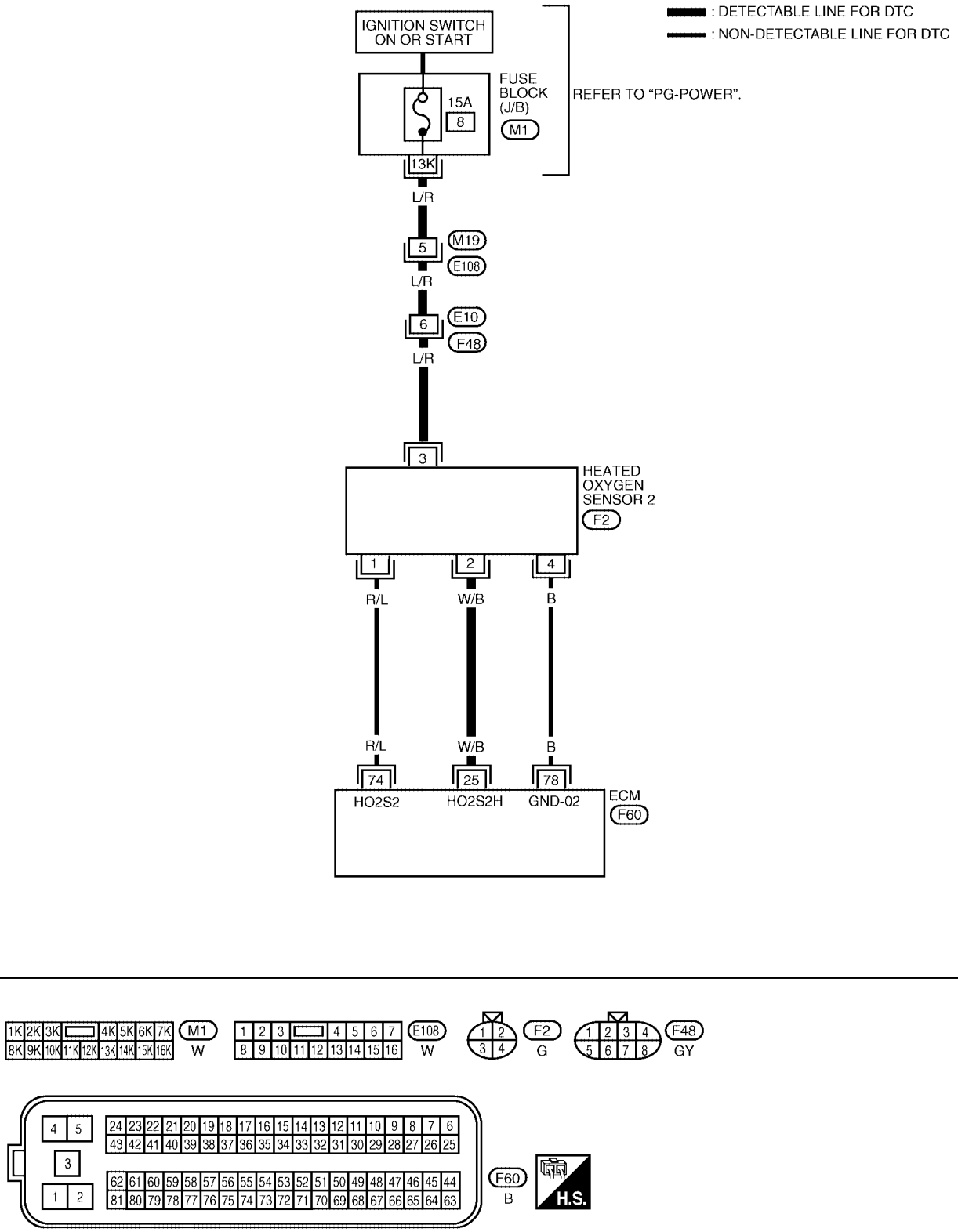

Specification data are reference values and are measured between each terminal and ground.

CAUTION:

Do not use ECM ground terminals when measuring input/output voltage. Doing so may result in damage to the ECM's transistor. Use a ground other than ECM terminals, such as the ground.

TERMINAL NO.	WIRE COLOR	ITEM	CONDITION	DATA (DC Voltage)
25	W/B	Heated oxygen sensor 2 heater	**[Engine is running]** ● **Warm-up condition** ● Engine speed: Below 3,600 rpm after the following conditions are met. ● Keeping the engine speed between 3,500 and 4,000 rpm for 1 minute and at idle for 1 minute under on load	0 - 1.0V
			[Ignition switch: ON] ● Engine stopped. **[Engine is running]** ● Engine speed is above 3,600 rpm.	BATTERY VOLTAGE (11 - 14V)

Diagnostic Procedure

UBS00B44

1. CHECK HO2S2 POWER SUPPLY CIRCUIT

1. Turn ignition switch OFF.
2. Disconnect heated oxygen sensor 2 harness connector.
3. Turn ignition switch ON.

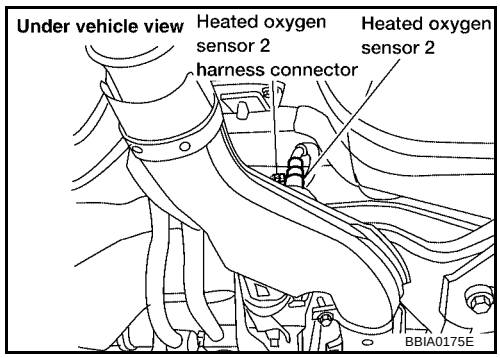

4. Check voltage between HO2S2 terminal 3 and ground with CONSULT-II or tester.

Voltage: Battery voltage

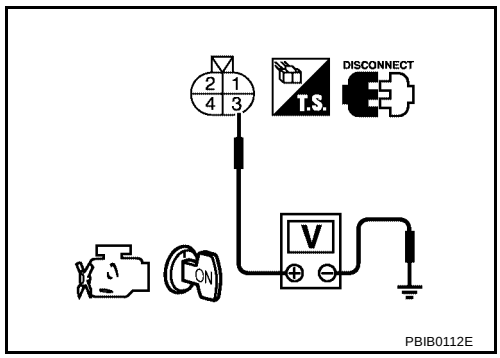

OK or NG

OK >> GO TO 3.
NG >> GO TO 2.

2. DETECT MALFUNCTIONING PART

Check the following.

- Harness connectors E10, F48
- Harness connectors E108, M19
- Fuse block (J/B) connector M1
- 15A fuse
- Harness for open or short between heated oxygen sensor 2 and fuse

>> Repair open circuit or short to ground or short to power in harness or connectors.

3. CHECK HO2S2 OUTPUT SIGNAL CIRCUIT FOR OPEN AND SHORT

1. Turn ignition switch OFF.
2. Disconnect ECM harness connector.
3. Check harness continuity between ECM terminal 25 and HO2S2 terminal 2.
   Refer to Wiring Diagram.

   Continuity should exist.

4. Also check harness for short to ground and short to power.

OK or NG

OK >> GO TO 4.
NG >> Repair open circuit or short to ground or short to power in harness or connectors.

4. CHECK HEATED OXYGEN SENSOR 2 HEATER

Refer to EC-185, "Component Inspection" .

OK or NG

OK >> GO TO 5.
NG >> Replace heated oxygen sensor 2.

5. CHECK INTERMITTENT INCIDENT

Refer to EC-164, "TROUBLE DIAGNOSIS FOR INTERMITTENT INCIDENT" .

>> **INSPECTION END**

Component Inspection

UBS00B45

HEATED OXYGEN SENSOR 2 HEATER

1. Check resistance between HO2S2 terminals as follows.

Terminal No.	Resistance
2 and 3	8 -10 Ω at 25°C (77°F)
1 and 2, 3, 4	∞ Ω (Continuity should not exist)
4 and 1, 2, 3	

2. If NG, replace heated oxygen sensor 2.

CAUTION:

- **Discard any heated oxygen sensor which has been dropped from a height of more than 0.5 m (19.7 in) onto a hard surface such as a concrete floor; use a new one.**
- **Before installing new oxygen sensor, clean exhaust system threads using Oxygen Sensor Thread Cleaner tool J-43897-18 or J-43897-12 and approved anti-seize lubricant.**

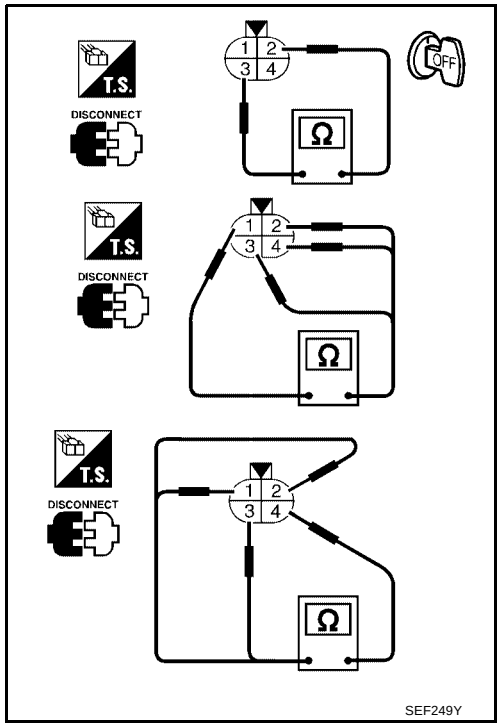

Removal and Installation

UBS00B46

HEATED OXYGEN SENSOR 2

Refer to EX-3, "EXHAUST SYSTEM" .

DTC P0101 MAF SENSOR

PFP:22680

Component Description

UBS00B47

The mass air flow sensor is placed in the stream of intake air. It measures the intake flow rate by measuring a part of the entire intake flow. The mass air flow sensor controls the temperature of the hot wire to a certain amount. The heat generated by the hot wire is reduced as the intake air flows around it. The more air, the greater the heat loss.
Therefore, the electric current supplied to hot wire is changed to maintain the temperature of the hot wire as air flow increases. The ECM detects the air flow by means of this current change.

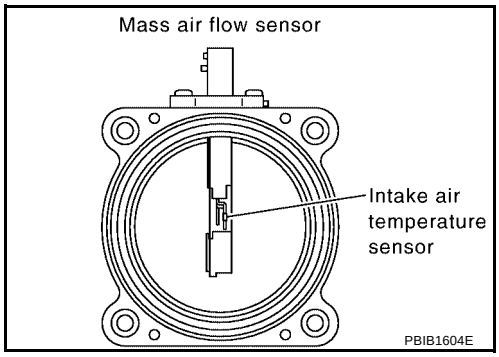

CONSULT-II Reference Value in Data Monitor Mode

UBS00B48

Specification data are reference values.

MONITOR ITEM	CONDITION		SPECIFICATION
MAS A/F SE-B1	See EC-154, "TROUBLE DIAGNOSIS - SPECIFICATION VALUE" .		
CAL/LD VALUE	● Engine: After warming up ● Air conditioner switch: OFF ● Shift lever: N (A/T), Neutral (M/T) ● No-load	Idle	20.0 - 35.5%
		2,500 rpm	12.0 - 30.0%
MASS AIRFLOW	● Engine: After warming up ● Air conditioner switch: OFF ● Shift lever: N (A/T), Neutral (M/T) ● No-load	Idle	1.4 - 4.0 g·m/s
		2,500 rpm	5.0 - 10.0 g·m/s

On Board Diagnosis Logic

UBS00B49

DTC No.	Trouble diagnosis name	DTC detecting condition		Possible cause
P0101 0101	Mass air flow sensor circuit range/performance problem	A)	A high voltage from the sensor is sent to ECM under light load driving condition.	● Harness or connectors (The sensor circuit is open or shorted.) ● Mass air flow sensor ● EVAP control system pressure sensor ● Intake air temperature sensor
		B)	A low voltage from the sensor is sent to ECM under heavy load driving condition.	● Harness or connectors (The sensor circuit is open or shorted.) ● Intake air leaks ● Mass air flow sensor ● EVAP control system pressure sensor ● Intake air temperature sensor

DTC Confirmation Procedure

UBS00B4A

Perform PROCEDURE FOR MALFUNCTION A first. If the 1st trip DTC cannot be confirmed, perform PROCEDURE FOR MALFUNCTION B.

PROCEDURE FOR MALFUNCTION A

NOTE:
If engine will not start or stops soon, wait at least 10 seconds with engine stopped (Ignition switch ON) instead of running engine at idle speed.

With CONSULT-II

1. Turn ignition switch ON.
2. Select “DATA MONITOR” mode with CONSULT-II.
3. Start engine and warm it up to normal operating temperature.
4. Run engine for at least 10 seconds at idle speed.
5. If 1st trip DTC is detected, go to EC-190, "Diagnostic Procedure" .

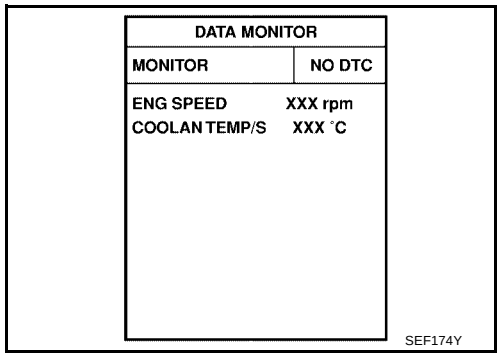

With GST

Follow the procedure “With CONSULT-II” above.

PROCEDURE FOR MALFUNCTION B

CAUTION:
Always driver vehicle at a safe speed.

With CONSULT-II

1. Turn ignition switch ON.
2. Start engine and warm it up to normal operating temperature.
   If engine cannot be started, go to EC-190, "Diagnostic Procedure" .
3. Select “DATA MONITOR” mode with CONSULT-II.
4. Check the voltage of “MAS A/F SE-B1” with “DATA MONITOR”.
5. Increases engine speed to about 4,000 rpm.
6. Monitor the linear voltage rise in response to engine speed increases.
   If NG, go to EC-190, "Diagnostic Procedure" .
   If OK, go to following step.

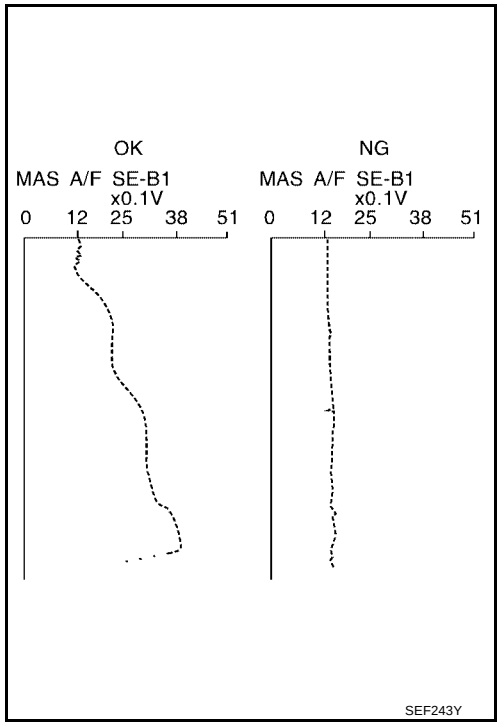

7. Maintain the following conditions for at least 10 consecutive seconds.

ENG SPEED	More than 2,000 rpm
THRTL SEN 1	More than 3.0V
THRTL SEN 2	More than 3.0V
Selector lever	Suitable position
Driving location	Driving vehicle uphill (Increased engine load) will help maintain the driving conditions required for this test.

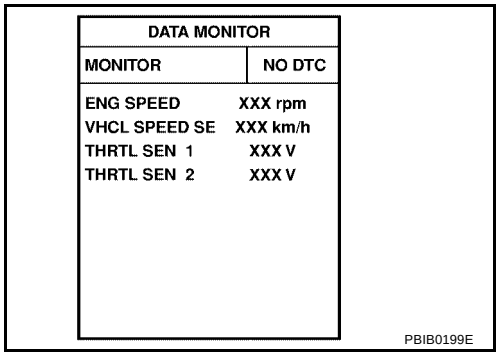

8. If 1st trip DTC is detected, go to EC-190, "Diagnostic Procedure" .

Overall Function Check

UBS00B4B

Use this procedure to check the overall function of the mass air flow sensor circuit. During this check, a DTC might not be confirmed.

PROCEDURE FOR MALFUNCTION B

With GST

1. Turn ignition switch ON.
2. Start engine and warm it up to normal operating temperature.
3. Select “Service $01” with GST.
4. Check the mass air flow sensor signal with “Service $01”.
5. Check for linear mass air flow rise in response to increases to about 4,000 rpm in engine speed.
6. If NG, go to EC-190, "Diagnostic Procedure" .

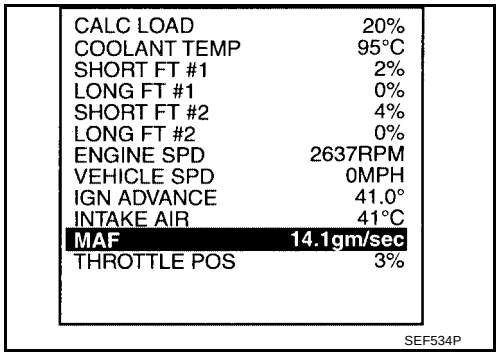

Wiring Diagram

UBS00B4C

EC-MAFS-01

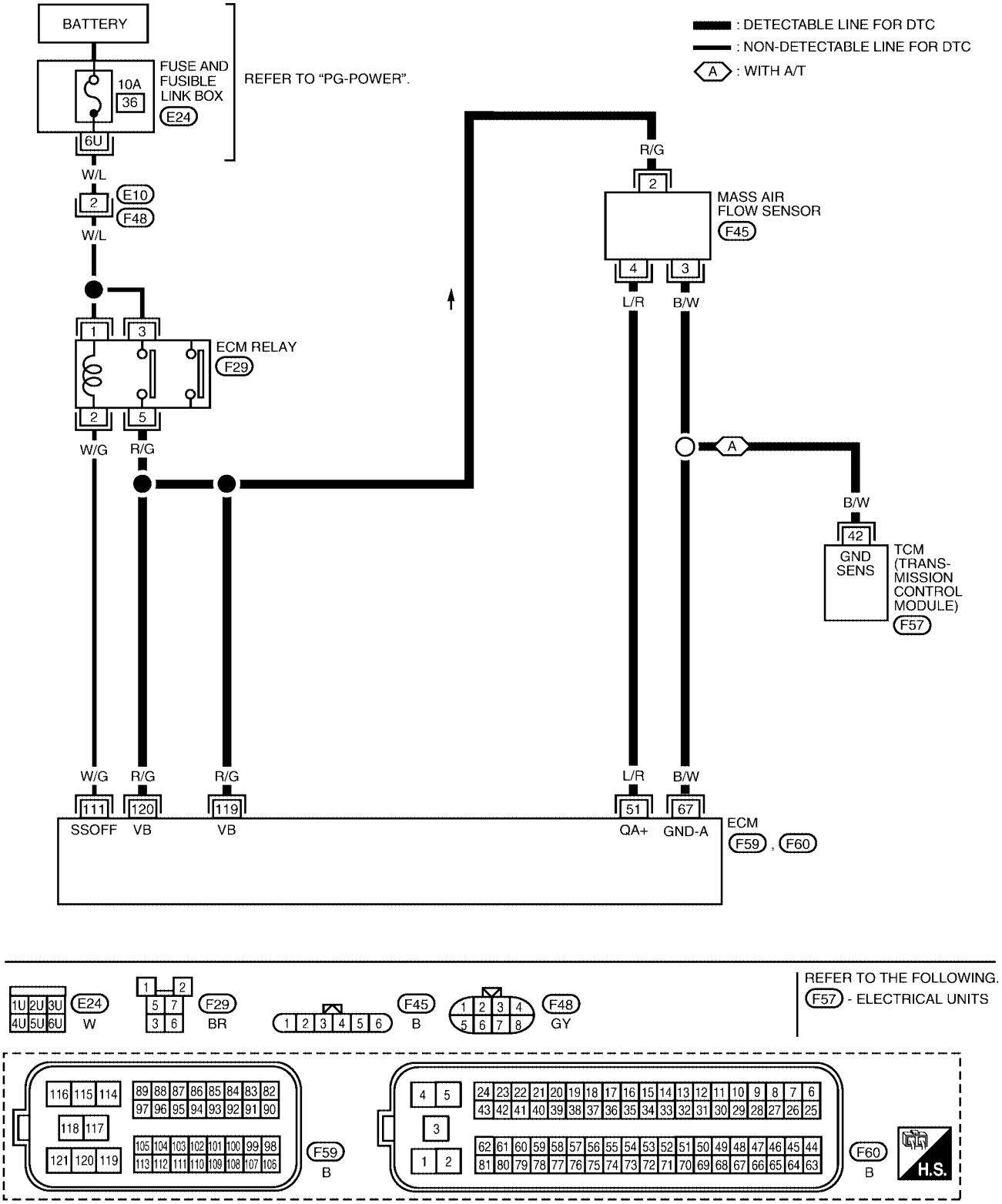

BBWA1424E

Specification data are reference values and are measured between each terminal and ground.

CAUTION:

Do not use ECM ground terminals when measuring input/output voltage. Doing so may result in damage to the ECM's transistor. Use a ground other than ECM terminals, such as the ground.

TERMINAL NO.	WIRE COLOR	ITEM	CONDITION	DATA (DC Voltage)
51	L/R	Mass air flow sensor	**[Engine is running]** ● **Warm-up condition** ● Idle speed	0.9 - 1.2V
			[Engine is running] ● **Warm-up condition** ● Engine speed is 2,500 rpm.	1.4 - 1.8V
67	B/W	Sensor ground	**[Engine is running]** ● **Warm-up condition** ● Idle speed	Approximately 0V
111	W/G	ECM relay (Self shut-off)	**[Engine is running]** **[Ignition switch: OFF]** ● For a few seconds after turning ignition switch OFF	0 - 1.0V
			[Ignition switch: OFF] ● More than a few seconds passed after turning ignition switch OFF	BATTERY VOLTAGE (11 - 14V)
119 120	R/G	Power supply for ECM	**[Ignition switch: ON]**	BATTERY VOLTAGE (11 - 14V)

Diagnostic Procedure

UBS00B4D

1. INSPECTION START

Which malfunction (A or B) is duplicated?

A or B

A >> GO TO 3.
B >> GO TO 2.

2. CHECK INTAKE AIR LEAK

Check the following for connections.

- Air duct
- Vacuum hoses
- Intake air passage between air duct and collector

OK or NG

OK >> GO TO 3.
NG >> Reconnect the parts.

3. RETIGHTEN GROUND SCREWS

1. Turn ignition switch OFF.
2. Loosen and retighten two ground screws on the body. Refer to EC-171, "Ground Inspection" .

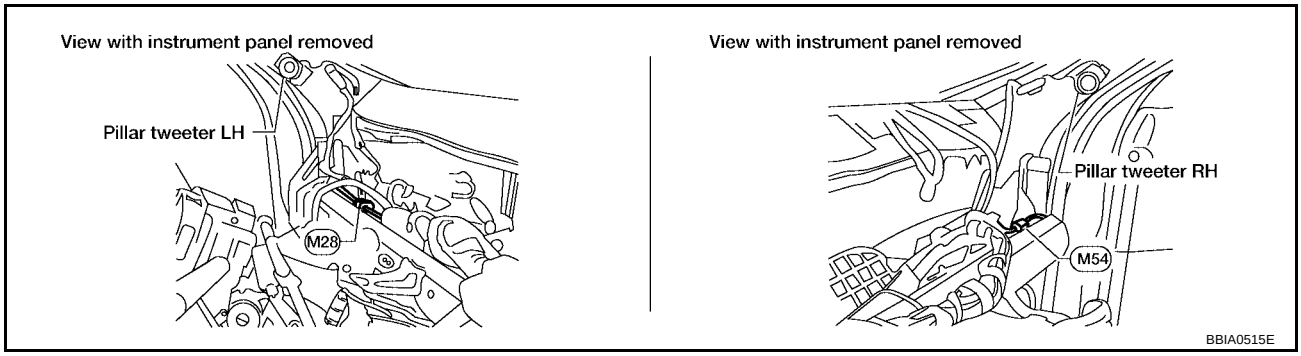

OK or NG

OK >> GO TO 4.
NG >> Repair or replace ground connections.

4. CHECK MAF SENSOR POWER SUPPLY CIRCUIT

1. Disconnect mass air flow sensor harness connector.
2. Turn ignition switch ON.

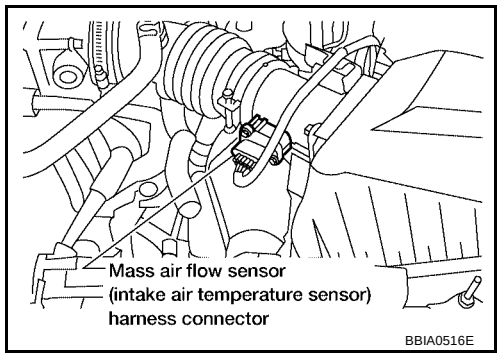

3. Check voltage between MAF sensor terminals 2 and ground with CONSULT-II or tester.

Voltage : Battery voltage.

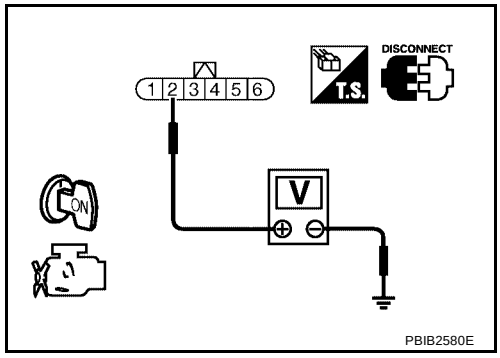

OK or NG

OK >> GO TO 6.
NG >> GO TO 5.

5. DETECT MALFUNCTIONING PART

Check the following.

- Harness for open or short between ECM relay and mass air flow sensor
- Harness for open or short between mass air flow sensor and ECM

>> Repair open circuit or short to ground or short to power in harness or connectors.

6. CHECK MAF SENSOR GROUND CIRCUIT FOR OPEN AND SHORT

1. Turn ignition switch OFF.
2. Disconnect ECM harness connector.
3. Disconnect TCM harness connector.
4. Check harness continuity between MAF sensor terminal 3 and ECM terminal 67, TCM terminal 42.
   Refer to Wiring Diagram.

   Continuity should exist.

5. Also check harness for short to ground and short to power.

OK or NG

OK >> GO TO 8.
NG >> GO TO 7.

7. DETECT MALFUNCTIONING PART

Check the following.

- Harness for open or short between mass air flow sensor and ECM
- Harness for open or short between mass air flow sensor and TCM

>> Repair open circuit or short to ground or short to power in harness or connectors.

8. CHECK MAF SENSOR INPUT SIGNAL CIRCUIT FOR OPEN AND SHORT

1. Check harness continuity between MAF sensor terminal 4 and ECM terminal 51.
   Refer to Wiring Diagram.

   Continuity should exist.

2. Also check harness for short to ground and short to power.

OK or NG

OK >> GO TO 9.
NG >> Repair open circuit or short to ground or short to power in harness or connectors.

9. CHECK INTAKE AIR TEMPERATURE SENSOR

Refer to EC-194, "Component Inspection" .

OK or NG

OK >> GO TO 10.
NG >> Replace intake air temperature sensor.

10. CHECK EVAP CONTROL SYSTEM PRESSURE SENSOR

Refer to EC-194, "Component Inspection" .

OK or NG

OK >> GO TO 11.
NG >> Replace EVAP control system pressure sensor.

11. CHECK MASS AIR FLOW SENSOR

Refer to EC-194, "Component Inspection" .

OK or NG

OK >> GO TO 12.
NG >> Replace mass air flow sensor.

12. CHECK INTERMITTENT INCIDENT

Perform EC-164, "TROUBLE DIAGNOSIS FOR INTERMITTENT INCIDENT" .

>> **INSPECTION END**

Component Inspection

UBS00B4E

MASS AIR FLOW SENSOR

With CONSULT-II

1. Reconnect all harness connectors disconnected.
2. Start engine and warm it up to normal operating temperature.
3. Connect CONSULT-II and select “DATA MONITOR” mode.
4. Select “MAS A/F SE-B1” and check indication under the following conditions.

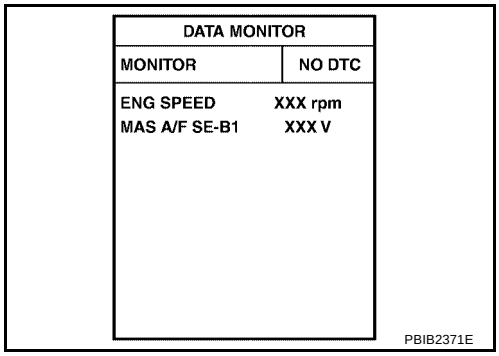

Condition	MAS A/F SE-B1 (V)
Ignition switch ON (Engine stopped.)	Approx 0.4
Idle (Engine is warmed-up to normal operating temperature.)	0.9 - 1.2
2,500 rpm (Engine is warmed-up to normal operating temperature.)	1.4 - 1.8
Idle to about 4,000 rpm*	0.9 - 1.2 to 2.4

*: Check for linear voltage rise in response to engine being increased to about 4,000 rpm.

5. If the voltage is out of specification, proceed the following.

a. Check for the cause of uneven air flow through mass air flow sensor. Refer to following.
   - Crushed air ducts
   - Malfunctioning seal of air cleaner element
   - Uneven dirt of air cleaner element
   - Improper specification of intake air system parts

b. If NG, repair or replace malfunctioning part and perform step 2 to 4 again.
   If OK, go to next step.

6. Turn ignition switch OFF.
7. Disconnect mass air flow sensor harness connector and reconnect it again.
8. Perform step 2 to 4 again.
9. If NG, clean or replace mass air flow sensor.

Without CONSULT-II

1. Reconnect all harness connectors disconnected.
2. Start engine and warm it up to normal operating temperature.
3. Check voltage between ECM terminal 51 (Mass air flow sensor signal) and ground.

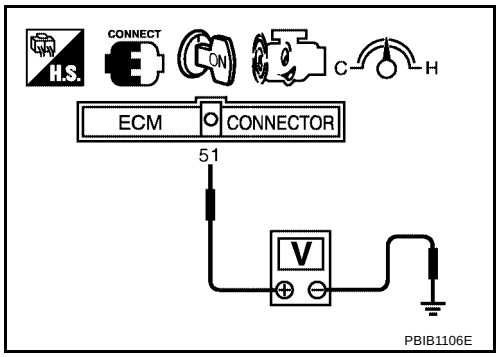

Condition	Voltage V
Ignition switch ON (Engine stopped.)	Approx 0.4
Idle (Engine is warmed-up to normal operating temperature.)	0.9 - 1.2
2,500 rpm (Engine is warmed-up to normal operating temperature.)	1.4 - 1.8
Idle to about 4,000 rpm*	0.9 - 1.2 to 2.4

*: Check for linear voltage rise in response to engine being increased to about 4,000 rpm.

4. If the voltage is out of specification, proceed the following.

a. Check for the cause of uneven air flow through mass air flow sensor. Refer to following.
   - Crushed air ducts
   - Malfunctioning seal of air cleaner element
   - Uneven dirt of air cleaner element
   - Improper specification of intake air system parts

b. If NG, repair or replace malfunctioning part and perform step 2 to 4 again.
If OK, go to next step.

5. Turn ignition switch OFF.
6. Disconnect mass air flow sensor harness connector and reconnect it again.
7. Perform step 2 and 3 again.
8. If NG, clean or replace mass air flow sensor.

DTC P0102, P0103 MAF SENSOR

PFP:22680

Component Description

UBS00B4F

The mass air flow sensor is placed in the stream of intake air. It measures the intake flow rate by measuring a part of the entire intake flow. The mass air flow sensor controls the temperature of the hot wire to a certain amount. The heat generated by the hot wire is reduced as the intake air flows around it. The more air, the greater the heat loss.
Therefore, the electric current supplied to hot wire is changed to maintain the temperature of the hot wire as air flow increases. The ECM detects the air flow by means of this current change.

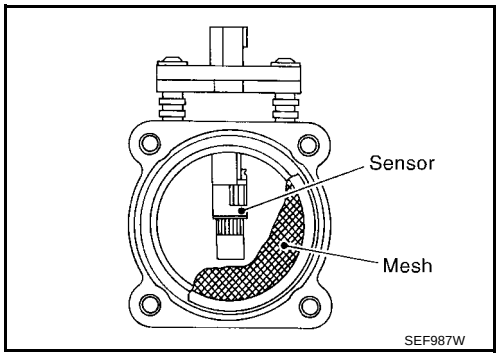

CONSULT-II Reference Value in Data Monitor Mode

UBS00B4G

Specification data are reference values.

MONITOR ITEM	CONDITION		SPECIFICATION
MAS A/F SE-B1	See EC-154, "TROUBLE DIAGNOSIS - SPECIFICATION VALUE" .		
CAL/LD VALUE	● Engine: After warming up ● Air conditioner switch: OFF ● Shift lever: N (A/T), Neutral (M/T) ● No-load	Idle	20.0 - 35.5%
		2,500 rpm	12.0 - 30.0%
MASS AIRFLOW	● Engine: After warming up ● Air conditioner switch: OFF ● Shift lever: N (A/T), Neutral (M/T) ● No-load	Idle	1.4 - 4.0 g·m/s
		2,500 rpm	5.0 - 10.0 g·m/s

On Board Diagnosis Logic

UBS00B4H

These self-diagnoses have the one trip detection logic.

DTC No.	Trouble diagnosis name	DTC detecting condition	Possible cause
P0102 0102	Mass air flow sensor circuit low input	An excessively low voltage from the sensor is sent to ECM.	● Harness or connectors (The sensor circuit is open or shorted.) ● Intake air leaks ● Mass air flow sensor
P0103 0103	Mass air flow sensor circuit high input	An excessively high voltage from the sensor is sent to ECM.	● Harness or connectors (The sensor circuit is open or shorted.) ● Mass air flow sensor

FAIL-SAFE MODE

When the malfunction is detected, the ECM enters fail-safe mode and the MIL lights up.

Detected items	Engine operating condition in fail-safe mode
Mass air flow sensor circuit	Engine speed will not rise more than 2,400 rpm due to the fuel cut.

DTC Confirmation Procedure

UBS00B4I

NOTE:
If DTC Confirmation Procedure has been previously conducted, always turn ignition switch OFF and wait at least 10 seconds before conducting the next test.

PROCEDURE FOR DTC P0102

With CONSULT-II

1. Turn ignition switch ON.
2. Select “DATA MONITOR” mode with CONSULT-II.
3. Start engine and wait at least 5 seconds.
4. If DTC is detected, go to EC-206, "Diagnostic Procedure" .

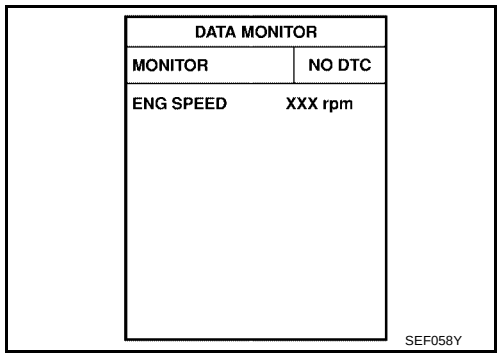

With GST

Follow the procedure “With CONSULT-II” above.

PROCEDURE FOR DTC P0103

With CONSULT-II

1. Turn ignition switch ON.
2. Select “DATA MONITOR” mode with CONSULT-II.
3. Wait at least 5 seconds.
4. If DTC is detected, go to EC-206, "Diagnostic Procedure" .
   If DTC is not detected, go to next step.
5. Start engine and wait at least 5 seconds.
6. If DTC is detected, go to EC-206, "Diagnostic Procedure" .

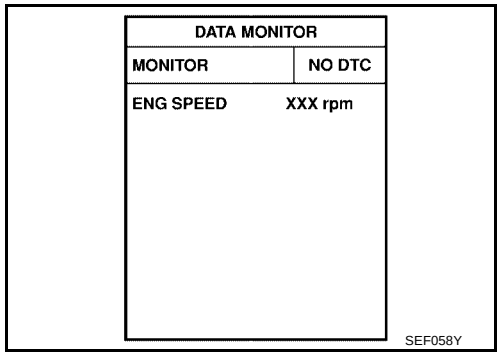

With GST

Follow the procedure “With CONSULT-II” above.

Wiring Diagram

UBS00B4J

EC-MAFS-01

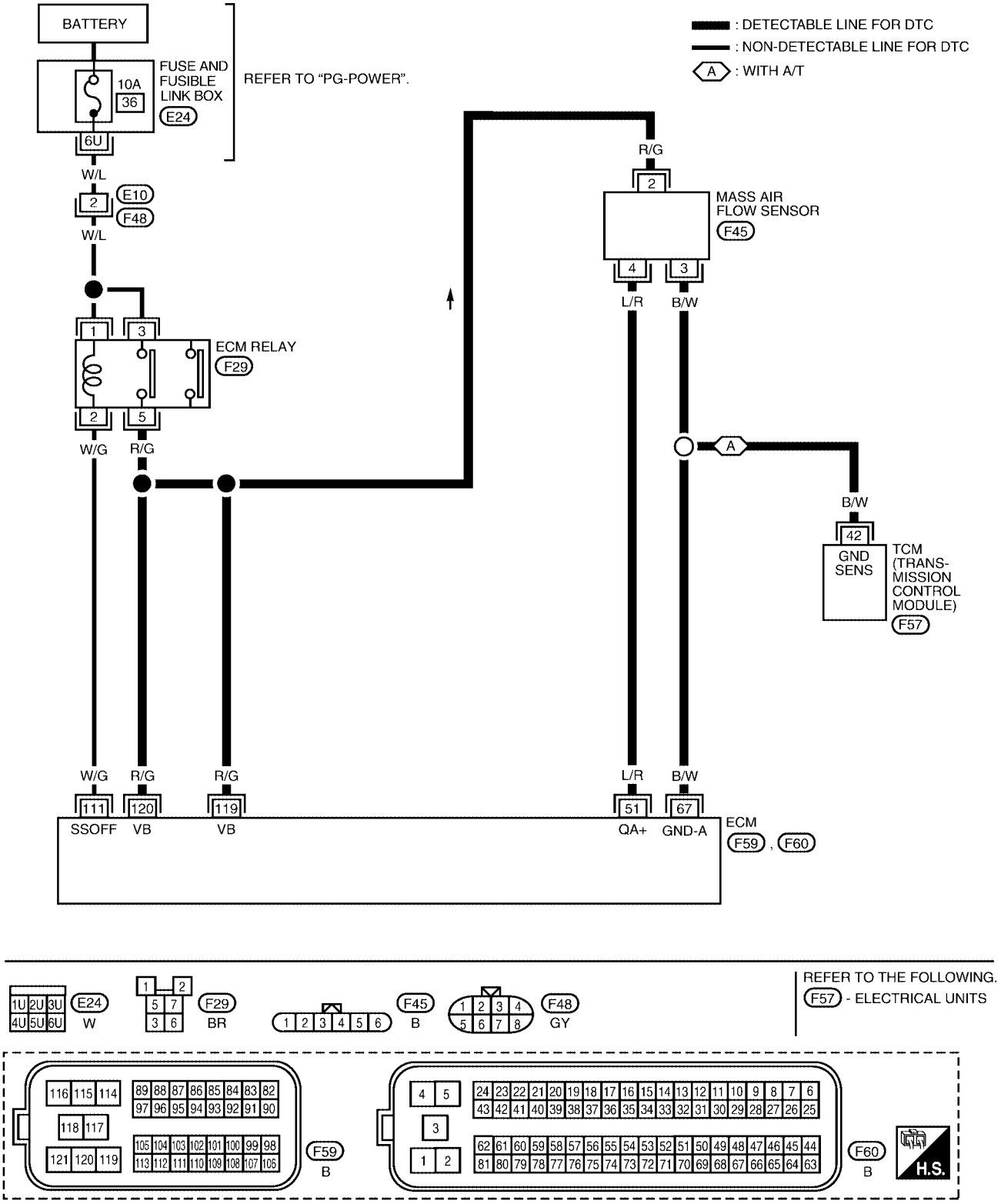

BBWA1424E

Specification data are reference values and are measured between each terminal and ground.

CAUTION:

Do not use ECM ground terminals when measuring input/output voltage. Doing so may result in damage to the ECM's transistor. Use a ground other than ECM terminals, such as the ground.

TERMINAL NO.	WIRE COLOR	ITEM	CONDITION	DATA (DC Voltage)
51	L/R	Mass air flow sensor	**[Engine is running]** ● **Warm-up condition** ● Idle speed	0.9 - 1.2V
			[Engine is running] ● **Warm-up condition** ● Engine speed is 2,500 rpm.	1.4 - 1.8V
67	B/W	Sensor ground	**[Engine is running]** ● **Warm-up condition** ● Idle speed	Approximately 0V
111	W/G	ECM relay (Self shut-off)	**[Engine is running]** **[Ignition switch: OFF]** ● For a few seconds after turning ignition switch OFF	0 - 1.0V
			[Ignition switch: OFF] ● More than a few seconds passed after turning ignition switch OFF	BATTERY VOLTAGE (11 - 14V)
119 120	R/G	Power supply for ECM	**[Ignition switch: ON]**	BATTERY VOLTAGE (11 - 14V)

Diagnostic Procedure

UBS00B4K

1. INSPECTION START

Which malfunction (P0102 or P0103) is duplicated?

P0102 or P0103

P0102 >> GO TO 2.
P0103 >> GO TO 3.

2. CHECK INTAKE SYSTEM

Check the following for connections.

- Air duct
- Vacuum hoses
- Intake air passage between air duct to manifold

OK or NG

OK >> GO TO 3.
NG >> Reconnect the parts.

3. CHECK GROUND CONNECTIONS

1. Turn ignition switch OFF.
2. Loosen and retighten two ground screws on the body. Refer to EC-171 .

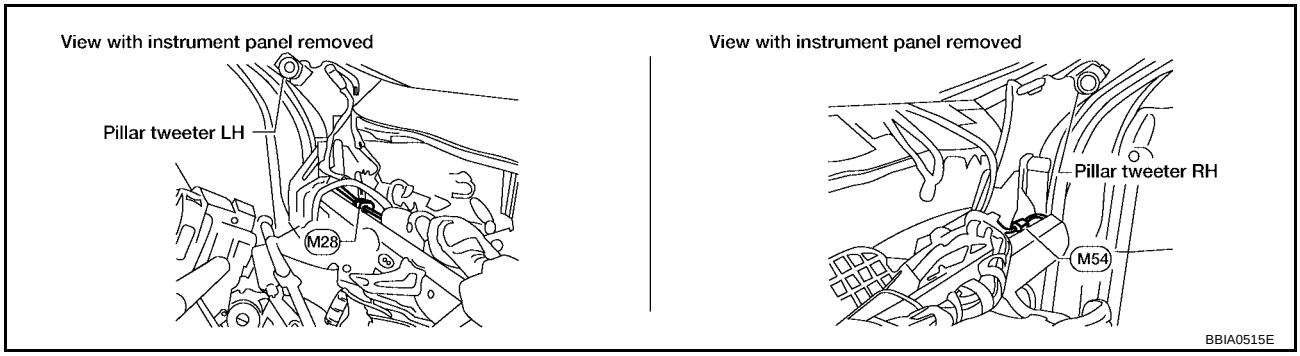

OK or NG

OK >> GO TO 4.
NG >> Repair or replace ground connections.

4. CHECK MAF SENSOR POWER SUPPLY CIRCUIT

1. Disconnect mass air flow sensor harness connector.
2. Turn ignition switch ON.

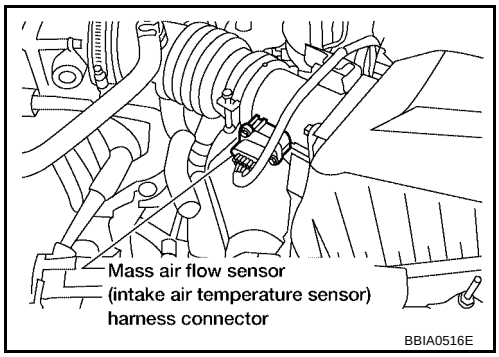

3. Check voltage between MAF terminals 2 and ground with CONSULT-II or tester.

Voltage : Battery voltage.

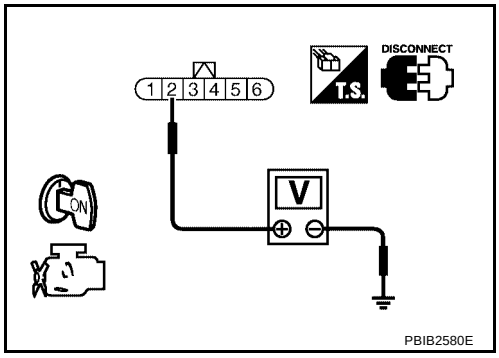

OK or NG

OK >> GO TO 6.
NG >> GO TO 5.

5. DETECT MALFUNCTIONING PART

Check the following.

- Harness for open or short between ECM relay and mass air flow sensor
- Harness for open or short between mass air flow sensor and ECM

>> Repair harness or connectors.

6. CHECK MAF SENSOR GROUND CIRCUIT FOR OPEN AND SHORT

1. Turn ignition switch OFF.
2. Disconnect ECM harness connector.
3. Disconnect TCM harness connector.
4. Check harness continuity between MAF sensor terminal 3 and ECM terminal 67, TCM terminal 42. Refer to Wiring Diagram.

   Continuity should exist.

5. Also check harness for short to ground and short to power.

OK or NG

OK >> GO TO 8.
NG >> GO TO 7.

7. DETECT MALFUNCTIONING PART

Check the following.

- Harness for open or short between mass air flow sensor and ECM
- Harness for open or short between mass air flow sensor and TCM

>> Repair open circuit or short to ground or short to power in harness or connectors.

8. CHECK MAF SENSOR INPUT SIGNAL CIRCUIT FOR POEN AND SHORT

1. Check harness continuity between MAF sensor terminal 4 and ECM terminal 51. Refer to Wiring Diagram.

   Continuity should exist.

2. Also check harness for short to ground and short to power.

OK or NG

OK >> GO TO 9.
NG >> Repair open circuit or short to ground or short to power in harness or connectors.

9. CHECK MASS AIR FLOW SENSOR

Refer to EC-207, "Component Inspection" .

OK or NG

OK >> GO TO 10.
NG >> Replace mass air flow sensor.

10. CHECK INTERMITTENT INCIDENT

Perform EC-164, "TROUBLE DIAGNOSIS FOR INTERMITTENT INCIDENT" .

>> **INSPECTION END**

Component Inspection

UBS00B4L

MASS AIR FLOW SENSOR

With CONSULT-II

1. Reconnect all harness connectors disconnected.
2. Start engine and warm it up to normal operating temperature.
3. Connect CONSULT-II and select “DATA MONITOR” mode.
4. Select “MAS A/F SE-B1” and check indication under the following conditions.

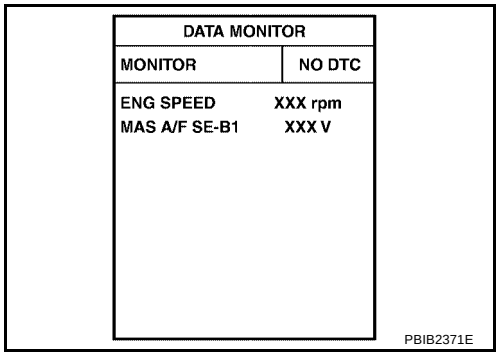

Condition	MAS A/F SE-B1 (V)
Ignition switch ON (Engine stopped.)	Approx 0.4
Idle (Engine is warmed-up to normal operating temperature.)	0.9 - 1.2
2,500 rpm (Engine is warmed-up to normal operating temperature.)	1.4 - 1.8
Idle to about 4,000 rpm*	0.9 - 1.2 to 2.4

*: Check for linear voltage rise in response to engine being increased to about 4,000 rpm.

5. If the voltage is out of specification, proceed the following.

a. Check for the cause of uneven air flow through mass air flow sensor. Refer to following.
   - Crushed air ducts
   - Malfunctioning seal of air cleaner element
   - Uneven dirt of air cleaner element
   - Improper specification of intake air system parts

b. If NG, repair or replace malfunctioning part and perform step 2 to 4 again.
   If OK, go to next step.

6. Turn ignition switch OFF.
7. Disconnect mass air flow sensor harness connector and reconnect it again.
8. Perform step 2 to 4 again.
9. If NG, clean or replace mass air flow sensor.

Without CONSULT-II

1. Reconnect all harness connectors disconnected.
2. Start engine and warm it up to normal operating temperature.
3. Check voltage between ECM terminal 51 (Mass air flow sensor signal) and ground.

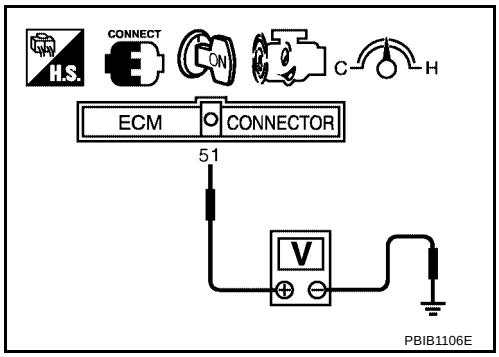

Condition	Voltage V
Ignition switch ON (Engine stopped.)	Approx 0.4
Idle (Engine is warmed-up to normal operating temperature.)	0.9 - 1.2
2,500 rpm (Engine is warmed-up to normal operating temperature.)	1.4 - 1.8
Idle to about 4,000 rpm*	0.9 - 1.2 to 2.4

*: Check for linear voltage rise in response to engine being increased to about 4,000 rpm.

4. If the voltage is out of specification, proceed the following.

a. Check for the cause of uneven air flow through mass air flow sensor. Refer to following.
   - Crushed air ducts
   - Malfunctioning seal of air cleaner element
   - Uneven dirt of air cleaner element
   - Improper specification of intake air system parts

b. If NG, repair or replace malfunctioning part and perform step 2 to 4 again.
If OK, go to next step.

5. Turn ignition switch OFF.
6. Disconnect mass air flow sensor harness connector and reconnect it again.
7. Perform step 2 and 3 again.
8. If NG, clean or replace mass air flow sensor.

DTC P0112, P0113 IAT SENSOR

PFP:22630

Component Description

UBS00B4M

The intake air temperature sensor is built-into mass air flow sensor. The sensor detects intake air temperature and transmits a signal to the ECM.
The temperature sensing unit uses a thermistor which is sensitive to the change in temperature. Electrical resistance of the thermistor decreases in response to the temperature rise.

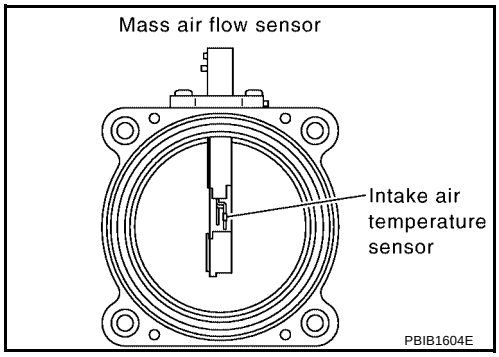

<Reference data>

Intake air temperature °C (°F)	Voltage* V	Resistance kΩ
-10(14)	4.43	7.9 - 9.3
25 (77)	3.32	1.9 - 2.1
80 (176)	1.23	0.31 - 0.37

*: These data are reference values and are measured between ECM terminal 34 (Intake air temperature sensor) and ground.

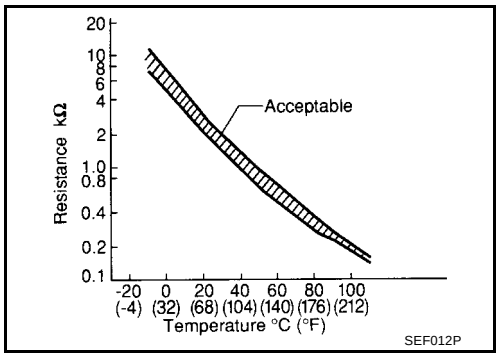

CAUTION:
Do not use ECM ground terminals when measuring input/output voltage. Doing so may result in damage to the ECM's transistor. Use a ground other than ECM terminals, such as the ground.

On Board Diagnosis Logic

UBS00B4N

DTC No.	Trouble diagnosis name	DTC detecting condition	Possible cause
P0112 0112	Intake air temperature sensor circuit low input	An excessively low voltage from the sensor is sent to ECM.	● Harness or connectors (The sensor circuit is open or shorted.) ● Intake air temperature sensor
P0113 0113	Intake air temperature sensor circuit high input	An excessively high voltage from the sensor is sent to ECM.	

DTC Confirmation Procedure

UBS00B4O

NOTE:
If DTC Confirmation Procedure has been previously conducted, always turn ignition switch OFF and wait at least 10 seconds before conducting the next test.

WITH CONSULT-II

1. Turn ignition switch ON.
2. Select “DATA MONITOR” mode with CONSULT-II.
3. Wait at least 5 seconds.
4. If 1st trip DTC is detected, go to EC-206, "Diagnostic Procedure"
.

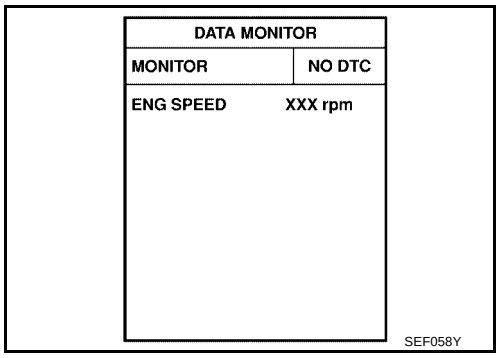

WITH GST

Follow the procedure “With CONSULT-II” above.

Wiring Diagram

UBS00B4P

EC-IATS-01

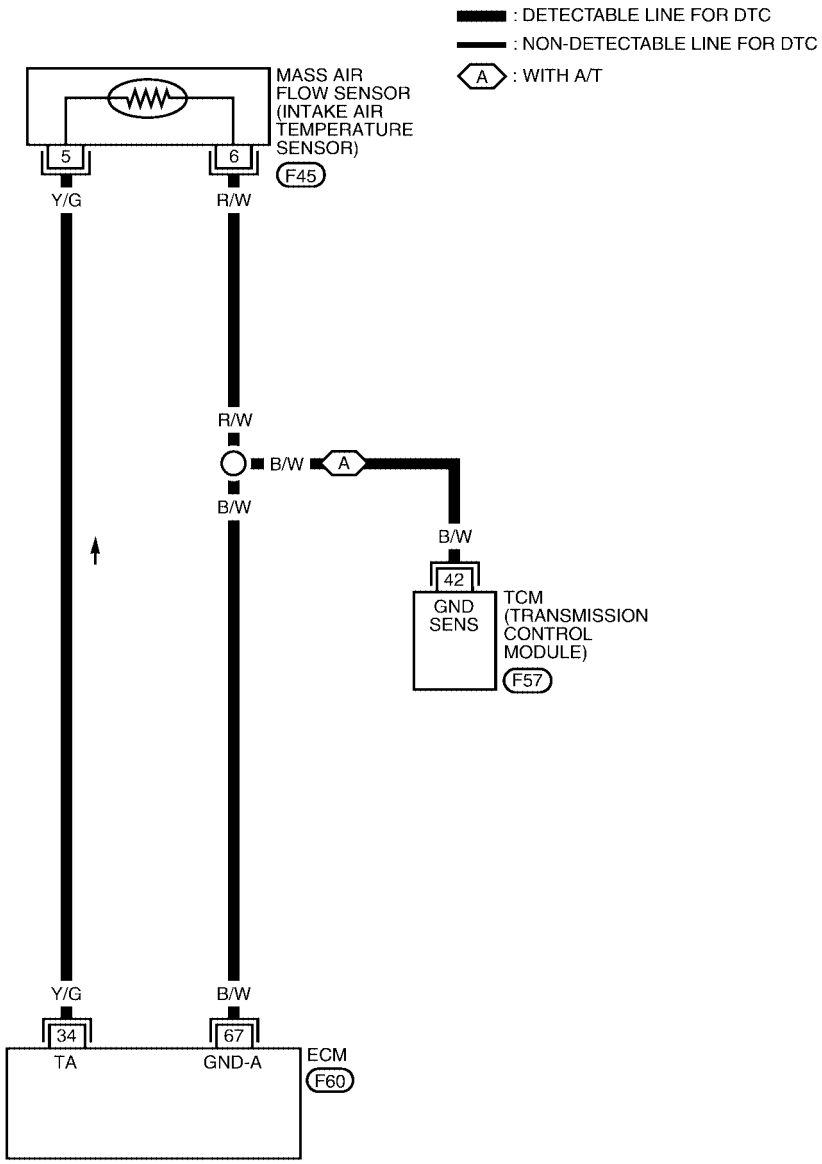

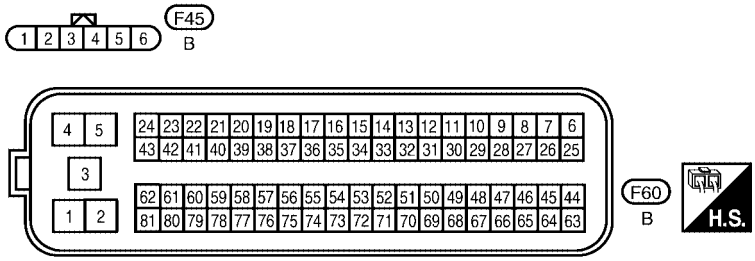

REFER TO THE FOLLOWING.
F57 - ELECTRICAL UNITS

BBWA1425E

Diagnostic Procedure

UBS00B4Q

1. CHECK INTAKE AIR TEMPERATURE SENSOR POWER SUPPLY

1. Turn ignition switch OFF.
2. Disconnect mass air flow sensor (intake air temperature sensor is built-into) sensor harness connector.
3. Turn ignition switch ON.

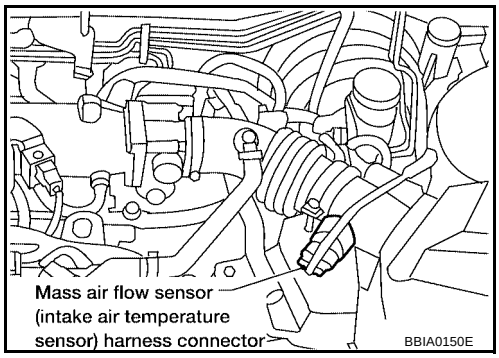

4. Check voltage between mass air flow sensor terminal 5 and ground with CONSULT-II or tester.

Voltage: Approximately 5V

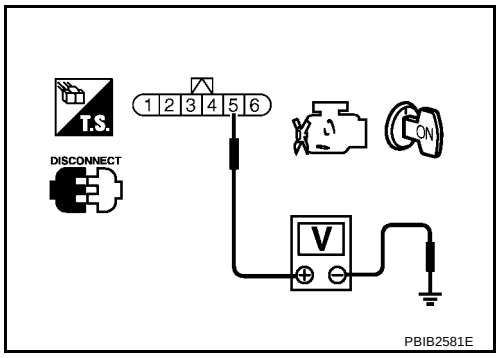

OK or NG

OK >> GO TO 3.
NG >> Repair open circuit or short to ground or short to power in harness or connectors.

2. CHECK INTAKE AIR TEMPERATURE SENSOR GROUND CIRCUIT FOR OPEN AND SHORT

1. Turn ignition switch OFF.
2. Disconnect ECM harness connector.
3. Disconnect TCM harness connector.
4. Check harness continuity between mass air flow sensor terminal 6 and ECM terminal 67, TCM terminal 42.
   Refer to wiring diagram.

Continuity should exist.

5. Also check harness for short to ground and short to power.

OK or NG

OK >> GO TO 4.
NG >> GO TO 3.

3. DETECT MALFUNCTIONING PART

Check the following.

- Harness for open or short between TCM and intake air temperature sensor
- Harness for open or short between ECM and intake air temperature sensor

>> Repair open circuit or short to ground or short to power in harness or connectors.

4. CHECK INTAKE AIR TEMPERATURE SENSOR

Refer to EC-207, "Component Inspection" .

OK or NG

OK >> GO TO 5.
NG >> Replace mass air flow sensor with intake air temperature sensor.

5. CHECK INTERMITTENT INCIDENT

Perform EC-164, "TROUBLE DIAGNOSIS FOR INTERMITTENT INCIDENT" .

>> **INSPECTION END**

Component Inspection

UBS00B4R

INTAKE AIR TEMPERATURE SENSOR

1. Check resistance between intake air temperature sensor terminals 5 and 6 under the following conditions.

Intake air temperature °C (°F)	Resistance kΩ
25 (77)	1.9 - 2.1

2. If NG, replace mass air flow sensor (with intake air temperature sensor).

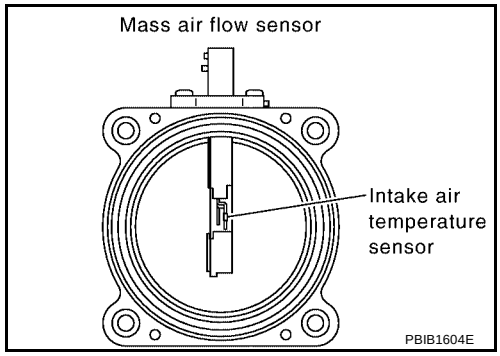

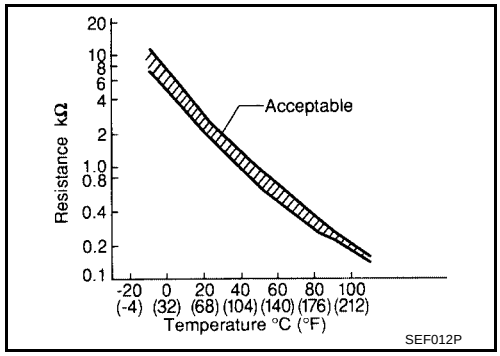

DTC P0117, P0118 ECT SENSOR

PFP:22630

Component Description

UBS00B4S

The engine coolant temperature sensor is used to detect the engine coolant temperature. The sensor modifies a voltage signal from the ECM. The modified signal returns to the ECM as the engine coolant temperature input. The sensor uses a thermistor which is sensitive to the change in temperature. The electrical resistance of the thermistor decreases as temperature increases.

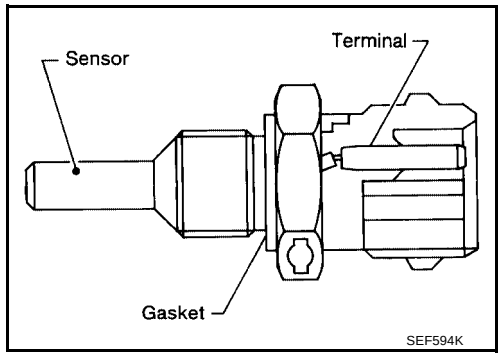

<Reference data>

Engine coolant temperature °C (°F)	Voltage* V	Resistance kΩ
20 (68)	3.5	2.1 - 2.9
50 (122)	2.2	0.68 - 1.00
90 (194)	0.9	0.236 - 0.260

*: These data are reference values and are measured between ECM terminal 73 (Engine coolant temperature sensor) and ground.

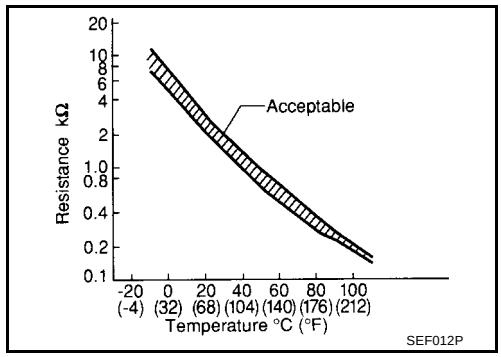

CAUTION:

Do not use ECM ground terminals when measuring input/output voltage. Doing so may damage the ECM's transistor. Use ground other than ECM, such as body ground.

On Board Diagnosis Logic

UBS00B4T

These self-diagnoses have the one trip detection logic.

DTC No.	Trouble Diagnosis Name	DTC Detecting Condition	Possible Cause
P0117 0117	Engine coolant temperature sensor circuit low input	An excessively low voltage from the sensor is sent to ECM.	● Harness or connectors (The sensor circuit is open or shorted.) ● Engine coolant temperature sensor
P0118 0118	Engine coolant temperature sensor circuit high input	An excessively high voltage from the sensor is sent to ECM.	

FAIL-SAFE MODE

When the malfunction is detected, the ECM enters fail-safe mode and the MIL lights up.

Detected items	Engine operating condition in fail-safe mode	
Engine coolant temperature sensor circuit	Engine coolant temperature will be determined by ECM based on the time after turning ignition switch ON or START. CONSULT-II displays the engine coolant temperature decided by ECM.	
	Condition	Engine coolant temperature decided (CONSULT-II display)
	Just as ignition switch is turned ON or Start	40°C (104°F)
	More than approx. 4 minutes after ignition ON or Start	80°C (176°F)
	Except as shown above	40 - 80°C (104 - 176°F) (Depends on the time)
	When the fail-safe system for engine coolant temperature sensor is activated, the cooling fan operates while the engine is running.	

DTC Confirmation Procedure

UBS00B4U

NOTE:
If DTC Confirmation Procedure has been previously conducted, always turn ignition switch OFF and wait at least 10 seconds before conducting the next test.

WITH CONSULT-II

1. Turn ignition switch ON.
2. Select “DATA MONITOR” mode with CONSULT-II.
3. Wait at least 5 seconds.
4. If DTC is detected, go to EC-211, "Diagnostic Procedure" .

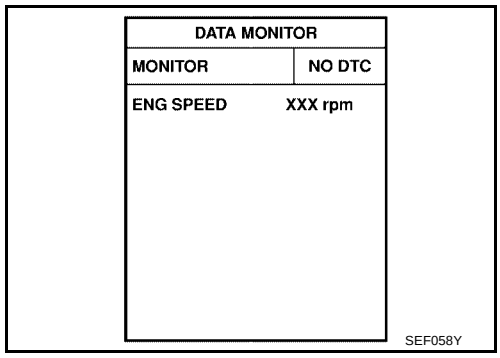

WITH GST

Follow the procedure “WITH CONSULT-II” above.

Wiring Diagram

UBS00B4V

EC-ECTS-01

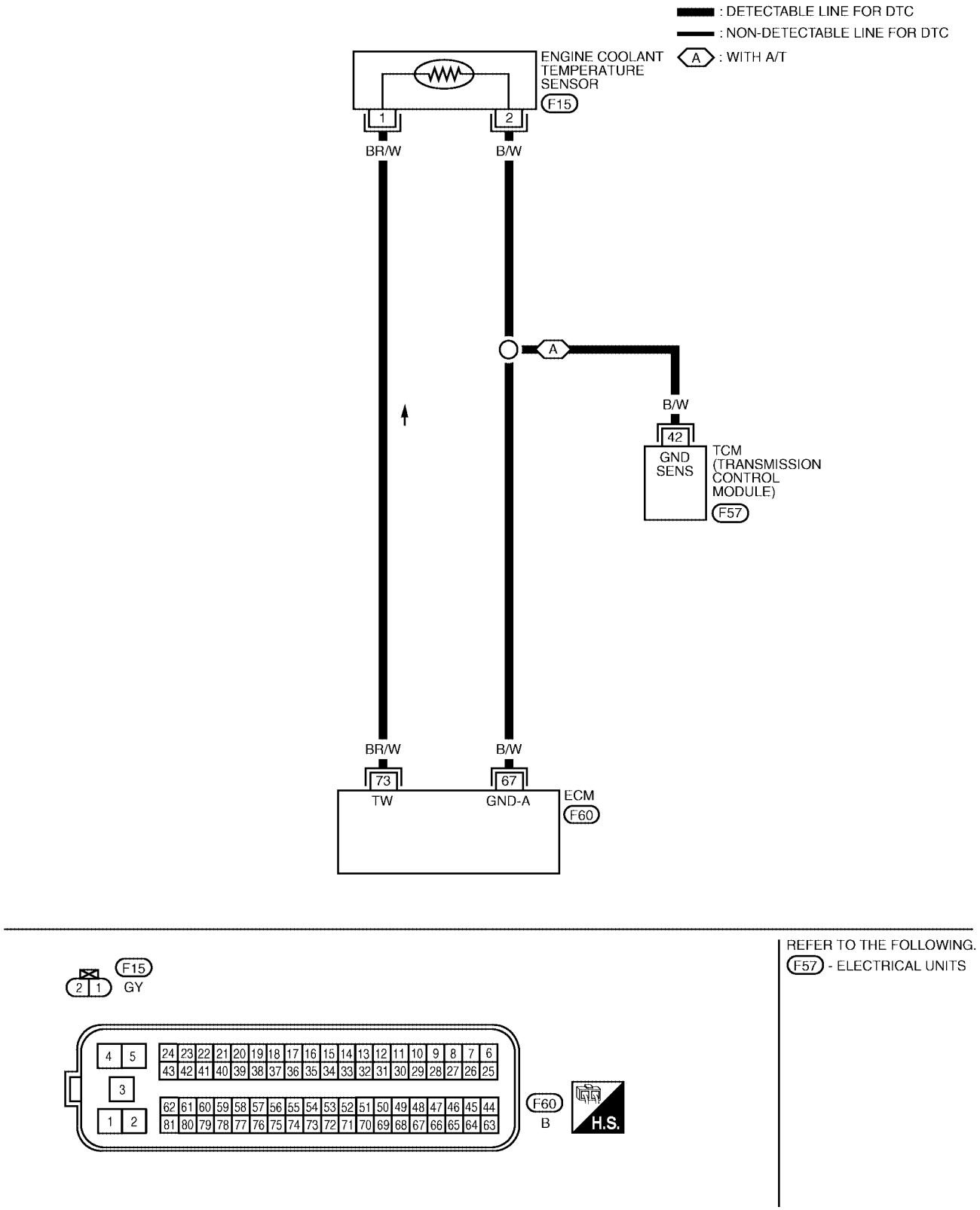

Diagnostic Procedure

UBS00B4W

1. CHECK ETC SENSOR POWER SUPPLY CIRCUIT

1. Turn ignition switch OFF.
2. Disconnect engine coolant temperature (ECT) sensor harness connector.
3. Turn ignition switch ON.

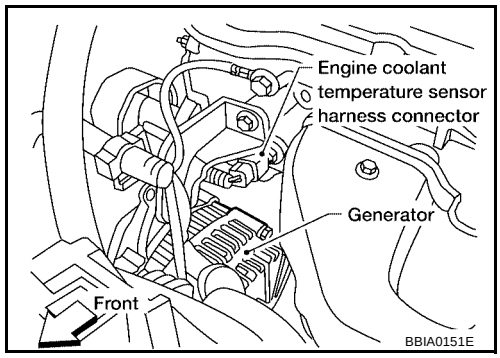

4. Check voltage between ECT terminal 1 and ground with CONSULT-II or tester.

Voltage: Approximately 5V

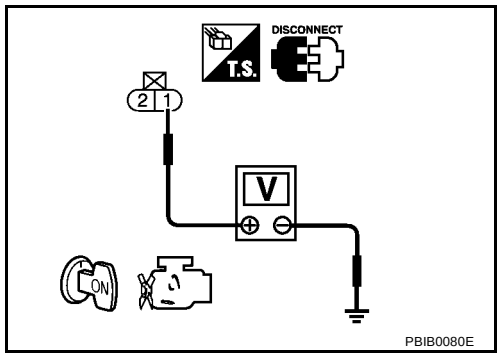

OK or NG

OK >> GO TO 2.
NG >> Repair open circuit or short to ground or short to power in harness or connectors.

2. CHECK ETC SENSOR GROUND CIRCUIT FOR OPEN AND SHORRT

1. Turn ignition switch OFF.
2. Disconnect ECM harness connector.
3. Disconnect TCM harness connector.
4. Check harness continuity between ECT sensor terminal 2 and ECM terminal 67, TCM terminal 42. Refer to wiring diagram.

Continuity should exist.

5. Also check harness for short to ground and short to power.

OK or NG

OK >> GO TO 4.
NG >> GO TO 3.

3. DETECT MALFUNCTIONING PART

Check the following.

- Harness for open or short between ECT sensor and ECM
- Harness for open or short between ECT sensor and TCM

>> Repair open circuit or short to ground or short to power in harness or connectors.

4. CHECK ENGINE COOLANT TEMPERATURE SENSOR

Refer to EC-212, "Component Inspection" .

OK or NG

OK >> GO TO 5.
NG >> Replace ECT sensor.

5. CHECK INTERMITTENT INCIDENT

Perform EC-164, "TROUBLE DIAGNOSIS FOR INTERMITTENT INCIDENT" .

>> **INSPECTION END**

Component Inspection

UBS00B4X

ENGINE COOLANT TEMPERATURE SENSOR

1. Check resistance between engine coolant temperature sensor terminals 1 and 2 as shown in the figure.

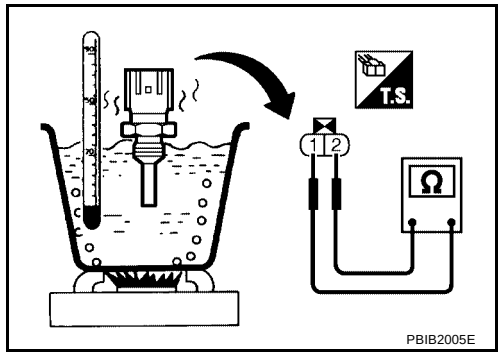

<Reference data>

Engine coolant temperature °C (°F)	Voltage* V	Resistance kΩ
20 (68)	3.5	2.1 - 2.9
50 (122)	2.2	0.68 - 1.00
90 (194)	0.9	0.236 - 0.260

*: These data are reference values and are measured between ECM terminal 73 (Engine coolant temperature sensor) and ground.

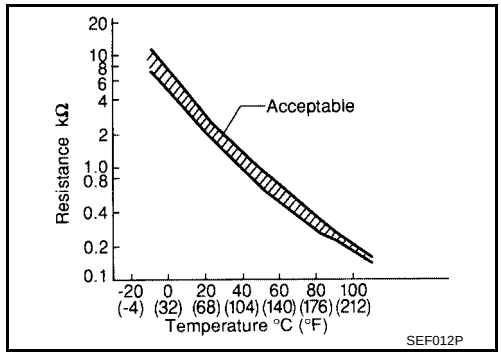

2. If NG, replace engine coolant temperature sensor.

Removal and Installation

UBS00B4Y

ENGINE COOLANT TEMPERATURE SENSOR

Refer to EM-15, "OUTER COMPONENT PARTS" .

DTC P0122, P0123 TP SENSOR

PFP:16119

Component Description

UBS00B4Z

Electric throttle control actuator consists of throttle control motor, throttle position sensor, etc. The throttle position sensor responds to the throttle valve movement.
The throttle position sensor has the two sensors. These sensors are a kind of potentiometers which transform the throttle valve position into output voltage, and emit the voltage signal to the ECM. In addition, these sensors detect the opening and closing speed of the throttle valve and feed the voltage signals to the ECM. The ECM judges the current opening angle of the throttle valve from these signals and the ECM controls the throttle control motor to make the throttle valve opening angle properly in response to driving condition.

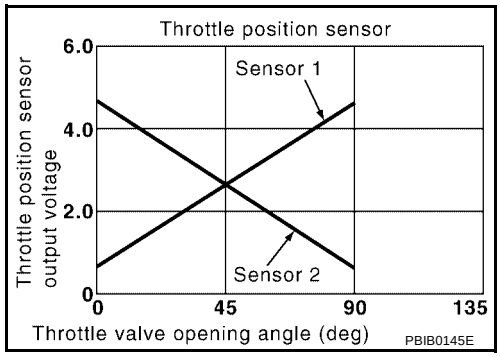

CONSULT-II Reference Value in Data Monitor Mode

UBS00B50

Specification data are reference values.

MONITOR ITEM	CONDITION		SPECIFICATION
THRTL SEN 1 THRTL SEN 2*	● Ignition switch: ON (Engine stopped) ● Shift lever: D (A/T), 1st (M/T)	Accelerator pedal: Fully released	More than 0.36V
		Accelerator pedal: Fully depressed	Less than 4.75V

*: Throttle position sensor 2 signal is converted by ECM internally. Thus, it differs from ECM terminal voltage signal.

On Board Diagnosis Logic

UBS00B51

These self-diagnoses have the one trip detection logic.

DTC No.	Trouble diagnosis name	DTC detecting condition	Possible cause
P0122 0122	Throttle position sensor 2 circuit low input	An excessively low voltage from the TP sensor 2 is sent to ECM.	● Harness or connectors (The TP sensor 2 circuit is open or shorted.) (APP sensor 2 circuit is shorted.) ● Electric throttle control actuator (TP sensor 2) Accelerator pedal position sensor.
P0123 0123	Throttle position sensor 2 circuit high input	An excessively high voltage from the TP sensor 2 is sent to ECM.	

FAIL-SAFE MODE

When the malfunction is detected, the ECM enters fail-safe mode and the MIL lights up.

Engine operation condition in fail-safe mode
The ECM controls the electric throttle control actuator in regulating the throttle opening in order for the idle position to be within +10 degrees. The ECM regulates the opening speed of the throttle valve to be slower than the normal condition. So, the acceleration will be poor.

DTC Confirmation Procedure

UBS00B52

NOTE:
If DTC Confirmation Procedure has been previously conducted, always turn ignition switch OFF and wait at least 10 seconds before conducting the next test.
TESTING CONDITION:
Before performing the following procedure, confirm that battery voltage is more than 10V at idle.

WITH CONSULT-II

1. Turn ignition switch ON.
2. Select “DATA MONITOR” mode with CONSULT-II.
3. Start engine and let it idle for 1 second.
4. If DTC is detected, go toEC-216, "Diagnostic Procedure" .

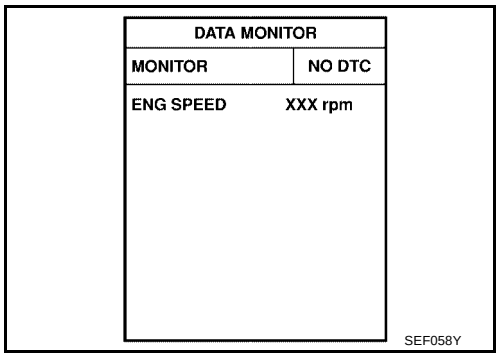

WITH GST

Follow the procedure “WITH CONSULT-II” above.

Wiring Diagram

UBS00B53

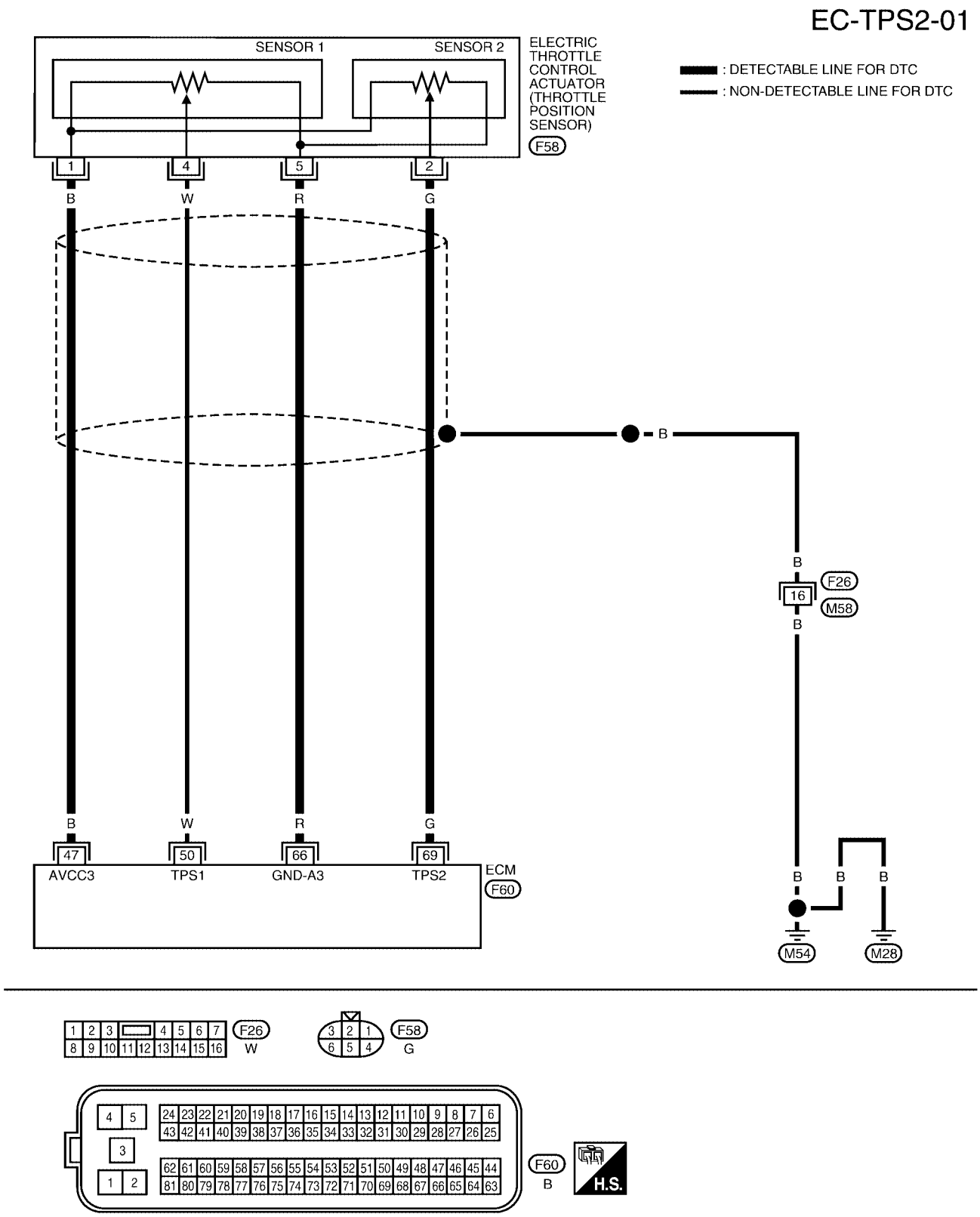

Specification data are reference values and are measured between each terminal and ground.

CAUTION:

Do not use ECM ground terminals when measuring input/output voltage. Doing so may result in damage to the ECM's transistor. Use a ground other than ECM terminals, such as the ground.

TERMINAL NO.	WIRE COLOR	ITEM	CONDITION	DATA (DC Voltage)
47	B	Sensor power supply (Throttle position sensor)	**[Ignition switch: ON]**	Approximately 5V
50	W	Throttle position sensor 1	**[Ignition switch: ON]** ● Engine stopped ● Shift lever: D (A/T), 1st (M/T) ● Accelerator pedal: Fully released	More than 0.36V
			[Ignition switch: ON] ● Engine stopped ● Shift lever: D (A/T), 1st (M/T) ● Accelerator pedal: Fully depressed	Less than 4.75V
66	R	Sensor ground (Throttle position sensor)	**[Engine is running]** ● **Warm-up condition** ● Idle speed	Approximately 0V
69	G	Throttle position sensor 2	**[Ignition switch: ON]** ● Engine stopped ● Shift lever: D (A/T), 1st (M/T) ● Accelerator pedal: Fully released	Less than 4.75V
			[Ignition switch: ON] ● Engine stopped ● Shift lever: D (A/T), 1st (M/T) ● Accelerator pedal: Fully depressed	More than 0.36V
91	R/G	Sensor power supply (Accelerator pedal position sensor 2)	**[Ignition switch: ON]**	Approximately 5V

Diagnostic Procedure

UBS00B54

1. CHECK GROUND CONNECTIONS

1. Turn ignition switch OFF.
2. Loosen and retighten two ground screws on the body. Refer to EC-171 .

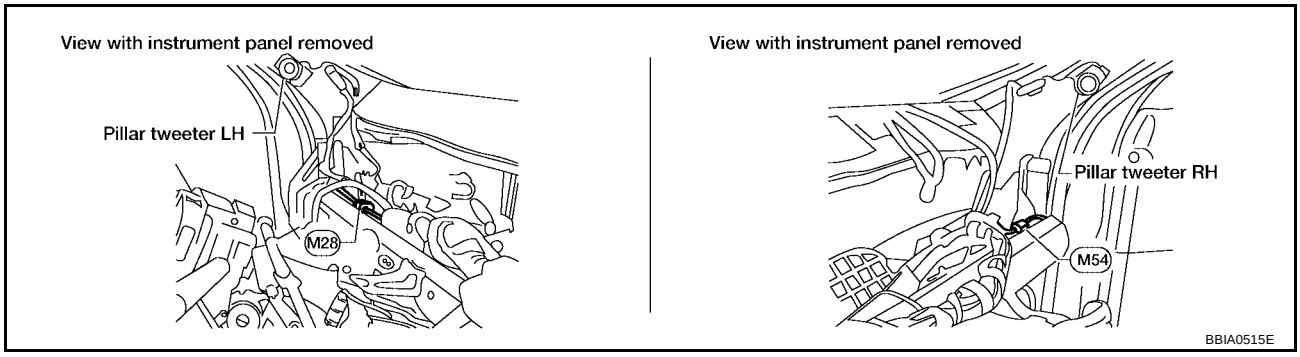

OK or NG

OK >> GO TO 2.
NG >> Repair or replace ground connections.

2. CHECK THROTTLE POSITION SENSOR 2 POWER SUPPLY CIRCUIT-I

1. Disconnect electric throttle control actuator harness connector.
2. Turn ignition switch ON.

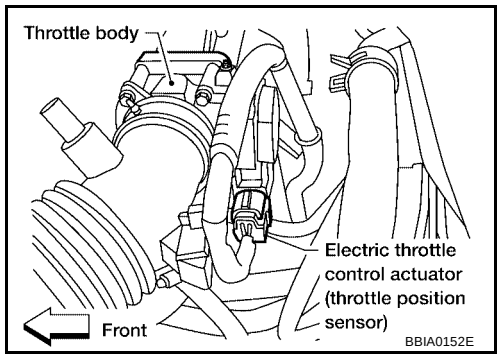

3. Check voltage between electric throttle control actuator terminal 1 and ground with CONSULT-II or tester.

Voltage: Approximately 5V

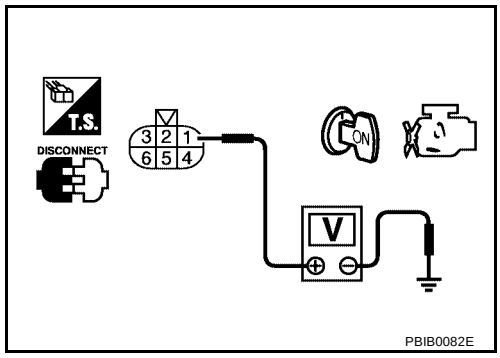

OK or NG

OK >> GO TO 7.
NG >> GO TO 3.

3. CHECK THROTTLE POSITION SENSOR 2 POWER SUPPLY CIRCUIT-II

1. Turn ignition switch OFF.
2. Disconnect ECM harness connector.
3. Check harness continuity between electric throttle control actuator terminal 1 and ECM terminal 47. Refer to Wiring Diagram.

Continuity should exist.

OK or NG

OK >> GO TO 4.
NG >> Repair or replace open circuit.

4. CHECK THROTTLE POSITION SENSOR 2 POWER SUPPLY CIRCUIT-III

Check harness for short to power and short to ground, between the following terminals.

ECM terminal	Sensor terminal	Reference Wiring Diagram
47	Electric throttle control actuator terminal 1	EC-398
91	APP sensor terminal 1	EC-573

OK or NG

OK >> GO TO 5.
NG >> Repair short to ground or short to power in harness or connectors.

5. CHECK APP SENSOR

Refer to EC-579, "Component Inspection"

OK or NG

OK >> GO TO 11.
NG >> GO TO 6.

6. REPLACE ACCELERATOR PEDAL ASSEMBLY

1. Replace accelerator pedal assembly.
2. Perform EC-92, "Accelerator Pedal Released Position Learning" .
3. Perform EC-92, "Throttle Valve Closed Position Learning" .
4. Perform EC-92, "Idle Air Volume Learning" .

>> **INSPECTION END**

7. CHECK THROTTLE POSITION SENSOR 2 GROUND CIRCUIT FOR OPEN AND SHORT

1. Turn ignition switch OFF.
2. Disconnect ECM harness connector.
3. Check harness continuity between ECM terminal 66 and electric throttle control actuator terminal 5. Refer to Wiring Diagram.

Continuity should exist.

4. Also check harness for short to ground and short to power.

OK or NG

OK >> GO TO 8.
NG >> Repair open circuit or short to ground or short to power in harness or connectors.

8. CHECK THROTTLE POSITION SENSOR 2 INPUT SIGNAL CIRCUIT FOR OPEN AND SHORT

1. Check harness continuity between ECM terminal 69 and electric throttle control actuator terminal 2. Refer to Wiring Diagram.

Continuity should exist.

2. Also check harness for short to ground and short to power.

OK or NG

OK >> GO TO 9.
NG >> Repair open circuit or short to ground or short to power in harness or connectors.

9. CHECK THROTTLE POSITION SENSOR

Refer to EC-219, "Component Inspection" .

OK or NG

OK >> GO TO 11.
NG >> GO TO 10.

10. REPLACE ELECTRIC THROTTLE CONTROL ACTUATOR

1. Replace the electric throttle control actuator.
2. Perform EC-92, "Throttle Valve Closed Position Learning" .
3. Perform EC-92, "Idle Air Volume Learning" .

>> **INSPECTION END**

11. CHECK INTERMITTENT INCIDENT

Refer to EC-164, "TROUBLE DIAGNOSIS FOR INTERMITTENT INCIDENT" .

>> **INSPECTION END**

Component Inspection

UBS00B55

THROTTLE POSITION SENSOR

1. Reconnect all harness connectors disconnected.
2. Perform EC-92, "Throttle Valve Closed Position Learning" .
3. Turn ignition switch ON.
4. Set selector lever to D position (A/T models) or 1st position (M/T models).
5. Check voltage between ECM terminals 50 (TP sensor 1 signal), 69 (TP sensor 2 signal) and ground under the following conditions.

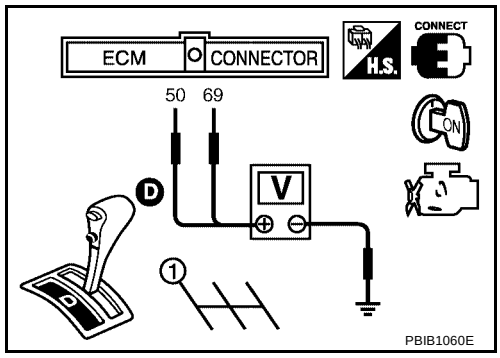

Terminal	Accelerator pedal	Voltage
50 (Throttle position sensor 1)	Fully released	More than 0.36V
	Fully depressed	Less than 4.75V
69 (Throttle position sensor 2)	Fully released	Less than 4.75V
	Fully depressed	More than 0.36V

6. If NG, replace electric throttle control actuator and go to the next step.
7. Perform EC-92, "Throttle Valve Closed Position Learning" .
8. Perform EC-92, "Idle Air Volume Learning" .

Remove and Installation

UBS00B56

ELECTRIC THROTTLE CONTROL ACTUATOR

Refer to EM-15, "Removal and Installation" .

DTC P0125 ECT SENSOR

PFP:22630

Component Description

UBS00B57

NOTE:
If DTC P0125 is displayed with P0117, P0118, first perform trouble diagnosis for EC-208, "DTC P0117, P0118 ECT SENSOR" .
The engine coolant temperature sensor is used to detect the engine coolant temperature. The sensor modifies a voltage signal from the ECM. The modified signal returns to the ECM as the engine coolant temperature input. The sensor uses a thermistor which is sensitive to the change in temperature. The electrical resistance of the thermistor decreases as temperature increases.

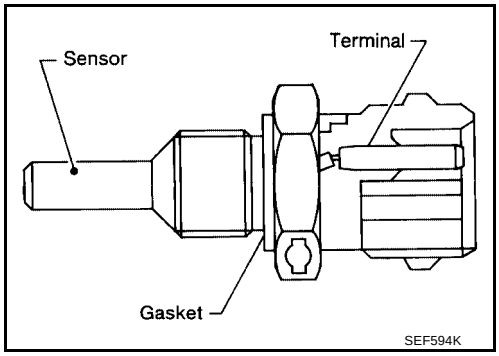

<Reference data>

Engine coolant temperature °C (°F)	Voltage* V	Resistance kΩ
20 (68)	3.5	2.1 - 2.9
50 (122)	2.2	0.68 - 1.00
90 (194)	0.9	0.236 - 0.260

*: These data are reference values and are measured between ECM terminal 73 (Engine coolant temperature sensor) and ground.

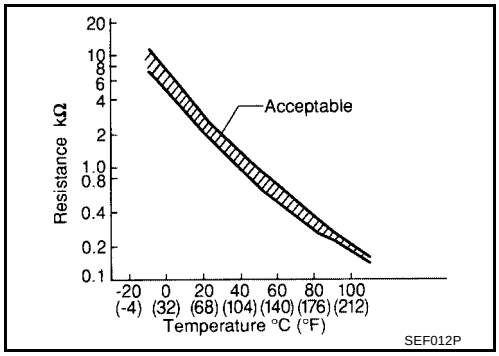

CAUTION:
Do not use ECM ground terminals when measuring input/output voltage. Doing so may damage the ECM's transistor. Use ground other than ECM, such as body ground.

On Board Diagnosis Logic

UBS00B58

This self-diagnosis has the one trip detection logic.

DTC No.	Trouble diagnosis name	DTC detecting condition	Possible cause
P0125 0125	Insufficient engine coolant temperature for closed loop fuel control	● Voltage sent to ECM from the sensor is not practical, even when some time has passed after starting the engine. ● Engine coolant temperature is insufficient for closed loop fuel control.	● Harness or connectors (High resistance in the circuit) ● Engine coolant temperature sensor ● Thermostat

DTC Confirmation Procedure

UBS00B59

CAUTION:
Be careful not to overheat engine.

NOTE:
If DTC Confirmation Procedure has been previously conducted, always turn ignition switch OFF and wait at least 10 seconds before conducting the next test.

WITH CONSULT-II

1. Turn ignition switch ON.
2. Select “DATA MONITOR” mode with CONSULT-II.
3. Check that “COOLAN TEMP/S” is above 10°C (50°F).
   If it is above 10°C (50°F), the test result will be OK. If it is below 10°C (50°F), go to following step.
4. Start engine and run it for 65 minutes at idle speed.
   If “COOLAN TEMP/S” increases to more than 10°C (50°F) within 65 minutes, stop engine because the test result will be OK.
5. If DTC is detected, go to EC-221, "Diagnostic Procedure" .

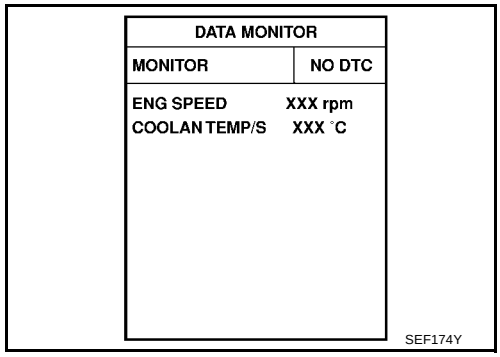

WITH GST

Follow the procedure “WITH CONSULT-II” above.

Diagnostic Procedure

UBS00B5A

1. CHECK GROUND CONNECTIONS

1. Turn ignition switch OFF.
2. Loosen and retighten two ground screws on the body. Refer to EC-171 .

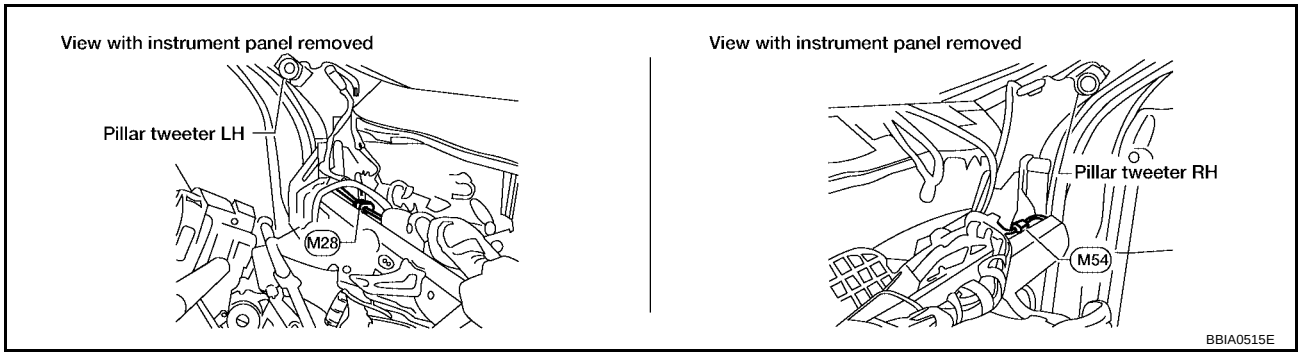

OK or NG

OK >> GO TO 2.
NG >> Repair or replace ground connections.

2. CHECK ENGINE COOLANT TEMPERATURE SENSOR

Refer to EC-222, "Component Inspection" .

OK or NG

OK >> GO TO 3.
NG >> Replace engine coolant temperature sensor.

3. CHECK THERMOSTAT OPERATION

When the engine is cooled [lower than 75°C (167°F)], grasp lower radiator hose and confirm the engine coolant does not flow.

OK or NG

OK >> GO TO 4.
NG >> Repair or replace thermostat. Refer to CO-12, "THERMOSTAT AND THERMOSTAT HOUSING" .

4. CHECK INTERMITTENT INCIDENT

Perform EC-164, "TROUBLE DIAGNOSIS FOR INTERMITTENT INCIDENT" .

>> **INSPECTION END**

Component Inspection

UBS00B5B

ENGINE COOLANT TEMPERATURE SENSOR

Check resistance as shown in the figure.

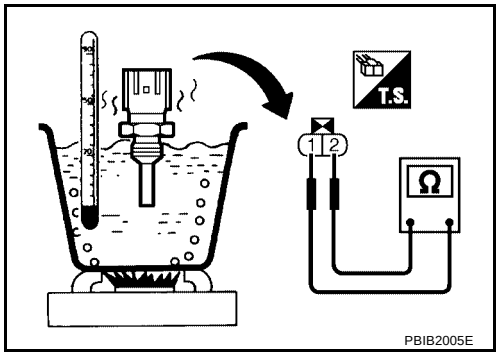

<Reference data>

Temperature °C (°F)	Resistance kΩ
20 (68)	2.1 - 2.9
50 (122)	0.68 - 1.0
90 (194)	0.236 - 0.260

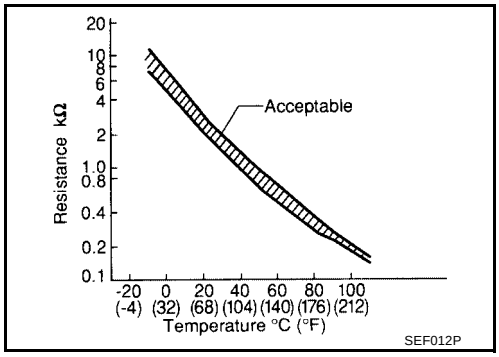

If NG, replace engine coolant temperature sensor.

Removal and Installation

UBS00B5C

ENGINE COOLANT TEMPERATURE SENSOR

Refer to EM-15, "OUTER COMPONENT PARTS" .

DTC P0127 IAT SENSOR

PFP:22630

Component Description

UBS00B5D

The intake air temperature sensor is built into mass air flow sensor. The sensor detects intake air temperature and transmits a signal to the ECM.
The temperature sensing unit uses a thermistor which is sensitive to the change in temperature. Electrical resistance of the thermistor decreases in response to the temperature rise.

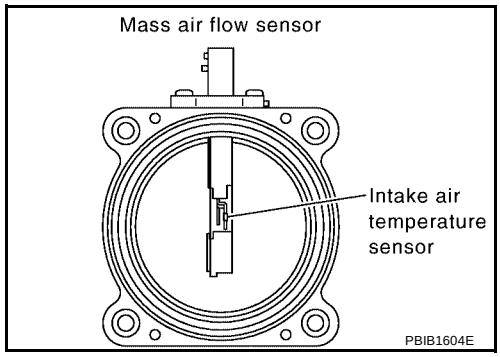

<Reference data>

Intake air temperature °C (°F)	Voltage* V	Resistance kΩ
–10 (14)	4.43	7.9 - 9.3
25 (77)	3.32	1.9 - 2.1
80 (176)	1.23	0.31 - 0.37

*: These data are reference values and are measured between ECM terminal 34 (Intake air temperature sensor) and ground.

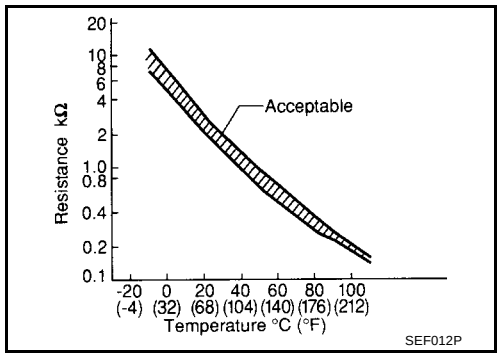

CAUTION:
Do not use ECM ground terminals when measuring input/output voltage. Doing so may result in damage to the ECM's transistor. Use a ground other than ECM terminals, such as the ground.

On Board Diagnosis Logic

UBS00B5E

DTC No.	Trouble diagnosis name	DTC detecting condition	Possible cause
P0127 0127	Intake air temperature too high	Rationally incorrect voltage from the sensor is sent to ECM, compared with the voltage signal from engine coolant temperature sensor.	● Harness or connectors (The sensor circuit is open or shorted) ● Intake air temperature sensor

DTC Confirmation Procedure

UBS00B5F

NOTE:
If DTC Confirmation Procedure has been previously conducted, always turn ignition switch OFF and wait at least 10 seconds before conducting the next test.

CAUTION:
Always drive vehicle at a safe speed.
TESTING CONDITION:
This test may be conducted with the drive wheels lifted in the shop or by driving the vehicle. If a road test is expected to be easier, it is unnecessary to lift the vehicle.

WITH CONSULT-II

1. Wait until engine coolant temperature is less than 90°C (194°F)

a. Turn ignition switch ON.

b. Select “DATA MONITOR” mode with CONSULT-II.

c. Check the engine coolant temperature.

d. If the engine coolant temperature is not less than 90°C (194°F), turn ignition switch OFF and cool down engine.
   - Perform the following steps before engine coolant temperature is above 90°C (194°F).

2. Turn ignition switch ON.
3. Select “DATA MONITOR” mode with CONSULT-II.
4. Start engine.
5. Hold vehicle speed at more than 70 km/h (43 MPH) for 100 consecutive seconds.
6. If 1st trip DTC is detected, go to EC-224, "Diagnostic Procedure" .

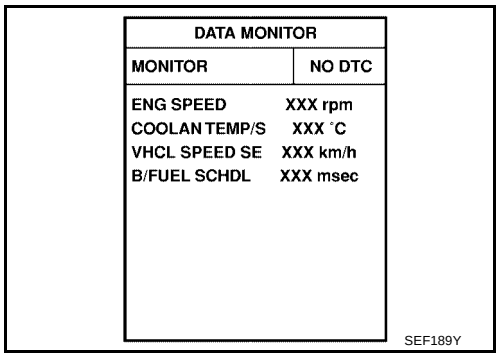

WITH GST

Follow the procedure “WITH CONSULT-II” above.

Diagnostic Procedure

UBS00B5G

1. CHECK GROUND CONNECTIONS

1. Turn ignition switch OFF.
2. Loosen and retighten two ground screws on the body. Refer to EC-171 .

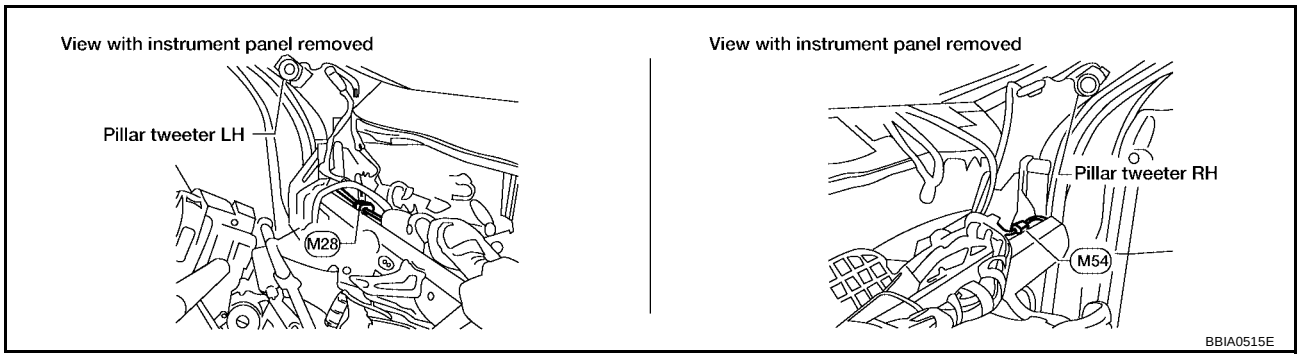

OK or NG

OK >> GO TO 2.
NG >> Repair or replace ground connections.

2. CHECK INTAKE AIR TEMPERATURE SENSOR

Refer to EC-225, "Component Inspection" .

OK or NG

OK >> GO TO 3.
NG >> Replace mass air flow sensor (with intake air temperature sensor).

3. CHECK INTERMITTENT INCIDENT

Perform EC-164, "TROUBLE DIAGNOSIS FOR INTERMITTENT INCIDENT" .

>> **INSPECTION END**

Component Inspection

UBS00B5H

INTAKE AIR TEMPERATURE SENSOR

1. Check resistance between intake air temperature sensor terminals 5 and 6 under the following conditions.

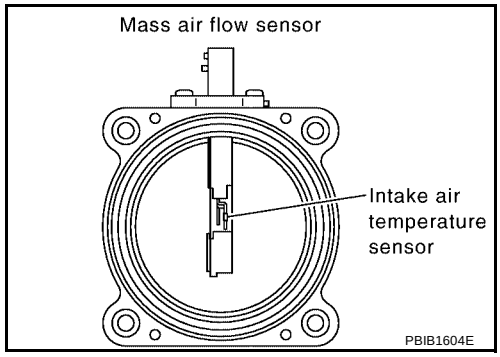

Intake air temperature °C (°F)	Resistance kΩ
25 (77)	1.9 - 2.1

2. If NG, replace mass air flow sensor (with intake air temperature sensor).

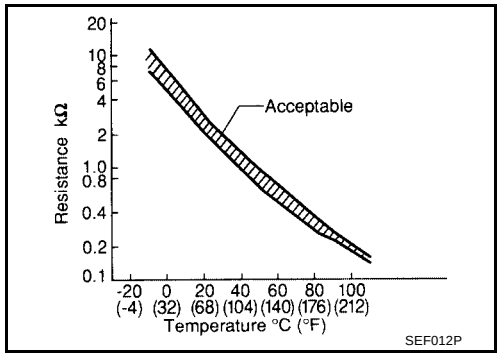

DTC P0128 THERMOSTAT FUNCTION

PFP:21200

On Board Diagnosis Logic

UBS00B5I

Engine coolant temperature has not risen enough to open the thermostat even though the engine has run long enough.
This is due to a leak in the seal or the thermostat stuck open.

DTC No.	Trouble diagnosis name	DTC detecting condition	Possible cause
P0128 0128	Thermostat function	The engine coolant temperature does not reach to specified temperature even though the engine has run long enough.	● Thermostat ● Leakage from sealing portion of thermostat ● Engine coolant temperature sensor

DTC Confirmation Procedure

UBS00B5J

NOTE:
If DTC Confirmation Procedure has been previously conducted, always turn ignition switch OFF and wait at least 10 seconds before conducting the next test.
TESTING CONDITION:

- **For best results, perform at ambient temperature of –10°C (14°F) or higher.**
- **For best results, perform at engine coolant temperature of –10°C (14°F) to 68°C (154°F).**

WITH CONSULT-II

1. Replace thermostat with new one. Refer to CO-12, "THERMOSTAT AND THERMOSTAT HOUSING" . Use only a genuine NISSAN thermostat as a replacement. If an incorrect thermostat is used, the MIL may come on.
2. Turn ignition switch ON.
3. Select “COOLAN TEMP/S” in “DATA MONITOR” mode with CONSULT-II.
4. Check that the “COOLAN TEMP/S” is above 68°C (154°F).
   If it is below 68°C (154°F), go to following step.
   If it is above 68°C (154°F), cool down the engine to less than 60°C (140°F), then retry from step 1.
5. Drive vehicle for 10 consecutive minutes under the following conditions.

VHCL SPEED SE	80 - 120 km/h (50 - 75 MPH)

If 1st trip DTC is detected, go to EC-226, "Diagnostic Procedure" .

WITH GST

1. Follow the procedure “WITH CONSULT-II” above.

Diagnostic Procedure

UBS00B5K

1. CHECK ENGINE COOLANT TEMPERATURE SENSOR

Refer to EC-227, "Component Inspection" .

OK or NG

OK >> **INSPECTION END**
NG >> Replace engine coolant temperature sensor.

Component Inspection

UBS00B5L

ENGINE COOLANT TEMPERATURE SENSOR

Check resistance as shown in the figure.

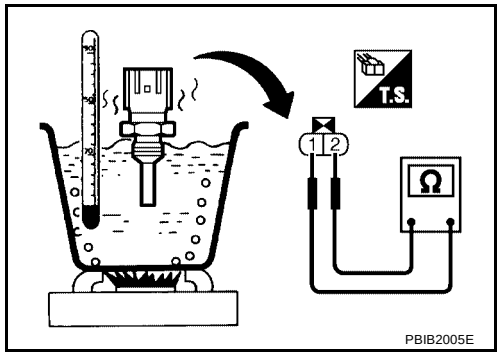

<Reference data>

Temperature °C (°F)	Resistance kΩ
20 (68)	2.1 - 2.9
50 (122)	0.68 - 1.0
90 (194)	0.236 - 0.260

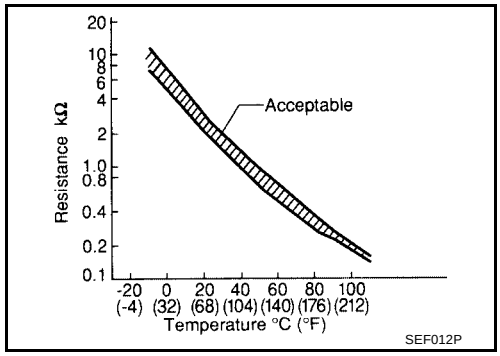

If NG, replace engine coolant temperature sensor.

Removal and Installation

UBS00B5M

ENGINE COOLANT TEMPERATURE SENSOR

Refer to CO-12, "THERMOSTAT AND THERMOSTAT HOUSING" .

DTC P0138 HO2S2

PFP:226A0

Component Description

UBS00B5N

The heated oxygen sensor 2, after three way catalyst (manifold), monitors the oxygen level in the exhaust gas.
Even if switching characteristics of the air fuel ratio (A/F) sensor 1 are shifted, the air-fuel ratio is controlled to stoichiometric, by the signal from the heated oxygen sensor 2.
This sensor is made of ceramic zirconia. The zirconia generates voltage from approximately 1V in richer conditions to 0V in leaner conditions.
Under normal conditions the heated oxygen sensor 2 is not used for engine control operation.

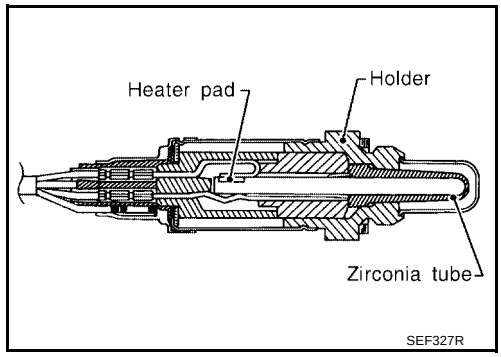

CONSULT-II Reference Value in Data Monitor Mode

UBS00B5O

Specification data are reference values.

MONITOR ITEM	CONDITION		SPECIFICATION
HO2S2 (B1)	● Engine: After warming up ● Keeping the engine speed between 3,500 and 4,000 rpm for 1 minute and at idle for 1 minute under no load	Revving engine from idle to 3,000 rpm quickly	0 - 0.3V ←→ 0.6 - 1.0V
HO2S2 MNTR (B1)			LEAN ←→ RICH

On Board Diagnosis Logic

UBS00B5P

The heated oxygen sensor 2 has a much longer switching time between rich and lean than the air fuel ratio (A/F) sensor 1. The oxygen storage capacity before the three way catalyst (manifold) causes the longer switching time. To judge the malfunctions of heated oxygen sensor 2, ECM monitors whether the voltage is too high during the various driving condition such as fuel-cut.

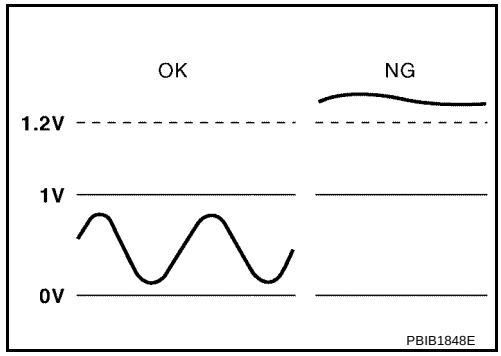

DTC No.	Trouble diagnosis name	DTC detecting condition	Possible cause
P0138 0138 (Bank 1)	Heated oxygen sensor 2 circuit high voltage	An excessively high voltage from the sensor is sent to ECM.	● Harness or connectors (The sensor circuit is open or shorted.) ● Heated oxygen sensor 2

DTC Confirmation Procedure

UBS00B5Q

CAUTION:
Always drive vehicle at a safe speed.

NOTE:
If DTC Confirmation Procedure has been previously conducted, always turn ignition switch OFF and wait at least 10 seconds before conducting the next test.

WITH CONSULT-II

1. Turn ignition switch ON and select “DATA MONITOR” mode with CONSULT-II.
2. Start engine and warm it up to the normal operating temperature.
3. Turn ignition switch OFF and wait at least 10 seconds.
4. Start engine and keep the engine speed between 3,500 and 4,000 rpm for at least 1 minute under no load.
5. Let engine idle for 2 minutes.
6. If 1st trip DTC is detected, go to EC-231, "Diagnostic Procedure".

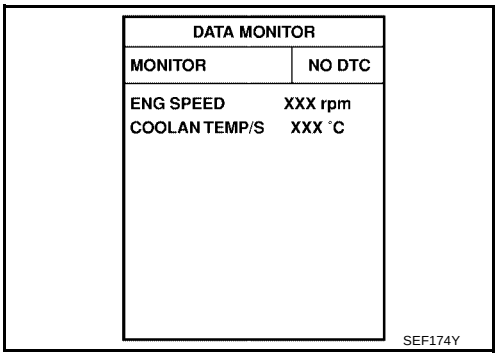

WITH GST

Follow the procedure “WITH CONSULT-II” above.

Wiring Diagram

UBS00B5R

EC-HO2S2-01

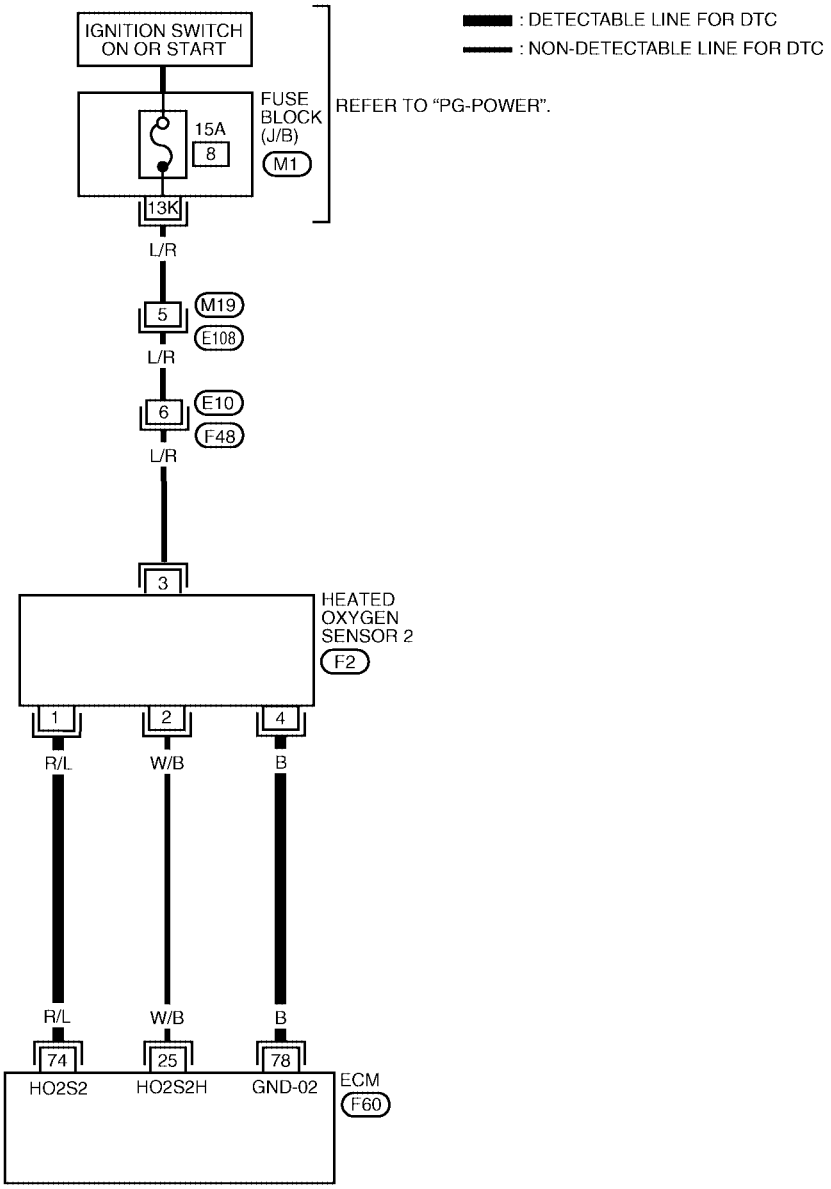

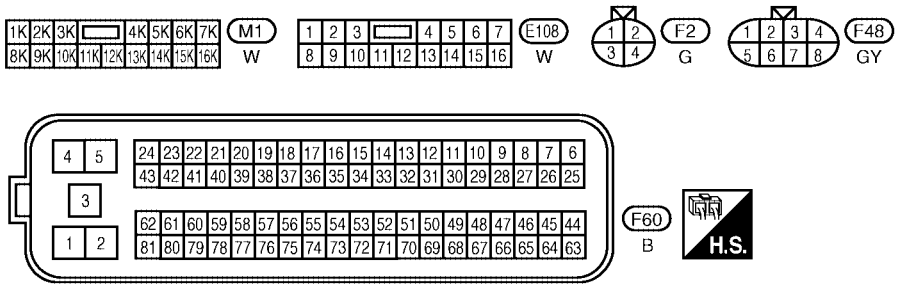

BBWA1427E

Specification data are reference values and are measured between each terminal and ground.

CAUTION:

Do not use ECM ground terminals when measuring input/output voltage. Doing so may result in damage to the ECM's transistor. Use a ground other than ECM terminals, such as the ground.

TERMINAL NO.	WIRE COLOR	ITEM	CONDITION	DATA (DC Voltage)
74	R/L	Heated oxygen sensor 2	**[Engine is running]** ● **Warm-up condition** ● Revving engine from idle up to 3,000 rpm quickly after the following conditions are met. ● Keeping the engine speed between 3,500 and 4,000 rpm for 1 minute and at idle for 1 minute under no load.	0 - Approximately 1.0V
78	B	Sensor ground (Heated oxygen sensor)	**[Engine is running]** ● **Warm-up condition** ● Idle speed	Approximately 0V

Diagnostic Procedure

UBS00B5S

1. CHECK GROUND CONNECTIONS

1. Turn ignition switch OFF.
2. Loosen and retighten two ground screws on the body. Refer to EC-171 .

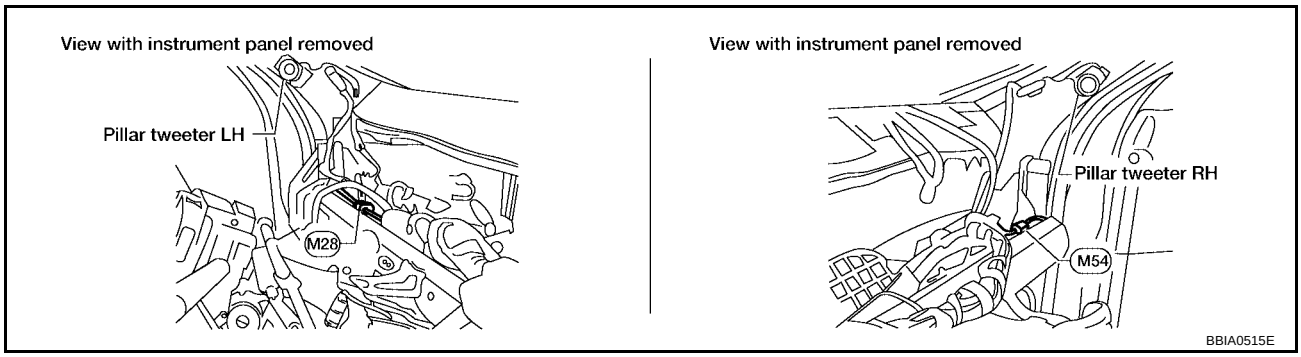

OK or NG

OK >> GO TO 2.
NG >> Repair or replace ground connections.

2. CHECK HO2S2 GROUND CIRCUIT FOR OPEN AND SHORT

1. Turn ignition switch OFF.
2. Disconnect heated oxygen sensor 2 harness connector.
3. Disconnect ECM harness connector.
4. Check harness continuity between ECM terminal 78 and HO2S2 terminal 4.
   Refer to Wiring Diagram.

   Continuity should exist.

5. Also check harness for short to ground and short to power.

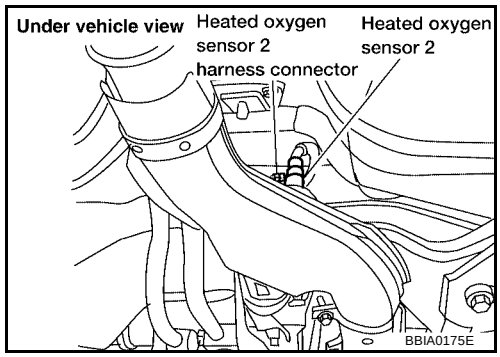

OK or NG

OK >> GO TO 3.
NG >> Repair open circuit or short to ground or short to power in harness or connectors.

3. CHECK HO2S2 INPUT SIGNAL CIRCUIT FOR OPEN AND SHORT

1. Check harness continuity between ECM terminal 74 and HO2S2 terminal 1.
   Refer to Wiring Diagram.

   Continuity should exist.

2. Check harness continuity between ECM terminal 74 or HO2S2 terminal 1 and ground.
   Refer to Wiring Diagram.

   Continuity should not exist.

3. Also check harness for short to power.

OK or NG

OK >> GO TO 4.
NG >> Repair open circuit or short to ground or short to power in harness or connectors.

4. CHECK HARNESS CONNECTOR

Check HO2S2 harness connector for water.

Water should not exist.

OK or NG

OK >> GO TO 5.
NG >> Repair or replace harness connector.

5. CHECK HEATED OXYGEN SENSOR 2

Refer to EC-232, "Component Inspection" .

OK or NG

OK >> GO TO 6.
NG >> Replace heated oxygen sensor 2.

6. CHECK INTERMITTENT INCIDENT

Refer to EC-164, "TROUBLE DIAGNOSIS FOR INTERMITTENT INCIDENT" .

>> **INSPECTION END**

Component Inspection

UBS00B5T

HEATED OXYGEN SENSOR 2

With CONSULT-II

1. Start engine and warm it up to the normal operating temperature.
2. Turn ignition switch OFF and wait at least 10 seconds.
3. Start engine and keep the engine speed between 3,500 and 4,000 rpm for at least 1 minute under no load.
4. Let engine idle for 1 minute.
5. Select “FUEL INJECTION” in “ACTIVE TEST” mode, and select “HO2S2 (B1)” as the monitor item with CONSULT-II.

ACTIVE TEST	
FUEL INJECTION	25 %
MONITOR	
ENG SPEED	XXX rpm
A/F SEN1 (B1)	XXX V
HO2S2 (B1)	XXX V

PBIB1782E

6. Check “HO2S2 (B1)” at idle speed when adjusting “FUEL INJECTION” to ±25%.

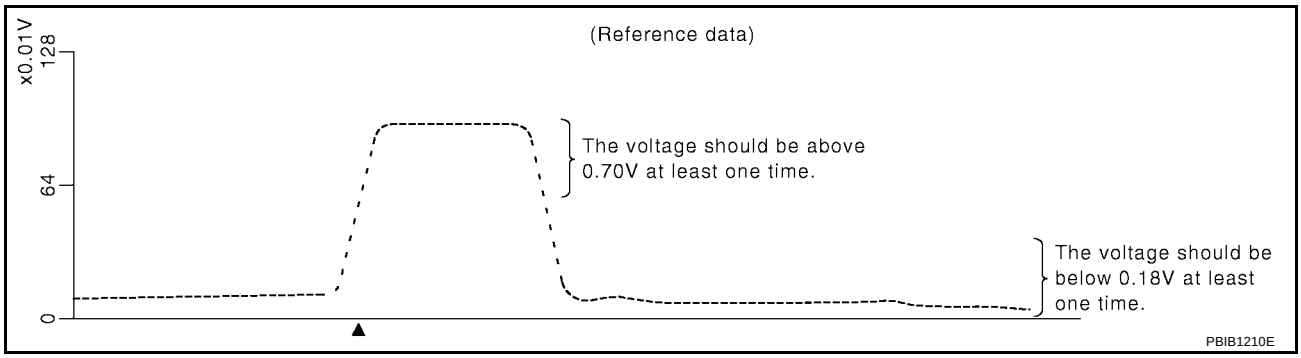

“HO2S2 (B1)” should be above 0.70V at least once when the “FUEL INJECTION” is +25%.
“HO2S2 (B1)” should be below 0.18V at least once when the “FUEL INJECTION” is –25%.

7. If NG, replace heated oxygen sensor 2.

CAUTION:

- **Discard any heated oxygen sensor which has been dropped from a height of more than 0.5 m (19.7 in) onto a hard surface such as a concrete floor; use a new one.**
- **Before installing new oxygen sensor, clean exhaust system threads using Oxygen Sensor Thread Cleaner tool J-43897-18 or J-43897-12 and approved anti-seize lubricant.**

Without CONSULT-II

1. Start engine and warm it up to the normal operating temperature.
2. Turn ignition switch OFF and wait at least 10 seconds.
3. Start engine and keep the engine speed at between 3,500 to 4,000 rpm for at least 1 minute under no load.
4. Let engine idle for 1 minute.
5. Set voltmeter probes between ECM terminal 74 (HO2S2 signal) and ground.
6. Check the voltage when revving up to 4,000 rpm under no load at least 10 times.
   (Depress and release accelerator pedal as soon as possible.)
   The voltage should be above 0.70V at least once during this procedure.
   If the voltage is above 0.70V at step 6, step 7 is not necessary.
7. Keep vehicle idling for 10 minutes, then check voltage. Or check the voltage when coasting from 80 km/h (50 MPH) in D position with “OD” OFF (A/T), 4th gear position (M/T).
   The voltage should be below 0.18V at least once during this procedure.

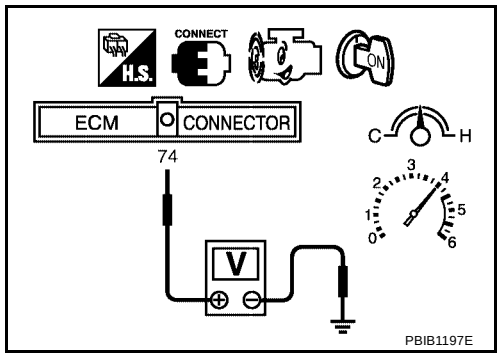

8. If NG, replace heated oxygen sensor 2.

CAUTION:

- **Discard any heated oxygen sensor which has been dropped from a height of more than 0.5 m (19.7 in) onto a hard surface such as a concrete floor; use a new one.**
- **Before installing new oxygen sensor, clean exhaust system threads using Oxygen Sensor Thread Cleaner tool J-43897-18 or J-43897-12 and approved anti-seize lubricant.**

Removal and Installation

UBS00B5U

HEATED OXYGEN SENSOR 2

Refer to EX-3, "EXHAUST SYSTEM" .

DTC P0139 HO2S2

PFP:226A0

Component Description

UBS00B5V

The heated oxygen sensor 2, after three way catalyst (manifold), monitors the oxygen level in the exhaust gas.
Even if switching characteristics of the air fuel ratio (A/F) sensor 1 are shifted, the air-fuel ratio is controlled to stoichiometric, by the signal from the heated oxygen sensor 2.
This sensor is made of ceramic zirconia. The zirconia generates voltage from approximately 1V in richer conditions to 0V in leaner conditions.
Under normal conditions the heated oxygen sensor 2 is not used for engine control operation.

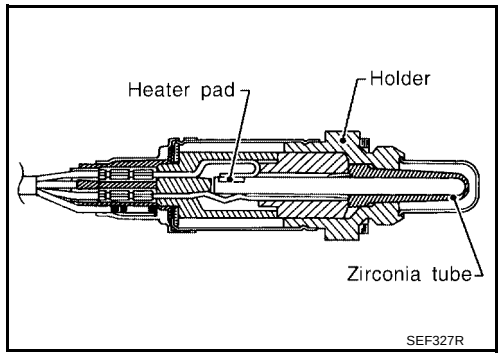

CONSULT-II Reference Value in Data Monitor Mode

UBS00B5W

Specification data are reference values.

MONITOR ITEM	CONDITION		SPECIFICATION
HO2S2 (B1)	● Engine: After warming up ● Keeping the engine speed between 3,500 and 4,000 rpm for 1 minute and at idle for 1 minute under no load	Revving engine from idle to 3,000 rpm quickly	0 - 0.3V ←→ 0.6 - 1.0V
HO2S2 MNTR (B1)			LEAN ←→ RICH

On Board Diagnosis Logic

UBS00B5X

The heated oxygen sensor 2 has a much longer switching time between rich and lean than the air fuel ratio (A/F) sensor 1. The oxygen storage capacity before the three way catalyst (manifold) causes the longer switching time. To judge the malfunctions of heated oxygen sensor 2, ECM monitors whether the switching response of the sensor's voltage is faster than specified during the various driving condition such as fuel-cut.

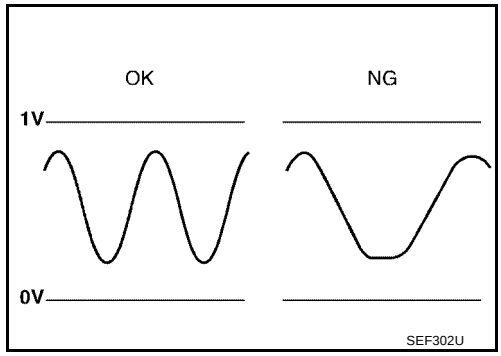

DTC No.	Trouble diagnosis name	DTC detecting condition	Possible cause
P0139 0139	Heated oxygen sensor 2 circuit slow response	It takes more time for the sensor to respond between rich and lean than the specified time.	● Harness or connectors (The sensor circuit is open or shorted.) ● Heated oxygen sensor 2 ● Fuel pressure ● Fuel injectors ● Intake air leaks

DTC Confirmation Procedure

UBS00B5Y

NOTE:
If DTC Confirmation Procedure has been previously conducted, always turn ignition switch OFF and wait at least 10 seconds before conducting the next test.

WITH CONSULT-II

For the best results, perform "DTC WORK SUPPORT" at a temperature of 0 to 30°C (32 to 86°F)

1. Turn ignition switch ON and select "DATA MONITOR" mode with CONSULT-II.
2. Start engine and warm it up to the normal operating temperature.
3. Turn ignition switch OFF and wait at least 10 seconds.
4. Start engine and keep the engine speed between 3,500 and 4,000 rpm for at least 1 minute under no load.
5. Let engine idle for 1 minute.
6. Make sure that "COOLANTEMP/S" indications more than 70°C (158°F).
   If not, warm up engine and go to next step when "COOLANTEMP/S" indication reaches to 70°C (158°F).

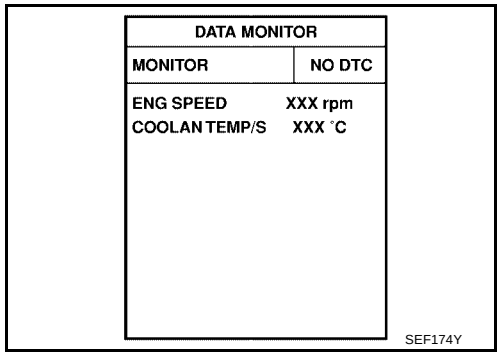

7. Select "HO2S2 (B1) P0139" of "HO2S2" in "DTC WORK SUPPORT" mode with CONSULT-II.
8. Start engine and following the instruction of CONSULT-II.

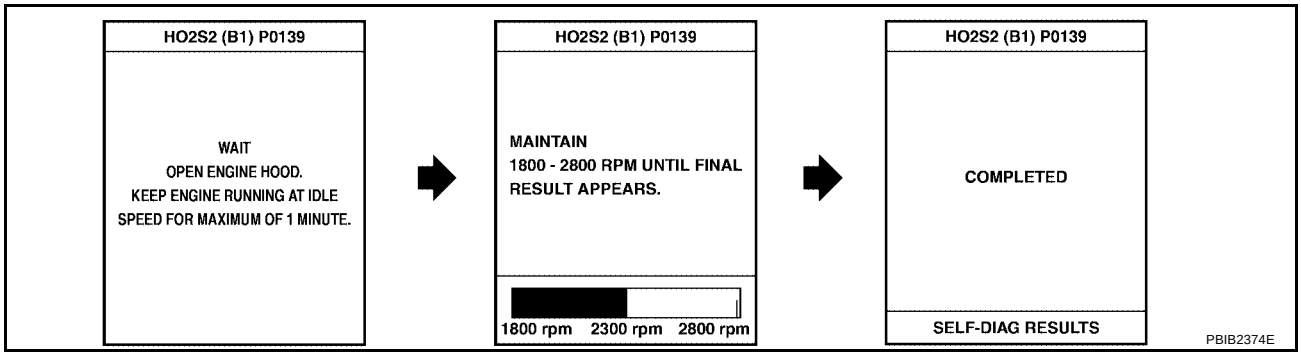

NOTE:
It will take at most 10 minutes until "COMPLETED" is displayed.

9. Make sure that OK is displayed after touching "SELF-DIAG RESULTS".
   If NG is displayed, refer to EC-238, "Diagnostic Procedure" .
   If "CAN NOT BE DIAGNOSED" is displayed, perform the following.

a. Turn ignition switch OFF and leave the vehicle in a cool place (soak the vehicle).
b. Return to step 1.

Overall Function Check

UBS00B5Z

Use this procedure to check the overall function of the heated oxygen sensor 2 circuit. During this check, a 1st trip DTC might not be confirmed.

WITH GST

1. Start engine and warm it up to the normal operating temperature.
2. Turn ignition switch OFF and wait at least 10 seconds.
3. Start engine and keep the engine speed between 3,500 and 4,000 rpm for at least 1 minute under no load.
4. Let engine idle for 1 minute.
5. Set voltmeter probes between ECM terminal 74 (HO2S2 signal) and ground.

6. Check the voltage when revving up to 4,000 rpm under no load at least 10 times.
   (Depress and release accelerator pedal as soon as possible.)
   A change of voltage should be more than 0.06V for 1 second during this procedure.
   If the voltage can be confirmed in step 6, step 7 is not necessary.
7. Keep vehicle at idling for 10 minutes, then check the voltage. Or check the voltage when coasting from 80 km/h (50 MPH) in D position with “OD” OFF (A/T), 4th gear position (M/T).
   A change of voltage should be more than 0.06V for 1 second during this procedure.
8. If NG, go to EC-238, "Diagnostic Procedure" .

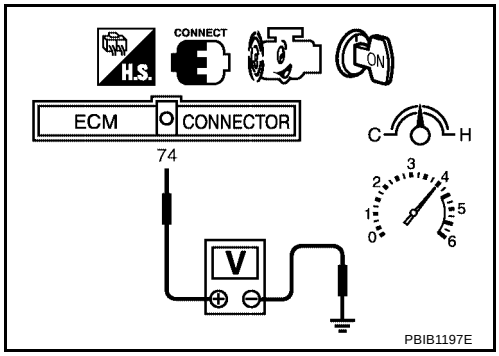

Wiring Diagram

UBS00B60

EC-HO2S2-01

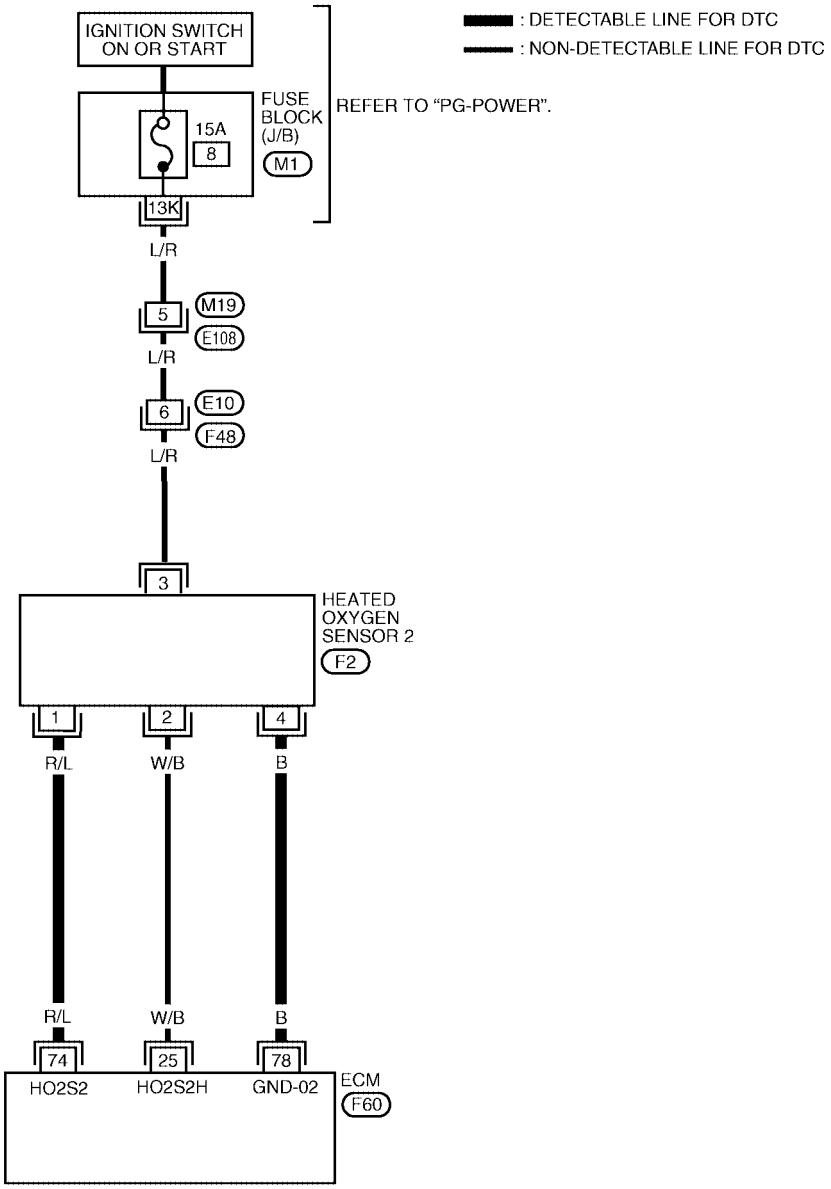

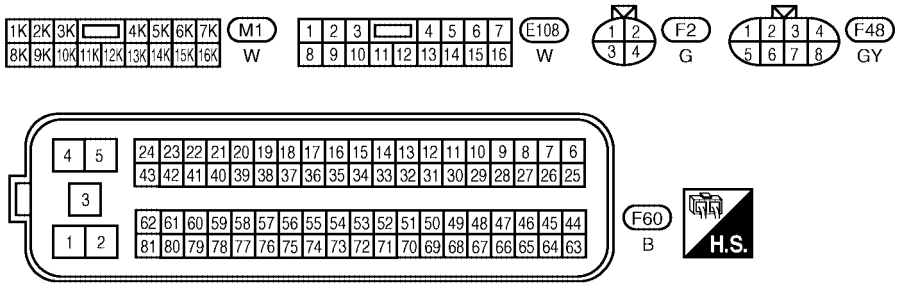

BBWA1427E

Specification data are reference values and are measured between each terminal and ground.

CAUTION:

Do not use ECM ground terminals when measuring input/output voltage. Doing so may result in damage to the ECM's transistor. Use a ground other than ECM terminals, such as the ground.

TERMINAL NO.	WIRE COLOR	ITEM	CONDITION	DATA (DC Voltage)
74	R/L	Heated oxygen sensor 2	**[Engine is running]** ● **Warm-up condition** ● Revving engine from idle up to 3,000 rpm quickly after the following conditions are met. ● Keeping the engine speed between 3,500 and 4,000 rpm for 1 minute and at idle for 1 minute under no load.	0 - Approximately 1.0V
78	B	Sensor ground (Heated oxygen sensor)	**[Engine is running]** ● **Warm-up condition** ● Idle speed	Approximately 0V

Diagnostic Procedure

UBS00B61

1. CHECK GROUND CONNECTIONS

1. Turn ignition switch OFF.
2. Loosen and retighten two ground screws on the body. Refer to EC-171 .

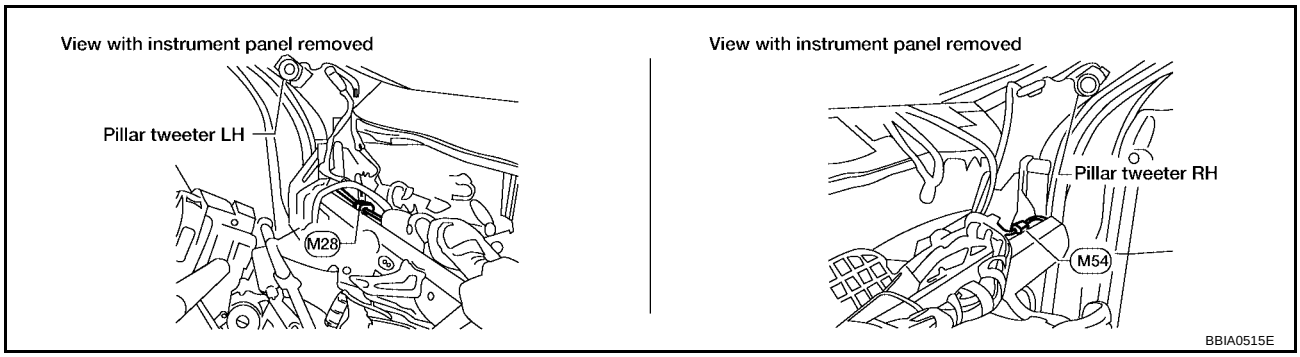

OK or NG

OK >> GO TO 2.
NG >> Repair or replace ground connections.

2. CLEAR THE SELF-LEARNING DATA

With CONSULT-II

1. Start engine and warm it up to normal operating temperature.
2. Select “SELF-LEARNING CONT” in “WORK SUPPORT” mode with CONSULT-II.
3. Clear the self-learning control coefficient by touching “CLEAR”.
4. Run engine for at least 10 minutes at idle speed.
   Is the 1st trip DTC P0171 or P0172 detected?
   Is it difficult to start engine?

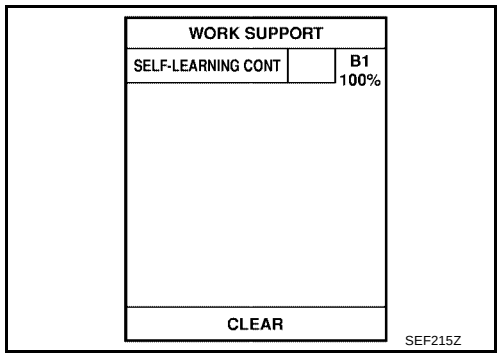

Without CONSULT-II

1. Start engine and warm it up to normal operating temperature.
2. Turn ignition switch OFF.
3. Disconnect mass air flow sensor harness connector, and restart and run engine for at least 5 seconds at idle speed.
4. Stop engine and reconnect mass air flow sensor harness connector.
5. Make sure that DTC P0102 is displayed.
6. Erase the DTC memory. Refer to EC-64, "HOW TO ERASE EMISSION-RELATED DIAGNOSTIC INFORMATION" .
7. Make sure that DTC P0000 is displayed.
8. Run engine for at least 10 minutes at idle speed.
   Is the 1st trip DTC P0171 or P0172 detected?
   Is it difficult to start engine?

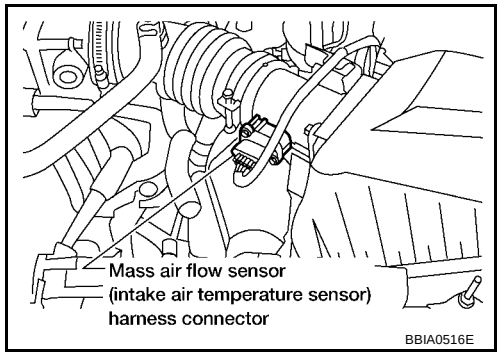

Yes or No

Yes >> Perform trouble diagnosis for DTC P0171 or P0172. Refer to EC-242, "DTC P0171 FUEL INJECTION SYSTEM FUNCTION" or EC-249, "DTC P0172 FUEL INJECTION SYSTEM FUNCTION" .

No >> GO TO 3.

3. CHECK HO2S2 GROUND CIRCUIT FOR OPEN AND SHORT

1. Turn ignition switch OFF.
2. Disconnect heated oxygen sensor 2 harness connector.
3. Disconnect ECM harness connector.
4. Check harness continuity between ECM terminal 78 and HO2S2 terminal 4.
   Refer to Wiring Diagram.

   Continuity should exist.

5. Also check harness for short to ground and short to power.

OK or NG

OK >> GO TO 4.

NG >> Repair open circuit or short to ground or short to power in harness or connectors.

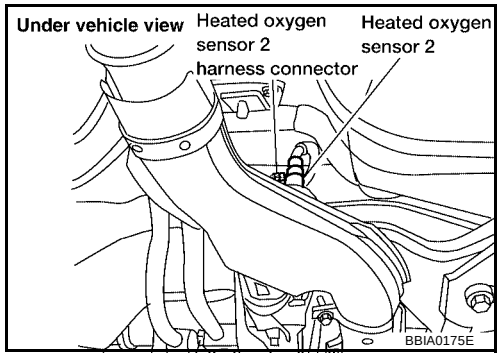

4. CHECK HO2S2 INPUT SIGNAL CIRCUIT FOR OPEN AND SHORT

1. Check harness continuity between ECM terminal 74 and HO2S2 terminal 1.
   Refer to Wiring Diagram.

   Continuity should exist.

2. Check harness continuity between ECM terminal 74 or HO2S2 terminal 1 and ground.
   Refer to Wiring Diagram.

   Continuity should not exist.

3. Also check harness for short to power.

OK or NG

OK >> GO TO 5.
NG >> Repair open circuit or short to ground or short to power in harness or connectors.

5. CHECK HEATED OXYGEN SENSOR 2

Refer to EC-240, "Component Inspection" .

OK or NG

OK >> GO TO 6.
NG >> Replace heated oxygen sensor 2.

6. CHECK INTERMITTENT INCIDENT

Refer to EC-164, "TROUBLE DIAGNOSIS FOR INTERMITTENT INCIDENT" .

>> **INSPECTION END**

Component Inspection

UBS00B62

HEATED OXYGEN SENSOR 2

With CONSULT-II

1. Start engine and warm it up to the normal operating temperature.
2. Turn ignition switch OFF and wait at least 10 seconds.
3. Start engine and keep the engine speed between 3,500 and 4,000 rpm for at least 1 minute under no load.
4. Let engine idle for 1 minute.
5. Select “FUEL INJECTION” in “ACTIVE TEST” mode, and select “HO2S2 (B1)” as the monitor item with CONSULT-II.

ACTIVE TEST	
FUEL INJECTION	25 %
MONITOR	
ENG SPEED	XXX rpm
A/F SEN1 (B1)	XXX V
HO2S2 (B1)	XXX V

PBIB1782E

6. Check “HO2S2 (B1)” at idle speed when adjusting “FUEL INJECTION” to ±25%.

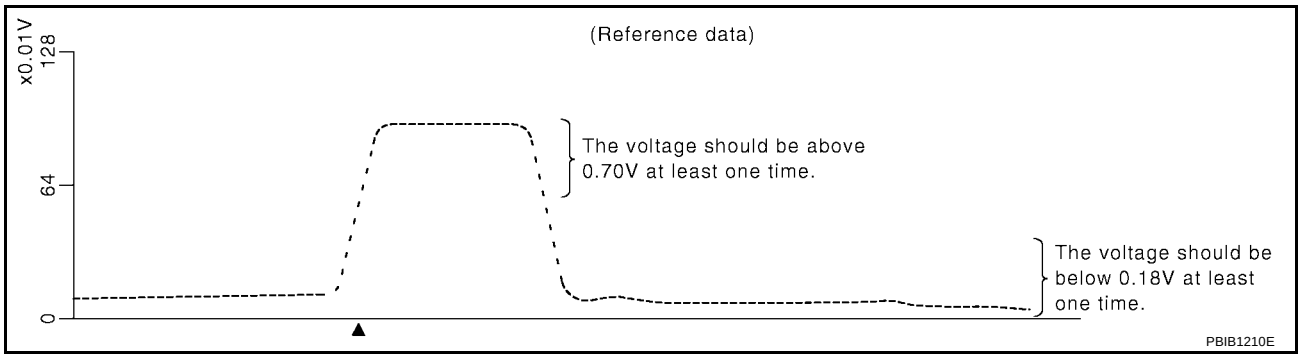

“HO2S2 (B1)” should be above 0.70V at least once when the “FUEL INJECTION” is +25%.
“HO2S2 (B1)” should be below 0.18V at least once when the “FUEL INJECTION” is –25%.

CAUTION:

- **Discard any heated oxygen sensor which has been dropped from a height of more than 0.5 m (19.7 in) onto a hard surface such as a concrete floor; use a new one.**
- **Before installing new oxygen sensor, clean exhaust system threads using Oxygen Sensor Thread Cleaner tool J-43897-18 or J-43897-12 and approved anti-seize lubricant.**

Without CONSULT-II

1. Start engine and warm it up to the normal operating temperature.
2. Turn ignition switch OFF and wait at least 10 seconds.
3. Start engine and keep the engine speed between 3,500 and 4,000 rpm for at least 1 minute under no load.
4. Let engine idle for 1 minute.
5. Set voltmeter probes between ECM terminal 74 (HO2S2 signal) and ground.
6. Check the voltage when revving up to 4,000 rpm under no load at least 10 times.
   (Depress and release accelerator pedal as soon as possible.)
   The voltage should be above 0.70V at least once during this procedure.
   If the voltage is above 0.70V at step 6, step 7 is not necessary.
7. Keep vehicle idling for 10 minutes, then check voltage. Or check the voltage when coasting from 80 km/h (50 MPH) in D position with “OD” OFF (A/T), 4th gear position (M/T).
   The voltage should be below 0.18V at least once during this procedure.

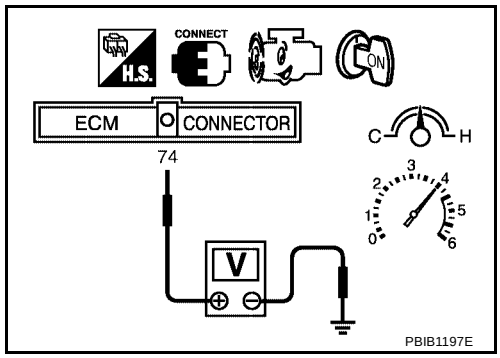

8. If NG, replace heated oxygen sensor 2.

CAUTION:

- **Discard any heated oxygen sensor which has been dropped from a height of more than 0.5 m (19.7 in) onto a hard surface such as a concrete floor; use a new one.**
- **Before installing new oxygen sensor, clean exhaust system threads using Oxygen Sensor Thread Cleaner tool J-43897-18 or J-43897-12 and approved anti-seize lubricant.**

Removal and Installation

UBS00B63

HEATED OXYGEN SENSOR 2

Refer toEX-3, "EXHAUST SYSTEM" .

DTC P0171 FUEL INJECTION SYSTEM FUNCTION

PFP:16600

On Board Diagnosis Logic

UBS00B64

With the Air/Fuel Mixture Ratio Self-Learning Control, the actual mixture ratio can be brought closely to the theoretical mixture ratio based on the mixture ratio feedback signal from the air fuel ratio (A/F) sensor 1. The ECM calculates the necessary compensation to correct the offset between the actual and the theoretical ratios.
In case the amount of the compensation value is extremely large (The actual mixture ratio is too lean.), the ECM judges the condition as the fuel injection system malfunction and lights up the MIL (2 trip detection logic).

Sensor	Input Signal to ECM	ECM function	Actuator
Air fuel ratio (A/F) sensor 1	Density of oxygen in exhaust gas (Mixture ratio feedback signal)	Fuel injection control	Injectors

DTC No.	Trouble diagnosis name	DTC detecting condition	Possible Cause
P0171 0171	Fuel injection system too learn	● Fuel injection system does not operate properly. ● The amount of mixture ratio compensation is too large. (The mixture ratio is too lean.)	● Intake air leaks ● Air fuel ratio (A/F) sensor 1 ● Injectors ● Exhaust gas leaks ● Incorrect fuel pressure ● Lack of fuel ● Mass air flow sensor ● Incorrect PCV hose connection

DTC Confirmation Procedure

UBS00B65

NOTE:
If DTC Confirmation Procedure has been previously conducted, always turn ignition switch OFF and wait at least 10 seconds before conducting the next test.

WITH CONSULT-II

1. Start engine and warm it up to normal operating temperature.
2. Turn ignition switch OFF and wait at least 10 seconds.
3. Turn ignition switch ON and select “SELF-LEARNING CONT” in “WORK SUPPORT” mode with CONSULT-II.
4. Clear the self-learning control coefficient by touching “CLEAR”.
5. Select “DATA MONITOR” mode with CONSULT-II.
6. Start engine again and let it idle for at least 10 minutes.
   The 1st trip DTC P0171 should be detected at this stage, if a malfunction exists. If so, go to EC-245, "Diagnostic Procedure" .

   NOTE:
   If 1st trip DTC is not detected during above procedure, performing the following procedure is advised.

a. Turn ignition switch OFF and wait at least 10 seconds.
b. Start engine and drive the vehicle under the similar conditions to (1st trip) Freeze Frame Data for 10 minutes. Refer to the table below.
   Hold the accelerator pedal as steady as possible.

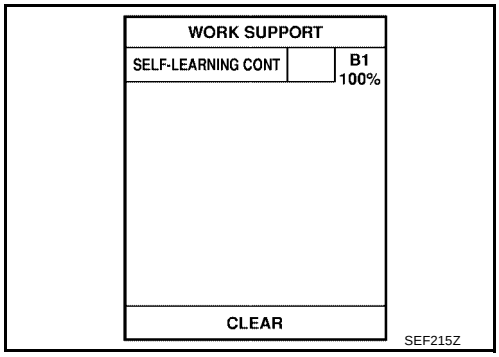

The similar conditions to (1st trip) Freeze Frame Data means the vehicle operation that the following conditions should be satisfied at the same time.

Engine speed	Engine speed in the freeze frame data ± 400 rpm
Vehicle speed	Vehicle speed in the freeze frame data ± 10 km/h (6 MPH)

Engine coolant temperature (T) condition	When the freeze frame data shows lower than 70 °C (158 °F), T should be lower than 70 °C (158 °F).
	When the freeze frame data shows higher than or equal to 70 °C (158 °F), T should be higher than or equal to 70 °C (158 °F).

7. If it is difficult to start engine at step 6, the fuel injection system has a malfunction.
8. Crank engine while depressing accelerator pedal. If engine starts, go to EC-245, "Diagnostic Procedure" . If engine does not start, check exhaust gas and intake air leak visually.

WITH GST

1. Start engine and warm it up to normal operating temperature.
2. Turn ignition switch OFF and wait at least 10 seconds.
3. Disconnect mass air flow sensor harness connector. Then restart and run engine for at least 5 seconds at idle speed.
4. Stop engine and reconnect mass air flow sensor harness connector.
5. Select “Service $03” with GST. Make sure DTC P0102 is detected.
6. Select “Service $04” with GST and erase the DTC P0102.
7. Start engine again and run it for at least 10 minutes at idle speed.

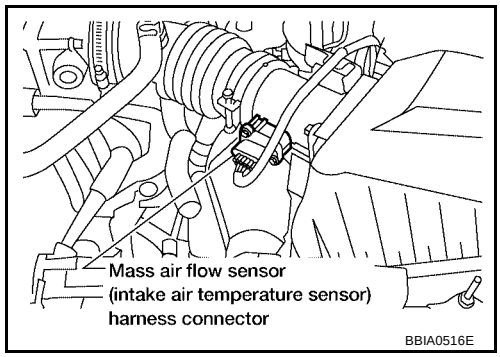

8. Select “Service $07” with GST. The 1st trip DTC P0171 should be detected at this stage, if a malfunction exists. If so, go to EC-245, "Diagnostic Procedure" .

NOTE:
If 1st trip DTC is not detected during above procedure, performing the following procedure is advised.

a. Turn ignition switch OFF and wait at least 10 seconds.
b. Start engine and drive the vehicle under the similar conditions to (1st trip) Freeze Frame Data for 10 minutes. Refer to the table below.
Hold the accelerator pedal as steady as possible.

The similar conditions to (1st trip) Freeze Frame Data means the vehicle operation that the following conditions should be satisfied at the same time.

Engine speed	Engine speed in the freeze frame data ± 400 rpm
Vehicle speed	Vehicle speed in the freeze frame data ± 10 km/h (6 MPH)
Engine coolant temperature (T) condition	When the freeze frame data shows lower than 70 °C (158 °F), T should be lower than 70 °C (158 °F).
	When the freeze frame data shows higher than or equal to 70 °C (158 °F), T should be higher than or equal to 70 °C (158 °F).

9. If it is difficult to start engine at step 7, the fuel injection system has a malfunction.
10. Crank engine while depressing accelerator pedal. If engine starts, go to EC-245, "Diagnostic Procedure" . If engine does not start, check exhaust gas and intake air leak visually.

Wiring Diagram

UBS00B66

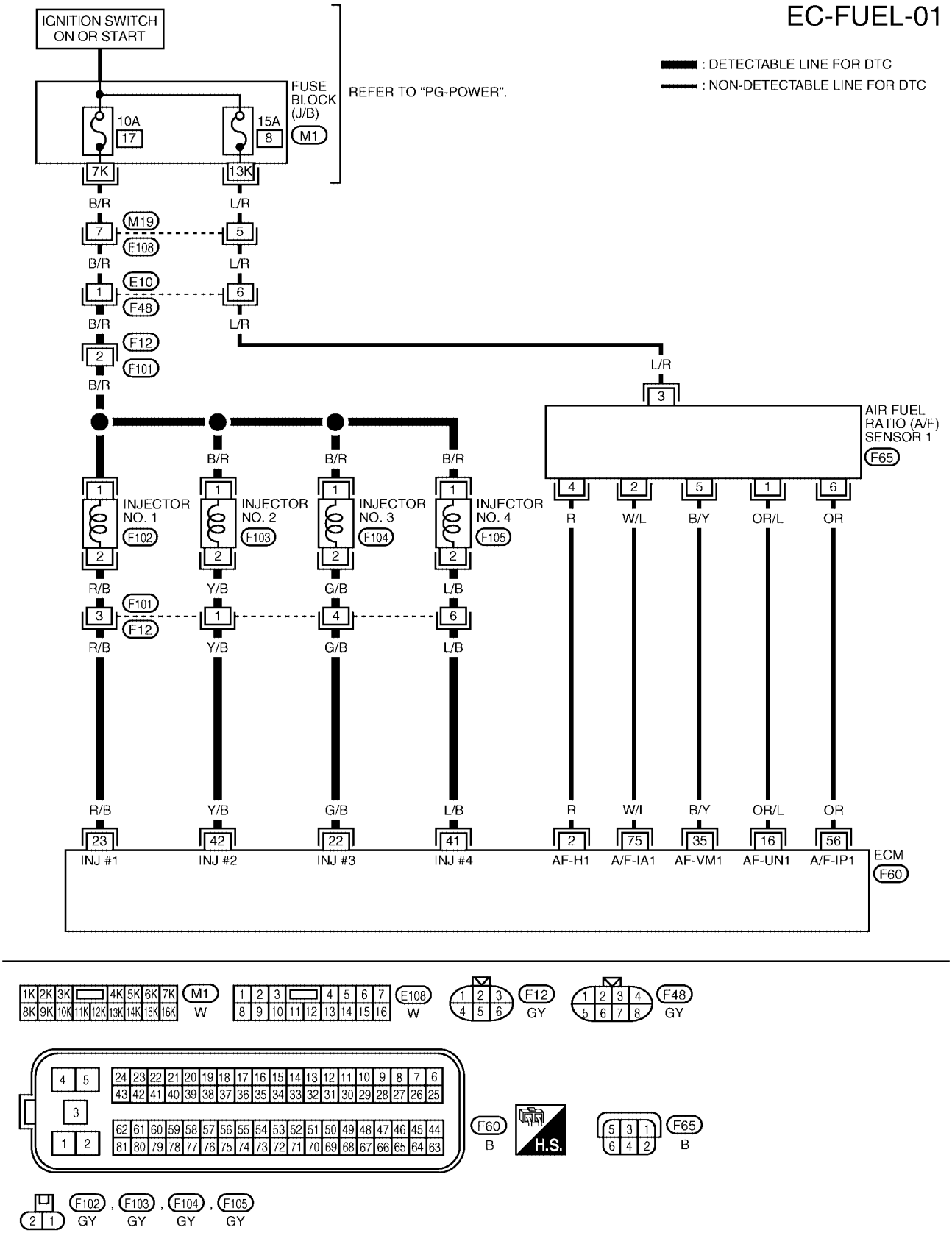

Diagnostic Procedure

UBS00B67

1. CHECK EXHAUST GAS LEAK

1. Start engine and run it at idle.
2. Listen for an exhaust gas leak before three way catalyst (manifold).

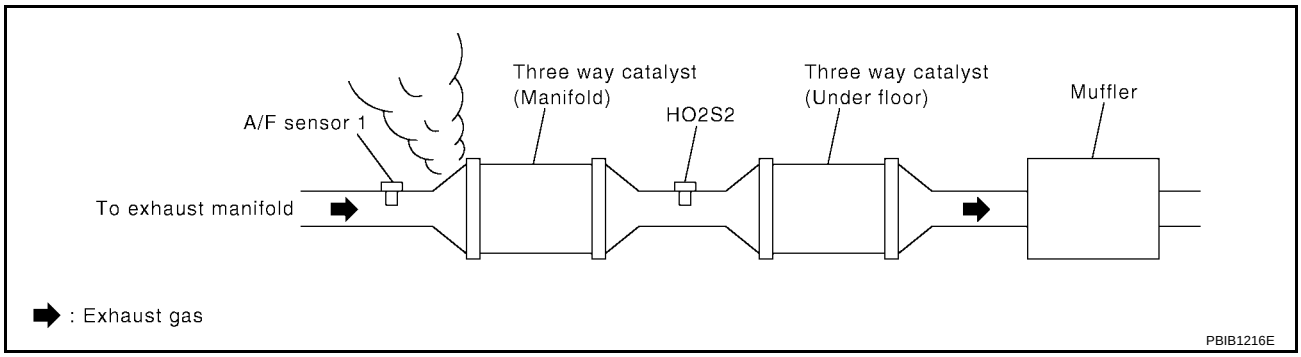

OK or NG

OK >> GO TO 2.
NG >> Repair or replace.

2. CHECK FOR INTAKE AIR LEAK AND PCV HOSE

1. Listen for an intake air leak after the mass air flow sensor.
2. Check PCV hose connection.

OK or NG

OK >> GO TO 3.
NG >> Repair or replace.

3. CHECK A/F SENSOR 1 INPUT SIGNAL CIRCUIT FOR OPEN AND SHORT

1. Turn ignition switch OFF.
2. Disconnect A/F sensor 1 harness connector.
3. Disconnect ECM harness connector.
4. Check harness continuity between ECM terminals and A/F sensor 1 terminals as follows.
   Refer to Wiring Diagram.

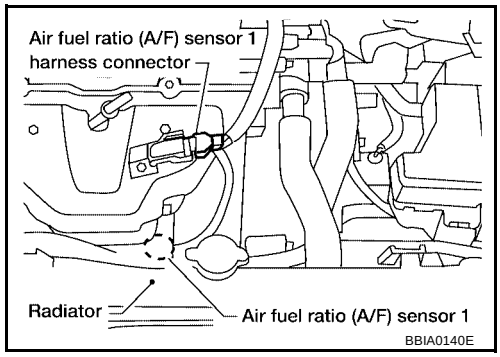

ECM terminal	A/F sensor 1
16	1
35	5
56	6
75	2

Continuity should exist.

5. Check harness continuity between ECM terminals 16, 35, 56, 75 and ground, or A/F sensor 1 terminals 1, 2, 5, 6 and ground.
   Refer to Wiring Diagram.

Continuity should not exist.

6. Also check harness for short to power.

OK or NG

OK >> GO TO 4.
NG >> Repair open circuit or short to ground or short to power in harness or connectors.

4. CHECK FUEL PRESSURE

1. Release fuel pressure to zero.
   Refer to EC-94, "FUEL PRESSURE RELEASE" .
2. Install fuel pressure gauge and check fuel pressure. Refer to EC-94, "FUEL PRESSURE RELEASE" .

At idling: 350 kPa (3.57 kg/cm^2 , 51 psi)

OK or NG

OK >> GO TO 6.
NG >> GO TO 5.

5. DETECT MALFUNCTIONING PART

Check the following.

- Fuel pump and circuit. Refer to EC-621, "FUEL PUMP" .
- Fuel pressure regulator
- Fuel lines.
- Fuel filter for clogging

>> Repair or replace.

6. CHECK MASS AIR FLOW SENSOR

With CONSULT-II

1. Install all removed parts.
2. Check “MASS AIR FLOW” in “DATA MONITOR” mode with CONSULT-II.

at idling:	**1.4 - 4.0 g·m/sec**
at 2,500 rpm:	**5.0 - 10.0 g·m/sec**

With GST

1. Install all removed parts.
2. Check mass air flow sensor signal in Service $01 with GST.

at idling:	**1.4 - 4.0 g·m/sec**
at 2,500 rpm:	**5.0 - 10.0 g·m/sec**

OK or NG

OK >> GO TO 7.
NG >> Check connectors for rusted terminals or loose connections in the mass air flow sensor circuit or engine grounds. Refer to EC-186, "DTC P0101 MAF SENSOR" .

7. CHECK FUNCTION OF INJECTOR

With CONSULT-II

1. Start engine.
2. Perform “POWER BALANCE” in “ACTIVE TEST” mode with CONSULT-II.
3. Make sure that each circuit produces a momentary engine speed drop.

ACTIVE TEST	
POWER BALANCE	
MONITOR	
ENG SPEED	XXX rpm
MAS A/F SE-B1	XXX V

PBIB0133E

Without CONSULT-II

1. Start engine.
2. Listen to each injector operating sound.

Clicking noise should be heard.

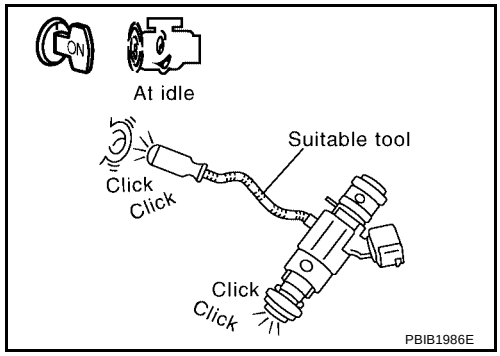

OK or NG

OK >> GO TO 8.
NG >> Perform trouble diagnosis for EC-615, "INJECTOR" .

8. REMOVE INJECTOR

1. Confirm that the engine is cooled down and there are no fire hazards near the vehicle.
2. Turn ignition switch OFF.
3. Remove injector with fuel tube assembly. Refer to EM-21, "FUEL INJECTOR AND FUEL TUBE" .
   Keep fuel hose and all injectors connected to injector gallery. The injector harness connectors should remain connected.

>> GO TO 9.

9. CHECK INJECTOR

1. Disconnect all ignition coil harness connectors.
2. Place pans or saucers under each injector.
3. Crank engine for about 3 seconds. Make sure that fuel sprays out from injectors.

Fuel should be sprayed evenly for each cylinder.

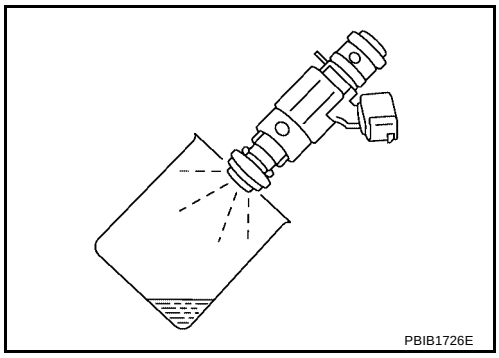

OK or NG

OK >> GO TO 10.
NG >> Replace injectors from which fuel does not spray out. Always replace O-ring with new one.

10. CHECK INTERMITTENT INCIDENT

Perform EC-164, "TROUBLE DIAGNOSIS FOR INTERMITTENT INCIDENT" .

>> **INSPECTION END**

DTC P0172 FUEL INJECTION SYSTEM FUNCTION

PFP:16600

On Board Diagnosis Logic

UBS00B68

With the Air/Fuel Mixture Ratio Self-Learning Control, the actual mixture ratio can be brought closely to the theoretical mixture ratio based on the mixture ratio feedback signal from the air fuel ratio (A/F) sensor 1. The ECM calculates the necessary compensation to correct the offset between the actual and the theoretical ratios.
In case the amount of the compensation value is extremely large (The actual mixture ratio is too rich.), the ECM judges the condition as the fuel injection system malfunction and lights up the MIL (2 trip detection logic).

Sensor	Input Signal to ECM	ECM function	Actuator
Air fuel ratio (A/F) sensor 1	Density of oxygen in exhaust gas (Mixture ratio feedback signal)	Fuel injection control	Injectors

DTC No.	Trouble diagnosis name	DTC detecting condition	Possible Cause
P0172 0172	Fuel injection system too rich	● Fuel injection system does not operate properly. ● The amount of mixture ratio compensation is too large. (The mixture ratio is too rich.)	● Air fuel ratio (A/F) sensor 1 ● Injectors ● Exhaust gas leaks ● Incorrect fuel pressure ● Mass air flow sensor

DTC Confirmation Procedure

UBS00B69

NOTE:
If DTC Confirmation Procedure has been previously conducted, always turn ignition switch OFF and wait at least 10 seconds before conducting the next test.

WITH CONSULT-II

1. Start engine and warm it up to normal operating temperature.
2. Turn ignition switch OFF and wait at least 10 seconds.
3. Turn ignition switch ON and select “SELF-LEARNING CONT” in “WORK SUPPORT” mode with CONSULT-II.
4. Clear the self-learning control coefficient by touching “CLEAR” or “START”.
5. Select “DATA MONITOR” mode with CONSULT-II.
6. Start engine again and let it idle for at least 10 minutes.
   The 1st trip DTC P0172 should be detected at this stage, if a malfunction exists. If so, go to EC-252, "Diagnostic Procedure" .

   NOTE:
   If 1st trip DTC is not detected during above procedure, performing the following procedure is advised.

a. Turn ignition switch OFF and wait at least 10 seconds.
b. Start engine and drive the vehicle under the similar conditions to (1st trip) Freeze Frame Data for 10 minutes. Refer to the table below.
   Hold the accelerator pedal as steady as possible.

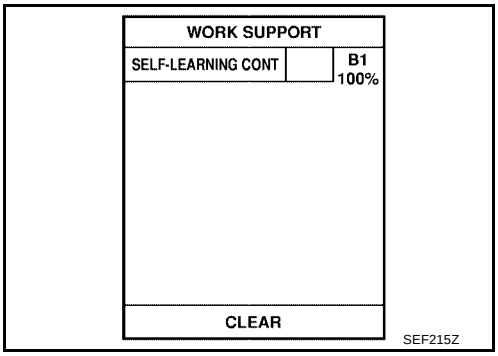

The similar conditions to (1st trip) Freeze Frame Data means the vehicle operation that the following conditions should be satisfied at the same time.

Engine speed	Engine speed in the freeze frame data ± 400 rpm
Vehicle speed	Vehicle speed in the freeze frame data ± 10 km/h (6 MPH)
Engine coolant temperature (T) condition	When the freeze frame data shows lower than 70 °C (158 °F), T should be lower than 70 °C (158 °F).
	When the freeze frame data shows higher than or equal to 70 °C (158 °F), T should be higher than or equal to 70 °C (158 °F).

7. If it is difficult to start engine at step 6, the fuel injection system has a malfunction.
8. Crank engine while depressing accelerator pedal. If engine starts, go to EC-252, "Diagnostic Procedure" . If engine does not start, remove ignition plugs and check for fouling, etc.

WITH GST

1. Start engine and warm it up to normal operating temperature.
2. Turn ignition switch OFF and wait at least 10 seconds.
3. Disconnect mass air flow sensor harness connector. Then restart and run engine for at least 5 seconds at idle speed.
4. Stop engine and reconnect mass air flow sensor harness connector.
5. Select Service $03 with GST. Make sure DTC P0102 is detected.
6. Select Service $04 with GST and erase the DTC P0102.
7. Start engine again and run it for at least 10 minutes at idle speed.

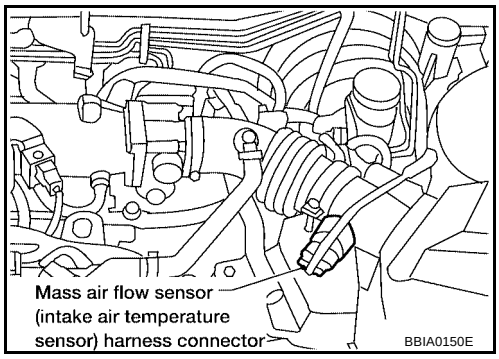

8. Select Service $07 with GST. The 1st trip DTC P0172 should be detected at this stage, if a malfunction exists. If so, go to EC-252, "Diagnostic Procedure" .

   NOTE:
   If 1st trip DTC is not detected during above procedure, performing the following procedure is advised.

a. Turn ignition switch OFF and wait at least 10 seconds.
b. Start engine and drive the vehicle under the similar conditions to (1st trip) Freeze Frame Data for 10 minutes. Refer to the table below.
   Hold the accelerator pedal as steady as possible.

   The similar conditions to (1st trip) Freeze Frame Data means the vehicle operation that the following conditions should be satisfied at the same time.

Engine speed	Engine speed in the freeze frame data ± 400 rpm
Vehicle speed	Vehicle speed in the freeze frame data ± 10 km/h (6 MPH)
Engine coolant temperature (T) condition	When the freeze frame data shows lower than 70 °C (158 °F), T should be lower than 70 °C (158 °F).
	When the freeze frame data shows higher than or equal to 70 °C (158 °F), T should be higher than or equal to 70 °C (158 °F).

9. If it is difficult to start engine at step 7, the fuel injection system has a malfunction.
10. Crank engine while depressing accelerator pedal.
    If engine starts, go to EC-252, "Diagnostic Procedure" . If engine does not start, remove ignition plugs and check for fouling, etc.

Wiring Diagram

UBS00B6A

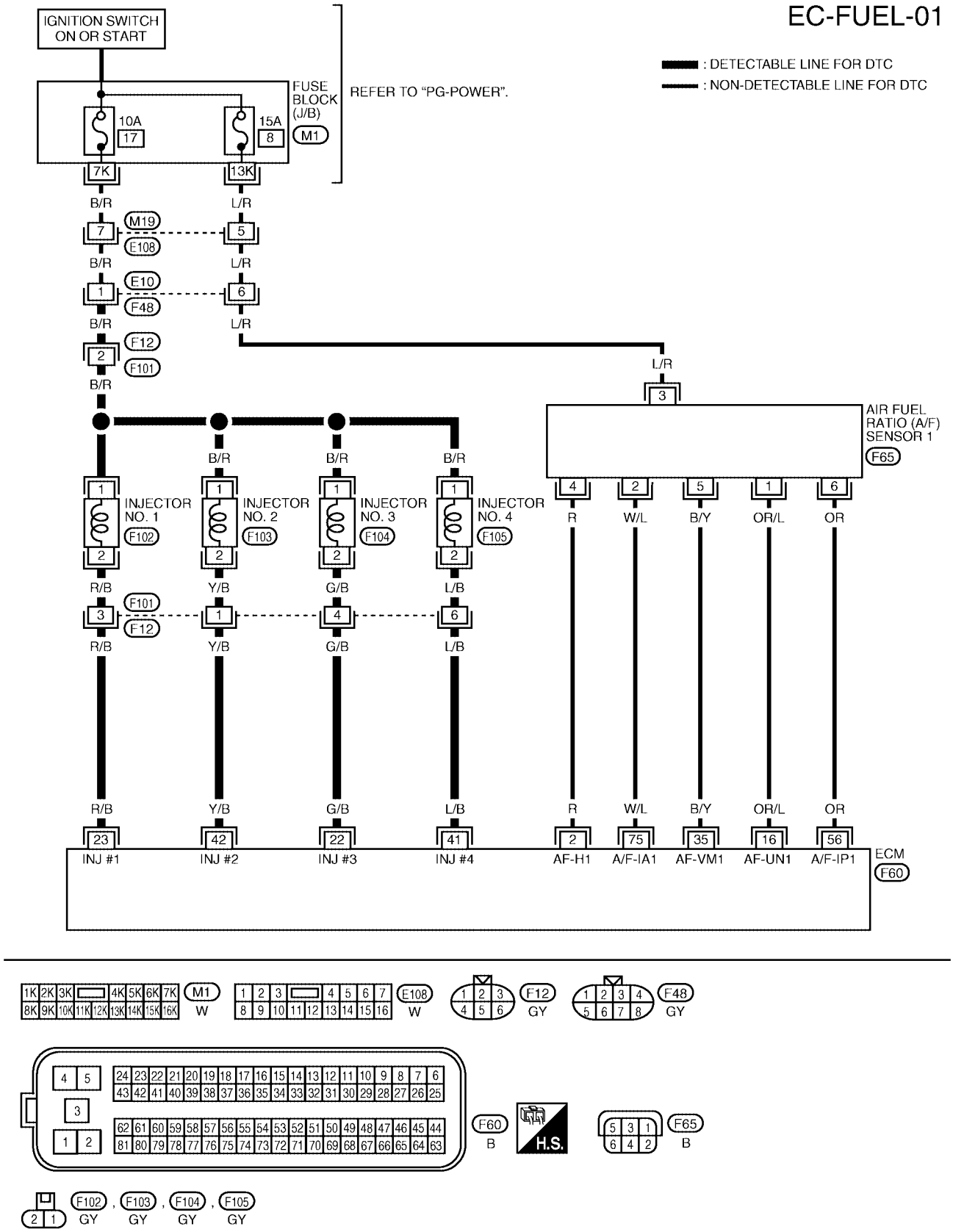

Diagnostic Procedure

UBS00B6B

1. CHECK FOR EXHAUST GAS LEAK

1. Start engine and run it at idle.
2. Listen for an exhaust gas leak before three way catalyst (manifold).

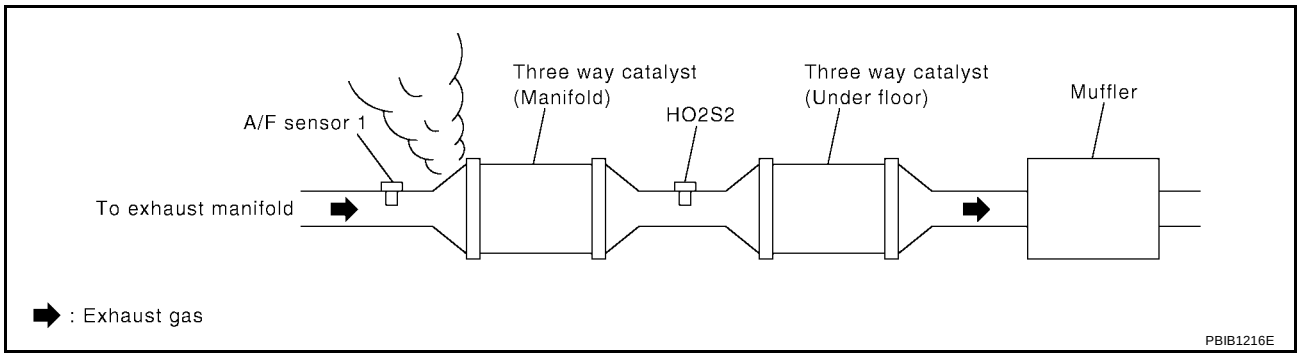

OK or NG

OK >> GO TO 2.
NG >> Repair or replace.

2. CHECK A/F SENSOR 1 INPUT SIGNAL CIRCUIT FOR OPEN AND SHORT

1. Turn ignition switch OFF.
2. Disconnect A/F sensor 1 harness connector and ECM harness connector.
3. Check harness continuity between ECM terminals and A/F sensor 1 terminals as follows.
   Refer to Wiring Diagram.

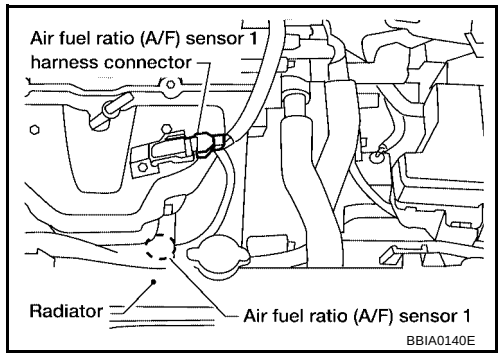

ECM terminal	A/F sensor 1 terminal
16	1
35	5
56	6
75	2

Continuity should exist.

4. Check harness continuity between ECM terminals 16, 35, 56, 75 and ground, or A/F sensor 1 terminals 1, 2, 5, 6 and ground.
   Refer to Wiring Diagram.

Continuity should not exist.

5. Also check harness for short to power.

OK or NG

OK >> GO TO 3.
NG >> Repair open circuit or short to ground or short to power in harness or connectors.

3. CHECK FUEL PRESSURE

1. Release fuel pressure to zero.
   Refer to EC-94, "FUEL PRESSURE RELEASE" .
2. Install fuel pressure gauge and check fuel pressure.

At idling: Approximately 350 kPa (3.57 kg/cm^2 , 51 psi)

OK or NG

OK >> GO TO 5.
NG >> GO TO 4.

4. DETECT MALFUNCTIONING PART

Check the following.

- Fuel pump and circuit (Refer to EC-621 .)
- Fuel pressure regulator (Refer to EC-94 .)

OK or NG

OK >> Replace “fuel level sensor unit and fuel pump”.
NG >> Repair or replace.

5. CHECK MASS AIR FLOW SENSOR

With CONSULT-II

1. Install all removed parts.
2. Check “MASS AIR FLOW” in “DATA MONITOR” mode with CONSULT-II.

at idling	**: 1.4 - 4.0 g·m/sec**
at 2,500 rpm	**: 5.0 - 10.0 g·m/sec**

With GST

1. Install all removed parts.
2. Check mass air flow sensor signal in Service $01 with GST.

at idling	**: 1.4 - 4.0 g·m/sec**
at 2,500 rpm	**: 5.0 - 10.0 g·m/sec**

OK or NG

OK >> GO TO 6.
NG >> Check connectors for rusted terminals or loose connections in the mass air flow sensor circuit or engine grounds. Refer toEC-186, "DTC P0101 MAF SENSOR" .

6. CHECK FUNCTION OF INJECTORS

With CONSULT-II

1. Start engine.
2. Perform “POWER BALANCE” in “ACTIVE TEST” mode with CONSULT-II.
3. Make sure that each circuit produces a momentary engine speed drop.

ACTIVE TEST	
POWER BALANCE	
MONITOR	
ENG SPEED	XXX rpm
MAS A/F SE-B1	XXX V

PBIB0133E

Without CONSULT-II

1. Start engine.
2. Listen to each injector operating sound.

Clicking noise should be heard.

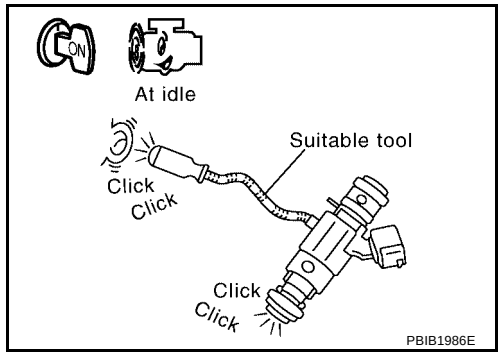

PBIB1986E

OK or NG

OK >> GO TO 7.
NG >> Perform trouble diagnosis for INJECTOR, EC-615, "INJECTOR" .

7. REMOVE INJECTOR

1. Confirm that the engine is cooled down and there are no fire hazards near the vehicle.
2. Turn ignition switch OFF.
3. Remove injector assembly. Refer to EM-21, "FUEL INJECTOR AND FUEL TUBE" .
   Keep fuel hose and all injectors connected to injector gallery.

>> GO TO 8.

8. CHECK INJECTOR

1. Disconnect injector harness connectors.
2. Disconnect all ignition coil harness connectors.
3. Prepare pans or saucers under each injectors.
4. Crank engine for about 3 seconds.
   Make sure fuel does not drip from injector.

OK or NG

OK (Does not drip)>>GO TO 9.
NG (Drips)>>Replace the injectors from which fuel is dripping. Always replace O-ring with new one.

9. CHECK INTERMITTENT INCIDENT

Perform EC-164, "TROUBLE DIAGNOSIS FOR INTERMITTENT INCIDENT" .

>> **INSPECTION END**

DTC P0181 FTT SENSOR

PFP:22630

Component Description

UBS00B6C

The fuel tank temperature sensor is used to detect the fuel temperature inside the fuel tank. The sensor modifies a voltage signal from the ECM. The modified signal returns to the ECM as the fuel temperature input. The sensor uses a thermistor which is sensitive to the change in temperature. The electrical resistance of the thermistor decreases as temperature increases.

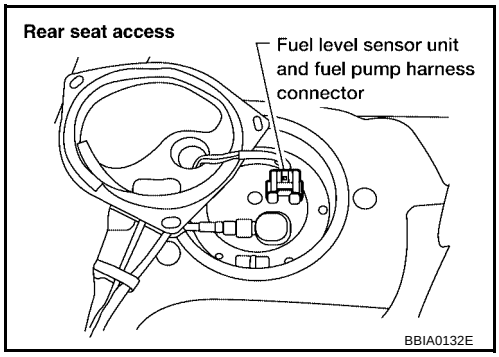

<Reference data>

Fluid temperature °C (°F)	Voltage* V	Resistance kΩ
20 (68)	3.5	2.3 - 2.7
50 (122)	2.2	0.79 - 0.90

*: These data are reference values and are measured between ECM terminal 107 (Fuel tank temperature sensor) and ground.

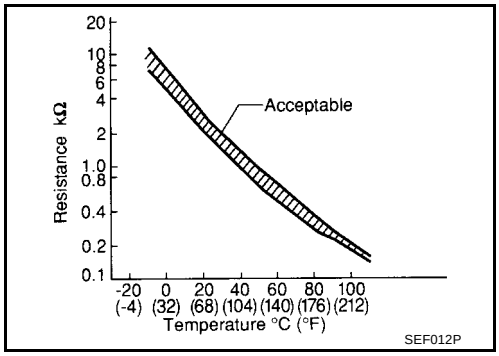

CAUTION:
Do not use ECM ground terminals when measuring input/output voltage. Doing so may damage the ECM's transistor. Use ground other than ECM, such as ground.

On Board Diagnosis Logic

UBS00B6D

DTC No.	Trouble diagnosis name	DTC detecting condition	Possible cause
P0181 0181	Fuel tank temperature sensor circuit range/ performance	Rationally incorrect voltage from the sensor is sent to ECM, compared with the voltage signals from engine coolant temperature sensor and intake air temperature sensor.	● Harness or connectors (The sensor circuit is open or shorted) ● Fuel tank temperature sensor

DTC Confirmation Procedure

UBS00B6E

NOTE:
If DTC Confirmation Procedure has been previously conducted, always turn ignition switch OFF and wait at least 10 seconds before conducting the next test.

WITH CONSULT-II

1. Turn ignition switch ON.
2. Select “DATA MONITOR” mode with CONSULT-II.
3. Wait at least 10 seconds.
   If 1st trip DTC is detected, go to EC-259, "Diagnostic Procedure".
   If the result is OK, go to following step.
4. Check “COOLAN TEMP/S” signal.
   If the signal is less than 50°C (122°F), the result will be OK.
   If the signal is above 50°C (122°F), go to the following step.
5. Cool engine down until “COOLAN TEMP/S” signal is less than 50°C (122°F).
6. Wait at least 10 seconds.
7. If 1st trip DTC is detected, go to EC-259, "Diagnostic Procedure".

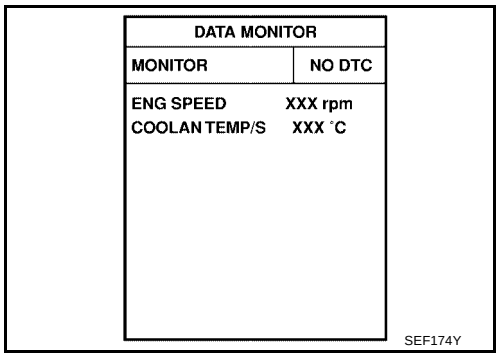

WITH GST

Follow the procedure “WITH CONSULT-II” above.

Wiring Diagram

UBS00B6F

EC-FTTS-01

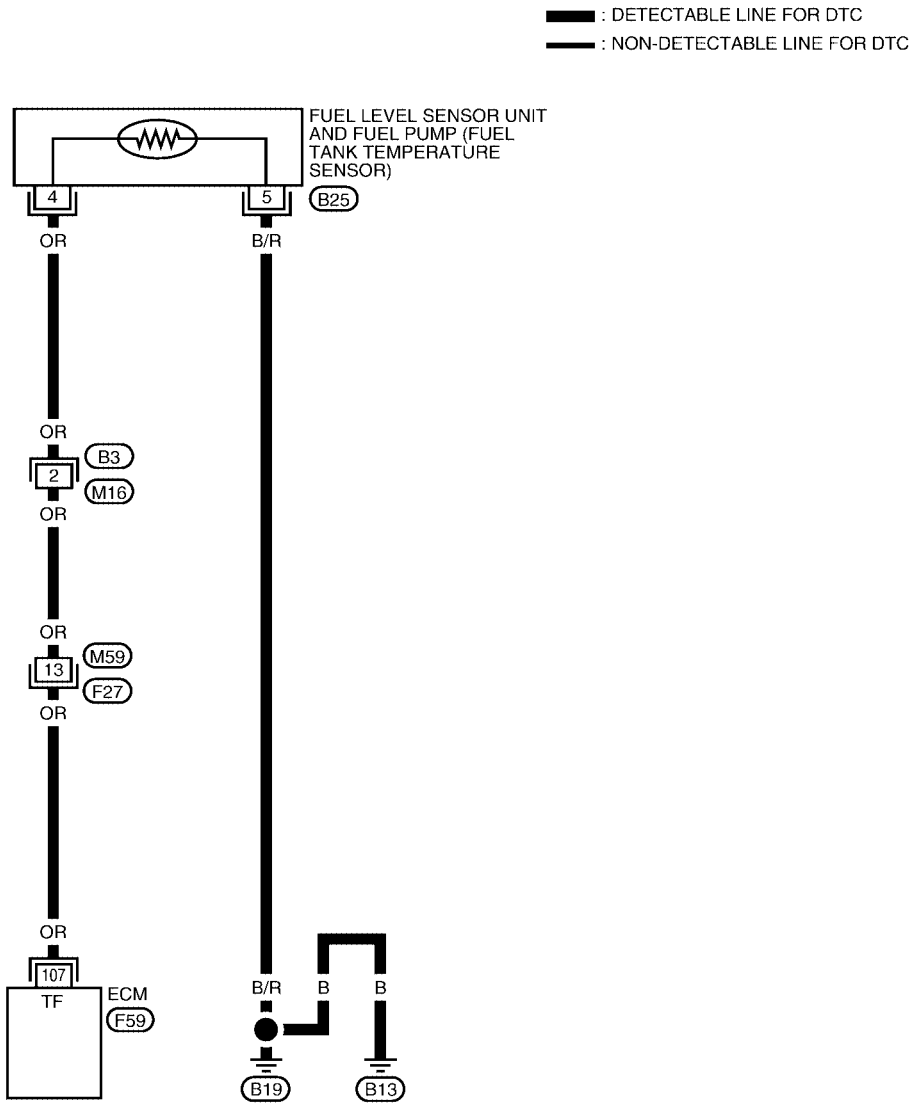

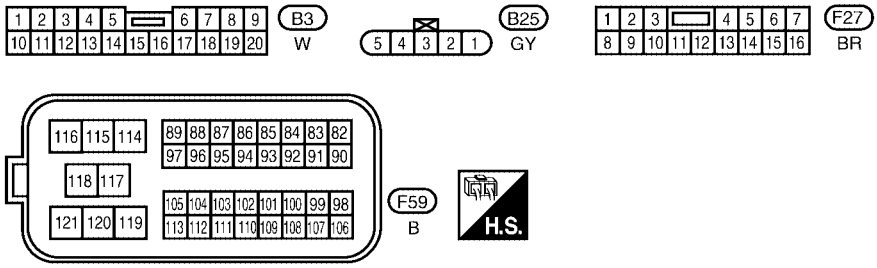

BBWA0285E

Diagnostic Procedure

UBS00B6G

1. CHECK FUEL TANK TEMPERATURE SENSOR POWER SUPPLY CIRCUIT

1. Turn ignition switch OFF.
2. Disconnect “fuel level sensor unit and fuel pump” harness connector.
3. Turn ignition switch ON.

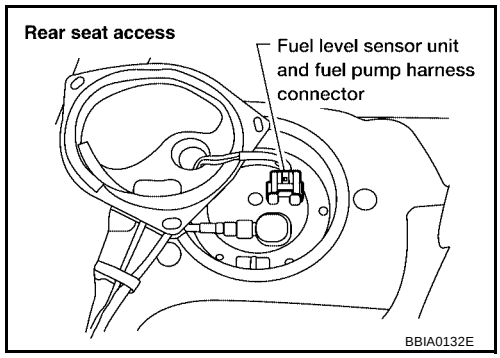

4. Check voltage between “fuel level sensor unit and fuel pump” terminal 4 and ground with CONSULT-II or tester.

Voltage: Approximately 5V

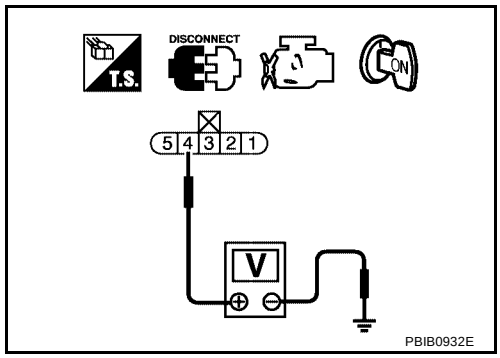

OK or NG

OK >> GO TO 3.
NG >> GO TO 2.

2. DETECT MALFUNCTIONING PART

Check the following.

- Harness connectors M59, F27
- Harness connectors B3, M16
- Harness for open or short between ECM and “fuel level sensor unit and fuel pump”

>> Repair harness or connector.

3. CHECK FUEL TANK TEMPERATURE SENSOR GROUND CIRCUIT FOR OPEN AND SHORT

1. Turn ignition switch OFF.
2. Check harness continuity between “fuel level sensor unit and fuel pump” terminal 5 and ground. Refer to Wiring Diagram.

Continuity should exist.

3. Also check harness for short to power.

OK or NG

OK >> GO TO 4.
NG >> Repair open circuit or short to power in harness or connectors.

4. CHECK FUEL TANK TEMPERATURE SENSOR

Refer to, EC-260, "Component Inspection" .

OK or NG

OK >> GO TO 5.
NG >> Replace fuel level sensor unit.

5. CHECK INTERMITTENT INCIDENT

Perform EC-164, "TROUBLE DIAGNOSIS FOR INTERMITTENT INCIDENT" .

>> **INSPECTION END**

Component Inspection

UBS00B6H

FUEL TANK TEMPERATURE SENSOR

Check resistance by heating with hot water or heat gun as shown in the figure.

Temperature °C (°F)	Resistance kΩ
20 (68)	2.3 - 2.7
50 (122)	0.79 - 0.90

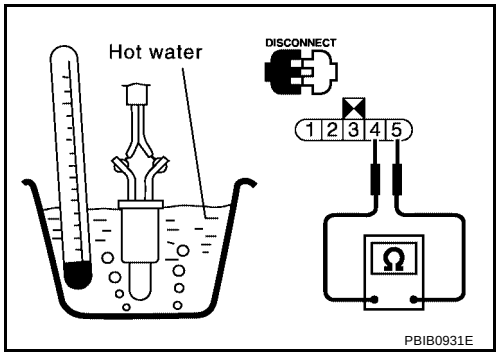

Removal and Installation

UBS00B6I

FUEL TANK TEMPERATURE SENSOR

Refer to FL-3, "FUEL LEVEL SENSOR UNIT, FUEL FILTER AND FUEL PUMP ASSEMBLY" .

DTC P0182, P0183 FTT SENSOR

PFP:22630

Component Description

UBS00B6J

The fuel tank temperature sensor is used to detect the fuel temperature inside the fuel tank. The sensor modifies a voltage signal from the ECM. The modified signal returns to the ECM as the fuel temperature input. The sensor uses a thermistor which is sensitive to the change in temperature. The electrical resistance of the thermistor decreases as temperature increases.

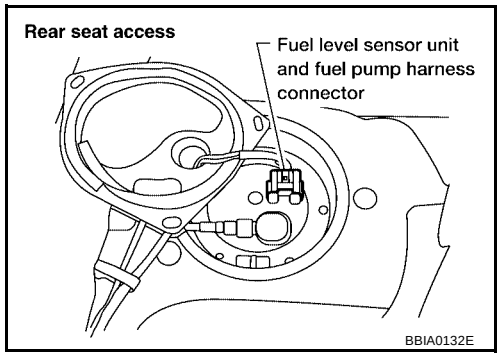

<Reference data>

Fluid temperature °C (°F)	Voltage* V	Resistance kΩ
20 (68)	3.5	2.3 - 2.7
50 (122)	2.2	0.79 - 0.90

*: These data are reference values and are measured between ECM terminal 107 (Fuel tank temperature sensor) and ground.

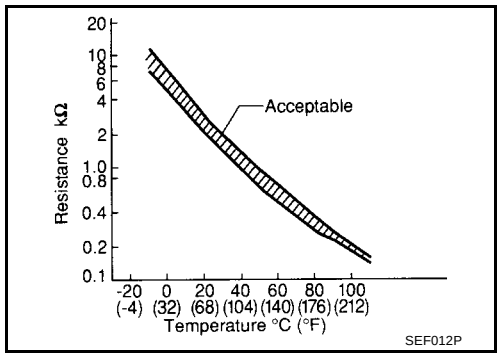

CAUTION:
Do not use ECM ground terminals when measuring input/output voltage. Doing so may damage the ECM's transistor. Use ground other than ECM, such as ground.

On Board Diagnosis Logic

UBS00B6K

DTC No.	Trouble diagnosis name	DTC detecting condition	Possible cause
P0182 0182	Fuel tank temperature sensor circuit low input	An excessively low voltage from the sensor is sent to ECM.	● Harness or connectors (The sensor circuit is open or shorted.) ● Fuel tank temperature sensor
P0183 0183	Fuel tank temperature sensor circuit high input	An excessively high voltage from the sensor is sent to ECM.	

DTC Confirmation Procedure

UBS00B6L

NOTE:
If DTC Confirmation Procedure has been previously conducted, always turn ignition switch OFF and wait at least 10 seconds before conducting the next test.

WITH CONSULT-II

1. Turn ignition switch ON.
2. Select “DATA MONITOR” mode with CONSULT-II.
3. Wait at least 5 seconds.
4. If 1st trip DTC is detected, go to EC-263, "Diagnostic Procedure".

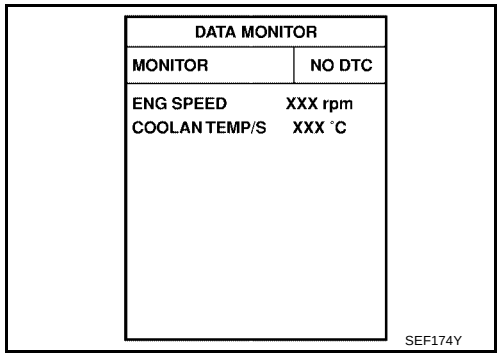

WITH GST

Follow the procedure “WITH CONSULT-II” above.

Wiring Diagram

UBS00B6M

EC-FTTS-01

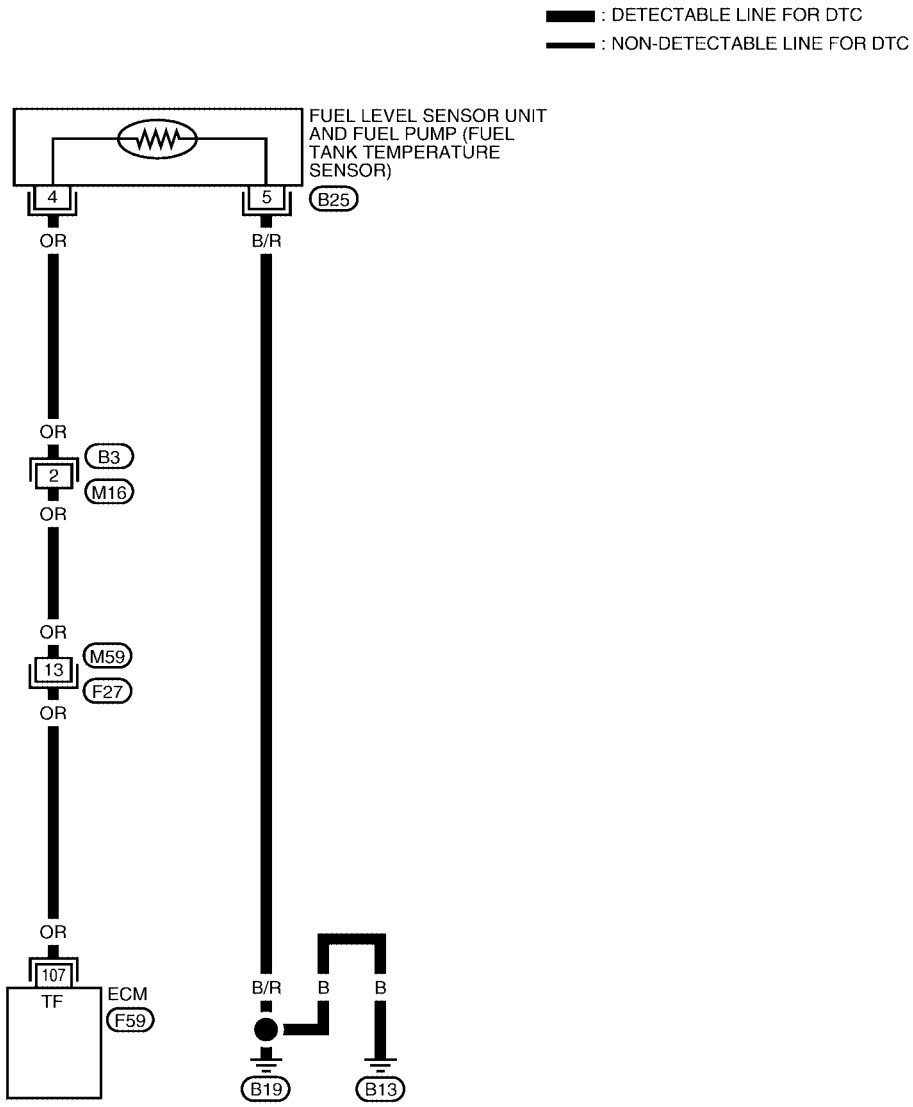

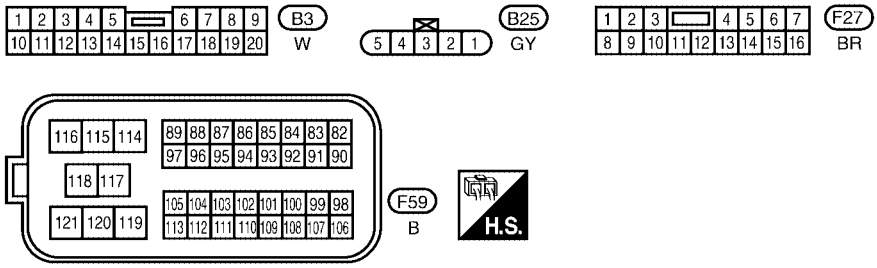

BBWA0285E

Diagnostic Procedure

UBS00B6N

1. CHECK FUEL TANK TEMPERATURE SENSOR POWER SUPPLY CIRCUIT

1. Turn ignition switch OFF.
2. Disconnect “fuel level sensor unit and fuel pump” harness connector.
3. Turn ignition switch ON.

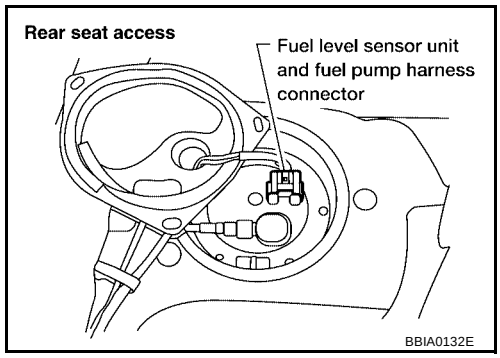

4. Check voltage between “fuel level sensor unit and fuel pump” terminal 4 and ground with CONSULT-II or tester.

Voltage: Approximately 5V

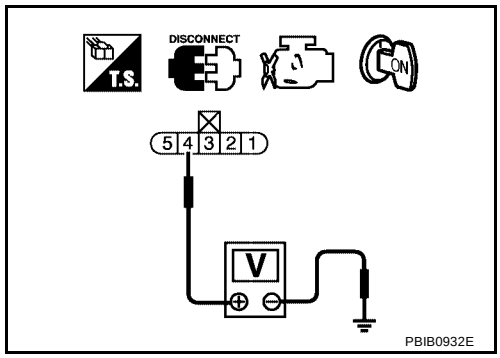

OK or NG

OK >> GO TO 3.
NG >> GO TO 2.

2. DETECT MALFUNCTIONING PART

Check the following.

- Harness connectors M59, F27
- Harness connectors B3, M16
- Harness for open or short between ECM and “fuel level sensor unit and fuel pump”

>> Repair harness or connector.

3. CHECK FUEL TANK TEMPERATURE SENSOR GROUND CIRCUIT FOR OPEN AND SHORT

1. Turn ignition switch OFF.
2. Check harness continuity between “fuel level sensor unit and fuel pump” terminal 5 and ground. Refer to Wiring Diagram.

Continuity should exist.

3. Also check harness for short to power.

OK or NG

OK >> GO TO 4.
NG >> Repair open circuit or short to power in harness or connectors.

4. CHECK FUEL TANK TEMPERATURE SENSOR

Refer to, EC-264, "Component Inspection" .

OK or NG

OK >> GO TO 5.
NG >> Replace “fuel level sensor unit and fuel pump”.

5. CHECK INTERMITTENT INCIDENT

Perform EC-164, "TROUBLE DIAGNOSIS FOR INTERMITTENT INCIDENT" .

>> **INSPECTION END**

Component Inspection

UBS00B6O

FUEL TANK TEMPERATURE SENSOR

Check resistance by heating with hot water or heat gun as shown in the figure.

Temperature °C (°F)	Resistance kΩ
20 (68)	2.3 - 2.7
50 (122)	0.79 - 0.90

If NG, replace fuel level sensor unit and fuel pump.

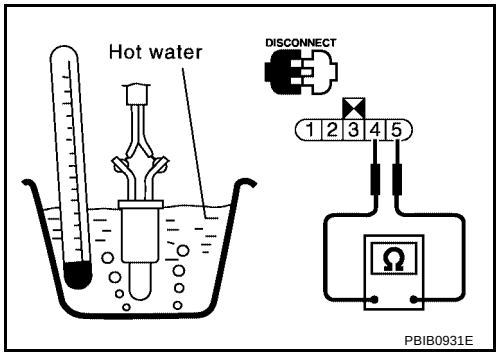

Removal and Installation

UBS00B6P

FUEL TANK TEMPERATURE SENSOR

Refer to FL-3, "FUEL LEVEL SENSOR UNIT, FUEL FILTER AND FUEL PUMP ASSEMBLY" .

DTC P0222, P0223 TP SENSOR

PFP:16119

Component Description

UBS00B6Q

Electric throttle control actuator consists of throttle control motor, throttle position sensor, etc. The throttle position sensor responds to the throttle valve movement.
The throttle position sensor has the two sensors. These sensors are a kind of potentiometers which transform the throttle valve position into output voltage, and emit the voltage signal to the ECM. In addition, these sensors detect the opening and closing speed of the throttle valve and feed the voltage signals to the ECM. The ECM judges the current opening angle of the throttle valve from these signals and the ECM controls the throttle control motor to make the throttle valve opening angle properly in response to driving condition.

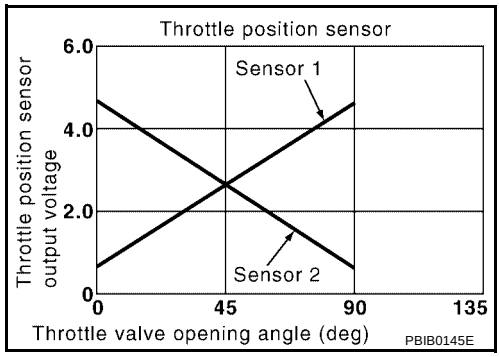

CONSULT-II Reference Value in Data Monitor Mode

UBS00B6R

Specification data are reference values.

MONITOR ITEM	CONDITION		SPECIFICATION
THRTL SEN 1 THRTL SEN 2*	● Ignition switch: ON (Engine stopped) ● Shift lever: D (A/T), 1st (M/T)	Accelerator pedal: Fully released	More than 0.36V
		Accelerator pedal: Fully depressed	Less than 4.75V

*: Throttle position sensor 2 signal is converted by ECM internally. Thus, it differs from ECM terminal voltage signal.

On Board Diagnosis Logic

UBS00B6S

These self-diagnoses have the one trip detection logic.

DTC No.	Trouble diagnosis name	DTC detecting condition	Possible cause
P0222 0222	Throttle position sensor 1 circuit low input	An excessively low voltage from the TP sensor 1 is sent to ECM.	● Harness or connectors (The TP sensor 1 circuit is open or shorted.) (APP sensor 2 circuit is shorted.) ● Electric throttle control actuator (TP sensor 1) ● Accelerator pedal position sensor
P0223 0223	Throttle position sensor 1 circuit high input	An excessively high voltage from the TP sensor 1 is sent to ECM.	

FAIL-SAFE MODE

When the malfunction is detected, ECM enters fail-safe mode an the MIL lights up.

Engine operation condition in fail-safe mode
The ECM controls the electric throttle control actuator in regulating the throttle opening in order for the idle position to be within +10 degrees. The ECM regulates the opening speed of the throttle valve to be slower than the normal condition. So, the acceleration will be poor.

DTC Confirmation Procedure

UBS00B6T

NOTE:
If DTC Confirmation Procedure has been previously conducted, always turn ignition switch OFF and wait at least 10 seconds before conducting the next test.
TESTING CONDITION:
Before performing the following procedure, confirm that battery voltage is more than 10V at idle.

WITH CONSULT-II

1. Turn ignition switch ON.
2. Select “DATA MONITOR” mode with CONSULT-II.
3. Start engine and let it idle for 1 second.
4. If DTC is detected, go to EC-268, "Diagnostic Procedure" .

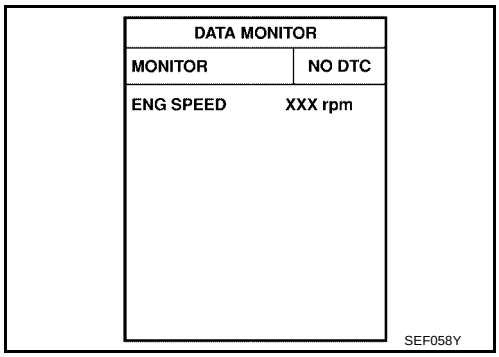

WITH GST

Follow the procedure “WITH CONSULT-II” above.

Wiring Diagram

UBS00B6U

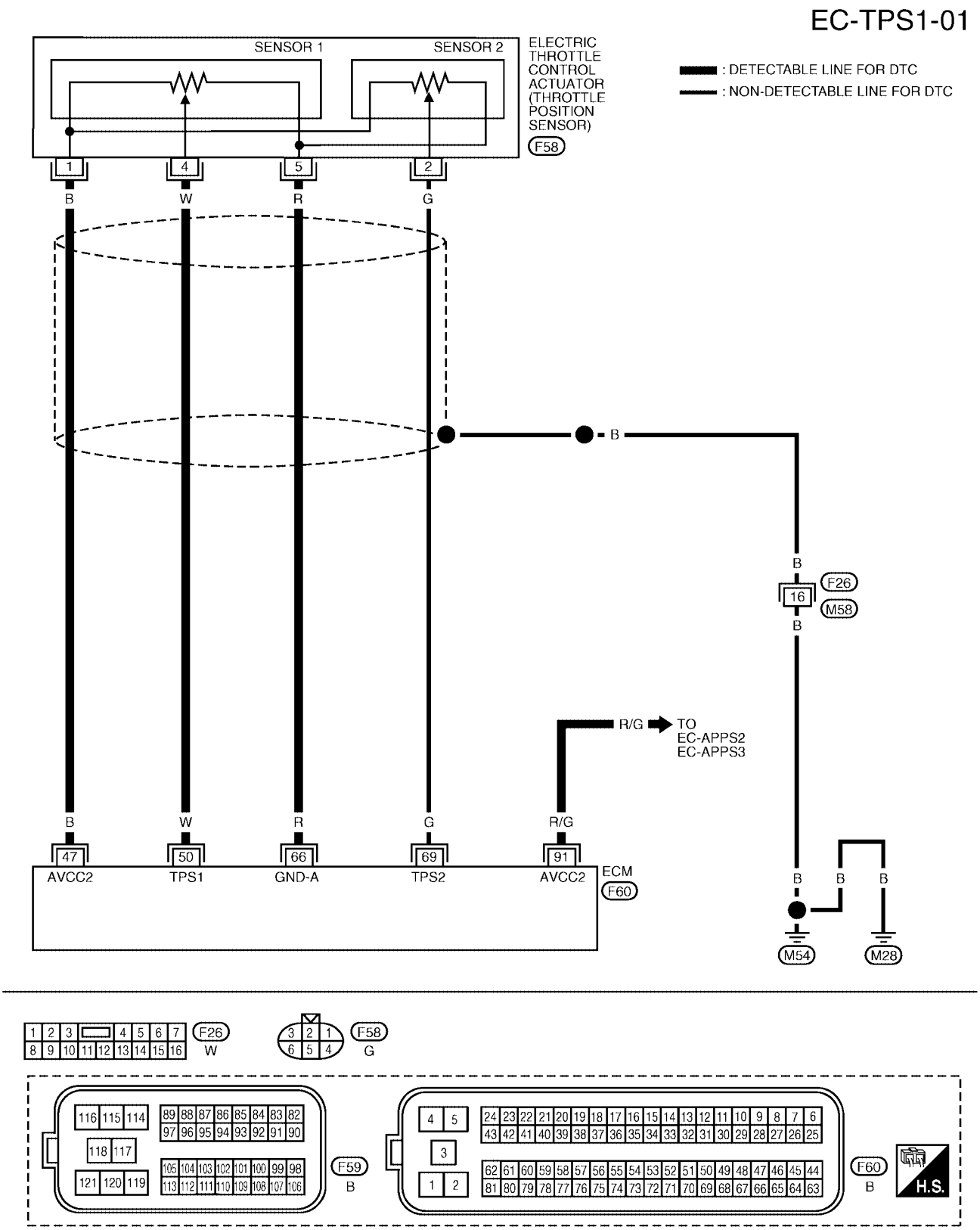

Specification data are reference values and are measured between each terminal and ground.

CAUTION:

Do not use ECM ground terminals when measuring input/output voltage. Doing so may result in damage to the ECM's transistor. Use a ground other than ECM terminals, such as the ground.

TERMINAL NO.	WIRE COLOR	ITEM	CONDITION	DATA (DC Voltage)
47	B	Throttle position sensor power supply	**[Ignition switch: ON]**	Approximately 5V
50	W	Throttle position sensor 1	**[Ignition switch: ON]** ● Engine stopped ● Shift lever: D (A/T), 1st (M/T) ● Accelerator pedal fully released	More than 0.36V
			[Ignition switch: ON] ● Engine stopped ● Shift lever: D (A/T), 1st (M/T) ● Accelerator pedal fully depressed	Less than 4.75V
66	R	Throttle position sensor ground	**[Engine is running]** ● **Warm-up condition** ● Idle speed	Approximately 0V
69	G	Throttle position sensor 2	**[Ignition switch: ON]** ● Engine stopped ● Shift lever: D (A/T), 1st (M/T) ● Accelerator pedal fully released	Less than 4.75V
			[Ignition switch: ON] ● Engine stopped ● Shift lever: D (A/T), 1st (M/T) ● Accelerator pedal fully depressed	More than 0.36V
91	R/G	Sensor power supply (Accelerator pedal position sensor 2)	**[Ignition switch: ON]**	Approximately 5V

Diagnostic Procedure

UBS00B6V

1. CHECK GROUND CONNECTIONS

1. Turn ignition switch OFF.
2. Loosen and retighten two ground screws on the body. Refer to EC-171, "Ground Inspection" .

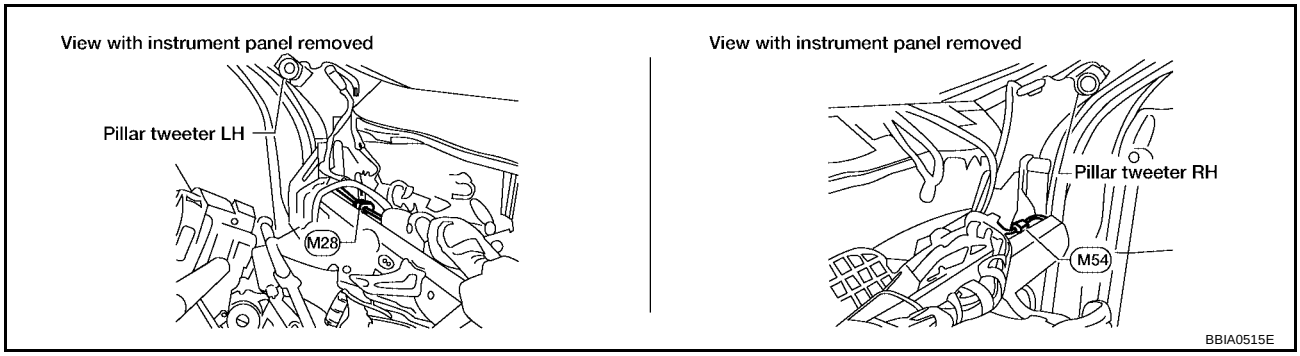

OK or NG

OK >> GO TO 2.
NG >> Repair or replace ground connections.

2. CHECK THROTTLE POSITION SENSOR 1 POWER SUPPLY CIRCUIT-I

1. Disconnect electric throttle control actuator harness connector.
2. Turn ignition switch ON.

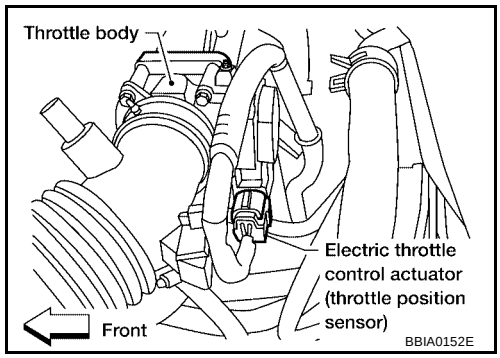

3. Check voltage between electric throttle control actuator terminal 1 and ground with CONSULT-II or tester.

Voltage: Approximately 5V

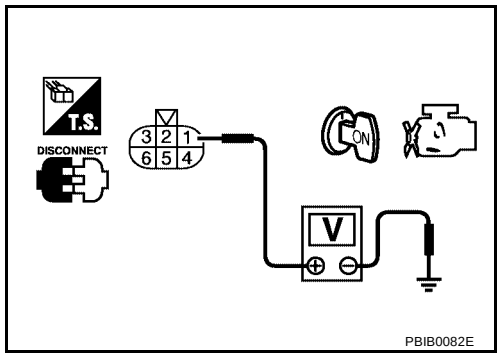

OK or NG

OK >> GO TO 7.
NG >> GO TO 3.

3. CHECK THROTTLE POSITION SENSOR 1 POWER SUPPLY CIRCUIT-II

1. Turn ignition switch OFF.
2. Disconnect ECM harness connector.
3. Check harness continuity between electric throttle control actuator terminal 1 and ECM terminal 47. Refer to Wiring Diagram.

Continuity should exist.

OK or NG

OK >> GO TO 4.
NG >> Repair or replace open circuit.

4. CHECK THROTTLE POSITION SENSOR 1 POWER SUPPLY CIRCUIT-III

Check harness for short to power and short to ground, between the following terminals.

ECM terminal	Sensor terminal	Reference Wiring Diagram
47	Electric throttle control actuator terminal 1	EC-401
91	APP sensor terminal 1	EC-596

OK or NG

OK >> GO TO 5.
NG >> Repair short to ground or short to power in harness or connectors.

5. CHECK APP SENSOR

Refer to EC-601, "Component Inspection" .

OK or NG

OK >> GO TO 11.
NG >> GO TO 6.

6. REPLACE ACCELERATOR PEDAL ASSEMBLY

1. Replace accelerator pedal assembly.
2. Perform EC-92, "Accelerator Pedal Released Position Learning" .
3. Perform EC-92, "Throttle Valve Closed Position Learning" .
4. Perform EC-92, "Idle Air Volume Learning" .

>> **INSPECTION END**

7. CHECK THROTTLE POSITION SENSOR 1 GROUND CIRCUIT FOR OPEN AND SHORT

1. Turn ignition switch OFF.
2. Disconnect ECM harness connector.
3. Check harness continuity between ECM terminal 66 and electric throttle control actuator terminal 5. Refer to Wiring Diagram.

Continuity should exist.

4. Also check harness for short to ground and short to power.

OK or NG

OK >> GO TO 8.
NG >> Repair open circuit or short to ground or short to power in harness or connectors.

8. CHECK THROTTLE POSITION SENSOR 1 INPUT SIGNAL CIRCUIT FOR OPEN AND SHORT

1. Disconnect ECM harness connector.
2. Check harness continuity between ECM terminal 50 and electric throttle control actuator terminal 4. Refer to Wiring Diagram.

Continuity should exist.

3. Also check harness for short to ground and short to power.

OK or NG

OK >> GO TO 9.
NG >> Repair open circuit or short to ground or short to power in harness or connectors.

9. CHECK THROTTLE POSITION SENSOR

Refer to EC-271, "Component Inspection" .

OK or NG

OK >> GO TO 11.
NG >> GO TO 10.

10. REPLACE ELECTRIC THROTTLE CONTROL ACTUATOR

1. Replace the electric throttle control actuator.
2. Perform EC-92, "Throttle Valve Closed Position Learning" .
3. Perform EC-92, "Idle Air Volume Learning" .

>> **INSPECTION END**

11. CHECK INTERMITTENT INCIDENT

Refer to EC-164, "TROUBLE DIAGNOSIS FOR INTERMITTENT INCIDENT" .

>> **INSPECTION END**

Component Inspection

UBS00B6W

THROTTLE POSITION SENSOR

1. Reconnect all harness connectors disconnected.
2. Perform EC-92, "Throttle Valve Closed Position Learning" .
3. Turn ignition switch ON.
4. Set selector lever to D position (A/T models) or 1st position (M/T models).
5. Check voltage between ECM terminals 50 (TP sensor 1 signal), 69 (TP sensor 2 signal) and ground under the following conditions.

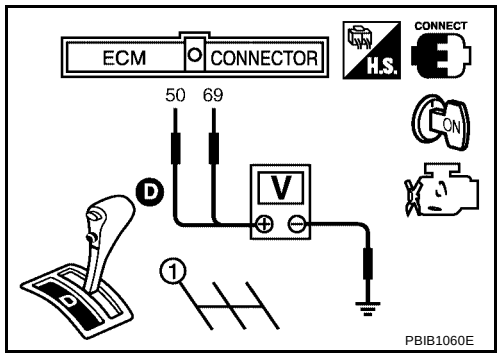

Terminal	Accelerator pedal	Voltage
50 (Throttle position sensor 1)	Fully released	More than 0.36V
	Fully depressed	Less than 4.75V
69 (Throttle position sensor 2)	Fully released	Less than 4.75V
	Fully depressed	More than 0.36V

6. If NG, replace electric throttle control actuator and go to the next step.
7. Perform EC-92, "Throttle Valve Closed Position Learning" .
8. Perform EC-92, "Idle Air Volume Learning" .

Removal and Installation

UBS00B6X

ELECTRIC THROTTLE CONTROL ACTUATOR

Refer to EM-15, "OUTER COMPONENT PARTS" .

DTC P0300 - P0304 NO. 4 - 1 CYLINDER MISFIRE, MULTIPLE CYLINDER MISFIRE

PFP:00020

On Board Diagnosis Logic

UBS00B6Y

When a misfire occurs, engine speed will fluctuate. If the engine speed fluctuates enough to cause the crankshaft position (CKP) sensor (POS) signal to vary, ECM can determine that a misfire is occurring.

Sensor	Input Signal to ECM	ECM function
Crankshaft position sensor (POS)	Engine speed	On board diagnosis of misfire

The misfire detection logic consists of the following two conditions.

1. One Trip Detection Logic (Three Way Catalyst Damage)
   On the first trip that a misfire condition occurs that can damage the three way catalyst (TWC) due to overheating, the MIL will blink.
   When a misfire condition occurs, the ECM monitors the CKP sensor signal every 200 engine revolutions for a change.
   When the misfire condition decreases to a level that will not damage the TWC, the MIL will turn off.
   If another misfire condition occurs that can damage the TWC on a second trip, the MIL will blink.
   When the misfire condition decreases to a level that will not damage the TWC, the MIL will remain on.
   If another misfire condition occurs that can damage the TWC, the MIL will begin to blink again.
2. Two Trip Detection Logic (Exhaust quality deterioration)
   For misfire conditions that will not damage the TWC (but will affect vehicle emissions), the MIL will only light when the misfire is detected on a second trip. During this condition, the ECM monitors the CKP sensor signal every 1,000 engine revolutions.
   A misfire malfunction can be detected on any one cylinder or on multiple cylinders.

DTC No.	Trouble diagnosis name	DTC detecting condition	Possible cause
P0300 0300	Multiple cylinder misfire detected	Multiple cylinder misfire.	● Improper spark plug ● Insufficient compression ● Incorrect fuel pressure ● The injector circuit is open or shorted ● Injectors ● Intake air leak ● The ignition signal circuit is open or shorted ● Lack of fuel ● Signal plate ● Air fuel ratio (A/F) sensor 1 ● Incorrect PCV hose connection
P0301 0301	No.1 cylinder misfire detected	No. 1 cylinder misfires.	
P0302 0302	No. 2 cylinder misfire detected	No. 2 cylinder misfires.	
P0303 0303	No. 3 cylinder misfire detected	No. 3 cylinder misfires.	
P0304 0304	No. 4 cylinder misfire detected	No. 4 cylinder misfires.	

DTC Confirmation Procedure

UBS00B6Z

CAUTION:
Always drive vehicle in safe manner according to traffic conditions and obey all traffic laws when driving.

NOTE:
If DTC Confirmation Procedure has been previously conducted, always turn ignition switch OFF and wait at least 10 seconds before conducting the next test.

WITH CONSULT-II

1. Turn ignition switch ON, and select “DATA MONITOR” mode with CONSULT-II.
2. Start engine and warm it up to normal operating temperature.
3. Turn ignition switch OFF and wait at least 10 seconds.
4. Restart engine and let it idle for about 15 minutes.
5. If 1st trip DTC is detected, go to EC-273, "Diagnostic Procedure".

   NOTE:
   If 1st trip DTC is not detected during above procedure, performing the following procedure is advised.

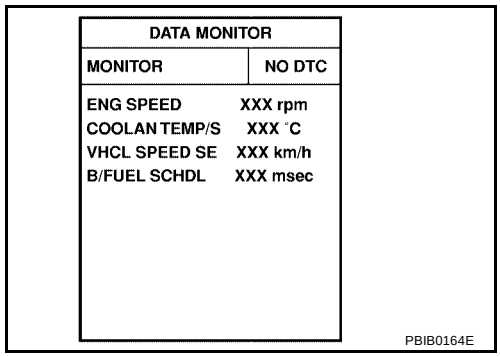

a. Turn ignition switch OFF and wait at least 10 seconds.
b. Start engine and drive the vehicle under the similar conditions to (1st trip) Freeze Frame Data for a certain time. Refer to the table below.
   Hold the accelerator pedal as steady as possible.

   The similar conditions to (1st trip) Freeze Frame Data means the vehicle operation that the following conditions should be satisfied at the same time.

Engine speed	Engine speed in the freeze frame data ± 400 rpm
Vehicle speed	Vehicle speed in the freeze frame data ± 10 km/h (6 MPH)
Engine coolant temperature (T) condition	When the freeze frame data shows lower than 70 °C (158 °F), T should be lower than 70 °C (158 °F).
	When the freeze frame data shows higher than or equal to 70 °C (158 °F), T should be higher than or equal to 70 °C (158 °F).

The time to driving varies according to the engine speed in the freeze frame data.

Engine speed	Time
Around 1,000 rpm	Approximately 10 minutes
Around 2,000 rpm	Approximately 5 minutes
More than 3,000 rpm	Approximately 3.5 minutes

WITH GST

Follow the procedure “WITH CONSULT-II” above.

Diagnostic Procedure

UBS00B70

1. CHECK FOR INTAKE AIR LEAK

1. Start engine and run it at idle speed.
2. Listen for the sound of the intake air leak.
3. Check PCV hose connection.

OK or NG

OK >> GO TO 2.
NG >> Discover air leak location and repair.

2. CHECK FOR EXHAUST SYSTEM CLOGGING

Stop engine and visually check exhaust tube, three way catalyst (manifold) and muffler for dents.

OK or NG

OK >> GO TO 3.
NG >> Repair or replace it.

3. PERFORM POWER BALANCE TEST

With CONSULT-II

1. Perform “POWER BALANCE” in “ACTIVE TEST” mode.
2. Is there any cylinder which does not produce a momentary engine speed drop?

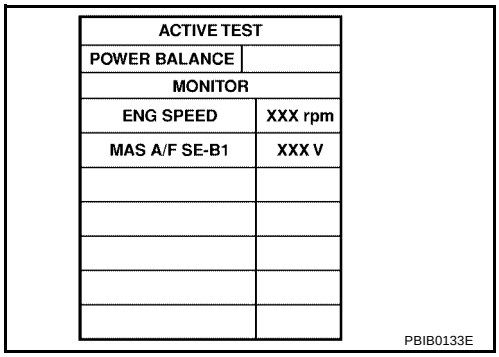

ACTIVE TEST	
POWER BALANCE	
MONITOR	
ENG SPEED	XXX rpm
MAS A/F SE-B1	XXX V

PBIB0133E

Without CONSULT-II

When disconnecting each injector harness connector one at a time, is there any cylinder which does not produce a momentary engine speed drop?

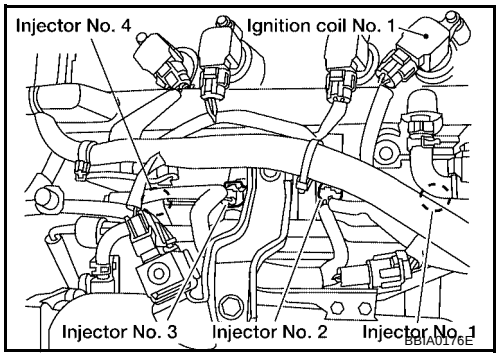

Yes or No

Yes >> GO TO 4.
No >> GO TO 7.

4. CHECK INJECTOR

Does each injector make an operating sound at idle?

Yes or No

Yes >> GO TO 5.
No >> Check injector(s) and circuit(s). Refer to EC-615 .

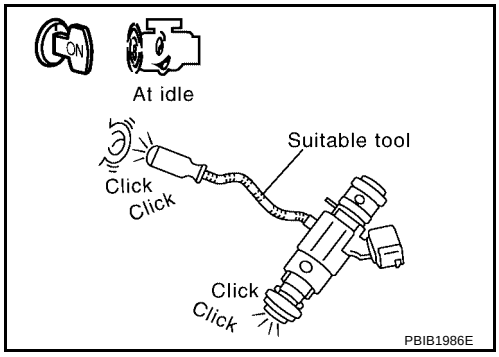

5. CHECK FUNCTION OF IGNITION COIL-I

CAUTION:
Do the following procedure in the place where ventilation is good without the combustibles.

1. Turn ignition switch OFF.
2. Remove fuel pump fuse in IPDM E/R to release fuel pressure.

   NOTE:
   Do not use CONSULT-II to release fuel pressure, or fuel pressure applies again during the following procedure.
3. Start engine.
4. After engine stalls, crank it two or three times to release all fuel pressure.
5. Turn ignition switch OFF.
6. Remove all ignition coil harness connectors to avoid the electrical discharge from the ignition coils.
7. Remove ignition coil and spark plug of the cylinder to be checked.

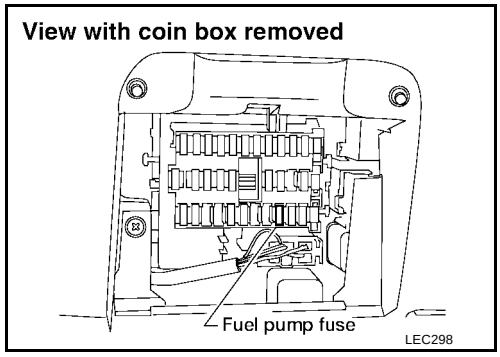

8. Crank engine for five seconds or more to remove combustion gas in the cylinder.
9. Connect spark plug and harness connector to ignition coil.
10. Fix ignition coil using a rope etc. with gap of 13 - 17 mm between the edge of the spark plug and grounded metal portion as shown in the figure.
11. Crank engine for about three seconds, and check whether spark is generated between the spark plug and the grounded metal portion.

    Spark should be generated.

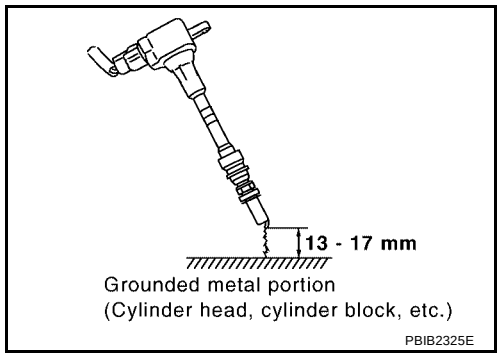

CAUTION:
- **Do not approach to the spark plug and the ignition coil within 50cm. Be careful not to get an electrical shock while checking, because the electrical discharge voltage becomes 20kV or more.**
- **It might cause to damage the ignition coil if the gap of 17 mm or more is taken.**

NOTE:
When the gap is 13 mm or less, the spark might be generated even if the coil is malfunctioning.

OK or NG

OK >> GO TO 9.
NG >> GO TO 6.

6. CHECK FUNCTION OF IGNITION COIL-II

1. Turn ignition switch OFF.
2. Disconnect spark plug and connect a known-good spark plug.
3. Crank engine for about three seconds, and recheck whether spark is generated between the spark plug and the grounded metal portion.

   Spark should be generated.

OK or NG

OK >> GO TO 7.
NG >> Check ignition coil, power transistor and their circuits. Refer to EC-602 .

7. CHECK SPARK PLUGS

Check the spark plugs and check for fouling, etc.

OK or NG

OK >> GO TO 8.
NG >> Repair or replace spark plug (s) with standard type one (s). For spark plug type. Refer to MA-21 .

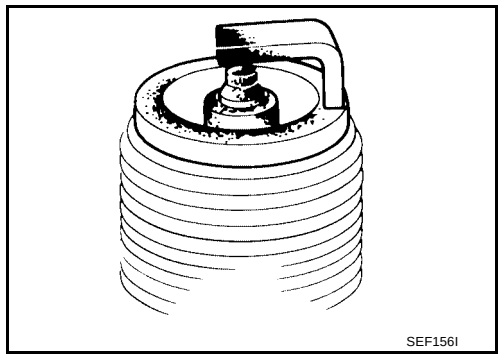

8. CHECK FUNCTION OF IGNITION COIL-III

1. Reconnect the initial spark plugs.
2. Crank engine for about three seconds, and recheck whether spark is generated between the spark plug and the grounded portion.

Spark should be generated.

OK or NG

OK >> **INSPECTION END**
NG >> Replace spark plug(s) with standard type one(s). For spark plug type, refer to MA-21 .

9. CHECK COMPRESSION PRESSURE

Check compression pressure. Refer to EM-55, "CHECKING COMPRESSION PRESSURE" .

Standard	**: 1,320 kPa (13.5 kg/cm^2 , 191 psi) /300 rpm**
Minimum	**: 1,130 kPa (11.5 kg/cm^2 , 164 psi)/ 300 rpm**
Difference between each cylinder	**: 98 kPa (1.0 kg/cm^2 , 14 psi)/ 300 rpm**

OK or NG

OK >> GO TO 10.
NG >> Check pistons, piston rings, valves, valve seats and cylinder head gaskets.

10. CHECK FUEL PRESSURE

1. Install all removed parts.
2. Release fuel pressure to zero. Refer to EC-94, "FUEL PRESSURE RELEASE" .
3. Install fuel pressure gauge and check fuel pressure.

At idle: Approx. 350 kPa (3.57 kg/cm^2 , 51 psi)

OK or NG

OK >> GO TO 12.
NG >> GO TO 11.

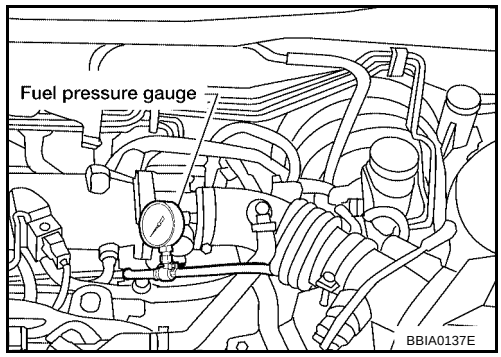

11. DETECT MALFUNCTIONING PART

Check the following.

- Fuel pump and circuit (Refer to EC-621, "FUEL PUMP" .)
- Fuel pressure regulator
- Fuel lines
- Fuel filter for clogging

>> Repair or replace.

12. CHECK IGNITION TIMING

Perform EC-74, "Basic Inspection" .

Items	Specifications	
Target idle speed	A/T	800 ± 50 rpm (in P or N position)
	M/T	650 ± 50 rpm
Ignition timing	A/T	18 ± 5°BTDC (in P or N position)
	M/T	7 ± 5°BTDC

OK or NG

OK >> GO TO 13.
NG >> Follow the EC-74, "Basic Inspection" .

13. CHECK A/F SENSOR 1 INPUT SIGNAL CIRCUIT

1. Turn ignition switch OFF.
2. Disconnect ECM harness connector and A/F sensor 1 harness connector.
3. Check harness continuity between the following terminals. Refer to EC-482, "Wiring Diagram" .

ECM terminal	A/F sensor 1 terminal
16	1
35	5
56	6
75	2

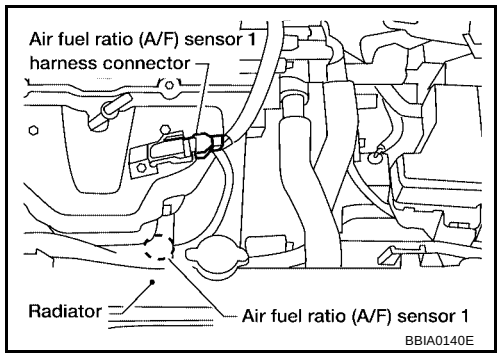

Continuity should exist.

4. Check harness continuity between ECM terminals 16, 35, 56, 75 or A/F sensor 1 terminals 1, 2, 5, 6 and ground. Refer to Wiring Diagram.

Continuity should not exist.

5. Also check harness for short to power.

OK or NG

OK >> GO TO 14.
NG >> Repair open circuit or short to ground or short to power in harness or connectors.

14. CHECK A/F SENSOR 1 HEATER

Refer to EC-389, "Component Inspection" .

OK or NG

OK >> GO TO 15.
NG >> Replace A/F sensor 1.

15. CHECK MASS AIR FLOW SENSOR

With CONSULT-II
Check “MASS AIR FLOW” in “DATA MONITOR” mode with CONSULT-II.

at idling:	**1.4 - 4.0 g·m/sec**
at 2,500 rpm:	**5.0 - 10.0 g·m/sec**

With GST
Check mass air flow sensor signal in Service $01 with GST.

at idling:	**1.4 - 4.0 g·m/sec**
at 2,500 rpm:	**5.0 - 10.0 g·m/sec**

OK or NG

OK >> GO TO 17.
NG >> GO TO 16.

16. CHECK CONNECTORS

Check connectors for rusted terminals or loose connections in the mass air flow sensor circuit or engine grounds.
Refer to EC-186, "DTC P0101 MAF SENSOR" .

OK or NG

OK >> GO TO 17.
NG >> Repair or replace it.

17. CHECK SYMPTOM MATRIX CHART

Check items on the rough idle symptom in EC-106, "Symptom Matrix Chart" .

OK or NG

OK >> GO TO 18.
NG >> Repair or replace.

18. ERASE THE 1ST TRIP DTC

Some tests may cause a 1st trip DTC to be set.
Erase the 1st trip DTC from the ECM memory after performing the tests. Refer to EC-64, "HOW TO ERASE EMISSION-RELATED DIAGNOSTIC INFORMATION" .

>> GO TO 19.

19. CHECK INTERMITTENT INCIDENT

Perform EC-164, "TROUBLE DIAGNOSIS FOR INTERMITTENT INCIDENT" .

>> **INSPECTION END**

DTC P0327, P0328 KS

PFP:22060

Component Description

UBS00B71

The knock sensor is attached to the cylinder block. It senses engine knocking using a piezoelectric element. A knocking vibration from the cylinder block is sensed as vibrational pressure. This pressure is converted into a voltage signal and sent to the ECM.

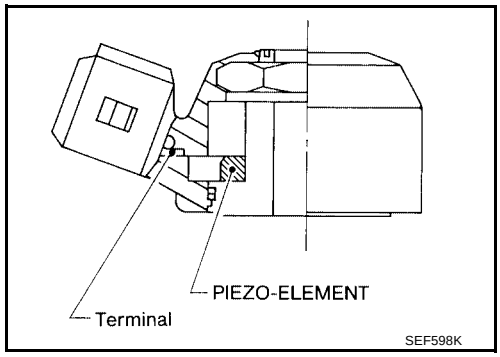

On Board Diagnosis Logic

UBS00B72

The MIL will not light up for these diagnoses.

DTC No.	Trouble Diagnosis Name	DTC Detected Condition	Possible Cause
P0327 0327	Knock sensor circuit low input	An excessively low voltage from the sensor is sent to ECM.	● Harness or connectors (The sensor circuit is open or shorted.) ● Knock sensor
P0328 0328	Knock sensor circuit high input	An excessively high voltage from the sensor is sent to ECM.	

DTC Confirmation Procedure

UBS00B73

NOTE:
If DTC Confirmation Procedure has been previously conducted, always turn ignition switch OFF and wait at least 10 seconds before conducting the next test.
TESTING CONDITION:
Before performing the following procedure, confirm that battery voltage is more than 10V at idle.

WITH CONSULT-II

1. Turn ignition switch ON and select “DATA MONITOR” mode with CONSULT-II.
2. Start engine and run it for at least 5 seconds at idle speed.
3. If 1st trip DTC is detected, go to EC-281, "Diagnostic Procedure"
.

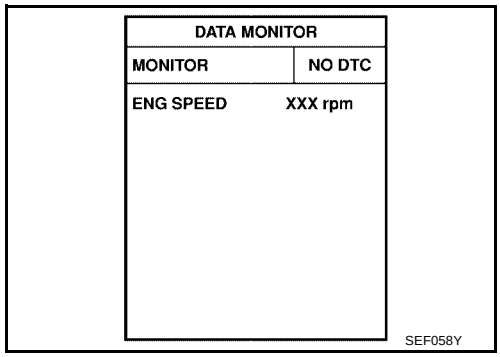

WITH GST

Follow the procedure “WITH CONSULT-II” above.

Wiring Diagram

UBS00B74

EC-KS-01

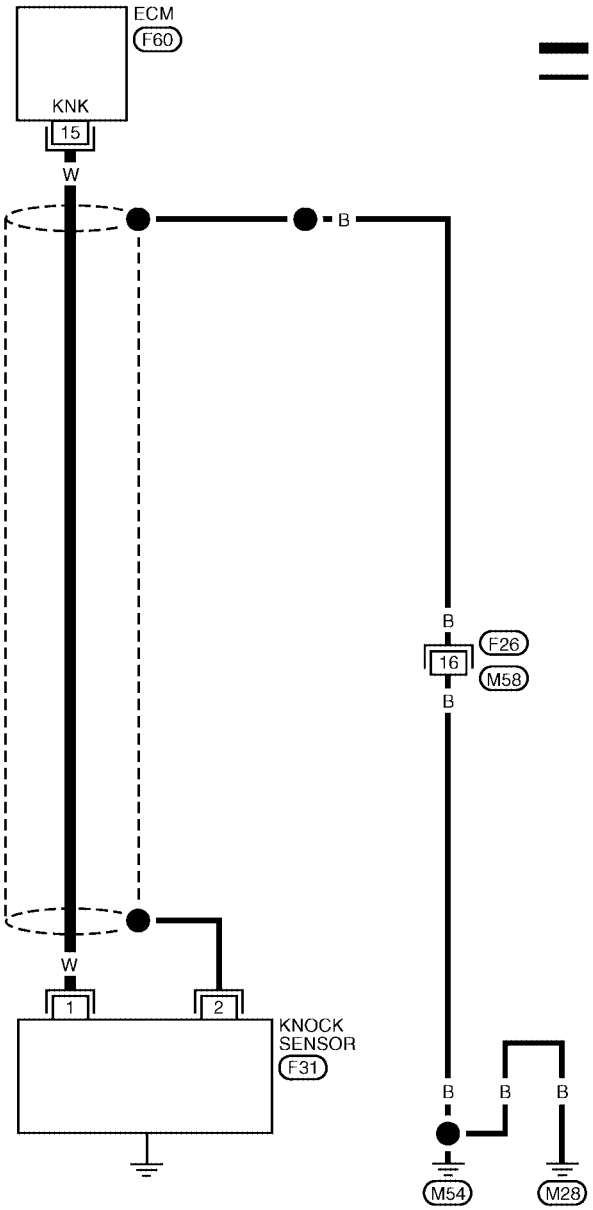

: DETECTABLE LINE FOR DTC

: NON-DETECTABLE LINE FOR DTC

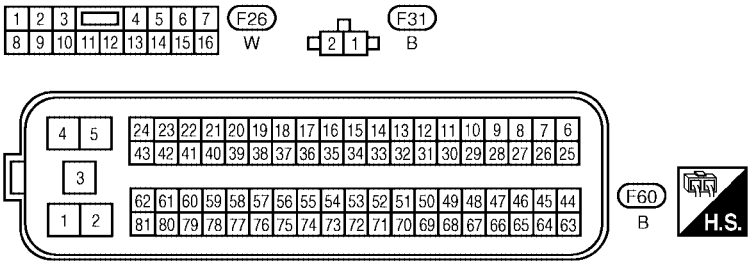

BBWA1462E

Specification data are reference values and are measured between each terminal and ground.

CAUTION:

Do not use ECM ground terminals when measuring input/output voltage. Doing so may result in damage to the ECM's transistor. Use a ground other than ECM terminals, such as the ground.

TERMINAL NO.	WIRE COLOR	ITEM	CONDITION	DATA (DC Voltage)
15	W	Knock sensor	**[Engine is running]** ● Idle speed	Approximately 2.5V

Diagnostic Procedure

UBS00B75

1. CHECK KNOCK SENSOR INPUT SIGNAL CIRCUIT FOR OPEN AND SHORT-I

1. Turn ignition switch OFF.
2. Disconnect ECM harness connector.
3. Check resistance between ECM terminal 15 and ground. Refer to Wiring Diagram.

   NOTE:
   It is necessary to use an ohmmeter which can measure more than 10 MΩ.

   Resistance: Approximately 530 - 590kΩ [at 20°C (68°F)]

4. Also check harness for short to ground and short to power.

OK or NG

OK >> GO TO 4.
NG >> GO TO 2.

2. CHECK KNOCK SENSOR INPUT SIGNAL CIRCUIT FOR OPEN AND SHORT-II

1. Disconnect ECM harness connector and knock sensor harness connector.
2. Check harness continuity between knock sensor terminal 1 and ECM terminal 15.
   Refer to Wiring Diagram.

   Continuity should exist.

3. Also check harness for short to ground and short to power.

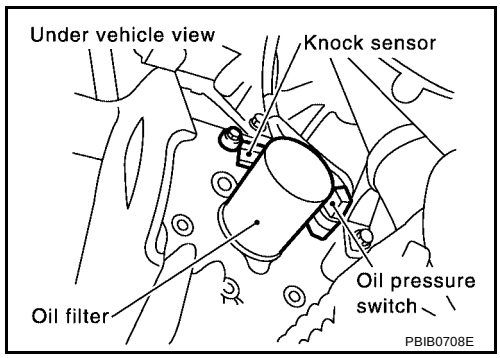

OK or NG

OK >> GO TO 3.
NG >> Repair open circuit or short to ground or short to power in harness or connectors.

3. CHECK KNOCK SENSOR

Refer to EC-282, "Component Inspection" .

OK or NG

OK >> GO TO 4.
NG >> Replace knock sensor.

4. CHECK GROUND CONNECTIONS

Loosen and retighten two ground screws on the body. Refer to EC-171 .

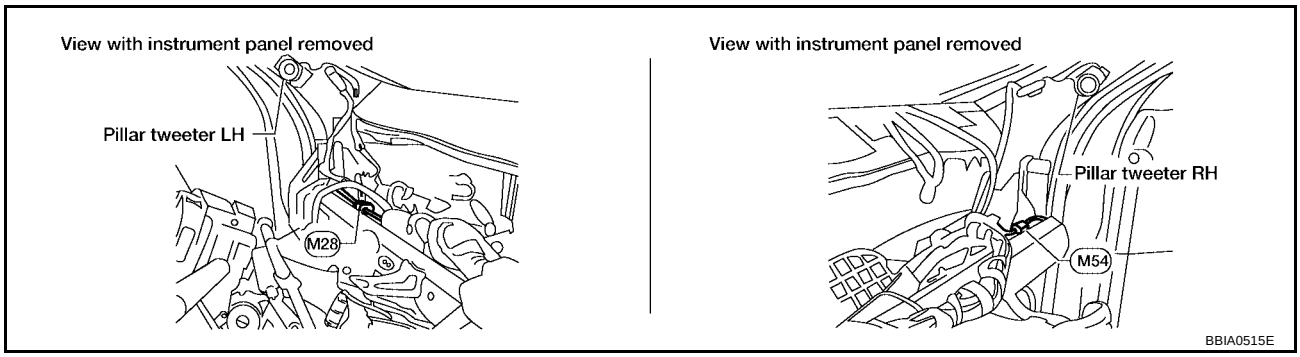

OK or NG

OK >> GO TO 5.
NG >> Repair or replace ground connections.

5. CHECK KNOCK SENSOR SHIELD CIRCUIT FOR OPEN AND SHORT

1. Disconnect knock sensor harness connector.
2. Check harness continuity between knock sensor terminal 2 and ground.
   Refer to Wiring Diagram.

   Continuity should exist.

3. Also check harness for short to power.

OK or NG

OK >> GO TO 7.
NG >> GO TO 6.

6. DETECT MALFUNCTIONING PART

Check the following.

- Harness connectors F26, M58
- Harness for open or short between knock sensor and ground

>> Repair open circuit or short to power in harness connectors

7. CHECK INTERMITTENT INCIDENT

Perform EC-164, "TROUBLE DIAGNOSIS FOR INTERMITTENT INCIDENT" .

>> **INSPECTION END**

Component Inspection

UBS00B76

KNOCK SENSOR

Use an ohmmeter which can measure more than 10 MΩ.

1. Disconnect knock sensor harness connector.
2. Check resistance between terminal 1 and ground.

   Resistance: 530 - 590 kΩ [at 20°C (68°F)]

CAUTION:
Discard any knock sensors that have been dropped or physically damaged. Use only new ones.

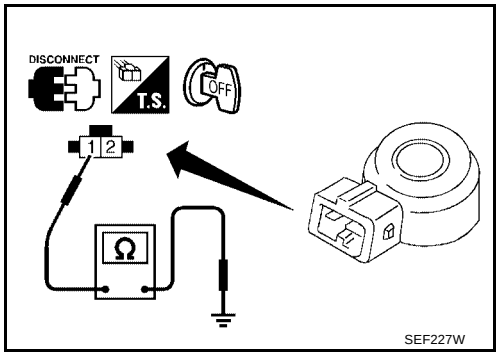

Removal and Installation

UBS00B77

KNOCK SENSOR

Refer to EM-69, "CYLINDER BLOCK" .

DTC P0335 CKP SENSOR (POS)

PFP:23731

Component Description

UBS00B78

The crankshaft position sensor (POS) is located on the cylinder block rear housing facing the gear teeth (cogs) of the signal plate at the end of the crankshaft. It detects the fluctuation of the engine revolution.
The sensor consists of a permanent magnet and Hall IC.
When the engine is running, the high and low parts of the teeth cause the gap with the sensor to change.
The changing gap causes the magnetic field near the sensor to change.
Due to the changing magnetic field, the voltage from the sensor changes.
The ECM receives the voltage signal and detects the fluctuation of the engine revolution.
ECM receives the signals as shown in the figure.

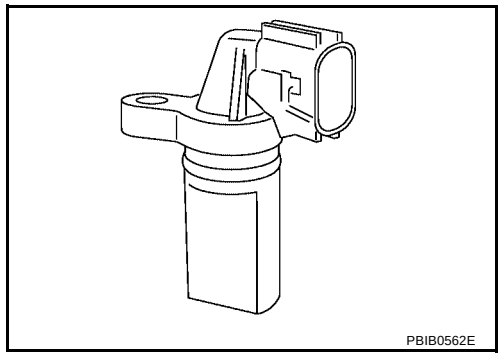

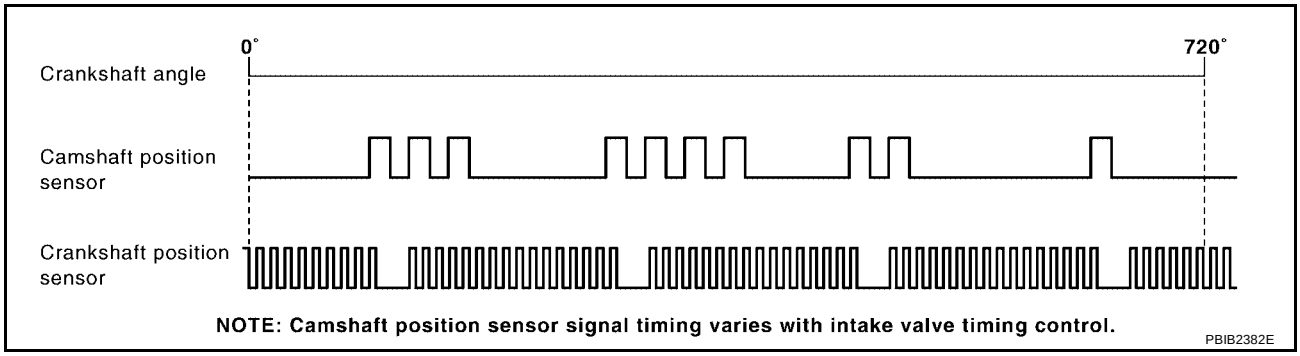

CONSULT-II Reference Value in Data Monitor Mode

UBS00B79

Specification data are reference values.

MONITOR ITEM	CONDITION	SPECIFICATION
ENG SPEED	● Run engine and compare CONSULT-II value with the tachometer indication.	Almost the same speed as the tachometer indication.

On Board Diagnosis Logic

UBS00B7A

Specification data are reference values.

DTC No.	Trouble diagnosis name	DTC detecting condition	Possible cause
P0335 0335	Crankshaft position sensor (POS) circuit	● The crankshaft position sensor (POS) signal is not detected by the ECM during the first few seconds of engine cranking. ● The proper pulse signal from the crankshaft position sensor (POS) is not sent to ECM while the engine is running. ● The crankshaft position sensor (POS) signal is not in the normal pattern during engine running.	● Harness or connectors (The sensor circuit is open or shorted) ● Crankshaft position sensor (POS) ● Signal plate

DTC Confirmation Procedure

UBS00B7B

NOTE:
If DTC Confirmation Procedure has been previously conducted, always turn ignition switch OFF and wait at least 10 seconds before conducting the next test.
TESTING CONDITION:
Before performing the following procedure, confirm that battery voltage is more than 10V with ignition switch ON.

WITH CONSULT-II

1. Turn ignition switch ON and select “DATA MONITOR” mode with CONSULT-II.
2. Crank engine for at least 2 seconds and run it for at least 5 seconds at idle speed.
3. If 1st trip DTC is detected, go to EC-287, "Diagnostic Procedure".
   If 1st trip DTC is not detected, go to next step.
4. Maintaining engine speed at more than 800 rpm for at least 5 seconds.
5. If 1st trip DTC is detected, go toEC-287, "Diagnostic Procedure".

DATA MONITOR	
MONITOR	NO DTC
ENG SPEED	XXX rpm

SEF058Y

WITH GST

Follow the procedure “WITH CONSULT-II” above.

Wiring Diagram

UBS00B7C

EC-POS-01

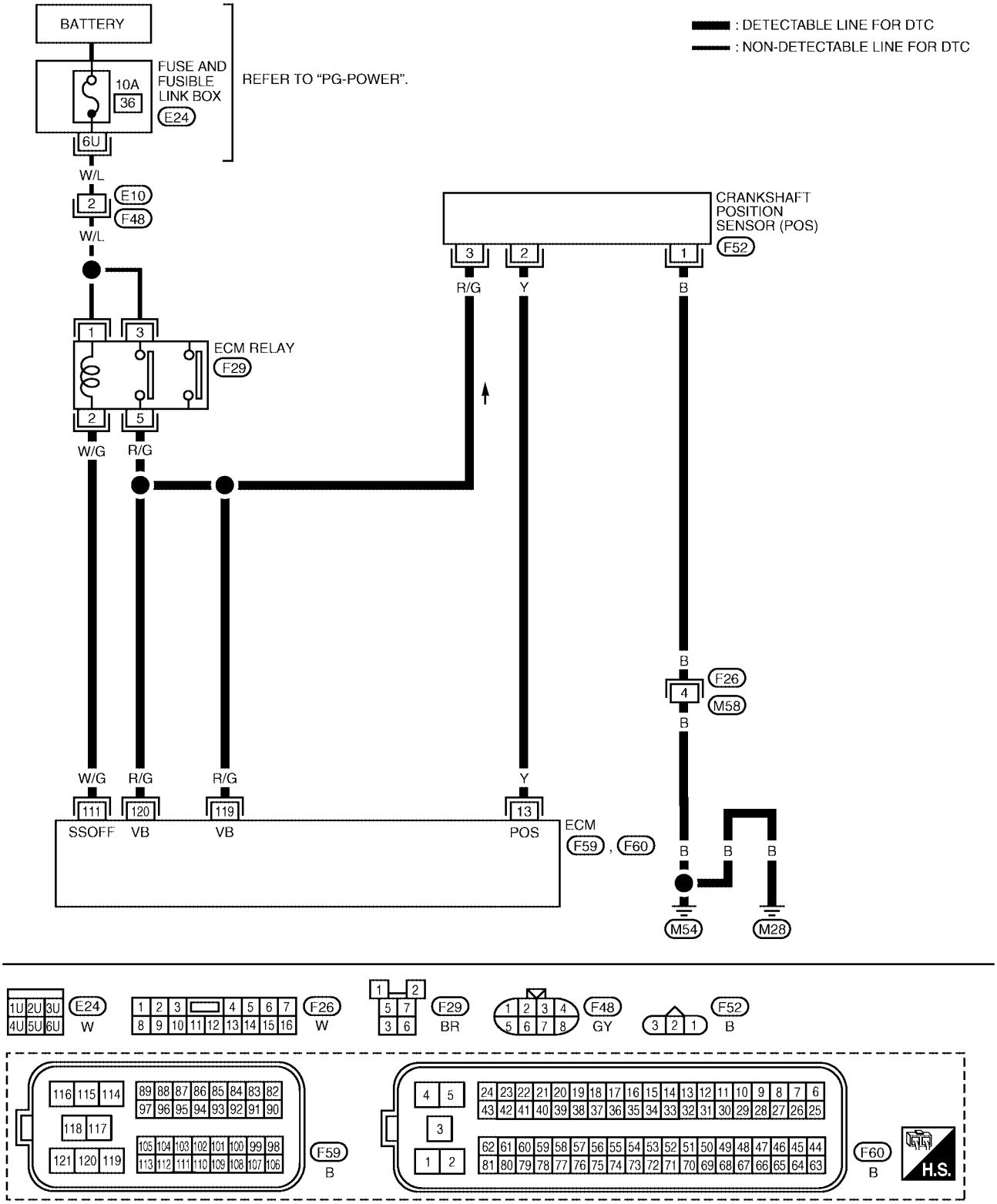

Specification data are reference values and are measured between each terminal and ground.
Pulse signal is measured by CONSULT-II.

CAUTION:

Do not use ECM ground terminals when measuring input/output voltage. Doing so may result in damage to the ECM's transistor. Use a ground other than ECM terminals, such as the ground.

TERMINAL NO.	WIRE COLOR	ITEM	CONDITION	DATA (DC Voltage)
13	Y	Crankshaft position sensor (POS)	**[Engine is running]** ● **Warm-up condition** ● Idle speed **NOTE:** The pulse cycle changes depending on rpm at idle.	Approximately 3.0V★ 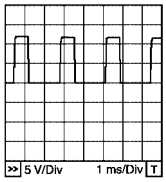 PBIB0527E
			[Engine is running] ● Engine speed is 2,000 rpm	Approximately 3.0V★ 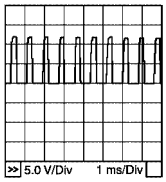 PBIB0528E

★: Average voltage for pulse signal (Actual pulse signal can be confirmed by oscilloscope.)

Diagnostic Procedure

UBS00B7D

1. CHECK GROUND CONNECTIONS

1. Turn ignition switch OFF.
2. Loosen and retighten two ground screws on the body. Refer to EC-171, "Ground Inspection" .

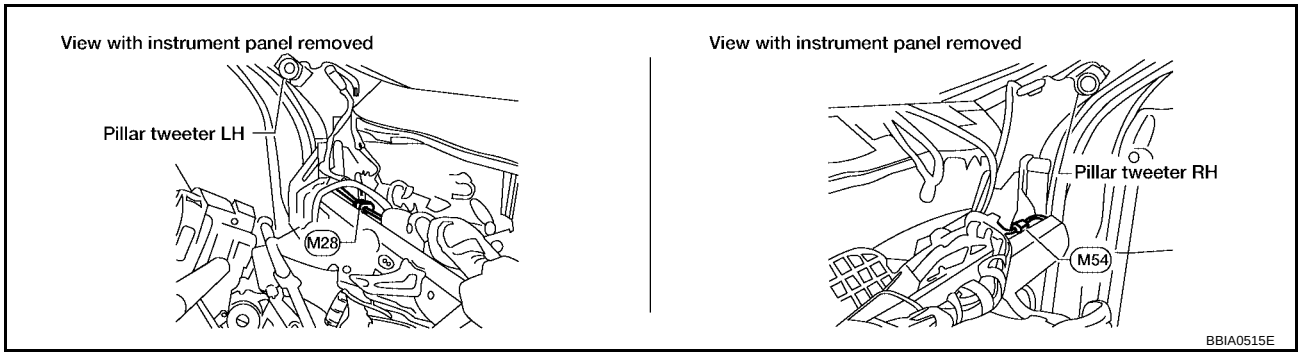

OK or NG

OK >> GO TO 2.
NG >> Repair or replace ground connections.

2. CHECK CKP SENSOR (POS) POWER SUPPLY CIRCUIT

1. Disconnect crankshaft position (CKP) sensor (POS) harness connector.
2. Turn ignition switch ON.

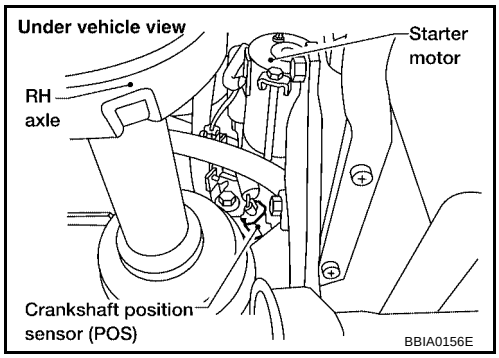

3. Check voltage between CKP sensor (POS) harness connector terminal 3 and ground with CONSULT-II or tester.

   Voltage: Battery voltage

4. Also check harness for short to ground and short to power.

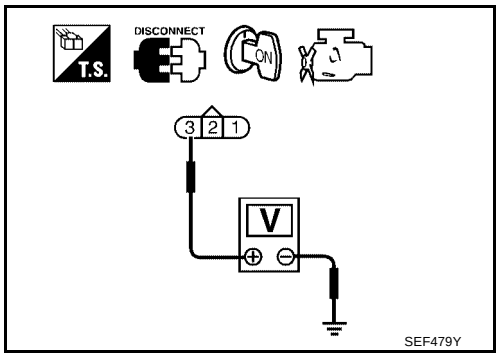

OK or NG

OK >> GO TO 4.
NG >> GO TO 3.

3. DETECT MALFUNCTIONING PART

Check the following.

- Harness for open or short between crankshaft position sensor (POS) and ECM
- Harness for open or short between crankshaft position sensor (POS) and ECM relay

>> Repair open circuit or short to ground or short to power in harness or connectors.

4. CHECK CKP SENSOR (POS) GROUND CIRCUIT FOR OPEN AND SHORT

1. Turn ignition switch OFF.
2. Check harness continuity between CKP sensor (POS) terminal 1 and ground.
   Refer to the wiring diagram.

   Continuity should exist.

3. Also check harness for short to power.

OK or NG

OK >> GO TO 6.
NG >> GO TO 5.

5. DETECT MALFUNCTIONING PART

Check the following.

- Harness connectors F26, M58
- Harness for open or short between crankshaft position sensor (POS) and ground

>> Repair open circuit or short to power in harness or connectors.

6. CHECK CKP SENSOR (POS) INPUT SIGNAL CIRCUIT FOR OPEN AND SHORT

1. Disconnect ECM harness connector.
2. Check harness continuity between ECM terminal 13 and CKP sensor (POS) terminal 2. Refer to Wiring Diagram.

Continuity should exist.

3. Also check harness for short to ground and short to power.

OK or NG

OK >> GO TO 7.
NG >> Repair open circuit or short to ground or short to power in harness or connectors.

7. CHECK CRANKSHAFT POSITION SENSOR (POS)

Refer to EC-289, "Component Inspection" .

OK or NG

OK >> GO TO 8.
NG >> Replace crankshaft position sensor (POS).

8. CHECK GEAR TOOTH

Visually check for chipping signal plate gear tooth.

OK or NG

OK >> GO TO 9.
NG >> Replace the signal plate.

9. CHECK INTERMITTENT INCIDENT

Perform EC-164, "TROUBLE DIAGNOSIS FOR INTERMITTENT INCIDENT" .

>> **INSPECTION END**

Component Inspection

UBS00B7E

CRANKSHAFT POSITION SENSOR (POS)

1. Disconnect crankshaft position sensor (POS) harness connector.
2. Loosen the fixing bolt of the sensor.
3. Remove the sensor.
4. Visually check the sensor for chipping.

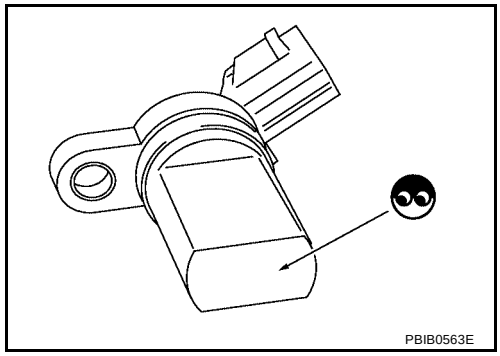

5. Check resistance as shown in the figure.

Terminal No. (Polarity)	Resistance Ω [at 25°C (77°F)]
3 (+) - 1 (–)	Except 0 or ∞
3 (+) - 2 (–)	
2 (+) - 1 (–)	

If NG, replace crankshaft position sensor (POS).

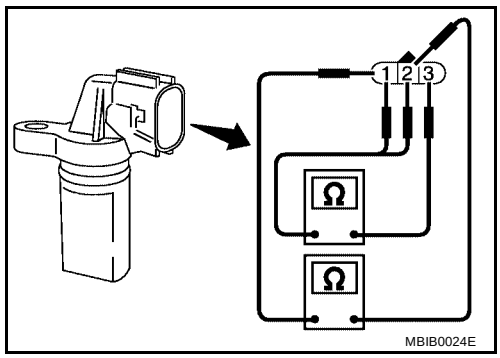

Removal and Installation

UBS00B7F

CRANKSHAFT POSITION SENSOR (POS)

Refer to EM-69, "CYLINDER BLOCK" .

DTC P0340 CMP SENSOR (PHASE)

PFP:23731

Component Description

UBS00B7G

The camshaft position sensor (PHASE) senses the retraction of intake valve camshaft to identify a particular cylinder. The camshaft position sensor (PHASE) senses the piston position.
When the crankshaft position sensor (POS) system becomes inoperative, the camshaft position sensor (PHASE) provides various controls of engine parts instead, utilizing timing of cylinder identification signals.
The sensor consists of a permanent magnet and Hall IC.
When engine is running, the high and low parts of the teeth cause the gap with the sensor to change.
The changing gap causes the magnetic field near the sensor to change.
Due to the changing magnetic field, the voltage from the sensor changes.
ECM receives the signals as shown in the figure.

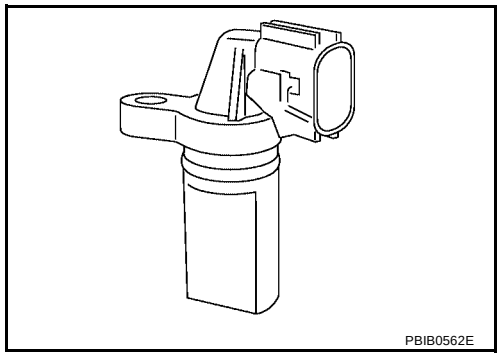

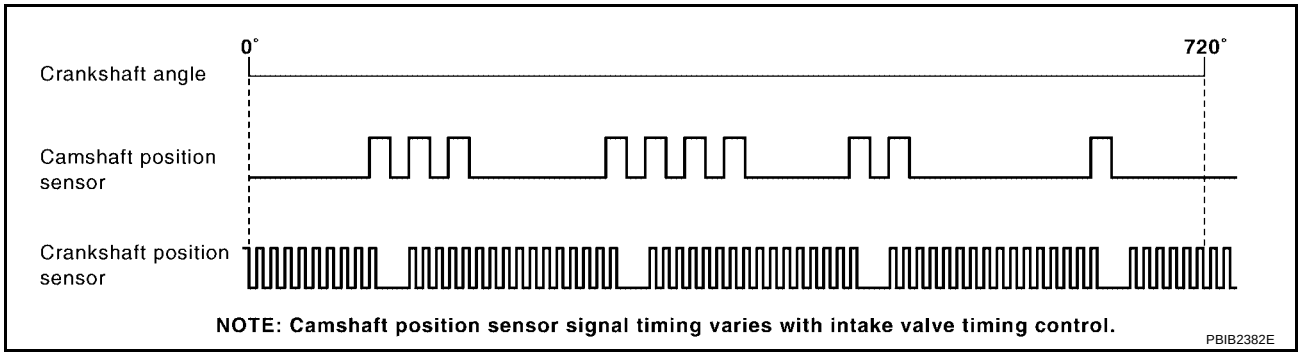

On Board Diagnosis Logic

UBS00B7H

DTC No.	Trouble diagnosis name	DTC detecting condition	Possible cause
P0340 0340	Camshaft position sensor (PHASE) circuit	● The cylinder No. signal is not sent to ECM for the first few seconds during engine cranking. ● The cylinder No. signal is not sent to ECM during engine running. ● The cylinder No. signal is not in the normal pattern during engine running.	● Harness or connectors (The sensor circuit is open or shorted) ● Camshaft position sensor (PHASE) ● Camshaft (Intake) ● Starter motor (Refer to SC-9 .) ● Starting system circuit (Refer to SC-9 .) ● Dead (Weak) battery

DTC Confirmation Procedure

UBS00B7I

NOTE:
If DTC Confirmation Procedure has been previously conducted, always turn ignition switch OFF and wait at least 10 seconds before conducting the next test.
TESTING CONDITION:
Before performing the following procedure, confirm that battery voltage is more than 10.5V with ignition switch ON.

WITH CONSULT-II

1. Turn ignition switch ON.

2. Select “DATA MONITOR” mode with CONSULT-II.
3. Crank engine for at least 2 seconds and run it for at least 5 seconds at idle speed.
4. If 1st trip DTC is detected, go to EC-294, "Diagnostic Procedure".
   If 1st trip DTC is not detected, go to next step.
5. Maintaining engine speed at more than 800 rpm for at least 5 seconds.
6. If 1st trip DTC is detected, go to EC-294, "Diagnostic Procedure".

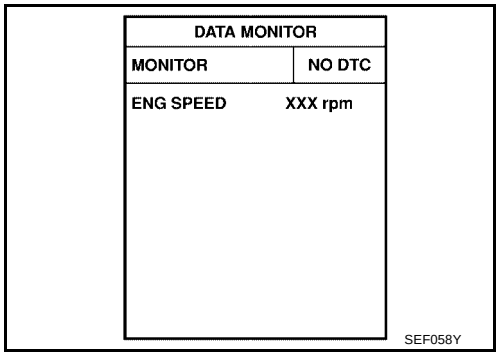

WITH GST

Follow the procedure “WITH CONSULT-II” above.

Wiring Diagram

UBS00B7J

EC-PHASE-01

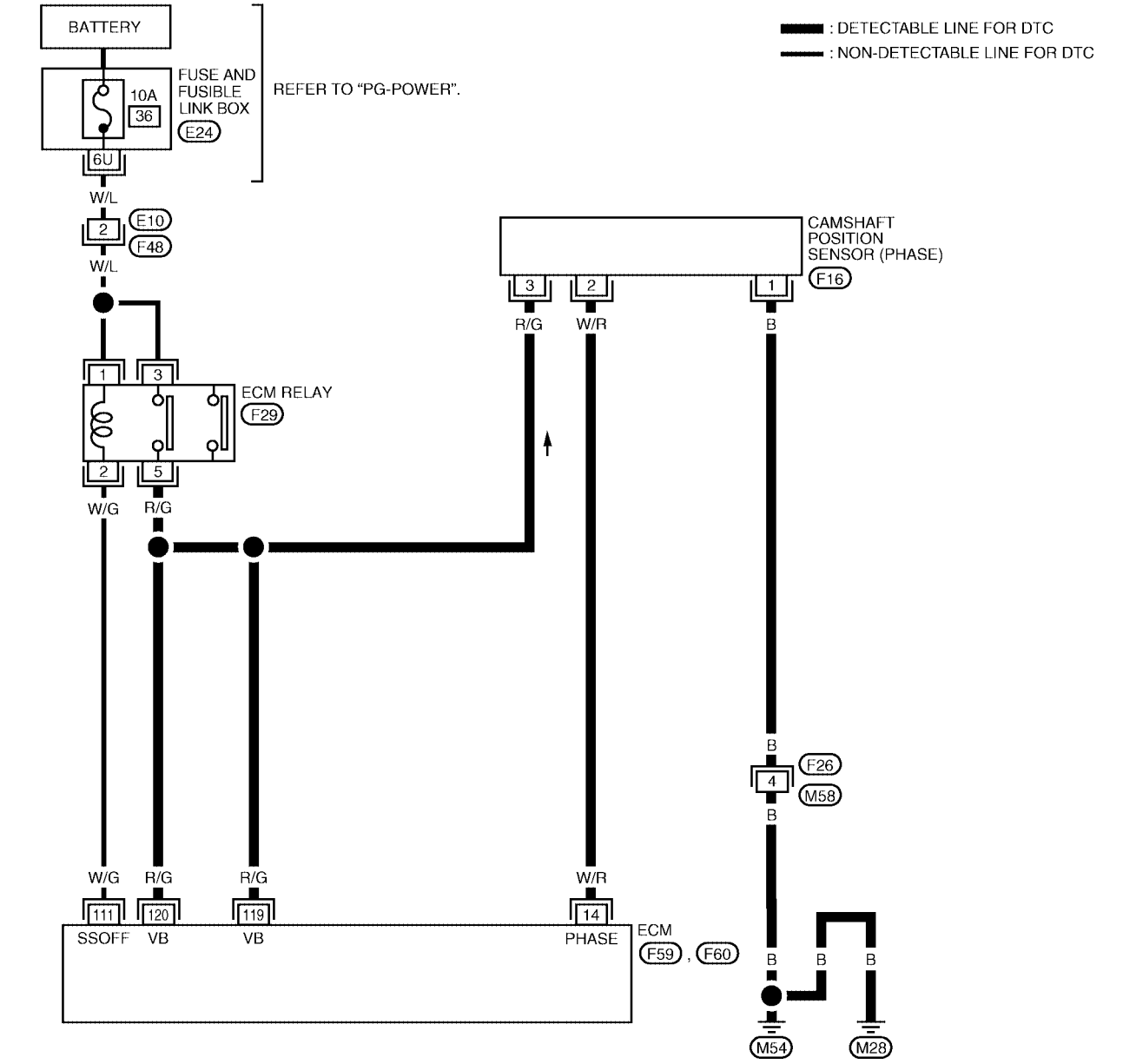

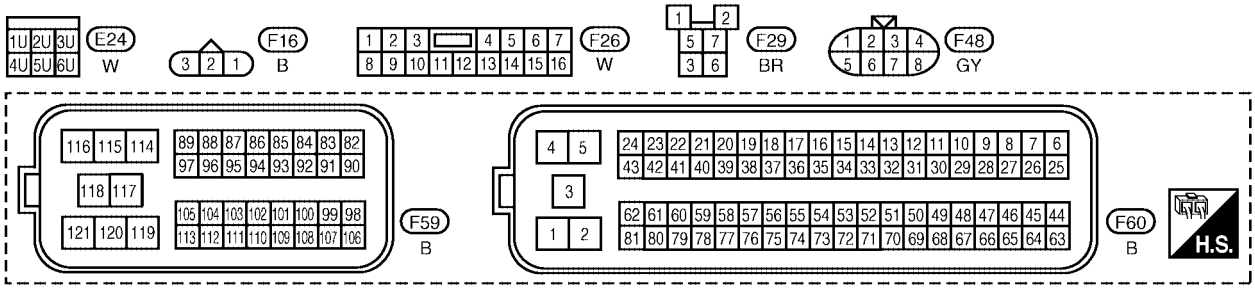

BBWA1430E

Specification data are reference values and are measured between each terminal and ground.
Pulse signal is measured by CONSULT-II.

CAUTION:
Do not use ECM ground terminals when measuring input/output voltage. Doing so may result in damage to the ECM's transistor. Use a ground other than ECM terminals, such as the ground.

TERMINAL NO.	WIRE COLOR	ITEM	CONDITION	DATA (DC Voltage)
14	W/R	Camshaft position sensor (PHASE)	**[Engine is running]** ● **Warm-up condition** ● Idle speed **NOTE:** The pulse cycle changes depending on rpm at idle.	1.0 - 4.0V★ 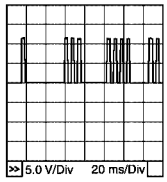 PBIB0525E
			[Engine is running] ● Engine speed is 2,000 rpm.	1.0 - 4.0V★ 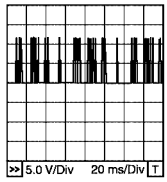 PBIB0526E

★: Average voltage for pulse signal (Actual pulse signal can be confirmed by oscilloscope.)

Diagnostic Procedure

UBS00B7K

1. CHECK STARTING SYSTEM

Turn ignition switch to START position.
Does the engine turn over?
Does the starter motor operate?

Yes or No

Yes >> GO TO 2.
No >> Check starting system. (Refer to SC-9, "STARTING SYSTEM" .)

2. CHECK GROUND CONNECTIONS

1. Turn ignition switch OFF.
2. Loosen and retighten two ground screws on the body. Refer to EC-171 .

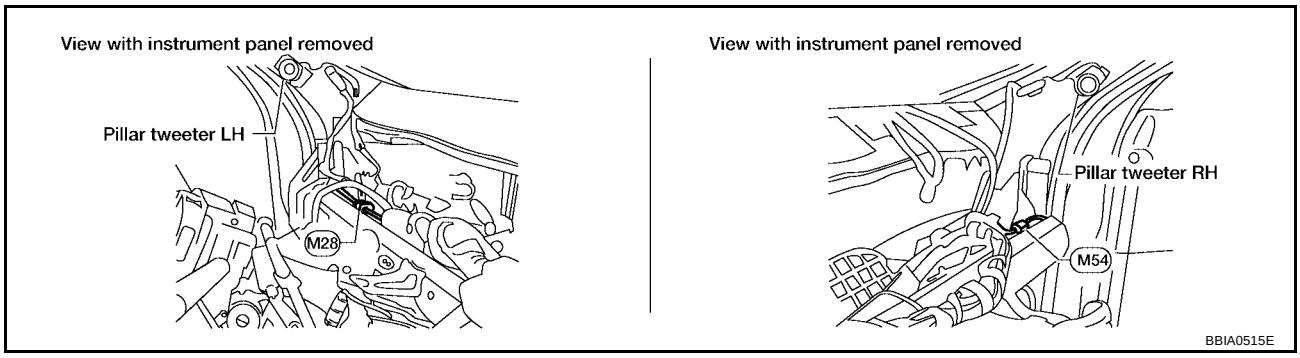

OK or NG

OK >> GO TO 3.
NG >> Repair or replace ground connections.

3. CHECK CMP SENSOR (PHASE) POWER SUPPLY CIRCUIT

1. Disconnect camshaft position (CMP) sensor (PHASE) harness connector.
2. Turn ignition switch ON.

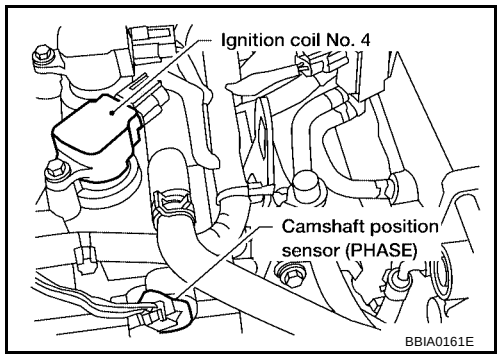

3. Check voltage between camshaft position sensor (PHASE) terminal 3 and ground with CONSULT-II or tester.

   Voltage: Battery voltage

4. Also check harness for short to ground and short to power.

OK or NG

OK >> GO TO 5.
NG >> GO TO 4.

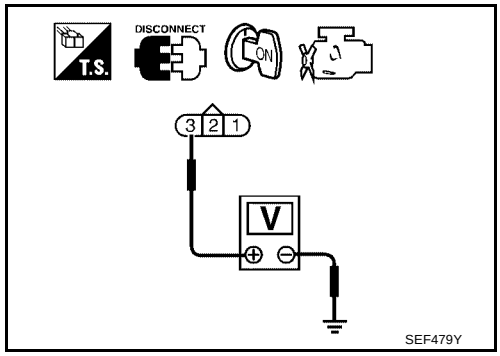

4. DETECT MALFUNCTIONING PART

Check the following.

- Harness for open or short between camshaft position sensor (PHASE) and ECM
- Harness for open or short between camshaft position sensor (PHASE) and ECM relay

>> Repair open circuit or short to ground or short to power in harness or connectors.

5. CHECK CMP SENSOR (PHASE) GROUND CIRCUIT FOR OPEN AND SHORT

1. Turn ignition switch OFF.
2. Check harness continuity between camshaft position sensor (PHASE) terminal 1 and ground. Refer to the wiring diagram.

   Continuity should exist.

3. Also check harness for short to power.

OK or NG

OK >> GO TO 7.
NG >> GO TO 6.

6. DETECT MALFUNCTIONING PART

Check the following.

- Harness connectors F26, M58
- Harness for open or short between camshaft position sensor (PHASE) and ground

>> Repair open circuit or short to power in harness or connectors.

7. CHECK CMP SENSOR (PHASE) INPUT SIGNAL CIRCUIT FOR OPEN AND SHORT

1. Disconnect ECM harness connector.
2. Check harness continuity between CMP sensor (PHASE) terminal 2 and ECM terminal 14.
   Refer to Wiring Diagram.

   Continuity should exist.

3. Also check harness for short to ground and short to power.

OK or NG

OK >> GO TO 8.
NG >> Repair open circuit or short to ground or short to power in harness or connectors.

8. CHECK CAMSHAFT POSITION SENSOR (PHASE)

Refer to EC-297, "Component Inspection" .

OK or NG

OK >> GO TO 9.
NG >> Replace camshaft position sensor (PHASE).

9. CHECK CAMSHAFT (INTAKE)

Check the following.

- Accumulation of debris to the signal plate of camshaft rear end
- Chipping signal plate of camshaft rear end

OK or NG

OK >> GO TO 10.
NG >> Remove debris and clean the signal plate of camshaft rear end or replace camshaft.

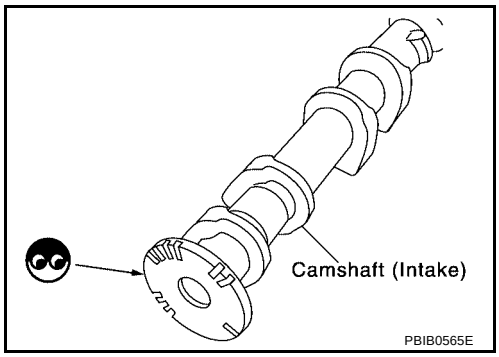

10. CHECK INTERMITTENT INCIDENT

Perform EC-164, "TROUBLE DIAGNOSIS FOR INTERMITTENT INCIDENT" .

>> **INSPECTION END**

Component Inspection

UBS00B7L

CAMSHAFT POSITION SENSOR (PHASE)

1. Loosen the fixing bolt of the sensor.
2. Disconnect camshaft position sensor (PHASE) harness connector.
3. Remove the sensor.
4. Visually check the sensor for chipping.

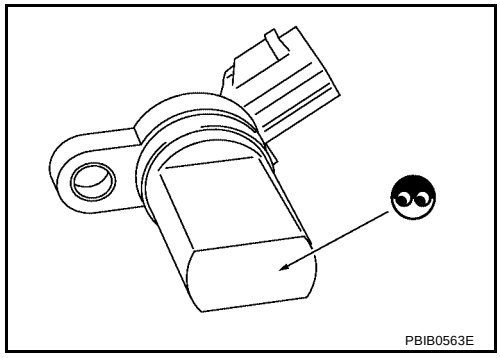

5. Check resistance as shown in the figure.

Terminal No. (Polarity)	Resistance Ω [at 25°C (77°F)]
3 (+) - 1 (-)	Except 0 or ∞
3 (+) - 2 (-)	
2 (+) - 1 (-)	

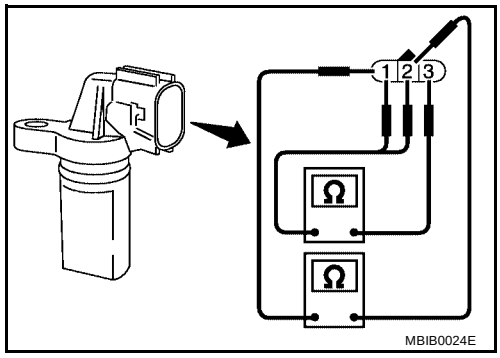

Removal and Installation

UBS00B7M

CAMSHAFT POSITION SENSOR (PHASE)

Refer to EM-42, "TIMING CHAIN" .

DTC P0420 THREE WAY CATALYST FUNCTION

PFP:20905

On Board Diagnosis Logic

UBS00B7N

The ECM monitors the switching frequency ratio of air fuel ratio (A/F) sensor 1 and heated oxygen sensor 2.

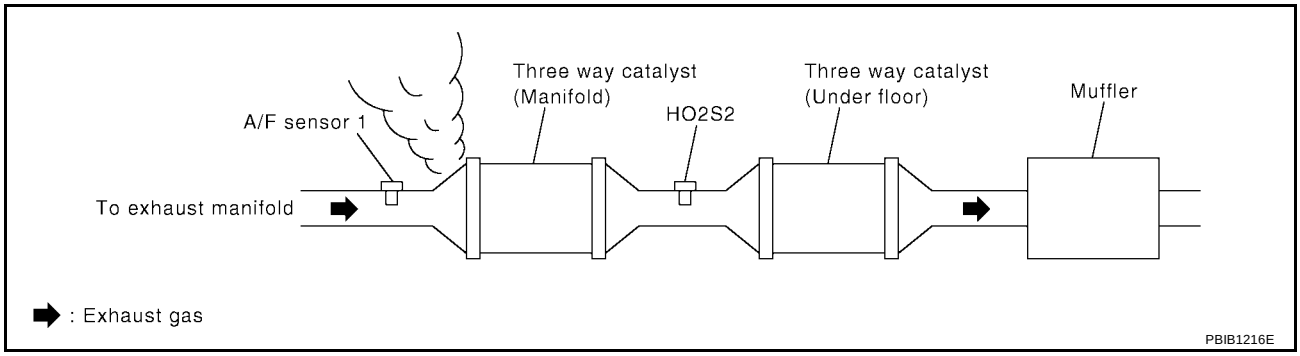

A three way catalyst (manifold) with high oxygen storage capacity will indicate a low switching frequency of heated oxygen sensor 2. As oxygen storage capacity decreases, the heated oxygen sensor 2 switching frequency will increase.
When the frequency ratio of air fuel ratio (A/F) sensor 1 and heated oxygen sensor 2 approaches a specified limit value, the three way catalyst (manifold) malfunction is diagnosed.

DTC No.	Trouble diagnosis name	DTC detecting condition	Possible cause
P0420 0420	Catalyst system efficiency below threshold	● Three way catalyst (manifold) does not operate properly. ● Three way catalyst (manifold) does not have enough oxygen storage capacity.	● Three way catalyst (manifold) ● Exhaust tube ● Intake air leaks ● Fuel injectors ● Fuel injector leaks ● Spark plug ● Improper ignition timing

DTC Confirmation Procedure

UBS00B7O

NOTE:
If DTC Confirmation Procedure has been previously conducted, always turn ignition switch OFF and wait at least 10 seconds before conducting the next test.

WITH CONSULT-II

TESTING CONDITION:
Do not hold engine speed for more than the specified minutes below.

1. Turn ignition switch ON and select “DATA MONITOR” mode with CONSULT-II.
2. Start engine and warm it up to normal operating temperature.
3. Turn ignition switch OFF and wait at least 10 seconds.
4. Start engine and keep the engine speed between 3,500 and 4,000 rpm for at least 1 minute under no load.
5. Let engine idle for 1 minute.
6. Make sure that “COOLAN TEMP/S” indicates more than 70°C (158°F).
7. Open engine hood.

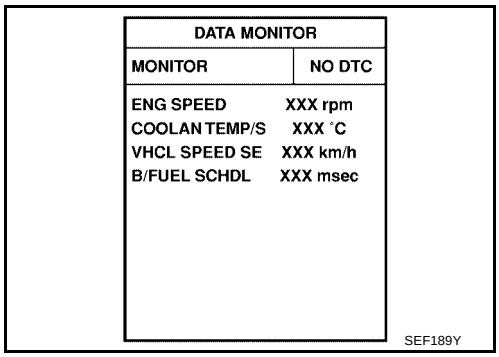

8. Select “DTC & SRT CONFIRMATION” then “SRT WORK SUPPORT” mode with CONSULT-II.
9. Rev engine up to 2,500 to 3,500 rpm and hold it for 3 consecutive minutes, then release the accelerator pedal completely.
   If “INCMP” of “CATALYST” changed to “CMPLT”, GO TO STEP 12.
10. Wait 5 seconds at idle.

SRT WORK SUPPORT	
CATALYST	INCMP
EVAP SYSTEM	INCMP
HO2S HTR	CMPLT
HO2S	INCMP
MONITOR	
ENG SPEED	XXX rpm
MAS A/F SE-B1	XXX V
B/FUEL SCHDL	XXX msec
A/F ALPHA-B1	XXX V
COOLAN TEMP/S	XX ˚C
A/F SEN1 (B1)	XXX V

PBIB1784E

11. Rev engine up to 2,000 to 3,000 rpm and maintain it until “IMCMP” of “CATALYST” changes to “CMPLT” (it will take approximately 5 minutes).
    If not “CMPLT”, stop engine and cool it down to less than 70°C (158°F) and then retest step 1.

SRT WORK SUPPORT	
CATALYST	CMPLT
EVAP SYSTEM	INCMP
HO2S HTR	CMPLT
HO2S	INCMP
MONITOR	
ENG SPEED	XXX rpm
MAS A/F SE-B1	XXX V
B/FUEL SCHDL	XXX msec
A/F ALPHA-B1	XXX V
COOLAN TEMP/S	XX ˚C
A/F SEN1 (B1)	XXX V

PBIB1785E

12. Select “SELF-DIAG RESULTS” mode with CONSULT-II.
13. Confirm that the 1st trip DTC is not detected.
    If the 1st trip DTC is detected, go to EC-300, "Diagnostic Procedure" .

SELF DIAG RESULTS	
DTC RESULTS	TIME
NO DTC IS DETECTED. FURTHER TESTING MAY BE REQUIRED.	

SEF535Z

Overall Function Check

UBS00B7P

Use this procedure to check the overall function of the three way catalyst (manifold). During this check, a 1st trip DTC might not be confirmed.

WITH GST

1. Start engine and warm it up to the normal operating temperature.
2. Turn ignition switch OFF and wait at least 10 seconds.
3. Start engine and keep the engine speed between 3,500 and 4,000 rpm for at least 1 minute under no load.
4. Let engine idle for 1 minute.
5. Open engine hood.
6. Set voltmeter probe between ECM terminal 74 and ground.
7. Keep engine speed at 2,500 rpm constant under no load.
8. Make sure that the voltage does not vary for more than 5 seconds.
   If the voltage fluctuation cycle takes less than 5 seconds, go to EC-300, "Diagnostic Procedure" .
   - 1 cycle: 0.6 - 1.0 V → 0 - 0.3 V → 0.6 - 1.0 V

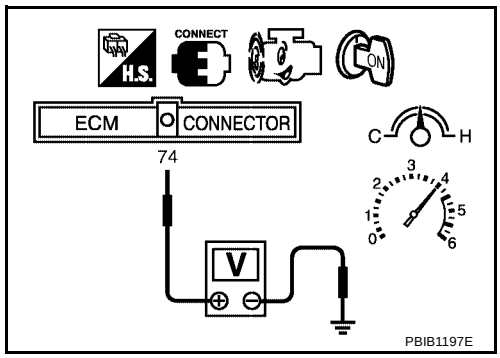

Diagnostic Procedure

UBS00B7Q

1. CHECK EXHAUST SYSTEM

Visually check exhaust tubes and muffler for dent.

OK or NG

OK >> GO TO 2.
NG >> Repair or replace.

2. CHECK EXHAUST GAS LEAK

1. Start engine and run it at idle.
2. Listen for an exhaust gas leak before the three way catalyst (manifold).

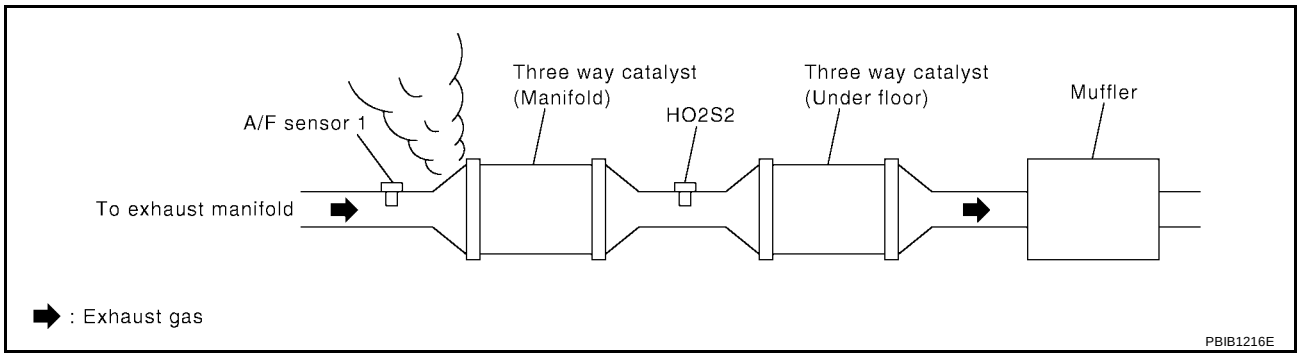

OK or NG

OK >> GO TO 3.
NG >> Repair or replace.

3. CHECK INTAKE AIR LEAK

Listen for an intake air leak after the mass air flow sensor.

OK or NG

OK >> GO TO 4.
NG >> Repair or replace.

4. CHECK IGNITION TIMING

Check for ignition timing. Refer to EC-74, "Basic Inspection" .

Items	Specifications	
Target idle speed	A/T	800 ± 50 rpm (in P or N position)
	M/T	650 ± 50 rpm
Ignition timing	A/T	18 ± 5°BTDC (in P or N position)
	M/T	7 ± 5°BTDC

OK or NG

OK >> GO TO 5.
NG >> Follow the EC-74, "Basic Inspection" .

5. CHECK INJECTORS

1. Refer to Wiring Diagram for Injectors, EC-616 .
2. Stop engine and then turn ignition switch ON.
3. Check voltage between ECM terminals 22, 23, 41, 42 and ground with CONSULT-II or tester.

   : Battery voltage should exist.

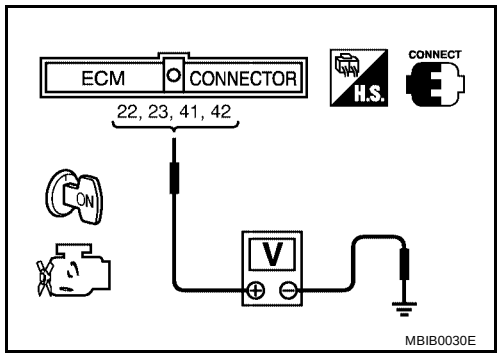

OK or NG

OK >> GO TO 6.
NG >> Perform Diagnostic Procedure INJECTOR, EC-616 .

6. CHECK FUNCTION OF IGNITION COIL-I

CAUTION:
Do the following procedure in the place where ventilation is good without the combustibles.

1. Turn ignition switch OFF.
2. Remove fuel pump fuse in IPDM E/R to release fuel pressure.

   NOTE:
   Do not use CONSULT-II to release fuel pressure, or fuel pressure applies again during the following procedure.

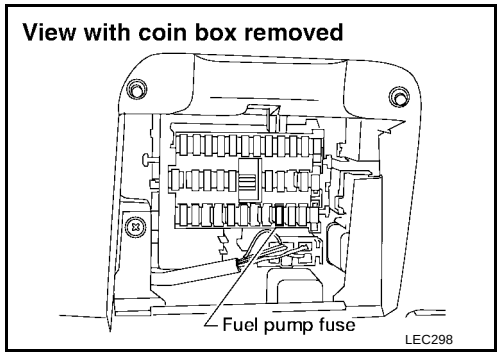

3. Start engine.
4. After engine stalls, crank it two or three times to release all fuel pressure.
5. Turn ignition switch OFF.
6. Remove all ignition coil harness connectors to avoid the electrical discharge from the ignition coils.
7. Remove ignition coil and spark plug of the cylinder to be checked.
8. Crank engine for five seconds or more to remove combustion gas in the cylinder.
9. Connect spark plug and harness connector to ignition coil.
10. Fix ignition coil using a rope etc. with gap of 13 - 17 mm between the edge of the spark plug and grounded metal portion as shown in the figure.
11. Crank engine for about three seconds, and check whether spark is generated between the spark plug and the grounded metal portion.

    Spark should be generated.

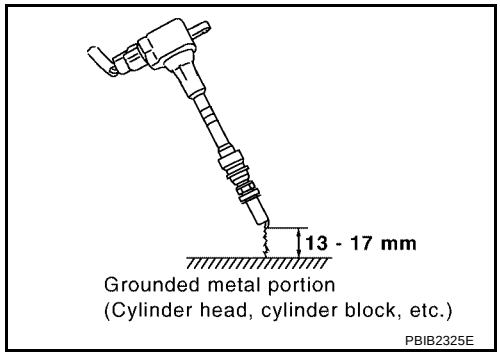

    CAUTION:
    - **Do not approach to the spark plug and the ignition coil within 50cm. Be careful not to get an electrical shock while checking, because the electrical discharge voltage becomes 20kV or more.**
    - **It might cause to damage the ignition coil if the gap of 17 mm or more is taken.**

    NOTE:
    When the gap is 13 mm or less, the spark might be generated even if the coil is malfunctioning.

OK or NG

OK >> GO TO 9.
NG >> GO TO 7.

7. CHECK FUNCTION OF IGNITION COIL-II

1. Turn ignition switch OFF.
2. Disconnect spark plug and connect a known-good spark plug.
3. Crank engine for about three seconds, and recheck whether spark is generated between the spark plug and the grounded metal portion.

Spark should be generated.

OK or NG

OK >> GO TO 8.
NG >> Check ignition coil, power transistor and their circuits. Refer to EC-602 .

8. CHECK FUNCTION OF IGNITION COIL-III

1. Reconnect the initial spark plugs.
2. Crank engine for about three seconds, and recheck whether spark is generated between the spark plug and the grounded portion.

Spark should be generated.

OK or NG

OK >> **INSPECTION END**
NG >> Replace spark plug(s) with standard type one(s). For spark plug type, refer to MA-21 .

9. CHECK INJECTOR

1. Turn ignition switch OFF.
2. Remove injector assembly. Refer to EM-21, "FUEL INJECTOR AND FUEL TUBE" .
   Keep fuel hose and all injectors connected to injector gallery.
3. Reconnect all injector harness connectors.
4. Disconnect all ignition coil harness connectors.
5. Turn ignition switch ON.
   Make sure fuel does not drip from injector.

OK or NG

OK (Does not drip)>>GO TO 10.
NG (Drips)>>Replace the injector(s) from which fuel is dripping.

10. CHECK INTERMITTENT INCIDENT

Perform EC-164, "TROUBLE DIAGNOSIS FOR INTERMITTENT INCIDENT" .

Trouble is fixed>>**INSPECTION END**
Trouble is not fixed>>Replace three way catalyst (manifold).

DTC P0441 EVAP CONTROL SYSTEM

PFP:14950

System Description

UBS00B7R

NOTE:
If DTC P0441 is displayed with other DTC such as P2122, P2123 P2127, P2128, P2138, first perform trouble diagnosis for other DTC.

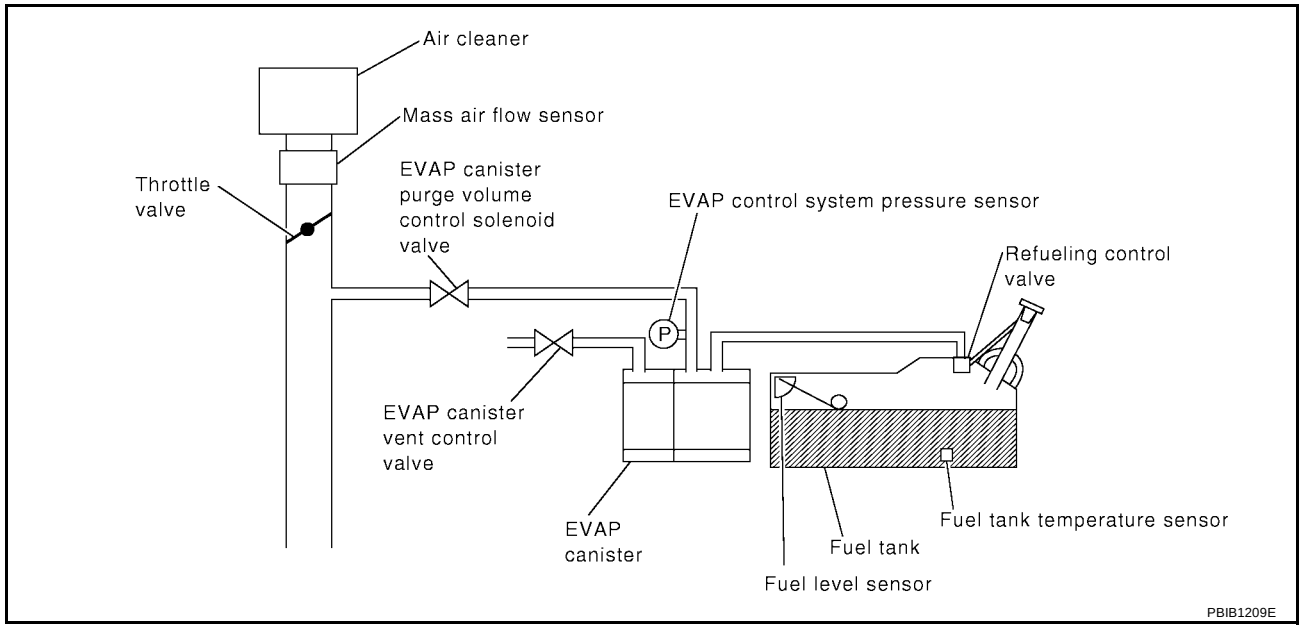

In this evaporative emission (EVAP) control system, purge flow occurs during non-closed throttle conditions. Purge volume is related to air intake volume. Under normal purge conditions (non-closed throttle), the EVAP canister purge volume control solenoid valve is open to admit purge flow. Purge flow exposes the EVAP control system pressure sensor to intake manifold vacuum.

On Board Diagnosis Logic

UBS00B7S

Under normal conditions (non-closed throttle), sensor output voltage indicates if pressure drop and purge flow are adequate. If not, a malfunction is determined.

DTC No.	Trouble diagnosis name	DTC detecting condition	Possible cause
P0441 0441	EVAP control system incorrect purge flow	EVAP control system does not operate properly, EVAP control system has a leak between intake manifold and EVAP control system pressure sensor.	● EVAP canister purge volume control solenoid valve stuck closed ● EVAP control system pressure sensor and the circuit ● Loose, disconnected or improper connection of rubber tube ● Blocked rubber tube ● Cracked EVAP canister ● EVAP canister purge volume control solenoid valve circuit ● Accelerator pedal position sensor ● Blocked purge port ● EVAP canister vent control valve

DTC Confirmation Procedure

UBS00B7T

CAUTION:
Always drive vehicle at a safe speed.

NOTE:
If DTC Confirmation Procedure has been previously conducted, always turn ignition switch OFF and wait at least 10 seconds before conducting the next test.

TESTING CONDITION:
Always perform test at a temperature of 0°C (32°F) or more.

WITH CONSULT-II

1. Start engine and warm it up to normal operating temperature.
2. Turn ignition switch OFF and wait at least 10 seconds.
3. Start engine and let it idle for at least 70 seconds.
4. Select “PURG FLOW P0441” of “EVAPORATIVE SYSTEM” in “DTC CONFIRMATION” mode with CONSULT-II.
5. Touch “START”.
   If “COMPLETED” is displayed, go to step 7.
6. When the following conditions are met, “TESTING” will be displayed on the CONSULT-II screen. Maintain the conditions continuously until “TESTING” changes to “COMPLETED”. (It will take at least 35 seconds.)

Selector lever	Suitable position
Vehicle speed	32 - 120 km/h (20 - 75 MPH)
ENG SPEED	500 - 3,800 rpm
B/FUEL SCHDL	1.0 - 8.2 msec
Engine coolant temperature	More than 0°C (32°F)

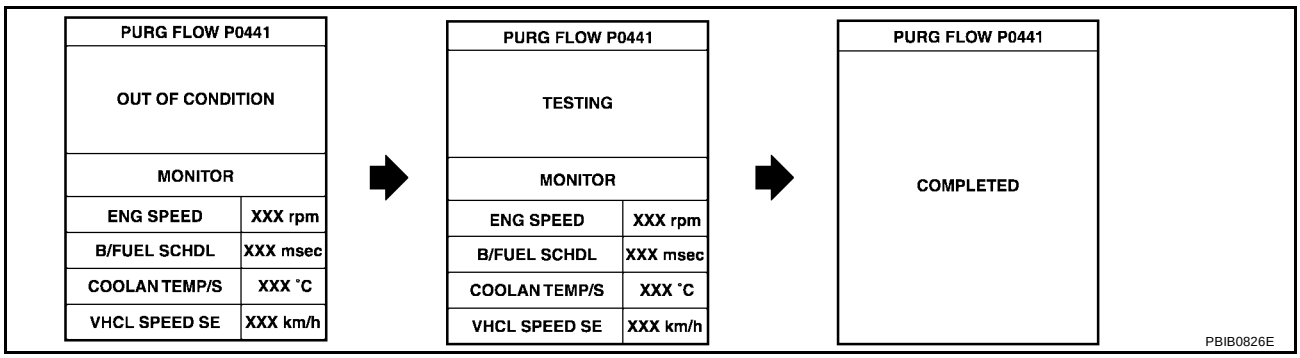

If “TESTING” is not changed for a long time, retry from step 2.

7. Make sure that OK is displayed after touching “SELF-DIAG RESULTS”. If NG is displayed, refer to EC-305, "Diagnostic Procedure" .

Overall Function Check

UBS00B7U

Use this procedure to check the overall monitoring function of the EVAP control system purge flow monitoring. During this check, a 1st trip DTC might not be confirmed.

WITH GST

1. Lift up drive wheels.
2. Start engine and warm it up to normal operating temperature.
3. Turn ignition switch OFF, wait at least 10 seconds.
4. Start engine and wait at least 70 seconds.

5. Set voltmeter probes to ECM terminals 32 (EVAP control system pressure sensor signal) and ground.
6. Check EVAP control system pressure sensor value at idle speed and note it.
7. Establish and maintain the following conditions for at least 1 minute.

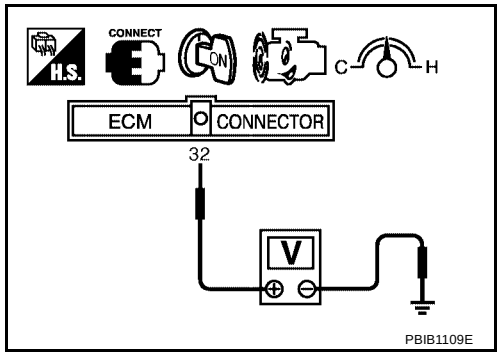

Air conditioner switch	ON
Headlamp switch	ON
Rear window defogger switch	ON
Engine speed	Approx. 3,000 rpm
Gear position	Any position other than P, N or R

8. Verify that EVAP control system pressure sensor value stays 0.1V less than the value at idle speed (measured at step 6) for at least 1 second.
9. If NG, go to EC-305, "Diagnostic Procedure" .

Diagnostic Procedure

UBS00B7V

1. CHECK EVAP CANISTER

1. Turn ignition switch OFF.
2. Check EVAP canister for cracks.

OK or NG

OK (With CONSULT-II) >>GO TO 2.
OK (Without CONSULT-II) >>GO TO 3.
NG >> Replace EVAP canister.

2. CHECK PURGE FLOW

With CONSULT-II

1. Disconnect vacuum hose connected to EVAP canister purge volume control solenoid valve at EVAP service port and install vacuum gauge.
2. Start engine and let it idle.
3. Select “PURG VOL CONT/V” in “ACTIVE TEST” mode with CONSULT-II.
4. Rev engine up to 2,000 rpm.

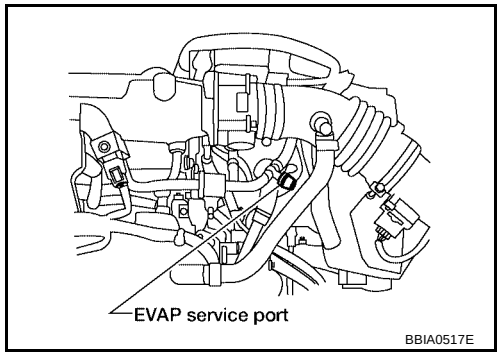

5. Touch “Qd” and “Qu” on CONSULT-II screen to adjust “PURG VOL CONT/V” opening and check vacuum existence.

PURG VOL CONT/V	VACUUM
100%	Should exist.
0%	should not exist.

OK or NG

OK >> GO TO 7.
NG >> GO TO 4.

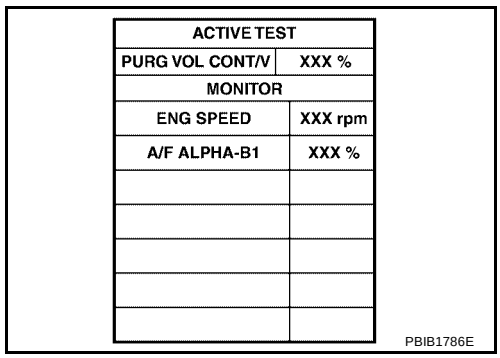

ACTIVE TEST	
PURG VOL CONT/V	XXX %
MONITOR	
ENG SPEED	XXX rpm
A/F ALPHA-B1	XXX %

PBIB1786E

3. CHECK PURGE FLOW

Without CONSULT-II

1. Start engine and warm it up to normal operating temperature.
2. Stop engine.
3. Disconnect vacuum hose connected to EVAP canister purge volume control solenoid valve at EVAP service port and install vacuum gauge.
4. Start engine and let it idle.
   Do not depress accelerator pedal even slightly.
5. Check vacuum gauge indication before 60 seconds passed after starting engine.

   Vacuum should not exist.

6. Revving engine up to 2,000 rpm after 100 seconds passed after starting engine.

   Vacuum should exist.

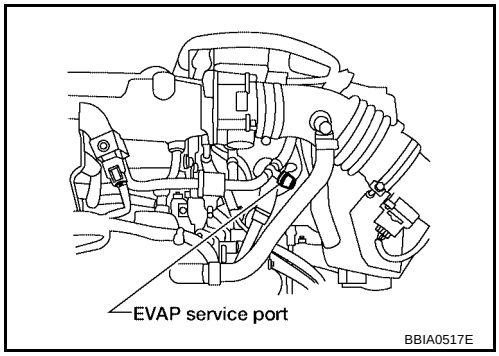

OK or NG

OK >> GO TO 7.
NG >> GO TO 4.

4. CHECK EVAP PURGE LINE

1. Turn ignition switch OFF.
2. Check EVAP purge line for improper connection or disconnection.
   Refer to EC-37, "EVAPORATIVE EMISSION LINE DRAWING" .

OK or NG

OK >> GO TO 5.
NG >> Repair it.

5. CHECK EVAP PURGE HOSE AND PURGE PORT

1. Disconnect purge hoses connected to EVAP service port **A** and EVAP canister purge volume control solenoid valve **B** .
2. Blow air into each hose and EVAP purge port **C** .

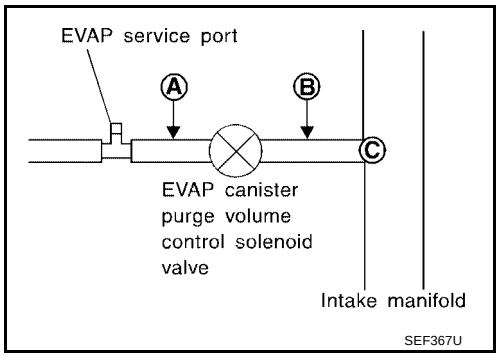

3. Check that air flows freely.

OK or NG

OK (With CONSULT-II)>>GO TO 6.
OK (Without CONSULT-II)>>GO TO 7.
NG >> Repair or clean hoses and/or purge port.

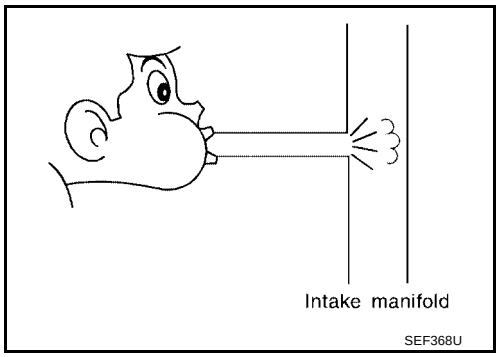

6. CHECK EVAP CANISTER PURGE VOLUME CONTROL SOLENOID VALVE

With CONSULT-II

1. Start engine.
2. Perform “PURG VOL CONT/V” in “ACTIVE TEST” mode with CONSULT-II. Check that engine speed varies according to the valve opening.

ACTIVE TEST	
PURG VOL CONT/V	XXX %
MONITOR	
ENG SPEED	XXX rpm
A/F ALPHA-B1	XXX %

PBIB1786E

OK or NG

OK >> GO TO 8.
NG >> GO TO 7.

7. CHECK EVAP CANISTER PURGE VOLUME CONTROL SOLENOID VALVE

Refer to EC-330, "Component Inspection" .

OK or NG

OK >> GO TO 8.
NG >> Replace EVAP canister purge volume control solenoid valve.

8. CHECK EVAP CONTROL SYSTEM PRESSURE SENSOR CONNECTOR

1. Disconnect EVAP control system pressure sensor harness connector.
2. Check connectors for water.

Water should not exist.

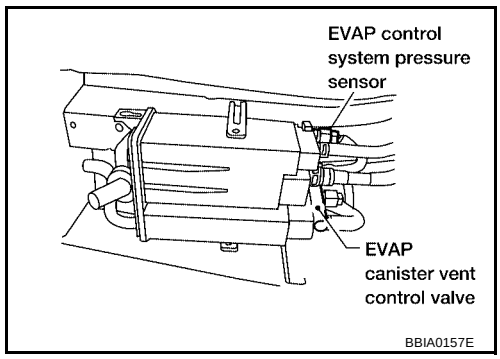

OK or NG

OK >> GO TO 9.
NG >> Replace EVAP control system pressure sensor.

9. CHECK EVAP CONTROL SYSTEM PRESSURE SENSOR FUNCTION

Refer to DTC Confirmation Procedure for DTC P0452, EC-335 P0453, EC-341 .

OK or NG

OK >> GO TO 10.
NG >> Replace EVAP control system pressure sensor.

10. CHECK RUBBER TUBE FOR CLOGGING

1. Disconnect rubber tube connected to EVAP canister vent control valve.
2. Check the rubber tube for clogging.

OK or NG

OK >> GO TO 11.
NG >> Clean the rubber tube using an air blower.

11. CHECK EVAP CANISTER VENT CONTROL VALVE

Refer to EC-330, "Component Inspection" .

OK or NG

OK >> GO TO 12.
NG >> Replace EVAP canister vent control valve.

12. CHECK EVAP PURGE LINE

Inspect EVAP purge line (pipe and rubber tube). Check for evidence of leaks.
Refer to EC-37, "EVAPORATIVE EMISSION LINE DRAWING" .

OK or NG

OK >> GO TO 13.
NG >> Replace it.

13. CLEAN EVAP PURGE LINE

Clean EVAP purge line (pipe and rubber tube) using air blower.

>> GO TO 14.

14. CHECK INTERMITTENT INCIDENT

Refer to EC-164, "TROUBLE DIAGNOSIS FOR INTERMITTENT INCIDENT" .

>> **INSPECTION END**

DTC P0442 EVAP CONTROL SYSTEM

PFP:14950

On Board Diagnosis Logic

UBS00B7W

This diagnosis detects leaks in the EVAP purge line using engine intake manifold vacuum.
If pressure does not increase, the ECM will check for leaks in the line between the fuel tank and EVAP canister purge volume control solenoid valve, under the following “Vacuum test” conditions.
The EVAP canister vent control valve is closed to shut the EVAP purge line off. The EVAP canister purge volume control solenoid valve will then be opened to depressurize the EVAP purge line using intake manifold vacuum. After this occurs, the EVAP canister purge volume control solenoid valve will be closed.

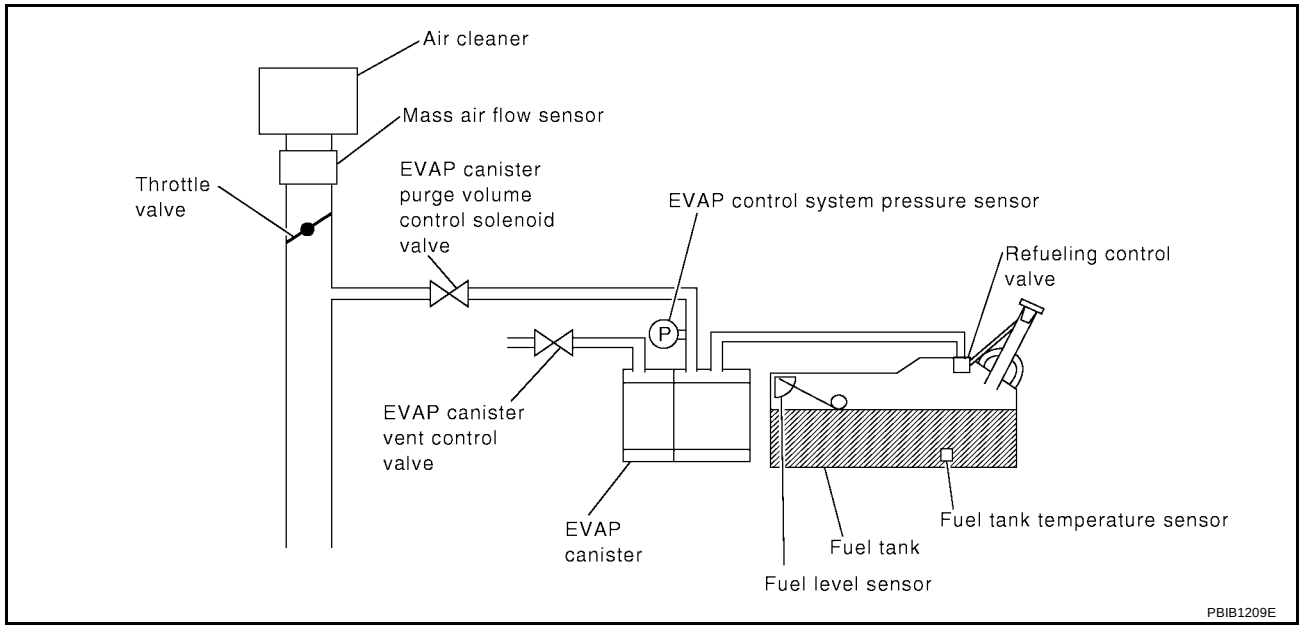

DTC No.	Trouble diagnosis name	DTC detecting condition	Possible cause
P0442 0442	EVAP control system small leak detected (negative pressure)	EVAP control system has a leak, EVAP control system does not operate properly.	● Incorrect fuel tank vacuum relief valve ● Incorrect fuel filler cap used ● Fuel filler cap remains open or fails to close. ● Foreign matter caught in fuel filler cap. ● Leak is in line between intake manifold and EVAP canister purge volume control solenoid valve. ● Foreign matter caught in EVAP canister vent control valve. ● EVAP canister or fuel tank leaks ● EVAP purge line (pipe and rubber tube) leaks ● EVAP purge line rubber tube bent ● Loose or disconnected rubber tube ● EVAP canister vent control valve and the circuit ● EVAP canister purge volume control solenoid valve and the circuit ● Fuel tank temperature sensor ● O-ring of EVAP canister vent control valve is missing or damaged ● EVAP canister is saturated with water ● EVAP control system pressure sensor ● Fuel level sensor and the circuit ● Refueling control valve ● ORVR system leaks

CAUTION:

- **Use only a genuine NISSAN fuel filler cap as a replacement. If an incorrect fuel filler cap is used, the MIL may come on.**
- **If the fuel filler cap is not tightened properly, the MIL may come on.**
- **Use only a genuine NISSAN rubber tube as a replacement.**

DTC Confirmation Procedure

UBS00B7X

NOTE:
If DTC Confirmation Procedure has been previously conducted, always turn ignition switch OFF and wait at least 10 seconds before conducting the next test.

TESTING CONDITION:

- **Perform "DTC WORK SUPPORT" when the fuel level is between 1/4 and 3/4 full, and vehicle is placed on flat level surface.**
- **Always perform test at a temperature of 0 to 30°C (32 to 86°F).**
- **Open engine hood before conducting following procedure.**

WITH CONSULT-II

1. Turn ignition switch ON.
2. Turn ignition switch OFF and wait at least 10 seconds.
3. Turn ignition switch ON and select "DATA MONITOR" mode with CONSULT-II.
4. Make sure that the following conditions are met.
   COOLAN TEMP/S: 0 - 70°C (32 - 158°F)
   INT/A TEMP SE: 0 - 60°C (32 - 140°F)
5. Select "EVAP SML LEAK P0442/P1442" of "EVAPORATIVE SYSTEM" in "DTC WORK SUPPORT" mode with CONSULT-II.
   Follow the instruction displayed.

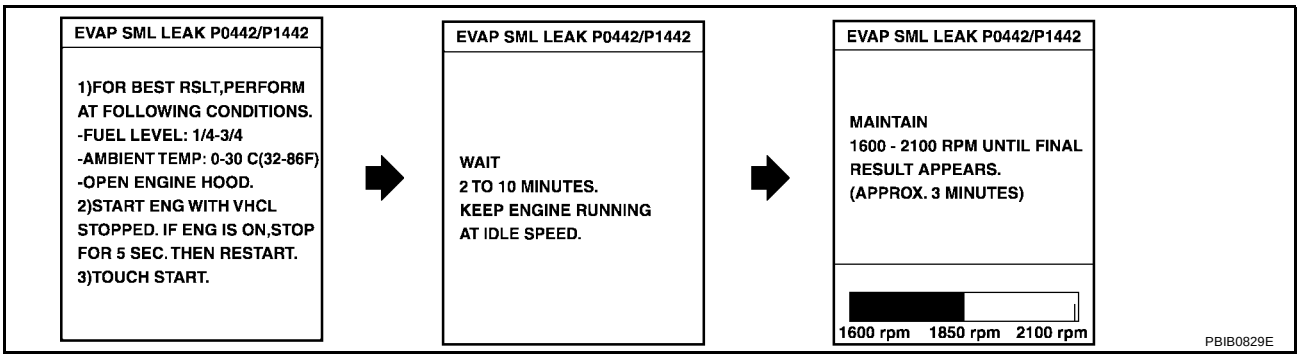

NOTE:
If the engine speed cannot be maintained within the range displayed on the CONSULT-II screen, go to EC-74, "Basic Inspection" .

6. Make sure that OK is displayed.
   If NG is displayed, refer to EC-311, "Diagnostic Procedure" .

   NOTE:
   Make sure that EVAP hoses are connected to the EVAP canister purge volume control solenoid valve properly.

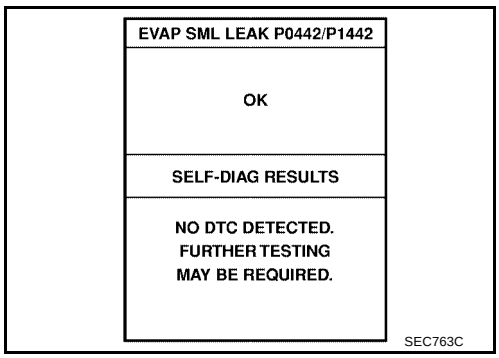

WITH GST

NOTE:
Be sure to read the explanation of Driving Pattern on EC-60 before driving vehicle.

1. Start engine.

2. Drive vehicle according to EC-61, "Driving Pattern" .
3. Stop vehicle.
4. Turn ignition switch OFF and wait at least 10 seconds.
5. Select Service $07 with GST.

- If P0442 is displayed on the screen, go to EC-311, "Diagnostic Procedure" .
- If P0441 is displayed on the screen, go to Diagnostic Procedure for DTC P0441, EC-305 .

Diagnostic Procedure

UBS00B7Y

1. CHECK FUEL FILLER CAP DESIGN

1. Turn ignition switch OFF.
2. Check for genuine NISSAN fuel filler cap design.

OK or NG

OK >> GO TO 2.
NG >> Replace with genuine NISSAN fuel filler cap.

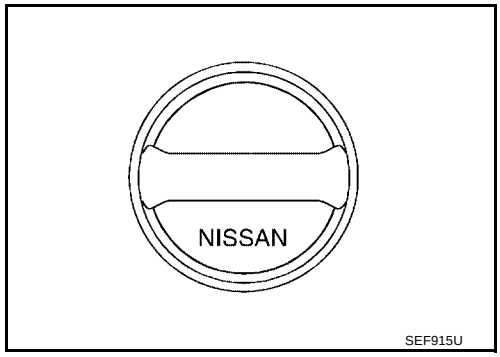

2. CHECK FUEL FILLER CAP INSTALLATION

Check that the cap is tightened properly by rotating the cap clockwise.

OK or NG

OK >> GO TO 3.
NG >> 1. Open fuel filler cap, then clean cap and fuel filler neck threads using air blower.
2. Retighten until ratcheting sound is heard.

3. CHECK FUEL FILLER CAP FUNCTION

Check for air releasing sound while opening the fuel filler cap.

OK or NG

OK >> GO TO 5.
NG >> GO TO 4.

4. CHECK FUEL TANK VACUUM RELIEF VALVE

1. Wipe clean valve housing.
2. Check valve opening pressure and vacuum.

Pressure:

15.3 - 20.0 kPa (0.156 - 0.204 kg/cm^2 , 2.22 - 2.90 psi)

Vacuum:

–6.0 to –3.3 kPa (–0.061 to –0.034 kg/cm^2 , –0.87 to –0.48 psi)

CAUTION:
Use only a genuine fuel filler cap as a replacement. If an incorrect fuel filler cap is used, the MIL may come on.

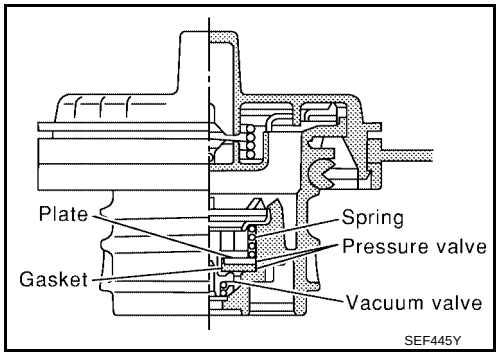

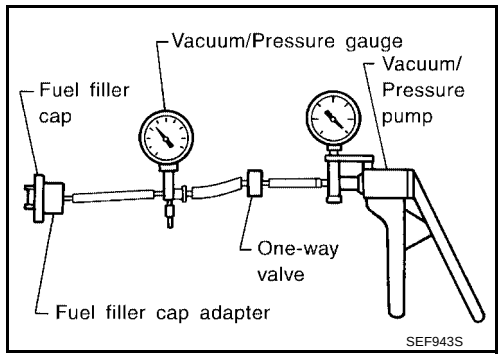

OK or NG

OK >> GO TO 5.
NG >> Replace fuel filler cap with a genuine one.

5. INSTALL THE PRESSURE PUMP

To locate the EVAP leak, install EVAP service port adapter and pressure pump to EVAP service port securely. For the location of EVAP service port, refer to EC-37, "EVAPORATIVE EMISSION LINE DRAWING" .

NOTE:
Improper installation of the EVAP service port adapter to the EVAP service port may cause leaking.

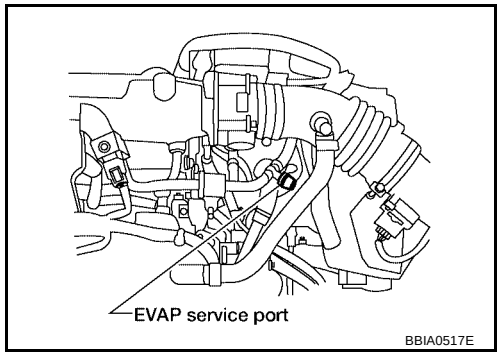

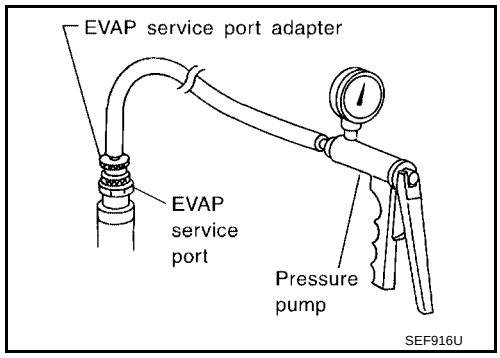

Models with CONSULT-II>>GO TO 6.
Models without CONSULT-II >>GO TO 7.

6. CHECK FOR EVAP LEAK

With CONSULT-II

1. Turn ignition switch ON.
2. Select “EVAP SYSTEM CLOSE” of “WORK SUPPORT” mode with CONSULT-II.
3. Touch “START” and apply pressure into the EVAP line until the pressure indicator reaches the middle of the bar graph.

   NOTE:
   - **Never use compressed air or a high pressure pump.**
   - **Do not exceed 4.12 kPa (0.042 kg/cm^2 , 0.6 psi) of pressure in the system.**

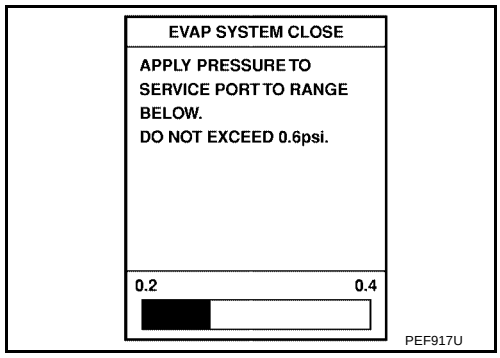

4. Using EVAP leak detector, locate the EVAP leak. For the leak detector, refer to the instruction manual for more details.
   Refer to EC-37, "EVAPORATIVE EMISSION LINE DRAWING" .

OK or NG

OK >> GO TO 8.
NG >> Repair or replace.

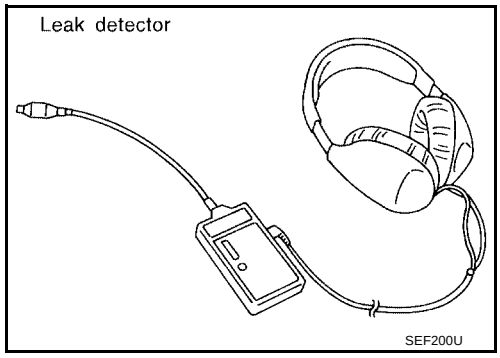

7. CHECK FOR EVAP LEAK

Without CONSULT-II

1. Turn ignition switch OFF.
2. Apply 12 volts DC to EVAP canister vent control valve. The valve will close. (Continue to apply 12 volts until the end of test.)
3. Pressurize the EVAP line using pressure pump with 1.3 to 2.7 kPa (10 to 20 mmHg, 0.39 to 0.79 inHg), then remove pump and EVAP service port adapter.

   NOTE:
   - **Never use compressed air or a high pressure pump.**
   - **Do not exceed 4.12 kPa (0.042 kg/cm^2 , 0.6 psi) of pressure in the system.**

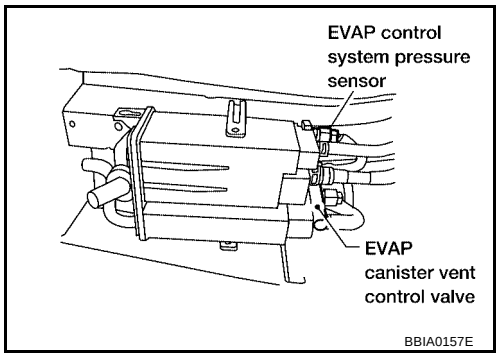

4. Using EVAP leak detector, locate the EVAP leak. For the leak detector, refer to the instruction manual for more details. Refer to EC-37, "EVAPORATIVE EMISSION LINE DRAWING" .

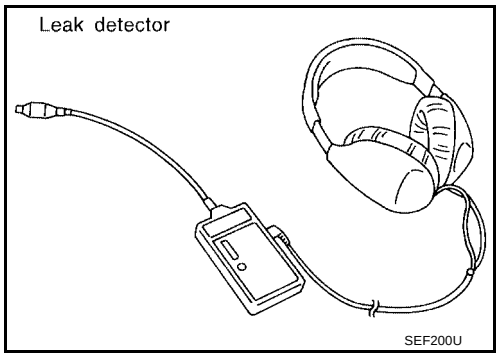

OK or NG

OK >> GO TO 8.
NG >> Repair or replace.

8. CHECK EVAP CANISTER VENT CONTROL VALVE

Check the following.

- EVAP canister vent control valve is installed properly.
  Refer to EC-40, "EVAP CANISTER VENT CONTROL VALVE" .
- EVAP canister vent control valve.
  Refer to EC-330, "Component Inspection" .

OK or NG

OK >> GO TO 10.
NG >> Repair or replace EVAP canister vent control valve and O-ring.

9. CHECK IF EVAP CANISTER SATURATED WITH WATER

1. Remove EVAP canister with EVAP canister vent control valve and EVAP control system pressure sensor attached.
2. Does water drain from the EVAP canister?

Yes or No

Yes >> GO TO 10.
No (With CONSULT-II)>>GO TO 12.
No (Without CONSULT-II)>>GO TO 13.

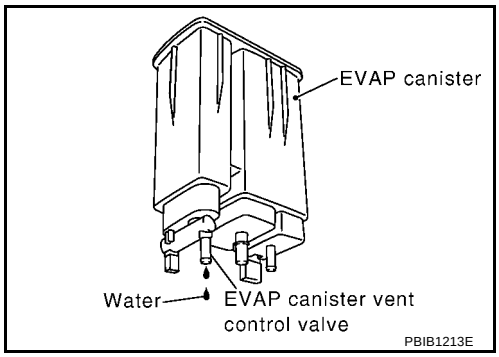

10. CHECK EVAP CANISTER

Weigh the EVAP canister with the EVAP canister vent control valve and EVAP control system pressure sensor attached.

The weight should be less than 1.9 kg (4.2 lb).

OK or NG

OK (With CONSULT-II)>>GO TO 12.
OK (Without CONSULT-II)>>GO TO 13.
NG >> GO TO 11.

11. DETECT MALFUNCTIONING PART

Check the following.

- EVAP canister for damage
- EVAP hose connected to EVAP canister for clogging or poor connection

>> Repair hose or replace EVAP canister.

12. CHECK EVAP CANISTER PURGE VOLUME CONTROL SOLENOID VALVE OPERATION

With CONSULT-II

1. Disconnect vacuum hose to EVAP canister purge volume control solenoid valve at EVAP service port.
2. Start engine.
3. Perform “PURG VOL CONT/V” in “ACTIVE TEST” mode.
4. Touch “Qu” on CONSULT-II screen to increase “PURG VOL CONT/V” opening to 100%.
5. Check vacuum hose for vacuum when revving engine up to 2,000 rpm.

Vacuum should exist.

ACTIVE TEST	
PURG VOL CONT/V	XXX %
MONITOR	
ENG SPEED	XXX rpm
A/F ALPHA-B1	XXX %

PBIB1786E

OK or NG

OK >> GO TO 15.
NG >> GO TO 14.

13. CHECK EVAP CANISTER PURGE VOLUME CONTROL SOLENOID VALVE OPERATION

Without CONSULT-II

1. Start engine and warm it up to normal operating temperature.
2. Stop engine.
3. Disconnect vacuum hose to EVAP canister purge volume control solenoid valve at EVAP service port.
4. Start engine and let it idle for at least 80 seconds.
5. Check vacuum hose for vacuum when revving engine up to 2,000 rpm.

Vacuum should exist.

OK or NG

OK >> GO TO 16.
NG >> GO TO 14.

14. CHECK VACUUM HOSE

Check vacuum hoses for clogging or disconnection. Refer to EC-37, "EVAPORATIVE EMISSION LINE DRAWING" .

OK or NG

OK >> GO TO 15.
NG >> Repair or reconnect the hose.

15. CHECK EVAP CANISTER PURGE VOLUME CONTROL SOLENOID VALVE

Refer to EC-323, "Component Inspection" .

OK or NG

OK >> GO TO 16.
NG >> Replace EVAP canister purge volume control solenoid valve.

16. CHECK FUEL TANK TEMPERATURE SENSOR

Refer to EC-264, "Component Inspection" .

OK or NG

OK >> GO TO 17.
NG >> Replace fuel level sensor unit.

17. CHECK EVAP CONTROL SYSTEM PRESSURE SENSOR

Refer to EC-334, "Component Inspection" .

OK or NG

OK >> GO TO 18.
NG >> Replace EVAP control system pressure sensor.

18. CHECK EVAP PURGE LINE

Check EVAP purge line (pipe, rubber tube, fuel tank and EVAP canister) for cracks or improper connection. Refer to EC-37, "EVAPORATIVE EMISSION LINE DRAWING" .

OK or NG

OK >> GO TO 19.
NG >> Repair or reconnect the hose.

19. CLEAN EVAP PURGE LINE

Clean EVAP purge line (pipe and rubber tube) using air blower.

>> GO TO 20.

20. CHECK EVAP/ORVR LINE

Check EVAP/ORVR line between EVAP canister and fuel tank for clogging, kink, looseness and improper connection. For location, refer to EC-43, "ON BOARD REFUELING VAPOR RECOVERY (ORVR)" .

OK or NG

OK >> GO TO 21.
NG >> Repair or replace hoses and tubes.

21. CHECK SIGNAL LINE AND RECIRCULATION LINE

Check signal line and recirculation line between filler neck tube and fuel tank for clogging, kink, cracks, looseness and improper connection.

OK or NG

OK >> GO TO 22.
NG >> Repair or replace hoses, tubes or filler neck tube.

22. CHECK REFUELING CONTROL VALVE

Refer to EC-47, "Component Inspection" .

OK or NG

OK >> GO TO 23.
NG >> Replace refueling EVAP vapor cut valve with fuel tank.

23. CHECK FUEL LEVEL SENSOR

Refer to DI-6 .

OK or NG

OK >> GO TO 24.
NG >> Replace fuel level sensor unit.

24. CHECK INTERMITTENT INCIDENT

Refer to EC-164, "TROUBLE DIAGNOSIS FOR INTERMITTENT INCIDENT" .

>> **INSPECTION END**

DTC P0444, P0445 EVAP CANISTER PURGE VOLUME CONTROL SOLENOID VALVE

PFP:14920

Description

UBS00B7Z

SYSTEM DESCRIPTION

Sensor	Input Signal to ECM	ECM function	Actuator
Crankshaft position sensor (POS) Camshaft position sensor (PHASE)	Engine speed*2	EVAP canister purge flow control	EVAP canister purge volume control solenoid valve
Mass air flow sensor	Amount of intake air		
Engine coolant temperature sensor	Engine coolant temperature		
Battery	Battery voltage*2		
Throttle position sensor	Throttle position		
Accelerator pedal position sensor	Accelerator pedal position		
Air fuel ratio (A/F) sensor 1	Density of oxygen in exhaust gas (Mixture ratio feedback signal)		
Vehicle speed signal*1	Vehicle speed		

*1: This signal is sent to the ECM through CAN communication line.
*2: The ECM determines the start signal status by the signal of engine speed and battery voltage.

This system controls flow rate of fuel vapor from the EVAP canister. The opening of the vapor by-pass passage in the EVAP canister purge volume control solenoid valve changes to control the flow rate. The EVAP canister purge volume control solenoid valve repeats ON/OFF operation according to the signal sent from the ECM. The opening of the valve varies for optimum engine control. The optimum value stored in the ECM is determined by considering various engine conditions. When the engine is operating, the flow rate of fuel vapor from the EVAP canister is regulated as the air flow changes.

COMPONENT DESCRIPTION

The EVAP canister purge volume control solenoid valve uses a ON/OFF duty to control the flow rate of fuel vapor from the EVAP canister. The EVAP canister purge volume control solenoid valve is moved by ON/OFF pulses from the ECM. The longer the ON pulse, the greater the amount of fuel vapor that will flow through the valve.

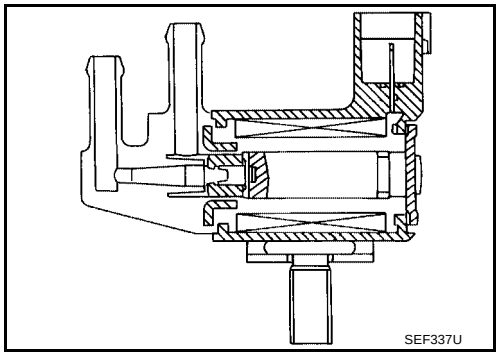

CONSULT-II Reference Value in Data Monitor Mode

UBS00B80

Specification data are reference values.

MONITOR ITEM	CONDITION		SPECIFICATION
PURG VOL C/V	● Engine: After warming up ● Air conditioner switch OFF ● Shift lever: N (A/T), Neutral (M/T) ● No-load	Idle (Accelerator is not depressed even slightly, after engine starting)	0%
		2,000 rpm	—

On Board Diagnosis Logic

UBS00B81

DTC No.	Trouble diagnosis name	DTC detecting condition	Possible cause
P0444 0444	EVAP canister purge volume control solenoid valve circuit open	An excessively low voltage signal is sent to ECM through the valve	● Harness or connectors (The solenoid valve circuit is open or shorted.) ● EVAP canister purge volume control solenoid valve
P0445 0445	EVAP canister purge volume control solenoid valve circuit shorted	An excessively high voltage signal is sent to ECM through the valve	● Harness or connectors (The solenoid valve circuit is shorted.) ● EVAP canister purge volume control solenoid valve

DTC Confirmation Procedure

UBS00B82

NOTE:
If DTC Confirmation Procedure has been previously conducted, always turn ignition switch OFF and wait at least 10 seconds before conducting the next test.

TESTING CONDITION:
Before performing the following procedure, confirm battery voltage is more than 11V at idle.

WITH CONSULT-II

1. Turn ignition switch ON.
2. Select “DATA MONITOR” mode with CONSULT-II.
3. Start engine and let it idle for at least 13 seconds.
4. If 1st trip DTC is detected, go to EC-322, "Diagnostic Procedure".

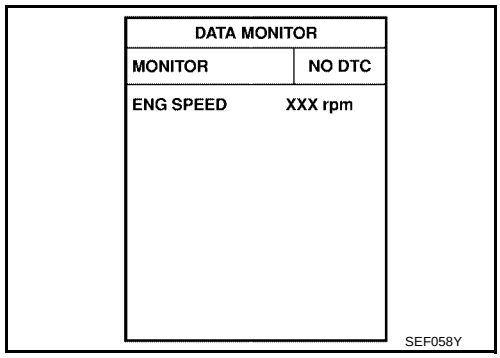

WITH GST

Follow the procedure “WITH CONSULT-II” above.

Wiring Diagram

UBS00B83

EC-PGC/V-01

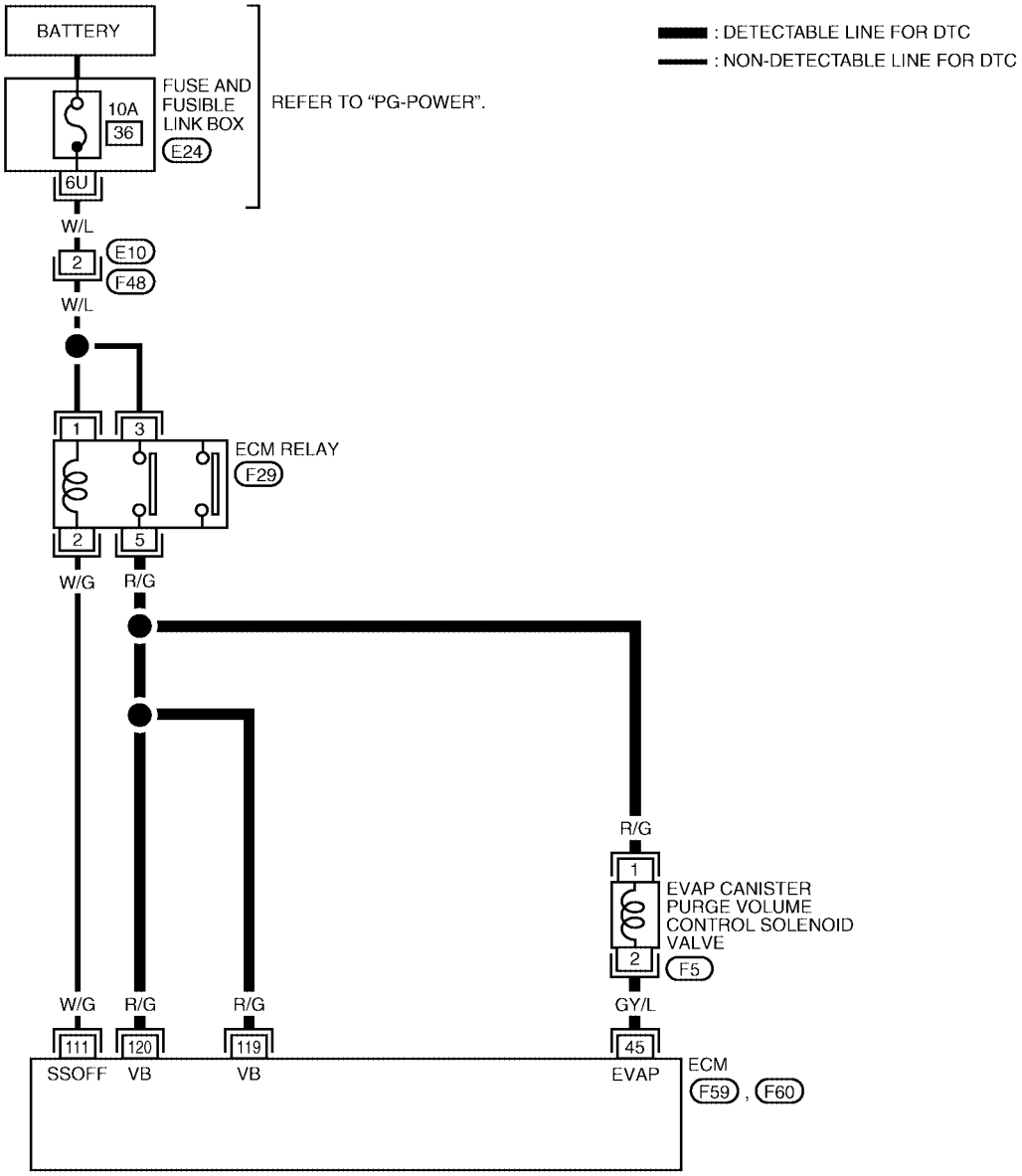

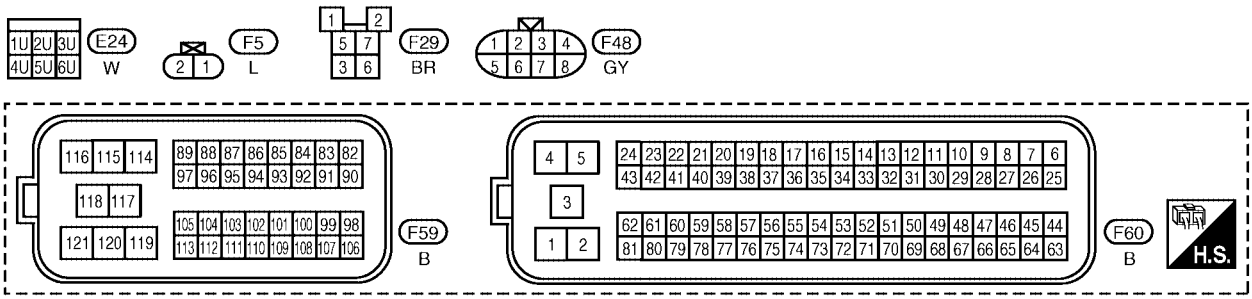

BBWA1431E

Specification data are reference values and are measured between each terminal and ground.
Pulse signal is measured by CONSULT-II.

CAUTION:

Do not use ECM ground terminals when measuring input/output voltage. Doing so may result in damage to the ECM's transistor. Use a ground other than ECM terminals, such as the ground.

TERMINAL NO.	WIRE COLOR	ITEM	CONDITION	DATA (DC Voltage)
45	GY/L	EVAP canister purge volume control solenoid valve	**[Engine is running]** ● Idle speed ● Accelerator pedal is not depressed even slightly, after engine starting.	BATTERY VOLTAGE (11 - 14V)★ 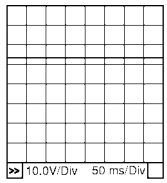 PBIB0050E
			[Engine is running] ● Engine speed is about 2,000 rpm (More than 100 seconds after starting engine)	Approximately 10V★ 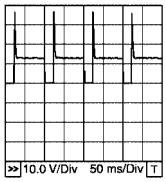 PBIB0520E
111	W/G	ECM relay (Self shut-off)	**[Engine is running]** **[Ignition switch: OFF]** ● For a few seconds after turning ignition switch OFF	0 - 1.0V
			[Ignition switch: OFF] ● More than a few seconds after turning ignition switch OFF	BATTERY VOLTAGE (11 - 14V)
119 120	R/G	Power supply for ECM	**[Ignition switch: ON]**	BATTERY VOLTAGE (11 - 14V)

★: Average voltage for pulse signal (Actual pulse signal can be confirmed by oscilloscope.)

Diagnostic Procedure

UBS00B84

1. CHECK EVAP CANISTER PURGE VOLUME CONTROL SOLENOID VALVE POWER SUPPLY CIRCUIT

1. Turn ignition switch OFF.
2. Disconnect EVAP canister purge volume control solenoid valve harness connector.
3. Turn ignition switch ON.

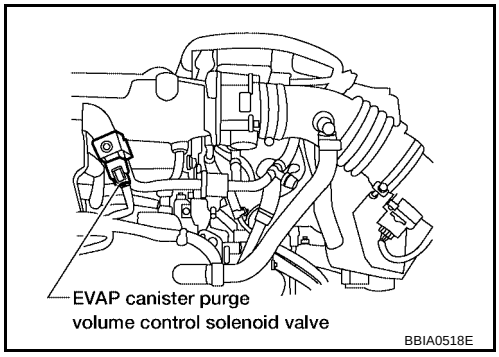

4. Check voltage between EVAP canister purge volume control solenoid valve terminal 1 and ground with CONSULT-II or tester.

Voltage: Battery voltage

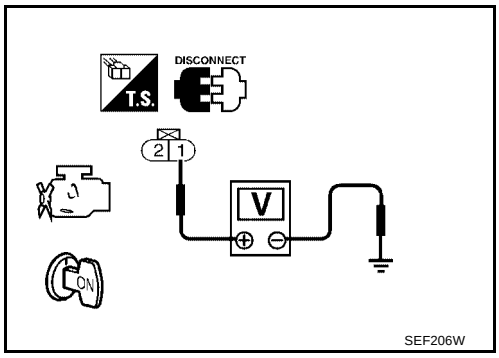

OK or NG

OK >> GO TO 3.
NG >> GO TO 2.

2. DETECT MALFUNCTIONING PART

Check the following.

- Harness for open or short between EVAP canister purge volume control solenoid valve and ECM
- Harness for open or short between EVAP canister purge volume control solenoid valve and ECM relay.

>> Repair harness or connectors.

3. CHECK EVAP CANISTER PURGE VOLUME CONTROL SOLENOID VALVE OUTPUT SIGNAL CIRCUIT FOR OPEN AND SHORT

1. Turn ignition switch OFF.
2. Disconnect ECM harness connector.
3. Check harness continuity between ECM terminal 45 and EVAP canister purge volume control solenoid valve terminal 2.
   Refer to Wiring Diagram.

Continuity should exist.

4. Also check harness for short to ground and short to power.

OK or NG

OK (With CONSULT-II)>>GO TO 4.
OK (Without CONSULT-II)>>GO TO 5.
NG >> Repair open circuit or short to ground or short to power in harness or connectors.

4. CHECK EVAP CANISTER PURGE VOLUME CONTROL SOLENOID VALVE OPERATION

With CONSULT-II

1. Reconnect all harness connectors disconnected.
2. Start engine.
3. Perform “PURG VOL CONT/V” in “ACTIVE TEST” mode with CONSULT-II. Check that engine speed varies according to the valve opening.

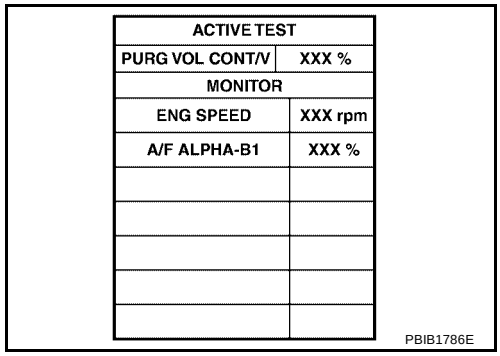

ACTIVE TEST	
PURG VOL CONT/V	XXX %
MONITOR	
ENG SPEED	XXX rpm
A/F ALPHA-B1	XXX %

PBIB1786E

OK or NG

OK >> GO TO 6.
NG >> GO TO 5.

5. CHECK EVAP CANISTER PURGE VOLUME CONTROL SOLENOID VALVE

Refer to EC-323, "Component Inspection" .

OK or NG

OK >> GO TO 6.
NG >> Replace EVAP canister purge volume control solenoid valve.

6. CHECK INTERMITTENT INCIDENT

Refer to EC-164, "TROUBLE DIAGNOSIS FOR INTERMITTENT INCIDENT" .

>> **INSPECTION END**

Component Inspection

UBS00B85

EVAP CANISTER PURGE VOLUME CONTROL SOLENOID VALVE

With CONSULT-II

Check air passage continuity of EVAP canister purge volume control solenoid valve under the following conditions.

Condition (PURG VOL CONT/V value)	Air passage continuity between A and B
100%	Yes
0%	No

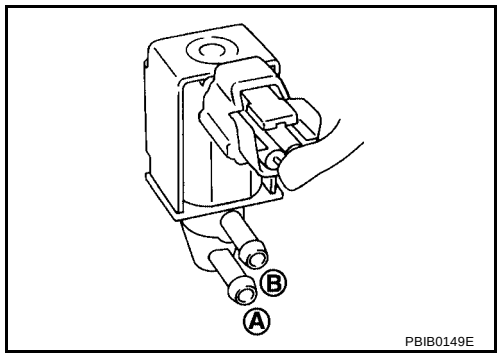

PBIB0149E

Without CONSULT-II

Check air passage continuity of EVAP canister purge volume control solenoid valve under the following conditions.

Condition	Air passage continuity between A and B
12V direct current supply between terminals 1 and 2	Yes
No supply	No

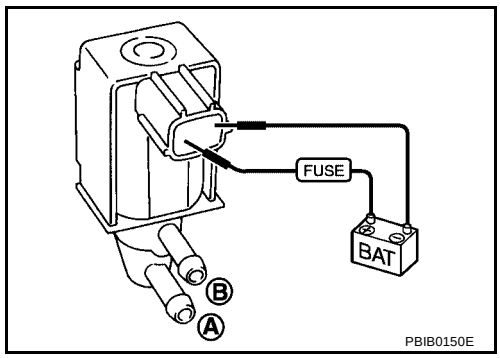

PBIB0150E

Removal and Installation

UBS00B86

EVAP CANISTER PURGE VOLUME CONTROL SOLENOID VALVE

Refer to EM-15, "OUTER COMPONENT PARTS" .

DTC P0447 EVAP CANISTER VENT CONTROL VALVE

PFP:14935

Component Description

UBS00B87

The EVAP canister vent control valve is located on the EVAP canister and is used to seal the canister vent.
This solenoid valve responds to signals from the ECM. When the ECM sends an ON signal, the coil in the solenoid valve is energized. A plunger will then move to seal the canister vent. The ability to seal the vent is necessary for the on board diagnosis of other evaporative emission control system components.
This solenoid valve is used only for diagnosis, and usually remains opened.
When the vent is closed, under normal purge conditions, the evaporative emission control system is depressurized and allows “EVAP Control System” diagnoses.

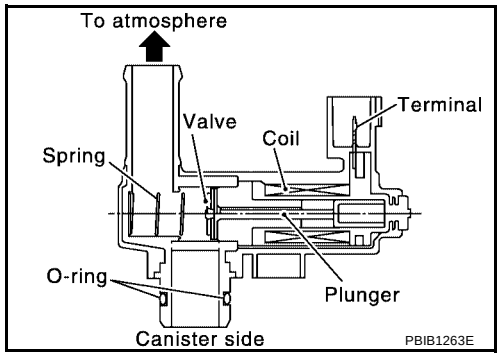

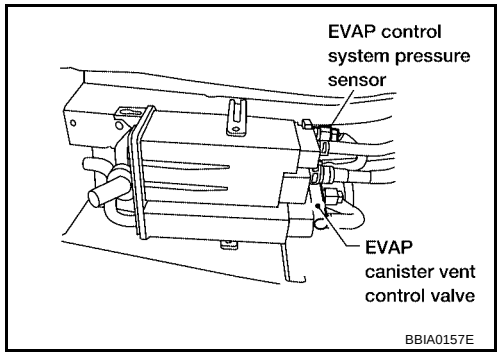

CONSULT-II Reference Value in Data Monitor Mode

UBS00B88

Specification data are reference values.

MONITOR ITEM	CONDITION	SPECIFICATION
VENT CONT/V	● Ignition switch: ON	OFF

On Board Diagnosis Logic

UBS00B89

DTC No.	Trouble diagnosis name	DTC detecting condition	Possible cause
P0447 0447	EVAP canister vent control valve circuit open	An improper voltage signal is sent to ECM through EVAP canister vent control valve.	● Harness or connectors (The valve circuit is open or shorted.) ● EVAP canister vent control valve

DTC Confirmation Procedure

UBS00B8A

NOTE:
If DTC Confirmation Procedure has been previously conducted, always turn ignition switch OFF and wait at least 10 seconds before conducting the next test.
TESTING CONDITION:
Before performing the following procedure, confirm battery voltage is more than 11V at idle.

WITH CONSULT-II

1. Turn ignition switch ON.

2. Select “DATA MONITOR” mode with CONSULT-II.
3. Start engine and wait at least 8 seconds.
4. If 1st trip DTC is detected, go to EC-328, "Diagnostic Procedure"
.

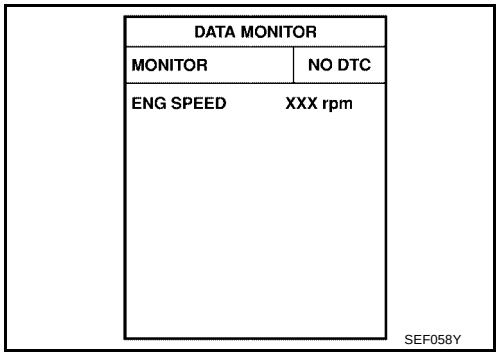

WITH GST

Follow the procedure “WITH CONSULT-II” above.

Wiring Diagram

UBS00B8B

EC-VENT/V-01

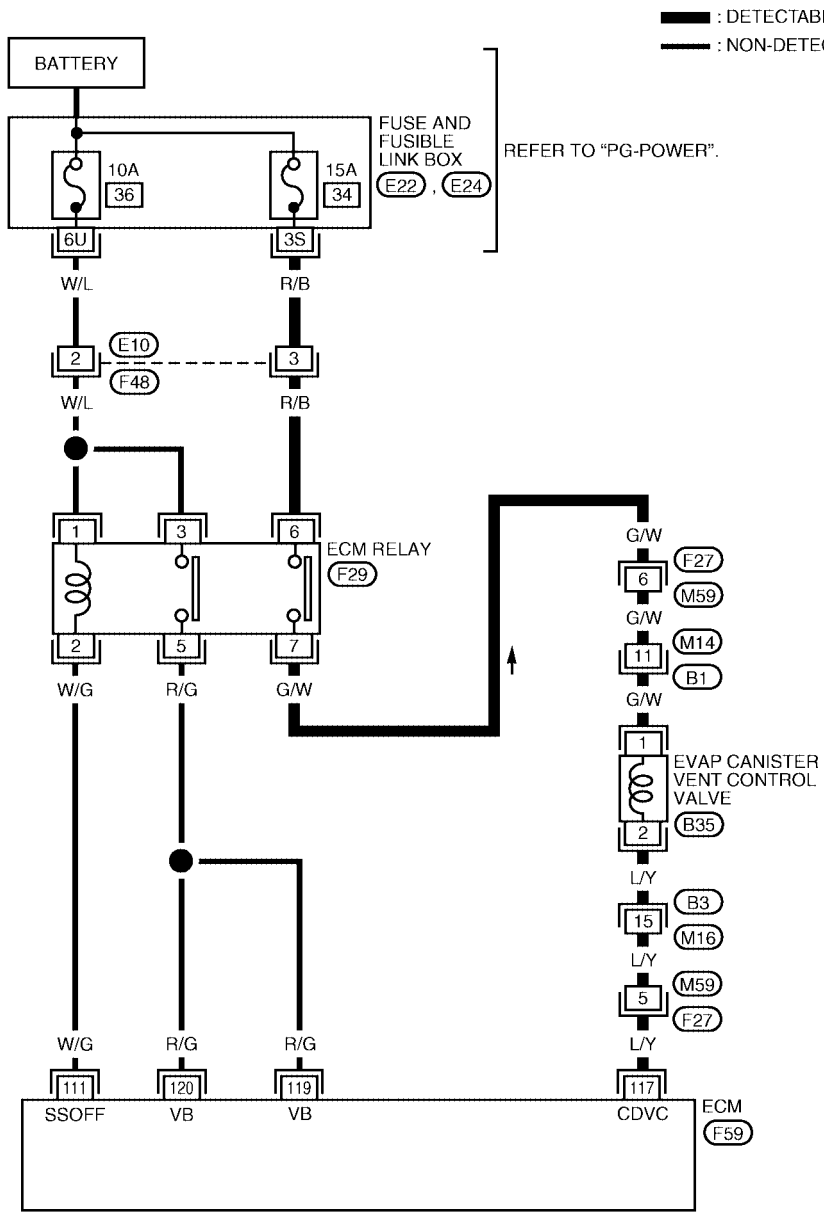

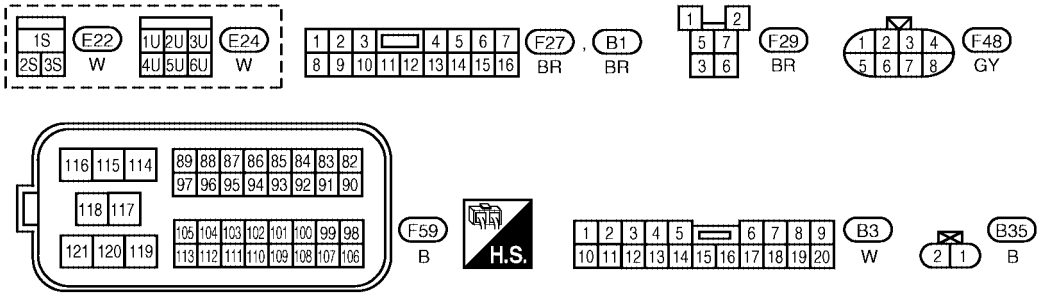

BBWA1432E

Specification data are reference values and are measured between each terminal and ground.

CAUTION:

Do not use ECM ground terminals when measuring input/output voltage. Doing so may result in damage to the ECM's transistor. Use a ground other than ECM terminals, such as the ground.

TERMINAL NO.	WIRE COLOR	ITEM	CONDITION	DATA (DC Voltage)
111	W/G	ECM relay (Self shut-off)	**[Engine is running]** **[Ignition switch: OFF]** ● For a few seconds after turning ignition switch OFF	0 - 1.0V
			[Ignition switch: OFF] ● More than a few seconds after turning ignition switch OFF	BATTERY VOLTAGE (11 - 14V)
117	L/Y	EVAP canister vent control valve	**[Ignition switch: ON]**	BATTERY VOLTAGE (11 - 14V)
119 120	R/G	Power supply for ECM	**[Ignition switch: ON]**	BATTERY VOLTAGE (11 - 14V)

Diagnostic Procedure

UBS00B8C

1. INSPECTION START

1. Do you have CONSULT-II?

Yes or No

Yes >> GO TO 2.
No >> GO TO 3.

2. CHECK EVAP CANISTER VENT CONTROL VALVE CIRCUIT

With CONSULT-II

1. Turn ignition switch OFF and then turn ON.
2. Select “VENT CONTROL/V” in “ACTIVE TEST” mode with CONSULT-II.
3. Touch “ON/OFF” on CONSULT-II screen.
4. Check for operating sound of the valve.
   Clicking noise should be heard.

OK or NG

OK >> GO TO 7.
NG >> GO TO 3.

ACTIVE TEST	
VENT CONTROL/V	OFF
MONITOR	
ENG SPEED	XXX rpm
A/F ALPHA-B1	XXX %

PBIB1787E

3. CHECK EVAP CANISTER VENT CONTROL VALVE POWER SUPPLY CIRCUIT

1. Turn ignition switch OFF.
2. Disconnect EVAP canister vent control valve harness connector.
3. Turn ignition switch ON.

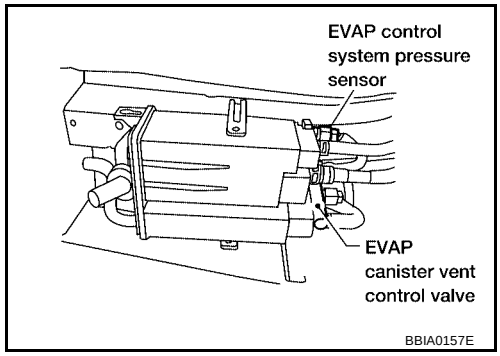

4. Check voltage between EVAP canister vent control valve terminal 1 and ground with CONSULT-II or tester.

Voltage: Battery voltage

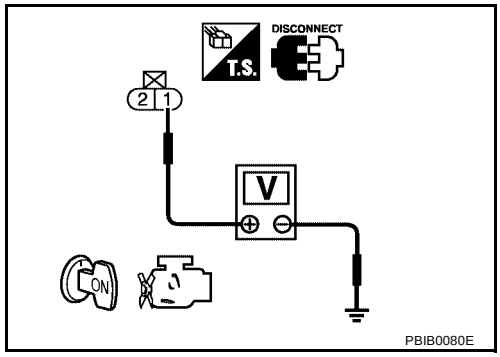

OK or NG

OK >> GO TO 5.
NG >> GO TO 4.

4. DETECT MALFUNCTIONING PART

Check the following.

- Harness connectors F27, M59
- Harness connectors B1, M14
- Harness for open or short between EVAP canister vent control valve and ECM relay

>> Repair harness or connectors.

5. CHECK EVAP CANISTER VENT CONTROL VALVE OUTPUT SIGNAL CIRCUIT FOR OPEN AND SHORT

1. Turn ignition switch OFF.
2. Disconnect ECM harness connector.
3. Check harness continuity between ECM terminal 117 and EVAP canister vent control valve terminal 2. Refer to Wiring Diagram.

Continuity should exist.

4. Also check harness for short to ground and short to power.

OK or NG

OK >> GO TO 7.
NG >> GO TO 6.

6. DETECT MALFUNCTIONING PART

Check the following.

- Harness connectors B3, M16
- Harness connectors M59, F27
- Harness for open or short between EVAP canister vent control valve and ECM

>> Repair open circuit or short to ground or short to power in harness or connectors.

7. CHECK RUBBER TUBE FOR CLOGGING

1. Disconnect rubber tube connected to EVAP canister vent control valve.
2. Check the rubber tube for clogging.

OK or NG

OK >> GO TO 8.
NG >> Clean the rubber tube using an air blower.

8. CHECK EVAP CANISTER VENT CONTROL VALVE

Refer to EC-330, "Component Inspection" .

OK or NG

OK >> GO TO 9.
NG >> Replace EVAP canister vent control valve.

9. CHECK INTERMITTENT INCIDENT

Refer to EC-164, "TROUBLE DIAGNOSIS FOR INTERMITTENT INCIDENT" .

>> **INSPECTION END**

Component Inspection

UBS00B8D

EVAP CANISTER VENT CONTROL VALVE

With CONSULT-II

1. Remove EVAP canister vent control valve from EVAP canister.
2. Check portion **B** of EVAP canister vent control valve for being rusted.
   If NG, replace EVAP canister vent control valve.
   If OK, go to next step.
3. Reconnect harness connectors disconnected.
4. Turn ignition switch ON.

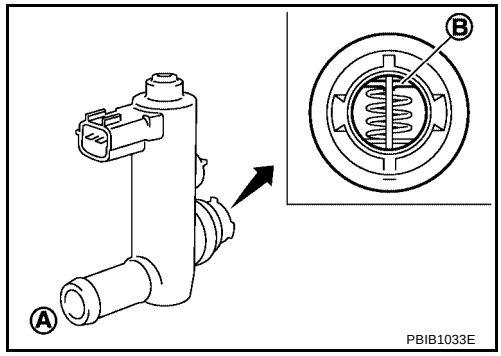

5. Perform “VENT CONTROL/V” in “ACTIVE TEST” mode.
6. Check air passage continuity and operation delay time.
   Make sure new O-ring is installed properly.

Condition VENT CONTROL/V	Air passage continuity between A and B
ON	No
OFF	Yes

Operation takes less than 1 second.

If NG, replace EVAP canister vent control valve.
If OK, go to next step.

ACTIVE TEST	
VENT CONTROL/V	OFF
MONITOR	
ENG SPEED	XXX rpm
A/F ALPHA-B1	XXX %

PBIB1787E

7. Clean the air passage (Portion **A** to **B**) of EVAP canister vent control valve using an air blower.
8. Perform step 6 again.

Without CONSULT-II

1. Remove EVAP canister vent control valve from EVAP canister.
2. Check portion **B** of EVAP canister vent control valve for being rusted.

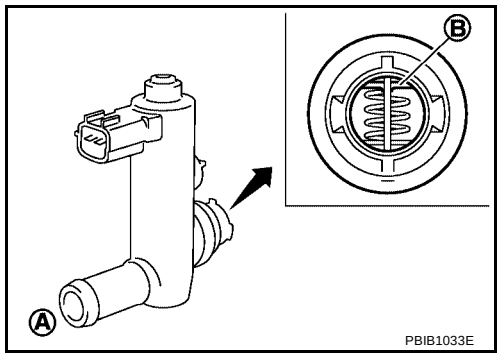

PBIB1033E

3. Check air passage continuity and operation delay time under the following conditions.
   Make sure new O-ring is installed properly.

Condition	Air passage continuity between A and B
12V direct current supply between terminals 1 and 2	No
OFF	Yes

Operation takes less than 1 second.

If NG, replace EVAP canister vent control valve.
If OK, go to next step.

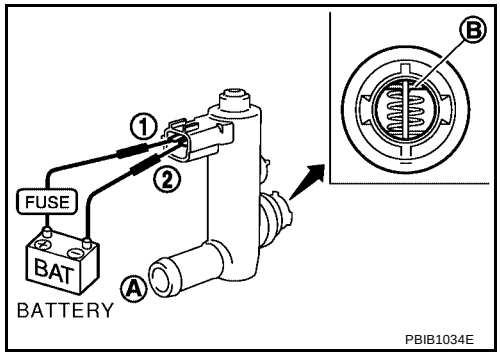

PBIB1034E

4. Clean the air passage (Portion **A** to **B**) of EVAP canister vent control valve using an air blower.
5. Perform step 3 again.

DTC P0451 EVAP CONTROL SYSTEM PRESSURE SENSOR

PFP:22365

Component Description

UBS00ISB

The EVAP control system pressure sensor detects pressure in the purge line. The sensor output voltage to the ECM increases as pressure increases.

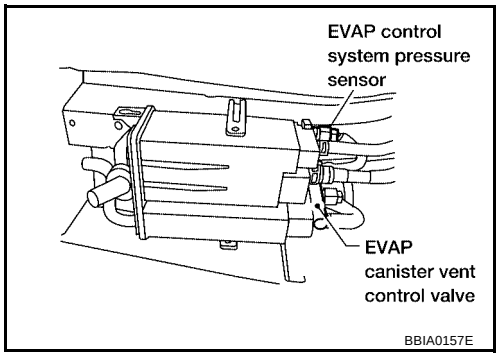

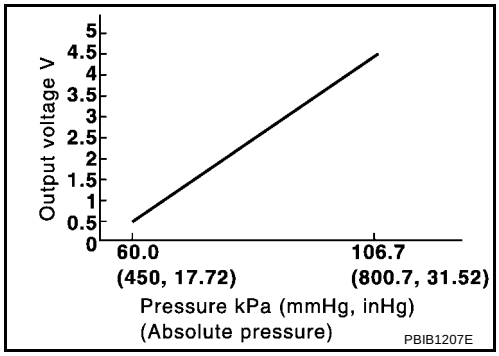

CONSULT-II Reference Value in Data Monitor Mode

UBS00ISC

Specification data are reference values.

MONITOR ITEM	CONDITION	SPECIFICATION
EVAP SYS PRES	● Ignition switch: ON	Approx. 1.8 - 4.8V

On Board Diagnosis Logic

UBS00ISD

NOTE:
If DTC P0451 is displayed with DTC P1229, first perform the trouble diagnosis for DTC P1229. Refer to EC-474

DTC No.	Trouble diagnosis name	DTC detecting condition	Possible cause
P0451 0451	EVAP control system pressure sensor performance	ECM detects a sloshing signal from the EVAP control system pressure sensor	● Harness or connectors ● EVAP control system pressure sensor

DTC Confirmation Procedure

UBS00ISE

NOTE:
If DTC Confirmation Procedure has been previously conducted, always turn ignition switch OFF and wait at least 10 seconds before conducting the next test.

WITH CONSULT-II

1. Turn ignition switch OFF and wait at least 10 seconds.

2. Turn ignition switch ON and select “DATA MONITOR” mode with CONSULT-II.
3. Start engine and wait at least 40 seconds.

   NOTE:
   Do not depress accelerator pedal even slightly.
   If 1st trip DTC is detected, go to EC-333, "Diagnostic Procedure"
   .

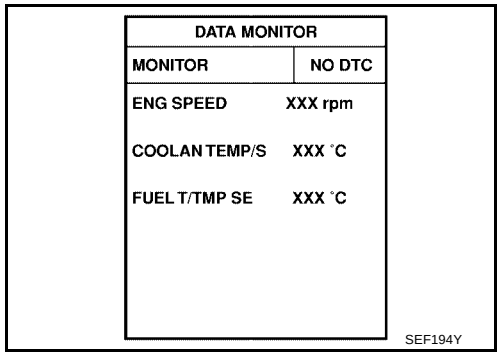

WITH GST

Follow the procedure “WITH CONSULT-II” above.

Diagnostic Procedure

UBS00ISF

1. CHECK GROUND CONNECTIONS

1. Turn ignition switch OFF.
2. Loosen and retighten two ground screws on the body. Refer to EC-171, "Ground Inspection" .

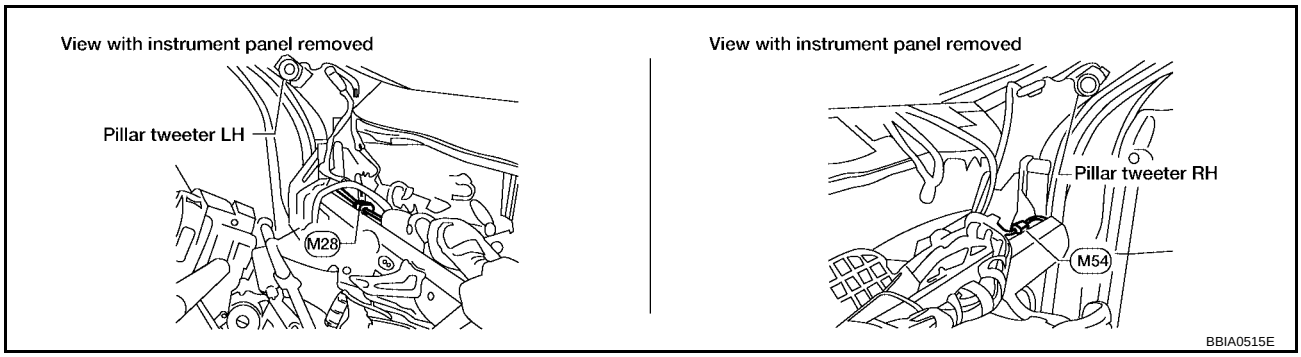

OK or NG

OK >> GO TO 2.
NG >> Repair or replace ground connections.

2. CHECK EVAP CONTROL SYSTEM PRESSURE SENSOR CONNECTOR FOR WATER

1. Disconnect EVAP control system pressure sensor harness connector.
2. Check sensor harness connector for water.

   Water should not exist.

OK or NG

OK >> GO TO 3.
NG >> Repair or replace harness connector.

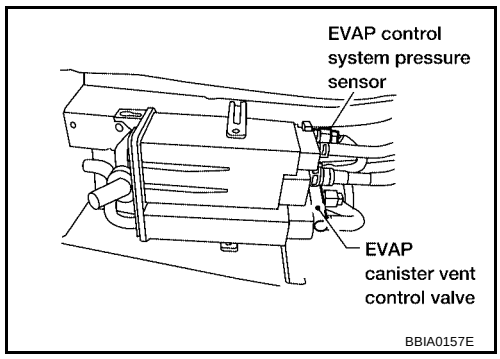

3. CHECK EVAP CONTROL SYSTEM PRESSURE SENSOR

Refer to EC-334, "Component Inspection" .

OK or NG

OK >> GO TO 4.
NG >> Replace EVAP control system pressure sensor.

4. CHECK INTERMITTENT INCIDENT

Refer to EC-164, "TROUBLE DIAGNOSIS FOR INTERMITTENT INCIDENT" .
For wiring diagram, refer to EC-337 .

>> **INSPECTION END**

Component Inspection

UBS00ISG

EVAP CONTROL SYSTEM PRESSURE SENSOR

1. Remove EVAP control system pressure sensor with its harness connector connected from EVAP canister. **Do not reuse the O-ring, replace it with a new one.**
2. Install a vacuum pump to EVAP control system pressure sensor.
3. Turn ignition switch ON and check output voltage between ECM terminal 32 and ground under the following conditions.

Applied vacuum kPa (mmHg, inHg)	Voltage V
Not applied	1.8 - 4.8
-26.7 (-200, -7.87)	2.1 to 2.5V lower than above value

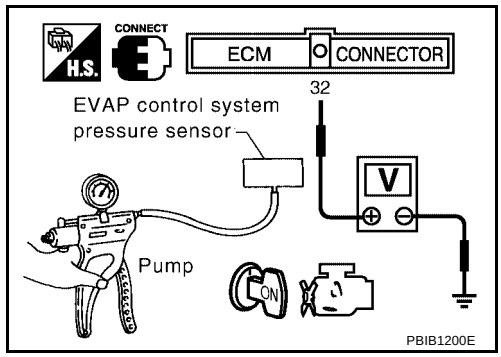

CAUTION:
- **Always calibrate the vacuum pump gauge when using it.**
- **Do not apply below -93.3 kPa (-700 mmHg, -27.56 inHg) or pressure over 101.3 kPa (760 mmHg, 29.92 inHg).**

4. If NG, replace EVAP control system pressure sensor.

DTC P0452 EVAP CONTROL SYSTEM PRESSURE SENSOR

PFP:25085

Component Description

UBS00B8E

The EVAP control system pressure sensor detects pressure in the purge line. The sensor output voltage to the ECM increases as pressure increases.

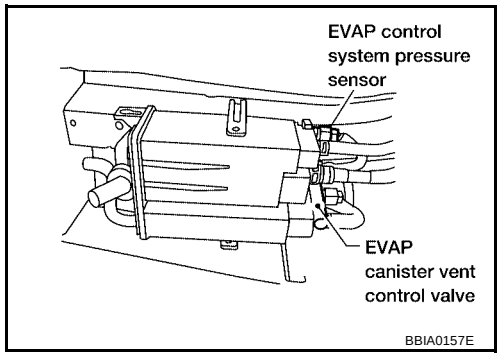

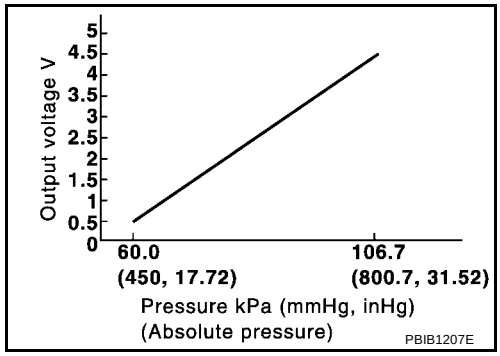

CONSULT-II Reference Value in Data Monitor Mode

UBS00B8F

Specification data are reference values.

MONITOR ITEM	CONDITION	SPECIFICATION
EVAP SYS PRES	● Ignition switch: ON	Approx. 1.8 - 4.8V

On Board Diagnosis Logic

UBS00B8G

NOTE:
If DTC P0452 is displayed with DTC P1229, first perform the trouble diagnosis for DTC P1229. Refer to EC-474 .

DTC No.	Trouble diagnosis name	DTC detecting condition	Possible cause
P0452 0452	EVAP control system pressure sensor low input	An excessively low voltage from the sensor is sent to ECM.	● Harness or connectors (The sensor circuit is open or shorted.) ● EVAP control system pressure sensor

DTC Confirmation Procedure

UBS00B8H

NOTE:
If DTC Confirmation Procedure has been previously conducted, always turn ignition switch OFF and wait at least 10 seconds before conducting the next test.
TESTING CONDITION:
Always perform test at a temperature of 0°C (32°F) or more.

WITH CONSULT-II

1. Start engine and warm it up to normal operating temperature.
2. Turn ignition switch OFF and wait at least 10 seconds.
3. Turn ignition switch ON.
4. Select “DATA MONITOR” mode with CONSULT-II.
5. Make sure that “FUEL T/TMP SE” is more than 0°C (32°F).
6. Start engine and wait at least 20 seconds.
7. If 1st trip DTC is detected, go to EC-338, "Diagnostic Procedure"
.

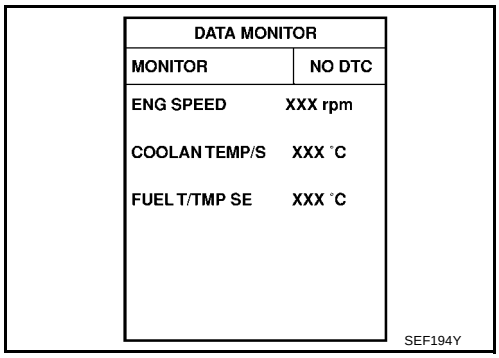

WITH GST

1. Start engine and warm it up to normal operating temperature.
2. Check that voltage between ECM terminal 107 (Fuel tank temperature sensor signal) and ground is less than 4.2V.
3. Turn ignition switch OFF and wait at least 10 seconds.
4. Start engine and wait at least 20 seconds.
5. Select Service $07 with GST.
6. If 1st trip DTC is detected, go to EC-338, "Diagnostic Procedure"
.

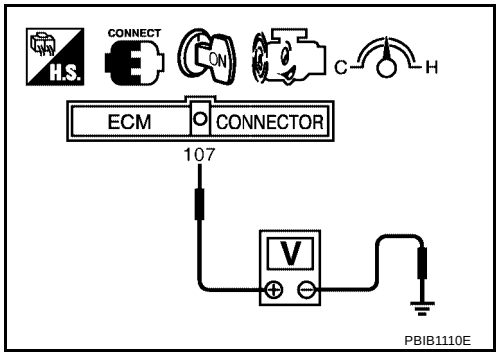

Wiring Diagram

UBS00B8I

EC-PRE/SE-01

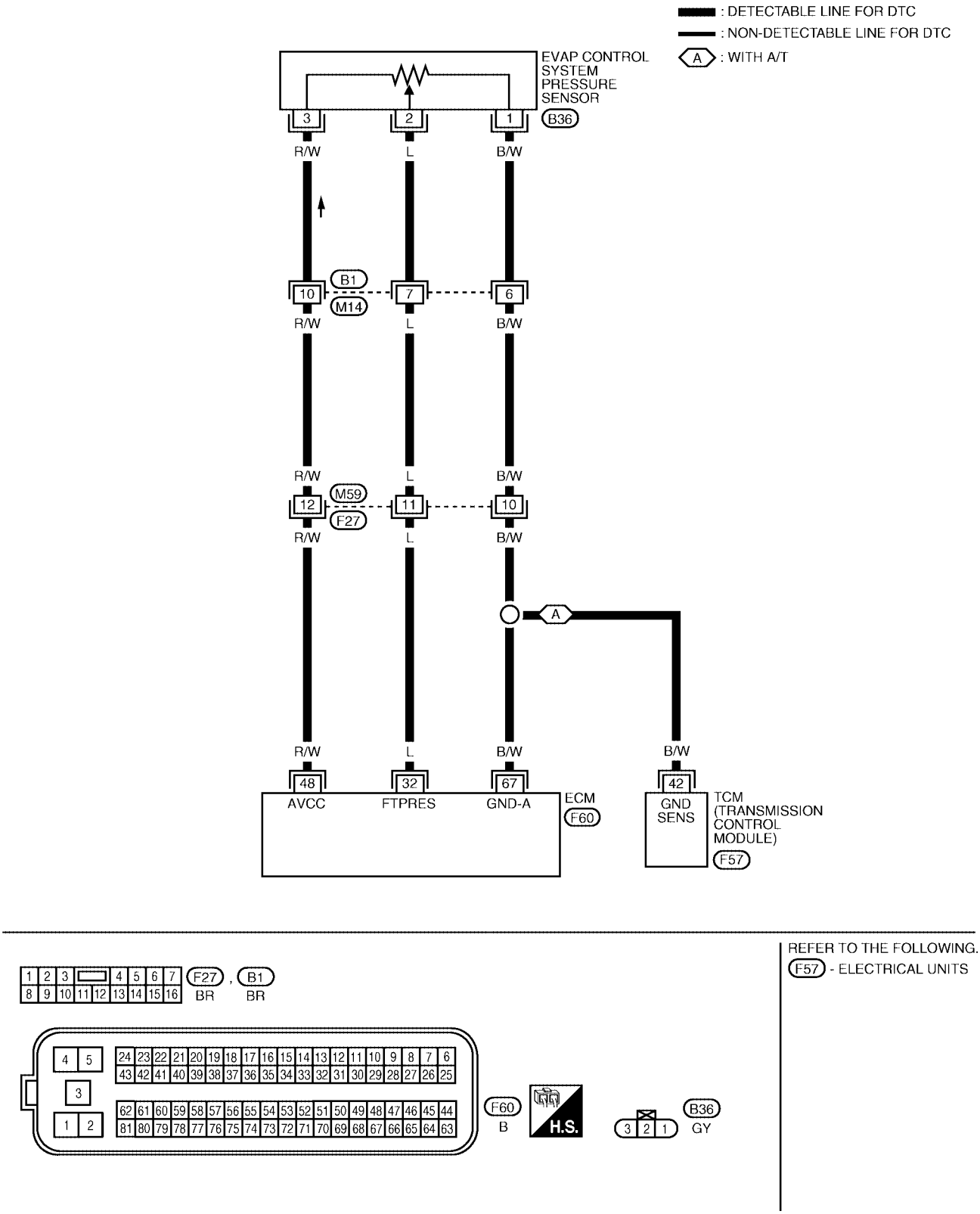

Specification data are reference values and are measured between each terminal and ground.

CAUTION:

Do not use ECM ground terminals when measuring input/output voltage. Doing so may result in damage to the ECM's transistor. Use a ground other than ECM terminals, such as the ground.

TERMINAL NO.	WIRE COLOR	ITEM	CONDITION	DATA (DC Voltage)
32	L	EVAP control system pressure sensor	**[Ignition switch: ON]**	Approximately 1.8 - 4.8V
48	R/W	Sensor power supply (EVAP control system pressure sensor)	**[Ignition switch: ON]**	Approximately 5V
67	B/W	Sensor ground	**[Engine is running]** ● **Warm-up condition** ● Idle speed	Approximately 0V

Diagnostic Procedure

UBS00B8J

1. CHECK GROUND CONNECTIONS

1. Turn ignition switch OFF.
2. Loosen and retighten two ground screws on the body. Refer to EC-171, "Ground Inspection" .

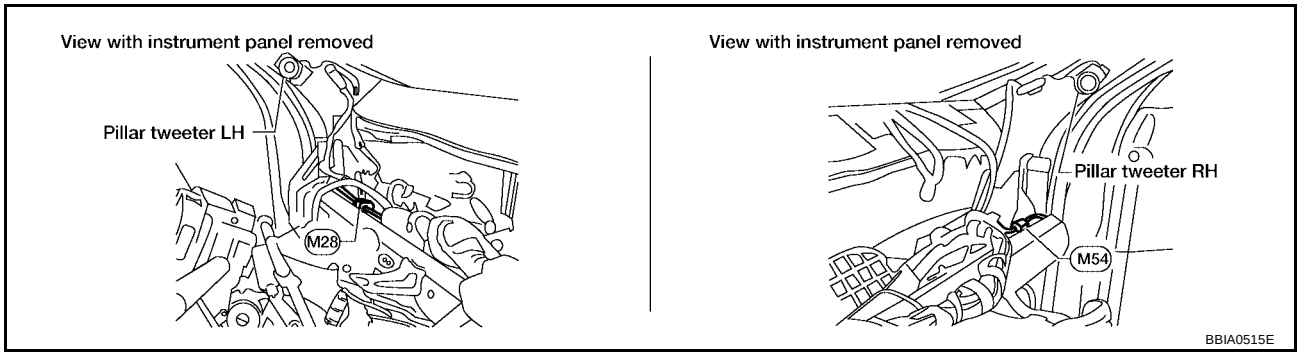

OK or NG

OK >> GO TO 2.
NG >> Repair or replace ground connections.

2. CHECK CONNECTOR

1. Disconnect EVAP control system pressure sensor harness connector.
2. Check sensor harness connector for water.

Water should not exist.

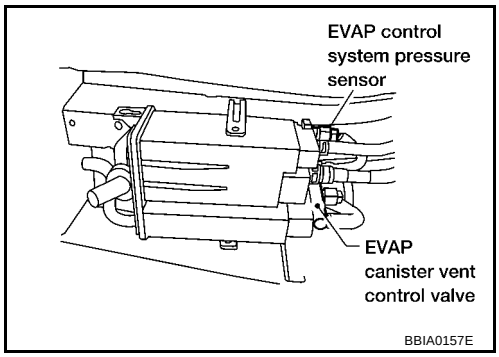

OK or NG

OK >> GO TO 3.
NG >> Repair or replace harness connector.

3. CHECK EVAP CONTROL SYSTEM PRESSURE SENSOR POWER SUPPLY CIRCUIT

1. Turn ignition switch ON.
2. Check voltage between EVAP control system pressure sensor terminal 3 and ground with CONSULT-II or tester.

Voltage: Approximately 5V

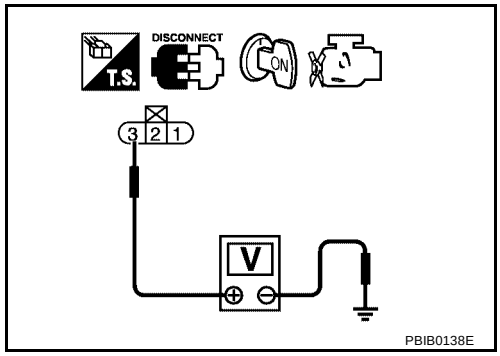

OK or NG

OK >> GO TO 5.
NG >> GO TO 4.

4. DETECT MALFUNCTIONING PART

Check the following.

- Harness connectors B1, M14
- Harness connectors M59, F27
- Harness for open or short between EVAP control system pressure sensor and ECM

>> Repair harness or connectors.

5. CHECK EVAP CONTROL SYSTEM PRESSURE SENSOR GROUND CIRCUIT FOR OPEN AND SHORT

1. Turn ignition switch OFF.
2. Disconnect ECM harness connector.
3. Disconnect TCM harness connector.
4. Check harness continuity between EVAP control system pressure sensor terminal 1 and ECM terminal 67, TCM terminal 42.
   Refer to Wiring Diagram.

Continuity should exist.

5. Also check harness for short to ground and short to power.

OK or NG

OK >> GO TO 7.
NG >> GO TO 6.

6. DETECT MALFUNCTIONING PART

Check the following.

- Harness connectors B1, M14
- Harness connectors M59, F27
- Harness for open or short between EVAP control system pressure sensor and TCM
- Harness for open or short between EVAP control system pressure sensor and ECM

>> Repair open circuit or short to ground or short to power in harness or connectors.

7. CHECK EVAP CONTROL SYSTEM PRESSURE SENSOR INPUT SIGNAL CIRCUIT FOR OPEN AND SHORT

1. Check harness continuity between ECM terminal 32 and EVAP control system pressure sensor terminal 2.
   Refer to Wiring Diagram.

   Continuity should exist.

2. Also check harness for short to ground and short to power.

OK or NG

OK >> GO TO 9.
NG >> GO TO 8.

8. DETECT MALFUNCTIONING PART

Check the following.

- Harness connectors B1, M14
- Harness connectors M59, F27
- Harness for open or short between ECM and EVAP control system pressure sensor

>> Repair open circuit or short to ground or short to power in harness or connectors.

9. CHECK EVAP CONTROL SYSTEM PRESSURE SENSOR

Refer to EC-340, "Component Inspection" .

OK or NG

OK >> GO TO 10.
NG >> Replace EVAP control system pressure sensor.

10. CHECK INTERMITTENT INCIDENT

Refer to EC-164, "TROUBLE DIAGNOSIS FOR INTERMITTENT INCIDENT" .

>> **INSPECTION END**

Component Inspection

UBS00B8K

EVAP CONTROL SYSTEM PRESSURE SENSOR

1. Remove EVAP control system pressure sensor with its harness connector connected from EVAP canister.
   Do not reuse the O-ring, replace it with a new one.
2. Install a vacuum pump to EVAP control system pressure sensor.
3. Turn ignition switch ON and check output voltage between ECM terminal 32 and ground under the following conditions.

Applied vacuum kPa (mmHg, inHg)	Voltage V
Not applied	1.8 - 4.8
-26.7 (-200, -7.87)	2.1 to 2.5V lower than above value

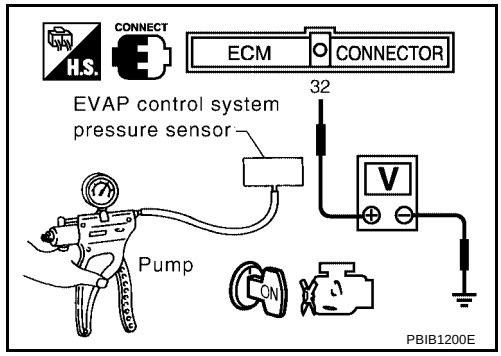

CAUTION:

- **Always calibrate the vacuum pump gauge when using it.**
- **Do not apply below -93.3 kPa (-700 mmHg, -27.56 inHg) or pressure over 101.3 kPa (760 mmHg, 29.92 inHg).**

4. If NG, replace EVAP control system pressure sensor.

DTC P0453 EVAP CONTROL SYSTEM PRESSURE SENSOR

PFP:25085

Component Description

UBS00B8L

The EVAP control system pressure sensor detects pressure in the purge line. The sensor output voltage to the ECM increases as pressure increases.

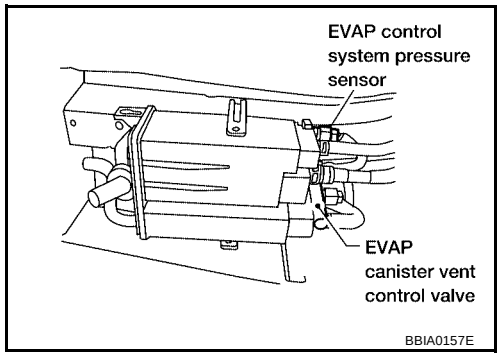

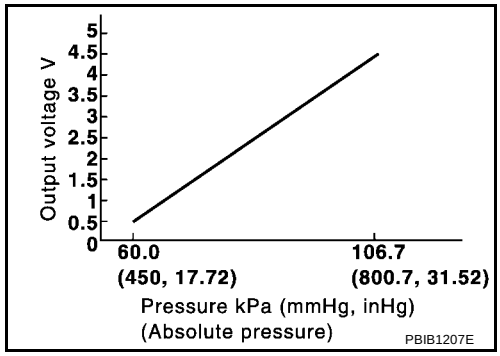

CONSULT-II Reference Value in Data Monitor Mode

UBS00B8M

Specification data are reference values.

MONITOR ITEM	CONDITION	SPECIFICATION
EVAP SYS PRES	● Ignition switch: ON	Approx. 1.8 - 4.8V

On Board Diagnosis Logic

UBS00B8N

NOTE:
If DTC P0453 is displayed with DTC P1229, first perform the trouble diagnosis for DTC P1229. Refer to EC-474 .

DTC No.	Trouble diagnosis name	DTC detecting condition	Possible cause
P0453 0453	EVAP control system pressure sensor high input	An excessively high voltage from the sensor is sent to ECM.	● Harness or connectors (The sensor circuit is open or shorted.) ● EVAP control system pressure sensor ● EVAP canister vent control valve ● EVAP canister ● Rubber hose to EVAP canister vent control valve

DTC Confirmation Procedure

UBS00B8O

NOTE:
If DTC Confirmation Procedure has been previously conducted, always turn ignition switch OFF and wait at least 10 seconds before conducting the next test.
TESTING CONDITION:
Always perform test at a temperature of 0°C (32°F) or more.

WITH CONSULT-II

1. Start engine and warm it up to normal operating temperature.
2. Turn ignition switch OFF and wait at least 10 seconds.
3. Turn ignition switch ON.
4. Select “DATA MONITOR” mode with CONSULT-II.
5. Make sure that “FUEL T/TMP SE” is more than 0°C (32°F).
6. Wait at least 10 seconds.
7. If 1st trip DTC is detected, go to EC-344, "Diagnostic Procedure"
.

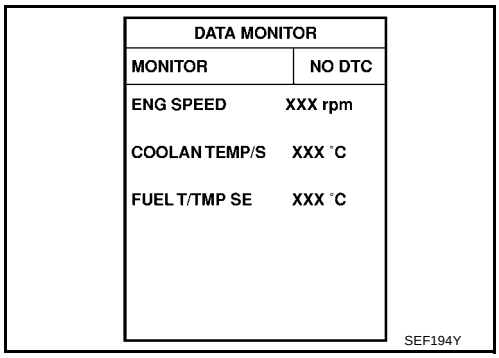

WITH GST

1. Start engine and warm it up to normal operating temperature.
2. Check that voltage between ECM terminal 107 (Fuel tank temperature sensor signal) and ground is less than 4.2V.
3. Turn ignition switch OFF and wait at least 10 seconds.
4. Wait at least 10 seconds.
5. Select Service $07 with GST.
6. If 1st trip DTC is detected, go to EC-344, "Diagnostic Procedure"
.

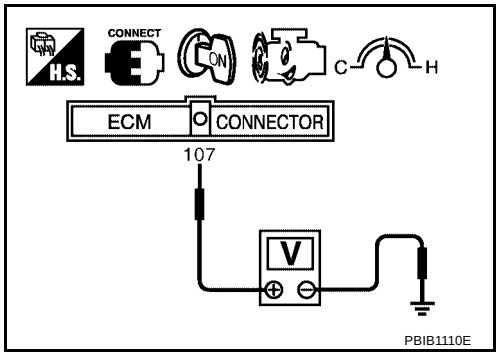

Wiring Diagram

UBS00B8P

EC-PRE/SE-01

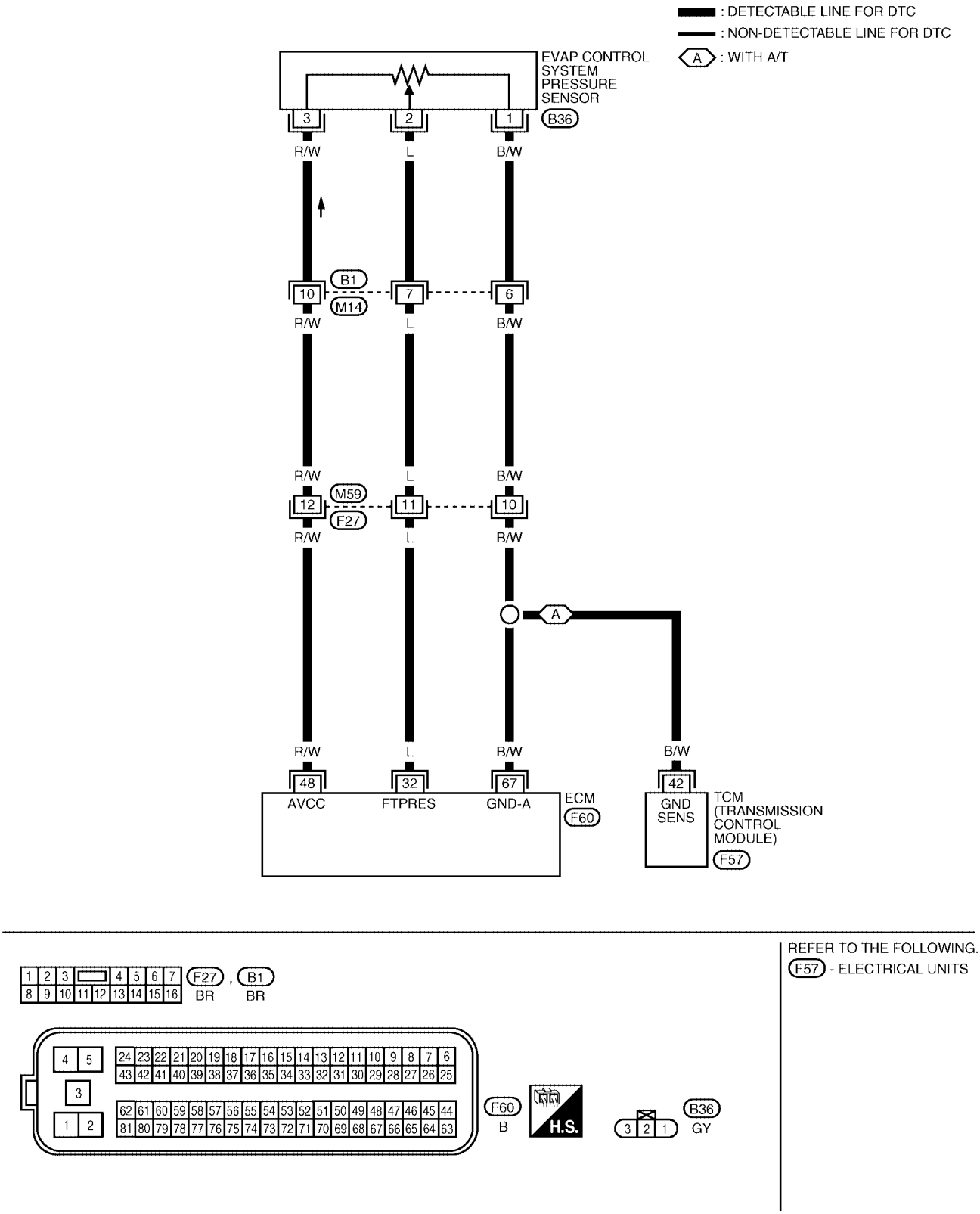

Specification data are reference values and are measured between each terminal and ground.

CAUTION:

Do not use ECM ground terminals when measuring input/output voltage. Doing so may result in damage to the ECM's transistor. Use a ground other than ECM terminals, such as the ground.

TERMINAL NO.	WIRE COLOR	ITEM	CONDITION	DATA (DC Voltage)
32	L	EVAP control system pressure sensor	**[Ignition switch: ON]**	Approximately 1.8 - 4.8V
48	R/W	Sensor power supply (EVAP control system pressure sensor)	**[Ignition switch: ON]**	Approximately 5V
67	B/W	Sensor ground	**[Engine is running]** ● **Warm-up condition** ● Idle speed	Approximately 0V

Diagnostic Procedure

UBS00B8Q

1. CHECK GROUND CONNECTIONS

1. Turn ignition switch OFF.
2. Loosen and retighten two ground screws on the body. Refer to EC-171, "Ground Inspection" .

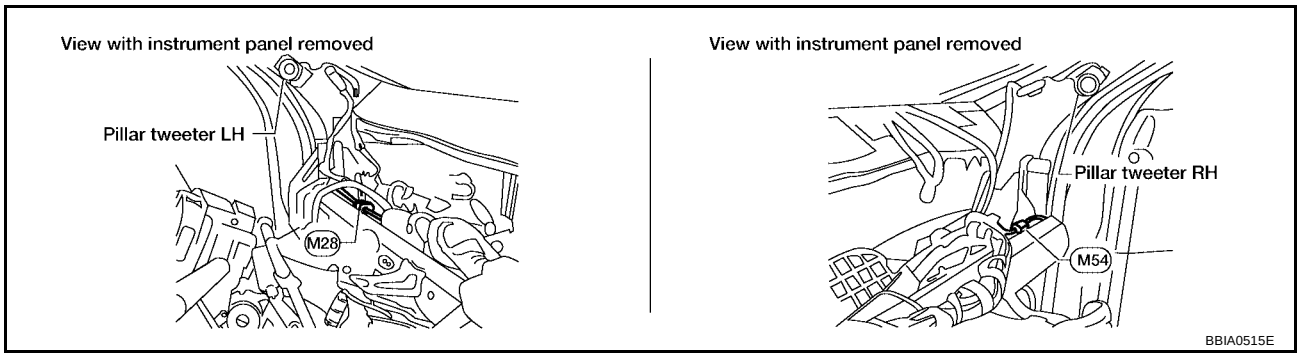

OK or NG

OK >> GO TO 2.
NG >> Repair or replace ground connections.

2. CHECK CONNECTOR

1. Disconnect EVAP control system pressure sensor harness connector.
2. Check sensor harness connector for water.

Water should not exist.

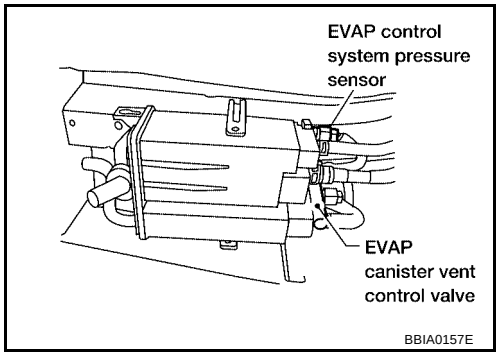

OK or NG

OK >> GO TO 3.
NG >> Repair or replace harness connector.

3. CHECK EVAP CONTROL SYSTEM PRESSURE SENSOR POWER SUPPLY CIRCUIT

1. Turn ignition switch ON.
2. Check voltage between EVAP control system pressure sensor terminal 3 and ground with CONSULT-II or tester.

Voltage: Approximately 5V

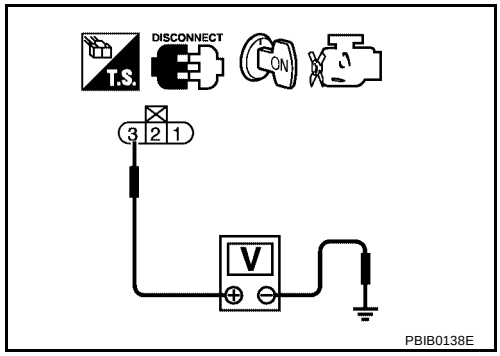

OK or NG

OK >> GO TO 5.
NG >> GO TO 4.

4. DETECT MALFUNCTIONING PART

Check the following.

- Harness connectors B1, M14
- Harness connectors M59, F27
- Harness for open or short between EVAP control system pressure sensor and ECM

>> Repair harness or connectors.

5. CHECK EVAP CONTROL SYSTEM PRESSURE SENSOR GROUND CIRCUIT FOR OPEN AND SHORT

1. Turn ignition switch OFF.
2. Disconnect ECM harness connector.
3. Disconnect TCM harness connector.
4. Check harness continuity between EVAP control system pressure sensor terminal 1 and ECM terminal 67, TCM terminal 42.
   Refer to Wiring Diagram.

Continuity should exist.

5. Also check harness for short to ground and short to power.

OK or NG

OK >> GO TO 7.
NG >> GO TO 6.

6. DETECT MALFUNCTIONING PART

Check the following.

- Harness connectors B1, M14
- Harness connectors M58, F26
- Harness for open or short between EVAP control system pressure sensor and TCM
- Harness for open or short between EVAP control system pressure sensor and ECM

>> Repair open circuit or short to ground or short to power in harness or connectors.

7. CHECK EVAP CONTROL SYSTEM PRESSURE SENSOR INPUT SIGNAL CIRCUIT FOR OPEN AND SHORT

1. Check harness continuity between ECM terminal 32 and EVAP control system pressure sensor terminal 2.
   Refer to Wiring Diagram.

   Continuity should exist.

2. Also check harness for short to ground and short to power.

OK or NG

OK >> GO TO 9.
NG >> GO TO 8.

8. DETECT MALFUNCTIONING PART

Check the following.

- Harness connectors B1, M14
- Harness connectors M58, F26
- Harness for open or short between ECM and EVAP control system pressure sensor

>> Repair open circuit or short to ground or short to power in harness or connectors.

9. CHECK RUBBER TUBE

1. Disconnect rubber tube connected to EVAP canister vent control valve.
2. Check the rubber tube for clogging, vent and kinked.

OK or NG

OK >> GO TO 10.
NG >> Clean the rubber tube using an air blower, repair or replace rubber tube.

10. CHECK EVAP CANISTER VENT CONTROL VALVE

Refer to EC-330, "Component Inspection" .

OK or NG

OK >> GO TO 11.
NG >> Replace EVAP canister vent control valve.

11. CHECK EVAP CONTROL SYSTEM PRESSURE SENSOR

Refer to EC-347, "Component Inspection" .

OK or NG

OK >> GO TO 12.
NG >> Replace EVAP control system pressure sensor.

12. CHECK IF EVAP CANISTER SATURATED WITH WATER

1. Remove EVAP canister with EVAP canister vent control valve and EVAP control system pressure sensor attached.
2. Check if water will drain from the EVAP canister.

Yes or No

Yes >> GO TO 13.
No >> GO TO 15.

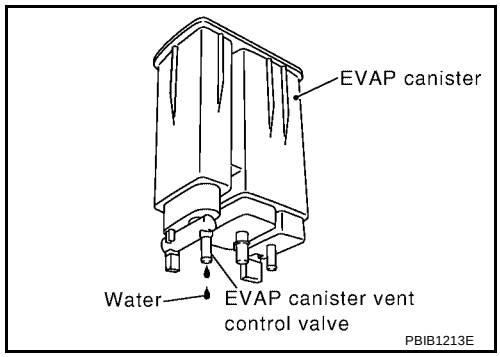

13. CHECK EVAP CANISTER

Weigh the EVAP canister with the EVAP canister vent control valve and EVAP control system pressure sensor attached.

The weight should be less than 1.9 kg (4.2 lb).

OK or NG

OK >> GO TO 15.
NG >> GO TO 14.

14. DETECT MALFUNCTIONING PART

Check the following.

- EVAP canister for damage
- EVAP hose connected to EVAP canister for clogging or poor connection

>> Repair hose or replace EVAP canister.

15. CHECK INTERMITTENT INCIDENT

Refer to EC-164, "TROUBLE DIAGNOSIS FOR INTERMITTENT INCIDENT" .

>> **INSPECTION END**

Component Inspection

UBS00B8R

EVAP CONTROL PRESSURE SENSOR

1. Remove EVAP control system pressure sensor with its harness connector connected from EVAP canister. **Do not reuse the O-ring, replace it with a new one.**
2. Install a vacuum pump to EVAP control system pressure sensor.
3. Turn ignition switch ON and check output voltage between ECM terminal 32 and ground under the following conditions.

Applied vacuum kPa (mmHg, inHg)	Voltage V
Not applied	1.8 - 4.8
-26.7 (-200, -7.87)	2.1 to 2.5V lower than above value

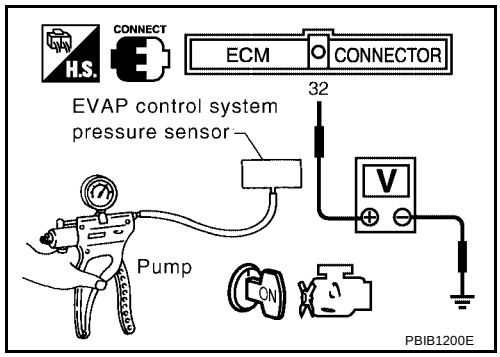

CAUTION:

- **Always calibrate the vacuum pump gauge when using it.**
- **Do not apply below -93.3 kPa (-700 mmHg, -27.56 inHg) or pressure over 101.3 kPa (760 mmHg, 29.92 inHg).**

4. If NG, replace EVAP control system pressure sensor.

DTC P0455 EVAP CONTROL SYSTEM

PFP:14950

On Board Diagnosis Logic

UBS00B8S

This diagnosis detects a very large leak (fuel filler cap fell off etc.) in EVAP system between the fuel tank and EVAP canister purge volume control solenoid valve.

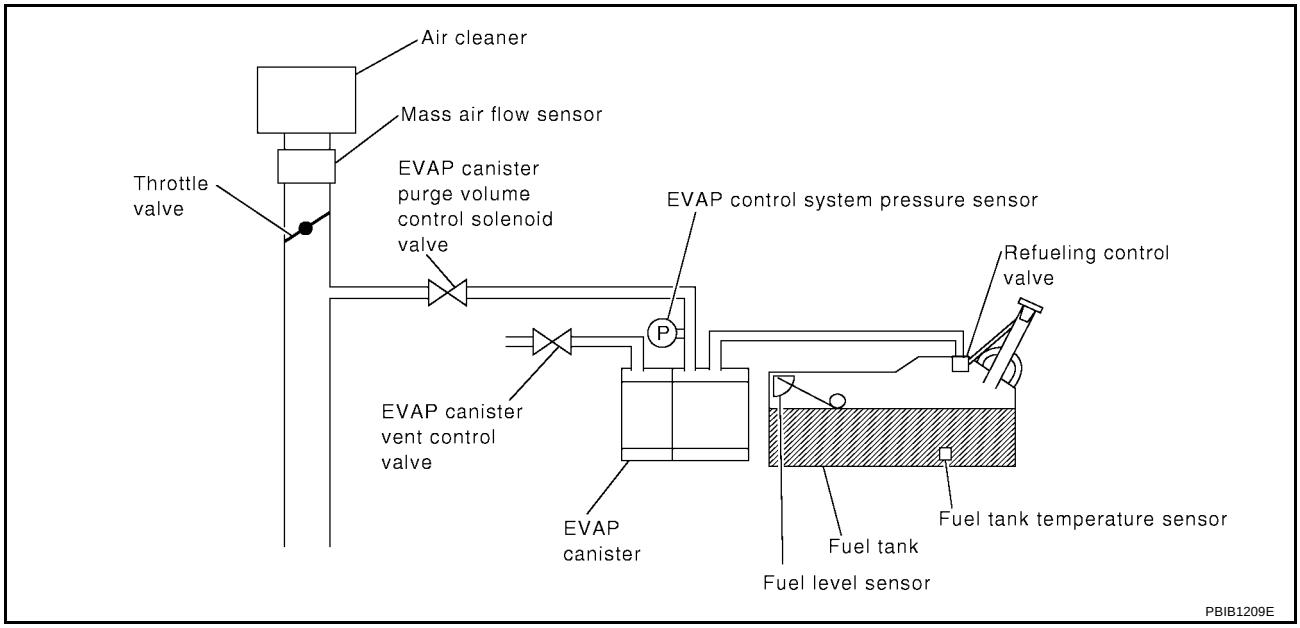

DTC No.	Trouble diagnosis name	DTC detecting condition	Possible cause
P0455 0455	EVAP control system gross leak detected	EVAP control system has a very large leak such as fuel filler cap fell off, EVAP control system does not operate properly.	● Fuel filler cap remains open or fails to close. ● Incorrect fuel tank vacuum relief valve ● Incorrect fuel filler cap used ● Foreign matter caught in fuel filler cap. ● Leak is in line between intake manifold and EVAP canister purge volume control solenoid valve. ● Foreign matter caught in EVAP canister vent control valve. ● EVAP canister or fuel tank leaks ● EVAP purge line (pipe and rubber tube) leaks ● EVAP purge line rubber tube bent. ● Loose or disconnected rubber tube ● EVAP canister vent control valve and the circuit ● EVAP canister purge volume control solenoid valve and the circuit ● Fuel tank temperature sensor ● O-ring of EVAP canister vent control valve is missing or damaged. ● EVAP control system pressure sensor ● Refueling control valve ● ORVR system leaks

CAUTION:

- **Use only a genuine NISSAN fuel filler cap as a replacement. If an incorrect fuel filler cap is used, the MIL may come on.**
- **If the fuel filler cap is not tightened properly, the MIL may come on.**
- **Use only a genuine NISSAN rubber tube as a replacement.**

DTC Confirmation Procedure

UBS00B8T

CAUTION:
Never remove fuel filler cap during the DTC Confirmation Procedure.

NOTE:
- **Make sure that EVAP hose are connected to EVAP canister purge volume control solenoid valve properly.**
- If DTC Confirmation Procedure has been previously conducted, always turn ignition switch OFF and wait at least 10 seconds before conducting the next test.

TESTING CONDITION:
- **Perform "DTC WORK SUPPORT" when the fuel level is between 1/4 to 3/4 full, and vehicle is placed on flat level surface.**
- **Open engine hood before conducting the following procedure.**

WITH CONSULT-II

1. Tighten fuel filler cap securely until ratcheting sound is heard.
2. Turn ignition switch ON.
3. Turn ignition switch OFF and wait at least 10 seconds.
4. Turn ignition switch ON and select "DATA MONITOR" mode with CONSULT-II.
5. Make sure that the following conditions are met.
   COOLAN TEMP/S: 0 - 70°C (32 - 158°F)
   INT/A TEMP SE: 0 - 60°C (32 - 140°F)
6. Select "EVAP SML LEAK P0442/P1442" of "EVAPORATIVE SYSTEM" in "DTC WORK SUPPORT" mode with CONSULT-II.
   Follow the instruction displayed.

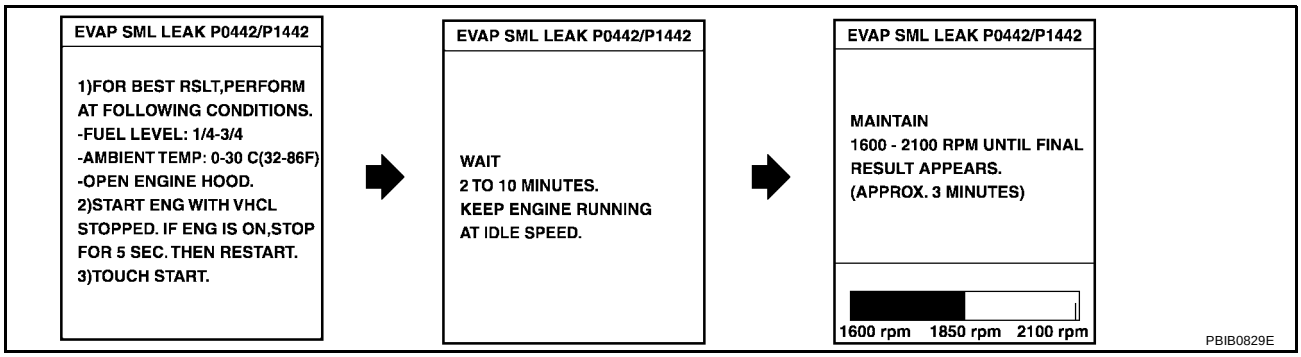

NOTE:
If the engine speed cannot be maintained within the range displayed on the CONSULT-II screen, go to EC-74, "Basic Inspection" .

7. Make sure that OK is displayed.
   If NG is displayed, select "SELF-DIAG RESULTS" mode with CONSULT-II and make sure that "EVAP GROSS LEAK [P0455]" is displayed. If it is displayed, refer to EC-350, "Diagnostic Procedure" .
   If P0442 is displayed, perform Diagnostic Procedure for DTC P0442, EC-311 .

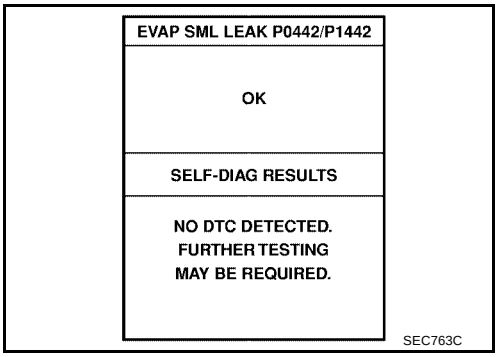

WITH GST

NOTE:
Be sure to read the explanation of Driving Pattern on EC-61 before driving vehicle.

1. Start engine.
2. Drive vehicle according to EC-61, "Driving Pattern" .
3. Stop vehicle.
4. Turn ignition switch OFF and wait at least 10 seconds.
5. Select Service $07 with GST.
   - If P0455 is displayed on the screen, go to EC-350, "Diagnostic Procedure" .
   - If P0442 is displayed on the screen, go to Diagnostic Procedure, for DTC P0442, EC-311 .
   - If P0441 is displayed on the screen, go to Diagnostic Procedure for DTC P0441, EC-305 .

Diagnostic Procedure

UBS00B8U

1. CHECK FUEL FILLER CAP DESIGN

1. Turn ignition switch OFF.
2. Check for genuine NISSAN fuel filler cap design.

OK or NG

OK >> GO TO 2.
NG >> Replace with genuine NISSAN fuel filler cap.

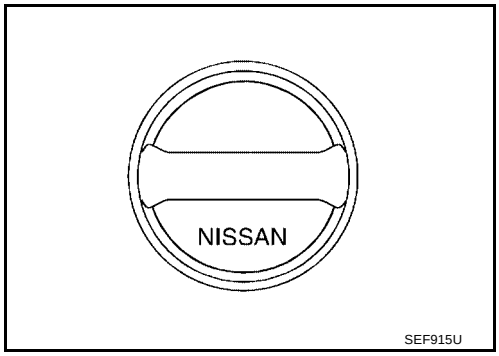

2. CHECK FUEL FILLER CAP INSTALLATION

Check that the cap is tightened properly by rotating the cap clockwise.

OK or NG

OK >> GO TO 3.
NG >> 1. Open fuel filler cap, then clean cap and fuel filler neck threads using air blower.
2. Retighten until ratcheting sound is heard.

3. CHECK FUEL FILLER CAP FUNCTION

Check for air releasing sound while opening the fuel filler cap.

OK or NG

OK >> GO TO 5.
NG >> GO TO 4.

4. CHECK FUEL TANK VACUUM RELIEF VALVE

1. Wipe clean valve housing.
2. Check valve opening pressure and vacuum.

Pressure: 15.3 - 20.0 kPa
(0.156 - 0.204 kg/cm^2 , 2.22 - 2.90 psi)
Vacuum: –6.0 to –3.3 kPa
(–0.061 to –0.034 kg/cm^2 , –0.87 to –0.48 psi)

CAUTION:
Use only a genuine fuel filler cap as a replacement. If an incorrect fuel filler cap is used, the MIL may come on.

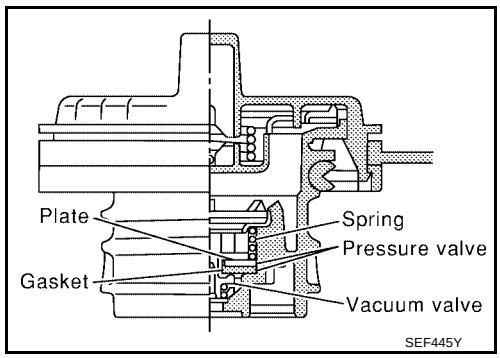

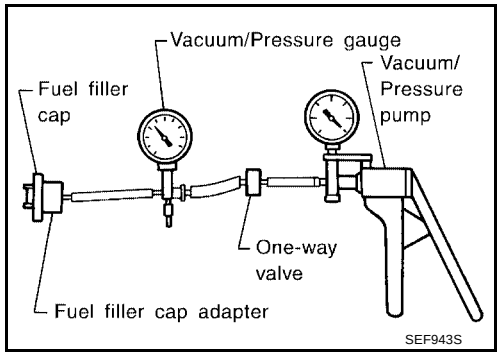

OK or NG
OK >> GO TO 5.
NG >> Replace fuel filler cap with a genuine one.

5. CHECK EVAP PURGE LINE

Check EVAP purge line (pipe, rubber tube, fuel tank and EVAP canister) for cracks, improper connection or disconnection.
Refer to EC-36, "EVAPORATIVE EMISSION SYSTEM" .

OK or NG
OK >> GO TO 6.
NG >> Repair or reconnect the hose.

6. CLEAN EVAP PURGE LINE

Clean EVAP purge line (pipe and rubber tube) using air blower.

>> GO TO 7.

7. CHECK EVAP CANISTER VENT CONTROL VALVE

Check the following.

- EVAP canister vent control is installed properly.
  Refer to EC-40, "EVAP CANISTER VENT CONTROL VALVE"
- EVAP canister vent control valve.
  Refer to EC-330, "Component Inspection"

OK or NG
OK >> GO TO 8.
NG >> Repair or replace EVAP canister vent control valve and O-ring.

8. INSTALL THE PRESSURE PUMP

To locate the EVAP leak, install EVAP service port adapter and pressure pump to EVAP service port securely.

NOTE:
Improper installation of the EVAP service port adapter to the EVAP service port may cause leaking.

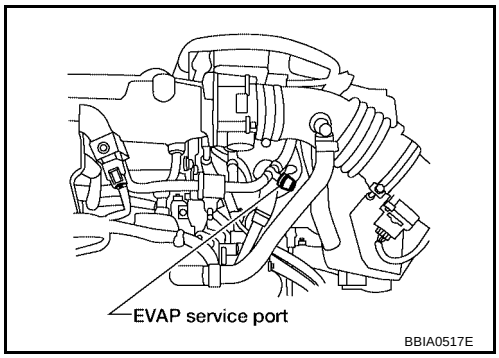

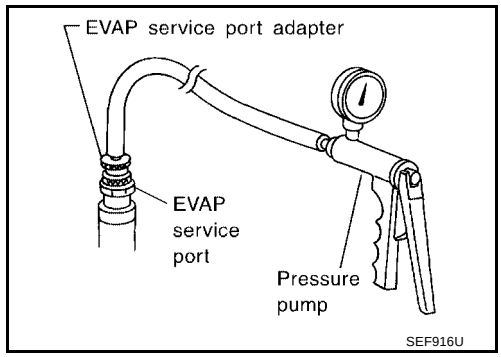

Models with CONSULT-II>>GO TO 9.
Models without CONSULT-II>>GO TO 10.

9. CHECK FOR EVAP LEAK

With CONSULT-II

1. Turn ignition switch ON.
2. Select “EVAP SYSTEM CLOSE” of “WORK SUPPORT” mode with CONSULT-II.
3. Touch “START” and apply pressure into the EVAP line until the pressure indicator reaches the middle of the bar graph.

   NOTE:
   - **Never use compressed air or a high pressure pump.**
   - **Do not exceed 4.12 kPa (0.042 kg/cm^2 , 0.6 psi) of pressure in the system.**

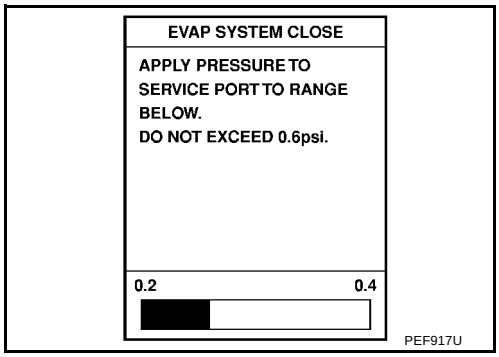

4. Using EVAP leak detector, locate the EVAP leak. For the leak detector, refer to the instruction manual for more details.
   Refer to EC-37, "EVAPORATIVE EMISSION LINE DRAWING" .

OK or NG

OK >> GO TO 11.
NG >> Repair or replace.

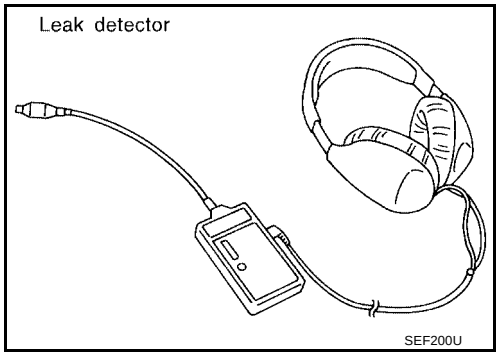

10. CHECK FOR EVAP LEAK

Without CONSULT-II

1. Turn ignition switch OFF.
2. Apply 12 volts DC to EVAP canister vent control valve. The valve will close. (Continue to apply 12 volts until the end of test.)
3. Pressurize the EVAP line using pressure pump with 1.3 to 2.7 kPa (10 to 20 mmHg, 0.39 to 0.79 inHg), then remove pump and EVAP service port adapter.

   NOTE:
   - **Never use compressed air or a high pressure pump.**
   - **Do not exceed 4.12 kPa (0.042 kg/cm^2 , 0.6 psi) of pressure in the system.**

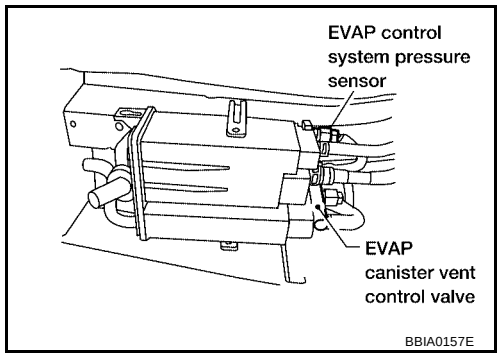

4. Using EVAP leak detector, locate the EVAP leak. For the leak detector, refer to the instruction manual for more details. Refer to EC-37, "EVAPORATIVE EMISSION LINE DRAWING" .

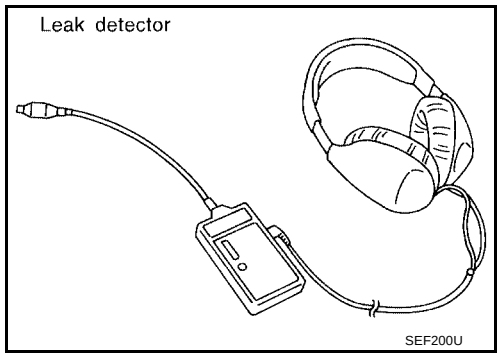

OK or NG

OK >> GO TO 12.
NG >> Repair or replace.

11. CHECK EVAP CANISTER PURGE VOLUME CONTROL SOLENOID VALVE OPERATION

With CONSULT-II

1. Disconnect vacuum hose to EVAP canister purge volume control solenoid valve at EVAP service port.
2. Start engine.
3. Perform “PURG VOL CONT/V” in “ACTIVE TEST” mode.
4. Touch “Qu” on CONSULT-II screen to increase “PURG VOL CONT/V” opening to 100%.
5. Check vacuum hose for vacuum when revving engine up to 2,000 rpm.

   Vacuum should exist.

OK or NG

OK >> GO TO 14.
NG >> GO TO 13.

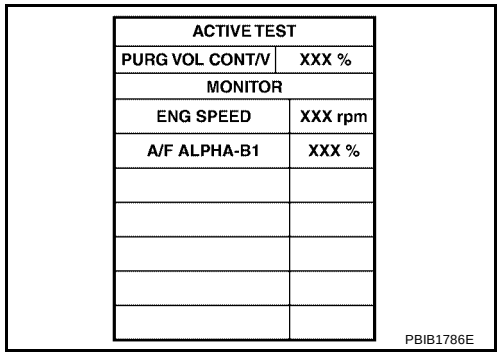

ACTIVE TEST	
PURG VOL CONT/V	XXX %
MONITOR	
ENG SPEED	XXX rpm
A/F ALPHA-B1	XXX %

PBIB1786E

12. CHECK EVAP CANISTER PURGE VOLUME CONTROL SOLENOID VALVE OPERATION

Without CONSULT-II

1. Start engine and warm it up to normal operating temperature.
2. Stop engine.
3. Disconnect vacuum hose to EVAP canister purge volume control solenoid valve at EVAP service port.
4. Start engine and let it idle for at least 80 seconds.
5. Check vacuum hose for vacuum when revving engine up to 2,000 rpm.

Vacuum should exist.

OK or NG

OK >> GO TO 15.
NG >> GO TO 13.

13. CHECK VACUUM HOSE

Check vacuum hoses for clogging or disconnection. Refer to EC-37, "EVAPORATIVE EMISSION LINE DRAWING" .

OK or NG

OK (With CONSULT-II) >>GO TO 14.
OK (Without CONSULT-II) >>GO TO 15.
NG >> Repair or reconnect the hose.

14. CHECK EVAP CANISTER PURGE VOLUME CONTROL SOLENOID VALVE

With CONSULT-II

1. Start engine.
2. Perform “PURG VOL CONT/V” in “ACTIVE TEST” mode with CONSULT-II. Check that engine speed varies according to the valve opening.

OK or NG

OK >> GO TO 16.
NG >> GO TO 15.

ACTIVE TEST	
PURG VOL CONT/V	XXX %
MONITOR	
ENG SPEED	XXX rpm
A/F ALPHA-B1	XXX %

PBIB1786E

15. CHECK EVAP CANISTER PURGE VOLUME CONTROL SOLENOID VALVE

Refer to EC-323, "Component Inspection" .

OK or NG

OK >> GO TO 16.
NG >> Replace EVAP canister purge volume control solenoid valve.

16. CHECK FUEL TANK TEMPERATURE SENSOR

Refer to EC-264, "Component Inspection" .

OK or NG

OK >> GO TO 17.
NG >> Replace fuel level sensor unit.

17. CHECK EVAP CONTROL SYSTEM PRESSURE SENSOR

Refer to EC-334, "Component Inspection" .

OK or NG

OK >> GO TO 18.
NG >> Replace EVAP control system pressure sensor.

18. CHECK EVAP/ORVR VAPOR LINE

Check refueling EVAP/ORVR line between EVAP canister and fuel tank for clogging, kink, looseness and improper connection. For location, refer to EC-43, "ON BOARD REFUELING VAPOR RECOVERY (ORVR)" .

OK or NG

OK >> GO TO 19.
>> Repair or replace hoses and tubes.

19. CHECK SIGNAL LINE AND RECIRCULATION LINE

Check signal line and recirculation line between filler neck tube and fuel tank for clogging, kink, cracks, looseness and improper connection.

OK or NG

OK >> GO TO 20.
>> Repair or replace hoses, tubes or filler neck tube.

20. CHECK REFUELING CONTROL VALVE

Refer to EC-48, "REFUELING CONTROL VALVE" .

OK or NG

OK >> GO TO 21.
>> Replace refueling control valve with fuel tank.

21. CHECK INTERMITTENT INCIDENT

Refer to EC-164, "TROUBLE DIAGNOSIS FOR INTERMITTENT INCIDENT" .

>> **INSPECTION END**

DTC P0456 EVAP CONTROL SYSTEM

PFP:14950

On Board Diagnosis Logic

UBS00B8V

This diagnosis detects very small leaks in the EVAP line between fuel tank and EVAP canister purge volume control solenoid valve, using the intake manifold vacuum in the same way as conventional EVAP small leak diagnosis.
If ECM judges a leak which corresponds to a very small leak, the very small leak P0456 will be detected.
If ECM judges a leak equivalent to a small leak, EVAP small leak P0442 will be detected.
If ECM judges there are no leaks, the diagnosis will be OK.

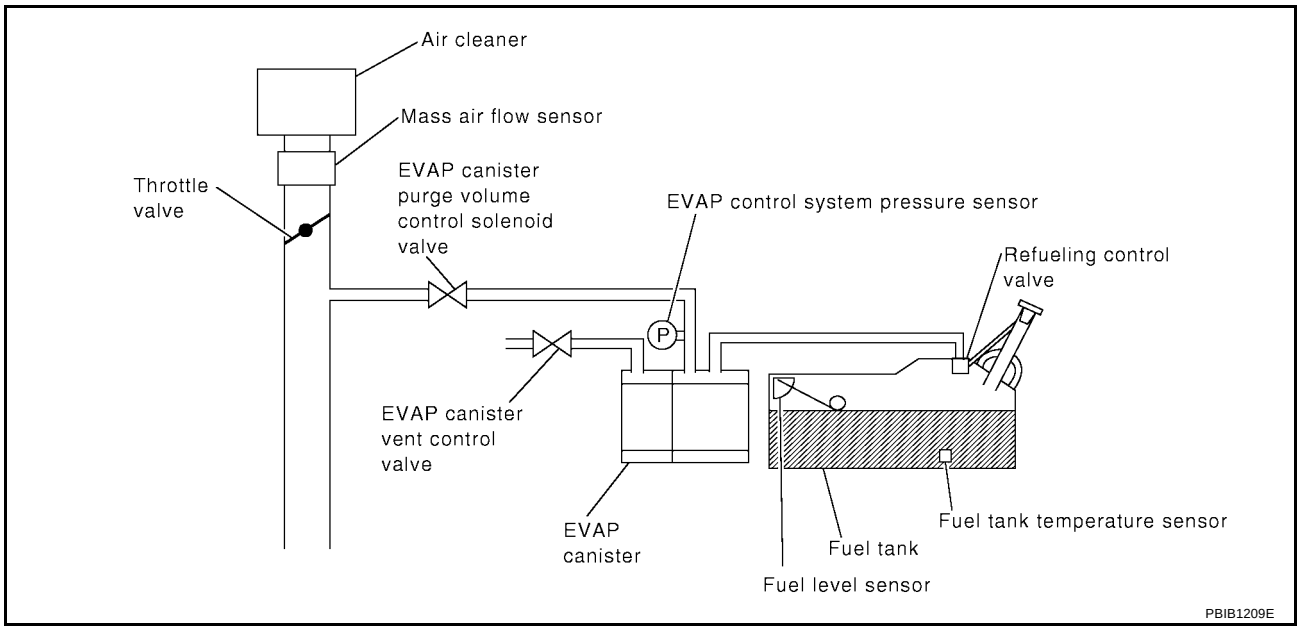

DTC No.	Trouble diagnosis name	DTC detecting condition	Possible cause
P0456 0456	Evaporative emission control system very small leak (negative pressure check)	● EVAP system has a very small leak. ● EVAP system does not operate properly.	● Incorrect fuel tank vacuum relief valve ● Incorrect fuel filler cap used ● Fuel filler cap remains open or fails to close. ● Foreign matter caught in fuel filler cap. ● Leak is in line between intake manifold and EVAP canister purge volume control solenoid valve. ● Foreign matter caught in EVAP canister vent control valve. ● EVAP canister or fuel tank leaks ● EVAP purge line (pipe and rubber tube) leaks ● EVAP purge line rubber tube bent ● Loose or disconnected rubber tube ● EVAP canister vent control valve and the circuit ● EVAP canister purge volume control solenoid valve and the circuit ● Fuel tank temperature sensor ● O-ring of EVAP canister vent control valve is missing or damaged ● EVAP canister is saturated with water ● EVAP control system pressure sensor ● Refueling control valve ● ORVR system leaks ● Fuel level sensor and the circuit ● Foreign matter caught in EVAP canister purge volume control solenoid valve

CAUTION:

- **Use only a genuine NISSAN fuel filler cap as a replacement. If an incorrect fuel filler cap is used, the MIL may come on.**
- **If the fuel filler cap is not tightened properly, the MIL may come on.**
- **Use only a genuine NISSAN rubber tube as a replacement.**

DTC Confirmation Procedure

UBS00B8W

NOTE:

- **If DTC P0456 is displayed with P0442, perform first trouble diagnosis for DTC P0456.**
- **After repair, make sure that the hoses and clips are installed properly.**
- If DTC Confirmation Procedure has been previously conducted, always turn ignition switch OFF and wait at least 10 seconds before conducting the next test.

TESTING CONDITION:

- **Open engine hood before conducting following procedure.**
- **If any of following conditions are met just before the DTC confirmation procedure, leave the vehicle for more than 1 hour.**
  - **Fuel filler cap is removed.**
  - **Refilled or drained the fuel.**
  - **EVAP component parts is/are removed.**
- **Before performing the following procedure, confirm that battery voltage is more than 11V at idle.**

WITH CONSULT-II

1. Turn ignition switch ON and select “DATA MONITOR” mode with CONSULT-II.
2. Make sure the following conditions are met.
   FUEL LEVEL SE: 0.25 - 1.4V
   COOLAN TEMP/S: 0 - 32°C (32 - 90°F)
   FUEL T/TMP SE: 0 - 35°C (32 - 95°F)
   INT A/TEMP SE: More than 0°C (32°F)
   If NG, turn ignition switch OFF and leave the vehicle in a cool place (soak the vehicle) or refilling/draining fuel until the output voltage condition of the “FUEL LEVEL SE” meets within the range above and leave the vehicle for more than 1 hour. Then start from step 1).
3. Turn ignition switch OFF and wait at least 10 seconds.
4. Turn ignition switch ON.
5. Select “EVAP V/S LEAK P0456/P1456” of “EVAPORATIVE SYSTEM” in “DTC WORK SUPPORT” mode with CONSULT-II.
   Follow the instruction displayed.

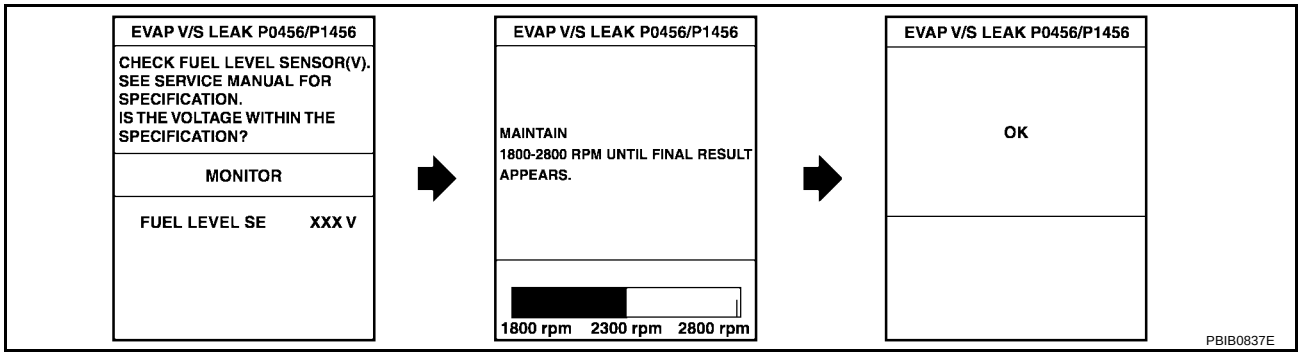

6. Make sure that OK is displayed.
   If NG is displayed, refer to EC-359, "Diagnostic Procedure" .

   NOTE:
   - **If the engine speed cannot be maintained within the range displayed on CONSULT-II screen, go to EC-74, "Basic Inspection" .**
   - **Make sure that EVAP hoses are connected to EVAP canister purge volume control solenoid valve properly.**

Overall Function Check

UBS00B8X

WITH GST

Use this procedure to check the overall function of the EVAP very small leak function. During this check, a DTC might not be confirmed.

CAUTION:

- **Never use compressed air, doing so may damage the EVAP system.**
- **Do not start engine.**
- **Do not exceeded 4.12 kPa (0.042 kg/cm^2 , 0.6 psi).**

1. Attach the EVAP service port adapter securely to the EVAP service port.

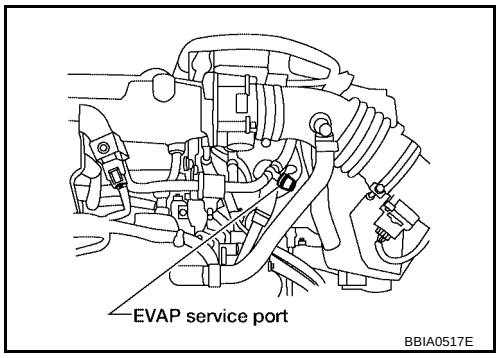

2. Set the pressure pump and a hose.
3. Also set a vacuum gauge via 3-way connector and a hose.
4. Turn ignition switch ON.
5. Connect GST and select “Service $08”.
6. Using Service $08 control the EVAP canister vent control valve (close).
7. Apply pressure and make sure the following conditions are satisfied.
   Pressure to be applied: 2.7 kPa (20 mmHg, 0.79 inHg)
   Time to be waited after the pressure drawn in to the EVAP system and the pressure to be dropped: 60 seconds and the pressure should not be dropped more than 0.4 kPa (3 mmHg, 0.12 inHg).
   If NG, go to EC-359, "Diagnostic Procedure" .
   If OK, go to next step.

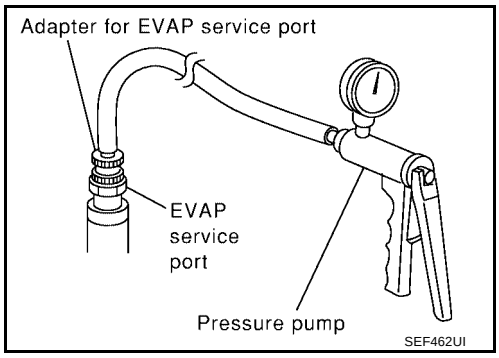

8. Disconnect GST.
9. Start engine and warm it up to normal operating temperature.
10. Turn ignition switch OFF and wait at least 10 seconds.
11. Restart engine and let it idle for 90 seconds.
12. Keep engine speed at 2,000 rpm for 30 seconds.
13. Turn ignition switch OFF.

    NOTE:
    For more information, refer to GST instruction manual.

Diagnostic Procedure

UBS00B8Y

1. CHECK FUEL FILLER CAP DESIGN

1. Turn ignition switch OFF.
2. Check for genuine NISSAN fuel filler cap design.

OK or NG

OK >> GO TO 2.
NG >> Replace with genuine NISSAN fuel filler cap.

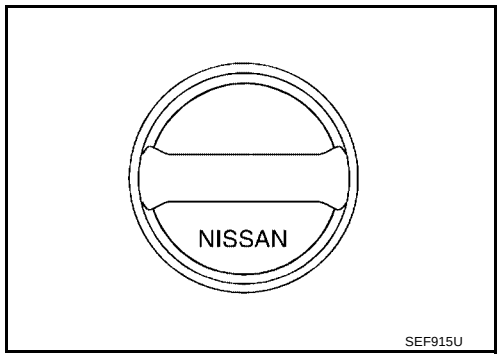

2. CHECK FUEL FILLER CAP INSTALLATION

Check that the cap is tightened properly by rotating the cap clockwise.

OK or NG

OK >> GO TO 3.
NG >> 1. Open fuel filler cap, then clean cap and fuel filler neck threads using air blower.
2. Retighten until ratcheting sound is heard.

3. CHECK FUEL FILLER CAP FUNCTION

Check for air releasing sound while opening the fuel filler cap.

OK or NG

OK >> GO TO 5.
NG >> GO TO 4.

4. CHECK FUEL TANK VACUUM RELIEF VALVE

Refer to EC-39, "FUEL TANK VACUUM RELIEF VALVE (BUILT INTO FUEL FULLER CAP)" .

OK or NG

OK >> GO TO 5.
NG >> Replace fuel filler cap with a genuine one.

5. INSTALL THE PRESSURE PUMP

To locate the EVAP leak, install EVAP service port adapter and pressure pump to EVAP service port securely.

NOTE:
Improper installation of the EVAP service port adapter to the EVAP service port may cause leaking.

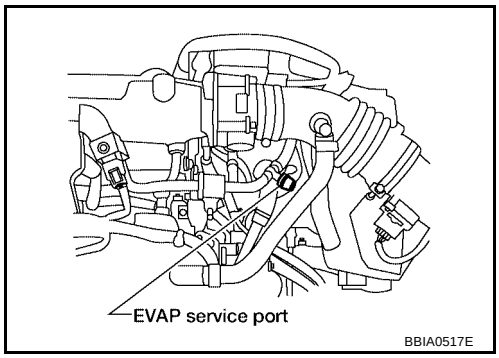

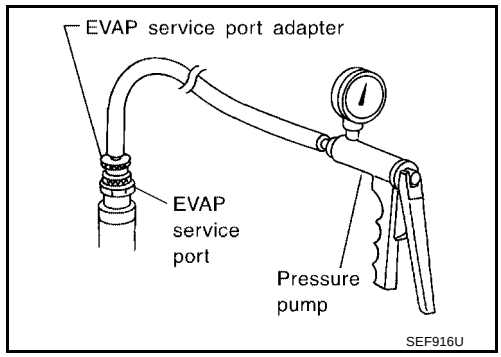

Models with CONSULT-II>>GO TO 6.
Models without CONSULT-II>>GO TO 7.

6. CHECK FOR EVAP LEAK

With CONSULT-II

1. Turn ignition switch ON.
2. Select “EVAP SYSTEM CLOSE” of “WORK SUPPORT” mode with CONSULT-II.
3. Touch “START” and apply pressure into the EVAP line until the pressure indicator reaches the middle of the bar graph.

   NOTE:
   - **Never use compressed air or a high pressure pump.**
   - **Do not exceed 4.12 kPa (0.042 kg/cm^2 , 0.6 psi) of pressure in the system.**

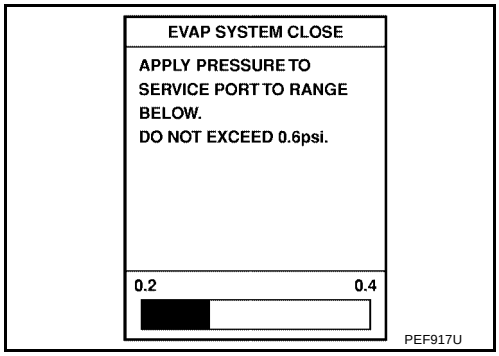

4. Using EVAP leak detector, locate the EVAP leak. For the leak detector, refer to the instruction manual for more details.
   Refer to EC-37, "EVAPORATIVE EMISSION LINE DRAWING" .

OK or NG

OK >> GO TO 8.
NG >> Repair or replace.

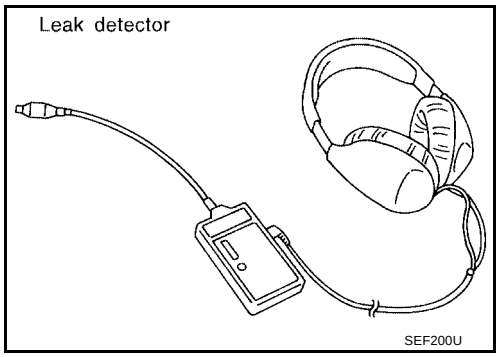

7. CHECK FOR EVAP LEAK

Without CONSULT-II

1. Turn ignition switch OFF.
2. Apply 12 volts DC to EVAP canister vent control valve. The valve will close. (Continue to apply 12 volts until the end of test.)
3. Pressurize the EVAP line using pressure pump with 1.3 to 2.7 kPa (10 to 20 mmHg, 0.39 to 0.79 inHg), then remove pump and EVAP service port adapter.

   NOTE:
   - **Never use compressed air or a high pressure pump.**
   - **Do not exceed 4.12 kPa (0.042 kg/cm^2 , 0.6 psi) of pressure in the system.**

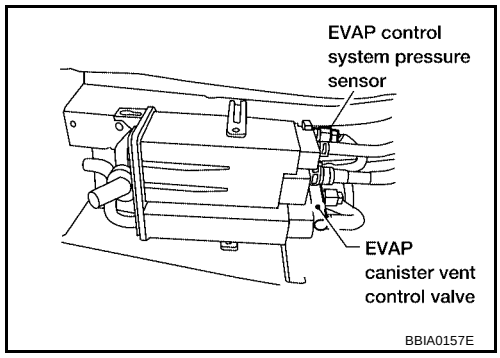

4. Using EVAP leak detector, locate the EVAP leak. For the leak detector, refer to the instruction manual for more details. Refer to EC-37, "EVAPORATIVE EMISSION LINE DRAWING" .

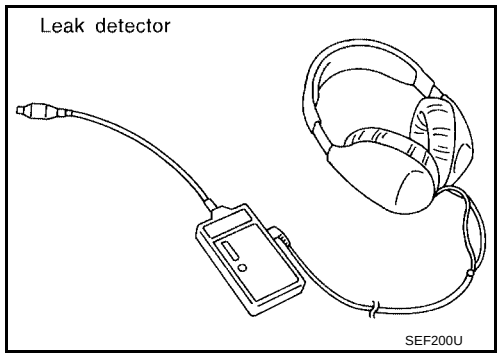

OK or NG

OK >> GO TO 8.
NG >> Repair or replace.

8. CHECK EVAP CANISTER VENT CONTROL VALVE

Check the following.

- EVAP canister vent control valve is installed properly. Refer to EC-40, "EVAP CANISTER VENT CONTROL VALVE"
- EVAP canister vent control valve. Refer to EC-330, "Component Inspection"

OK or NG

OK >> GO TO 9.
NG >> Repair or replace EVAP canister vent control valve and O-ring.

9. CHECK IF EVAP CANISTER SATURATED WITH WATER

1. Remove EVAP canister with EVAP canister vent control valve and EVAP control system pressure sensor attached.
2. Does water drain from the EVAP canister?

Yes or No

Yes >> GO TO 10.
No (With CONSULT-II)>>GO TO 12.
No (Without CONSULT-II)>>GO TO 13.

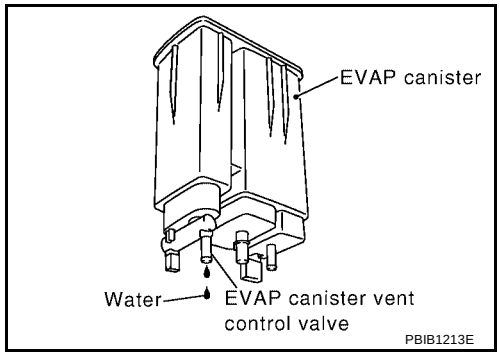

10. CHECK EVAP CANISTER

Weigh the EVAP canister with the EVAP canister vent control valve and EVAP control system pressure sensor attached.

The weight should be less than 1.9 kg (4.2 lb).

OK or NG

OK (With CONSULT-II)>>GO TO 12.
OK (Without CONSULT-II)>>GO TO 13.
NG >> GO TO 11.

11. DETECT MALFUNCTIONING PART

Check the following.

- EVAP canister for damage
- EVAP hose between EVAP canister and vehicle frame for clogging or poor connection

>> Repair hose or replace EVAP canister.

12. CHECK EVAP CANISTER PURGE VOLUME CONTROL SOLENOID VALVE OPERATION

With CONSULT-II

1. Disconnect vacuum hose to EVAP canister purge volume control solenoid valve at EVAP service port.
2. Start engine.
3. Perform “PURG VOL CONT/V” in “ACTIVE TEST” mode.
4. Touch “Qu” on CONSULT-II screen to increase “PURG VOL CONT/V” opening to 100%.
5. Check vacuum hose for vacuum when revving engine up to 2,000 rpm.

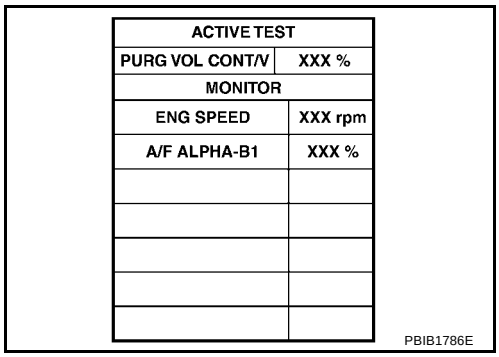

ACTIVE TEST	
PURG VOL CONT/V	XXX %
MONITOR	
ENG SPEED	XXX rpm
A/F ALPHA-B1	XXX %

PBIB1786E

OK or NG

OK >> GO TO 15.
NG >> GO TO 14.

13. CHECK EVAP CANISTER PURGE VOLUME CONTROL SOLENOID VALVE OPERATION

Without CONSULT-II

1. Start engine and warm it up to normal operating temperature.
2. Stop engine.
3. Disconnect vacuum hose to EVAP canister purge volume control solenoid valve at EVAP service port.
4. Start engine and let it idle for at least 80 seconds.
5. Check vacuum hose for vacuum when revving engine up to 2,000 rpm.

Vacuum should exist.

OK or NG

OK >> GO TO 16.
NG >> GO TO 14.

14. CHECK VACUUM HOSE

Check vacuum hoses for clogging or disconnection. Refer to EC-37, "EVAPORATIVE EMISSION LINE DRAWING" .

OK or NG

OK >> GO TO 15.
NG >> Repair or reconnect the hose.

15. CHECK EVAP CANISTER PURGE VOLUME CONTROL SOLENOID VALVE

Refer to EC-323, "Component Inspection" .

OK or NG

OK >> GO TO 16.
NG >> Replace EVAP canister purge volume control solenoid valve.

16. CHECK FUEL TANK TEMPERATURE SENSOR

Refer to EC-260, "Component Inspection" .

OK or NG

OK >> GO TO 17.
NG >> Replace fuel level sensor unit.

17. CHECK EVAP CONTROL SYSTEM PRESSURE SENSOR

Refer to EC-340, "Component Inspection" .

OK or NG

OK >> GO TO 18.
NG >> Replace EVAP control system pressure sensor.

18. CHECK EVAP PURGE LINE

Check EVAP purge line (pipe, rubber tube, fuel tank and EVAP canister) for cracks or improper connection. Refer to EC-37, "EVAPORATIVE EMISSION LINE DRAWING" .

OK or NG

OK >> GO TO 19.
NG >> Repair or reconnect the hose.

19. CLEAN EVAP PURGE LINE

Clean EVAP purge line (pipe and rubber tube) using air blower.

>> GO TO 20.

20. CHECK EVAP/ORVR LINE

Check EVAP/ORVR line between EVAP canister and fuel tank for clogging, kink, looseness and improper connection. For location, refer to EC-43, "ON BOARD REFUELING VAPOR RECOVERY (ORVR)" .

OK or NG

OK >> GO TO 22.
NG >> Repair or replace hoses and tubes.

21. CHECK SIGNAL LINE AND RECIRCULATION LINE

Check signal line recirculation line between filler neck tube and fuel tank for clogging, kink, cracks, looseness and improper connection.

OK or NG

OK >> GO TO 22.
NG >> Repair or replace hose, tube or filler neck tube.

22. CHECK REFUELING EVAP VAPOR CUT VALVE

Refer to EC-47, "Component Inspection" .

OK or NG

OK >> GO TO 23.
NG >> Replace refueling EVAP vapor cut valve with fuel tank.

23. CHECK FUEL LEVEL SENSOR

Refer to DI-26, "FUEL LEVEL SENSOR UNIT CHECK" .

OK or NG

OK >> GO TO 24.
NG >> Replace fuel level sensor unit.

24. CHECK INTERMITTENT INCIDENT

Refer to EC-164, "TROUBLE DIAGNOSIS FOR INTERMITTENT INCIDENT" .

>> **INSPECTION END**

DTC P0460 FUEL LEVEL SENSOR

PFP:25060

Component Description

UBS00B8Z

The fuel level sensor is mounted in the fuel level sensor unit. The sensor detects a fuel level in the fuel tank and transmits a signal to the combination meter. The combination meter sends the fuel level sensor signal to the ECM through CAN communication line.
It consists of two parts, one is mechanical float and the other is variable resistor. Fuel level sensor output voltage changes depending on the movement of the fuel mechanical float.

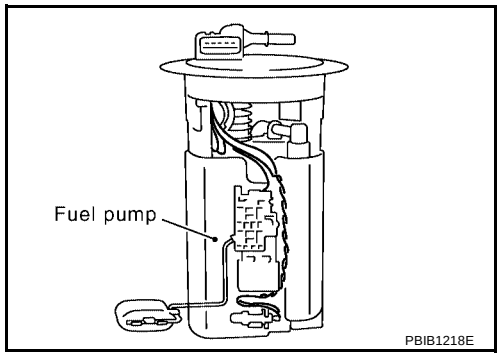

On Board Diagnostic Logic

UBS00B90

NOTE:
If DTC P0460 is displayed with DTC U1000, U1001, first perform the trouble diagnosis for DTC U1000, U1001. Refer to EC-173, "DTC U1000, U1001 CAN COMMUNICATION LINE" .
When the vehicle is parked, naturally the fuel level in the fuel tank is stable. It means that output signal of the fuel level sensor does not change. If ECM senses sloshing signal from the sensor, fuel level sensor malfunction is detected.

DTC No.	Trouble diagnosis name	DTC detecting condition	Possible cause
P0460 0460	Fuel level sensor circuit noise	Even though the vehicle is parked, a signal being varied is sent from the fuel level sensor to ECM.	● Harness or connectors (The CAN communication line is open or shorted) ● Harness or connectors (The sensor circuit is open or shorted) ● Combination meter ● Fuel level sensor

DTC Confirmation Procedure

UBS00B91

NOTE:
If DTC Confirmation Procedure has been previously conducted, always turn ignition switch OFF and wait at least 10 seconds before conducting the next test.

WITH CONSULT-II

1. Turn ignition switch ON.
2. Select “DATA MONITOR” mode with CONSULT-II.
3. Start engine and wait maximum of 2 consecutive minutes.
4. If 1st trip DTC is detected, go to EC-366, "Diagnostic Procedure" .

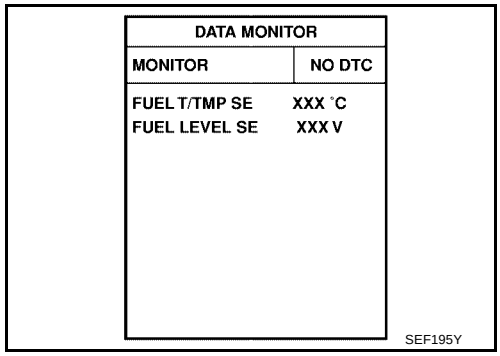

WITH GST

Follow the procedure “WITH CONSULT-II” above.

Diagnostic Procedure

UBS00B92

1. CHECK COMBINATION METER

Refer to DI-4 .

OK or NG

OK >> GO TO 2.
NG >> GO TO DI-4 .

2. CHECK INTERMITTENT INCIDENT

Refer to EC-164, "TROUBLE DIAGNOSIS FOR INTERMITTENT INCIDENT" .

>> **INSPECTION END**

Removal and Installation

UBS00B93

FUEL LEVEL SENSOR

Refer to DI-26, "FUEL LEVEL SENSOR UNIT CHECK" .

DTC P0461 FUEL LEVEL SENSOR

PFP:25060

Component Description

UBS00B94

The fuel level sensor is mounted in the fuel level sensor unit. The sensor detects a fuel level in the fuel tank and transmits a signal to the combination meter. The combination meter sends the fuel level sensor signal to the ECM through CAN communication line.
It consists of two parts, one is mechanical float and the other is variable resistor. Fuel level sensor output voltage changes depending on the movement of the fuel mechanical float.

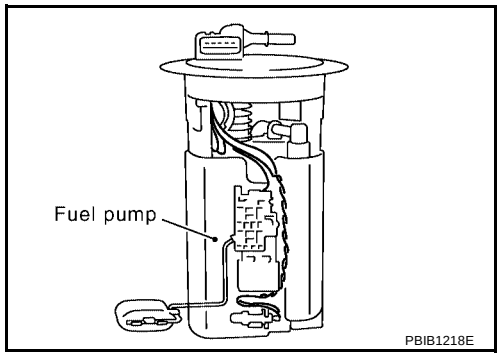

On Board Diagnostic Logic

UBS00B95

NOTE:
If DTC P0461 is displayed with DTC U1000, U1001, first perform the trouble diagnosis for DTC U1000, U1001. Refer to EC-173, "DTC U1000, U1001 CAN COMMUNICATION LINE" .
Driving long distances naturally affect fuel gauge level.
This diagnosis detects the fuel gauge malfunction of the gauge not moving even after a long distance has been driven.

DTC No.	Trouble diagnosis name	DTC detecting condition	Possible cause
P0461 0461	Fuel level sensor circuit range/performance	The output signal of the fuel level sensor does not change within the specified range even though the vehicle has been driven a long distance.	● Harness or connectors (The CAN communication line is open or shorted) ● Harness or connectors (The sensor circuit is open or shorted) ● Combination meter ● Fuel level sensor

Overall Function Check

UBS00B96

Use this procedure to check the overall function of the fuel level sensor function. During this check, a 1st trip DTC might not be confirmed.

WARNING:
When performing following procedure, be sure to observe the handling of the fuel. Refer to FL-2, "FUEL SYSTEM" .
TESTING CONDITION:
Before starting overall function check, preparation of draining fuel and refilling fuel is required.

WITH CONSULT-II

NOTE:
Start from step 10, if it is possible to confirm that the fuel cannot be drained by 30 ℓ (7-7/8 US gal, 6-5/8 Imp gal) in advance.

1. Prepare a fuel container and a spare hose.
2. Release fuel pressure from fuel line, refer to EC-94, "FUEL PRESSURE RELEASE" .
3. Remove the fuel feed hose on the fuel level sensor unit.
4. Connect a spare fuel hose where the fuel feed hose was removed.
5. Turn ignition switch OFF and wait at least 10 seconds then turn ON.

6. Select “FUEL LEVEL SE” in “DATA MONITOR” mode with CONSULT-II.
7. Check “FUEL LEVEL SE” output voltage and note it.
8. Select “FUEL PUMP” in “ACTIVE TEST” mode with CONSULT-II.
9. Touch “ON” and drain fuel approximately 30 ℓ (7-7/8 US gal, 6-5/8 Imp gal) and stop it.
10. Check “FUEL LEVEL SE” output voltage and note it.
11. Fill fuel into the fuel tank for 30 ℓ (7-7/8 US gal, 6-5/8 Imp gal).
12. Check “FUEL LEVEL SE” output voltage and note it.

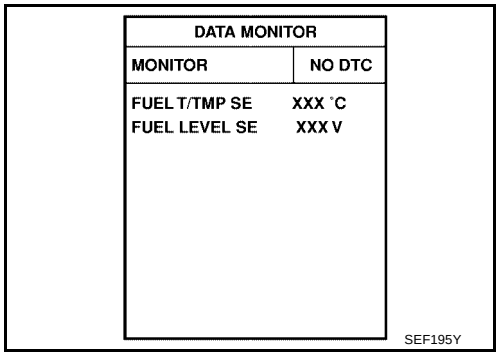

13. Confirm whether the voltage changes more than 0.03V during step 7 to 10 and 10 to 12.
If NG, go to EC-368, "Diagnostic Procedure" .

WITH GST

NOTE:
Start from step 8, if it is possible to confirm that the fuel cannot be drained by 30 ℓ (7-7/8 US gal, 6-5/8 Imp gal) in advance.

1. Prepare a fuel container and a spare hose.
2. Release fuel pressure from fuel line, refer to EC-94, "FUEL PRESSURE RELEASE" .
3. Remove the fuel feed hose on the fuel level sensor unit.
4. Connect a spare fuel hose where the fuel feed hose was removed.
5. Turn ignition switch ON.
6. Drain fuel by 30 ℓ (7-7/8 US gal, 6-5/8 Imp gal) from the fuel tank using proper equipment.
7. Confirm that the fuel gauge indication varies.
8. Fill fuel into the fuel tank for 30 ℓ (7-7/8 US gal, 6-5/8 Imp gal).
9. Confirm that the fuel gauge indication varies.
10. If NG, go to EC-368, "Diagnostic Procedure" .

Diagnostic Procedure

UBS00B97

1. CHECK COMBINATION METER

Refer to DI-7 .

OK or NG

OK >> GO TO 2.
NG >> GO TO DI-7 .

2. CHECK INTERMITTENT INCIDENT

Refer to EC-164, "TROUBLE DIAGNOSIS FOR INTERMITTENT INCIDENT" .

>> **INSPECTION END**

Removal and Installation

UBS00B98

FUEL LEVEL SENSOR

Refer to DI-26, "FUEL LEVEL SENSOR UNIT CHECK" .

DTC P0462, P0463 FUEL LEVEL SENSOR

PFP:25060

Component Description

UBS00B99

The fuel level sensor is mounted in the fuel level sensor unit. The sensor detects a fuel level in the fuel tank and transmits a signal to the combination meter. The combination meter sends the fuel level sensor signal to the ECM through CAN communication.
It consists of two parts, one is mechanical float and the other is variable resistor. Fuel level sensor output voltage changes depending on the movement of the fuel mechanical float.

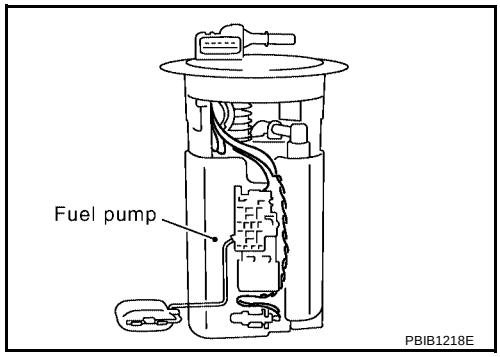

On Board Diagnostic Logic

UBS00B9A

NOTE:
If DTC P0462 or P0463 is displayed with DTC U1000, U1001, first perform the trouble diagnosis for DTC U1000, U1001. Refer to EC-173, "DTC U1000, U1001 CAN COMMUNICATION LINE" .
This diagnosis indicates the former, to detect open or short circuit malfunction.

DTC No.	Trouble diagnosis name	DTC detecting condition	Possible cause
P0462 0462	Fuel level sensor circuit low input	An excessively low voltage from the sensor is sent to ECM.	● Harness or connectors (The CAN communication line is open or shorted) ● Harness or connectors (The sensor circuit is open or shorted) ● Combination meter ● Fuel level sensor
P0463 0463	Fuel level sensor circuit high input	An excessively high voltage from the sensor is sent to ECM.	

DTC Confirmation Procedure

UBS00B9B

NOTE:
If DTC Confirmation Procedure has been previously conducted, always turn ignition switch OFF and wait at least 10 seconds before conducting the next test.
TESTING CONDITION:
Before performing the following procedure, confirm that battery voltage is more than 11V at ignition switch ON.

WITH CONSULT-II

1. Turn ignition switch ON.
2. Select “DATA MONITOR” mode with CONSULT-II.
3. Wait at least 5 seconds.
4. If 1st trip DTC is detected, go to EC-370, "Diagnostic Procedure" .

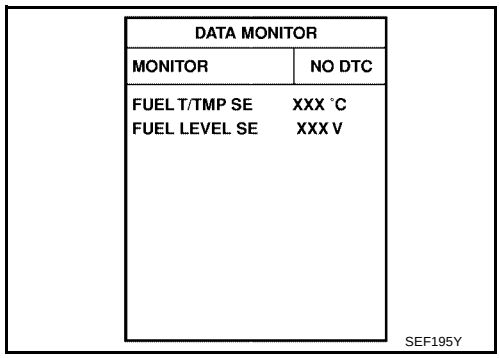

WITH GST

Follow the procedure “WITH CONSULT-II” above.

Diagnostic Procedure

UBS00B9C

1. CHECK COMBINATION METER

Refer to DI-4

OK or NG

OK >> GO TO 2.
NG >> GO TO DI-7 .

2. CHECK INTERMITTENT INCIDENT

Refer to EC-164, "TROUBLE DIAGNOSIS FOR INTERMITTENT INCIDENT" .

>> **INSPECTION END**

Removal and Installation

UBS00B9D

FUEL LEVEL SENSOR

Refer toDI-26, "FUEL LEVEL SENSOR UNIT CHECK" .

DTC P0500 VSS

PFP:32702

Component Description

UBS00B9E

NOTE:
If DTC P0500 is displayed with DTC U1000 or U1001, first perform the trouble diagnosis for DTC U1000, U1001. Refer to EC-173, "DTC U1000, U1001 CAN COMMUNICATION LINE" .
The vehicle speed sensor is installed in the transaxle. It contains a pulse generator which provides a vehicle speed signal to the combination meter. The combination meter then sends a signal to the ECM through CAN communication line.

On Board Diagnosis Logic

UBS00B9F

DTC No.	Trouble diagnosis name	DTC detecting condition	Possible cause
P0500 0500	Vehicle speed sensor	The almost 0 km/h (0 MPH) signal from vehicle speed sensor is sent to ECM even when vehicle is being driven.	● Harness or connectors (The CAN communication line is open or shorted) ● Harness or connectors (The vehicle speed signal circuit is open or shorted) ● Vehicle speed sensor ● Combination meter

DTC Confirmation Procedure

UBS00B9G

CAUTION:
Always drive vehicle at a safe speed.

NOTE:
If DTC Confirmation Procedure has been previously conducted, always turn ignition switch OFF and wait at least 10 seconds before conducting the next test.

TESTING CONDITION:
Steps 1 and 2 may be conducted with the drive wheels lifted in the shop or by driving the vehicle. If a road test is expected to be easier, it is unnecessary to lift the vehicle.

WITH CONSULT-II

1. Start engine.
2. Read “VHCL SPEED SE” in “DATA MONITOR” mode with CONSULT-II. The vehicle speed on CONSULT-II should exceed 10 km/h (6 MPH) when rotating wheels with suitable gear position.
   If NG, go to EC-372, "Diagnostic Procedure" .
   If OK, go to following step.
3. Select “DATA MONITOR” mode with CONSULT-II.
4. Warm engine up to normal operating temperature.
5. Maintain the following conditions for at least 60 consecutive seconds.

ENG SPEED	1,800 - 6,000 rpm (A/T) 2,200 - 6,000 rpm (M/T)
B/FUEL SCHDL	More then 4.8 msec
Selector lever	Except P or N position
PW/ST SIGNAL	OFF

6. If 1st trip DTC is detected, go to EC-372, "Diagnostic Procedure" .

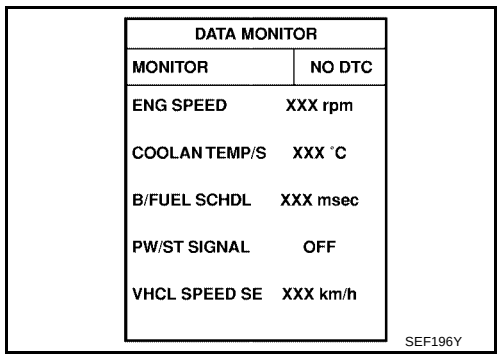

Overall Function Check

UBS00B9H

Use this procedure to check the overall function of the vehicle speed signal circuit. During this check, a 1st trip DTC might not be confirmed.

WITH GST

1. Lift up drive wheels.
2. Start engine.

3. Read vehicle speed sensor signal in Service $01 with GST.
   The vehicle speed sensor on GST should be able to exceed 10 km/h (6 MPH) when rotating wheels with suitable gear position.
4. If NG, go to EC-372, "Diagnostic Procedure" .

Diagnostic Procedure

UBS00B9I

1. CHECK VEHICLE SPEED SENSOR CIRCUIT

Refer to DI-4, "METERS AND GAUGES" .

OK or NG

OK >> GO TO 2.
NG >> Repair or replace.

2. CHECK COMBINATION METER

Refer toDI-7, "Combination Meter" .

>> **INSPECTION END**

DTC P0506 ISC SYSTEM

PFP:23781

Description

UBS00B9J

NOTE:
If DTC P0506 is displayed with other DTC, first perform the trouble diagnosis for the other DTC.
The ECM controls the engine idle speed to a specified level through the fine adjustment of the air, which is let into the intake manifold, by operating the electric throttle control actuator. The operating of the throttle valve is varied to allow for optimum control of the engine idling speed. The crankshaft position sensor (POS) detects the actual engine speed and sends a signal to the ECM.
The ECM controls the electric throttle control actuator so that the engine speed coincides with the target value memorized in the ECM. The target engine speed is the lowest speed at which the engine can operate steadily. The optimum value stored in the ECM is determined by taking into consideration various engine conditions, such as during warming up, deceleration, and engine load (air conditioner, power steering and cooling fan operation, etc.).

On Board Diagnosis Logic

UBS00B9K

DTC No.	Trouble diagnosis name	DTC detecting condition	Possible cause
P0506 0506	Idle speed control system RPM lower than expected	The idle speed is less than the target idle speed by 100 rpm or more.	● Electric throttle control actuator ● Intake air leak

DTC Confirmation Procedure

UBS00B9L

NOTE:
- If DTC Confirmation Procedure has been previously conducted, always turn ignition switch OFF and wait at least 10 seconds before conducting the next test.
- **If the target idle speed is out of the specified value, perform Idle Air Volume Learning, EC-92 , before conducting DTC Confirmation Procedure. For the target idle speed, refer to EC-656, "SERVICE DATA AND SPECIFICATIONS (SDS)" .**

TESTING CONDITION:
- **Before performing the following procedure, confirm that battery voltage is more than 11V at idle.**
- **Always perform the test at a temperature above –10°C (14°F).**

WITH CONSULT-II

1. Open engine hood.
2. Start engine and warm it up to normal operating temperature.
3. Turn ignition switch OFF and wait at least 10 seconds.
4. Turn ignition switch ON again and select “DATA MONITOR” mode with CONSULT-II.
5. Start engine and run it for at least 1 minute at idle speed.
6. If 1st trip DTC is detected, go to EC-374 .

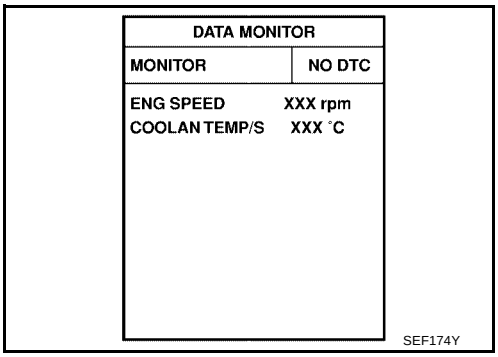

WITH GST

Follow the procedure “WITH CONSULT-II” above.

Diagnostic Procedure

UBS00B9M

1. CHECK INTAKE AIR LEAK

1. Start engine and let it idle.
2. Listen for an intake air leak after the mass air flow sensor.

OK or NG

OK >> GO TO 2.
NG >> Discover air leak location and repair.

2. REPLACE ECM

1. Stop engine.
2. Replace ECM.
3. Perform initialization of NVIS (NATS) system and registration of all NVIS (NATS) ignition key IDs. Refer to BL-96 .
4. Perform EC-91, "VIN Registration" .
5. Perform EC-92, "Accelerator Pedal Released Position Learning" .
6. Perform EC-92, "Throttle Valve Closed Position Learning" .
7. Perform EC-92, "Idle Air Volume Learning" .

>> **INSPECTION END**

DTC P0507 ISC SYSTEM

PFP:23781

Description

UBS00B9N

NOTE:
If DTC P0507 is displayed with other DTC, first perform the trouble diagnosis for the other DTC.
The ECM controls the engine idle speed to a specified level through the fine adjustment of the air, which is let into the intake manifold, by operating the electric throttle control actuator. The operating of the throttle valve is varied to allow for optimum control of the engine idling speed. The crankshaft position sensor (POS) detects the actual engine speed and sends a signal to the ECM.
The ECM controls the electric throttle control actuator so that the engine speed coincides with the target value memorized in the ECM. The target engine speed is the lowest speed at which the engine can operate steadily. The optimum value stored in the ECM is determined by taking into consideration various engine conditions, such as during warming up, deceleration, and engine load (air conditioner, power steering and cooling fan operation, etc.).

On Board Diagnosis Logic

UBS00B9O

DTC No.	Trouble diagnosis name	DTC detecting condition	Possible cause
P0507 0507	Idle speed control system RPM higher than expected	The idle speed is more than the target idle speed by 200 rpm or more.	● Electric throttle control actuator ● Intake air leak ● PCV system

DTC Confirmation Procedure

UBS00B9P

NOTE:
- If DTC Confirmation Procedure has been previously conducted, always turn ignition switch OFF and wait at least 10 seconds before conducting the next test.
- **If the target idle speed is out of the specified value, perform “Idle Air Volume Learning”, EC-92 , before conducting DTC Confirmation Procedure. For the target idle speed, refer to EC-656, "SERVICE DATA AND SPECIFICATIONS (SDS)" .**

TESTING CONDITION:
- **Before performing the following procedure, confirm that battery voltage is more than 11V at idle.**
- **Always perform the test at a temperature above –10°C (14°F).**

WITH CONSULT-II

1. Open engine hood.
2. Start engine and warm it up to normal operating temperature.
3. Turn ignition switch OFF and wait at least 10 seconds.
4. Turn ignition switch ON again and select “DATA MONITOR” mode with CONSULT-II.
5. Start engine and run it for at least 1 minute at idle speed.
6. If 1st trip DTC is detected, go to EC-376, "Diagnostic Procedure" .

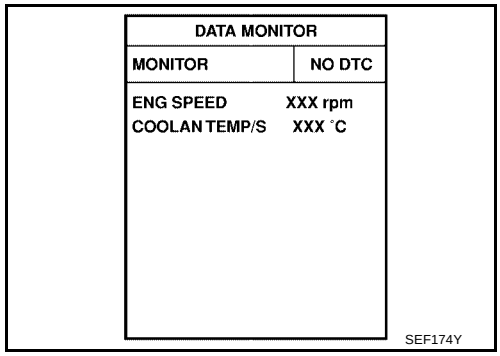

WITH GST

Follow the procedure “WITH CONSULT-II” above.

Diagnostic Procedure

UBS00B9Q

1. CHECK PCV HOSE CONNECTION

Confirm that PCV hose is connected correctly.

OK or NG

OK >> GO TO 2.
NG >> Repair or replace.

2. CHECK INTAKE AIR LEAK

1. Start engine and let it idle.
2. Listen for an intake air leak after the mass air flow sensor.

OK or NG

OK >> GO TO 3.
NG >> Discover air leak location and repair.

3. REPLACE ECM

1. Stop engine.
2. Replace ECM.
3. Perform initialization of NVIS (NATS) system and registration of all NVIS (NATS) ignition key IDs.
   Refer to BL-96 .
4. Perform EC-91, "VIN Registration" .
5. Perform EC-92, "Accelerator Pedal Released Position Learning" .
6. Perform EC-92, "Throttle Valve Closed Position Learning" .
7. Perform EC-92, "Idle Air Volume Learning" .

>> **INSPECTION END**

DTC P0550 PSP SENSOR

PFP:49763

Component Description

UBS00B9R

Power steering pressure (PSP) sensor is installed to the power steering high-pressure tube and detects a power steering load. This sensor is a potentiometer which transforms the power steering load into output voltage, and emits the voltage signal to the ECM. The ECM controls the electric throttle control actuator and adjusts the throttle valve opening angle to increase the engine speed and adjusts the idle speed for the increased load.

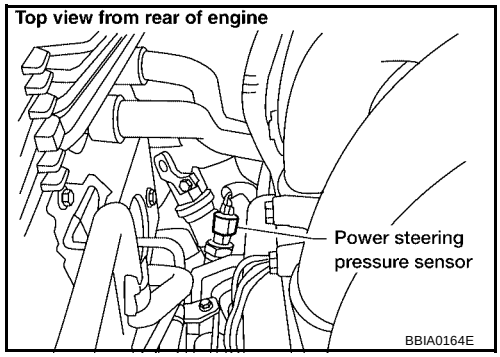

CONSULT-II Reference Value in Data Monitor Mode

UBS00B9S

Specification data are reference values.

MONITOR ITEM	CONDITION		SPECIFICATION
PW/ST SIGNAL	● Engine: After warming up, idle the engine	Steering wheel is in neutral position. (Forward direction)	OFF
		Steering wheel is being turned.	ON

On Board Diagnosis Logic

UBS00B9T

The MIL will not light up for this diagnosis.

NOTE:
If DTC P0550 is displayed with DTC1229, first perform the trouble diagnosis for DTC P1229. Refer to EC-474 .

DTC No.	Trouble diagnosis name	DTC detecting condition	Possible cause
P0550 0550	Power steering pressure sensor circuit	An excessively low or high voltage from the sensor is sent to ECM.	● Harness or connectors (The sensor circuit is open or shorted.) ● Power steering pressure sensor

DTC Confirmation Procedure

UBS00B9U

NOTE:
If DTC Confirmation Procedure has been previously conducted, always turn ignition switch OFF and wait at least 10 seconds before conducting the next test.

WITH CONSULT-II

1. Turn ignition switch ON.
2. Select “DATA MONITOR” mode with CONSULT-II.
3. Start engine and let it idle for at least 5 seconds.
4. If 1st trip DTC is detected, go to EC-379, "Diagnostic Procedure" .

WITH GST

Follow the procedure “WITH CONSULT-II” above.

Wiring Diagram

UBS00B9V

EC-PS/SEN-01

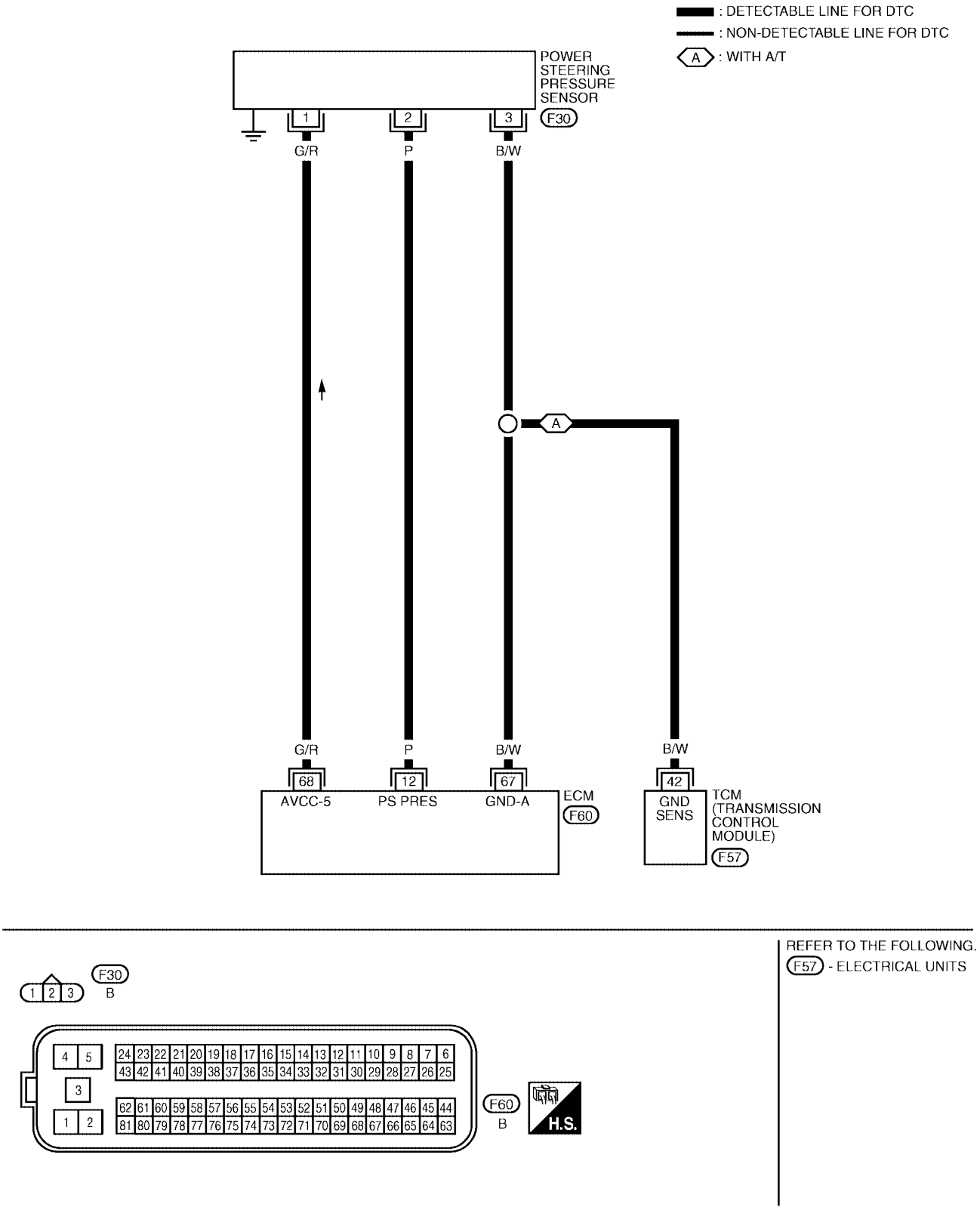

Specification data are reference values and are measured between each terminal and ground.

CAUTION:

Do not use ECM ground terminals when measuring input/output voltage. Doing so may result in damage to the ECM's transistor. Use a ground other than ECM terminals, such as the ground.

TERMINAL NO.	WIRE COLOR	ITEM	CONDITION	DATA (DC Voltage)
12	P	Power steering pressure sensor	**[Engine is running]** ● Steering wheel is being turned.	0.5 - 4.0V
			[Engine is running] ● Steering wheel is not being turned.	0.4 - 0.8V
67	B/W	Sensor ground	**[Engine is running]** ● **Warm-up condition** ● Idle speed	Approximately 0V
68	G/R	Sensor power supply (Power steering pressure sensor)	**[Ignition switch: ON]**	Approximately 5V

Diagnostic Procedure

UBS00B9W

1. CHECK GROUND CONNECTIONS

1. Turn ignition switch OFF.
2. Loosen and retighten two ground screws on the body. Refer to EC-171, "Ground Inspection" .

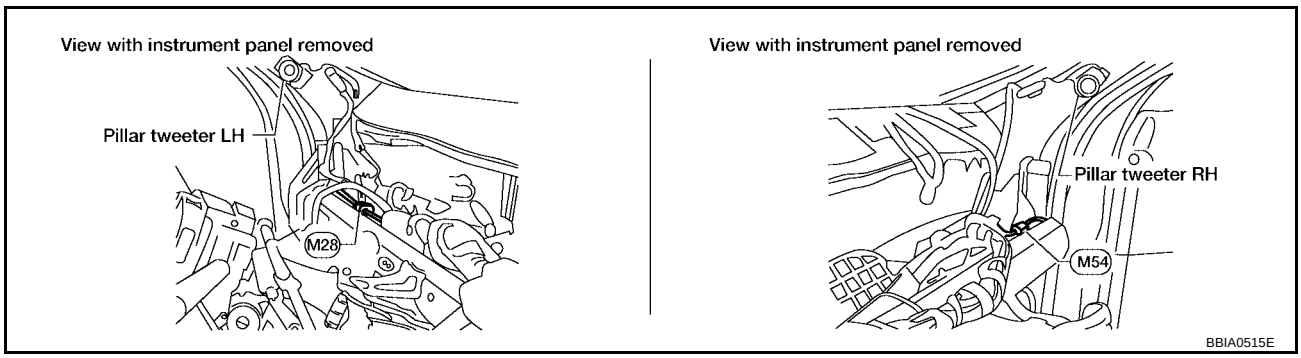

OK or NG

OK >> GO TO 2.
NG >> Repair or replace ground connections.

2. CHECK PSP SENSOR POWER SUPPLY CIRCUIT

1. Disconnect PSP sensor harness connector.
2. Turn ignition switch ON.

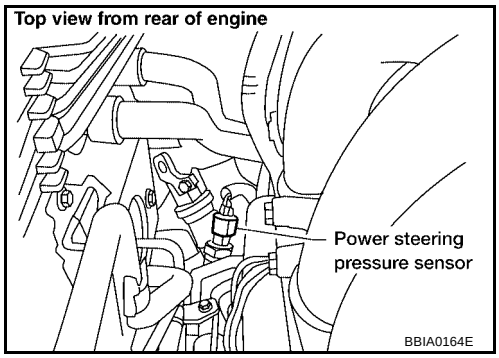

3. Check voltage between PSP sensor terminal 1 and ground with CONSULT-II or tester.

Voltage: Approximately 5V

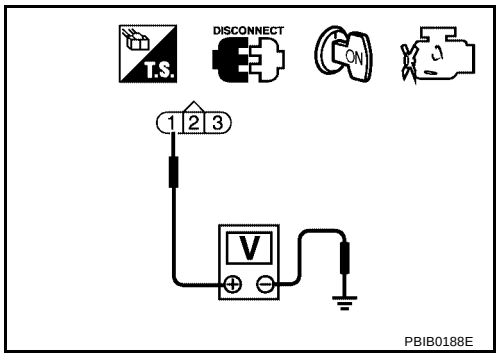

OK or NG

OK >> GO TO 4.
NG >> Repair open circuit or short to ground or short to power in harness or connectors.

3. CHECK PSP SENSOR GROUND CIRCUIT FOR OPEN AND SHORT

1. Turn ignition switch OFF.
2. Disconnect ECM harness connector.
3. Disconnect TCM harness connector.
4. Check harness continuity between PSP sensor terminal 3 and ECM terminal 67, TCM terminal 42.

Continuity should exist.

5. Also check harness for short to ground and short to power.

OK or NG

OK >> GO TO 5.
NG >> GO TO 4.

4. DETECT MALFUNCTIONING PART

Check the following.

- Harness for open or short between power steering pressure sensor and ECM
- Harness for open or short between power steering pressure sensor and TCM

>> Repair open circuit or short to ground or short to power in harness or connectors.

5. CHECK PSP SENSOR INPUT SIGNAL CIRCUIT FOR OPEN AND SHORT

1. Check harness continuity between ECM terminal 12 and PSP sensor terminal 2.

Continuity should exist.

2. Also check harness for short to ground and short to power.

OK or NG

OK >> GO TO 6.
NG >> Repair open circuit or short to ground or short to power in harness or connectors.

6. CHECK PSP SENSOR

Refer to EC-381, "Component Inspection" .

OK or NG

OK >> GO TO 7.
NG >> Replace PSP sensor.

7. CHECK INTERMITTENT INCIDENT

Refer to EC-164, "TROUBLE DIAGNOSIS FOR INTERMITTENT INCIDENT" .

>> **INSPECTION END**

Component Inspection

UBS00B9X

POWER STEERING PRESSURE SENSOR

1. Reconnect all harness connectors disconnected.
2. Start engine and let it idle.
3. Check voltage between ECM terminal 12 and ground under the following conditions.

Condition	Voltage
Steering wheel is being turned fully.	0.5 - 4.0V
Steering wheel is not being turned.	0.4 - 0.8V

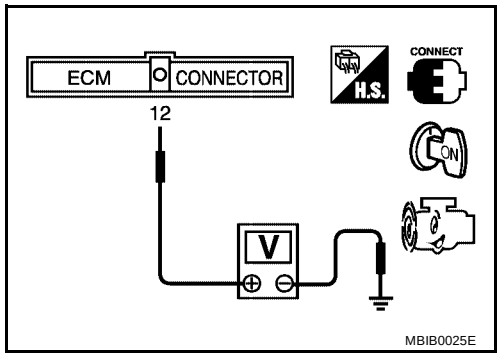

DTC P0605 ECM

PFP:23710

Component Description

UBS00B9Y

The ECM consists of a microcomputer and connectors for signal input and output and for power supply. The ECM controls the engine.

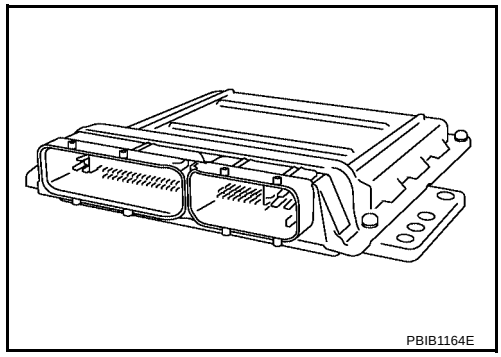

On Board Diagnosis Logic

UBS00B9Z

This self-diagnosis has one or two trip detection logic.

DTC No.	Trouble diagnosis name	DTC detecting condition		Possible cause
P0605 0605	Engine control module	A)	ECM calculation function is malfunctioning.	● ECM
		B)	ECM EEP-ROM system is malfunctioning.	
		C)	ECM self shut-off function is malfunctioning.	

FAIL-SAFE MODE

ECM enters in fail-safe mode when the malfunction A is detected.

Detected items	Engine operation condition in fail-safe mode
Malfunction A	● ECM stops the electric throttle control actuator control, throttle valve is maintained at a fixed opening (approx. 5 degrees) by the return spring. ● ECM deactivates ASCD operation.

DTC Confirmation Procedure

UBS00BA0

Perform PROCEDURE FOR MALFUNCTION A first. If the 1st trip DTC cannot be confirmed, perform PROCEDURE FOR MALFUNCTION B. If there is no problem on PROCEDURE FOR MALFUNCTION B, perform PROCEDURE FOR MALFUNCTION C.

NOTE:

If DTC Confirmation Procedure has been previously conducted, always turn ignition switch OFF and wait at least 10 seconds before conducting the next test.

PROCEDURE FOR MALFUNCTION A

With CONSULT-II

1. Turn ignition switch ON.
2. Select “DATA MONITOR” mode with CONSULT-II.
3. If 1st trip DTC is detected, go to EC-383, "Diagnostic Procedure"
.

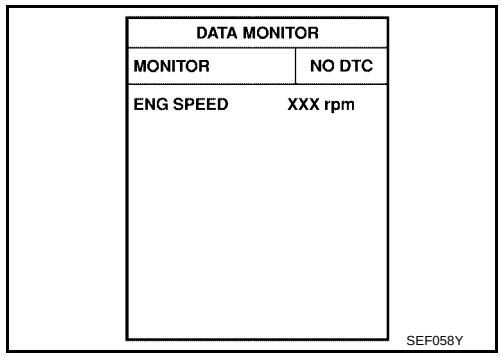

With GST

Follow the procedure “With CONSULT-II” above.

PROCEDURE FOR MALFUNCTION B

With CONSULT-II

1. Turn ignition switch ON and wait at least 1 second.
2. Select “DATA MONITOR” mode with CONSULT-II.
3. Turn ignition switch OFF, wait at least 10 seconds, and then turn ON.
4. If 1st trip DTC is detected, go to EC-383, "Diagnostic Procedure" .

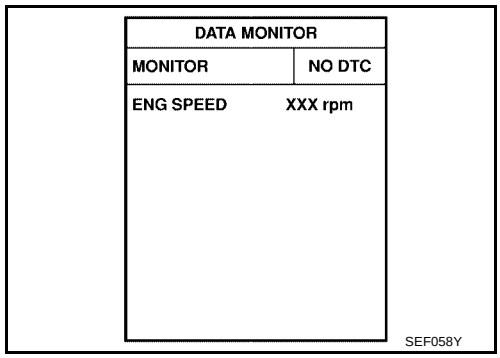

With GST

Follow the procedure “With CONSULT-II” above.

PROCEDURE FOR MALFUNCTION C

With CONSULT-II

1. Turn ignition switch ON and wait at least 1 second.
2. Select “DATA MONITOR” mode with CONSULT-II.
3. Turn ignition switch OFF, wait at least 10 seconds, and then turn ON.
4. Repeat step 3 for 32 times.
5. If 1st trip DTC is detected, go to EC-383, "Diagnostic Procedure" .

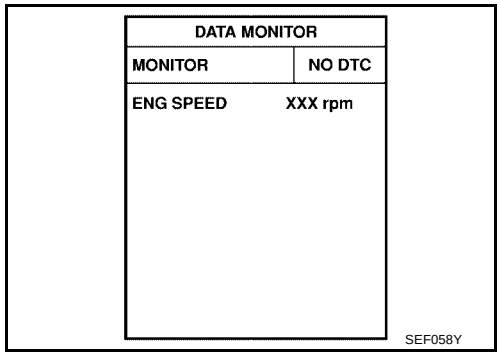

With GST

Follow the procedure “With CONSULT-II” above.

Diagnostic Procedure

UBS00BA1

1. INSPECTION START

With CONSULT-II

1. Turn ignition switch ON.
2. Select “SELF DIAG RESULTS” mode with CONSULT-II.
3. Touch “ERASE”.
4. **Perform DTC Confirmation Procedure.**
   See EC-382 .
5. Is the 1st trip DTC P0605 displayed again?

With GST

1. Turn ignition switch ON.
2. Select Service $04 with GST.
3. Touch “ERASE”.
4. **Perform DTC Confirmation Procedure.**
   See EC-382 .
5. Is the 1st trip DTC P0605 displayed again?

Yes or No

Yes >> GO TO 2.
No >> **INSPECTION END**

2. REPLACE ECM

1. Stop engine.
2. Replace ECM.
3. Perform initialization of NVIS (NATS) system and registration of all NVIS (NATS) ignition key IDs. Refer to BL-96 .
4. Perform EC-91, "VIN Registration" .
5. Perform EC-92, "Accelerator Pedal Released Position Learning" .
6. Perform EC-92, "Throttle Valve Closed Position Learning" .
7. Perform EC-92, "Idle Air Volume Learning" .

>> **INSPECTION END**

DTC P1031, P1032 A/F SENSOR 1 HEATER

PFP:22693

Description

UBS00BA2

SYSTEM DESCRIPTION

Sensor	Input Signal to ECM	ECM function	Actuator
Camshaft position sensor (PHASE) Crankshaft position sensor (POS)	Engine speed	Air fuel ratio (A/F) sensor 1 heater control	Air fuel ratio (A/F) sensor 1 heater
Mass air flow sensor	Amount of intake air		

The ECM performs ON/OFF duty control of the A/F sensor 1 heater corresponding to the engine operating condition to keep the temperature of A/F sensor 1 element at the specified range.

CONSULT-II Reference Value in Data Monitor Mode

UBS00BA3

Specification data are reference values.

MONITOR ITEM	CONDITION	SPECIFICATION
A/F S1 HTR (B1)	● Engine: After warming up, idle the engine	0 - 100%

On Board Diagnosis Logic

UBS00BA4

DTC No.	Trouble diagnosis name	DTC detecting condition	Possible cause
P1031 1031 (Bank 1)	Air fuel ratio (A/F) sensor 1 heater control circuit low	The current amperage in the heated air fuel ratio (A/F) sensor 1 heater circuit is out of the normal range. (An excessively low voltage signal is sent to ECM through the heated air fuel ratio (A/F) sensor 1 heater.)	● Harness or connectors (The heated A/F sensor 1 heater circuit is open or shorted.) ● A/F sensor 1 heater
P1032 1032 (Bank 1)	Air fuel ratio (A/F) sensor 1 heater control circuit high	The current amperage in the heated air fuel ratio (A/F) sensor 1 heater circuit is out of the normal range. (An excessively high voltage signal is sent to ECM through the heated air fuel ratio (A/F) sensor 1 heater.)	● Harness or connectors (The heated A/F sensor 1 heater circuit is shorted.) ● A/F sensor 1 heater

DTC Confirmation Procedure

UBS00BA5

NOTE:
If DTC Confirmation Procedure has been previously conducted, always turn ignition switch OFF and wait at least 10 seconds before conducting the next test.

TESTING CONDITION:
Before performing the following procedure, confirm that battery voltage is between 10.5V and 16V at idle.

WITH CONSULT-II

1. Turn ignition switch ON and select “DATA MONITOR” mode with CONSULT-II.
2. Start engine and run it for at least 10 seconds at idle speed.
3. If 1st trip DTC is detected, go to EC-387, "Diagnostic Procedure".

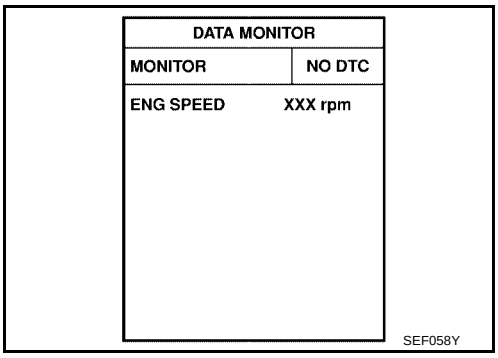

WITH GST

Follow the procedure “WITH CONSULT-II” above.

Wiring Diagram

UBS00BA6

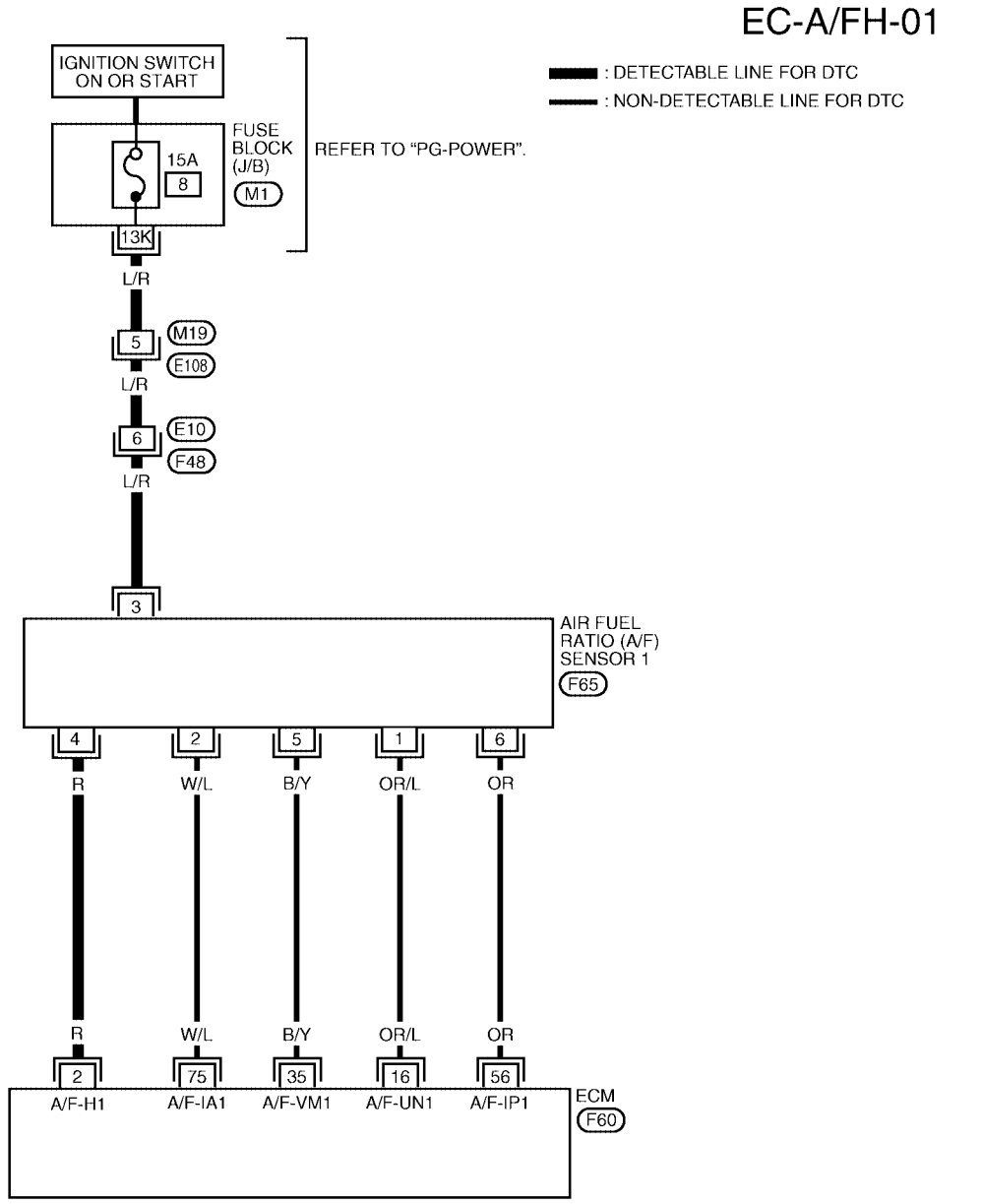

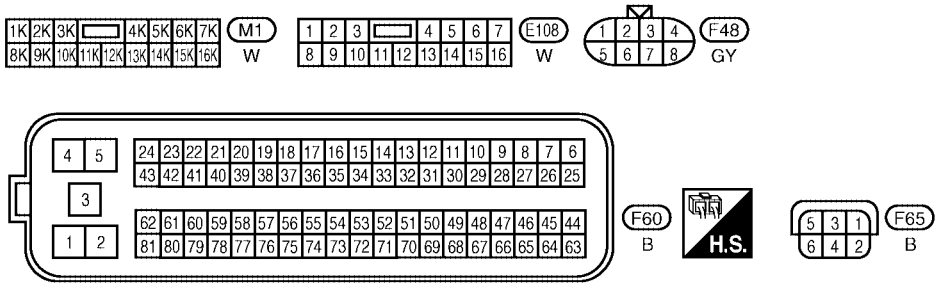

BBWA1435E

Specification data are reference values and are measured between each terminal and ground.
Pulse signal is measured by CONSULT-II.

CAUTION:
Do not use ECM ground terminals when measuring input/output voltage. Doing so may result in damage to the ECM's transistor. Use a ground other than ECM terminals, such as the ground.

TERMINAL NO.	WIRE COLOR	ITEM	CONDITION	DATA (DC Voltage)
2	R	A/F sensor 1 heater	**[Engine is running]** ● **Warm-up condition** ● Idle speed	Approximately 5V★ 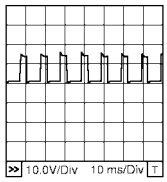 PBIB1584E

★: Average voltage for pulse signal (Actual pulse signal can be confirmed by oscilloscope.)

Diagnostic Procedure

UBS00BA7

1. CHECK GROUND CONNECTIONS

1. Turn ignition switch OFF.
2. Loosen and retighten two ground screws on the body. Refer to EC-171, "Ground Inspection" .

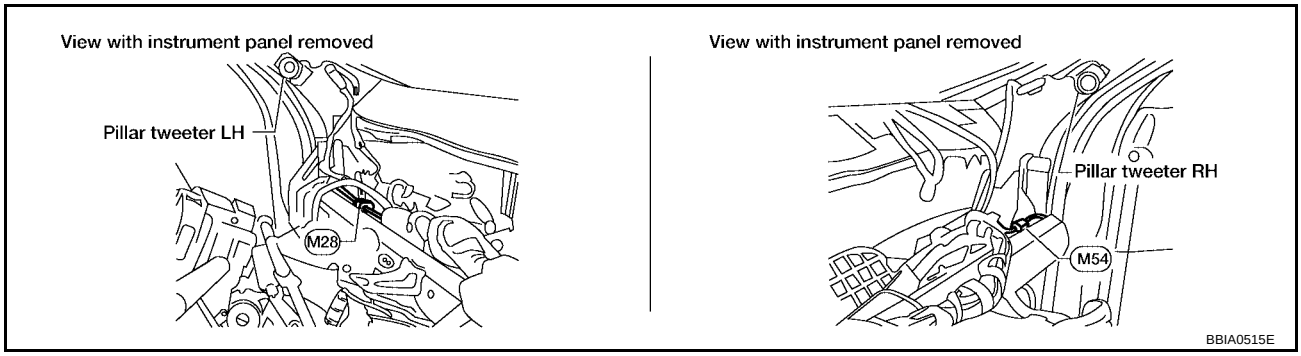

OK or NG

OK >> GO TO 2.
NG >> Repair or replace ground connections.

2. CHECK AIR FUEL RATIO (A/F) SENSOR 1 POWER SUPPLY CIRCUIT

1. Disconnect air fuel ratio (A/F) sensor 1 harness connector.
2. Turn ignition switch ON.

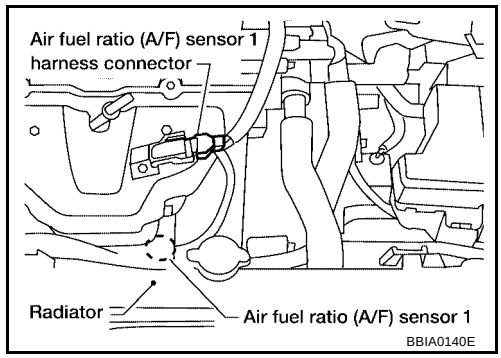

3. Check voltage between A/F sensor 1 terminal 3 and ground with CONSULT-II or tester.

Voltage: Battery voltage

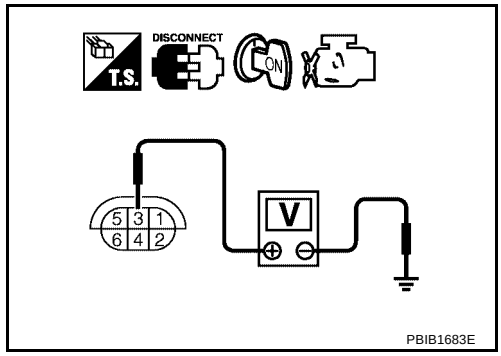

OK or NG

OK >> GO TO 4.
NG >> GO TO3.

3. DETECT MALFUNCTIONING PART

Check the following.

- Harness connectors M19, E108
- Harness connectors E10, F48
- Fuse block (J/B) connector M1
- 15A fuse
- Harness for open or short between A/F sensor 1 and fuse

>> Repair or replace harness or connectors.

4. CHECK A/F SENSOR 1 HEATER OUTPUT SIGNAL CIRCUIT FOR OPEN AND SHORT

1. Turn ignition switch OFF.
2. Disconnect ECM harness connector.
3. Check harness continuity between ECM terminal 2 and A/F sensor 1 terminal 4. Refer to Wiring Diagram.

Continuity should exist.

4. Also check harness for short to power.

OK or NG

OK >> GO TO 5.
NG >> Repair open circuit or short to ground or short to power in harness or connectors.

5. CHECK A/F SENSOR 1 HEATER

Refer to EC-389, "Component Inspection" .

OK or NG

OK >> GO TO 6.
NG >> Replace A/F sensor 1.

6. CHECK INTERMITTENT INCIDENT

Perform EC-164, "TROUBLE DIAGNOSIS FOR INTERMITTENT INCIDENT" .

OK or NG

OK >> Replace A/F sensor 1.
NG >> Repair or replace.

Component Inspection

UBS00BA8

AIR FUEL RATIO (A/F) SENSOR 1 HEATER

Check resistance between terminals 3 and 4.

Resistance: 2.3 - 4.3Ω at 25°C (77°F)

Check continuity between terminals 3 and 1, 2, 5, 6, terminals 4 and 1, 2, 5, 6.

Continuity should not exist.

If NG, replace the A/F sensor 1.

CAUTION:

- **Discard any A/F sensor which has been dropped from a height of more than 0.5 m (19.7 in) onto a hard surface such as a concrete floor; use a new one.**
- **Before installing new A/F sensor, clean exhaust system threads using Heated Oxygen Sensor Thread Cleaner tool J-43897-18 or J-43897-12 and approved anti-seize lubricant.**

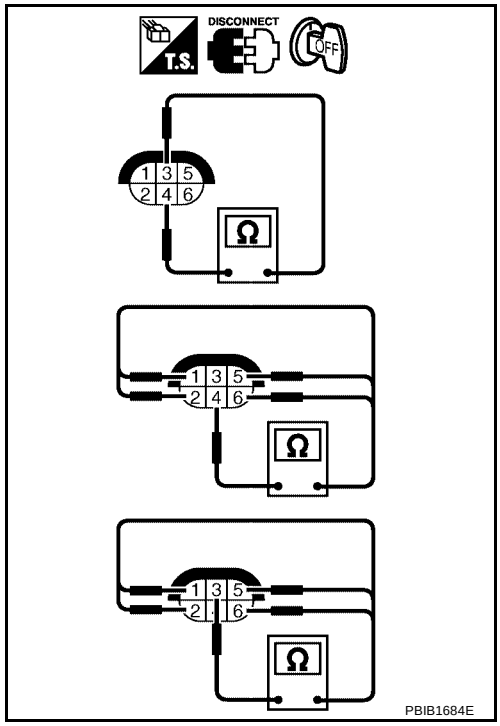

Removal and Installation

UBS00BA9

AIR FUEL RATIO SENSOR HEATER

Refer to EM-15, "Removal and Installation" .

DTC P1065 ECM POWER SUPPLY

PFP:23710

Component Description

UBS00BAA

Battery voltage is supplied to the ECM even when the ignition switch is turned OFF for the ECM memory function of the DTC memory, the air-fuel ratio feedback compensation value memory, the idle air volume learning value memory, etc.

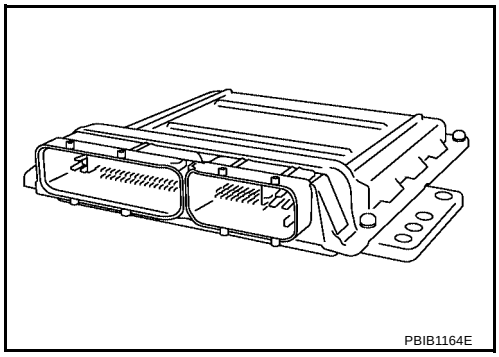

On Board Diagnosis Logic

UBS00BAB

DTC No.	Trouble diagnosis name	DTC detecting condition	Possible cause
P1065 1065	ECM power supply circuit	ECM back-up RAM system does not function properly.	● Harness or connectors [ECM power supply (back-up) circuit is open or shorted.] ● ECM

DTC Confirmation Procedure

UBS00BAC

NOTE:
If DTC Confirmation Procedure has been previously conducted, always turn ignition switch OFF and wait at least 10 seconds before conducting the next test.

WITH CONSULT-II

1. Turn ignition switch ON and wait at least 1 second.
2. Select “DATA MONITOR” mode with CONSULT-II.
3. Start engine and let it idle for 1 second.
4. Turn ignition switch OFF, wait at least 10 seconds, and then turn ON.
5. Repeat steps 3 and 4 four times.
6. If 1st trip DTC is detected, go to EC-392, "Diagnostic Procedure".

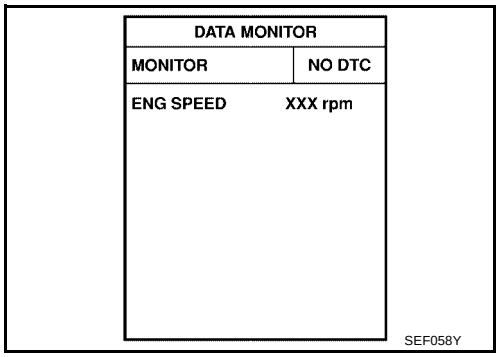

WITH GST

Follow the procedure “WITH CONSULT-II” above.

Wiring Diagram

UBS00BAD

EC-ECM/PW-01

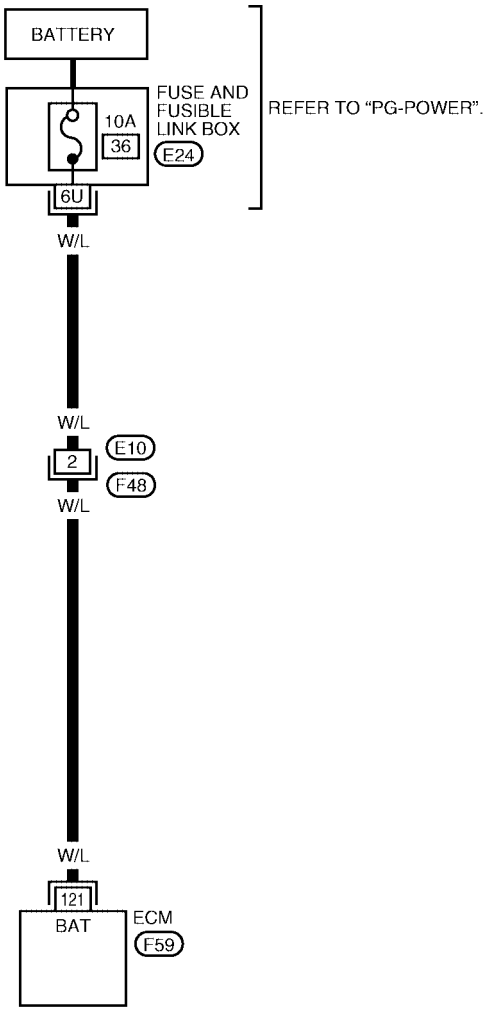

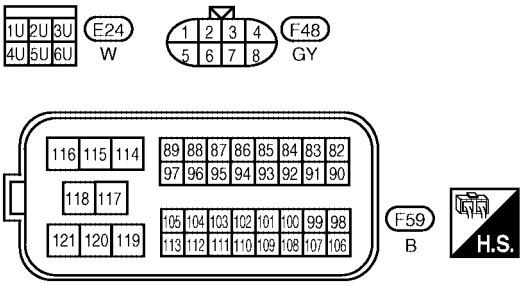

BBWA1437E

Specification data are reference values and are measured between each terminal and ground.

CAUTION:

Do not use ECM ground terminals when measuring input/output voltage. Doing so may result in damage to the ECM's transistor. Use a ground other than ECM terminals, such as the ground.

TERMINAL NO.	WIRE COLOR	ITEM	CONDITION	DATA (DC Voltage)
121	W/L	Power supply for ECM (Buck-up)	**[Ignition switch: OFF]**	BATTERY VOLTAGE (11 - 14V)

Diagnostic Procedure

UBS00BAE

1. CHECK ECM POWER SUPPLY

1. Turn ignition switch OFF.
2. Disconnect ECM harness connector.
3. Check voltage between ECM terminal 121 and ground with CONSULT-II or tester.

Voltage: Battery voltage

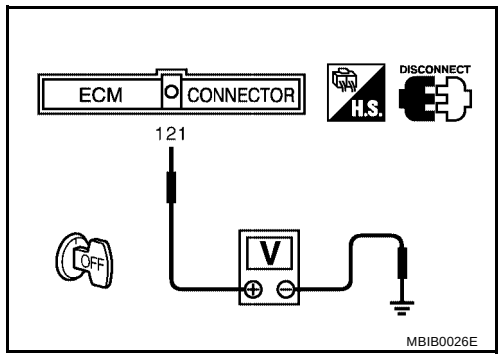

OK or NG

OK >> GO TO 3.
NG >> GO TO 2.

2. DETECT MALFUNCTIONING PART

Check the following.

- Harness connectors E10, F48
- 10A fuse
- Harness for open or short between ECM and battery

>> Repair or replace harness or connectors.

3. CHECK INTERMITTENT INCIDENT

Refer to EC-164, "TROUBLE DIAGNOSIS FOR INTERMITTENT INCIDENT" .

OK or NG

OK >> GO TO 4.
NG >> Repair open circuit short to ground or short to power in harness or connectors.

4. PERFORM DTC CONFIRMATION PROCEDURE

With CONSULT-II

1. Turn ignition switch ON.
2. Select “SELF DIAG RESULTS” mode with CONSULT-II.
3. Touch “ERASE”.
4. **Perform DTC Confirmation Procedure.**
   See EC-390 .
5. Is the 1st trip DTC P1065 displayed again?

With GST

1. Turn ignition switch ON.
2. Select “Service $04” with GST.
3. Touch “ERASE”.
4. **Perform DTC Confirmation Procedure.**
   See EC-390 .
5. Is the 1st trip DTC P1065 displayed again?

Yes or No

Yes >> GO TO 5.
No >> **INSPECTION END**

5. REPLACE ECM

1. Replace ECM.
2. Perform initialization of NVIS (NATS) system and registration of all NVIS (NATS) ignition key IDs. Refer to BL-96 .
3. Perform EC-91, "VIN Registration" .
4. Perform EC-92, "Accelerator Pedal Released Position Learning" .
5. Perform EC-92, "Throttle Valve Closed Position Learning" .
6. Perform EC-92, "Idle Air Volume Learning" .

>> **INSPECTION END**

DTC P1111 IVT CONTROL SOLENOID VALVE

PFP:23796

Description

UBS00BAM

COMPONENT DESCRIPTION

Intake valve timing control solenoid valve is activated by ON/OFF pulse duty (ratio) signals from the ECM.
The intake valve timing control solenoid valve changes the oil amount and direction of flow through intake valve timing control unit or stops oil flow.
The longer pulse width advances valve angle.
The shorter pulse width retards valve angle.
When ON and OFF pulse widths become equal, the solenoid valve stops oil pressure flow to fix the intake valve angle at the control position.

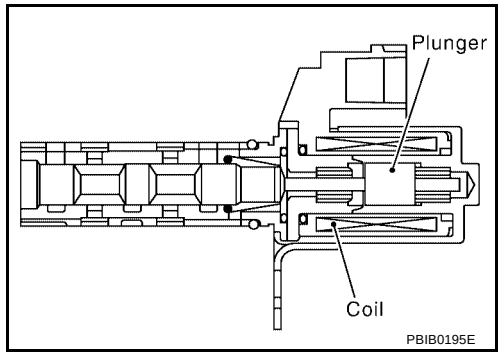

CONSULT-II Reference Value in Data Monitor Mode

UBS00BAN

Specification data are reference values.

MONITOR ITEM	CONDITION		SPECIFICATION
INT/V SOL (B1)	● Engine: After warming up ● Shift lever: N (A/T), Neutral (M/T) ● Air conditioner switch: OFF ● No-load	Idle	0% - 2%
		When revving engine up to 2,000 rpm quickly	Approx. 0% - 80%

On Board Diagnosis Logic

UBS00BAO

DTC No.	Trouble diagnosis name	DTC detecting condition	Possible cause
P1111 1111	Intake valve timing control solenoid valve circuit	An improper voltage is sent to the ECM through intake valve timing control solenoid valve.	● Harness or connectors (Solenoid valve circuit is open or shorted.) ● Intake valve timing control solenoid valve

DTC Confirmation Procedure

UBS00BAP

NOTE:
If DTC Confirmation Procedure has been previously conducted, always turn ignition switch OFF and wait at least 10 seconds before conducting the next test.

WITH CONSULT-II

1. Turn ignition switch ON.
2. Select “DATA MONITOR” mode with CONSULT-II.
3. Start engine and let it idle for 5 seconds.
4. If 1st trip DTC is detected, go to EC-396, "Diagnostic Procedure"
.

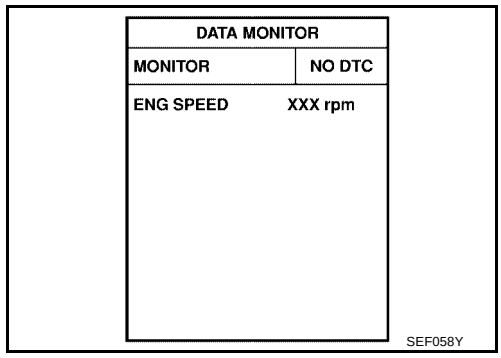

WITH GST

Following the procedure “WITH CONSULT-II” above.

Wiring Diagram

UBS00BAQ

EC-IVC-01

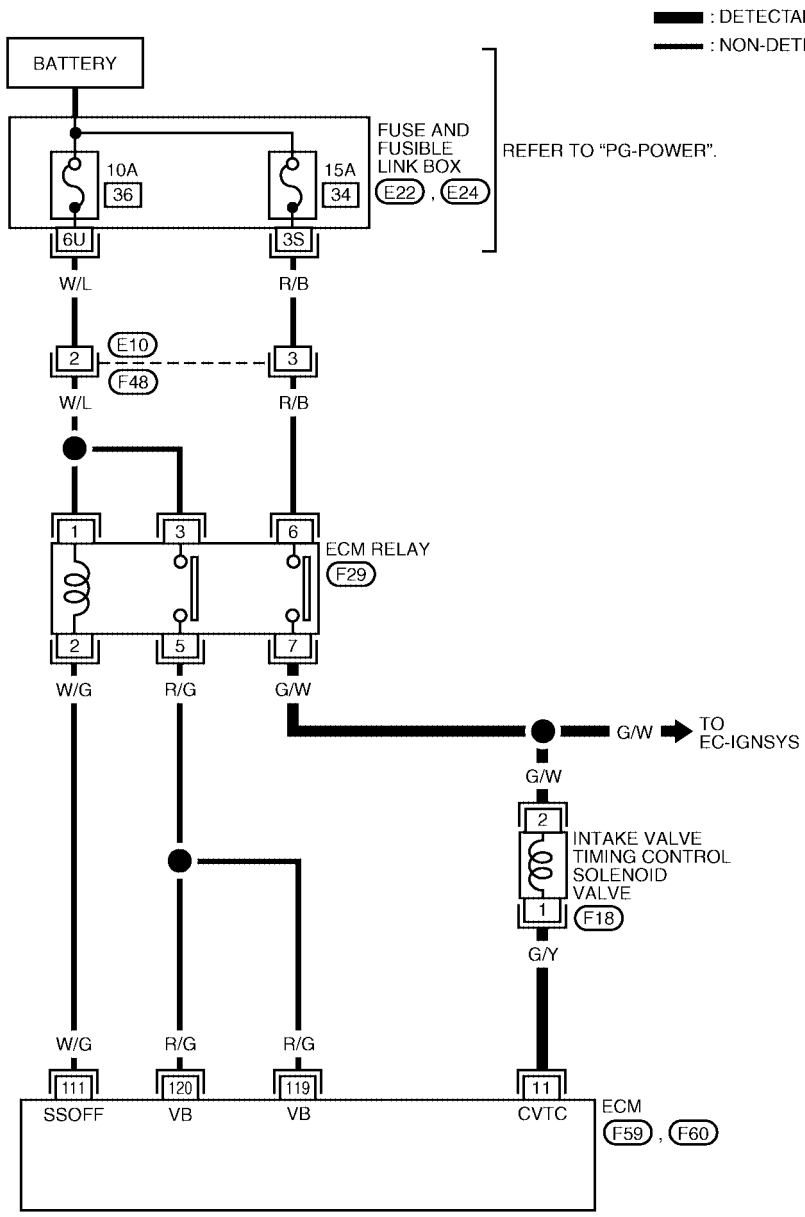

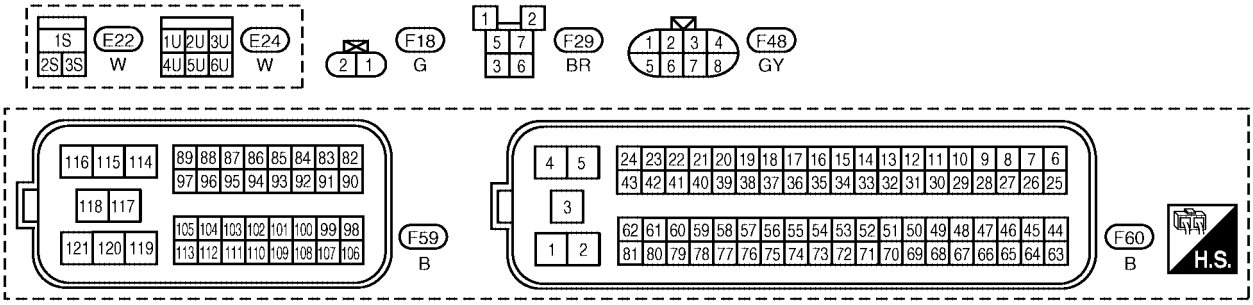

BBWA1436E

Specification data are reference values and are measured between each terminal and ground.
Pulse signal is measured by CONSULT-II.

CAUTION:
Do not use ECM ground terminals when measuring input/output voltage. Doing so may result in damage to the ECM's transistor. Use a ground other than ECM terminals, such as the ground.

TERMINAL NO.	WIRE COLOR	ITEM	CONDITION	DATA (DC Voltage)
11	G/Y	Intake valve timing control solenoid valve	**[Engine is running]** ● **Warm-up condition** ● Idle speed	BATTERY VOLTAGE (11 - 14V)
			[Engine is running] ● **Warm-up condition** ● When revving engine up to 2,500 rpm quickly	7 - 10V★ 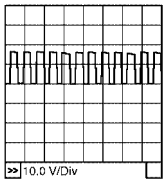 PBIB1790E

★: Average voltage for pulse signal (Actual pulse signal can be confirmed by oscilloscope.)

Diagnostic Procedure

UBS00BAR

1. CHECK IVT CONTROL SOLENOID VALVE POWER SUPPLY CIRCUIT

1. Turn ignition switch OFF.
2. Disconnect intake valve timing control solenoid valve harness connector.
3. Turn ignition switch ON.

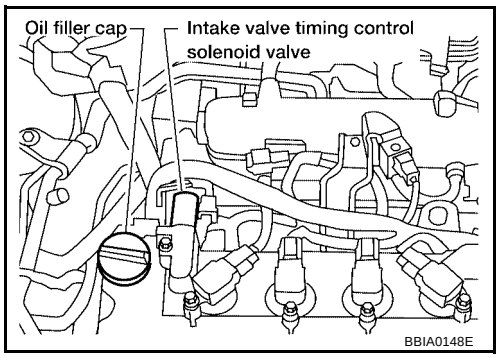

4. Check voltage between intake valve timing control solenoid valve terminal 2 and ground with CONSULT-II or tester.

Voltage: Battery voltage

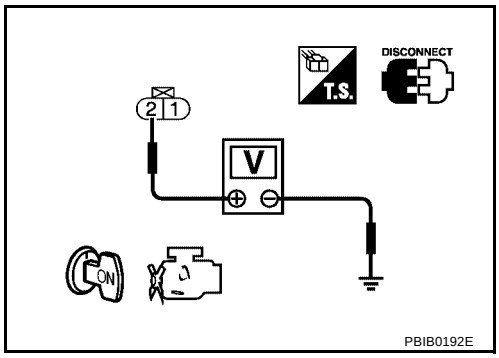

OK or NG

OK >> GO TO 2.
NG >> Repair open circuit or short to ground or short to power in harness or connectors.

2. CHECK IVT CONTROL SOLENOID VALVE OUTPUT SIGNAL CIRCUIT FOR OPEN AND SHORT

1. Turn ignition switch OFF.
2. Disconnect ECM harness connector.
3. Check harness continuity between ECM terminal 11 and intake valve timing control solenoid valve terminal 1. Refer to Wiring Diagram.

   Continuity should exist.

4. Also check harness for short to ground and short to power.

OK or NG

OK >> GO TO 3.
NG >> Repair open circuit or short to ground or short to power in harness or connectors.

3. CHECK INTAKE VALVE TIMING CONTROL SOLENOID VALVE

Refer to EC-397, "Component Inspection" .

OK or NG

OK >> GO TO 4.
NG >> Replace intake valve timing control solenoid valve.

4. CHECK INTERMITTENT INCIDENT

Refer to EC-164, "TROUBLE DIAGNOSIS FOR INTERMITTENT INCIDENT" .

>> **INSPECTION END**

Component Inspection

UBS00BAS

INTAKE VALVE TIMING CONTROL SOLENOID VALVE

1. Disconnect intake valve timing control solenoid valve harness connector.
2. Check resistance between intake valve timing control solenoid valve as follows.

Terminal	Resistance
1 and 2	Approximately 8Ω at 20°C (68°F)
1 or 2 and ground	(Continuity should not exist.)

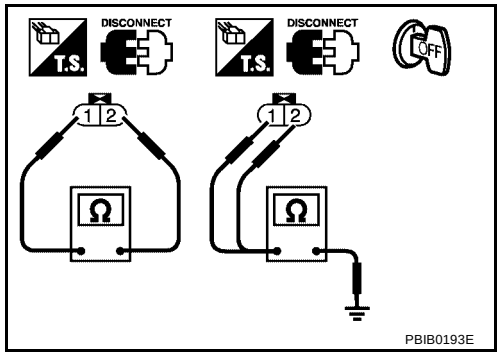

   If NG, replace intake valve timing control solenoid valve.
   If OK, go to next step.
3. Remove intake valve timing control solenoid valve.
4. Provide 12V DC between intake valve timing control solenoid valve terminals and then interrupt it. Make sure that the plunger moves as shown in the figure.

   CAUTION:
   Do not apply 12V DC continuously for 5 seconds or more. Doing so may result in damage to the coil in intake valve timing control solenoid valve.
   If NG, replace intake valve timing control solenoid valve.

   NOTE:
   Always replace O-ring when intake valve timing control solenoid valve is removed.

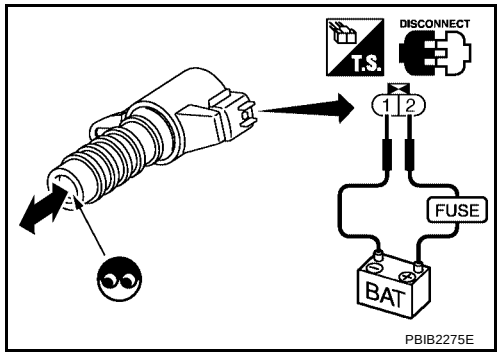

Removal and Installation

UBS00BAT

INTAKE VALVE TIMING CONTROL SOLENOID VALVE

Refer to EM-42, "TIMING CHAIN" .

DTC P1121 ELECTRIC THROTTLE CONTROL ACTUATOR

PFP:16119

Component Description

UBS00BAU

Electric throttle control actuator consists of throttle control motor, throttle position sensor, etc.
The throttle control motor is operated by the ECM and it opens and closes the throttle valve.
The throttle position sensor detects the throttle valve position, and the opening and closing speed of the throttle valve and feeds the voltage signals to the ECM. The ECM judges the current opening angle of the throttle valve from these signals and the ECM controls the throttle control motor to make the throttle valve opening angle properly in response to driving condition.

On Board Diagnosis Logic

UBS00BAV

This self-diagnosis has the one trip detection logic.

DTC No.	Trouble diagnosis name	DTC detecting condition		Possible cause
P1121 1121	Electric throttle control actuator	A)	Electric throttle control actuator does not function properly due to the return spring malfunction.	● Electric throttle control actuator
		B)	Throttle valve opening angle in fail-safe mode is not in specified range.	
		C)	ECM detects the throttle valve is stuck open.	

FAIL-SAFE MODE

When the malfunction is detected, ECM enters fail-safe mode and the MIL lights up.

Detected items	Engine operating condition in fail-safe mode
Malfunction A	The ECM controls the electric throttle control actuator by regulating the throttle opening around the idle position. The engine speed will not rise more than 2,000 rpm.
Malfunction B	ECM controls the electric throttle control actuator by regulating the throttle opening to 20 degrees or less.
Malfunction C	While the vehicle is driving, it slows down gradually by fuel cut. After the vehicle stops, the engine stalls. The engine can restart in N or P position, and engine speed will not exceed 1,000 rpm or more.

DTC Confirmation Procedure

UBS00BAW

NOTE:

- **Perform PROCEDURE FOR MALFUNCTION A AND B first. If the 1st trip DTC cannot be confirmed, perform PROCEDURE FOR MALFUNCTION C.**
- If DTC Confirmation Procedure has been previously conducted, always turn ignition switch OFF and wait at least 10 seconds before conducting the next test.

PROCEDURE FOR MALFUNCTION A AND B

With CONSULT-II

1. Turn ignition switch ON and wait at least 1 second.
2. Select “DATA MONITOR” mode with CONSULT-II.
3. Shift selector lever to D position (A/T), 1st position (M/T) and wait at least 3 seconds.
4. Shift selector lever to P or N position (A/T models), Neutral position (M/T models).
5. Turn ignition switch OFF, wait at least 10 seconds, and then turn ON.
6. Turn ignition switch ON and wait at least 1 second.
7. Shift selector lever to D position (A/T), 1st position (M/T), and wait at least 3 seconds.
8. Shift selector lever to P or N position (A/T models), Neutral position (M/T models).
9. Turn ignition switch OFF, wait at least 10 seconds, and then turn ON.
10. If 1st trip DTC is detected, go to EC-399, "Diagnostic Procedure" .

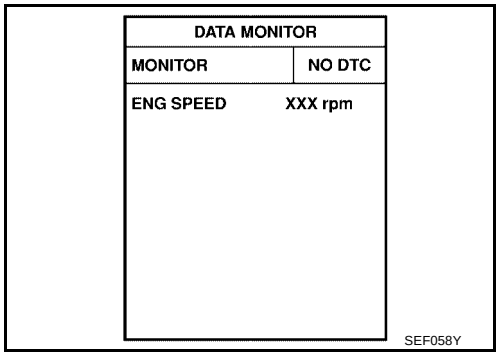

With GST

Follow the procedure “With CONSULT-II” above.

PROCEDURE FOR MALFUNCTION C

With CONSULT-II

1. Turn ignition switch ON and wait at least 1 second.
2. Select “DATA MONITOR” mode with CONSULT-II.
3. Shift selector lever to D position (A/T), 1st position (M/T) and wait at least 2 seconds.
4. Shift selector lever to N or P position.
5. Start engine and let it idle for 3 seconds.
6. If DTC is detected, go to EC-399, "Diagnostic Procedure" .

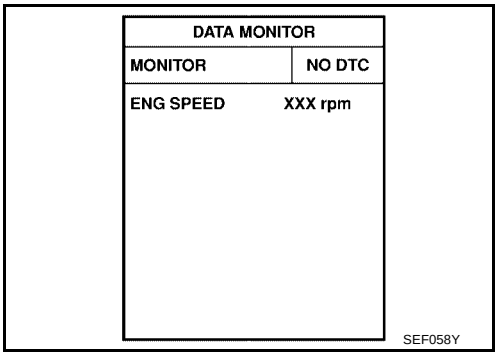

With GST

Follow the procedure “With CONSULT-II” above.

Diagnostic Procedure

UBS00BAX

1. CHECK ELECTRIC THROTTLE CONTROL ACTUATOR VISUALLY

1. Remove the intake air duct.
2. Check if a foreign matter is caught between the throttle valve and the housing.

OK or NG

OK >> GO TO 2.
NG >> Remove the foreign matter and clean the electric throttle control actuator inside.

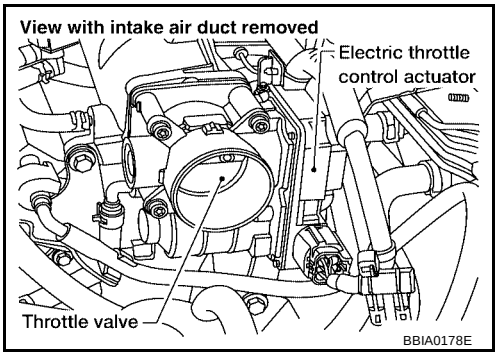

2. REPLACE ELECTRIC THROTTLE CONTROL ACTUATOR

1. Replace the electric throttle control actuator.
2. Perform EC-92, "Throttle Valve Closed Position Learning" .
3. Perform EC-92, "Idle Air Volume Learning" .

>> **INSPECTION END**

DTC P1122 ELECTRIC THROTTLE CONTROL FUNCTION

PFP:16119

Description

UBS00BAY

NOTE:
If DTC P1122 is displayed with DTC P1121 or 1126, first perform the trouble diagnosis for DTC P1121 or P1126. Refer to EC-398 or EC-407 .
Electric throttle control actuator consists of throttle control motor, throttle position sensor, etc.
The throttle control motor is operated by the ECM and it opens and closes the throttle valve.
The current opening angle of the throttle valve is detected by the throttle position sensor and it provides feedback to the ECM to control the throttle control motor to make the throttle valve opening angle properly in response to driving condition.

On Board Diagnosis Logic

UBS00BAZ

This self-diagnosis has the one trip detection logic.

DTC No.	Trouble diagnosis name	DTC detecting condition	Possible cause
P1122 1122	Electric throttle control performance problem	Electric throttle control function does not operate properly.	● Harness or connectors (Throttle control motor circuit is open or shorted) ● Electric throttle control actuator

FAIL-SAFE MODE

When the malfunction is detected, ECM enters fail-safe mode and the MIL lights up.

Engine operating condition in fail-safe mode
ECM stops the electric throttle control actuator control, throttle valve is maintained at a fixed opening (approx. 5 degrees) by the return spring.

DTC Confirmation Procedure

UBS00BB0

NOTE:
If DTC Confirmation Procedure has been previously conducted, always turn ignition switch OFF and wait at least 10 seconds before conducting the next test.
TESTING CONDITION:
Before performing the following procedure, confirm that battery voltage is more than 11V when engine is running.

WITH CONSULT-II

1. Turn ignition switch ON and wait at least 2 seconds.
2. Select “DATA MONITOR” mode with CONSULT-II.
3. Start engine and let it idle for 5 seconds.
4. If DTC is detected, go to EC-402, "Diagnostic Procedure" .

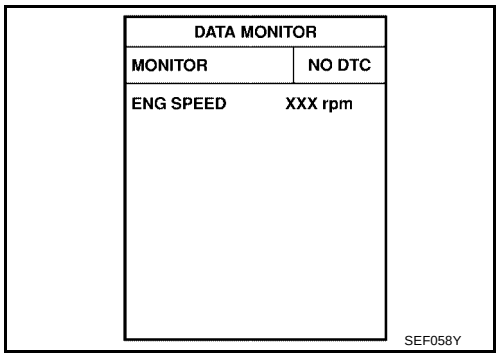

WITH GST

Follow the procedure “WITH CONSULT-II” above.

Wiring Diagram

UBS00BB1

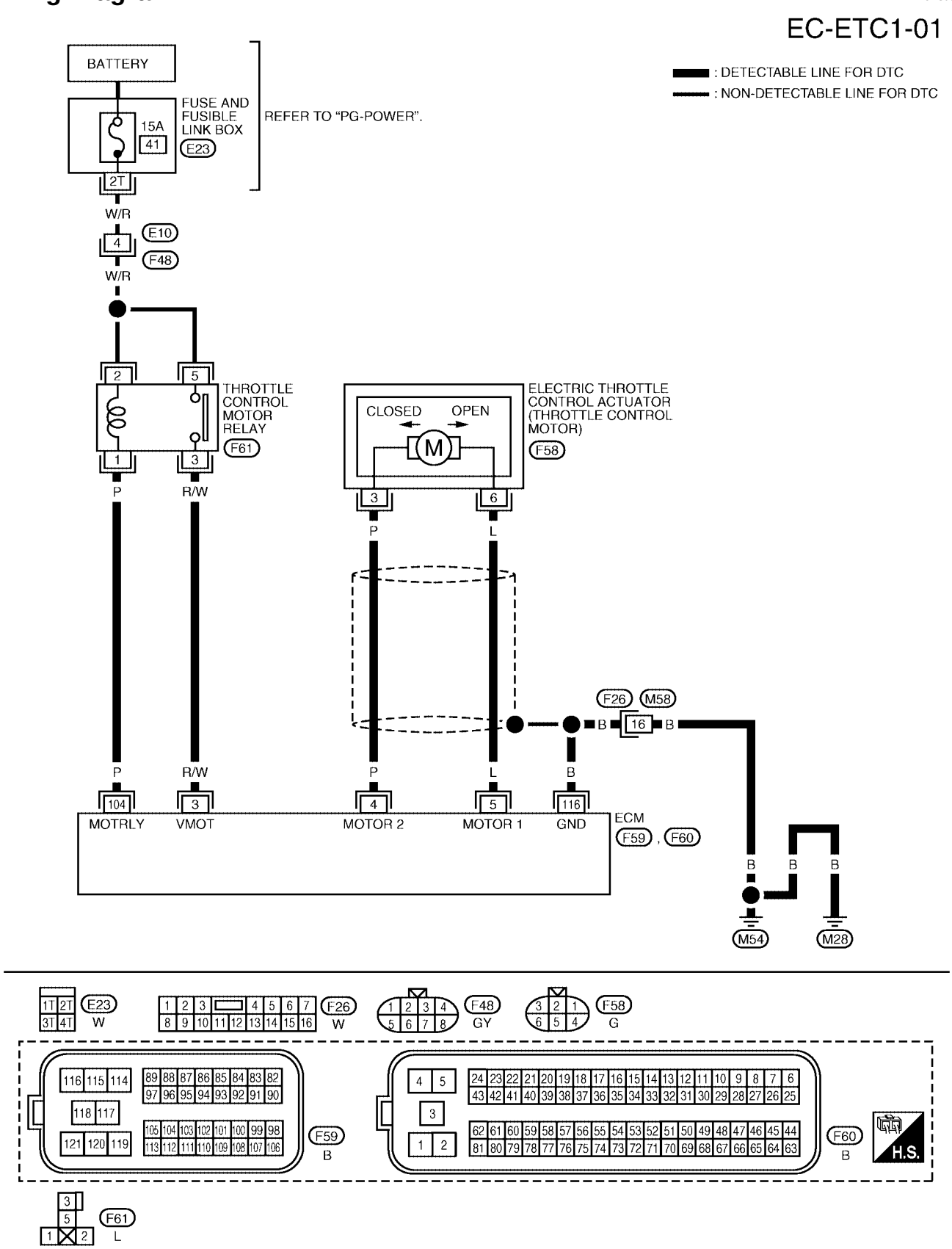

Specification data are reference values and are measured between each terminal and ground.
Pulse signal is measured by CONSULT-II.

CAUTION:
Do not use ECM ground terminals when measuring input/output voltage. Doing so may result in damage to the ECM's transistor. Use a ground other than ECM terminals, such as the ground.

TERMINAL NO.	WIRE COLOR	ITEM	CONDITION	DATA (DC Voltage)
3	R/W	Throttle control motor power supply	**[Ignition switch: ON]**	BATTERY VOLTAGE (11 - 14V)
4	P	Throttle control motor (Close)	**[Ignition switch: ON]** ● Engine stopped ● Shift lever: D (A/T), 1st (M/T) ● Accelerator pedal: Fully released	0 - 14V★ 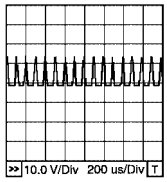 PBIB0534E
5	L	Throttle control motor (Open)	**[Ignition switch: ON]** ● Engine stopped ● Shift lever: D (A/T), 1st (M/T) ● Accelerator pedal: Fully depressed	0 - 14V★ 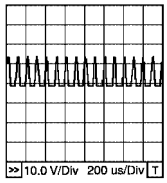 PBIB0533E
104	P	Throttle control motor relay	**[Ignition switch: OFF]**	BATTERY VOLTAGE (11 - 14V)
			[Ignition switch: ON]	0 - 1.0V
116	B	ECM ground	**[Engine is running]** ● Idle speed	Engine ground

★: Average voltage for pulse signal (Actual pulse signal can be confirmed by oscilloscope.)

Diagnostic Procedure

UBS00BB2

1. CHECK GROUND CONNECTIONS

1. Turn ignition switch OFF.
2. Loosen and retighten two ground screws on the body.
   Refer to EC-171, "Ground Inspection" .

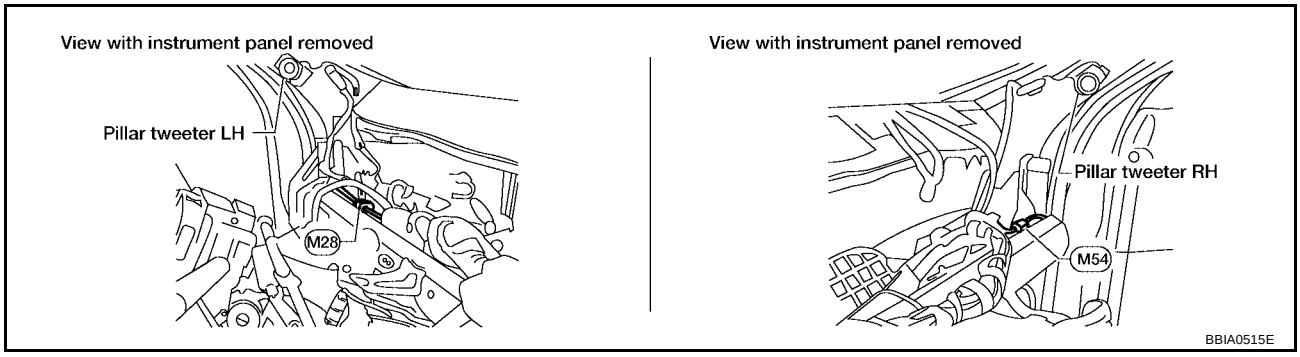

OK or NG

OK >> GO TO 2.
NG >> Repair or replace ground connections.

2. CHECK THROTTLE CONTROL MOTOR RELAY SIGNAL CIRCUIT

Check voltage between ECM terminal 3 and ground under the following conditions with CONSULT-II or tester.

Ignition switch	Voltage
OFF	Approximately 0V
ON	Battery voltage (11 - 14V)

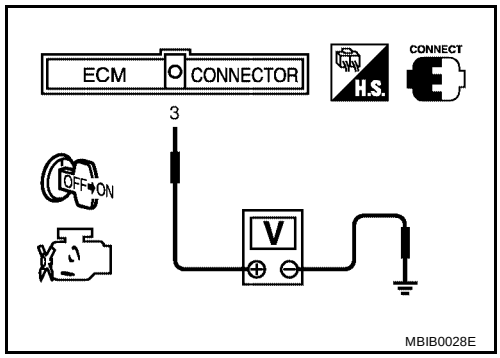

OK or NG

OK >> GO TO 8.
NG >> GO TO 3.

3. CHECK THROTTLE CONTROL MOTOR RELAY POWER SUPPLY CIRCUIT

1. Turn ignition switch OFF.
2. Disconnect throttle control motor relay.

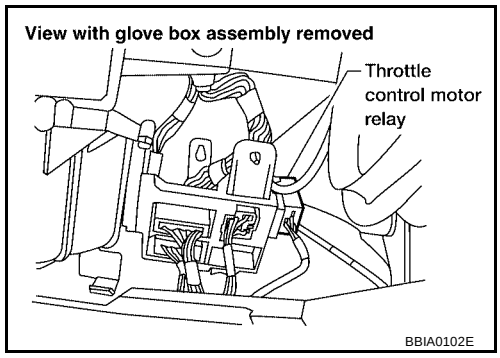

3. Check voltage between throttle control motor relay terminals 2, 5 and ground.

Voltage: Battery voltage

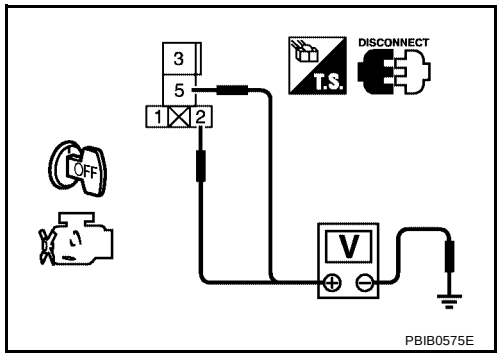

OK or NG

OK >> GO TO 5.
NG >> GO TO 4.

4. DETECT MALFUNCTIONING PART

Check the following.

- Harness connectors E10, F48
- 15A fuse
- Harness for open or short between throttle control motor relay and fuse

>> Repair open circuit or short to ground or short to power in harness or connectors.

5. CHECK THROTTLE CONTROL MOTOR RELAY INPUT SIGNAL CIRCUIT FOR OPEN AND SHORT

1. Disconnect ECM harness connector.
2. Check harness continuity between ECM terminal 3 and throttle control motor relay terminal 3. Refer to Wiring Diagram.

Continuity should exist.

3. Also check harness for short to ground and short to power.

OK or NG

OK >> GO TO 6.
NG >> Repair open circuit or short to ground or short to power in harness or connectors.

6. CHECK THROTTLE CONTROL MOTOR RELAY OUTPUT SIGNAL CIRCUIT FOR OPEN AND SHORT

1. Check harness continuity between ECM terminal 104 and throttle control motor relay terminal 1. Refer to Wiring Diagram.

Continuity should exist.

2. Also check harness for short to ground and short to power.

OK or NG

OK >> GO TO 7.
NG >> Repair open circuit or short to ground or short to power in harness or connectors.

7. CHECK THROTTLE CONTROL MOTOR RELAY

Refer to EC-405, "Component Inspection" .

OK or NG

OK >> GO TO 11.
NG >> Replace throttle control motor relay.

8. CHECK THROTTLE CONTROL MOTOR OUTPUT SIGNAL CIRCUIT FOR OPEN OR SHORT

1. Turn ignition switch OFF.
2. Disconnect electric throttle control actuator harness connector.
3. Disconnect ECM harness connector.
4. Check harness continuity between the following terminals. Refer to Wiring Diagram.

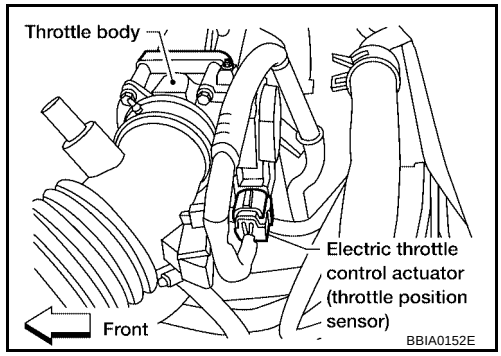

Electric throttle control actuator terminal	ECM terminal	Continuity
3	4	Should exist
	5	Should not exist
6	4	Should not exist
	5	Should exist

5. Also check harness for short to ground and short to power.

OK or NG

OK >> GO TO 9.
NG >> Repair open circuit or short to ground or short to power in harness or connectors.

9. CHECK ELECTRIC THROTTLE CONTROL ACTUATOR VISUALLY

1. Remove the intake air duct.
2. Check if foreign matter is caught between the throttle valve and the housing.

OK or NG

OK >> GO TO 10.
NG >> Remove the foreign matter and clean the electric throttle control actuator inside.

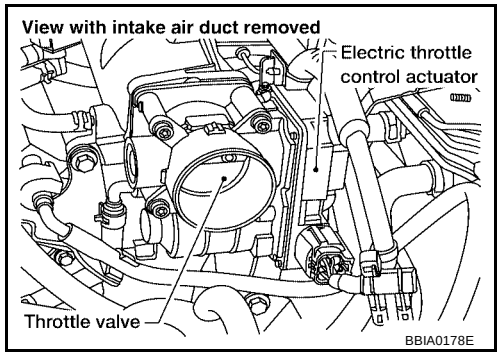

10. CHECK THROTTLE CONTROL MOTOR

Refer to EC-405, "Component Inspection" .

OK or NG

OK >> GO TO 11.
NG >> GO TO 12.

11. CHECK INTERMITTENT INCIDENT

Refer to EC-164, "TROUBLE DIAGNOSIS FOR INTERMITTENT INCIDENT" .

OK or NG

OK >> GO TO 12.
NG >> Repair or replace harness or connectors.

12. REPLACE ELECTRIC THROTTLE CONTROL ACTUATOR

1. Replace the electric throttle control actuator.
2. Perform EC-92, "Throttle Valve Closed Position Learning" .
3. Perform EC-92, "Idle Air Volume Learning" .

>> **INSPECTION END**

Component Inspection

UBS00BB3

THROTTLE CONTROL MOTOR RELAY

1. Apply 12V direct current between relay terminals 1 and 2.
2. Check continuity between relay terminals 3 and 5.

Conditions	Continuity
12V direct current supply between terminals 1 and 2	Yes
No current supply	No

3. If NG, replace throttle control motor relay.

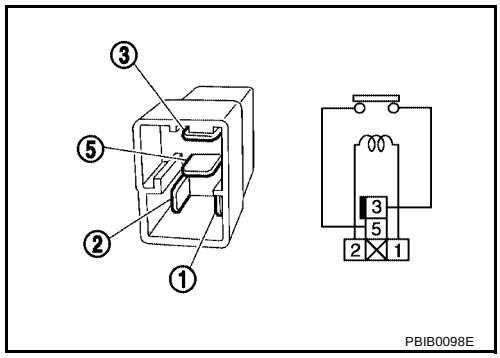

THROTTLE CONTROL MOTOR

1. Disconnect electric throttle control actuator harness connector.

2. Check resistance between terminals 3 and 6.

   Resistance: Approximately 1 - 15 Ω [at 25 °C (77°F)]

3. If NG, replace electric throttle control actuator and go to next step.
4. Perform EC-92, "Throttle Valve Closed Position Learning" .
5. PerformEC-92, "Idle Air Volume Learning" .

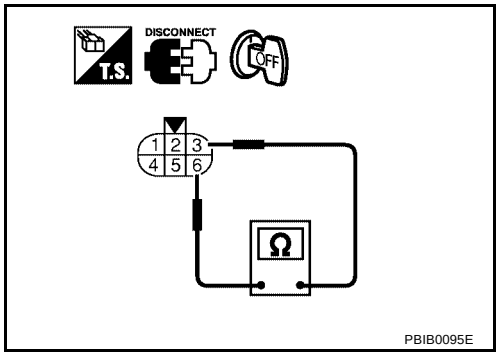

Removal and Installation

UBS00BB4

ELECTRIC THROTTLE CONTROL ACTUATOR

Refer to EM-15, "OUTER COMPONENT PARTS" .

DTC P1124, P1126 THROTTLE CONTROL MOTOR RELAY

PFP:16119

Component Description

UBS00BB5

Power supply for the throttle control motor is provided to the ECM via throttle control motor relay. The throttle control motor relay is ON/OFF controlled by the ECM. When the ignition switch is turned ON, the ECM sends an ON signal to throttle control motor relay and battery voltage is provided to the ECM. When the ignition switch is turned OFF, the ECM sends an OFF signal to throttle control motor relay and battery voltage is not provided to the ECM.

CONSULT-II Reference Value in Data Monitor Mode

UBS00BB6

Specification data are reference values.

MONITOR ITEM	CONDITION	SPECIFICATION
THRTL RELAY	● Ignition switch: ON	ON

On Board Diagnosis Logic

UBS00BB7

These self-diagnoses have the one trip detection logic.

DTC No.	Trouble diagnosis name	DTC detecting condition	Possible cause
P1124 1124	Throttle control motor relay circuit short	ECM detects the throttle control motor relay is stuck ON.	● Harness or connectors (Throttle control motor relay circuit is shorted) ● Throttle control motor relay
P1126 1126	Throttle control motor relay circuit open	ECM detects a voltage of power source for throttle control motor is excessively low.	● Harness or connectors (Throttle control motor relay circuit is open) ● Throttle control motor relay

FAIL-SAFE MODE

When the malfunction is detected, ECM enters fail-safe mode and the MIL lights up.

Engine operating condition in fail-safe mode
ECM stops the electric throttle control actuator control, throttle valve is maintained at a fixed opening (approx. 5 degrees) by the return spring.

DTC Confirmation Procedure

UBS00BB8

NOTE:
If DTC Confirmation Procedure has been previously conducted, always turn ignition switch OFF and wait at least 10 seconds before conducting the next test.

PROCEDURE FOR DTC P1124

TESTING CONDITION:
Before performing the following procedure, confirm that battery voltage is more than 8V.

With CONSULT-II

1. Turn ignition switch ON and wait at least 1 second.
2. Select “DATA MONITOR” mode with CONSULT-II.
3. If DTC is detected, go to EC-410, "Diagnostic Procedure" .

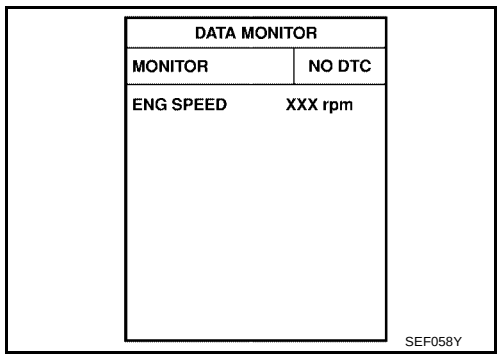

With GST

Follow the procedure “With CONSULT-II” above.

PROCEDURE FOR DTC P1126

With CONSULT-II

1. Turn ignition switch ON and wait at least 2 seconds.
2. Select “DATA MONITOR” mode with CONSULT-II.
3. Start engine and let it idle for 5 seconds.
4. If DTC is detected, go to EC-410, "Diagnostic Procedure" .

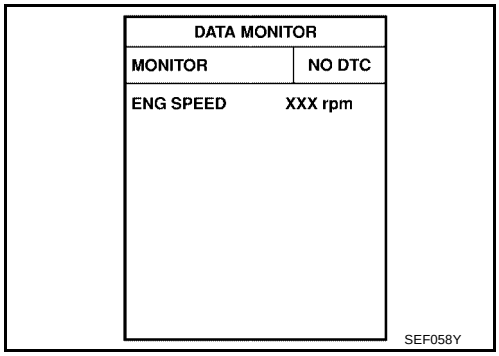

With GST

Follow the procedure “With CONSULT-II” above.

Wiring Diagram

UBS00BB9

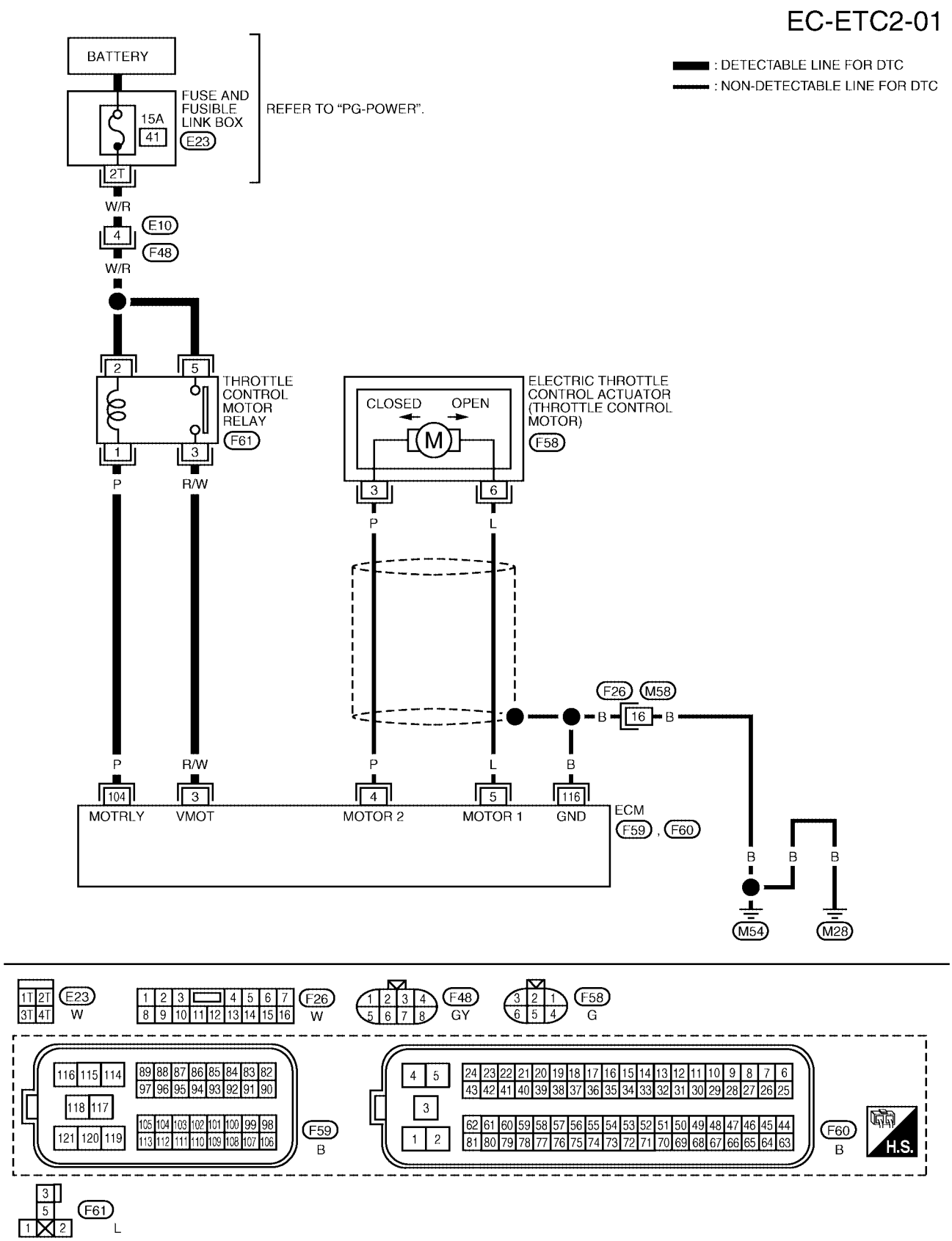

Specification data are reference values and are measured between each terminal and ground.

CAUTION:

Do not use ECM ground terminals when measuring input/output voltage. Doing so may result in damage to the ECM's transistor. Use a ground other than ECM terminals, such as the ground.

TERMINAL NO.	WIRE COLOR	ITEM	CONDITION	DATA (DC Voltage)
3	R/W	Throttle control motor power supply	**[Ignition switch: ON]**	BATTERY VOLTAGE (11 - 14V)
104	P	Throttle control motor relay	**[Ignition switch: OFF]**	BATTERY VOLTAGE (11 - 14V)
			[Ignition switch: ON]	0 - 1.0V

Diagnostic Procedure

UBS00BBA

1. CHECK THROTTLE CONTROL MOTOR RELAY POWER SUPPLY CIRCUIT

1. Turn ignition switch OFF.
2. Disconnect throttle control motor relay harness connector.

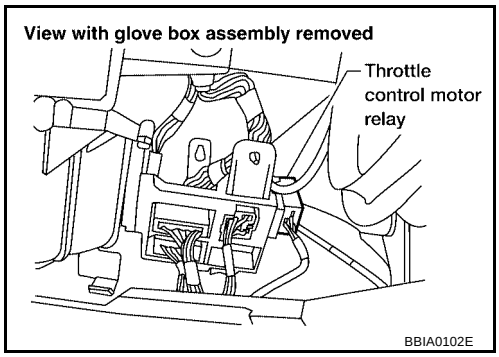

3. Check voltage between throttle control motor relay terminal 2, 5 and ground with CONSULT-II or tester.

Voltage: Battery voltage

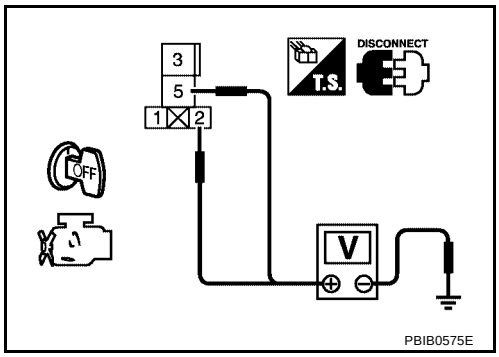

OK or NG

OK >> GO TO 3.
NG >> GO TO 2.

2. DETECT MALFUNCTIONING PART

Check the following.

- Harness connectors E10, F48
- Fuse and fusible link connector E23
- 15A fuse
- Harness for open or short between throttle control motor relay and battery

>> Repair or replace harness or connectors.

3. CHECK THROTTLE CONTROL MOTOR RELAY INPUT SIGNAL CIRCUIT FOR OPEN AND SHORT

1. Disconnect ECM harness connector.
2. Check continuity between ECM terminal 3 and throttle control motor relay terminal 3.
   Refer to Wiring Diagram.

   Continuity should exist.

3. Also check harness for short to ground and short to power.

OK or NG

OK >> GO TO 4.
NG >> Repair open circuit or short to ground or short to power in harness or connectors.

4. CHECK THROTTLE CONTROL MOTOR RELAY OUTPUT SIGNAL CIRCUIT FOR OPEN AND SHORT

1. Check continuity between ECM terminal 104 and throttle control motor relay terminal 1.
   Refer to Wiring Diagram.

   Continuity should exist.

2. Also check harness for short to ground and short to power.

OK or NG

OK >> GO TO 5.
NG >> Repair open circuit or short to ground or short to power in harness or connectors.

5. CHECK THROTTLE CONTROL MOTOR RELAY

Refer to EC-411, "Component Inspection" .

OK or NG

OK >> GO TO 6.
NG >> Replace throttle control motor relay.

6. CHECK INTERMITTENT INCIDENT

Refer toEC-164, "TROUBLE DIAGNOSIS FOR INTERMITTENT INCIDENT" .

>> **INSPECTION END**

Component Inspection

UBS00BBB

THROTTLE CONTROL MOTOR RELAY

1. Apply 12V direct current between relay terminals 1 and 2.
2. Check continuity between relay terminals 3 and 5.

Conditions	Continuity
12V direct current supply between terminals 1 and 2	Yes
No current supply	No

3. If NG, replace throttle control motor relay.

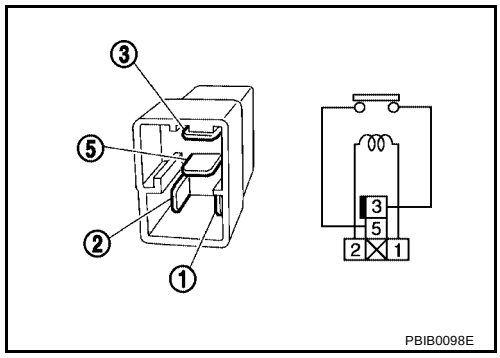

PBIB0098E

DTC P1128 THROTTLE CONTROL MOTOR

PFP:16119

Component Description

UBS00BBC

The throttle control motor is operated by the ECM and it opens and closes the throttle valve.
The current opening angle of the throttle valve is detected by the throttle position sensor and it provides feedback to the ECM to control the throttle control motor to make the throttle valve opening angle properly in response to driving condition.

On Board Diagnosis Logic

UBS00BBD

This self-diagnosis has the one trip detection logic.

DTC No.	Trouble diagnosis name	DTC detecting condition	Possible cause
P1128 1128	Throttle control motor circuit short	ECM detects short in both circuits between ECM and throttle control motor.	● Harness or connectors (Throttle control motor circuit is shorted.) ● Electric throttle control actuator (Throttle control motor)

FAIL-SAFE MODE

When the malfunction is detected, the ECM enters fail-safe mode and the MIL lights up.

Engine operating condition in fail-safe mode
ECM stops the electric throttle control actuator control, throttle valve is maintained at a fixed opening (approx. 5 degrees) by the return spring.

DTC Confirmation Procedure

UBS00BBE

NOTE:
If DTC Confirmation Procedure has been previously conducted, always turn ignition switch OFF and wait at least 10 seconds before conducting the next test.

WITH CONSULT-II

1. Turn ignition switch ON and wait at least 2 seconds.
2. Select “DATA MONITOR” mode with CONSULT-II.
3. Start engine and let it idle for 5 seconds.
4. If DTC is detected, go to EC-414, "Diagnostic Procedure" .

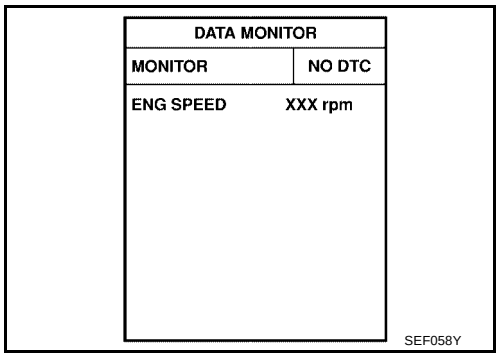

WITH GST

Follow the procedure “WITH CONSULT-II” above.

Wiring Diagram

UBS00BBF

EC-ETC3-01

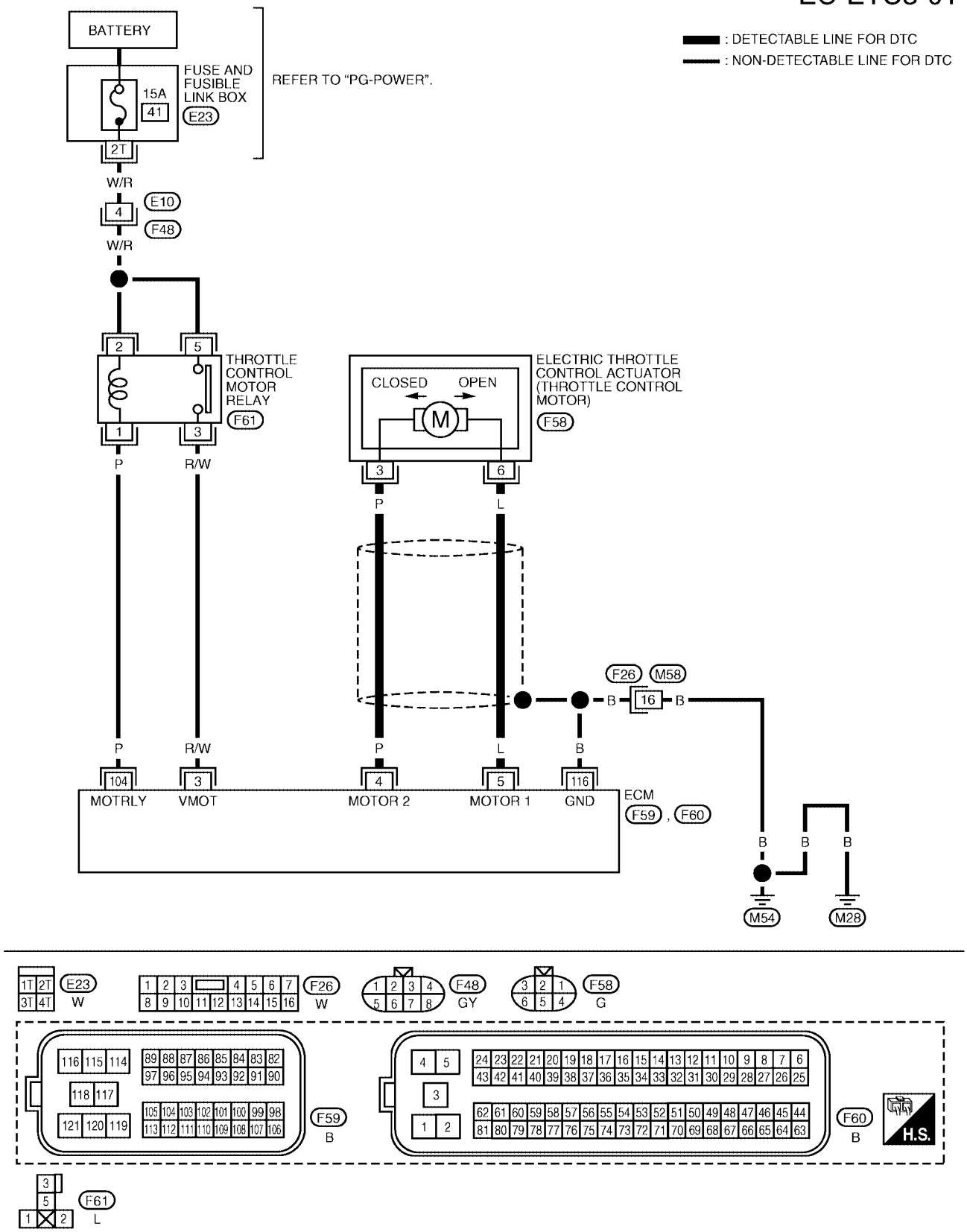

BBWA1440E

Specification data are reference values and are measured between each terminal and ground.
Pulse signal is measured by CONSULT-II.

CAUTION:
Do not use ECM ground terminals when measuring input/output voltage. Doing so may result in damage to the ECM's transistor. Use a ground other than ECM terminals, such as the ground.

TERMINAL NO.	WIRE COLOR	ITEM	CONDITION	DATA (DC Voltage)
4	P	Throttle control motor (Close)	**[Ignition switch: ON]** ● Engine stopped ● Shift lever: D (A/T), 1st (M/T) ● Accelerator pedal is releasing	0 - 14V★ 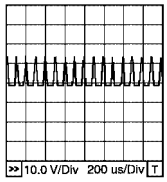 PBIB0534E
5	L	Throttle control motor (Open)	**[Ignition switch: ON]** ● Engine stopped ● Shift lever: D (A/T), 1st (M/T) ● Accelerator pedal is depressing	0 - 14V★ 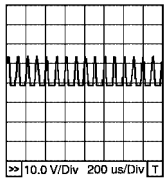 PBIB0533E

★: Average voltage for pulse signal (Actual pulse signal can be confirmed by oscilloscope.)

Diagnostic Procedure

UBS00BBG

1. CHECK GROUND CONNECTIONS

1. Turn ignition switch OFF.
2. Loosen and retighten two ground screws on the body.
   Refer to EC-171, "Ground Inspection" .

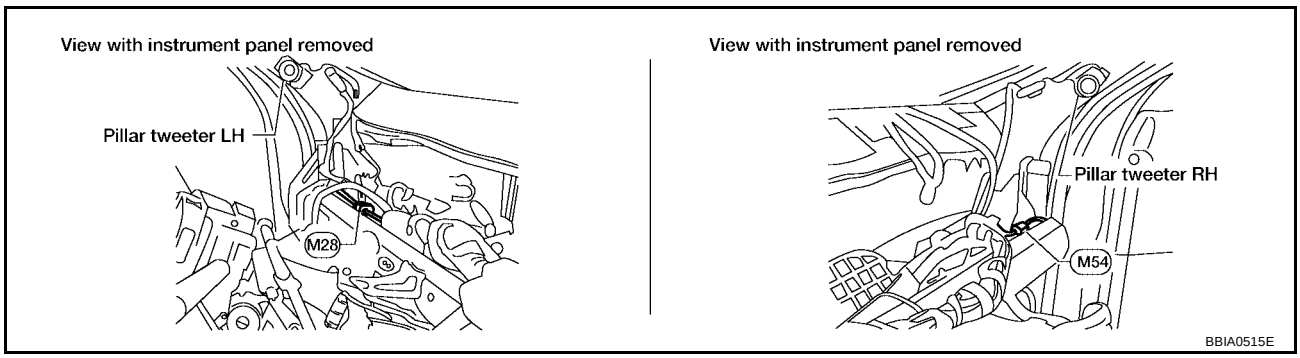

OK or NG

OK >> GO TO 2.
NG >> Repair or replace ground connections.

2. CHECK THROTTLE CONTROL MOTOR OUTPUT SIGNAL CIRCUIT FOR OPEN OR SHORT

1. Turn ignition switch OFF.
2. Disconnect electric throttle control actuator harness connector.
3. Disconnect ECM harness connector.
4. Check harness continuity between the following terminals. Refer to Wiring Diagram.

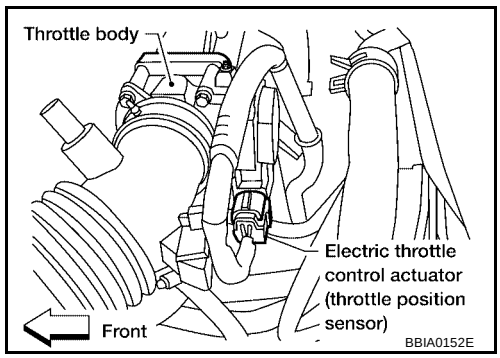

Electric throttle control actuator terminal	ECM terminal	Continuity
3	4	Should exist
	5	Should not exist
6	4	Should not exist
	5	Should exist

5. Also check harness for short to ground and short to power.

OK or NG

OK >> GO TO 3.
NG >> Repair open circuit or short to ground or short to power in harness or connectors.

3. CHECK THROTTLE CONTROL MOTOR

Refer to EC-415, "Component Inspection" .

OK or NG

OK >> GO TO 4.
NG >> GO TO 5.

4. CHECK INTERMITTENT INCIDENT

Refer to EC-164, "TROUBLE DIAGNOSIS FOR INTERMITTENT INCIDENT" .

OK or NG

OK >> GO TO 5.
NG >> Repair or replace harness or connectors.

5. REPLACE ELECTRIC THROTTLE CONTROL ACTUATOR

1. Replace the electric throttle control actuator.
2. Perform EC-92, "Throttle Valve Closed Position Learning" .
3. Perform EC-92, "Idle Air Volume Learning" .

>> **INSPECTION END**

Component Inspection

UBS00BBH

THROTTLE CONTROL MOTOR

1. Disconnect electric throttle control actuator harness connector.
2. Check resistance between terminals 3 and 6.

Resistance: Approximately 1 - 15 Ω [at 25 °C (77°F)]

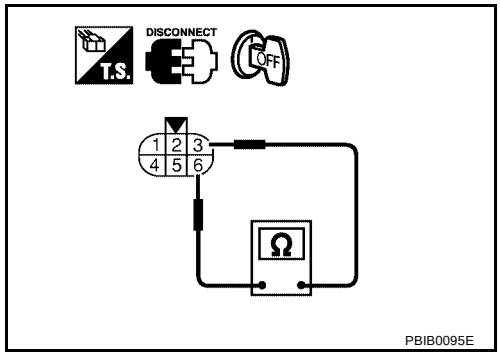

3. If NG, replace electric throttle control actuator and go to next step.
4. Perform EC-92, "Throttle Valve Closed Position Learning" .
5. Perform EC-92, "Idle Air Volume Learning" .

Removal and Installation

UBS00BBI

ELECTRIC THROTTLE CONTROL ACTUATOR

Refer to EM-15, "OUTER COMPONENT PARTS" .

DTC P1132 SWIRL CONTROL VALVE

PFP:00000

Component Description

UBS00BBJ

Swirl control valve consists of actuator and valve. The valve is installed in the intake manifold, and the actuator is connected to the rear end of the valve shaft.
The swirl control valve uses a step motor which has four winding phases. It operates according to the output pulse signal of the ECM. Two windings are turned ON and OFF in sequence. Each time an ON pulse is issued, the valve opens or closes. When no change in the control position is needed, the ECM does not issue the pulse signal. A certain voltage signal is issued so that the valve remains at that particular opening.

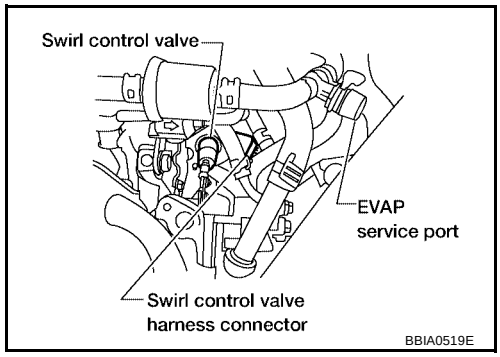

CONSULT-II Reference Value in Data Monitor Mode

UBS00BBK

Specification data are reference values.

MONITOR ITEM	CONDITION		SPECIFICATION
SWL C/V (B1)	● Engine: Idle the engine	Engine coolant temperature is below 44°C (111°F)	0 - 5 step
		Engine coolant temperature is above 45°C (113°F)	115 - 120 step
SWL/C POSI SE	● Engine: Idle the engine	Engine coolant temperature is below 44°C (111°F)	Approx. 0 deg.
		Engine coolant temperature is above 45°C (113°F)	Approx. 80 deg.

On Board Diagnosis Logic

UBS00BBL

DTC No.	Trouble diagnosis name	DTC Detecting Condition	Possible Cause
P1132 1132	Swirl control valve circuit	An improper voltage signal is sent to ECM.	● Harness or connectors (The swirl control valve circuit is open or shorted.) ● Swirl control valve control solenoid valve

DTC Confirmation Procedure

UBS00BBM

NOTE:
If DTC Confirmation Procedure has been previously conducted, always turn ignition switch OFF and wait at least 10 seconds before conducting the next test.

WITH CONSULT-II

1. Turn ignition switch ON and wait at least 2 seconds.
2. Select “DATA MONITOR” mode with CONSULT-II.
3. Start engine and let it idle for at least 10 seconds.
4. Turn ignition switch OFF and wait at least 10 seconds.
5. Turn ignition switch ON and wait at least 2 seconds.
6. Start engine and let it idle for at least 10 seconds.
7. Maintain engine speed at about 2,000 rpm for at least 10 seconds.
8. Turn ignition switch OFF, wait at least 10 seconds and then turn ON.
   If 1st trip DTC is detected, go to EC-420, "Diagnostic Procedure"
   .
   If 1st trip DTC is not detected, go to next step.
9. Perform step 5 through 8 three times.

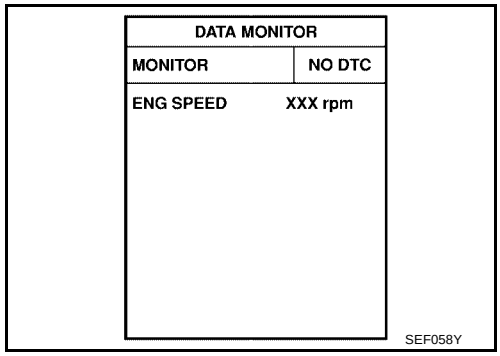

WITH GST

Follow the procedure “WITH CONSULT-II” above.

Wiring Diagram

UBS00BBN

EC-SWL/V-01

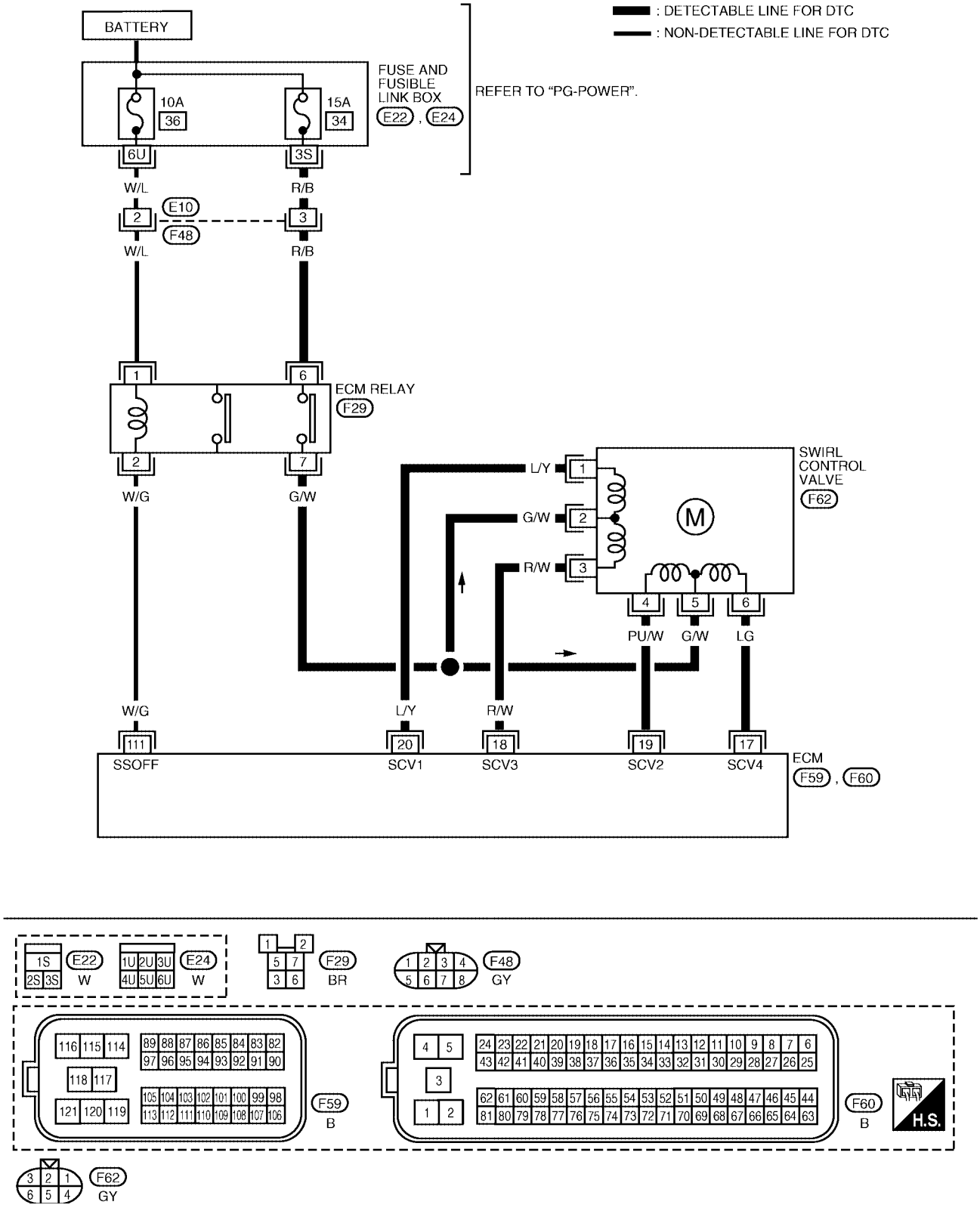

Specification data are reference values and are measured between each terminal and ground.

CAUTION:

Do not use ECM ground terminals when measuring input/output voltage. Doing so may result in damage to the ECM's transistor. Use a ground other than ECM terminals, such as the ground.

TERMINAL NO.	WIRE COLOR	ITEM	CONDITION	DATA (DC Voltage)
17 18 19 20	LG R/W PU/W L/Y	Swirl control valve	**[Engine is running]** ● Idle speed	0.1 - 14V

Diagnostic Procedure

UBS00BBO

1. CHECK SWIRL CONTROL VALVE POWER SUPPLY CIRCUIT

1. Turn ignition switch OFF.
2. Disconnect swirl control valve harness connector.
3. Turn ignition switch ON.

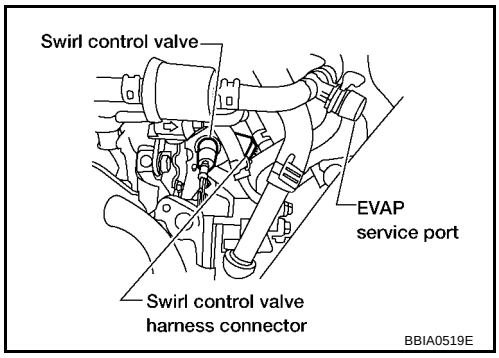

4. Check voltage between swirl control valve terminals 2, 5 and ground with CONSULT-II or tester.

Voltage: Battery voltage

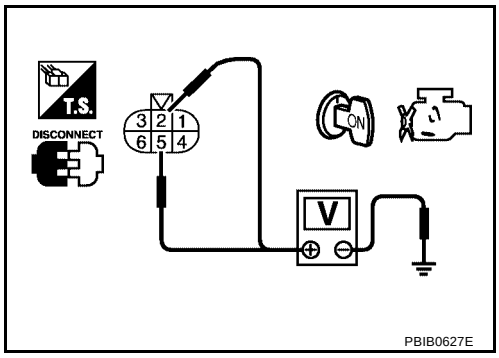

OK or NG

OK >> GO TO 3.
NG >> GO TO 2.

2. DETECT MALFUNCTIONING PART

Check the following.

- Harness for open or short between swirl control valve and ECM relay

>> Repair open circuit or short to ground or short to power in harness or connectors.

3. CHECK SWIRL CONTROL VALVE OUTPUT SIGNAL CIRCUIT FOR OPEN AND SHORT

1. Turn ignition switch OFF.
2. Disconnect ECM harness connector.
3. Check harness continuity between ECM terminals and swirl control valve terminals as follows. Refer to Wiring Diagram.

ECM terminal	Swirl volume control valve
17	6
18	3
19	4
20	1

Continuity should exist.

4. Also check harness for short to ground and short to power.

OK or NG

OK >> GO TO 4.
NG >> Repair open circuit or short to ground or short to power in harness or connectors.

4. CHECK SWIRL CONTROL VALVE

Check resistance between swirl control valve terminal 2 and terminals 1, 3, terminal 5 and terminals 4, 6.

Resistance: 20.5 - 23.5Ω [At 20°C (68°F)]

OK or NG

OK >> GO TO 5.
NG >> Replace intake manifold assembly.

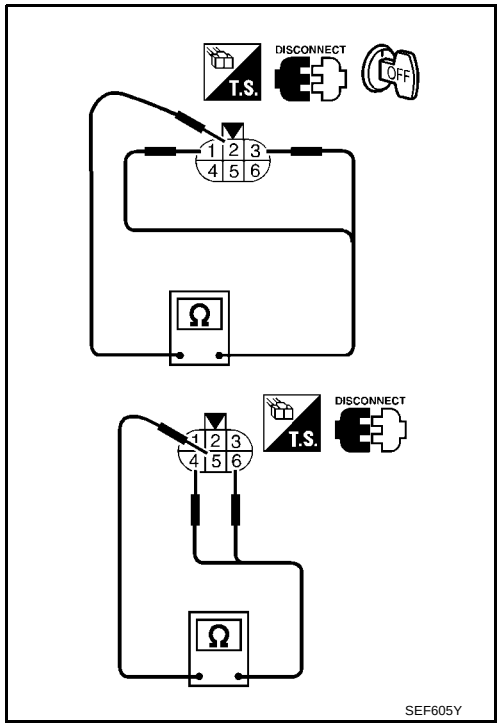

5. CHECK INTERMITTENT INCIDENT

Refer to EC-164, "TROUBLE DIAGNOSIS FOR INTERMITTENT INCIDENT" .

>> **INSPECTION END**

Removal and Installation

UBS00BBP

SWIRL CONTROL VALVE

Refer to EM-15, "Removal and Installation" .

DTC P1137 SWIRL CONTROL VALVE POSITION SENSOR

PFP:23731

Component Description

UBS00BBQ

Swirl control valve position sensor is installed on the intake manifold. The sensor is connected to the front end of the valve shaft of the swirl control valve.
The sensor responds to the valve shaft movement. This sensor is a kind of potentiometer which transforms the swirl control valve position into output voltage, and emits the voltage signal to the ECM.

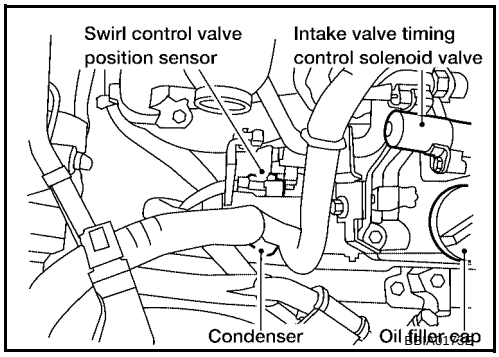

CONSULT-II Reference Value in Data Monitor Mode

UBS00BBR

Specification data are reference values.

MONITOR ITEM	CONDITION		SPECIFICATION
SWL C/V (B1)	● Engine speed: Idle	Engine coolant temperature is below 44°C (111°F).	0 - 5 step
		Engine coolant temperature is above 45°C (113°F).	115 - 120 step
SWL/C POSI SE	● Engine: Idle the engine	Engine coolant temperature is below 44°C (111°F)	Approx. 0 deg.
		Engine coolant temperature is above 45°C (113°F)	Approx. 80 deg.

On Board Diagnosis Logic

UBS00BBS

NOTE:
If DTC P1137 is displayed with DTC P1229, first perform the trouble diagnosis for DTC P1229.

DTC No.	Trouble diagnosis name	DTC Detecting Condition	Possible Cause
P1137 1137	Swirl control valve position sensor circuit	An excessively low or high voltage from the sensor is sent to ECM.	● Harness or connectors (Swirl control valve position sensor circuit is open or shorted.) ● Swirl control valve position sensor ● Harness or connectors (Swirl control valve circuit is open or shorted.) ● Swirl control valve

DTC Confirmation Procedure

UBS00BBT

NOTE:
If DTC Confirmation Procedure has been previously conducted, always turn ignition switch OFF and wait at least 10 seconds before conducting the next test.

WITH CONSULT-II

1. Turn ignition switch OFF and wait at least 10 seconds.
2. Turn ignition switch ON.
3. Select “DATA MONITOR” mode with CONSULT-II and wait at least 5 seconds.
   If 1st trip DTC is detected, go to EC-426, "Diagnostic Procedure"
   .

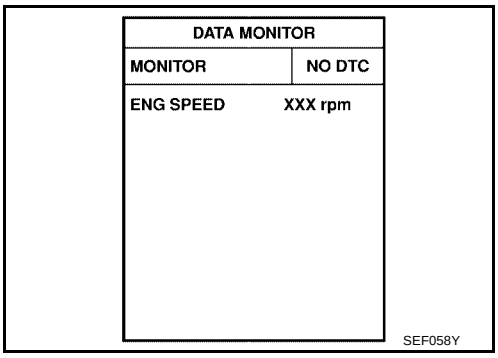

WITH GST

Follow the procedure “WITH CONSULT-II” above.

Wiring Diagram

UBS00BBU

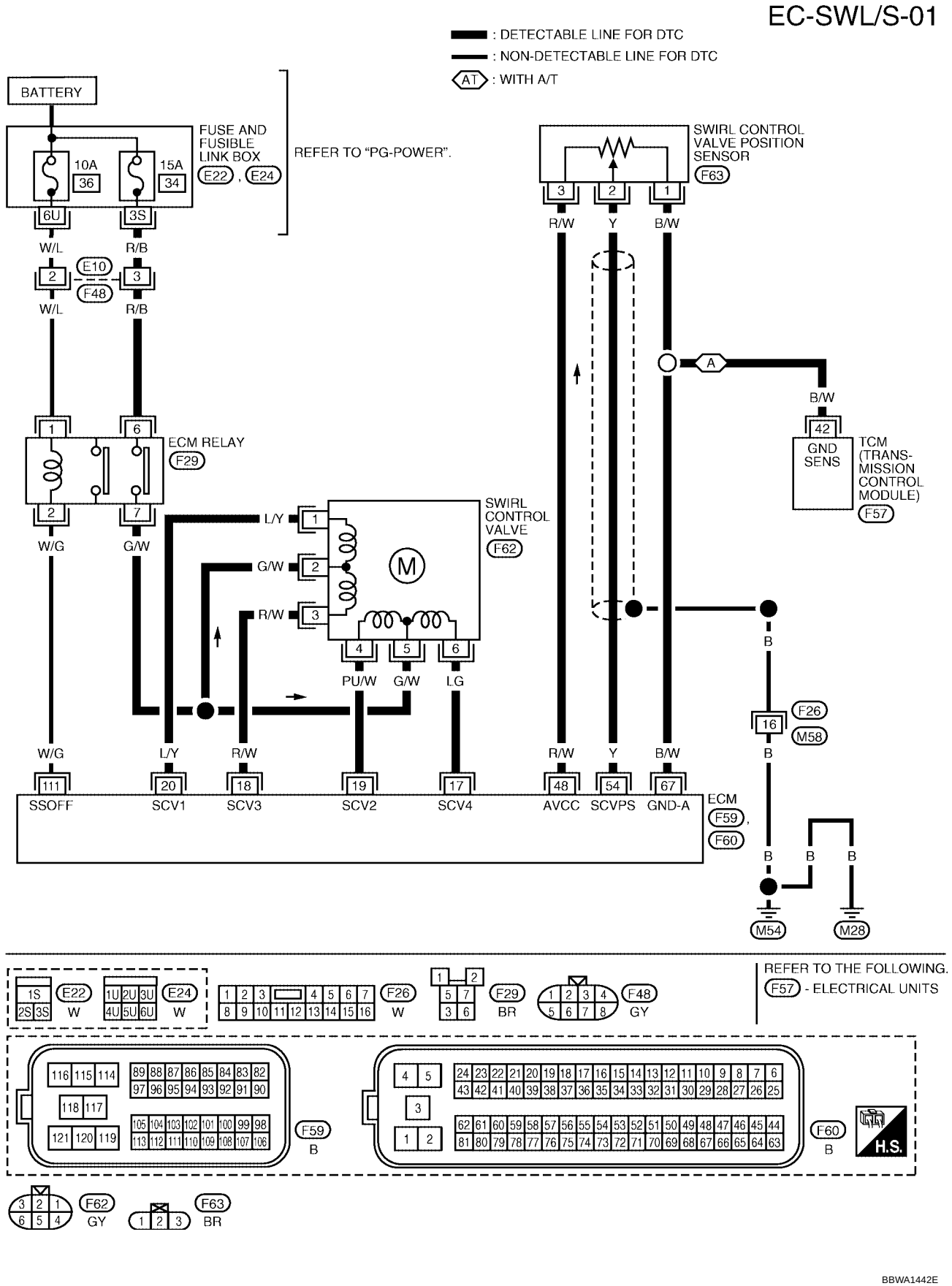

Specification data are reference values and are measured between each terminal and ground.

CAUTION:

Do not use ECM ground terminals when measuring input/output voltage. Doing so may result in damage to the ECM's transistor. Use a ground other than ECM terminals, such as the ground.

TERMINAL NO.	WIRE COLOR	ITEM	CONDITION	DATA (DC Voltage)
17 18 19 20	LG R/W PU/W L/Y	Swirl control valve	**[Engine is running]** ● Idle speed	0.1 - 14V
48	R/W	Sensor power supply	**[Ignition switch: ON]**	Approximately 5V
54	Y	Swirl control valve position sensor	**[Engine is running]** ● Idle speed ● Engine coolant temperature is below 44°C (111°F).	Approximately 5V
			[Engine is running] ● **Warm-up condition** ● Idle speed ● Engine coolant temperature is above 45°C (113°F).	0 - 1.0V
67	B/W	Sensor ground	**[Engine is running]** ● **Warm-up condition** ● Idle speed	Approximately 0V
111	W/G	ECM relay (Self shut-off)	**[Engine is running]** **[Ignition switch: OFF]** ● For a few seconds after turning ignition switch OFF	0 - 1.0V
			[Ignition switch: OFF] ● More than a few seconds after turning ignition switch OFF	BATTERY VOLTAGE (11 - 14V)

Diagnostic Procedure

UBS00BBV

1. CHECK SWIRL CONTROL VALVE POWER SUPPLY CIRCUIT

1. Turn ignition switch OFF.
2. Disconnect swirl control valve harness connector.
3. Turn ignition switch ON.

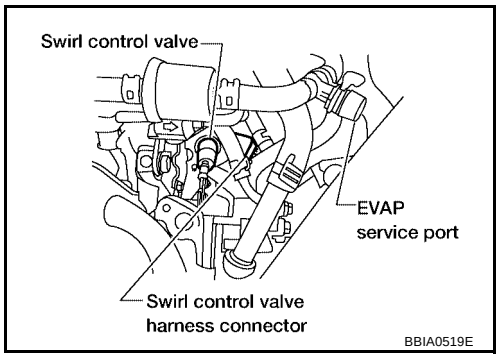

4. Check voltage between swirl control valve terminals 2, 5 and ground with CONSULT-II or tester.

Voltage: Battery voltage

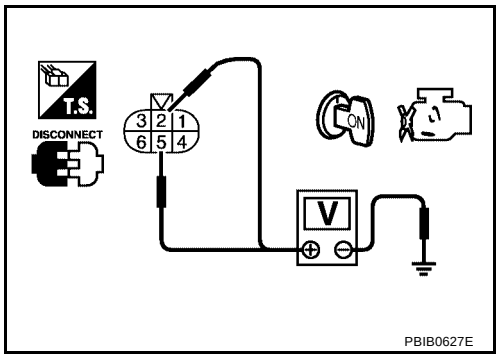

OK or NG

OK >> GO TO 3.
NG >> GO TO 2.

2. DETECT MALFUNCTIONING PART

Check the following.

- Harness for open or short between swirl control valve and ECM relay

>> Repair open circuit or short to ground or short to power in harness or connectors.

3. CHECK SWIRL CONTROL VALVE OUTPUT SIGNAL CIRCUIT FOR OPEN AND SHORT

1. Turn ignition switch OFF.
2. Disconnect ECM harness connector.
3. Check harness continuity between ECM terminals and swirl control valve terminals as follows. Refer to Wiring Diagram.

ECM terminal	Swirl volume control valve
17	6
18	3
19	4
20	1

Continuity should exist.

4. Also check harness for short to ground and short to power.

OK or NG

OK >> GO TO 4.
NG >> Repair open circuit or short to ground or short to power in harness or connectors.

4. CHECK SWIRL CONTROL VALVE

Check resistance between swirl control valve terminal 2 and terminals 1, 3, terminal 5 and terminals 4, 6.

Resistance: 20.5 - 23.5 Ω [at 20°C (68°F)]

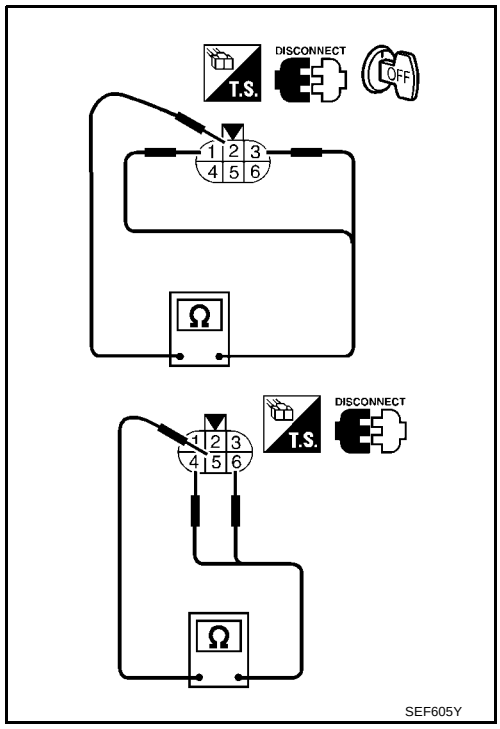

OK or NG

OK >> GO TO 5.
NG >> Replace intake manifold collector assembly.

5. CHECK GROUND CONNECTIONS

Loosen and retighten two ground screws on the body. Refer to EC-171, "Ground Inspection" .

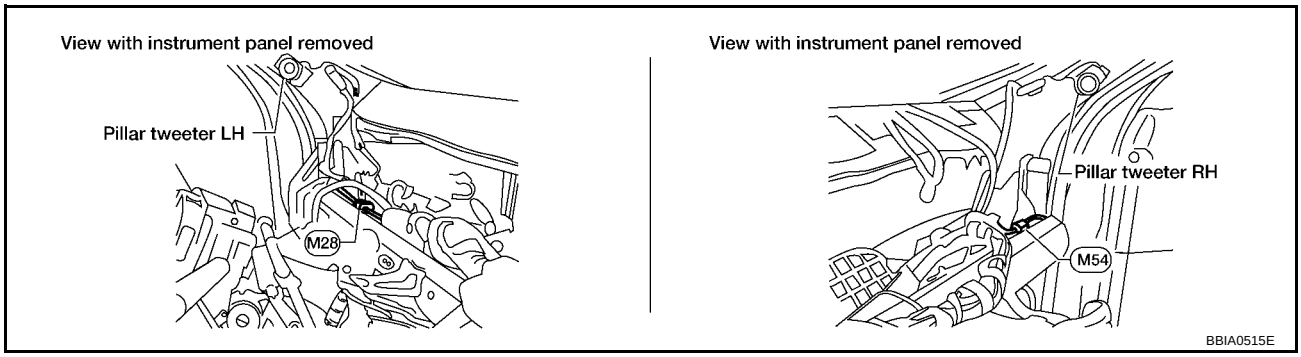

OK or NG

OK >> GO TO 6.
NG >> Repair or replace ground connections.

6. CHECK SWIRL CONTROL VALVE POSITION SENSOR POWER SUPPLY CIRCUIT

1. Disconnect swirl control valve position sensor harness connector.
2. Turn ignition switch ON.

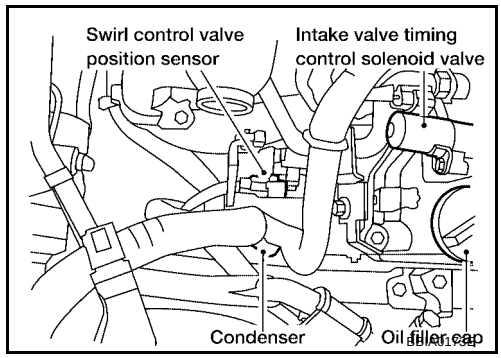

3. Check voltage between swirl control valve position sensor terminal 3 and ground with CONSULT-II or tester.

Voltage: Approximately 5V

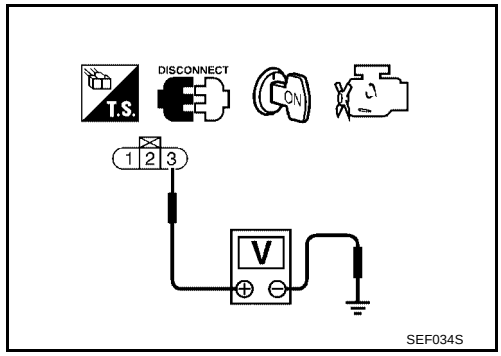

OK or NG

OK >> GO TO 7.
NG >> Repair open circuit or short to ground or short to power in harness connectors.

7. CHECK SWIRL CONTROL VALVE POSITION SENSOR GROUND CIRCUIT FOR OPEN AND SHORT

1. Turn ignition switch OFF.
2. Disconnect ECM harness connector.
3. Disconnect TCM harness connector.
4. Check harness continuity between swirl control valve position sensor terminal 1 and ECM terminal 67, TCM terminal 42.
   Refer to Wiring Diagram.

Continuity should exist.

5. Also check harness for short to ground and short to power.

OK or NG

OK >> GO TO 9.
NG >> GO TO 8.

8. DETECT MALFUNCTIONING PART

Check the following.

- Harness for open or short between swirl control valve position sensor and TCM
- Harness for open or short between swirl control valve position sensor and ECM

>> Repair open circuit or short to ground or short to power in harness or connectors.

9. CHECK SWIRL CONTROL VALVE POSITION SENSOR INPUT SIGNAL CIRCUIT FOR OPEN AND SHORT

1. Check harness continuity between ECM terminal 54 and swirl control valve position sensor terminal 2. Refer to Wiring Diagram.

   Continuity should exist.

2. Also check harness for short to ground and short to power.

OK or NG

OK (With CONSULT-II)>>GO TO 10.
NG >> Repair open circuit or short to ground or short to power in harness or connectors.

10. CHECK INTERMITTENT INCIDENT

Refer to EC-164, "TROUBLE DIAGNOSIS FOR INTERMITTENT INCIDENT" .

OK or NG

OK >> Replace intake manifold assembly.
NG >> Repair or replace.

Removal and Installation

UBS00BBW

SWIRL CONTROL VALVE CONTROL POSITION SENSOR

Refer to EM-15, "Removal and Installation" .

DTC P1138 SWIRL CONTROL VALVE

PFP:00000

Description

UBS00BBX

SYSTEM DESCRIPTION

Sensor	Input Signal to ECM	ECM function	Actuator
Throttle position sensor	Throttle position	Swirl control valve control	Swirl control valve
Battery	Battery voltage*		
Crankshaft position sensor (POS) Camshaft position sensor (PHASE)	Engine speed*		
Mass air flow sensor	Amount of intake air		
Engine coolant temperature sensor	Engine coolant temperature		
Swirl control valve position sensor	Swirl control valve position		

*: The ECM determines the start signal status by the signal of engine speed and battery voltage.

Swirl control valve has a valve portion in the intake passage of each cylinder.
While idling and during low engine coolant temperature, the swirl control valve closes, Thus the velocity of the air in the intake passage increases, promoting the vaporization of the fuel and producing a swirl in the combustion chamber.
Because of this operation, this system tends to increase the burning speed of the gas mixture, improve fuel consumption, and increase the stability in running conditions.
Also, except when idling and during low engine coolant temperature, this system opens the swirl control valve. In this condition, this system tends to increase power by improving intake efficiency via reduction of intake flow resistance, intake flow.
The swirl control valve is operated by the ECM.

Throttle position sensor (Idle position)	Engine coolant temperature	Swirl control valve
OFF	—	Open
ON	Above 45°C (113°F)	Open
	Below 44°C (111°F)	Close

COMPONENT DESCRIPTION

Swirl Control Valve

Swirl control valve consists of actuator and valve. The valve is installed in the intake manifold, and the actuator is connected to the rear end of the valve shaft.
The swirl control valve uses a step motor which has four winding phases. It operates according to the output pulse signal of the ECM. Two windings are turned ON and OFF in sequence. Each time an ON pulse is issued, the valve opens or closes. When no change in the control position is needed, the ECM does not issue the pulse signal. A certain voltage signal is issued so that the valve remains at that particular opening.

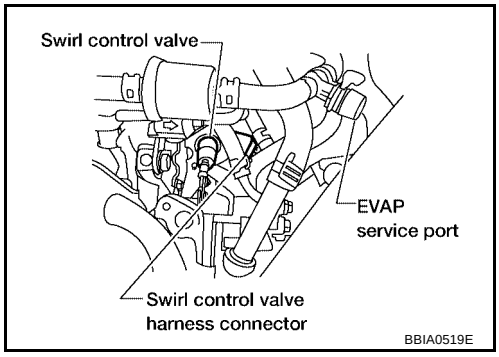

Swirl Control Valve Position Sensor

Swirl control valve position sensor is installed on the intake manifold. The sensor is connected to the front end of the valve shaft of the swirl control valve.
The sensor responds to the valve shaft movement. This sensor is a kind of potentiometer which transforms the swirl control valve position into output voltage, and emits the voltage signal to the ECM.

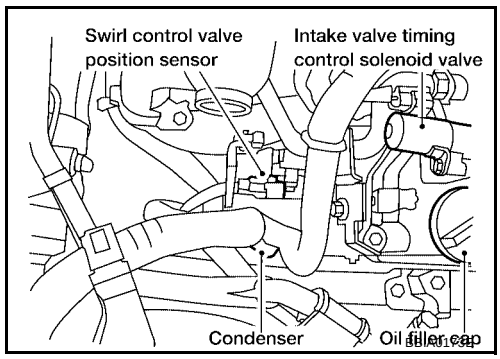

CONSULT-II Reference Value in Data Monitor Mode

UBS00BBY

Specification data are reference values.

MONITOR ITEM	CONDITION		SPECIFICATION
SWL C/V (B1)	● Engine speed: Idle	Engine coolant temperature is below 44°C (111°F).	0 - 5 step
		Engine coolant temperature is above 45°C (113°F).	115 - 120 step

On Board Diagnosis Logic

UBS00BBZ

DTC No.	Trouble diagnosis name	DTC Detecting Condition	Possible Cause
P1138 1138	Swirl control valve control system performance	The target opening angle of swirl control valve controlled by ECM and the input signal from swirl control valve position sensor is not in the normal rang.	● Harness or connectors (Swirl control valve position sensor circuit is open or shorted.) ● Swirl control valve position sensor ● Harness or connectors (Swirl control valve circuit is open or shorted.) ● Swirl control valve

DTC Confirmation Procedure

UBS00BC0

NOTE:
If DTC Confirmation Procedure has been previously conducted, always turn ignition switch OFF and wait at least 10 seconds before conducting the next test.

WITH CONSULT-II

1. Turn ignition switch ON and wait at least 2 seconds.
2. Select “DATA MONITOR” mode with CONSULT-II.
3. Start engine and let it idle for at least 10 seconds.
4. Turn ignition switch OFF and wait at least 10 seconds.
5. Turn ignition switch ON and wait at least 2 seconds.
6. Start engine and let it idle for at least 10 seconds.
7. Maintain engine speed at about 2,000 rpm for at least 10 seconds.
8. Turn ignition switch OFF, wait at least 10 seconds and then turn ON.
   If 1st trip DTC is detected, go to EC-434, "Diagnostic Procedure".
   If 1st trip DTC is not detected, go to next step.
9. Perform step 5 through 8 three times.

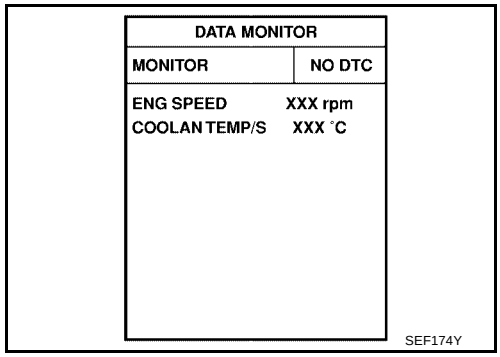

WITH GST

Follow the procedure “WITH CONSULT-II” above.

Wiring Diagram

UBS00BC1

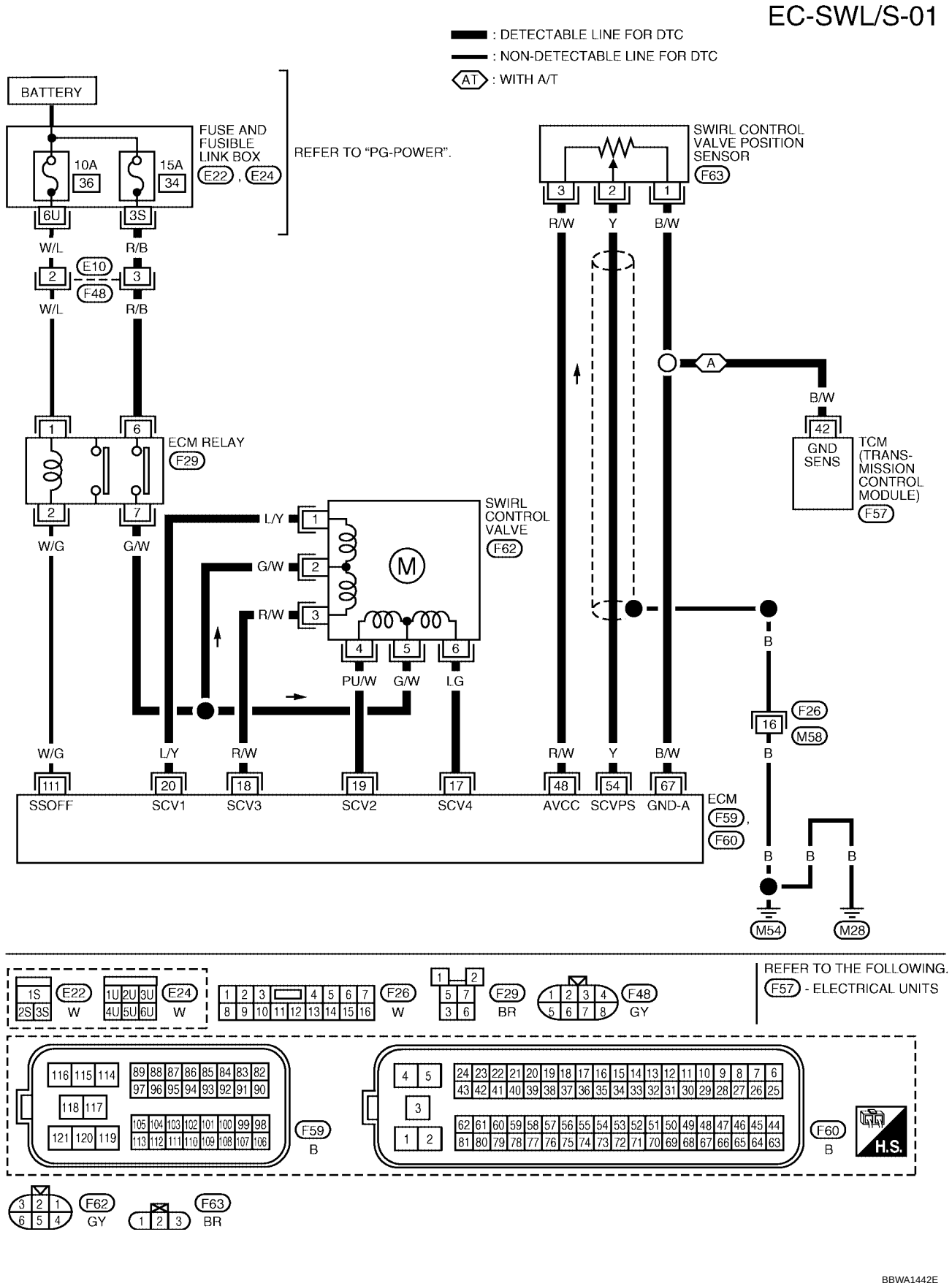

Specification data are reference values and are measured between each terminal and ground.

CAUTION:

Do not use ECM ground terminals when measuring input/output voltage. Doing so may result in damage to the ECM's transistor. Use a ground other than ECM terminals, such as the ground.

TERMINAL NO.	WIRE COLOR	ITEM	CONDITION	DATA (DC Voltage)
17 18 19 20	LG R/W PU/W L/Y	Swirl control valve	**[Engine is running]** ● Idle speed	0.1 - 14V
48	R/W	Sensor power supply (EVAP control system pressure sensor)	**[Ignition switch: ON]**	Approximately 5V
54	Y	Swirl control valve position sensor	**[Engine is running]** ● Idle speed ● Engine coolant temperature is below 44°C (111°F).	Approximately 5V
			[Engine is running] ● **Warm-up condition** ● Idle speed ● Engine coolant temperature is above 45°C (113°F).	0 - 1.0V
67	B/W	Sensor ground	**[Engine is running]** ● **Warm-up condition** ● Idle speed	Approximately 0V
111	W/G	ECM relay (Self shut-off)	**[Engine is running]** **[Ignition switch: OFF]** ● For a few seconds after turning ignition switch OFF	0 - 1.0V
			[Ignition switch: OFF] ● More than a few seconds passed after turning ignition switch OFF	BATTERY VOLTAGE (11 - 14V)

Diagnostic Procedure

UBS00BC2

1. CHECK SWIRL CONTROL VALVE POWER SUPPLY CIRCUIT

1. Turn ignition switch OFF.
2. Disconnect swirl control valve harness connector.
3. Turn ignition switch ON.

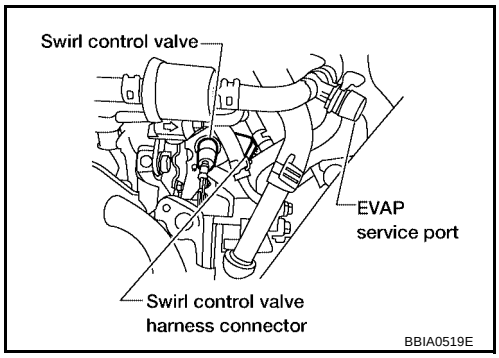

4. Check voltage between swirl control valve terminals 2, 5 and ground with CONSULT-II or tester.

Voltage: Battery voltage

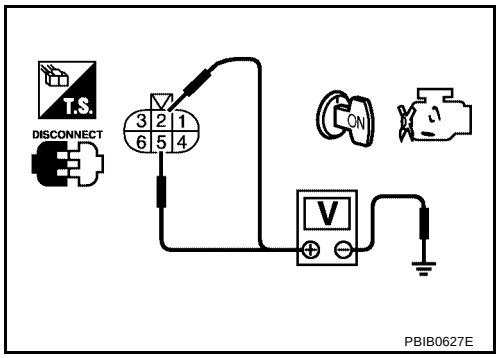

OK or NG

OK >> GO TO 3.
NG >> GO TO 2.

2. DETECT MALFUNCTIONING PART

Check the following.

- Harness for open or short between swirl control valve and ECM relay

>> Repair open circuit or short to ground or short to power in harness or connectors.

3. CHECK SWIRL CONTROL VALVE OUTPUT SIGNAL CIRCUIT FOR OPEN AND SHORT

1. Turn ignition switch OFF.
2. Disconnect ECM harness connector.
3. Check harness continuity between ECM terminals and swirl control valve terminals as follows. Refer to Wiring Diagram.

ECM terminal	Swirl volume control valve
17	6
18	3
19	4
20	1

Continuity should exist.

4. Also check harness for short to ground and short to power.

OK or NG

OK >> GO TO 4.
NG >> Repair open circuit or short to ground or short to power in harness or connectors.

4. CHECK SWIRL CONTROL VALVE

Check resistance between swirl control valve terminal 2 and terminals 1, 3, terminal 5 and terminals 4, 6.

Resistance: 20.5 - 23.5Ω [At 20°C (68°F)]

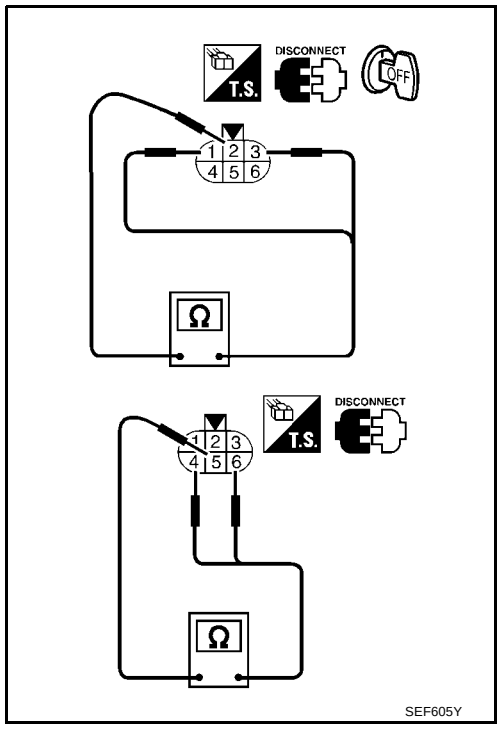

OK or NG

OK >> GO TO 5.
NG >> Replace intake manifold collector assembly.

5. CHECK GROUND CONNECTIONS

Loosen and retighten two ground screws on the body. Refer to EC-171, "Ground Inspection" .

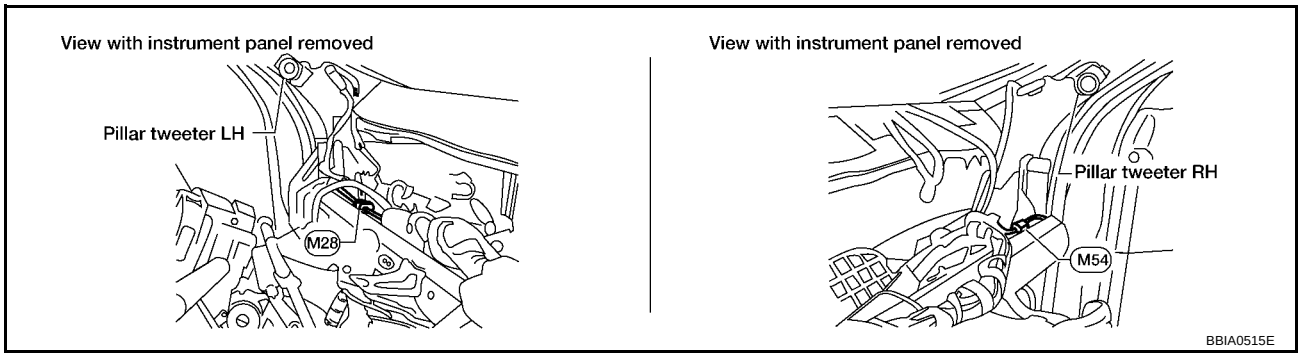

OK or NG

OK >> GO TO 6.
NG >> Repair or replace ground connections.

6. CHECK SWIRL CONTROL VALVE POSITION SENSOR POWER SUPPLY CIRCUIT

1. Disconnect swirl control valve position sensor harness connector.
2. Turn ignition switch ON.

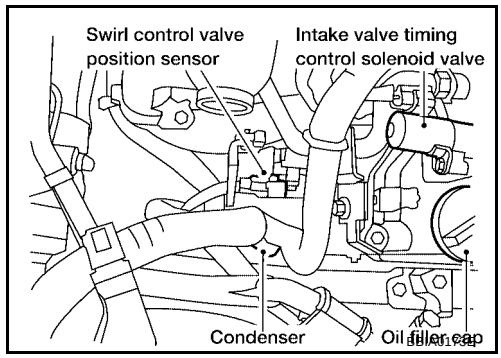

3. Check voltage between swirl control valve position sensor terminal 3 and ground with CONSULT-II or tester.

Voltage: Approximately 5V

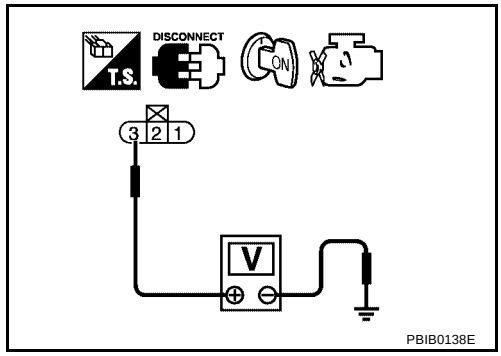

OK or NG

OK >> GO TO 7.
NG >> Repair open circuit or short to ground or short to power in harness connectors.

7. CHECK SWIRL CONTROL VALVE POSITION SENSOR GROUND CIRCUIT FOR OPEN AND SHORT

1. Turn ignition switch OFF.
2. Disconnect ECM harness connector.
3. Disconnect TCM harness connector.
4. Check harness continuity between swirl control valve position sensor terminal 1 and ECM terminal 67, TCM terminal 42.
   Refer to Wiring Diagram.

Continuity should exist.

5. Also check harness for short to ground and short to power.

OK or NG

OK >> GO TO 9.
NG >> GO TO 8.

8. DETECT MALFUNCTIONING PART

Check the following.

- Harness for open or short between swirl control valve position sensor and TCM
- Harness for open or short between swirl control valve position sensor and ECM

>> Repair open circuit or short to ground or short to power in harness or connectors.

9. CHECK SWIRL CONTROL VALVE POSITION SENSOR INPUT SIGNAL CIRCUIT FOR OPEN AND SHORT

1. Check harness continuity between ECM terminal 54 and swirl control valve position sensor terminal 2. Refer to Wiring Diagram.

   Continuity should exist.

2. Also check harness for short to ground and short to power.

OK or NG

OK (With CONSULT-II)>>GO TO 10.
NG >> Repair open circuit or short to ground or short to power in harness or connectors.

10. CHECK INTERMITTENT INCIDENT

Refer to EC-164, "TROUBLE DIAGNOSIS FOR INTERMITTENT INCIDENT" .

OK or NG

OK >> Replace intake manifold assembly.
NG >> Repair or replace.

Removal and Installation

UBS00BC3

SWIRL CONTROL VALVE

Refer to EM-15, "Removal and Installation" .

DTC P1146 HO2S2

PFP:226A0

Component Description

UBS00BC4

The heated oxygen sensor 2, after three way catalyst (manifold), monitors the oxygen level in the exhaust gas.
Even if switching characteristics of the air fuel ratio (A/F) sensor 1 are shifted, the air fuel ratio is controlled to stoichiometric, by the signal from the heated oxygen sensor 2.
This sensor is made of ceramic zirconia. The zirconia generates voltage from approximately 1V in richer conditions to 0V in leaner conditions.
Under normal conditions the heated oxygen sensor 2 is not used for engine control operation.

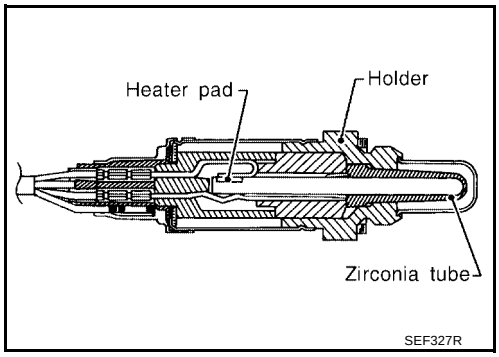

CONSULT-II Reference Value in Data Monitor Mode

UBS00BC5

Specification data are reference values.

MONITOR ITEM	CONDITION		SPECIFICATION
HO2S2 (B1)	● Engine: After warming up ● Keeping the engine speed between 3,500 and 4,000 rpm for 1 minute and at idle for 1 minute under no load	Revving engine from idle to 3,000 rpm quickly	0 - 0.3V ←→ 0.6 - 1.0V
HO2S2 MNTR (B1)			LEAN ←→ RICH

On Board Diagnosis Logic

UBS00BC6

The heated oxygen sensor 2 has a much longer switching time between rich and lean than the air fuel ratio (A/F) sensor 1. The oxygen storage capacity of the three way catalyst causes the longer switching time. To judge the malfunctions of heated oxygen sensor 2, ECM monitors whether the minimum voltage of sensor is sufficiently low during the various driving condition such as fuel-cut.

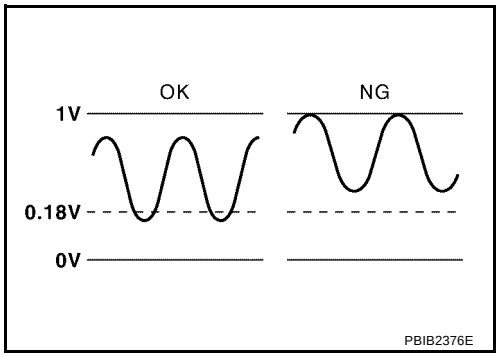

DTC No.	Trouble diagnosis name	DTC detecting condition	Possible cause
P1146 1146	Heated oxygen sensor 2 minimum voltage monitoring	The minimum voltage from the sensor is not reached to the specified voltage.	● Harness or connectors (The sensor circuit is open or shorted.) ● Heated oxygen sensor 2 ● Fuel pressure ● Fuel injectors

DTC Confirmation Procedure

UBS00BC7

NOTE:
If DTC confirmation Procedure has been previously conducted, always turn ignition switch OFF and wait at least 10 seconds before conducting the next test.

WITH CONSULT-II

TESTING CONDITION:
For the best results, perform "DTC WORK SUPPORT" at a temperature of 0 to 30°C (32 to 86°F).

1. Start engine and warm it up to the normal operating temperature.
2. Turn ignition switch OFF and wait at least 10 seconds.
3. Start engine and keep the engine speed between 3,500 and 4,000 rpm for at least 1 minute under no load.
4. Let engine idle for 1 minute.
5. Select "HO2S2 (B1) P1146" of "HO2S2" in "DTC WORK SUPPORT" mode with CONSULT-II and follow the instruction of CONSULT-II.

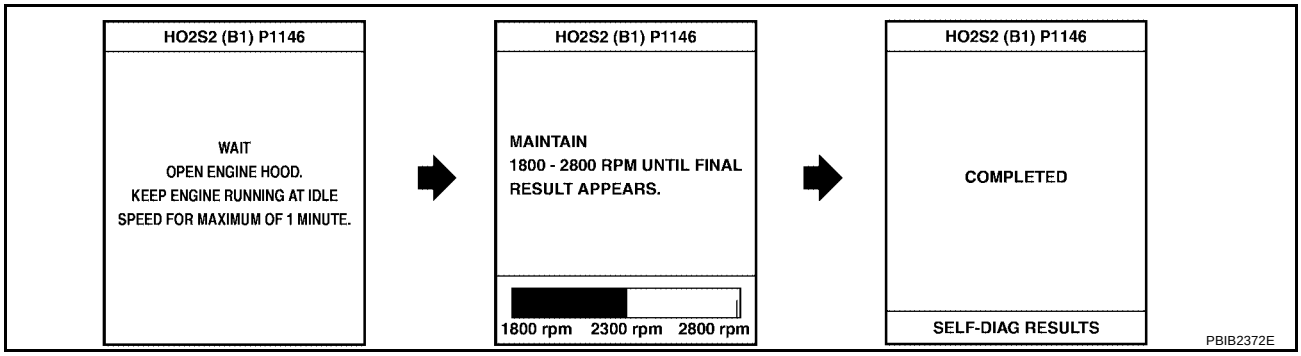

NOTE:
It will take at most 10 minutes until "COMPLETED" is displayed.

6. Make sure that OK is displayed after touching "SELF-DIAG RESULTS".
   If NG is displayed, refer to EC-442, "Diagnostic Procedure" .
   If "CAN NOT BE DIAGNOSED" is displayed, perform the following.

a. Turn ignition switch OFF and leave the vehicle in a cool place (soak the vehicle).
b. Turn ignition switch ON and select "COOLAN TEMP/S" in "DATA MONITOR" mode with CONSULT-II.
c. Start engine and warm it up while monitoring "COOLAN TEMP/S" indication on CONSULT-II.
d. When "COOLAN TEMP/S" indication reaches to 70°C (158°F), go to step 3.

Overall Function Check

UBS00BC8

Use this procedure to check the overall function of the heated oxygen sensor 2 circuit. During this check, a 1st trip DTC might not be confirmed.

WITH GST

1. Start engine and warm it up to the normal operating temperature.
2. Turn ignition switch OFF and wait at least 10 seconds.
3. Start engine and keep the engine speed between 3,500 and 4,000 rpm for at least 1 minute under no load.
4. Let engine idle 1 minute.
5. Set voltmeter probes between ECM terminal 74 (HO2S2 signal) and ground.
6. Check the voltage when revving up to 4,000 rpm under no load at least 10 times.
   (Depress and release accelerator pedal as soon as possible.)
   The voltage should be below 0.18V at least once during this procedure.
   If the voltage can be confirmed in step 6, step 7 is not necessary.
7. Keep vehicle at idling for 10 minutes, then check the voltage. Or check the voltage when coasting from 80 km/h (50 MPH) in D position with "OD" OFF (A/T), 4th gear position (M/T).

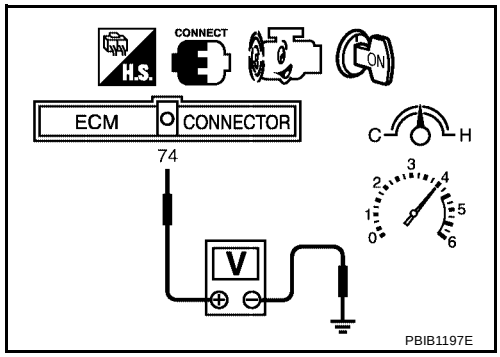

The voltage should be below 0.18V at least once during this procedure.

8. If NG, go to EC-442, "Diagnostic Procedure" .

Wiring Diagram

UBS00BC9

EC-HO2S2-01

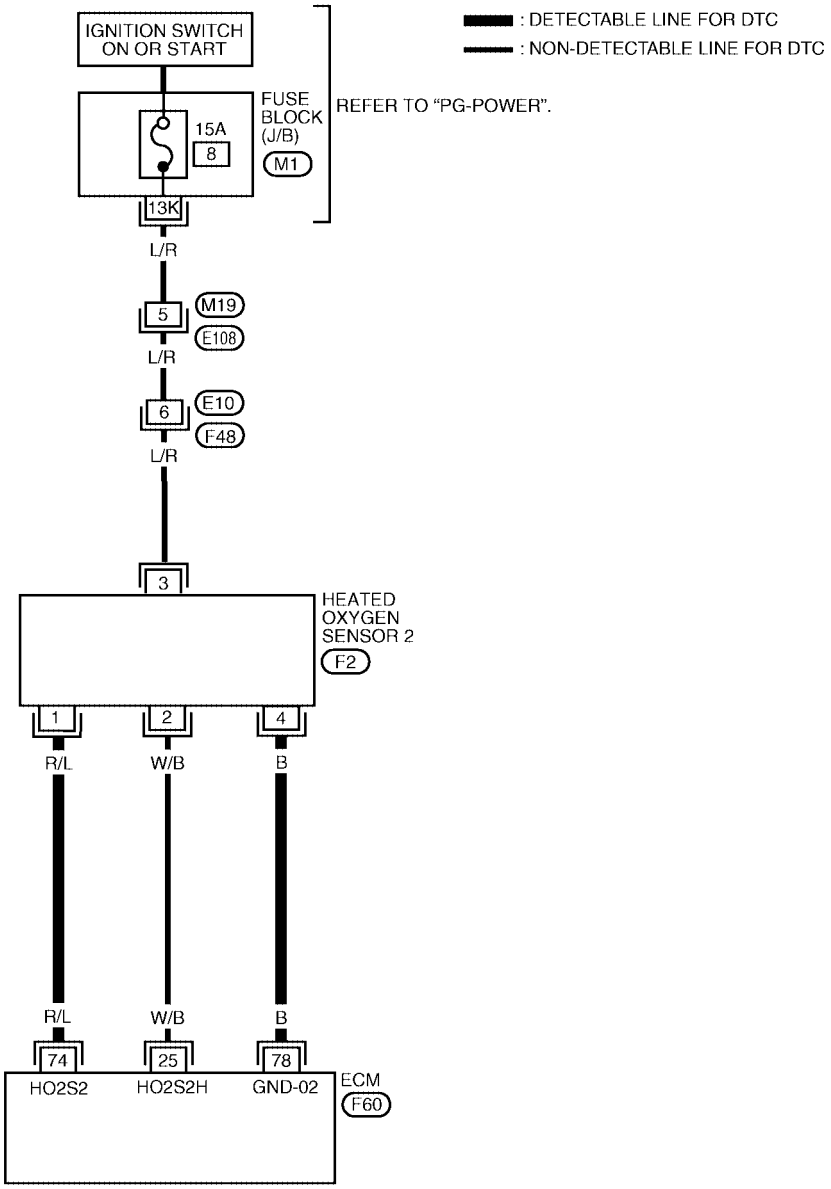

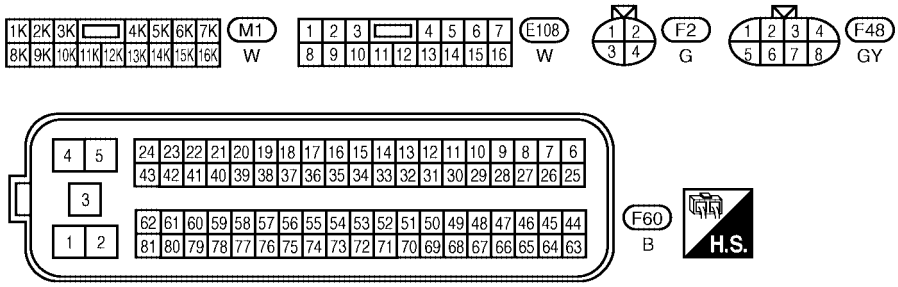

BBWA1427E

Specification data are reference values and are measured between each terminal and ground.

CAUTION:

Do not use ECM ground terminals when measuring input/output voltage. Doing so may result in damage to the ECM's transistor. Use a ground other than ECM terminals, such as the ground.

TERMINAL NO.	WIRE COLOR	ITEM	CONDITION	DATA (DC Voltage)
74	R/L	Heated oxygen sensor 2	**[Engine is running]** ● **Warm-up condition** ● Revving engine from idle up to 3,000 rpm quickly after the following conditions are met. ● Keeping the engine speed between 3,500 and 4,000 rpm for 1 minute and at idle for 1 minute under no load.	0 - Approximately 1.0V
78	B	Sensor ground (Heated oxygen sensor)	**[Engine is running]** ● **Warm-up condition** ● Idle speed	Approximately 0V

Diagnostic Procedure

UBS00BCA

1. CHECK GROUND CONNECTIONS

1. Turn ignition switch OFF.
2. Loosen and retighten two ground screws on the body.
   Refer to EC-171, "Ground Inspection" .

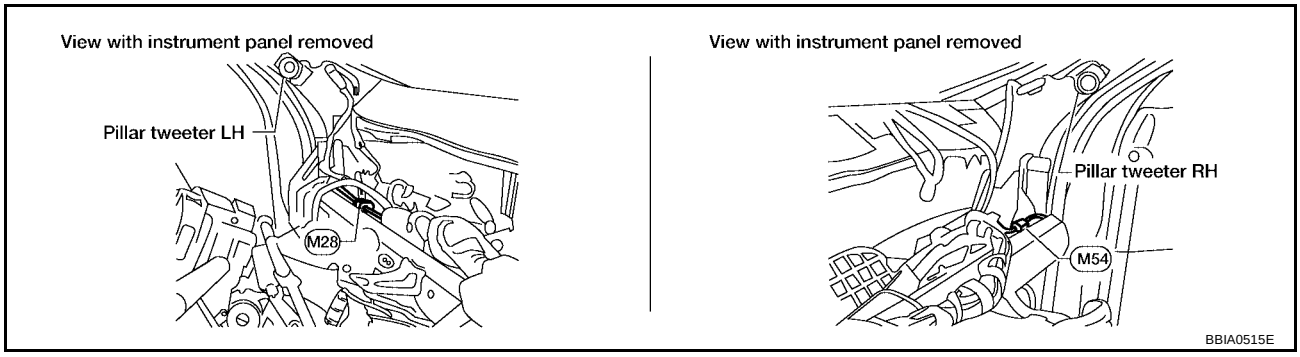

OK or NG

OK >> GO TO 2.
NG >> Repair or replace ground connections.

2. CLEAR THE SELF-LEARNING DATA

With CONSULT-II

1. Start engine and warm it up to normal operating temperature.
2. Select “SELF-LEARNING CONT” in “WORK SUPPORT” mode with CONSULT-II.
3. Clear the self-learning control coefficient by touching “CLEAR”.
4. Run engine for at least 10 minutes at idle speed.
   Is the 1st trip DTC P0172 detected?
   Is it difficult to start engine?

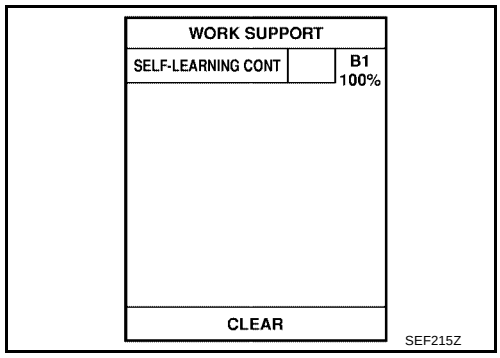

Without CONSULT-II

1. Start engine and warm it up to normal operating temperature.
2. Turn ignition switch OFF.
3. Disconnect mass air flow sensor harness connector, and restart and run engine for at least 5 seconds at idle speed.
4. Stop engine and reconnect mass air flow sensor harness connector.
5. Make sure that DTC P0102 is displayed.
6. Erase the DTC memory. Refer to EC-64, "HOW TO ERASE EMISSION-RELATED DIAGNOSTIC INFORMATION" .
7. Make sure that DTC P0000 is displayed.
8. Run engine for at least 10 minutes at idle speed.
   Is the 1st trip DTC P0172 detected?
   Is it difficult to start engine?

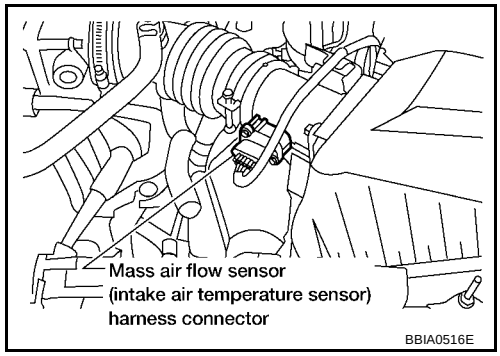

Yes or No

Yes >> Perform trouble diagnosis for DTC P0172. Refer toEC-249 .
No >> GO TO 3.

3. CHECK HO2S2 GROUND CIRCUIT FOR OPEN AND SHORT

1. Turn ignition switch OFF.
2. Disconnect heated oxygen sensor 2 harness connector.
3. Disconnect ECM harness connector.
4. Check harness continuity between ECM terminal 78 and HO2S2 terminal 4.
   Refer to Wiring Diagram.

   Continuity should exist.

5. Also check harness for short to ground and short to power.

OK or NG

OK >> GO TO 4.
NG >> Repair open circuit or short to ground or short to power in harness or connectors.

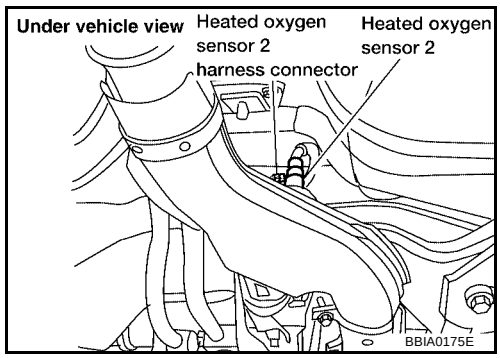

4. CHECK HO2S2 INPUT SIGNAL CIRCUIT FOR OPEN AND SHORT

1. Check harness continuity between ECM terminal 74 and HO2S2 terminal 1.
   Refer to Wiring Diagram.

   Continuity should exist.

2. Check harness continuity between ECM terminal 74 or HO2S2 terminal 1 and ground.
   Refer to Wiring Diagram.

   Continuity should not exist.

3. Also check harness for short to power.

OK or NG

OK >> GO TO 5.
NG >> Repair open circuit or short to ground or short to power in harness or connectors.

5. CHECK HEATED OXYGEN SENSOR 2

Refer toEC-444, "Component Inspection" .

OK or NG

OK >> GO TO 6.
NG >> Replace heated oxygen sensor 2.

6. CHECK INTERMITTENT INCIDENT

Refer to EC-164, "TROUBLE DIAGNOSIS FOR INTERMITTENT INCIDENT" .

>> **INSPECTION END**

Component Inspection

UBS00BCB

HEATED OXYGEN SENSOR 2

With CONSULT-II

1. Start engine and warm it up to the normal operating temperature.
2. Turn ignition switch OFF and wait at least 10 seconds.
3. Start engine and keep the engine speed between 3,500 and 4,000 rpm for at least 1 minute under no load.
4. Let engine idle for 1 minute.
5. Select “FUEL INJECTION” in “ACTIVE TEST” mode, and select “HO2S2 (B1)” as the monitor item with CONSULT-II.

ACTIVE TEST	
FUEL INJECTION	25 %
MONITOR	
ENG SPEED	XXX rpm
A/F SEN1 (B1)	XXX V
HO2S2 (B1)	XXX V

PBIB1782E

6. Check “HO2S2 (B1)” at idle speed when adjusting “FUEL INJECTION” to ±25%.

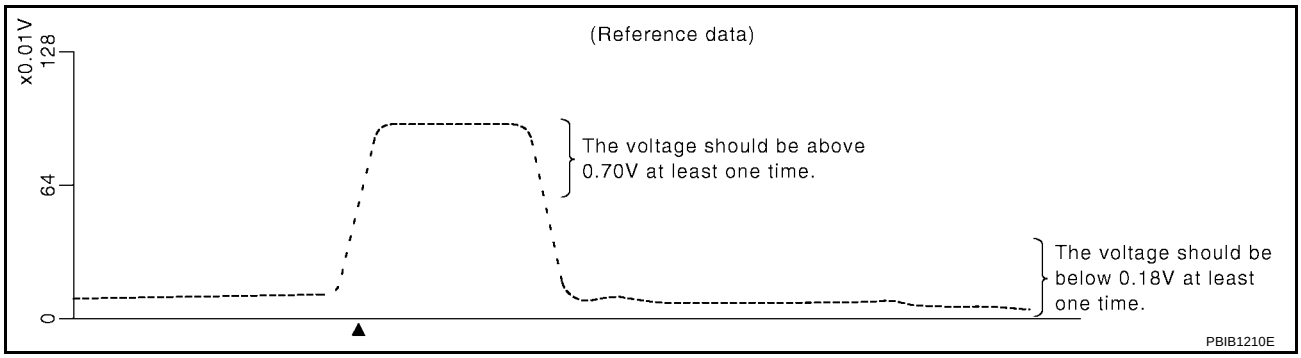

“HO2S2 (B1)” should be above 0.70V at least once when the “FUEL INJECTION” is +25%.
“HO2S2 (B1)” should be below 0.18V at least once when the “FUEL INJECTION” is –25%.

CAUTION:

- **Discard any heated oxygen sensor which has been dropped from a height of more than 0.5 m (19.7 in) onto a hard surface such as a concrete floor; use a new one.**
- **Before installing new oxygen sensor, clean exhaust system threads using Oxygen Sensor Thread Cleaner tool J-43897-18 or J-43897-12 and approved anti-seize lubricant.**

Without CONSULT-II

1. Start engine and warm it up to the normal operating temperature.
2. Turn ignition switch OFF and wait at least 10 seconds.
3. Start engine and keep the engine speed between 3,500 and 4,000 rpm for at least 1 minute under no load.
4. Let engine idle for 1 minute.
5. Set voltmeter probes between ECM terminal 74 (HO2S2 signal) and ground.
6. Check the voltage when revving up to 4,000 rpm under no load at least 10 times.
   (Depress and release accelerator pedal as soon as possible.)
   The voltage should be above 0.70V at least once during this procedure.
   If the voltage is above 0.70V at step 6, step 7 is not necessary.
7. Keep vehicle at idling for 10 minutes, then check voltage. Or check the voltage when coasting from 80 km/h (50 MPH) in D position with “OD” OFF (A/T), 4th gear position.
   The voltage should be below 0.18V at least once during this procedure.

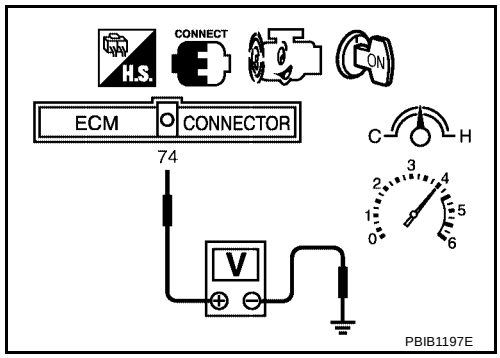

8. If NG, replace heated oxygen sensor 2.

CAUTION:

- **Discard any heated oxygen sensor which has been dropped from a height of more than 0.5 m (19.7 in) onto a hard surface such as a concrete floor; use a new one.**
- **Before installing new oxygen sensor, clean exhaust system threads using Oxygen Sensor Thread Cleaner tool J-43897-18 or J-43897-12 and approved anti-seize lubricant.**

Removal and Installation

UBS00BCC

HEATED OXYGEN SENSOR 2

Refer to EX-3, "EXHAUST SYSTEM" .

DTC P1147 HO2S2

PFP:226A0

Component Description

UBS00BCD

The heated oxygen sensor 2, after three way catalyst (manifold), monitors the oxygen level in the exhaust gas.
Even if switching characteristics of the air fuel ratio (A/F) sensor 1 are shifted, the air fuel ratio is controlled to stoichiometric, by the signal from the heated oxygen sensor 2.
This sensor is made of ceramic zirconia. The zirconia generates voltage from approximately 1V in richer conditions to 0V in leaner conditions.
Under normal conditions the heated oxygen sensor 2 is not used for engine control operation.

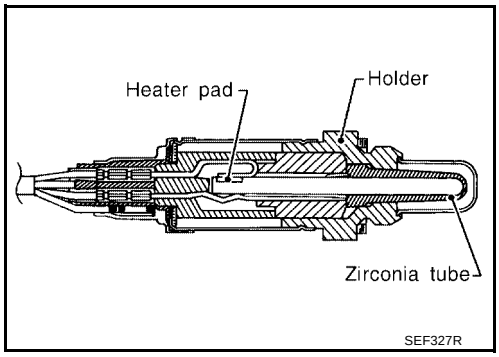

CONSULT-II Reference Value in Data Monitor Mode

UBS00BCE

Specification data are reference values.

MONITOR ITEM	CONDITION		SPECIFICATION
HO2S2 (B1)	● Engine: After warming up ● Keeping the engine speed between 3,500 and 4,000 rpm for 1 minute and at idle for 1 minute under no load	Revving engine from idle to 3,000 rpm quickly	0 - 0.3V ←→ 0.6 - 1.0V
HO2S2 MNTR (B1)			LEAN ←→ RICH

On Board Diagnosis Logic

UBS00BCF

The heated oxygen sensor 2 has a much longer switching time between rich and lean than the air fuel ratio (A/F) sensor 1. The oxygen storage capacity of the three way catalyst (manifold) causes the longer switching time. To judge the malfunctions of heated oxygen sensor 2, ECM monitors whether the maximum voltage of the sensor is sufficiently high during the various driving condition such as fuel-cut.

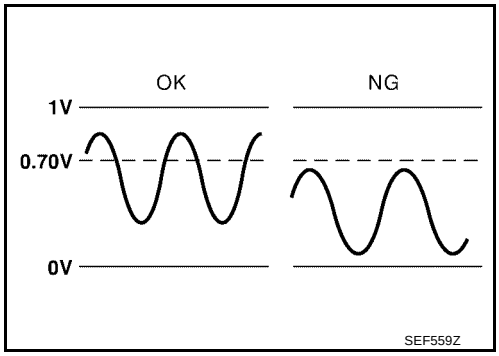

DTC No.	Trouble diagnosis name	DTC detecting condition	Possible cause
P1147 1147	Heated oxygen sensor 2 maximum voltage monitoring	The maximum voltage from the sensor is not reached to the specified voltage.	● Harness or connectors (The sensor circuit open or shorted.) ● Heated oxygen sensor 2 ● Fuel pressure ● Injectors ● Intake air leaks

DTC Confirmation Procedure

UBS00BCG

NOTE:
If DTC confirmation Procedure has been previously conducted, always turn ignition switch OFF and wait at least 10 seconds before conducting the next test.

WITH CONSULT-II

TESTING CONDITION:
For the best results, perform "DTC WORK SUPPORT" at a temperature of 0 to 30°C (32 to 86°F).

1. Start engine and warm it up to the normal operating temperature.
2. Turn ignition switch OFF and wait at least 10 seconds.
3. Start engine and keep the engine speed between 3,500 and 4,000 rpm for at least 1 minute under no load.
4. Let engine idle for 1 minute.
5. Select "HO2S2 (B1) P1147" of "HO2S2" in "DTC WORK SUPPORT" mode with CONSULT-II and follow the instruction of CONSULT-II.

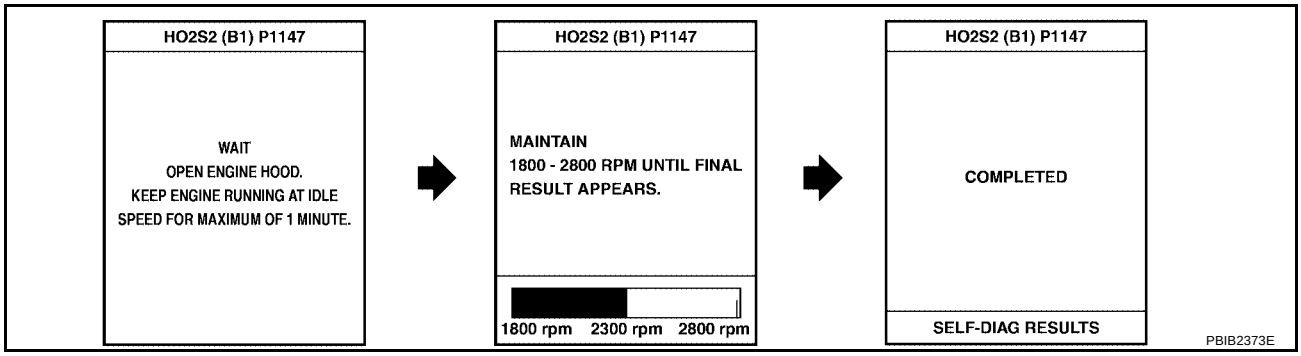

NOTE:
It will take at most 10 minutes until "COMPLETED" is displayed.

6. Make sure that OK is displayed after touching "SELF-DIAG RESULTS".
   If NG is displayed, refer to EC-450 .
   If "CAN NOT BE DIAGNOSED" is displayed, perform the following.

a. Turn ignition switch OFF and leave the vehicle in a cool place (soak the vehicle).
b. Turn ignition switch ON and select "COOLAN TEMP/S" in "DATA MONITOR" mode with CONSULT-II.
c. Start engine and warm it up while monitoring "COOLAN TEMP/S" indication on CONSULT-II.
d. When "COOLAN TEMP/S" indication reaches to 70°C (158°F), go to step 3.

Overall Function Check

UBS00BCH

Use this procedure to check the overall function of the heated oxygen sensor 2 circuit. During this check, a 1st trip DTC might not be confirmed.

WITH GST

1. Start engine and warm it up to the normal operating temperature.
2. Turn ignition switch OFF and wait at least 10 seconds.
3. Start engine and keep the engine speed between 3,500 and 4,000 rpm for at least 1 minute under no load.
4. Let engine idle 1 minute.
5. Set voltmeter probes between ECM terminal 74 (HO2S2 signal) and ground.
6. Check the voltage when revving up to 4,000 rpm under no load at least 10 times.
   (Depress and release accelerator pedal as soon as possible.)
   The voltage should be above 0.70V at least once during this procedure.
   If the voltage can be confirmed in step 6, step 7 is not necessary.
7. Keep vehicle idling for 10 minutes, then check the voltage. Or check the voltage when coasting from 80 km/h (50 MPH) in D position with "OD" OFF (A/T), 4th gear position (M/T).

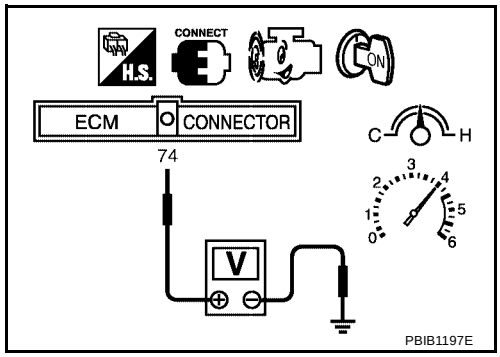

The voltage should be above 0.70V at least once during this procedure.

8. If NG, go to EC-450, "Diagnostic Procedure" .

Wiring Diagram

UBS00BCI

EC-HO2S2-01

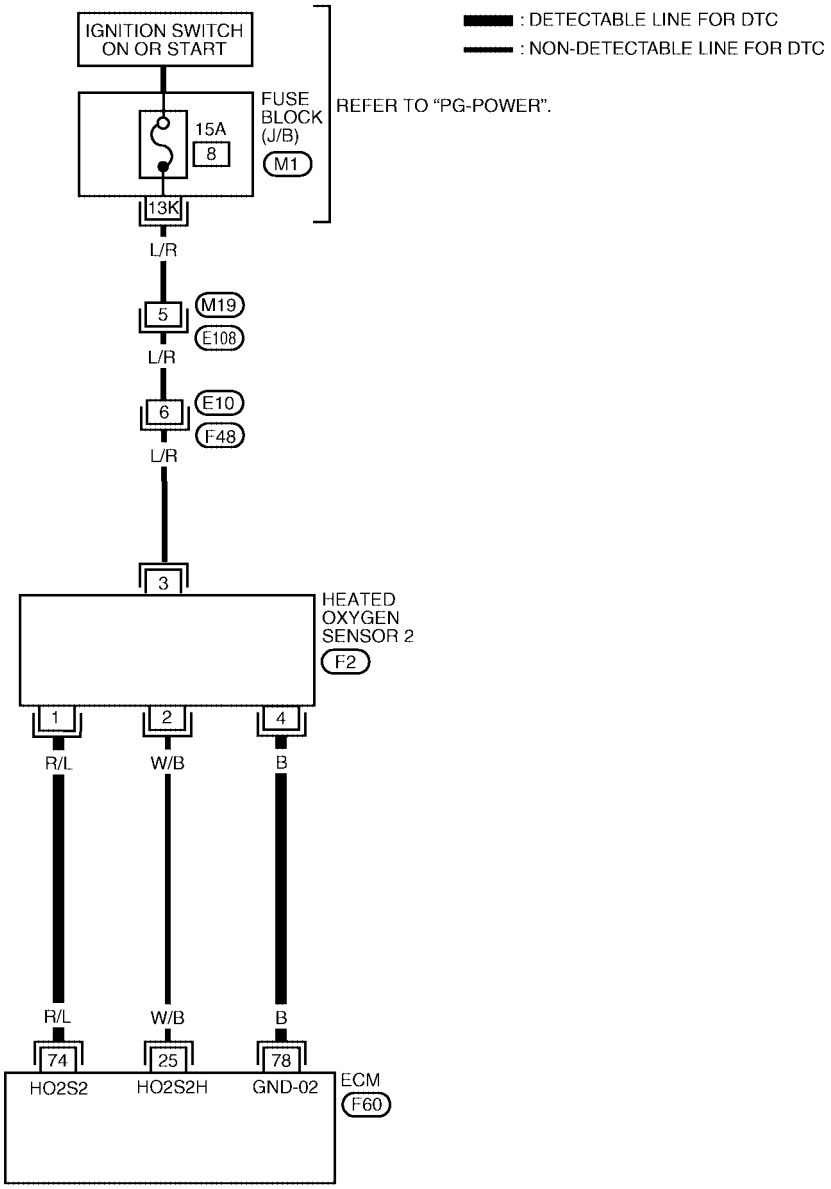

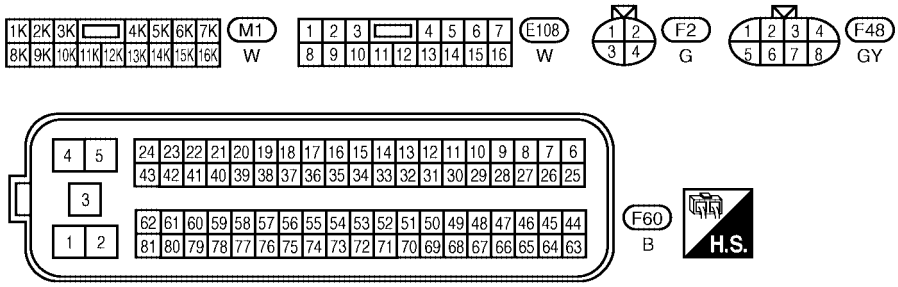

BBWA1427E

Specification data are reference values and are measured between each terminal and ground.

CAUTION:

Do not use ECM ground terminals when measuring input/output voltage. Doing so may result in damage to the ECM's transistor. Use a ground other than ECM terminals, such as the ground.

TERMINAL NO.	WIRE COLOR	ITEM	CONDITION	DATA (DC Voltage)
74	R/L	Heated oxygen sensor 2	**[Engine is running]** ● **Warm-up condition** ● Revving engine from idle up to 3,000 rpm quickly after the following conditions are met. ● Keeping the engine speed between 3,500 and 4,000 rpm for 1 minute and at idle for 1 minute under no load.	0 - Approximately 1.0V
78	B	Sensor ground (Heated oxygen sensor)	**[Engine is running]** ● **Warm-up condition** ● Idle speed	Approximately 0V

Diagnostic Procedure

UBS00BCJ

1. CHECK GROUND CONNECTIONS

1. Turn ignition switch OFF.
2. Loosen and retighten two ground screws on the body.
   Refer to EC-171, "Ground Inspection" .

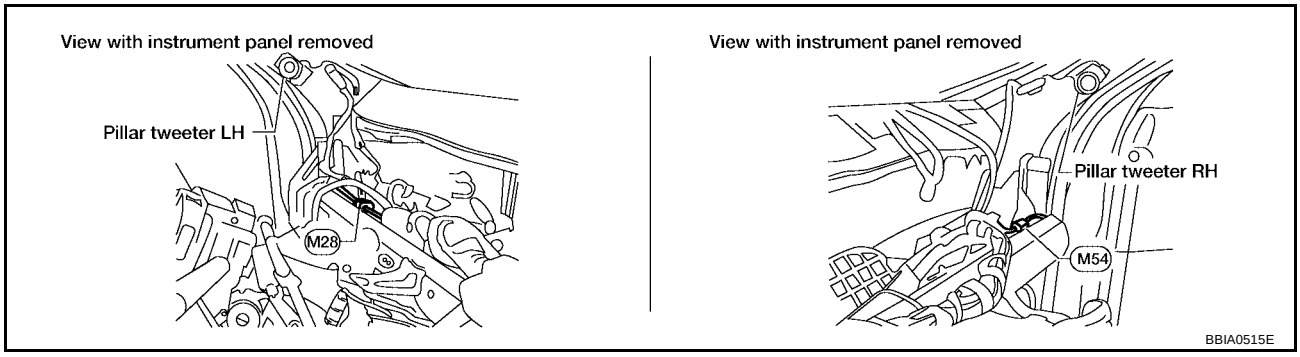

OK or NG

OK >> GO TO 2.
NG >> Repair or replace ground connections.

2. CLEAR THE SELF-LEARNING DATA

With CONSULT-II

1. Start engine and warm it up to normal operating temperature.
2. Select “SELF-LEARNING CONT” in “WORK SUPPORT” mode with CONSULT-II.
3. Clear the self-learning control coefficient by touching “CLEAR”.
4. Run engine for at least 10 minutes at idle speed.
   Is the 1st trip DTC P0171 detected?
   Is it difficult to start engine?

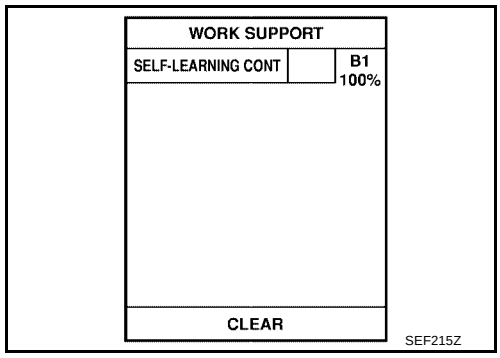

Without CONSULT-II

1. Start engine and warm it up to normal operating temperature.
2. Turn ignition switch OFF.
3. Disconnect mass air flow sensor harness connector, and restart and run engine for at least 5 seconds at idle speed.
4. Stop engine and reconnect mass air flow sensor harness connector.
5. Make sure that DTC P0102 is displayed.
6. Erase the DTC memory. Refer to EC-64, "HOW TO ERASE EMISSION-RELATED DIAGNOSTIC INFORMATION" .
7. Make sure that DTC P0000 is displayed.
8. Run engine for at least 10 minutes at idle speed.
   Is the 1st trip DTC P0171 detected?
   Is it difficult to start engine?

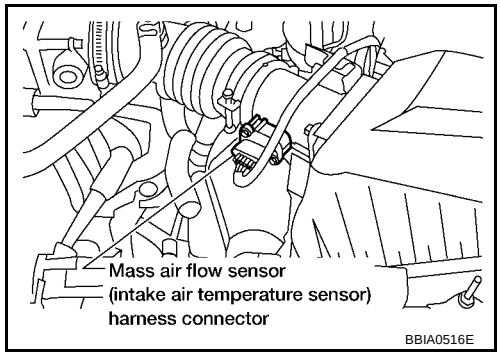

Yes or No

Yes >> Perform trouble diagnosis for DTC P0171. Refer to EC-242 .
No >> GO TO 3.

3. CHECK HO2S2 GROUND CIRCUIT FOR OPEN AND SHORT

1. Turn ignition switch OFF.
2. Disconnect heated oxygen sensor 2 harness connector.
3. Disconnect ECM harness connector.
4. Check harness continuity between ECM terminal 78 and HO2S2 terminal 4.
   Refer to Wiring Diagram.

   Continuity should exist.

5. Also check harness for short to ground and short to power.

OK or NG

OK >> GO TO 4.
NG >> Repair open circuit or short to ground or short to power in harness or connectors.

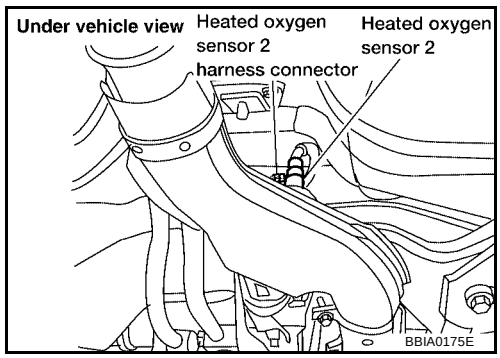

4. CHECK HO2S2 INPUT SIGNAL CIRCUIT FOR OPEN AND SHORT

1. Check harness continuity between ECM terminal 74 and HO2S2 terminal 1.
   Refer to Wiring Diagram.

   Continuity should exist.

2. Check harness continuity between ECM terminal 74 or HO2S2 terminal 1 and ground.
   Refer to Wiring Diagram.

   Continuity should not exist.

3. Also check harness for short to power.

OK or NG

OK >> GO TO 5.
NG >> Repair open circuit or short to ground or short to power in harness or connectors.

5. CHECK HEATED OXYGEN SENSOR 2

Refer to EC-452, "Component Inspection" .

OK or NG

OK >> GO TO 6.
NG >> Replace heated oxygen sensor 2.

6. CHECK INTERMITTENT INCIDENT

Refer to EC-164, "TROUBLE DIAGNOSIS FOR INTERMITTENT INCIDENT" .

>> **INSPECTION END**

Component Inspection

UBS00BCK

HEATED OXYGEN SENSOR 2

With CONSULT-II

1. Start engine and warm it up to the normal operating temperature.
2. Turn ignition switch OFF and wait at least 10 seconds.
3. Start engine and keep the engine speed between 3,500 and 4,000 rpm for at least 1 minute under no load.
4. Let engine idle 1 minute.
5. Select “FUEL INJECTION” in “ACTIVE TEST” mode, and select “HO2S2 (B1)” as the monitor item with CONSULT-II.

ACTIVE TEST	
FUEL INJECTION	25 %
MONITOR	
ENG SPEED	XXX rpm
A/F SEN1 (B1)	XXX V
HO2S2 (B1)	XXX V

PBIB1782E

6. Check “HO2S2 (B1)” at idle speed when adjusting “FUEL INJECTION” to ±25%.

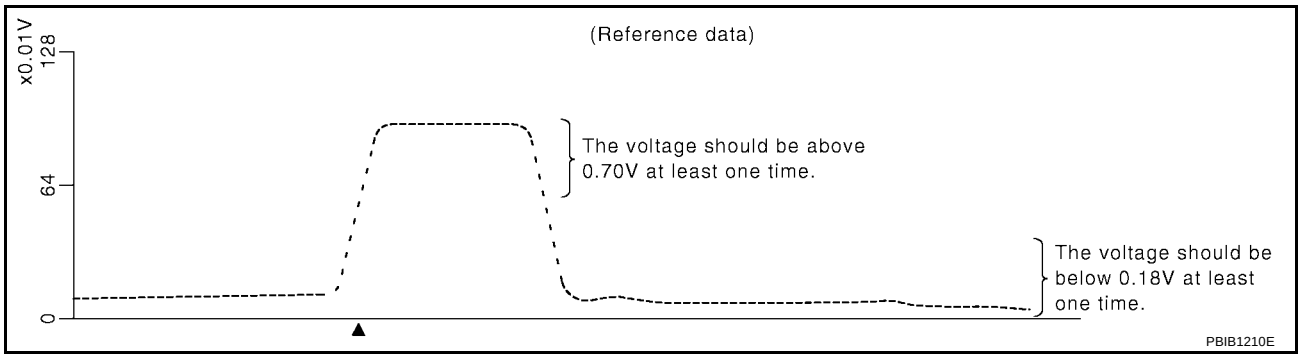

“HO2S2 (B1)” should be above 0.70V at least once when the “FUEL INJECTION” is +25%.
“HO2S2 (B1)” should be below 0.18V at least once when the “FUEL INJECTION” is –25%.

CAUTION:

- **Discard any heated oxygen sensor which has been dropped from a height of more than 0.5 m (19.7 in) onto a hard surface such as a concrete floor; use a new one.**
- **Before installing new oxygen sensor, clean exhaust system threads using Oxygen Sensor Thread Cleaner tool J-43897-18 or J-43897-12 and approved anti-seize lubricant.**

Without CONSULT-II

1. Start engine and warm it up to the normal operating temperature.
2. Turn ignition switch OFF and wait at least 10 seconds.
3. Start engine and keep the engine speed between 3,500 and 4,000 rpm for at least 1 minute under no load.
4. Let engine idle for 1 minute.
5. Set voltmeter probes between ECM terminal 74 (HO2S2 signal) and ground.
6. Check the voltage when revving up to 4,000 rpm under no load at least 10 times.
   (Depress and release accelerator pedal as soon as possible.)
   The voltage should be above 0.70V at least once during this procedure.
   If the voltage is above 0.70V at step 6, step 7 is not necessary.
7. Keep vehicle idling for 10 minutes, then check voltage. Or check the voltage when coasting from 80 km/h (50 MPH) in D position with “OD” OFF (A/T), 4th position (M/T).
   The voltage should be below 0.18V at least once during this procedure.

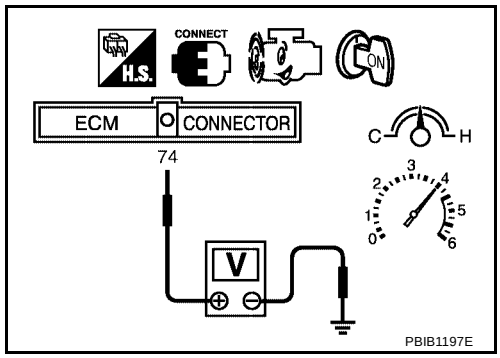

8. If NG, replace heated oxygen sensor 2.

CAUTION:

- **Discard any heated oxygen sensor which has been dropped from a height of more than 0.5 m (19.7 in) onto a hard surface such as a concrete floor; use a new one.**
- **Before installing new oxygen sensor, clean exhaust system threads using Oxygen Sensor Thread Cleaner tool J-43897-18 or J-43897-12 and approved anti-seize lubricant.**

Removal and Installation

UBS00BCL

HEATED OXYGEN SENSOR 2

Refer to EX-3, "EXHAUST SYSTEM" .

DTC P1148 CLOSED LOOP CONTROL

PFP:22690

On Board Diagnosis Logic

UBS00BCM

This self-diagnosis has the one trip detection logic.

DTC No.	Trouble diagnosis name	DTC detecting condition	Possible cause
P1148 1148	Closed loop control function	The closed loop control function for bank 1 does not operate even when vehicle is driving in the specified condition.	● The air fuel ratio (A/F) sensor 1 circuit is open or shorted. ● Air fuel ratio (A/F) sensor 1 ● Air fuel ratio (A/F) sensor 1 heater

DTC P1148 is displayed with another DTC for air fuel ratio (A/F) sensor 1. Perform the trouble diagnosis for the corresponding DTC.

DTC P1217 ENGINE OVER TEMPERATURE

PFP:00000

System Description

UBS00BCN

COOLING FAN CONTROL

Sensor	Input Signal to ECM	ECM function	Actuator
Crankshaft position sensor (POS) Camshaft position sensor (PHASE)	Engine speed*1	Cooling fan control	Cooling fan relay(s)
Vehicle speed signal*2	Vehicle speed		
Engine coolant temperature sensor	Engine coolant temperature		
Air conditioner switch	Air conditioner ON signal		
Battery	Battery voltage*1		
Refrigerant pressure sensor	Refrigerant pressure		

*1: ECM determines the start signal status by the signals of engine speed and battery voltage.
*2: This signal is sent to the ECM through CAN communication line.

The ECM controls the cooling fan corresponding to the vehicle speed, engine coolant temperature, refrigerant pressure, and air conditioner ON signal. The control system has 3-step control [HIGH/LOW/OFF].

OPERATION

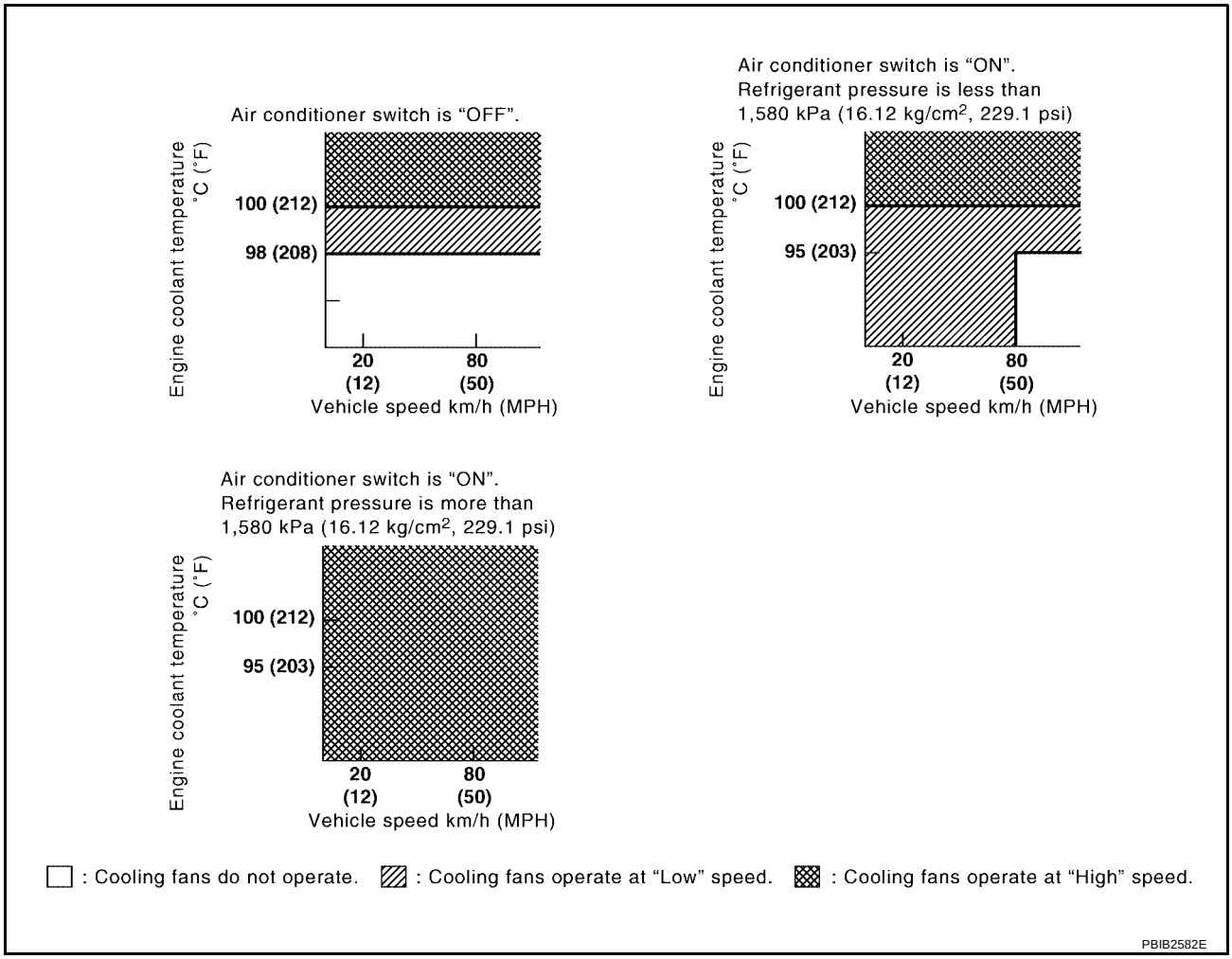

CONSULT-II Reference Value in Data Monitor Mode

UBS00BCO

Specification data are reference values.

MONITOR ITEM	CONDITION		SPECIFICATION
AIR COND SIG	● Engine: After warming up, idle the engine	A/C switch: OFF	OFF
		A/C switch: ON (Compressor operates)	ON
COOLING FAN	● After warming up engine, idle the engine. ● Air conditioner switch: OFF	Engine coolant temperature is 97°C (207°F) or less	OFF
		Engine coolant temperature is between 98°C (208°F) and 99°C (210°F)	LOW
		Engine coolant temperature is 100°C (212°F) or more	HIGH

On Board Diagnosis Logic

UBS00BCP

If the cooling fan or another component in the cooling system malfunctions, engine coolant temperature will rise.
When the engine coolant temperature reaches an abnormally high temperature condition, a malfunction is indicated.
This self-diagnosis has the one trip detection logic.

DTC No.	Trouble diagnosis name	DTC detecting condition	Possible Cause
P1217 1217	Engine over temperature (Overheat)	● Cooling fan does not operate properly (Overheat). ● Cooling fan system does not operate properly (Overheat). ● Engine coolant was not added to the system using the proper filling method. ● Engine coolant level is not within the specified range.	● Harness or connectors (The cooling fan circuit is open or shorted.) ● Cooling fan ● Radiator hose ● Radiator ● Radiator cap ● Water pump ● Thermostat For more information, refer to EC-467, "Main 12 Causes of Overheating" .

CAUTION:
When a malfunction is indicated, be sure to replace the coolant. Refer to MA-16, "Changing Engine Coolant" . Also, replace the engine oil. Refer to MA-20, "Changing Engine Oil" .

1. **Fill radiator with coolant up to specified level with a filling speed of 2 liters per minute. Be sure to use coolant with the proper mixture ratio. Refer to MA-14, "Anti-freeze Coolant Mixture Ratio" .**
2. **After refilling coolant, run engine to ensure that no water-flow noise is emitted.**

Overall Function Check

UBS00BCQ

Use this procedure to check the overall function of the cooling fan. During this check, a DTC might not be confirmed.

WARNING:
Never remove the radiator cap when the engine is hot. Serious burns could be caused by high pressure fluid escaping from the radiator.
Wrap a thick cloth around cap. Carefully remove the cap by turning it a quarter turn to allow built-up pressure to escape. Then turn the cap all the way off.

WITH CONSULT-II

1. Check the coolant level in the reservoir tank and radiator.
   Allow engine to cool before checking coolant level.
   If the coolant level in the reservoir tank and/or radiator is below the proper range, skip the following steps and go to EC-460, "Diagnostic Procedure" .
2. Confirm whether customer filled the coolant or not. If customer filled the coolant, skip the following steps and go to EC-460, "Diagnostic Procedure" .
3. Turn ignition switch ON.

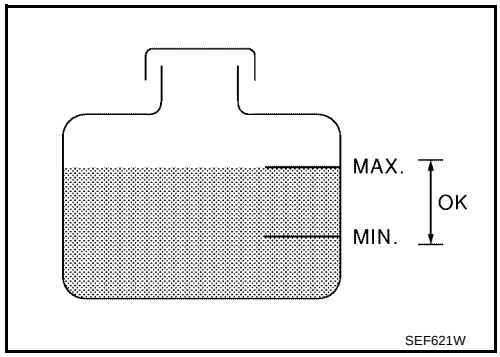

4. Perform “COOLING FAN” in “ACTIVE TEST” mode with CONSULT-II.
5. If the results are NG, go to EC-460, "Diagnostic Procedure" .

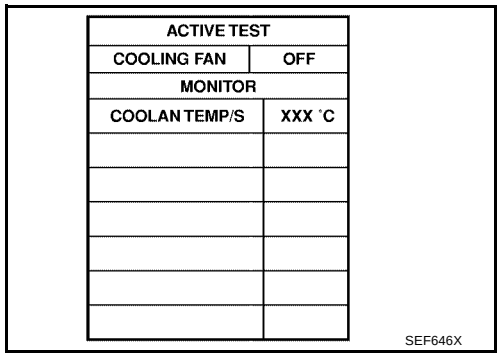

ACTIVE TEST	
COOLING FAN	OFF
MONITOR	
COOLAN TEMP/S	XXX °C

SEF646X

WITH GST

1. Check the coolant level in the reservoir tank and radiator.
   Allow engine to cool before checking coolant level.
   If the coolant level in the reservoir tank and/or radiator is below the proper range, skip the following steps and go to EC-460, "Diagnostic Procedure" .
2. Confirm whether customer filled the coolant or not. If customer filled the coolant, skip the following steps and go to EC-460, "Diagnostic Procedure" .
3. Start engine.
   Be careful not to overheat engine.
4. Set temperature control lever to full cold position.
5. Turn air conditioner switch ON.
6. Turn blower fan switch ON.
7. Run engine at idle for a few minutes with air conditioner operating.
   Be careful not to overheat engine.
8. Make sure that cooling fan operates at low speed.
   If NG, go to EC-460, "Diagnostic Procedure" .
   If OK, go to the following step.

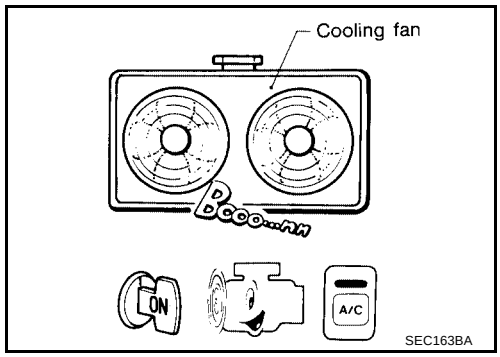

9. Turn ignition switch OFF.
10. Turn air conditioner switch and blower fan switch OFF.
11. Disconnect engine coolant temperature sensor harness connector.
12. Connect 150Ω resistor to engine coolant temperature sensor harness connector.

13. Restart engine and make sure that cooling fan operates at higher speed than low speed.
    Be careful not to overheat engine.
14. If NG, go to EC-460, "Diagnostic Procedure" .

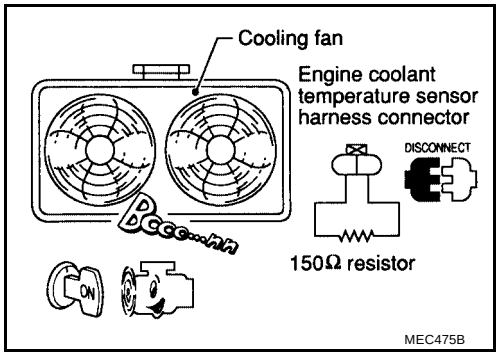

Wiring Diagram

UBS00BCR

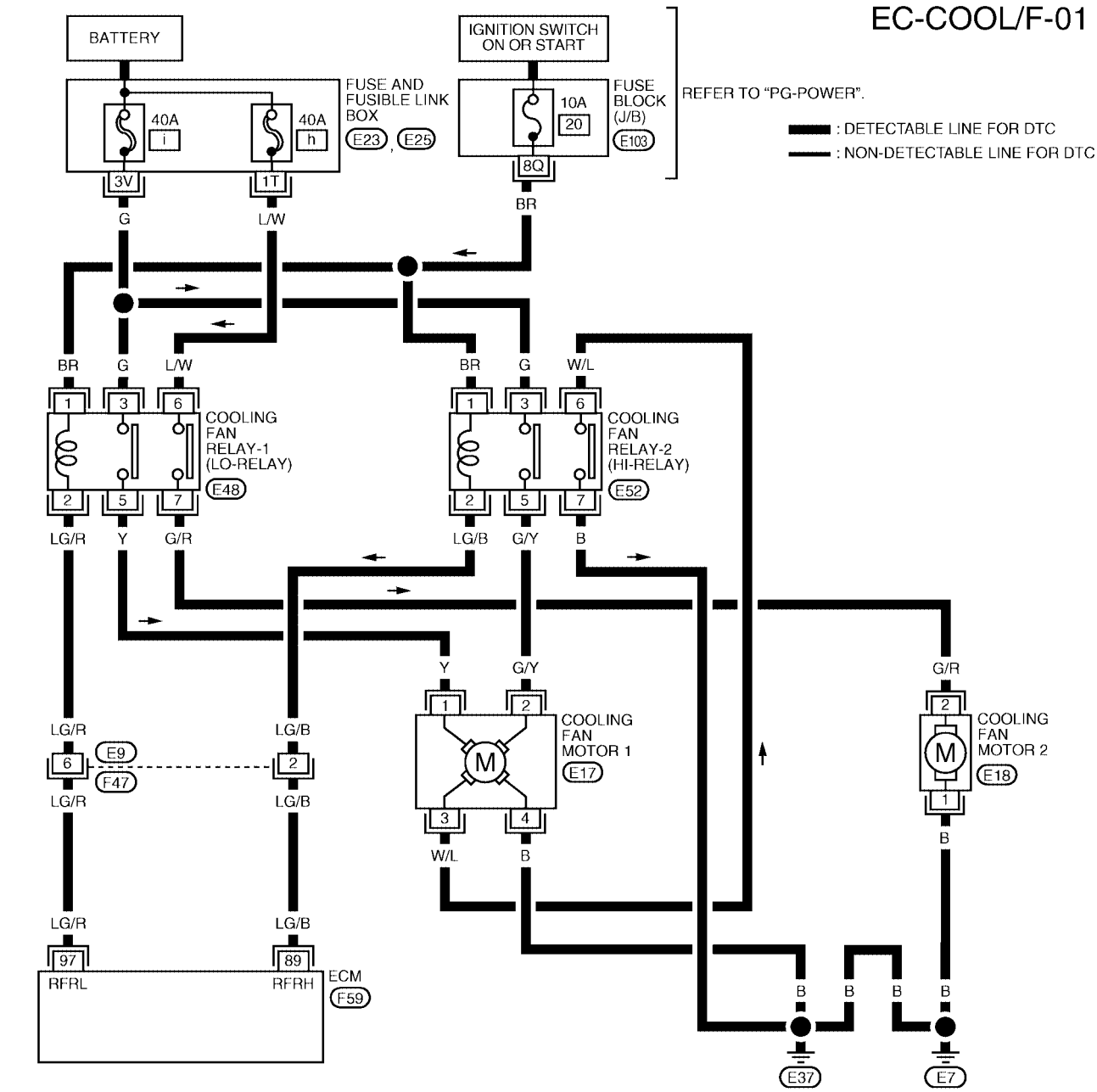

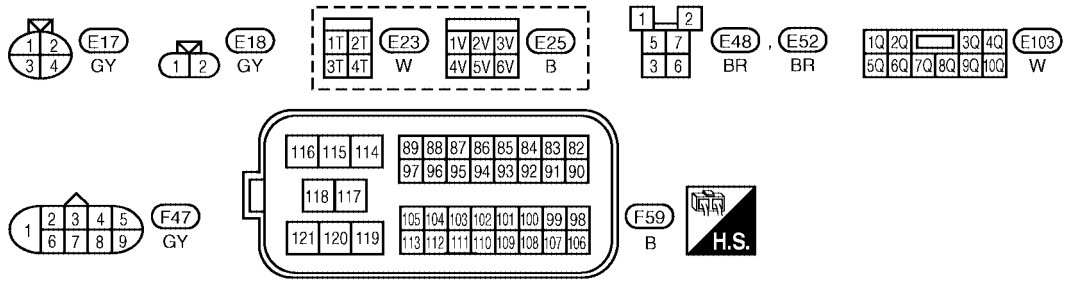

BBWA1449E

Specification data are reference values and are measured between each terminal and ground.

CAUTION:

Do not use ECM ground terminals when measuring input/output voltage. Doing so may result in damage to the ECM's transistor. Use a ground other than ECM terminals, such as the ground.

TERMINAL NO.	WIRE COLOR	ITEM	CONDITION	DATA (DC Voltage)
89	LG/B	Cooling fan relay-2 (High)	**[Engine is running]** ● Cooling fan is not operating	BATTERY VOLTAGE (11-14V)
			[Engine is running] ● Cooling fan is high speed operating	0 - 1.0V
97	LG/R	Cooling fan relay-1 (Low)	**[Ignition switch: ON]** ● Cooling fan is not operating	BATTERY VOLTAGE (11-14V)
			[Ignition switch: ON] ● Cooling fan is operating	0 - 1.0V

Diagnostic Procedure

UBS00BCS

1. INSPECTION START

Do you have CONSULT-II?

Yes or No

Yes >> GO TO 2.
No >> GO TO 4.

2. CHECK COOLING FAN LOW SPEED OPERATION

With CONSULT-II

1. Disconnect cooling fan relay-2.
2. Turn ignition switch ON.

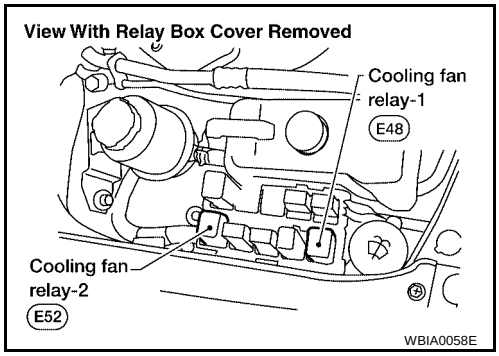

3. Perform “COOLING FAN” in “ACTIVE TEST” mode with CONSULT-II.
4. Make sure that cooling fans-1 and -2 operate at low speed.

OK or NG

OK >> GO TO 3.
NG >> Check cooling fan low speed control circuit. (Go to PROCEDURE A, EC-464 .)

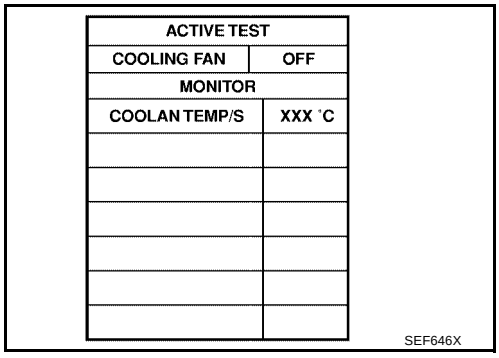

ACTIVE TEST	
COOLING FAN	OFF
MONITOR	
COOLAN TEMP/S	XXX °C

SEF646X

3. CHECK COOLING FAN HIGH SPEED OPERATION

With CONSULT-II

1. Turn ignition switch OFF.
2. Reconnect cooling fan relay-2.
3. Turn ignition switch ON.
4. Perform “COOLING FAN” in “ACTIVE TEST” mode with CONSULT-II.
5. Make sure that cooling fan-1 operates at high speed.

OK or NG

OK >> GO TO 6.
NG >> Check cooling fan high speed control circuit. (Go to PROCEDURE B, EC-466 .)

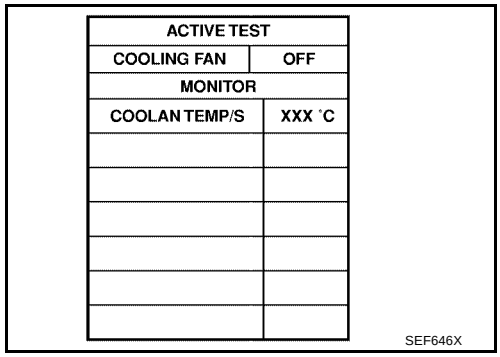

ACTIVE TEST	
COOLING FAN	OFF
MONITOR	
COOLAN TEMP/S	XXX °C

SEF646X

4. CHECK COOLING FAN LOW SPEED OPERATION

Without CONSULT-II

1. Disconnect cooling fan relays-2.
2. Start engine and let it idle.
3. Set temperature lever at full cold position.
4. Turn air conditioner switch ON.
5. Turn blower fan switch ON.

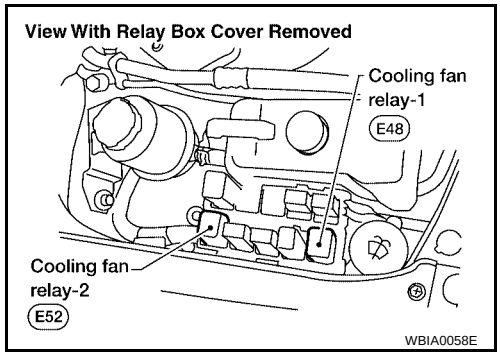

6. Make sure that cooling fans-1 and -2 operate at low speed.

OK or NG

OK >> GO TO 5.
NG >> Check cooling fan low speed control circuit. (Go to PROCEDURE A, EC-464 .)

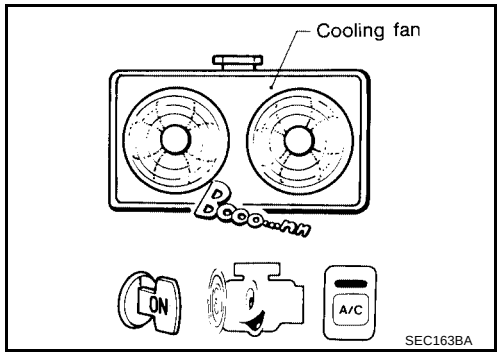

5. CHECK COOLING FAN HIGH SPEED OPERATION

Without CONSULT-II

1. Turn ignition switch OFF.
2. Reconnect cooling fan relay-2.
3. Turn air conditioner switch and blower fan switch OFF.
4. Disconnect engine coolant temperature sensor harness connector.
5. Connect 150Ω resistor to engine coolant temperature sensor harness connector.
6. Restart engine and make sure that cooling fan-1 operates at high speed.

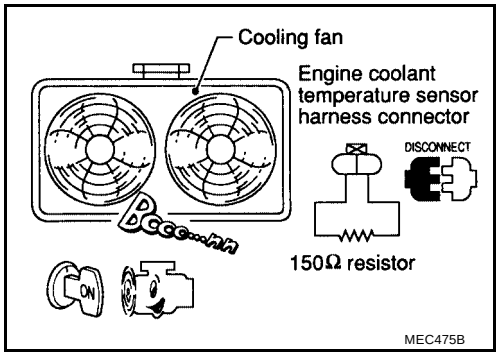

OK or NG

OK >> GO TO 6.
NG >> Check cooling fan high speed control circuit. (Go to PROCEDURE B, EC-466 .)

6. CHECK COOLING SYSTEM FOR LEAK

Apply pressure to the cooling system with a tester, and check if the pressure drops.

Testing pressure: 157 kPa (1.6 kg/cm^2 , 23 psi)

CAUTION:
Higher than the specified pressure may cause radiator damage. Pressure should not drop.

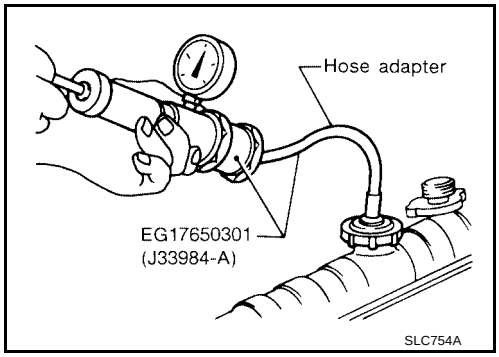

OK or NG

OK >> GO TO 8.
NG >> GO TO 7.

7. DETECT MALFUNCTIONING PART

Check the following for leak.

- Hose
- Radiator
- Water pump (Refer to CO-10, "WATER PUMP" .)

>> Repair or replace.

8. CHECK RADIATOR CAP

Apply pressure to cap with a tester.

Radiator cap relief pressure:

59 - 98 kPa (0.6 - 1.0 kg/cm^2 , 9 - 14 psi)

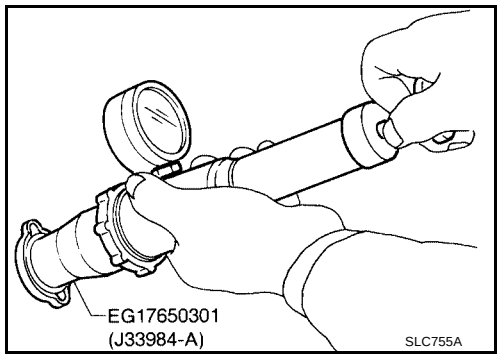

OK or NG

OK >> GO TO 9.
NG >> Replace radiator cap.

9. CHECK THERMOSTAT

1. Check valve seating condition at normal room temperatures.
It should seat tightly.
2. Check valve opening temperature and valve lift.

Valve opening temperature:

76.5°C (170°F) [standard]

Valve lift:

More than 9 mm/90°C (0.35 in/194°F)

3. Check if valve is closed at 5°C (9°F) below valve opening temperature.

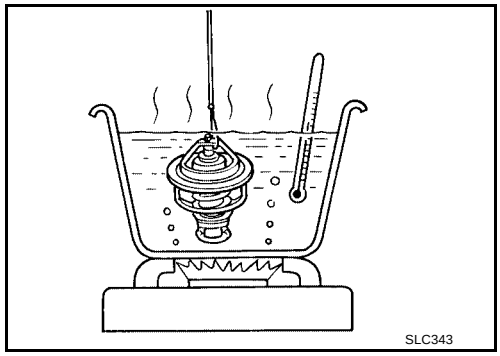

For details, refer toCO-12, "THERMOSTAT AND THERMOSTAT HOUSING" .

OK or NG

OK >> GO TO 10.
NG >> Replace thermostat.

10. CHECK ENGINE COOLANT TEMPERATURE SENSOR

Refer to EC-468, "Component Inspection" .

OK or NG

OK >> GO TO 11.
NG >> Replace engine coolant temperature sensor.

11. CHECK MAIN 12 CAUSES

If the cause cannot be isolated, go to EC-467, "Main 12 Causes of Overheating" .

>> **INSPECTION END**

PROCEDURE A

1. CHECK COOLING FAN POWER SUPPLY CIRCUIT

1. Turn ignition switch OFF.
2. Disconnect cooling fan relay-1.
3. Turn ignition switch ON.
4. Check voltage between cooling fan relay-1 terminals 1, 3, 6 and ground with CONSULT-II or tester.

Voltage: Battery voltage

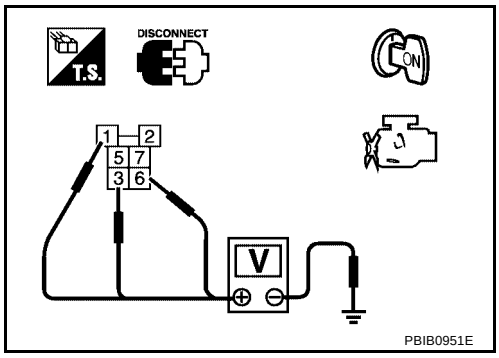

OK or NG

OK >> GO TO 3.
NG >> GO TO 2.

2. DETECT MALFUNCTIONING PART

Check the following.

- Fuse and fusible link box connectors E23, E25
- Fuse block (J/B) connector E103
- 10A fuse
- 40A fusible links
- Harness for open or short between cooling fan relay-1 and fuse
- Harness for open or short between cooling fan relay-1 and battery

>> Repair open circuit or short to ground or short to power in harness or connectors.

3. CHECK COOLING FAN MOTOR CIRCUIT FOR OPEN AND SHORT

1. Turn ignition switch OFF.
2. Disconnect cooling fan motor-1 harness connector and cooling fan motor-2 harness connector.
3. Check harness continuity between cooling fan relay-1 terminal 5 and cooling fan motor-1 terminal 1, cooling fan motor-1 terminal 4 and ground.
   Refer to Wiring Diagram.

Continuity should exist.

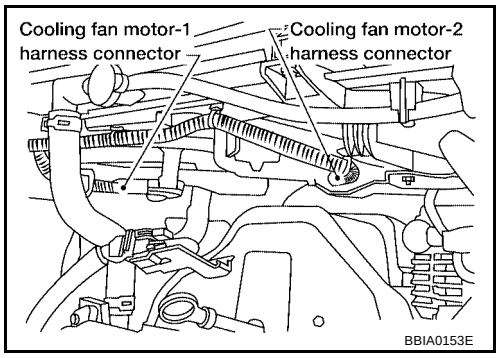

4. Also check harness for short to ground and short to power.
5. Check harness continuity between cooling fan relay-1 terminal 7 and cooling fan motor-2 terminal 2, cooling fan motor-2 terminal 1 and ground.
   Refer to Wiring Diagram.

Continuity should exist.

6. Also check harness for short to ground and short to power.

OK or NG

OK >> GO TO 4.
NG >> Repair open circuit or short to ground or short to power in harness or connectors.

4. CHECK COOLING FAN RELAY-1 OUTPUT SIGNAL CIRCUIT FOR OPEN AND SHORT

1. Disconnect ECM harness connector.
2. Check harness continuity between ECM terminal 97 and cooling fan relay-1 terminal 2. Refer to Wiring Diagram.

   Continuity should exist.

3. Also check harness for short to ground and short to power.

OK or NG

OK >> GO TO 6.
NG >> GO TO 5.

5. DETECT MALFUNCTIONING PART

Check the following.

- Harness connectors E9, F47
- Harness for open or short between cooling fan relay-1 and ECM

>> Repair open circuit or short to ground or short to power in harness or connectors.

6. CHECK COOLING FAN RELAY-1

Refer to EC-468, "Component Inspection" .

OK or NG

OK >> GO TO 7.
NG >> Replace cooling fan relay.

7. CHECK COOLING FAN MOTORS

Refer to EC-468, "Component Inspection" .

OK or NG

OK >> GO TO 8.
NG >> Replace cooling fan motors.

8. CHECK INTERMITTENT INCIDENT

Perform EC-164, "TROUBLE DIAGNOSIS FOR INTERMITTENT INCIDENT" .

>> **INSPECTION END**

PROCEDURE B

1. CHECK COOLING FAN POWER SUPPLY CIRCUIT

1. Turn ignition switch OFF.
2. Disconnect cooling fan relay-2.
3. Turn ignition switch ON.
4. Check voltage between cooling fan relay-2 terminals 1, 3 and ground with CONSULT-II or tester.

Voltage: Battery voltage

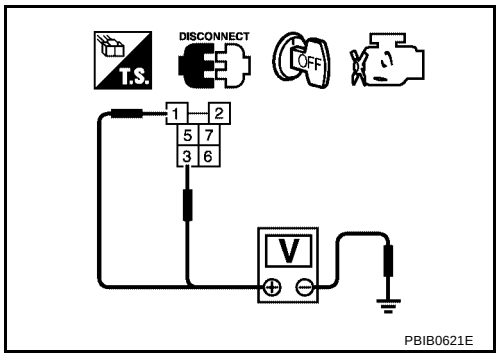

OK or NG

OK >> GO TO 3.
NG >> GO TO 2.

2. DETECT MALFUNCTIONING PART

Check the following.

- Fuse and fusible link box connectors E23, E25
- Fuse block (J/B) connector E103
- Harness for open or short between cooling fan relay-2 and fuse
- Harness for open or short between cooling fan relay-2 and battery

>> Repair harness or connectors.

3. CHECK COOLING FAN MOTOR CIRCUIT FOR OPEN AND SHORT

1. Turn ignition switch OFF.
2. Disconnect cooling fan motor-1 harness connector.
3. Check harness continuity between cooling fan relay-2 terminal 5 and cooling fan motor-1 terminal 2, cooling fan relay-2 terminal 6 and cooling fan motor-1 terminal 3, cooling fan relay-2 terminal 7 and ground. Refer to Wiring Diagram.

Continuity should exist.

4. Also check harness for short to ground and short to power.

OK or NG

OK >> GO TO 4.
NG >> Repair open circuit or short to ground or short to power in harness or connectors.

4. CHECK COOLING FAN RELAY-2 OUTPUT SIGNAL CIRCUIT FOR OPEN AND SHORT

1. Disconnect ECM harness connector.
2. Check harness continuity between ECM terminal 89 and cooling fan relay-2 terminal 2. Refer to Wiring Diagram.

Continuity should exist.

3. Also check harness for short to ground and short to power.

OK or NG

OK >> GO TO 6.
NG >> GO TO 5.

5. DETECT MALFUNCTIONING PART

Check the following.

- Harness connectors E9, F47
- Harness for open or short between cooling fan relay-2 and ECM

>> Repair open circuit or short to ground or short to power in harness or connectors.

6. CHECK COOLING FAN RELAY-2

Refer to EC-468, "Component Inspection" .

OK or NG

OK >> GO TO 7.
NG >> Replace cooling fan relays.

7. CHECK COOLING FAN MOTORS

Refer to EC-468, "Component Inspection" .

OK or NG

OK >> GO TO 8.
NG >> Replace cooling fan motors.

8. CHECK INTERMITTENT INCIDENT

Perform EC-164, "TROUBLE DIAGNOSIS FOR INTERMITTENT INCIDENT" .

>> **INSPECTION END**

Main 12 Causes of Overheating

UBS00BCT

Engine	Step	Inspection item	Equipment	Standard	Reference page
OFF	1	● Blocked radiator ● Blocked condenser ● Blocked radiator grille ● Blocked bumper	● Visual	No blocking	—
	2	● Coolant mixture	● Coolant tester	50 - 50% coolant mixture	See MA-13, "RECOMMENDED FLUIDS AND LUBRICANTS" .
	3	● Coolant level	● Visual	Coolant up to MAX level in reservoir tank and radiator filler neck	See MA-16, "Changing Engine Coolant" .
	4	● Radiator cap	● Pressure tester	59 - 98 kPa (0.6 - 1.0 kg/cm^2 , 9 - 14 psi) (Limit)	SeeCO-9, "CHECKING RADIATOR CAP" .
ON*2	5	● Coolant leaks	● Visual	No leaks	See CO-8, "CHECKING COOLING SYSTEM FOR LEAKS" .
ON*2	6	● Thermostat	● Touch the upper and lower radiator hoses	Both hoses should be hot	See CO-12, "THERMOSTAT AND THERMOSTAT HOUSING" and CO-14, "RADIATOR" .
ON*1	7	● Cooling fan	● CONSULT-II	Operating	See trouble diagnosis for DTC P1217 (EC-455).
OFF	8	● Combustion gas leak	● Color checker chemical tester 4 Gas analyzer	Negative	—

Engine	Step	Inspection item	Equipment	Standard	Reference page
ON*3	9	● Coolant temperature gauge	● Visual	Gauge less than 3/4 when driving	—
		● Coolant overflow to reservoir tank	● Visual	No overflow during driving and idling	See MA-16, "Changing Engine Coolant" .
OFF*4	10	● Coolant return from reservoir tank to radiator	● Visual	Should be initial level in reservoir tank	See MA-16, "ENGINE MAINTENANCE (QG18DE ENGINE)" .
OFF	11	● Cylinder head	● Straight gauge feeler gauge	0.1 mm (0.004 in) Maximum distortion (warping)	See EM-61, "Inspection after Disassembly" .
	12	● Cylinder block and pistons	● Visual	No scuffing on cylinder walls or piston	See EM-71, "Inspection" .

*1: Turn the ignition switch ON.
*2: Engine running at 3,000 rpm for 10 minutes.
*3: Drive at 90 km/h (56 MPH) for 30 minutes and then let idle for 10 minutes.
*4: After 60 minutes of cool down time.
For more information, refer to CO-5, "Overheating Cause Analysis" .

Component Inspection

UBS00BCU

COOLING FAN RELAYS-1 AND -2

Check continuity between terminals 3 and 5, 6 and 7.

Conditions	Continuity
12V direct current supply between terminals 1 and 2	Yes
No current supply	No

If NG, replace relay.

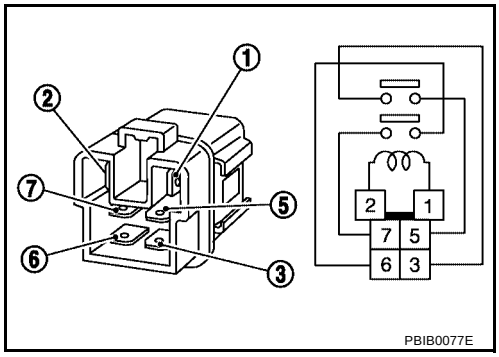

COOLING FAN MOTOR-1

1. Disconnect cooling fan motor harness connectors.
2. Supply cooling fan motor terminals with battery voltage and check operation.

	Speed	Terminals	
		(+)	(–)
Cooling fan motor	Low	1	4
	High	1, 2	3, 4

Cooling fan motor should operate.
If NG, replace cooling fan motor.

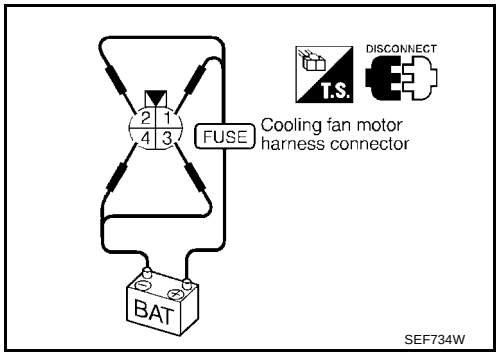

COOLING FAN MOTOR-2

1. Disconnect cooling fan motor harness connectors.

2. Supply cooling fan motor terminals with battery voltage and check operation.

	Terminals	
	(+)	(–)
Cooling fan motor	2	1

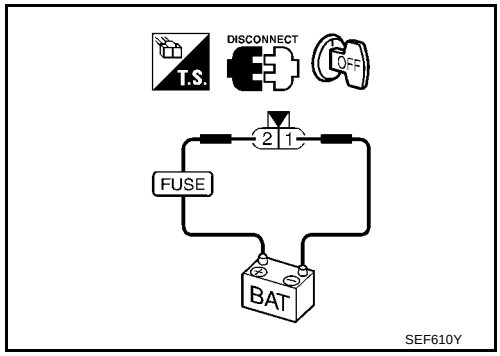

Cooling fan motor should operate.
If NG, replace cooling fan motor.

DTC P1225 TP SENSOR

PFP:16119

Component Description

UBS00BCV

Electric throttle control actuator consists of throttle control motor, throttle position sensor, etc. The throttle position sensor responds to the throttle valve movement.
The throttle position sensor has the two sensors. These sensors are a kind of potentiometers which transform the throttle valve position into output voltage, and emit the voltage signal to the ECM. In addition, these sensors detect the opening and closing speed of the throttle valve and feed the voltage signals to the ECM. The ECM judges the current opening angle of the throttle valve from these signals and the ECM controls the throttle control motor to make the throttle valve opening angle properly in response to driving condition.

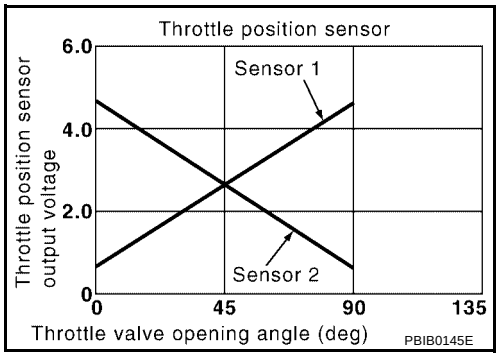

On Board Diagnosis Logic

UBS00BCW

The MIL will not light up for this diagnosis.

DTC No.	Trouble diagnosis name	DTC detecting condition	Possible cause
P1225 1225	Closed throttle position learning performance problem	Closed throttle position learning value is excessively low.	● Electric throttle control actuator (TP sensor 1 and 2)

DTC Confirmation Procedure

UBS00BCX

NOTE:
If DTC Confirmation Procedure has been previously conducted, always turn ignition switch OFF and wait at least 10 seconds before conducting the next test.
TESTING CONDITION:
Before performing the following procedure, confirm that battery voltage is more than 10V at idle.

WITH CONSULT-II

1. Turn ignition switch ON.
2. Select “DATA MONITOR” mode with CONSULT-II.
3. Turn ignition switch OFF and wait at least 10 seconds.
4. Turn ignition switch ON.
5. If 1st trip DTC is detected, go to EC-471, "Diagnostic Procedure"
.

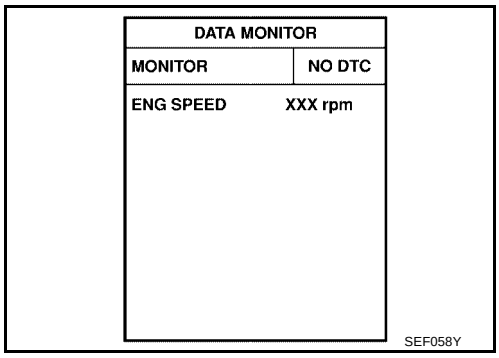

WITH GST

Follow the procedure “WITH CONSULT-II” above.

Diagnostic Procedure

UBS00BCY

1. CHECK ELECTRIC THROTTLE CONTROL ACTUATOR VISUALLY

1. Turn ignition switch OFF.
2. Remove the intake air duct.
3. Check if foreign matter is caught between the throttle valve and the housing.

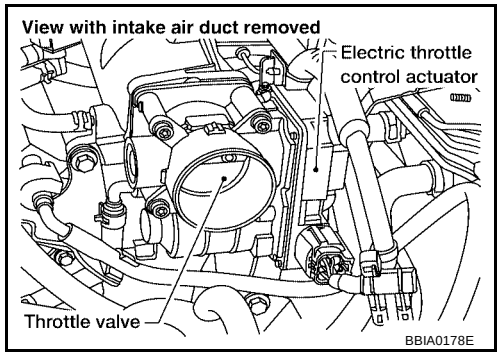

OK or NG

OK >> GO TO 2.
NG >> Remove the foreign matter and clean the electric throttle control actuator inside.

2. REPLACE ELECTRIC THROTTLE CONTROL ACTUATOR

1. Replace the electric throttle control actuator.
2. Perform EC-92, "Throttle Valve Closed Position Learning" .
3. Perform EC-92, "Idle Air Volume Learning" .

>> **INSPECTION END**

Removal and Installation

UBS00BCZ

ELECTRIC THROTTLE CONTROL ACTUATOR

Refer toEM-15, "OUTER COMPONENT PARTS" .

DTC P1226 TP SENSOR

PFP:16119

Component Description

UBS00BD0

Electric throttle control actuator consists of throttle control motor, throttle position sensor, etc. The throttle position sensor responds to the throttle valve movement.
The throttle position sensor has the two sensors. These sensors are a kind of potentiometers which transform the throttle valve position into output voltage, and emit the voltage signal to the ECM. In addition, these sensors detect the opening and closing speed of the throttle valve and feed the voltage signals to the ECM. The ECM judges the current opening angle of the throttle valve from these signals and the ECM controls the throttle control motor to make the throttle valve opening angle properly in response to driving condition.

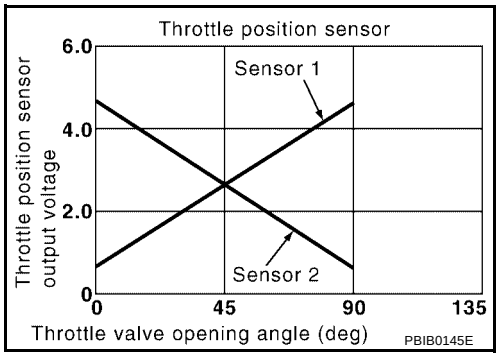

On Board Diagnosis Logic

UBS00BD1

The MIL will not light up for this diagnosis.

DTC No.	Trouble diagnosis name	DTC detecting condition	Possible cause
P1226 1226	Closed throttle position learning performance problem	Closed throttle position learning is not performed successfully, repeatedly.	● Electric throttle control actuator (TP sensor 1 and 2)

DTC Confirmation Procedure

UBS00BD2

NOTE:
If DTC Confirmation Procedure has been previously conducted, always turn ignition switch OFF and wait at least 10 seconds before conducting the next test.
TESTING CONDITION:
Before performing the following procedure, confirm that battery voltage is more than 10V at idle.

WITH CONSULT-II

1. Turn ignition switch ON.
2. Select “DATA MONITOR” mode with CONSULT-II.
3. Turn ignition switch OFF and wait at least 10 seconds.
4. Turn ignition switch ON.
5. Repeat steps 3 and 4, 32 times.
6. If 1st trip DTC is detected, go to EC-473, "Diagnostic Procedure"
.

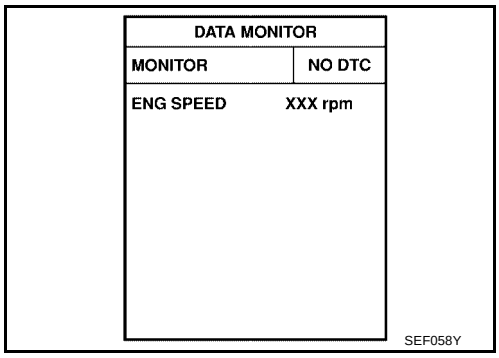

WITH GST

Follow the procedure “WITH CONSULT-II” above.

Diagnostic Procedure

UBS00BD3

1. CHECK ELECTRIC THROTTLE CONTROL ACTUATOR VISUALLY

1. Turn ignition switch OFF.
2. Remove the intake air duct.
3. Check if foreign matter is caught between the throttle valve and the housing.

OK or NG

OK >> GO TO 2.
NG >> Remove the foreign matter and clean the electric throttle control actuator inside.

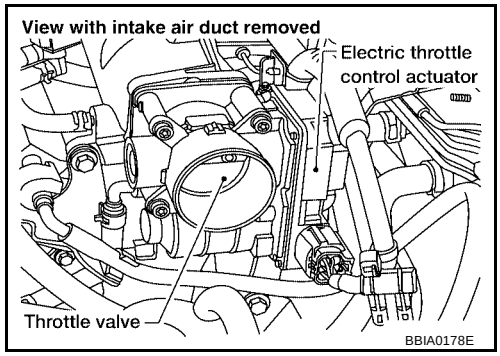

2. REPLACE ELECTRIC THROTTLE CONTROL ACTUATOR

1. Replace the electric throttle control actuator.
2. Perform EC-92, "Throttle Valve Closed Position Learning" .
3. Perform EC-92, "Idle Air Volume Learning" .

>> **INSPECTION END**

Removal and Installation

UBS00BD4

ELECTRIC THROTTLE CONTROL ACTUATOR

Refer to EM-15, "OUTER COMPONENT PARTS" .

DTC P1229 SENSOR POWER SUPPLY

PFP:16119

On Board Diagnosis Logic

UBS00KJV

This self-diagnosis has the one trip detection logic.

DTC No.	Trouble diagnosis name	DTC detecting condition	Possible cause
P1229 1229	Sensor power supply circuit short	ECM detects a voltage of power source for sensor is excessively low or high.	● Harness or connectors (APP sensor 1 circuit is shorted.) (PSP sensor circuit is shorted.) (Refrigerant pressure sensor circuit is shorted.) (EVAP control system pressure sensor circuit is shorted.) ● Swirl control valve position sensor circuit is shorted (SULEV model) ● Accelerator pedal position sensor ● Power steering pressure sensor ● Refrigerant pressure sensor ● EVAP control system pressure sensor ● Swirl control valve position sensor (SULEV model)

FAIL-SAFE MODE

When the malfunction is detected, the ECM enters fail-safe mode and the MIL lights up.

Engine operation condition in fail-safe mode
ECM stops the electric throttle control actuator control, throttle valve is maintained at a fixed opening (approx. 5 degrees) by the return spring.

DTC Confirmation Procedure

UBS00KJW

NOTE:
If DTC Confirmation Procedure has been previously conducted, always turn ignition switch OFF and wait at least 10 seconds before conducting the next test.
TESTING CONDITION:
Before performing the following procedure, confirm that battery voltage is more than 10V at idle.

WITH CONSULT-II

1. Turn ignition switch ON.
2. Select “DATA MONITOR” mode with CONSULT-II.
3. Start engine and let it idle for 1 second.
4. If DTC is detected, go to EC-476, "Diagnostic Procedure" .

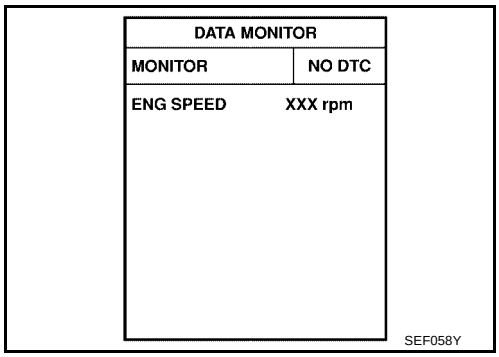

WITH GST

Follow the procedure “WITH CONSULT-II” above.

Wiring Diagram

UBS00KJX

EC-SEN/PW-01

: DETECTABLE LINE FOR DTC
: NON-DETECTABLE LINE FOR DTC

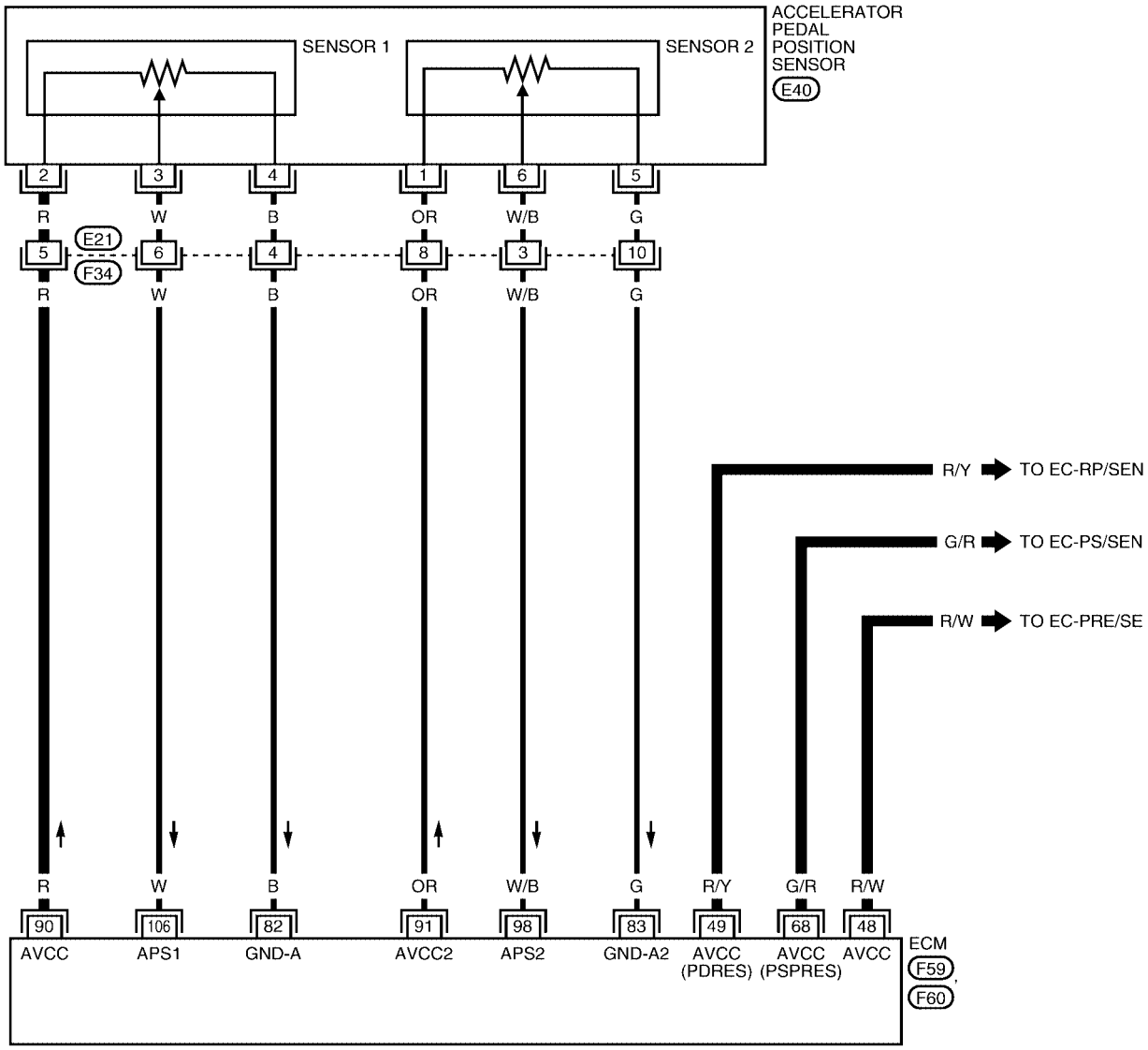

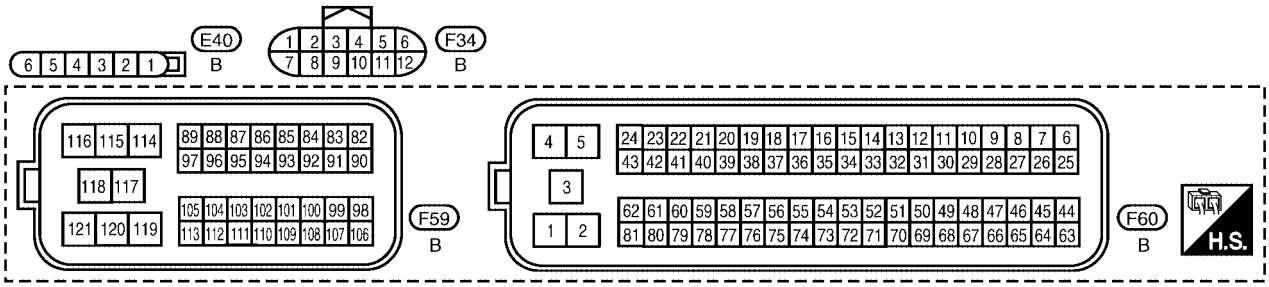

BBWA2278E

Specification data are reference values and are measured between each terminal and ground.

CAUTION:

Do not use ECM ground terminals when measuring input/output voltage. Doing so may result in damage to the ECM's transistor. Use a ground other than ECM terminals, such as the ground.

TERMINAL NO.	WIRE COLOR	ITEM	CONDITION	DATA (DC Voltage)
48	R/W	Sensor power supply	**[Ignition switch: ON]**	Approximately 5V
49	R/Y	Sensor power supply (Refrigerant pressure sensor)	**[Ignition switch: ON]**	Approximately 5V
68	G/R	Sensor power supply (Power steering pressure sensor)	**[Ignition switch: ON]**	Approximately 5V
90	R	Sensor power supply (Accelerator pedal position sensor 1)	**[Ignition switch: ON]**	Approximately 5V

Diagnostic Procedure

UBS00KJY

1. CHECK GROUND CONNECTIONS

1. Turn ignition switch OFF.
2. Loosen and retighten two ground screws on the body.
   Refer to EC-171, "Ground Inspection" .

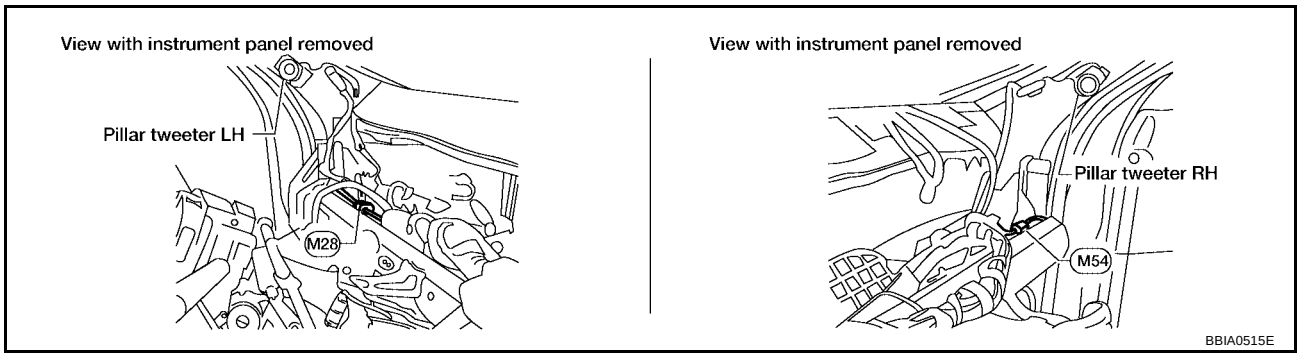

OK or NG

OK >> GO TO 2.
NG >> Repair or replace ground connections.

2. CHECK ACCELERATOR PEDAL POSITION SENSOR 1 POWER SUPPLY CIRCUIT

1. Disconnect accelerator pedal position (APP) sensor harness connector.
2. Turn ignition switch ON.

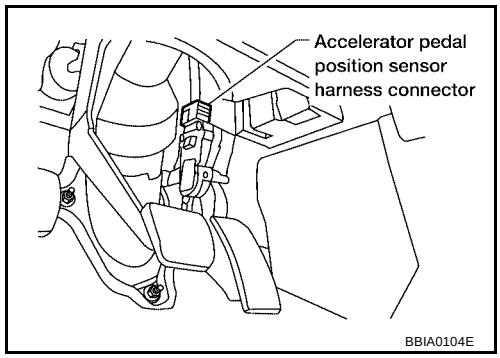

3. Check voltage between APP sensor terminal 2 and ground with CONSULT-II or tester.

Voltage: Approximately 5V

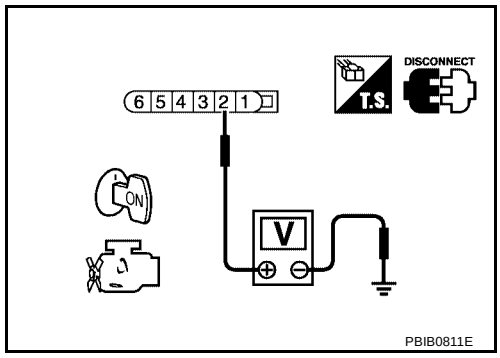

OK or NG

OK >> GO TO 5.
NG >> GO TO 3.

3. CHECK SENSOR POWER SUPPLY CIRCUITS

Check harness for short to power and short to ground, between the following terminals.

ECM terminal	Sensor terminal	Reference Wiring Diagram
90	APP sensor terminal 2	EC-596
48	Swirl control valve position sensor terminal 3.	EC-424
49	Refrigerant pressure sensor terminal 1	EC-628
68	PSP sensor terminal 1	EC-378

OK or NG

OK >> GO TO 4.
NG >> Repair short to ground or short to power in harness or connectors.

4. CHECK COMPONENTS

Check the following.

- Refrigerant pressure sensor (Refer to EC-626 .)
- Power steering pressure sensor (Refer toEC-381 .)
- EVAP control system pressure sensor (Refer to EC-347 .)
- Swirl control valve position sensor (Refer to EC-422 .)

OK or NG

OK >> GO TO 7.
NG >> Replace malfunctioning component.

5. CHECK APP SENSOR

Refer to EC-601, "Component Inspection" .

OK or NG

OK >> GO TO 7.
NG >> GO TO 6.

6. REPLACE ACCELERATOR PEDAL ASSEMBLY

1. Replace accelerator pedal assembly.
2. Perform EC-92, "Accelerator Pedal Released Position Learning" .
3. Perform EC-92, "Throttle Valve Closed Position Learning" .
4. Perform EC-92, "Idle Air Volume Learning" .

>> **INSPECTION END**

7. CHECK INTERMITTENT INCIDENT

Refer to EC-164, "TROUBLE DIAGNOSIS FOR INTERMITTENT INCIDENT" .

>> **INSPECTION END**

DTC P1271 A/F SENSOR 1

PFP:22693

Component Description

UBS00BD9

The A/F sensor 1 is a planar dual-cell limit current sensor. The sensor element of the A/F sensor 1 is the combination of a Nernst concentration cell (sensor cell) with an oxygen-pump cell, which transports ions. It has a heater in the element.

The sensor is capable of precise measurement λ = 1, but also in the lean and rich range. Together with its control electronics, the sensor outputs a clear, continuous signal throughout a wide λ range (0.7 < λ < air).

The exhaust gas components diffuse through the diffusion gap at the electrode of the oxygen pump and Nernst concentration cell, where they are brought to thermodynamic balance.

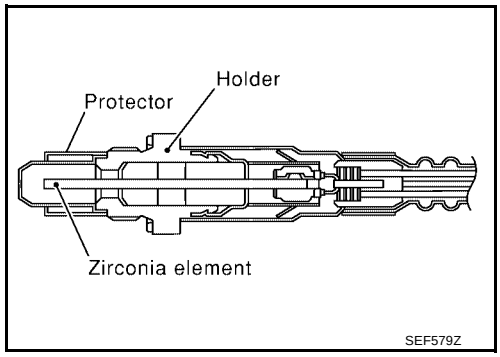

An electronic circuit controls the pump current through the oxygen-pump cell so that the composition of the exhaust gas in the diffusion gap remains constant at λ = 1. Therefore, the A/F sensor 1 is able to indicate air-fuel ratio by this pumping of current. In addition, a heater is integrated in the sensor to ensure the required operating temperature of 700 - 800°C (1,292 - 1,472°F).

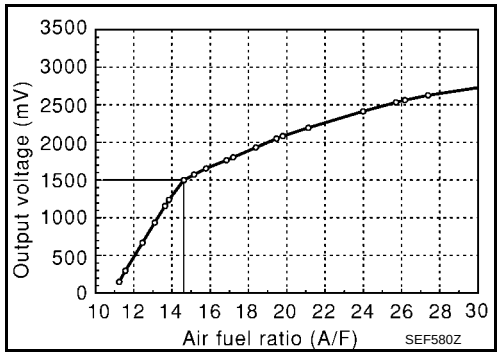

CONSULT-II Reference Value in Data Monitor Mode

UBS00BDA

Specification data are reference values.

MONITOR ITEM	CONDITION		SPECIFICATION
A/F SEN1 (B1)	● Engine: After warming up	Maintaining engine speed at 2,000 rpm	Fluctuates around 1.5V

On Board Diagnosis Logic

UBS00BDB

To judge the malfunction, the diagnosis checks that the A/F signal computed by ECM from the air fuel ratio (A/F) sensor 1 signal is not inordinately low.

DTC No.	Trouble diagnosis name	DTC detecting condition	Possible Cause
P1271 1271	Air fuel ratio (A/F) sensor 1 circuit no activity detected	● The A/F signal computed by ECM from the A/F sensor 1 signal is constantly approx. 0V.	● Harness or connectors (The sensor circuit is open or shorted.) ● Air fuel ratio (A/F) sensor 1

DTC Confirmation Procedure

UBS00BDC

CAUTION:
Always drive vehicle at a safe speed.

NOTE:
If DTC Confirmation Procedure has been previously conducted, always turn ignition switch OFF and wait at least 10 seconds before conducting the next test.

TESTING CONDITION:
Before performing the following procedure, confirm that battery voltage is more than 10.5V at idle.

WITH CONSULT-II

1. Start engine and warm it up to normal operating temperature.
2. Select “A/F SEN1 (B1)” in “DATA MONITOR” mode with CONSULT-II.

3. Check “A/F SEN1 (B1)” indication.
   If the indication is constantly approx. 0V, go to EC-483, "Diagnostic Procedure" .
   If the indication is not constantly approx. 0V, go to next step.
4. Select “A/F SEN1 (B1) P1278/P1279” of “A/F SEN1” in “DTC WORK SUPPORT” mode.
5. Touch “START”.

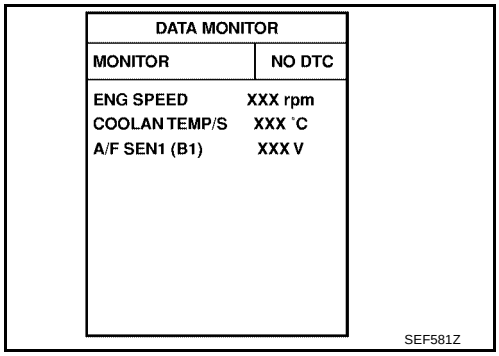

6. When the following conditions are met, “TESTING” will be displayed on the CONSULT-II screen.

ENG SPEED	1,000 - 3,200 rpm
Vehicle speed	More than 40 km/h (25 MPH)
B/FUEL SCHDL	1.5 - 9.0 msec
Selector lever	● D position with “OD” ON (A/T) ● 4th position (M/T)

If “TESTING” is not displayed after 20 seconds, retry from step 2.

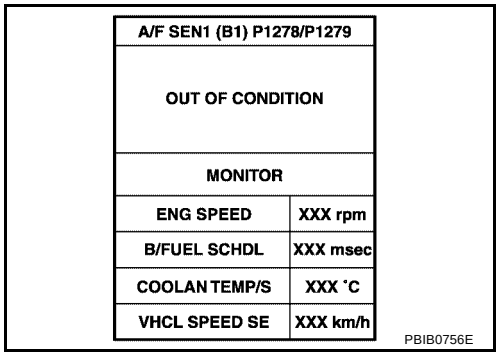

7. Following the instructions of CONSULT-II screen, set D position with “OD” OFF (A/T) or 3rd position (M/T) and release accelerator pedal fully.

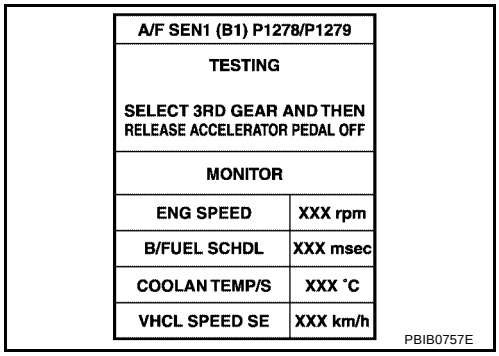

8. Make sure that “TESTING” changes to “COMPLETED”.
   If “TESTING” changed to “OUT OF CONDITION”, retry from step 6.
9. Touch “BACK” and “MODE”, then select “SELF-DIAG RESULT” mode.
   If P1271 is displayed, go to EC-483, "Diagnostic Procedure" .
   If another DTC is displayed, go to the corresponding “Diagnostic Procedure”.

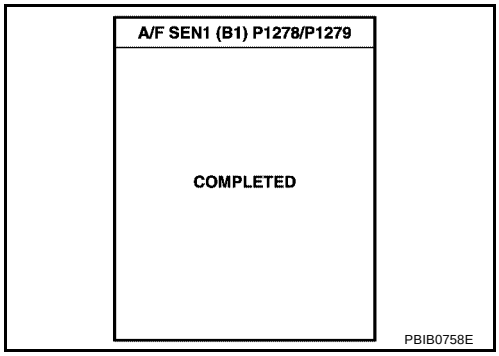

Overall Function Check

UBS00BDD

Use this procedure to check the overall function of the A/F sensor 1 circuit. During this check, a 1st trip DTC might not be confirmed.

WITH GST

1. Start engine and warm it up to normal operating temperature.
2. Drive the vehicle at a speed of 80 km/h (50 MPH) for a few minutes in D position with “OD” OFF (A/T) or 3rd position (M/T).

NOTE:
Keep the accelerator pedal as steady as possible during the cruising.

3. Set D position with “OD” ON (A/T) or 4th position (M/T), then release the accelerator pedal fully until the vehicle speed decreases to 50 km/h (30 MPH).

   NOTE:
   Never apply brake during releasing the accelerator pedal.

4. Repeat steps 2 to 3 five times.
5. Stop the vehicle and turn ignition switch OFF.
6. Wait at least 10 seconds and restart engine.
7. Repeat steps 2 to 3 five times.
8. Stop the vehicle and connect GST to the vehicle.
9. Make sure that no DTC is displayed.
   If the DTC is displayed, go to EC-483, "Diagnostic Procedure" .

Wiring Diagram

UBS00BDE

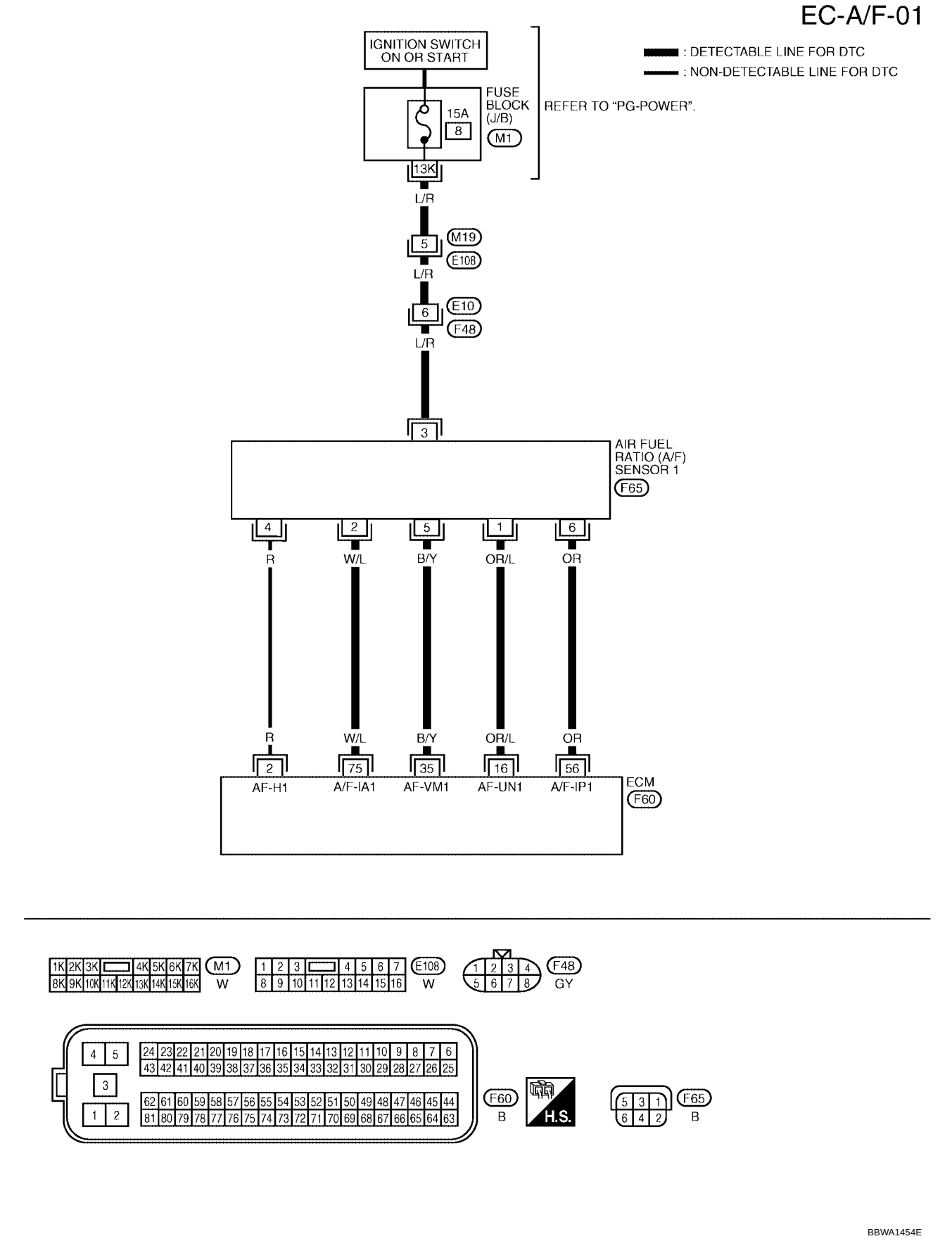

Specification data are reference values and are measured between each terminal and ground.

CAUTION:

Do not use ECM ground terminals when measuring input/output voltage. Doing so may result in damage to the ECM's transistor. Use a ground other than ECM terminals, such as the ground.

TERMINAL NO.	WIRE COLOR	ITEM	CONDITION	DATA (DC Voltage)
16	OR/L	A/F sensor 1	**[Engine is running]** ● **Warm-up condition** ● Idle speed	Approximately 3.1V
35	B/Y			Approximately 2.6V
56	OR			2 - 3V
75	W/L			2 - 3V

Diagnostic Procedure

UBS00BDF

1. CHECK GROUND CONNECTIONS

1. Turn ignition switch OFF.
2. Loosen and retighten two ground screws on the body. Refer to EC-171, "Ground Inspection" .

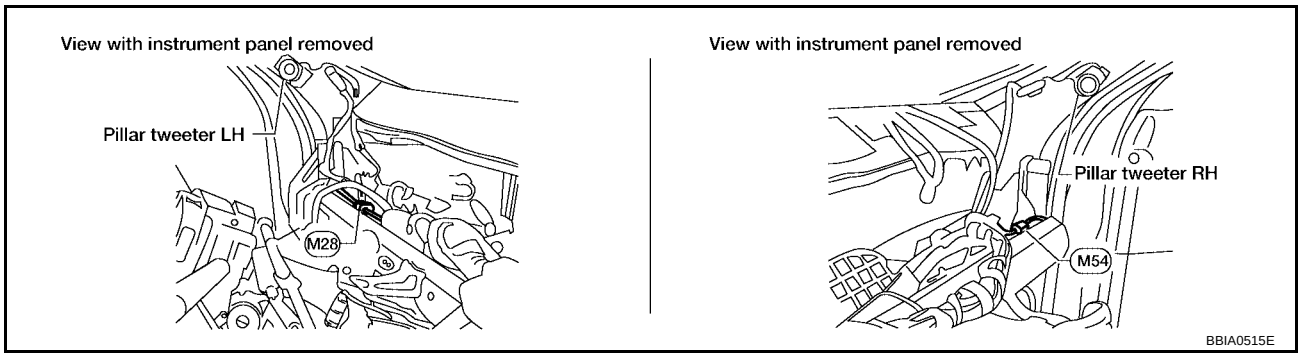

OK or NG

OK >> GO TO 2.

NG >> Repair or replace ground connections.

2. CHECK A/F SENSOR 1 INPUT SIGNAL CIRCUIT

1. Disconnect ECM harness connector and A/F sensor 1 harness connector.
2. Check harness continuity between the following terminals. Refer to Wiring Diagram.

A/F sensor 1 terminal	ECM terminal
1	16
2	75
5	35
6	56

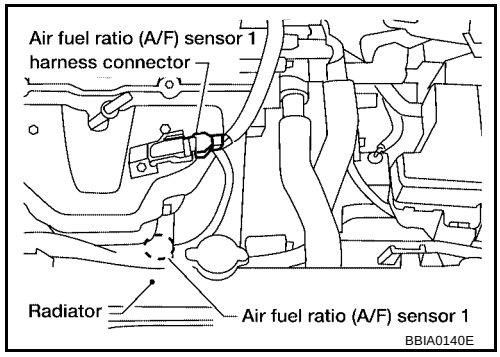

Continuity should exist.

3. Check harness continuity between ECM terminals 16, 35, 56, 75 or A/F sensor 1 terminals 1, 2, 5, 6 and ground. Refer to Wiring Diagram.

Continuity should not exist.

4. Also check harness for short to power.

OK or NG

OK >> GO TO 3.

NG >> Repair open circuit or short to ground or short to power in harness or connectors.

3. CHECK INTERMITTENT INCIDENT

Perform EC-164, "TROUBLE DIAGNOSIS FOR INTERMITTENT INCIDENT" .

OK or NG

OK >> Replace A/F sensor 1.
NG >> Repair or replace.

Removal and Installation

UBS00BDG

AIR FUEL RATIO SENSOR 1

Refer to EM-15, "Removal and Installation" .

DTC P1272 A/F SENSOR 1

PFP:22693

Component Description

UBS00BDH

The A/F sensor 1 is a planar dual-cell limit current sensor. The sensor element of the A/F sensor 1 is the combination of a Nernst concentration cell (sensor cell) with an oxygen-pump cell, which transports ions. It has a heater in the element.

The sensor is capable of precise measurement λ = 1, but also in the lean and rich range. Together with its control electronics, the sensor outputs a clear, continuous signal throughout a wide λ range (0.7 < λ < air).

The exhaust gas components diffuse through the diffusion gap at the electrode of the oxygen pump and Nernst concentration cell, where they are brought to thermodynamic balance.

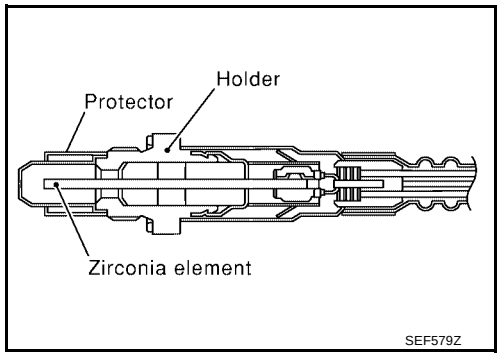

An electronic circuit controls the pump current through the oxygen-pump cell so that the composition of the exhaust gas in the diffusion gap remains constant at λ = 1. Therefore, the A/F sensor 1 is able to indicate air-fuel ratio by this pumping of current. In addition, a heater is integrated in the sensor to ensure the required operating temperature of 700 - 800°C (1,292 - 1,472°F).

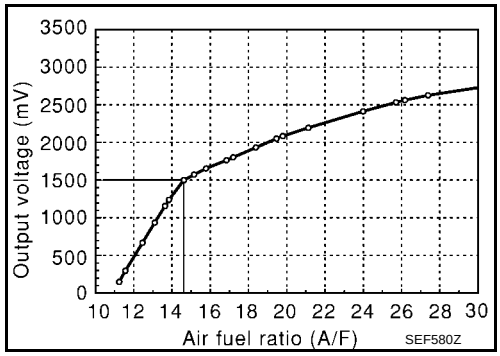

CONSULT-II Reference Value in Data Monitor Mode

UBS00BDI

Specification data are reference values.

MONITOR ITEM	CONDITION		SPECIFICATION
A/F SEN1 (B1)	● Engine: After warming up	Maintaining engine speed at 2,000 rpm	Fluctuates around 1.5V

On Board Diagnosis Logic

UBS00BDJ

To judge the malfunction, the diagnosis checks that the A/F signal computed by ECM from the air fuel ratio (A/F) sensor 1 signal is not inordinately high.

DTC No.	Trouble diagnosis name	DTC detecting condition	Possible Cause
P1272 1272	Air fuel ratio (A/F) sensor 1 circuit no activity detected	● The A/F signal computed by ECM from the A/F sensor 1 signal is constantly approx. 4.5V.	● Harness or connectors (The sensor circuit is open or shorted.) ● Air fuel ratio (A/F) sensor 1

DTC Confirmation Procedure

UBS00BDK

CAUTION:
Always drive vehicle at a safe speed.

NOTE:
If DTC Confirmation Procedure has been previously conducted, always turn ignition switch OFF and wait at least 10 seconds before conducting the next test.

TESTING CONDITION:
Before performing the following procedure, confirm that battery voltage is more than 11V at idle.

WITH CONSULT-II

1. Start engine and warm it up to normal operating temperature.
2. Select “A/F SEN1 (B1)” in “DATA MONITOR” mode with CONSULT-II.

3. Check “A/F SEN1 (B1)” indication.
   If the indication is constantly approx. 4.5V, go to EC-489, "Diagnostic Procedure" .
   If the indication is not constantly approx. 4.5V, go to next step.
4. Select “A/F SEN1 (B1) P1278/P1279” of “A/F SEN1” in “DTC WORK SUPPORT” mode.
5. Touch “START”.

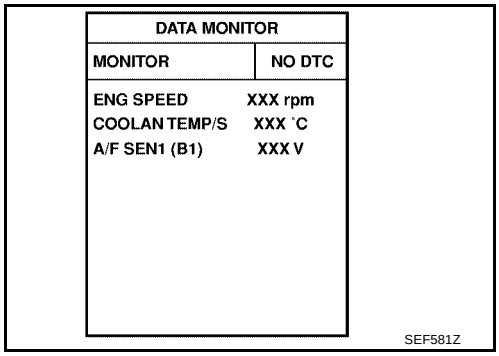

6. When the following conditions are met, “TESTING” will be displayed on the CONSULT-II screen.

ENG SPEED	1,000 - 3,200 rpm
Vehicle speed	More than 40 km/h (25 MPH)
B/FUEL SCHDL	1.5 - 9.0 msec
Selector lever	● D position with “OD” ON (A/T) ● 4th position (M/T)

If “TESTING” is not displayed after 20 seconds, retry from step 2.

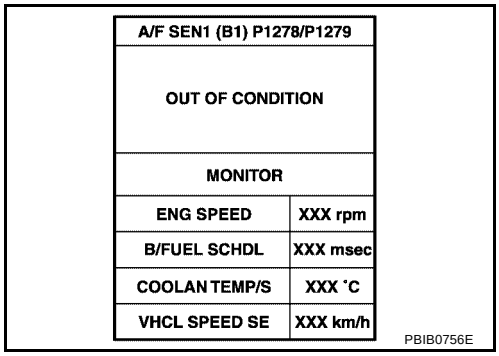

7. Following the instructions of CONSULT-II screen, set D position with “OD” OFF (A/T) or 3rd position (M/T) and release accelerator pedal fully.

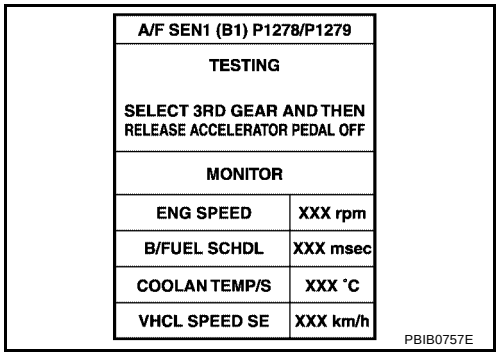

8. Make sure that “TESTING” changes to “COMPLETED”.
   If “TESTING” changed to “OUT OF CONDITION”, retry from step 6.
9. Touch “BACK” and “MODE”, then select “SELF-DIAG RESULT” mode.
   If P1272 is displayed, go to EC-489, "Diagnostic Procedure" .
   If another DTC is displayed, go to the corresponding Diagnostic Procedure.

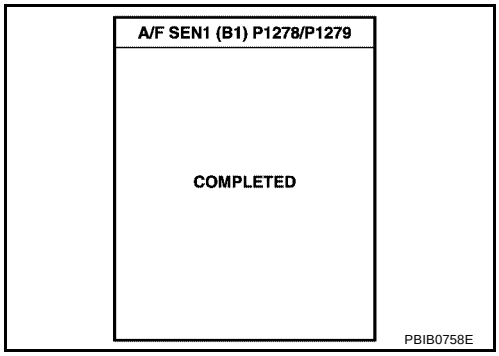

Overall Function Check

UBS00BDL

Use this procedure to check the overall function of the A/F sensor 1 circuit. During this check, a 1st trip DTC might not be confirmed.

WITH GST

1. Start engine and warm it up to normal operating temperature.
2. Drive the vehicle at a speed of 80 km/h (50 MPH) for a few minutes in D position with “OD” OFF (A/T) or 3rd position (M/T).

NOTE:
Keep the accelerator pedal as steady as possible during the cruising.

3. Set D position with “OD” ON (A/T) or 4th position (M/T), then release the accelerator pedal fully until the vehicle speed decreases to 50 km/h (30 MPH).

   NOTE:
   Never apply brake during releasing the accelerator pedal.
4. Repeat steps 2 to 3 five times.
5. Stop the vehicle and turn ignition switch OFF.
6. Wait at least 10 seconds and restart engine.
7. Repeat steps 2 to 3 five times.
8. Stop the vehicle and connect GST to the vehicle.
9. Make sure that no DTC is displayed.
   If the DTC is displayed, go to EC-489, "Diagnostic Procedure" .

Wiring Diagram

UBS00BDM

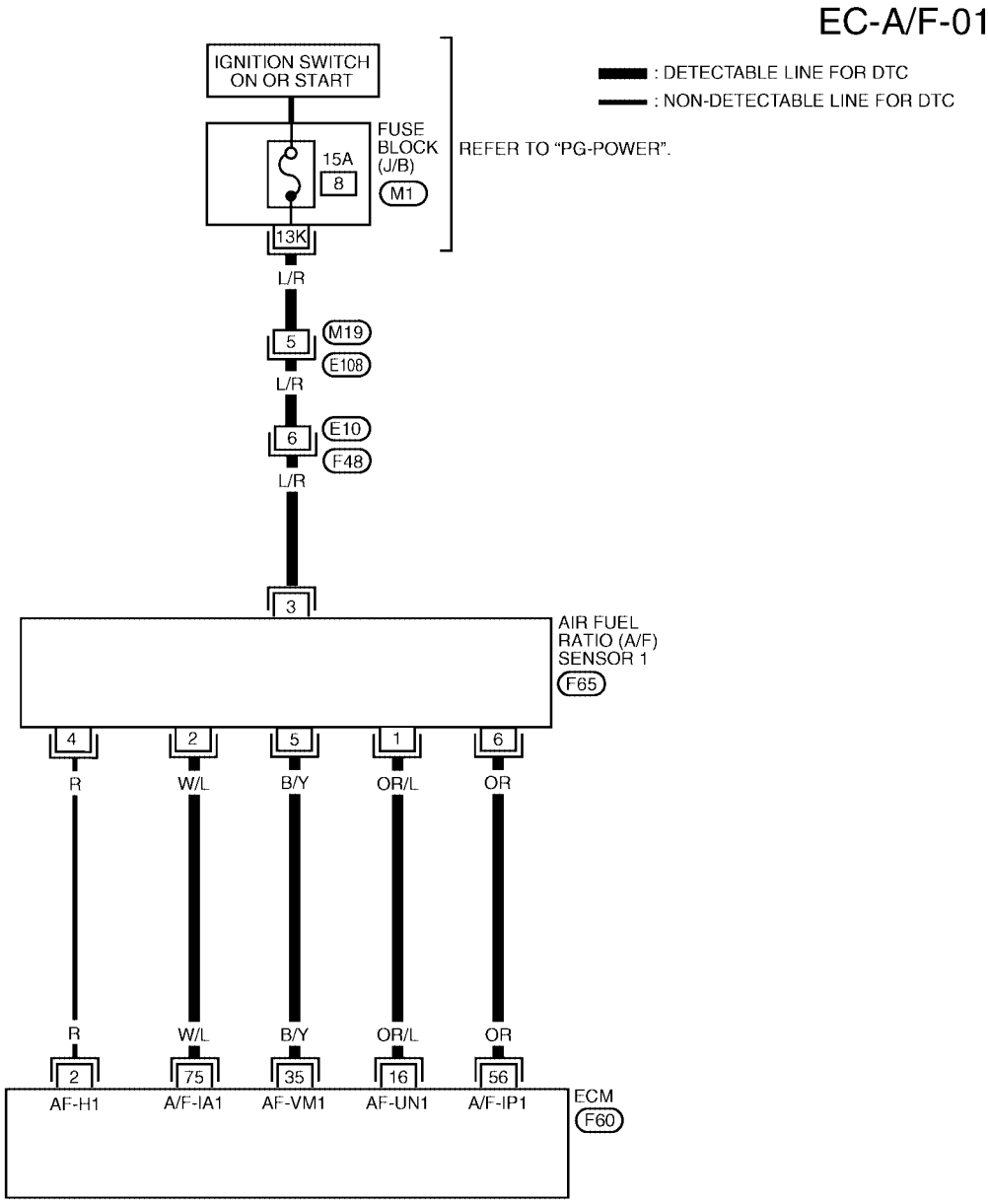

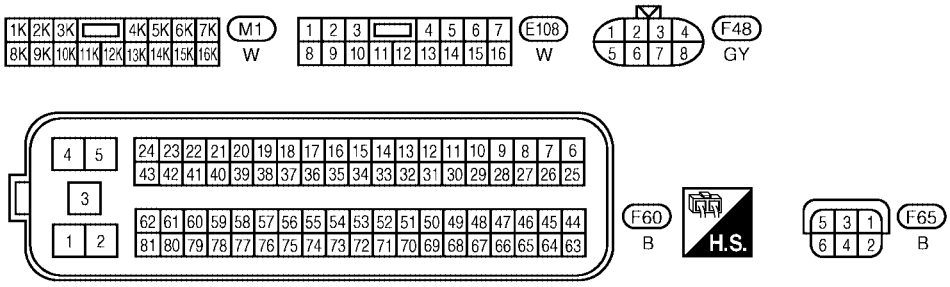

BBWA1454E

Specification data are reference values and are measured between each terminal and ground.

CAUTION:

Do not use ECM ground terminals when measuring input/output voltage. Doing so may result in damage to the ECM's transistor. Use a ground other than ECM terminals, such as the ground.

TERMINAL NO.	WIRE COLOR	ITEM	CONDITION	DATA (DC Voltage)
16	OR/L	A/F sensor 1	**[Engine is running]** ● **Warm-up condition** ● Idle speed	Approximately 3.1V
35	B/Y			Approximately 2.6V
56	OR			2 - 3V
75	W/L			2 - 3V

Diagnostic Procedure

UBS00BDN

1. CHECK GROUND CONNECTIONS

1. Turn ignition switch OFF.
2. Loosen and retighten two ground screws on the body. Refer to EC-171, "Ground Inspection" .

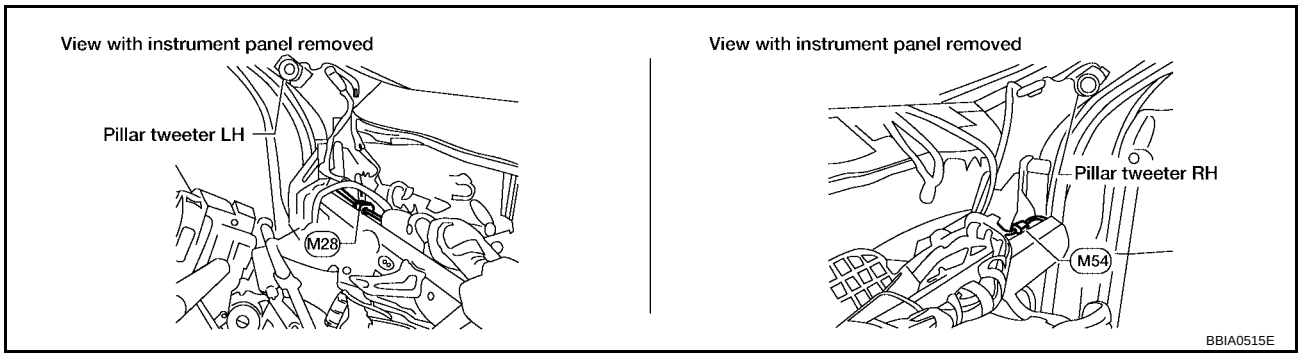

OK or NG

OK >> GO TO 2.

NG >> Repair or replace ground connections.

2. CHECK A/F SENSOR 1 INPUT SIGNAL CIRCUIT

1. Disconnect ECM harness connector and A/F sensor 1 harness connector.
2. Check harness continuity between the following terminals. Refer to Wiring Diagram.

A/F sensor 1 terminal	ECM terminal
1	16
2	75
5	35
6	56

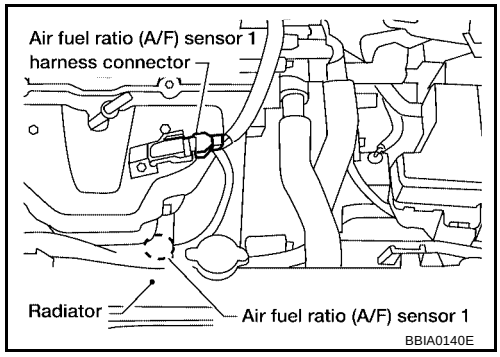

Continuity should exist.

3. Check harness continuity between ECM terminals 16, 35, 56, 75 or A/F sensor 1 terminals 1, 2, 5, 6 and ground. Refer to Wiring Diagram.

Continuity should not exist.

4. Also check harness for short to power.

OK or NG

OK >> GO TO 3.

NG >> Repair open circuit or short to ground or short to power in harness or connectors.

3. CHECK INTERMITTENT INCIDENT

Perform EC-164, "TROUBLE DIAGNOSIS FOR INTERMITTENT INCIDENT" .

OK or NG

OK >> Replace A/F sensor 1.
NG >> Repair or replace.

Removal and Installation

UBS00BDO

AIR FUEL RATIO SENSOR 1

Refer to EM-15, "Removal and Installation" .

DTC P1273 A/F SENSOR 1

PFP:22693

Component Description

UBS00BDP

The A/F sensor 1 is a planar dual-cell limit current sensor. The sensor element of the A/F sensor 1 is the combination of a Nernst concentration cell (sensor cell) with an oxygen-pump cell, which transports ions. It has a heater in the element.

The sensor is capable of precise measurement λ = 1, but also in the lean and rich range. Together with its control electronics, the sensor outputs a clear, continuous signal throughout a wide λ range (0.7 < λ < air).

The exhaust gas components diffuse through the diffusion gap at the electrode of the oxygen pump and Nernst concentration cell, where they are brought to thermodynamic balance.

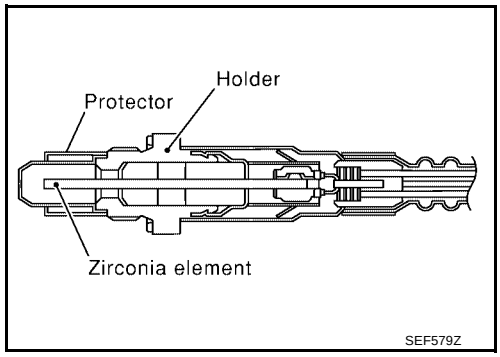

An electronic circuit controls the pump current through the oxygen-pump cell so that the composition of the exhaust gas in the diffusion gap remains constant at λ = 1. Therefore, the A/F sensor 1 is able to indicate air-fuel ratio by this pumping of current. In addition, a heater is integrated in the sensor to ensure the required operating temperature of 700 - 800°C (1,292 - 1,472°F).

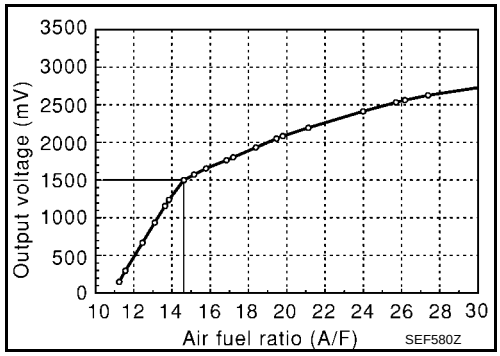

CONSULT-II Reference Value in Data Monitor Mode

UBS00BDQ

Specification data are reference values.

MONITOR ITEM	CONDITION		SPECIFICATION
A/F SEN1 (B1)	● Engine: After warming up	Maintaining engine speed at 2,000 rpm	Fluctuates around 1.5V

On Board Diagnosis Logic

UBS00BDR

To judge the malfunction, the A/F signal computed by ECM from the air fuel ratio (A/F) sensor 1 signal is monitored not to be shifted “lean” side or “rich” side. When the A/F signal is shifting to the lean side, the malfunction will be detected.

DTC No.	Trouble diagnosis name	DTC detecting condition	Possible Cause
P1273 1273	Air fuel ratio (A/F) sensor 1 lean shift monitoring	● The output voltage computed by ECM from the A/F sensor 1 signal is shifted to the lean side for a specified period.	● Air fuel ratio (A/F) sensor 1 ● Air fuel ratio (A/F) sensor heater 1 ● Fuel pressure ● Fuel injectors ● Intake air leaks

DTC Confirmation Procedure

UBS00BDS

NOTE:
If DTC Confirmation Procedure has been previously conducted, always turn ignition switch OFF and wait at least 10 seconds before conducting the next test.

TESTING CONDITION:
Before performing the following procedure, confirm that battery voltage is more than 11V at idle.

WITH CONSULT-II

1. Start engine and warm it up to normal operating temperature.
2. Select “A/F SEN1 (B1) P1273” of “A/F SEN1” in “DTC WORK SUPPORT” mode.
3. Touch “START”.

4. Maintain the following conditions continuously until “TESTING” changes to “COMPLETED”. (It will take approximately 400 to 800 seconds.)

   NOTE:
   Keep the accelerator pedal as steady as possible.

ENG SPEED	Below 3,200 rpm
B/FUEL SCHDL	Below 13.6 msec
Selector lever	P or N position

   If “TESTING” is not displayed after 20 minutes, retry from step 2.

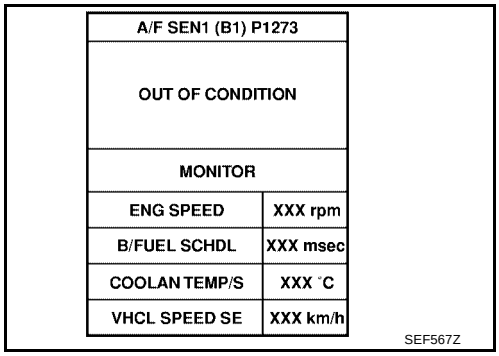

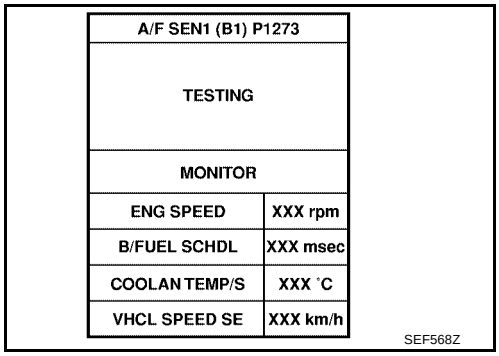

5. Make sure that OK is displayed after touching “SELF-DIAG RESULTS”.
   If NG is displayed, go to EC-495, "Diagnostic Procedure" .

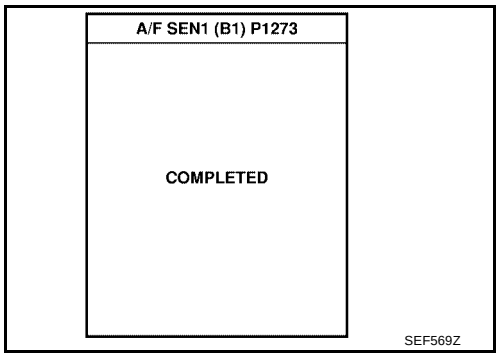

Overall Function Check

UBS00BDT

Use this procedure to check the overall function of the A/F sensor 1 circuit. During this check, a 1st trip DTC might not be confirmed.

WITH GST

1. Start engine and warm it up to normal operating temperature.
2. Drive the vehicle at a speed of 80 km/h (50 MPH) for a few minutes in D position with “OD” OFF (A/T) or 3rd position (M/T).

   NOTE:
   Keep accelerator pedal as steady as possible during the cruising.
3. Set D position with “OD” ON (A/T) or 4th position (M/T), then release the accelerator pedal fully until the vehicle speed decreases to 50 km/h (30 MPH).

   NOTE:
   Never apply brake during releasing the accelerator pedal.
4. Repeat steps 2 to 3 five times.
5. Stop the vehicle and turn ignition switch OFF.
6. Wait at least 10 seconds and restart engine.
7. Repeat steps 2 to 3 five times.
8. Stop the vehicle and connect GST to the vehicle.
9. Make sure that no DTC is displayed.

If the DTC is displayed, go to EC-495, "Diagnostic Procedure" .

Wiring Diagram

UBS00BDU

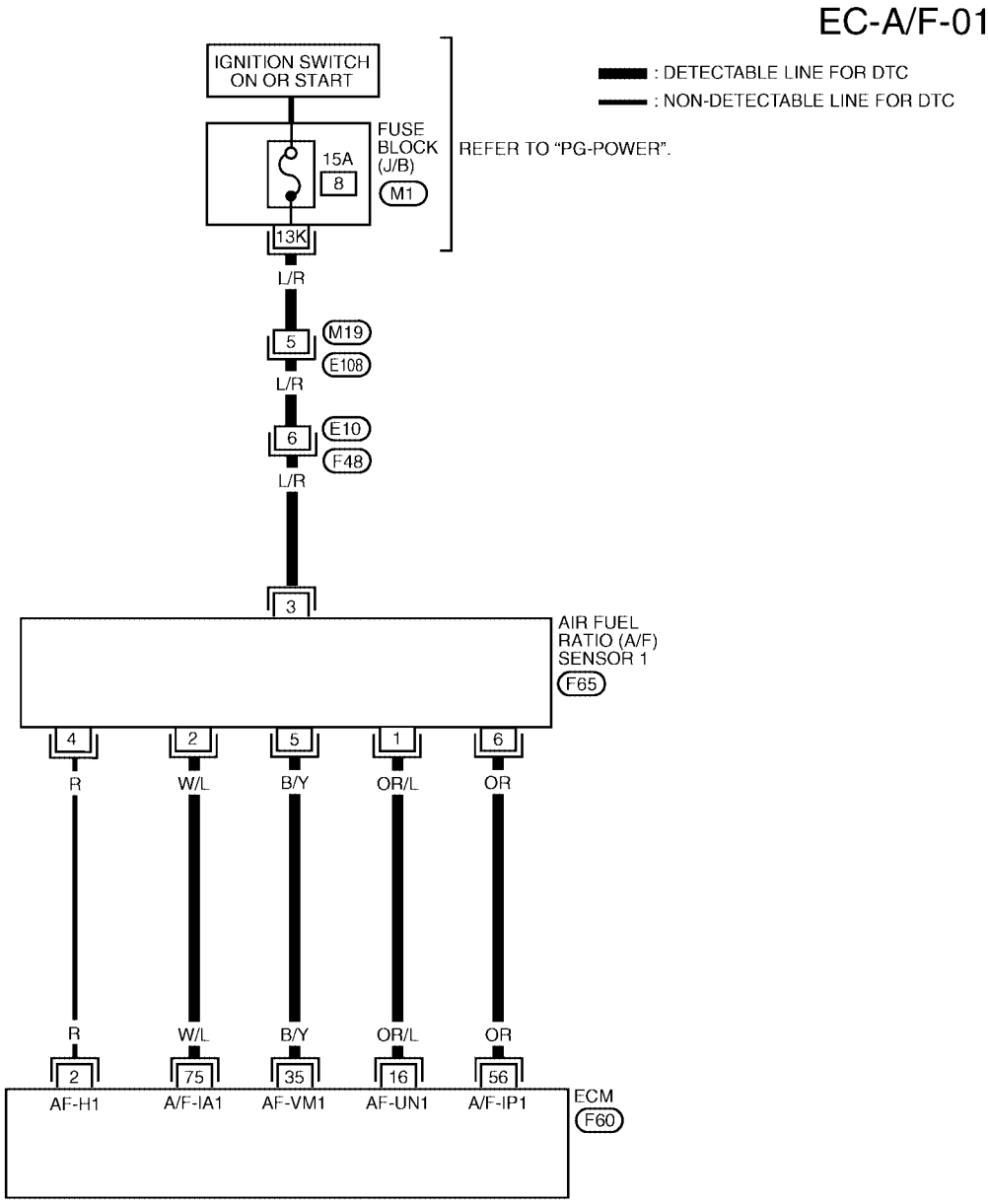

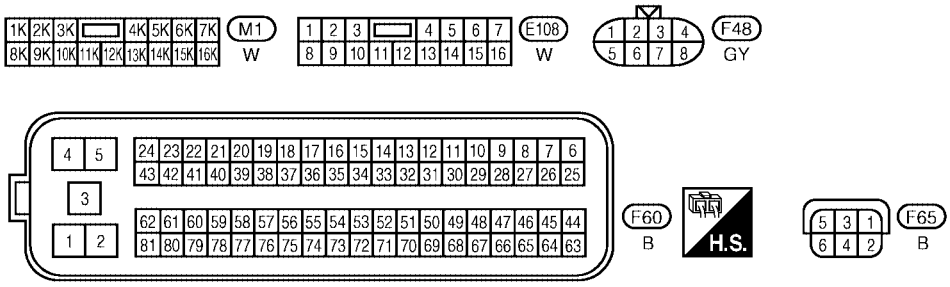

BBWA1454E

Specification data are reference values and are measured between each terminal and ground.

CAUTION:

Do not use ECM ground terminals when measuring input/output voltage. Doing so may result in damage to the ECM's transistor. Use a ground other than ECM terminals, such as the ground.

TERMINAL NO.	WIRE COLOR	ITEM	CONDITION	DATA (DC Voltage)
16	OR/L	A/F sensor 1	**[Engine is running]** ● **Warm-up condition** ● Idle speed	Approximately 3.1V
35	B/Y			Approximately 2.6V
56	OR			2 - 3V
75	W/L			2 - 3V

Diagnostic Procedure

UBS00BDV

1. CHECK GROUND CONNECTIONS

1. Turn ignition switch OFF.
2. Loosen and retighten two ground screws on the body. Refer to EC-171, "Ground Inspection" .

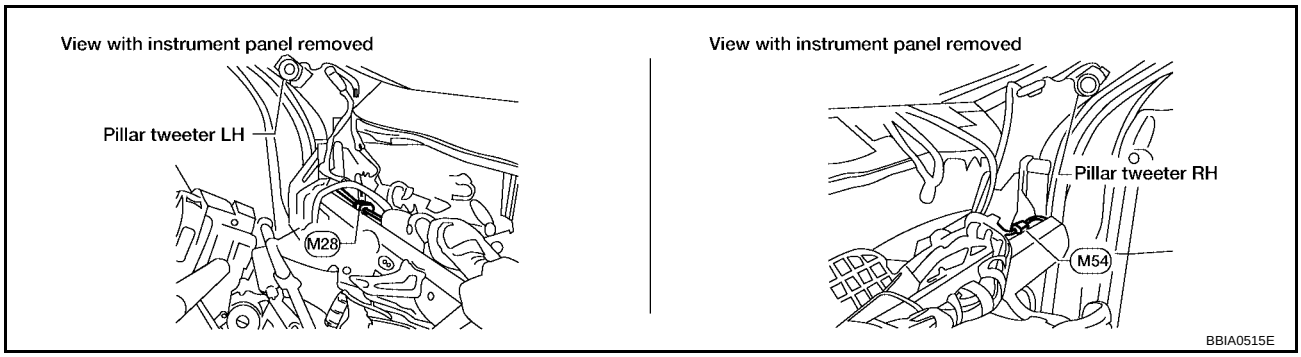

OK or NG

OK >> GO TO 2.
NG >> Repair or replace ground connections.

2. RETIGHTEN AIR FUEL RATIO (A/F) SENSOR 1

Loosen and retighten the air fuel ratio (A/F) sensor 1.

Tightening torque: 40 - 60 N-m (4.1 - 6.1 kg-m, 30 - 44 ft-lb)

>> GO TO 3.

3. CLEAR THE SELF-LEARNING DATA.

With CONSULT-II

1. Start engine and warm it up to normal operating temperature.
2. Select “SELF-LEARNING CONT” in “WORK SUPPORT” mode with CONSULT-II.
3. Clear the self-learning control coefficient by touching “CLEAR”.
4. Run engine for at least 10 minutes at idle speed.
   Is the 1st trip DTC P0171 detected? Is it difficult to start engine?

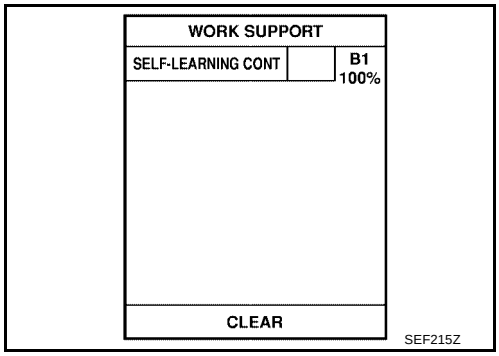

Without CONSULT-II

1. Start engine and warm it up to normal operating temperature.
2. Turn ignition switch OFF.
3. Disconnect mass air flow sensor harness connector, and restart and run engine for at least 3 seconds at idle speed.
4. Stop engine and reconnect mass air flow sensor harness connector.
5. Make sure DTC P0102 is displayed.
6. Erase the DTC memory. Refer to EC-64, "HOW TO ERASE EMISSION-RELATED DIAGNOSTIC INFORMATION" .
7. Make sure DTC P0000 is displayed.
8. Run engine for at least 10 minutes at idle speed.
   Is the 1st trip DTC P0171 detected? Is it difficult to start engine?

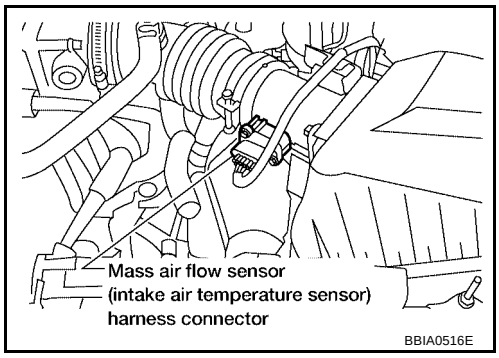

Yes or No

Yes >> Perform trouble diagnosis for DTC P0171. Refer to EC-242 .
No >> GO TO 4.

4. CHECK A/F SENSOR 1 INPUT SIGNAL CIRCUIT

1. Turn ignition switch OFF.
2. Disconnect ECM harness connector and A/F sensor 1 harness connector.
3. Check harness continuity between the following terminals. Refer to Wiring Diagram.

A/F sensor 1 terminal	ECM terminal
1	16
2	75
5	35
6	56

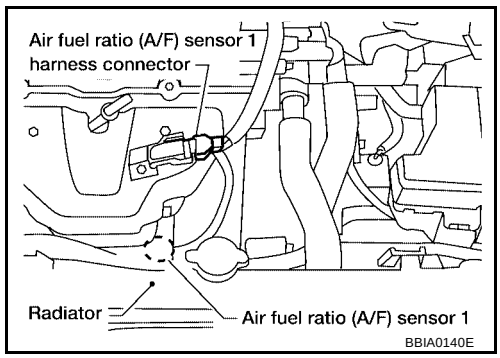

Continuity should exist.

4. Check harness continuity between ECM terminals 16, 35, 56, 75 or A/F sensor 1 terminals 1, 2, 5, 6 and ground. Refer to Wiring Diagram.

Continuity should not exist.

5. Also check harness for short to power.

OK or NG

OK >> GO TO 5.
NG >> Repair open circuit or short to ground or short to power in harness or connectors.

5. CHECK A/F SENSOR 1 HEATER

Refer to EC-389, "Component Inspection" .

OK or NG

OK >> GO TO 6.
NG >> Replace A/F sensor 1.

6. CHECK INTERMITTENT INCIDENT

Perform EC-164, "TROUBLE DIAGNOSIS FOR INTERMITTENT INCIDENT" .

OK or NG

OK >> Replace A/F sensor 1.
NG >> Repair or replace.

Removal and Installation

UBS00BDW

AIR FUEL RATIO SENSOR 1

Refer to EM-15, "Removal and Installation" .

DTC P1274 A/F SENSOR 1

PFP:22693

Component Description

UBS00BDX

The A/F sensor 1 is a planar dual-cell limit current sensor. The sensor element of the A/F sensor 1 is the combination of a Nernst concentration cell (sensor cell) with an oxygen-pump cell, which transports ions. It has a heater in the element.

The sensor is capable of precise measurement λ = 1, but also in the lean and rich range. Together with its control electronics, the sensor outputs a clear, continuous signal throughout a wide λ range (0.7 < λ < air).

The exhaust gas components diffuse through the diffusion gap at the electrode of the oxygen pump and Nernst concentration cell, where they are brought to thermodynamic balance.

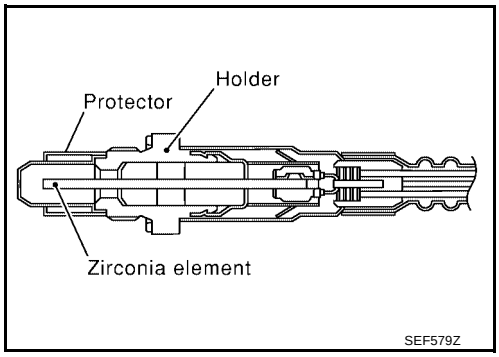

An electronic circuit controls the pump current through the oxygen-pump cell so that the composition of the exhaust gas in the diffusion gap remains constant at λ = 1. Therefore, the A/F sensor 1 is able to indicate air-fuel ratio by this pumping of current. In addition, a heater is integrated in the sensor to ensure the required operating temperature of 700 - 800°C (1,292 - 1,472°F).

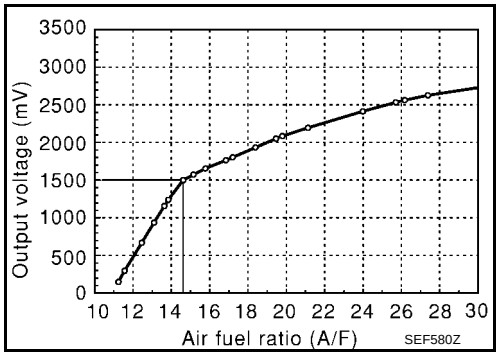

CONSULT-II Reference Value in Data Monitor Mode

UBS00BDY

Specification data are reference values.

MONITOR ITEM	CONDITION		SPECIFICATION
A/F SEN1 (B1)	● Engine: After warming up	Maintaining engine speed at 2,000 rpm	Fluctuates around 1.5V

On Board Diagnosis Logic

UBS00BDZ

To judge the malfunction, the A/F signal computed by ECM from the air fuel ratio (A/F) sensor 1 signal is monitored not to be shifted to the lean side or rich side. When the A/F signal is shifting to the rich side, the malfunction will be detected.

DTC No.	Trouble diagnosis name	DTC detecting condition	Possible Cause
P1274 1274	Air fuel ratio (A/F) sensor 1 rich shift monitoring	● The A/F signal computed by ECM from the A/F sensor 1 signal is shifted to the rich side for a specified period.	● Air fuel ratio (A/F) sensor 1 ● Air fuel ratio (A/F) sensor heater 1 ● Fuel pressure ● Fuel injectors

DTC Confirmation Procedure

UBS00BE0

NOTE:
If DTC Confirmation Procedure has been previously conducted, always turn ignition switch OFF and wait at least 10 seconds before conducting the next test.

TESTING CONDITION:
Before performing the following procedure, confirm that battery voltage is more than 11V at idle.

WITH CONSULT-II

1. Start engine and warm it up to normal operating temperature.
2. Select “A/F SEN1 (B1) P1274” of “A/F SEN1” in “DTC WORK SUPPORT” mode.
3. Touch “START”.

4. Maintain the following conditions continuously until “TESTING” changes to “COMPLETED”. (It will take approximately 400 to 800 seconds.)

   NOTE:
   Keep the accelerator pedal as steady as possible.

ENG SPEED	Below 3,200 rpm
B/FUEL SCHDL	Below 13.6 msec
Selector lever	P or N position

   If “TESTING” is not displayed after 20 minutes, retry from step 2.

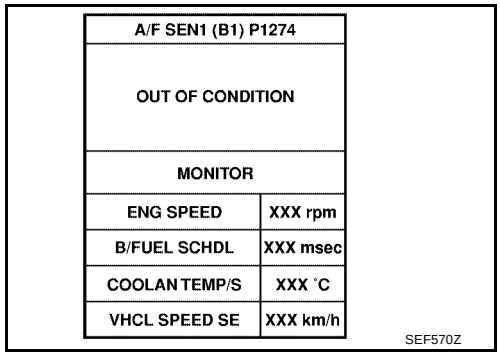

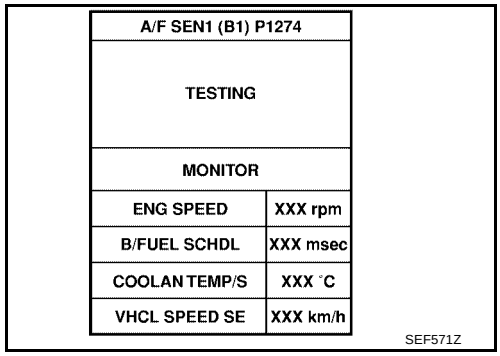

5. Make sure that OK is displayed after touching “SELF-DIAG RESULTS”.
   If NG is displayed, go to EC-502, "Diagnostic Procedure" .

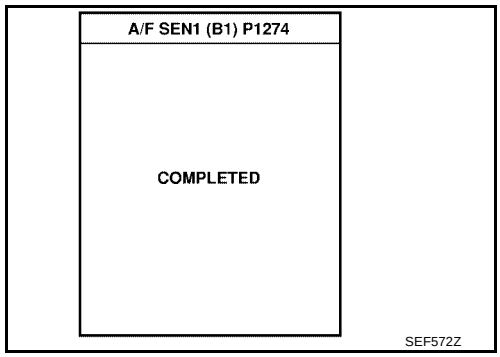

Overall Function Check

UBS00BE1

Use this procedure to check the overall function of the A/F sensor 1 circuit. During this check, a 1st trip DTC might not be confirmed.

WITH GST

1. Start engine and warm it up to normal operating temperature.
2. Drive the vehicle at a speed of 80 km/h (50 MPH) for a few minutes in D position with “OD” OFF (A/T) or 3rd position (M/T).

   NOTE:
   Keep accelerator pedal as steady as possible during the cruising.
3. Set D position with “OD” ON (A/T) or 4th position (M/T), then release the accelerator pedal fully until the vehicle speed decreases to 50 km/h (30 MPH).

   NOTE:
   Never apply brake during releasing the accelerator pedal.
4. Repeat steps 2 to 3 five times.
5. Stop the vehicle and turn ignition switch OFF.
6. Wait at least 10 seconds and restart engine.
7. Repeat steps 2 to 3 five times.
8. Stop the vehicle and connect GST to the vehicle.
9. Make sure that no DTC is displayed.

If the DTC is displayed, go to EC-502, "Diagnostic Procedure" .

Wiring Diagram

UBS00BE2

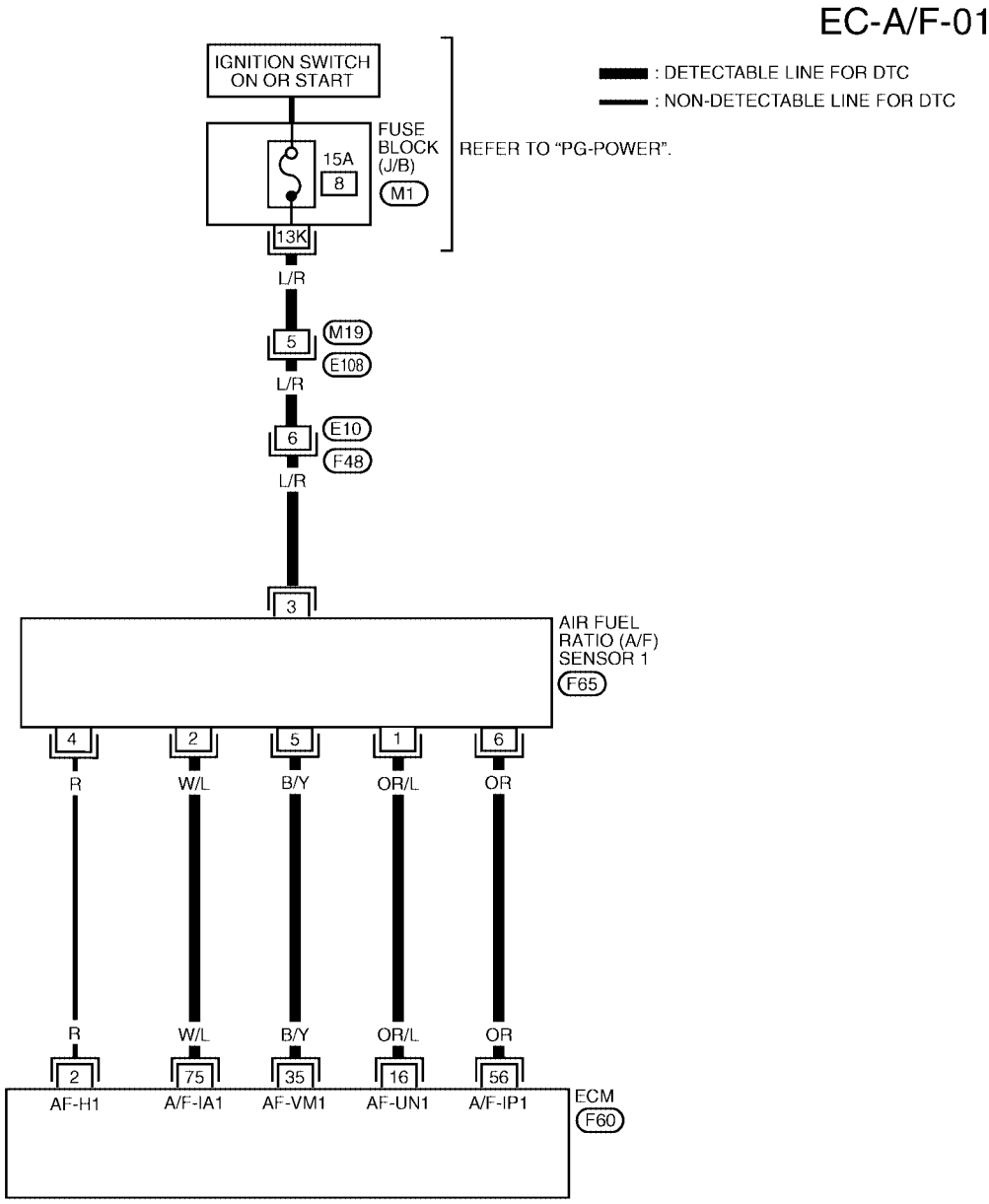

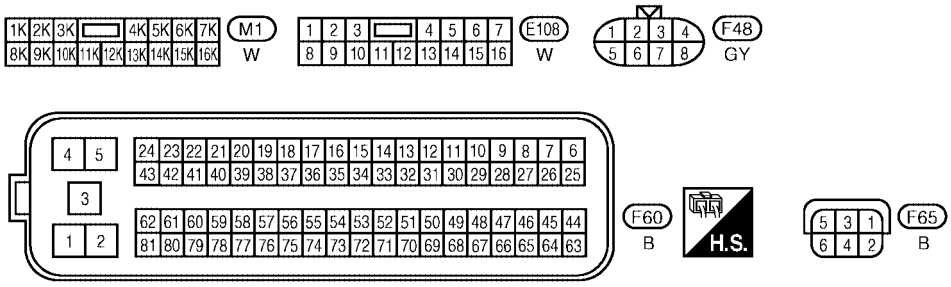

BBWA1454E

Specification data are reference values and are measured between each terminal and ground.

CAUTION:

Do not use ECM ground terminals when measuring input/output voltage. Doing so may result in damage to the ECM's transistor. Use a ground other than ECM terminals, such as the ground.

TERMINAL NO.	WIRE COLOR	ITEM	CONDITION	DATA (DC Voltage)
16	OR/L	A/F sensor 1	**[Engine is running]** ● **Warm-up condition** ● Idle speed	Approximately 3.1V
35	B/Y			Approximately 2.6V
56	OR			2 - 3V
75	W/L			2 - 3V

Diagnostic Procedure

UBS00BE3

1. CHECK GROUND CONNECTIONS

1. Turn ignition switch OFF.
2. Loosen and retighten two ground screws on the body. Refer to EC-171, "Ground Inspection" .

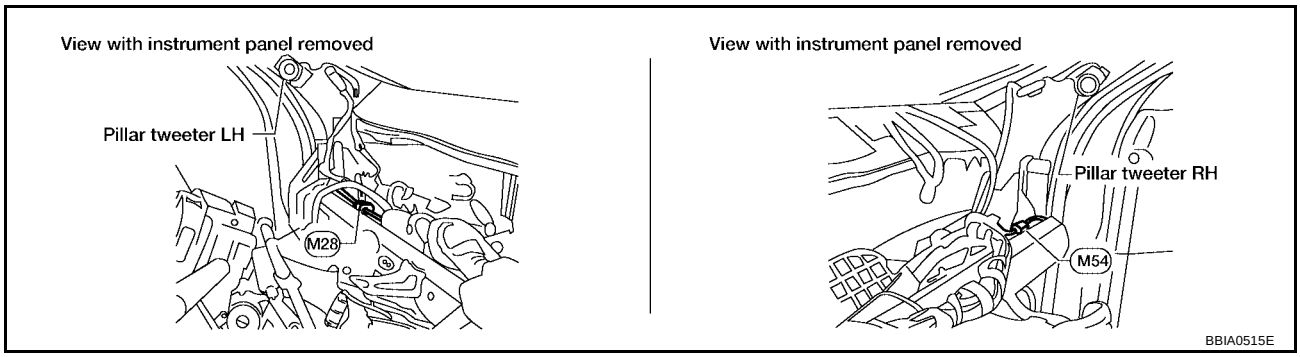

OK or NG

OK >> GO TO 2.
NG >> Repair or replace ground connections.

2. RETIGHTEN AIR FUEL RATIO (A/F) SENSOR 1

Loosen and retighten the air fuel ratio (A/F) sensor 1.

Tightening torque: 40 - 60 N-m (4.1 - 6.1 kg-m, 30 - 44 ft-lb)

>> GO TO 3.

3. CLEAR THE SELF-LEARNING DATA

With CONSULT-II

1. Start engine and warm it up to normal operating temperature.
2. Select “SELF-LEARNING CONT” in “WORK SUPPORT” mode with CONSULT-II.
3. Clear the self-learning control coefficient by touching “CLEAR”.
4. Run engine for at least 10 minutes at idle speed.
   Is the 1st trip DTC P0172 detected? Is it difficult to start engine?

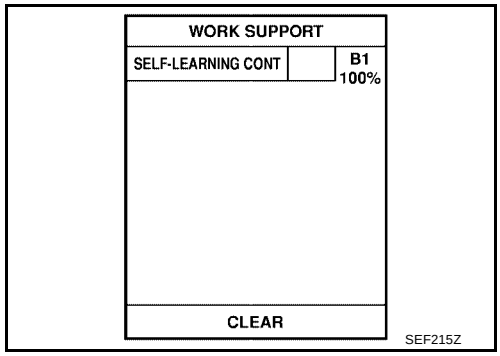

Without CONSULT-II

1. Start engine and warm it up to normal operating temperature.
2. Turn ignition switch OFF.
3. Disconnect mass air flow sensor harness connector, and restart and run engine for at least 3 seconds at idle speed.
4. Stop engine and reconnect mass air flow sensor harness connector.
5. Make sure DTC P0102 is displayed.
6. Erase the DTC memory. Refer to EC-64, "HOW TO ERASE EMISSION-RELATED DIAGNOSTIC INFORMATION" .
7. Make sure DTC P0000 is displayed.
8. Run engine for at least 10 minutes at idle speed.
   Is the 1st trip DTC P0172 detected? Is it difficult to start engine?

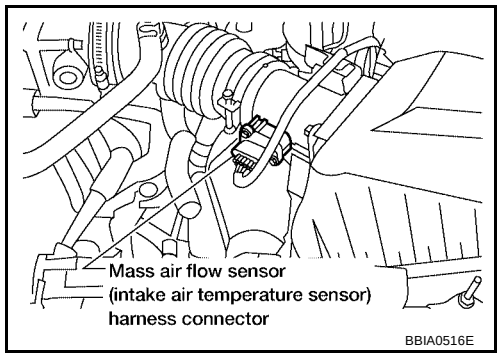

Yes or No

Yes >> Perform trouble diagnosis for DTC P0172. Refer to EC-249 .
No >> GO TO 4.

4. CHECK HARNESS CONNECTOR

1. Turn ignition switch OFF.
2. Disconnect A/F sensor 1 harness connector.
3. Check harness connector for water.
   Water should not exit.

OK or NG

OK >> GO TO 5.
NG >> Repair or replace harness connector.

5. CHECK A/F SENSOR 1 INPUT SIGNAL CIRCUIT

1. Turn ignition switch OFF.
2. Disconnect ECM harness connector and A/F sensor 1 harness connector.
3. Check harness continuity between the following terminals. Refer to Wiring Diagram.

A/F sensor 1 terminal	ECM terminal
1	16
2	75
5	35
6	56

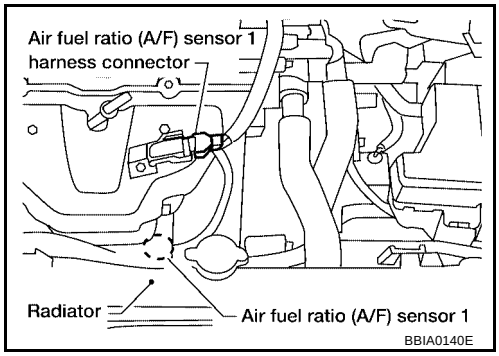

Continuity should exist.

4. Check harness continuity between ECM terminals 16, 35, 56, 75 or A/F sensor 1 terminals 1, 2, 5, 6 and ground. Refer to Wiring Diagram.

Continuity should not exist.

5. Also check harness for short to power.

OK or NG

OK >> GO TO 6.
NG >> Repair open circuit or short to ground or short to power in harness or connectors.

6. CHECK A/F SENSOR 1 HEATER

Refer to EC-389, "Component Inspection" .

OK or NG

OK >> GO TO 7.
NG >> Replace A/F sensor 1.

7. CHECK INTERMITTENT INCIDENT

Perform EC-164, "TROUBLE DIAGNOSIS FOR INTERMITTENT INCIDENT" .

OK or NG

OK >> Replace A/F sensor 1.
NG >> Repair or replace.

Removal and Installation

UBS00BE4

AIR FUEL RATIO SENSOR 1

Refer to EM-15, "Removal and Installation" .

DTC P1276 A/F SENSOR 1

PFP:22693

Component Description

UBS00BE5

The A/F sensor 1 is a planar dual-cell limit current sensor. The sensor element of the A/F sensor 1 is the combination of a Nernst concentration cell (sensor cell) with an oxygen-pump cell, which transports ions. It has a heater in the element.

The sensor is capable of precise measurement λ = 1, but also in the lean and rich range. Together with its control electronics, the sensor outputs a clear, continuous signal throughout a wide λ range (0.7 < λ < air).

The exhaust gas components diffuse through the diffusion gap at the electrode of the oxygen pump and Nernst concentration cell, where they are brought to thermodynamic balance.

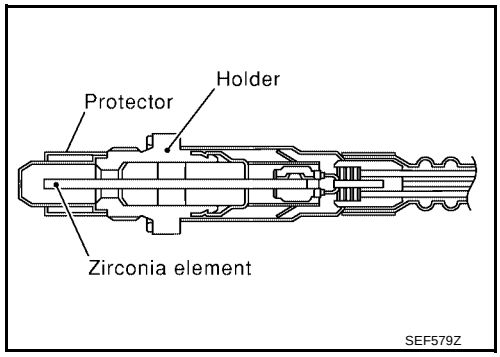

An electronic circuit controls the pump current through the oxygen-pump cell so that the composition of the exhaust gas in the diffusion gap remains constant at λ = 1. Therefore, the A/F sensor 1 is able to indicate air-fuel ratio by this pumping of current. In addition, a heater is integrated in the sensor to ensure the required operating temperature of 700 - 800°C (1,292 - 1,472°F).

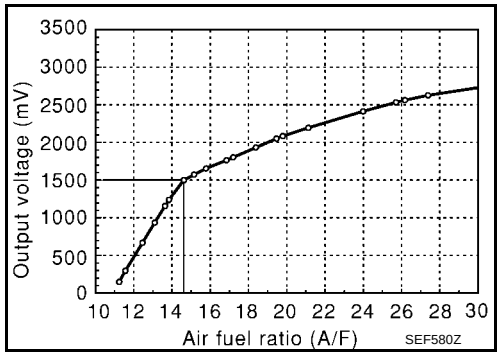

CONSULT-II Reference Value in Data Monitor Mode

UBS00BE6

Specification data are reference values.

MONITOR ITEM	CONDITION		SPECIFICATION
A/F SEN1 (B1)	● Engine: After warming up	Maintaining engine speed at 2,000 rpm	Fluctuates around 1.5V

On Board Diagnosis Logic

UBS00BE7

To judge the malfunction, the diagnosis checks that the A/F signal computed by ECM from the air fuel ratio (A/F) sensor 1 signal fluctuates according to fuel feedback control.

DTC No.	Trouble diagnosis name	DTC detecting condition	Possible Cause
P1276 1276	Air fuel ratio (A/F) sensor 1 circuit high voltage	● The A/F signal computed by ECM from the A/F sensor 1 signal is constantly approx. 1.5V.	● Harness or connectors (The sensor circuit is open or shorted.) ● Air fuel ratio (A/F) sensor 1

DTC Confirmation Procedure

UBS00BE8

CAUTION:
Always drive vehicle at a safe speed.

NOTE:
If DTC Confirmation Procedure has been previously conducted, always turn ignition switch OFF and wait at least 10 seconds before conducting the next test.

TESTING CONDITION:
Before performing the following procedure, confirm that battery voltage is more than 11V at idle.

WITH CONSULT-II

1. Start engine and warm it up to normal operating temperature.
2. Select “A/F SEN1 (B1)” of “DATA MONITOR” mode with CONSULT-II.
3. Check “A/F SEN1 (B1)” indication.
   If the indication is constantly approx. 1.5V and does not fluctuates, go to EC-509, "Diagnostic Procedure" .
   If the indication fluctuates around 1.5V, go to next step.

4. Select “A/F SEN1 (B1) P1276” of “A/F SEN1” in “DTC WORK SUPPORT” mode.
5. Touch “START”.
6. When the following conditions are met, “TESTING” will be displayed on the CONSULT-II screen.

ENG SPEED	1,750 - 2,000 rpm (A/T) 1,750 - 2,900 rpm (M/T)
Vehicle speed	More than 65 km/h (40 MPH)
B/FUEL SCHDL	1.0 - 8.0 msec
Selector lever	● D position with “OD” ON (A/T) ● 4th position (M/T)

If “TESTING” is not displayed after 20 seconds, retry from step 2.

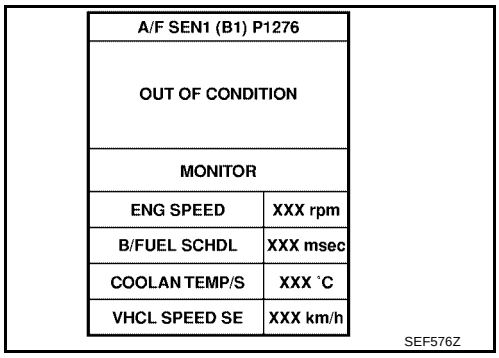

7. Following the instructions of CONSULT-II screen, set D position with “OD” OFF (A/T) or 3rd position (M/T) and release accelerator pedal fully.

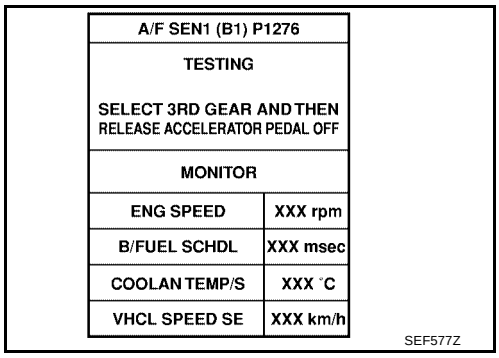

8. Make sure that “TESTING” changes to “COMPLETED”.
   If “TESTING” changed to “OUT OF CONDITION”, retry from step 6.
9. Make sure that OK is displayed after touching “SELF-DIAG RESULT”.
   If NG is displayed, go to EC-509, "Diagnostic Procedure" .

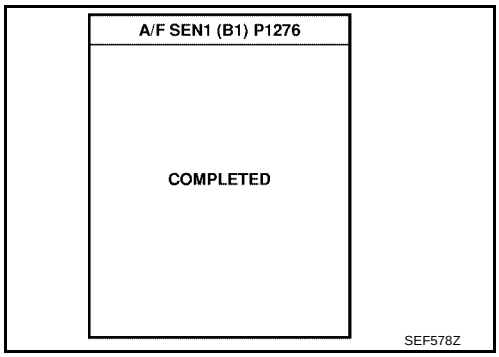

Overall Function Check

UBS00BE9

Use this procedure to check the overall function of the A/F sensor 1 circuit. During this check, a 1st trip DTC might not be confirmed.

WITH GST

1. Start engine and warm it up to normal operating temperature.
2. Drive the vehicle at a speed of 80 km/h (50 MPH) for a few minutes in D position with “OD” OFF (A/T) or 3rd position (M/T).

   NOTE:
   Keep the accelerator pedal as steady as possible during the cruising.
3. Set D position with “OD” ON (A/T) or 4th position (M/T), then release the accelerator pedal fully until the vehicle speed decreases to 50 km/h (30 MPH).

   NOTE:
   Never apply brake during releasing the accelerator pedal.
4. Repeat steps 2 to 3 five times.
5. Stop the vehicle and turn ignition switch OFF.
6. Wait at least 10 seconds and restart engine.

7. Repeat steps 2 to 3 five times.
8. Stop the vehicle and connect GST to the vehicle.
9. Make sure that no DTC is displayed.
   If the DTC is displayed, go to EC-509, "Diagnostic Procedure" .

Wiring Diagram

UBS00BEA

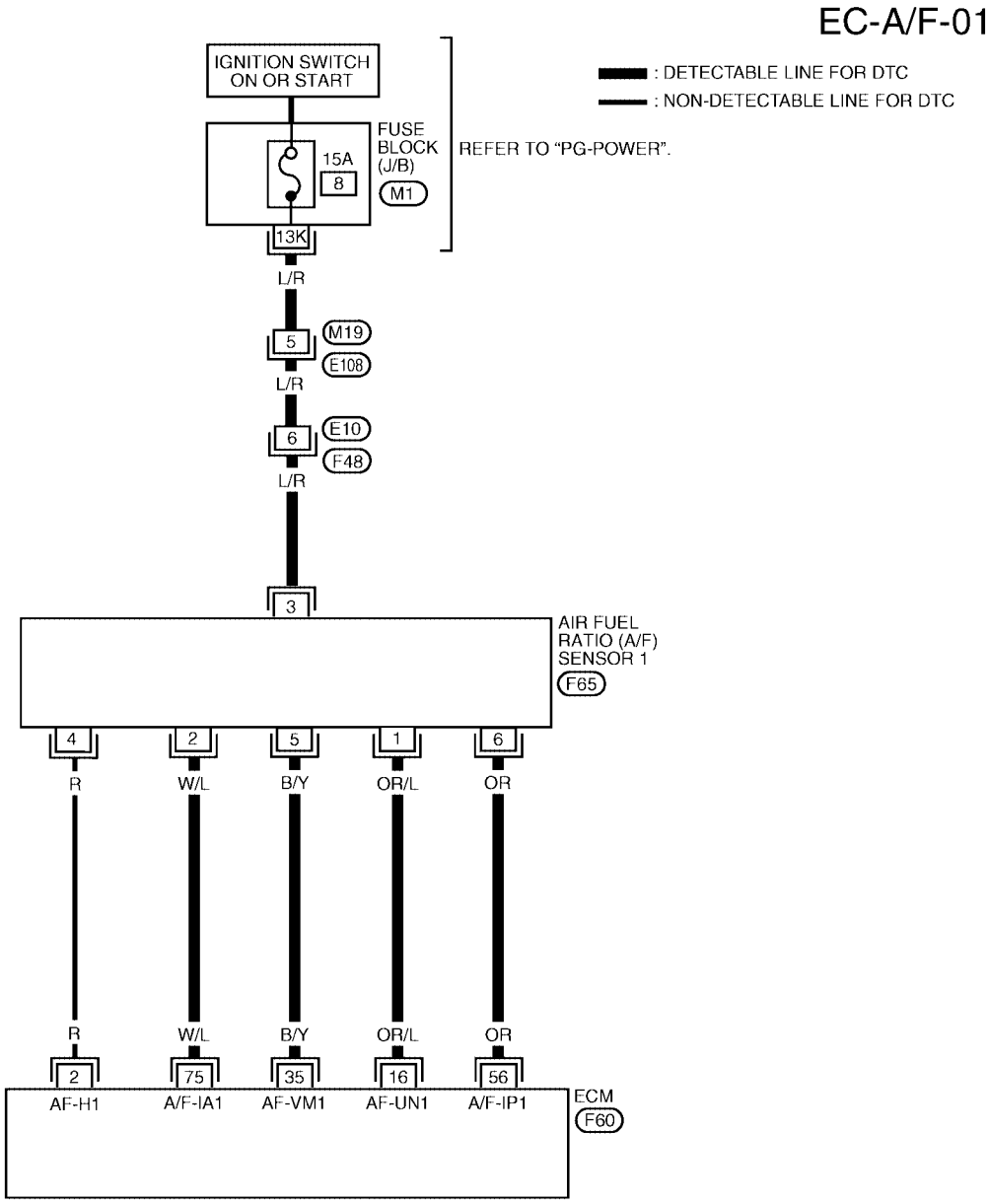

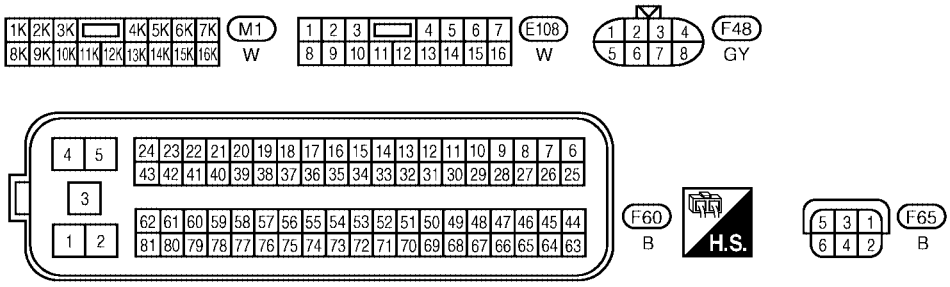

BBWA1454E

Specification data are reference values and are measured between each terminal and ground.

CAUTION:

Do not use ECM ground terminals when measuring input/output voltage. Doing so may result in damage to the ECM's transistor. Use a ground other than ECM terminals, such as the ground.

TERMINAL NO.	WIRE COLOR	ITEM	CONDITION	DATA (DC Voltage)
16	OR/L	A/F sensor 1	**[Engine is running]** ● **Warm-up condition** ● Idle speed	Approximately 3.1V
35	B/Y			Approximately 2.6V
56	OR			2 - 3V
75	W/L			2 - 3V

Diagnostic Procedure

UBS00BEB

1. CHECK GROUND CONNECTIONS

1. Turn ignition switch OFF.
2. Loosen and retighten two ground screws on the body. Refer to EC-171, "Ground Inspection" .

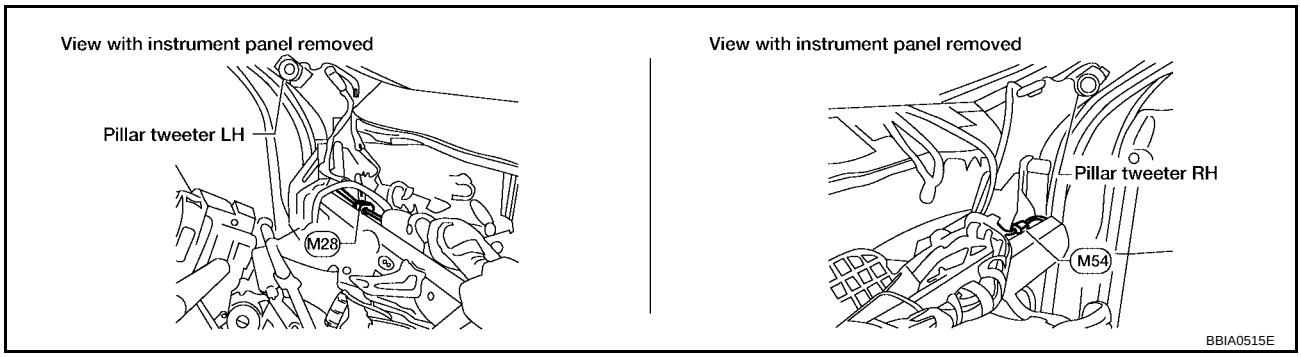

OK or NG

OK >> GO TO 2.

NG >> Repair or replace ground connections.

2. CHECK A/F SENSOR 1 INPUT SIGNAL CIRCUIT

1. Disconnect ECM harness connector and A/F sensor 1 harness connector.
2. Check harness continuity between the following terminals. Refer to Wiring Diagram.

A/F sensor 1 terminal	ECM terminal
1	16
2	75
5	35
6	56

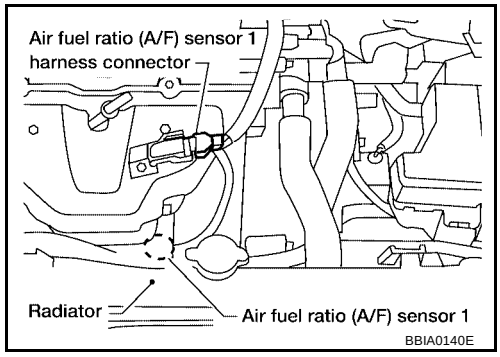

Continuity should exist.

3. Check harness continuity between ECM terminals 16, 35, 56, 75 or A/F sensor 1 terminals 1, 2, 5, 6 and ground. Refer to Wiring Diagram.

Continuity should not exist.

4. Also check harness for short to power.

OK or NG

OK >> GO TO 3.

NG >> Repair open circuit or short to ground or short to power in harness or connectors.

3. CHECK INTERMITTENT INCIDENT

Perform EC-164, "TROUBLE DIAGNOSIS FOR INTERMITTENT INCIDENT" .

OK or NG

OK >> Replace A/F sensor 1.
NG >> Repair or replace.

Removal and Installation

UBS00BEC

AIR FUEL RATIO SENSOR 1

Refer to EM-15, "Removal and Installation" .

DTC P1278 A/F SENSOR 1

PFP:22693

Component Description

UBS00BED

The A/F sensor 1 is a planar dual-cell limit current sensor. The sensor element of the A/F sensor 1 is the combination of a Nernst concentration cell (sensor cell) with an oxygen-pump cell, which transports ions. It has a heater in the element.

The sensor is capable of precise measurement λ = 1, but also in the lean and rich range. Together with its control electronics, the sensor outputs a clear, continuous signal throughout a wide λ range (0.7 < λ < air).

The exhaust gas components diffuse through the diffusion gap at the electrode of the oxygen pump and Nernst concentration cell, where they are brought to thermodynamic balance.

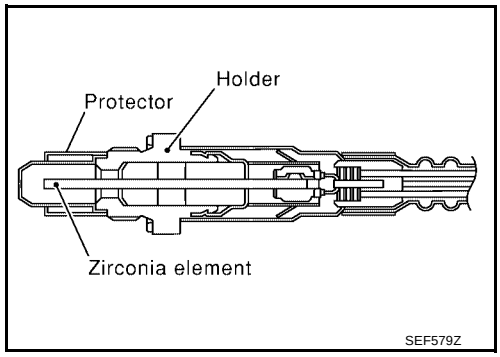

An electronic circuit controls the pump current through the oxygen-pump cell so that the composition of the exhaust gas in the diffusion gap remains constant at λ = 1. Therefore, the A/F sensor 1 is able to indicate air/fuel ratio by this pumping of current. In addition, a heater is integrated in the sensor to ensure the required operating temperature of 700 - 800°C (1,292 - 1,472°F).

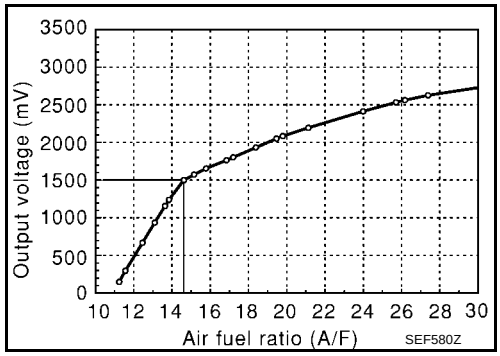

CONSULT-II Reference Value in Data Monitor Mode

UBS00BEE

Specification data are reference values.

MONITOR ITEM	CONDITION		SPECIFICATION
A/F SEN1 (B1)	● Engine: After warming up	Maintaining engine speed at 2,000 rpm	Fluctuates around 1.5V

On Board Diagnosis Logic

UBS00BEF

To judge the malfunction of air fuel ratio (A/F) sensor 1, this diagnosis measures response time of the A/F signal computed by ECM from the air fuel ratio (A/F) sensor 1 signal. The time is compensated by engine operating (speed and load), fuel feedback control constant, and the air fuel ratio (A/F) sensor 1 temperature index. Judgment is based on whether the compensated time (the A/F signal cycling time index) is inordinately long or not.

DTC No.	Trouble diagnosis name	DTC detecting condition	Possible Cause
P1278 1278	Air fuel ratio (A/F) sensor 1 circuit slow response	● The response (from RICH to LEAN) of the A/F signal computed by ECM from A/F sensor 1 signal takes more than the specified time.	● Harness or connectors (The sensor circuit is open or shorted.) ● Air fuel ratio (A/F) sensor 1 ● Air fuel ratio (A/F) sensor heater 1 ● Fuel pressure ● Fuel injectors ● Intake air leaks ● Exhaust gas leaks ● PCV ● Mass air flow sensor

DTC Confirmation Procedure

UBS00BEG

CAUTION:
Always drive vehicle at a safe speed.

NOTE:
If DTC Confirmation Procedure has been previously conducted, always turn ignition switch OFF and wait at least 10 seconds before conducting the next test.

TESTING CONDITION:
Before performing the following procedure, confirm that battery voltage is more than 11V at idle.

WITH CONSULT-II

1. Perform EC-92, "Idle Air Volume Learning" . Make sure that “CMPLT” is displayed on CONSULT-II screen. If “INCMP” is displayed, follow the instruction for Idle Air Volume Learning.
2. Select “A/F SEN1 (B1) P1278/P1279” of “A/F SEN1” in “DTC WORK SUPPORT” mode.
3. Touch “START”.
4. When the following conditions are met, “TESTING” will be displayed on the CONSULT-II screen.

ENG SPEED	1,750 - 2,000 rpm (A/T) 1,750 - 2,900 rpm (M/T)
Vehicle speed	More than 65 km/h (40 MPH)
B/FUEL SCHDL	1.0 - 8.0 msec
Selector lever	● D position with “OD” ON (A/T) ● 4th position (M/T)

If “TESTING” is not displayed after 20 seconds, retry from step 2.

A/F SEN1 (B1) P1278/P1279	
OUT OF CONDITION	
MONITOR	
ENG SPEED	XXX rpm
B/FUEL SCHDL	XXX msec
COOLAN TEMP/S	XXX °C
VHCL SPEED SE	XXX km/h

PBIB0756E

5. Following the instructions of CONSULT-II screen, set D position with “OD” OFF (A/T) or 3rd position (M/T) and release accelerator pedal fully.

A/F SEN1 (B1) P1278/P1279	
TESTING SELECT 3RD GEAR AND THEN RELEASE ACCELERATOR PEDAL OFF	
MONITOR	
ENG SPEED	XXX rpm
B/FUEL SCHDL	XXX msec
COOLAN TEMP/S	XXX °C
VHCL SPEED SE	XXX km/h

PBIB0757E

6. Make sure that “TESTING” changes to “COMPLETED”.
   If “TESTING” changed to “OUT OF CONDITION”, retry from step 6.
7. Make sure that OK is displayed after touching “SELF-DIAG RESULT”.
   If NG is displayed, go to EC-515, "Diagnostic Procedure" .

A/F SEN1 (B1) P1278/P1279
COMPLETED

PBIB0758E

Overall Function Check

UBS00BEH

Use this procedure to check the overall function of the A/F sensor 1 circuit. During this check, a 1st trip DTC might not be confirmed.

WITH GST

1. Perform EC-92, "Idle Air Volume Learning" . Make sure the result is OK. If NG, follow the instruction for Idle Air Volume Learning.

2. Drive the vehicle at a speed of 80 km/h (50 MPH) for a few minutes in D position with “OD” OFF (A/T) or 3rd position (M/T).

   NOTE:
   Keep the accelerator pedal as steady as possible during the cruising.
3. Set D position with “OD” ON (A/T) or 4th position (M/T), then release the accelerator pedal fully until the vehicle speed decreases to 50 km/h (30 MPH).

   NOTE:
   Never apply brake during releasing the accelerator pedal.
4. Repeat steps 2 to 3 five times.
5. Select Service $07 with GST.
   If 1st trip DTC is displayed, go to EC-515, "Diagnostic Procedure" .

Wiring Diagram

UBS00BEI

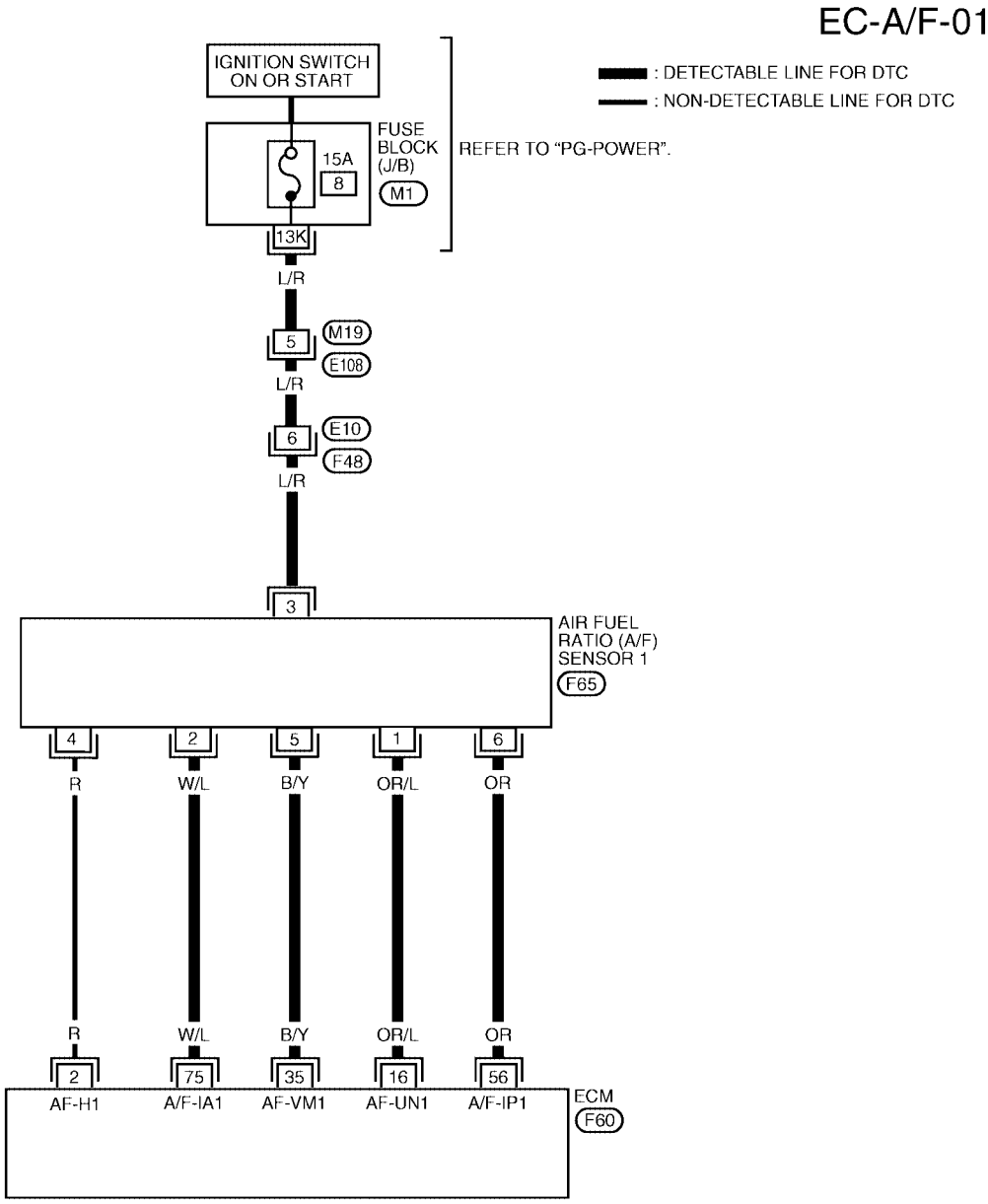

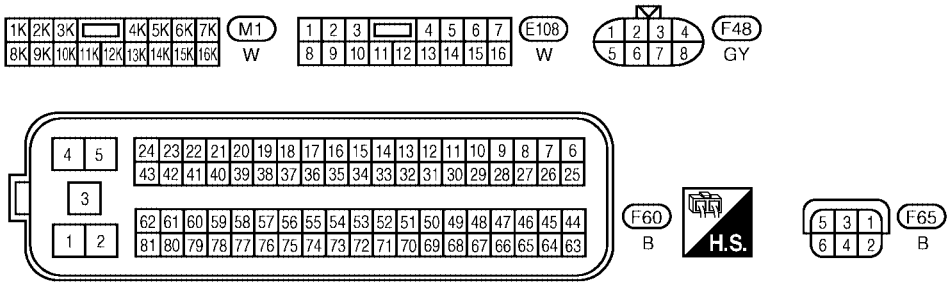

BBWA1454E

Specification data are reference values and are measured between each terminal and ground.

CAUTION:

Do not use ECM ground terminals when measuring input/output voltage. Doing so may result in damage to the ECM's transistor. Use a ground other than ECM terminals, such as the ground.

TERMINAL NO.	WIRE COLOR	ITEM	CONDITION	DATA (DC Voltage)
16	OR/L	A/F sensor 1	**[Engine is running]** ● **Warm-up condition** ● Idle speed	Approximately 3.1V
35	B/Y			Approximately 2.6V
56	OR			2 - 3V
75	W/L			2 - 3V

Diagnostic Procedure

UBS00BEJ

1. CHECK GROUND CONNECTIONS

1. Turn ignition switch OFF.
2. Loosen and retighten two ground screws on the body.
   Refer to EC-171, "Ground Inspection" .

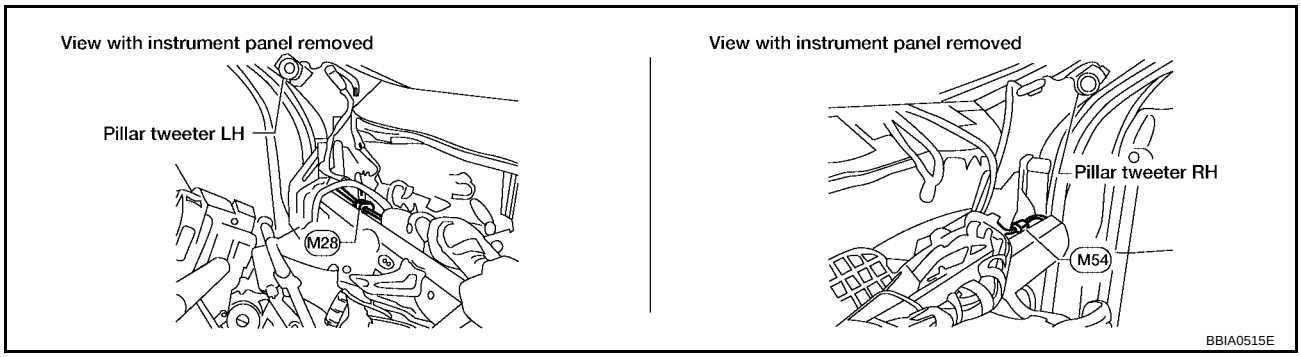

OK or NG

OK >> GO TO 2.
NG >> Repair or replace ground connections.

2. RETIGHTEN AIR FUEL RATIO (A/F) SENSOR 1

Loosen and retighten the air fuel ratio (A/F) sensor 1.

Tightening torque: 40 - 60 N-m (4.1 - 6.1 kg-m, 30 - 44 ft-lb)

>> GO TO 3.

3. CHECK EXHAUST GAS LEAK

1. Start engine and run it at idle.
2. Listen for an exhaust gas leak before three way catalyst (manifold).

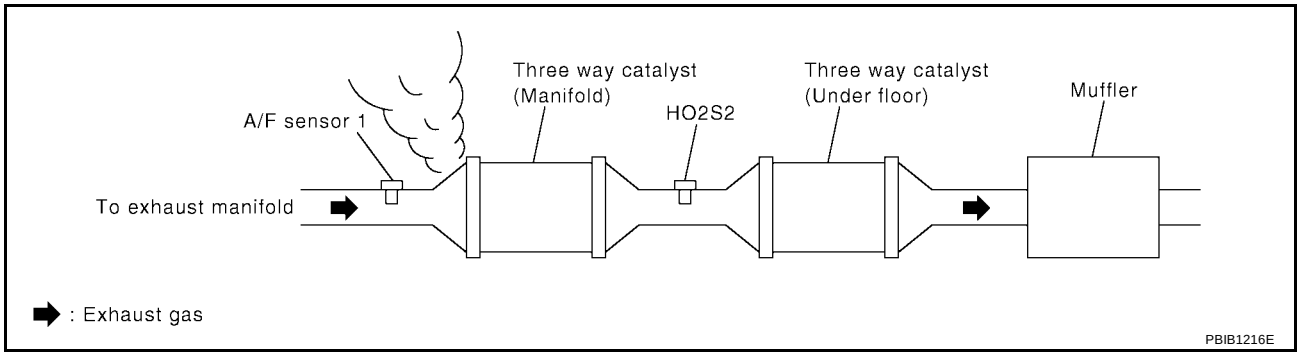

OK or NG

OK >> GO TO 4.
NG >> Repair or replace.

4. CHECK FOR INTAKE AIR LEAK

Listen for an intake air leak after the mass air flow sensor.

OK or NG

OK >> GO TO 5.
NG >> Repair or replace.

5. CLEAR THE SELF-LEARNING DATA

With CONSULT-II

1. Start engine and warm it up to normal operating temperature.
2. Select “SELF-LEARNING CONT” in “WORK SUPPORT” mode with CONSULT-II.
3. Clear the self-learning control coefficient by touching “CLEAR” or “START”.
4. Run engine for at least 10 minutes at idle speed.
   Is the 1st trip DTC P0171 or P0172 detected? Is it difficult to start engine?

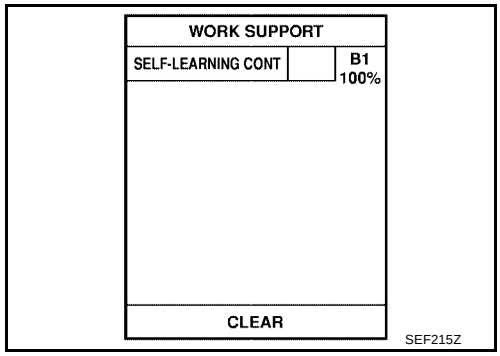

Without CONSULT-II

1. Start engine and warm it up to normal operating temperature.
2. Turn ignition switch OFF.
3. Disconnect mass air flow sensor harness connector, and restart and run engine for at least 3 seconds at idle speed.
4. Stop engine and reconnect mass air flow sensor harness connector.
5. Make sure DTC P0102 is displayed.
6. Erase the DTC memory. Refer to EC-64, "HOW TO ERASE EMISSION-RELATED DIAGNOSTIC INFORMATION" .
7. Make sure DTC P0000 is displayed.
8. Run engine for at least 10 minutes at idle speed.
   Is the 1st trip DTC P0171 or P0172 detected? Is it difficult to start engine?

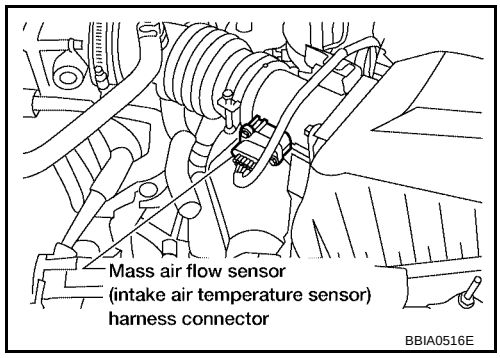

Yes or No

Yes >> Perform trouble diagnosis for DTC P0171, P0172. Refer to EC-242 , EC-249 .
No >> GO TO 6.

6. CHECK A/F SENSOR 1 INPUT SIGNAL CIRCUIT

1. Turn ignition switch OFF.
2. Disconnect ECM harness connector and A/F sensor 1 harness connector.
3. Check harness continuity between the following terminals. Refer to Wiring Diagram.

A/F sensor 1 terminal	ECM terminal
1	16
2	75
5	35
6	56

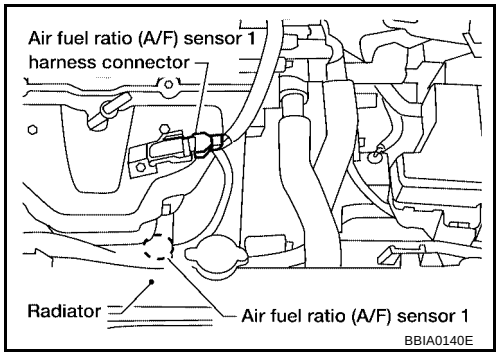

Continuity should exist.

4. Check harness continuity between ECM terminals 16, 35, 56, 75 or A/F sensor 1 terminals 1, 2, 5, 6 and ground. Refer to Wiring Diagram.

Continuity should exist.

5. Also check harness for short to power.

OK or NG

OK >> GO TO 7.
NG >> Repair open circuit or short to ground or short to power in harness or connectors.

7. CHECK AIR FUEL RATIO (A/F) SENSOR 1 HEATER

Refer to EC-389, "Component Inspection" .

OK or NG

OK >> GO TO 8.
NG >> Replace A/F sensor 1.

8. CHECK MASS AIR FLOW SENSOR

Refer to EC-194, "Component Inspection" .

OK or NG

OK >> GO TO 9.
NG >> Replace mass air flow sensor.

9. CHECK PCV VALVE

Refer toEC-49, "POSITIVE CRANKCASE VENTILATION" .

OK or NG

OK >> GO TO 10.
NG >> Repair or replace PCV valve.

10. CHECK INTERMITTENT INCIDENT

Perform EC-164, "TROUBLE DIAGNOSIS FOR INTERMITTENT INCIDENT" .

OK or NG

OK >> Replace A/F sensor 1.
NG >> Repair or replace.

Removal and Installation

UBS00BEK

AIR FUEL RATIO SENSOR 1

Refer to EM-15, "Removal and Installation" .

DTC P1279 A/F SENSOR 1

PFP:22693

Component Description

UBS00BEL

The A/F sensor 1 is a planar dual-cell limit current sensor. The sensor element of the A/F sensor 1 is the combination of a Nernst concentration cell (sensor cell) with an oxygen-pump cell, which transports ions. It has a heater in the element.

The sensor is capable of precise measurement λ = 1, but also in the lean and rich range. Together with its control electronics, the sensor outputs a clear, continuous signal throughout a wide λ range (0.7 < λ < air).

The exhaust gas components diffuse through the diffusion gap at the electrode of the oxygen pump and Nernst concentration cell, where they are brought to thermodynamic balance.

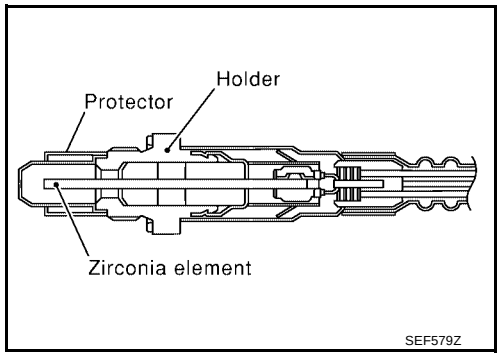

An electronic circuit controls the pump current through the oxygen-pump cell so that the composition of the exhaust gas in the diffusion gap remains constant at λ = 1. Therefore, the A/F sensor 1 is able to indicate air-fuel ratio by this pumping of current. In addition, a heater is integrated in the sensor to ensure the required operating temperature of 700 - 800°C (1,292 - 1,472°F).

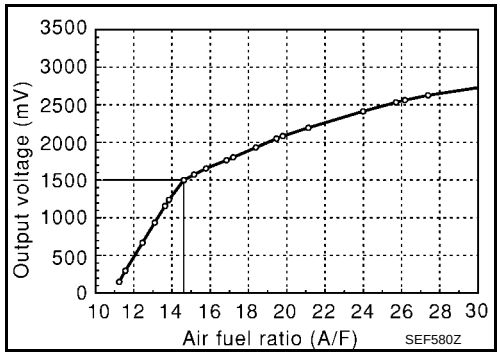

CONSULT-II Reference Value in Data Monitor Mode

UBS00BEM

Specification data are reference values.

MONITOR ITEM	CONDITION		SPECIFICATION
A/F SEN1 (B1)	● Engine: After warming up	Maintaining engine speed at 2,000 rpm	Fluctuates around 1.5V

On Board Diagnosis Logic

UBS00BEN

To judge the malfunction of air fuel ratio (A/F) sensor 1, this diagnosis measures response time of the A/F signal computed by ECM from the air fuel ratio (A/F) sensor 1 signal. The time is compensated by engine operating (speed and load), fuel feedback control constant, and the air fuel ratio (A/F) sensor 1 temperature index. Judgment is based on whether the compensated time (the A/F signal cycling time index) is inordinately long or not.

DTC No.	Trouble diagnosis name	DTC detecting condition	Possible Cause
P1279 1279	Air fuel ratio (A/F) sensor 1 circuit slow response	● The response (from LEAN to RICH) of the A/F signal computed by ECM from A/F sensor 1 signal takes more than the specified time.	● Harness or connectors (The sensor circuit is open or shorted.) ● Air fuel ratio (A/F) sensor 1 ● Air fuel ratio (A/F) sensor heater 1 ● Fuel pressure ● Fuel injectors ● Intake air leaks ● Exhaust gas leaks ● PCV ● Mass air flow sensor

DTC Confirmation Procedure

UBS00BEO

CAUTION:
Always drive vehicle at a safe speed.

NOTE:
If DTC Confirmation Procedure has been previously conducted, always turn ignition switch OFF and wait at least 10 seconds before conducting the next test.
TESTING CONDITION:
Before performing the following procedure, confirm that battery voltage is more than 11V at idle.

WITH CONSULT-II

1. Perform EC-92, "Idle Air Volume Learning" . Make sure that “CMPLT” is displayed on CONSULT-II screen. If “INCMP” is displayed, follow the instruction for Idle Air Volume Learning.
2. Select “A/F SEN1 (B1) P1278/P1279” of “A/F SEN1” in “DTC WORK SUPPORT” mode.
3. Touch “START”.
4. When the following conditions are met, “TESTING” will be displayed on the CONSULT-II screen.

ENG SPEED	1,500 - 3,000 rpm
Vehicle speed	70 - 120 km/h (43 - 75 MPH)
B/FUEL SCHDL	1.0 - 8.0 msec
Selector lever	● D position with “OD” ON (A/T) ● 4th position (M/T)

If “TESTING” is not displayed after 20 seconds, retry from step 2.

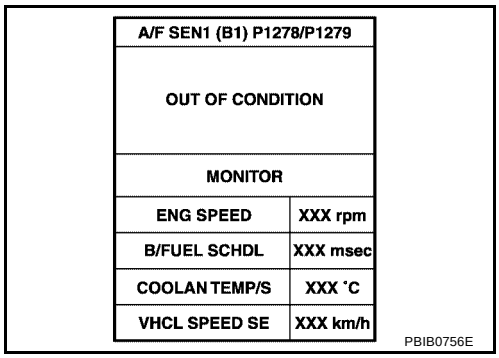

5. Following the instructions of CONSULT-II screen, set D position with “OD” OFF (A/T) or 3rd position (M/T) and release accelerator pedal fully.

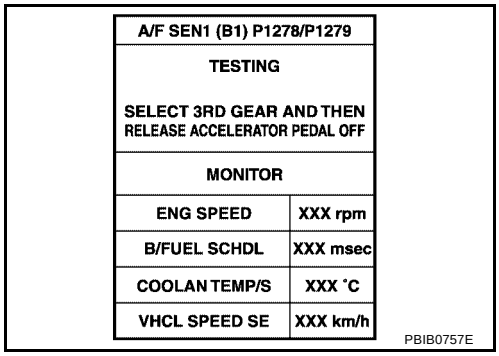

6. Make sure that “TESTING” changes to “COMPLETED”.
   If “TESTING” changed to “OUT OF CONDITION”, retry from step 6.
7. Make sure that OK is displayed after touching “SELF-DIAG RESULT”.
   If NG is displayed, go to EC-523, "Diagnostic Procedure" .

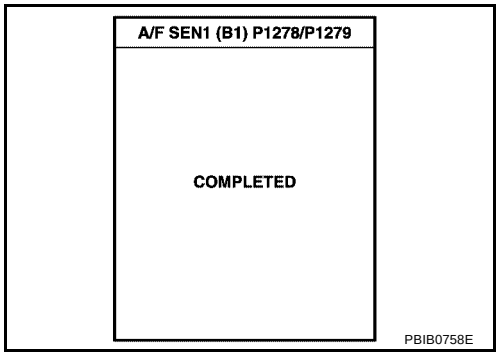

Overall Function Check

UBS00BEP

Use this procedure to check the overall function of the A/F sensor 1 circuit. During this check, a 1st trip DTC might not be confirmed.

WITH GST

1. Perform EC-92, "Idle Air Volume Learning" . Make sure the result is OK. If NG, follow the instruction for Idle Air Volume Learning.
2. Drive the vehicle at a speed of 80 km/h (50 MPH) for a few minutes in D position with “OD” OFF (A/T) or 3rd position (M/T).

   NOTE:
   Keep the accelerator pedal as steady as possible during the cruising.

3. Set D position with “OD” ON (A/T) or 4th position (M/T), then release the accelerator pedal fully until the vehicle speed decreases to 50 km/h (30 MPH).

   NOTE:
   Never apply brake during releasing the accelerator pedal.
4. Repeat steps 2 to 3 five times.
5. Stop the vehicle and turn ignition switch OFF.
6. Wait at least 10 seconds and restart engine.
7. Repeat steps 2 to 3 five times.
8. Stop the vehicle and connect GST to the vehicle.
9. Make sure that no DTC is displayed.
   If the DTC is displayed, go to EC-523, "Diagnostic Procedure" .

Wiring Diagram

UBS00BEQ

EC-A/F-01

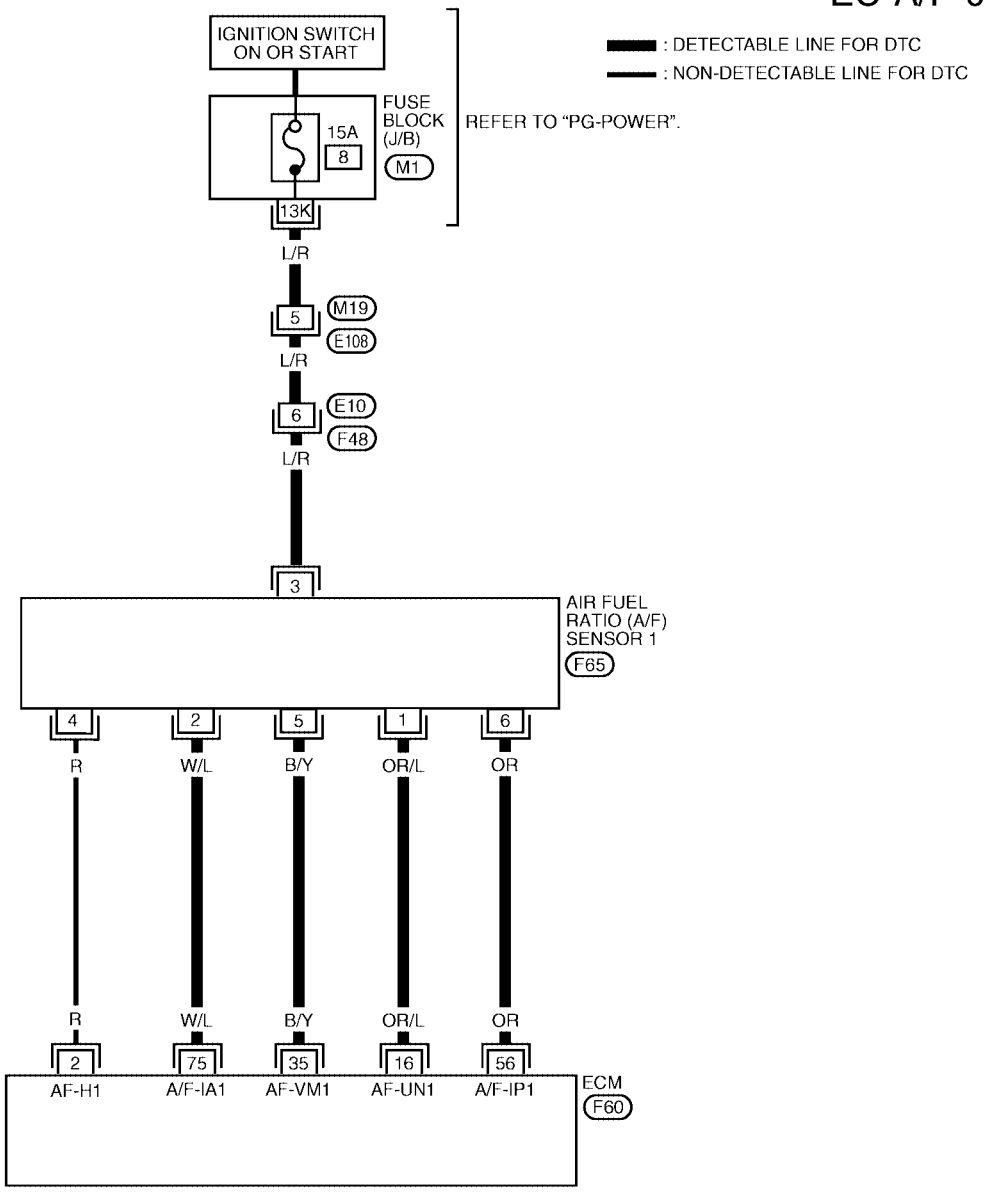

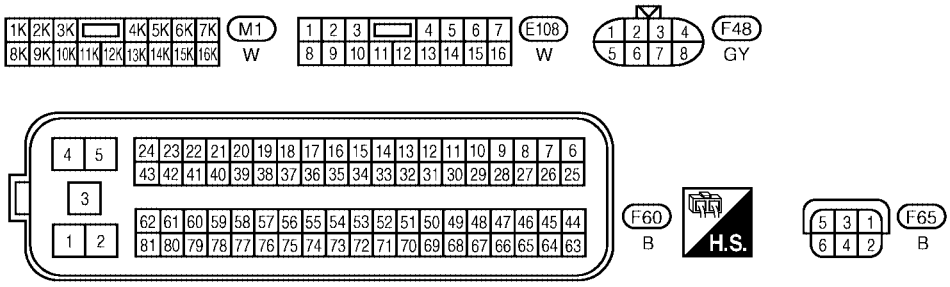

BBWA1454E

Specification data are reference values and are measured between each terminal and ground.

CAUTION:

Do not use ECM ground terminals when measuring input/output voltage. Doing so may result in damage to the ECM's transistor. Use a ground other than ECM terminals, such as the ground.

TERMINAL NO.	WIRE COLOR	ITEM	CONDITION	DATA (DC Voltage)
16	OR/L	A/F sensor 1	**[Engine is running]** ● **Warm-up condition** ● Idle speed	Approximately 3.1V
35	B/Y			Approximately 2.6V
56	OR			2 - 3V
75	W/L			2 - 3V

Diagnostic Procedure

UBS00BER

1. CHECK GROUND CONNECTIONS

1. Turn ignition switch OFF.
2. Loosen and retighten two ground screws on the body.
   Refer to EC-171, "Ground Inspection" .

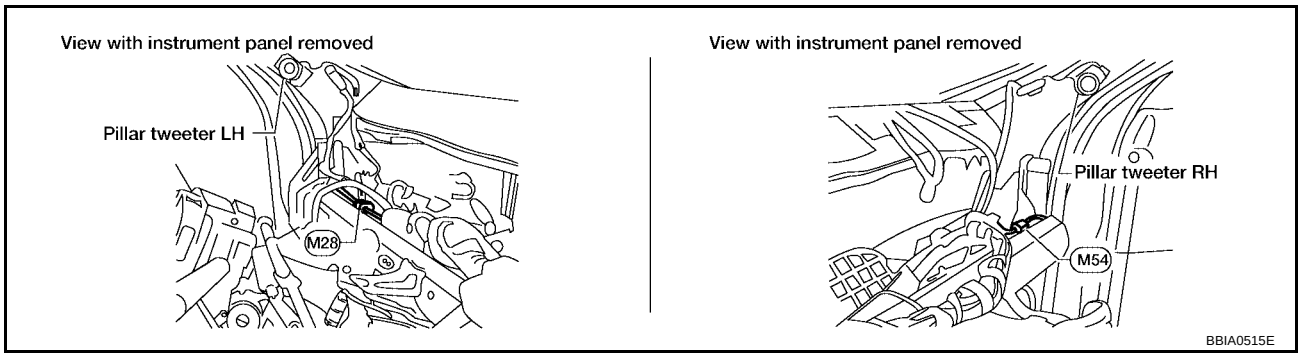

OK or NG

OK >> GO TO 2.
NG >> Repair or replace ground connections.

2. RETIGHTEN AIR FUEL RATIO (A/F) SENSOR 1

Loosen and retighten the air fuel ratio (A/F) sensor 1.

Tightening torque: 40 - 60 N-m (4.1 - 6.1 kg-m, 30 - 44 ft-lb)

>> GO TO 3.

3. CHECK EXHAUST GAS LEAK

1. Start engine and run it at idle.
2. Listen for an exhaust gas leak before three way catalyst (manifold).

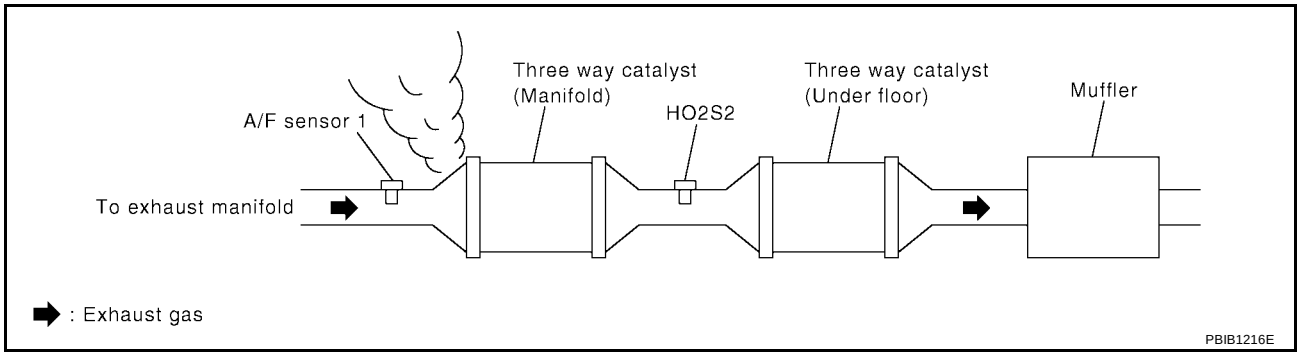

OK or NG

OK >> GO TO 4.
NG >> Repair or replace.

4. CHECK FOR INTAKE AIR LEAK

Listen for an intake air leak after the mass air flow sensor.

OK or NG

OK >> GO TO 5.
NG >> Repair or replace.

5. CLEAR THE SELF-LEARNING DATA

With CONSULT-II

1. Start engine and warm it up to normal operating temperature.
2. Select “SELF-LEARNING CONT” in “WORK SUPPORT” mode with CONSULT-II.
3. Clear the self-learning control coefficient by touching “CLEAR” or “START”.
4. Run engine for at least 10 minutes at idle speed.
   Is the 1st trip DTC P0171 or P0172 detected? Is it difficult to start engine?

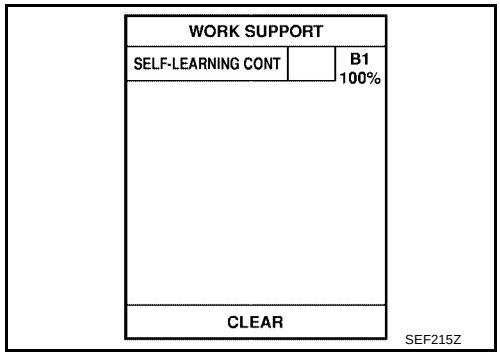

Without CONSULT-II

1. Start engine and warm it up to normal operating temperature.
2. Turn ignition switch OFF.
3. Disconnect mass air flow sensor harness connector, and restart and run engine for at least 3 seconds at idle speed.
4. Stop engine and reconnect mass air flow sensor harness connector.
5. Make sure DTC P0102 is displayed.
6. Erase the DTC memory. Refer to EC-64, "HOW TO ERASE EMISSION-RELATED DIAGNOSTIC INFORMATION" .
7. Make sure DTC P0000 is displayed.
8. Run engine for at least 10 minutes at idle speed.
   Is the 1st trip DTC P0171 or P0172 detected? Is it difficult to start engine?

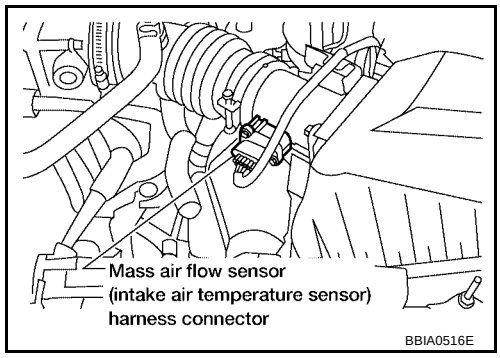

Yes or No

Yes >> Perform trouble diagnosis for DTC P0171, P0172. Refer to EC-242 , EC-249 .
No >> GO TO 6.

6. CHECK A/F SENSOR 1 INPUT SIGNAL CIRCUIT

1. Turn ignition switch OFF.
2. Disconnect ECM harness connector and A/F sensor 1 harness connector.
3. Check harness continuity between the following terminals. Refer to Wiring Diagram.

A/F sensor 1 terminal	ECM terminal
1	16
2	75
5	35
6	56

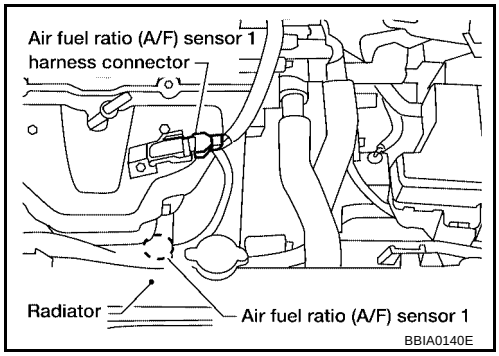

Continuity should exist.

4. Check harness continuity between ECM terminals 16, 35, 56, 75 or A/F sensor 1 terminals 1, 2, 5, 6 and ground. Refer to Wiring Diagram.

Continuity should exist.

5. Also check harness for short to power.

OK or NG

OK >> GO TO 7.
NG >> Repair open circuit or short to ground or short to power in harness or connectors.

7. CHECK AIR FUEL RATIO (A/F) SENSOR 1 HEATER

Refer to EC-389, "Component Inspection" .

OK or NG

OK >> GO TO 8.
NG >> Replace A/F sensor 1.

8. CHECK MASS AIR FLOW SENSOR

Refer to EC-194, "Component Inspection" .

OK or NG

OK >> GO TO 9.
NG >> Replace mass air flow sensor.

9. CHECK PCV VALVE

Refer to EC-164, "TROUBLE DIAGNOSIS FOR INTERMITTENT INCIDENT" .

OK or NG

OK >> GO TO 10.
NG >> Repair or replace PCV valve.

10. CHECK INTERMITTENT INCIDENT

Perform EC-164, "TROUBLE DIAGNOSIS FOR INTERMITTENT INCIDENT" .

OK or NG

OK >> Replace A/F sensor 1.
NG >> Repair or replace.

Removal and Installation

UBS00BES

AIR FUEL RATIO SENSOR 1

Refer to EM-15, "Removal and Installation" .

DTC P1444 EVAP CANISTER PURGE VOLUME CONTROL SOLENOID VALVE

PFP:14920

Description

UBS00BET

SYSTEM DESCRIPTION

Sensor	Input Signal to ECM	ECM function	Actuator
Crankshaft position sensor (POS) Camshaft position sensor (PHASE)	Engine speed*1	EVAP canister purge flow control	EVAP canister purge volume control solenoid valve
Mass air flow sensor	Amount of intake air		
Engine coolant temperature sensor	Engine coolant temperature		
Battery	Battery voltage*1		
Throttle position sensor	Throttle position		
Accelerator pedal position sensor	Accelerator pedal position		
Air fuel ratio (A/F) sensor 1	Density of oxygen in exhaust gas (Mixture ratio feedback signal)		
Fuel tank temperature sensor	Fuel temperature in fuel tank		
Vehicle speed sensor*2	Vehicle speed		

*1: ECM determines the start signal status by the signals of engine speed and battery voltage.
*2: This signal is sent to the ECM through CAN communication line.

This system controls flow rate of fuel vapor from the EVAP canister. The opening of the vapor by-pass passage in the EVAP canister purge volume control solenoid valve changes to control the flow rate. The EVAP canister purge volume control solenoid valve repeats ON/OFF operation according to the signal sent from the ECM. The opening of the valve varies for optimum engine control. The optimum value stored in the ECM is determined by considering various engine conditions. When the engine is operating, the flow rate of fuel vapor from the EVAP canister is regulated as the air flow changes.

COMPONENT DESCRIPTION

The EVAP canister purge volume control solenoid valve uses a ON/OFF duty to control the flow rate of fuel vapor from the EVAP canister. The EVAP canister purge volume control solenoid valve is moved by ON/OFF pulses from the ECM. The longer the ON pulse, the greater the amount of fuel vapor that will flow through the valve.

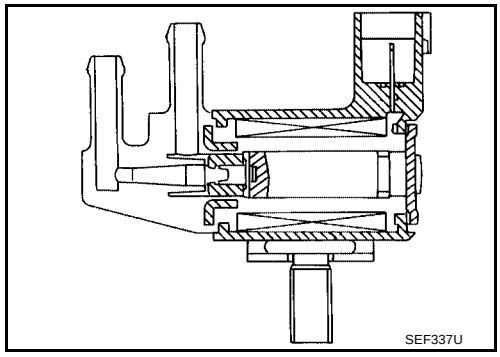

CONSULT-II Reference Value in Data Monitor Mode

UBS00BEU

Specification data are reference values.

MONITOR ITEM	CONDITION		SPECIFICATION
PURG VOL C/V	● Engine: After warming up ● Air conditioner switch: OFF ● Shift lever: N (A/T), Neutral (M/T) ● No-load	Idle (Accelerator pedal is not depressed even slightly, after engine starting.)	0%
		2,000 rpm	—

On Board Diagnosis Logic

UBS00BEV

DTC No.	Trouble diagnosis name	DTC detecting condition	Possible cause
P1444 1444	EVAP canister purge volume control solenoid valve	The canister purge flow is detected during the specified driving conditions, even when EVAP canister purge volume control solenoid valve is completely closed.	● EVAP control system pressure sensor ● EVAP canister purge volume control solenoid valve (The valve is stuck open.) ● EVAP canister vent control valve ● EVAP canister ● Hoses (Hoses are connected incorrectly or clogged.)

DTC Confirmation Procedure

UBS00BEW

NOTE:
If DTC Confirmation Procedure has been previously conducted, always turn ignition switch OFF and wait at least 10 seconds before conducting the next test.
TESTING CONDITION:
Always perform test at a temperature of 0°C (32°F) or more.

WITH CONSULT-II

1. Start engine and warm it up to normal operating temperature.
2. Turn ignition switch OFF and wait at least 10 seconds.
3. Turn ignition switch ON.
4. Select “PURG VOL CN/V P1444” of “EVAPORATIVE SYSTEM” in “DTC WORK SUPPORT” mode with CONSULT-II.
5. Touch “START”.

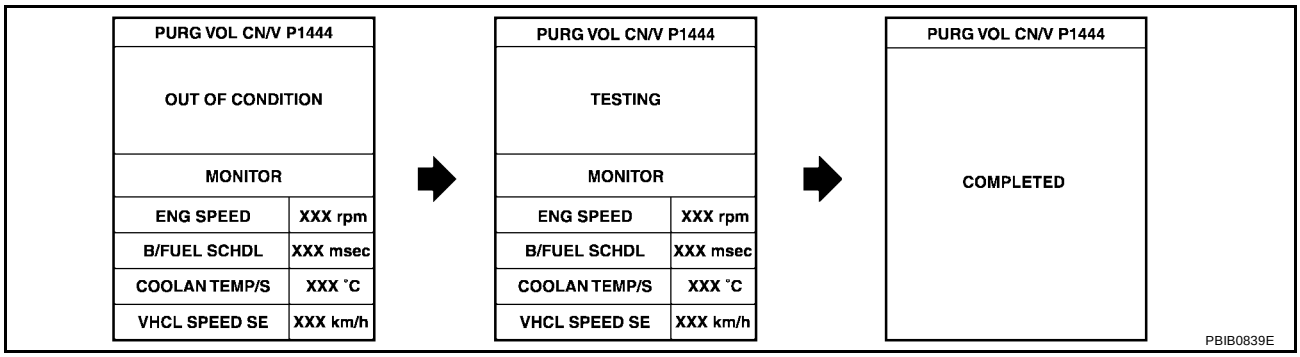

6. Start engine and let it idle until “TESTING” on CONSULT-II changes to “COMPLETED”. (It will take approximately 10 seconds.)
   If “TESTING” is not displayed after 5 minutes, retry from step 2.
7. Make sure that OK is displayed after touching “SELF-DIAG RESULTS”. If NG is displayed, refer to EC-531, "Diagnostic Procedure" .

WITH GST

1. Start engine and warm it up to normal operating temperature.
2. Turn ignition switch OFF and wait at least 10 seconds.
3. Start engine and let it idle for at least 20 seconds.
4. Select Service $07 with GST.
5. If 1st trip DTC is detected, go to EC-531, "Diagnostic Procedure" .

Wiring Diagram

UBS00BEX

EC-PGC/V-01

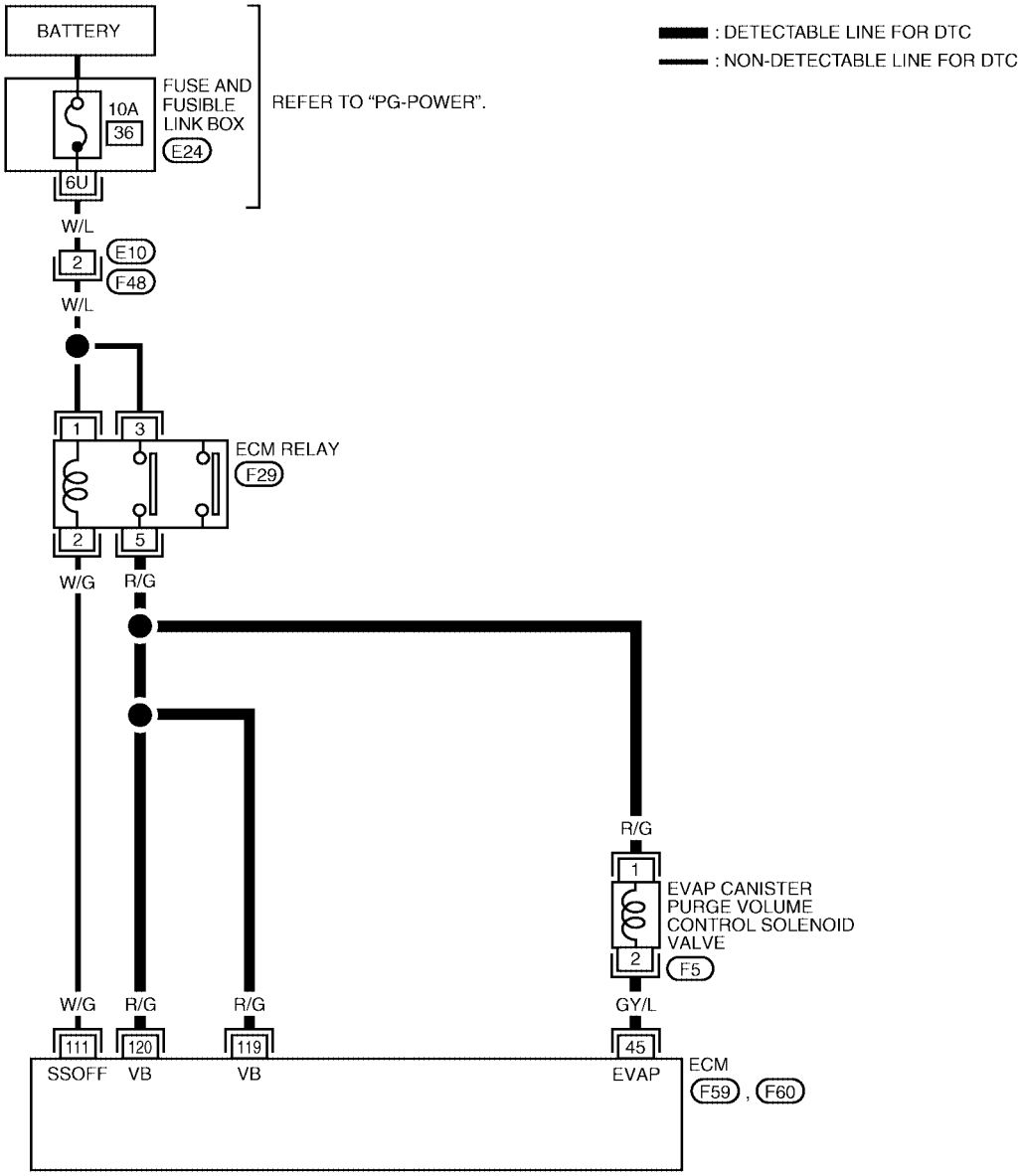

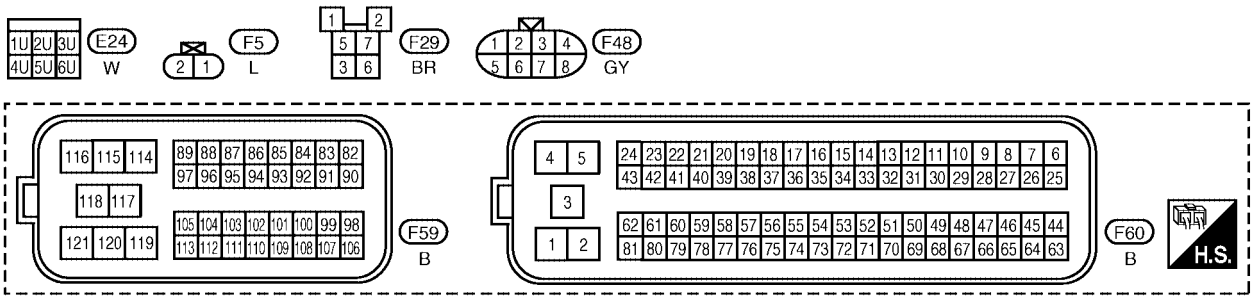

BBWA1431E

Specification data are reference values and are measured between each terminal and ground.
Pulse signal is measured by CONSULT-II.

CAUTION:

Do not use ECM ground terminals when measuring input/output voltage. Doing so may result in damage to the ECM's transistor. Use a ground other than ECM terminals, such as the ground.

TERMINAL NO.	WIRE COLOR	ITEM	CONDITION	DATA (DC Voltage)
45	GY/L	EVAP canister purge volume control solenoid valve	**[Engine is running]** ● Idle speed ● Accelerator pedal is not depressed even slightly, after engine starting.	BATTERY VOLTAGE (11 - 14V)★ 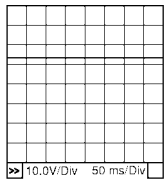 PBIB0050E
			[Engine is running] ● Engine speed is about 2,000 rpm (More than 100 seconds after starting engine)	Approximately 10V★ 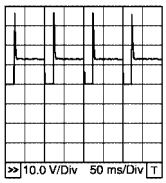 PBIB0520E
111	W/G	ECM relay (Self shut-off)	**[Engine is running]** **[Ignition switch: OFF]** ● For a few seconds after turning ignition switch OFF	0 - 1.0V
			[Ignition switch: OFF] ● More than a few seconds after turning ignition switch OFF	BATTERY VOLTAGE (11 - 14V)
119 120	R/G	Power supply for ECM	**[Ignition switch: ON]**	BATTERY VOLTAGE (11 - 14V)

★: Average voltage for pulse signal (Actual pulse signal can be confirmed by oscilloscope.)

Diagnostic Procedure

UBS00BEY

1. CHECK EVAP CANISTER PURGE VOLUME CONTROL SOLENOID VALVE POWER SUPPLY CIRCUIT

1. Turn ignition switch OFF.
2. Disconnect EVAP canister purge volume control solenoid valve harness connector.
3. Turn ignition switch ON.

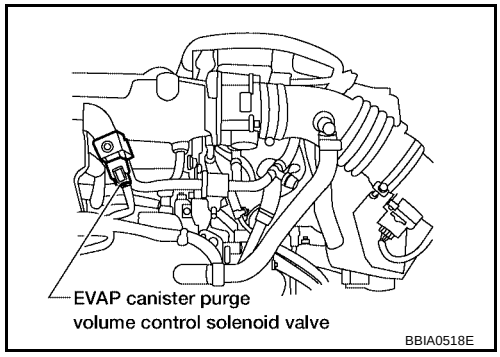

4. Check voltage between EVAP canister purge volume control solenoid valve terminal 1 and engine ground with CONSULT-II or tester.

Voltage: Battery voltage

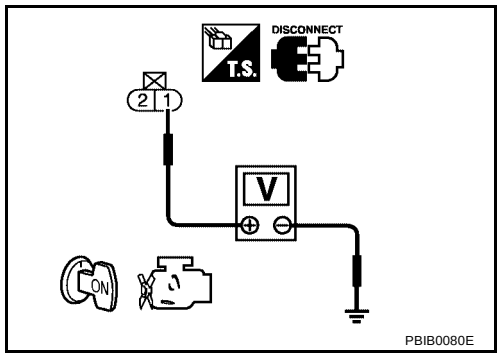

OK or NG

OK >> GO TO 3.
NG >> GO TO 2.

2. DETECT MALFUNCTIONING PART

Check the following.

- Harness for open or short between EVAP canister purge volume control solenoid valve and ECM relay
- Harness for open or short between EVAP canister purge volume control solenoid valve and ECM

>> Repair harness or connectors.

3. CHECK EVAP CANISTER PURGE VOLUME CONTROL SOLENOID VALVE OUTPUT SIGNAL CIRCUIT FOR OPEN AND SHORT

1. Turn ignition switch OFF.
2. Disconnect ECM harness connector.
3. Check harness continuity between ECM terminal 45 and EVAP canister purge volume control solenoid valve terminal 2. Refer to Wiring Diagram.

Continuity should exist.

4. Also check harness for short to ground and short to power.

OK or NG

OK >> GO TO 4.
NG >> Repair open circuit or short to ground or short to power in harness or connectors.

4. CHECK EVAP CONTROL SYSTEM PRESSURE SENSOR CONNECTOR

1. Disconnect EVAP control system pressure sensor harness connector.
2. Check connectors for water.

Water should not exist.

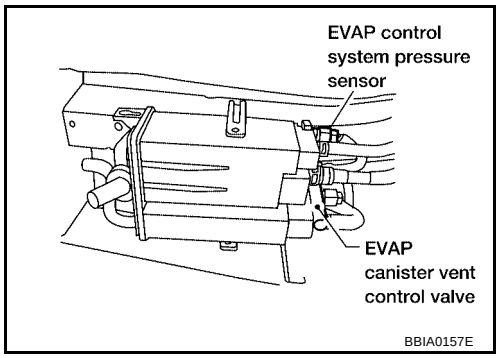

OK or NG

OK >> GO TO 5.
NG >> Replace EVAP control system pressure sensor.

5. CHECK EVAP CONTROL SYSTEM PRESSURE SENSOR

Refer to EC-340, "Component Inspection" .

OK or NG

OK (With CONSULT-II)>>GO TO 6.
OK (Without CONSULT-II)>>GO TO 7.
NG >> Replace EVAP control system pressure sensor.

6. CHECK EVAP CANISTER PURGE VOLUME CONTROL SOLENOID VALVE

With CONSULT-II

1. Turn ignition switch OFF.
2. Reconnect harness connectors disconnected.
3. Start engine.
4. Perform “PURG VOL CONT/V” in “ACTIVE TEST” mode with CONSULT-II. Check that engine speed varies according to the valve opening.

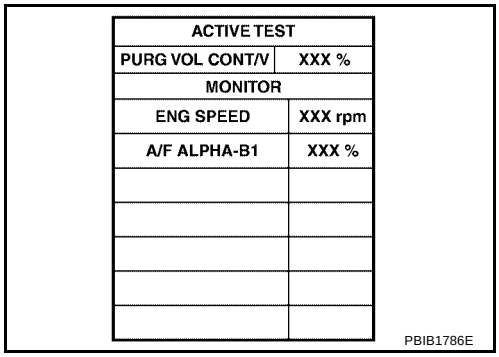

ACTIVE TEST	
PURG VOL CONT/V	XXX %
MONITOR	
ENG SPEED	XXX rpm
A/F ALPHA-B1	XXX %

PBIB1786E

OK or NG

OK >> GO TO 8.
NG >> GO TO 7.

7. CHECK EVAP CANISTER PURGE VOLUME CONTROL SOLENOID VALVE

Refer to EC-347, "Component Inspection" .

OK or NG

OK >> GO TO 8.
NG >> Replace EVAP canister purge volume control solenoid valve.

8. CHECK RUBBER TUBE FOR CLOGGING

1. Disconnect rubber tube connected to EVAP canister vent control valve.
2. Check the rubber tube for clogging.

OK or NG

OK >> GO TO 9.
NG >> Clean the rubber tube using an air blower.

9. CHECK EVAP CANISTER VENT CONTROL VALVE

Refer to EC-330, "Component Inspection" .

OK or NG

OK >> GO TO 11.
NG >> Replace EVAP canister vent control valve.

10. CHECK IF EVAP CANISTER SATURATED WITH WATER

1. Remove EVAP canister with EVAP canister vent control valve attached.
2. Check if water will drain from the EVAP canister.

Yes or No

Yes >> GO TO 11.
No >> GO TO 13.

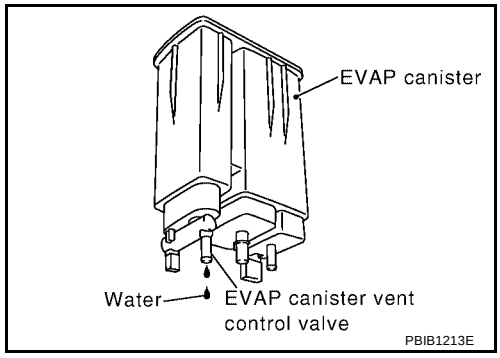

11. CHECK EVAP CANISTER

Weigh the EVAP canister with the EVAP canister vent control valve attached.

The weight should be less than 1.9 kg (4.2 lb).

OK or NG

OK >> GO TO 13.
NG >> GO TO 12.

12. DETECT MALFUNCTIONING PART

Check the following.

- EVAP canister for damage
- EVAP hose between EVAP canister and vehicle frame for clogging or poor connection

>> Repair hose or replace EVAP canister.

13. CHECK INTERMITTENT INCIDENT

Refer to EC-164, "TROUBLE DIAGNOSIS FOR INTERMITTENT INCIDENT" .

>> **INSPECTION END**

Component Inspection

UBS00BEZ

EVAP CANISTER PURGE VOLUME CONTROL SOLENOID VALVE

With CONSULT-II

Check air passage continuity of EVAP canister purge volume control solenoid valve under the following conditions.

Condition (PURG VOL CONT/V value)	Air passage continuity between A and B
100%	Yes
0%	No

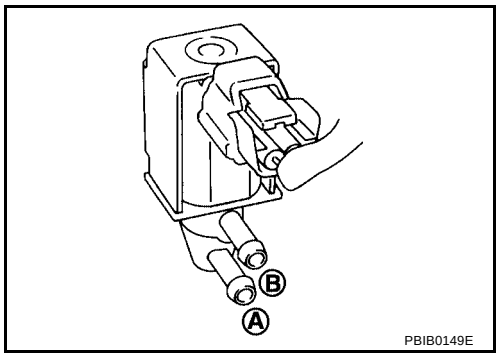

Without CONSULT-II

Check air passage continuity of EVAP canister purge volume control solenoid valve under the following conditions.

Condition	Air passage continuity between A and B
12V direct current supply between terminals 1 and 2	Yes
No supply	No

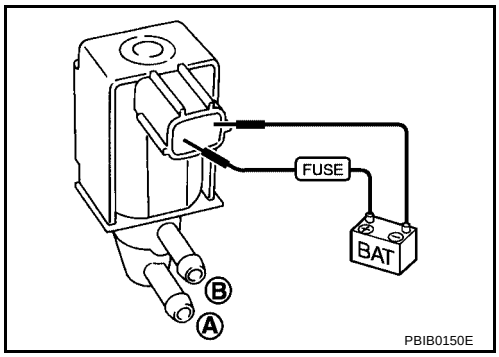

Removal and Installation

UBS00BJU

EVAP CANISTER PURGE VOLUME CONTROL SOLENOID VALVE

Refer to EM-15, "Removal and Installation" .

DTC P1446 EVAP CANISTER VENT CONTROL VALVE

PFP:14935

Component Description

UBS00BF0

The EVAP canister vent control valve is located on the EVAP canister and is used to seal the canister vent.
This solenoid valve responds to signals from the ECM. When the ECM sends an ON signal, the coil in the solenoid valve is energized. A plunger will then move to seal the canister vent. The ability to seal the vent is necessary for the on board diagnosis of other evaporative emission control system components.
This solenoid valve is used only for diagnosis, and usually remains opened.
When the vent is closed, under normal purge conditions, the evaporative emission control system is depressurized and allows “EVAP Control System” diagnoses.

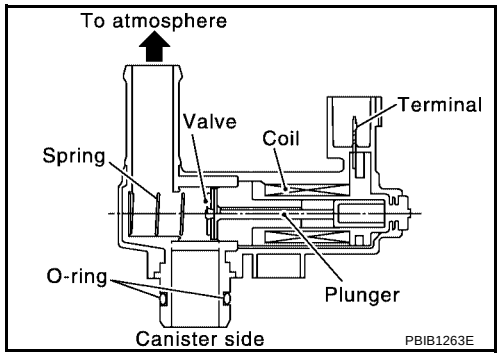

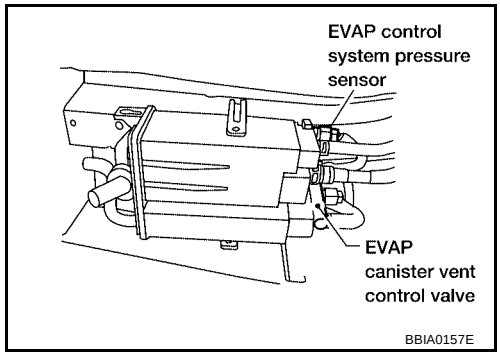

CONSULT-II Reference Value in Data Monitor Mode

UBS00BF1

Specification data are reference values.

MONITOR ITEM	CONDITION	SPECIFICATION
VENT CONT/V	● Ignition switch: ON	OFF

On Board Diagnosis Logic

UBS00BF2

DTC No.	Trouble diagnosis name	DTC detecting condition	Possible cause
P1446 1446	EVAP canister vent control valve close	EVAP canister vent control valve remains closed under specified driving conditions.	● EVAP canister vent control valve ● EVAP control system pressure sensor and the circuit ● Blocked rubber tube to EVAP canister vent control valve ● EVAP canister is saturated with water

DTC Confirmation Procedure

UBS00BF3

CAUTION:
Always drive vehicle at a safe speed.

NOTE:
If DTC Confirmation Procedure has been previously conducted, always turn ignition switch OFF and wait at least 10 seconds before conducting the next test.

WITH CONSULT-II

1. Turn ignition switch ON and wait at least 5 seconds.
2. Turn ignition switch OFF and wait at least 10 seconds.
3. Turn ignition switch ON and select “DATA MONITOR” mode with CONSULT-II.
4. Start engine and let it idle for at least 1 minute.
5. Repeat next procedures 3 times.

a. Increase the engine speed up to 3,000 to 3,500 rpm and keep it for 2 minutes and 50 seconds to 3 minutes.
Never exceed 3 minutes.

b. Fully released accelerator pedal and keep engine idle for about 5 seconds.

6. If 1st trip DTC is detected, go to EC-442, "Diagnostic Procedure".
If 1st trip DTC is not detected, go to the next step.

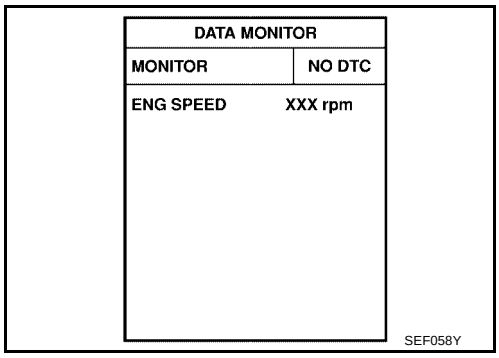

7. Repeat next procedure 20 times.

a. Quickly increase the engine speed up to 4,000 to 4,500 rpm or more and keep it for 25 to 30 seconds.

b. Fully released accelerator pedal and keep engine idle for at least 35 seconds.

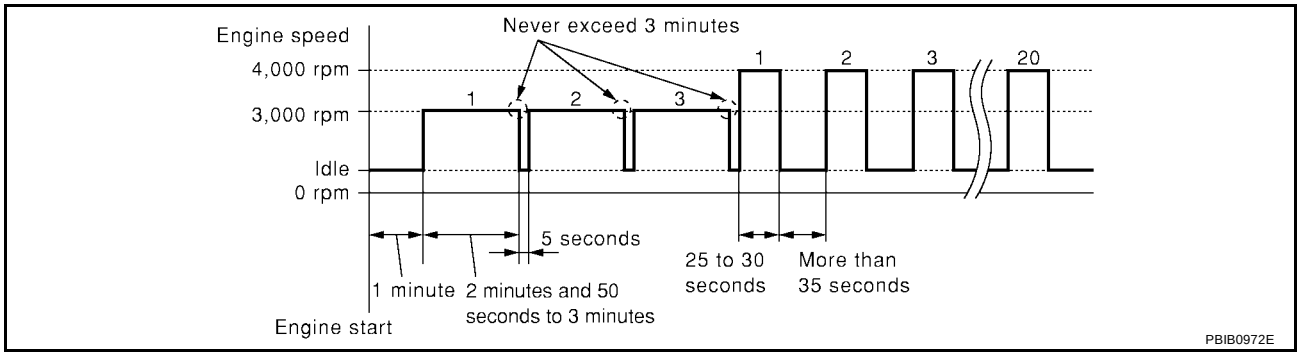

8. If 1st trip DTC is detected, go to EC-442, "Diagnostic Procedure".

WITH GST

Follow the procedure “WITH CONSULT-II” above.

Wiring Diagram

UBS00BF4

EC-VENT/V-01

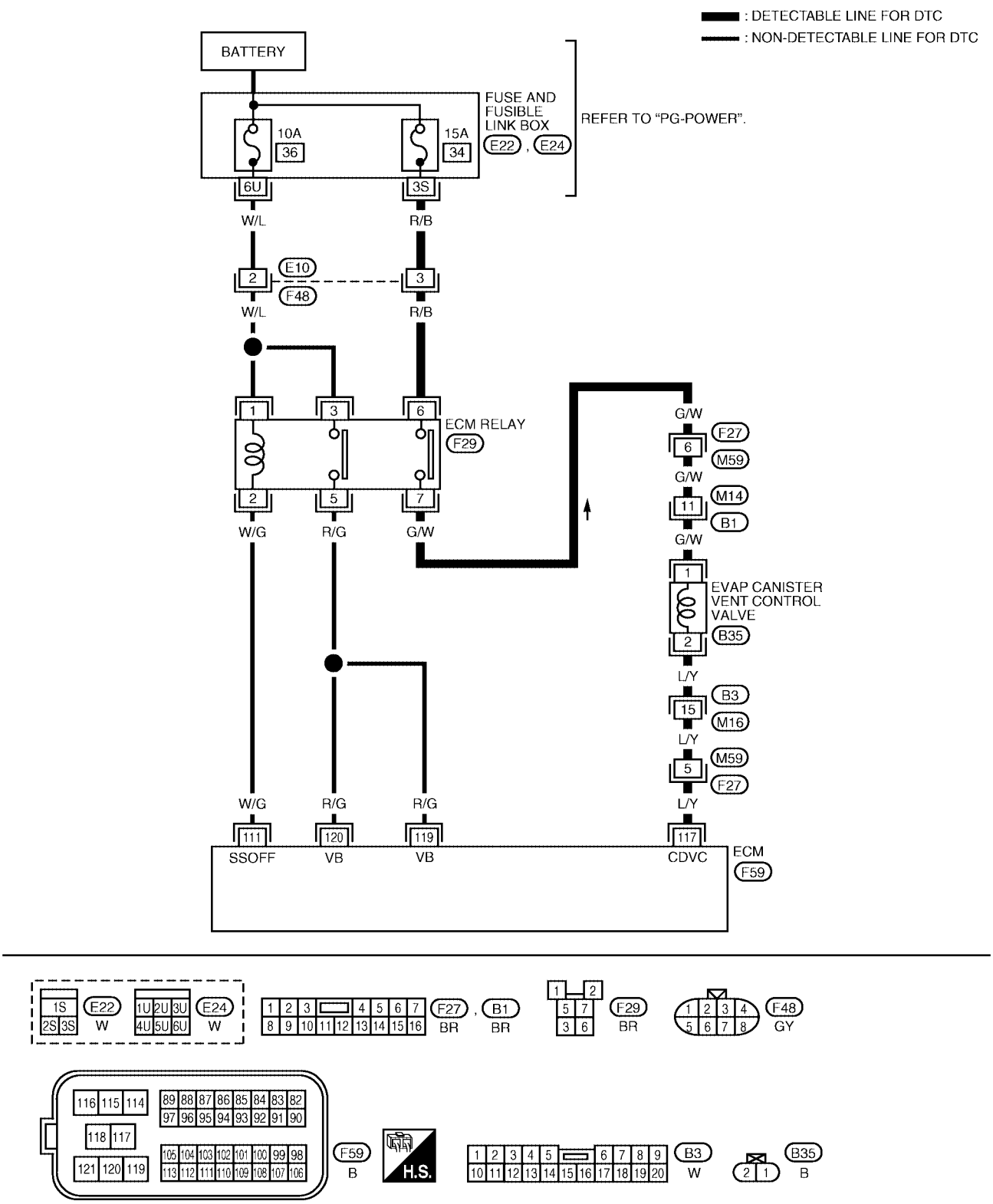

BBWA1432E

Specification data are reference values and are measured between each terminal and ground.

CAUTION:

Do not use ECM ground terminals when measuring input/output voltage. Doing so may result in damage to the ECM's transistor. Use a ground other than ECM terminals, such as the ground.

TERMINAL NO.	WIRE COLOR	ITEM	CONDITION	DATA (DC Voltage)
111	W/G	ECM relay (Self shut-off)	**[Engine is running]** **[Ignition switch: OFF]** ● For a few seconds after turning ignition switch OFF	0 - 1.0V
			[Ignition switch: OFF] ● More than a few seconds after turning ignition switch OFF	BATTERY VOLTAGE (11 - 14V)
117	L/Y	EVAP canister vent control valve	**[Ignition switch: ON]**	BATTERY VOLTAGE (11 - 14V)
119 120	R/G	Power supply for ECM	**[Ignition switch: ON]**	BATTERY VOLTAGE (11 - 14V)

Diagnostic Procedure

UBS00BF5

1. CHECK RUBBER TUBE

1. Turn ignition switch OFF.
2. Disconnect rubber tube connected to EVAP canister vent control valve.
3. Check the rubber tube for clogging.

OK or NG

OK >> GO TO 2.
NG >> Clean rubber tube using an air blower.

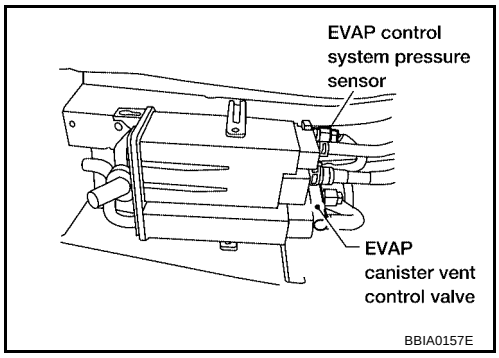

2. CHECK EVAP CANISTER VENT CONTROL VALVE

Refer to EC-444, "Component Inspection" .

OK or NG

OK >> GO TO 3.
NG >> Replace EVAP canister vent control valve.

3. CHECK IF EVAP CANISTER SATURATED WITH WATER

1. Remove EVAP canister with EVAP canister vent control valve and EVAP control system pressure sensor attached.
2. Check if water will drain from the EVAP canister.

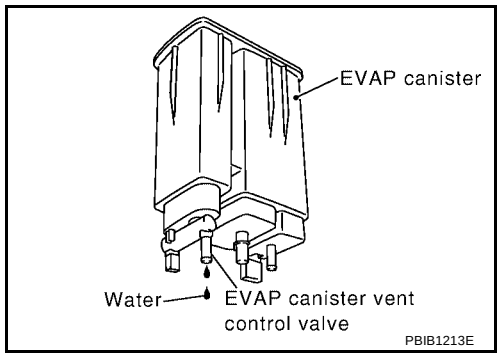

Yes or No

Yes >> GO TO 4.
No >> GO TO 6.

4. CHECK EVAP CANISTER

Weigh the EVAP canister with the EVAP canister vent control valve and EVAP control system pressure sensor attached.

The weight should be less than 1.9 kg (4.2 lb).

OK or NG

OK >> GO TO 6.
NG >> GO TO 5.

5. DETECT MALFUNCTIONING PART

Check the following.

- EVAP canister for damage
- EVAP hose between EVAP canister and vehicle frame for clogging or poor connection

>> Repair hose or replace EVAP canister.

6. CHECK EVAP CONTROL SYSTEM PRESSURE SENSOR CONNECTOR

1. Disconnect EVAP control system pressure sensor harness connector.
2. Check connectors for water.

Water should not exist.

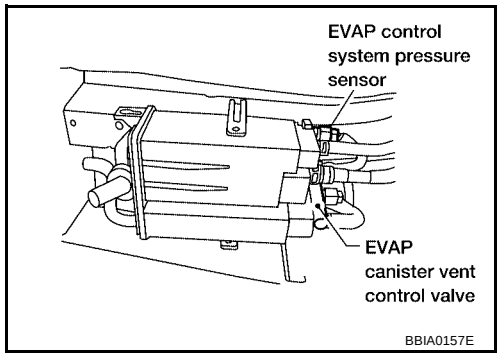

OK or NG

OK >> GO TO 7.
NG >> Replace EVAP control system pressure sensor.

7. CHECK EVAP CONTROL SYSTEM PRESSURE SENSOR

Refer to EC-347, "Component Inspection" .

OK or NG

OK >> GO TO 8.
NG >> Replace EVAP control system pressure sensor.

8. CHECK INTERMITTENT INCIDENT

Refer to EC-164, "TROUBLE DIAGNOSIS FOR INTERMITTENT INCIDENT" .

>> **INSPECTION END**

Component Inspection

UBS00BF6

EVAP CANISTER VENT CONTROL VALVE

With CONSULT-II

1. Remove EVAP canister vent control valve from EVAP canister.
2. Check portion **B** of EVAP canister vent control valve for being rusted.
   If NG, replace EVAP canister vent control valve.
   If OK, go to next step.
3. Reconnect harness connectors disconnected.
4. Turn ignition switch ON.

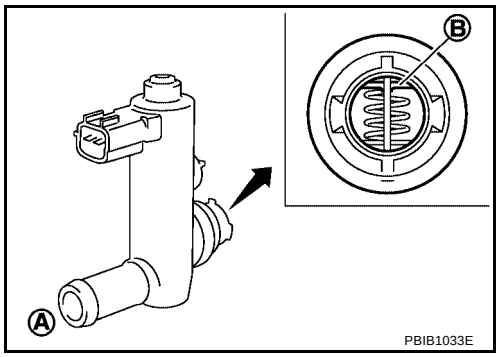

5. Perform “VENT CONTROL/V” in “ACTIVE TEST” mode.
6. Check air passage continuity and operation delay time.

Condition VENT CONTROL/V	Air passage continuity between A and B
ON	No
OFF	Yes

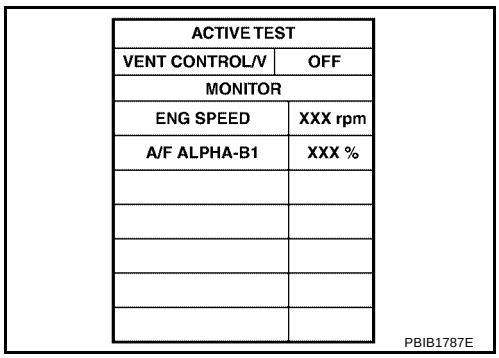

ACTIVE TEST	
VENT CONTROL/V	OFF
MONITOR	
ENG SPEED	XXX rpm
A/F ALPHA-B1	XXX %

PBIB1787E

   Operation takes less than 1 second.
   Make sure new O-ring is installed properly.
   If NG, replace EVAP canister vent control valve.
   If OK, go to next step.
7. Clean the air passage (Portion **A** to **B**) of EVAP canister vent control valve using an air blower.
8. Perform step 5 again.

Without CONSULT-II

1. Remove EVAP canister vent control valve from EVAP canister.
2. Check portion **B** of EVAP canister vent control valve for being rusted.

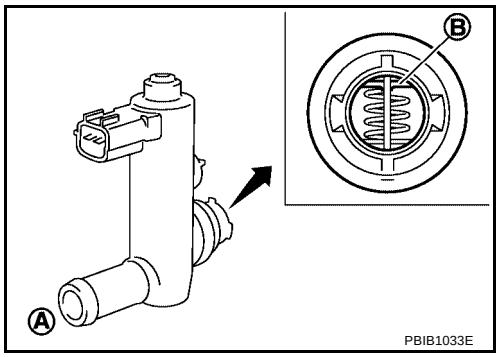

3. Check air passage continuity and operation delay time under the following conditions.

Condition	Air passage continuity between A and B
12V direct current supply between terminals 1 and 2	No
OFF	Yes

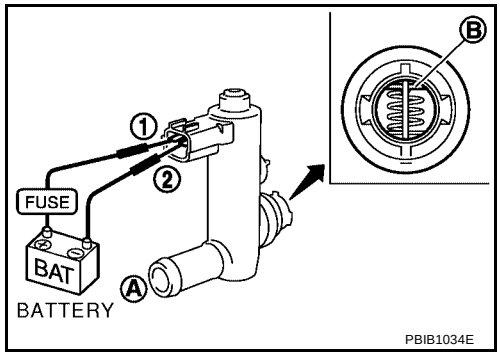

Operation takes less than 1 second.
Make sure new O-ring is installed properly.
If NG, replace EVAP canister vent control valve.
If OK, go to next step.

4. Clean the air passage (Portion **A** to **B**) of EVAP canister vent control valve using an air blower.
5. Perform step 3 again.

DTC P1564 ASCD STEERING SWITCH

PFP:25551

Component Description

UBS00BF7

ASCD steering switch has variant values of electrical resistance for each button. ECM reads voltage variation of switch, and determines which button is operated.

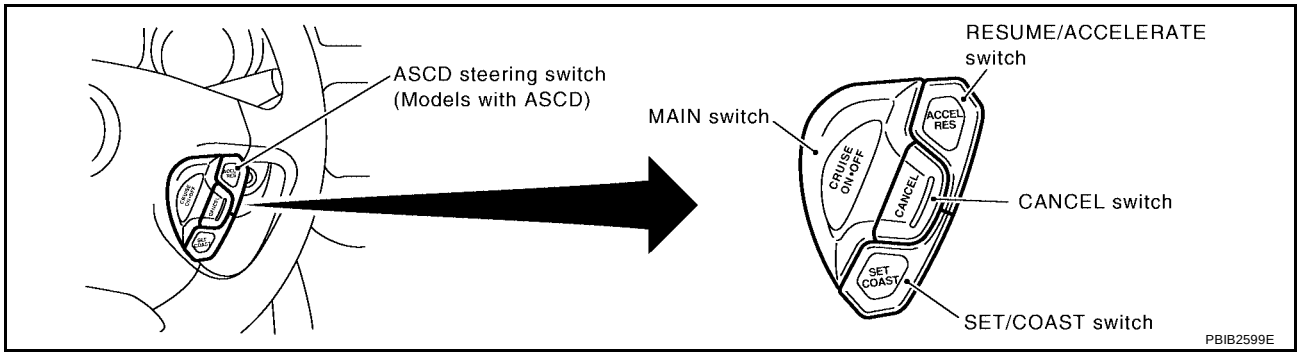

Refer to EC-33 for the ASCD function.

CONSULT-II Reference Value in Data Monitor Mode

UBS00BF8

Specification data are reference values.

MONITOR ITEM	CONDITION		SPECIFICATION
MAIN SW	● Ignition switch: ON	MAIN switch: Pressed	ON
		MAIN switch: Released	OFF
CANCEL SW	● Ignition switch: ON	CANCEL switch: Pressed	ON
		CANCEL switch: Released	OFF
RESUME/ACC SW	● Ignition switch: ON	RESUME/ACCELERATE switch: Pressed	ON
		RESUME/ACCELERATE switch: Released	OFF
SET SW	● Ignition switch: ON	SET/COAST switch: Pressed	ON
		SET/COAST switch: Released	OFF

On Board Diagnosis Logic

UBS00BF9

This self-diagnosis has the one trip detection logic.
The MIL will not light up for this diagnosis.

NOTE:
If DTC P1564 is displayed with DTC P0605, first perform the trouble diagnosis for DTC P0605. Refer to EC-382.

DTC No.	Trouble Diagnosis Name	DTC Detecting Condition	Possible Cause
P1564 1564	ASCD steering switch	● An excessively high voltage signal from the ASCD steering switch is sent to ECM. ● ECM detects that input signal from the ASCD steering switch is out of the specified range. ● ECM detects that the ASCD steering switch is stuck ON.	● Harness or connectors (The switch circuit is open or shorted.) ● ASCD steering switch ● ECM

DTC Confirmation Procedure

UBS00BFA

NOTE:
If DTC Confirmation Procedure has been previously conducted, always turn ignition switch OFF and wait at least 10 seconds before conducting the next test.

WITH CONSULT-II

1. Turn ignition switch ON.
2. Select “DATA MONITOR” mode with CONSULT-II.
3. Wait at least 10 seconds.

4. Press MAIN switch for at least 10 seconds, then release it and wait at least 10 seconds.
5. Press CANCEL switch for at least 10 seconds, then release it and wait at least 10 seconds.
6. Press RESUME/ACCELERATE switch for at least 10 seconds, then release it and wait at least 10 seconds.
7. Press SET/COAST switch for at least 10 seconds, then release it and wait at least 10 seconds.
8. If DTC is detected, go to EC-545, "Diagnostic Procedure" .

WITH GST

Follow the procedure “WITH CONSULT-II” above.

Wiring Diagram

UBS00BFB

EC-ASC/SW-01

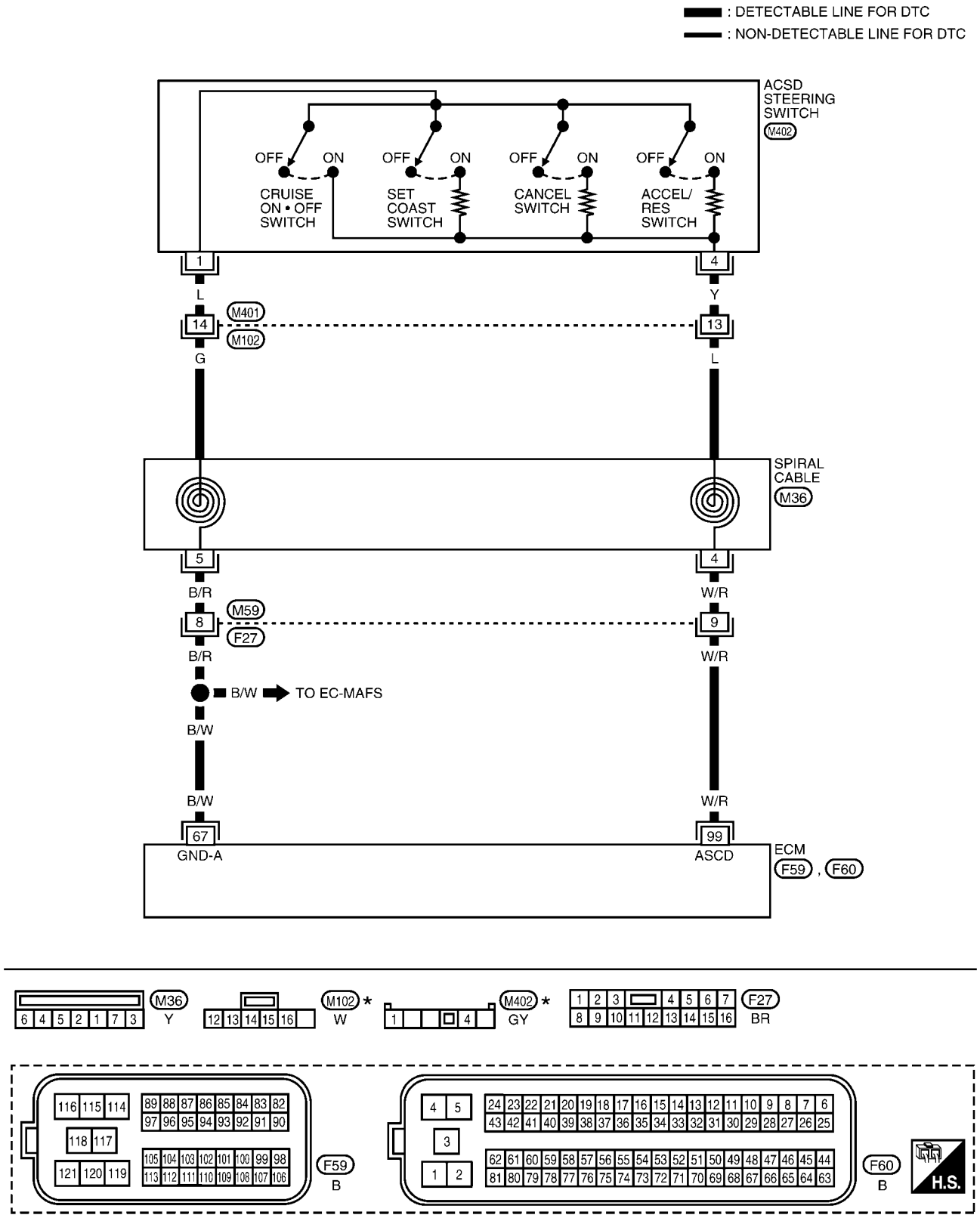

Specification data are reference values and are measured between each terminal and ground.

CAUTION:

Do not use ECM ground terminals when measuring input/output voltage. Doing so may result in damage to the ECM's transistor. Use a ground other than ECM terminals, such as the ground.

TERMINAL NO.	WIRE COLOR	ITEM	CONDITION	DATA (DC Voltage)
67	B/W	Sensor ground	**[Engine is running]** ● **Warm-up condition** ● Idle speed	Approximately 0V
99	W/R	ASCD steering switch	**[Ignition switch: ON]** ● ASCD steering switch: OFF	Approximately 4V
			[Ignition switch: ON] ● MAIN switch: Pressed	Approximately 0V
			[Ignition switch: ON] ● CANCEL switch: Pressed	Approximately 1V
			[Ignition switch: ON] ● RESUME/ACCELERATE switch: Pressed	Approximately 3V
			[Ignition switch: ON] ● SET/COAST switch: Pressed	Approximately 2V

Diagnostic Procedure

UBS00BFC

1. CHECK GROUND CONNECTIONS

1. Turn ignition switch OFF.
2. Loosen and retighten two ground screws on the body.
   Refer to EC-171, "Ground Inspection" .

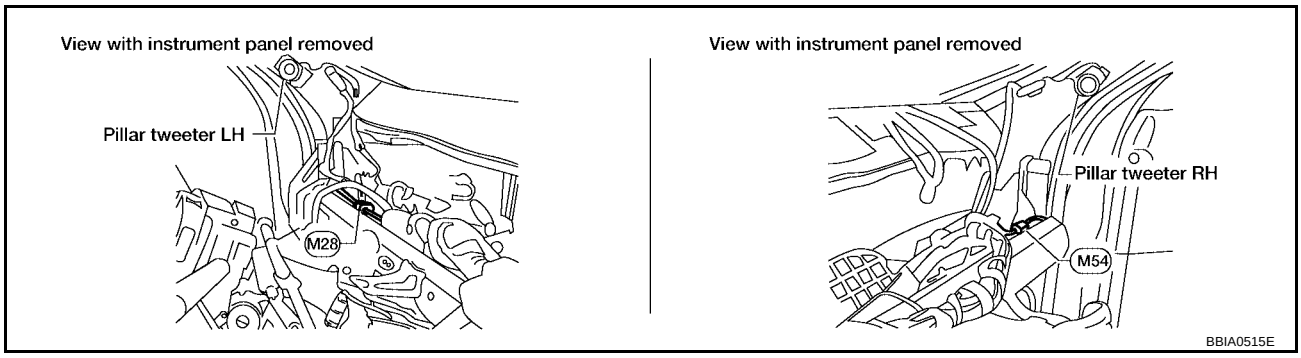

OK or NG

OK >> GO TO 2.
NG >> Repair or replace ground connections.

2. CHECK ASCD STEERING SWITCH CIRCUIT

With CONSULT-II

1. Turn ignition switch ON.
2. Select “MAIN SW”, “RESUME/ACC SW”, “SET SW” and “CANCEL SW” in “DATA MONITOR” mode with CONSULT-II.
3. Check each item indication under the following conditions.

Switch	Monitor item	Condition	Indication
MAIN switch	MAIN SW	Pressed	ON
		Released	OFF
CANCEL switch	CANCEL SW	Pressed	ON
		Released	OFF
RESUME/ACCEL-ERATE switch	RESUME/ACC SW	Pressed	ON
		Released	OFF
SET/COAST switch	SET SW	Pressed	ON
		Released	OFF

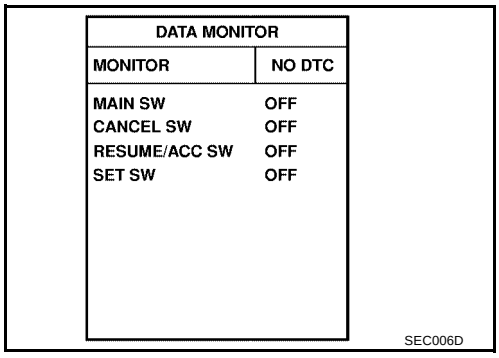

Without CONSULT-II

1. Turn ignition switch ON.
2. Check voltage between ECM terminal 99 and ground with pressing each button.

Switch	Condition	Voltage [V]
MAIN switch	Pressed	Approx. 0
	Released	Approx. 4
CANCEL switch	Pressed	Approx. 1
	Released	Approx. 4
RESUME/ACCELERATE switch	Pressed	Approx. 3
	Released	Approx. 4
SET/COAST switch	Pressed	Approx. 2
	Released	Approx. 4

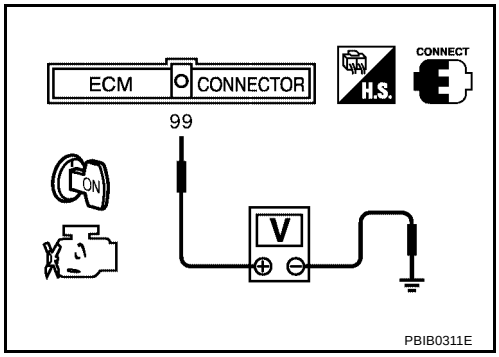

OK or NG

OK >> GO TO 8.
NG >> GO TO 3.

3. CHECK ASCD STEERING SWITCH GROUND CIRCUIT FOR OPEN AND SHORT

1. Turn ignition switch OFF.
2. Disconnect ASCD steering switch harness connector.

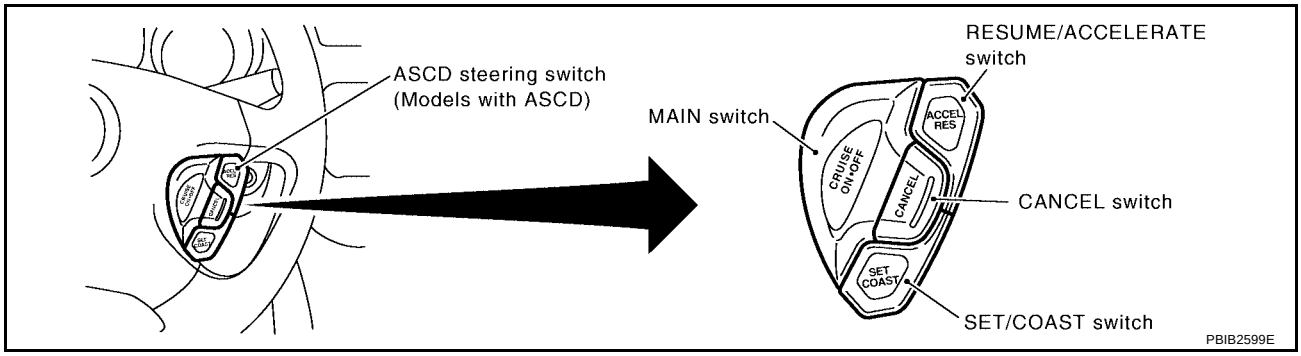

3. Disconnect ECM harness connector.
4. Disconnect TCM harness connector.
5. Check harness continuity between ASCD steering switch terminal 1 and ECM terminal 67, TCM terminal 42. Refer to Wiring Diagram.

Continuity should exist.

6. Also check harness for short to power.

OK or NG

OK >> GO TO 5.
NG >> GO TO 4.

4. DETECT MALFUNCTIONING PART

Check the following.

- Harness connectors M401, M102
- Harness connectors M59, F27
- Spiral cable
- Harness for open and short between ECM and ASCD steering switch
- Harness for open and short between TCM and ASCD steering switch

>> Repair open circuit or short to power in harness or connectors.

5. CHECK ASCD STEERING SWITCH INPUT SIGNAL CIRCUIT FOR OPEN AND SHORT

1. Check harness continuity between ECM terminal 99 and ASCD steering switch terminal 4. Refer to Wiring Diagram.

Continuity should exist.

2. Also check harness for short to ground and short to power.

OK or NG

OK >> GO TO 7.
NG >> GO TO 6.

6. DETECT MALFUNCTIONING PART

Check the following.

- Harness connectors M401, M102
- Harness connectors M59, F27
- Spiral cable
- Harness for open and short between ECM and ASCD steering switch

>> Repair open circuit or short to ground or short to ground or short to power in harness or connectors.

7. CHECK ASCD STEERING SWITCH

Refer to EC-548, "Component Inspection" .

OK or NG

OK >> GO TO 8.
NG >> Replace ASCD steering switch.

8. CHECK INTERMITTENT INCIDENT

Refer to EC-164, "TROUBLE DIAGNOSIS FOR INTERMITTENT INCIDENT" .

>> **INSPECTION END**

Component Inspection

UBS00BFD

ASCD STEERING SWITCH

1. Disconnect ASCD steering switch.
2. Check continuity between ASCD steering switch terminals 1 and 4 with pushing each switch.

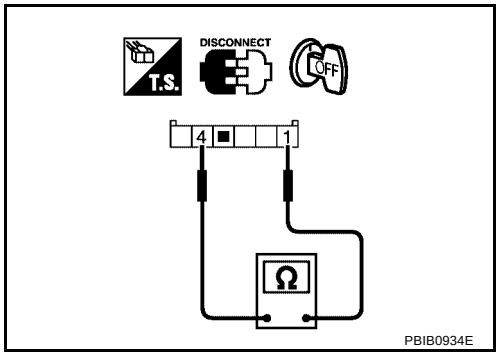

Switch	Condition	Resistance [Ω]
MAIN switch	Pressed	Approx. 0
	Released	Approx. 4,000
CANCEL switch	Pressed	Approx. 250
	Released	Approx. 4,000
RESUME/ACCELERATE switch	Pressed	Approx. 1,480
	Released	Approx. 4,000
SET/COAST switch	Pressed	Approx. 660
	Released	Approx. 4,000

DTC P1572 ASCD BRAKE SWITCH

PFP:25320

Component Description

UBS00BFE

When the brake pedal is depressed, ASCD brake switch is turned OFF and stop lamp switch is turned ON. ECM detects the state of the brake pedal by this input of two kinds (ON/OFF signal).
Refer to EC-33, "AUTOMATIC SPEED CONTROL DEVICE (ASCD)" for the ASCD function.

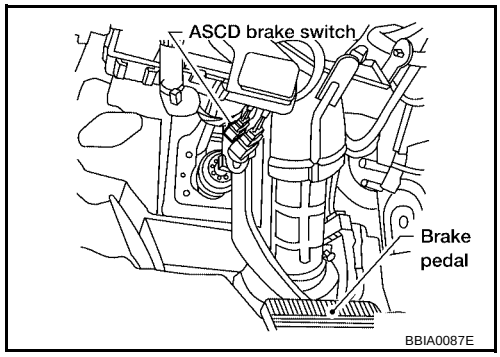

CONSULT-II Reference Value in Data Monitor Mode

UBS00BFF

Specification data are reference values.

MONITOR ITEM	CONDITION		SPECIFICATION
BRAKE SW1	● Ignition switch: ON	Clutch pedal (M/T) and brake pedal: Fully released	ON
		Clutch pedal (M/T) and/or brake pedal: Depressed	OFF
BRAKE SW2	● Ignition switch: ON	Brake pedal: Fully released	OFF
		Brake pedal: Slightly Depressed	ON

On Board Diagnosis Logic

UBS00BFG

This self-diagnosis has the one trip detection logic.
The MIL will not light up for this diagnosis.

NOTE:

- **If DTC P1572 is displayed with DTC P0605, first perform the trouble diagnosis for DTC P0605. Refer to EC-382**
- **This self-diagnosis has the one trip detection logic. When malfunction A is detected, DTC is not stored in ECM memory. And in that case, 1st trip DTC and 1st trip freeze frame data are displayed. 1st trip DTC is erased when ignition switch OFF. And even when malfunction A is detected in two consecutive trips, DTC is not stored in ECM memory.**

DTC No.	Trouble Diagnosis Name	DTC Detecting Condition		Possible Cause
P1572 1572	ASCD brake switch	A)	● When the vehicle speed is above 30km/h (19 MPH), ON signals from the stop lamp switch and the ASCD brake switch are sent to ECM at the same time.	● Harness or connectors (The stop lamp switch circuit is shorted.) ● Harness or connectors (The ASCD brake switch circuit is shorted.) ● Harness or connectors (The ASCD clutch switch circuit is shorted.) (M/T models) ● Stop lamp switch ● ASCD brake switch ● ASCD clutch switch (M/T models) ● Incorrect stop lamp switch installation ● Incorrect ASCD brake switch installation ● Incorrect ASCD clutch switch installation (M/T models) ● ECM
		B)	● ASCD brake switch signal is not sent to ECM for extremely long time while the vehicle is driving	

DTC Confirmation Procedure

UBS00BFH

CAUTION:

Always drive vehicle at a safe speed.

NOTE:

- If DTC Confirmation Procedure has been previously conducted, always turn ignition switch OFF and wait at least 10 seconds before conducting the next test.
- Procedure for malfunction B is not described here. It takes extremely long time to complete procedure for malfunction B. By performing procedure for malfunction A, the incident that causes malfunction B can be detected.

TESTING CONDITION:

Steps 3 and 4 may be conducted with the drive wheels lifted in the shop or by driving the vehicle. If a road test is expected to be easier, it is unnecessary to lift the vehicle.

WITH CONSULT-II

1. Start engine.
2. Select “DATA MONITOR” mode with CONSULT-II.
3. Press MAIN switch and make sure that CRUISE indicator lights up.
4. Drive the vehicle for at least 5 consecutive seconds under the following condition.

VHCL SPEED SE	More than 30 km/h (19 MPH)
Selector lever	Suitable position

If 1st trip DTC is detected, go to EC-554, "Diagnostic Procedure".

If 1st trip DTC is not detected, go to the following step.

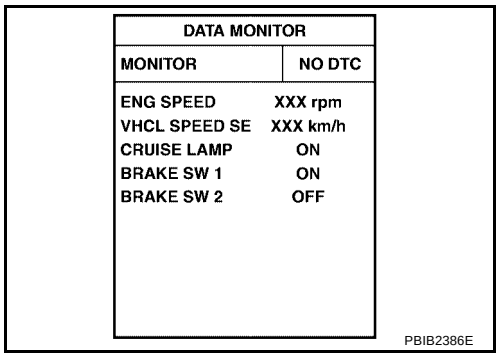

5. Drive the vehicle for at least 5 consecutive seconds under the following condition.

VHCL SPEED SE	More than 30 km/h (19 MPH)
Selector lever	Suitable position
Driving location	Depress the brake pedal for more than 5 seconds so as not to come off from the above-mentioned vehicle speed.

6. If 1st trip DTC is detected, go to EC-554, "Diagnostic Procedure" .

Overall Function Check

UBS00KK1

Use this procedure to check the overall function of the ASCD brake switch circuit. During this check, a 1st trip DTC might not be confirmed.

WITHOUT CONSULT-II

1. Turn ignition switch ON.
2. Check voltage between ECM terminal 108 (ASCD brake switch signal) and ground under the following conditions.

A/T models

CONDITION	VOLTAGE
Brake pedal: Slightly depressed	Approximately 0V
Brake pedal: Fully released	Battery voltage

M/T models

CONDITION	VOLTAGE
Clutch pedal and/or brake pedal: Slightly depressed	Approximately 0V
Clutch pedal and brake pedal: Fully released	Battery voltage

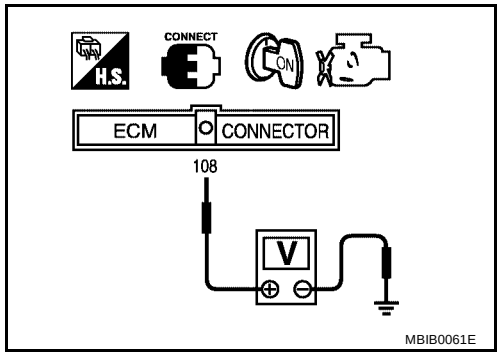

3. If NG, go to EC-554, "Diagnostic Procedure" .
   If OK, go to next step.
4. Check voltage between ECM terminal 101 (Stop lamp switch signal) and ground under the following conditions.

CONDITION	VOLTAGE
Brake pedal: Fully released	Approximately 0V
Brake pedal: Slightly depressed	Battery voltage

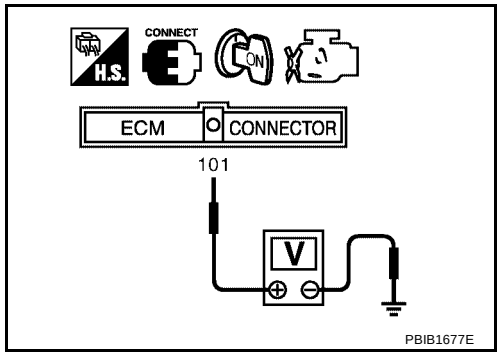

5. If NG, go to EC-554, "Diagnostic Procedure" .

Wiring Diagram

UBS00BFI

EC-ASC/BS-01

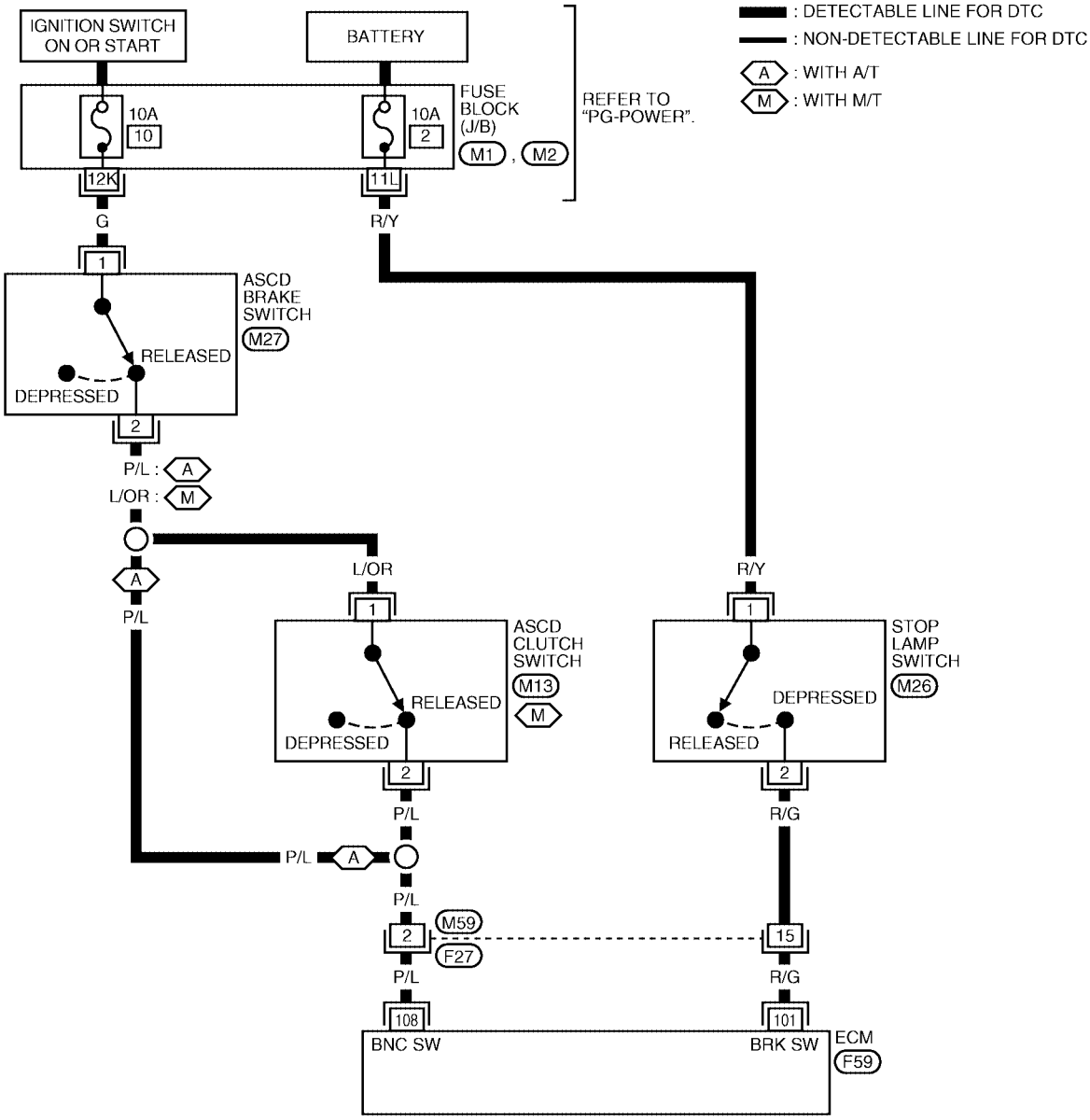

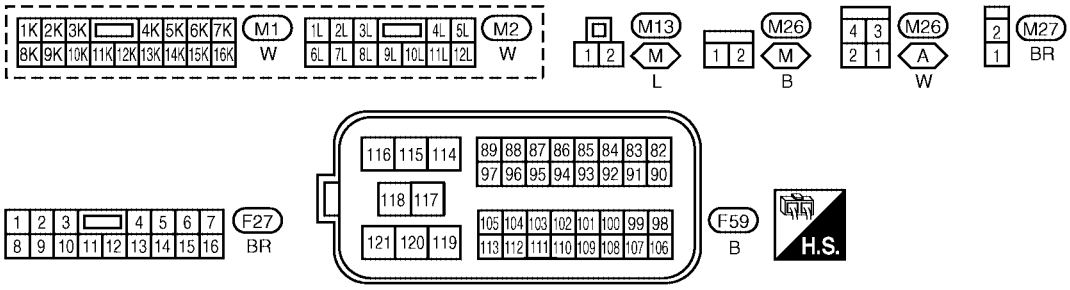

BBWA1444E

Specification data are reference values and are measured between each terminal and ground.

CAUTION:

Do not use ECM ground terminals when measuring input/output voltage. Doing so may result in damage to the ECM's transistor. Use a ground other than ECM terminals, such as the ground.

TERMINAL NO.	WIRE COLOR	ITEM	CONDITION	DATA (DC Voltage)
101	R/G	Stop lamp switch	**[Ignition switch: ON]** ● Brake pedal: Fully released	Approximately 0V
			[Ignition switch: ON] ● Brake pedal: Depressed	BATTERY VOLTAGE (11 - 14V)
108	P/L	ASCD brake switch	**[Ignition switch: ON]** ● Brake pedal: Depressed ● Clutch pedal: Depressed (M/T models)	Approximately 0V
			[Ignition switch: ON] ● Brake pedal: Fully released ● Clutch pedal: Released (M/T models)	BATTERY VOLTAGE (11 - 14V)

Diagnostic Procedure

UBS00BFJ

1. CHECK OVERALL FUNCTION-I

With CONSULT-II

1. Turn ignition switch ON.
2. Select “BRAKE SW1” in “DATA MONITOR” mode with CONSULT-II.
3. Check “BRAKE SW1” indication under the following conditions.

A/T models

CONDITION	INDICATION
When brake pedal is depress	OFF
When brake pedal is fully released	ON

M/T models

CONDITION	INDICATION
When clutch pedal and/or brake pedal is depressed	OFF
When clutch pedal and brake pedal are fully released	ON

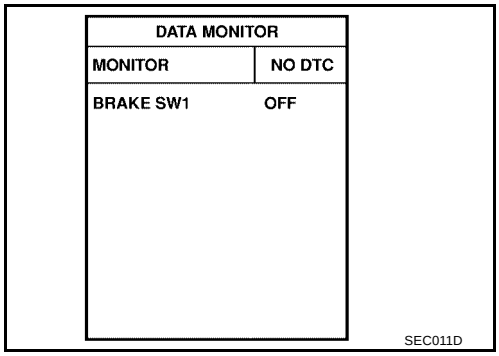

Without CONSULT-II

1. Turn ignition switch ON.
2. Check voltage between ECM terminal 108 and ground under the following conditions.

A/T models

CONDITION	VOLTAGE
When brake pedal is depress	Approximately 0V
When brake pedal is fully released	Battery voltage

M/T models

CONDITION	VOLTAGE
When clutch pedal and/or brake pedal is depressed	Approximately 0V
When clutch pedal and brake pedal are fully released	Battery voltage

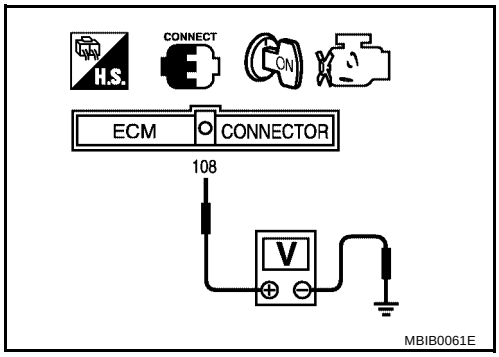

OK or NG

OK >> GO TO 2.
NG (M/T models) >>GO TO 3.
NG (A/T models) >>GO TO 4.

2. CHECK OVERALL FUNCTION-II

With CONSULT-II

Check “BRAKE SW2” indication in “DATA MONITOR” mode.

CONDITION	INDICATION
When brake pedal is released	OFF
When brake pedal is depressed	ON

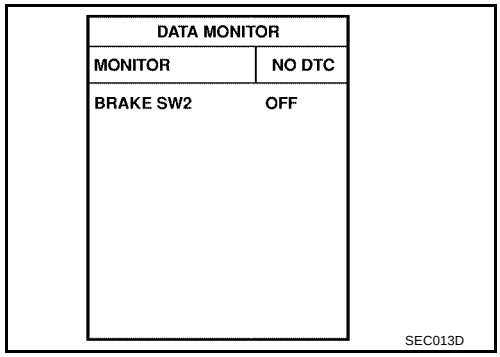

Without CONSULT-II

Check voltage between ECM terminal 101 and ground under the following conditions.

CONDITION	VOLTAGE
When brake pedal is released	Approximately 0V
When brake pedal is depressed	Battery voltage

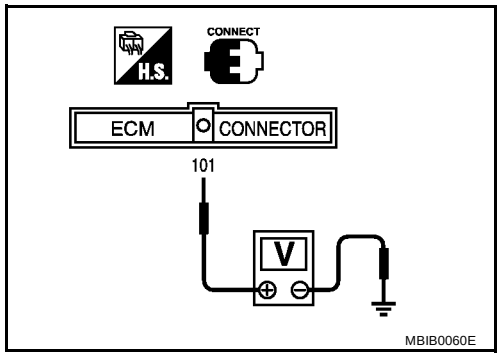

OK or NG

OK >> GO TO 18.
NG >> GO TO 13.

3. CHECK ASCD CLUTCH SWITCH POWER SUPPLY CIRCUIT

1. Turn ignition switch OFF.
2. Disconnect ASCD clutch switch harness connector.
3. Turn ignition switch ON.

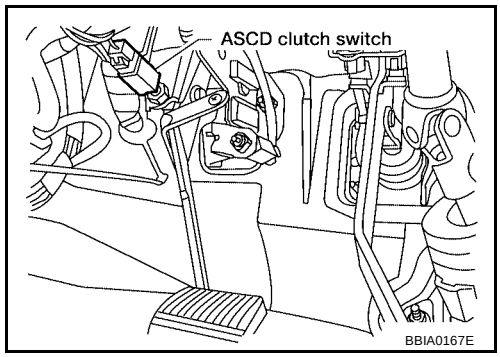

4. Check voltage between ASCD clutch switch terminal 1 and ground under the following conditions with CONSULT-II or tester.

CONDITION	VOLTAGE
When brake pedal is released	Battery voltage
When brake pedal is depressed	Approx. 0V

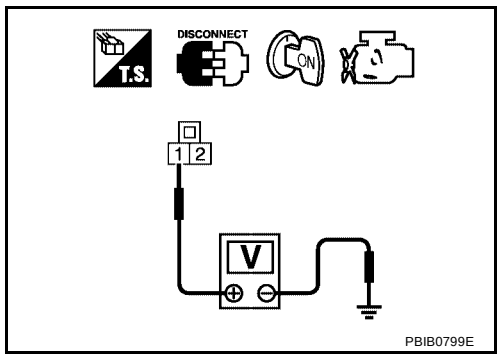

OK or NG

OK >> GO TO 10.
NG >> GO TO 4.

4. CHECK ASCD BRAKE SWITCH POWER SUPPLY CIRCUIT

1. Turn ignition switch OFF.
2. Disconnect ASCD brake switch harness connector.
3. Turn ignition switch ON.

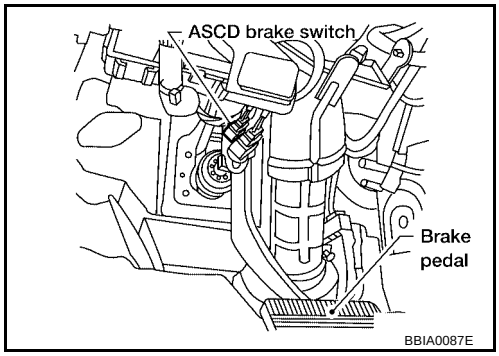

4. Check voltage between ASCD brake switch terminal 1 and ground with CONSULT-II or tester.

Voltage: Battery voltage

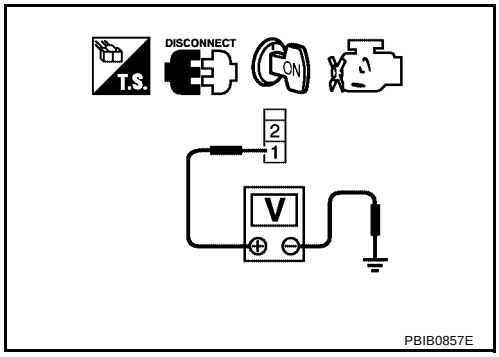

OK or NG

OK (M/T models)>>GO TO 6.
OK (A/T models)>>GO TO 7.
NG >> GO TO 5.

5. DETECT MALFUNCTIONING PART

Check the following.

- Fuse block (J/B) connector M1
- 10A fuse
- Harness for open or short between ASCD brake switch and fuse

>> Repair open circuit or short to ground or short to power in harness or connectors.

6. CHECK ASCD BRAKE SWITCH INPUT SIGNAL CIRCUIT FOR OPEN AND SHORT

1. Turn ignition switch OFF.
2. Check harness continuity between ASCD brake switch terminal 2 and ASCD clutch switch terminal 1. Refer to Wiring Diagram.

Continuity should exist.

3. Also check harness for short to ground and short to power.

OK or NG

OK >> GO TO 9.
NG >> Repair open circuit or short to ground or short to power in harness or connectors.

7. CHECK ASCD BRAKE SWITCH INPUT SIGNAL CIRCUIT FOR OPEN AND SHORT

1. Turn ignition switch OFF.
2. Disconnect ECM harness connector.
3. Check harness continuity between ECM terminal 108 and ASCD brake switch terminal 2. Refer to Wiring Diagram.

Continuity should exist.

4. Also check harness for short to ground or short to power.

OK or NG

OK >> GO TO 9.
NG >> GO TO 8.

8. DETECT MALFUNCTIONING PART

Check the following.

- Harness connectors M59, F27
- Harness for open or short between ECM and ASCD brake switch

>> Repair open circuit or short to ground or short to power in harness or connectors.

9. CHECK ASCD BRAKE SWITCH

Refer to EC-559, "Component Inspection" .

OK or NG

OK >> GO TO 18.
NG >> Replace ASCD brake switch.

10. CHECK ASCD CLUTCH SWITCH INPUT SIGNAL CIRCUIT FOR OPEN AND SHORT

1. Turn ignition switch OFF.
2. Disconnect ECM harness connector.
3. Check harness continuity between ECM terminal 108 and ASCD clutch switch terminal 2. Refer to Wiring Diagram.

Continuity should exist.

4. Also check harness for short to ground or short to power.

OK or NG

OK >> GO TO 12.
NG >> GO TO 11.

11. DETECT MALFUNCTIONING PART

Check the following.

- Harness connectors M59, F27
- Harness for open or short between ECM and ASCD clutch switch

>> Repair open circuit or short to ground or short to power in harness or connectors.

12. CHECK ASCD CLUTCH SWITCH

Refer to EC-559, "Component Inspection" .

OK or NG

OK >> GO TO 18.
NG >> Replace ASCD clutch switch.

13. CHECK STOP LAMP SWITCH POWER SUPPLY CIRCUIT

1. Turn ignition switch OFF.
2. Disconnect stop lamp switch harness connector.

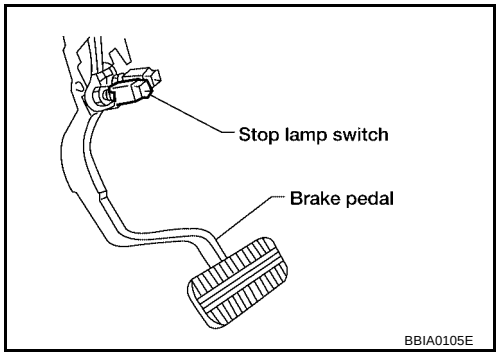

3. Check voltage between stop lamp switch terminal 1 and ground with CONSULT-II or tester.

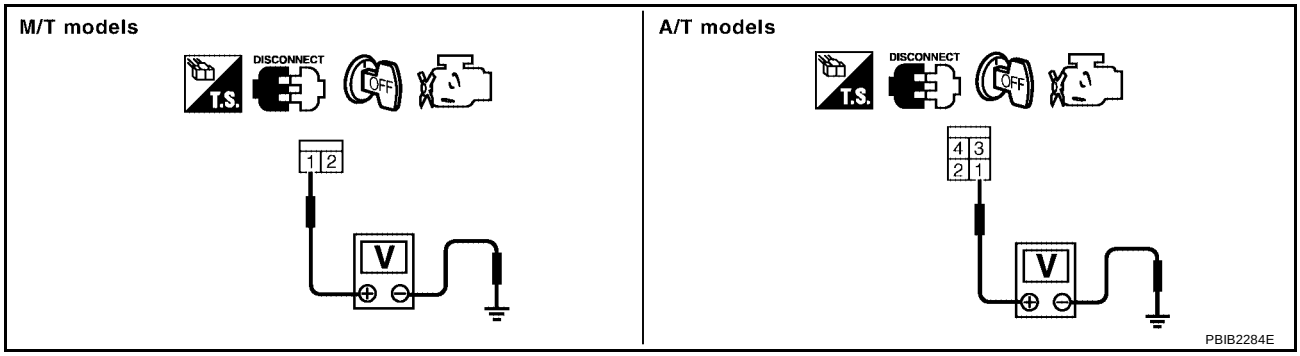

Voltage: Battery voltage

OK or NG

OK >> GO TO 15.
NG >> GO TO 14.

14. DETECT MALFUNCTIONING PART

Check the following.

- Fuse block (J/B) connector M2
- 10A fuse
- Harness for open or short between stop lamp switch and fuse

>> Repair open circuit or short to ground or short to power in harness or connectors.

15. CHECK STOP LAMP SWITCH INPUT SIGNAL CIRCUIT FOR OPEN AND SHORT

1. Disconnect ECM harness connector.
2. Check harness continuity between ECM terminal 101 and stop lamp switch terminal 2.
   Refer to Wiring Diagram.

Continuity should exist.

3. Also check harness for short to ground and short to power.

OK or NG

OK >> GO TO 17.
NG >> GO TO 16.

16. DETECT MALFUNCTIONING PART

Check the following.

- Harness connectors M59, F27
- Harness for open or short between ECM and stop lamp switch

>> Repair open circuit or short to ground or short to power in harness or connectors.

17. CHECK STOP LAMP SWITCH

Refer to EC-559, "Component Inspection" .

OK or NG

OK >> GO TO 18.
NG >> Replace stop lamp switch.

18. CHECK INTERMITTENT INCIDENT

Refer to EC-164, "TROUBLE DIAGNOSIS FOR INTERMITTENT INCIDENT" .

>> **INSPECTION END**

Component Inspection

UBS00BFK

ASCD BRAKE SWITCH

1. Turn ignition switch OFF.
2. Disconnect ASCD brake switch harness connector.
3. Check harness continuity between ASCD brake switch terminals 1 and 2 under the following conditions.

Condition	Continuity
When brake pedal is fully released.	Should exist.
When brake pedal is depressed.	Should not exist.

If NG, adjust ASCD brake switch installation, refer to BR-11, "BRAKE PEDAL AND BRACKET" , and perform step 3 again.

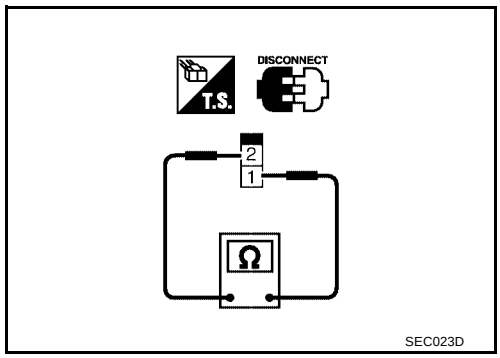

ASCD CLUTCH SWITCH (FOR M/T MODELS)

1. Turn ignition switch OFF.
2. Disconnect ASCD clutch switch harness connector.
3. Check harness continuity between ASCD clutch switch terminals 1 and 2 under the following conditions.

Condition	Continuity
When clutch pedal is fully released.	Should exist.
When clutch pedal is depressed.	Should not exist.

If NG, adjust ASCD clutch switch installation, refer to CL-6, "CLUTCH SYSTEM" , and perform step 3 again.

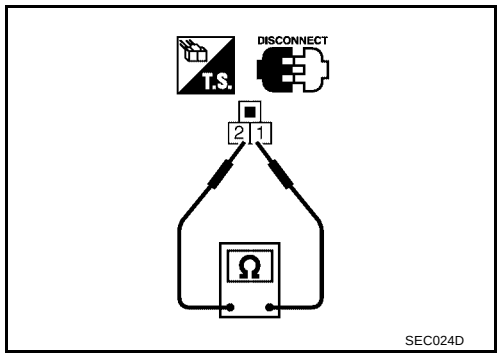

STOP LAMP SWITCH

1. Turn ignition switch OFF.
2. Disconnect stop lamp switch harness connector.
3. Check harness continuity between stop lamp switch terminals 1 and 2 under the following conditions.

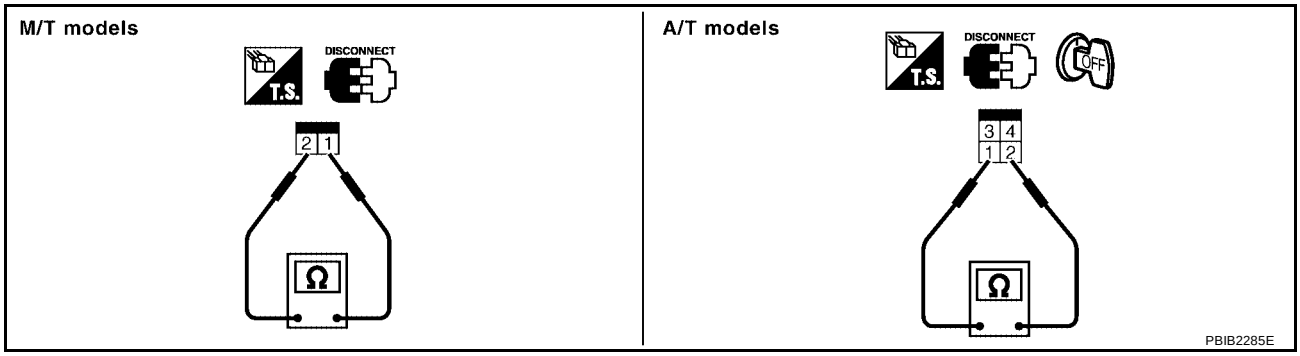

Condition	Continuity
When brake pedal is fully released.	Should not exist.
When brake pedal is depressed.	Should exist.

If NG, adjust stop lamp switch installation, refer to BR-11, "BRAKE PEDAL AND BRACKET" , and perform step 3 again.

DTC P1574 ASCD VEHICLE SPEED SENSOR

PFP:31036

Component Description

UBS00BFL

The ECM receives two vehicle speed sensor signals via CAN communication line. One is sent from combination meter, and the other is from TCM (Transmission control module). The ECM uses these signals for ASCD control. Refer to EC-33, "AUTOMATIC SPEED CONTROL DEVICE (ASCD)" for ASCD functions.

On Board Diagnosis Logic

UBS00BFM

This self-diagnosis has the one trip detection logic.
The MIL will not light up for this diagnosis.

NOTE:

- **If DTC P1574 is displayed with DTC U1000, U1001, first perform the trouble diagnosis for DTC U1000, U1001. Refer to EC-173, "DTC U1000, U1001 CAN COMMUNICATION LINE" .**
- **If DTC P1574 is displayed with DTC P0500, first perform the trouble diagnosis for DTC P0500. Refer to EC-371, "DTC P0500 VSS"**
- **If DTC P1574 is displayed with DTC P0605, first perform the trouble diagnosis for DTC P0605. Refer to EC-382, "DTC P0605 ECM"**

DTC No.	Trouble Diagnosis Name	DTC Detecting Condition	Possible Cause
P1574 1574	ASCD vehicle speed sensor	ECM detects a difference between two vehicle speed signals is out of the specified range.	● Harness or connectors (The CAN communication line is open or shorted.) ● Combination meter ● Vehicle speed sensor ● TCM ● ECM

DTC Confirmation Procedure

UBS00BFN

CAUTION:
Always drive vehicle at a safe speed.

NOTE:
If DTC Confirmation Procedure has been previously conducted, always turn ignition switch OFF and wait at least 10 seconds before conducting the next test.

TESTING CONDITION:
Step 3 may be conducted with the drive wheels lifted in the shop or by driving the vehicle. If a road test is expected to be easier, it is unnecessary to lift the vehicle.

WITH CONSULT-II

1. Start engine.
2. Select “DATA MONITOR” mode with CONSULT-II.
3. Drive the vehicle at more than 30 km/h (19 MPH).
4. If DTC is detected, go to EC-562, "Diagnostic Procedure" .

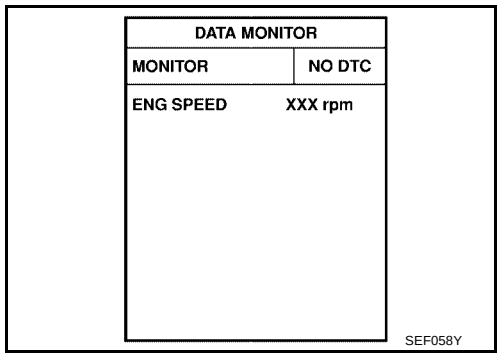

WITH GST

Follow the procedure “WITH CONSULT-II” above.

Diagnostic Procedure

UBS00BFO

1. CHECK DTC WITH TCM

Check DTC with TCM. Refer to AT-38, "ON BOARD DIAGNOSTIC SYSTEM DESCRIPTION" .

OK or NG

OK >> GO TO 2.
NG >> Perform trouble shooting relevant to DTC indicated.

2. CHECK COMBINATION METER

Refer to DI-7, "Combination Meter" .

>> **INSPECTION END**

DTC P1706 PNP SWITCH

PFP:32006

Component Description

UBS00BFP

When the gear position is P or N (A/T models), Neutral (M/T models), park/neutral position (PNP) switch is ON.
ECM detects the park/neutral position when continuity with ground exists.
For A/T models, the park/neutral position (PNP) switch assembly also indicates a transmission range switch to detect selector lever position.

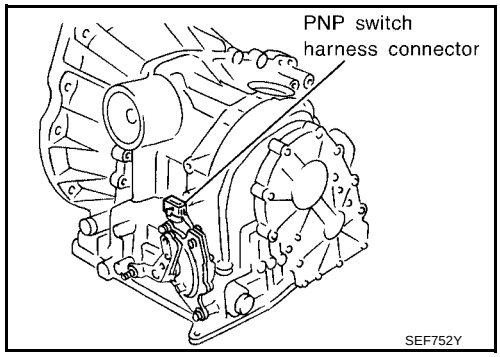

CONSULT-II Reference Value in Data Monitor Mode

UBS00BFQ

Specification data are reference values.

MONITOR ITEM	CONDITION		SPECIFICATION
P/N POSI SW	● Ignition switch: ON	Shift lever: P or N (A/T), Neutral (M/T)	ON
		Except above	OFF

On Board Diagnosis Logic

UBS00BFR

DTC No.	Trouble diagnosis name	DTC detecting condition	Possible cause
P1706 1706	Park/neutral position switch	The signal of the park/neutral position (PNP) switch is not changed in the process of engine starting and driving.	● Harness or connectors [The park/neutral position (PNP) switch circuit is open or shorted.] ● Park/neutral position (PNP) switch

DTC Confirmation Procedure

UBS00BFS

CAUTION:
Always drive vehicle at a safe speed.

NOTE:
If DTC Confirmation Procedure has been previously conducted, always turn ignition switch OFF and wait at least 10 seconds before conducting the next test.

WITH CONSULT-II

1. Turn ignition switch ON.
2. Select “P/N POSI SW” in “DATA MONITOR” mode with CONSULT-II. Then check the “P/N POSI SW” signal under the following conditions.

Position (Selector lever)	Known-good signal
N or P position (A/T models) Neutral position (M/T models)	ON
Except the above position	OFF

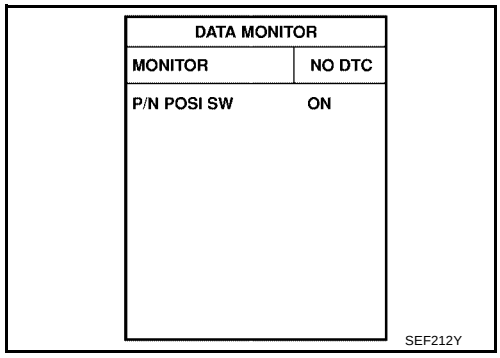

If NG, go to EC-566, "Diagnostic Procedure" .
If OK, go to following step.

3. Select “DATA MONITOR” mode with CONSULT-II.
4. Start engine and warm it up to normal operating temperature.

5. Maintain the following conditions for at least 50 consecutive seconds.

ENG SPEED	More that 1,550 (A/T) More that 1,850 (M/T)
B/FUEL SCHDL	3.0 - 31.8 msec (A/T) 2.8 - 31.8 msec (M/T)
VHCL SPEED SE	More than 64 km/h (40 MPH)
Selector lever	Suitable position

6. If 1st trip DTC is detected, go to EC-566, "Diagnostic Procedure" .

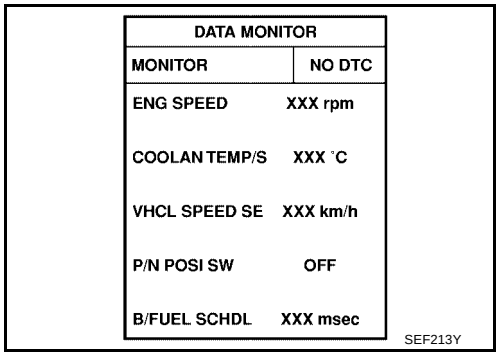

Overall Function Check

UBS00BFT

Use this procedure to check the overall function of the park/neutral position switch circuit. During this check, a 1st trip DTC might not be confirmed.

WITHOUT CONSULT-II

1. Turn ignition switch ON.
2. Check voltage between ECM terminal 102 (PNP switch signal) and ground under the following conditions.

Condition (Gear position)	Voltage (V) (Known-good data)
P or N position (A/T models) Neutral position (M/T models)	Approx. 0
Except the above position	A/T models: Battery voltage M/T models: Approximately 5V

3. If NG, go to EC-566, "Diagnostic Procedure" .

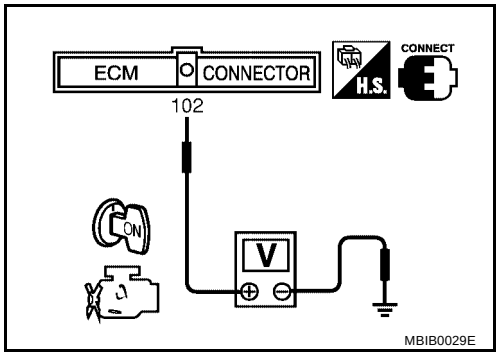

Wiring Diagram

UBS00BFU

EC-PNP/SW-01

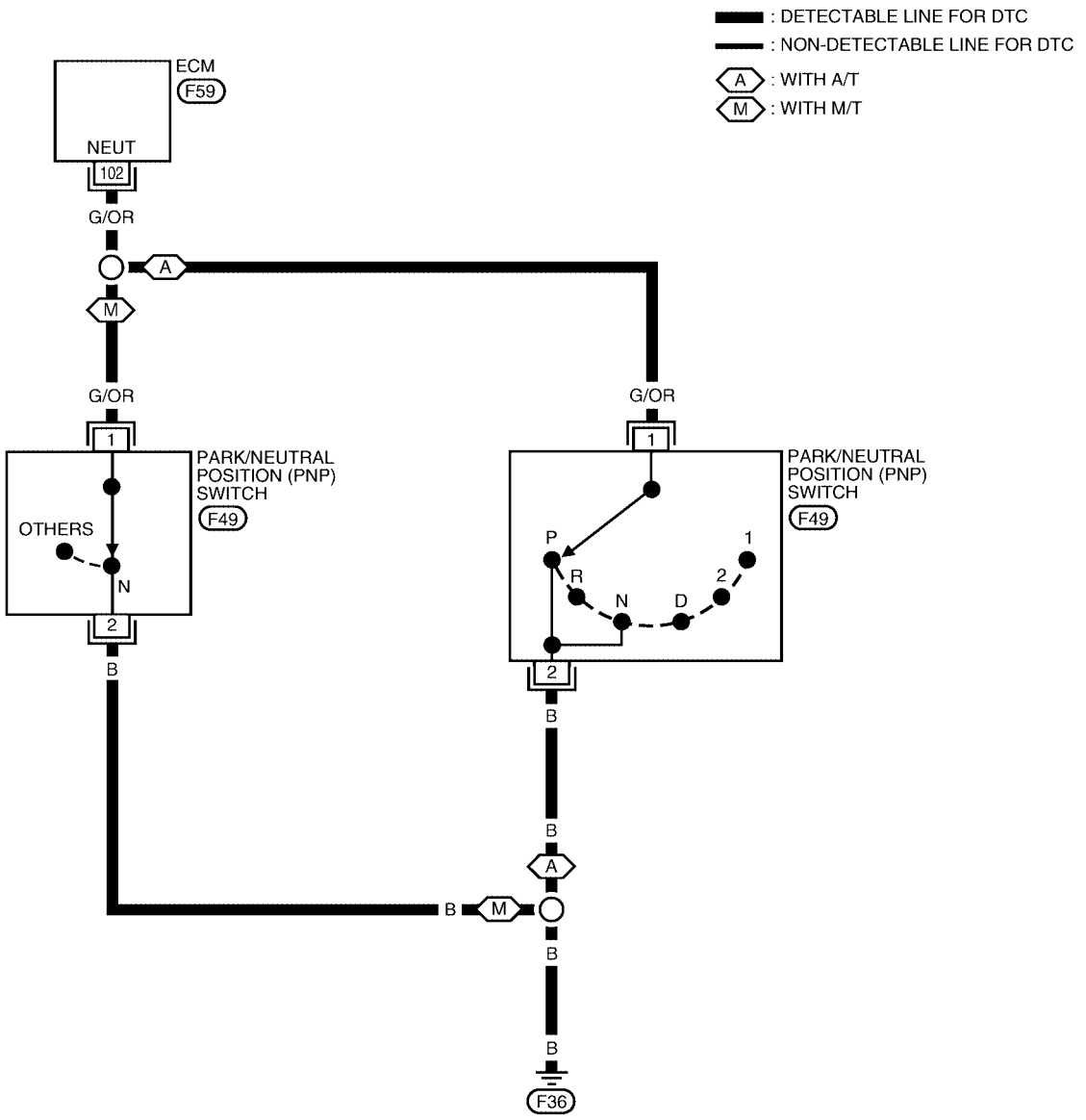

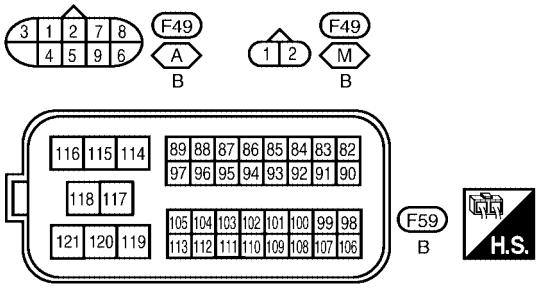

BBWA0304E

Specification data are reference values and are measured between each terminal and ground.

CAUTION:

Do not use ECM ground terminals when measuring input/output voltage. Doing so may result in damage to the ECM's transistor. Use a ground other than ECM terminals, such as the ground.

TERMINAL NO.	WIRE COLOR	ITEM	CONDITION	DATA (DC Voltage)
102	G/OR	PNP switch	**[Ignition switch: ON]** ● Shift lever: P or N (A/T), Neutral (M/T).	Approximately 0V
			[Ignition switch: ON] ● Except the above gear position	**A/T models** BATTERY VOLTAGE (11 - 14V) **M/T models** Approximately 5V

Diagnostic Procedure

UBS00BFV

1. CHECK PNP SWITCH GROUND CIRCUIT FOR OPEN AND SHORT

1. Turn ignition switch OFF.
2. Disconnect PNP switch harness connector.
3. Check harness continuity between PNP switch terminal 2 and ground.
   Refer to Wiring Diagram.

   Continuity should exist.

4. Also check harness for short to power.

OK or NG

OK >> GO TO 2.
NG >> Repair open circuit or short to power in harness or connectors.

2. CHECK INPUT SIGNAL CIRCUIT

1. Disconnect ECM harness connector.
2. Check harness continuity between ECM terminal 102 and PNP switch terminal 1.
   Refer to Wiring Diagram.

   Continuity should exist.

3. Also check harness for short to ground and short to power.

OK or NG

OK >> GO TO 3.
NG >> Repair open circuit or short to ground or short to power in harness or connectors.

3. CHECK PNP SWITCH

Refer to AT-115, "DTC P0705 PARK/NEUTRAL POSITION (PNP) SWITCH" (A/T models) or MT-12, "POSITION SWITCH" (M/T models).

OK or NG

OK >> GO TO 4.
NG >> Replace PNP switch.

4. CHECK INTERMITTENT INCIDENT

Perform EC-164, "TROUBLE DIAGNOSIS FOR INTERMITTENT INCIDENT" .

>> **INSPECTION END**

DTC P1805 BRAKE SWITCH

PFP:25320

Description

UBS00BFW

Brake switch signal is applied to the ECM through the stop lamp switch when the brake pedal is depressed. This signal is used mainly to decrease the engine speed when the vehicle is driving.

CONSULT-II Reference Value in Data Monitor Mode

UBS00BFX

Specification data are reference values.

MONITOR ITEM	CONDITION		SPECIFICATION
BRAKE SW	● Ignition switch: ON	Brake pedal: Fully released	OFF
		Brake pedal: Slightly depressed	ON

On Board Diagnosis Logic

UBS00BFY

The MIL will not light up for this diagnosis.

DTC No.	Trouble diagnosis name	DTC detecting condition	Possible cause
P1805 1805	Brake switch	A brake switch signal is not sent to ECM for extremely long time while the vehicle is driving.	● Harness or connectors (Stop lamp switch circuit is open or shorted.) ● Stop lamp switch

FALI-SAFE MODE

When the malfunction is detected, the ECM enters fail-safe mode.

Engine operating condition in fail-safe mode	
ECM controls the electric throttle control actuator by regulating the throttle opening to a small range. Therefore, acceleration will be poor.	
Vehicle condition	Driving condition
When engine is idling	Normal
When accelerating	Poor acceleration

DTC Confirmation Procedure

UBS00BFZ

WITH CONSULT-II

1. Turn ignition switch ON.
2. Fully depress the brake pedal for at least 5 seconds.
3. Erase the DTC with CONSULT-II.
4. Select “DATA MONITOR” mode with CONSULT-II.
5. If 1st trip DTC is detected, go to EC-569, "Diagnostic Procedure"
.

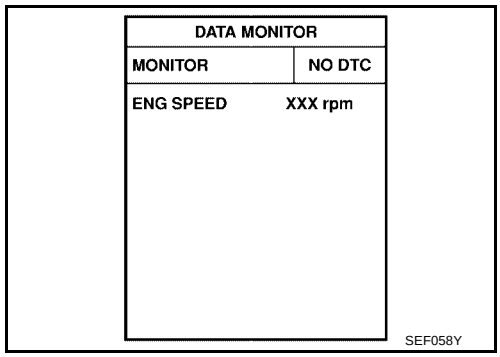

WITH GST

Follow the procedure “WITH CONSULT-II” above.

Wiring Diagram

UBS00BG0

EC-BRK/SW-01

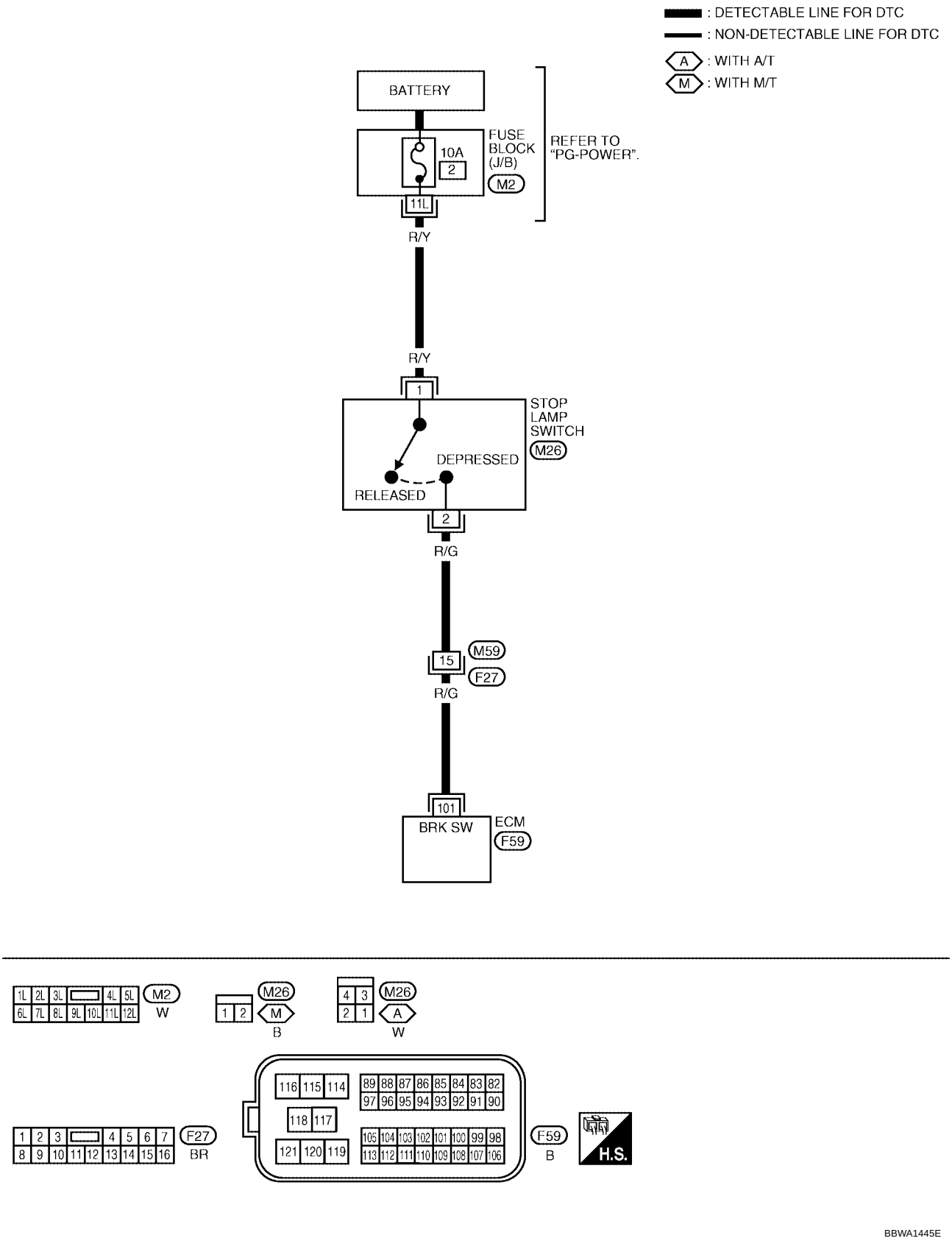

Specification data are reference values and are measured between each terminal and ground.

CAUTION:

Do not use ECM ground terminals when measuring input/output voltage. Doing so may result in damage to the ECM's transistor. Use a ground other than ECM terminals, such as the ground.

TERMINAL NO.	WIRE COLOR	ITEM	CONDITION	DATA (DC Voltage)
101	R/G	Stop lamp switch	**[Ignition switch: ON]** ● Brake pedal: Fully released	Approximately 0V
			[Ignition switch: ON] ● Brake pedal: Depressed	BATTERY VOLTAGE (11 - 14V)

Diagnostic Procedure

UBS00BG1

1. CHECK STOP LAMP SWITCH CIRCUIT

1. Turn ignition switch OFF.
2. Check the stop lamp when depressing and releasing the brake pedal.

Brake pedal	Stop lamp
Fully released	Not illuminated
Depressed	Illuminated

OK or NG

OK >> GO TO 4.
NG >> GO TO 2.

2. CHECK STOP LAMP SWITCH POWER SUPPLY CIRCUIT

1. Disconnect stop lamp switch harness connector.

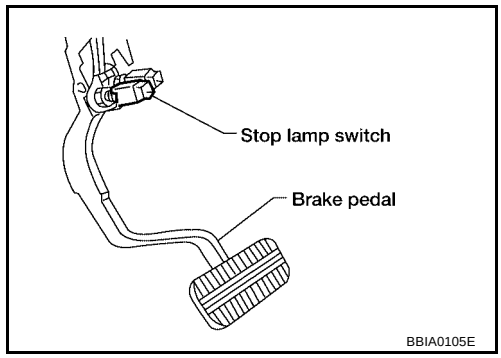

2. Check voltage between stop lamp switch terminal 1 and ground with CONSULT-II or tester.

   Voltage: Battery voltage

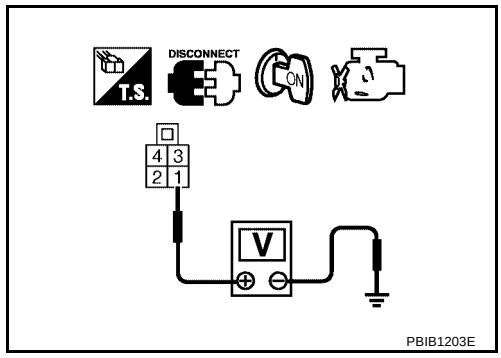

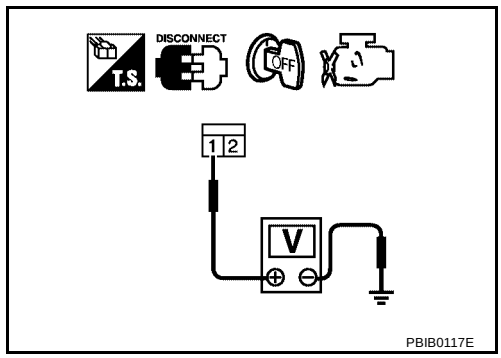

OK or NG

OK >> GO TO 4.
NG >> GO TO 3.

3. DETECT MALFUNCTIONING PART

Check the following.

- 10A fuse
- Fuse block (J/B) connector M2
- Harness for open and short between stop lamp switch and battery

>> Repair open circuit or short to ground or short to power in harness or connectors.

4. CHECK STOP LAMP SWITCH INPUT SIGNAL CIRCUIT FOR OPEN AND SHORT

1. Turn ignition switch OFF.
2. Disconnect ECM harness connector.
3. Disconnect stop lamp switch harness connector.
4. Check harness continuity between ECM terminal 101 and stop lamp switch terminal 2.
   Refer to Wiring Diagram.

   Continuity should exist.

5. Also check harness for short to ground and short to power.

OK or NG

OK >> GO TO 6.
NG >> GO TO 5.

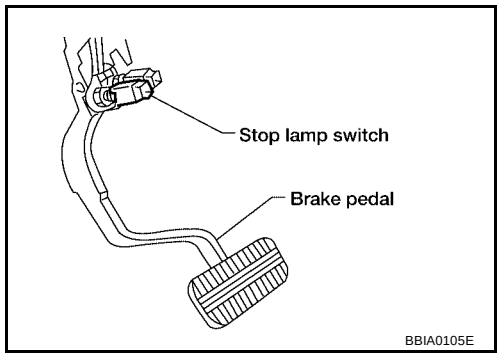

5. DETECT MALFUNCTIONING PART

Check the following.

- Harness connectors M59, F27
- Harness for open or short between ECM and stop lamp switch

>> Repair open circuit or short to ground or short to power in harness or connectors.

6. CHECK STOP LAMP SWITCH

Refer to EC-571, "Component Inspection" .

OK or NG

OK >> GO TO 7.
NG >> Replace stop lamp switch.

7. CHECK INTERMITTENT INCIDENT

Refer to EC-164, "TROUBLE DIAGNOSIS FOR INTERMITTENT INCIDENT" .

>> **INSPECTION END**

Component Inspection

UBS00BG2

STOP LAMP SWITCH

1. Disconnect stop lamp switch harness connector.

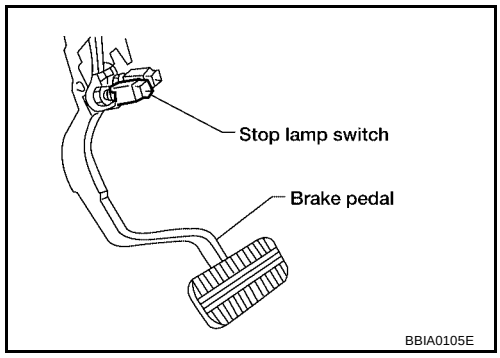

2. Check continuity between stop lamp switch terminals 1 and 2 under the following conditions.

Conditions	Continuity
Brake pedal fully released	Should not exist.
Brake pedal depressed	Should exist.

If NG, adjust brake pedal installation, refer to BR-11, "BRAKE PEDAL AND BRACKET" , and perform step 2 again.

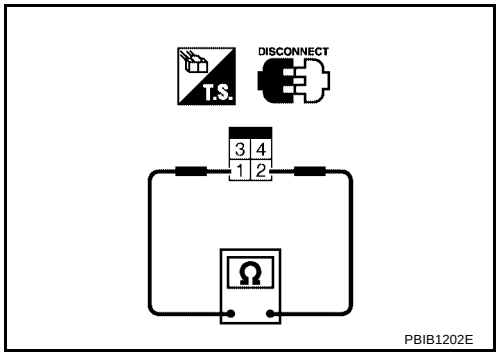

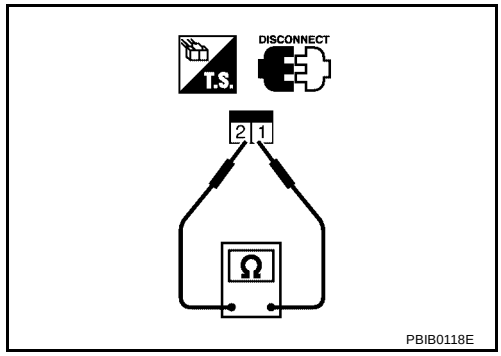

DTC P2122, P2123 APP SENSOR

PFP:18002

Component Description

UBS00BG3

The accelerator pedal position sensor is installed on the upper end of the accelerator pedal assembly. The sensor detects the accelerator position and sends a signal to the ECM.
Accelerator pedal position sensor has two sensors. These sensors are a kind of potentiometers which transform the accelerator pedal position into output voltage, and emit the voltage signal to the ECM. In addition, these sensors detect the opening and closing speed of the accelerator pedal and feed the voltage signals to the ECM. The ECM judges the current opening angle of the accelerator pedal from these signals and controls the throttle control motor based on these signals.

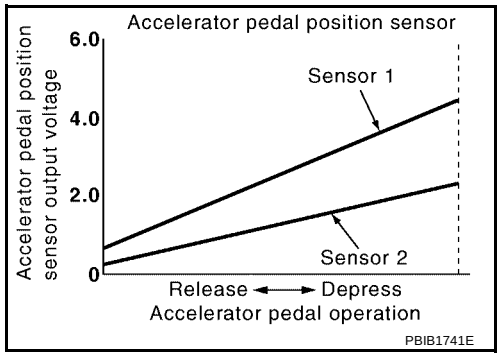

Idle position of the accelerator pedal is determined by the ECM receiving the signal from the accelerator pedal position sensor. The ECM uses this signal for the engine operation such as fuel cut.

CONSULT-II Reference Value in Data Monitor Mode

UBS00BG4

Specification data are reference values.

MONITOR ITEM	CONDITION		SPECIFICATION
ACCEL SEN 1	● Ignition switch: ON (Engine stopped)	Accelerator pedal: Fully released	0.65 - 0.87V
		Accelerator pedal: Fully depressed	More than 4.3V
ACCEL SEN 2*	● Ignition switch: ON (Engine stopped)	Accelerator pedal: Fully released	0.56 - 0.96V
		Accelerator pedal: Fully depressed	More than 4.0V
CLSD THL POS	● Ignition switch: ON (Engine stopped)	Accelerator pedal: Fully released	ON
		Accelerator pedal: Slightly depressed	OFF

*: Accelerator pedal sensor 2 signal is converted by ECM internally. Thus, it differs from ECM terminal voltage signal.

On Board Diagnosis Logic

UBS00BG5

These self-diagnoses have the one trip detection logic.

NOTE:
If DTC P2122 or P2123 is displayed with DTC P1229, first perform the trouble diagnosis for DTC P1229.

DTC No.	Trouble diagnosis name	DTC detecting condition	Possible cause
P2122 2122	Accelerator pedal position sensor 1 circuit low input	An excessively low voltage from the APP sensor 1 is sent to ECM.	● Harness or connectors (The APP sensor 1 circuit is open or shorted.) ● Accelerator pedal position sensor (Accelerator pedal position sensor 1)
P2123 2123	Accelerator pedal position sensor 1 circuit high input	An excessively high voltage from the APP sensor 1 is sent to ECM.	

FAIL-SAFE MODE

When the malfunction is detected, the ECM enters fail-safe mode and the MIL lights up.

Engine operating condition in fail-safe mode
The ECM controls the electric throttle control actuator in regulating the throttle opening in order for the idle position to be within +10 degrees. The ECM regulates the opening speed of throttle valve to be slower than the normal condition. So, the acceleration will be poor.

DTC Confirmation Procedure

UBS00BG6

NOTE:
If DTC Confirmation Procedure has been previously conducted, always turn ignition switch OFF and wait at least 10 seconds before conducting the next test.
TESTING CONDITION:
Before performing the following procedure, confirm that battery voltage is more than 8V at idle.

WITH CONSULT-II

1. Turn ignition switch ON.
2. Select “DATA MONITOR” mode with CONSULT-II.
3. Start engine and let it idle for 1 second.
4. If DTC is detected, go to EC-576, "Diagnostic Procedure" .

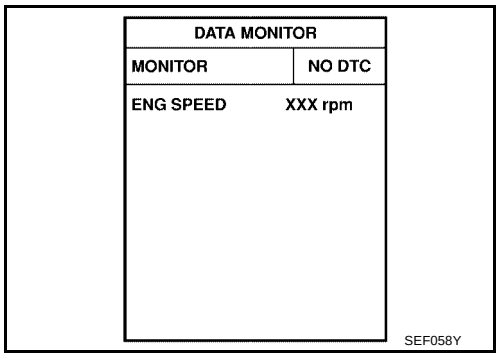

WITH GST

Follow the procedure “WITH CONSULT-II” above.

Wiring Diagram

UBS00BG7

EC-APPS1-01

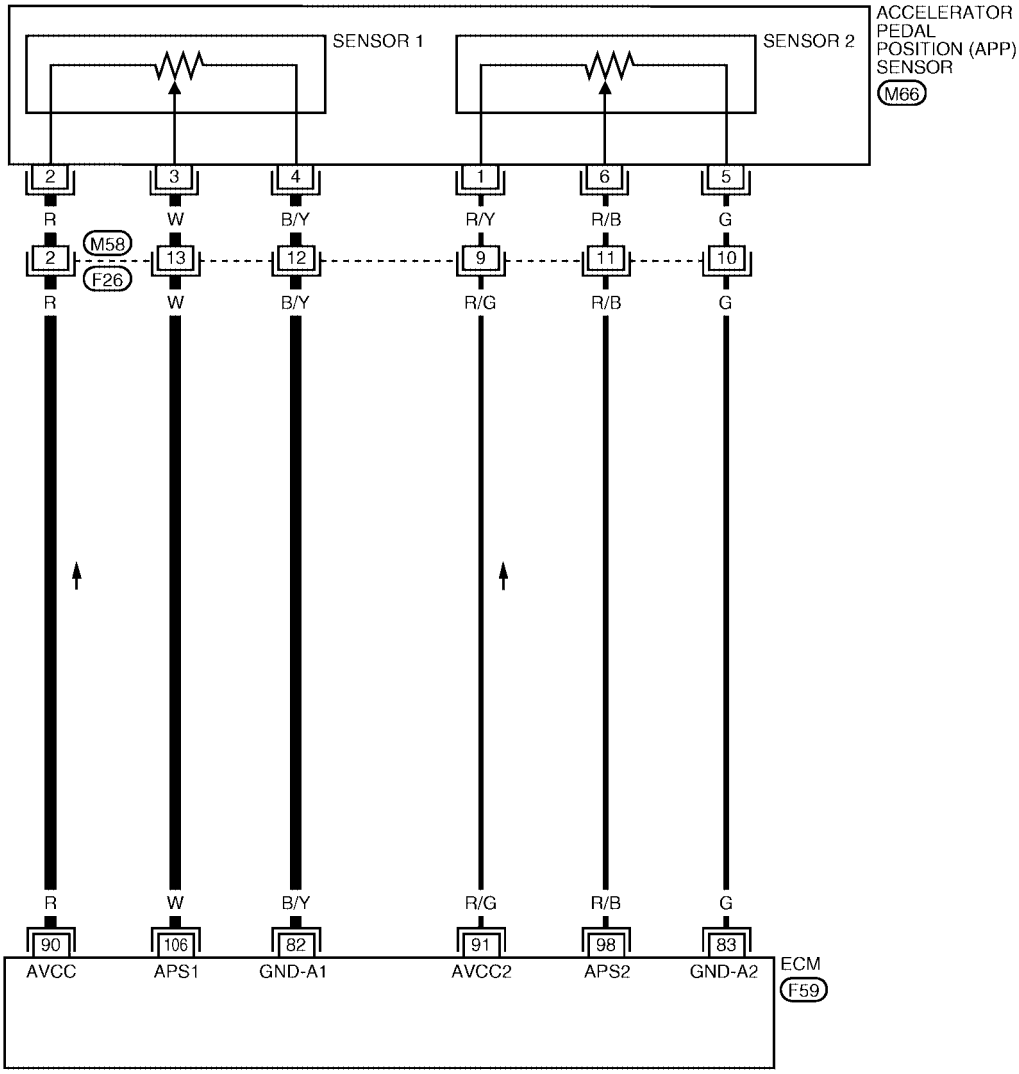

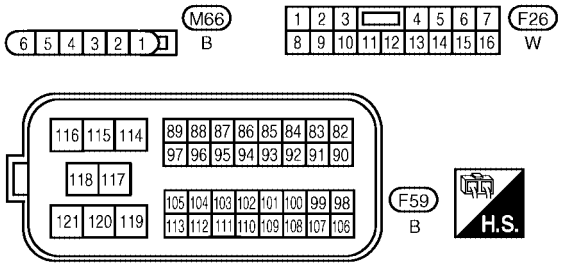

BBWA1485E

Specification data are reference values and are measured between each terminal and ground.

CAUTION:

Do not use ECM ground terminals when measuring input/output voltage. Doing so may result in damage to the ECM's transistor. Use a ground other than ECM terminals, such as the ground.

TERMINAL NO.	WIRE COLOR	ITEM	CONDITION	DATA (DC Voltage)
82	B/Y	Sensor ground (Accelerator pedal position sensor 1)	**[Engine is running]** ● **Warm-up condition** ● Idle speed	Approximately 0V
83	G	Sensor ground (Accelerator pedal position sensor 2)	**[Engine is running]** ● **Warm-up condition** ● Idle speed	Approximately 0V
90	R	Sensor power supply (Accelerator pedal position sensor 1)	**[Ignition switch: ON]**	Approximately 5V
91	R/G	Sensor power supply (Accelerator pedal position sensor 2)	**[Ignition switch: ON]**	Approximately 5V
98	R/B	Accelerator pedal position sensor 2	**[Ignition switch: ON]** ● Engine stopped ● Accelerator pedal: Fully released	0.28 - 0.48V
			[Ignition switch: ON] ● Engine stopped ● Accelerator pedal: Fully depressed	More than 2.0V
106	W	Accelerator pedal position sensor 1	**[Ignition switch: ON]** ● Engine stopped ● Accelerator pedal: Fully released	0.65 - 0.87V
			[Ignition switch: ON] ● Engine stopped ● Accelerator pedal: Fully depressed	More than 4.3V

Diagnostic Procedure

UBS00BG8

1. CHECK GROUND CONNECTIONS

1. Turn ignition switch OFF.
2. Loosen and retighten two ground screws on the body. Refer to EC-171, "Ground Inspection" .

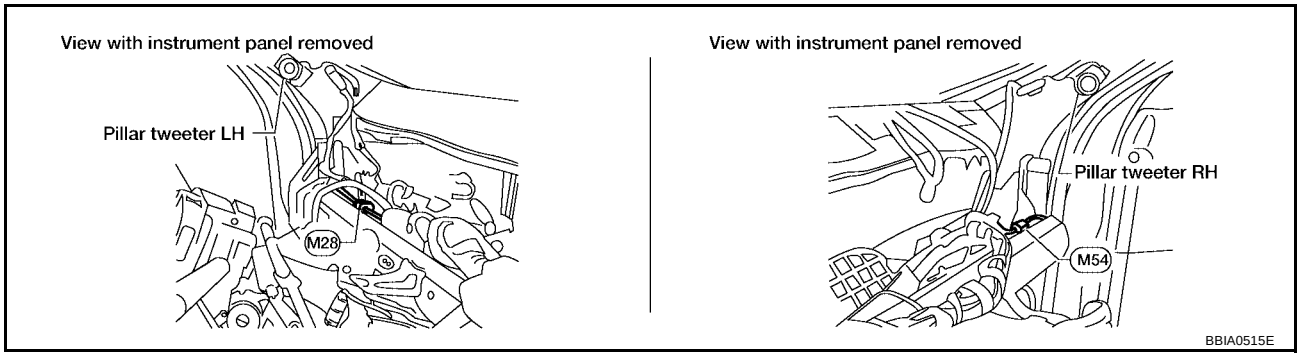

OK or NG

OK >> GO TO 2.
NG >> Repair or replace ground connections.

2. CHECK APP SENSOR 1 POWER SUPPLY CIRCUIT

1. Disconnect accelerator pedal position (APP) sensor harness connector.
2. Turn ignition switch ON.

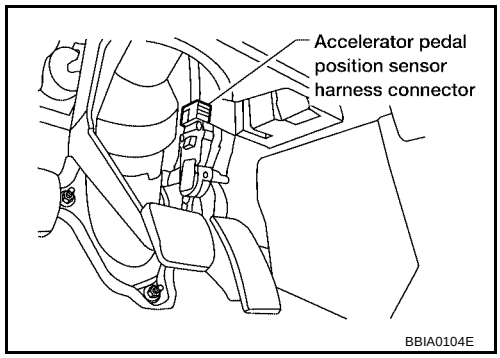

3. Check voltage between APP sensor terminal 2 and ground with CONSULT-II or tester.

Voltage: Approximately 5V

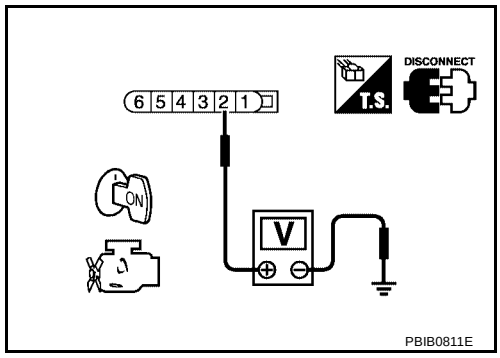

OK or NG

OK >> GO TO 4.
NG >> GO TO 3.

3. DETECT MALFUNCTIONING PART

Check the following.

- Harness connectors M58, F26
- Harness for open or short between ECM and accelerator pedal position sensor

>> Repair open circuit or short to ground or short to power in harness or connectors.

4. CHECK APP SENSOR 1 GROUND CIRCUIT FOR OPEN AND SHORT

1. Turn ignition switch OFF.
2. Disconnect ECM harness connector.
3. Check harness continuity between ECM terminal 82 and APP sensor terminal 4. Refer to Wiring Diagram.

Continuity should exist.

4. Also check harness for short to ground and short to power.

OK or NG

OK >> GO TO 6.
NG >> GO TO 5.

5. DETECT MALFUNCTIONING PART

Check the following.

- Harness connectors M58, F26
- Harness for open or short between ECM and accelerator pedal position sensor

>> Repair open circuit or short to ground or short to power in harness or connectors.

6. CHECK APP SENSOR 1 INPUT SIGNAL CIRCUIT FOR OPEN AND SHORT

1. Check harness continuity between ECM terminal 106 and APP sensor terminal 3.
   Refer to Wiring Diagram.

   Continuity should exist.

2. Also check harness for short to ground and short to power.

OK or NG

OK >> GO TO 8.
NG >> GO TO 7.

7. DETECT MALFUNCTIONING PART

Check the following.

- Harness connectors M58, F26
- Harness for open or short between ECM and accelerator pedal position sensor

>> Repair open circuit or short to ground or short to power in harness or connectors.

8. CHECK APP SENSOR

Refer to EC-579, "Component Inspection" .

OK or NG

OK >> GO TO 10.
NG >> GO TO 9.

9. REPLACE ACCELERATOR PEDAL ASSENBLY

1. Replace accelerator pedal assembly.
2. Perform EC-92, "Accelerator Pedal Released Position Learning" .
3. Perform EC-92, "Throttle Valve Closed Position Learning" .
4. Perform EC-92, "Idle Air Volume Learning" .

>> **INSPECTION END**

10. CHECK INTERMITTENT INCIDENT

Refer to EC-164, "TROUBLE DIAGNOSIS FOR INTERMITTENT INCIDENT" .

>> **INSPECTION END**

Component Inspection

UBS00BG9

ACCELERATOR PEDAL POSITION SENSOR

1. Reconnect all harness connectors disconnected.
2. Turn ignition switch ON.
3. Check voltage between ECM terminals 106 (APP sensor 1 signal), 98 (APP sensor 2 signal) and ground under the following conditions.

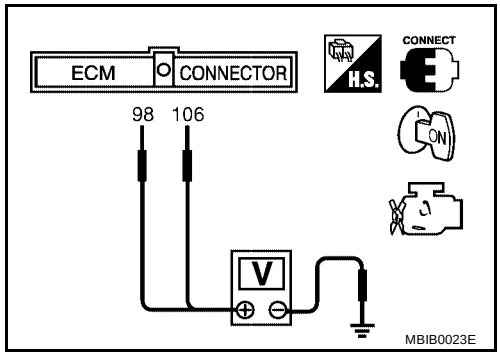

Terminal	Accelerator pedal	Voltage
106 (Accelerator pedal position sensor 1)	Fully released	0.65 - 0.87V
	Fully depressed	More than 4.3V
98 (Accelerator pedal position sensor 2)	Fully released	0.28 - 0.48V
	Fully depressed	More than 2.0V

4. If NG, replace accelerator pedal assembly and go to the next step.
5. Perform EC-92, "Accelerator Pedal Released Position Learning" .
6. Perform EC-92, "Throttle Valve Closed Position Learning" .
7. Perform EC-92, "Idle Air Volume Learning" .

Removal and Installation

UBS00BGA

ACCELERATOR PEDAL

Refer to ACC-2, "ACCELERATOR CONTROL SYSTEM" .

DTC P2127, P2128 APP SENSOR

PFP:18002

Component Description

UBS00BGB

The accelerator pedal position sensor is installed on the upper end of the accelerator pedal assembly. The sensor detects the accelerator position and sends a signal to the ECM.
Accelerator pedal position sensor has two sensors. These sensors are a kind of potentiometers which transform the accelerator pedal position into output voltage, and emit the voltage signal to the ECM. In addition, these sensors detect the opening and closing speed of the accelerator pedal and feed the voltage signals to the ECM. The ECM judges the current opening angle of the accelerator pedal from these signals and controls the throttle control motor based on these signals.

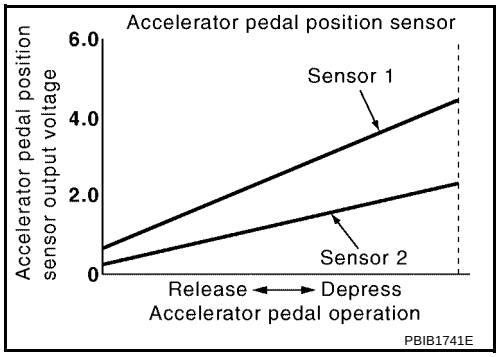

Idle position of the accelerator pedal is determined by the ECM receiving the signal from the accelerator pedal position sensor. The ECM uses this signal for the engine operation such as fuel cut.

CONSULT-II Reference Value in Data Monitor Mode

UBS00BGC

Specification data are reference values.

MONITOR ITEM	CONDITION		SPECIFICATION
ACCEL SEN 1	● Ignition switch: ON (Engine stopped)	Accelerator pedal: Fully released	0.65 - 0.87V
		Accelerator pedal: Fully depressed	More than 4.3V
ACCEL SEN 2*	● Ignition switch: ON (Engine stopped)	Accelerator pedal: Fully released	0.56 - 0.96V
		Accelerator pedal: Fully depressed	More than 4.0V
CLSD THL POS	● Ignition switch: ON (Engine stopped)	Accelerator pedal: Fully released	ON
		Accelerator pedal: Slightly depressed	OFF

*: Accelerator pedal sensor 2 signal is converted by ECM internally. Thus, it differs from ECM terminal voltage signal.

On Board Diagnosis Logic

UBS00BGD

These self-diagnoses have the one trip detection logic.

DTC No.	Trouble diagnosis name	DTC detecting condition	Possible cause
P1227 1227	Accelerator pedal position sensor 2 circuit low input	An excessively low voltage from the APP sensor 2 is sent to ECM.	● Harness or connectors (The APP sensor 2 circuit is open or shorted.) (TP sensor circuit is shorted) ● Accelerator pedal position sensor (Accelerator pedal position sensor 2) ● Electric throttle control actuator (TP sensor 1 and 2)
P1228 1228	Accelerator pedal position sensor 2 circuit high input	An excessively high voltage from the APP sensor 2 is sent to ECM.	

FAIL-SAFE MODE

When the malfunction is detected, ECM enters fail-safe mode and the MIL lights up.

Engine operating condition in fail-safe mode
The ECM controls the electric throttle control actuator in regulating the throttle opening in order for the idle position to be within +10 degrees. The ECM regulates the opening speed of the throttle valve to be slower than the normal condition. So, the acceleration will be poor.

DTC Confirmation Procedure

UBS00BGE

NOTE:
If DTC Confirmation Procedure has been previously conducted, always turn ignition switch OFF and wait at least 10 seconds before conducting the next test.
TESTING CONDITION:
Before performing the following procedure, confirm that battery voltage is more than 8V at idle.

WITH CONSULT-II

1. Turn ignition switch ON.
2. Select “DATA MONITOR” mode with CONSULT-II.
3. Start engine and let it idle for 1 second.
4. If DTC is detected, go to EC-583, "Diagnostic Procedure" .

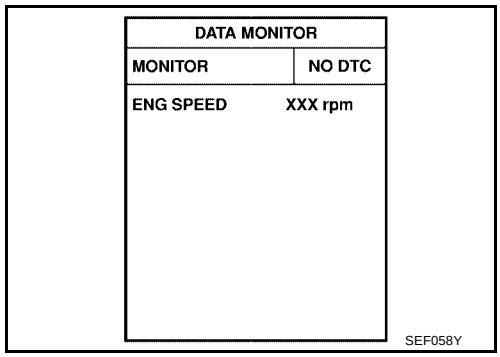

WITH GST

Follow the procedure “With CONSULT-II” above.

Wiring Diagram

UBS00BGF

EC-APPS2-01

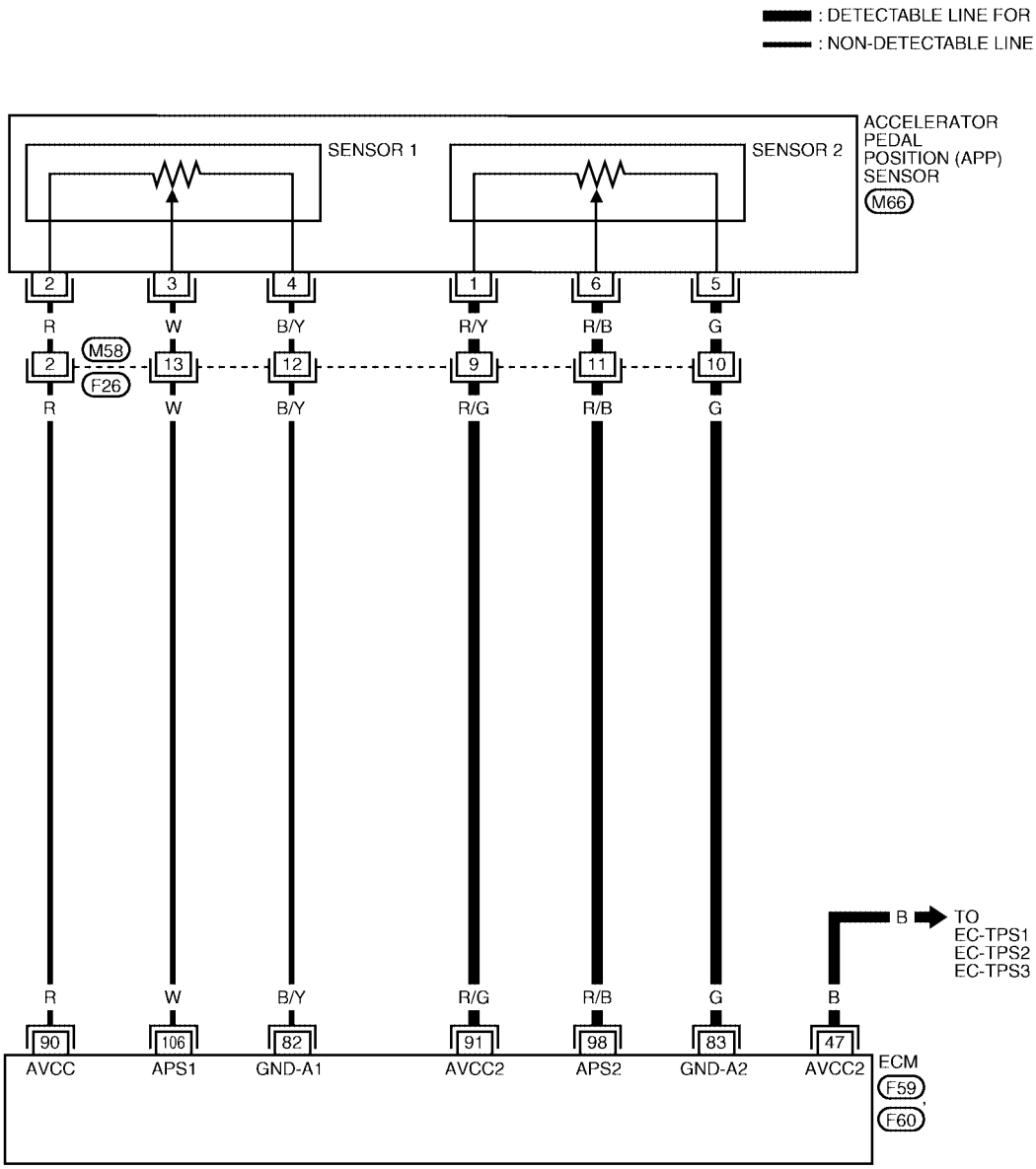

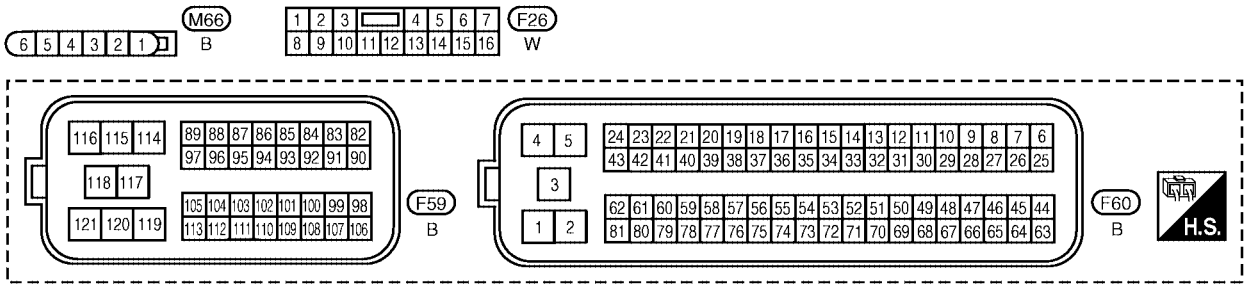

BBWA1486E

Specification data are reference values and are measured between each terminal and ground.

CAUTION:

Do not use ECM ground terminals when measuring input/output voltage. Doing so may result in damage to the ECM's transistor. Use a ground other than ECM terminals, such as the ground.

TERMINAL NO.	WIRE COLOR	ITEM	CONDITION	DATA (DC Voltage)
47	B	Sensor power supply (Throttle position sensor)	**[Ignition switch: ON]**	Approximately 5V
82	B/Y	Sensor ground (Accelerator pedal position sensor 1)	**[Engine is running]** ● **Warm-up condition** ● Idle speed	Approximately 0V
83	G	Sensor ground (Accelerator pedal position sensor 2)	**[Engine is running]** ● **Warm-up condition** ● Idle speed	Approximately 0V
90	R	Sensor power supply (Accelerator pedal position sensor 1)	**[Ignition switch: ON]**	Approximately 5V
91	R/G	Sensor power supply (Accelerator pedal position sensor 2)	**[Ignition switch: ON]**	Approximately 5V
98	R/B	Accelerator pedal position sensor 2	**[Ignition switch: ON]** ● Engine stopped ● Accelerator pedal: Fully released	0.28 - 0.48V
			[Ignition switch: ON] ● Engine stopped ● Accelerator pedal: Fully depressed	More than 2.0V
106	W	Accelerator pedal position sensor 1	**[Ignition switch: ON]** ● Engine stopped ● Accelerator pedal: Fully released	0.65 - 0.87V
			[Ignition switch: ON] ● Engine stopped ● Accelerator pedal: Fully depressed	More than 4.3V

Diagnostic Procedure

UBS00BGG

1. CHECK GROUND CONNECTIONS

1. Turn ignition switch OFF.
2. Loosen and retighten two ground screws on the body. Refer to EC-171, "Ground Inspection" .

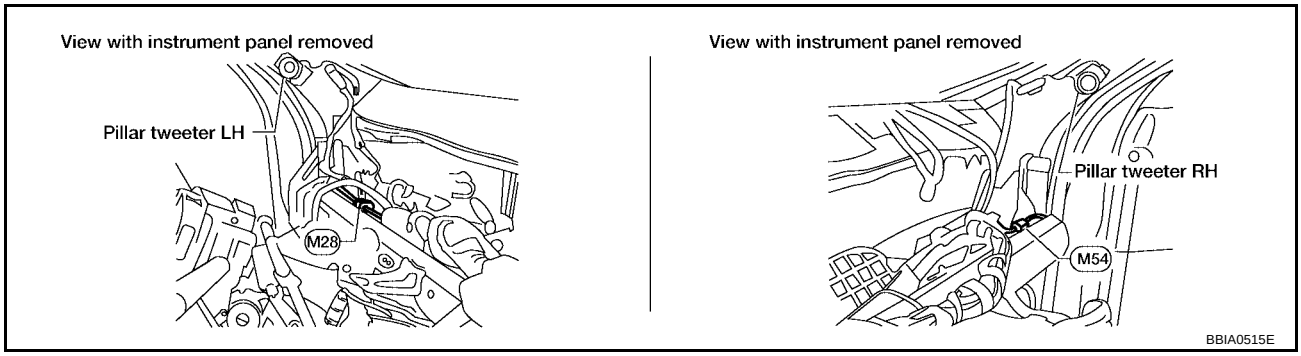

OK or NG

OK >> GO TO 2.
NG >> Repair or replace ground connections.

2. CHECK APP SENSOR 2 POWER SUPPLY CIRCUIT-I

1. Disconnect accelerator pedal position (APP) sensor harness connector.
2. Turn ignition switch ON.

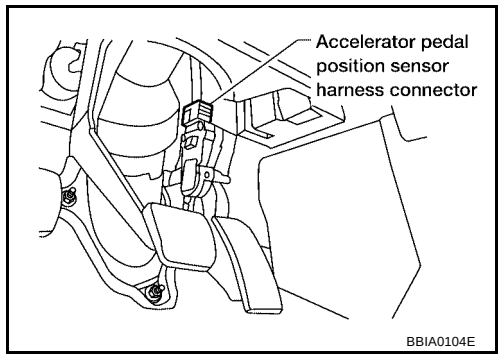

3. Check voltage between APP sensor terminal 1 and ground with CONSULT-II or tester.

Voltage: Approximately 5V

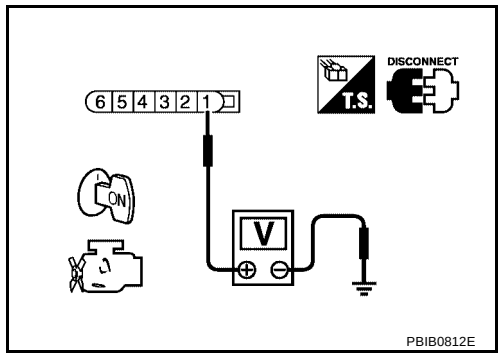

OK or NG

OK >> GO TO 8.
NG >> GO TO 3.

3. CHECK APP SENSOR 2 POWER SUPPLY CIRCUIT-II

1. Turn ignition switch OFF.
2. Disconnect ECM harness connector.
3. Check harness continuity between APP sensor terminal 1 and ECM terminal 91. Refer to Wiring Diagram.

Continuity should exist.

OK or NG

OK >> GO TO 5.
NG >> GO TO 4.

4. DETECT MALFUNCTIONING PART

Check the following.

- Harness connectors M58, F26
- Harness for open between ECM and accelerator pedal position sensor

>> Repair or replace open circuit.

5. CHECK APP SENSOR 2 POWER SUPPLY CIRCUIT-III

Check harness for short to power and short to ground, between the following terminals.

ECM terminal	Sensor terminal	Reference Wiring Diagram
91	APP sensor terminal 1	EC-596
47	Electric throttle control actuator terminal 1	EC-401

OK or NG

OK >> GO TO 6.
NG >> Repair short to ground or short to power in harness or connectors.

6. CHECK THROTTLE POSITION SENSOR

Refer to EC-271, "Component Inspection" .

OK or NG

OK >> GO TO 14.
NG >> GO TO 7.

7. REPLACE ELECTRIC THROTTLE CONTROL ACTUATOR

1. Replace the electric throttle control actuator.
2. Perform EC-92, "Throttle Valve Closed Position Learning" .
3. Perform EC-92, "Idle Air Volume Learning" .

>> **INSPECTION END**

8. CHECK APP SENSOR 2 GROUND CIRCUIT FOR OPEN AND SHORT

1. Turn ignition switch OFF.
2. Check harness continuity between ECM terminal 83 APP sensor terminal 5.
   Refer to Wiring Diagram.

   Continuity should exist.

3. Also check harness for short to ground and short to power.

OK or NG

OK >> GO TO 10.
NG >> GO TO 9.

9. DETECT MALFUNCTIONING PART

Check the following.

- Harness connectors M58, F26
- Harness for open or short between ECM and accelerator pedal position sensor

>> Repair open circuit or short to ground or short to power in harness or connectors.

10. CHECK APP SENSOR 2 INPUT SIGNAL CIRCUIT FOR OPEN AND SHORT

1. Check harness continuity between ECM terminal 98 and APP sensor terminal 6.
   Refer to Wiring Diagram.

   Continuity should exist.

2. Also check harness for short to ground and short to power.

OK or NG

OK >> GO TO 12.
NG >> GO TO 11.

11. DETECT MALFUNCTIONING PART

Check the following.

- Harness connectors M58, F26
- Harness for open or short between ECM and accelerator pedal position sensor

>> Repair open circuit or short to ground or short to power in harness or connectors.

12. CHECK APP SENSOR

Refer to EC-601, "Component Inspection" .

OK or NG

OK >> GO TO 14.
NG >> Replace accelerator pedal assembly.

13. REPLACE ACCELERATOR PEDAL ASSEMBLY

1. Replace accelerator pedal assembly.
2. Perform EC-92, "Accelerator Pedal Released Position Learning" .
3. Perform EC-92, "Throttle Valve Closed Position Learning" .
4. Perform EC-92, "Idle Air Volume Learning" .

>> **INSPECTION END**

14. CHECK INTERMITTENT INCIDENT

Refer to EC-164, "TROUBLE DIAGNOSIS FOR INTERMITTENT INCIDENT" .

>> **INSPECTION END**

Component Inspection

UBS00BGH

ACCELERATOR PEDAL POSITION SENSOR

1. Reconnect all harness connectors disconnected.
2. Turn ignition switch ON.
3. Check voltage between ECM terminals 106 (APP sensor 1 signal), 98 (APP sensor 2 signal) and ground under the following conditions.

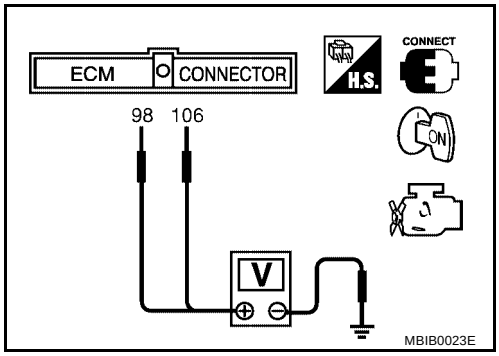

Terminal	Accelerator pedal	Voltage
106 (Accelerator pedal position sensor 1)	Fully released	0.65 - 0.87V
	Fully depressed	More than 4.3V
98 (Accelerator pedal position sensor 2)	Fully released	0.28 - 0.48V
	Fully depressed	More than 2.0V

4. If NG, replace accelerator pedal assembly.
5. Perform EC-92, "Accelerator Pedal Released Position Learning" .
6. Perform EC-92, "Throttle Valve Closed Position Learning" .
7. Perform EC-92, "Idle Air Volume Learning" .

Removal and Installation

UBS00BGI

ACCELERATOR PEDAL

Refer to ACC-2, "ACCELERATOR CONTROL SYSTEM" .

DTC P2135 TP SENSOR

PFP:16119

Component Description

UBS00BGJ

Electric throttle control actuator consists of throttle control motor, throttle position sensor, etc. The throttle position sensor responds to the throttle valve movement.
The throttle position sensor has the two sensors. These sensors are a kind of potentiometers which transform the throttle valve position into output voltage, and emit the voltage signal to the ECM. In addition, these sensors detect the opening and closing speed of the throttle valve and feed the voltage signals to the ECM. The ECM judges the current opening angle of the throttle valve from these signals and the ECM controls the throttle control motor to make the throttle valve opening angle properly in response to driving condition.

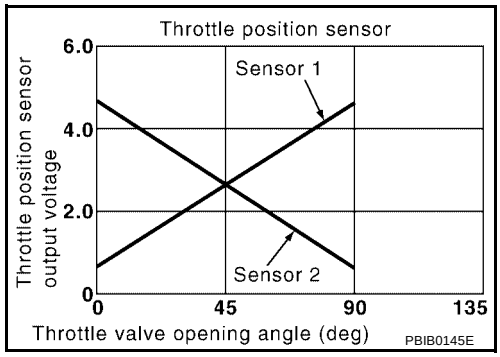

CONSULT-II Reference Value in Data Monitor Mode

UBS00BGK

Specification data are reference values.

MONITOR ITEM	CONDITION		SPECIFICATION
THRTL SEN 1 THRTL SEN 2*	● Ignition switch: ON (Engine stopped) ● Shift lever: D (A/T), 1st (M/T)	Accelerator pedal: Fully released	More than 0.36V
		Accelerator pedal: Fully depressed	Less than 4.75V

*: Throttle position sensor 2 signal is converted by ECM internally. Thus, it differs from ECM terminal voltage signal.

On Board Diagnosis Logic

UBS00BGL

This self-diagnosis has the one trip detection logic.

DTC No.	Trouble diagnosis name	DTC detecting condition	Possible cause
P2135 2135	Throttle position sensor circuit range/performance problem	Rationally incorrect voltage is sent to ECM compared with the signals from TP sensor 1 and TP sensor 2.	● Harness or connector (The TP sensor 1 and 2 circuit is open or shorted.) (APP sensor 2 circuit is shorted) ● Electric throttle control actuator (TP sensor 1 and 2) ● Accelerator pedal position sensor

FAIL-SAFE MODE

When the malfunction is detected, the ECM enters fail-safe mode and the MIL lights up.

Engine operation condition in fail-safe mode
The ECM controls the electric throttle control actuator in regulating the throttle opening in order for the idle position to be within +10 degrees. The ECM regulates the opening speed of the throttle valve to be slower than the normal condition. So, the acceleration will be poor.

DTC Confirmation Procedure

UBS00BGM

NOTE:
If DTC Confirmation Procedure has been previously conducted, always turn ignition switch OFF and wait at least 10 seconds before conducting the next test.
TESTING CONDITION:
Before performing the following procedure, confirm that battery voltage is more than 8V at idle.

WITH CONSULT-II

1. Turn ignition switch ON.
2. Select “DATA MONITOR” mode with CONSULT-II.
3. Start engine and let it idle for 1 second.
4. If DTC is detected, go to EC-590, "Diagnostic Procedure" .

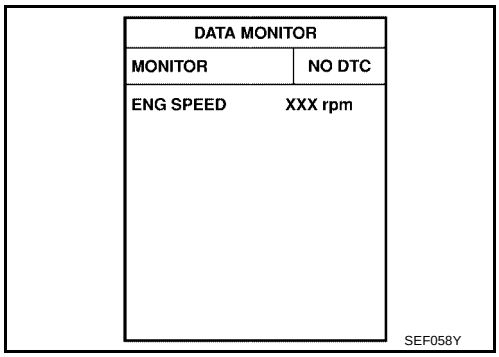

WITH GST

Follow the procedure “WITH CONSULT-II” above.

Wiring Diagram

UBS00BGN

EC-TPS3-01

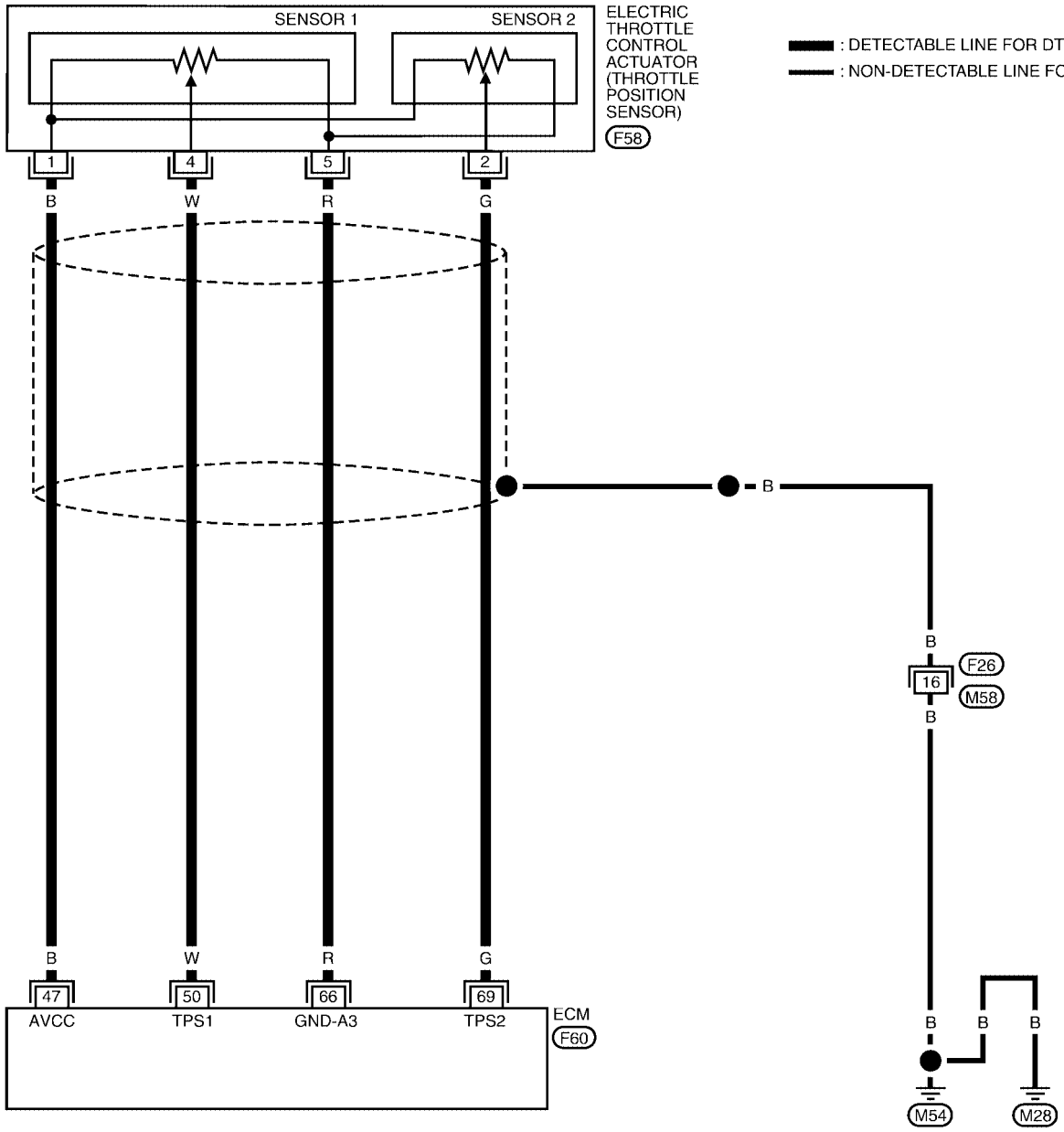

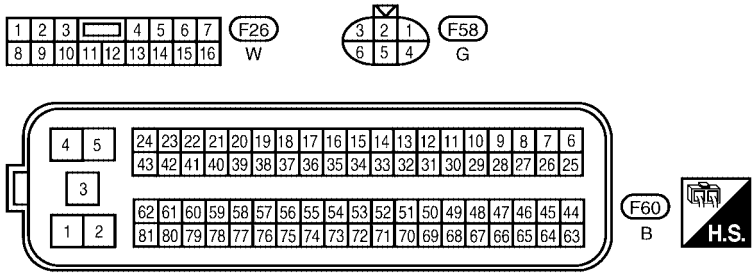

BBWA0706E

Specification data are reference values and are measured between each terminal and ground.

CAUTION:

Do not use ECM ground terminals when measuring input/output voltage. Doing so may result in damage to the ECM's transistor. Use a ground other than ECM terminals, such as the ground.

TERMINAL NO.	WIRE COLOR	ITEM	CONDITION	DATA (DC Voltage)
47	B	Sensor power supply (Throttle position sensor)	**[Ignition switch: ON]**	Approximately 5V
50	W	Throttle position sensor 1	**[Ignition switch: ON]** ● Engine stopped ● Shift lever: D (A/T), 1st (M/T) ● Accelerator pedal: Fully released	More than 0.36V
			[Ignition switch: ON] ● Engine stopped ● Shift lever: D (A/T), 1st (M/T) ● Accelerator pedal: Fully depressed	Less than 4.75V
66	R	Sensor ground (Throttle position sensor)	**[Engine is running]** ● **Warm-up condition** ● Idle speed	Approximately 0V
69	G	Throttle position sensor 2	**[Ignition switch: ON]** ● Engine stopped ● Shift lever: D (A/T), 1st (M/T) ● Accelerator pedal: Fully released	Less than 4.75V
			[Ignition switch: ON] ● Engine stopped ● Shift lever: D (A/T), 1st (M/T) ● Accelerator pedal: Fully depressed	More than 0.36V
91	R/G	Sensor power supply (Accelerator pedal position sensor 2)	**[Ignition switch: ON]**	Approximately 5V

Diagnostic Procedure

UBS00BGO

1. CHECK GROUND CONNECTIONS

1. Turn ignition switch OFF.
2. Loosen and retighten two ground screws on the body. Refer to EC-171, "Ground Inspection" .

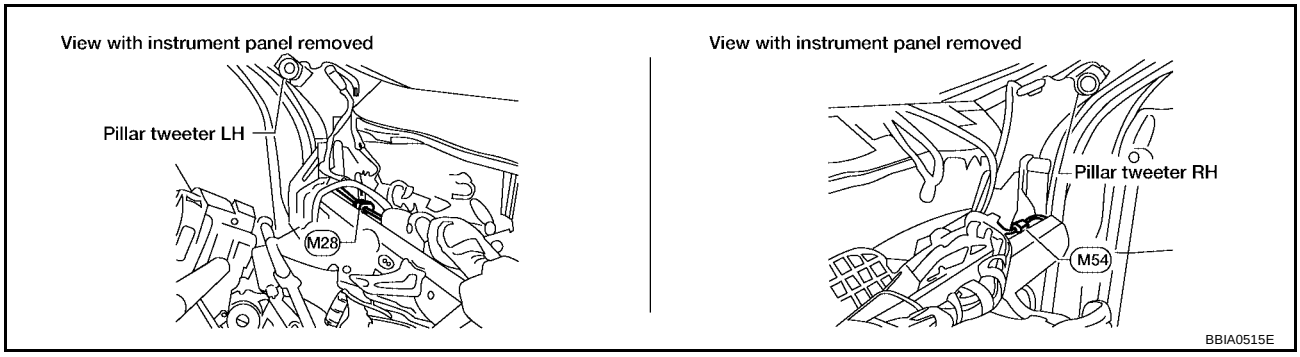

OK or NG

OK >> GO TO 2.

NG >> Repair or replace ground connections.

2. CHECK THROTTLE POSITION SENSOR POWER SUPPLY CIRCUIT-I

1. Disconnect electric throttle control actuator harness connector.
2. Turn ignition switch ON.

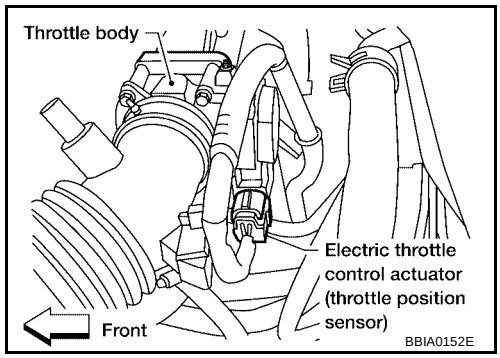

3. Check voltage between electric throttle control actuator terminal 1 and ground with CONSULT-II or tester.

Voltage: Approximately 5V

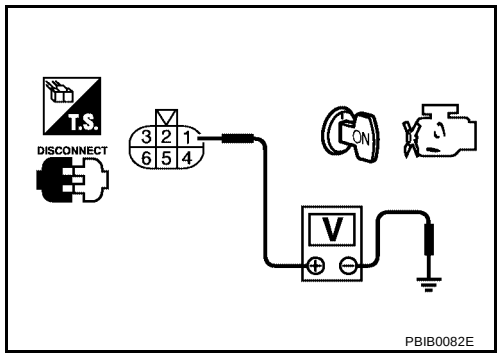

OK or NG

OK >> GO TO 7.
NG >> GO TO 3.

3. CHECK THROTTLE POSITION SENSOR POWER SUPPLY CIRCUIT-II

1. Turn ignition switch OFF.
2. Disconnect ECM harness connector.
3. Check harness continuity between electric throttle control actuator terminal 1 and ECM terminal 47. Refer to Wiring Diagram.

Continuity should exist.

OK or NG

OK >> GO TO 4.
NG >> Repair or replace open circuit.

4. CHECK THROTTLE POSITION SENSOR POWER SUPPLY CIRCUIT-III

Check harness for short to power and short to ground, between the following terminals.

ECM terminal	Sensor terminal	Reference Wiring Diagram
47	Electric throttle control actuator terminal 1	EC-409
91	APP sensor terminal 1	EC-575

OK or NG

OK >> GO TO 5.
NG >> Repair short to ground or short to power in harness or connectors.

5. CHECK APP SENSOR

Refer to EC-601, "Component Inspection" .

OK or NG

OK >> GO TO 11.
NG >> GO TO 6.

6. REPLACE ACCELERATOR PEDAL ASSEMBLY

1. Replace accelerator pedal assembly.
2. Perform EC-92, "Accelerator Pedal Released Position Learning" .
3. Perform EC-92, "Throttle Valve Closed Position Learning" .
4. Perform EC-92, "Idle Air Volume Learning" .

>> **INSPECTION END**

7. CHECK THROTTLE POSITION SENSOR GROUND CIRCUIT FOR OPEN AND SHORT

1. Turn ignition switch OFF.
2. Disconnect ECM harness connector.
3. Check harness continuity between ECM terminal 66 and electric throttle control actuator terminal 5.
   Refer to Wiring Diagram.

   Continuity should exist.

4. Also check harness for short to ground and short to power.

OK or NG

OK >> GO TO 8.
NG >> Repair open circuit or short to ground or short to power in harness or connectors.

8. CHECK THROTTLE POSITION SENSOR INPUT SIGNAL CIRCUIT FOR OPEN AND SHORT

1. Check harness continuity between ECM terminal 50 and electric throttle control actuator terminal 4, ECM terminal 69 and electric throttle control actuator terminal 2.
   Refer to Wiring Diagram.

   Continuity should exist.

2. Also check harness for short to ground and short to power.

OK or NG

OK >> GO TO 9.
NG >> Repair open circuit or short to ground or short to power in harness or connectors.

9. CHECK THROTTLE POSITION SENSOR

Refer to EC-271, "Component Inspection" .

OK or NG

OK >> GO TO 11.
NG >> GO TO 10.

10. REPLACE ELECTRIC THROTTLE CONTROL ACTUATOR

1. Replace the electric throttle control actuator.
2. Perform EC-92, "Throttle Valve Closed Position Learning" .
3. Perform EC-92, "Idle Air Volume Learning" .

>> **INSPECTION END**

11. CHECK INTERMITTENT INCIDENT

Refer to EC-164, "TROUBLE DIAGNOSIS FOR INTERMITTENT INCIDENT" .

>> **INSPECTION END**

Component Inspection

UBS00BGP

THROTTLE POSITION SENSOR

1. Reconnect all harness connectors disconnected.
2. Perform EC-92, "Throttle Valve Closed Position Learning" .
3. Turn ignition switch ON.
4. Set selector lever to D position (A/T models) or 1st position (M/T models).
5. Check voltage between ECM terminals 50 (TP sensor 1 signal), 69 (TP sensor 2 signal) and ground under the following conditions.

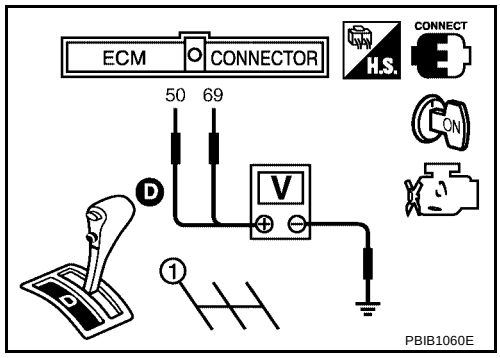

Terminal	Accelerator pedal	Voltage
50 (Throttle position sensor 1)	Fully released	More than 0.36V
	Fully depressed	Less than 4.75V
69 (Throttle position sensor 2)	Fully released	Less than 4.75V
	Fully depressed	More than 0.36V

6. If NG, replace electric throttle control actuator and go to the next step.
7. Perform EC-92, "Throttle Valve Closed Position Learning" .
8. Perform EC-92, "Idle Air Volume Learning" .

Removal and Installation

UBS00BGQ

ELECTRIC THROTTLE CONTROL ACTUATOR

Refer to EM-15, "Removal and Installation" .

DTC P2138 APP SENSOR

PFP:18002

Component Description

UBS00BGR

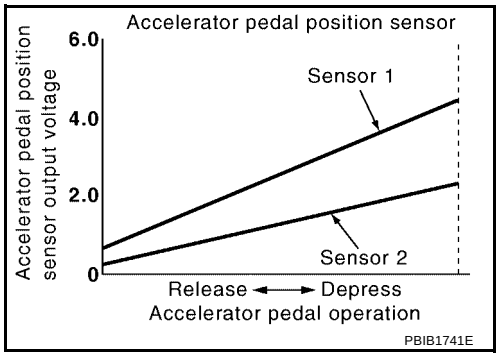

The accelerator pedal position sensor is installed on the upper end of the accelerator pedal assembly. The sensor detects the accelerator position and sends a signal to the ECM.
Accelerator pedal position sensor has two sensors. These sensors are a kind of potentiometers which transform the accelerator pedal position into output voltage, and emit the voltage signal to the ECM. In addition, these sensors detect the opening and closing speed of the accelerator pedal and feed the voltage signals to the ECM. The ECM judges the current opening angle of the accelerator pedal from these signals and controls the throttle control motor based on these signals.
Idle position of the accelerator pedal is determined by the ECM receiving the signal from the accelerator pedal position sensor. The ECM uses this signal for the engine operation such as fuel cut.

CONSULT-II Reference Value in Data Monitor Mode

UBS00BGS

Specification data are reference values.

MONITOR ITEM	CONDITION		SPECIFICATION
ACCEL SEN 1	● Ignition switch: ON (Engine stopped)	Accelerator pedal: Fully released	0.65 - 0.87V
		Accelerator pedal: Fully depressed	More than 4.3V
ACCEL SEN 2*	● Ignition switch: ON (Engine stopped)	Accelerator pedal: Fully released	0.56 - 0.96V
		Accelerator pedal: Fully depressed	More than 4.0V
CLSD THL POS	● Ignition switch: ON (Engine stopped)	Accelerator pedal: Fully released	ON
		Accelerator pedal: Slightly depressed	OFF

*: Accelerator pedal sensor 2 signal is converted by ECM internally. Thus, it differs from ECM terminal voltage signal.

On Board Diagnosis Logic

UBS00BGT

This self-diagnosis has the one trip detection logic.

NOTE:
If DTC P2138 is displayed with DTC P1229, first perform the trouble diagnosis for DTC P1229. Refer to EC-474 .

DTC No.	Trouble diagnosis name	DTC detecting condition	Possible cause
P2138 2138	Accelerator pedal position sensor circuit range/performance problem	Rationally incorrect voltage is sent to ECM compared with the signals from APP sensor 1 and APP sensor 2.	● Harness or connector (The APP sensor 1 and 2 circuit is open or shorted.) (TP sensor circuit is shorted.) ● Accelerator pedal position sensor 1 and 2 ● Electric throttle control actuator (TP sensor 1 and 2)

FAIL-SAFE MODE

When the malfunction is detected, the ECM enters fail-safe mode and the MIL lights up.

Engine operating condition in fail-safe mode
The ECM controls the electric throttle control actuator in regulating the throttle opening in order for the idle position to be within +10 degrees. The ECM regulates the opening speed of throttle valve to be slower than the normal condition. So, the acceleration will be poor.

DTC Confirmation Procedure

UBS00BGU

NOTE:
If DTC Confirmation Procedure has been previously conducted, always turn ignition switch OFF and wait at least 10 seconds before conducting the next test.
TESTING CONDITION:
Before performing the following procedure, confirm that battery voltage is more than 8V at idle.

WITH CONSULT-II

1. Turn ignition switch ON.
2. Select “DATA MONITOR” mode with CONSULT-II.
3. Start engine and let it idle for 1 second.
4. If DTC is detected, go to EC-597, "Diagnostic Procedure" .

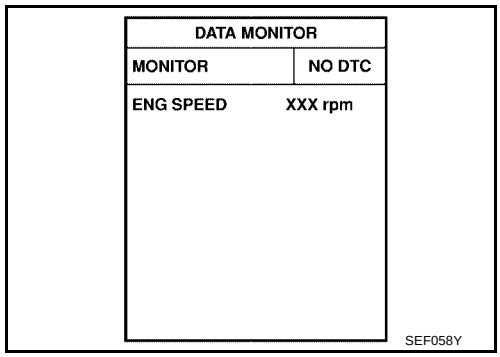

WITH GST

Follow the procedure “WITH CONSULT-II” above.

Wiring Diagram

UBS00BGV

EC-APPS3-01

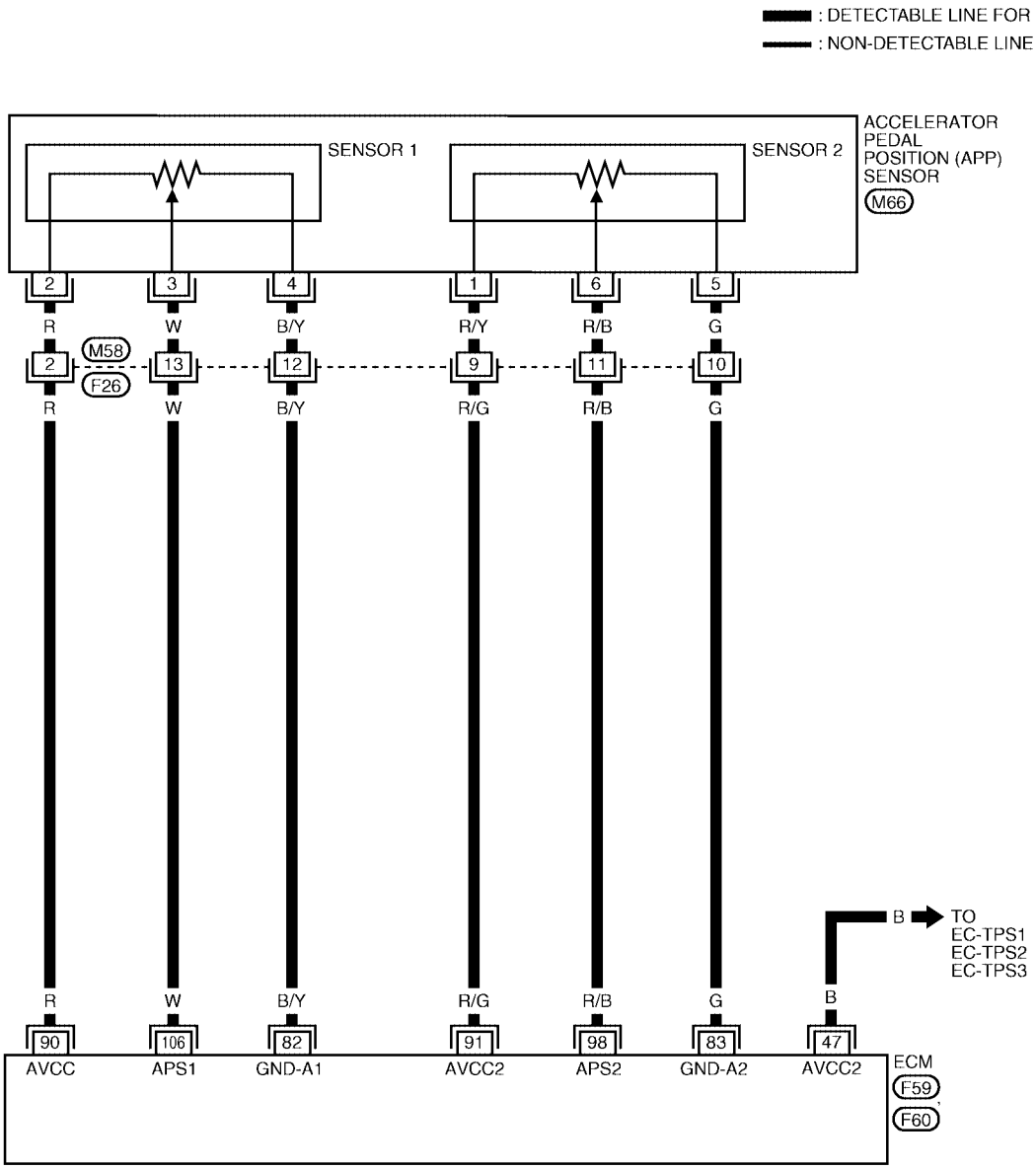

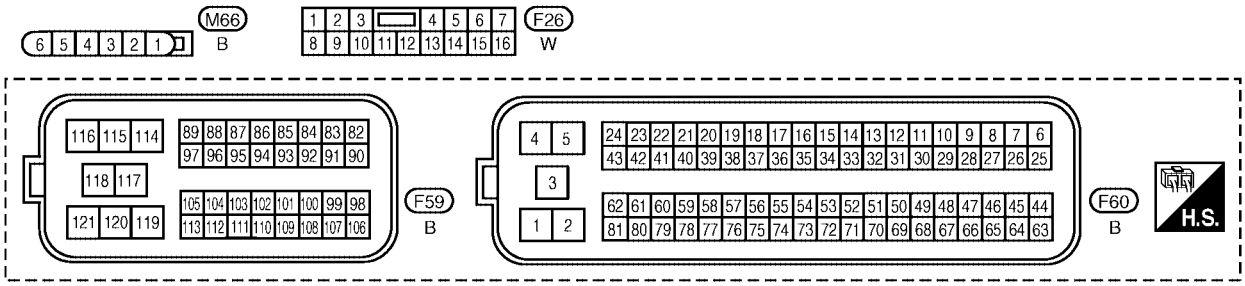

BBWA1487E

Specification data are reference values and are measured between each terminal and ground.

CAUTION:

Do not use ECM ground terminals when measuring input/output voltage. Doing so may result in damage to the ECM's transistor. Use a ground other than ECM terminals, such as the ground.

TERMINAL NO.	WIRE COLOR	ITEM	CONDITION	DATA (DC Voltage)
47	B	Sensor power supply (Throttle position sensor)	**[Ignition switch: ON]**	Approximately 5V
82	B/Y	Sensor ground (Accelerator pedal position sensor 1)	**[Engine is running]** ● **Warm-up condition** ● Idle speed	Approximately 0V
83	G	Sensor ground (Accelerator pedal position sensor 2)	**[Engine is running]** ● **Warm-up condition** ● Idle speed	Approximately 0V
90	R	Sensor power supply (Accelerator pedal position sensor 1)	**[Ignition switch: ON]**	Approximately 5V
91	R/G	Sensor power supply (Accelerator pedal position sensor 2)	**[Ignition switch: ON]**	Approximately 5V
98	R/B	Accelerator pedal position sensor 2	**[Ignition switch: ON]** ● Engine stopped ● Accelerator pedal: Fully released	0.28 - 0.48V
			[Ignition switch: ON] ● Engine stopped ● Accelerator pedal: Fully depressed	More than 2.0V
106	W	Accelerator pedal position sensor 1	**[Ignition switch: ON]** ● Engine stopped ● Accelerator pedal: Fully released	0.65 - 0.87V
			[Ignition switch: ON] ● Engine stopped ● Accelerator pedal: Fully depressed	More than 4.3V

Diagnostic Procedure

UBS00BGW

1. CHECK GROUND CONNECTIONS

1. Turn ignition switch OFF.
2. Loosen and retighten two ground screws on the body. Refer to EC-171, "Ground Inspection" .

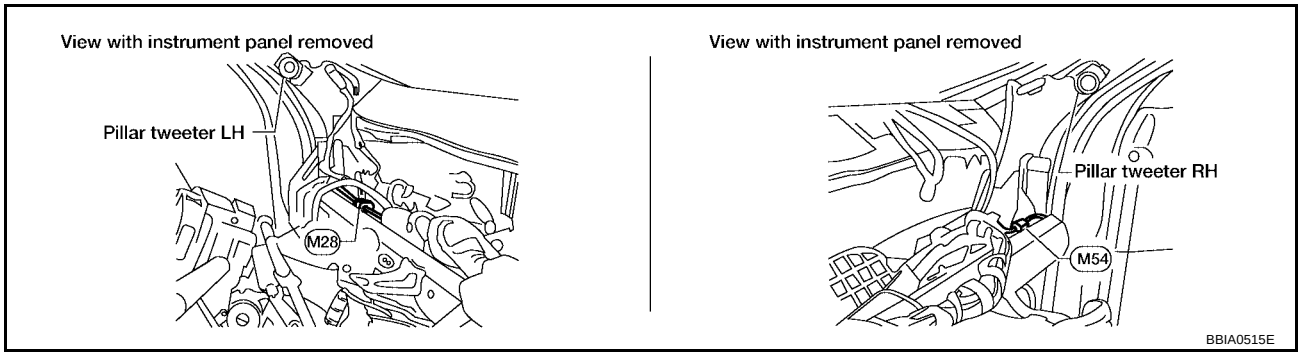

OK or NG

OK >> GO TO 2.
NG >> Repair or replace ground connections.

2. CHECK APP SENSOR 1 POWER SUPPLY CIRCUIT

1. Disconnect accelerator pedal position (APP) sensor harness connector.
2. Turn ignition switch ON.

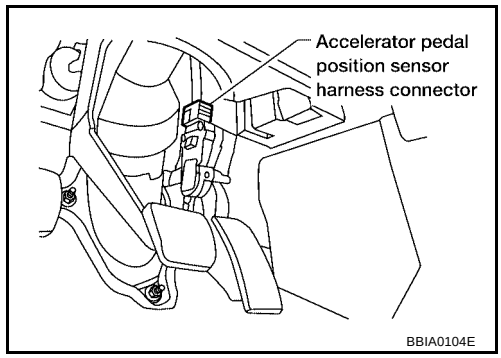

3. Check voltage between APP sensor terminal 2 and ground with CONSULT-II or tester.

Voltage: Approximately 5V

OK or NG

OK >> GO TO 4.
NG >> GO TO 3.

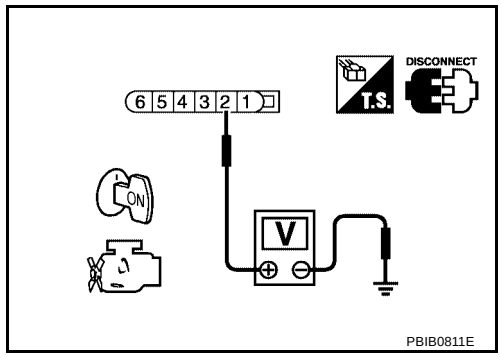

3. DETECT MALFUNCTIONING PART

Check the following.

- Harness connectors M58, F26
- Harness for open or short between ECM and accelerator pedal position sensor

>> Repair open circuit or short to ground or short to power in harness or connectors.

4. CHECK APP SENSOR 2 POWER SUPPLY CIRCUIT-I

Check voltage between APP sensor terminal 1 and ground with CONSULT-II or tester.

Voltage: Approximately 5V

OK or NG

OK >> GO TO 10.
NG >> GO TO 5.

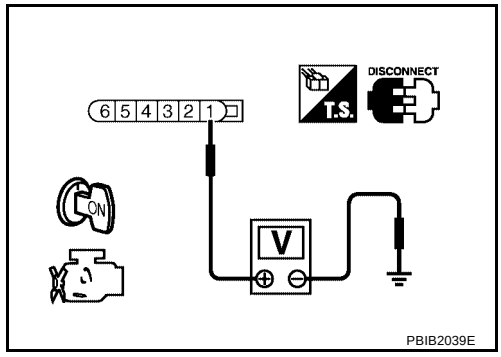

5. CHECK APP SENSOR 2 POWER SUPPLY CIRCUIT-II

1. Turn ignition switch OFF.
2. Disconnect ECM harness connector.
3. Check harness continuity between APP sensor terminal 1 and ECM terminal 91.
   Refer to Wiring Diagram.

Continuity should exist.

OK or NG

OK >> GO TO 7.
NG >> GO TO 6.

6. DETECT MALFUNCTIONING PART

Check the following.

- Harness connectors M58, F26
- Harness for open between ECM and accelerator pedal position sensor

>> Repair or replace open circuit.

7. CHECK APP SENSOR 2 POWER SUPPLY CIRCUIT-III

Check harness for short to power and short to ground, between the following terminals.

ECM terminal	Sensor terminal	Reference Wiring Diagram
91	APP sensor terminal 1	EC-596
47	Electric throttle control actuator terminal 1	EC-401

OK or NG

OK >> GO TO 8.
NG >> Repair short to ground or short to power in harness or connectors.

8. CHECK THROTTLE POSITION SENSOR

Refer to EC-271, "Component Inspection" .

OK or NG

OK >> GO TO 16.
NG >> GO TO 9.

9. REPLACE ELECTRIC THROTTLE CONTROL ACTUATOR

1. Replace the electric throttle control actuator.
2. Perform EC-92, "Throttle Valve Closed Position Learning" .
3. Perform EC-92, "Idle Air Volume Learning" .

>> **INSPECTION END**

10. CHECK APP SENSOR GROUND CIRCUIT FOR OPEN AND SHORT

1. Turn ignition switch OFF.
2. Disconnect ECM harness connector.
3. Check harness continuity between APP sensor terminal 4 and ECM terminal 82, APP sensor terminal 5 and ECM terminal 83.
   Refer to Wiring Diagram.

   Continuity should exist.

4. Also check harness for short to ground and short to power.

OK or NG

OK >> GO TO 12.
NG >> GO TO 11.

11. DETECT MALFUNCTIONING PART

Check the following.

- Harness connectors M58, F26
- Harness for open or short between ECM and accelerator pedal position sensor

>> Repair open circuit or short to ground or short to power in harness or connectors.

12. CHECK APP SENSOR INPUT SIGNAL CIRCUIT FOR OPEN AND SHORT

1. Check harness continuity between ECM terminal 106 and APP sensor terminal 3, ECM terminal 98 and APP sensor terminal 6.
   Refer to Wiring Diagram.

   Continuity should exist.

2. Also check harness for short to ground and short to power.

OK or NG

OK >> GO TO 14.
NG >> GO TO 13.

13. DETECT MALFUNCTIONING PART

Check the following.

- Harness connectors M58, F26
- Harness for open or short between ECM and accelerator pedal position sensor

>> Repair open circuit or short to ground or short to power in harness or connectors.

14. CHECK APP SENSOR

Refer to EC-601, "Component Inspection" .

OK or NG

OK >> GO TO 16.
NG >> GO TO 15.

15. REPLACE ACCELERATOR PEDAL ASSEMBLY

1. Replace accelerator pedal assembly.
2. Perform EC-92, "Accelerator Pedal Released Position Learning" .
3. Perform EC-92, "Throttle Valve Closed Position Learning" .
4. Perform EC-92, "Idle Air Volume Learning" .

>> **INSPECTION END**

16. CHECK INTERMITTENT INCIDENT

Refer to EC-164, "TROUBLE DIAGNOSIS FOR INTERMITTENT INCIDENT" .

>> **INSPECTION END**

Component Inspection

UBS00BGX

ACCELERATOR PEDAL POSITION SENSOR

1. Reconnect all harness connectors disconnected.
2. Turn ignition switch ON.
3. Check voltage between ECM terminals 106 (APP sensor 1 signal), 98 (APP sensor 2 signal) and ground under the following conditions.

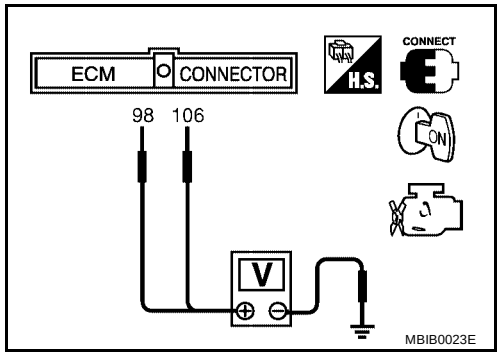

Terminal	Accelerator pedal	Voltage
106 (Accelerator pedal position sensor 1)	Fully released	0.65 - 0.87V
	Fully depressed	More than 4.3V
98 (Accelerator pedal position sensor 2)	Fully released	0.28 - 0.48V
	Fully depressed	More than 2.0V

4. If NG, replace accelerator pedal assembly and go to the next step.
5. Perform EC-92, "Accelerator Pedal Released Position Learning" .
6. Perform EC-92, "Throttle Valve Closed Position Learning" .
7. Perform EC-92, "Idle Air Volume Learning" .

Removal and Installation

UBS00BGY

ACCELERATOR PEDAL

Refer to ACC-2, "ACCELERATOR CONTROL SYSTEM" .

IGNITION SIGNAL

PFP:22448

Component Description

UBS00BGZ

IGNITION COIL & POWER TRANSISTOR

The ignition signal from the ECM is sent to and amplified by the power transistor. The power transistor turns ON and OFF the ignition coil primary circuit. This ON/OFF operation induces the proper high voltage in the coil secondary circuit.

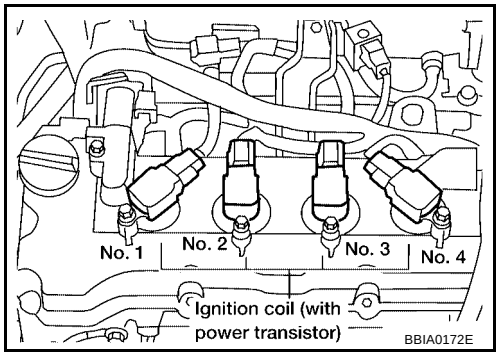

Wiring Diagram

UBS00BH0

EC-IGNSYS-01

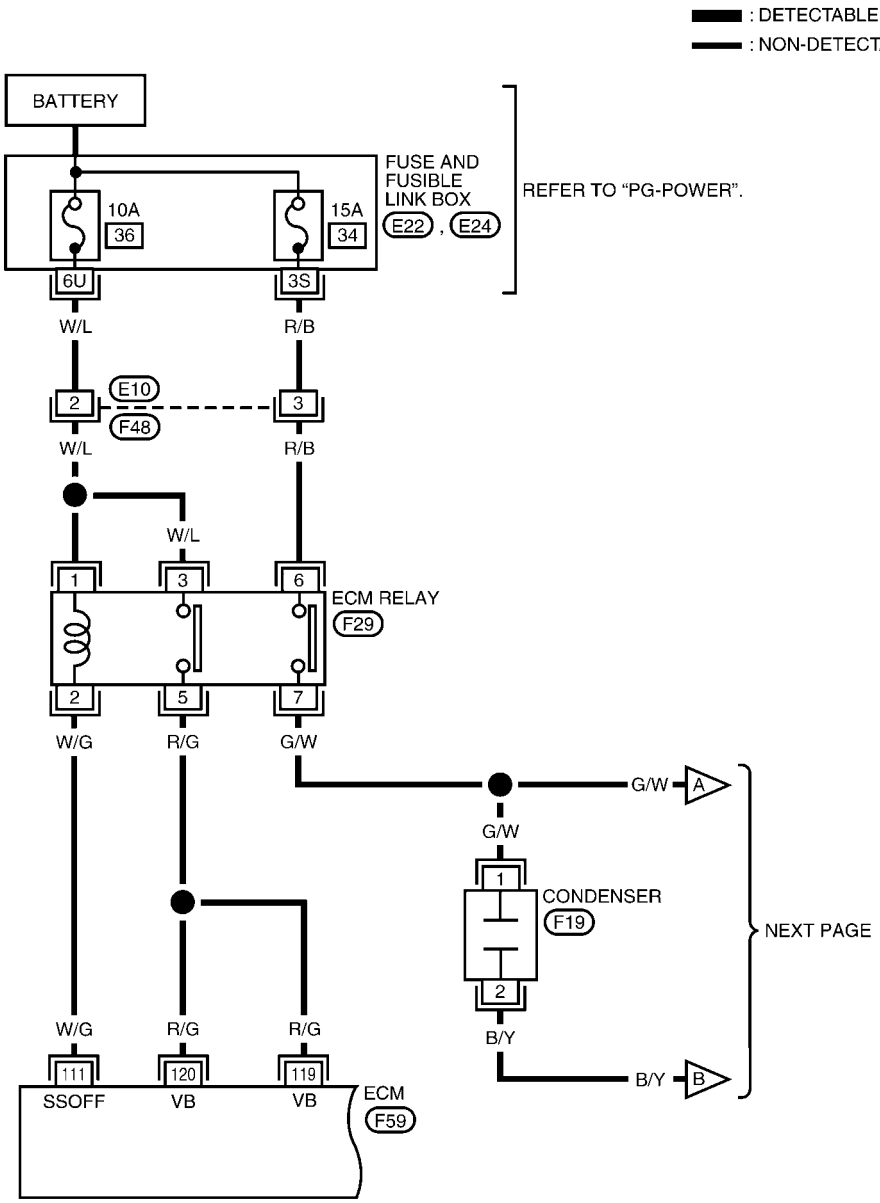

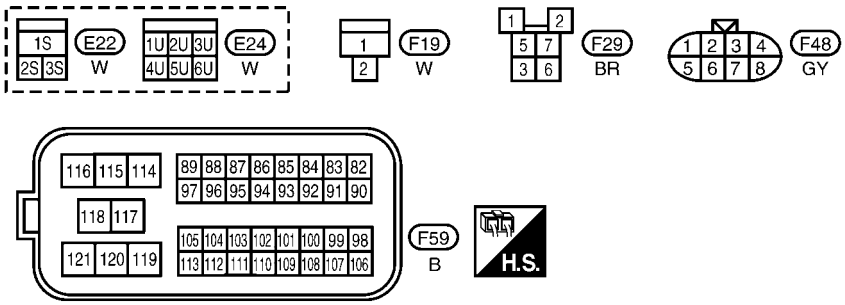

BBWA2282E

Specification data are reference values and are measured between each terminal and ground.

CAUTION:

Do not use ECM ground terminals when measuring input/output voltage. Doing so may result in damage to the ECM's transistor. Use a ground other than ECM terminals, such as the ground.

TERMINAL NO.	WIRE COLOR	ITEM	CONDITION	DATA (DC Voltage)
111	W/G	ECM relay (Self shut-off)	**[Engine is running]** **[Ignition switch: OFF]** ● For a few seconds after turning ignition switch OFF	0 - 1.0V
			[Ignition switch: OFF] ● More than a few seconds after turning ignition switch OFF	BATTERY VOLTAGE (11 - 14V)
119 120	R/G	Power supply for ECM	**[Ignition switch: ON]**	BATTERY VOLTAGE (11 - 14V)

EC-IGNSYS-02

: DETECTABLE LINE FOR DTC
: NON-DETECTABLE LINE FOR DTC

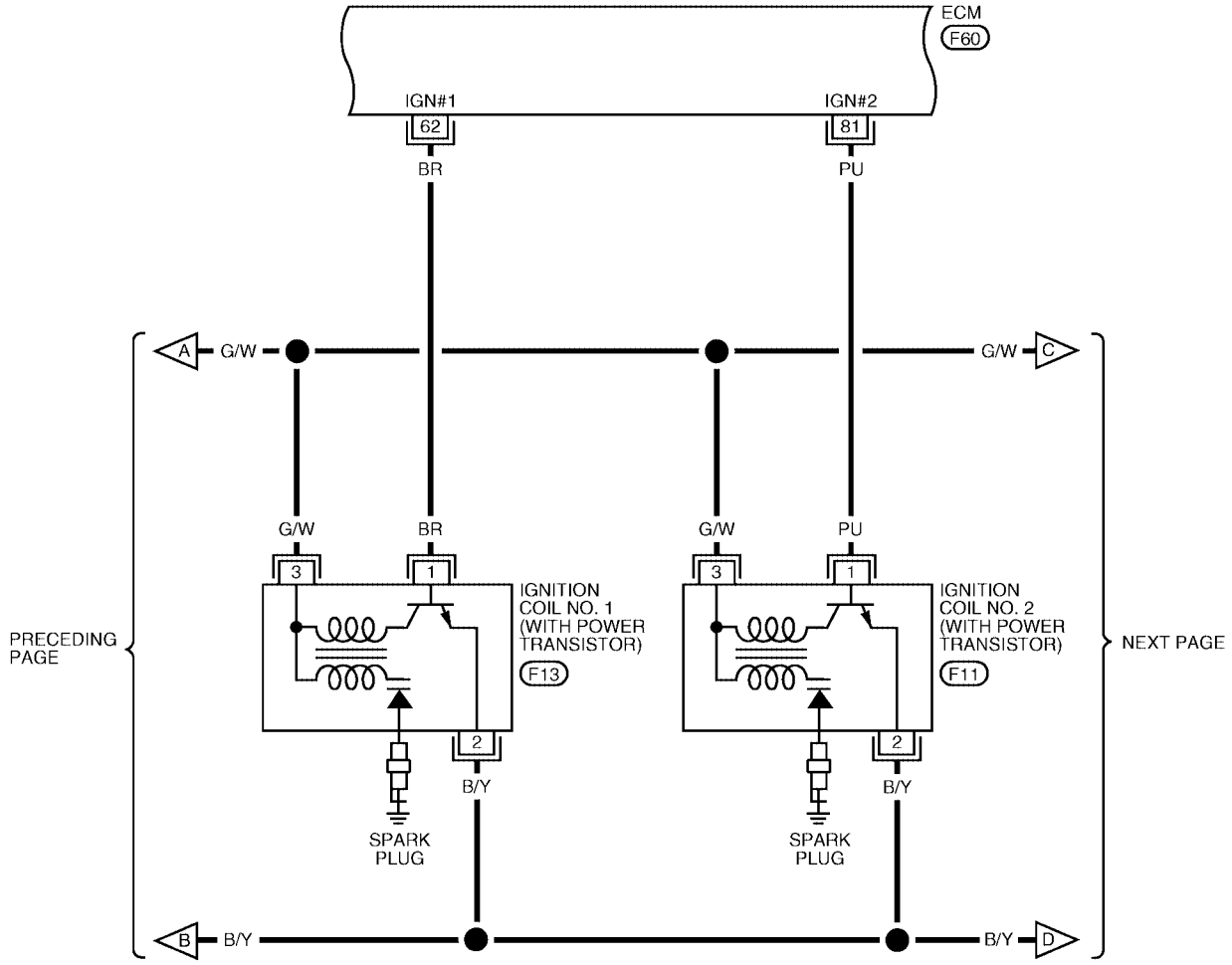

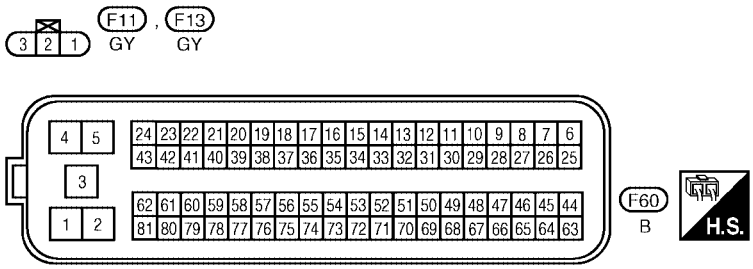

BBWA1447E

Specification data are reference values and are measured between each terminal and ground.
Pulse signal is measured by CONSULT-II.

CAUTION:

Do not use ECM ground terminals when measuring input/output voltage. Doing so may result in damage to the ECM's transistor. Use a ground other than ECM terminals, such as the ground.

TERMINAL NO.	WIRE COLOR	ITEM	CONDITION	DATA (DC Voltage)
62 81	BR PU	Ignition signal No. 1 Ignition signal No. 2	**[Engine is running]** ● **Warm-up condition** ● Idle speed **NOTE:** The pulse cycle changes depending on rpm at idle.	0 - 0.1V★ 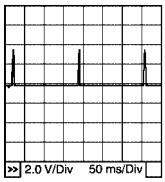 PBIB0521E
			[Engine is running] ● **Warm-up condition** ● Engine speed is 2,000 rpm.	0 - 0.2V★ 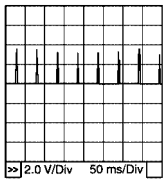 PBIB0522E

★: Average voltage for pulse signal (Actual pulse signal can be confirmed by oscilloscope.)

EC-IGNSYS-03

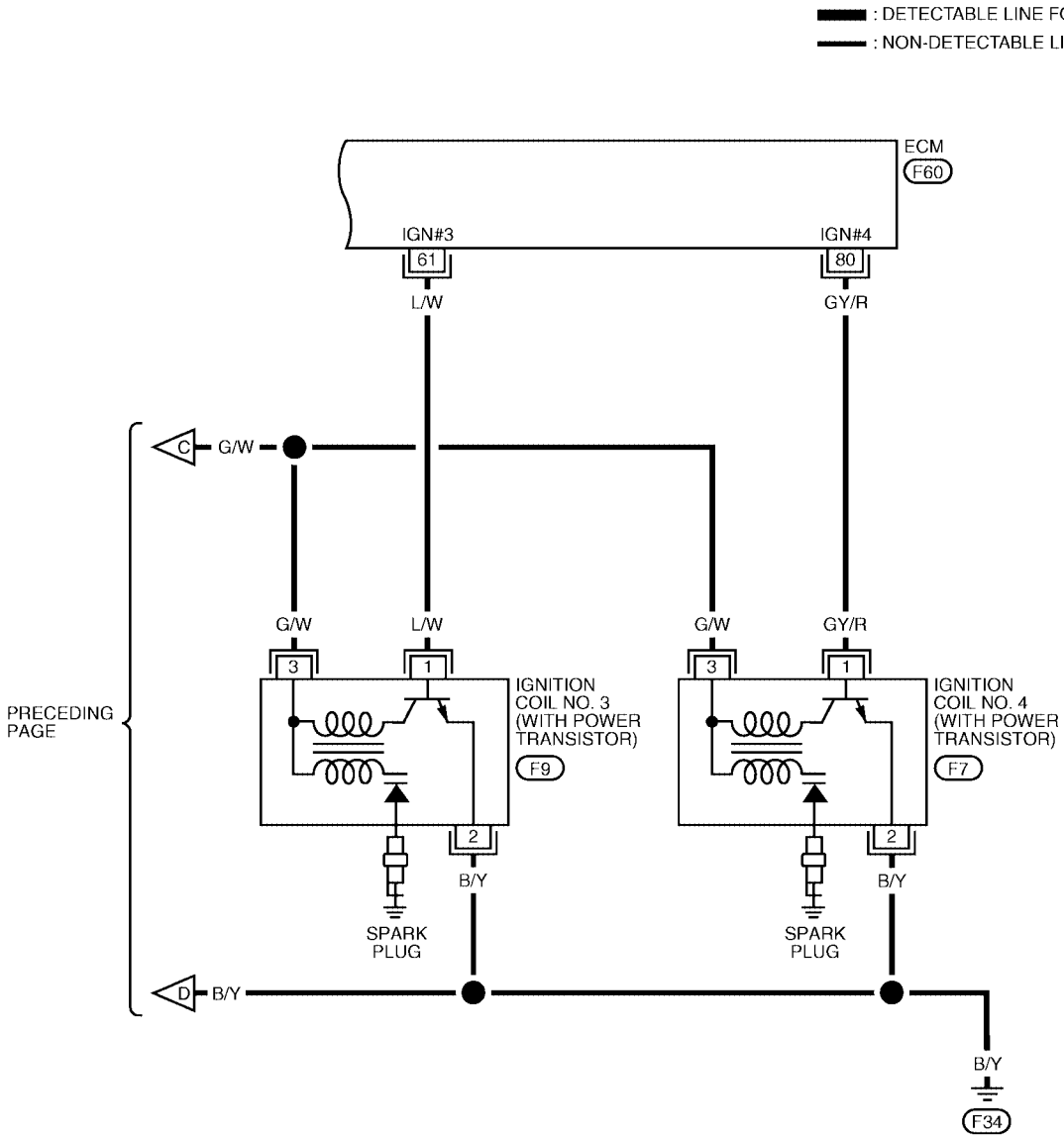

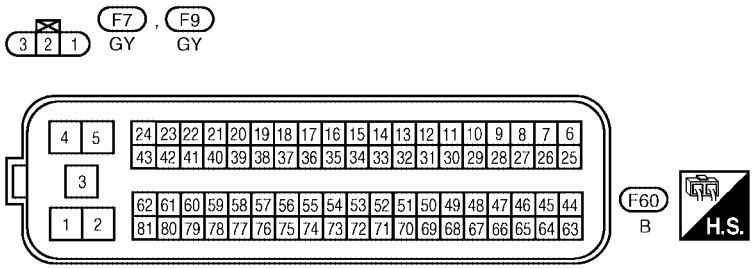

BBWA1448E

Specification data are reference values and are measured between each terminal and ground.
Pulse signal is measured by CONSULT-II.

CAUTION:

Do not use ECM ground terminals when measuring input/output voltage. Doing so may result in damage to the ECM's transistor. Use a ground other than ECM terminals, such as the ground.

TERMINAL NO.	WIRE COLOR	ITEM	CONDITION	DATA (DC Voltage)
61 80	L/W GY/R	Ignition signal No. 3 Ignition signal No. 4	**[Engine is running]** ● **Warm-up condition** ● Idle speed **NOTE:** The pulse cycle changes depending on rpm at idle.	0 - 0.1V★ 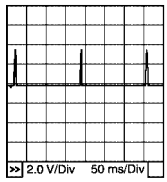 PBIB0521E
			[Engine is running] ● **Warm-up condition** ● Engine speed is 2,000 rpm.	0 - 0.2V★ 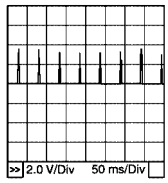 PBIB0522E

★: Average voltage for pulse signal (Actual pulse signal can be confirmed by oscilloscope.)

Diagnostic Procedure

UBS00BH1

1. CHECK ENGINE START

Turn ignition switch OFF, and restart engine.
Is engine running?

Yes or No

Yes (With CONSULT-II) >>GO TO 2.
Yes (Without CONSULT-II) >>GO TO 3.
No >> GO TO 4.

2. CHECK OVERALL FUNCTION

With CONSULT-II

1. Perform “POWER BALANCE” in “ACTIVE TEST” mode with CONSULT-II.
2. Make sure that each circuit produces a momentary engine speed drop.

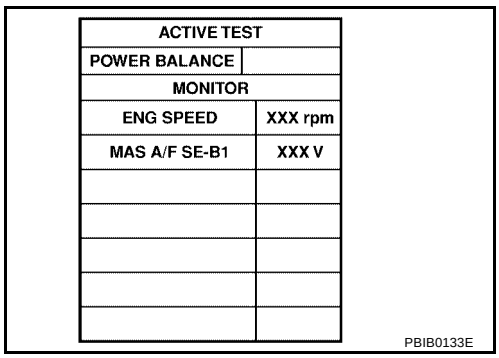

ACTIVE TEST	
POWER BALANCE	
MONITOR	
ENG SPEED	XXX rpm
MAS A/F SE-B1	XXX V

PBIB0133E

OK or NG

OK >> **INSPECTION END**
NG >> GO TO 10.

3. CHECK OVERALL FUNCTION

Without CONSULT-II

1. Let engine idle.
2. Read the voltage signal between ECM terminals 61, 62, 80, 81 and ground with an oscilloscope.
3. Verify that the oscilloscope screen shows the signal wave as shown below.

   NOTE:
   The pulse cycle changes depending on rpm at idle.

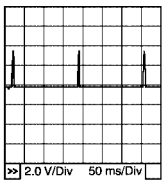

PBIB0521E

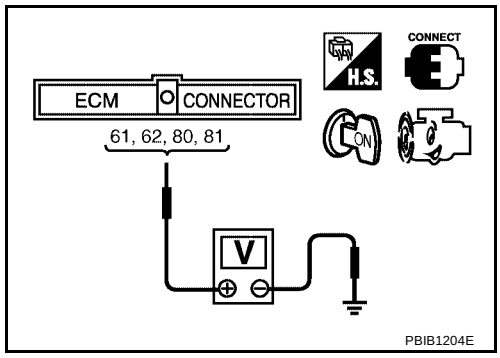

PBIB1204E

OK or NG

OK >> **INSPECTION END**
NG >> GO TO 10.

4. CHECK IGNITION COIL POWER SUPPLY CIRCUIT-I

1. Turn ignition switch ON.
2. Check voltage between ECM terminals 119, 120 and ground with CONSULT-II or tester.

   Voltage: Battery voltage

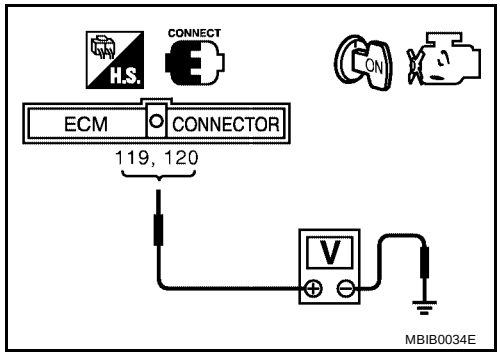

MBIB0034E

OK or NG

OK >> GO TO 5.
NG >> Go to EC-165, "POWER SUPPLY AND GROUND CIRCUIT" .

5. CHECK IGNITION COIL POWER SUPPLY CIRCUIT-II

1. Turn ignition switch OFF.
2. Disconnect condenser harness connector.
3. Turn ignition switch ON.
4. Check voltage between condenser terminal 1 and ground with CONSULT-II or tester.

   Voltage: Battery voltage

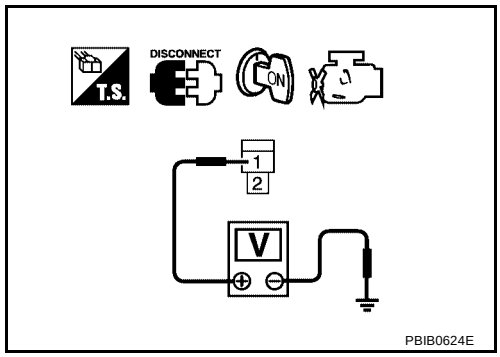

PBIB0624E

OK or NG

OK >> GO TO 10.
NG >> GO TO 6.

6. CHECK IGNITION COIL POWER SUPPLY CIRCUIT-III

1. Turn ignition switch OFF.
2. Disconnect ECM relay.
3. Check harness continuity between ECM relay terminal 7 and condenser terminal 1.
   Refer to Wiring Diagram.

   Continuity should exist.

4. Also check harness for short to ground and short to power.

OK or NG

OK >> GO TO 7.
NG >> Repair open circuit or short to ground or short to power in harness or connectors.

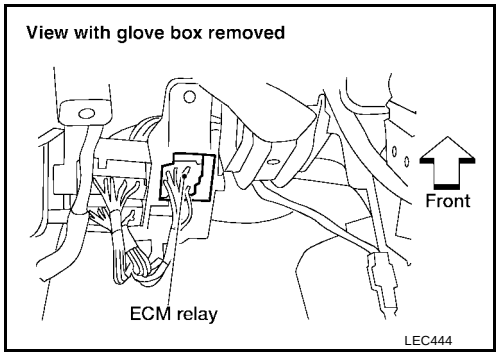

7. CHECK IGNITION COIL POWER SUPPLY CIRCUIT-IV

Check voltage between ECM relay terminal 6 and ground with CONSULT-II or tester.

Voltage: Battery voltage

OK or NG

OK >> GO TO 9.
NG >> GO TO 8.

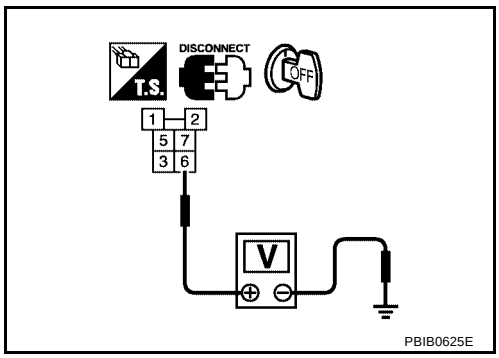

8. DETECT MALFUNCTIONING PART

Check the following.

- Harness connectors E10, F48
- 15A fuse
- Harness for open or short between ECM relay and battery

>> Repair or replace harness or connectors.

9. CHECK ECM RELAY

Refer to EC-612, "Component Inspection" .

OK or NG

OK >> GO TO 17.
NG >> Replace ECM relay.

10. CHECK CONDENSER GROUND CIRCUIT FOR OPEN AND SHORT

1. Turn ignition switch OFF.
2. Disconnect condenser harness connector.
3. Check harness continuity between condenser terminal 2 and ground.
   Refer to Wiring diagram.

   Continuity should exist.

4. Also check harness for short to power.

OK or NG

OK >> GO TO 11.
NG >> Repair open circuit or short to power in harness or connector.

11. CHECK CONDENSER

Refer to EC-612, "Component Inspection" .

OK or NG

OK >> GO TO 12.
NG >> Replace condenser.

12. CHECK IGNITION COIL POWER SUPPLY CIRCUIT-V

1. Turn ignition switch OFF.
2. Reconnect all harness connectors disconnected.
3. Disconnect ignition coil harness connector.
4. Turn ignition switch ON.

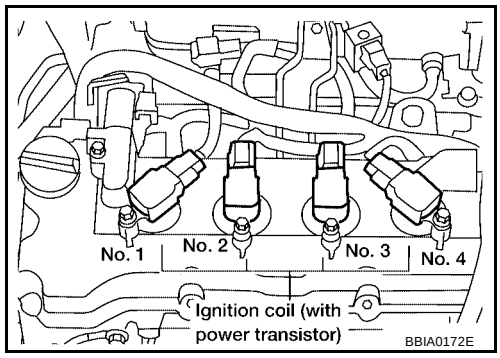

5. Check voltage between ignition coil terminal 3 and ground with CONSULT-II or tester.

Voltage: Battery voltage

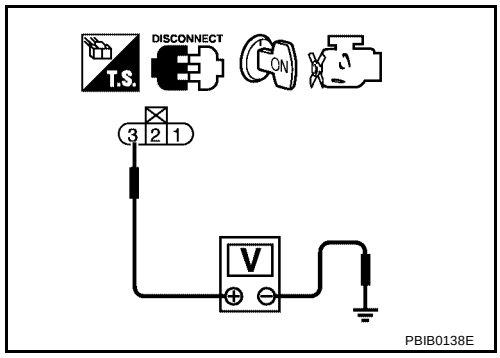

OK or NG

OK >> GO TO 14.
NG >> GO TO 13.

13. DETECT MALFUNCTIONING PART

Check the following.

- Harness for open or short between ignition coil and ECM relay

>> Repair open circuit or short to ground or short to power in harness or connectors.

14. CHECK IGNITION COIL GROUND CIRCUIT FOR OPEN AND SHORT

1. Turn ignition switch OFF.
2. Check harness continuity between ignition coil terminal 2 and ground.
   Refer to Wiring Diagram.

Continuity should exist.

3. Also check harness for short to power.

OK or NG

OK >> GO TO 15.
NG >> Repair open circuit or short to power in harness or connectors.

15. CHECK IGNITION COIL OUTPUT SIGNAL CIRCUIT FOR OPEN AND SHORT

1. Disconnect ECM harness connector.
2. Check harness continuity between ECM terminals 61, 62, 80, 81 and ignition coil terminal 1. Refer to Wiring Diagram.

Continuity should exist.

3. Also check harness for short to ground and short to power.

OK or NG

OK >> GO TO 16.
NG >> Repair open circuit or short to ground or short to power in harness or connectors.

16. CHECK IGNITION COIL WITH POWER TRANSISTOR

Refer to EC-612, "Component Inspection" .

OK or NG

OK >> GO TO 17.
NG >> Replace ignition coil with power transistor.

17. CHECK INTERMITTENT INCIDENT

Refer to EC-164, "TROUBLE DIAGNOSIS FOR INTERMITTENT INCIDENT" .

>> **INSPECTION END**

Component Inspection

UBS00BH2

ECM RELAY

1. Apply 12V direct current between ECM relay terminals 1 and 2.
2. Check continuity between relay terminals 3 and 5, 6 and 7.

Condition	Continuity
12V direct current supply between terminals 1 and 2	Yes
OFF	No

3. If NG, replace ECM relay.

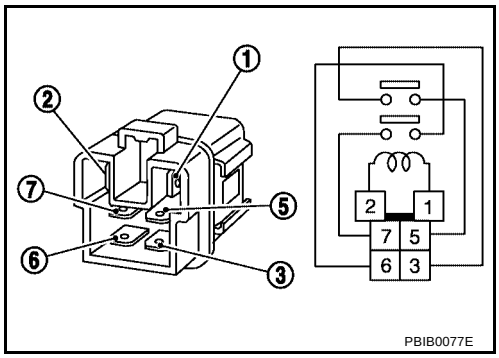

IGNITION COIL WITH POWER TRANSISTOR

CAUTION:

Do the following procedure in the place where ventilation is good without the combustible.

1. Turn ignition switch OFF.
2. Disconnect ignition coil harness connector.
3. Check resistance between ignition coil terminals as follows.

Terminal No. (Polarity)	Resistance Ω [at 25°C (77°F)]
1 and 2	Except 0 or ∞
1 and 3	Except 0
2 and 3	

4. If NG, replace ignition coil with power transistor.
   If OK, go to next step.
5. Turn ignition switch OFF.
6. Reconnect all harness connectors disconnected.

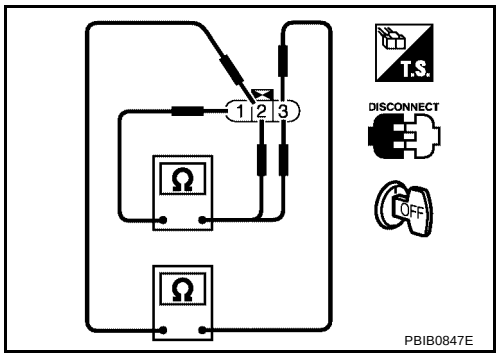

7. Remove fuel pump fuse in fuse block No. 1 to release fuel pressure.

   NOTE:
   Do not use CONSULT-II to release fuel pressure, or fuel pressure applies again during the following procedure.

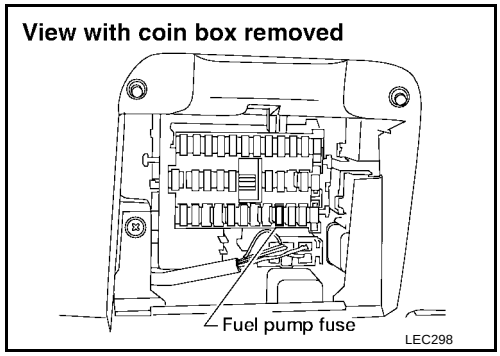

8. Start engine.
9. After engine stalls, crank it two or three times to release all fuel pressure.
10. Turn ignition switch OFF.
11. Remove all ignition coil harness connectors to avoid the electrical discharge from the ignition coils.
12. Remove ignition coil and spark plug of the cylinder to be checked.
13. Crank engine for five seconds or more to remove combustion gas in the cylinder.
14. Connect spark plug and harness connector to ignition coil.
15. Fix ignition coil using a rope etc. with gap of 13 - 17 mm between the edge of the spark plug and grounded metal portion as shown in the figure.

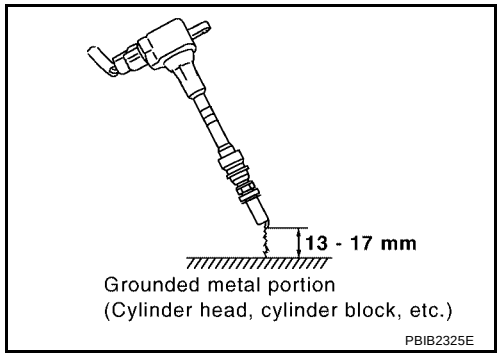

16. Crank engine for about three seconds, and check whether spark is generated between the spark plug and the grounded metal portion.

    Spark should be generated.

    CAUTION:
    - **Do not approach to the spark plug and the ignition coil within 50cm. Be careful not to get an electrical shock while checking, because the electrical discharge voltage becomes 20kV or more.**
    - **It might cause to damage the ignition coil if the gap of 17 mm or more is taken.**

    NOTE:
    When the gap is 13 mm or less, the spark might be generated even if the coil is malfunctioning.
17. If NG, replace ignition coil with power transistor.

CONDENSER

1. Turn ignition switch OFF.
2. Disconnect condenser harness connector.
3. Check resistance between condenser terminals 1 and 2.

Resistance: Above 1 MΩ at 25°C (77°F)

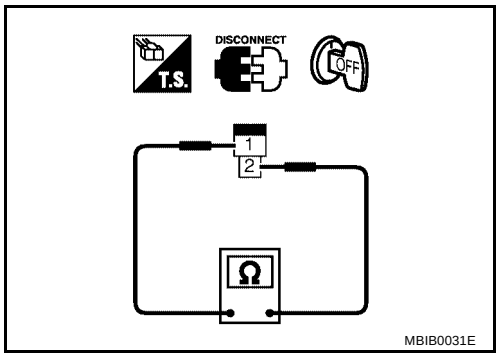

UBS00BH3

Removal and Installation

IGNITION COIL WITH POWER TRANSISTOR

Refer to EM-15, "Removal and Installation" .

INJECTOR

PFP:16600

Component Description

UBS00BH4

The fuel injector is a small, precise solenoid valve. When the ECM supplies a ground to the injector circuit, the coil in the injector is energized. The energized coil pulls the needle valve back and allows fuel to flow through the injector into the intake manifold. The amount of fuel injected depends upon the injection pulse duration. Pulse duration is the length of time the injector remains open. The ECM controls the injection pulse duration based on engine fuel needs.

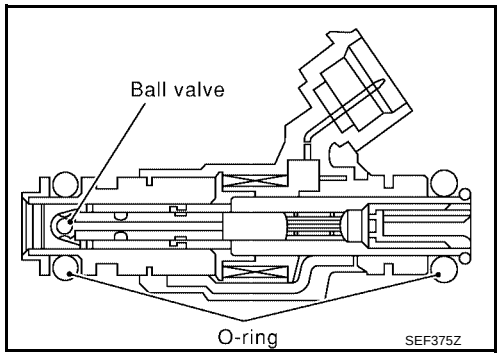

CONSULT-II Reference Value in Data Monitor Mode

UBS00BH5

MONITOR ITEM	CONDITION		SPECIFICATION
INJ PULSE-B1	● Engine: After warming up ● Air conditioner switch: OFF ● Shift lever: N (A/T), Neutral (M/T) ● No-load	Idle	2.4 - 3.2 msec
		2,000 rpm	1.9 - 3.2 msec
B/FUEL SCHDL	● Engine: After warming up ● Air conditioner switch: OFF ● Shift lever: N (A/T), Neutral (M/T) ● No-load	Idle	1.0 - 1.6 msec
		2,000 rpm	0.7 - 1.3 msec

Wiring Diagram

UBS00BH6

EC-INJECT-01

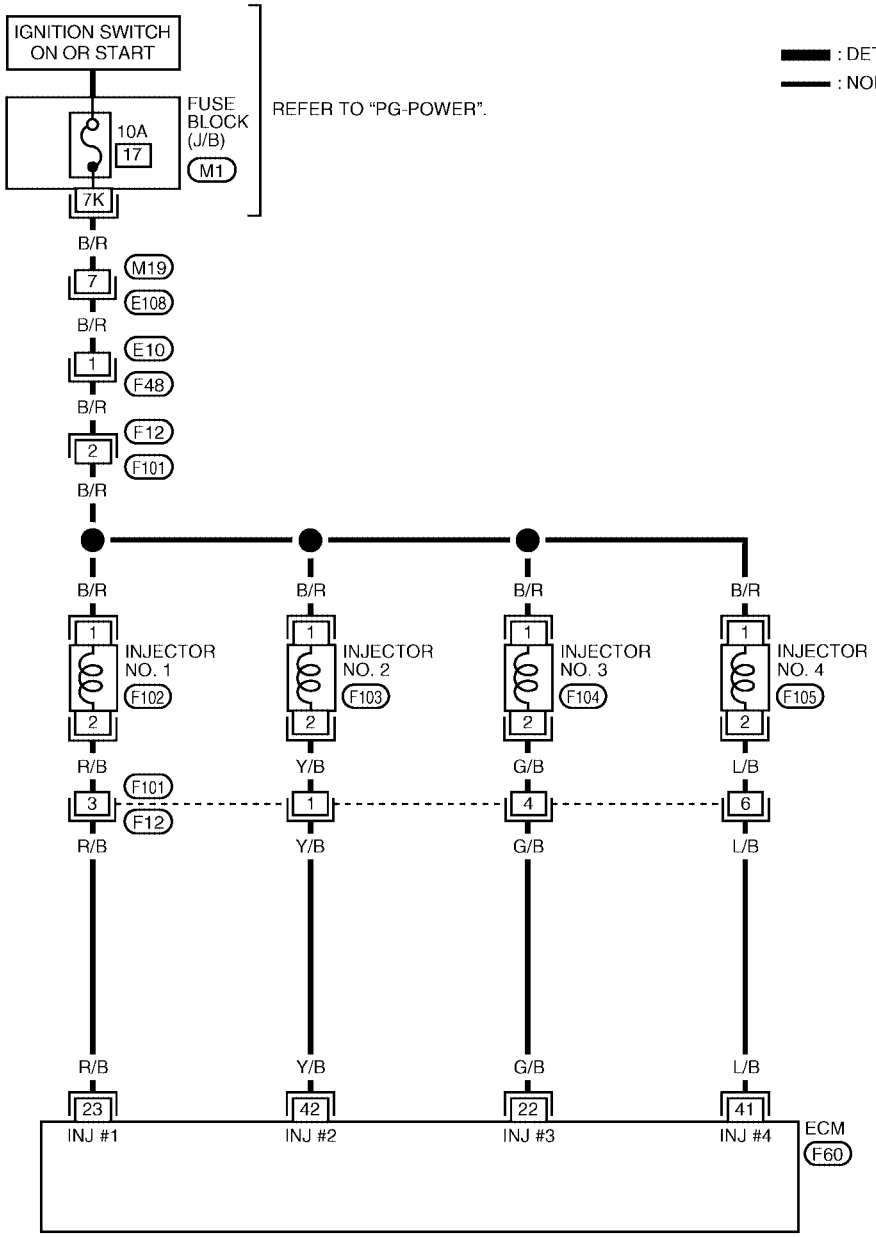

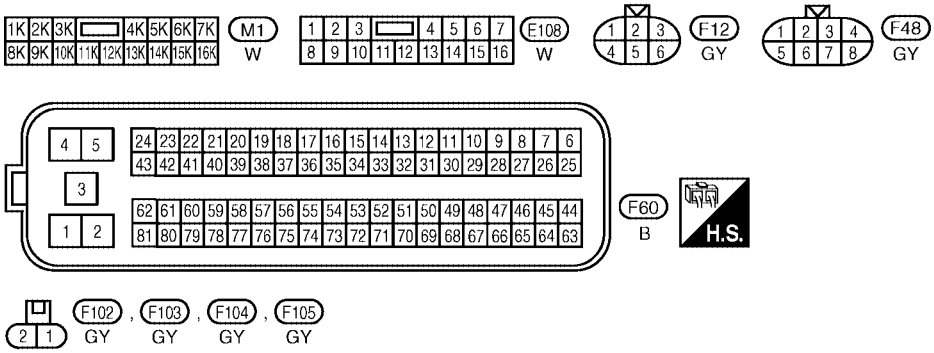

BBWA1450E

Specification data are reference values and are measured between each terminal and ground.
Pulse signal is measured by CONSULT-II.

CAUTION:
Do not use ECM ground terminals when measuring input/output voltage. Doing so may result in damage to the ECM's transistor. Use a ground other than ECM terminals, such as the ground.

TERMINAL NO.	WIRE COLOR	ITEM	CONDITION	DATA (DC Voltage)
22 23 41 42	G/B R/B L/B Y/B	Injector No. 3 Injector No. 1 Injector No. 4 Injector No. 2	**[Engine is running]** ● **Warm-up condition** ● Idle speed **NOTE:** The pulse cycle changes depending on rpm at idle.	BATTERY VOLTAGE (11 - 14V)★ 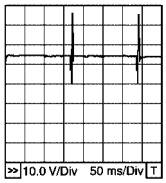 PBIB0529E
			[Engine is running] ● **Warm-up condition** ● Engine speed is 2,000 rpm	BATTERY VOLTAGE (11 - 14V)★ 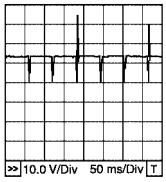 PBIB0530E

★: Average voltage for pulse signal (Actual pulse signal can be confirmed by oscilloscope.)

Diagnostic Procedure

UBS00BH7

1. INSPECTION START

Turn ignition switch to START.
Is any cylinder ignited?

Yes or No

Yes >> GO TO 2.
No >> GO TO 3.

2. CHECK OVERALL FUNCTION

With CONSULT-II

1. Start engine.
2. Perform “POWER BALANCE” in “ACTIVE TEST” mode with CONSULT-II.
3. Make sure that each circuit produces a momentary engine speed drop.

ACTIVE TEST	
POWER BALANCE	
MONITOR	
ENG SPEED	XXX rpm
MAS A/F SE-B1	XXX V

PBIB0133E

Without CONSULT-II

1. Start engine.
2. Listen to each injector operating sound.
   Clicking noise should be heard.

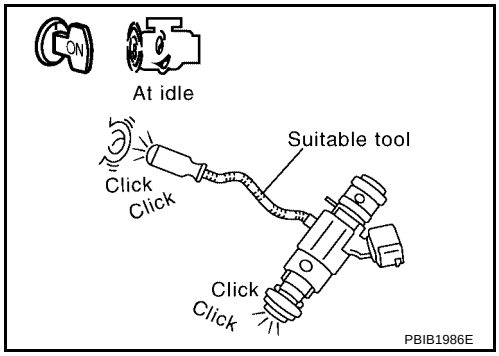

OK or NG

OK >> **INSPECTION END**
NG >> GO TO 3.

3. CHECK POWER SUPPLY CIRCUIT

1. Stop engine.
2. Disconnect injector harness connector.
3. Turn ignition switch ON.

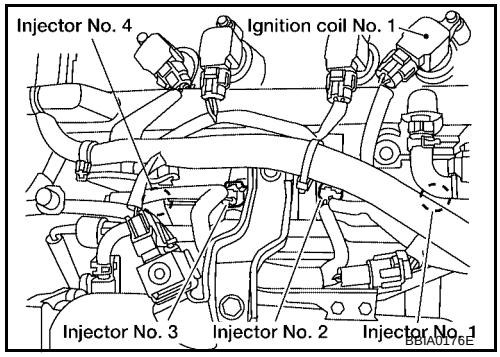

4. Check voltage between injector terminal 1 and ground with CONSULT-II or tester.

Voltage: Battery voltage

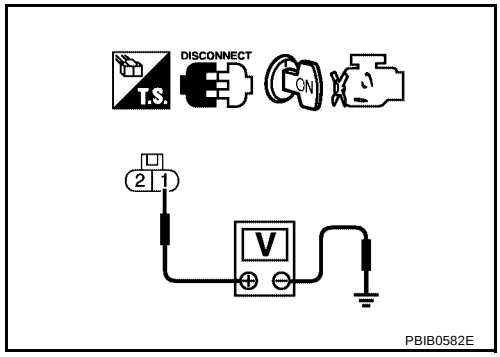

OK or NG

OK >> GO TO 5.
NG >> GO TO 4.

4. DETECT MALFUNCTIONING PART

Check the following.

- Harness connectors M19, E108
- Harness connectors E10, F48
- Harness connectors F12, F101
- Fuse block (J/B) connector M1
- 10A fuse
- Harness for open or short between injector and fuse

>> Repair harness or connectors.

5. CHECK INJECTOR OUTPUT SIGNAL CIRCUIT FOR OPEN AND SHORT

1. Turn ignition switch OFF.
2. Disconnect ECM harness connector.
3. Check harness continuity between injector harness connector terminal 2 and ECM terminals 22, 23, 41, 42.
   Refer to Wiring Diagram.

Continuity should exist.

4. Also check harness for short to ground and short to power.

OK or NG

OK >> GO TO 7.
NG >> GO TO 6.

6. DETECT MALFUNCTIONING PART

Check the following.

- Harness connectors F12, F101
- Harness for open or short between injector and ECM

>> Repair open circuit or short to ground or short to power in harness or connectors.

7. CHECK INJECTOR

Refer to EC-620, "Component Inspection" .

OK or NG

OK >> GO TO 8.
NG >> Replace injector.

8. CHECK INTERMITTENT INCIDENT

Perform EC-164, "TROUBLE DIAGNOSIS FOR INTERMITTENT INCIDENT" .

>> **INSPECTION END**

Component Inspection

UBS00BH8

INJECTOR

1. Disconnect injector harness connector.
2. Check resistance between terminals as shown in the figure.

Resistance: 12.5 - 18.4Ω [at 20°C (68°F)]

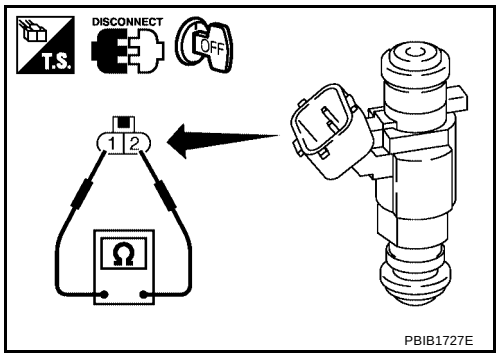

Removal and Installation

UBS00BH9

INJECTOR

Refer to EM-21, "Removal and Installation" .

FUEL PUMP

PFP:17042

System Description

UBS00BHA

SYSTEM DESCRIPTION

Sensor	Input Signal to ECM	ECM function	Actuator
Crankshaft position sensor (POS) Camshaft position sensor (PHASE)	Engine speed*	Fuel pump control	Fuel pump relay
Battery	Battery voltage*		

*: ECM determines the start signal status by the signals of engine speed and battery voltage.

The ECM activates the fuel pump for 1 second after the ignition switch is turned ON to improve engine start-ability. If the ECM receives a engine speed signal from the camshaft position sensor (PHASE), it knows that the engine is rotating, and causes the pump to operate. If the engine speed signal is not received when the ignition switch is ON, the engine stalls. The ECM stops pump operation and prevents battery discharging, thereby improving safety. The ECM does not directly drive the fuel pump. It controls the ON/OFF fuel pump relay, which in turn controls the fuel pump.

Condition	Fuel pump operation
Ignition switch is turned to ON.	Operates for 1 second
Engine running and cranking	Operates
When engine is stopped	Stops in 1 second
Except as shown above	Stops

COMPONENT DESCRIPTION

A turbine type design fuel pump is used in the fuel tank.

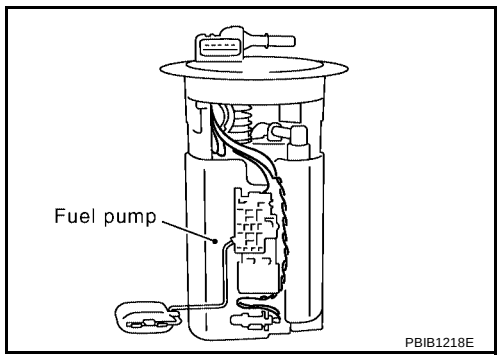

CONSULT-II Reference Value in Data Monitor Mode

UBS00BHB

MONITOR ITEM	CONDITION	SPECIFICATION
FUEL PUMP RLY	● Ignition switch is turned to ON (Operates for 1 second) ● Engine running and cranking ● When engine is stopped (Stops in 1 second)	ON
	● Except as shown above	OFF

Wiring Diagram

UBS00BHC

EC-F/PUMP-01

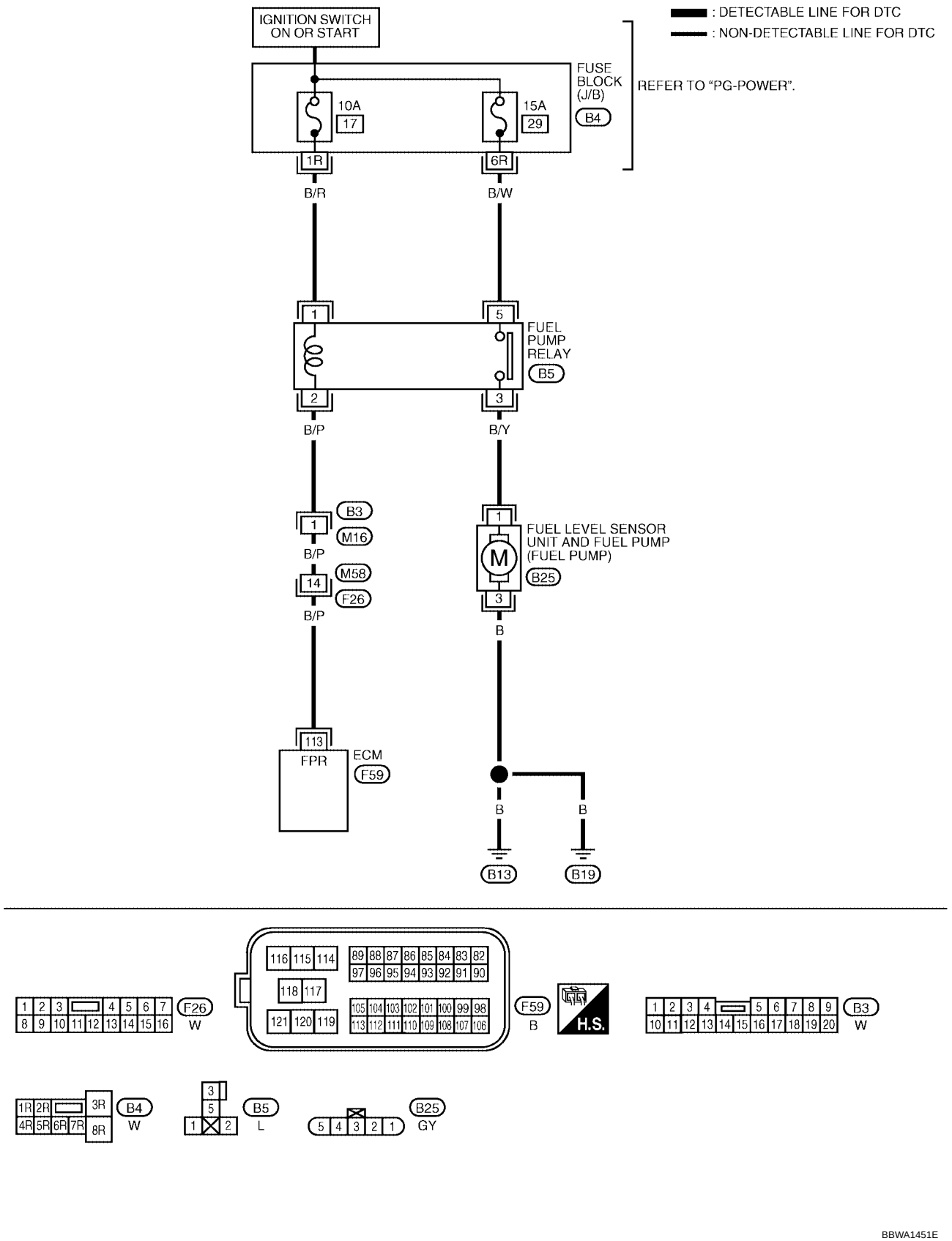

Specification data are reference values and are measured between each terminal and ground.

CAUTION:

Do not use ECM ground terminals when measuring input/output voltage. Doing so may result in damage to the ECM's transistor. Use a ground other than ECM terminals, such as the ground.

TERMINAL NO.	WIRE COLOR	ITEM	CONDITION	DATA (DC Voltage)
113	B/P	Fuel pump relay	**[Ignition switch: ON]** ● For 1 second after turning ignition switch ON. **[Engine is running]**	0 - 1.0V
			[Ignition switch: ON] ● More than 1 second after turning ignition switch ON.	BATTERY VOLTAGE (11 - 14V)

Diagnostic Procedure

UBS00BHD

1. CHECK OVERALL FUNCTION

1. Turn ignition switch ON.
2. Pinch fuel feed hose with fingers.
   Fuel pressure pulsation should be felt on the fuel feed hose for 1 seconds after ignition switch is turned ON.

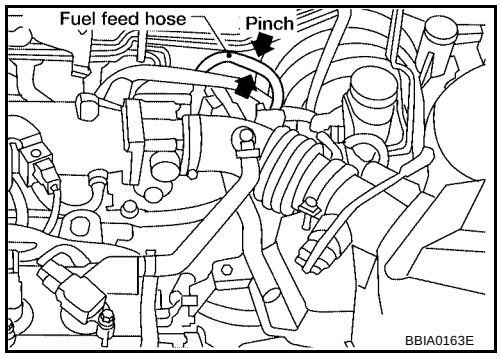

OK or NG

OK >> **INSPECTION END**
NG >> GO TO 2.

2. CHECK FUEL PUMP POWER SUPPLY CIRCUIT-I

1. Turn ignition switch OFF.
2. Disconnect fuel pump relay.
3. Turn ignition switch ON.

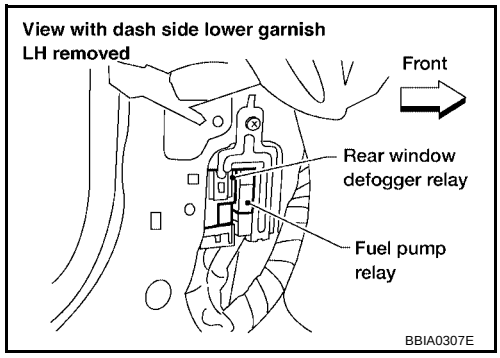

4. Check voltage between fuel pump relay terminals 1, 5 and ground with CONSULT-II or tester.

   Voltage: Battery voltage

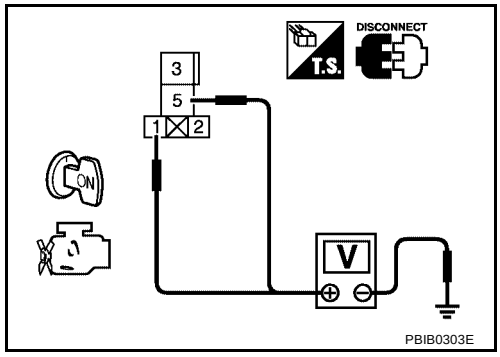

OK or NG

OK >> GO TO 4.
NG >> GO TO 3.

3. DETECT MALFUNCTIONING PART

Check the following.

- 10A fuse
- 15A fuse
- Fuse block (J/B) connector B4
- Harness for open or short between fuse and fuel pump relay

>> Repair harness or connectors.

4. CHECK POWER CIRCUIT AND GROUND CIRCUIT FOR OPEN AND SHORT

1. Turn ignition switch OFF.
2. Disconnect “fuel level sensor unit and fuel pump” harness connector.
3. Check harness continuity between “fuel level sensor unit and fuel pump” terminal 3 and body ground, “fuel level sensor unit and fuel pump” terminal 1 and fuel pump relay terminal 3. Refer to wiring diagram.

   Continuity should exist.

4. Also check harness for short to ground and short to power.

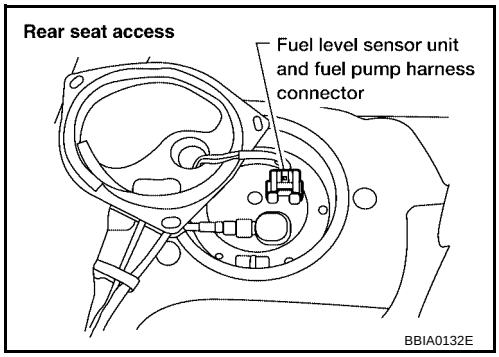

OK or NG

OK >> GO TO 6.
NG >> GO TO 5.

5. DETECT MALFUNCTIONING PART

Check the following.

- Harness for open or short between and “fuel level sensor unit and fuel pump” and ground
- Harness for open or short between and “fuel level sensor unit and fuel pump” and fuel pump relay

>> Repair open circuit or short to ground or short to power in harness or connectors.

6. CHECK FUEL PUMP RELAY OUTPUT SIGNAL CIRCUIT FOR OPEN AND SHORT

1. Disconnect ECM harness connector.
2. Check harness continuity between ECM terminal 113 and fuel pump relay terminal 2. Refer to Wiring Diagram.

   Continuity should exist.

3. Also check harness for short to ground and short to power.

OK or NG

OK >> GO TO 8.
NG >> GO TO 7.

7. DETECT MALFUNCTIONING PART

Check the following.

- Harness connectors B3, M16
- Harness connector M58, F26
- Harness for open or short between ECM and fuel pump relay

>> Repair open circuit or short to ground or short to power in harness or connectors.

8. CHECK FUEL PUMP RELAY

Refer to EC-625, "Component Inspection" .

OK or NG

OK >> GO TO 9.
NG >> Replace fuel pump relay.

9. CHECK FUEL PUMP

Refer to EC-625, "Component Inspection" .

OK or NG

OK >> GO TO 10.
NG >> Replace “fuel level sensor unit and fuel pump”.

10. CHECK INTERMITTENT INCIDENT

Perform EC-164, "TROUBLE DIAGNOSIS FOR INTERMITTENT INCIDENT" .

>> **INSPECTION END**

Component Inspection

UBS00BHE

FUEL PUMP RELAY

Check continuity between terminals 3 and 5.

Condition	Continuity
12V direct current supply between terminals 1 and 2	Yes
No current supply	No

If NG, replace relay.

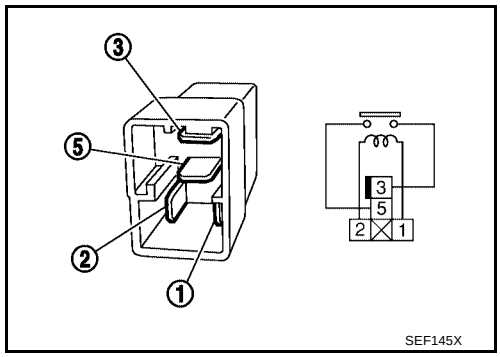

SEF145X

FUEL PUMP

1. Disconnect “fuel level sensor unit and fuel pump” harness connector.
2. Check resistance between “fuel level sensor unit and fuel pump” terminals 1 and 3.

   Resistance: 0.2 - 5.0Ω [at 25°C (77°F)]

   If NG, replace “fuel level sensor unit and fuel pump”.

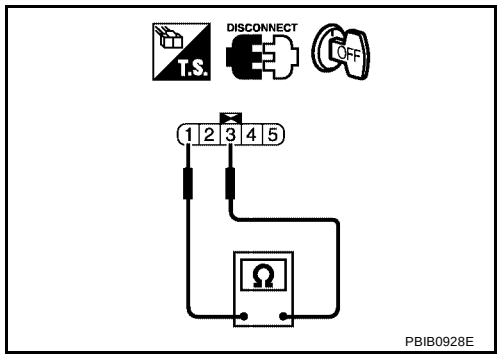

PBIB0928E

Removal and Installation

UBS00BHF

FUEL PUMP

Refer toDI-26, "FUEL LEVEL SENSOR UNIT CHECK" .

REFRIGERANT PRESSURE SENSOR

PFP:92136

Description

UBS00BHG

The refrigerant pressure sensor is installed at the liquid tank of the air conditioner system. The sensor uses an electrostatic volume pressure transducer to convert refrigerant pressure to voltage. The voltage signal is sent to ECM, and ECM controls cooling fan system.

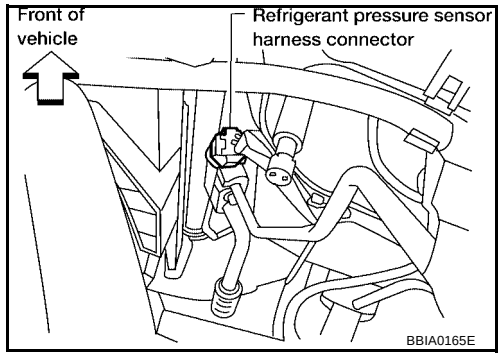

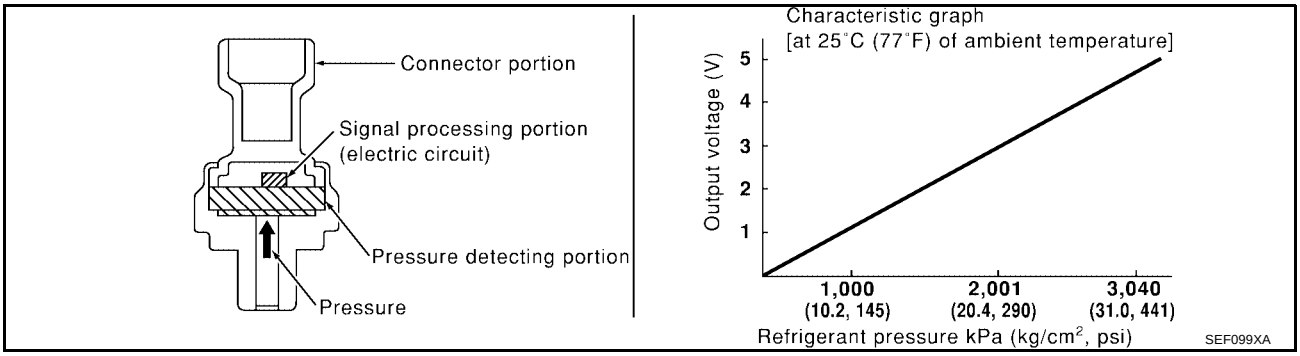

Wiring Diagram

UBS00BHH

EC-RP/SEN-01

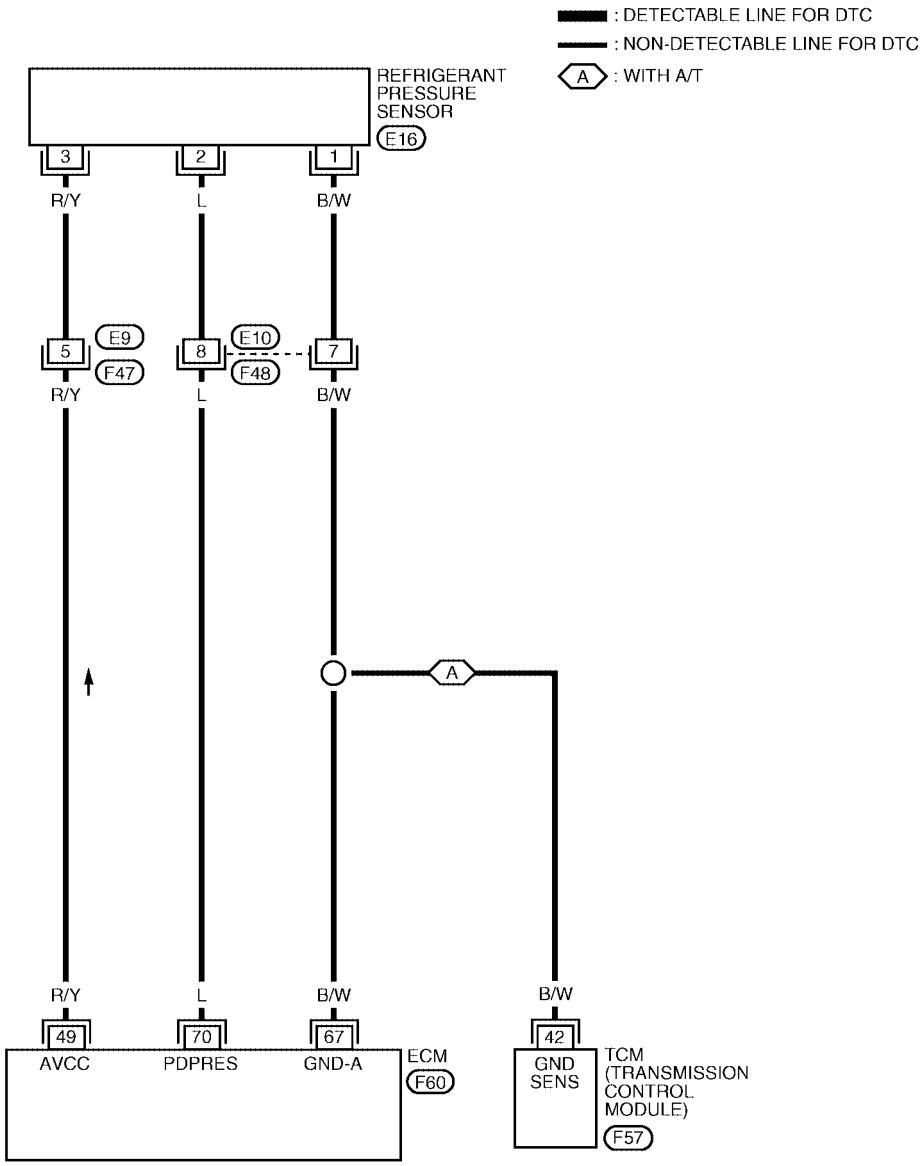

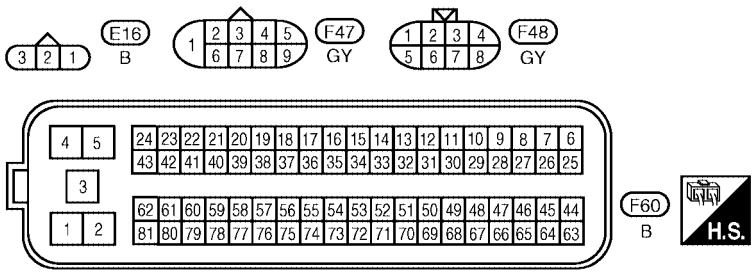

REFER TO THE FOLLOWING.
F57 - ELECTRICAL UNITS

BBWA1452E

Specification data are reference values and are measured between each terminal and ground.

CAUTION:

Do not use ECM ground terminals when measuring input/output voltage. Doing so may result in damage to the ECM's transistor. Use a ground other than ECM terminals, such as the ground.

TERMINAL NO.	WIRE COLOR	ITEM	CONDITION	DATA (DC Voltage)
49	R/Y	Sensor power supply (Refrigerant pressure sensor)	**[Ignition switch: ON]**	Approximately 5V
67	B/W	Sensor ground	**[Engine is running]** ● **Warm-up condition** ● Idle speed	Approximately 0V
70	L	Refrigerant pressure sensor	**[Engine is running]** ● **Warm-up condition** ● Both A/C switch and blower switch are ON (Compressor operates.)	1.0 - 4.0V

Diagnostic Procedure

UBS00BHI

1. CHECK REFRIGERANT PRESSURE SENSOR OVERALL FUNCTION

1. Start engine and warm it up to normal operating temperature.
2. Turn A/C switch and blower switch ON.
3. Check voltage between ECM terminal 70 and ground with CONSULT-II or tester.

Voltage: 1.0 - 4.0V

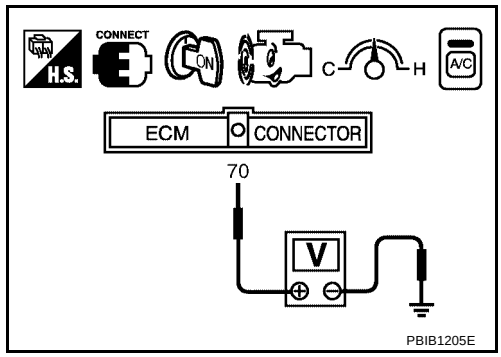

OK or NG

OK >> **INSPECTION END**
NG >> GO TO 2.

2. CHECK REFRIGERANT PRESSURE SENSOR POWER SUPPLY CIRCUIT

1. Turn A/C switch and blower switch OFF.
2. Stop engine.
3. Disconnect refrigerant pressure sensor harness connector.
4. Turn ignition switch ON.

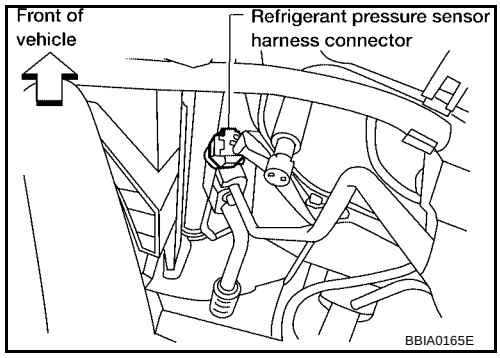

5. Check voltage between refrigerant pressure sensor terminal 3 and ground with CONSULT-II or tester.

Voltage: Approximately 5V

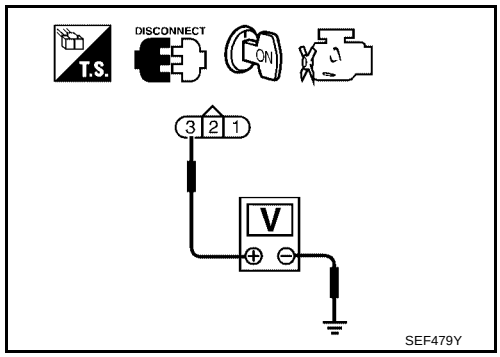

OK or NG

OK >> GO TO 4.
NG >> GO TO 3.

3. DETECT MALFUNCTIONING PART

Check the following.

- Harness connectors E9, F47
- Harness for open or short between ECM and refrigerant pressure sensor

>> Repair harness or connectors.

4. CHECK REFRIGERANT PRESSURE SENSOR GROUND CIRCUIT FOR OPEN AND SHORT

1. Turn ignition switch OFF.
2. Disconnect ECM harness connector.
3. Disconnect TCM harness connector.
4. Check harness continuity between refrigerant pressure sensor terminal 1 and ECM terminal 67, TCM terminal 42.
   Refer to Wiring Diagram.

Continuity should exist.

5. Also check harness for short to ground and short to power.

OK or NG

OK >> GO TO 6.
NG >> GO TO 5.

5. DETECT MALFUNCTIONING PART

Check the following.

- Harness connectors E10, F48
- Harness for open or short between TCM and refrigerant pressure sensor
- Harness for open or short between ECM and refrigerant pressure sensor

>> Repair open circuit or short to ground or short to power in harness or connectors.

6. CHECK REFRIGERANT PRESSURE SENSOR INPUT SIGNAL CIRCUIT FOR OPEN AND SHORT

1. Check harness continuity between ECM terminal 70 and refrigerant pressure sensor terminal 2.
   Refer to Wiring Diagram.

   Continuity should exist.

2. Also check harness for short to ground and short to power.

OK or NG

OK >> GO TO 8.
NG >> GO TO 7.

7. DETECT MALFUNCTIONING PART

Check the following.

- Harness connectors E10, F48
- Harness for open or short between ECM and refrigerant pressure sensor

>> Repair open circuit or short to ground or short to power in harness or connectors.

8. CHECK REFRIGERANT PRESSURE SENSOR

Refer to MTC-15, "Refrigerant Pressure Sensor" .

OK or NG

OK >> GO TO 9.
NG >> Replace refrigerant pressure sensor.

9. CHECK INTERMITTENT INCIDENT

Refer to EC-164, "TROUBLE DIAGNOSIS FOR INTERMITTENT INCIDENT" .

>> **INSPECTION END**

Removal and Installation

UBS00BHJ

REFRIGERANT PRESSURE SENSOR

Refer to MTC-15, "REFRIGERATION SYSTEM" .

ELECTRICAL LOAD SIGNAL

PFP:25350

CONSULT-II Reference Value in Data Monitor Mode

UBS00BJC

Specification data are reference values.

MONITOR ITEM	CONDITION		SPECIFICATION
LOAD SIGNAL	● Ignition switch: ON	Rear window defogger switch and/ or lighting switch is in 2nd	ON
		Rear window defogger switch is OFF and lighting switch is OFF	OFF
HEATER FAN SW	● Engine: After warming up, idle the engine	Heater fan is operating	ON
		Heater fan is not operating	OFF

Wiring Diagram
SULEV MODELS

UBS00BJD

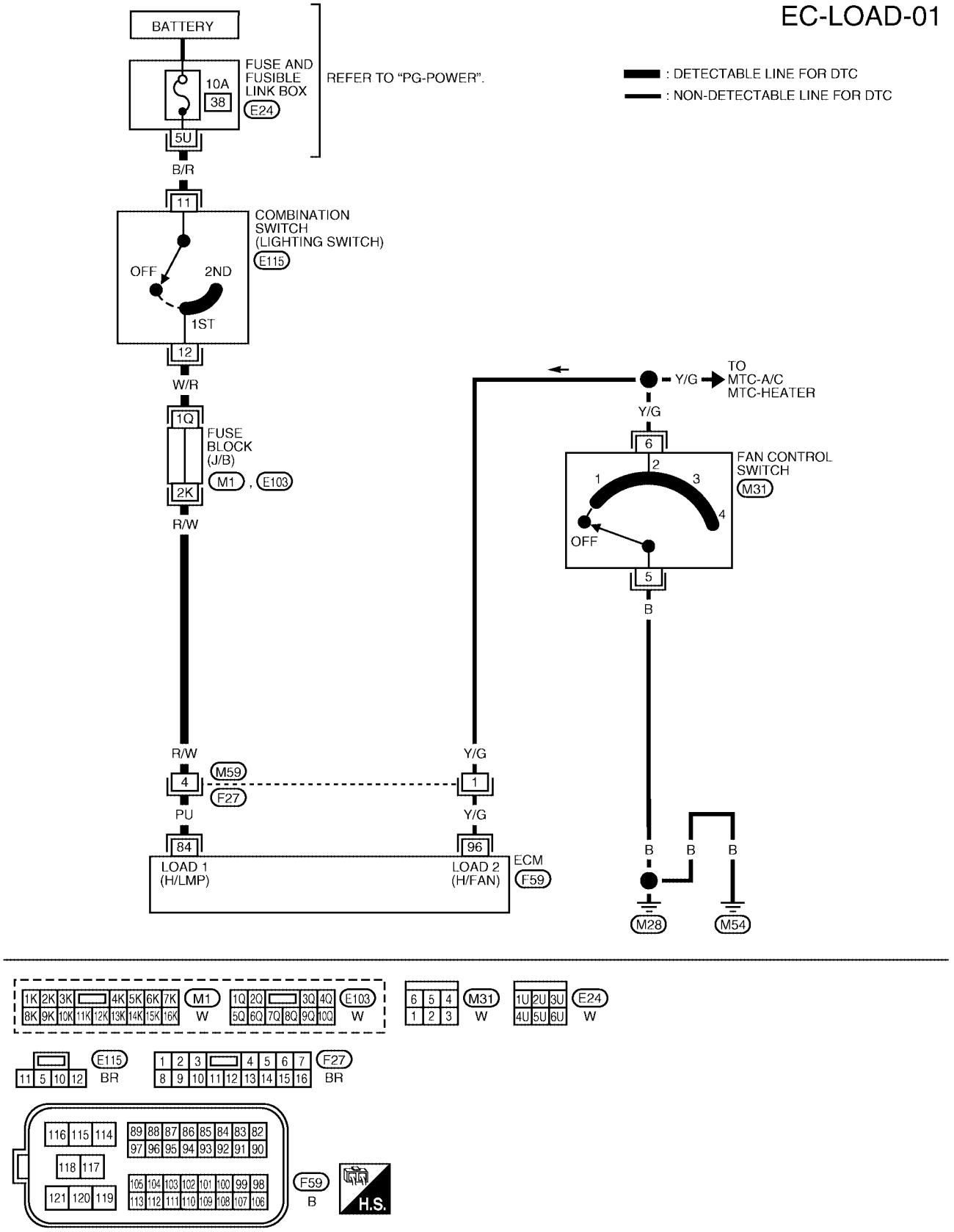

BBWA1453E

EXCEPT SULEV MODELS

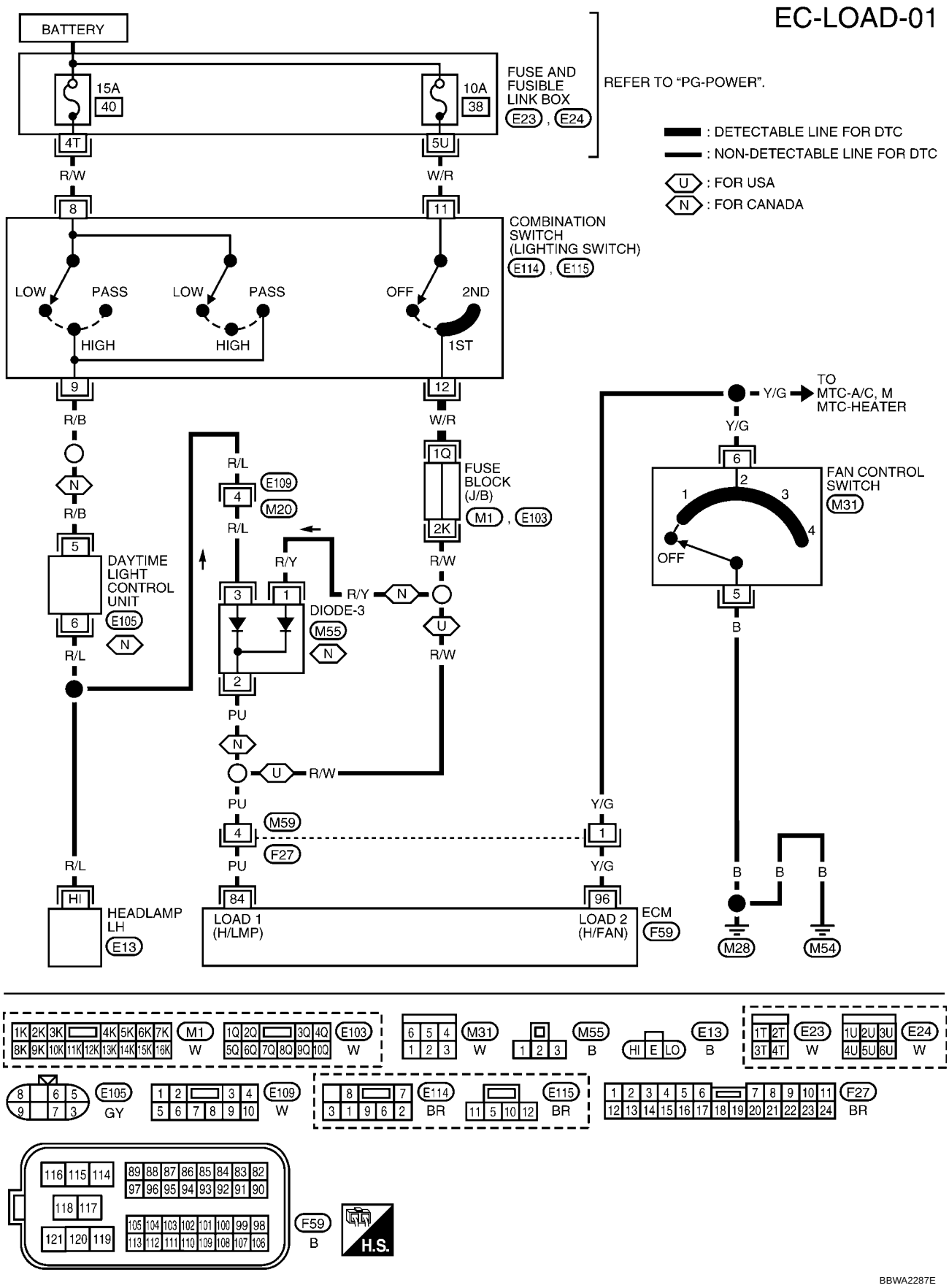

BBWA2287E

Specification data are reference values and are measured between each terminal and ground.

CAUTION:

Do not use ECM ground terminals when measuring input/output voltage. Doing so may result in damage to the ECM's transistor. Use a ground other than ECM terminals, such as the ground.

TERMINAL NO.	WIRE COLOR	ITEM	CONDITION	DATA (DC Voltage)
84	PU	Electrical load signal (Headlamp signal)	**[Ignition switch: ON]** ● Lighting switch: 2ND position	BATTERY VOLTAGE (11 - 14V)
			[Ignition switch: ON] ● Lighting switch: OFF	Approximately 0V
96	Y/G	Electrical load signal (Heater fan signal)	**[Engine is running]** ● Heater fan switch: ON	Approximately 0V
			[Engine is running] ● Heater fan switch: OFF	Approximately 5V

SULEV MODELS

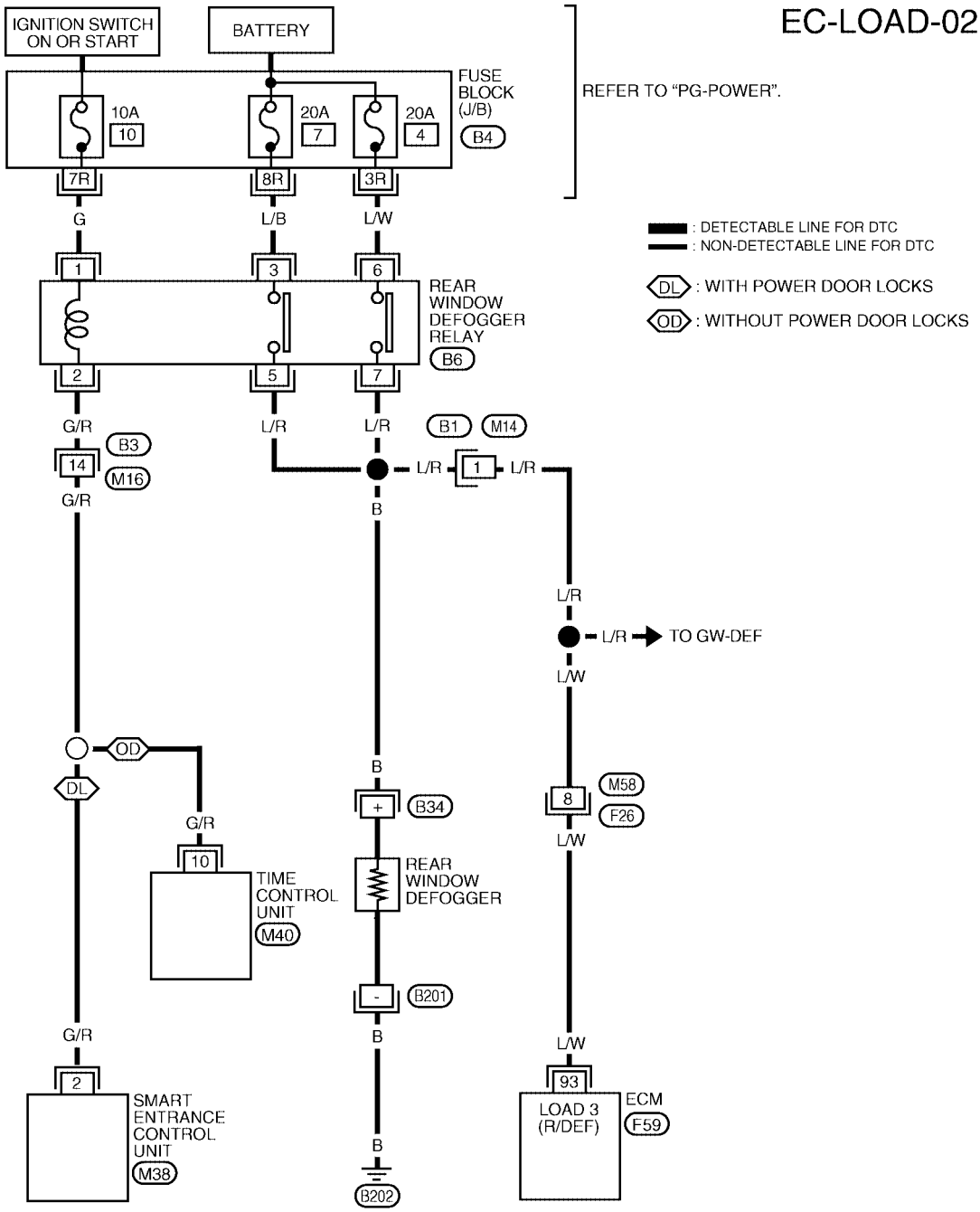

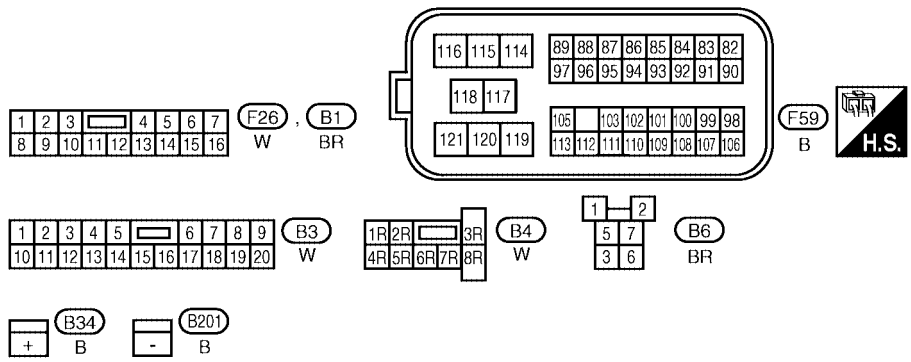

REFER TO THE FOLLOWING.
M38 , M40 - ELECTRICAL UNITS

BBWA1456E

EXCEPT SULEV MODELS

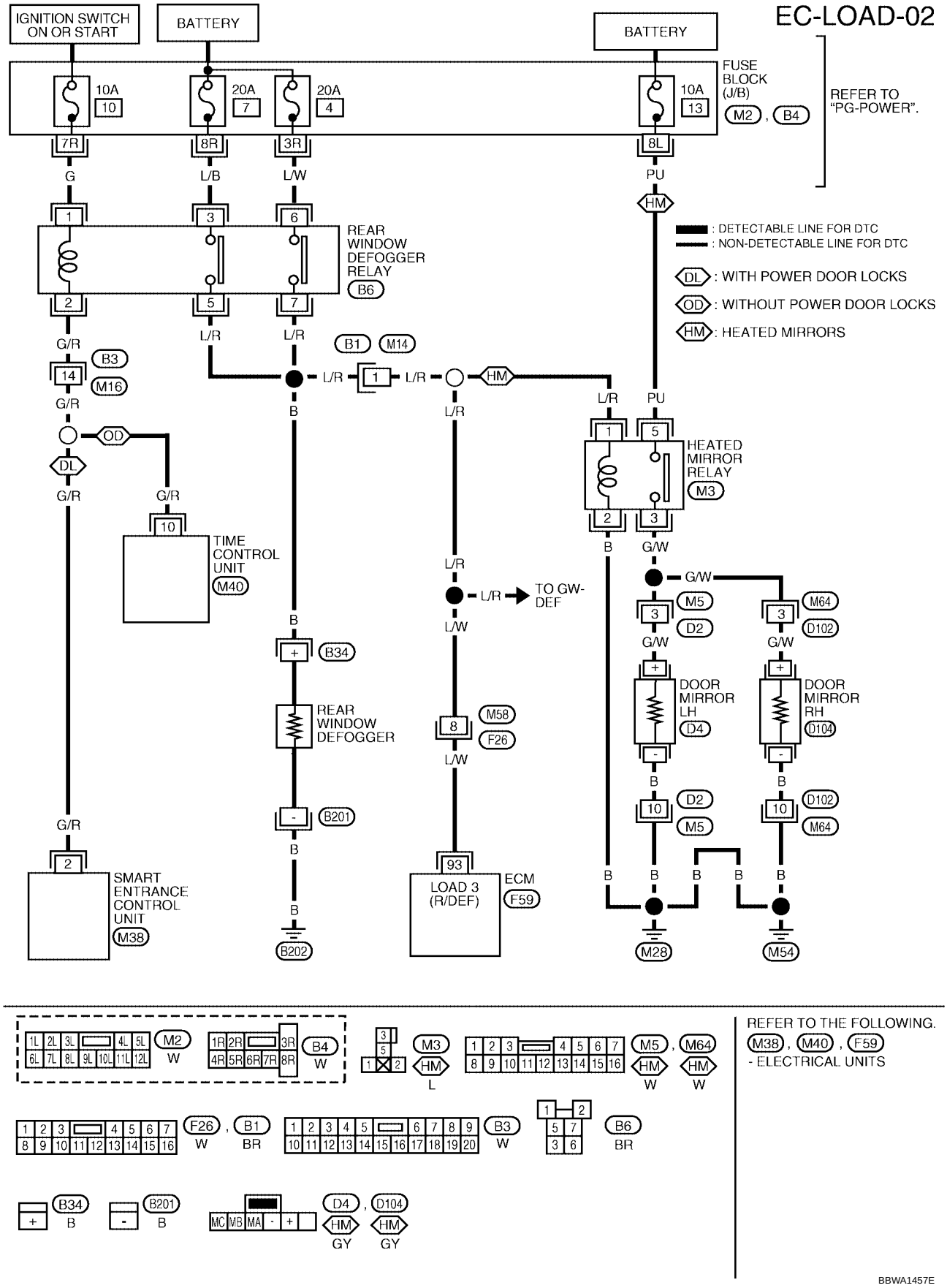

Specification data are reference values and are measured between each terminal and ground.

CAUTION:
Do not use ECM ground terminals when measuring input/output voltage. Doing so may result in damage to the ECM's transistor. Use a ground other than ECM terminals, such as the ground.

TERMINAL NO.	WIRE COLOR	ITEM	CONDITION	DATA (DC Voltage)
93	L/W	Electrical load signal (Rear window defogger signal)	**[Ignition switch: ON]** ● Rear window defogger switch: ON	BATTERY VOLTAGE (11 - 14V)
			[Ignition switch: ON] ● Rear window defogger switch: OFF	Approximately 0V

Diagnostic Procedure

UBS00BJE

1. INSPECTION START

Do you have CONSULT-II?

Yes or No

Yes >> GO TO 2.
No >> GO TO 3.

2. CHECK LOAD SIGNAL CIRCUIT OVERALL FUNCTION-I

With CONSULT-II

1. Turn ignition switch ON.
2. Check “LOAD SIGNAL” in “DATA MONITOR” mode with CONSULT-II under the following conditions.

Condition	LOAD SIGNAL
Lighting switch ON at 2nd position	ON
Lighting switch OFF	OFF

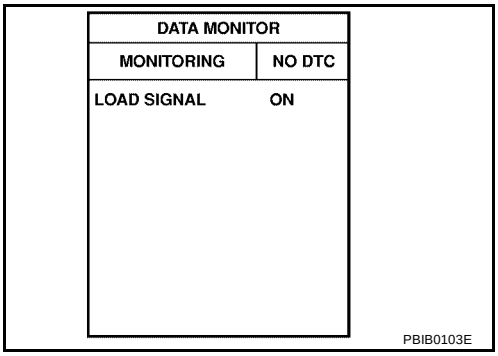

OK or NG

OK >> GO TO 4.
NG >> GO TO 8.

3. CHECK LOAD SIGNAL CIRCUIT OVERALL FUNCTION-I

Without CONSULT-II

1. Turn ignition switch ON.
2. Check voltage between ECM terminal 84 and ground under the following conditions.

Condition	Voltage
Lighting switch ON at 2nd position	BATTERY VOLTAGE
Lighting switch OFF	0V

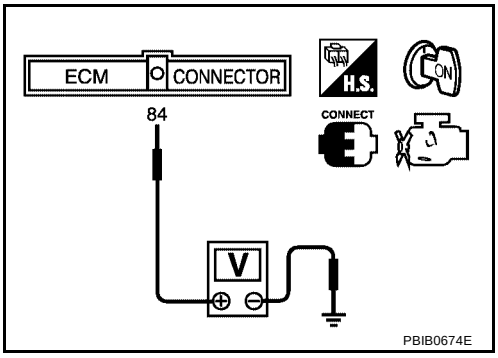

OK or NG

OK >> GO TO 5.
NG >> GO TO 8.

4. CHECK LOAD SIGNAL CIRCUIT OVERALL FUNCTION-II

With CONSULT-II

1. Turn ignition switch ON.
2. Check “HEATER FAN SW” in “DATA MONITOR” mode with CONSULT-II under the following conditions.

Condition	INDICATION
FAN control switch ON in any position	ON
FAN control switch OFF	OFF

OK or NG

OK >> GO TO 6.
NG >> GO TO 13.

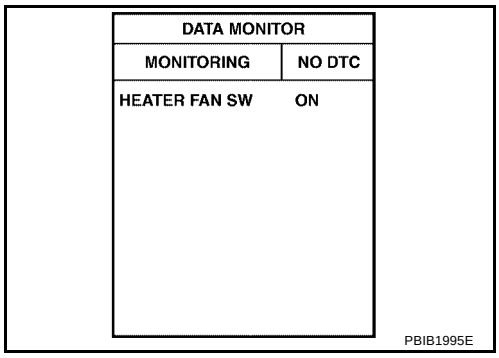

5. CHECK LOAD SIGNAL CIRCUIT OVERALL FUNCTION-II

Without CONSULT-II

1. Turn ignition switch ON.
2. Check voltage between ECM terminal 96 and ground under the following conditions.

Condition	Voltage
FAN control switch ON in any position	Approximately 0V
FAN control switch OFF	Approximately 5V

OK or NG

OK >> GO TO 7.
NG >> GO TO 13.

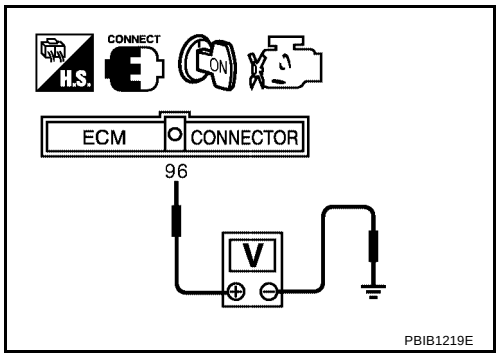

6. CHECK LOAD SIGNAL CIRCUIT OVERALL FUNCTION-III

With CONSULT-II

1. Turn ignition switch ON.
2. Check “LOAD SIGNAL” in “DATA MONITOR” mode with CONSULT-II under the following conditions.

Condition	LOAD SIGNAL
Rear window defogger switch ON	ON
Rear window defogger switch OFF	OFF

OK or NG

OK >> **INSPECTION END**
NG >> GO TO 16.

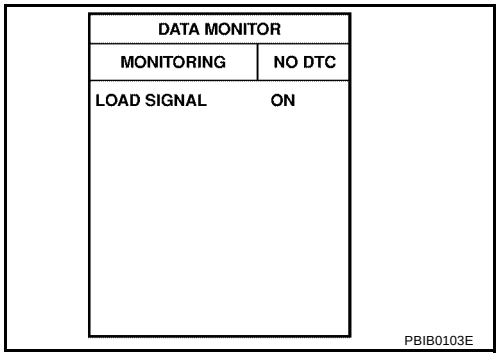

7. CHECK LOAD SIGNAL CIRCUIT OVERALL FUNCTION-III

Without CONSULT-II

1. Turn ignition switch ON.
2. Check voltage between ECM terminal 93 and ground under the following conditions.

Condition	Voltage
Rear window defogger switch ON	BATTERY VOLTAGE
Rear window defogger switch OFF	Approximately 0V

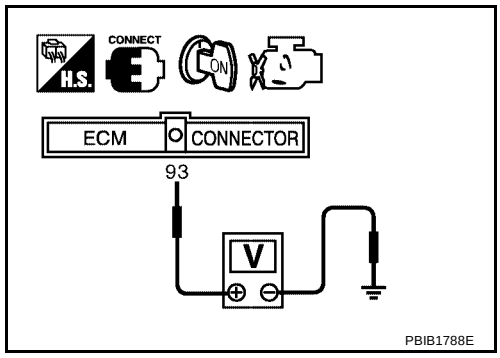

OK or NG

OK >> **INSPECTION END**
NG >> GO TO 16.

8. CHECK HEADLAMP FUNCTION

1. Start engine.
2. Turn the lighting switch ON at 2nd position.
3. Check that headlamps are illuminated.

OK or NG

OK (Models for USA)>>GO TO 9.
OK (Models for Canada)>>GO TO 11.
NG >> Refer to LT-6, "HEADLAMP (FOR USA)" or LT-10, "HEADLAMP (FOR CANADA) — DAYTIME LIGHT SYSTEM —" .

9. CHECK HEADLAMP INPUT SIGNAL CIRCUIT FOR OPEN AND SHORT

1. Stop engine.
2. Disconnect ECM harness connector.
3. Disconnect lighting switch harness connector.
4. Check harness continuity between ECM terminal 84 and lighting switch terminal 12.

   Continuity should exist.

5. Also check harness for short to ground and short to power.

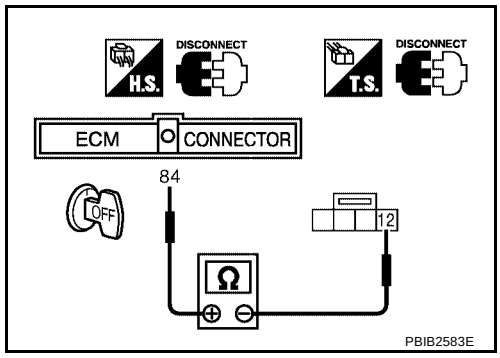

OK or NG

OK >> GO TO 19.
NG >> GO TO 10.

10. DETECT MALFUNCTIONING PART

Check the following.

- Fuse block (J/B)
- Harness connectors M59, F27
- Harness for open and short between ECM and lighting switch

>> Repair open circuit or short to ground or short to power in harness or connectors.

11. CHECK HEADLAMP INPUT SIGNAL CIRCUIT FOR OPEN AND SHORT

1. Stop engine.
2. Disconnect ECM harness connector.
3. Disconnect lighting switch harness connector E115.
   Disconnect daytime light control unit harness connector.
4. Check harness continuity between ECM terminal 84 and lighting switch terminal 12, daytime light control unit terminal 6 under the following conditions.

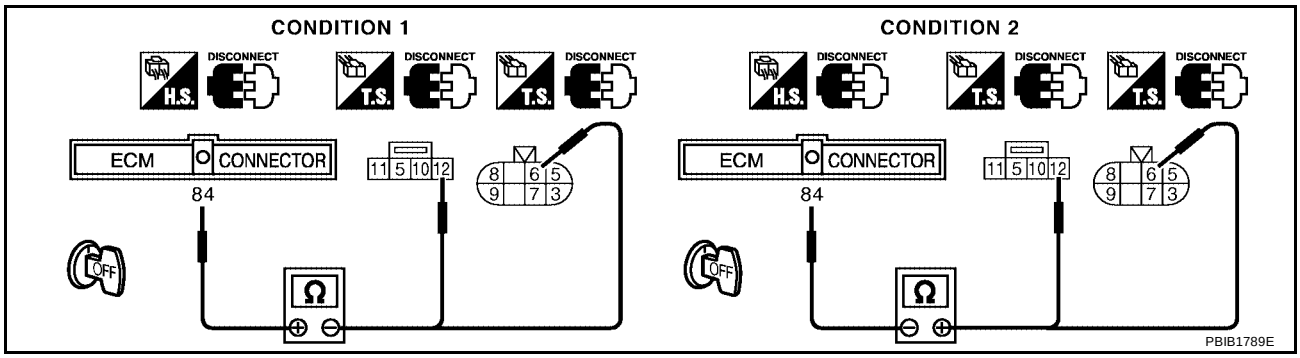

Condition	Continuity
1	Should exist
2	Should not exist

5. Also check harness for short to ground and short to power.

OK or NG

OK >> GO TO 19.
NG >> GO TO 12.

12. DETECT MALFUNCTIONING PART

Check the following.

- Harness connectors E109, M20
- Harness connectors M59, F27
- Fuse block (J/B)
- Diode-3
- Harness for open and short between ECM and lighting switch
- Harness for open and short between ECM and daytime light control unit

>> Repair open circuit or short to ground or short to power in harness or connectors.

13. CHECK HEATER FAN SWITCH FUNCTION

1. Start engine.
2. Turn the heater fan switch ON in any position.
3. Check that heater fan turns properly.

OK or NG

OK >> GO TO 14.
NG >> Refer to MTC-19, "TROUBLE DIAGNOSIS"

14. CHECK HEATER FAN INPUT SIGNAL CIRCUIT FOR OPEN AND SHORT

1. Stop engine.
2. Disconnect ECM harness connector.
3. Disconnect fan control switch harness connector.
4. Check harness continuity between ECM terminal 96 and fan control switch terminal 6.

Continuity should exist.

5. Also check harness for short to ground and short to power.

OK or NG

OK >> GO TO 19.
NG >> GO TO 15.

15. DETECT MALFUNCTIONING PART

Check the following.

- Harness connectors M59, F27
- Harness for open and short between ECM and fan control switch

>> Repair open circuit or short to ground or short to power in harness or connectors.

16. CHECK REAR WINDOW DEFOGGER FUNCTION

1. Start engine.
2. Turn ON the rear window defogger switch.
3. Check the rear windshield. Is the rear windshield heated up?

Yes or No

Yes >> GO TO 17.
No >> Refer to GW-17, "REAR WINDOW DEFOGGER"

17. CHECK REAR WINDOW DEFOGGER INPUT SIGNAL CIRCUIT FOR OPEN AND SHORT

1. Stop engine.
2. Disconnect ECM harness connector.
3. Disconnect rear window defogger relay.
4. Check harness continuity between ECM terminal 93 and rear window defogger relay terminals 5, 7.

Continuity should exist.

5. Also check harness for short to ground and short to power.

OK or NG

OK >> GO TO 19.
NG >> GO TO 18.

18. DETECT MALFUNCTIONING PART

Check the following.

- Harness connectors B1, M14
- Harness connectors M58, F26
- Harness for open and short between ECM and rear window defogger relay.

>> Repair open circuit or short to ground or short to power in harness or connectors.

19. CHECK INTERMITTENT INCIDENT

Perform EC-164, "TROUBLE DIAGNOSIS FOR INTERMITTENT INCIDENT" .

>> **INSPECTION END**

ASCD BRAKE SWITCH

PFP:25320

Component Description

UBS00BHN

When the brake pedal is depressed, ASCD brake switch is turned OFF and stop lamp switch is turned ON. ECM detects the state of the brake pedal by this input of two kinds (ON/OFF signal)
Refer to EC-33, "AUTOMATIC SPEED CONTROL DEVICE (ASCD)" for the ASCD function.

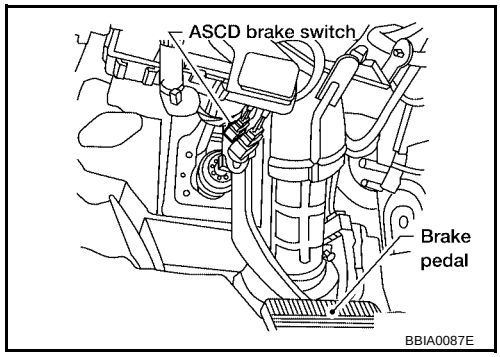

CONSULT-II Reference Value in Data Monitor Mode

UBS00BHO

Specification data are reference values.

MONITOR ITEM	CONDITION		SPECIFICATION
BRAKE SW1	● Ignition switch: ON	Clutch pedal (M/T) and brake pedal: Fully released	ON
		Clutch pedal (M/T) and/or brake pedal: Depressed	OFF
BRAKE SW2	● Ignition switch: ON	Brake pedal: Fully released	OFF
		Brake pedal: Slightly Depressed	ON

Wiring Diagram

UBS00BHP

EC-ASCBOF-01

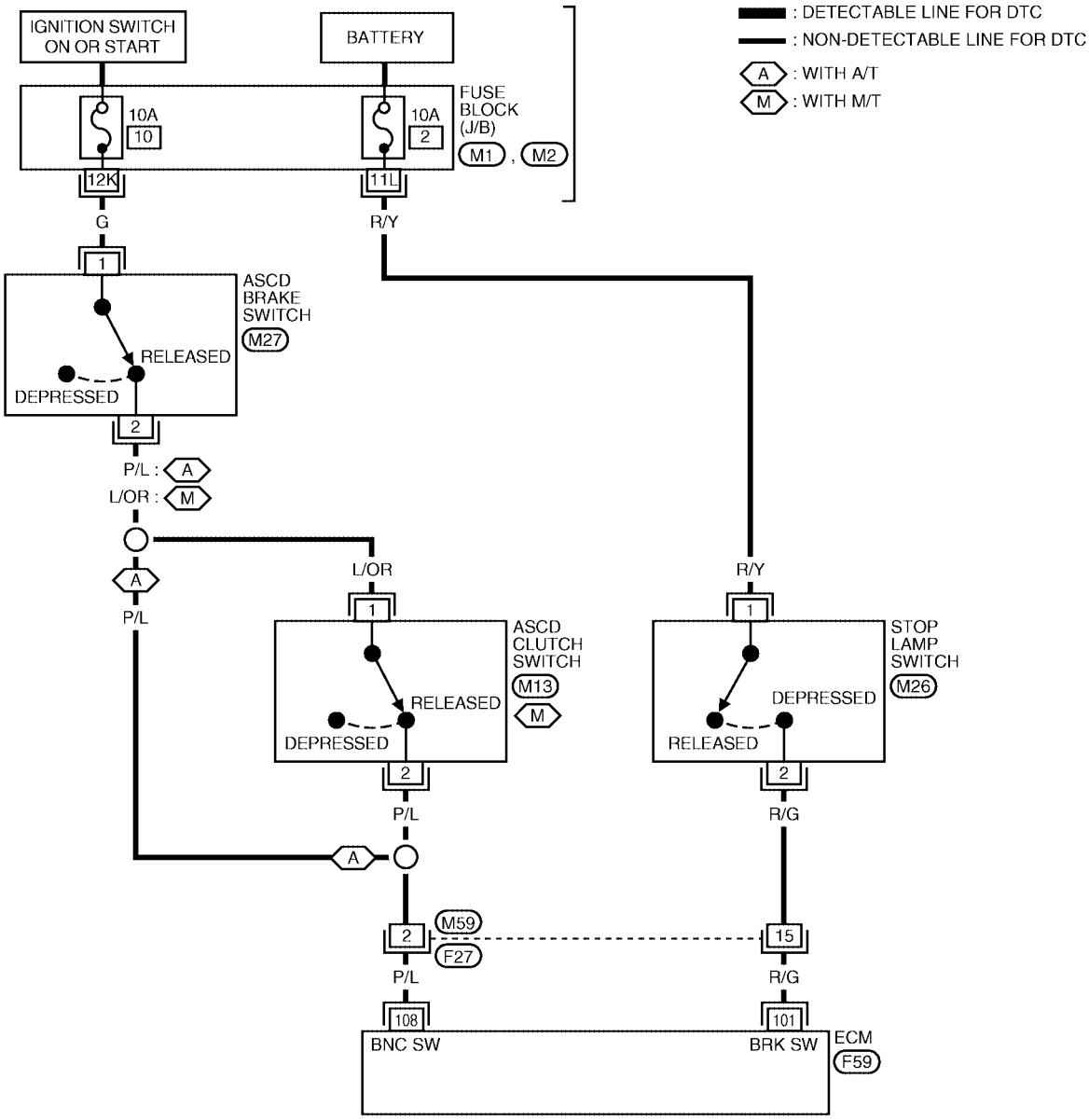

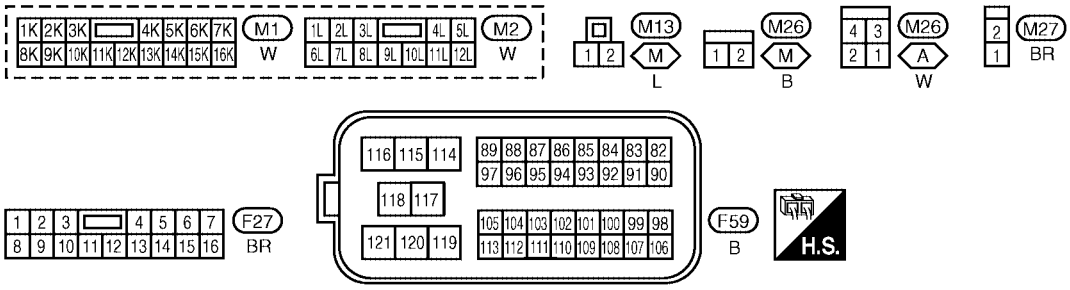

BBWA1458E

Specification data are reference values and are measured between each terminal and ground.

CAUTION:

Do not use ECM ground terminals when measuring input/output voltage. Doing so may result in damage to the ECM's transistor. Use a ground other than ECM terminals, such as the ground.

TERMINAL NO.	WIRE COLOR	ITEM	CONDITION	DATA (DC Voltage)
101	R/G	Stop lamp switch	**[Ignition switch: ON]** ● Brake pedal: Fully released	Approximately 0V
			[Ignition switch: ON] ● Brake pedal: Depressed	BATTERY VOLTAGE (11 - 14V)
108	P/L	ASCD brake switch	**[Ignition switch: ON]** ● Brake pedal: Depressed ● Clutch pedal: Depressed (M/T models)	Approximately 0V
			[Ignition switch: ON] ● Brake pedal: Fully released ● Clutch pedal: Released (M/T models)	BATTERY VOLTAGE (11 - 14V)

Diagnostic Procedure

UBS00BHQ

1. CHECK OVERALL FUNCTION-I

With CONSULT-II

1. Turn ignition switch ON.
2. Select “BRAKE SW1” in “DATA MONITOR” mode with CONSULT-II.
3. Check “BRAKE SW1” indication under the following conditions.

A/T models

CONDITION	INDICATION
When brake pedal is depressed	OFF
When brake pedal is fully released	ON

M/T models

CONDITION	INDICATION
When clutch pedal or brake pedal is depressed	OFF
When clutch pedal and brake pedal are fully released	ON

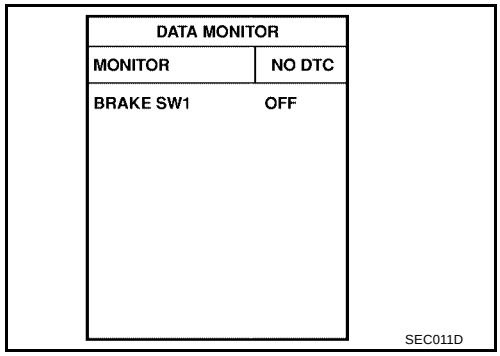

Without CONSULT-II

1. Turn ignition switch ON.
2. Check voltage between ECM terminal 108 and ground under the following conditions.

A/T models

CONDITION	VOLTAGE
When brake pedal is depressed	Approximately 0V
When brake pedal is fully released	Battery voltage

M/T models

CONDITION	VOLTAGE
When clutch pedal or brake pedal is depressed	Approximately 0V
When clutch pedal and brake pedal are fully released	Battery voltage

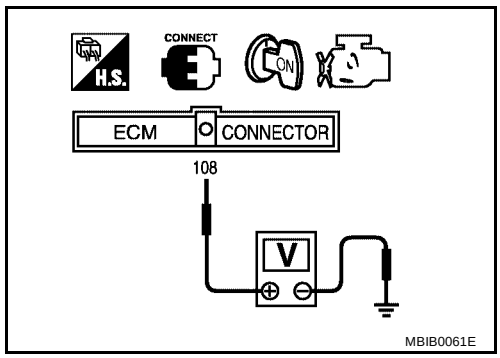

OK or NG

OK >> GO TO 2.
NG (M/T models) >>GO TO 3.
NG (A/T models) >>GO TO 4.

2. CHECK OVERALL FUNCTION-II

With CONSULT-II

Check “BRAKE SW2” indication in “DATA MONITOR” mode.

CONDITION	INDICATION
When brake pedal is released	OFF
When brake pedal is depressed	ON

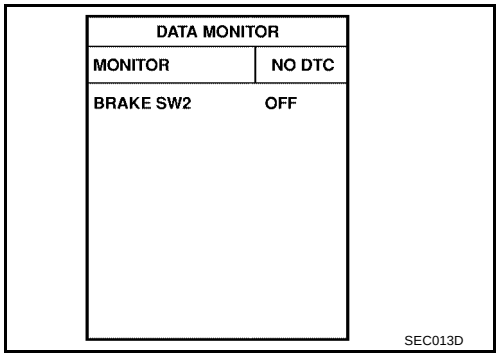

Without CONSULT-II

Check voltage between ECM terminal 101 and ground under the following conditions.

CONDITION	VOLTAGE
When brake pedal is released	Approximately 0V
When brake pedal is depressed	Battery voltage

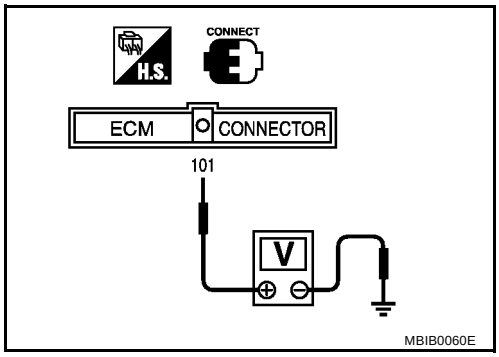

OK or NG

OK >> **INSPECTION END**
NG >> GO TO 13.

3. CHECK ASCD CLUTCH SWITCH POWER SUPPLY CIRCUIT

1. Turn ignition switch OFF.
2. Disconnect ASCD clutch switch harness connector.
3. Turn ignition switch ON.

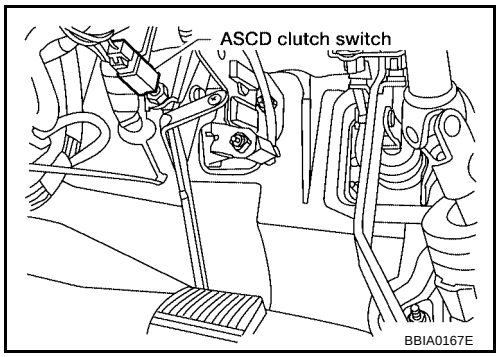

4. Check voltage between ASCD clutch switch terminal 1 and ground under the following conditions with CONSULT-II or tester.

CONDITION	VOLTAGE
When brake pedal is released	Battery voltage
When brake pedal is depressed	Approx. 0V

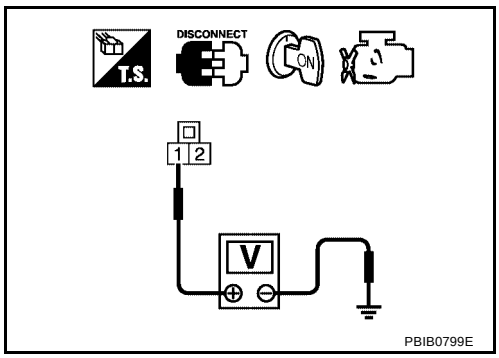

OK or NG

OK >> GO TO 10.
NG >> GO TO 4.

4. CHECK ASCD BRAKE SWITCH POWER SUPPLY CIRCUIT

1. Turn ignition switch OFF.
2. Disconnect ASCD brake switch harness connector.
3. Turn ignition switch ON.

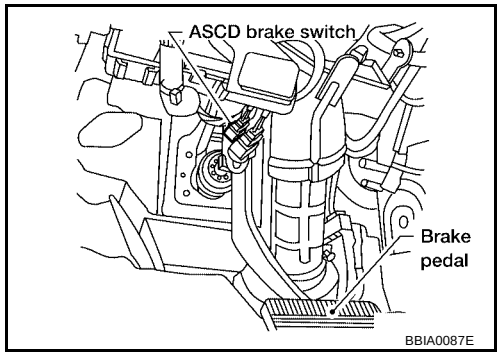

4. Check voltage between ASCD brake switch terminal 1 and ground with CONSULT-II or tester.

Voltage: Battery voltage

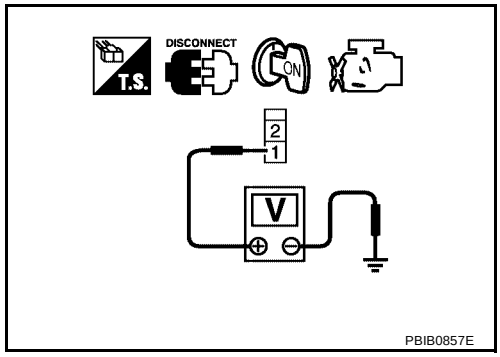

OK or NG

OK (M/T models)>>GO TO 6.
OK (A/T models)>>GO TO 7.
NG >> GO TO 5.

5. DETECT MALFUNCTIONING PART

Check the following.

- Fuse block (J/B) connector M1
- 10A fuse
- Harness for open or short between ASCD brake switch and fuse

>> Repair open circuit or short to ground or short to power in harness or connectors.

6. CHECK ASCD BRAKE SWITCH INPUT SIGNAL CIRCUIT FOR OPEN AND SHORT

1. Turn ignition switch OFF.
2. Check harness continuity between ASCD brake switch terminal 2 and ASCD clutch switch terminal 1. Refer to Wiring Diagram.

Continuity should exist.

3. Also check harness for short to ground and short to power.

OK or NG

OK >> GO TO 9.
NG >> Repair open circuit or short to ground or short to power in harness or connectors.

7. CHECK ASCD BRAKE SWITCH INPUT SIGNAL CIRCUIT FOR OPEN AND SHORT

1. Turn ignition switch OFF.
2. Disconnect ECM harness connector.
3. Check harness continuity between ECM terminal 108 and ASCD brake switch terminal 2.
   Refer to Wiring Diagram.

   Continuity should exist.

4. Also check harness for short to ground or short to power.

OK or NG

OK >> GO TO 9.
NG >> GO TO 8.

8. DETECT MALFUNCTIONING PART

Check the following.

- Harness connectors M59, F27
- Harness for open or short between ECM and ASCD brake switch

>> Repair open circuit or short to ground or short to power in harness or connectors.

9. CHECK ASCD BRAKE SWITCH

Refer to EC-650, "Component Inspection"

OK or NG

OK >> GO TO 18.
NG >> Replace ASCD brake switch.

10. CHECK ASCD CLUTCH SWITCH INPUT SIGNAL CIRCUIT FOR OPEN AND SHORT

1. Turn ignition switch OFF.
2. Disconnect ECM harness connector.
3. Check harness continuity between ECM terminal 108 and ASCD clutch switch terminal 2.
   Refer to Wiring Diagram.

   Continuity should exist.

4. Also check harness for short to ground or short to power.

OK or NG

OK >> GO TO 12.
NG >> GO TO 11.

11. DETECT MALFUNCTIONING PART

Check the following.

- Harness connectors M59, F27
- Harness for open or short between ECM and ASCD clutch switch

>> Repair open circuit or short to ground or short to power in harness or connectors.

12. CHECK ASCD CLUTCH SWITCH

Refer to EC-650, "Component Inspection"

OK or NG

OK >> GO TO 18.
NG >> Replace ASCD clutch switch.

13. CHECK STOP LAMP SWITCH POWER SUPPLY CIRCUIT

1. Turn ignition switch OFF.
2. Disconnect stop lamp switch harness connector.

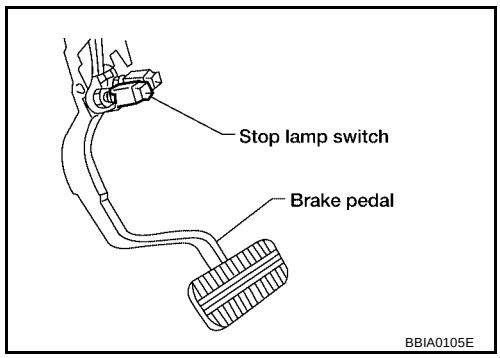

3. Check voltage between stop lamp switch terminal 1 and ground with CONSULT -II or tester.

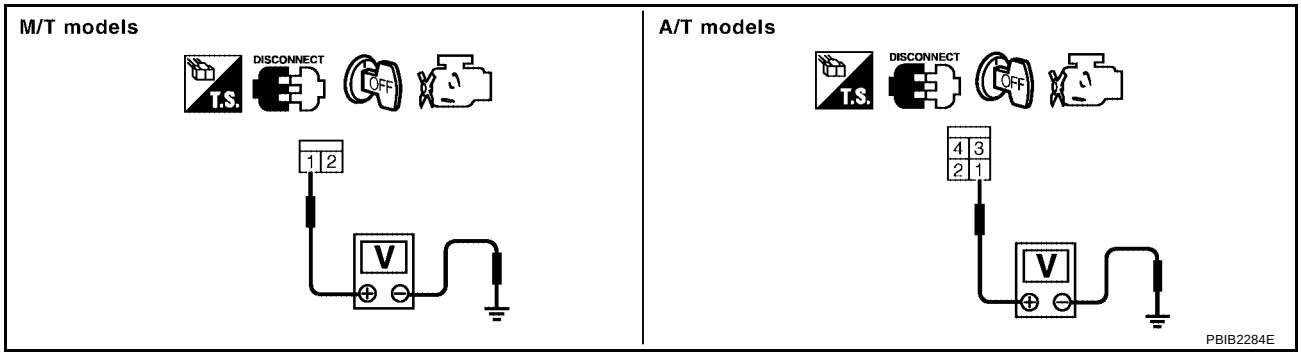

Voltage: Battery voltage

OK or NG

OK >> GO TO 15.
NG >> GO TO 14.

14. DETECT MALFUNCTIONING PART

Check the following.

- Fuse block (J/B) connector M2
- 10A fuse
- Harness for open or short between stop lamp switch and fuse

>> Repair open circuit or short to ground or short to power in harness or connectors.

15. CHECK STOP LAMP SWITCH INPUT SIGNAL CIRCUIT FOR OPEN AND SHORT

1. Disconnect ECM harness connector.
2. Check harness continuity between ECM terminal 101 and stop lamp switch terminal 2.
   Refer to Wiring Diagram.

Continuity should exist.

3. Also check harness for short to ground and short to power.

OK or NG

OK >> GO TO 17.
NG >> GO TO 16.

16. DETECT MALFUNCTIONING PART

Check the following.

- Harness connectors M59, F27
- Harness for open or short between ECM and stop lamp switch

>> Repair open circuit or short to ground or short to power in harness or connectors.

17. CHECK STOP LAMP SWITCH

Refer to EC-650, "Component Inspection" .

OK or NG

OK >> GO TO 18.
NG >> Replace stop lamp switch.

18. CHECK INTERMITTENT INCIDENT

Refer to EC-164, "TROUBLE DIAGNOSIS FOR INTERMITTENT INCIDENT" .

>> **INSPECTION END**

Component Inspection

UBS00BHR

ASCD BRAKE SWITCH

1. Turn ignition switch OFF.
2. Disconnect ASCD brake switch harness connector.
3. Check harness continuity between ASCD brake switch terminals 1 and 2 under the following conditions.

Condition	Continuity
When brake pedal is fully released.	Should exist.
When brake pedal is depressed.	Should not exist.

If NG, adjust ASCD brake switch installation, refer to BR-11, "BRAKE PEDAL AND BRACKET" , and perform step 3 again.

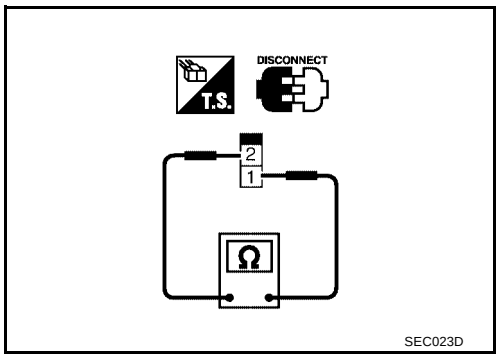

ASCD CLUTCH SWITCH (FOR M/T MODELS)

1. Turn ignition switch OFF.
2. Disconnect ASCD clutch switch harness connector.
3. Check continuity between ASCD clutch switch terminals 1 and 2 under the following conditions.

Condition	Continuity
When clutch pedal is fully released.	Should exist.
When clutch pedal is depressed.	Should not exist.

If NG, adjust ASCD clutch switch installation, refer to CL-6, "CLUTCH SYSTEM" , and perform step 3 again.

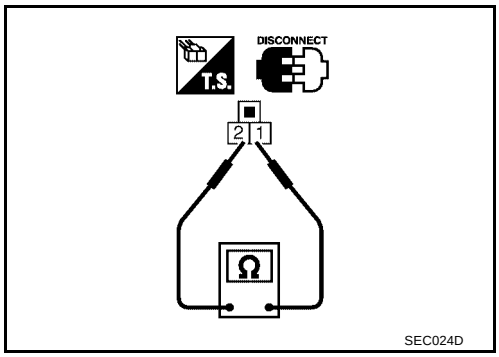

STOP LAMP SWITCH

1. Turn ignition switch OFF.
2. Disconnect stop lamp switch harness connector.
3. Check harness continuity between stop lamp switch terminals 1 and 2 under the following conditions.

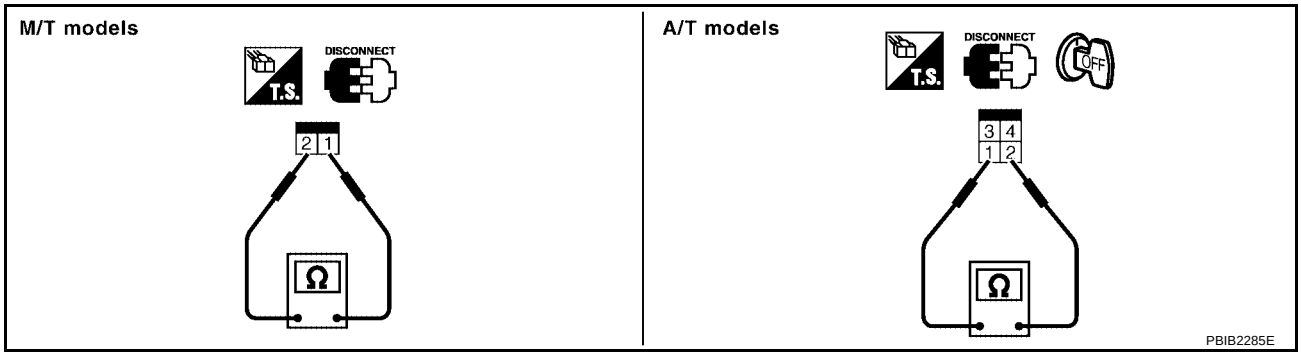

Condition	Continuity
When brake pedal is fully released.	Should not exist.
When brake pedal is depressed.	Should exist.

If NG, adjust stop lamp switch installation, refer to BR-11, "BRAKE PEDAL AND BRACKET" , and perform step 3 again.

ASCD INDICATOR

PFP:24814

Component Description

UBS00BHS

ASCD indicator lamp illuminates to indicate ASCD operation status. Lamp has two indicators, CRUISE and SET, and is integrated in combination meter.
CRUISE indicator illuminates when MAIN switch on ASCD steering switch is turned ON to indicate that ASCD system is ready for operation.
SET indicator illuminates when following conditions are met.

- CRUISE indicator is illuminated.
- SET/COAST switch on ASCD steering switch is turned ON while vehicle speed is within the range of ASCD setting.

SET indicator remains lit during ASCD control.
Refer to EC-33, "AUTOMATIC SPEED CONTROL DEVICE (ASCD)" for the ASCD function.

CONSULT-II Reference Value in Data Monitor Mode

UBS00BHT

Specification data are reference value.

MONITOR ITEM	CONDITION		SPECIFICATION
CRUISE LAMP	● Ignition switch: ON	MAIN switch: Pressed	ON
		MAIN switch: Released	OFF
SET LAMP	● MAIN switch: ON ● When vehicle speed is between 40 km/h (25 MPH) and 144 km/h (89 MPH)	ASCD is operating	ON
		ASCD is not operating	OFF

Wiring Diagram

UBS00BHU

EC-ASCIND-01

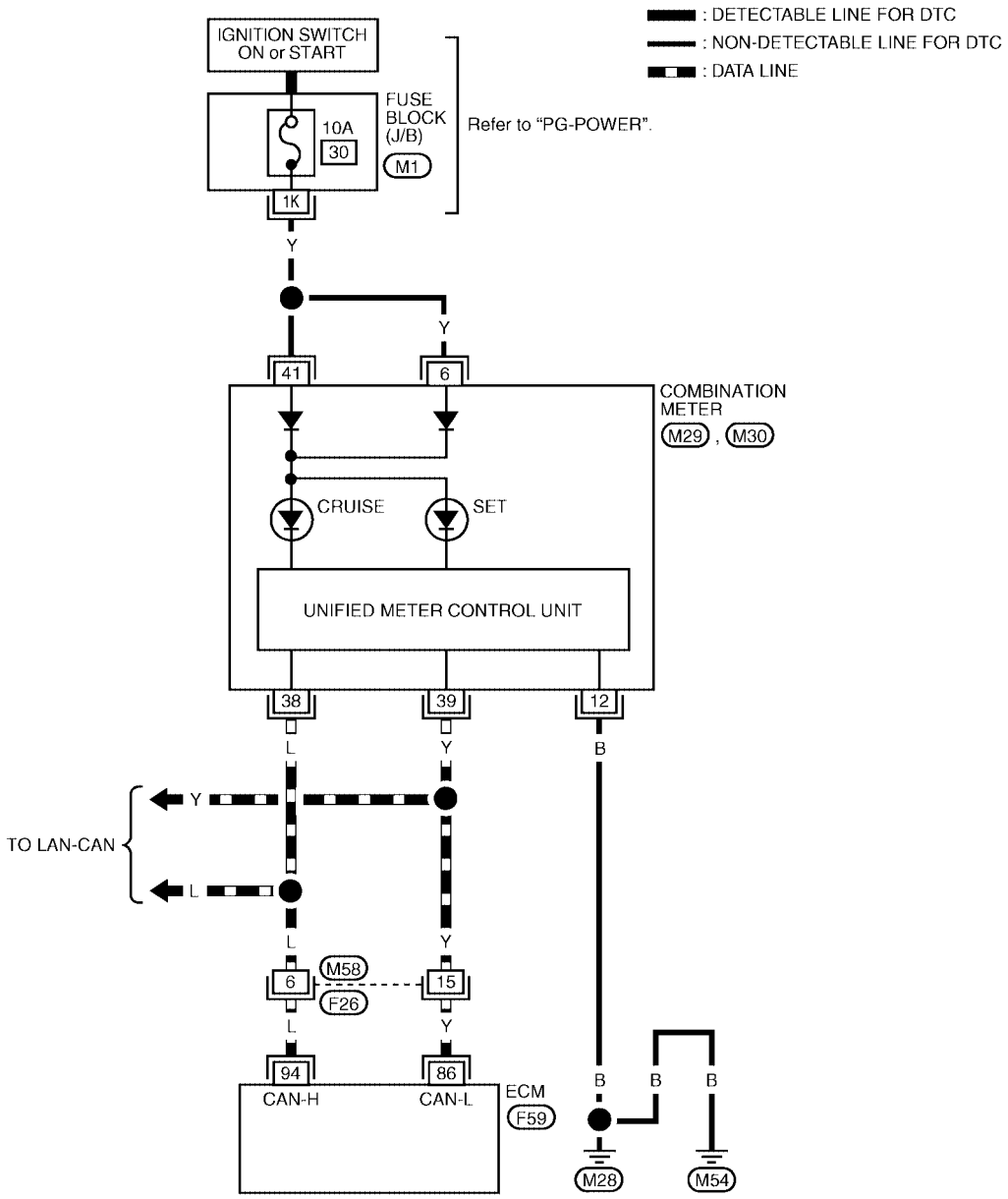

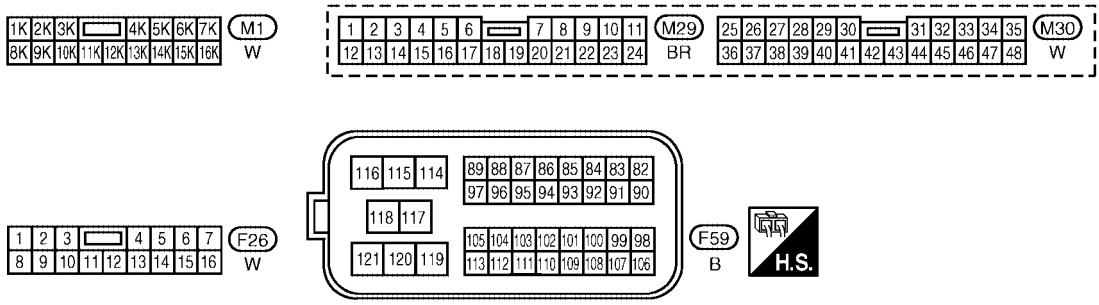

BBWA1459E

Diagnostic Procedure

UBS00BHV

1. CHECK OVERALL FUNCTION

Check ASCD indicator under the following conditions.

ASCD INDICATOR	CONDITION		SPECIFICATION
CRUISE LAMP	● Ignition switch: ON	MAIN switch: At the 1st time → at the 2nd time	ON → OFF
SET LAMP	● MAIN switch: ON ● When vehicle speed is between 40 km/h (25 MPH) and 144 km/h (89 MPH)	ASCD is operating	ON
		ASCD is not operating	OFF

OK or NG

OK >> **INSPECTION END**
NG >> GO TO 2.

2. CHECK DTC

Check that DTC U1000 or U1001 is not displayed.

Yes or No

Yes >> Perform trouble diagnoses for DTC U1000, U1001, refer to EC-173, "DTC U1000, U1001 CAN COMMUNICATION LINE" .
No >> GO TO 3.

3. CHECK COMBINATION METER OPERATION

Does combination meter operate normally?

Yes or No

Yes >> GO TO 4.
No >> Check combination meter circuit. Refer to DI-7, "Combination Meter" .

4. CHECK INTERMITTENT INCIDENT

Refer to EC-164, "TROUBLE DIAGNOSIS FOR INTERMITTENT INCIDENT" .

>> **INSPECTION END**

MIL & DATA LINK CONNECTORS

PFP:24814

Wiring Diagram

UBS00BHW

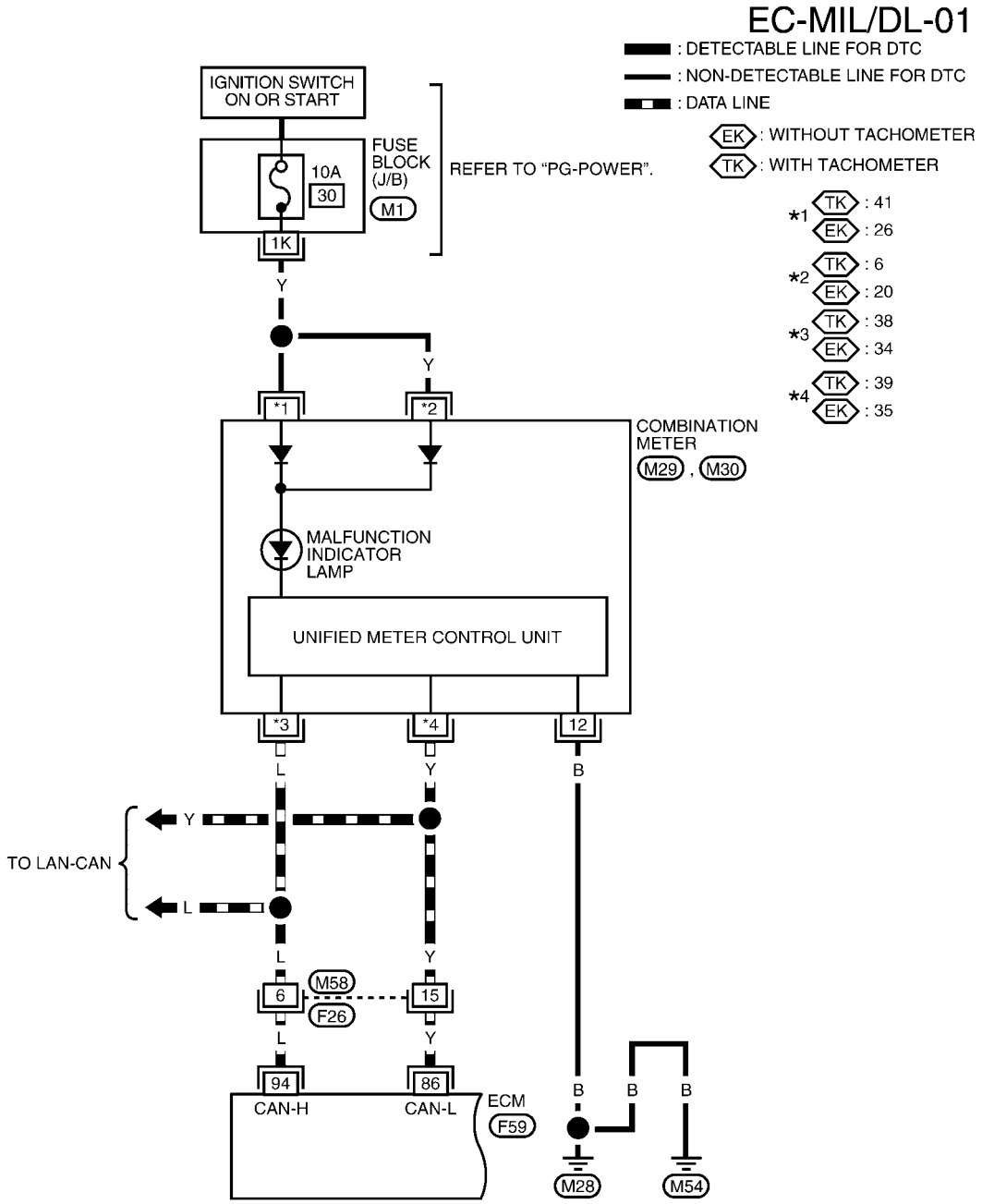

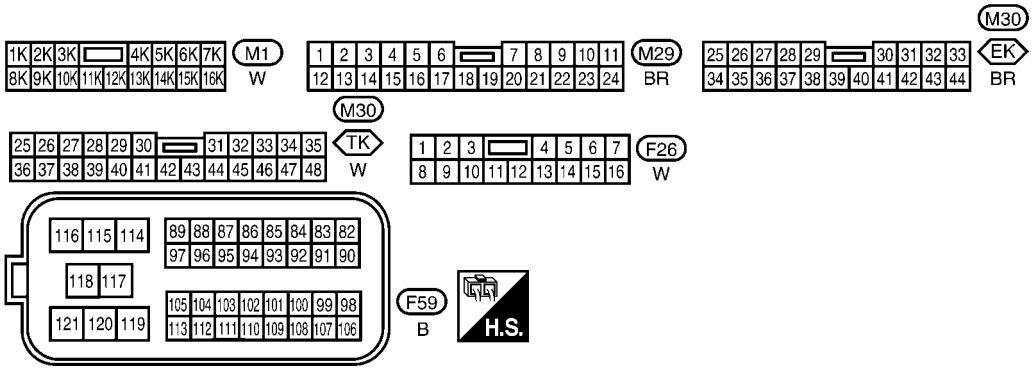

BBWA2291E

SERVICE DATA AND SPECIFICATIONS (SDS)

PFP:00030

Fuel Pressure

UBS00BI8

Fuel pressure at idling kPa (kg/cm^2 , psi)	Approximately 350 (3.57, 51)

Idle Speed and Ignition Timing

UBS00BI9

Target idle speed (Engine is warmed up to normal operating temperature)	A/T	No-load* (in P or N position)	800 ± 50 rpm
	M/T	No-load* (in Neutral position)	650 ± 50 rpm
Air conditioner: ON	A/T	In P or N position	850 rpm or more
	M/T	In Neutral position	
Ignition timing	A/T	In P or N position	18° ± 5° BTDC
	M/T	In Neutral position	7° ± 5° BTDC

*: Under the following conditions:

- Air conditioner switch: OFF
- Electrical load: OFF (Lights, heater fan & rear window defogger)
- Steering wheel: Kept in straight-ahead position

Mass Air Flow Sensor

UBS00BIA

Supply voltage V	Battery voltage (11 - 14)
Output voltage at idle V	0.9 - 1.2
Mass air flow (Using CONSULT-II or GST) g·m/sec	1.4 - 4.0 at idle* 5.0 - 10.0 at 2,500 rpm*

*: Engine is warmed up to normal operating temperature and idling under no-load.

Engine Coolant Temperature Sensor

UBS00BIB

Temperature °C (°F)	Resistance kΩ
20 (68)	2.1 - 2.9
50 (122)	0.68 - 1.00
90 (194)	0.236 - 0.260

Fuel Pump

UBS00BIC

Resistance [at 25°C (77°F)] Ω	0.2 - 5.0

Injector

UBS00BID

Resistance [at 20°C (68°F)] Ω	12.5 - 18.4

Resistor

UBS00BIE

Resistance [at 25°C (77°F)] Ω	4 - 8

Throttle Control Motor

UBS00BIF

Resistance [at 25°C (77°F)]	Approximately 1 - 15Ω

Air Fuel Ratio (A/F) Sensor 1 Heater

UBS00BIG

Resistance [at 25°C (77°F)] Ω	2.3 - 4.3

Heated Oxygen Sensor 2 Heater

UBS00BIN

Resistance [at 25°C (77°F)] Ω	8 - 10

Calculated Load Value

UBS00BIH

Condition	Calculated load value % (Using CONSULT-II or GST)
At idle	20.0 - 35.5
At 2,500 rpm	12.0 - 30.0

Intake Air Temperature Sensor

UBS00BII

Temperature °C (°F)	Resistance kΩ
25 (77)	1.9 - 2.1

Crankshaft Position Sensor (POS)

UBS00BIK

Refer toEC-289, "Component Inspection" .

Camshaft Position Sensor (PHASE)

UBS00KTC

Refer to EC-297, "Component Inspection" .

Fuel Tank Temperature Sensor

UBS00BIL

Temperature °C (°F)	Resistance kΩ
20 (68)	2.3 - 2.7
50 (122)	0.79 - 0.90

INDEX FOR DTC

PFP:00024

DTC No. Index

UBS00KJE

NOTE:
If DTC U1000 or U1001 is displayed with other DTC, first perform the trouble diagnosis for DTC U1000, U1001. Refer to EC-842, "DTC U1000, U1001 CAN COMMUNICATION LINE" .

DTC*1		Items (CONSULT-II screen terms)	Reference page
CONSULT-II GST*2	ECM*3 *7		
No DTC	Flashing*4	NO DTC IS DETECTED. FURTHER TESTING MAY BE REQUIRED.	EC-715
U1000	1000*5	CAN COMM CIRCUIT	EC-842
U1001	1001*5	CAN COMM CIRCUIT	EC-842
P0000	**0000**	**NO DTC IS DETECTED. FURTHER TESTING MAY BE REQUIRED.**	**—**
P0011	0011	INT/V TIM CONT-B1	EC-845
P0031	0031	HO2S1 HTR (B1)*7	EC-849
P0032	0032	HO2S1 HTR (B1)*7	EC-849
P0037	0037	HO2S2 HTR (B1)	EC-855
P0038	0038	HO2S2 HTR (B1)	EC-855
P0101	0101	MAF SEN/CIRCUIT	EC-861
P0102	0102	MAF SEN/CIRCUIT	EC-870
P0103	0103	MAF SEN/CIRCUIT	EC-870
P0112	0112	IAT SEN/CIRCUIT	EC-878
P0113	0113	IAT SEN/CIRCUIT	EC-878
P0117	0117	ECT SEN/CIRCUIT	EC-884
P0118	0118	ECT SEN/CIRCUIT	EC-884
P0122	0122	TP SEN 2/CIRC	EC-890
P0123	0123	TP SEN 2/CIRC	EC-890
P0125	0125	ECT SENSOR	EC-897
P0127	0127	IAT SENSOR	EC-900
P0128	0128	THERMSTAT FNCTN	EC-903
P0132	0132	HO2S1 (B1)*7	EC-905
P0133	0133	HO2S1 (B1)*7	EC-912
P0134	0134	HO2S1 (B1)*7	EC-922
P0138	0138	HO2S2 (B1)	EC-929
P0139	0139	HO2S2 (B1)	EC-935
P0171	0171	FUEL SYS-LEAN-B1	EC-943
P0172	0172	FUEL SYS-RICH-B1	EC-954
P0181	0181	FTT SENSOR	EC-964
P0182	0182	FTT SEN/CIRCUIT	EC-969
P0183	0183	FTT SEN/CIRCUIT	EC-969
P0222	0222	TP SEN 1/CIRC	EC-973
P0223	0223	TP SEN 1/CIRC	EC-973
P0300	0300	MULTI CYL MISFIRE	EC-980

DTC*1		Items (CONSULT-II screen terms)	Reference page
CONSULT-II GST*2	ECM*3 *7		
P0301	0301	CYL 1 MISFIRE	EC-980
P0302	0302	CYL 2 MISFIRE	EC-980
P0303	0303	CYL 3 MISFIRE	EC-980
P0304	0304	CYL 4 MISFIRE	EC-980
P0327	0327	KNOCK SEN/CIRC-B1	EC-987
P0328	0328	KNOCK SEN/CIRC-B1	EC-987
P0335	0335	CKP SEN/CIRCUIT	EC-992
P0340	0340	CMP SEN/CIRC-B1	EC-999
P0420	0420	TW CATALYST SYS-B1	EC-1006
P0441	0441	EVAP PURG FLOW/MON	EC-1016
P0442	0442	EVAP SMALL LEAK	EC-1022
P0444	0444	PURG VOLUME CONT/V	EC-1031
P0445	0445	PURG VOLUME CONT/V	EC-1031
P0447	0447	VENT CONTROL VALVE	EC-1038
P0451	0451	EVAP SYS PRES SEN	EC-1045
P0452	0452	EVAP SYS PRES SEN	EC-1048
P0453	0453	EVAP SYS PRES SEN	EC-1054
P0455	0455	EVAP GROSS LEAK	EC-1061
P0456	0456	EVAP VERY SML LEAK	EC-1069
P0460	0460	FUEL LEV SEN SLOSH	EC-1079
P0461	0461	FUEL LEVEL SENSOR	EC-1081
P0462	0462	FUEL LEVL SEN/CIRC	EC-1083
P0463	0463	FUEL LEVL SEN/CIRC	EC-1083
P0500	0500	VEH SPEED SEN/CIRC*6	EC-1085
P0506	0506	ISC SYSTEM	EC-1087
P0507	0507	ISC SYSTEM	EC-1089
P0550	0550	PW ST P SEN/CIRC	EC-1091
P0605	0605	ECM	EC-1096
P0705	0705	PNP SW/CIRC	AT-487
P0710	0710	ATF TEMP SEN/CIRC	AT-493
P0720	0720	VEH SPD SEN/CIR AT*6	AT-499
P0725	0725	ENGINE SPEED SIG	AT-504
P0731	0731	A/T 1ST GR FNCTN	AT-508
P0732	0732	A/T 2ND GR FNCTN	AT-513
P0733	0733	A/T 3RD GR FNCTN	AT-518
P0734	0734	A/T 4TH GR FNCTN	AT-523
P0740	0740	TCC SOLENOID/CIRC	AT-530
P0744	0744	A/T TCC S/V FNCTN	AT-535
P0745	0745	L/PRESS SOL/CIRC	AT-543
P0750	0750	SFT SOL A/CIRC	AT-549
P0755	0755	SFT SOL B/CIRC	AT-554
P1031	1031	A/F SEN1 HTR (B1)*8	EC-1099

DTC*1		Items (CONSULT-II screen terms)	Reference page
CONSULT-II GST*2	ECM*3 *7		
P1032	1032	A/F SEN1 HTR (B1)*8	EC-1099
P1065	1065	ECM BACK UP/CIRC	EC-1104
P1111	1111	INT/V TIM V/CIR-B1	EC-1108
P1121	1121	ETC ACTR	EC-1112
P1122	1122	ETC FUNCTION/CIRC	EC-1114
P1124	1124	ETC MOT PWR	EC-1121
P1126	1126	ETC MOT PWR	EC-1121
P1128	1128	ETC MOT	EC-1126
P1143	1143	HO2S1 (B1)*7	EC-1131
P1144	1144	HO2S1 (B1)*7	EC-1137
P1146	1146	HO2S2 (B1)	EC-1143
P1147	1147	HO2S2 (B1)	EC-1151
P1148	1148	CLOSED LOOP-B1	EC-1159
P1217	1217	ENG OVER TEMP	EC-1161
P1225	1225	CTP LEARNING	EC-1174
P1226	1226	CTP LEARNING	EC-1176
P1229	1229	SENSOR POWER/CIRC	EC-1178
P1271	1271	A/F SENSOR1 (B1)*8	EC-1183
P1272	1272	A/F SENSOR1 (B1)*8	EC-1189
P1273	1273	A/F SENSOR1 (B1)*8	EC-1195
P1274	1274	A/F SENSOR1 (B1)*8	EC-1202
P1276	1276	A/F SENSOR1 (B1)*8	EC-1209
P1278	1278	A/F SENSOR1 (B1)*8	EC-1216
P1279	1279	A/F SENSOR1 (B1)*8	EC-1225
P1444	1444	PURG VOLUME CONT/V	EC-1234
P1446	1446	VENT CONTROL VALVE	EC-1242
P1564	1564	ASCD SW	EC-1249
P1572	1572	ASCD BRAKE SW	EC-1256
P1574	1574	ASCD VHL SPD SEN	EC-1267
P1610 - P1615	1610 - 1615	NATS MALFUNCTION	EC-696
P1705	1705	TP SEN/CIRC A/T	AT-559
P1706	1706	P-N POS SW/CIRCUIT	EC-1269
P1760	1760	O/R CLTCH SOL/CIRC	AT-564
P1800	1800	VIAS S/V CIRC	EC-1273
P1805	1805	BRAKE SW/CIRCUIT	EC-1279
P2122	2122	APP SEN 1/CIRC	EC-1284
P2123	2123	APP SEN 1/CIRC	EC-1284
P2127	2127	APP SEN 2/CIRC	EC-1291
P2128	2128	APP SEN 2/CIRC	EC-1291
P2135	2135	TP SENSOR	EC-1299
P2138	2138	APP SENSOR	EC-1306

*1: 1st trip DTC No. is the same as DTC No.
*2: This number is prescribed by SAE J2012.
*3: In Diagnostic Test Mode II (Self-diagnostic results), this number is controlled by NISSAN.
*4: When engine is running.
*5: The troubleshooting for this DTC needs CONSULT-II.
*6: When the fail-safe operations for both self-diagnoses occur, the MIL illuminates.
*7: A/T models ULEV and M/T models.
*8: A/T models except ULEV.

Alphabetical Index

UBS00KJF

NOTE:
If DTC U1000 or U1001 is displayed with other DTC, first perform the trouble diagnosis for DTC U1000, U1001. Refer to EC-842, "DTC U1000, U1001 CAN COMMUNICATION LINE" .

Items (CONSULT-II screen terms)	DTC*1		Reference page
	CONSULT-II GST*2	ECM*3	
A/F SENSOR1 (B1)*8	P1271	1271	EC-1183
A/F SENSOR1 (B1)*8	P1272	1272	EC-1189
A/F SENSOR1 (B1)*8	P1273	1273	EC-1195
A/F SENSOR1 (B1)*8	P1274	1274	EC-1202
A/F SENSOR1 (B1)*8	P1276	1276	EC-1209
A/F SENSOR1 (B1)*8	P1278	1278	EC-1216
A/F SENSOR1 (B1)*8	P1279	1279	EC-1225
A/F SEN1 HTR (B1)*8	P1031	1031	EC-1099
A/F SEN1 HTR (B1)*8	P1032	1032	EC-1099
A/T 1ST GR FNCTN	P0731	0731	AT-508
A/T 2ND GR FNCTN	P0732	0732	AT-513
A/T 3RD GR FNCTN	P0733	0733	AT-518
A/T 4TH GR FNCTN	P0734	0734	AT-523
A/T TCC S/V FNCTN	P0744	0744	AT-535
APP SEN 1/CIRC	P2122	2122	EC-1284
APP SEN 1/CIRC	P2123	2123	EC-1284
APP SEN 2/CIRC	P2127	2127	EC-1291
APP SEN 2/CIRC	P2128	2128	EC-1291
APP SENSOR	P2138	2138	EC-1306
ASCD BRAKE SW	P1572	1572	EC-1256
ASCD SW	P1564	1564	EC-1249
ASCD VHL SPD SEN	P1574	1574	EC-1267
ATF TEMP SEN/CIRC	P0710	0710	AT-493
BRAKE SW/CIRCUIT	P1805	1805	EC-1279
CAN COMM CIRCUIT	U1000	1000*5	EC-842
CAN COMM CIRCUIT	U1001	1001*5	EC-842
CKP SEN/CIRCUIT	P0335	0335	EC-992
CLOSED LOOP-B1	P1148	1148	EC-1159
CMP SEN/CIRC-B1	P0340	0340	EC-999
CTP LEARNING	P1225	1225	EC-1174
CTP LEARNING	P1226	1226	EC-1176

Items (CONSULT-II screen terms)	DTC*1		Reference page
	CONSULT-II GST*2	ECM*3	
CYL 1 MISFIRE	P0301	0301	EC-980
CYL 2 MISFIRE	P0302	0302	EC-980
CYL 3 MISFIRE	P0303	0303	EC-980
CYL 4 MISFIRE	P0304	0304	EC-980
ECM	P0605	0605	EC-1096
ECM BACK UP/CIRC	P1065	1065	EC-1104
ECT SEN/CIRCUIT	P0117	0117	EC-884
ECT SEN/CIRCUIT	P0118	0118	EC-884
ECT SENSOR	P0125	0125	EC-897
ENG OVER TEMP	P1217	1217	EC-1161
ENGINE SPEED SIG	P0725	0725	AT-504
ETC ACTR	P1121	1121	EC-1112
ETC FUNCTION/CIRC	P1122	1122	EC-1114
ETC MOT	P1128	1128	EC-1126
ETC MOT PWR	P1124	1124	EC-1121
ETC MOT PWR	P1126	1126	EC-1121
EVAP GROSS LEAK	P0455	0455	EC-1061
EVAP PURG FLOW/MON	P0441	0441	EC-1016
EVAP SMALL LEAK	P0442	0442	EC-1022
EVAP SYS PRES SEN	P0451	0451	EC-1045
EVAP SYS PRES SEN	P0452	0452	EC-1048
EVAP SYS PRES SEN	P0453	0453	EC-1054
EVAP VERY SML LEAK	P0456	0456	EC-1069
FTT SEN/CIRCUIT	P0182	0182	EC-969
FTT SEN/CIRCUIT	P0183	0183	EC-969
FTT SENSOR	P0181	0181	EC-964
FUEL LEV SEN SLOSH	P0460	0460	EC-1079
FUEL LEVEL SENSOR	P0461	0461	EC-1081
FUEL LEVL SEN/CIRC	P0462	0462	EC-1083
FUEL LEVL SEN/CIRC	P0463	0463	EC-1083
FUEL SYS-LEAN-B1	P0171	0171	EC-943
FUEL SYS-RICH-B1	P0172	0172	EC-954
HO2S1 (B1)*7	P0132	0132	EC-905
HO2S1 (B1)*7	P0133	0133	EC-912
HO2S1 (B1)*7	P0134	0134	EC-922
HO2S1 (B1)*7	P1143	1143	EC-1131
HO2S1 (B1)*7	P1144	1144	EC-1137
HO2S1 HTR (B1)*7	P0031	0031	EC-849
HO2S1 HTR (B1)*7	P0032	0032	EC-849
HO2S2 (B1)	P0138	0138	EC-929
HO2S2 (B1)	P0139	0139	EC-935

Items (CONSULT-II screen terms)	DTC*1		Reference page
	CONSULT-II GST*2	ECM*3	
HO2S2 (B1)	P1146	1146	EC-1143
HO2S2 (B1)	P1147	1147	EC-1151
HO2S2 HTR (B1)	P0037	0037	EC-855
HO2S2 HTR (B1)	P0038	0038	EC-855
IAT SEN/CIRCUIT	P0112	0112	EC-878
IAT SEN/CIRCUIT	P0113	0113	EC-878
IAT SENSOR	P0127	0127	EC-900
INT/V TIM CONT-B1	P0011	0011	EC-845
INT/V TIM V/CIR-B1	P1111	1111	EC-1108
ISC SYSTEM	P0506	0506	EC-1087
ISC SYSTEM	P0507	0507	EC-1089
KNOCK SEN/CIRC-B1	P0327	0327	EC-987
KNOCK SEN/CIRC-B1	P0328	0328	EC-987
L/PRESS SOL/CIRC	P0745	0745	AT-543
MAF SEN/CIRCUIT	P0101	0101	EC-861
MAF SEN/CIRCUIT	P0102	0102	EC-870
MAF SEN/CIRCUIT	P0103	0103	EC-870
MULTI CYL MISFIRE	P0300	0300	EC-980
NATS MALFUNCTION	P1610 - P1615	1610 - 1615	EC-696
NO DTC IS DETECTED. FURTHER TESTING MAY BE REQUIRED.	No DTC	Flashing*4 *7	EC-715
NO DTC IS DETECTED. FURTHER TESTING MAY BE REQUIRED.	**P0000**	**0000**	**—**
O/R CLTCH SOL/CIRC	P1760	1760	AT-564
P-N POS SW/CIRCUIT	P1706	1706	AT-564
PNP SW/CIRC	P0705	0705	AT-487
PURG VOLUME CONT/V	P0444	0444	EC-1031
PURG VOLUME CONT/V	P0445	0445	EC-1031
PURG VOLUME CONT/V	P1444	1444	EC-1234
PW ST P SEN/CIRC	P0550	0550	EC-1091
SENSOR POWER/CIRC	P1229	1229	EC-1178
SFT SOL A/CIRC	P0750	0750	AT-549
SFT SOL B/CIRC	P0755	0755	AT-554
TCC SOLENOID/CIRC	P0740	0740	AT-530
THERMSTAT FNCTN	P0128	0128	EC-903
TP SEN 1/CIRC	P0222	0222	EC-973
TP SEN 1/CIRC	P0223	0223	EC-973
TP SEN 2/CIRC	P0122	0122	EC-890
TP SEN 2/CIRC	P0123	0123	EC-890
TP SENSOR	P2135	2135	EC-1299
TP SEN/CIRC A/T	P1705	1705	AT-559
TW CATALYST SYS-B1	P0420	0420	EC-1006

Items (CONSULT-II screen terms)	DTC*1		Reference page
	CONSULT-II GST*2	ECM*3	
VEH SPD SEN/CIR AT*6	P0720	0720	AT-499
VEH SPEED SEN/CIRC*6	P0500	0500	EC-1085
VENT CONTROL VALVE	P0447	0447	EC-1038
VENT CONTROL VALVE	P1446	1446	EC-1242
VIAS S/V CIRC	P1800	1800	EC-1273

*1: 1st trip DTC No. is the same as DTC No.
*2: This number is prescribed by SAE J2012.
*3: In Diagnostic Test Mode II (Self-diagnostic results), this number is controlled by NISSAN.
*4: When engine is running.
*5: The troubleshooting for this DTC needs CONSULT-II.
*6: When the fail-safe operations for both self-diagnoses occur, the MIL illuminates.
*7: A/T models ULEV and M/T models.
*8: A/T models except ULEV.

PRECAUTIONS

PFP:00001

Precautions for Supplemental Restraint System (SRS) “AIR BAG” and “SEAT BELT PRE-TENSIONER”

UBS00KU5

The Supplemental Restraint System such as “AIR BAG” and “SEAT BELT PRE-TENSIONER”, used along with a front seat belt, helps to reduce the risk or severity of injury to the driver and front passenger for certain types of collision. Information necessary to service the system safely is included in the SRS and SB section of this Service Manual.

WARNING:

- **To avoid rendering the SRS inoperative, which could increase the risk of personal injury or death in the event of a collision which would result in air bag inflation, all maintenance must be performed by an authorized NISSAN/INFINITI dealer.**
- **Improper maintenance, including incorrect removal and installation of the SRS, can lead to personal injury caused by unintentional activation of the system. For removal of Spiral Cable and Air Bag Module, see the SRS section.**
- **Do not use electrical test equipment on any circuit related to the SRS unless instructed to in this Service Manual. SRS wiring harnesses can be identified by yellow and/or orange harnesses or harness connectors.**

On Board Diagnostic (OBD) System of Engine and A/T

UBS00J8T

The ECM has an on board diagnostic system. It will light up the malfunction indicator lamp (MIL) to warn the driver of a malfunction causing emission deterioration.

CAUTION:

- **Be sure to turn the ignition switch OFF and disconnect the battery ground cable before any repair or inspection work. The open/short circuit of related switches, sensors, solenoid valves, etc. will cause the MIL to light up.**
- **Be sure to connect and lock the connectors securely after work. A loose (unlocked) connector will cause the MIL to light up due to the open circuit. (Be sure the connector is free from water, grease, dirt, bent terminals, etc.)**
- **Certain systems and components, especially those related to OBD, may use a new style slide-locking type harness connector. For description and how to disconnect, refer to PG-47, "HARNESS CONNECTOR" .**
- **Be sure to route and secure the harnesses properly after work. The interference of the harness with a bracket, etc. may cause the MIL to light up due to the short circuit.**
- **Be sure to connect rubber tubes properly after work. A misconnected or disconnected rubber tube may cause the MIL to light up due to the malfunction of the fuel injection system, etc.**
- **Be sure to erase the unnecessary malfunction information (repairs completed) from the ECM and TCM (Transmission control module) before returning the vehicle to the customer.**

Precaution

UBS00J8U

- **Always use a 12 volt battery as power source.**
- **Do not attempt to disconnect battery cables while engine is running.**
- **Before connecting or disconnecting the ECM harness connector, turn ignition switch OFF and disconnect battery ground cable. Failure to do so may damage the ECM because battery voltage is applied to ECM even if ignition switch is turned OFF.**
- **Before removing parts, turn ignition switch OFF and then disconnect battery ground cable.**

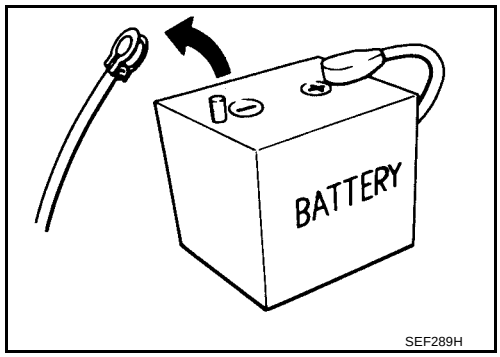

SEF289H

- **Do not disassemble ECM.**
- **If battery cable is disconnected, the memory will return to the initial ECM values.**
  The ECM will now start to self-control at its initial values. Engine operation can vary slightly when the cable is disconnected. However, this is not an indication of a malfunction. Do not replace parts because of a slight variation.
- **If the battery is disconnected, the following emission-related diagnostic information will be lost within 24 hours.**
  - **Diagnostic trouble codes**
  - **1st trip diagnostic trouble codes**
  - **Freeze frame data**
  - **1st trip freeze frame data**
  - **System readiness test (SRT) codes**
  - **Test values**

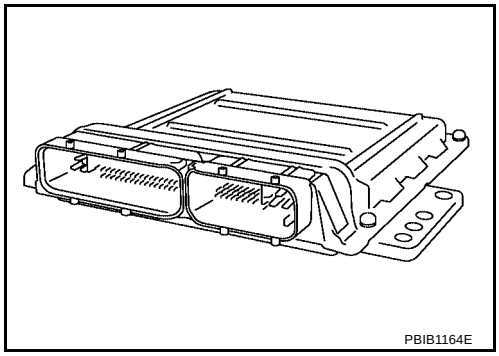
PBIB1164E

- **When connecting ECM harness connector, fasten it securely with a lever as far as it will go as shown in the figure.**

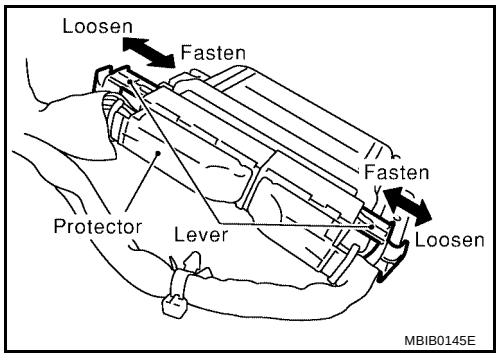

MBIB0145E

- **When connecting or disconnecting pin connectors into or from ECM, take care not to damage pin terminals (bend or break).**
  Make sure that there are not any bends or breaks on ECM pin terminal, when connecting pin connectors.
- **Securely connect ECM harness connectors.**
  A poor connection can cause an extremely high (surge) voltage to develop in coil and condenser, thus resulting in damage to ICs.
- **Keep engine control system harness at least 10 cm (4 in) away from adjacent harness, to prevent engine control system malfunctions due to receiving external noise, degraded operation of ICs, etc.**
- **Keep engine control system parts and harness dry.**

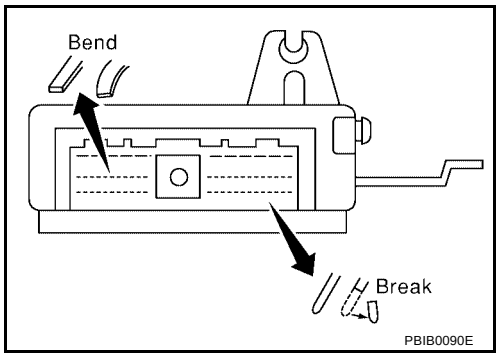

PBIB0090E

- **Before replacing ECM, perform "ECM Terminals and Reference Value" inspection and make sure ECM functions properly. Refer to EC-784 .**
- **Handle mass air flow sensor carefully to avoid damage.**
- **Do not disassemble mass air flow sensor.**
- **Do not clean mass air flow sensor with any type of detergent.**
- **Do not disassemble electric throttle control actuator.**
- **Even a slight leak in the air intake system can cause serious incidents.**
- **Do not shock or jar the camshaft position sensor (PHASE), crankshaft position sensor (POS).**

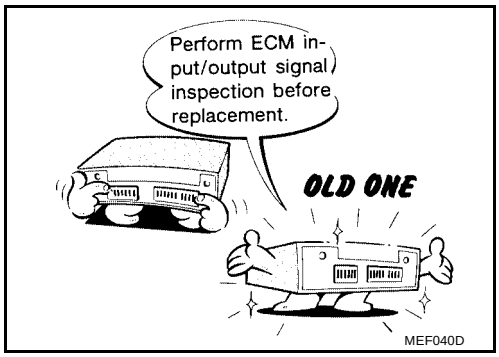

MEF040D

- **After performing each TROUBLE DIAGNOSIS, perform DTC Confirmation Procedure or Overall Function Check.**
  The DTC should not be displayed in the DTC Confirmation Procedure if the repair is completed. The Overall Function Check should be a good result if the repair is completed.

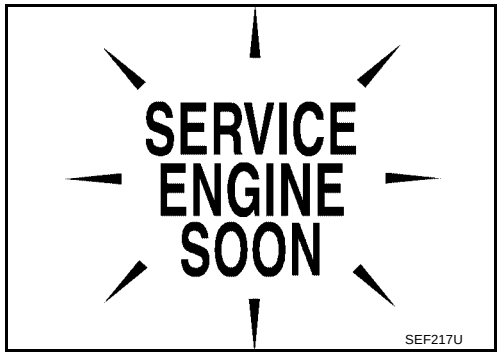

- **When measuring ECM signals with a circuit tester, never allow the two tester probes to contact.**
  Accidental contact of probes will cause a short circuit and damage the ECM power transistor.
- **Do not use ECM ground terminals when measuring input/output voltage. Doing so may result in damage to the ECM's transistor. Use a ground other than ECM terminals, such as the ground.**

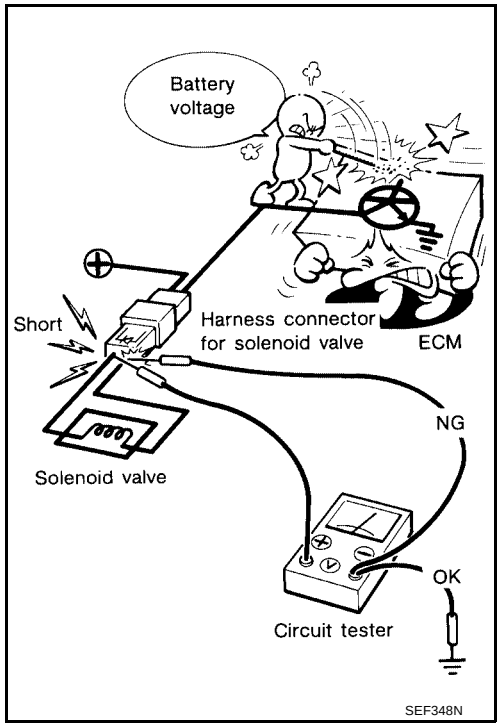

- **Do not operate fuel pump when there is no fuel in lines.**
- **Tighten fuel hose clamps to the specified torque.**

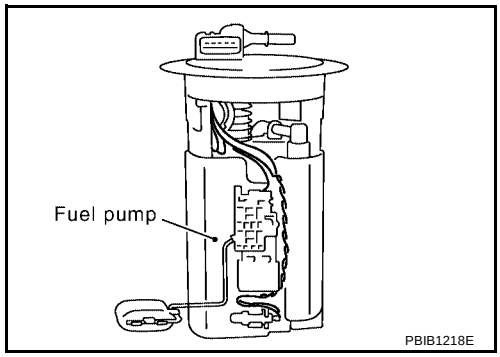

- **Do not depress accelerator pedal when starting.**
- **Immediately after starting, do not rev up engine unnecessarily.**
- **Do not rev up engine just prior to shutdown.**

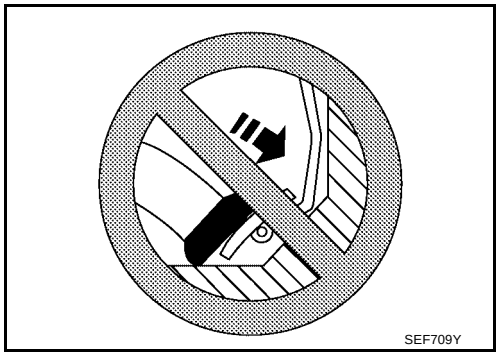

- **When installing C.B. ham radio or a mobile phone, be sure to observe the following as it may adversely affect electronic control systems depending on installation location.**
  - **Keep the antenna as far as possible from the electronic control units.**
  - **Keep the antenna feeder line more than 20 cm (8 in) away from the harness of electronic controls.**
    Do not let them run parallel for a long distance.
  - **Adjust the antenna and feeder line so that the standing-wave radio can be kept smaller.**
  - **Be sure to ground the radio to vehicle body.**

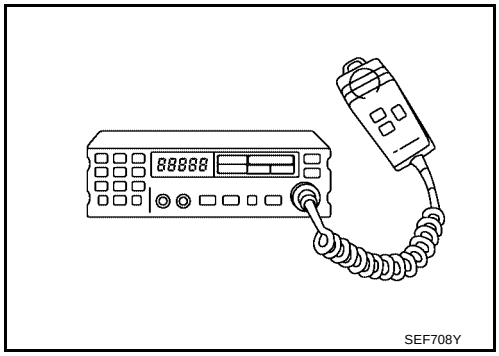

Wiring Diagrams and Trouble Diagnosis

UBS00J8V

When you read wiring diagrams, refer to the following:

- GI-15, "How to Read Wiring Diagrams"
- PG-3, "POWER SUPPLY ROUTING" for power distribution circuit

When you perform trouble diagnosis, refer to the following:

- GI-11, "HOW TO FOLLOW TEST GROUPS IN TROUBLE DIAGNOSES"
- GI-27, "How to Perform Efficient Diagnosis for an Electrical Incident"

PREPARATION

PFP:00002

Special Service Tools

UBS00KJG

The actual shapes of Kent-Moore tools may differ from those of special service tools illustrated here.

Tool number (Kent-Moore No.) Tool name	Description	
KV10117100 (J-36471-A) Heated oxygen sensor wrench	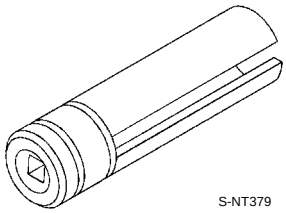 S-NT379	Loosening or tightening heated oxygen sensors with 22 mm (0.87 in) hexagon nut
KV10114400 (J-38365) Heated oxygen sensor wrench	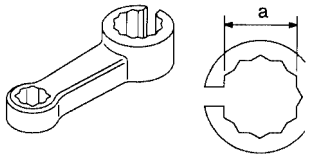 S-NT636	Loosening or tightening heated oxygen sensors **a: 22 mm (0.87 in)**
(J-44626) Air fuel ratio (A/F) sensor wrench	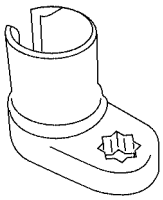 LEM054	Loosening or tightening air fuel ratio (A/F) sensor 1
(J-44321) Fuel pressure gauge kit	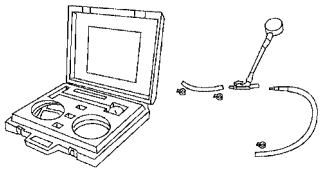 LEC642	Checking fuel pressure
KV109E0010 (J-46209) Break-out box	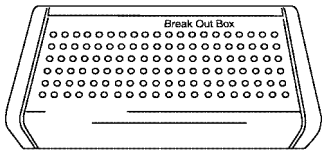 S-NT825	Measuring the ECM signals with a circuit tester
KV109E0080 (J-45819) Y-cable adapter	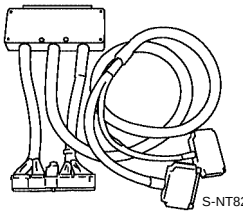 S-NT826	Measuring the ECM signals with a circuit tester
EG17650301 (J-33984-A) Radiator cap tester adapter	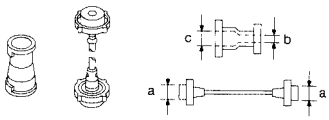 S-NT564	Adapting radiator cap tester to radiator cap and radiator filler neck **a: 28 (1.10) dia.** **b: 31.4 (1.236) dia.** **c: 41.3 (1.626) dia.** Unit: mm (in)

Commercial Service Tools

UBS00KJH

Tool name (Kent-Moore No.)	Description	
Fuel filler cap adapter (J-45356)	 S-NT815	Checking fuel tank vacuum relief valve opening pressure
Leak detector ie: (J-41416)	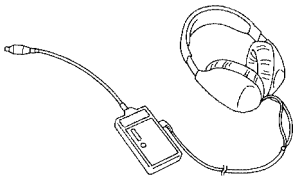 S-NT703	Locating the EVAP leak
EVAP service port adapter ie: (J-41413-OBD)	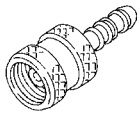 S-NT704	Applying positive pressure through EVAP service port
Socket wrench	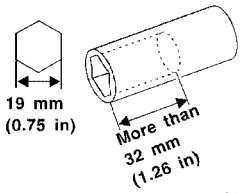 S-NT705	Removing and installing engine coolant temperature sensor
Oxygen sensor thread cleaner ie: (J-43897-18) (J-43897-12)	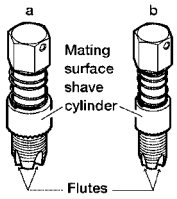 AEM488	Reconditioning the exhaust system threads before installing a new oxygen sensor. Use with anti-seize lubricant shown below. **a: 18 mm diameter with pitch 1.5 mm for Zirconia Oxygen Sensor** **b: 12 mm diameter with pitch 1.25 mm for Titania Oxygen Sensor**
Anti-seize lubricant ie: (Permatex™ 133AR or equivalent meeting MIL specification MIL-A-907)	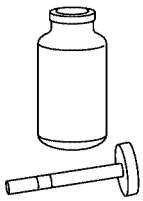 S-NT779	Lubricating oxygen sensor thread cleaning tool when reconditioning exhaust system threads.

ENGINE CONTROL SYSTEM

PFP:23710

System Diagram

UBS00KJC

A/T MODELS ULEV AND M/T MODELS

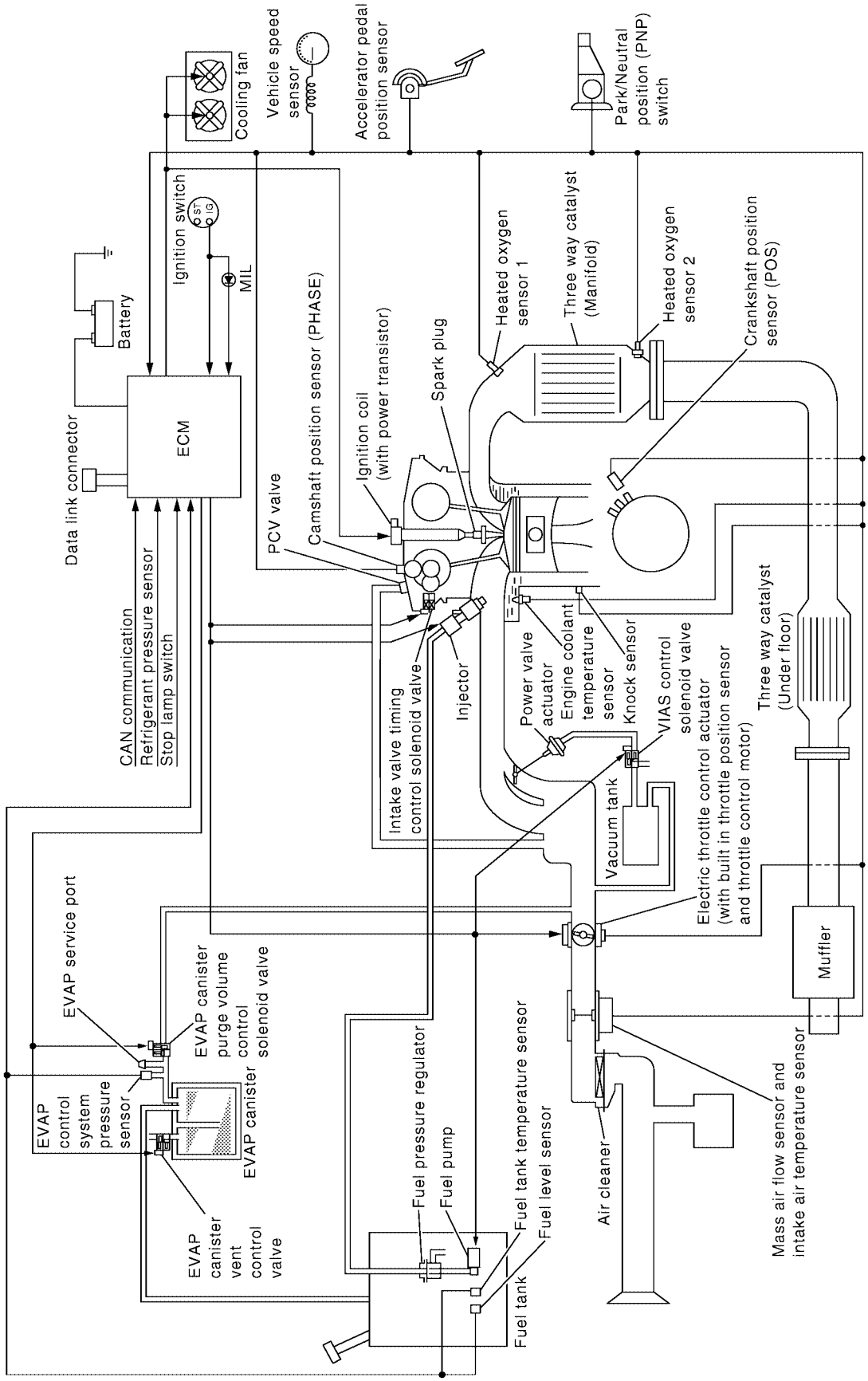

PBIB2511E

A/T MODELS EXCEPT ULEV

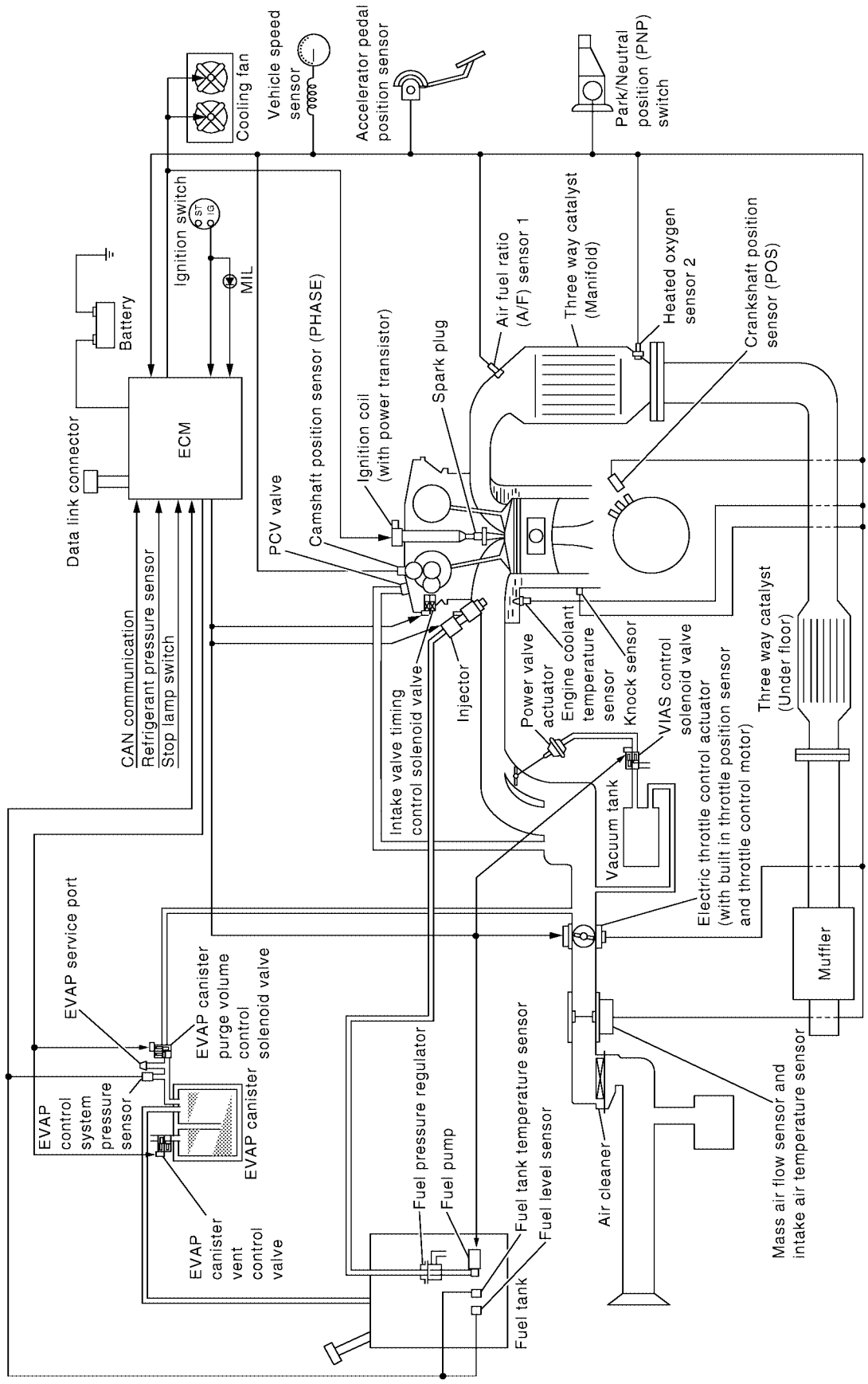

PBIB2512E

Multiport Fuel Injection (MFI) System

UBS00KJD

INPUT/OUTPUT SIGNAL CHART

Sensor	Input Signal to ECM	ECM function	Actuator
Crankshaft position sensor (POS)	Engine speed*5 Piston position	Fuel injection & mixture ratio control	Fuel injector
Camshaft position sensor (PHASE)			
Mass air flow sensor	Amount of intake air		
Engine coolant temperature sensor	Engine coolant temperature		
Heated oxygen sensor 1*1	Density of oxygen in exhaust gas		
Air fuel ratio (A/F) sensor 1*2	Density of oxygen in exhaust gas		
Throttle position sensor	Throttle position		
Accelerator pedal position sensor	Accelerator pedal position		
Park/neutral position (PNP) switch	Gear position		
Knock sensor	Engine knocking condition		
Battery	Battery voltage*5		
Power steering pressure sensor	Power steering operation		
Heated oxygen sensor 2*3	Density of oxygen in exhaust gas		
Vehicle speed sensor*4	Vehicle speed		
Air conditioner switch	Air conditioner operation		

*1: A/T models ULEV and M/T models.
*2: A/T models except ULEV.
*3: Under normal conditions, this sensor is not for engine control operation.
*4: This signal is sent to the ECM through CAN communication line.
*5: ECM determines the start signal status by the signal of engine speed and battery voltage.

SYSTEM DESCRIPTION

The amount of fuel injected from the fuel injector is determined by the ECM. The ECM controls the length of time the valve remains open (injection pulse duration). The amount of fuel injected is a program value in the ECM memory. The program value is preset by engine operating conditions. These conditions are determined by input signals (for engine speed and intake air) from both the crankshaft position sensor and the mass air flow sensor.

VARIOUS FUEL INJECTION INCREASE/DECREASE COMPENSATION

In addition, the amount of fuel injected is compensated to improve engine performance under various operating conditions as listed below.

<Fuel increase>

- During warm-up
- When starting the engine
- During acceleration
- Hot-engine operation
- When selector lever is changed from N to D (A/T models)
- High-load, high-speed operation

<Fuel decrease>

- During deceleration
- During high engine speed operation

MIXTURE RATIO FEEDBACK CONTROL (CLOSED LOOP CONTROL)

A/T Models ULEV and M/T Models

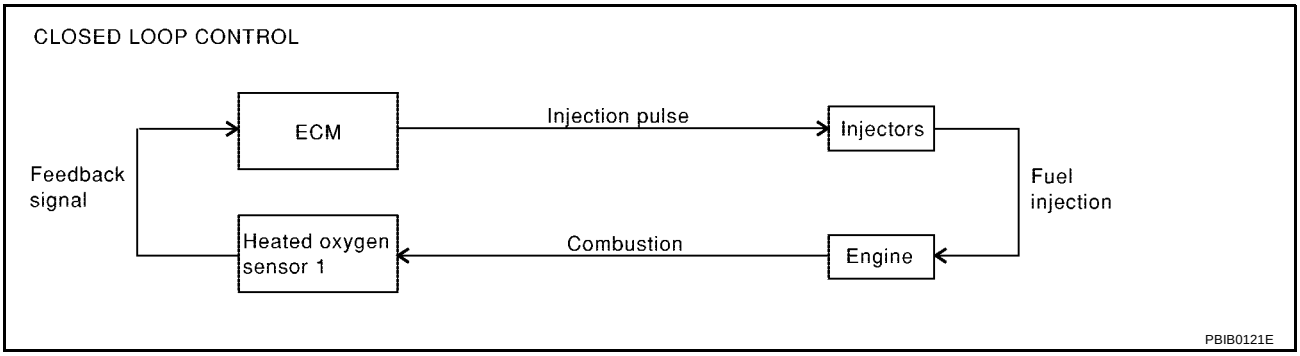

A/T Models Except ULEV

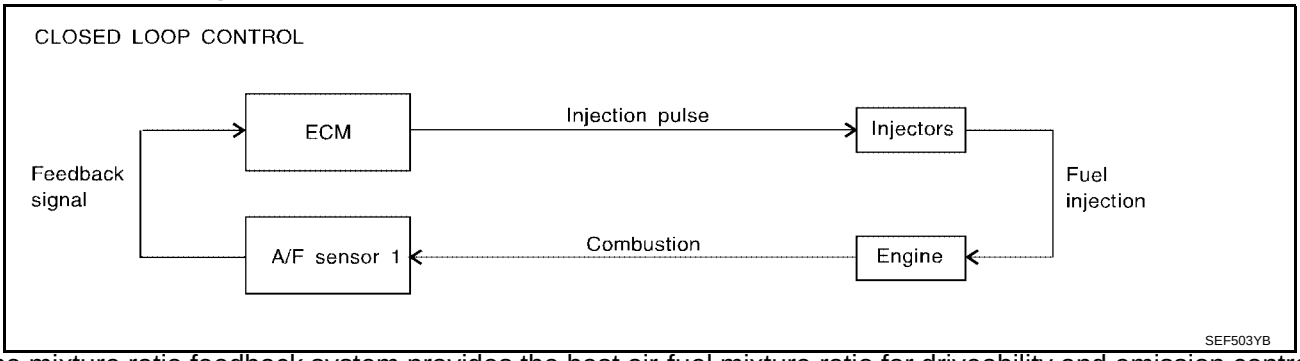

The mixture ratio feedback system provides the best air-fuel mixture ratio for driveability and emission control. The three way catalyst (manifold) can then better reduce CO, HC and NOx emissions. This system uses heated oxygen sensor 1 (A/T models ULEV and M/T models), air fuel ratio (A/F) sensor 1 (A/T models except ULEV) in the exhaust manifold to monitor if the engine operation is rich or lean. The ECM adjusts the injection pulse width according to the sensor voltage signal. For more information about heated oxygen sensor 1 (A/T models ULEV and M/T models), air fuel ratio (A/F) sensor 1 (A/T models except ULEV), refer to EC-905 / EC-1183 This maintains the mixture ratio within the range of stoichiometric (ideal air-fuel mixture).
This stage is referred to as the closed loop control condition.
Heated oxygen sensor 2 is located downstream of the three way catalyst (manifold). Even if the switching characteristics of heated oxygen sensor 1 (A/T models ULEV and M/T models), air-fuel ratio (A/F) sensor 1 (A/T models except ULEV) shift, the air-fuel ratio is controlled to stoichiometric by the signal from heated oxygen sensor 2.

Open Loop Control

The open loop system condition refers to when the ECM detects any of the following conditions. Feedback control stops in order to maintain stabilized fuel combustion.

- Deceleration and acceleration
- High-load, high-speed operation
- Malfunction of heated oxygen sensor 1 (A/T models ULEV and M/T models), air fuel ratio (A/F) sensor 1 (A/T models except ULEV) or their circuits
- Insufficient activation of heated oxygen sensor 1 at low engine coolant temperature
- High engine coolant temperature
- During warm-up
- After shifting from N to D (A/T models)
- When starting the engine

MIXTURE RATIO SELF-LEARNING CONTROL

The mixture ratio feedback control system monitors the mixture ratio signal transmitted from heated oxygen sensor 1 (A/T models ULEV and M/T models), air fuel ratio (A/F) sensor 1 (A/T models except ULEV). This feedback signal is then sent to the ECM. The ECM controls the basic mixture ratio as close to the theoretical mixture ratio as possible. However, the basic mixture ratio is not necessarily controlled as originally designed. Both manufacturing differences (i.e., mass air flow sensor hot wire) and characteristic changes during operation (i.e., injector clogging) directly affect mixture ratio.

Accordingly, the difference between the basic and theoretical mixture ratios is monitored in this system. This is then computed in terms of “injection pulse duration” to automatically compensate for the difference between the two ratios.
“Fuel trim” refers to the feedback compensation value compared against the basic injection duration. Fuel trim includes short term fuel trim and long term fuel trim.
“Short term fuel trim” is the short-term fuel compensation used to maintain the mixture ratio at its theoretical value. The signal from heated oxygen sensor 1 (A/T models ULEV and M/T models), air fuel ratio (A/F) sensor 1 (A/T models except ULEV) indicates whether the mixture ratio is RICH or LEAN compared to the theoretical value. The signal then triggers a reduction in fuel volume if the mixture ratio is rich, and an increase in fuel volume if it is lean.
“Long term fuel trim” is overall fuel compensation carried out long-term to compensate for continual deviation of the short term fuel trim from the central value. Such deviation will occur due to individual engine differences, wear over time and changes in the usage environment.

FUEL INJECTION TIMING

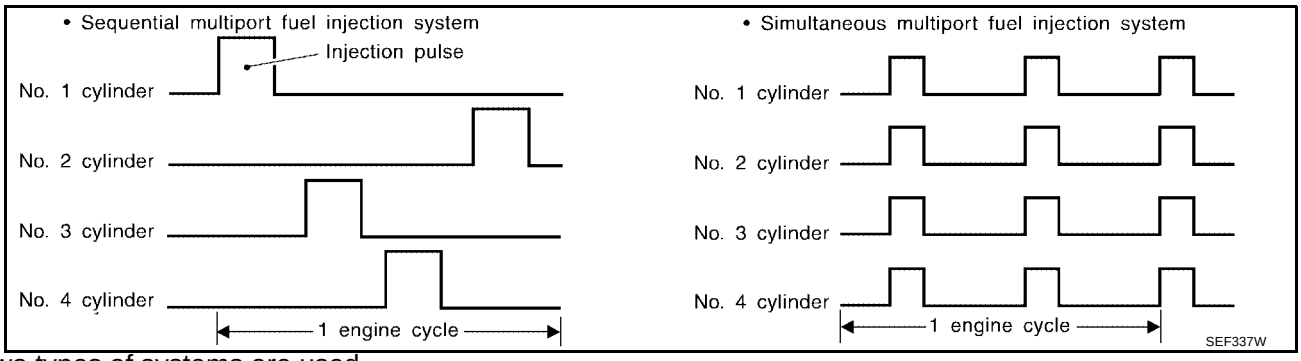

Two types of systems are used.

Sequential Multiport Fuel Injection System

Fuel is injected into each cylinder during each engine cycle according to the firing order. This system is used when the engine is running.

Simultaneous Multiport Fuel Injection System

Fuel is injected simultaneously into all four cylinders twice each engine cycle. In other words, pulse signals of the same width are simultaneously transmitted from the ECM.
The four injectors will then receive the signals two times for each engine cycle.
This system is used when the engine is being started and/or if the fail-safe system (CPU) is operating.

FUEL SHUT-OFF

Fuel to each cylinder is cut off during deceleration, operation of the engine at excessively high speeds or operation of the vehicle at excessively high speeds.

Electronic Ignition (EI) System

UBS00J90

INPUT/OUTPUT SIGNAL CHART

Sensor	Input Signal to ECM	ECM function	Actuator
Crankshaft position sensor (POS)	Engine speed*2	Ignition timing control	Power transistor
Camshaft position sensor (PHASE)	Piston position		
Mass air flow sensor	Amount of intake air		
Engine coolant temperature sensor	Engine coolant temperature		
Throttle position sensor	Throttle position		
Accelerator pedal position sensor	Accelerator pedal position		
Knock sensor	Engine knocking		
Park/neutral position (PNP) switch	Gear position		
Vehicle speed sensor*1	Vehicle speed		
Battery	Battery voltage*2		

*1: This signal is sent to the ECM through CAN communication line.

*2: ECM determines the start signal status by the signal of engine speed and battery voltage.

SYSTEM DESCRIPTION

Firing order: 1 - 3 - 4 - 2
The ignition timing is controlled by the ECM to maintain the best air-fuel ratio for every running condition of the engine. The ignition timing data is stored in the ECM.
The ECM receives information such as the injection pulse width and camshaft position sensor signal. Computing this information, ignition signals are transmitted to the power transistor.
During the following conditions, the ignition timing is revised by the ECM according to the other data stored in the ECM.

- At starting
- During warm-up
- At idle
- At low battery voltage
- During acceleration

The knock sensor retard system is designed only for emergencies. The basic ignition timing is programmed within the anti-knocking zone, if recommended fuel is used under dry conditions. The retard system does not operate under normal driving conditions. If engine knocking occurs, the knock sensor monitors the condition. The signal is transmitted to the ECM. The ECM retards the ignition timing to eliminate the knocking condition.

Fuel Cut Control (at No Load and High Engine Speed)

UBS00J91

INPUT/OUTPUT SIGNAL CHART

Sensor	Input Signal to ECM	ECM function	Actuator
Park/neutral position (PNP) switch	Neutral position	Fuel cut control	Fuel injector
Accelerator pedal position sensor	Accelerator pedal position		
Engine coolant temperature sensor	Engine coolant temperature		
Crankshaft position sensor (POS) Camshaft position sensor (PHASE)	Engine speed		
Vehicle speed sensor*	Vehicle speed		

*: This signal is sent to the ECM through CAN communication line.

SYSTEM DESCRIPTION

If the engine speed is above 1,800 rpm under no load (for example, the shift position is neutral and engine speed is over 1,800 rpm) fuel will be cut off after some time. The exact time when the fuel is cut off varies based on engine speed.
Fuel cut will be operated until the engine speed reaches 1,500 rpm, then fuel cut will be cancelled.

NOTE:
This function is different from deceleration control listed under “Multiport Fuel Injection (MFI) System”, EC-673
.

AIR CONDITIONING CUT CONTROL

PFP:23710

Input/output Signal Chart

UBS00J92

Sensor	Input Signal to ECM	ECM function	Actuator
Air conditioner switch*1	Air conditioner ON signal	Air conditioner cut control	Air conditioner relay
Throttle position sensor	Throttle position		
Accelerator pedal position sensor	Accelerator pedal position		
Crankshaft position sensor (POS) Camshaft position sensor (PHASE)	Engine speed*2		
Engine coolant temperature sensor	Engine coolant temperature		
Refrigerant pressure sensor	Refrigerant pressure		
Power steering pressure sensor	Power steering operation		
Vehicle speed sensor*1	Vehicle speed		
Battery	Battery voltage*2		

*1: This signal is sent to the ECM through CAN communication line.
*2: ECM determines the start signal status by the signal of engine speed and battery voltage.

System Description

UBS00J93

This system improves engine operation when the air conditioner is used.
Under the following conditions, the air conditioner is turned off.

- When the accelerator pedal is fully depressed.
- When cranking the engine.
- At high engine speeds.
- When the engine coolant temperature becomes excessively high.
- When operating power steering during low engine speed or low vehicle speed.
- When engine speed is excessively low.
- When refrigerant pressure is excessively low or high.

AUTOMATIC SPEED CONTROL DEVICE (ASCD)

PFP:18930

System Description

UBS00JT1

INPUT/OUTPUT SIGNAL CHART

Sensor	Input signal to ECM	ECM function	Actuator
ASCD brake switch	Brake pedal operation	ASCD vehicle speed control	Electric throttle control actuator
Stop lamp switch	Brake pedal operation		
ASCD clutch switch (M/T models)	Clutch pedal operation		
ASCD steering switch	ASCD steering switch operation		
Park/Neutral position (PNP) switch (A/T models)	Gear position		
Combination meter*	Vehicle speed		
TCM*	Powertrain revolution		

*: This signal is sent to the ECM through CAN communication line.

BASIC ASCD SYSTEM

Refer to Owner's Manual for ASCD operating instructions.
Automatic Speed Control Device (ASCD) allows a driver to keep vehicle at predetermined constant speed without depressing accelerator pedal. Driver can set vehicle speed in advance between approximately 40 km/h (25 MPH) and 144 km/h (89 MPH).
ECM controls throttle angle of electric throttle control actuator to regulate engine speed.
Operation status of ASCD is indicated by CRUISE indicator and SET indicator in combination meter. If any malfunction occurs in ASCD system, it automatically deactivates the control.

NOTE:
Always drive vehicle in safe manner according to traffic conditions and obey all traffic laws.

SET OPERATION

Press MAIN switch. (The CRUISE indicator in combination meter illuminates.)
When vehicle speed reaches a desired speed between approximately 40 km/h (25 MPH) and 144 km/h (89 MPH), press SET/COAST switch. (Then SET indicator in combination meter illuminates.)

ACCEL OPERATION

If the RESUME/ACCELERATE switch is depressed during cruise control driving, increase the vehicle speed until the switch is released or vehicle speed reaches maximum speed controlled by the system.
And then ASCD will keep the new set speed.

CANCEL OPERATION

When any of following conditions exist, cruise operation will be canceled.

- CANCEL switch is pressed
- More than 2 switches at ASCD steering switch are pressed at the same time (Set speed will be cleared)
- Brake pedal is depressed
- Clutch pedal is depressed or gear position is changed to the neutral position (M/T models)
- Selector lever is changed to N, P, R position (A/T models)
- Vehicle speed decreased to 13km/h(8MPH) lower than the set speed

When the ECM detects any of the following conditions, the ECM will cancel the cruise operation and inform the driver by blinking indicator lamp.

- Engine coolant temperature is slightly higher than the normal operating temperature, CRUISE lamp may blink slowly.
  When the engine coolant temperature decreases to the normal operating temperature, CRUISE lamp will stop blinking and the cruise operation will be able to work by pressing SET/COAST switch or RESUME/ACCELERATE switch.
- Malfunction for some self-diagnoses regarding ASCD control: SET lamp will blink quickly.

COAST OPERATION

When the SET/COAST switch is pressed during cruise control driving, decrease vehicle set speed until the switch is released. And then ASCD will keep the new set speed.

RESUME OPERATION

When the RESUME/ACCELERATE switch is pressed after cancel operation other than pressing MAIN switch is performed, vehicle speed will return to last set speed. To resume vehicle set speed, vehicle condition must meet following conditions.

- Brake pedal is released.
- Clutch pedal is released (M/T models).
- A/T selector lever is in other than P and N positions (A/T models).
- Vehicle speed is greater than 40 km/h (25 MPH) and less than 144 km/h (89 MPH).

Component Description

UBS00JT2

ASCD STEERING SWITCH

Refer to EC-1249 .

ASCD BRAKE SWITCH

Refer to EC-1279 .

ASCD CLUTCH SWITCH

Refer to EC-1256 .

STOP LAMP SWITCH

Refer to EC-1256 .

ELECTRIC THROTTLE CONTROL ACTUATOR

Refer to EC-1112 .

ASCD INDICATOR

Refer to EC-1380 .

CAN COMMUNICATION

PFP:23710

System Description

UBS00J96

CAN (Controller Area Network) is a serial communication line for real time application. It is an on-vehicle multiplex communication line with high data communication speed and excellent error detection ability. Many electronic control units are equipped onto a vehicle, and each control unit shares information and links with other control units during operation (not independent). In CAN communication, control units are connected with 2 communication lines (CAN H line, CAN L line) allowing a high rate of information transmission with less wiring. Each control unit transmits/receives data but selectively reads required data only.
Refer to LAN-4 , about CAN communication for detail.

EVAPORATIVE EMISSION SYSTEM

PFP:14950

Description

UBS00JT3

SYSTEM DESCRIPTION

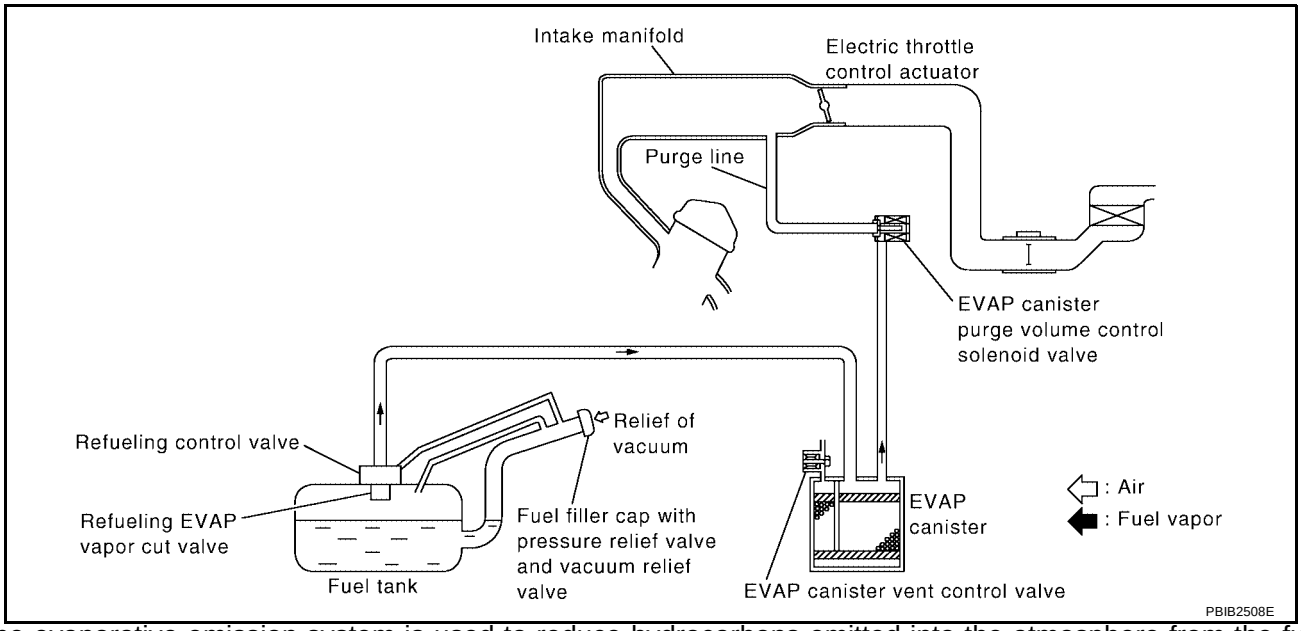

The evaporative emission system is used to reduce hydrocarbons emitted into the atmosphere from the fuel system. This reduction of hydrocarbons is accomplished by activated charcoals in the EVAP canister.

The fuel vapor in the sealed fuel tank is led into the EVAP canister which contains activated carbon and the vapor is stored there when the engine is not operating or when refueling to the fuel tank.

The vapor in the EVAP canister is purged by the air through the purge line to the intake manifold when the engine is operating. EVAP canister purge volume control solenoid valve is controlled by ECM. When the engine operates, the flow rate of vapor controlled by EVAP canister purge volume control solenoid valve is proportionally regulated as the air flow increases.

EVAP canister purge volume control solenoid valve also shuts off the vapor purge line during decelerating and idling.

EVAPORATIVE EMISSION LINE DRAWING

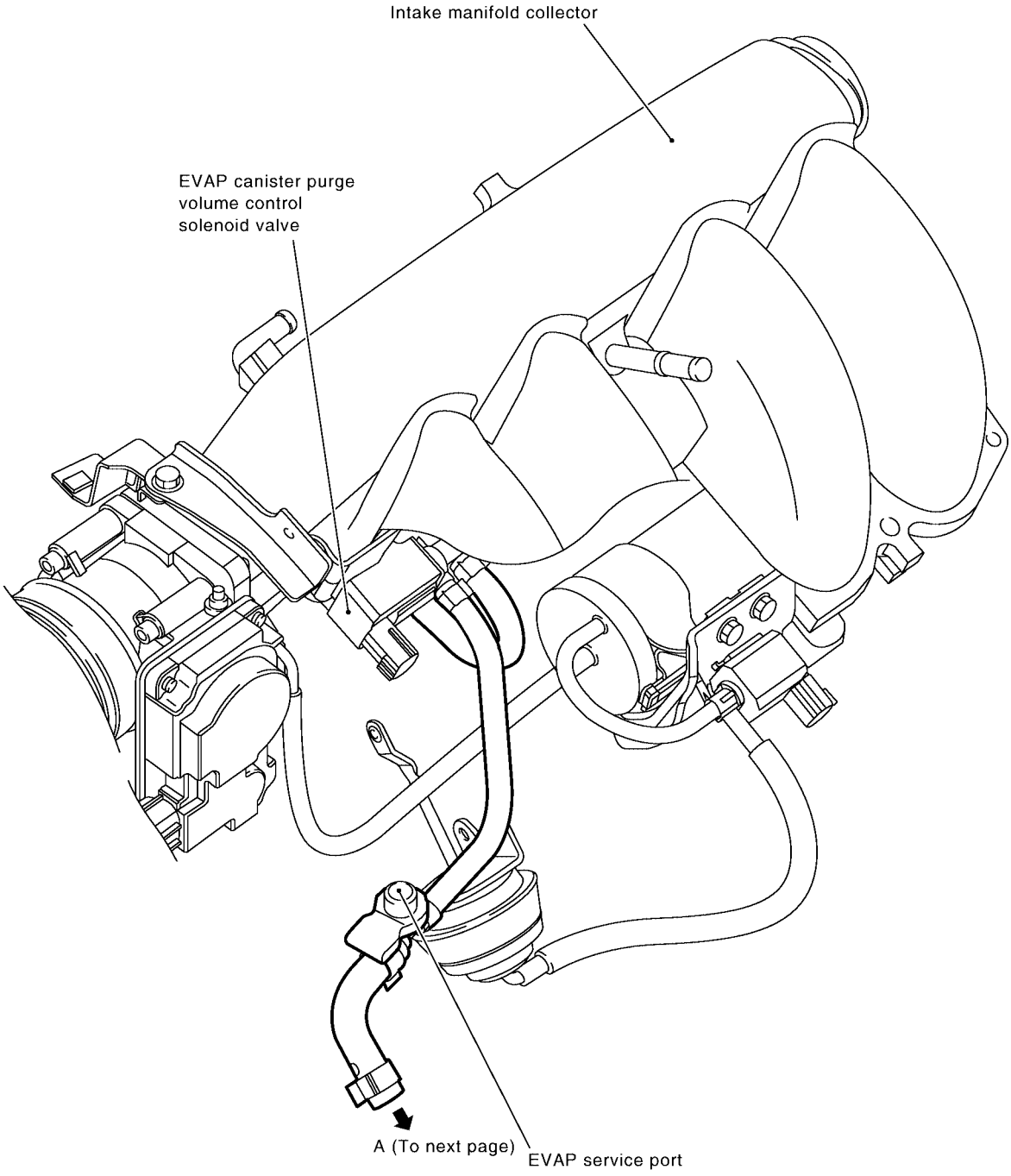

BBIA0293E

NOTE: Do not use soapy water or any type of solvent while installing vacuum hose or purge hoses.

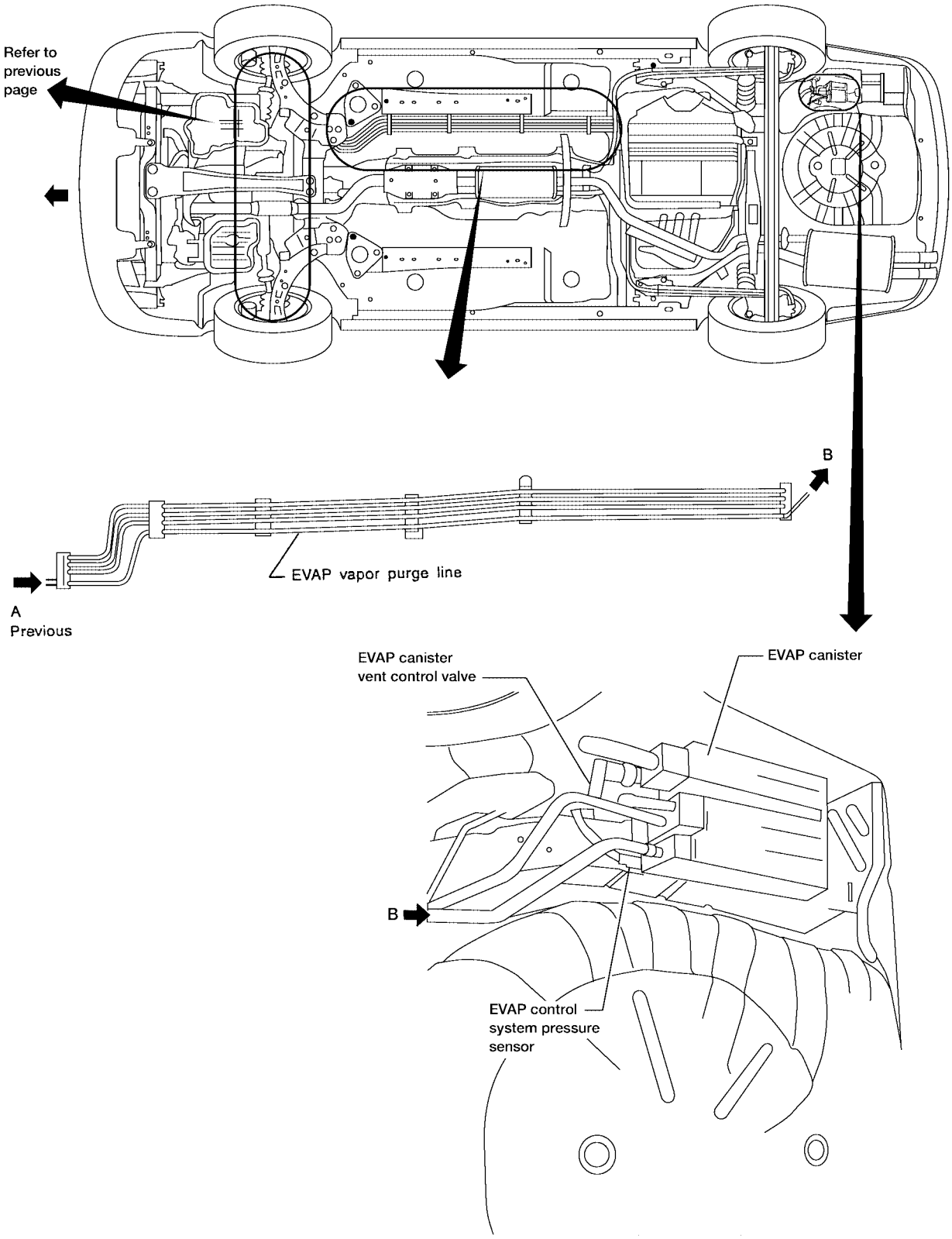
Refer to
previous
page
B
EVAP vapor purge line
A
Previous
EVAP canister
vent control valve
EVAP canister
B
EVAP control
system pressure
sensor

BBIA0294E

Component Inspection

UBS00JT4

EVAP CANISTER

Check EVAP canister as follows:

1. Block port **B** .
2. Blow air into port **A** and check that it flows freely out of port **C** .
3. Release blocked port **B** .
4. Apply vacuum pressure to port **B** and check that vacuum pressure exists at the ports **A** and **C** .
5. Block port **A** and **B** .
6. Apply pressure to port **C** and check that there is no leakage.

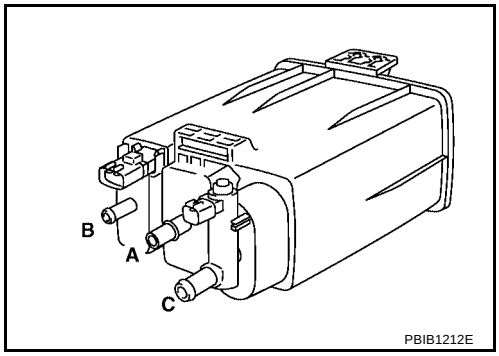

FUEL TANK VACUUM RELIEF VALVE (BUILT INTO FUEL FULLER CAP)

1. Wipe clean valve housing.

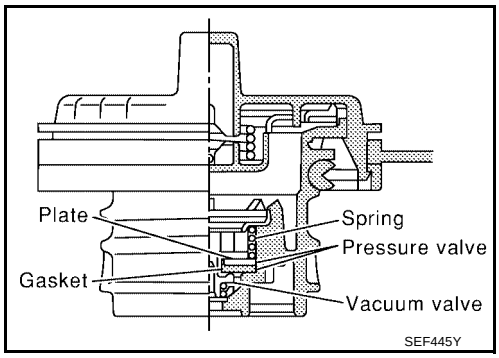

2. Check valve opening pressure and vacuum.

   Pressure: 15.3 - 20.0 kPa
   (0.156 - 0.204 kg/cm^2 , 2.22 - 2.90 psi)
   Vacuum: –6.0 to –3.3 kPa
   (–0.061 to –0.034 kg/cm^2 , –0.87 to –0.48 psi)

3. If out of specification, replace fuel filler cap as an assembly.

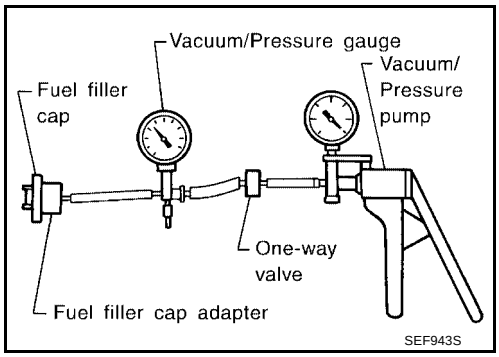

CAUTION:
Use only a genuine fuel filler cap as a replacement. If an incorrect fuel filler cap is used, the MIL may come on.

EVAP CANISTER PURGE VOLUME CONTROL SOLENOID VALVE

Refer to EC-1031

FUEL TANK TEMPERATURE SENSOR

Refer to EC-964 .

EVAP CANISTER VENT CONTROL VALVE

Refer to EC-1038 .

EVAP CONTROL SYSTEM PRESSURE SENSOR

Refer to EC-1048 .

EVAP SERVICE PORT

Positive pressure is delivered to the EVAP system through the EVAP service port. If fuel vapor leakage in the EVAP system occurs, use a leak detector to locate the leak.

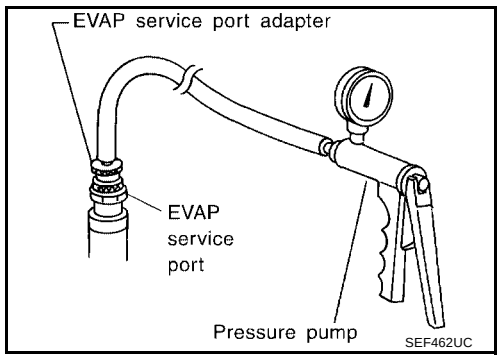

Removal and Installation

UBS00JT5

EVAP CANISTER

Tighten EVAP canister as shown in the figure.

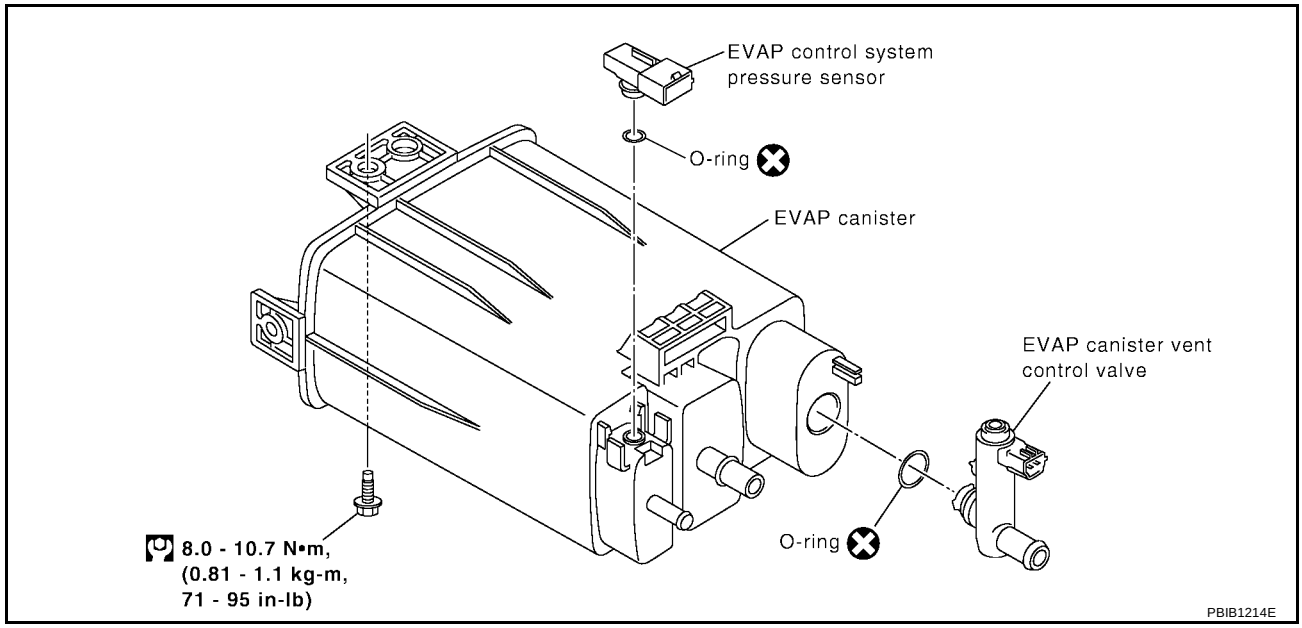

EVAP CANISTER VENT CONTROL VALVE

1. Turn EVAP canister vent control valve clockwise.
2. Remove the EVAP canister vent control valve.

Do not reuse the O-ring, replace it with a new one.

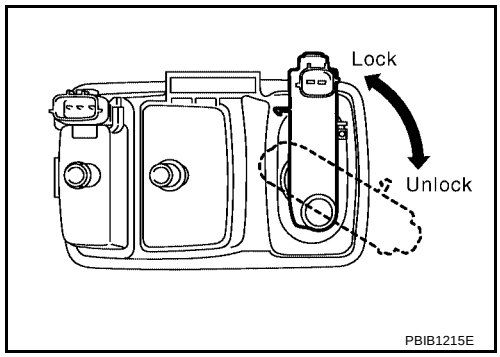

How to Detect Fuel Vapor Leakage

UBS00JT6

CAUTION:

- **Never use compressed air or a high pressure pump.**
- **Do not exceed 4.12 kPa (0.042 kg/cm^2 , 0.6 psi) of pressure in EVAP system.**

NOTE:

- Do not start engine.
- Improper installation of EVAP service port adapter to the EVAP service port may cause a leak.

WITH CONSULT-II

1. Attach the EVAP service port adapter securely to the EVAP service port.
2. Also attach the pressure pump and hose to the EVAP service port adapter.
3. Turn ignition switch ON.
4. Select the “EVAP SYSTEM CLOSE” of “WORK SUPPORT MODE” with CONSULT-II.
5. Touch “START”. A bar graph (Pressure indicating display) will appear on the screen.

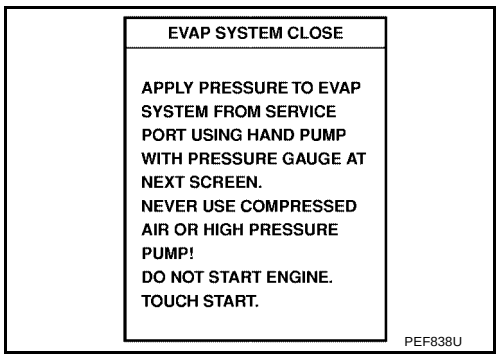

6. Apply positive pressure to the EVAP system until the pressure indicator reaches the middle of the bar graph.
7. Remove EVAP service port adapter and hose with pressure pump.

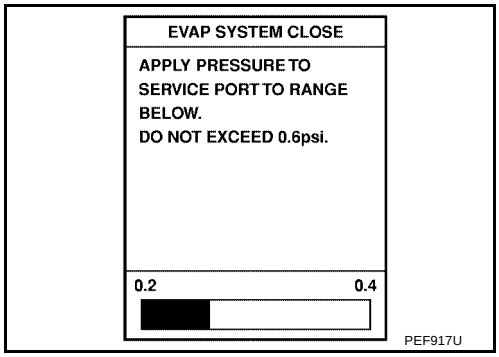

8. Locate the leak using a leak detector. Refer to EC-682, "EVAPORATIVE EMISSION LINE DRAWING" .

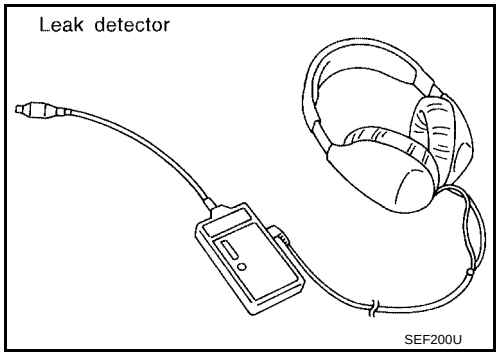

WITHOUT CONSULT-II

1. Attach the EVAP service port adapter securely to the EVAP service port.
2. Also attach the pressure pump with pressure gauge to the EVAP service port adapter.

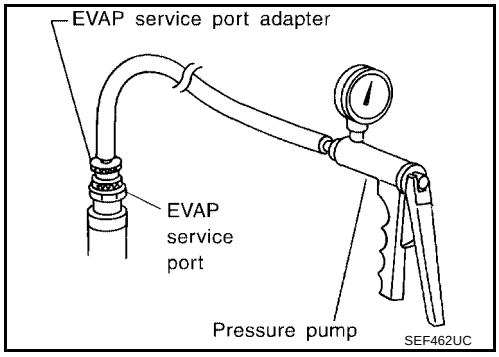

3. Apply battery voltage to the terminal of EVAP canister vent control valve to make a closed EVAP system.

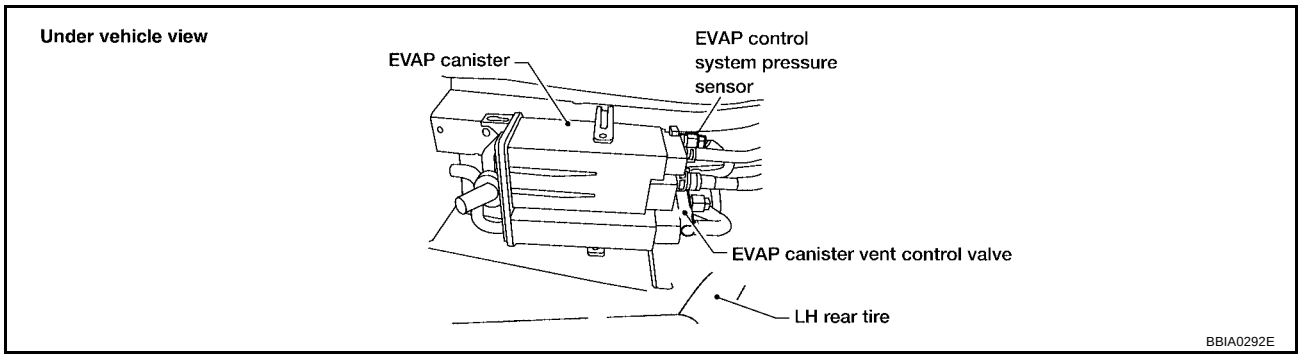

4. To locate the leak, deliver positive pressure to the EVAP system until pressure gauge points reach 1.38 to 2.76 kPa (0.014 to 0.028 kg/cm^2 , 0.2 to 0.4 psi).
5. Remove EVAP service port adapter and hose with pressure pump.
6. Locate the leak using a leak detector. Refer to EC-682, "EVAPORATIVE EMISSION LINE DRAWING" .

ON BOARD REFUELING VAPOR RECOVERY (ORVR)

PFP:00032

System Description

UBS00JT7

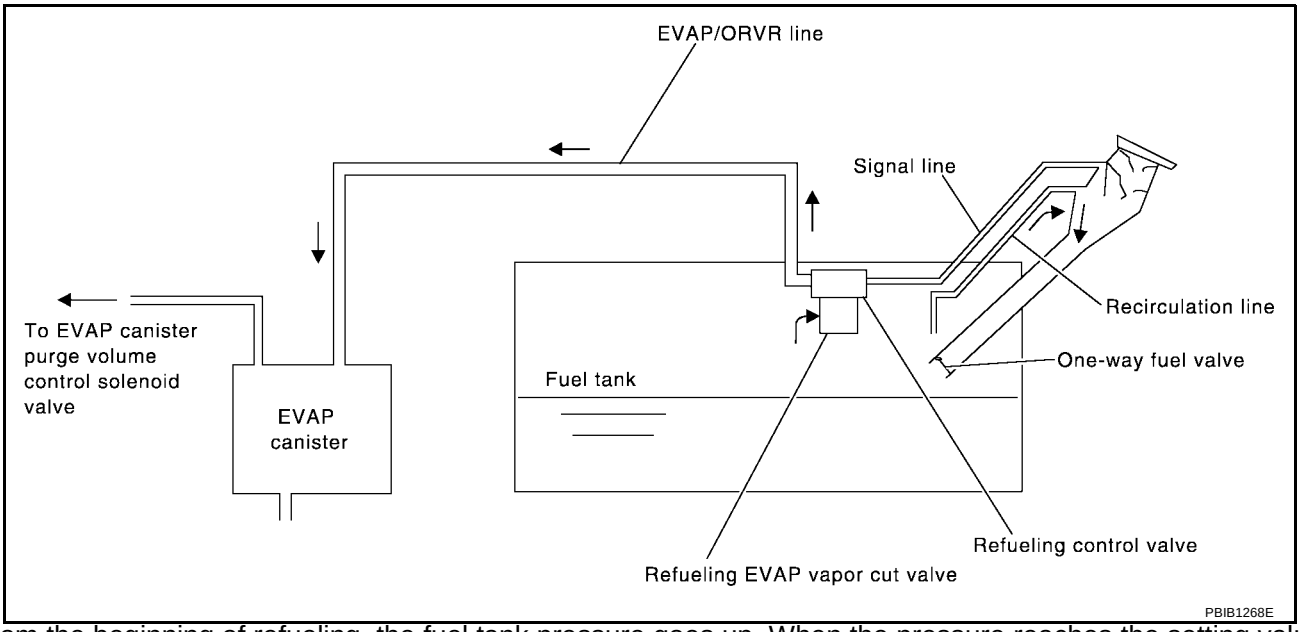

From the beginning of refueling, the fuel tank pressure goes up. When the pressure reaches the setting value of the refueling control valve (RCV) opening pressure, the RCV is opened. After RCV opens, the air and vapor inside the fuel tank go through refueling EVAP vapor cut valve, RCV and EVAP/ORVR line to the EVAP canister. The vapor is absorbed by the EVAP canister and the air is released to the atmosphere.
When the refueling has reached the full level of the fuel tank, the refueling EVAP vapor cut valve is closed and refueling is stopped because of auto shut-off. The vapor which was absorbed by the EVAP canister is purged during driving.
The RCV is always closed during driving and the evaporative emission control system is operated the same as conventional system.

WARNING:

When conducting inspections below, be sure to observe the following:

- **Put a “CAUTION: INFLAMMABLE” sign in workshop.**
- **Do not smoke while servicing fuel system. Keep open flames and sparks away from work area.**
- **Be sure to furnish the workshop with a CO_2 fire extinguisher.**

CAUTION:

- **Before removing fuel line parts, carry out the following procedures:**
  - **Put drained fuel in an explosion-proof container and put lid on securely.**
  - **Release fuel pressure from fuel line. Refer to EC-752, "FUEL PRESSURE RELEASE" .**
  - **Disconnect battery ground cable.**
- **Always replace O-ring when the fuel gauge retainer is removed.**
- **Do not kink or twist hose and tube when they are installed.**
- **Do not tighten hose and clamps excessively to avoid damaging hoses.**
- **After installation, run engine and check for fuel leaks at connection.**
- **Do not attempt to top off the fuel tank after the fuel pump nozzle shuts off automatically. Continued refueling may cause fuel overflow, resulting in fuel spray and possibly a fire.**

Diagnostic Procedure

UBS00JT8

SYMPTOM: FUEL ODOR FROM EVAP CANISTER IS STRONG.

1. CHECK EVAP CANISTER

1. Remove EVAP canister with EVAP canister vent control valve and EVAP control system pressure sensor attached.
2. Weigh the EVAP canister with EVAP canister vent control valve and EVAP control system pressure sensor attached.
   The weight should be less than 1.9 kg (4.2 lb).

OK or NG

OK >> GO TO 2.
NG >> GO TO 3.

2. CHECK IF EVAP CANISTER SATURATED WITH WATER

Does water drain from the EVAP canister?

Yes or No

Yes >> GO TO 3.
No >> GO TO 5.

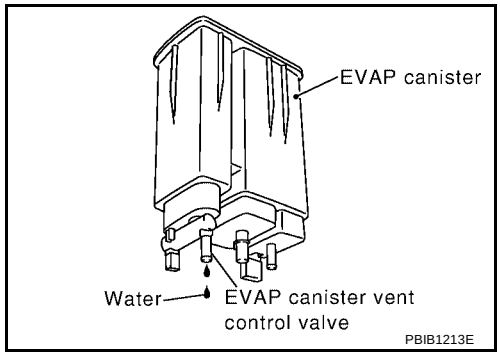

3. REPLACE EVAP CANISTER

Replace EVAP canister with a new one.

>> GO TO 4.

4. DETECT MALFUNCTIONING PART

Check the EVAP hose between EVAP canister and vehicle frame for clogging or poor connection.

>> Repair or replace EVAP hose.

5. CHECK REFUELING CONTROL VALVE

Refer to EC-691, "Component Inspection" .

OK or NG

OK >> GO TO 6.
NG >> Replace refueling control valve.

6. CHECK REFUELING EVAP VAPOR CUT VALVE

Refer to EC-691, "Component Inspection" .

OK or NG

OK >> **INSPECTION END**.
NG >> Replace refueling EVAP vapor cut valve with fuel tank.

SYMPTOM: CANNOT REFUEL/FUEL ODOR FROM THE FUEL FILLER OPENING IS STRONG WHILE REFUELING.

1. CHECK EVAP CANISTER

1. Remove EVAP canister with EVAP canister vent control valve and EVAP control system pressure sensor attached.
2. Weigh the EVAP canister with EVAP canister vent control valve and EVAP control system pressure sensor attached.
   The weight should be less than 1.9 kg (4.2 lb).

OK or NG

OK >> GO TO 2.
NG >> GO TO 3.

2. CHECK IF EVAP CANISTER SATURATED WITH WATER

Does water drain from the EVAP canister?

Yes or No

Yes >> GO TO 3.
No >> GO TO 5.

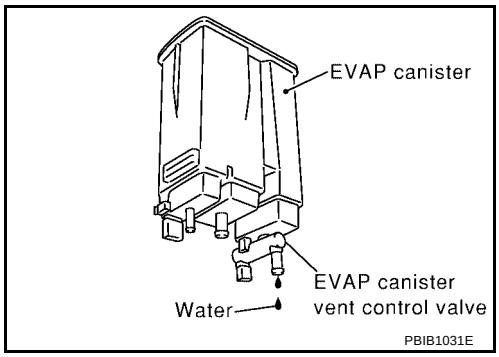

3. REPLACE EVAP CANISTER

Replace EVAP canister with a new one.

>> GO TO 4.

4. DETECT MALFUNCTIONING PART

Check the EVAP hose between EVAP canister and vehicle frame for clogging or poor connection.

>> Repair or replace EVAP hose.

5. CHECK VENT HOSES AND VENT TUBES

Check hoses and tubes between EVAP canister and refueling control valve for clogging, kink, looseness and improper connection.

OK or NG

OK >> GO TO 6.
NG >> Repair or replace hoses and tubes.

6. CHECK FILLER NECK TUBE

Check signal line and recirculation line for clogging, dents and cracks.

OK or NG

OK >> GO TO 7.
NG >> Replace filler neck tube.

7. CHECK REFUELING CONTROL VALVE

Refer to EC-691, "Component Inspection" .

OK or NG

OK >> GO TO 8.
NG >> Replace refueling control valve.

8. CHECK REFUELING EVAP VAPOR CUT VALVE

Refer to EC-691, "Component Inspection" .

OK or NG

OK >> GO TO 9.
NG >> Replace refueling EVAP vapor cut valve with fuel tank.

9. CHECK FUEL FILLER TUBE

Check filler neck tube and hose connected to the fuel tank for clogging, dents and cracks.

OK or NG

OK >> GO TO 10.
NG >> Replace fuel filler tube.

10. CHECK ONE-WAY FUEL VALVE-I

Check one-way valve for clogging.

OK or NG

OK >> GO TO 11.
NG >> Repair or replace one-way fuel valve with fuel tank.

11. CHECK ONE-WAY FUEL VALVE-II

1. Make sure that fuel is drained from the tank.
2. Remove fuel filler tube and hose.
3. Check one-way fuel valve for operation as follows.
   When a stick is inserted, the valve should open, when removing stick it should close.
   Do not drop any material into the tank.

OK or NG

OK >> **INSPECTION END**
NG >> Replace fuel filler tube or replace one-way fuel valve with fuel tank.

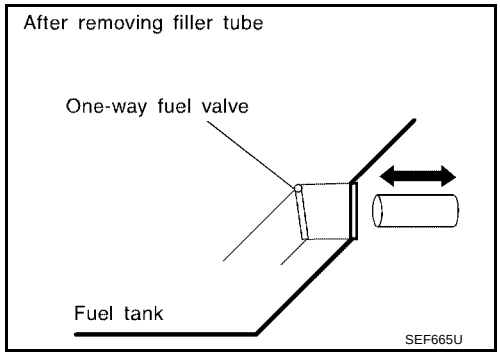

Component Inspection

UBS00JT9

REFUELING EVAP VAPOR CUT VALVE

With CONSULT-II

1. Remove fuel tank. Refer to FL-7, "FUEL TANK" .
2. Drain fuel from the tank as follows:
   - Remove fuel feed hose located on ”fuel level sensor and fuel pump”.
   - Connect a spare fuel hose, one side to fuel gauge retainer where the hose was removed and the other side to a fuel container.
   - Drain fuel using “FUEL PUMP RELAY” in “ACTIVE TEST” mode with CONSULT-II.
3. Check refueling EVAP vapor cut valve for being stuck to close as follows.
   Blow air into the refueling EVAP vapor cut valve (from hose end **B**), and check that the air flows freely into the tank.
4. Check EVAP vapor cut valve for being stuck to open as follows.

- Connect vacuum pump to hose ends **A** and **B** using a suitable 3-way connector.
- Remove fuel gauge retainer with fuel gauge unit.
  Always replace O-ring with new one.
- Put fuel tank upside down.
- Apply vacuum pressure to both hose ends **A** and **B** [–13.3 kPa (–100 mmHg, –3.94 inHg)] with fuel gauge retainer remaining open and check that the pressure is applicable.

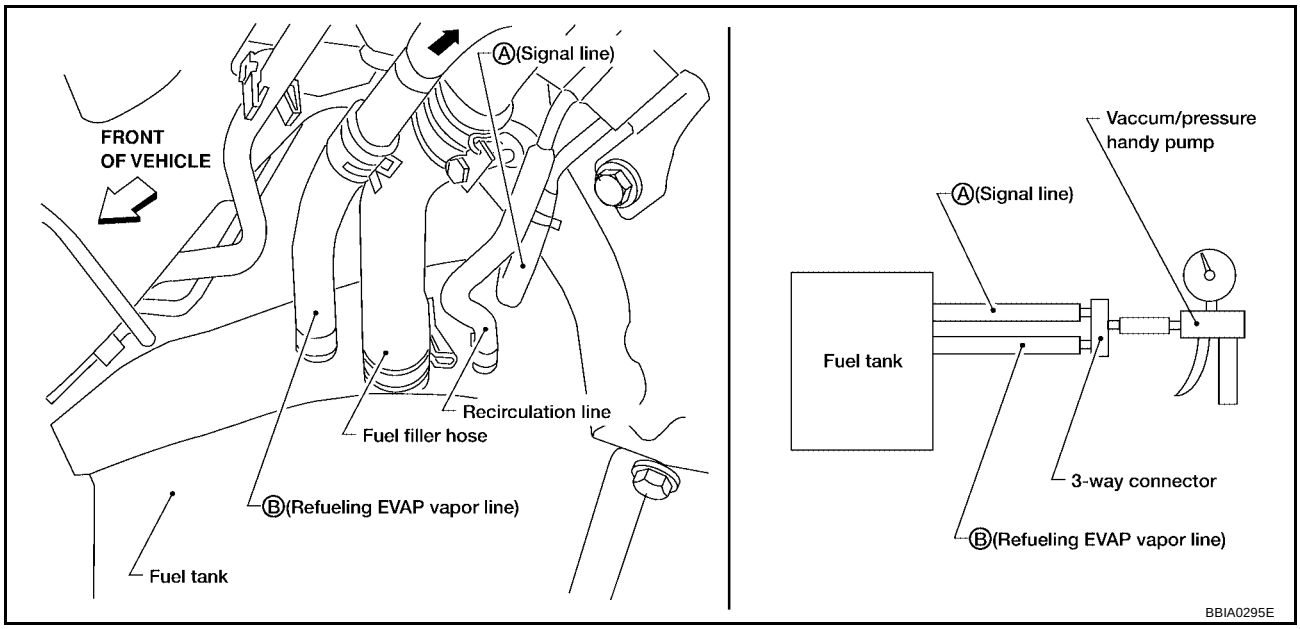

With GST

1. Remove fuel tank. Refer to FL-7, "FUEL TANK" .
2. Drain fuel from the tank as follows:
- Remove ”fuel level sensor and fuel pump”.
- Drain fuel from the tank using a handy pump into a fuel container.
3. Check refueling EVAP vapor cut valve for being stuck closed as follows.
   Blow air into the refueling EVAP vapor cut valve (from hose end **B**), and check that the air flows freely into the tank.
4. Check EVAP vapor cut valve for being stuck open as follows.
- Connect vacuum pump to hose ends **A** and **B** using a suitable 3-way connector.
- Remove fuel level sensor unit retainer with fuel level sensor unit.
  Always replace O-ring with new one.
- Put fuel tank upside down.

– Apply vacuum pressure to both hose ends **A** and **B** [–13.3 kPa (–100 mmHg, –3.94 inHg)] with fuel level sensor unit retainer remaining open and check that the pressure is applicable.

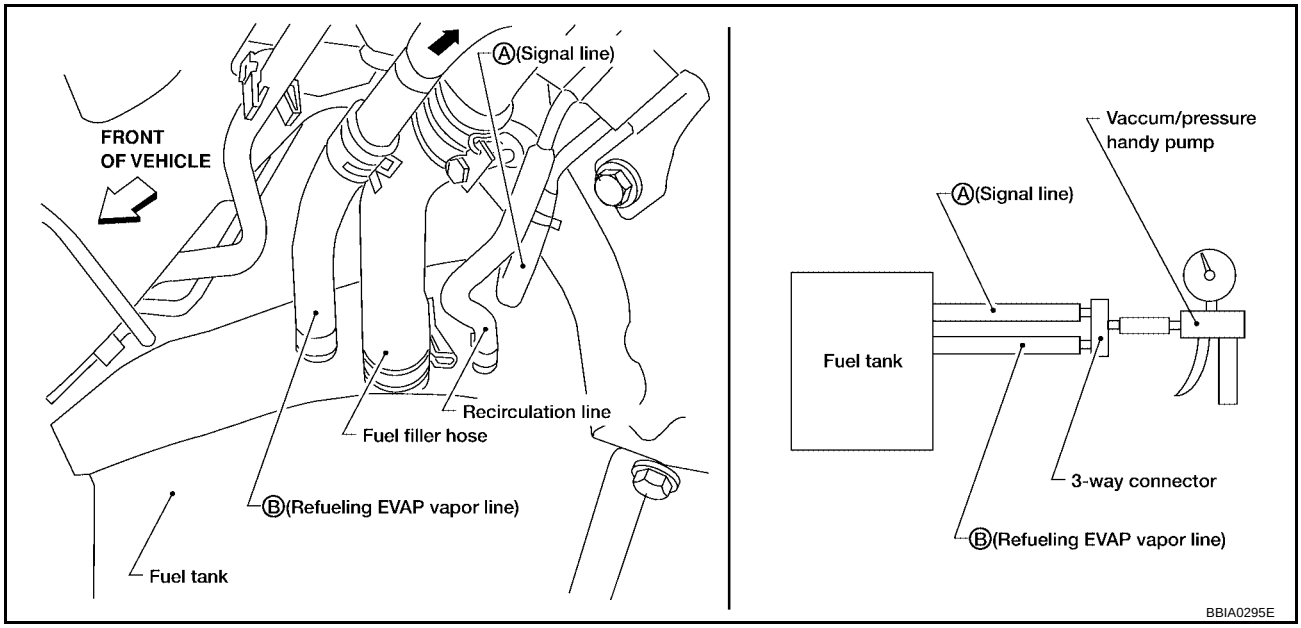

REFUELING CONTROL VALVE

1. Remove fuel filler cap.
2. Check air continuity between hose ends A and B.
   Blow air into the hose end B. Air should flow freely into the fuel tank.
3. Blow air into hose end A and check there is no leakage.
4. Apply pressure to both hose ends A and B [20 kPa (150 mmHg, 5.91 inHg)] using a pressure pump and a suitable 3-way connector. Check that there is no leakage.

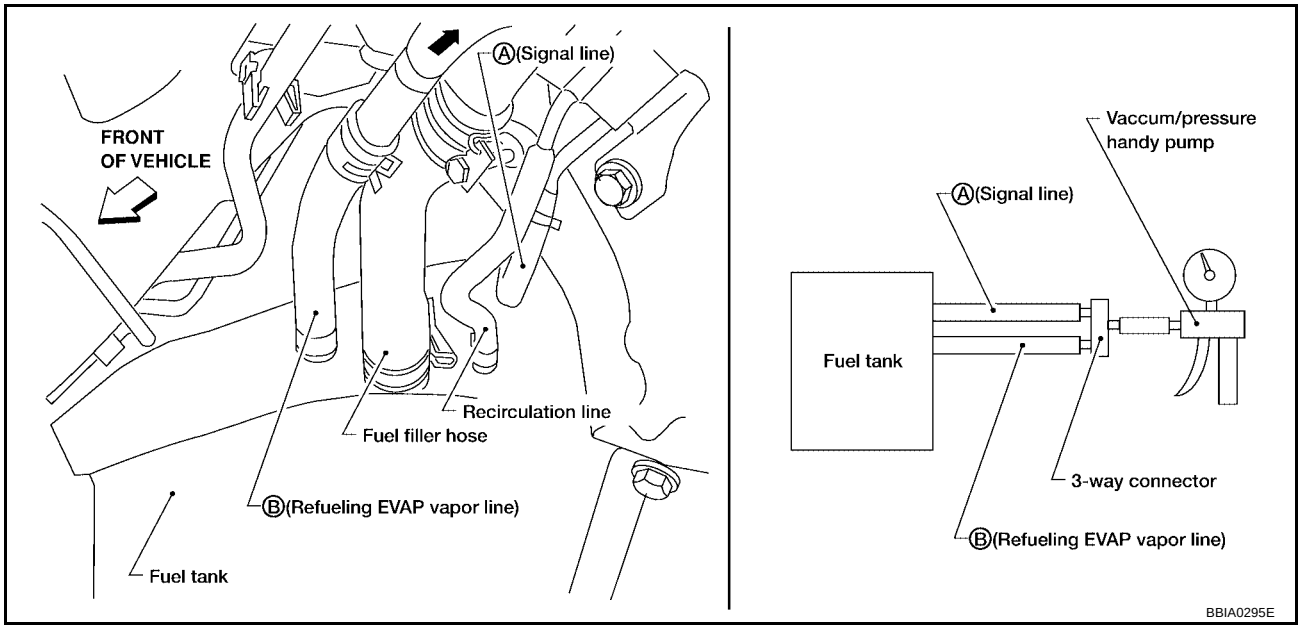

POSITIVE CRANKCASE VENTILATION

PFP:11810

Description

UBS00JTA

SYSTEM DESCRIPTION

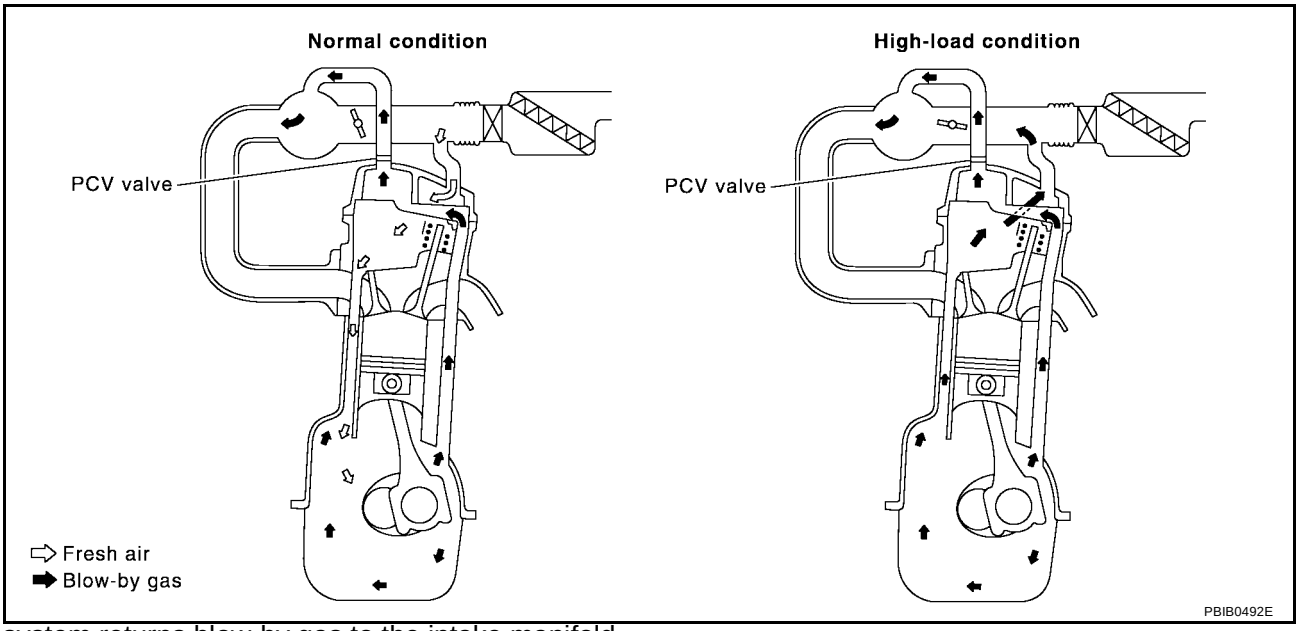

This system returns blow-by gas to the intake manifold.

The positive crankcase ventilation (PCV) valve is provided to conduct crankcase blow-by gas to the intake manifold. During partial throttle operation of the engine, the intake manifold sucks the blow-by gas through the PCV valve. Normally, the capacity of the valve is sufficient to handle any blow-by and a small amount of ventilating air. The ventilating air is then drawn from the air inlet tubes into the crankcase. In this process the air passes through the hose connecting air inlet tubes to rocker cover. Under full-throttle condition, the manifold vacuum is insufficient to draw the blow-by flow through the valve. The flow goes through the hose connection in the reverse direction.

On vehicles with an excessively high blow-by, the valve does not meet the requirement. This is because some of the flow will go through the hose connection to the air inlet tubes under all conditions.

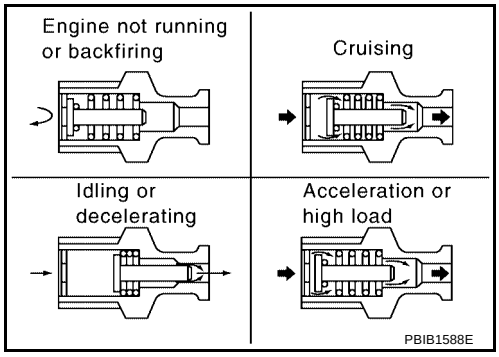

Component Inspection

UBS00JTB

PCV (POSITIVE CRANKCASE VENTILATION) VALVE

With engine running at idle, remove PCV valve from rocker cover. A properly working valve makes a hissing noise as air passes through it. A strong vacuum should be felt immediately when a finger is placed over valve inlet.

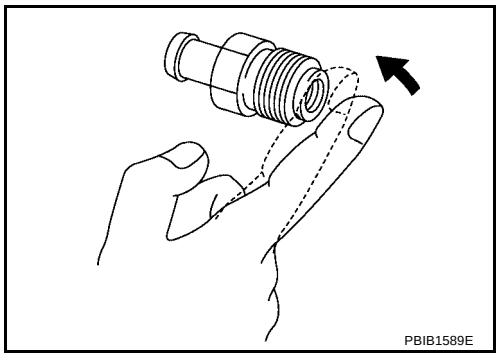

PCV VALVE VENTILATION HOSE

1. Check hoses and hose connections for leaks.
2. Disconnect all hoses and clean with compressed air. If any hose cannot be freed of obstructions, replace.

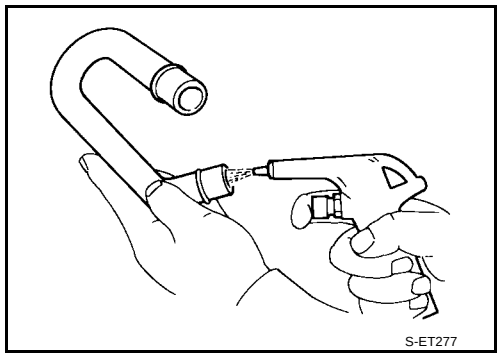

NVIS (NISSAN VEHICLE IMMOBILIZER SYSTEM-NATS)

PFP:25386

Description

UBS00J9G

- **If the security indicator lights up with the ignition switch in the ON position or "NATS MALFUNCTION" is displayed on "SELF-DIAG RESULTS" screen, perform self-diagnostic results mode with CONSULT-II using NATS program card. Refer to BL-96, "NVIS (NISSAN VEHICLE IMMOBILIZER SYSTEM — NATS)" .**
- **Confirm no self-diagnostic results of NVIS (NATS) is displayed before touching "ERASE" in "SELF-DIAG RESULTS" mode with CONSULT-II.**
- **When replacing ECM, initialization of NVIS (NATS) system and registration of all NVIS (NATS) ignition key IDs must be carried out with CONSULT-II using NATS program card.**
  Therefore, be sure to receive all keys from vehicle owner. Regarding the procedures of NVIS (NATS) initialization and all NVIS (NATS) ignition key ID registration, refer to CONSULT-II Operation Manual, IVIS/NVIS.

SELF DIAG RESULTS	
DTC RESULTS	TIME
NATS MALFUNCTION [P1610]	0

SEF543X

ON BOARD DIAGNOSTIC (OBD) SYSTEM

PFP:00028

Introduction

UBS00J9H

The ECM has an on board diagnostic system, which detects malfunctions related to engine sensors or actuators. The ECM also records various emission-related diagnostic information including:

Emission-related diagnostic information	Diagnostic service
Diagnostic Trouble Code (DTC)	Service $03 of SAE J1979
Freeze Frame data	Service $02 of SAE J1979
System Readiness Test (SRT) code	Service $01 of SAE J1979
1st Trip Diagnostic Trouble Code (1st Trip DTC)	Service $07 of SAE J1979
1st Trip Freeze Frame data	
Test values and Test limits	Service $06 of SAE J1979
Calibration ID	Service $09 of SAE J1979

The above information can be checked using procedures listed in the table below.

×: Applicable —: Not applicable

	DTC	1st trip DTC	Freeze Frame data	1st trip Freeze Frame data	SRT code	SRT status	Test value
CONSULT-II	×	×	×	×	×	×	—
GST	×	×	×	—	×	×	×
ECM	×	×*	—	—	—	×	—

*: When DTC and 1st trip DTC simultaneously appear on the display, they cannot be clearly distinguished from each other.

The malfunction indicator lamp (MIL) on the instrument panel lights up when the same malfunction is detected in two consecutive trips (Two trip detection logic), or when the ECM enters fail-safe mode. (Refer to EC-764 .)

Two Trip Detection Logic

UBS00J9I

When a malfunction is detected for the first time, 1st trip DTC and 1st trip Freeze Frame data are stored in the ECM memory. The MIL will not light up at this stage. <1st trip>
If the same malfunction is detected again during the next drive, the DTC and Freeze Frame data are stored in the ECM memory, and the MIL lights up. The MIL lights up at the same time when the DTC is stored. <2nd trip> The “trip” in the “Two Trip Detection Logic” means a driving mode in which self-diagnosis is performed during vehicle operation. Specific on board diagnostic items will cause the ECM to light up or blink the MIL, and store DTC and Freeze Frame data, even in the 1st trip, as shown below.

×: Applicable —: Not applicable

Items	MIL				DTC		1st trip DTC	
	1st trip		2nd trip		1st trip displaying	2nd trip displaying	1st trip displaying	2nd trip displaying
	Blinking	Lighting up	Blinking	Lighting up				
Misfire (Possible three way catalyst damage) — DTC: P0300 - P0304 is being detected	×	—	—	—	—	—	×	—
Misfire (Possible three way catalyst damage) — DTC: P0300 - P0304 is being detected	—	—	×	—	—	×	—	—
One trip detection diagnoses (Refer to EC-698, "EMISSION-RELATED DIAGNOSTIC INFORMATION ITEMS" .)	—	×	—	—	×	—	—	—
Except above	—	—	—	×	—	×	×	—

When there is an open circuit on MIL circuit, the ECM cannot warn the driver by lighting up MIL when there is malfunction on engine control system.

Therefore, when electrical controlled throttle and part of ECM related diagnoses are continuously detected as NG for 5 trips, ECM warns the driver that engine control system malfunctions and MIL circuit is open by means of operating fail-safe function.
The fail-safe function also operates when above diagnoses except MIL circuit are detected, and demands the driver to repair the malfunction.

Engine operating condition in fail-safe mode	Engine speed will not rise more than 2,500 rpm due to the fuel cut

Emission-related Diagnostic Information

UBS00J9J

EMISSION-RELATED DIAGNOSTIC INFORMATION ITEMS

×: Applicable —: Not applicable

Items (CONSULT-II screen terms)	DTC*1		SRT code	Test value/ Test limit (GST only)	Trip	MIL light-ing up	Reference page
	CONSULT-II GST*2	ECM*11					
CAN COMM CIRCUIT	U1000	1000*5	—	—	1 (A/T) 2 (M/T)	× —	EC-842
CAN COMM CIRCUIT	U1001	1001*5	—	—	2	—	EC-842
NO DTC IS DETECTED. FURTHER TESTING MAY BE REQUIRED.	**P0000**	**0000**	—	—	—	**Flashing***9 *10	EC-715
INT/V TIM CONT-B1	P0011	0011	—	—	2	×	EC-845
HO2S1 HTR (B1)*7	P0031	0031	×	×	2	×	EC-849
HO2S1 HTR (B1)*7	P0032	0032	×	×	2	×	EC-849
HO2S2 HTR (B1)	P0037	0037	×	×	2	×	EC-855
HO2S2 HTR (B1)	P0038	0038	×	×	2	×	EC-855
MAF SEN/CIRCUIT	P0101	0101	—	—	2	×	EC-861
MAF SEN/CIRCUIT	P0102	0102	—	—	1	×	EC-870
MAF SEN/CIRCUIT	P0103	0103	—	—	1	×	EC-870
IAT SEN/CIRCUIT	P0112	0112	—	—	2	×	EC-878
IAT SEN/CIRCUIT	P0113	0113	—	—	2	×	EC-878
ECT SEN/CIRCUIT	P0117	0117	—	—	1	×	EC-884
ECT SEN/CIRCUIT	P0118	0118	—	—	1	×	EC-884
TP SEN 2/CIRC	P0122	0122	—	—	1	×	EC-890
TP SEN 2/CIRC	P0123	0123	—	—	1	×	EC-890
ECT SENSOR	P0125	0125	—	—	1	×	EC-897
IAT SENSOR	P0127	0127	—	—	2	×	EC-900
THERMSTAT FNCTN	P0128	0128	—	—	2	×	EC-903
HO2S1 (B1)*7	P0132	0132	—	×	2	×	EC-905
HO2S1 (B1)*7	P0133	0133	×	×	2	×	EC-912
HO2S1 (B1)	P0134	0134	—	×	2	×	EC-922
HO2S2 (B1)	P0138	0138	—	×	2	×	EC-929
HO2S2 (B1)	P0139	0139	×	×	2	×	EC-935
FUEL SYS-LEAN-B1	P0171	0171	—	—	2	×	EC-943
FUEL SYS-RICH-B1	P0172	0172	—	—	2	×	EC-954
FTT SENSOR	P0181	0181	—	—	2	×	EC-964
FTT SEN/CIRCUIT	P0182	0182	—	—	2	×	EC-969
FTT SEN/CIRCUIT	P0183	0183	—	—	2	×	EC-969
TP SEN 1/CIRC	P0222	0222	—	—	1	×	EC-973
TP SEN 1/CIRC	P0223	0223	—	—	1	×	EC-973

Items (CONSULT-II screen terms)	DTC*1		SRT code	Test value/ Test limit (GST only)	Trip	MIL light-ing up	Reference page
	CONSULT-II GST*2	ECM*11					
MULTI CYL MISFIRE	P0300	0300	—	—	2	×	EC-980
CYL 1 MISFIRE	P0301	0301	—	—	2	×	EC-980
CYL 2 MISFIRE	P0302	0302	—	—	2	×	EC-980
CYL 3 MISFIRE	P0303	0303	—	—	2	×	EC-980
CYL 4 MISFIRE	P0304	0304	—	—	2	×	EC-980
KNOCK SEN/CIRC-B1	P0327	0327	—	—	2	—	EC-987
KNOCK SEN/CIRC-B1	P0328	0328	—	—	2	—	EC-987
CKP SEN/CIRCUIT	P0335	0335	—	—	2	×	EC-992
CMP SEN/CIRC-B1	P0340	0340	—	—	2	×	EC-999
TW CATALYST SYS-B1	P0420	0420	×	×	2	×	EC-1006
EVAP PURG FLOW/MON	P0441	0441	×	×	2	×	EC-1016
EVAP SMALL LEAK	P0442	0442	×	×	2	×	EC-1022
PURG VOLUME CONT/V	P0444	0444	—	—	2	×	EC-1031
PURG VOLUME CONT/V	P0445	0445	—	—	2	×	EC-1031
VENT CONTROL VALVE	P0447	0447	—	—	2	×	EC-1038
EVAP SYS PRES SEN	P0451	0451	—	—	2	×	EC-1045
EVAP SYS PRES SEN	P0452	0452	—	—	2	×	EC-1048
EVAP SYS PRES SEN	P0453	0453	—	—	2	×	EC-1054
EVAP GROSS LEAK	P0455	0455	—	—	2	×	EC-1061
EVAP VERY SML LEAK	P0456	0456	×*3	×	2	×	EC-1069
FUEL LEV SEN SLOSH	P0460	0460	—	—	2	×	EC-1079
FUEL LEVEL SENSOR	P0461	0461	—	—	2	×	EC-1081
FUEL LEVL SEN/CIRC	P0462	0462	—	—	2	×	EC-1083
FUEL LEVL SEN/CIRC	P0463	0463	—	—	2	×	EC-1083
VEH SPEED SEN/CIRC*6	P0500	0500	—	—	2	×	EC-1085
ISC SYSTEM	P0506	0506	—	—	2	×	EC-1087
ISC SYSTEM	P0507	0507	—	—	2	×	EC-1089
PW STP SEN/CIRC	P0550	0550	—	—	2	—	EC-1091
ECM	P0605	0605	—	—	1 or 2	— or ×	EC-1096
PNP SW/CIRC	P0705	0705	—	—	2	×	AT-487
ATF TEMP SEN/CIRC	P0710	0710	—	—	2	×	AT-493
VEH SPD SEN/CIR AT*6	P0720	0720	—	—	2	×	AT-499
ENGINE SPEED SIG	P0725	0725	—	—	2	×	AT-504
A/T 1ST GR FNCTN	P0731	0731	—	—	2	×	AT-508
A/T 2ND GR FNCTN	P0732	0732	—	—	2	×	AT-513
A/T 3RD GR FNCTN	P0733	0733	—	—	2	×	AT-518
A/T 4TH GR FNCTN	P0734	0734	—	—	2	×	AT-523
TCC SOLENOID/CIRC	P0740	0740	—	—	2	×	AT-530
A/T TCC S/V FNCTN	P0744	0744	—	—	2	×	AT-535
L/PRESS SOL/CIRC	P0745	0745	—	—	2	×	AT-543
SFT SOL A/CIRC	P0750	0750	—	—	1	×	AT-549
SFT SOL B/CIRC	P0755	0755	—	—	1	×	AT-554

Items (CONSULT-II screen terms)	DTC*1		SRT code	Test value/ Test limit (GST only)	Trip	MIL light-ing up	Reference page
	CONSULT-II GST*2	ECM*11					
A/F SEN1 HTR (B1)*8	P1031	1031	×	×	2	×	EC-1099
A/F SEN1 HTR (B1)*8	P1032	1032	×	×	2	×	EC-1099
ECM BACK UP/CIRC	P1065	1065	—	—	2	×	EC-1104
INT/V TIM V/CIR-B1	P1111	1111	—	—	2	×	EC-1108
ETC ACTR	P1121	1121	—	—	1	×	EC-1112
ETC FUNCTION/CIRC	P1122	1122	—	—	1	×	EC-1114
ETC MOT PWR	P1124	1124	—	—	1	×	EC-1121
ETC MOT PWR	P1126	1126	—	—	1	×	EC-1121
ETC MOT	P1128	1128	—	—	1	×	EC-1126
HO2S1 (B1)*7	P1143	1143	×	×	2	×	EC-1131
HO2S1 (B1)*7	P1144	1144	×	×	2	×	EC-1137
HO2S2 (B1)	P1146	1146	×	×	2	×	EC-1143
HO2S2 (B1)	P1147	1147	×	×	2	×	EC-1151
CLOSED LOOP-B1	P1148	1148	—	—	1	×	EC-1159
ENG OVER TEMP	P1217	1217	—	—	1	×	EC-1161
CTP LEARNING	P1225	1225	—	—	2	—	EC-1174
CTP LEARNING	P1226	1226	—	—	2	—	EC-1176
SENSOR POWER/CIRC	P1229	1229	—	—	1	×	EC-1178
A/F SENSOR*8	P1271	1271	—	×	2	×	EC-1183
A/F SENSOR*8	P1272	1272	—	×	2	×	EC-1189
A/F SENSOR*8	P1273	1273	—	×	2	×	EC-1195
A/F SENSOR*8	P1274	1274	—	×	2	×	EC-1202
A/F SENSOR*8	P1276	1276	—	×	2	×	EC-1209
A/F SENSOR*8	P1278	1278	×	×	2	×	EC-1216
A/F SENSOR*8	P1279	1279	×	×	2	×	EC-1225
PURG VOLUME CONT/V	P1444	1444	—	—	2	×	EC-1234
VENT CONTROL VALVE	P1446	1446	—	—	2	×	EC-1242
ASCD SW	P1564	1564	—	—	1	—	EC-1249
ASCD BRAKE SW	P1572	1572	—	—	1	—	EC-1256
ASCD VHL SPD SEN	P1574	1574	—	—	1	—	EC-1267
TPV SEN/CIRC A/T	P1705	1705	—	—	1	×	AT-559
P-N POS SW/CIRCUIT	P1706	1706	—	—	2	×	EC-1269
O/R CLTCH SOL/CIRC	P1760	1760	—	—	2	×	AT-564
VIAS S/V CIRC	P1800	1800	—	—	2	—	EC-1273
BRAKE SW/CIRCUIT	P1805	1805	—	—	2	—	EC-1279
APP SEN 1/CIRC	P2122	2122	—	—	1	×	EC-1284
APP SEN 1/CIRC	P2123	2123	—	—	1	×	EC-1284
APP SEN 2/CIRC	P2127	2127	—	—	1	×	EC-1291
APP SEN 2/CIRC	P2128	2128	—	—	1	×	EC-1291
TP SENSOR	P2135	2135	—	—	1	×	EC-1299
APP SENSOR	P2138	2138	—	—	1	×	EC-1306

*1: 1st trip DTC No. is the same as DTC No.
*2: This number is prescribed by SAE J2012.
*3: SRT code will not be set if the self-diagnostic result is NG.
*4: This is not displayed with GST.
*5: The troubleshooting for this DTC needs CONSULT-II.
*6: When the fail-safe operations for both self-diagnoses occur at the same time, the MIL illuminates.
*7: A/T models ULEV and M/T models.
*8: A/T models except ULEV.
*9: When the ECM in the mode of displaying SRT status, MIL may flash. For the details, refer to EC-706, "How to Display SRT Status" .
*10: When engine is running, MIL may flash. For the details, refer to EC-715, "MIL Flashing Without DTC" .
*11: In Diagnostic Test Mode II (Self-diagnostic results), this number is controlled by NISSAN.

DTC AND 1ST TRIP DTC

The 1st trip DTC (whose number is the same as the DTC number) is displayed for the latest self-diagnostic result obtained. If the ECM memory was cleared previously, and the 1st trip DTC did not reoccur, the 1st trip DTC will not be displayed.
If a malfunction is detected during the 1st trip, the 1st trip DTC is stored in the ECM memory. The MIL will not light up (two trip detection logic). If the same malfunction is not detected in the 2nd trip (meeting the required driving pattern), the 1st trip DTC is cleared from the ECM memory. If the same malfunction is detected in the 2nd trip, both the 1st trip DTC and DTC are stored in the ECM memory and the MIL lights up. In other words, the DTC is stored in the ECM memory and the MIL lights up when the same malfunction occurs in two consecutive trips. If a 1st trip DTC is stored and a non-diagnostic operation is performed between the 1st and 2nd trips, only the 1st trip DTC will continue to be stored. For malfunctions that blink or light up the MIL during the 1st trip, the DTC and 1st trip DTC are stored in the ECM memory.
Procedures for clearing the DTC and the 1st trip DTC from the ECM memory are described in EC-712, "HOW TO ERASE EMISSION-RELATED DIAGNOSTIC INFORMATION" .
For malfunctions in which 1st trip DTCs are displayed, refer to EC-698, "EMISSION-RELATED DIAGNOSTIC INFORMATION ITEMS" . These items are required by legal regulations to continuously monitor the system/component. In addition, the items monitored non-continuously are also displayed on CONSULT-II.
1st trip DTC is specified in Service $07 of SAE J1979. 1st trip DTC detection occurs without lighting up the MIL and therefore does not warn the driver of a malfunction. However, 1st trip DTC detection will not prevent the vehicle from being tested, for example during Inspection/Maintenance (I/M) tests.
When a 1st trip DTC is detected, check, print out or write down and erase (1st trip) DTC and Freeze Frame data as specified in Work Flow procedure Step II, refer to EC-757, "WORK FLOW" . Then perform DTC Confirmation Procedure or Overall Function Check to try to duplicate the malfunction. If the malfunction is duplicated, the item requires repair.

How to Read DTC and 1st Trip DTC

DTC and 1st trip DTC can be read by the following methods.

WITH CONSULT-II

WITH GST

CONSULT-II or GST (Generic Scan Tool) Examples: P0340, P1148, P1706, etc.
These DTCs are prescribed by SAE J2012.
(CONSULT-II also displays the malfunctioning component or system.)

NO TOOLS

The number of blinks of the MIL in the Diagnostic Test Mode II (Self-Diagnostic Results) indicates the DTC. Example: 0340, 1148, 1706, etc.
These DTCs are controlled by NISSAN.

- **1st trip DTC No. is the same as DTC No.**
- **Output of a DTC indicates a malfunction. However, GST or the Diagnostic Test Mode II do not indicate whether the malfunction is still occurring or has occurred in the past and has returned to normal. CONSULT-II can identify malfunction status as shown below. Therefore, using CONSULT-II (if available) is recommended.**

A sample of CONSULT-II display for DTC and 1st trip DTC is shown below. DTC or 1st trip DTC of a malfunction is displayed in SELF-DIAGNOSTIC RESULTS mode of CONSULT-II. Time data indicates how many times the vehicle was driven after the last detection of a DTC.
If the DTC is being detected currently, the time data will be 0.

If a 1st trip DTC is stored in the ECM, the time data will be [1t].

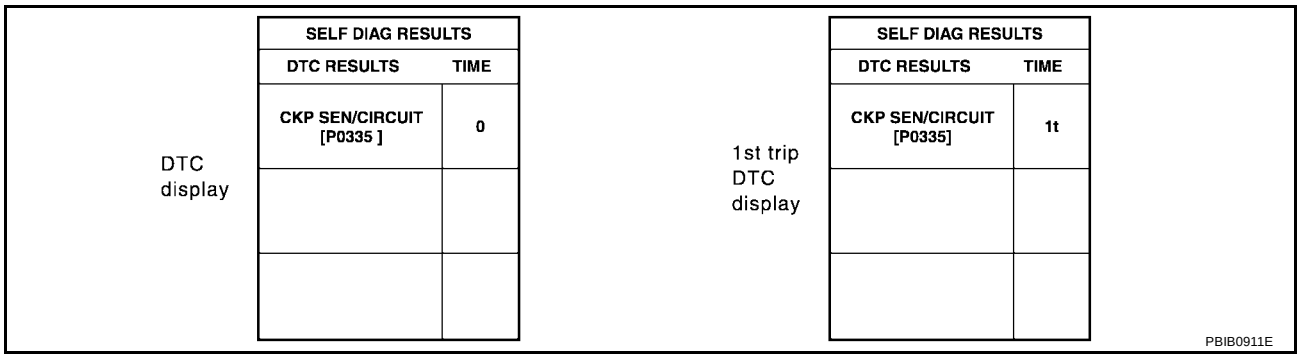

FREEZE FRAME DATA AND 1ST TRIP FREEZE FRAME DATA

The ECM records the driving conditions such as fuel system status, calculated load value, engine coolant temperature, short term fuel trim, long term fuel trim, engine speed, vehicle speed, base fuel schedule and intake air temperature at the moment a malfunction is detected.

Data which are stored in the ECM memory, along with the 1st trip DTC, are called 1st trip freeze frame data. The data, stored together with the DTC data, are called freeze frame data and displayed on CONSULT-II or GST. The 1st trip freeze frame data can only be displayed on the CONSULT-II screen, not on the GST. For details, see EC-702, "FREEZE FRAME DATA AND 1ST TRIP FREEZE FRAME DATA" .

Only one set of freeze frame data (either 1st trip freeze frame data or freeze frame data) can be stored in the ECM. 1st trip freeze frame data is stored in the ECM memory along with the 1st trip DTC. There is no priority for 1st trip freeze frame data and it is updated each time a different 1st trip DTC is detected. However, once freeze frame data (2nd trip detection/MIL on) is stored in the ECM memory, 1st trip freeze frame data is no longer stored. Remember, only one set of freeze frame data can be stored in the ECM. The ECM has the following priorities to update the data.

Priority	Items	
1	Freeze frame data	Misfire — DTC: P0300 - P0304 Fuel Injection System Function — DTC: P0171, P0172
2		Except the above items (Includes A/T related items)
3	1st trip freeze frame data	

For example, the EGR malfunction (Priority: 2) was detected and the freeze frame data was stored in the 2nd trip. After that when the misfire (Priority: 1) is detected in another trip, the freeze frame data will be updated from the EGR malfunction to the misfire. The 1st trip freeze frame data is updated each time a different malfunction is detected. There is no priority for 1st trip freeze frame data. However, once freeze frame data is stored in the ECM memory, 1st trip freeze data is no longer stored (because only one freeze frame data or 1st trip freeze frame data can be stored in the ECM). If freeze frame data is stored in the ECM memory and freeze frame data with the same priority occurs later, the first (original) freeze frame data remains unchanged in the ECM memory.

Both 1st trip freeze frame data and freeze frame data (along with the DTCs) are cleared when the ECM memory is erased. Procedures for clearing the ECM memory are described in EC-698, "EMISSION-RELATED DIAGNOSTIC INFORMATION ITEMS" .

SYSTEM READINESS TEST (SRT) CODE

System Readiness Test (SRT) code is specified in Service $01 of SAE J1979.

As part of an enhanced emissions test for Inspection & Maintenance (I/M), certain states require the status of SRT be used to indicate whether the ECM has completed self-diagnosis of major emission systems and components. Completion must be verified in order for the emissions inspection to proceed.

If a vehicle is rejected for a State emissions inspection due to one or more SRT items indicating “INCMP”, use the information in this Service Manual to set the SRT to “CMPLT”.

In most cases the ECM will automatically complete its self-diagnosis cycle during normal usage, and the SRT status will indicate “CMPLT” for each application system. Once set as “CMPLT”, the SRT status remains “CMPLT” until the self-diagnosis memory is erased.

Occasionally, certain portions of the self-diagnostic test may not be completed as a result of the customer's normal driving pattern; the SRT will indicate “INCMP” for these items.

NOTE:

The SRT will also indicate “INCMP” if the self-diagnosis memory is erased for any reason or if the ECM memory power supply is interrupted for several hours.

If, during the state emissions inspection, the SRT indicates “CMPLT” for all test items, the inspector will continue with the emissions test. However, if the SRT indicates “INCMP” for one or more of the SRT items the vehicle is returned to the customer untested.

NOTE:
If MIL is ON during the state emissions inspection, the vehicle is also returned to the customer untested even though the SRT indicates “CMPLT” for all test items. Therefore, it is important to check SRT (“CMPLT”) and DTC (No DTCs) before the inspection.

SRT Item

The table below shows required self-diagnostic items to set the SRT to “CMPLT”.

SRT item (CONSULT-II indication)	Performance Priority*1	Required self-diagnostic items to set the SRT to “CMPLT”	Corresponding DTC No.
CATALYST	2	Three way catalyst function	P0420
EVAPORATIVE SYSTEM	1	EVAP control system	P0442
	2	EVAP control system	P0456
	2	EVAP control system purge flow monitoring	P0441
HO2S	2	Heated oxygen sensor 1*2	P0133
		Heated oxygen sensor 1*2	P1143
		Heated oxygen sensor 1*2	P1144
		Air fuel ratio (A/F) sensor 1*3	P1278, P1279
		Heated oxygen sensor 2	P0139
		Heated oxygen sensor 2	P1146
		Heated oxygen sensor 2	P1147
HO2S HTR	2	Heated oxygen sensor 1 heater	P0031, P0032
		Air fuel ratio (A/F) sensor 1 heater*3	P1031, P1032
		Heated oxygen sensor 2 heater	P0037, P0038

*1: If completion of several SRTs is required, perform driving patterns (DTC confirmation procedure), one by one based on the priority for models with CONSULT-II.
*2: A/T models ULEV and M/T models
*3: A/T models except ULEV

SRT Set Timing

SRT is set as “CMPLT” after self-diagnosis has been performed one or more times. Completion of SRT is done regardless of whether the result is OK or NG. The set timing is different between OK and NG results and is shown in the table below.

Self-diagnosis result		Example				
		Diagnosis	Ignition cycle ← ON → OFF	← ON → OFF	← ON → OFF	← ON →
All OK	Case 1	P0400	OK (1)	— (1)	OK (2)	— (2)
		P0402	OK (1)	— (1)	— (1)	OK (2)
		P1402	OK (1)	OK (2)	— (2)	— (2)
		SRT of EGR	“CMPLT”	“CMPLT”	“CMPLT”	“CMPLT”
	Case 2	P0400	OK (1)	— (1)	— (1)	— (1)
		P0402	— (0)	— (0)	OK (1)	— (1)
		P1402	OK (1)	OK (2)	— (2)	— (2)
		SRT of EGR	“INCMP”	“INCMP”	“CMPLT”	“CMPLT”
NG exists	Case 3	P0400	OK	OK	—	—
		P0402	—	—	—	—
		P1402	NG	—	NG	NG (Consecutive NG)
		(1st trip) DTC	1st trip DTC	—	1st trip DTC	DTC (= MIL “ON”)
		SRT of EGR	“INCMP”	“INCMP”	“INCMP”	“CMPLT”

OK: Self-diagnosis is carried out and the result is OK.
NG: Self-diagnosis is carried out and the result is NG.

—: Self-diagnosis is not carried out.

When all SRT related self-diagnoses showed OK results in a single cycle (Ignition OFF-ON-OFF), the SRT will indicate “CMPLT”. → Case 1 above
When all SRT related self-diagnoses showed OK results through several different cycles, the SRT will indicate “CMPLT” at the time the respective self-diagnoses have at least one OK result. → Case 2 above
If one or more SRT related self-diagnoses showed NG results in 2 consecutive cycles, the SRT will also indicate “CMPLT”. → Case 3 above
The table above shows that the minimum number of cycles for setting SRT as “INCMP” is one (1) for each self-diagnosis (Case 1 & 2) or two (2) for one of self-diagnoses (Case 3). However, in preparation for the state emissions inspection, it is unnecessary for each self-diagnosis to be executed twice (Case 3) for the following reasons:

- The SRT will indicate “CMPLT” at the time the respective self-diagnoses have one (1) OK result.
- The emissions inspection requires “CMPLT” of the SRT only with OK self-diagnosis results.
- When, during SRT driving pattern, 1st trip DTC (NG) is detected prior to “CMPLT” of SRT, the self-diagnosis memory must be erased from ECM after repair.
- If the 1st trip DTC is erased, all the SRT will indicate “INCMP”.

  NOTE:
  SRT can be set as “CMPLT” together with the DTC(s). Therefore, DTC check must always be carried out prior to the state emission inspection even though the SRT indicates “CMPLT”.

SRT Service Procedure

If a vehicle has failed the state emissions inspection due to one or more SRT items indicating “INCMP”, review the flowchart diagnostic sequence on the next page.

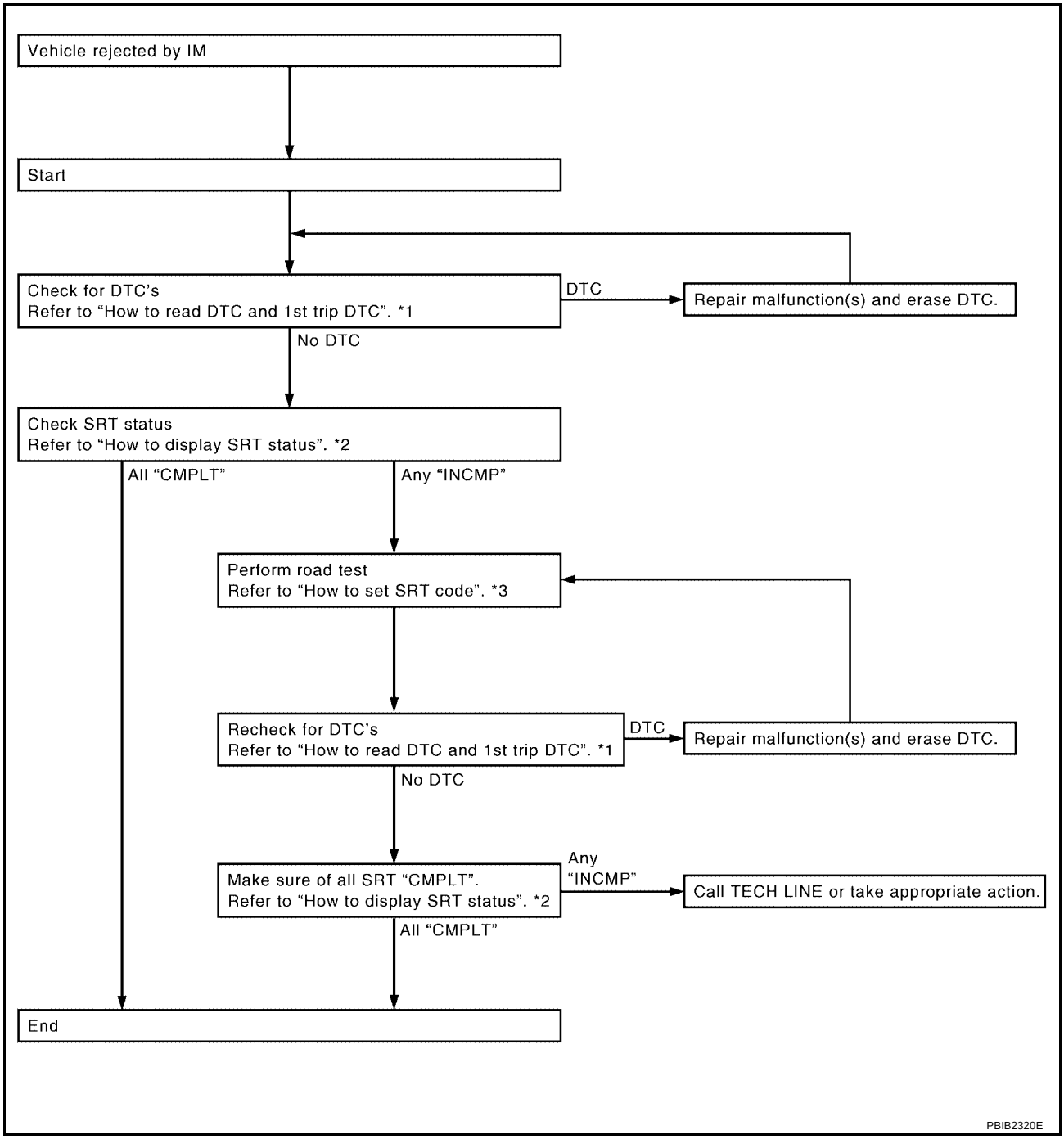

*1 EC-701 *2 EC-706 *3 EC-707

How to Display SRT Status

WITH CONSULT-II

Selecting "SRT STATUS" in "DTC CONFIRMATION" mode with CONSULT-II.

For items whose SRT codes are set, a "CMPLT" is displayed on the CONSULT-II screen; for items whose SRT codes are not set, "INCMP" is displayed.

A sample of CONSULT-II display for SRT code is shown at right.

"INCMP" means the self-diagnosis is incomplete and SRT is not set.

"CMPLT" means the self-diagnosis is complete and SRT is set.

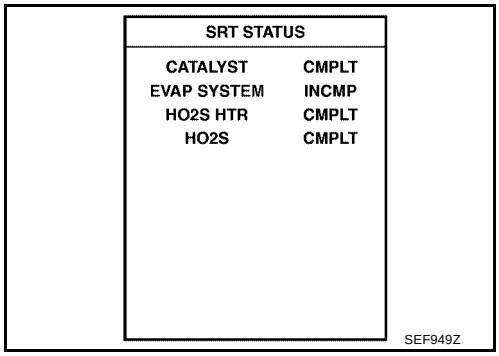

WITH GST

Selecting Service $01 with GST (Generic Scan Tool)

NO TOOLS

A SRT code itself can not be displayed while only SRT status can be.

1. Turn ignition switch ON and wait 20 seconds.
2. SRT status is indicated as shown below.
   - When all SRT codes are set, MIL lights up continuously.
   - When any SRT codes are not set, MIL will flash periodically for 10 seconds.

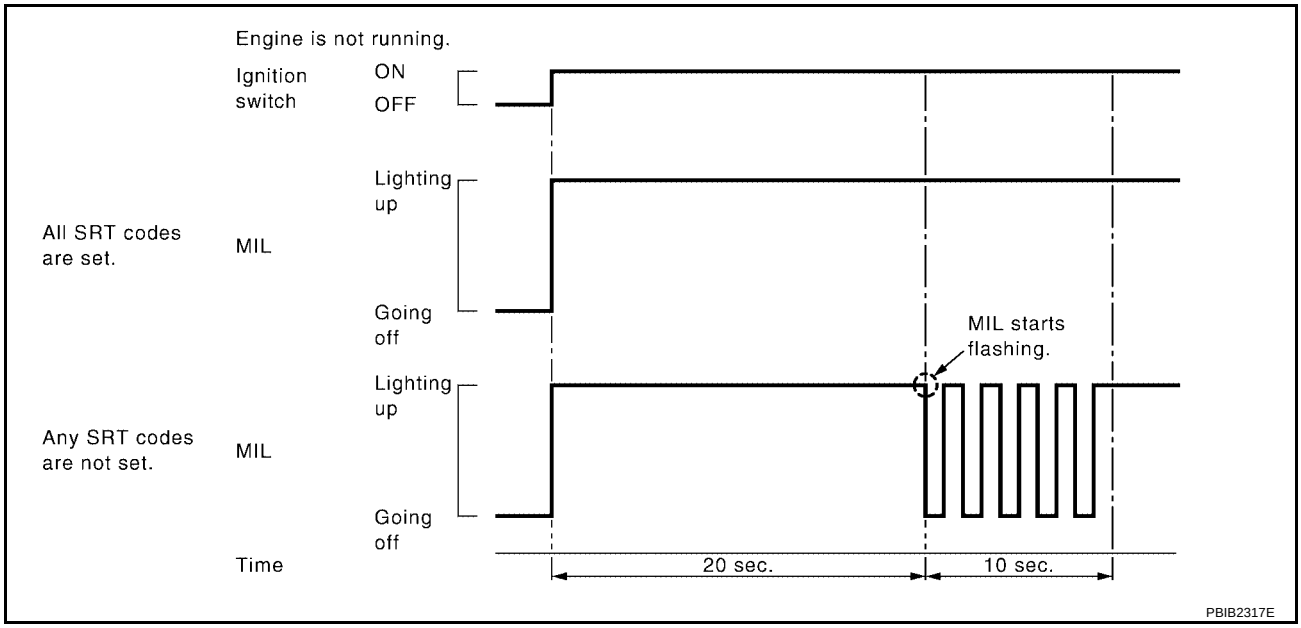

How to Set SRT Code

To set all SRT codes, self-diagnosis for the items indicated above must be performed one or more times. Each diagnosis may require a long period of actual driving under various conditions.

WITH CONSULT-II

Perform corresponding DTC Confirmation Procedure one by one based on Performance Priority in the table on EC-704, "SRT Item" .

WITHOUT CONSULT-II

The most efficient driving pattern in which SRT codes can be properly set is explained on the next page. The driving pattern should be performed one or more times to set all SRT codes.

Driving Pattern

A/T MODELS ULEV AND M/T MODELS

Driving pattern

Note: Always drive vehicle in safe manner according to traffic conditions and obey all traffic laws.
Refer to next page for more information and explanation of chart.

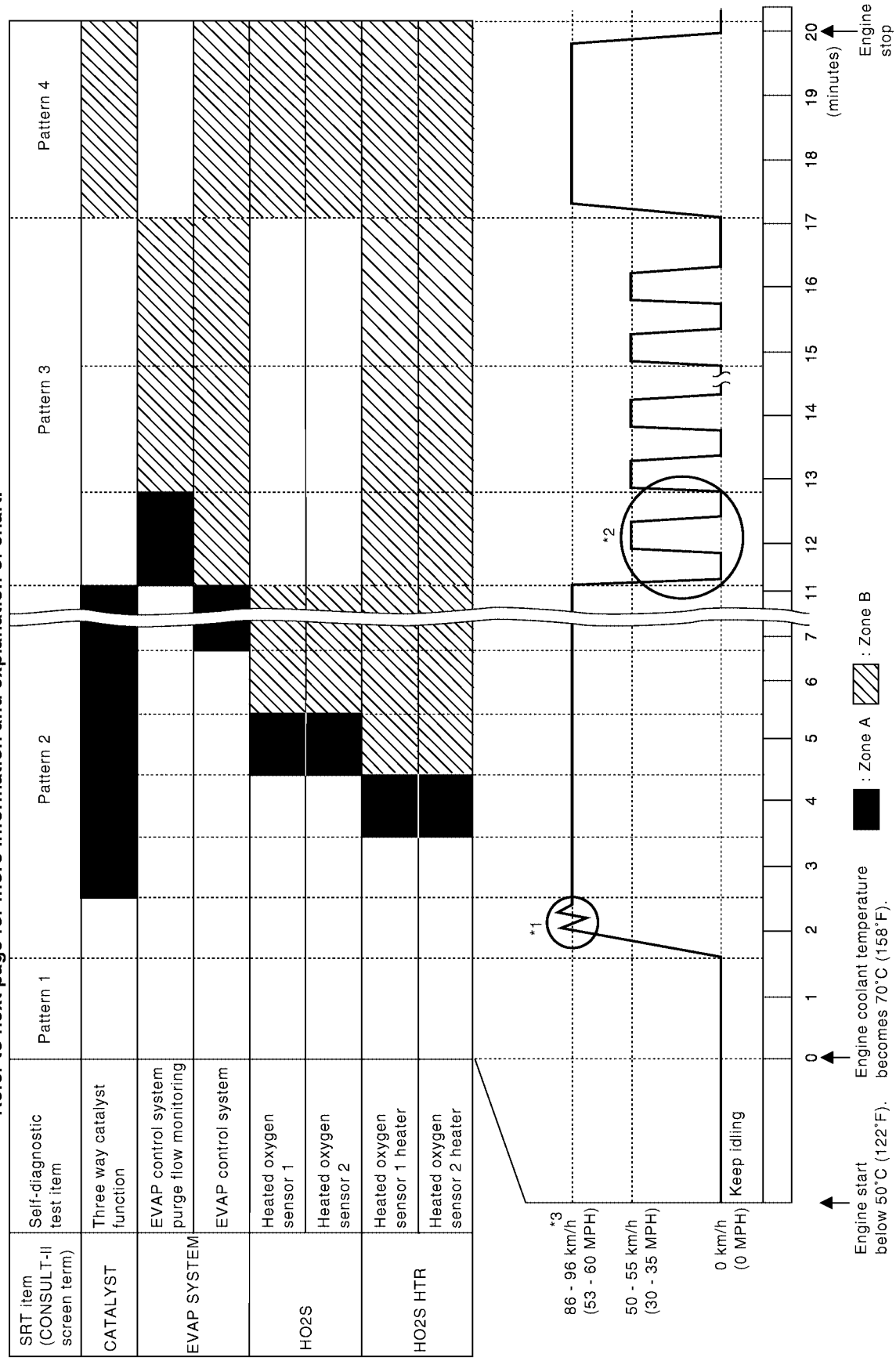

A/T MODELS EXCEPT ULEV

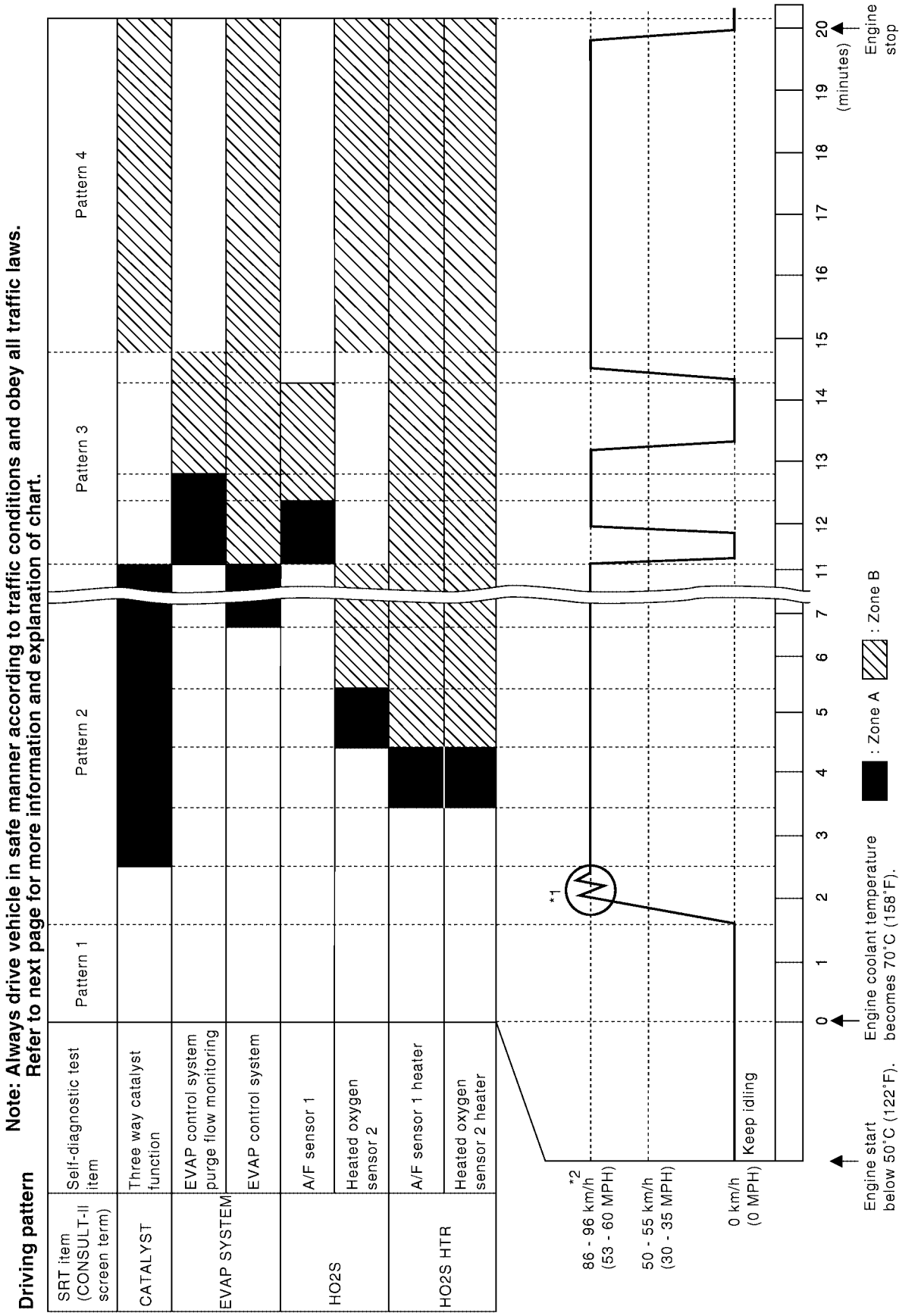

- The time required for each diagnosis varies with road surface conditions, weather, altitude, individual driving habits, etc.
  Zone A refers to the range where the time, required for the diagnosis under normal conditions*, is the shortest.
  Zone B refers to the range where the diagnosis can still be performed if the diagnosis is not completed within zone A.

*: Normal conditions refer to the following:

- Sea level
- Flat road
- Ambient air temperature: 20 - 30°C (68 - 86°F)
- Diagnosis is performed as quickly as possible under normal conditions.
  Under different conditions [For example: ambient air temperature other than 20 - 30°C (68 - 86°F)], diagnosis may also be performed.

Pattern 1:

- **The engine is started at the engine coolant temperature of –10 to 35°C (14 to 95°F) (where the voltage between the ECM terminal 73 and ground is 3.0 - 4.3V).**
- **The engine must be operated at idle speed until the engine coolant temperature is greater than 70°C (158°F) (where the voltage between the ECM terminal 73 and ground is lower than 1.4V).**
- **The engine is started at the fuel tank temperature of warmer than 0°C (32°F) (where the voltage between the ECM terminal 107 and ground is less than 4.1V).**

Pattern 2:

- When steady-state driving is performed again even after it is interrupted, each diagnosis can be conducted. In this case, the time required for diagnosis may be extended.

Pattern 3:

- Operate vehicle following the driving pattern shown in the figure.
- Release the accelerator pedal during decelerating vehicle speed from 90 km/h (56 MPH) to 0 km/h (0 MPH).

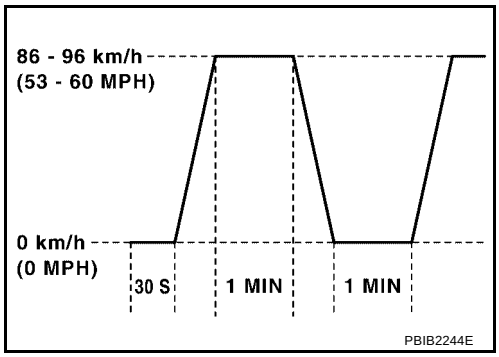

Pattern 4:

- The accelerator pedal must be held very steady during steady-state driving.
- If the accelerator pedal is moved, the test must be conducted all over again.

*1: Depress the accelerator pedal until vehicle speed is 90 km/h (56 MPH), then release the accelerator pedal and keep it released for more than 10 seconds. Depress the accelerator pedal until vehicle speed is 90 km/h (56 MPH) again.
*2: Checking the vehicle speed with GST is advised.

Suggested Transmission Gear Position for A/T Models
Set the selector lever in the D position with the overdrive switch turned ON.
Suggested upshift speeds for M/T models
Shown below are suggested vehicle speeds for shifting into a higher gear. These suggestions relate to fuel economy and vehicle performance. Actual upshift speeds will vary according to road conditions, the weather and individual driving habits.

	For normal acceleration in low altitude areas [less than 1,219 m (4,000 ft)]:	For quick acceleration in low altitude areas	For high attitude areas [over 1,219m (4,000 ft)]:
Gear change	ACCEL shift point km/h (MPH)	km/h (MPH)	km/h (MPH)
1st to 2nd	16 (10)	26 (16)	24 (15)
2nd to 3rd	23 (14)	42 (26)	40 (25)
3rd to 4th	40 (25)	55 (34)	64 (40)
4th to 5th	60 (37)	66 (41)	72 (45)
5th to 6th	72 (45)	72 (45)	80 (50)

Suggested Maximum Speed in Each Gear

Downshift to a lower gear if the engine is not running smoothly, or if you need to accelerate.
Do not exceed the maximum suggested speed (shown below) in any gear. For level road driving, use the highest gear suggested for that speed. Always observe posted speed limits and drive according to the road conditions to ensure safe operation. Do not over-rev the engine when shifting to a lower gear as it may cause engine damage or loss of vehicle control.

Gear	km/h (MPH)
1st	45 (25)
2nd	80 (50)
3rd	130 (80)
4th	—
5th	—
6th	—

TEST VALUE AND TEST LIMIT (GST ONLY — NOT APPLICABLE TO CONSULT-II)

The following is the information specified in Service $06 of SAE J1979.
The test value is a parameter used to determine whether a system/circuit diagnostic test is “OK” or “NG” while being monitored by the ECM during self-diagnosis. The test limit is a reference value which is specified as the maximum or minimum value and is compared with the test value being monitored.
These data (test value and test limit) are specified by Test ID (TID) and Component ID (CID) and can be displayed on the GST screen.

A/T Models ULEV and M/T Models

Item	Self-diagnostic test item	DTC	Test value (GST display)		Test limit	Conversion
			TID	CID		
CATALYST	Three way catalyst function	P0420	01H	01H	Max.	1/128
		P0420	02H	81H	Min.	1
EVAP SYSTEM	EVAP control system (Small leak)	P0442	05H	03H	Max.	1/128 mm^2
	EVAP control system purge flow monitoring	P0441	06H	83H	Min.	20 mV
	EVAP control system (Very small leak)	P0456	07H	03H	Max.	1/128 mm^2
HO2S	Heated oxygen sensor 1	P0133	09H	04H	Max.	16 ms
		P1143	0AH	84H	Min.	10 mV
		P1144	0BH	04H	Max.	10 mV
	Heated oxygen sensor 2	P0139	19H	86H	Min.	10 mV/500 ms
		P1147	1AH	86H	Min.	10 mV
		P1146	1BH	06H	Max.	10 mV
HO2S HTR	Heated oxygen sensor 1 heater	P0032	29H	08H	Max.	20 mV
		P0031	2AH	88H	Min.	20 mV
	Heated oxygen sensor 2 heater	P0038	2DH	0AH	Max.	20 mV
		P0037	2EH	8AH	Min.	20 mV

A/T Models Except ULEV

Item	Self-diagnostic test item	DTC	Test value (GST display)		Test limit	Conversion
			TID	CID		
CATALYST	Three way catalyst function	P0420	01H	01H	Max.	1/128
		P0420	02H	81H	Min.	1
EVAP SYSTEM	EVAP control system (Small leak)	P0442	05H	03H	Max.	1/128 mm^2
	EVAP control system purge flow monitoring	P0441	06H	83H	Min.	20 mV
	EVAP control system (Very small leak)	P0456	07H	03H	Max.	1/128 mm^2

Item	Self-diagnostic test item	DTC	Test value (GST display)		Test limit	Conversion
			TID	CID		
HO2S	A/F sensor 1	P1271	41H	8EH	Min.	5 mV
		P1272	42H	0EH	Max.	5 mV
		P1273	43H	0EH	Max.	0.002
		P1274	44H	8EH	Min.	0.002
		P1278	45H	8EH	Min.	0.004
		P1276	46H	0EH	Max.	5 mV
		P1276	47H	8EH	Min.	5 mV
		P1279	48H	8EH	Min.	0.004
	Heated oxygen sensor 2	P0139	19H	86H	Min.	10mV/500 ms
		P1147	1AH	86H	Min.	10 mV
		P1146	1BH	06H	Max.	10 mV
		P0138	1CH	06H	Max.	10 mV
HO2S HEATER	A/F sensor 1 heater	P1032	57H	10H	Max.	5 mV
		P1031	58H	90H	Min.	5 mV
	Heated oxygen sensor 2 heater	P0038	2DH	0AH	Max.	20 mV
		P0037	2EH	8AH	Min.	20 mV

HOW TO ERASE EMISSION-RELATED DIAGNOSTIC INFORMATION

How to Erase DTC

With CONSULT-II

The emission related diagnostic information in the ECM can be erased by selecting “ERASE” in the “SELF-DIAG RESULTS” mode with CONSULT-II.
If DTCs are displayed for both ECM and TCM (Transmission control module), they need to be erased individually from the ECM and TCM (Transmission control module).

NOTE:
If the DTC is not for A/T related items (see EC-658, "INDEX FOR DTC"), skip steps 2 through 4.

1. If the ignition switch stays ON after repair work, be sure to turn ignition switch OFF once. Wait at least 10 seconds and then turn it ON (engine stopped) again.
2. Turn CONSULT-II ON and touch “A/T”.
3. Touch “SELF-DIAG RESULTS”.
4. Touch “ERASE”. [The DTC in the TCM (Transmission control module) will be erased.] Then touch “BACK” twice.
5. Touch “ENGINE”.
6. Touch “SELF-DIAG RESULTS”.

7. Touch “ERASE”. (The DTC in the ECM will be erased.)

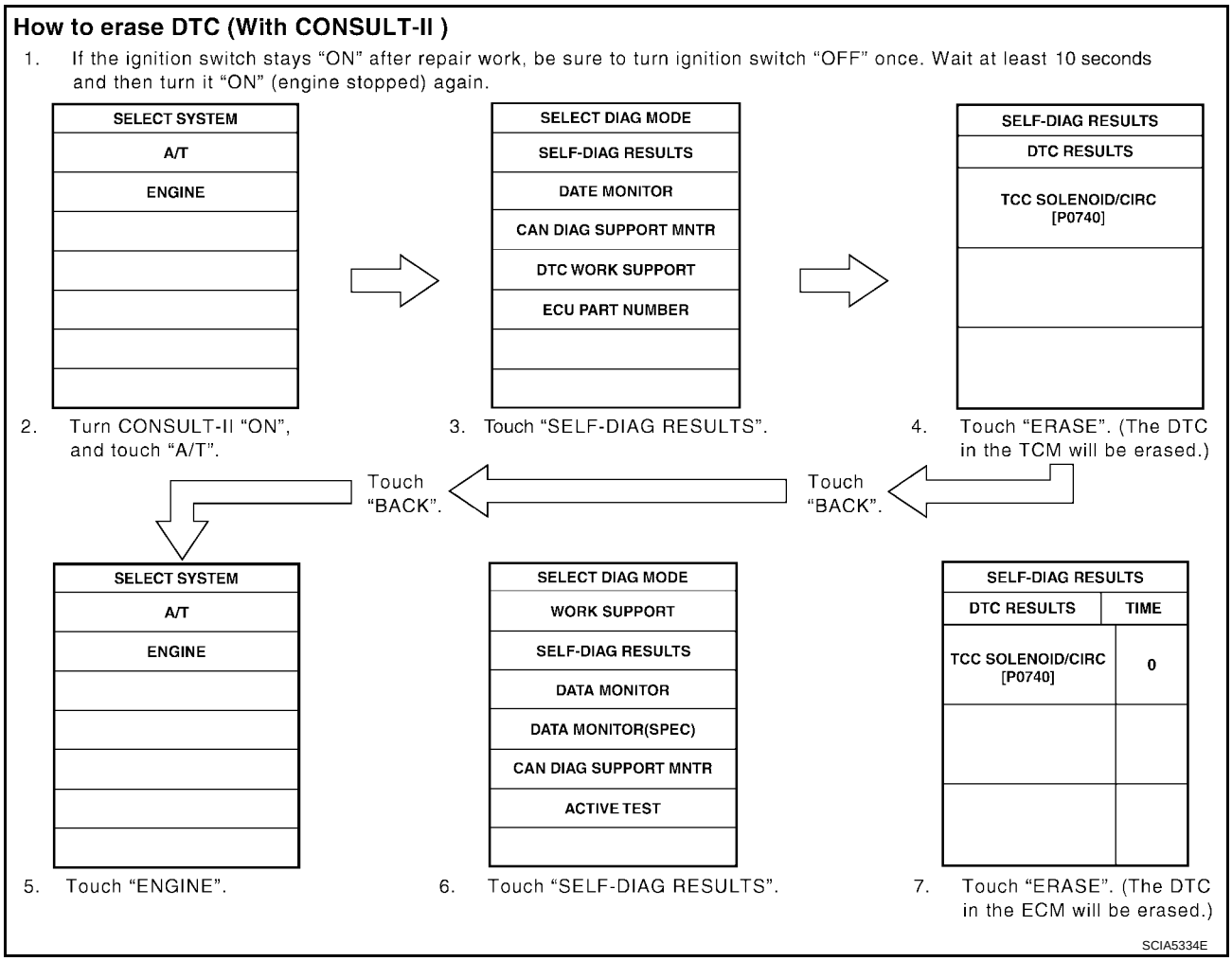

With GST

The emission related diagnostic information in the ECM can be erased by selecting Service $04 with GST.

NOTE:

If the DTC is not for A/T related items (see EC-658, "INDEX FOR DTC" , skip step 2.

1. If the ignition switch stays ON after repair work, be sure to turn ignition switch OFF once. Wait at least 10 seconds and then turn it ON (engine stopped) again.
2. Perform AT-429, "HOW TO ERASE DTC (WITH GST)" . (The DTC in the TCM will be erased.)
3. Select Service $04 with GST (Generic Scan Tool).

No Tools

NOTE:

If the DTC is not for A/T related items (see EC-658, "INDEX FOR DTC"), skip step 2.

1. If the ignition switch stays ON after repair work, be sure to turn ignition switch OFF once. Wait at least 10 seconds and then turn it ON (engine stopped) again.
2. Perform AT-429, "HOW TO ERASE DTC (NO TOOLS)" . (The DTC in the TCM will be erased.)
3. Change the diagnostic test mode from Mode II to Mode I by depressing the accelerator pedal. Refer to EC-715, "HOW TO SWITCH DIAGNOSTIC TEST MODE" .

- **If the battery is disconnected, the emission-related diagnostic information will be lost within 24 hours.**
- **The following data are cleared when the ECM memory is erased.**
  - Diagnostic trouble codes
  - 1st trip diagnostic trouble codes
  - Freeze frame data
  - 1st trip freeze frame data

- System readiness test (SRT) codes
- Test values

Actual work procedures are explained using a DTC as an example. Be careful so that not only the DTC, but all of the data listed above, are cleared from the ECM memory during work procedures.

Malfunction Indicator Lamp (MIL)

UBS00J9K

DESCRIPTION

The MIL is located on the instrument panel.

1. The MIL will light up when the ignition switch is turned ON without the engine running. This is a bulb check.
   If the MIL does not light up, refer to DI-27, "WARNING LAMPS" , or see EC-1383, "MIL AND DATA LINK CONNECTOR" .
2. When the engine is started, the MIL should go off.
   If the MIL remains on, the on board diagnostic system has detected an engine system malfunction.

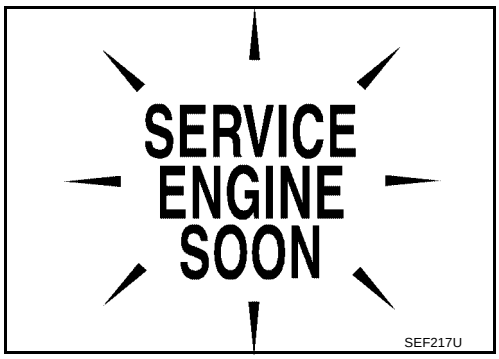

ON BOARD DIAGNOSTIC SYSTEM FUNCTION

The on board diagnostic system has the following 4 functions.

Diagnostic Test Mode	KEY and ENG. Status	Function	Explanation of Function
Mode I	Ignition switch in ON position  Engine stopped 	BULB CHECK	This function checks the MIL bulb for damage (blown, open circuit, etc.). If the MIL does not come on, check MIL circuit.
	Engine running 	MALFUNCTION WARNING	This is a usual driving condition. When a malfunction is detected twice in two consecutive driving cycles (two trip detection logic), the MIL will light up to inform the driver that a malfunction has been detected. The following malfunctions will light up or blink the MIL in the 1st trip. ● Misfire (Possible three way catalyst damage) ● One trip detection diagnoses
Mode II	Ignition switch in ON position  Engine stopped 	SELF-DIAGNOSTIC RESULTS	This function allows DTCs and 1st trip DTCs to be read.
	Engine running 	HEATED OXYGEN SENSOR 1 MONITOR*	This function allows the fuel mixture condition (lean or rich), monitored by heated oxygen sensor 1, to be read.

*: A/T models ULEV and M/T models

When there is an open circuit on MIL circuit, the ECM cannot warn the driver by lighting up MIL when there is malfunction on engine control system.

Therefore, when electrical controlled throttle and part of ECM related diagnoses are continuously detected as NG for 5 trips, ECM warns the driver that engine control system malfunctions and MIL circuit is open by means of operating fail-safe function.
The fail-safe function also operates when above diagnoses except MIL circuit are detected, and demands the driver to repair the malfunction.

Engine operating condition in fail-safe mode	Engine speed will not rise more than 2,500 rpm due to the fuel cut

MIL Flashing Without DTC

- When any SRT codes are not set, MIL may flash without DTC. For the details, refer to EC-706, "How to Display SRT Status"
- If the ECM is in Diagnostic Test Mode II, MIL may flash when engine is running. In this case, check ECM diagnostic test mode. EC-715, "HOW TO SWITCH DIAGNOSTIC TEST MODE" .
  How to switch the diagnostic test (function) modes, and details of the above functions are described later. EC-715, "HOW TO SWITCH DIAGNOSTIC TEST MODE" .
  The following emission-related diagnostic information is cleared when the ECM memory is erased.

- Diagnostic trouble codes
- 1st trip diagnostic trouble codes
- Freeze frame data
- 1st trip freeze frame data
- System readiness test (SRT) codes
- Test values

HOW TO SWITCH DIAGNOSTIC TEST MODE

NOTE:

- **It is better to count the time accurately with a clock.**
- **It is impossible to switch the diagnostic mode when an accelerator pedal position sensor circuit has a malfunction.**
- **Always ECM returns to Diagnostic Test Mode I after ignition switch is turned OFF.**

How to Set Diagnostic Test Mode II (Self-diagnostic Results)

1. Confirm that accelerator pedal is fully released, turn ignition switch ON and wait 3 seconds.
2. Repeat the following procedure quickly five times within 5 seconds.

a. Fully depress the accelerator pedal.
b. Fully release the accelerator pedal.

3. Wait 7 seconds, fully depress the accelerator pedal and keep it for approx. 10 seconds until the MIL starts blinking.

   NOTE:
   Do not release the accelerator pedal for 10 seconds if MIL may start blinking on the halfway of this 10 seconds. This blinking is displaying SRT status and is continued for another 10 seconds. For the details, refer to EC-706, "How to Display SRT Status" .

4. Fully release the accelerator pedal.
   ECM has entered to Diagnostic Test Mode II (Self-diagnostic results).

   NOTE:
   Wait until the same DTC (or 1st trip DTC) appears to confirm all DTCs certainly.

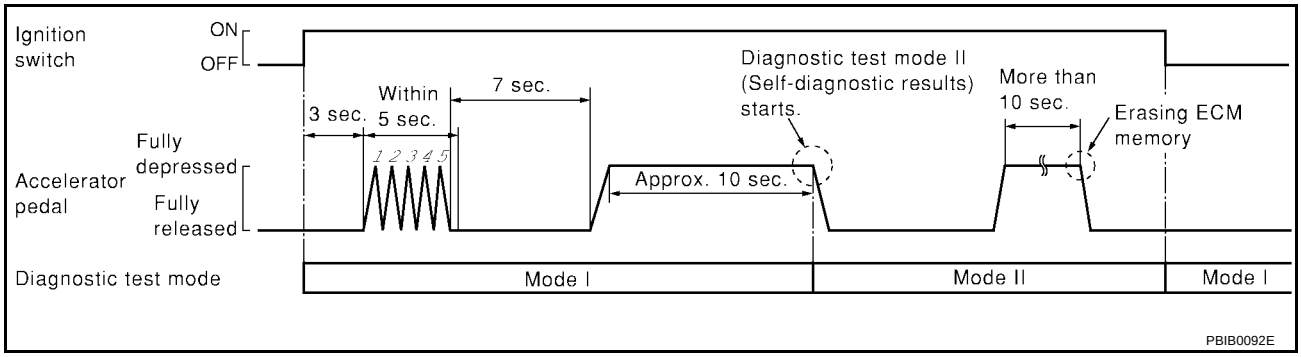

How to Set Diagnostic Test Mode II (Heated Oxygen Sensor 1 Monitor)

1. Set the ECM in Diagnostic Test Mode II (Self-diagnostic results). Refer to EC-716, "DIAGNOSTIC TEST MODE II — SELF-DIAGNOSTIC RESULTS" .
2. Start Engine.
   ECM has entered to Diagnostic Test Mode II (Heated oxygen sensor 1 monitor).
   ECM will start heated oxygen sensor 1 monitoring from the bank 1 sensor.

How to Erase Diagnostic Test Mode II (Self-diagnostic Results)

1. Set ECM in Diagnostic Test Mode II (Self-diagnostic results). Refer to EC-715, "How to Set Diagnostic Test Mode II (Self-diagnostic Results)" .
2. Fully depress the accelerator pedal and keep it for more than 10 seconds.
   The emission-related diagnostic information has been erased from the backup memory in the ECM.
3. Fully release the accelerator pedal, and confirm the DTC 0000 is displayed.

DIAGNOSTIC TEST MODE I — BULB CHECK

In this mode, the MIL on the instrument panel should stay ON. If it remains OFF, check the bulb. Refer to DI-27, "WARNING LAMPS" .

DIAGNOSTIC TEST MODE I — MALFUNCTION WARNING

MIL	Condition
ON	When the malfunction is detected.
OFF	No malfunction

These DTC numbers are clarified in Diagnostic Test Mode II (SELF-DIAGNOSTIC RESULTS)

DIAGNOSTIC TEST MODE II — SELF-DIAGNOSTIC RESULTS

In this mode, the DTC and 1st trip DTC are indicated by the number of blinks of the MIL as shown below.
The DTC and 1st trip DTC are displayed at the same time. If the MIL does not illuminate in diagnostic test mode I (Malfunction warning), all displayed items are 1st trip DTCs. If only one code is displayed when the MIL illuminates in diagnostic test mode II (SELF-DIAGNOSTIC RESULTS), it is a DTC; if two or more codes are displayed, they may be either DTCs or 1st trip DTCs. DTC No. is same as that of 1st trip DTC. These unidentified codes can be identified by using the CONSULT-II or GST. A DTC will be used as an example for how to read a code.

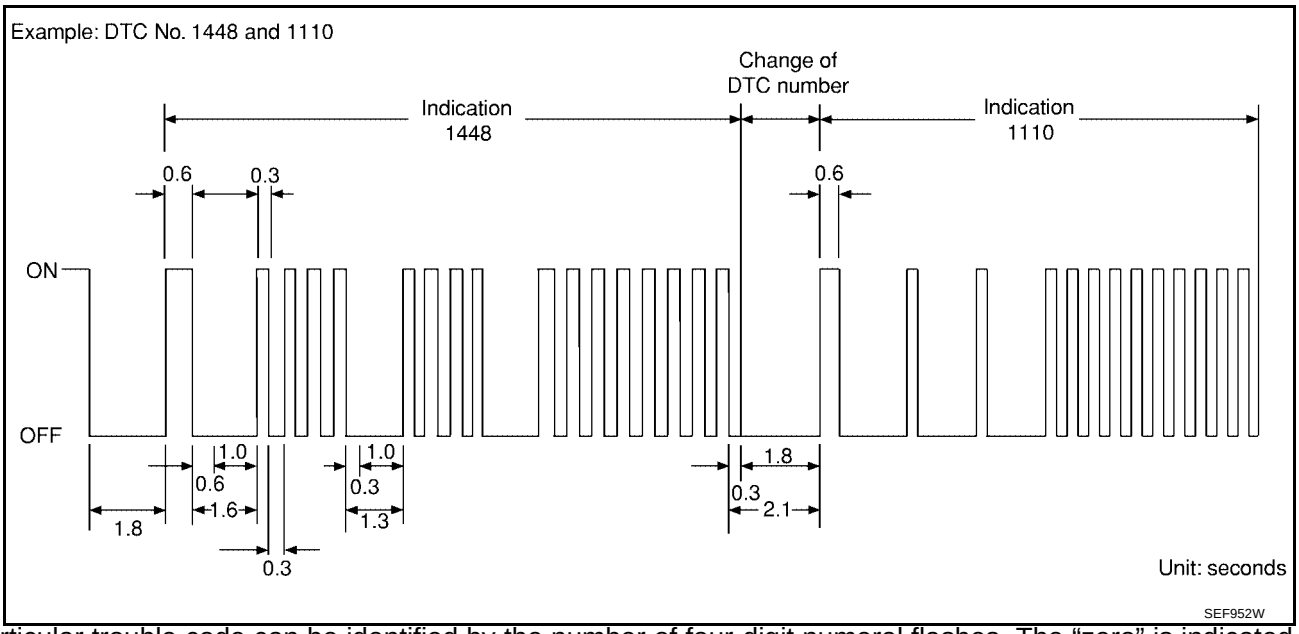

A particular trouble code can be identified by the number of four-digit numeral flashes. The “zero” is indicated by the number of ten flashes. The length of time the 1,000th-digit numeral flashes on and off is 1.2 seconds consisting of an ON (0.6-second) - OFF (0.6-second) cycle.
The 100th-digit numeral and lower digit numerals consist of a 0.3-second ON and 0.3-second OFF cycle.
A change from one digit numeral to another occurs at an interval of 1.0-second OFF. In other words, the later numeral appears on the display 1.3 seconds after the former numeral has disappeared.

A change from one trouble code to another occurs at an interval of 1.8-second OFF.
In this way, all the detected malfunctions are classified by their DTC numbers. The DTC 0000 refers to no malfunction. (See EC-658, "INDEX FOR DTC")

How to Erase Diagnostic Test Mode II (Self-diagnostic Results)

The DTC can be erased from the back-up memory in the ECM by depressing accelerator pedal. Refer to EC-716, "How to Erase Diagnostic Test Mode II (Self-diagnostic Results)" .

- **If the battery is disconnected, the DTC will be lost from the backup memory within 24 hours.**
- **Be careful not to erase the stored memory before starting trouble diagnoses.**

DIAGNOSTIC TEST MODE II — HEATED OXYGEN SENSOR 1 MONITOR

In this mode, the MIL displays the condition of the fuel mixture (lean or rich) which is monitored by the heated oxygen sensor 1.

MIL	Fuel mixture condition in the exhaust gas	Air fuel ratio feedback control condition
ON	Lean	Closed loop system
OFF	Rich	
*Remains ON or OFF	Any condition	Open loop system

*: Maintains conditions just before switching to open loop.

To check the heated oxygen sensor 1 function, start engine in the Diagnostic Test Mode II and warm it up until engine coolant temperature indicator points to the middle of the gauge.
Next run engine at about 2,000 rpm for about 2 minutes under no-load conditions. Then make sure that the MIL comes ON more than 5 times within 10 seconds with engine running at 2,000 rpm under no-load.

OBD System Operation Chart

UBS00J9L

RELATIONSHIP BETWEEN MIL, 1ST TRIP DTC, DTC, AND DETECTABLE ITEMS

- When a malfunction is detected for the first time, the 1st trip DTC and the 1st trip freeze frame data are stored in the ECM memory.
- When the same malfunction is detected in two consecutive trips, the DTC and the freeze frame data are stored in the ECM memory, and the MIL will come on. For details, refer to EC-697, "Two Trip Detection Logic" .
- The MIL will go off after the vehicle is driven 3 times (driving pattern B) with no malfunction. The drive is counted only when the recorded driving pattern is met (as stored in the ECM). If another malfunction occurs while counting, the counter will reset.
- The DTC and the freeze frame data will be stored until the vehicle is driven 40 times (driving pattern A) without the same malfunction recurring (except for Misfire and Fuel Injection System). For Misfire and Fuel Injection System, the DTC and freeze frame data will be stored until the vehicle is driven 80 times (driving pattern C) without the same malfunction recurring. The “TIME” in “SELF-DIAGNOSTIC RESULTS” mode of CONSULT-II will count the number of times the vehicle is driven.
- The 1st trip DTC is not displayed when the self-diagnosis results in OK for the 2nd trip.

SUMMARY CHART

Items	Fuel Injection System	Misfire	Other
MIL (goes off)	3 (pattern B)	3 (pattern B)	3 (pattern B)
DTC, Freeze Frame Data (no display)	80 (pattern C)	80 (pattern C)	40 (pattern A)
1st Trip DTC (clear)	1 (pattern C), *1	1 (pattern C), *1	1 (pattern B)
1st Trip Freeze Frame Data (clear)	*1, *2	*1, *2	1 (pattern B)

For details about patterns B and C under “Fuel Injection System” and “Misfire”, see EC-719 .
For details about patterns A and B under “Other”, see EC-721 .
*1: Clear timing is at the moment OK is detected.
*2: Clear timing is when the same malfunction is detected in the 2nd trip.

RELATIONSHIP BETWEEN MIL, DTC, 1ST TRIP DTC AND DRIVING PATTERNS FOR “MISFIRE <EXHAUST QUALITY DETERIORATION>”, “FUEL INJECTION SYSTEM”

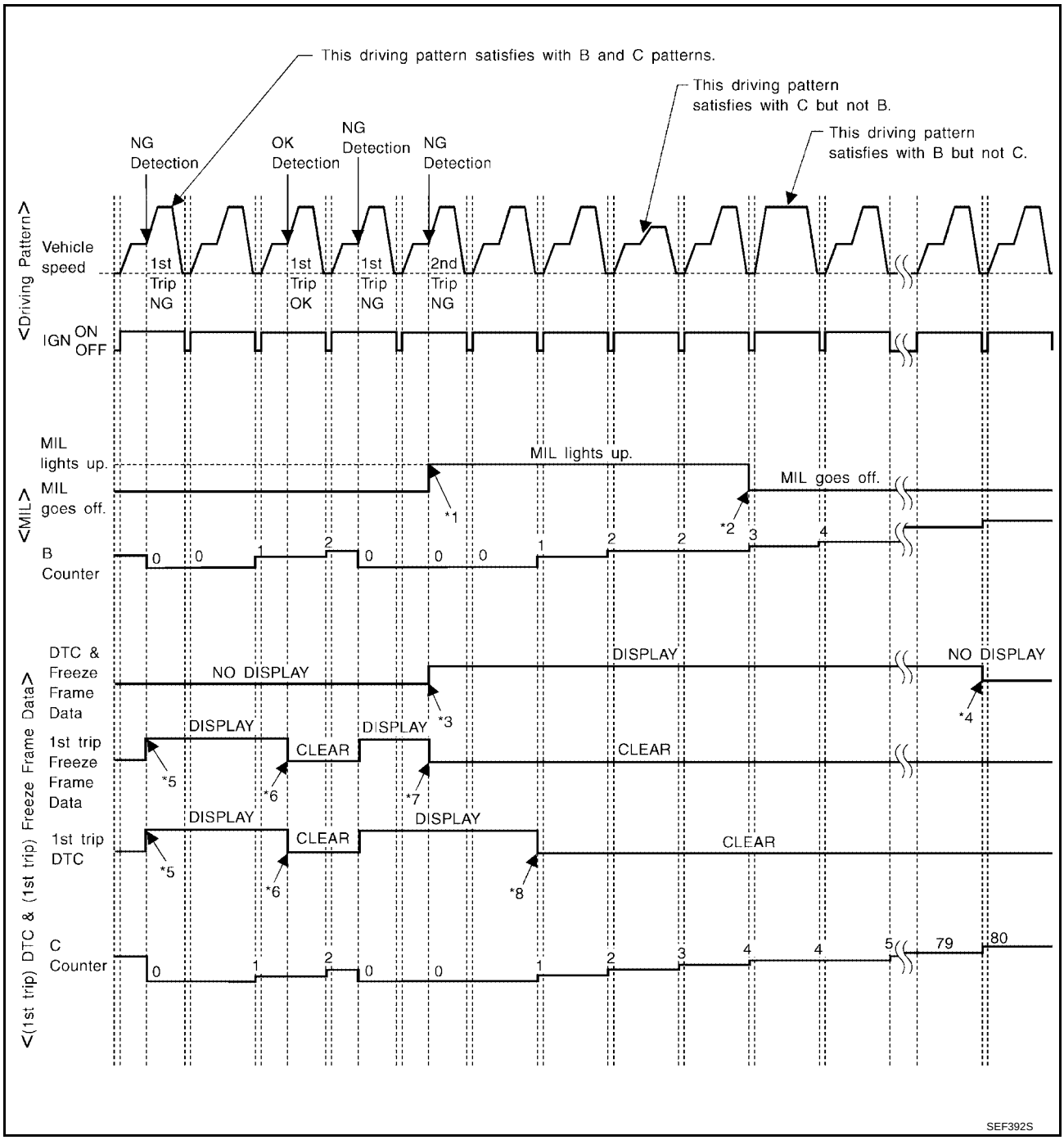

*1: When the same malfunction is detected in two consecutive trips, MIL will light up.

*2: MIL will go off after vehicle is driven 3 times (pattern B) without any malfunctions.

*3: When the same malfunction is detected in two consecutive trips, the DTC and the freeze frame data will be stored in ECM.

*4: The DTC and the freeze frame data will not be displayed any longer after vehicle is driven 80 times (pattern C) without the same malfunction. (The DTC and the freeze frame data still remain in ECM.)

*5: When a malfunction is detected for the first time, the 1st trip DTC and the 1st trip freeze frame data will be stored in ECM.

*6: The 1st trip DTC and the 1st trip freeze frame data will be cleared at the moment OK is detected.

*7: When the same malfunction is detected in the 2nd trip, the 1st trip freeze frame data will be cleared.

*8: 1st trip DTC will be cleared when vehicle is driven once (pattern C) without the same malfunction after DTC is stored in ECM.

EXPLANATION FOR DRIVING PATTERNS FOR “MISFIRE <EXHAUST QUALITY DETERIORATION>”, “FUEL INJECTION SYSTEM”

<Driving Pattern B>

Driving pattern B means the vehicle operation as follows:
All components and systems should be monitored at least once by the OBD system.

- The B counter will be cleared when the malfunction is detected once regardless of the driving pattern.
- The B counter will be counted up when driving pattern B is satisfied without any malfunction.
- The MIL will go off when the B counter reaches 3. (*2 in “OBD SYSTEM OPERATION CHART”)

<Driving Pattern C>

Driving pattern C means the vehicle operation as follows:
The following conditions should be satisfied at the same time:
Engine speed: (Engine speed in the freeze frame data) ±375 rpm
Calculated load value: (Calculated load value in the freeze frame data) x (1±0.1) [%]
Engine coolant temperature (T) condition:

- When the freeze frame data shows lower than 70°C (158°F), “T” should be lower than 70°C (158°F).
- When the freeze frame data shows higher than or equal to 70°C (158°F), “T” should be higher than or equal to 70°C (158°F).

Example:
If the stored freeze frame data is as follows:
Engine speed: 850 rpm, Calculated load value: 30%, Engine coolant temperature: 80°C (176°F)
To be satisfied with driving pattern C, the vehicle should run under the following conditions:
Engine speed: 475 - 1,225 rpm, Calculated load value: 27 - 33%, Engine coolant temperature: more than 70°C (158°F)

- The C counter will be cleared when the malfunction is detected regardless of vehicle conditions above.
- The C counter will be counted up when vehicle conditions above is satisfied without the same malfunction.
- The DTC will not be displayed after C counter reaches 80. (*2 in “OBD SYSTEM OPERATION CHART”)
- The 1st trip DTC will be cleared when C counter is counted once without the same malfunction after DTC is stored in ECM.

RELATIONSHIP BETWEEN MIL, DTC, 1ST TRIP DTC AND DRIVING PATTERNS EXCEPT FOR "MISFIRE <EXHAUST QUALITY DETERIORATION>", "FUEL INJECTION SYSTEM"

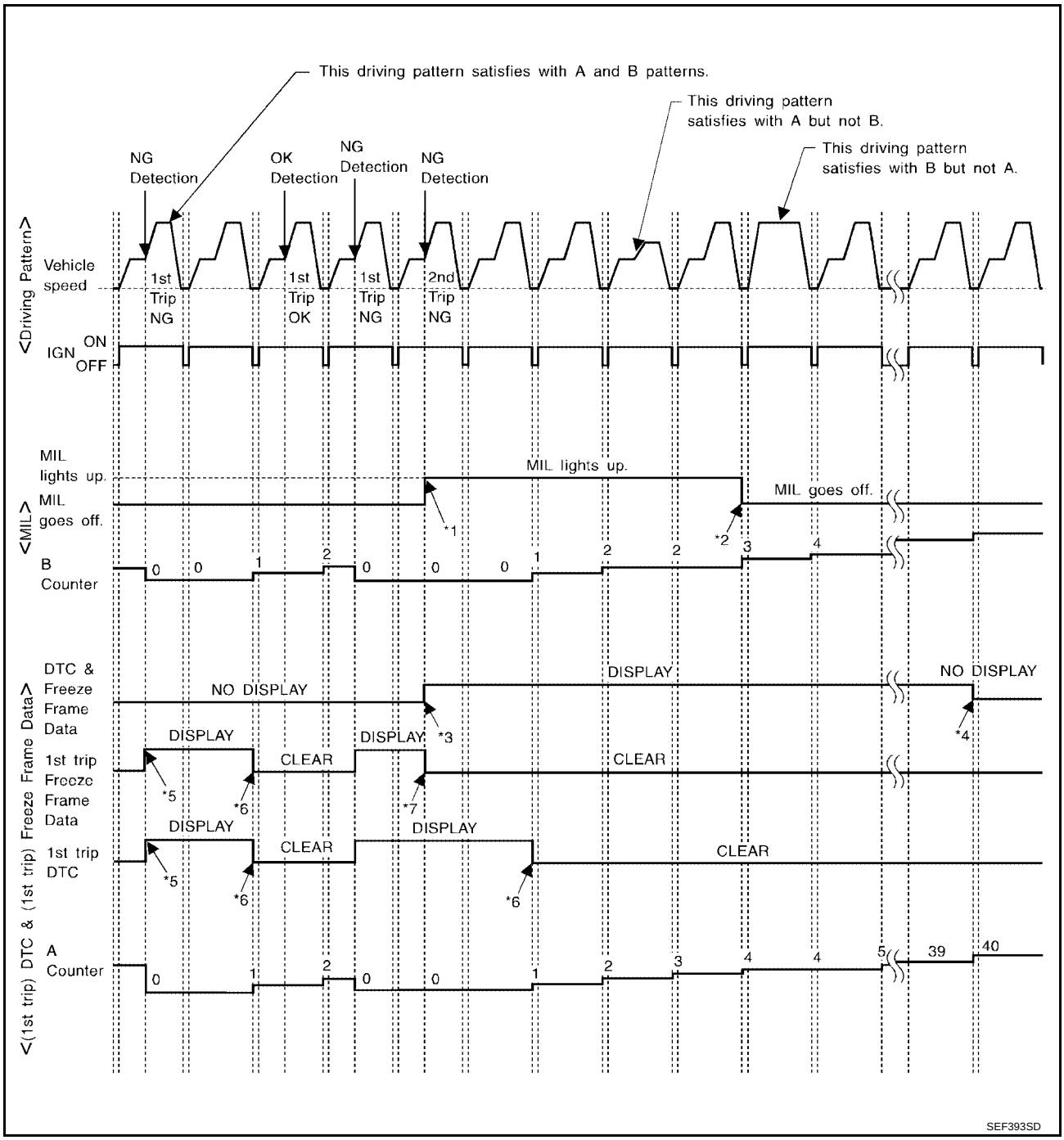

*1: When the same malfunction is detected in two consecutive trips, MIL will light up.

*2: MIL will go off after vehicle is driven 3 times (pattern B) without any malfunctions.

*3: When the same malfunction is detected in two consecutive trips, the DTC and the freeze frame data will be stored in ECM.

*4: The DTC and the freeze frame data will not be displayed any longer after vehicle is driven 40 times (pattern A) without the same malfunction. (The DTC and the freeze frame data still remain in ECM.)

*5: When a malfunction is detected for the first time, the 1st trip DTC and the 1st trip freeze frame data will be stored in ECM.

*6: 1st trip DTC will be cleared after vehicle is driven once (pattern B) without the same malfunction.

*7: When the same malfunction is detected in the 2nd trip, the 1st trip freeze frame data will be cleared.

EXPLANATION FOR DRIVING PATTERNS EXCEPT FOR "MISFIRE <EXHAUST QUALITY DETERIORATION>", "FUEL INJECTION SYSTEM"

<Driving Pattern A>

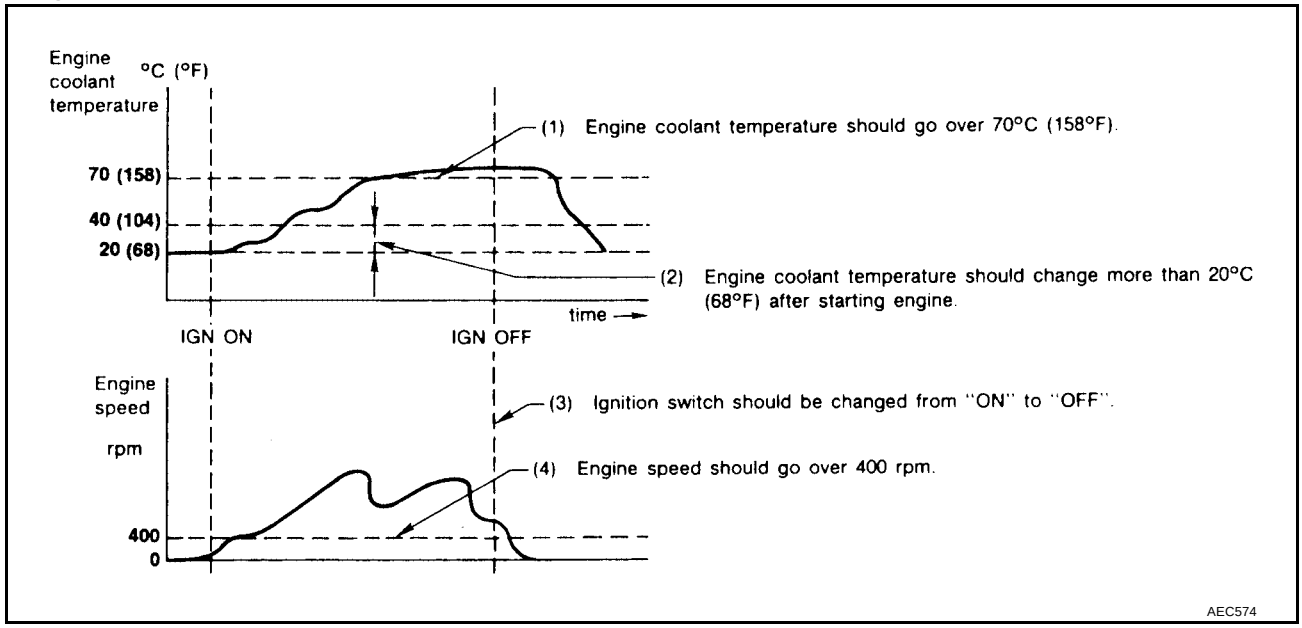

- The A counter will be cleared when the malfunction is detected regardless of (1) - (4).
- The A counter will be counted up when (1) - (4) are satisfied without the same malfunction.
- The DTC will not be displayed after the A counter reaches 40. (*2 in "OBD SYSTEM OPERATION CHART")

<Driving Pattern B>

Driving pattern B means the vehicle operation as follows:
All components and systems should be monitored at least once by the OBD system.

- The B counter will be cleared when the malfunction is detected once regardless of the driving pattern.
- The B counter will be counted up when driving pattern B is satisfied without any malfunctions.
- The MIL will go off when the B counter reaches 3 (*2 in "OBD SYSTEM OPERATION CHART").

BASIC SERVICE PROCEDURE

PFP:00018

Basic Inspection

UBS00J9M

1. INSPECTION START

1. Check service records for any recent repairs that may indicate a related malfunction, or a current need for scheduled maintenance.
2. Open engine hood and check the following:
   - Harness connectors for improper connections
   - Wiring harness for improper connections, pinches and cut
   - Vacuum hoses for splits, kinks and improper connections
   - Hoses and ducts for leaks
   - Air cleaner clogging
   - Gasket
3. Confirm that electrical or mechanical loads are not applied.
   - Headlamp switch is OFF.
   - Air conditioner switch is OFF.
   - Rear window defogger switch is OFF.
   - Steering wheel is in the straight-ahead position, etc.
4. Start engine and warm it up until engine coolant temperature indicator points the middle of gauge.
   Ensure engine stays below 1,000 rpm.

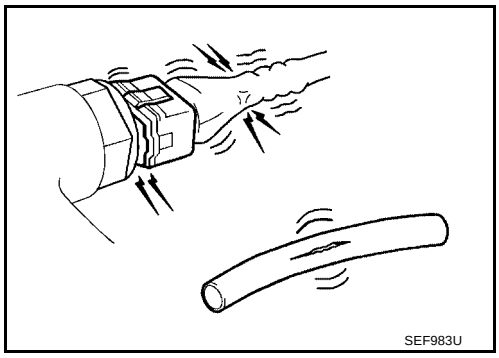

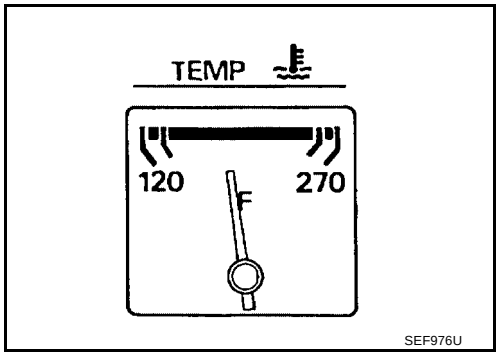

5. Run engine at about 2,000 rpm for about 2 minutes under no-load.
6. Make sure that no DTC is displayed with CONSULT-II or GST.

OK or NG

OK >> GO TO 3.
NG >> GO TO 2.

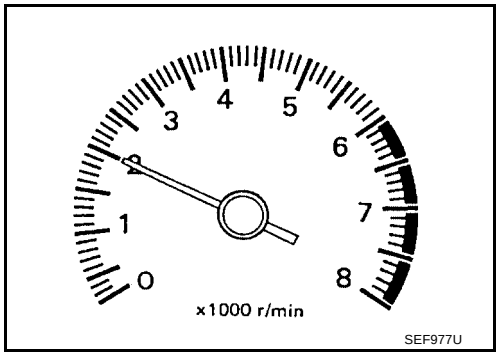

2. REPAIR OR REPLACE

Repair or replace components as necessary according to corresponding Diagnostic Procedure.

>> GO TO 3.

3. CHECK TARGET IDLE SPEED

With CONSULT-II

1. Run engine at about 2,000 rpm for about 2 minutes under no-load.
2. Rev engine (2,000 to 3,000 rpm) 2 or 3 times under no-load, then run engine at idle speed for about 1 minute.

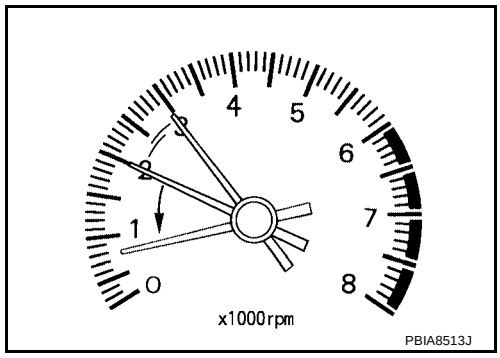

3. Read idle speed in “DATA MONITOR” mode with CONSULT-II. Refer to EC-727, "IDLE SPEED" .

   M/T: 700 ± 50 rpm (in Neutral position)
   A/T: 700 ± 50 rpm (in P or N position)

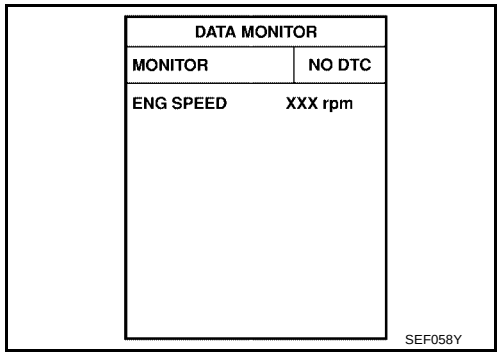

Without CONSULT-II

1. Run engine at about 2,000 rpm for about 2 minutes under no-load.
2. Rev engine (2,000 to 3,000 rpm) 2 or 3 times under no-load, then run engine at idle speed for about 1 minute.
3. Check idle speed. Refer to EC-727, "IDLE SPEED" .

   M/T: 700 ± 50 rpm (in Neutral position)
   A/T: 700 ± 50 rpm (in P or N position)

OK or NG

OK >> GO TO 10.
NG >> GO TO 4.

4. PERFORM ACCELERATOR PEDAL RELEASED POSITION LEARNING

1. Stop engine.
2. Perform EC-749, "Accelerator Pedal Released Position Learning" .

>> GO TO 5.

5. PERFORM THROTTLE VALVE CLOSED POSITION LEARNING

Perform EC-749, "Throttle Valve Closed Position Learning" .

>> GO TO 6.

6. PERFORM IDLE AIR VOLUME LEARNING

Refer to EC-750, "Idle Air Volume Learning" .

Is Idle Air Volume Learning carried out successfully?

Yes or No

Yes >> GO TO 7.
No >> 1. Follow the instruction of Idle Air Volume Learning.
2. GO TO 4.

7. CHECK TARGET IDLE SPEED AGAIN

With CONSULT-II

1. Start engine and warm it up to normal operating temperature.
2. Read idle speed in “DATA MONITOR” mode with CONSULT-II. Refer to EC-727, "IDLE SPEED" .

M/T: 700 ± 50 rpm (in Neutral position)
A/T: 700 ± 50 rpm (in P or N position)

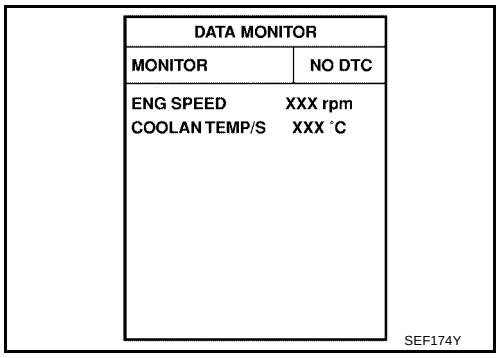

Without CONSULT-II

1. Start engine and warm it up to normal operating temperature.
2. Check idle speed. Refer to EC-727, "IDLE SPEED" .

M/T: 700 ± 50 rpm (in Neutral position)
A/T: 700 ± 50 rpm (in P or N position)

OK or NG

OK >> GO TO 10.
NG >> GO TO 8.

8. DETECT MALFUNCTIONING PART

Check the following.

- Check camshaft position sensor (PHASE) and circuit. Refer to EC-999 .
- Check crankshaft position sensor (POS) and circuit. Refer to EC-992 .

OK or NG

OK >> GO TO 9.
NG >> 1. Repair or replace.
2. GO TO 4.

9. CHECK ECM FUNCTION

1. Substitute another known-good ECM to check ECM function. (ECM may be the cause of an incident, but this is a rare case.)
2. Perform initialization of NVIS (NATS) system and registration of all NVIS (NATS) ignition key IDs. Refer to BL-96, "NVIS (NISSAN VEHICLE IMMOBILIZER SYSTEM — NATS)" .

>> GO TO 4.

10. CHECK IGNITION TIMING

1. Run engine at idle.
2. Check ignition timing with a timing light. Refer to EC-727, "IGNITION TIMING" .

M/T: 15 ± 5° BTDC (in Neutral position)
A/T: 15 ± 5° BTDC (in P or N position)

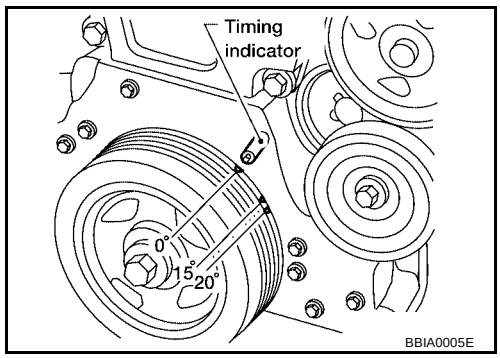

OK or NG

OK >> GO TO 19.
NG >> GO TO 11.

11. PERFORM ACCELERATOR PEDAL RELEASED POSITION LEARNING

1. Stop engine.
2. Perform EC-749, "Accelerator Pedal Released Position Learning" .

>> GO TO 12.

12. PERFORM THROTTLE VALVE CLOSED POSITION LEARNING

Perform EC-749, "Throttle Valve Closed Position Learning" .

>> GO TO 13.

13. PERFORM IDLE AIR VOLUME LEARNING

Refer to EC-750, "Idle Air Volume Learning" .
Is Idle Air Volume Learning carried out successfully?

Yes or No

Yes >> GO TO 14.
No >> 1. Follow the instruction of Idle Air Volume Learning.
2. GO TO 4.

14. CHECK TARGET IDLE SPEED AGAIN

With CONSULT-II

1. Start engine and warm it up to normal operating temperature.
2. Read idle speed in “DATA MONITOR” mode with CONSULT-II. Refer to EC-727, "IDLE SPEED" .

M/T: 700 ± 50 rpm (in Neutral position)
A/T: 700 ± 50 rpm (in P or N position)

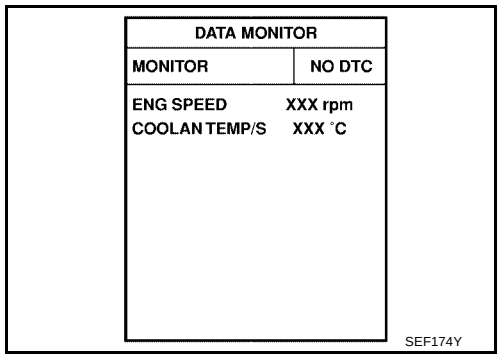

Without CONSULT-II

1. Start engine and warm it up to normal operating temperature.
2. Check idle speed. Refer to EC-727, "IDLE SPEED" .

M/T: 700 ± 50 rpm (in Neutral position)
A/T: 700 ± 50 rpm (in P or N position)

OK or NG

OK >> GO TO 15.
NG >> GO TO 17.

15. CHECK IGNITION TIMING AGAIN

1. Run engine at idle.
2. Check ignition timing with a timing light. Refer to EC-727, "IDLE SPEED" .

M/T: 15 ± 5° BTDC (in Neutral position)
A/T: 15 ± 5° BTDC (in P or N position)

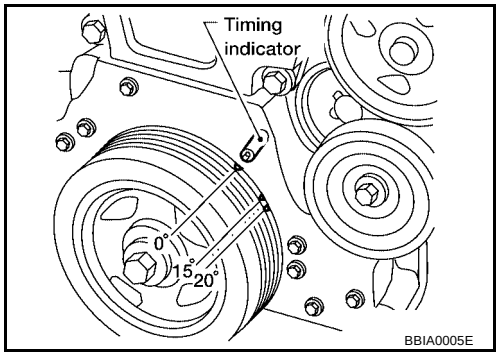

OK or NG

OK >> GO TO 19
NG >> GO TO 16.

16. CHECK TIMING CHAIN INSTALLATION

Check timing chain installation. Refer to EM-136, "TIMING CHAIN" .

OK or NG

OK >> GO TO 17.
NG >> 1. Repair the timing chain installation.
2. GO TO 4.

17. DETECT MALFUNCTIONING PART

Check the following.

- Check camshaft position sensor (PHASE) and circuit. Refer to EC-999 .
- Check crankshaft position sensor (POS) and circuit. Refer to EC-992 .

OK or NG

OK >> GO TO 18.
NG >> 1. Repair or replace.
2. GO TO 4.

18. CHECK ECM FUNCTION

1. Substitute another known-good ECM to check ECM function. (ECM may be the cause of an incident, but this is a rare case.)
2. Perform initialization of NVIS (NATS) system and registration of all NVIS (NATS) ignition key IDs. Refer to BL-96, "NVIS (NISSAN VEHICLE IMMOBILIZER SYSTEM — NATS)" .

>> GO TO 4.

19. INSPECTION END

Did you replace ECM, referring this Basic Inspection procedure?

Yes or No

Yes >> 1. Perform EC-749, "VIN Registration" .
2. **INSPECTION END**
No >> **INSPECTION END**

Idle Speed and Ignition Timing Check

UBS00J9N

IDLE SPEED

With CONSULT-II

Check idle speed in “DATA MONITOR” mode with CONSULT-II.

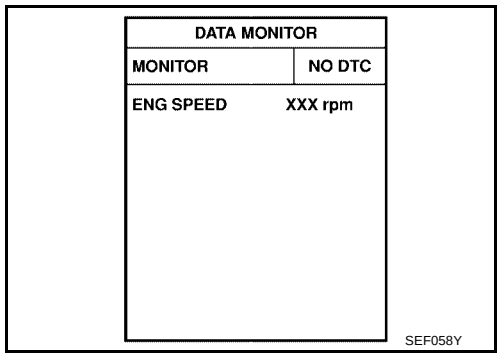

With GST

Check idle speed in Service $01 with GST.

IGNITION TIMING

Any of following two methods may be used.

Method A

1. Slide the harness protector off the ignition coil No.1 to clear the wires.
2. Attach timing light to the ignition coil No. 1 wires as shown in the figure.
3. Check ignition timing.

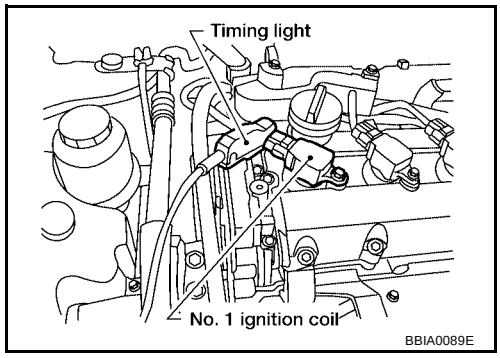

Method B

1. Remove No. 1 ignition coil.

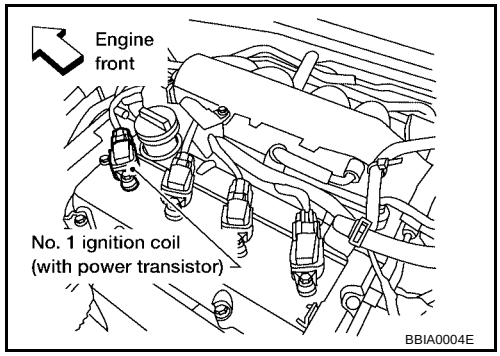

2. Connect No. 1 ignition coil and No. 1 spark plug with suitable high-tension wire as shown, and attach timing light clamp to this wire.

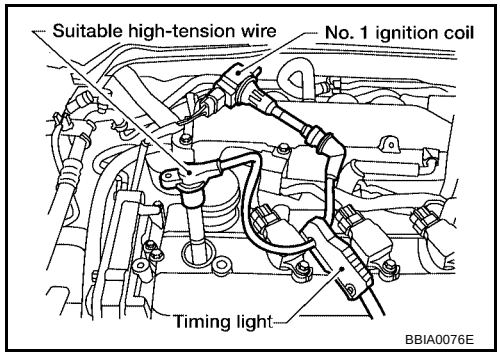

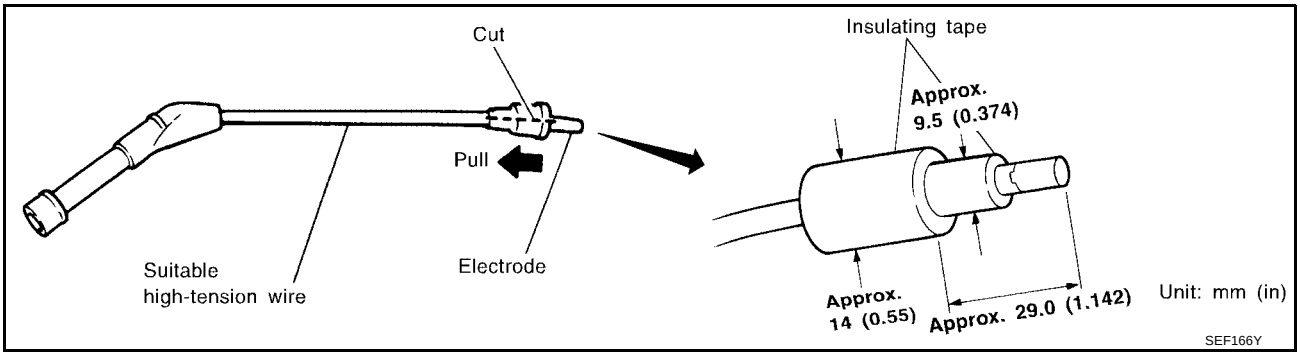

3. Check ignition timing.

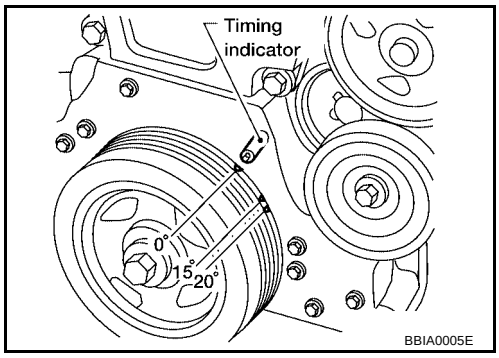

Idle Mixture Ratio Adjustment (A/T Models ULEV and M/T Models)

UBS00KK2

PREPARATION

1. Make sure that the following parts are in good order.
   - Battery
   - Ignition system
   - Engine oil and coolant levels
   - Fuses
   - ECM harness connector
   - Vacuum hoses
   - Air intake system
     (Oil filler cap, oil level gauge, etc.)
   - Fuel pressure
   - Engine compression
   - Throttle valve
   - Evaporative emission system
2. On air conditioner equipped models, checks should be carried out while the air conditioner is OFF.
3. On automatic transmission equipped models, when checking idle rpm, ignition timing and mixture ratio, checks should be carried out while shift lever is in P or N (A/T), Neutral (M/T) position.
4. When measuring CO percentage, insert probe more than 40 cm (15.7 in) into tail pipe.
5. Turn OFF headlamps, heater blower, rear window defogger.
6. Keep front wheels pointed straight ahead.

OVERALL SEQUENCE

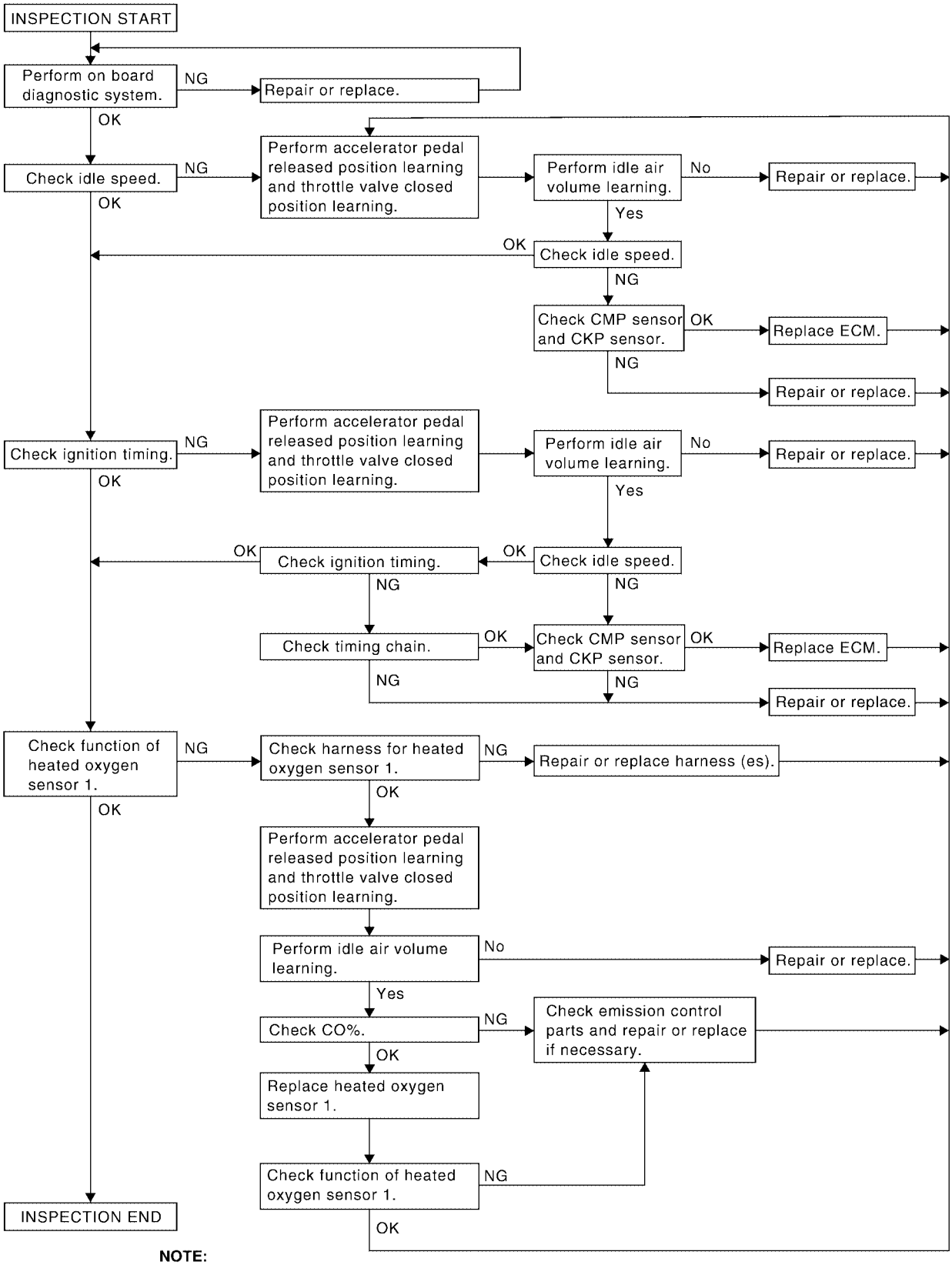

NOTE:
If a vehicle contains a part which is operating outside of design specifications with no MIL illumination, the part shall not be replaced prior to emission testing unless it is determined that the part has been tampered with or abused in such a way that the diagnostic system cannot reasonably be expected to detect the resulting malfunction.

PBIB2001E

DETAILED PROCEDURE

1. INSPECTION START

1. Check service records for any recent repairs that may indicate a related malfunction, or a current need for scheduled maintenance.
2. Open engine hood and check the following:
- Harness connectors for improper connections
- Wiring harness for improper connections, pinches and cut
- Vacuum hoses for splits, kinks and improper connections
- Hoses and ducts for leaks
- Air cleaner clogging
- Gasket
3. Confirm that electrical or mechanical loads are not applied.
- Headlamp switch is OFF.
- Air conditioner switch is OFF.
- Rear window defogger switch is OFF.
- Steering wheel is in the straight-ahead position, etc.

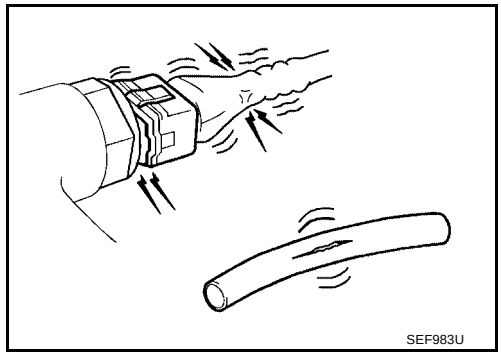

4. Start engine and warm it up until engine coolant temperature indicator points the middle of gauge.
   Ensure engine stays below 1,000 rpm.

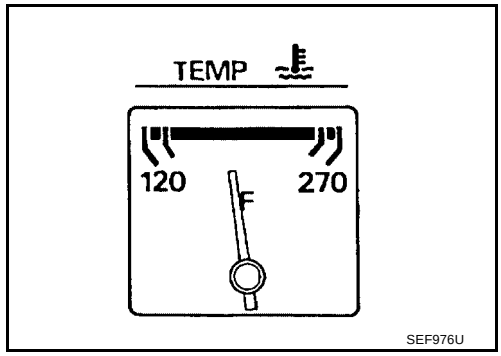

5. Run engine at about 2,000 rpm for about 2 minutes under no-load.
6. Make sure that no DTC is displayed with CONSULT-II or GST.

OK or NG

OK >> GO TO 3.
NG >> GO TO 2.

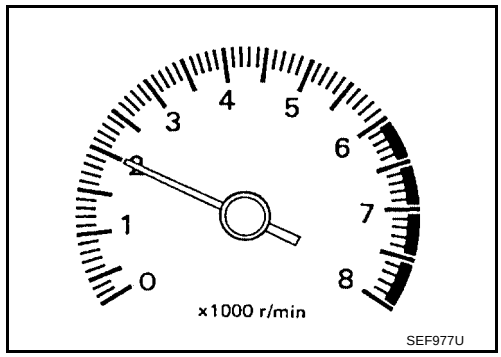

2. REPAIR OR REPLACE

Repair or replace components as necessary according to corresponding Diagnostic Procedure.

>> GO TO 3.

3. CHECK TARGET IDLE SPEED

With CONSULT-II

1. Run engine at about 2,000 rpm for about 2 minutes under no-load.
2. Rev engine (2,000 to 3,000 rpm) 2 or 3 times under no-load, then run engine at idle speed for about 1 minute.

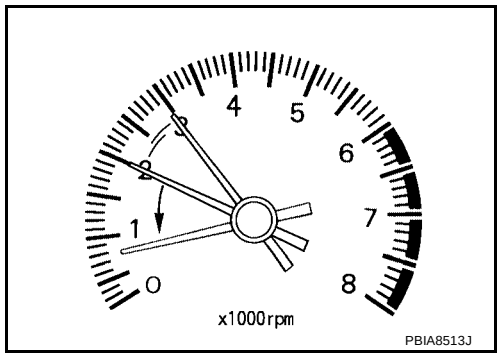

3. Read idle speed in “DATA MONITOR” mode with CONSULT-II. Refer to EC-727, "IDLE SPEED" .

   M/T: 700 ± 50 rpm (in Neutral position)

   A/T: 700 ± 50 rpm (in P or N position)

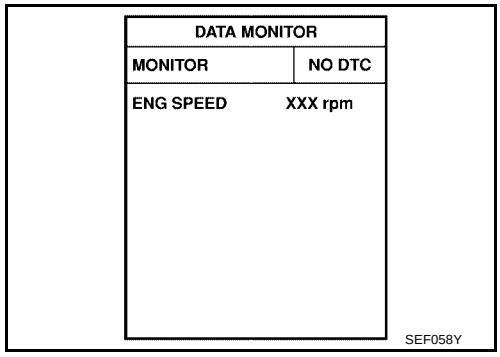

Without CONSULT-II

1. Run engine at about 2,000 rpm for about 2 minutes under no-load.
2. Rev engine (2,000 to 3,000 rpm) 2 or 3 times under no-load, then run engine at idle speed for about 1 minute.
3. Check idle speed. Refer to EC-727, "IDLE SPEED" .

   M/T: 700 ± 50 rpm (in Neutral position)

   A/T: 700 ± 50 rpm (in P or N position)

OK or NG

OK >> GO TO 10.
NG >> GO TO 4.

4. PERFORM ACCELERATOR PEDAL RELEASED POSITION LEARNING

1. Stop engine.
2. Perform EC-749, "Accelerator Pedal Released Position Learning" .

>> GO TO 5.

5. PERFORM THROTTLE VALVE CLOSED POSITION LEARNING

Perform EC-749, "Throttle Valve Closed Position Learning" .

>> GO TO 6.

6. PERFORM IDLE AIR VOLUME LEARNING

Perform EC-750, "Idle Air Volume Learning" .

Is Idle Air Volume Learning carried out successfully?

Yes or No

Yes >> GO TO 7.
No >> 1. Follow the instruction of Idle Air Volume Learning.
2. GO TO 4.

7. CHECK TARGET IDLE SPEED AGAIN

With CONSULT-II

1. Start engine and warm it up to normal operating temperature.
2. Read idle speed in “DATA MONITOR” mode with CONSULT-II. Refer to EC-727, "IDLE SPEED" .

M/T: 700 ± 50 rpm (in Neutral position)

A/T: 700 ± 50 rpm (in P or N position)

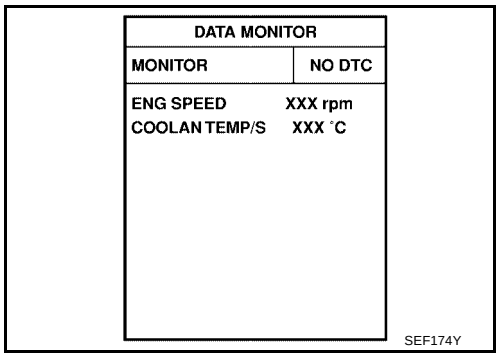

Without CONSULT-II

1. Start engine and warm it up to normal operating temperature.
2. Check idle speed. Refer to EC-727, "IDLE SPEED" .

M/T: 700 ± 50 rpm (in Neutral position)

A/T: 700 ± 50 rpm (in P or N position)

OK or NG

OK >> GO TO 10.
NG >> GO TO 8.

8. DETECT MALFUNCTIONING PART

Check the following.

- Check camshaft position sensor (PHASE) and circuit. Refer to EC-999 .
- Check crankshaft position sensor (POS) and circuit. Refer to EC-992 .

OK or NG

OK >> GO TO 9.
NG >> 1. Repair or replace.
2. GO TO 4.

9. CHECK ECM FUNCTION

1. Substitute another known-good ECM to check ECM function. (ECM may be the cause of an incident, but this is a rare case.)
2. Perform initialization of NVIS (NATS) system and registration of all NVIS (NATS) ignition key IDs. Refer to BL-96, "NVIS (NISSAN VEHICLE IMMOBILIZER SYSTEM — NATS)" .

>> GO TO 4.

10. CHECK IGNITION TIMING

1. Run engine at idle.
2. Check ignition timing with a timing light. Refer to EC-727, "IGNITION TIMING" .

M/T: 15 ± 5° BTDC (in Neutral position)

A/T: 15 ± 5° BTDC (in P or N position)

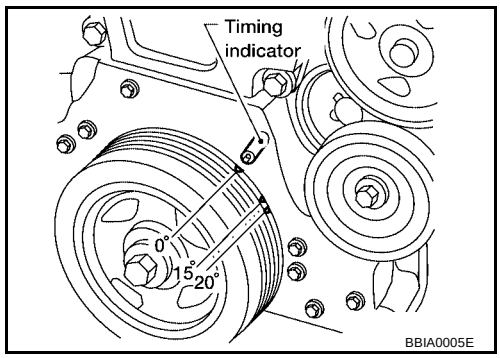

OK or NG

OK (With CONSULT-II)>>GO TO 19.
OK (Without CONSULT-II)>>GO TO 20.
NG >> GO TO 11.

11. PERFORM ACCELERATOR PEDAL RELEASED POSITION LEARNING

1. Stop engine.
2. Perform EC-749, "Accelerator Pedal Released Position Learning" .

>> GO TO 12.

12. PERFORM THROTTLE VALVE CLOSED POSITION LEARNING

Perform EC-749, "Throttle Valve Closed Position Learning" .

>> GO TO 13.

13. PERFORM IDLE AIR VOLUME LEARNING

Perform EC-750, "Idle Air Volume Learning" .

Is Idle Air Volume Learning carried out successfully?

Yes or No

Yes >> GO TO 14.
No >> 1. Follow the instruction of Idle Air Volume Learning.
2. GO TO 4.

14. CHECK TARGET IDLE SPEED AGAIN

With CONSULT-II

1. Start engine and warm it up to normal operating temperature.
2. Read idle speed in “DATA MONITOR” mode with CONSULT-II. Refer to EC-727, "IDLE SPEED" .

M/T: 700 ± 50 rpm (in Neutral position)

A/T: 700 ± 50 rpm (in P or N position)

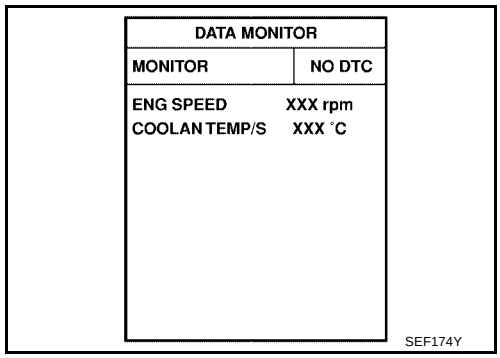

Without CONSULT-II

1. Start engine and warm it up to normal operating temperature.
2. Check idle speed. Refer to EC-727, "IDLE SPEED" .

M/T: 700 ± 50 rpm (in Neutral position)

A/T: 700 ± 50 rpm (in P or N position)

OK or NG

OK >> GO TO 15.
NG >> GO TO 17.

15. CHECK IGNITION TIMING AGAIN

1. Run engine at idle.
2. Check ignition timing with a timing light. Refer to EC-727, "IGNITION TIMING" .

M/T: 15 ± 5° BTDC (in Neutral position)

A/T: 15 ± 5° BTDC (in P or N position)

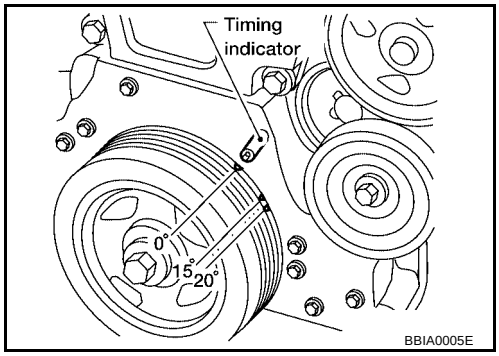

OK or NG

OK (With CONSULT-II)>>GO TO 19.
OK (Without CONSULT-II)>>GO TO 20.
NG >> GO TO 16.

16. CHECK TIMING CHAIN INSTALLATION

Check timing chain installation. Refer to EM-136, "TIMING CHAIN" .

OK or NG

OK >> GO TO 17.
NG >> 1. Repair the timing chain installation.
2. GO TO 4.

17. DETECT MALFUNCTIONING PART

Check the following.

- Check camshaft position sensor (PHASE) and circuit. Refer to EC-999 .
- Check crankshaft position sensor (POS) and circuit. Refer to EC-992 .

OK or NG

OK >> GO TO 18.
NG >> 1. Repair or replace.
2. GO TO 4.

18. CHECK ECM FUNCTION

1. Substitute another known-good ECM to check ECM function. (ECM may be the cause of an incident, but this is a rare case.)
2. Perform initialization of NVIS (NATS) system and registration of all NVIS (NATS) ignition key IDs. Refer to BL-96, "NVIS (NISSAN VEHICLE IMMOBILIZER SYSTEM — NATS)" .

>> GO TO 4.

19. CHECK HEATED OXYGEN SENSOR 1 SIGNAL

With CONSULT-II

1. Run engine at about 2,000 rpm for about 2 minutes under no-load.
2. See “HO2S1 MNTR (B1)” in “DATA MONITOR” mode.
3. Running engine at 2,000 rpm under no-load (The engine is warmed up to normal operating temperature.), check that the monitor fluctuates between LEAN and RICH more than 5 times during 10 seconds.

   1 time: RICH → LEAN → RICH

   2 times: RICH → LEAN → RICH → LEAN → RICH

DATA MONITOR	
MONITOR	NO DTC
ENG SPEED	XXX rpm
MAS A/F SE-B1	XXX V
COOLAN TEMP/S	XXX ˚C
HO2S1 (B1)	XXX V
HO2S1 MNTR (B1)	LEAN

SEF646Y

OK or NG

OK >> **INSPECTION END**
NG (Monitor does not fluctuate.)>>GO TO 21.
NG (Monitor fluctuates less than 5 times.)>>GO TO 28.

20. CHECK HEATED OXYGEN SENSOR 1 SIGNAL

Without CONSULT-II

1. Stop engine and set ECM to Self-diagnostic mode II (Heated oxygen sensor 1 monitor).
   Refer to EC-715, "HOW TO SWITCH DIAGNOSTIC TEST MODE" .
2. Start engine and run it at about 2,000 rpm for about 2 minutes under no-load.
3. Running engine at 2,000 rpm under no-load (The engine is warmed up to normal operating temperature.), check that the MIL comes on more than 5 times during 10 seconds.

OK or NG

OK >> **INDPECTION END**
NG (MIL does not come on)>>GO TO 21.
NG (MIL comes on less than 5 times)>>GO TO 28.

21. CHECK HEATED OXYGEN SENSOR 1 HARNESS

1. Turn ignition switch OFF and disconnect battery ground cable.
2. Disconnect ECM harness connector.
3. Disconnect heated oxygen sensor 1 harness connector.
4. Check harness continuity between ECM terminal 35 and heated oxygen sensor 1 terminal 1.
   Refer to EC-907, "Wiring Diagram" .

   Continuity should exist.

5. Also check harness for short to ground and short to power.

OK or NG

OK >> GO TO 22.
NG >> 1. Repair or replace harness between ECM and heated oxygen sensor 1.
2. GO TO 4.

22. PERFORM ACCELERATOR PEDAL RELEASED POSITION LEARNING

1. Reconnect ECM harness connector.
2. Perform EC-749, "Accelerator Pedal Released Position Learning" .

>> GO TO 23.

23. PERFORM THROTTLE VALVE CLOSED POSITION LEARNING

Perform EC-749, "Throttle Valve Closed Position Learning" .

>> GO TO 24.

24. PERFORM IDLE AIR VOLUME LEARNING

Refer to EC-750, "Idle Air Volume Learning" .
Is the Idle Air Volume Learning carried out successfully?

Yes or No

Yes (With CONSULT-II)>>GO TO 25.
Yes (Without CONSULT-II)>> GO TO 26.
No >> 1. Follow the instruction of Idle Air Volume Learning.
2. GO TO 4.

25. CHECK CO%

With CONSULT-II

1. Start engine and warm it up until engine coolant temperature indicator points the middle of gauge.
2. Turn ignition switch OFF, wait at least 10 seconds and then turn ON.
3. Select “ENG COOLANT TEMP” in “ACTIVE TEST” mode.
4. Set “ENG COOLANT TEMP” to 5°C (41°F) by touching “DOWN” and “Qd”.
5. Start engine and rev it (2,000 to 3,000 rpm) 2 or 3 times under no-load, then run engine at idle speed.
6. Check CO%.

Idle CO: 0.3 – 9.5% and engine runs smoothly.

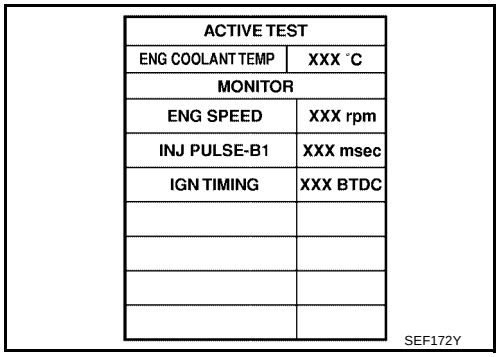

ACTIVE TEST	
ENG COOLANT TEMP	XXX °C
MONITOR	
ENG SPEED	XXX rpm
INJ PULSE-B1	XXX msec
IGN TIMING	XXX BTDC

SEF172Y

OK or NG

OK >> GO TO 28.
NG >> GO TO 27.

26. CHECK CO%

Without CONSULT-II

1. Start engine and warm it up until engine coolant temperature indicator points to the middle of gauge.
2. Turn ignition switch OFF.
3. Disconnect engine coolant temperature sensor harness connector.
4. Connect a resistor (4.4 kΩ) between terminals of engine coolant temperature sensor harness connector.
5. Start engine and rev it (2,000 to 3,000 rpm) 2 or 3 times under no-load, then run engine at idle speed.
6. Check CO%.

Idle CO: 0.3 – 9.5% and engine runs smoothly.

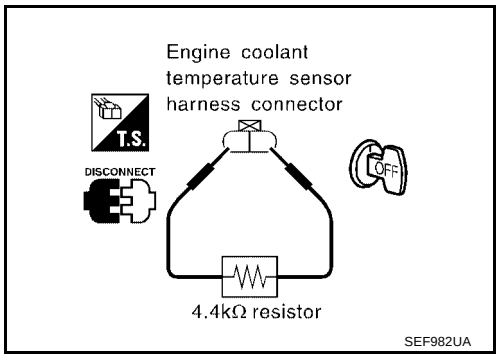

7. After checking CO%, turn ignition switch OFF, disconnect the resistor from the terminals of engine coolant temperature sensor harness connector, and then connect engine coolant temperature sensor harness connector to engine coolant temperature sensor.

OK or NG

OK >> GO TO 28.
NG >> GO TO 27.

27. RECONNECT HEATED OXYGEN SENSOR 1 HARNESS CONNECTOR

1. Turn ignition switch OFF.
2. Reconnect heated oxygen sensor 1 harness connector.

>> GO TO 31.

28. REPLACE HEATED OXYGEN SENSOR 1

1. Stop engine.
2. Replace heated oxygen sensor 1.

With CONSULT-II>>GO TO 29.
Without CONSULT-II>>GO TO 30.

29. CHECK HEATED OXYGEN SENSOR 1 SIGNAL

With CONSULT-II

1. Start engine and warm it up until engine coolant temperature indicator points the middle of gauge.
2. See “HO2S1 MNTR (B1)” in “DATA MONITOR” mode.
3. Running engine at 2,000 rpm under no-load (The engine is warmed up to normal operating temperature.), check that the monitor fluctuates between LEAN and RICH more than 5 times during 10 seconds.

   1 time: RICH → LEAN → RICH

   2 times: RICH → LEAN → RICH → LEAN → RICH

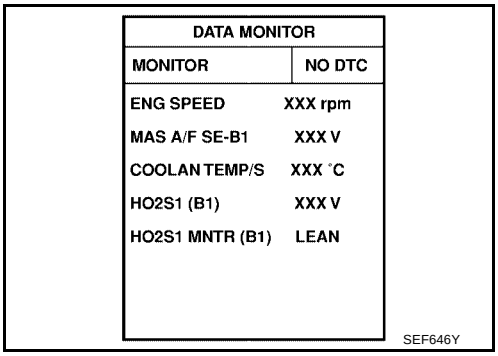

DATA MONITOR	
MONITOR	NO DTC
ENG SPEED	XXX rpm
MAS A/F SE-B1	XXX V
COOLAN TEMP/S	XXX °C
HO2S1 (B1)	XXX V
HO2S1 MNTR (B1)	LEAN

SEF646Y

OK or NG

OK >> GO TO 4.
NG >> GO TO 31.

30. CHECK HEATED OXYGEN SENSOR 1 SIGNAL

Without CONSULT-II

1. Set ECM to Self-diagnostic mode II (Heated oxygen sensor 1 monitor). Refer to EC-717, "DIAGNOSTIC TEST MODE II — HEATED OXYGEN SENSOR 1 MONITOR" .
2. Running engine at 2,000 rpm under no-load (The engine is warmed up to normal operating temperature.), check that the MIL comes on more than 5 times during 10 seconds.

OK or NG

OK >> GO TO 4.
NG >> GO TO 31.

31. DETECT MALFUNCTIONING PART

Check the following.

- Check fuel pressure regulator and repair or replace if necessary.
  Refer to EC-753, "FUEL PRESSURE CHECK" .
- Check mass air flow sensor and its circuit, and repair or replace if necessary.
  Refer to EC-861, "DTC P0101 MAF SENSOR" , EC-870, "DTC P0102, P0103 MAF SENSOR" .
- Check injector and its circuit, and repair or replace if necessary.
  Refer to EC-1336, "INJECTOR CIRCUIT" .
- Check engine coolant temperature sensor and its circuit, and repair or replace if necessary.
  Refer to EC-884, "DTC P0117, P0118 ECT SENSOR" and EC-897, "DTC P0125 ECT SENSOR" .

OK or NG

OK >> GO TO 33.
NG >> 1. Repair or replace.
2. GO TO 32.

32. ERASE UNNECESSARY DTC

After this inspection, unnecessary DTC might be displayed.
Erase the stored memory in ECM and TCM.
Refer to EC-712, "HOW TO ERASE EMISSION-RELATED DIAGNOSTIC INFORMATION" and AT-428, "HOW TO ERASE DTC" .

>> GO TO 4.

33. CHECK ECM FUNCTION

1. Substitute another known-good ECM to check ECM function. (ECM may be the cause of an incident, but this is a rare case.)
2. Perform initialization of NVIS (NATS) system and registration of all NVIS (NATS) ignition key IDs.
   Refer to BL-96, "NVIS (NISSAN VEHICLE IMMOBILIZER SYSTEM — NATS)" .

>> GO TO 4.

Idle Mixture Ratio Adjustment (A/T Models except ULEV)

UBS00J9O

PREPARATION

1. Make sure that the following parts are in good order.
   - Battery
   - Ignition system
   - Engine oil and coolant levels
   - Fuses
   - ECM harness connector
   - Vacuum hoses
   - Air intake system
     (Oil filler cap, oil level gauge, etc.)
   - Fuel pressure
   - Engine compression
   - Throttle valve
   - Evaporative emission system
2. On air conditioner equipped models, checks should be carried out while the air conditioner is OFF.
3. On automatic transmission equipped models, when checking idle rpm, ignition timing and mixture ratio, checks should be carried out while selector lever is in P or N position.
4. When measuring CO percentage, insert probe more than 40 cm (15.7 in) into tail pipe.
5. Turn OFF headlamps, heater blower, rear window defogger.

6. Keep front wheels pointed straight ahead.

OVERALL SEQUENCE

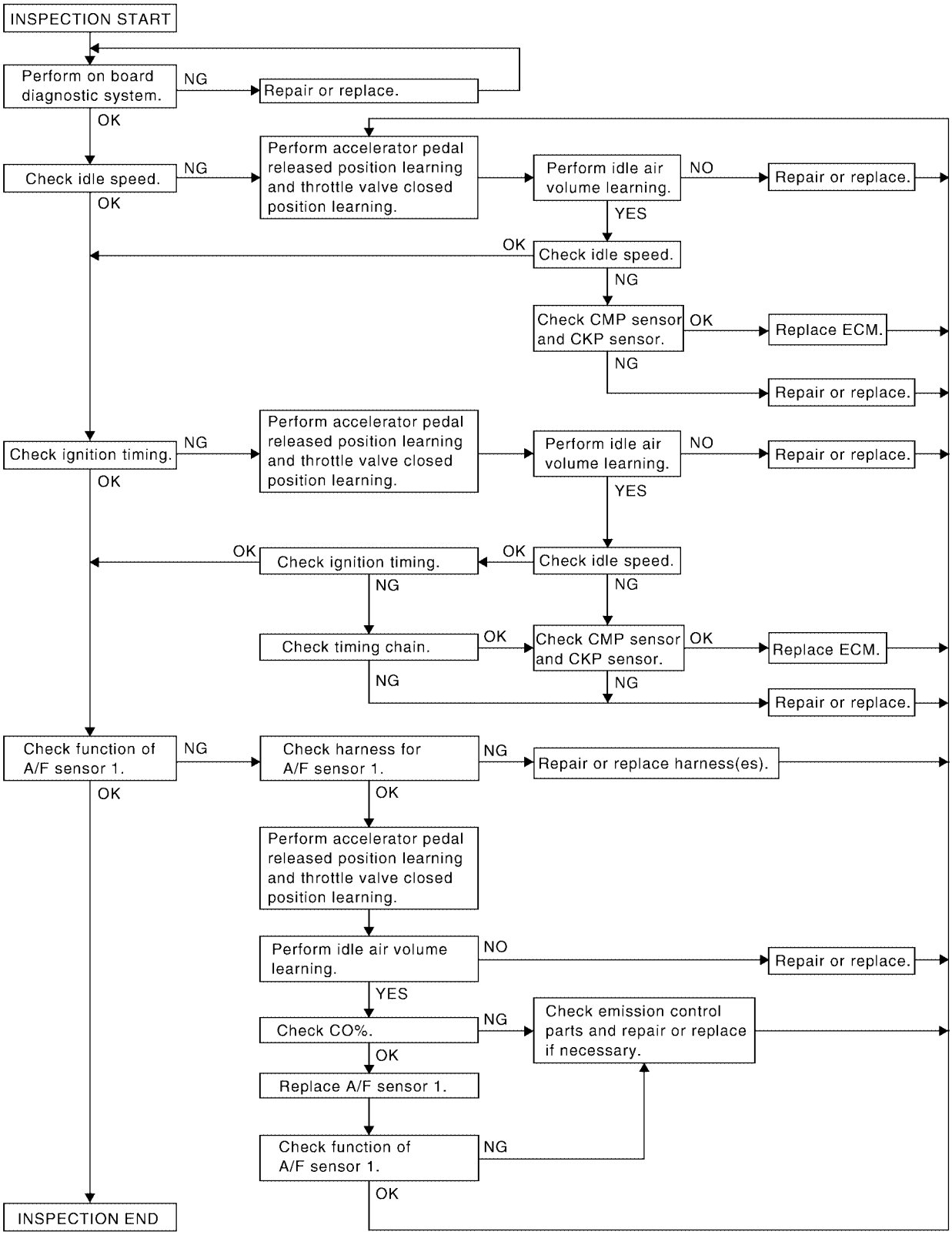

NOTE:
If a vehicle contains a part which is operating outside of design specifications with no MIL illumination, the part shall not be replaced prior to emission testing unless it is determined that the part has been tampered with or abused in such a way that the diagnostic system cannot reasonably be expected to detect the resulting malfunction.

PBIB2061E

DETAILED PROCEDURE

1. INSPECTION START

1. Check service records for any recent repairs that may indicate a related malfunction, or a current need for scheduled maintenance.
2. Open engine hood and check the following:
- Harness connectors for improper connections
- Wiring harness for improper connections, pinches and cut
- Vacuum hoses for splits, kinks and improper connections
- Hoses and ducts for leaks
- Air cleaner clogging
- Gasket
3. Confirm that electrical or mechanical loads are not applied.
- Headlamp switch is OFF.
- Air conditioner switch is OFF.
- Rear window defogger switch is OFF.
- Steering wheel is in the straight-ahead position, etc.

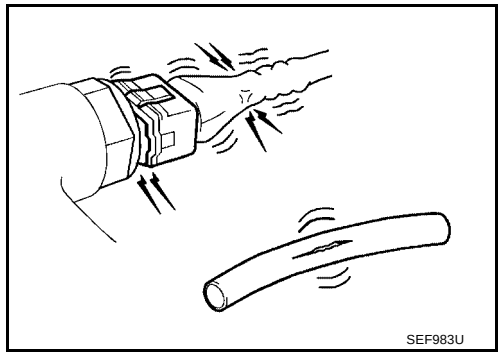

4. Start engine and warm it up until engine coolant temperature indicator points the middle of gauge.
   Ensure engine stays below 1,000 rpm.

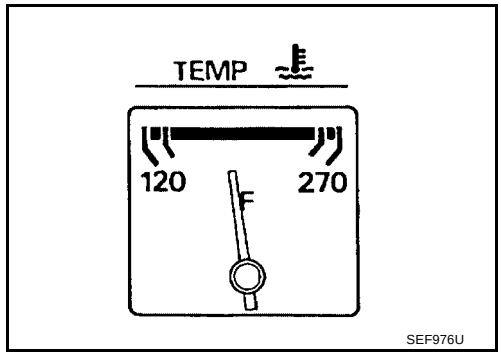

5. Run engine at about 2,000 rpm for about 2 minutes under no-load.
6. Make sure that no DTC is displayed with CONSULT-II or GST.

OK or NG

OK >> GO TO 3.
NG >> GO TO 2.

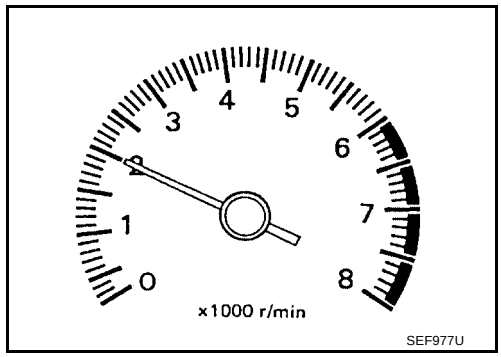

2. REPAIR OR REPLACE

Repair or replace components as necessary according to corresponding Diagnostic Procedure.

>> GO TO 3.

3. CHECK TARGET IDLE SPEED

With CONSULT-II

1. Run engine at about 2,000 rpm for about 2 minutes under no-load.
2. Rev engine (2,000 to 3,000 rpm) 2 or 3 times under no-load, then run engine at idle speed for about 1 minute.

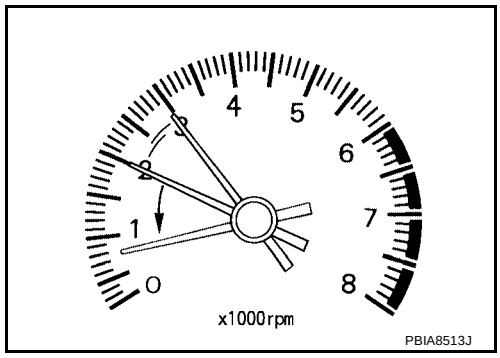

3. Read idle speed in “DATA MONITOR” mode with CONSULT-II. Refer to EC-727, "IDLE SPEED" .

   700 ± 50 rpm (in P or N position)

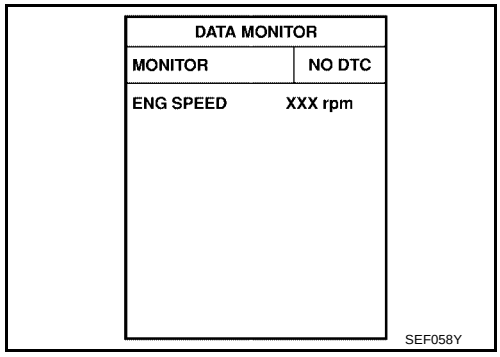

Without CONSULT-II

1. Run engine at about 2,000 rpm for about 2 minutes under no-load.
2. Rev engine (2,000 to 3,000 rpm) 2 or 3 times under no-load, then run engine at idle speed for about 1 minute.
3. Check idle speed. Refer to EC-727, "IDLE SPEED" .

   700 ± 50 rpm (in P or N position)

OK or NG

OK >> GO TO 10.
NG >> GO TO 4.

4. PERFORM ACCELERATOR PEDAL RELEASED POSITION LEARNING

1. Stop engine.
2. Perform EC-749, "Accelerator Pedal Released Position Learning" .

>> GO TO 5.

5. PERFORM THROTTLE VALVE CLOSED POSITION LEARNING

Perform EC-749, "Throttle Valve Closed Position Learning" .

>> GO TO 6.

6. PERFORM IDLE AIR VOLUME LEARNING

Perform EC-750, "Idle Air Volume Learning" .

Is Idle Air Volume Learning carried out successfully?

Yes or No

Yes >> GO TO 7.
No >> 1. Follow the instruction of Idle Air Volume Learning.
2. GO TO 4.

7. CHECK TARGET IDLE SPEED AGAIN

With CONSULT-II

1. Start engine and warm it up to normal operating temperature.
2. Read idle speed in “DATA MONITOR” mode with CONSULT-II. Refer to EC-727, "IDLE SPEED" .

700 ± 50 rpm (in P or N position)

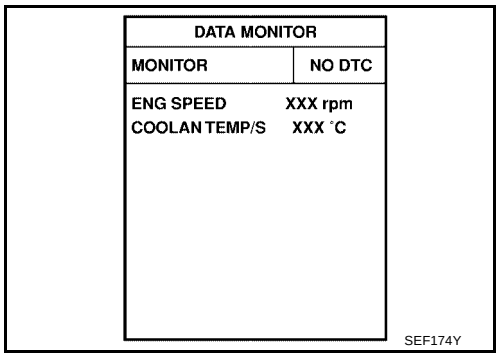

Without CONSULT-II

1. Start engine and warm it up to normal operating temperature.
2. Check idle speed. Refer to EC-727, "IDLE SPEED" .

700 ± 50 rpm (in P or N position)

OK or NG

OK >> GO TO 10.
NG >> GO TO 8.

8. DETECT MALFUNCTIONING PART

Check the following.

- Check camshaft position sensor (PHASE) and circuit. Refer to EC-999 .
- Check crankshaft position sensor (POS) and circuit. Refer to EC-992 .

OK or NG

OK >> GO TO 9.
NG >> 1. Repair or replace.
2. GO TO 4.

9. CHECK ECM FUNCTION

1. Substitute another known-good ECM to check ECM function. (ECM may be the cause of an incident, but this is a rare case.)
2. Perform initialization of NVIS (NATS) system and registration of all NVIS (NATS) ignition key IDs. Refer to BL-96, "NVIS (NISSAN VEHICLE IMMOBILIZER SYSTEM — NATS)" .

>> GO TO 4.

10. CHECK IGNITION TIMING

1. Run engine at idle.
2. Check ignition timing with a timing light. Refer to EC-727, "IGNITION TIMING" .

15 ± 5° BTDC (in P or N position)

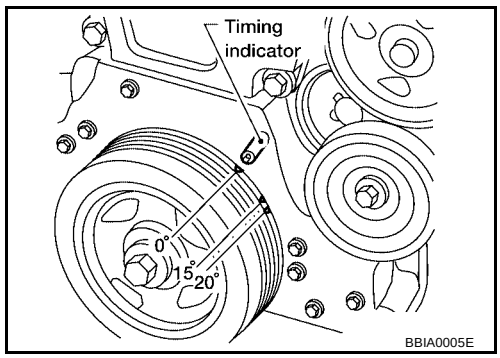

OK or NG

OK (With CONSULT-II)>>GO TO 19.
OK (Without CONSULT-II)>>GO TO 20.
NG >> GO TO 11.

11. PERFORM ACCELERATOR PEDAL RELEASED POSITION LEARNING

1. Stop engine.
2. Perform EC-749, "Accelerator Pedal Released Position Learning" .

>> GO TO 12.

12. PERFORM THROTTLE VALVE CLOSED POSITION LEARNING

Perform EC-749, "Throttle Valve Closed Position Learning" .

>> GO TO 13.

13. PERFORM IDLE AIR VOLUME LEARNING

Perform EC-750, "Idle Air Volume Learning" .

Is Idle Air Volume Learning carried out successfully?

Yes or No

Yes >> GO TO 14.
No >> 1. Follow the instruction of Idle Air Volume Learning.
2. GO TO 4.

14. CHECK TARGET IDLE SPEED AGAIN

With CONSULT-II

1. Start engine and warm it up to normal operating temperature.
2. Read idle speed in “DATA MONITOR” mode with CONSULT-II. Refer to EC-727, "IDLE SPEED" .

700 ± 50 rpm (in P or N position)

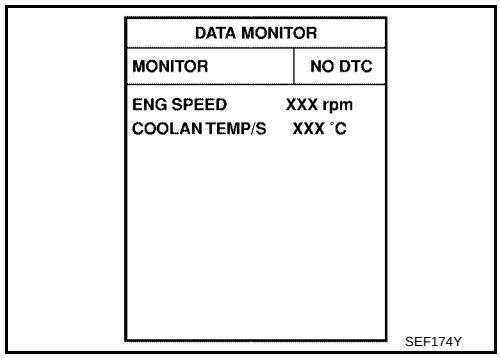

Without CONSULT-II

1. Start engine and warm it up to normal operating temperature.
2. Check idle speed. Refer to EC-727, "IDLE SPEED" .

700 ± 50 rpm (in P or N position)

OK or NG

OK >> GO TO 15.
NG >> GO TO 17.

15. CHECK IGNITION TIMING AGAIN

1. Run engine at idle.
2. Check ignition timing with a timing light. Refer to EC-727, "IGNITION TIMING" .

15 ± 5° BTDC (in P or N position)

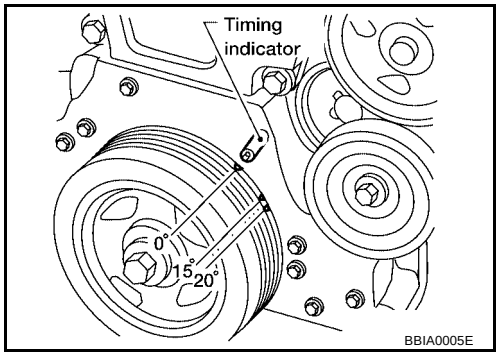

OK or NG

OK (With CONSULT-II)>>GO TO 19.
OK (With GST)>>GO TO 20.
NG >> GO TO 16.

16. CHECK TIMING CHAIN INSTALLATION

Check timing chain installation. Refer to EM-136, "TIMING CHAIN" .

OK or NG

OK >> GO TO 17.
NG >> 1. Repair the timing chain installation.
2. GO TO 4.

17. DETECT MALFUNCTIONING PART

Check the following.

- Check camshaft position sensor (PHASE) and circuit. Refer to EC-999 .
- Check crankshaft position sensor (POS) and circuit. Refer to EC-992 .

OK or NG

OK >> GO TO 18.
NG >> 1. Repair or replace.
2. GO TO 4.

18. CHECK ECM FUNCTION

1. Substitute another known-good ECM to check ECM function. (ECM may be the cause of an incident, but this is a rare case.)
2. Perform initialization of NVIS (NATS) system and registration of all NVIS (NATS) ignition key IDs. Refer to BL-96, "NVIS (NISSAN VEHICLE IMMOBILIZER SYSTEM — NATS)" .

>> GO TO 4.

19. CHECK AIR FUEL RATIO (A/F) SENSOR 1 FUNCTION

With CONSULT-II

1. Turn ignition switch OFF and wait at a least 10 seconds.
2. Start engine and warm it up to normal operating temperature.
3. Drive the vehicle at a speed of 80 km/h (50 MPH) for a few minutes in D position with OD OFF.

   NOTE:
   Keep the accelerator pedal as steady as possible during the cruising.
4. Set OD ON, then release the accelerator pedal fully until the vehicle speed decreases to 50 km/h (30 MPH).

   NOTE:
   Never apply brake during releasing the accelerator pedal.
5. Repeat steps 3 to 4 for 5 times.
6. Stop the vehicle and connect CONSULT-II to the vehicle.
7. Make sure that no (1st trip) DTC is displayed in “SELF-DIAG RESULTS” mode.

OK or NG

OK >> **INSPECTION END**
NG >> GO TO 21.

20. CHECK AIR FUEL RATIO (A/F) SENSOR 1 FUNCTION

With GST

1. Turn ignition switch OFF and wait at a least 10 seconds.
2. Start engine and warm it up to normal operating temperature.
3. Drive the vehicle at a speed of 80 km/h (50 MPH) for a few minutes in D position with OD OFF.

   NOTE:
   Keep the accelerator pedal as steady as possible during the cruising.
4. Set OD ON, then release the accelerator pedal fully until the vehicle speed decreases to 50 km/h (30 MPH).

   NOTE:
   Never apply brake during releasing the accelerator pedal.
5. Repeat steps 3 to 4 for 5 times.
6. Stop the vehicle and connect GST to the vehicle.
7. Make sure that no (1st trip) DTC is displayed.

OK or NG

OK >> **INSPECTION END**
NG >> GO TO 21.

21. CHECK AIR FUEL RATIO (A/F) SENSOR 1 HARNESS

1. Turn ignition switch OFF and disconnect battery ground cable.
2. Disconnect ECM harness connector.
3. Disconnect A/F sensor 1 harness connector.
4. Check harness continuity between the following terminals. Refer to EC-1185, "Wiring Diagram" .

A/F sensor 1 terminal	ECM terminal
4	2
1	16
5	35
6	56
2	75

Continuity should exist.

5. Also check harness for short to ground and short to power.

OK or NG

OK >> GO TO 22.
NG >> 1. Repair open circuit or short to ground or short to power in harness or connectors between ECM and A/F sensor 1.
2. GO TO 4.

22. PERFORM ACCELERATOR PEDAL RELEASED POSITION LEARNING

1. Reconnect ECM harness connector.
2. Perform EC-749, "Accelerator Pedal Released Position Learning" .

>> GO TO 23.

23. PERFORM THROTTLE VALVE CLOSED POSITION LEARNING

Perform EC-749, "Throttle Valve Closed Position Learning" .

>> GO TO 24.

24. PERFORM IDLE AIR VOLUME LEARNING

Refer to EC-750, "Idle Air Volume Learning" .
Is Idle Air Volume Learning carried out successfully?

Yes or No

Yes (With CONSULT-II)>>GO TO 25.
Yes (Without CONSULT-II)>>GO TO 26.
No >> 1. Follow the instruction of Idle Air Volume Learning.
2. GO TO 4.

25. CHECK CO%

With CONSULT-II

1. Start engine and warm it up until engine coolant temperature indicator points the middle of gauge.
2. Turn ignition switch OFF, wait at least 10 seconds and then turn ON.
3. Select “ENG COOLANT TEMP” in “ACTIVE TEST” mode.
4. Set “ENG COOLANT TEMP” to 5°C (41°F) by touching “DOWN” and “Qd”.
5. Start engine and rev it (2,000 to 3,000 rpm) 2 or 3 times under no load, then run engine at idle speed.
6. Check CO%.

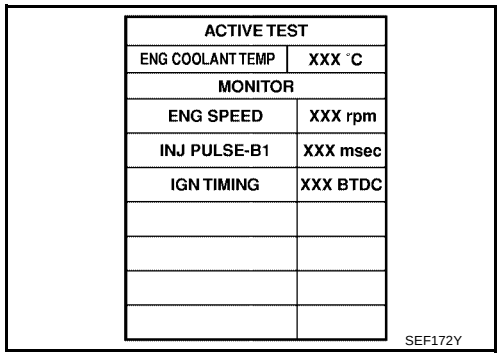

ACTIVE TEST	
ENG COOLANT TEMP	XXX °C
MONITOR	
ENG SPEED	XXX rpm
INJ PULSE-B1	XXX msec
IGN TIMING	XXX BTDC

SEF172Y

Idle CO: 0.3 – 9.5% and engine runs smoothly.

OK or NG

OK >> GO TO 28.
NG >> GO TO 27.

26. CHECK CO%

Without CONSULT-II

1. Start engine and warm it up until engine coolant temperature indicator points to the middle of gauge.
2. Turn ignition switch OFF.
3. Disconnect engine coolant temperature sensor harness connector.
4. Connect a resistor (4.4 kΩ) between terminals of engine coolant temperature sensor harness connector.
5. Start engine and rev it (2,000 to 3,000 rpm) 2 or 3 times under no load, then run engine at idle speed.
6. Check CO%.

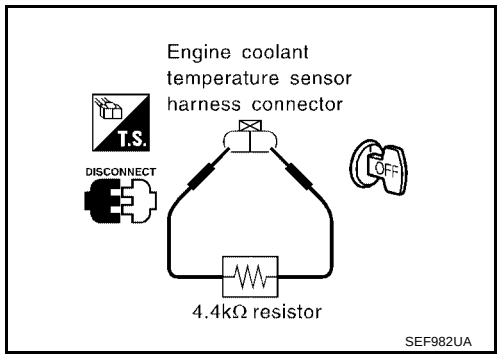

SEF982UA

Idle CO: 0.3 – 9.5% and engine runs smoothly.

7. After checking CO%, turn ignition switch OFF, disconnect the resistor from the terminals of engine coolant temperature sensor harness connector, and then connect engine coolant temperature sensor harness connector to engine coolant temperature sensor.

OK or NG

OK >> GO TO 28.
NG >> GO TO 27.

27. RECONNECT AIR FUEL RATIO (A/F) SENSOR 1 HARNESS CONNECTOR

1. Turn ignition switch OFF.
2. Reconnect A/F sensor 1 harness connector.

>> GO TO 31.

28. REPLACE AIR FUEL RATIO (A/F) SENSOR 1

1. Stop engine.
2. Replace A/F sensor 1.

With CONSULT-II>>GO TO 29.
With GST>>GO TO 30.

29. CHECK AIR FUEL RATIO (A/F) SENSOR 1 FUNCTION

With CONSULT-II

1. Turn ignition switch OFF and wait at a least 10 seconds.
2. Start engine and warm it up to normal operating temperature.
3. Drive the vehicle at a speed of 80 km/h (50 MPH) for a few minutes in D position with OD OFF.

   NOTE:
   Keep the accelerator pedal as steady as possible during the cruising.
4. Set OD ON, then release the accelerator pedal fully until the vehicle speed decreases to 50 km/h (30 MPH).

   NOTE:
   Never apply brake during releasing the accelerator pedal.
5. Repeat steps 3 to 4 for 5 times.
6. Stop the vehicle and connect CONSULT-II to the vehicle.
7. Make sure that no (1st trip) DTC is displayed in “SELF-DIAG RESULTS” mode.

OK or NG

OK >> GO TO 4.
NG >> GO TO 31.

30. CHECK AIR FUEL RATIO (A/F) SENSOR 1 FUNCTION

With GST

1. Turn ignition switch OFF and wait at a least 10 seconds.
2. Start engine and warm it up to normal operating temperature.
3. Drive the vehicle at a speed of 80 km/h (50 MPH) for a few minutes in D position with OD OFF.

   NOTE:
   Keep the accelerator pedal as steady as possible during the cruising.
4. Set OD ON, then release the accelerator pedal fully until the vehicle speed decreases to 50 km/h (30 MPH).

   NOTE:
   Never apply brake during releasing the accelerator pedal.
5. Repeat steps 3 to 4 for 5 times.
6. Stop the vehicle and connect GST to the vehicle.
7. Make sure that no (1st trip) DTC is displayed.

OK or NG

OK >> GO TO 4.
NG >> GO TO 31.

31. DETECT MALFUNCTIONING PART

Check the following.

- Check fuel pressure regulator, and repair or replace if necessary.
  Refer toEC-752, "Fuel Pressure Check"
- Check mass air flow sensor and its circuit, and repair or replace if necessary.
  Refer to EC-861, "DTC P0101 MAF SENSOR" and EC-870, "DTC P0102, P0103 MAF SENSOR" .
- Check injector and its circuit, and repair or replace if necessary.
  Refer to EC-1336, "INJECTOR CIRCUIT" .
- Check engine coolant temperature sensor and its circuit, and repair or replace if necessary.
  Refer to EC-884, "DTC P0117, P0118 ECT SENSOR" and EC-897, "DTC P0125 ECT SENSOR" .

OK or NG

OK >> GO TO 33.
NG >> 1. Repair or replace.
2. GO TO 32.

32. ERASE UNNECESSARY DTC

After this inspection, unnecessary DTC might be displayed.
Erase the stored memory in ECM and TCM.
Refer to AT-428, "HOW TO ERASE DTC" and EC-712, "HOW TO ERASE EMISSION-RELATED DIAGNOSTIC INFORMATION" .

>> GO TO 4.

33. CHECK ECM FUNCTION

1. Substitute another known-good ECM to check ECM function. (ECM may be the cause of an incident, but this is a rare case.)
2. Perform initialization of NVIS (NATS) system and registration of all NVIS (NATS) ignition key IDs.
   Refer to BL-96, "NVIS (NISSAN VEHICLE IMMOBILIZER SYSTEM — NATS)" .

>> GO TO 4.

VIN Registration

UBS00J9P

DESCRIPTION

VIN Registration is an operation to registering VIN in ECM. It must be performed each time ECM is replaced.

NOTE:
Accurate VIN which is registered in ECM may be required for Inspection & Maintenance (I/M).

OPERATION PROCEDURE

With CONSULT-II

1. Check the VIN of the vehicle and note it. Refer to GI-47, "IDENTIFICATION INFORMATION" .
2. Turn ignition switch ON and engine stopped.
3. Select “VIN REGISTRATION” in “WORK SUPPORT” mode.
4. Follow the instruction of CONSULT-II display.

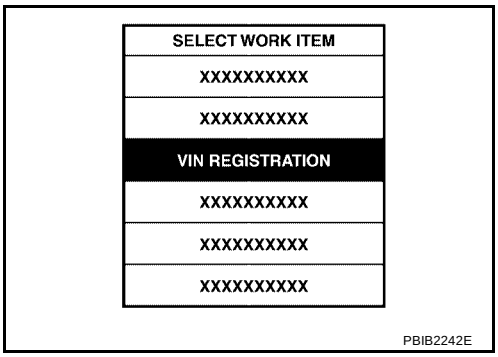

Accelerator Pedal Released Position Learning

UBS00J9Q

DESCRIPTION

Accelerator Pedal Released Position Learning is an operation to learn the fully released position of the accelerator pedal by monitoring the accelerator pedal position sensor output signal. It must be performed each time harness connector of accelerator pedal position sensor or ECM is disconnected.

OPERATION PROCEDURE

1. Make sure that accelerator pedal is fully released.
2. Turn ignition switch ON and wait at least 2 seconds.
3. Turn ignition switch OFF and wait at least 10 seconds.
4. Turn ignition switch ON and wait at least 2 seconds.
5. Turn ignition switch OFF and wait at least 10 seconds.

Throttle Valve Closed Position Learning

UBS00J9R

DESCRIPTION

Throttle Valve Closed Position Learning is an operation to learn the fully closed position of the throttle valve by monitoring the throttle position sensor output signal. It must be performed each time harness connector of electric throttle control actuator or ECM is disconnected.

OPERATION PROCEDURE

1. Make sure that accelerator pedal is fully released.
2. Turn ignition switch ON.
3. Turn ignition switch OFF and wait at least 10 seconds.
   Make sure that throttle valve moves during above 10 seconds by confirming the operating sound.

Idle Air Volume Learning

UBS00J9S

DESCRIPTION

Idle Air Volume Learning is an operation to learn the idle air volume that keeps each engine within the specific range. It must be performed under any of the following conditions:

- Each time electric throttle control actuator or ECM is replaced.
- Idle speed or ignition timing is out of specification.

PREPARATION

Before performing Idle Air Volume Learning, make sure that all of the following conditions are satisfied. Learning will be cancelled if any of the following conditions are missed for even a moment.

- Battery voltage: More than 12.9V (At idle)
- Engine coolant temperature: 70 - 95°C (158 - 203°F)
- PNP switch: ON
- Electric load switch: OFF
  (Air conditioner, headlamp, rear window defogger)
  On vehicles equipped with daytime light systems, if the parking brake is applied before the engine is started the headlamp will not be illuminated.
- Steering wheel: Neutral (Straight-ahead position)
- Vehicle speed: Stopped
- Transmission: Warmed-up
  For A/T models with CONSULT-II, drive vehicle until “FLUID TEMP SE” in “DATA MONITOR” mode of “A/T” system indicates less than 0.9V.
  For A/T models without CONSULT-II and M/T models, drive vehicle for 10 minutes.

OPERATION PROCEDURE

With CONSULT-II

1. Perform EC-749, "Accelerator Pedal Released Position Learning" .
2. Perform EC-749, "Throttle Valve Closed Position Learning" .
3. Start engine and warm it up to normal operating temperature.
4. Check that all items listed under the topic PREPARATION (previously mentioned) are in good order.
5. Select “IDLE AIR VOL LEARN” in “WORK SUPPORT” mode.

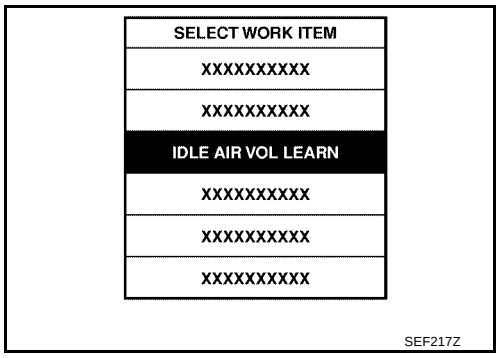

6. Touch “START” and wait 20 seconds.

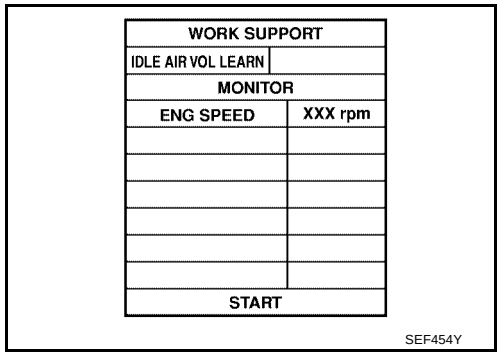

7. Make sure that “CMPLT” is displayed on CONSULT-II screen. If “CMPLT” is not displayed, Idle Air Volume Learning will not be carried out successfully. In this case, find the cause of the incident by referring to the DIAGNOSTIC PROCEDURE below.
8. Rev up the engine 2 or 3 times and make sure that idle speed and ignition timing are within the specifications. Refer to EC-727, "IDLE SPEED" .

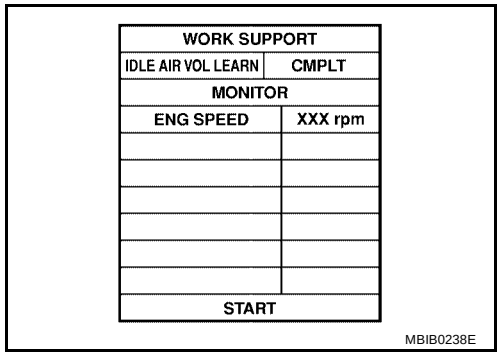

ITEM	SPECIFICATION
Idle speed	M/T: 700 ± 50 rpm (in Neutral position) A/T: 700 ± 50 rpm (in P or N position)
Ignition timing	M/T: 15 ± 5° BTDC (in Neutral position) A/T: 15 ± 5° BTDC (in P or N position)

Without CONSULT-II

NOTE:

- **It is better to count the time accurately with a clock.**
- **It is impossible to switch the diagnostic mode when an accelerator pedal position sensor circuit has a malfunction.**

1. Perform EC-749, "Accelerator Pedal Released Position Learning" .
2. Perform EC-749, "Throttle Valve Closed Position Learning" .
3. Start engine and warm it up to normal operating temperature.
4. Check that all items listed under the topic PREPARATION (previously mentioned) are in good order.
5. Turn ignition switch OFF and wait at least 10 seconds.
6. Confirm that accelerator pedal is fully released, turn ignition switch ON and wait 3 seconds.
7. Repeat the following procedure quickly 5 times within 5 seconds.

a. Fully depress the accelerator pedal.
b. Fully release the accelerator pedal.

8. Wait 7 seconds, fully depress the accelerator pedal and keep it for approx. 20 seconds until the MIL stops blinking and turned ON.
9. Fully release the accelerator pedal within 3 seconds after the MIL turned ON.
10. Start engine and let it idle.

11. Wait 20 seconds.

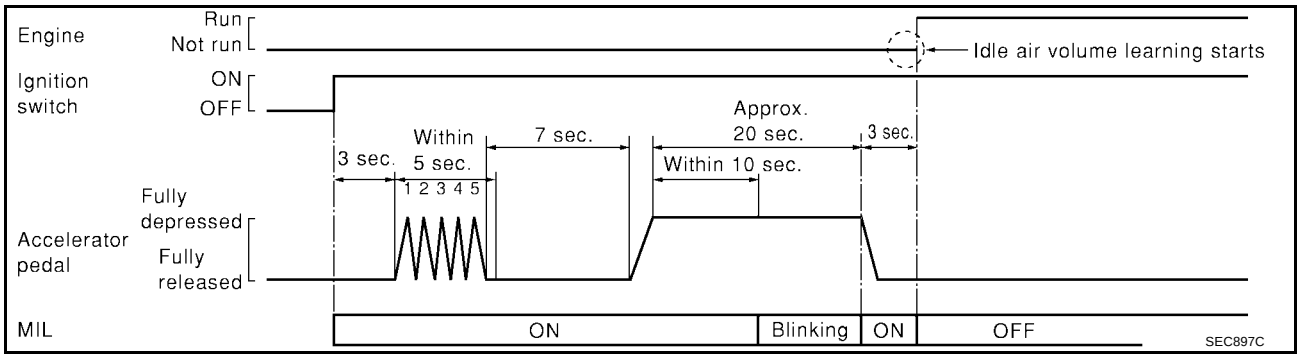

12. Rev up the engine 2 or 3 times and make sure that idle speed and ignition timing are within the specifications. Refer to EC-727, "IDLE SPEED" .

ITEM	SPECIFICATION
Idle speed	M/T: 700 ± 50 rpm (in Neutral position) A/T: 700 ± 50 rpm (in P or N position)
Ignition timing	M/T: 15 ± 5° BTDC (in Neutral position) A/T: 15 ± 5° BTDC (in P or N position)

13. If idle speed and ignition timing are not within the specification, Idle Air Volume Learning will not be carried out successfully. In this case, find the cause of the incident by referring to the Diagnostic Procedure below.

DIAGNOSTIC PROCEDURE

If idle air volume learning cannot be performed successfully, proceed as follows:

1. **Check that throttle valve is fully closed.**
2. **Check PCV valve operation.**
3. **Check that downstream of throttle valve is free from air leakage.**
4. **When the above three items check out OK, engine component parts and their installation condition are questionable. Check and eliminate the cause of the incident.**
   It is useful to perform EC-815, "TROUBLE DIAGNOSIS - SPECIFICATION VALUE" .
5. **If any of the following conditions occur after the engine has started, eliminate the cause of the incident and perform Idle air volume learning all over again:**

- **Engine stalls.**
- **Erroneous idle.**

Fuel Pressure Check

UBS00J9T

FUEL PRESSURE RELEASE

With CONSULT-II

1. Turn ignition switch ON.
2. Perform “FUEL PRESSURE RELEASE” in “WORK SUPPORT” mode with CONSULT-II.
3. Start engine.
4. After engine stalls, crank it 2 or 3 times to release all fuel pressure.
5. Turn ignition switch OFF.

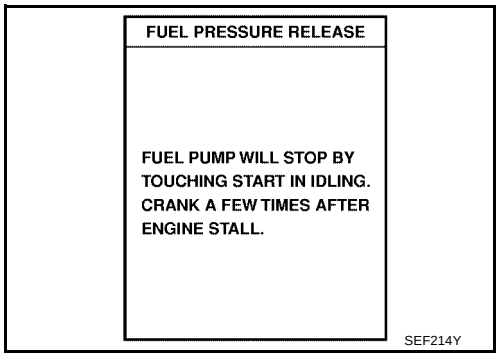

Without CONSULT-II

1. Remove fuel pump fuse located.
2. Start engine.
3. After engine stalls, crank it 2 or 3 times to release all fuel pressure.
4. Turn ignition switch OFF.
5. Reinstall fuel pump fuse after servicing fuel system.

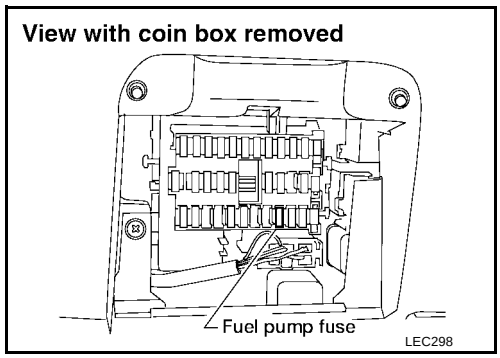

FUEL PRESSURE CHECK

Before disconnecting fuel line, release fuel pressure from fuel line to eliminate danger.

NOTE:
Prepare pans or saucers under the disconnected fuel line because the fuel may spill out. The fuel pressure cannot be completely released because B15 models do not have fuel return system.

Method A

CAUTION:

- **The fuel hose connection method used when taking fuel pressure check must not be used for other purposes.**
- **Be careful not to scratch or put debris around connection area when servicing, so that the quick connector maintains saleability with O-rings inside.**

1. Release fuel pressure to zero. Refer to EC-752, "FUEL PRESSURE RELEASE" .
2. Prepare fuel hose and fuel hose clamp for fuel pressure check, and connect fuel pressure gauge.
   - Use suitable fuel hose for fuel pressure check (genuine NISSAN fuel hose without quick connector).
   - To avoid unnecessary force or tension to hose, use moderately long fuel hose for fuel pressure check.
   - Do not use the fuel hose for checking fuel pressure with damage or cracks on it.
   - Use fuel pressure gauge to check fuel pressure.
3. Remove fuel hose. Refer to EM-108, "INTAKE MANIFOLD" .
   - Do not twist or kink fuel hose because it is plastic hose.
   - Do not remove fuel hose from quick connector.
   - Keep the original fuel hose to be free from intrusion of dust or foreign substances with a suitable cover.
4. Install the fuel pressure gauge as shown in the figure.
   - Wipe off oil or dirt from hose insertion part using cloth moistened with gasoline.
   - Apply proper amount of gasoline between top of the fuel tube and No.1 spool.
   - Insert fuel hose for fuel pressure check until it touches the No.1 spool on fuel tube.
   - Use NISSAN genuine hose clamp (part number: 16439 N4710 or 16439 40U00).
   - When reconnecting fuel line, always use new clamps.
   - When reconnecting fuel hose, check the original fuel hose for damage and abnormality.
   - Use a torque driver to tighten clamps.

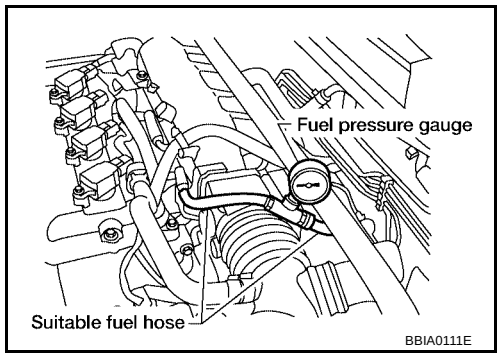

- Install hose clamp to the position within 1 - 2 mm (0.04 - 0.08 in).

Tightening torque:

1 - 1.5 N·m (0.1 - 0.15 kg-m, 9 - 13 in-lb.)

- Make sure that clamp screw does not contact adjacent parts.

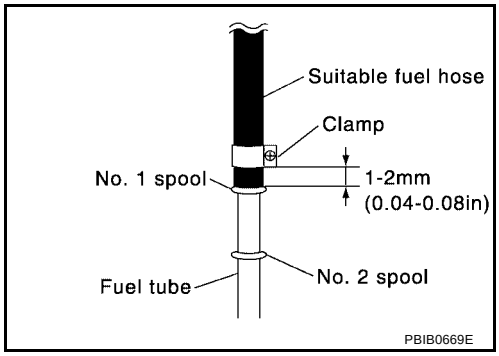

5. After connecting fuel hose for fuel pressure check, pull the hose with a force of approximately 98 N (10 kg, 22 lb.) to confirm fuel tube does not come off.
6. Turn ignition switch ON, and check for fuel leakage.
7. Start engine and check for fuel leakage.
8. Read the indication of fuel pressure gauge.
   - Do not perform fuel pressure check with system operating. Fuel pressure gauge may indicate false readings.
   - During fuel pressure check, confirm for fuel leakage from fuel connection every 3 minutes.

At idling: Approximately 350 kPa (3.57 kg/cm^2 , 51 psi)

9. If result is unsatisfactory, go to next step.
10. Check the following.
    - Fuel hoses and fuel tubes for clogging
    - Fuel filter for clogging
    - Fuel pump
    - Fuel pressure regulator for clogging

    If OK, replace fuel pressure regulator.
    If NG, repair or replace.

Method B

CAUTION:

- **Be careful not to scratch or get the fuel hose connection area dirty when servicing, so that the quick connector o-ring maintains sealability.**
- **Use Fuel Pressure Gauge Kit J-44321 and Fuel Pressure Adapter J-44321-6 to check fuel pressure.**

1. Release fuel pressure to zero. Refer to EC-752, "FUEL PRESSURE RELEASE" .
2. Remove fuel hose using Quick Connector Release J-45488. Refer to EM-121, "FUEL INJECTOR AND FUEL TUBE" .
   - Do not twist or kink fuel hose because it is plastic hose.
   - Do not remove fuel hose from quick connector.
   - Keep fuel hose connections clean.
3. Install Fuel Pressure Adapter J-44321-6 and Fuel Pressure Gauge (from kit J-44321) as shown in the figure.
   - Do not distort or bend fuel rail tube when installing fuel pressure gauge adapter.
   - When reconnecting fuel hose, check the original fuel hose for damage and abnormality.

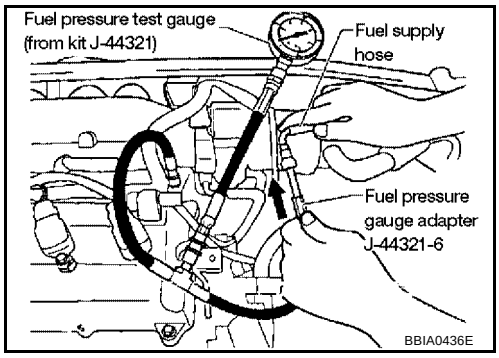

4. Turn ignition switch ON (reactivate fuel pump), and check for fuel leakage.
5. Start engine and check for fuel leakage.
6. Read the indication of fuel pressure gauge.
   - During fuel pressure check, check for fuel leakage from fuel connection every 3 minutes.

At idling: **Approximately 350 kPa (3.57 kg/cm^2 , 51 psi)**

7. If result is unsatisfactory, go to next step.
8. Check the following.
   - Fuel hoses and fuel tubes for clogging
   - Fuel filter for clogging
   - Fuel pump
   - Fuel pressure regulator for clogging

   If OK, replace fuel pressure regulator.
   If NG, repair or replace.
9. Before disconnecting Fuel Pressure Gauge and Fuel Pressure Adapter J-44321-6, release fuel pressure to zero. Refer to EC-752, "FUEL PRESSURE RELEASE" .

TROUBLE DIAGNOSIS

PFP:00004

Trouble Diagnosis Introduction

UBS00J9U

INTRODUCTION

The engine has an ECM to control major systems such as fuel control, ignition control, idle air control system, etc. The ECM accepts input signals from sensors and instantly drives actuators. It is essential that both input and output signals are proper and stable. At the same time, it is important that there are no malfunctions such as vacuum leaks, fouled spark plugs, or other malfunctions with the engine.

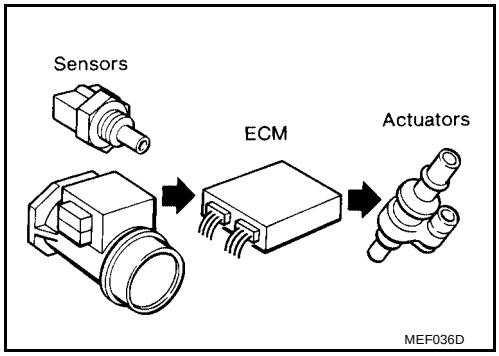

It is much more difficult to diagnose an incident that occurs intermittently rather than continuously. Most intermittent incidents are caused by poor electric connections or improper wiring. In this case, careful checking of suspected circuits may help prevent the replacement of good parts.

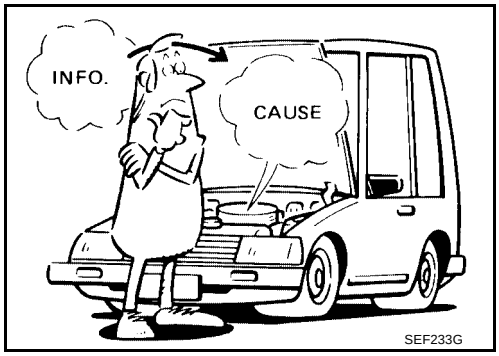

A visual check only may not find the cause of the incidents. A road test with CONSULT-II (or GST) or a circuit tester connected should be performed. Follow the WORK FLOW on EC-757 .

Before undertaking actual checks, take a few minutes to talk with a customer who approaches with a driveability complaint. The customer can supply good information about such incidents, especially intermittent ones. Find out what symptoms are present and under what conditions they occur. A DIAGNOSTIC WORKSHEET like the example on EC-761 should be used.

Start your diagnosis by looking for conventional malfunctions first. This will help troubleshoot driveability malfunctions on an electronically controlled engine vehicle.

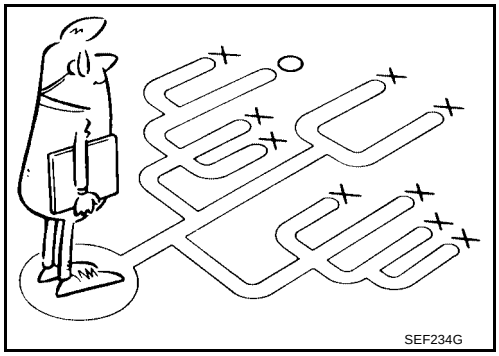

WORK FLOW
Overall Sequence

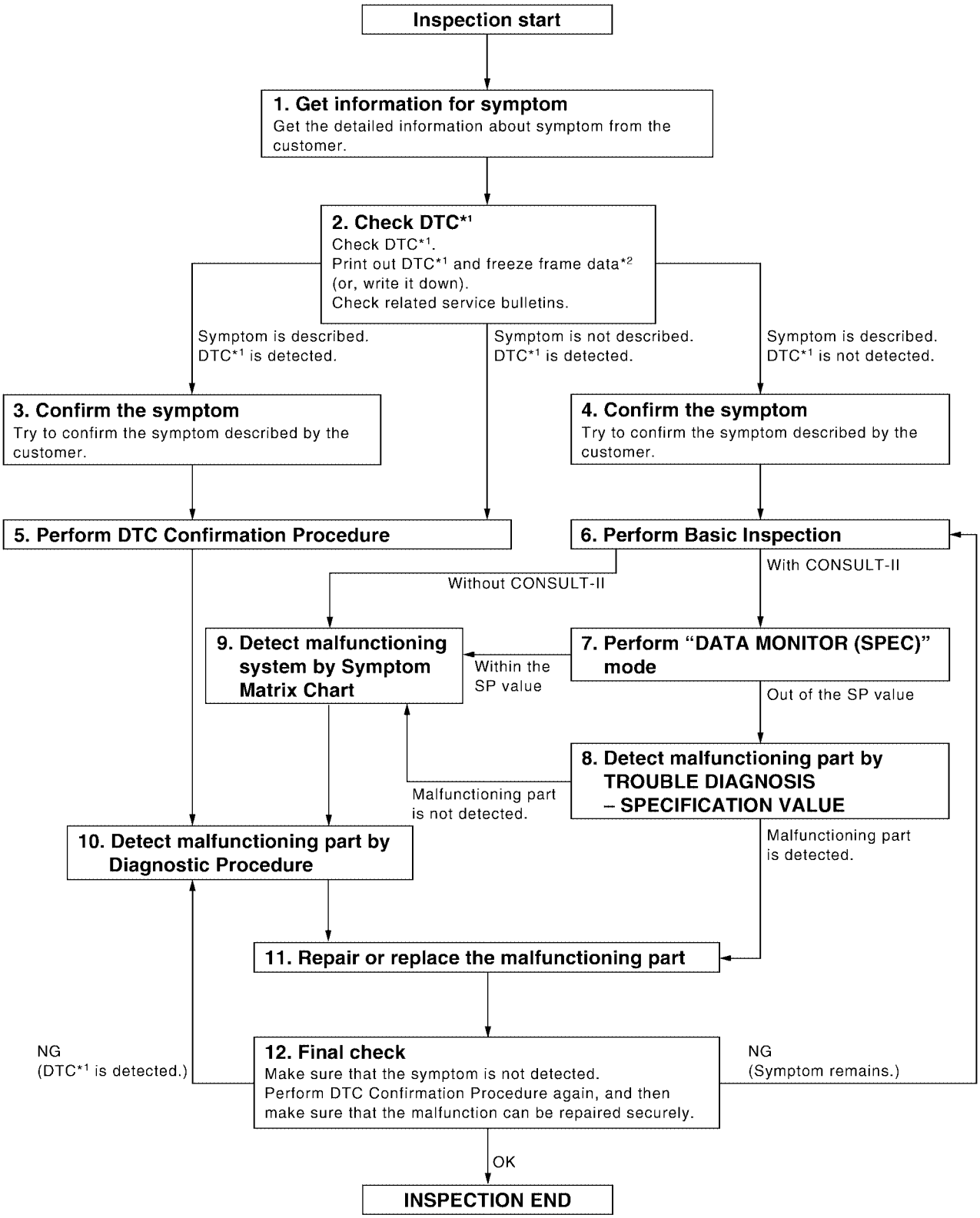

*1: Include 1st trip DTC.
*2: Include 1st trip freeze frame data.

PBIB2267E

Detailed Flow

1. GET INFORMATION FOR SYMPTOM

Get the detailed information from the customer about the symptom (the condition and the environment when the incident/malfunction occurred) using the EC-760, "DIAGNOSTIC WORKSHEET" .

>> GO TO 2.

2. CHECK DTC*1

1. Check DTC*1 .
2. Perform the following procedure if DTC*1 is displayed.

- Record DTC*1 and freeze frame data*2 . (Print them out with CONSULT-II or GST.)
- Erase DTC*1 . (Refer to EC-712, "HOW TO ERASE EMISSION-RELATED DIAGNOSTIC INFORMATION" .)
- Study the relationship between the cause detected by DTC*1 and the symptom described by the customer. (Symptom Matrix Chart is useful. Refer to EC-765 .)

3. Check related service bulletins for information.

Is any symptom described and any DTC detected?

Symptom is described, DTC*1 is displayed>>GO TO 3.
Symptom is described, DTC*1 is not displayed>>GO TO 4.
Symptom is not described, DTC*1 is displayed>>GO TO 5.

3. CONFIRM THE SYMPTOM

Try to confirm the symptom described by the customer (except MIL ON).
DIAGNOSIS WORK SHEET is useful to verify the incident.
Connect CONSULT-II to the vehicle in DATA MONITOR (AUTO TRIG) mode and check real time diagnosis results.
Verify relation between the symptom and the condition when the symptom is detected.

>> GO TO 5.

4. CONFIRM THE SYMPTOM

Try to confirm the symptom described by the customer.
DIAGNOSIS WORK SHEET is useful to verify the incident.
Connect CONSULT-II to the vehicle in DATA MONITOR (AUTO TRIG) mode and check real time diagnosis results.
Verify relation between the symptom and the condition when the symptom is detected.

>> GO TO 6.

5. PERFORM DTC CONFIRMATION PROCEDURE

Perform DTC Confirmation Procedure for the displayed DTC*1 , and then make sure that DTC*1 is detected again.
At this time, always connect CONSULT-II to the vehicle, and check diagnostic results in real time on “DATA MONITOR (AUTO TRIG)”.

If two or more DTCs*1 are detected, refer to EC-762, "DTC Inspection Priority Chart" and determine trouble diagnosis order.

NOTE:

- Freeze frame data*2 is useful if the DTC*1 is not detected.
- Perform Overall Function Check if DTC Confirmation Procedure is not included on Service Manual. This simplified check procedure is an effective alternative though DTC*1 cannot be detected during this check. If the result of Overall Function Check is NG, it is the same as the detection of DTC*1 by DTC Confirmation Procedure.

Is DTC*1 detected?

Yes >> GO TO 10.
No >> Check according to EC-834, "TROUBLE DIAGNOSIS FOR INTERMITTENT INCIDENT" .

6. PERFORM BASIC INSPECTION

Perform EC-722, "Basic Inspection" .

With CONSULT-II>>GO TO 7.
Without CONSULT-II>>GO TO 9.

7. PERFORM DATA MONITOR (SPEC) MODE

With CONSULT-II
Make sure that “MAS A/F SE-B1”, “B/FUEL SCHDL”, and “A/F ALPHA-B1” are within the SP value using CONSULT-II “DATA MONITOR (SPEC)” mode. Refer to EC-816, "Diagnostic Procedure (A/T Models ULEV and M/T Models)" .

Are they within the SP value?

Yes >> GO TO 9.
No >> GO TO 8.

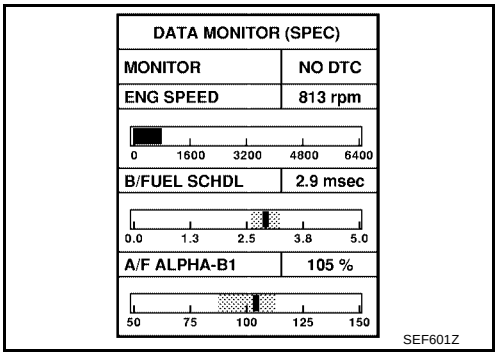

8. DETECT MALFUNCTIONING PART BY TROUBLE DIAGNOSIS - SPECIFICATION VALUE

Detect malfunctioning part according to EC-815, "TROUBLE DIAGNOSIS - SPECIFICATION VALUE" .

Is malfunctioning part detected?

Yes >> GO TO 11.
No >> GO TO 9.

9. DETECT MALFUNCTIONING SYSTEM BY SYMPTOM MATRIX CHART

Detect malfunctioning system according to EC-765, "Symptom Matrix Chart" based on the confirmed symptom in step 4, and determine the trouble diagnosis order based on possible causes and symptom.

>> GO TO 10.

10. DETECT MALFUNCTIONING PART BY DIAGNOSTIC PROCEDURE

Inspect according to Diagnostic Procedure of the system.

NOTE:
The Diagnostic Procedure in EC section described based on open circuit inspection. A short circuit inspection is also required for the circuit check in the Diagnostic Procedure. For details, refer to Circuit Inspection in GI-27, "How to Perform Efficient Diagnosis for an Electrical Incident" .

Is malfunctioning part detected?

Yes >> GO TO 11.
No >> Monitor input data from related sensors or check voltage of related ECM terminals using CONSULT-II. Refer to EC-807, "CONSULT-II Reference Value in Data Monitor Mode" , EC-784, "ECM Terminals and Reference Value" .

11. REPAIR OR REPLACE THE MALFUNCTIONING PART

1. Repair or replace the malfunctioning part.
2. Reconnect parts or connectors disconnected during Diagnostic Procedure again after repair and replacement.
3. Check DTC. If DTC is displayed, erase it, refer to EC-712, "HOW TO ERASE EMISSION-RELATED DIAGNOSTIC INFORMATION" .

>> GO TO 12.

12. FINAL CHECK

When DTC was detected in step 2, perform DTC Confirmation Procedure or Overall Function Check again, and then make sure that the malfunction have been repaired securely.
When symptom was described from the customer, refer to confirmed symptom in step 3 or 4, and make sure that the symptom is not detected.

OK or NG

NG (DTC*1 is detected)>>GO TO 10.
NG (Symptom remains)>>GO TO 6.
OK >> 1. Before returning the vehicle to the customer, make sure to erase unnecessary DTC*1 in ECM and TCM (Transmission Control Module). (Refer to EC-712, "HOW TO ERASE EMISSION-RELATED DIAGNOSTIC INFORMATION" and AT-428, "HOW TO ERASE DTC" .)
2. If the completion of SRT is needed, drive vehicle under the specific driving pattern. Refer to EC-708, "Driving Pattern" .
3. **INSPECTION END**

*1: Include 1st trip DTC.
*2: Include 1st trip freeze frame data.

DIAGNOSTIC WORKSHEET

Description

There are many operating conditions that lead to the malfunction of engine components. A good grasp of such conditions can make troubleshooting faster and more accurate.
In general, each customer feels differently about an incident. It is important to fully understand the symptoms or conditions for a customer complaint.
Utilize a diagnostic worksheet like the one on the next page in order to organize all the information for troubleshooting.
Some conditions may cause the MIL to come on steady or blink and DTC to be detected. Examples:

- Vehicle ran out of fuel, which caused the engine to misfire.
- Fuel filler cap was left off or incorrectly screwed on, allowing fuel to evaporate into the atmosphere.

KEY POINTS

WHAT ..... Vehicle & engine model
WHEN ..... Date, Frequencies
WHERE..... Road conditions
HOW ..... Operating conditions, Weather conditions, Symptoms

SEF907L

Worksheet Sample

Customer name MR/MS	Model & Year	VIN
Engine #	Trans.	Mileage
Incident Date	Manuf. Date	In Service Date
Fuel and fuel filler cap	☐ Vehicle ran out of fuel causing misfire ☐ Fuel filler cap was left off or incorrectly screwed on.	
Symptoms — ☐ Startability	☐ Impossible to start ☐ No combustion ☐ Partial combustion ☐ Partial combustion affected by throttle position ☐ Partial combustion NOT affected by throttle position ☐ Possible but hard to start ☐ Others [ ]	
Symptoms — ☐ Idling	☐ No fast idle ☐ Unstable ☐ High idle ☐ Low idle ☐ Others [ ]	
Symptoms — ☐ Driveability	☐ Stumble ☐ Surge ☐ Knock ☐ Lack of power ☐ Intake backfire ☐ Exhaust backfire ☐ Others [ ]	
Symptoms — ☐ Engine stall	☐ At the time of start ☐ While idling ☐ While accelerating ☐ While decelerating ☐ Just after stopping ☐ While loading	
Incident occurrence	☐ Just after delivery ☐ Recently ☐ In the morning ☐ At night ☐ In the daytime	
Frequency	☐ All the time ☐ Under certain conditions ☐ Sometimes	
Weather conditions	☐ Not affected	
Weather conditions — Weather	☐ Fine ☐ Raining ☐ Snowing ☐ Others [ ]	
Weather conditions — Temperature	☐ Hot ☐ Warm ☐ Cool ☐ Cold ☐ Humid ˚F	
Engine conditions	☐ Cold ☐ During warm-up ☐ After warm-up Engine speed 0 2,000 4,000 6,000 8,000 rpm	
Road conditions	☐ In town ☐ In suburbs ☐ Highway ☐ Off road (up/down)	
Driving conditions	☐ Not affected ☐ At starting ☐ While idling ☐ At racing ☐ While accelerating ☐ While cruising ☐ While decelerating ☐ While turning (RH/LH) Vehicle speed 0 10 20 30 40 50 60 MPH	
Malfunction indicator lamp	☐ Turned on ☐ Not turned on	

MTBL0017

DTC Inspection Priority Chart

UBS00J9V

If some DTCs are displayed at the same time, perform inspections one by one based on the following priority chart.

NOTE:
If DTC U1000 and/or U1001 is displayed with other DTC, first perform the trouble diagnosis for DTC U1000 and U1001. Refer to EC-842 .

Priority	Detected items (DTC)
1	● U1000 U1001 CAN communication line ● P0101 P0102 P0103 Mass air flow sensor ● P0112 P0113 P0127 Intake air temperature sensor ● P0117 P0118 P0125 Engine coolant temperature sensor ● P0122 P0123 P0222 P0223 P1225 P1226 P2135 Throttle position sensor ● P0128 Thermostat function ● P0181 P0182 P0183 Fuel tank temperature sensor ● P0327 P0328 Knock sensor ● P0335 Crankshaft position sensor (POS) ● P0340 Camshaft position sensor (PHASE) ● P0460 P0461 P0462 P0463 Fuel level sensor ● P0500 Vehicle speed sensor ● P0605 ECM ● P1229 Sensor power supply ● P1610-P1615 NATS ● P1706 Park/Neutral position (PNP) switch ● P2122 P2123 P2127 P2128 P2138 Accelerator pedal position sensor

Priority	Detected items (DTC)
2	● P0031 P0032 Heated oxygen sensor 1 heater*1 ● P0037 P0038 Heated oxygen sensor 2 heater ● P0132 P0133 P0134 P1143 P1144 Heated oxygen sensor 1*1 ● P0138 P0139 P1146 P1147 Heated oxygen sensor 2 ● P0441 EVAP control system purge flow monitoring ● P0444 P0445 P1444 EVAP canister purge volume control solenoid valve ● P0447 P1446 EVAP canister vent control valve ● P0451 P0452 P0453 EVAP control system pressure sensor ● P0506 P0507 Idle speed control system ● P0550 power steering pressure sensor ● P0705 P0710 P0720 P0725 P0740 P0745 P0750 P0755 P1705 P1760 A/T related sensors and solenoid valves ● P1031, P1032 A/F sensor 1 heater*2 ● P1065 ECM power supply ● P1111 Intake valve timing control solenoid valve ● P1122 Electric throttle control function ● P1124 P1126 Electric throttle control motor relay ● P1128 Electric throttle control actuator ● P1271, P1272, P1273, P1274, P1276, P1278, P1279 A/F sensor 1*2 ● P1800 VIAS control solenoid valve ● P1805 Brake switch
3	● P0011 Intake valve timing control ● P0171 P0172 Fuel injection system function ● P0300 - P0304 Misfire ● P0420 Three way catalyst function ● P0442 P0455 P0456 EVAP control system (SMALL LEAK, VERY SMALL LEAK, GROSS LEAK) ● P0731 - P0734 A/T function ● P1121 Electric throttle control actuator ● P1148 Closed loop control ● P1217 Engine over temperature (OVERHEAT) ● P1564 ASCD steering switch ● P1572 ASCD brake switch ● P1574 ASCD vehicle speed sensor

*1: A/T models ULEV and M/T models.
*2: A/T models except ULEV.

Fail-safe Chart

UBS00J9W

When the DTC listed below is detected, the ECM enters fail-safe mode and the MIL lights up.

DTC No.	Detected items	Engine operating condition in fail-safe mode	
P0102 P0103	Mass air flow sensor circuit	Engine speed will not rise more than 2,400 rpm due to the fuel cut.	
P0117 P0118	Engine coolant temperature sensor circuit	Engine coolant temperature will be determined by ECM based on the time after turning ignition switch ON or START. CONSULT-II displays the engine coolant temperature decided by ECM.	
		Condition	Engine coolant temperature decided (CONSULT-II display)
		Just as ignition switch is turned ON or START	40°C (104°F)
		More than approx. 4 minutes after ignition ON or START	80°C (176°F)
		Except as shown above	40 - 80°C (104 - 176°F) (Depends on the time)
		When the fail-safe system for engine coolant temperature sensor is activated, the cooling fan operates while engine is running.	
P0122 P0123 P0222 P0223 P2135	Throttle position sensor	The ECM controls the electric throttle control actuator in regulating the throttle opening in order for the idle position to be within +10 degrees. The ECM regulates the opening speed of the throttle valve to be slower than the normal condition. So, the acceleration will be poor.	
P1121	Electric throttle control actuator	(When electric throttle control actuator does not function properly due to the return spring malfunction:) ECM controls the electric throttle actuator by regulating the throttle opening around the idle position. The engine speed will not rise more than 2,000 rpm.	
		(When throttle valve opening angle in fail-safe mode is not in specified range:) ECM controls the electric throttle control actuator by regulating the throttle opening to 20 degrees or less.	
		(When ECM detects the throttle valve is stuck open:) While the vehicle is driving, it slows down gradually by fuel cut. After the vehicle stops, the engine stalls. The engine can restart in N or P (A/T), Neutral (M/T) position, and engine speed will not exceed 1,000 rpm or more.	
P1122	Electric throttle control function	ECM stops the electric throttle control actuator control, throttle valve is maintained at a fixed opening (approx. 5 degrees) by the return spring.	
P1124 P1126	Throttle control relay	ECM stops the electric throttle control actuator control, throttle valve is maintained at a fixed opening (approx. 5 degrees) by the return spring.	
P1128	Throttle control motor	ECM stops the electric throttle control actuator control, throttle valve is maintained at a fixed opening (approx. 5 degrees) by the return spring.	
P1229	Sensor power supply	ECM stops the electric throttle control actuator control, throttle valve is maintained at a fixed opening (approx. 5 degrees) by the return spring.	
P2122 P2123 P2127 P2128 P2138	Accelerator pedal position sensor	The ECM controls the electric throttle control actuator in regulating the throttle opening in order for the idle position to be within +10 degrees. The ECM regulates the opening speed of the throttle valve to be slower than the normal condition. So, the acceleration will be poor.	

- When there is an open circuit on MIL circuit, the ECM cannot warn the driver by lighting up MIL when there is malfunction on engine control system.
  Therefore, when electrical controlled throttle and part of ECM related diagnoses are continuously detected as NG for 5 trips, ECM warns the driver that engine control system malfunctions and MIL circuit is open by means of operating fail-safe function.
  The fail-safe function also operates when above diagnoses except MIL circuit are detected, and demands the driver to repair the malfunction.

Engine operating condition in fail-safe mode	Engine speed will not rise more than 2,500 rpm due to the fuel cut

Symptom Matrix Chart

UBS00KJI

SYSTEM — BASIC ENGINE CONTROL SYSTEM

		SYMPTOM													Reference page
		HARD/NO START/RESTART (EXCP. HA)	ENGINE STALL	HESITATION/SURGING/FLAT SPOT	SPARK KNOCK/DETONATION	LACK OF POWER/POOR ACCELERATION	HIGH IDLE/LOW IDLE	ROUGH IDLE/HUNTING	IDLING VIBRATION	SLOW/NO RETURN TO IDLE	OVERHEATS/WATER TEMPERATURE HIGH	EXCESSIVE FUEL CONSUMPTION	EXCESSIVE OIL CONSUMPTION	BATTERY DEAD (UNDER CHARGE)	
Warranty symptom code		AA	AB	AC	AD	AE	AF	AG	AH	AJ	AK	AL	AM	HA	
Fuel	Fuel pump circuit	1	1	2	3	2		2	2			3		2	EC-1342
	Fuel pressure regulator system	3	3	4	4	4	4	4	4	4		4			EC-753
	Injector circuit	1	1	2	3	2		2	2			2			EC-1336
	Evaporative emission system	3	3	4	4	4	4	4	4	4		4			EC-681
Air	Positive crankcase ventilation system	3	3	4	4	4	4	4	4	4		4	1		EC-694
	Incorrect idle speed adjustment	3	3				1	1	1	1		1			EC-722
	Electric throttle control actuator	1	1	2	3	3	2	2	2	2		2		2	EC-1112, EC-1114 , EC-1121 , EC-1126
Ignition	Incorrect ignition timing adjustment	3	3	1	1	1		1	1			1			EC-722
	Ignition circuit	1	1	2	2	2		2	2			2			EC-1314
Main power supply and ground circuit		2	2	3	3	3		3	3		2	3		2	EC-835
Mass air flow sensor circuit		1	1	2	2	2		2	2			2			EC-861, EC-870 ,
A/F sensor 1 circuit*1			1	2	3	2		2	2			2			EC-1183
Engine coolant temperature sensor circuit		1	1	2	2	2	3	2	2	3	1	2			EC-884, EC-897
Throttle position sensor circuit			1	2		2	2	2	2	2		2			EC-890, EC-973 , EC-1174 , EC-1176 , EC-1299
Accelerator pedal position sensor circuit				3	2	1	2			2					EC-1178, EC-1284 , EC-1291 , EC-1306
Heated oxygen sensor 1 circuit *2			1	2	3	2		2	2			2			EC-905, EC-912 , EC-922 , EC-1131 , EC-1137
Knock sensor circuit				2	2							3			EC-987
Crankshaft position sensor (POS) circuit		2	2												EC-992

	SYMPTOM													Reference page
	HARD/NO START/RESTART (EXCP. HA)	ENGINE STALL	HESITATION/SURGING/FLAT SPOT	SPARK KNOCK/DETONATION	LACK OF POWER/POOR ACCELERATION	HIGH IDLE/LOW IDLE	ROUGH IDLE/HUNTING	IDLING VIBRATION	SLOW/NO RETURN TO IDLE	OVERHEATS/WATER TEMPERATURE HIGH	EXCESSIVE FUEL CONSUMPTION	EXCESSIVE OIL CONSUMPTION	BATTERY DEAD (UNDER CHARGE)	
Warranty symptom code	AA	AB	AC	AD	AE	AF	AG	AH	AJ	AK	AL	AM	HA	
Camshaft position sensor (PHASE) circuit	2	2												EC-999
Vehicle speed signal circuit		2	3		3						3			EC-1085
Power steering pressure sensor circuit		2				3	3	3	3					EC-1091
ECM	2	2	3	3	3	3	3	3	3	3	3			EC-1096, EC-1104
Intake valve timing control solenoid valve circuit	3	3	2		1	3	2	2	3		3			EC-1108
VIAS control solenoid valve circuit					1									EC-1273, EC-1327
PNP switch circuit			3		3	3	3	3	3		3			EC-1269
Refrigerant pressure sensor circuit		2				3	3	3	3		4			EC-1347
Electrical load signal circuit						3	3	3	3					EC-1352
Air conditioner circuit	2	2	3	3	3	3	3	3	3		3		2	MTC-19

1 - 6: The numbers refer to the order of inspection.
(continued on next page)
*1: A/T models except ULEV.
*2: A/T models ULEV and M/T models.

SYSTEM — ENGINE MECHANICAL & OTHER

		SYMPTOM													Reference page
		HARD/NO START/RESTART (EXCP. HA)	ENGINE STALL	HESITATION/SURGING/FLAT SPOT	SPARK KNOCK/DETONATION	LACK OF POWER/POOR ACCELERATION	HIGH IDLE/LOW IDLE	ROUGH IDLE/HUNTING	IDLING VIBRATION	SLOW/NO RETURN TO IDLE	OVERHEATS/WATER TEMPERATURE HIGH	EXCESSIVE FUEL CONSUMPTION	EXCESSIVE OIL CONSUMPTION	BATTERY DEAD (UNDER CHARGE)	
Warranty symptom code		AA	AB	AC	AD	AE	AF	AG	AH	AJ	AK	AL	AM	HA	
Fuel	Fuel tank	5	5												FL-7
	Fuel piping			5	5	5		5	5			5			FL-2
	Vapor lock														—
	Valve deposit	5		5	5	5		5	5			5			—
	Poor fuel (Heavy weight gasoline, Low octane)														—
Air	Air duct	5	5	5	5	5	5	5	5	5		5			EM-106
	Air cleaner														EM-106
	Air leakage from air duct (Mass air flow sensor —electric throttle control actuator)														EM-106
	Electric throttle control actuator														EC-1129
	Air leakage from intake manifold/ Collector/Gasket														EM-108
Cranking	Battery	1	1	1		1		1	1			1		1	SC-6
	Alternator circuit														SC-24
	Starter circuit	3													SC-13
	Signal plate/Flywheel/Drive plate	6													CL-33or EM-164
	PNP switch	4													EC-1269 AT-641 or AT-487
Engine	Cylinder head	5	5	5	5	5		5	5			5			EM-148
	Cylinder head gasket										4		3		
	Cylinder block	6	6	6	6	6		6	6			6	4		EM-164
	Piston														
	Piston ring														
	Connecting rod														
	Bearing														
	Crankshaft														

		SYMPTOM													Reference page
		HARD/NO START/RESTART (EXCP. HA)	ENGINE STALL	HESITATION/SURGING/FLAT SPOT	SPARK KNOCK/DETONATION	LACK OF POWER/POOR ACCELERATION	HIGH IDLE/LOW IDLE	ROUGH IDLE/HUNTING	IDLING VIBRATION	SLOW/NO RETURN TO IDLE	OVERHEATS/WATER TEMPERATURE HIGH	EXCESSIVE FUEL CONSUMPTION	EXCESSIVE OIL CONSUMPTION	BATTERY DEAD (UNDER CHARGE)	
Warranty symptom code		AA	AB	AC	AD	AE	AF	AG	AH	AJ	AK	AL	AM	HA	
Valve mechanism	Timing chain	5	5	5	5	5		5	5			5			EM-136
	Camshaft														EM-126
	Intake valve timing control														EM-136
	Intake valve												3		EM-148
	Exhaust valve														
Exhaust	Exhaust manifold/Tube/Muffler/Gasket	5	5	5	5	5		5	5			5			EM-113, EX-3
	Three way catalyst														
Lubrication	Oil pan/Oil strainer/Oil pump/Oil filter/Oil gallery	5	5	5	5	5		5	5			5	2		EM-115, LU-19 , LU-18
	Oil level (Low)/Filthy oil														LU-16
Cooling	Radiator/Hose/Radiator filler cap	5	5	5	5	5		5	5		2	5			CO-32
	Thermostat									5					CO-30
	Water pump														CO-28
	Water gallery														CO-25
	Cooling fan									5					CO-37
	Coolant level (low)/Contaminated coolant														CO-26
NVIS (NISSAN Vehicle Immobilizer System — NATS)		1	1												EC-696 or BL-96

1 - 6: The numbers refer to the order of inspection.

Engine Control Component Parts Location

UBS00J9Y

A/T MODELS ULEV AND M/T MODELS

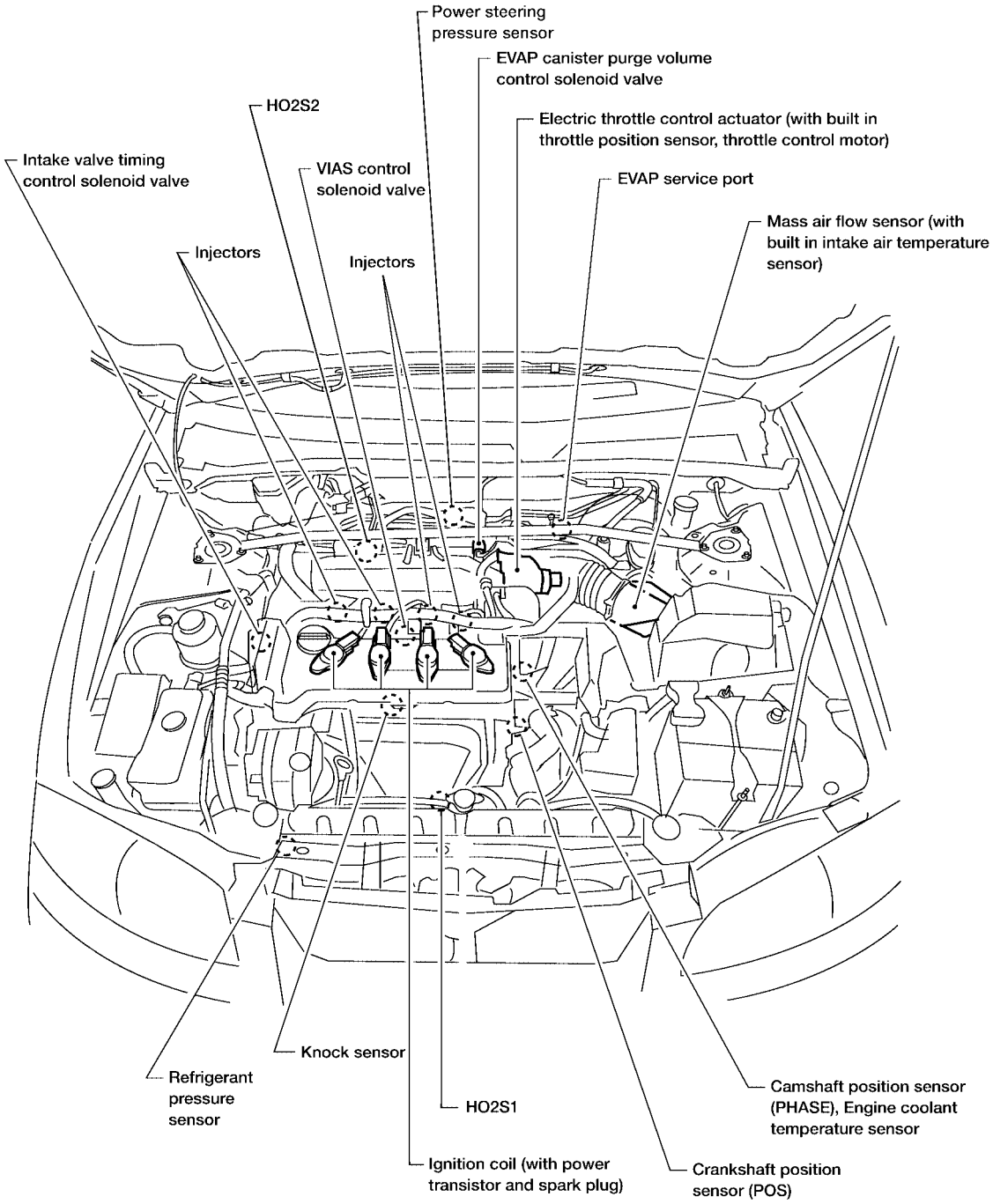

BBIA0287E

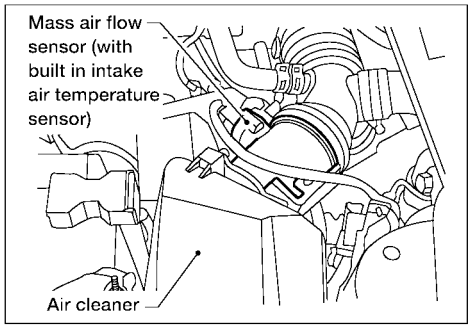
Mass air flow sensor (with built in intake air temperature sensor)
Air cleaner

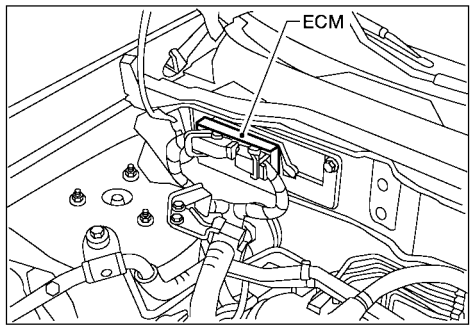
ECM

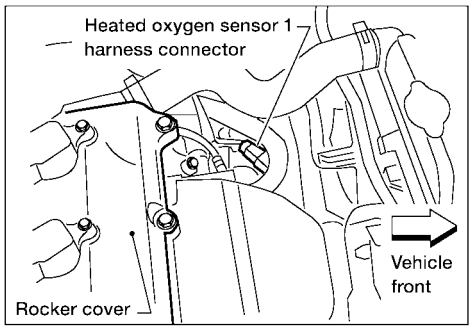
Heated oxygen sensor 1 harness connector
Vehicle front
Rocker cover

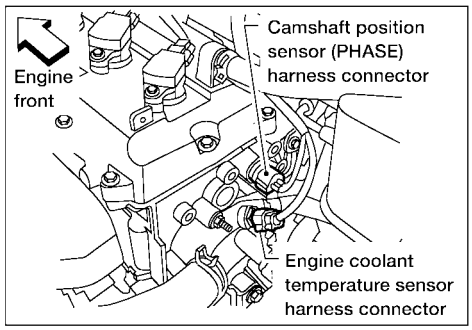
Engine front
Camshaft position sensor (PHASE) harness connector
Engine coolant temperature sensor harness connector

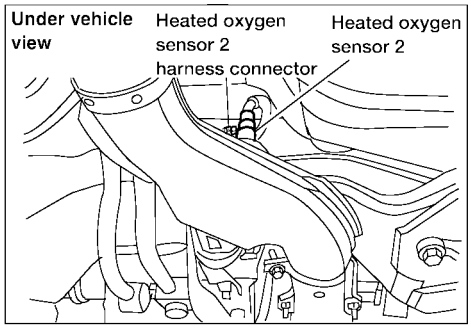
Under vehicle view
Heated oxygen sensor 2 harness connector
Heated oxygen sensor 2

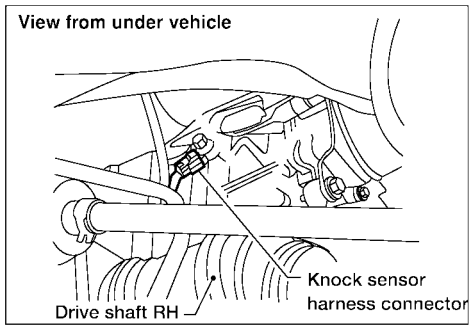
View from under vehicle
Knock sensor harness connector
Drive shaft RH

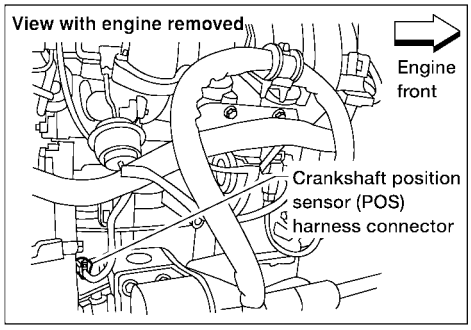
View with engine removed
Engine front
Crankshaft position sensor (POS) harness connector

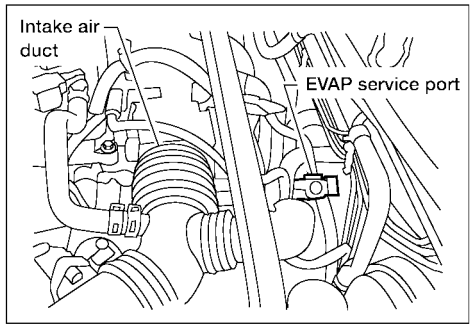
Intake air duct
EVAP service port

BBIA0285E

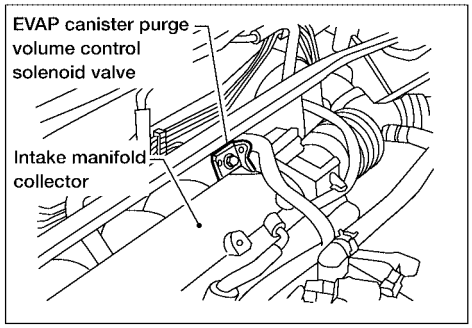
EVAP canister purge volume control solenoid valve
Intake manifold collector

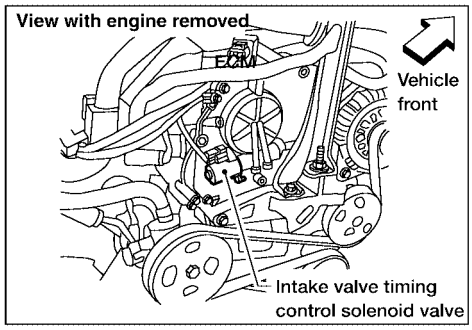
View with engine removed
ECM
Vehicle front
Intake valve timing control solenoid valve

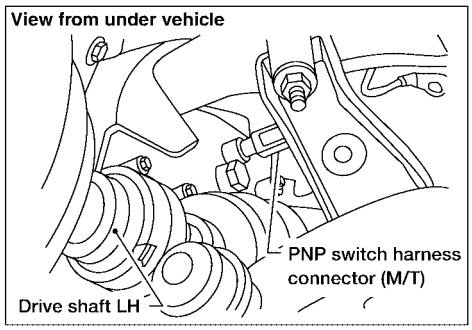
View from under vehicle
PNP switch harness connector (M/T)
Drive shaft LH

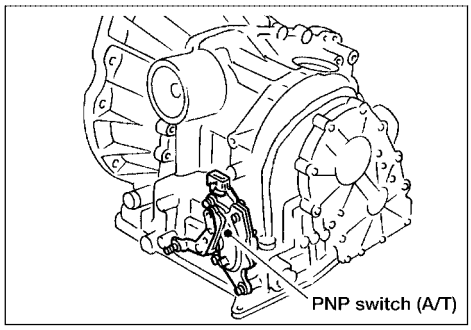
PNP switch (A/T)

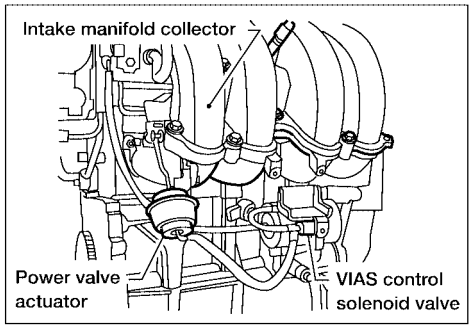
Intake manifold collector
Power valve actuator
VIAS control solenoid valve

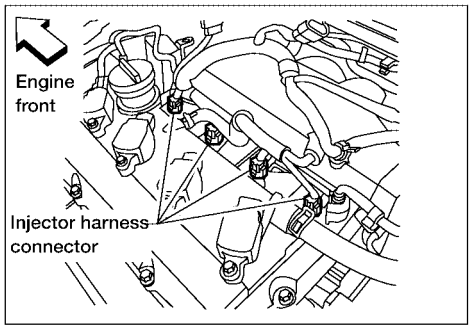
Engine front
Injector harness connector

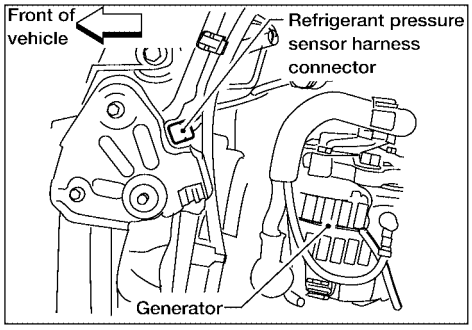
Front of vehicle
Refrigerant pressure sensor harness connector
Generator

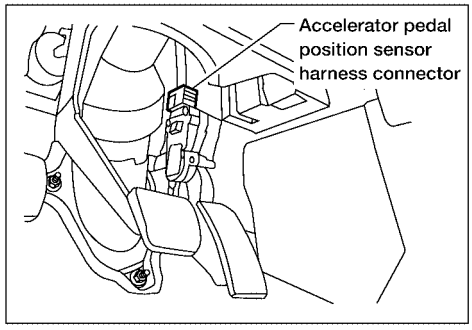
Accelerator pedal position sensor harness connector

BBIA0128E

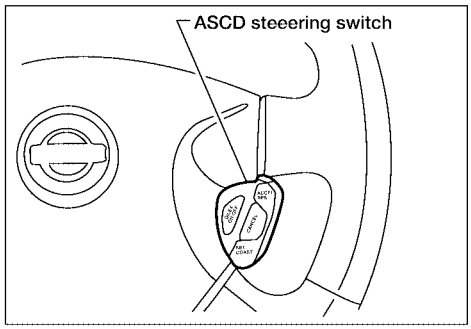
ASCD steeering switch

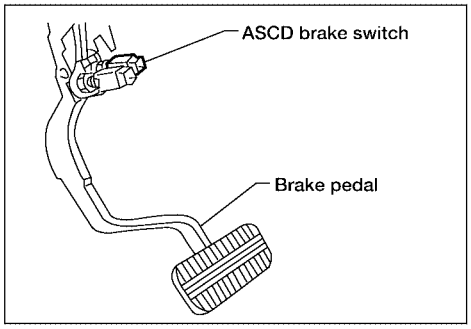
ASCD brake switch
Brake pedal

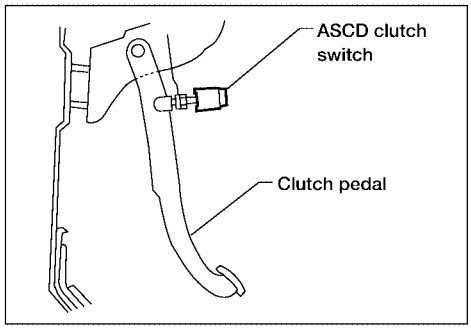
ASCD clutch switch
Clutch pedal

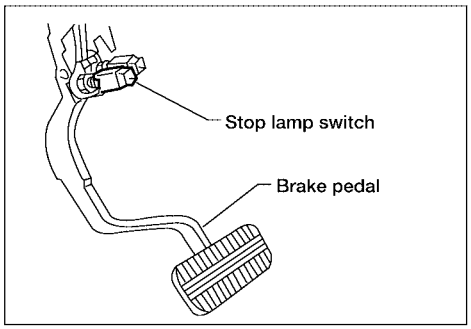
Stop lamp switch
Brake pedal

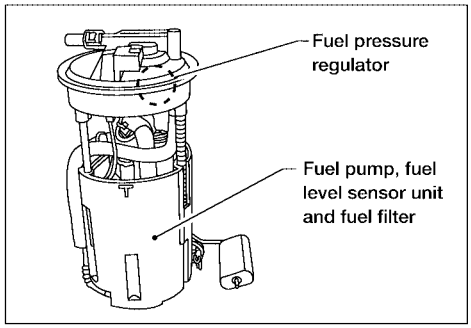
Fuel pressure regulator
Fuel pump, fuel level sensor unit and fuel filter

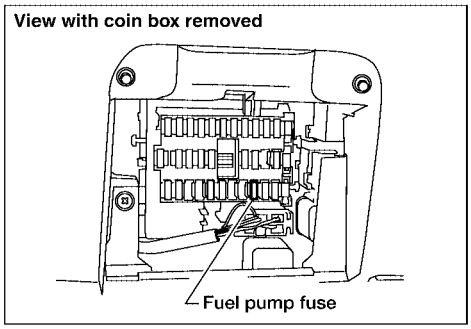
View with coin box removed
Fuel pump fuse

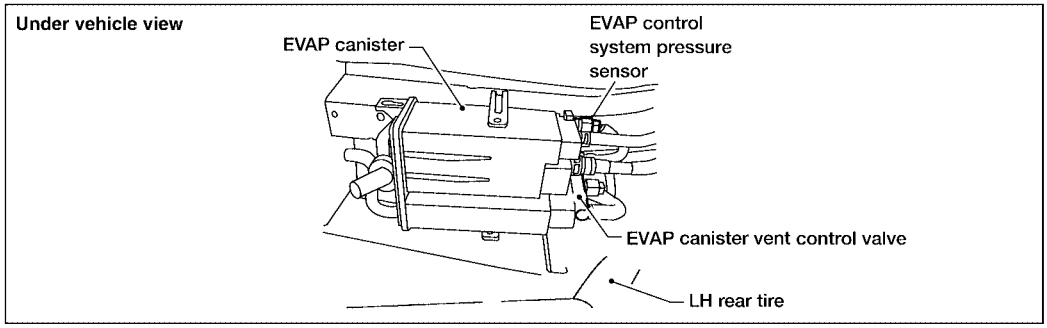
Under vehicle view
EVAP canister
EVAP control system pressure sensor
EVAP canister vent control valve
LH rear tire

BBIA0288E

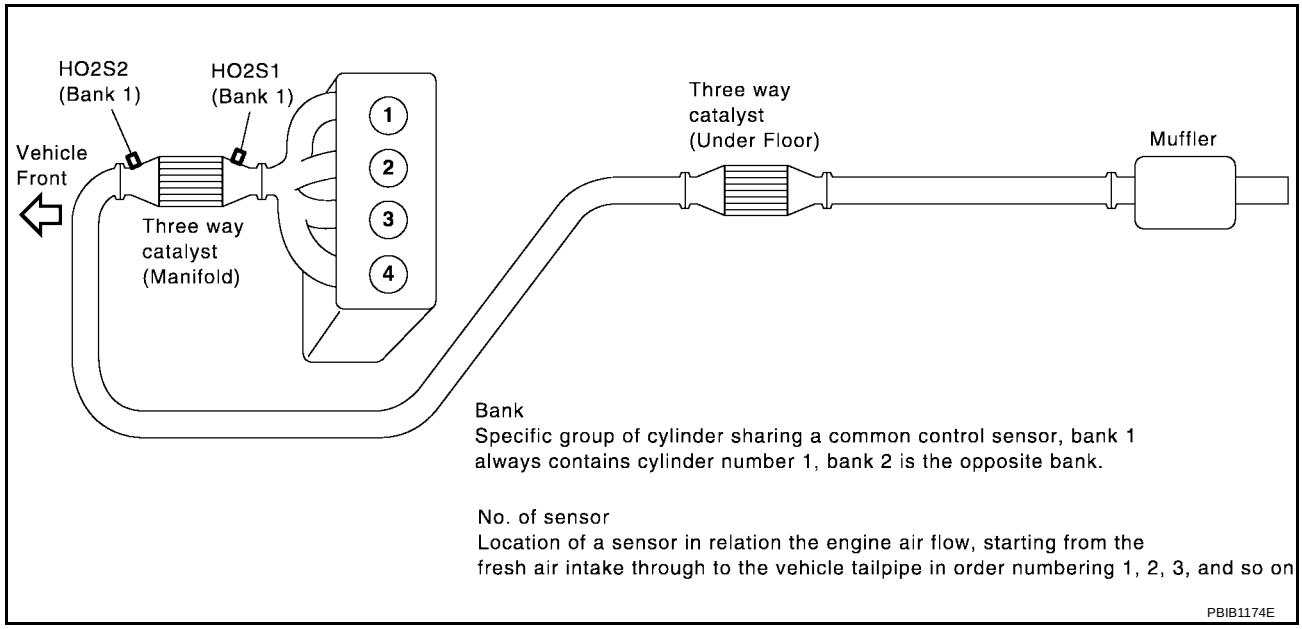
HO2S2
(Bank 1)
HO2S1
(Bank 1)
Vehicle
Front
Three way
catalyst
(Manifold)
1
2
3
4
Three way
catalyst
(Under Floor)
Muffler
Bank
Specific group of cylinder sharing a common control sensor, bank 1
always contains cylinder number 1, bank 2 is the opposite bank.
No. of sensor
Location of a sensor in relation the engine air flow, starting from the
fresh air intake through to the vehicle tailpipe in order numbering 1, 2, 3, and so on
PBIB1174E

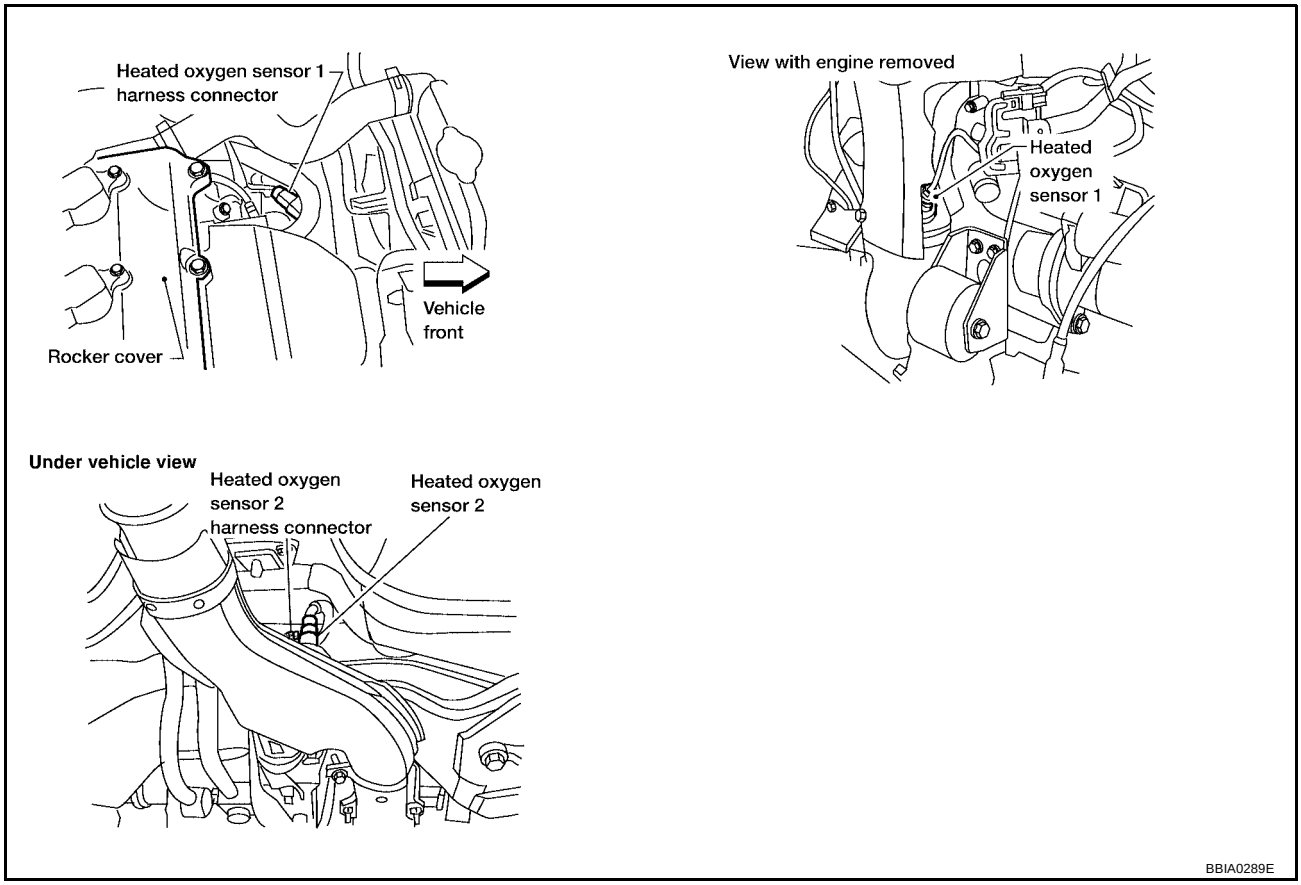
Heated oxygen sensor 1
harness connector
Rocker cover
Vehicle
front
View with engine removed
Heated
oxygen
sensor 1
Under vehicle view
Heated oxygen
sensor 2
harness connector
Heated oxygen
sensor 2
BBIA0289E

A/T MODELS EXCEPT ULEV

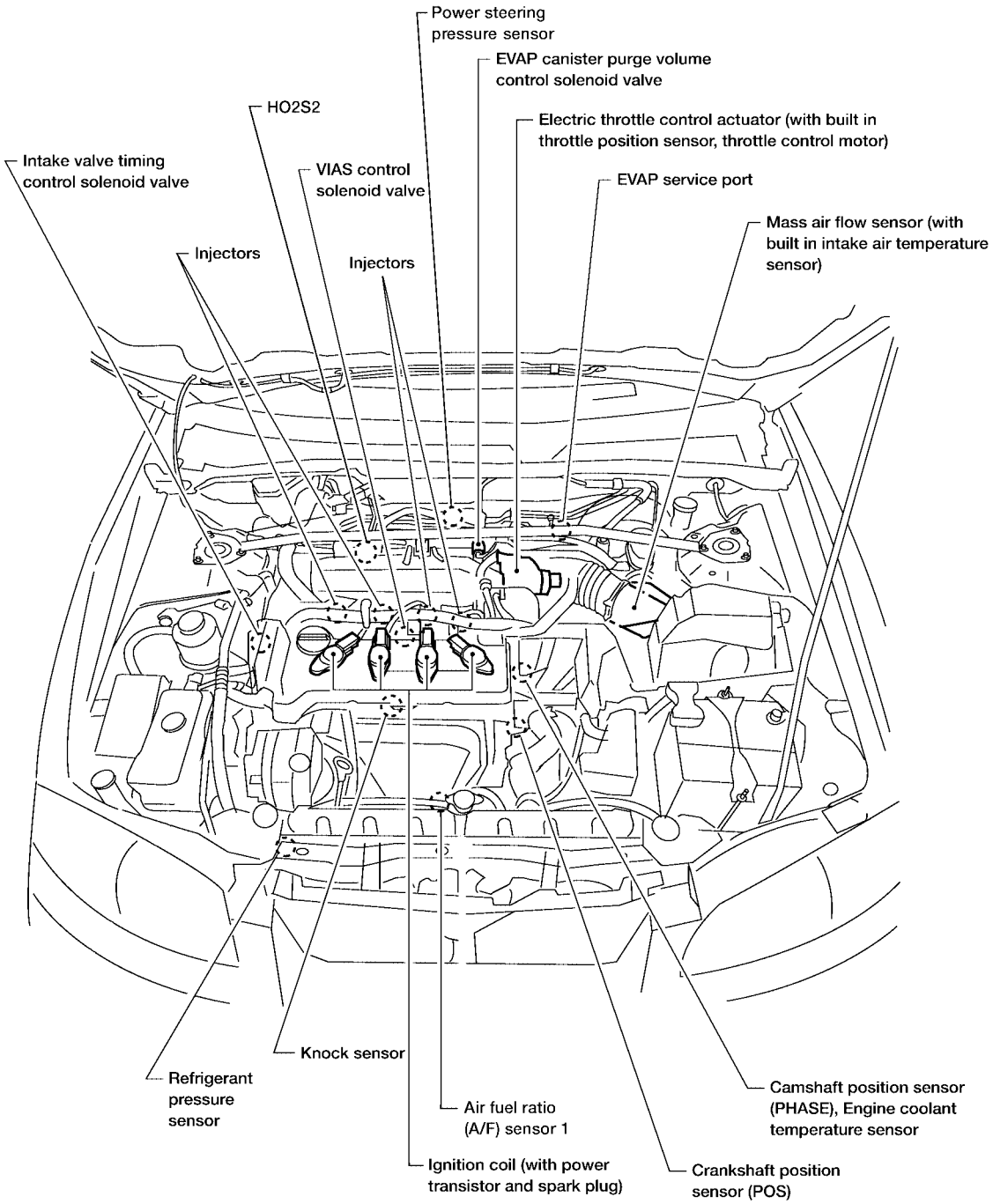

BBIA0302E

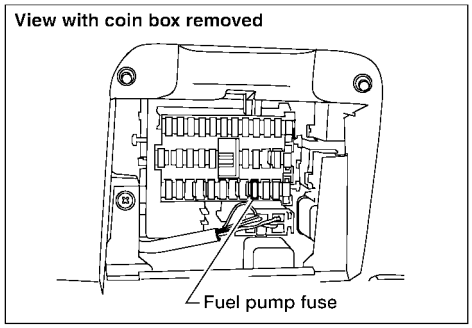
View with coin box removed
Fuel pump fuse

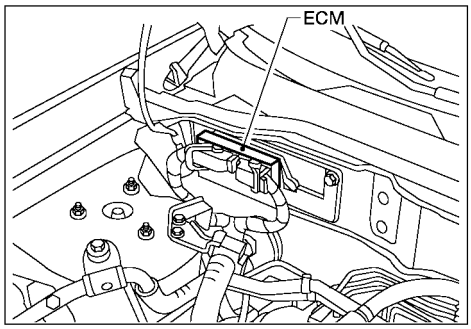
ECM

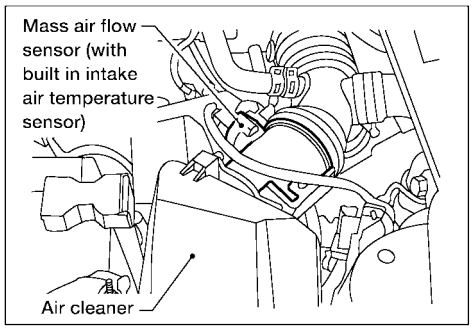
Mass air flow sensor (with built in intake air temperature sensor)
Air cleaner

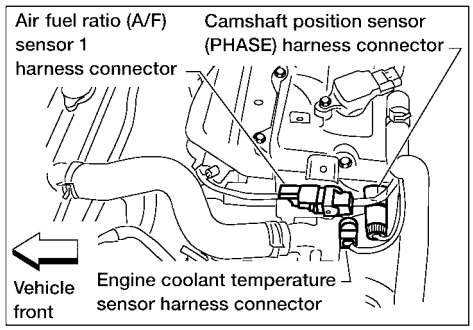
Air fuel ratio (A/F) sensor 1 harness connector
Camshaft position sensor (PHASE) harness connector
Vehicle front
Engine coolant temperature sensor harness connector

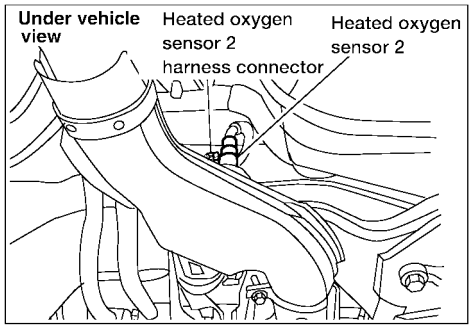
Under vehicle view
Heated oxygen sensor 2 harness connector
Heated oxygen sensor 2

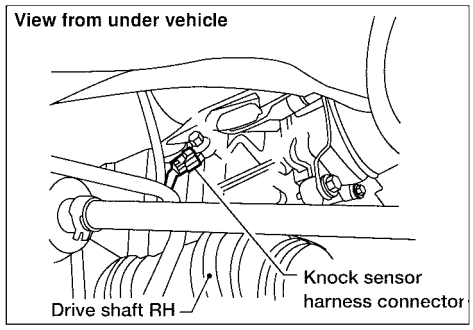
View from under vehicle
Knock sensor harness connector
Drive shaft RH

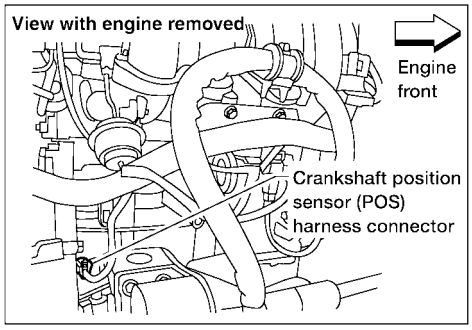
View with engine removed
Engine front
Crankshaft position sensor (POS) harness connector

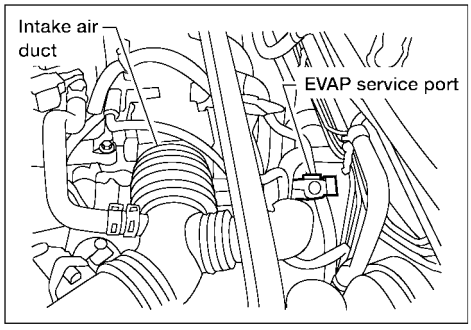
Intake air duct
EVAP service port

BBIA0303E

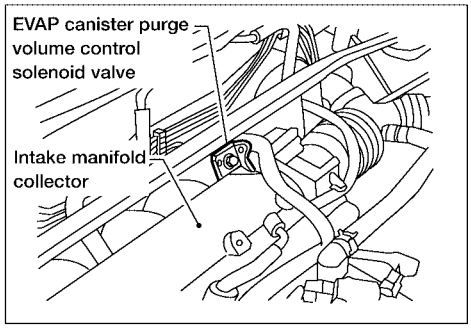
EVAP canister purge volume control solenoid valve
Intake manifold collector

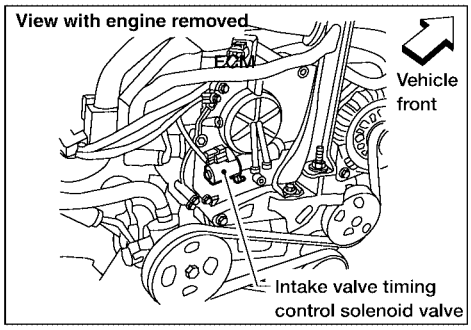
View with engine removed
ECM
Vehicle front
Intake valve timing control solenoid valve

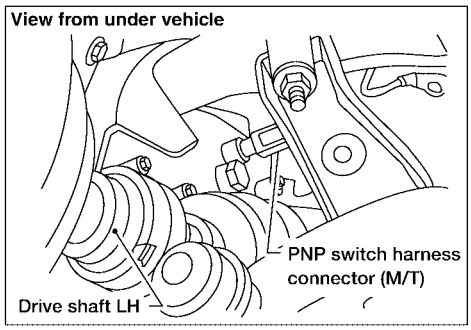
View from under vehicle
PNP switch harness connector (M/T)
Drive shaft LH

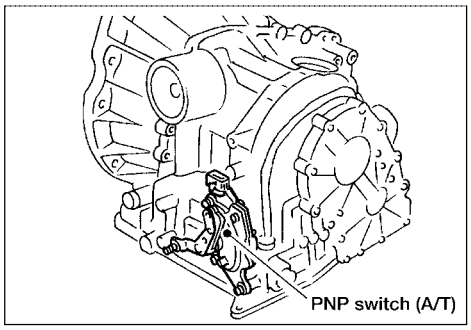
PNP switch (A/T)

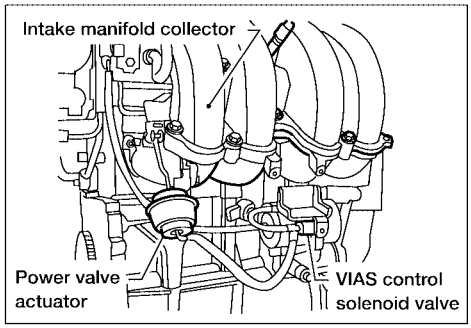
Intake manifold collector
Power valve actuator
VIAS control solenoid valve

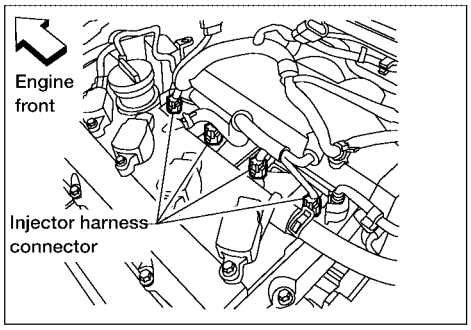
Engine front
Injector harness connector

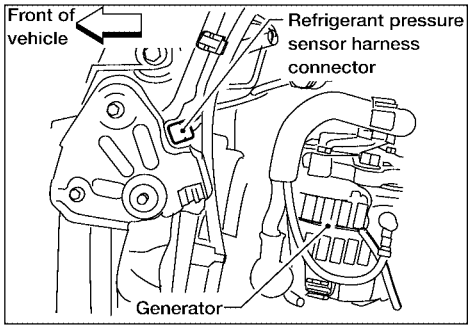
Front of vehicle
Refrigerant pressure sensor harness connector
Generator

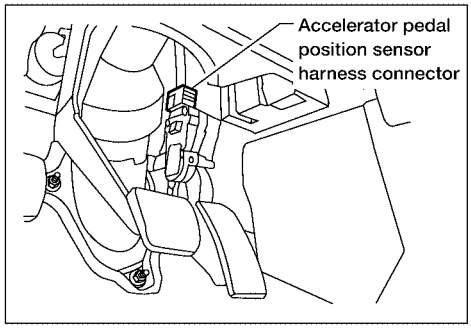
Accelerator pedal position sensor harness connector

BBIA0128E

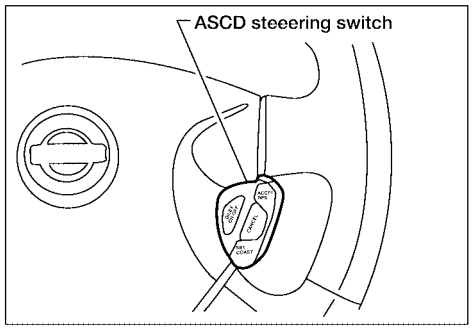
ASCD steeering switch

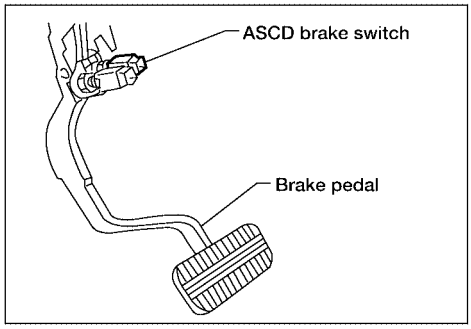
ASCD brake switch
Brake pedal

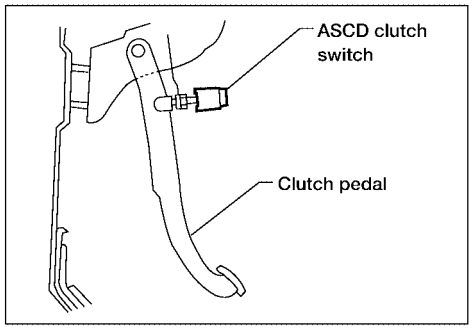
ASCD clutch switch
Clutch pedal

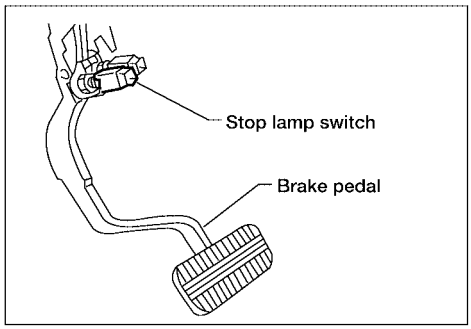
Stop lamp switch
Brake pedal

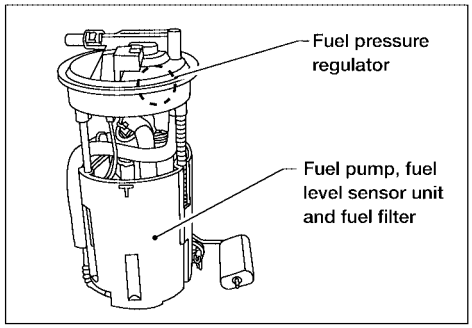
Fuel pressure regulator
Fuel pump, fuel level sensor unit and fuel filter

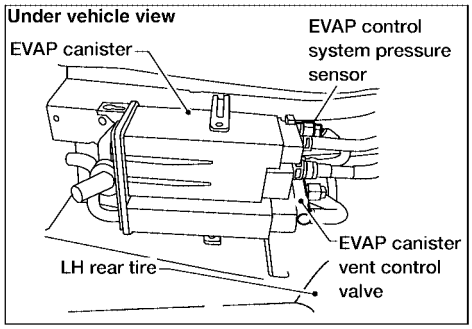
Under vehicle view
EVAP canister
EVAP control system pressure sensor
EVAP canister vent control valve
LH rear tire

BBIA0342E

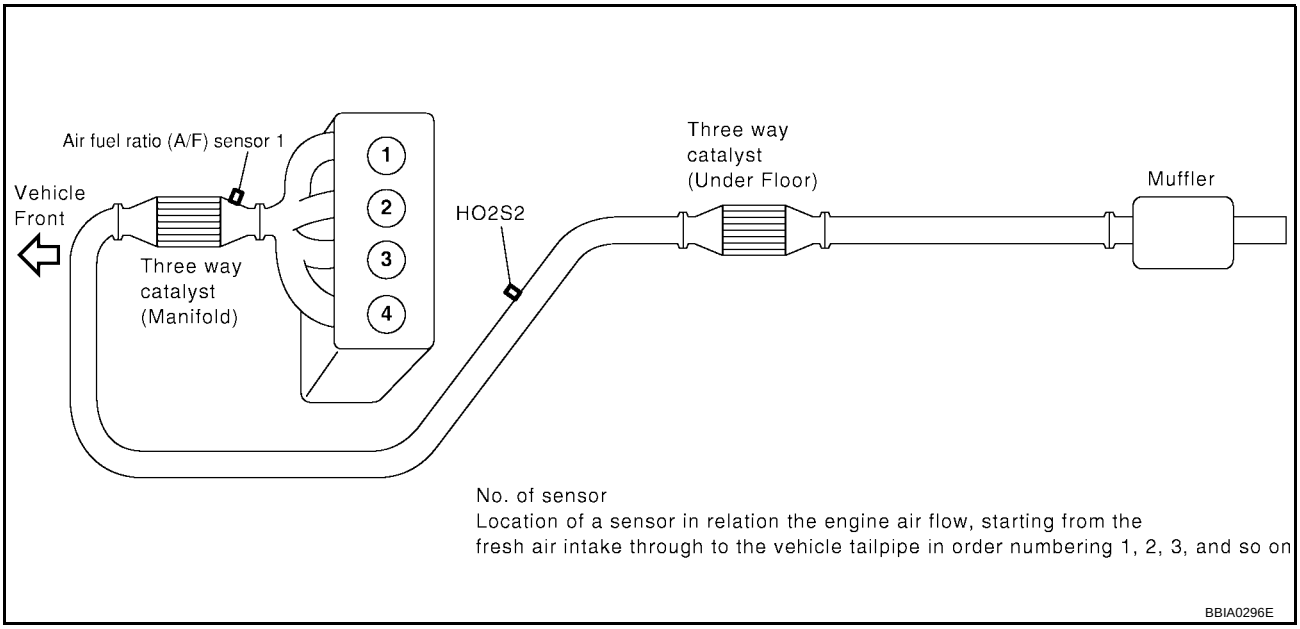
Air fuel ratio (A/F) sensor 1
Vehicle Front
Three way catalyst (Manifold)
1
2
3
4
HO2S2
Three way catalyst (Under Floor)
Muffler
No. of sensor
Location of a sensor in relation the engine air flow, starting from the fresh air intake through to the vehicle tailpipe in order numbering 1, 2, 3, and so on
BBIA0296E

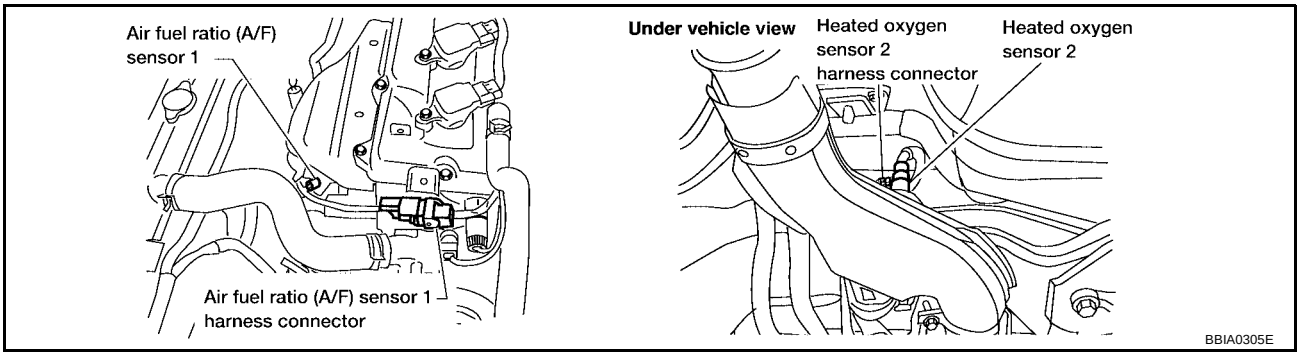
Air fuel ratio (A/F) sensor 1
Air fuel ratio (A/F) sensor 1 harness connector
Under vehicle view
Heated oxygen sensor 2 harness connector
Heated oxygen sensor 2
BBIA0305E

Vacuum Hose Drawing

UBS00J9Z

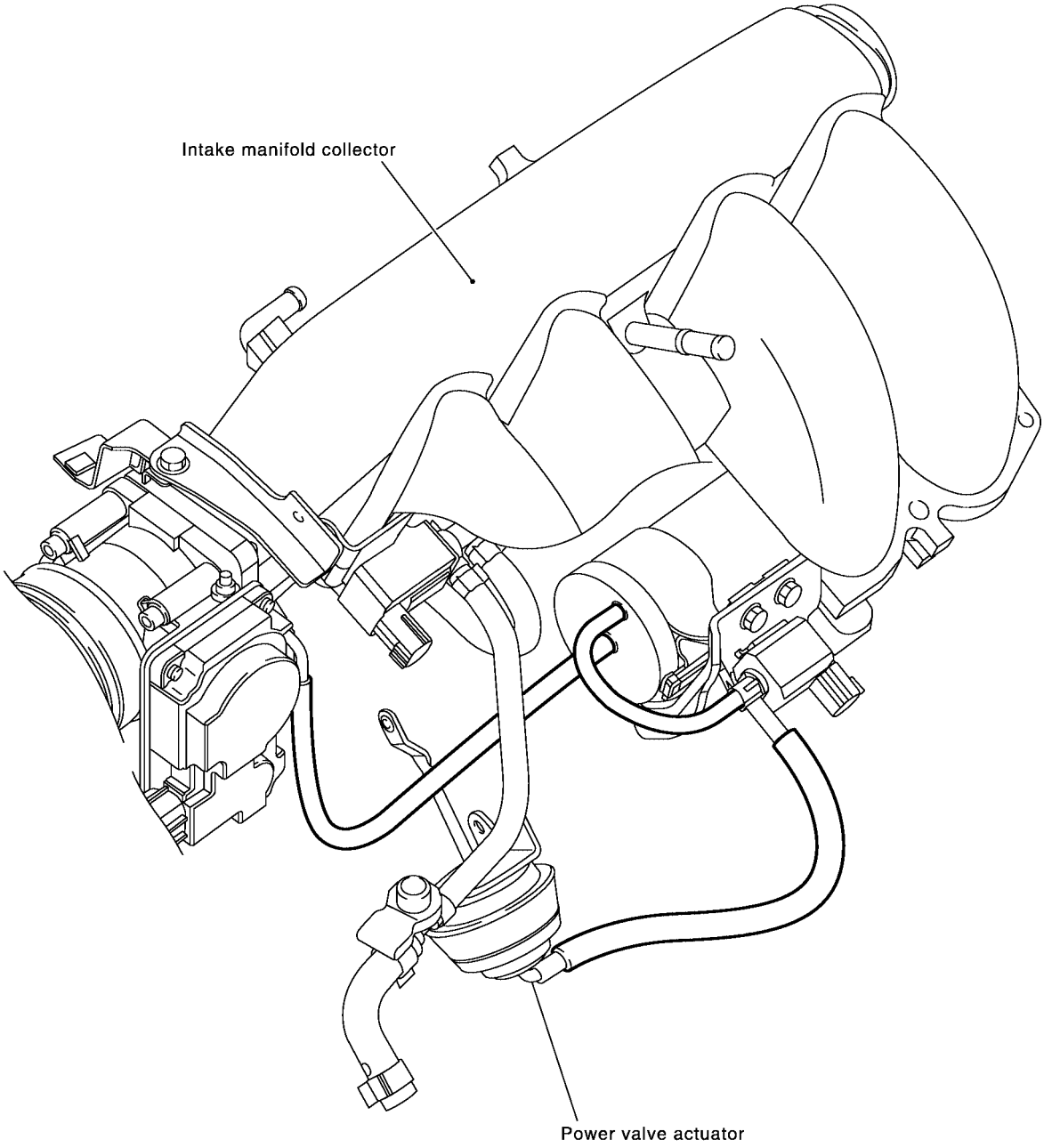

BBIA0286E

NOTE:
Do not use soapy water or any type of solvent while installing vacuum hose or purge hoses.
Refer to EC-671, "System Diagram" for Vacuum Control System.

Circuit Diagram

UBS00JA0

A/T MODELS ULEV AND M/T MODELS

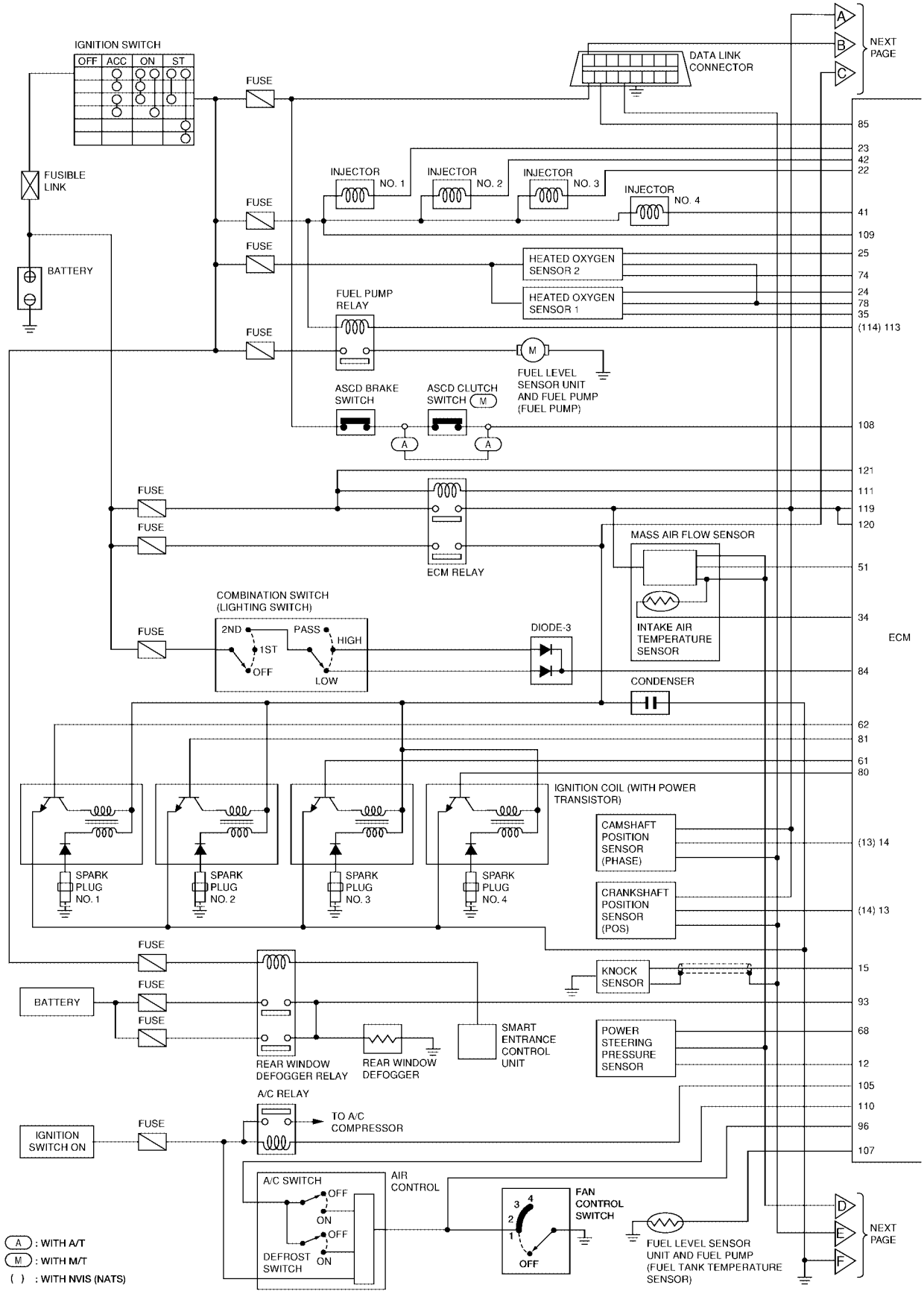

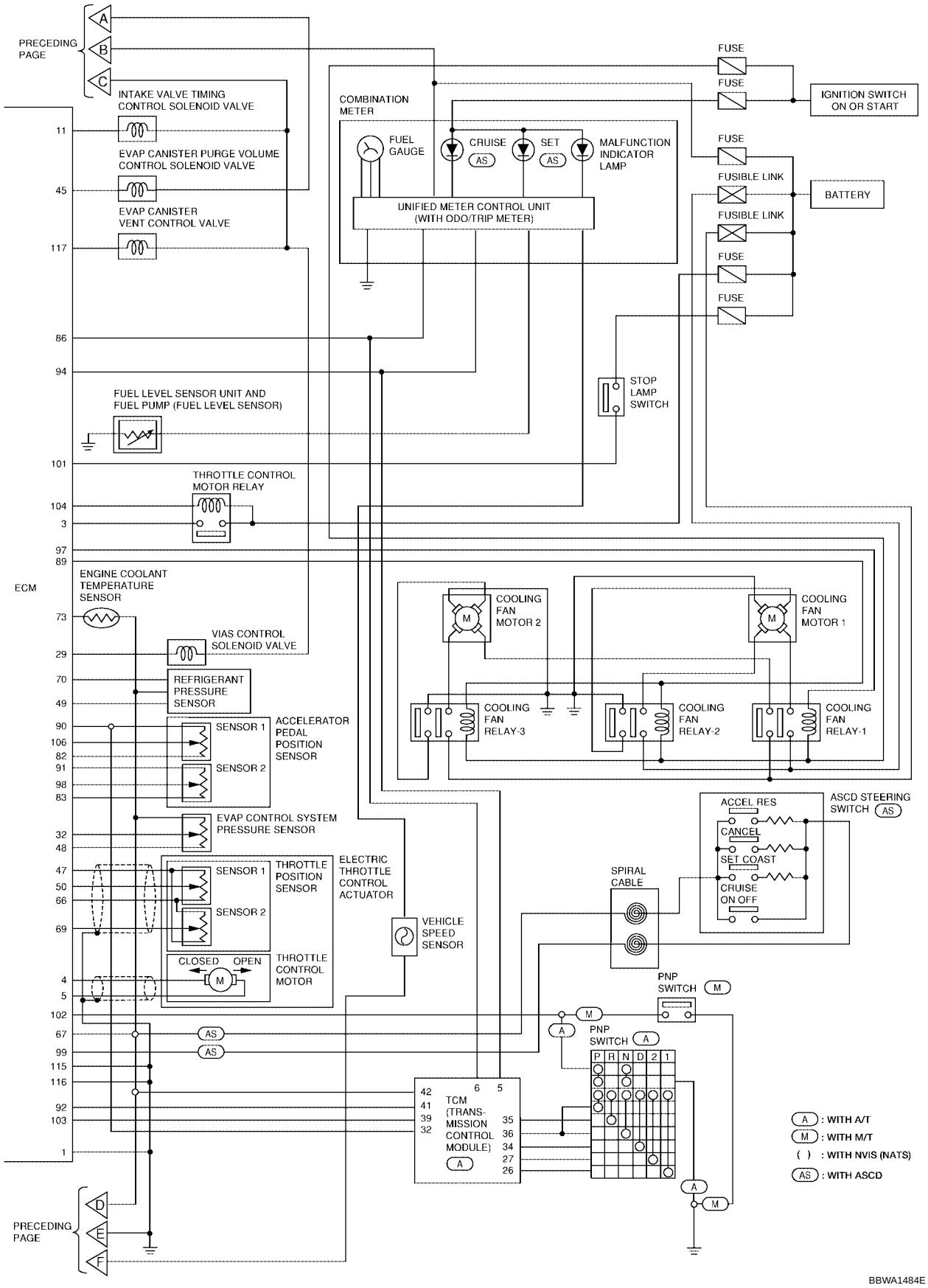
PRECEDING PAGE
A
B
C
INTAKE VALVE TIMING CONTROL SOLENOID VALVE
11
EVAP CANISTER PURGE VOLUME CONTROL SOLENOID VALVE
45
EVAP CANISTER VENT CONTROL VALVE
117
86
94
FUEL LEVEL SENSOR UNIT AND FUEL PUMP (FUEL LEVEL SENSOR)
101
THROTTLE CONTROL MOTOR RELAY
104
3
97
89
ECM
ENGINE COOLANT TEMPERATURE SENSOR
73
VIAS CONTROL SOLENOID VALVE
29
70
REFRIGERANT PRESSURE SENSOR
49
90
106
82
91
98
83
SENSOR 1
SENSOR 2
ACCELERATOR PEDAL POSITION SENSOR
EVAP CONTROL SYSTEM PRESSURE SENSOR
32
48
47
50
66
69
SENSOR 1
SENSOR 2
THROTTLE POSITION SENSOR
ELECTRIC THROTTLE CONTROL ACTUATOR
CLOSED
OPEN
M
THROTTLE CONTROL MOTOR
4
5
102
67
99
115
116
92
103
1
AS
VEHICLE SPEED SENSOR
COMBINATION METER
FUEL GAUGE
CRUISE
AS
SET
AS
MALFUNCTION INDICATOR LAMP
UNIFIED METER CONTROL UNIT (WITH ODO/TRIP METER)
FUSE
FUSE
IGNITION SWITCH ON OR START
FUSE
FUSIBLE LINK
BATTERY
FUSIBLE LINK
FUSE
FUSE
STOP LAMP SWITCH
COOLING FAN MOTOR 2
COOLING FAN MOTOR 1
COOLING FAN RELAY-3
COOLING FAN RELAY-2
COOLING FAN RELAY-1
ACCEL RES
CANCEL
SET COAST
CRUISE ON OFF
ASCD STEERING SWITCH
AS
SPIRAL CABLE
PNP SWITCH
M
A
PNP SWITCH
A
P R N D 2 1
TCM (TRANS-MISSION CONTROL MODULE)
A
42
41
39
32
6
5
35
36
34
27
26
A : WITH A/T
M : WITH M/T
( ) : WITH NVIS (NATS)
AS : WITH ASCD
PRECEDING PAGE
D
E
F
BBWA1484E

A/T MODELS EXCEPT ULEV

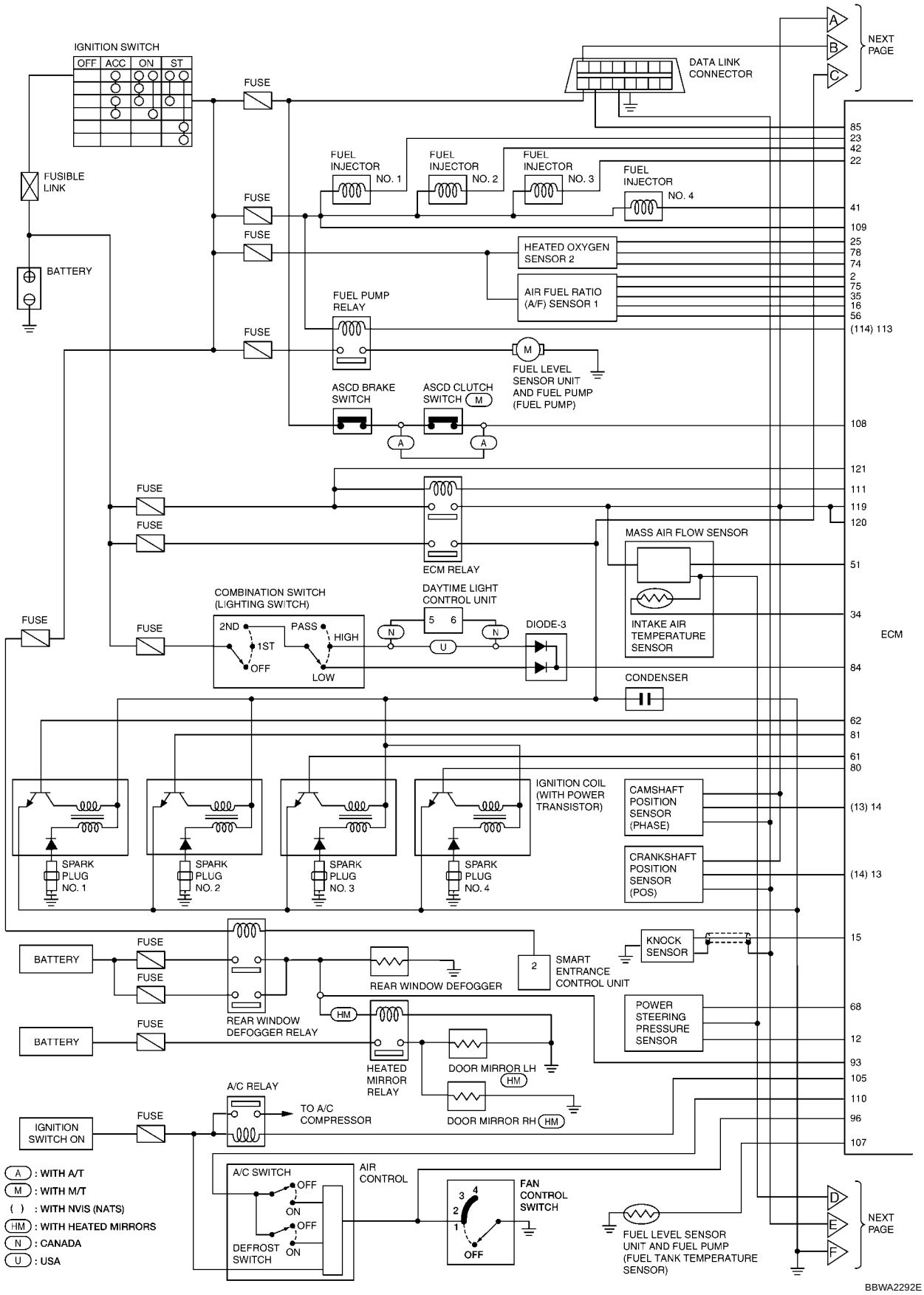

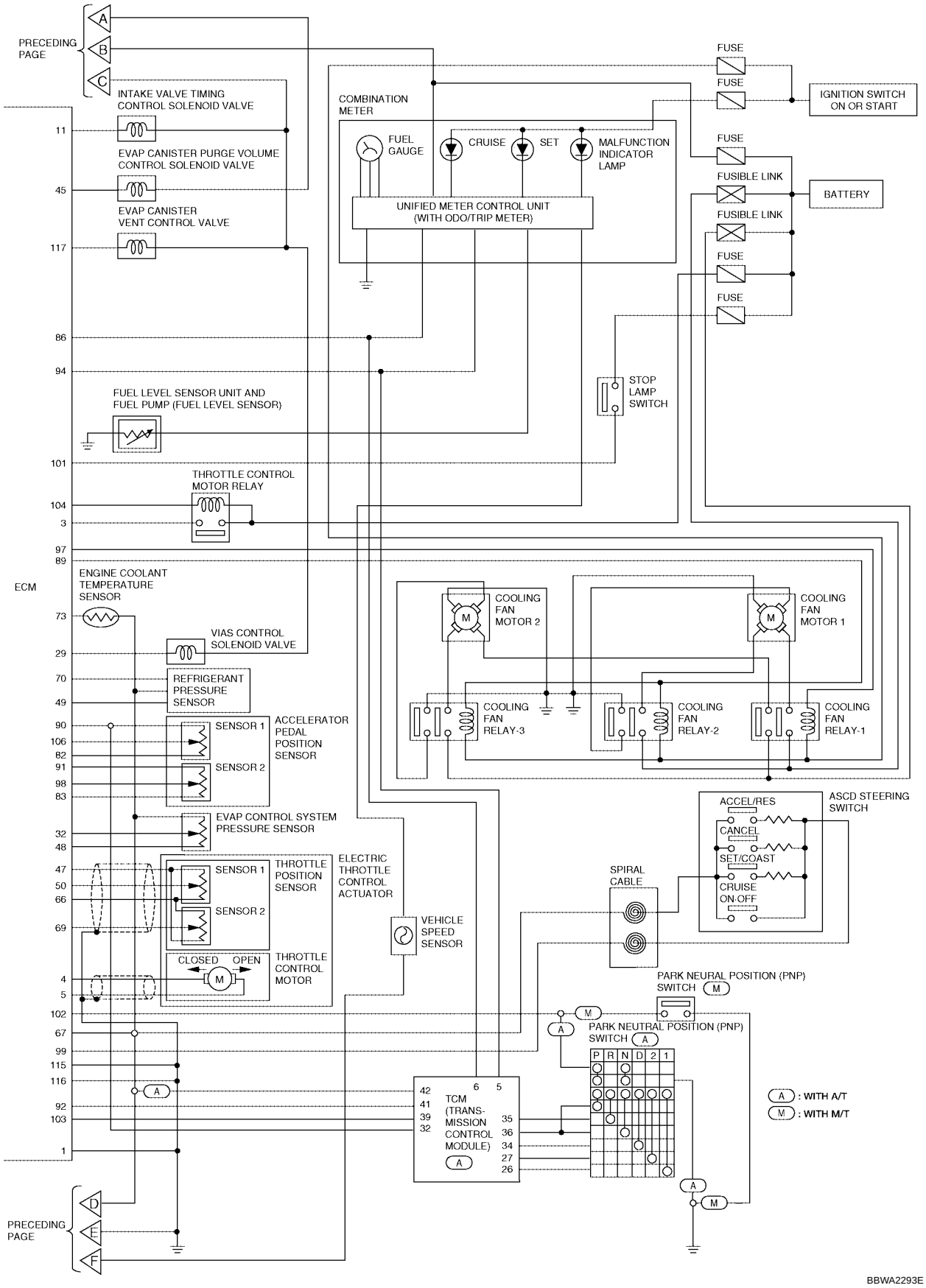
PRECEDING PAGE
A
B
C
INTAKE VALVE TIMING CONTROL SOLENOID VALVE
EVAP CANISTER PURGE VOLUME CONTROL SOLENOID VALVE
EVAP CANISTER VENT CONTROL VALVE
COMBINATION METER
FUEL GAUGE
CRUISE
SET
MALFUNCTION INDICATOR LAMP
UNIFIED METER CONTROL UNIT (WITH ODO/TRIP METER)
FUSE
IGNITION SWITCH ON OR START
FUSIBLE LINK
BATTERY
STOP LAMP SWITCH
FUEL LEVEL SENSOR UNIT AND FUEL PUMP (FUEL LEVEL SENSOR)
THROTTLE CONTROL MOTOR RELAY
ECM
ENGINE COOLANT TEMPERATURE SENSOR
VIAS CONTROL SOLENOID VALVE
REFRIGERANT PRESSURE SENSOR
ACCELERATOR PEDAL POSITION SENSOR
SENSOR 1
SENSOR 2
EVAP CONTROL SYSTEM PRESSURE SENSOR
THROTTLE POSITION SENSOR
ELECTRIC THROTTLE CONTROL ACTUATOR
CLOSED
OPEN
THROTTLE CONTROL MOTOR
VEHICLE SPEED SENSOR
COOLING FAN MOTOR 2
COOLING FAN MOTOR 1
COOLING FAN RELAY-3
COOLING FAN RELAY-2
COOLING FAN RELAY-1
ACCEL/RES
CANCEL
SET/COAST
CRUISE ON-OFF
ASCD STEERING SWITCH
SPIRAL CABLE
PARK NEURAL POSITION (PNP) SWITCH
P R N D 2 1
TCM (TRANS-MISSION CONTROL MODULE)
: WITH A/T
: WITH M/T
BBWA2293E

ECM Harness Connector Terminal Layout

UBS00JA1

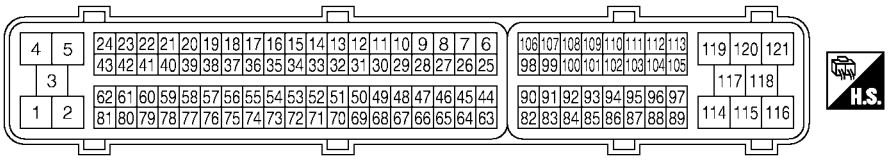

PBIB1192E

ECM Terminals and Reference Value

UBS00KJJ

PREPARATION

1. ECM is located in the right side of the cowl top (behind the strut tower).

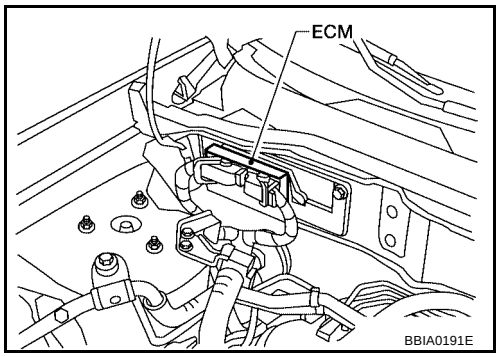

BBIA0191E

2. Remove ECM harness protector.
3. When disconnecting ECM harness connector, loosen it with levers as far as they will go as shown at right.
4. Connect a break-out box (SST) and Y-cable adapter (SST) between the ECM and ECM harness connector.
   - Use extreme care not to touch 2 pins at one time.
   - Data is for comparison and may not be exact.

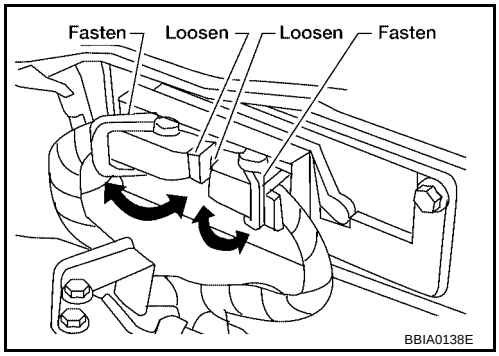

BBIA0138E

ECM INSPECTION TABLE

Specification data are reference values and are measured between each terminal and ground.
Pulse signal is measured by CONSULT-II.

CAUTION:

Do not use ECM ground terminals when measuring input/output voltage. Doing so may result in damage to the ECM's transistor. Use a ground other than ECM terminals, such as the ground.

TERMINAL NO.	WIRE COLOR	ITEM	CONDITION	DATA (DC Voltage)
1	B	ECM ground	**[Engine is running]** ● Idle speed	Body ground
2*4	R	A/F sensor 1 heater	**[Engine is running]** ● **Warm-up condition** ● Idle speed	Approximately 5V★ 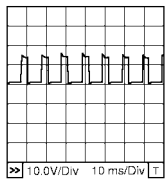 PBIB1584E

TERMINAL NO.	WIRE COLOR	ITEM	CONDITION	DATA (DC Voltage)
3	R/W	Throttle control motor power supply	**[Ignition switch: ON]**	BATTERY VOLTAGE (11 - 14V)
4	P	Throttle control motor (Close)	**[Ignition switch: ON]** ● Engine stopped ● Shift lever: D (A/T), 1ST (M/T) ● Accelerator pedal: Fully released	0 - 14V★ 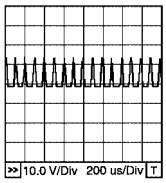 PBIB0534E
5	L	Throttle control motor (Open)	**[Ignition switch: ON]** ● Engine stopped ● Shift lever: D (A/T), 1ST (M/T) ● Accelerator pedal: Fully depressed	0 - 14V★ 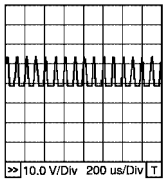 PBIB0533E
11	G/Y	Intake valve timing control solenoid valve	**[Engine is running]** ● **Warm-up condition** ● Idle speed	BATTERY VOLTAGE (11 - 14V)
			[Engine is running] ● **Warm-up condition** ● Engine speed 2,500 rpm	7 - 10V★ 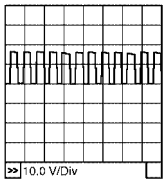 PBIB1790E
12	P	Power steering pressure sensor	**[Engine is running]** ● Steering wheel is being turned	0.5 - 4.0V
			[Engine is running] ● Steering wheel is not being turned	0.4 - 0.8V
13*1 (14)*2	Y	Crankshaft position sensor (POS)	**[Engine is running]** ● **Warm-up condition** ● Idle speed	Approximately 3.0V★ 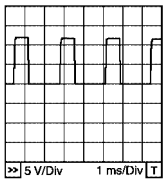 PBIB0527E
			[Engine is running] ● Engine speed is 2,000 rpm	Approximately 3.0V★ 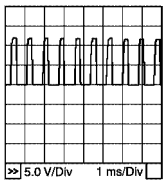 PBIB0528E

TERMINAL NO.	WIRE COLOR	ITEM	CONDITION	DATA (DC Voltage)
14*1 (13)*2	W/R	Camshaft position sensor (PHASE)	**[Engine is running]** ● **Warm-up condition** ● Idle speed	1.0 - 4.0V★ 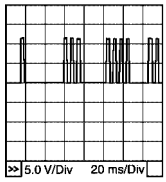 PBIB0525E
			[Engine is running] ● Engine speed is 2,000 rpm.	1.0 - 4.0V★ 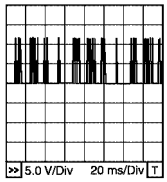 PBIB0526E
15	W	Knock sensor	**[Engine is running]** ● Idle speed	Approximately 2.5V
16*4	OR/L	A/F sensor 1	**[Engine is running]** ● **Warm-up condition** ● Idle speed	Approximately 3.1V
35*4	B/Y			Approximately 2.6V
56*4	OR			2 - 3V
75*4	W/L			2 - 3V
22 23 41 42	G/B R/B L/B Y/B	Injector No. 3 Injector No. 1 Injector No. 4 Injector No. 2	**[Engine is running]** ● **Warm-up condition** ● Idle speed	BATTERY VOLTAGE (11 - 14V)★ 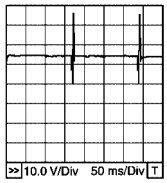 PBIB0529E
			[Engine is running] ● **Warm-up condition** ● Engine speed is 2,000 rpm	BATTERY VOLTAGE (11 - 14V)★ 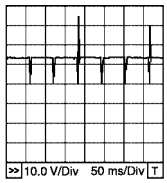 PBIB0530E
24*3	G/W	Heated oxygen sensor 1 heater	**[Engine is running]** ● **Warm-up condition.** ● Engine speed is below 3,600 rpm.	Approximately 7.0V★ 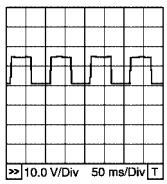 PBIB0519E
			[Engine is running] ● Engine speed is above 3,600 rpm.	BATTERY VOLTAGE (11 - 14V)

TERMINAL NO.	WIRE COLOR	ITEM	CONDITION	DATA (DC Voltage)
25	W/B	Heated oxygen sensor 2 heater	**[Engine is running]** ● **Warm-up condition** ● Engine speed: Below 3,600 rpm after the following conditions are met. ● Keeping the engine speed between 3,500 and 4,000 rpm for 1 minute and at idle for 1 minute under on load	0 - 1.0V
			[Ignition switch: ON] ● Engine stopped. **[Engine is running]** ● Engine speed is above 3,600 rpm.	BATTERY VOLTAGE (11 - 14V)
29	Y/R	VIAS control solenoid valve	**[Engine is running]** ● Idle speed	BATTERY VOLTAGE (11 - 14V)
			[Engine is running] ● Engine speed is above 5,000 rpm	0 - 1.0V
32	L	EVAP control system pressure sensor	**[Ignition switch: ON]**	Approximately 1.8 - 4.8V
34	Y/G	Intake air temperature sensor	**[Engine is running]**	Approximately 0 - 4.8V Output voltage varies with intake air temperature.
35*3	B/Y	Heated oxygen sensor 1	**[Engine is running]** ● **Warm-up condition** ● Engine speed is 2,000 rpm.	0 - Approximately 1.0V (Periodically change)
45	GY/L	EVAP canister purge volume control solenoid valve	**[Engine is running]** ● Idle speed ● Accelerator pedal is not depressed even slightly, after engine starting*4	BATTERY VOLTAGE (11 - 14V)★ 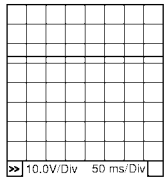 PBIB0050E
			[Engine is running] ● Engine speed is about 2,000 rpm (More than 100 seconds after starting engine)	Approximately 10V★ 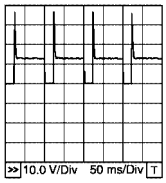 PBIB0520E
47	B	Sensor power supply (Throttle position sensor)	**[Ignition switch: ON]**	Approximately 5V
48	R/W	Sensor power supply (EVAP control system pressure sensor)	**[Ignition switch: ON]**	Approximately 5V
49	R/Y	Sensor power supply (Refrigerant pressure sensor)	**[Ignition switch: ON]**	Approximately 5V

TERMI-NAL NO.	WIRE COLOR	ITEM	CONDITION	DATA (DC Voltage)
50	W	Throttle position sensor 1	**[Ignition switch: ON]** ● Engine stopped ● Shift lever: D (A/T), 1ST (M/T) ● Accelerator pedal: Fully released	More than 0.36V
			[Ignition switch: ON] ● Engine stopped ● Shift lever: D (A/T), 1ST (M/T) ● Accelerator pedal: Fully depressed	Less than 4.75V
51	L/R	Mass air flow sensor	**[Engine is running]** ● **Warm-up condition** ● Idle speed	0.9 - 1.1V
			[Engine is running] ● **Warm-up condition** ● Engine speed is 2,500 rpm.	1.5 - 1.8V
61 62 80 81	L/W BR GY/R PU	Ignition signal No. 3 Ignition signal No. 1 Ignition signal No. 4 Ignition signal No. 2	**[Engine is running]** ● **Warm-up condition** ● Idle speed	0 - 0.1V★ 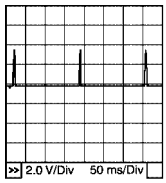 PBIB0521E
			[Engine is running] ● **Warm-up condition** ● Engine speed is 2,000 rpm.	0 - 0.2V★ 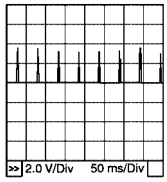 PBIB0522E
66	R	Sensor ground (Throttle position sensor)	**[Engine is running]** ● **Warm-up condition** ● Idle speed	Approximately 0V
67	B/W	Sensor ground	**[Engine is running]** ● **Warm-up condition** ● Idle speed	Approximately 0V
68	G/R	Sensor power supply (Power steering pressure sensor)	**[Ignition switch: ON]**	Approximately 5V
69	G	Throttle position sensor 2	**[Ignition switch: ON]** ● Engine stopped ● Shift lever: D (A/T), 1ST (M/T) ● Accelerator pedal: Fully released	Less than 4.75V
			[Ignition switch: ON] ● Engine stopped ● Shift lever: D (A/T), 1ST (M/T) ● Accelerator pedal: Fully depressed	More than 0.36V

TERMINAL NO.	WIRE COLOR	ITEM	CONDITION	DATA (DC Voltage)
70	L	Refrigerant pressure sensor	**[Engine is running]** ● **Warm-up condition** ● Both A/C switch and blower switch are ON (Compressor operates.)	1.0 - 4.0V
73	BR/W	Engine coolant temperature sensor	**[Engine is running]**	Approximately 0 - 4.8V Output voltage varies with engine coolant temperature.
74	R/L	Heated oxygen sensor 2	**[Engine is running]** ● **Warm-up condition** ● Revving engine from idle up to 3,000 rpm quickly after the following conditions are met. ● Keeping the engine speed between 3,500 and 4,000 rpm for 1 minute and at idle for 1 minute under no load.	0 - Approximately 1.0V
78	B	Sensor ground (Heated oxygen sensor)	**[Engine is running]** ● **Warm-up condition** ● Idle speed	Approximately 0V
82	B/Y	Sensor ground (Accelerator pedal position sensor 1)	**[Engine is running]** ● **Warm-up condition** ● Idle speed	Approximately 0V
83	G	Sensor ground (Accelerator pedal position sensor 2)	**[Engine is running]** ● **Warm-up condition** ● Idle speed	Approximately 0V
84	PU	Electrical load signal (Headlamp signal)	**[Lighting switch: ON]** ● Lighting switch: 2nd position	BATTERY VOLTAGE (11 - 14V)
			[Lighting switch: ON] ● Lighting switch: OFF	Approximately 0V
85	LG	DATA link connector	**[Ignition switch: ON]** ● CONSULT-II or GST is disconnected.	BATTERY VOLTAGE (11 - 14V)
86	Y	CAN communication line	**[Ignition switch: ON]**	Approximately 2.3V
89	LG/B	Cooling fan relay (High)	**[Engine is running]** ● Cooling fan is not operating	BATTERY VOLTAGE (11 - 14V)
			[Engine is running] ● Cooling fan is high speed operating	0 - 1.0V
90	R	Sensor power supply (Accelerator pedal position sensor 1)	**[Ignition switch: ON]**	Approximately 5V
91	R/Y	Sensor power supply (Accelerator pedal position sensor 2)	**[Ignition switch: ON]**	Approximately 5V
93	L/W	Electrical load signal (Rear window defogger signal)	**[Ignition switch: ON]** ● Rear window defogger switch: ON	BATTERY VOLTAGE (11 - 14V)
			[Ignition switch: ON] ● Rear window defogger switch: OFF	Approximately 0V
94	L	CAN communication line	**[Ignition switch: ON]**	Approximately 2.8V

TERMI-NAL NO.	WIRE COLOR	ITEM	CONDITION	DATA (DC Voltage)
96	Y/G	Electrical load signal (Heater fan switch)	**[Engine is running]** ● Heater fan switch: ON	Approximately 0V
			[Engine is running] ● Heater fan switch: OFF	Approximately 5V
97	LG/R	Cooling fan relay (Low)	**[Ignition switch: ON]** ● Cooling fan is not operating	BATTERY VOLTAGE (11 - 14V)
			[Ignition switch: ON] ● Cooling fan is operating	0 - 1.0V
98	R/B	Accelerator pedal position sensor 2	**[Ignition switch: ON]** ● Engine stopped ● Accelerator pedal: Fully released	0.28 - 0.48V
			[Ignition switch: ON] ● Engine stopped ● Accelerator pedal: Fully depressed	More than 2.0V
99	W/R	ASCD steering switch	**[Ignition switch: ON]** ● ASCD steering switch is OFF.	Approximately 4V
			[Ignition switch: ON] ● MAIN switch is ON.	Approximately 0V
			[Ignition switch: ON] ● CANCEL switch is ON.	Approximately 1V
			[Ignition switch: ON] ● SET/COAST switch is ON.	Approximately 2V
			[Ignition switch: ON] ● RESUME/ACCELERATE switch is ON.	Approximately 3V
101	R/G	Stop lamp switch	**[Ignition switch: OFF]** ● Brake pedal: Fully released	Approximately 0V
			[Ignition switch: OFF] ● Brake pedal: Slightly depressed	BATTERY VOLTAGE (11 - 14V)
102	G/OR	PNP switch	**[Ignition switch: ON]** ● Shift lever: P or N (A/T), Neutral (M/T)	Approximately 0V
			[Ignition switch: ON] ● Except above position	BATTERY VOLTAGE (11 - 14V)
104	P	Throttle control motor relay	**[Ignition switch: OFF]**	BATTERY VOLTAGE (11 - 14V)
			[Ignition switch: ON]	0 - 1.0V
106	W	Accelerator pedal position sensor 1	**[Ignition switch: ON]** ● Engine stopped ● Accelerator pedal: Fully released	0.65 - 0.87V
			[Ignition switch: ON] ● Engine stopped ● Accelerator pedal: Fully depressed	More than 4.3V
107	OR	Fuel tank temperature sen-sor	**[Engine is running]**	Approximately 0 - 4.8V Output voltage varies with fuel tank temperature.

TERMINAL NO.	WIRE COLOR	ITEM	CONDITION	DATA (DC Voltage)
108	P/L	ASCD brake switch	**[Ignition switch: ON]** ● Brake pedal: Slightly depressed (A/T) ● Brake pedal and/or clutch pedal: Slightly depressed (M/T)	Approximately 0V
			[Ignition switch: ON] ● Brake pedal: Fully released (A/T) ● Brake pedal and clutch pedal: Fully released (M/T)	BATTERY VOLTAGE (11 - 14V)
109	B/R	Ignition switch	**[Ignition switch: OFF]**	0V
			[Ignition switch: ON]	BATTERY VOLTAGE (11 - 14V)
111	W/G	ECM relay (Self shut-off)	**[Engine is running]** **[Ignition switch: OFF]** ● A few seconds after turning ignition switch OFF	0 - 1.0V
			[Ignition switch: OFF] ● More than a few seconds after turning ignition switch OFF	BATTERY VOLTAGE (11 - 14V)
113*1 (114)*2	B/P	Fuel pump relay	**[Ignition switch: ON]** ● For 1 second after turning ignition switch ON **[Engine is running]**	0 - 1.0V
			[Ignition switch: ON] ● More than 1 second after turning ignition switch ON.	BATTERY VOLTAGE (11 - 14V)
115 116	B	ECM ground	**[Engine is running]** ● Idle speed	Body ground
117	L/Y	EVAP canister vent control valve	**[Ignition switch: ON]**	BATTERY VOLTAGE (11 - 14V)
119 120	R/G	Power supply for ECM	**[Ignition switch: ON]**	BATTERY VOLTAGE (11 - 14V)
121	W/L	Power supply for ECM (Back-up)	**[Ignition switch: OFF]**	BATTERY VOLTAGE (11 - 14V)

★: Average voltage for pulse signal (Actual pulse signal can be confirmed by oscilloscope.)
*1: Without NVIS (NATS).
*2: With NVIS (NATS).
*3: A/T models ULEV and M/T models.
*4: A/T models except ULEV.

CONSULT-II Function (ENGINE)

UBS00JA3

FUNCTION

Diagnostic test mode	Function
Work support	This mode enables a technician to adjust some devices faster and more accurately by following the indications on the CONSULT-II unit.
Self-diagnostic results	Self-diagnostic results such as 1st trip DTC, DTCs and 1st trip freeze frame data or freeze frame data can be read and erased quickly.*1
Data monitor	Input/Output data in the ECM can be read.
Data monitor (SPEC)	Input/Output of the specification for Basic fuel schedule, AFM, A/F feedback control value and the other data monitor items can be read.
CAN diagnostic support monitor	The results of transmit/receive diagnosis of CAN communication can be read.

Diagnostic test mode	Function
Active test	Diagnostic Test Mode in which CONSULT-II drives some actuators apart from the ECMs and also shifts some parameters in a specified range.
Function test	This mode is used to inform customers when their vehicle condition requires periodic maintenance.
DTC & SRT confirmation	The status of system monitoring tests and the self-diagnosis status/result can be confirmed.
ECM part number	ECM part number can be read.

*1 The following emission-related diagnostic information is cleared when the ECM memory is erased.

- Diagnostic trouble codes
- 1st trip diagnostic trouble codes
- Freeze frame data
- 1st trip freeze frame data
- System readiness test (SRT) codes
- Test values

ENGINE CONTROL COMPONENT PARTS/CONTROL SYSTEMS APPLICATION

Item			DIAGNOSTIC TEST MODE							
			WORK SUP-PORT	SELF-DIAGNOSTIC RESULTS		DATA MONI-TOR	DATA MONI-TOR (SPEC)	ACTIVE TEST	DTC & SRT CONFIRMATION	
				DTC*1	FREEZE FRAME DATA*2				SRT STATUS	DTC WORK SUP-PORT
ENGINE CONTROL COMPONENT PARTS	INPUT	Crankshaft position sensor (POS)		×	×	×	×			
		Camshaft position sensor (PHASE)		×		×	×			
		Mass air flow sensor		×		×	×			
		Engine coolant temperature sensor		×	×	×	×	×		
		Air fuel ratio (A/F) sensor 1*4		×		×			×	×
		Heated oxygen sensor 1*3		×		×	×		×	×
		Heated oxygen sensor 2		×		×	×		×	×
		Vehicle speed sensor		×	×	×	×			
		Accelerator pedal position sensor		×		×	×			
		Throttle position sensor		×		×	×			
		Fuel tank temperature sensor		×		×	×	×		
		EVAP control system pressure sensor		×		×	×			
		Intake air temperature sensor		×		×	×			
		Knock sensor		×						
		Refrigerant pressure sensor				×	×			
		Closed throttle position switch (accelerator pedal position sensor signal)				×	×			
		Air conditioner switch				×	×			
		Park/neutral position (PNP) switch		×		×	×			
		Stop lamp switch		×		×	×			
		Power steering pressure sensor		×		×	×			
		Battery voltage				×	×			
		Load signal				×	×			
		Fuel level sensor		×		×	×			
		ASCD steering switch		×		×	×			
		ASCD brake switch		×		×	×			
		ASCD clutch switch		×		×	×			

Item			DIAGNOSTIC TEST MODE							
			WORK SUP-PORT	SELF-DIAGNOSTIC RESULTS		DATA MONI-TOR	DATA MONI-TOR (SPEC)	ACTIVE TEST	DTC & SRT CONFIRMATION	
				DTC*1	FREEZE FRAME DATA*2				SRT STATUS	DTC WORK SUP-PORT
ENGINE CONTROL COMPONENT PARTS	OUTPUT	Injector				×	×	×		
		Power transistor (Ignition timing)				×	×	×		
		Throttle control motor relay		×		×	×			
		Throttle control motor		×						
		EVAP canister purge volume control solenoid valve		×		×	×	×		×
		Air conditioner relay				×	×			
		Fuel pump relay	×			×	×	×		
		Cooling fan relay		×		×	×	×		
		Air fuel ratio (A/F) sensor 1 heater*4		×		×	×		×	
		Heated oxygen sensor 1 heater*3		×		×	×		×	
		Heated oxygen sensor 2 heater		×		×	×		×	
		EVAP canister vent control valve	×	×		×	×	×		
		Intake valve timing control solenoid valve		×		×	×	×		
		VIAS control solenoid valve		×		×	×	×		
		Calculated load value			×	×	×			

X: Applicable
*1: This item includes 1st trip DTCs.
*2: This mode includes 1st trip freeze frame data or freeze frame data. The items appear on CONSULT-II screen in freeze frame data mode only if a 1st trip DTC or DTC is detected. For details, refer to EC-702 .
*3: A/T models ULEV and M/T models.
*4: A/T models except ULEV.

INSPECTION PROCEDURE

1. Turn ignition switch OFF.
2. Connect CONSULT-II and CONSULT-II CONVERTER to data link connector, which is located under LH dash panel.
3. Turn ignition switch ON.

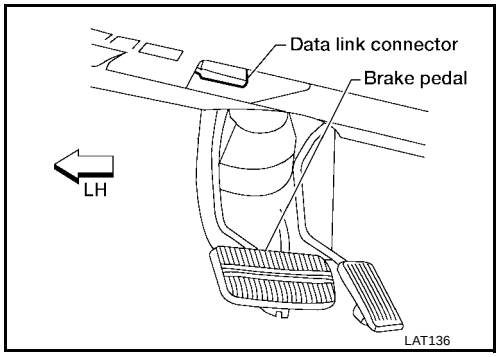

4. Touch “START” (NISSAN BASED VHCL).

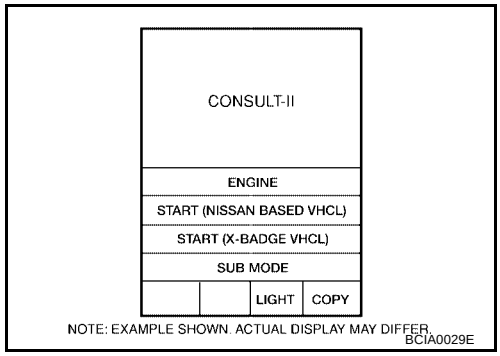

5. Touch “ENGINE”.
If “ENGINE” is not indicated, go to GI-39, "CONSULT-II Data Link Connector (DLC) Circuit" .

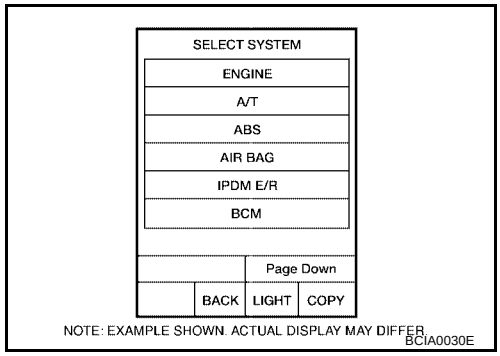

6. Perform each diagnostic test mode according to each service procedure.

For further information, see the CONSULT-II Operation Manual.

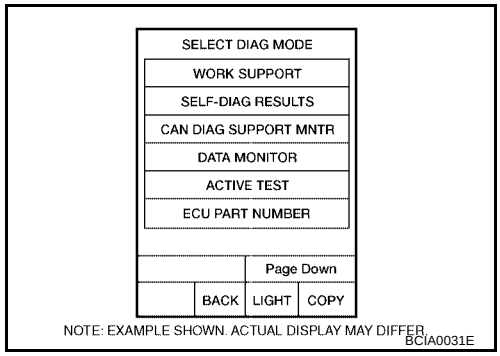

WORK SUPPORT MODE

Work Item

WORK ITEM	CONDITION	USAGE
FUEL PRESSURE RELEASE	● FUEL PUMP WILL STOP BY TOUCHING START DURING IDLING. CRANK A FEW TIMES AFTER ENGINE STALLS.	When releasing fuel pressure from fuel line
IDLE AIR VOL LEARN	● THE IDLE AIR VOLUME THAT KEEPS THE ENGINE WITHIN THE SPECIFIED RANGE IS MEMORIZED IN ECM.	When learning the idle air volume
SELF-LEARNING CONT	● THE COEFFICIENT OF SELF-LEARNING CONTROL MIXTURE RATIO RETURNS TO THE ORIGINAL COEFFICIENT.	When clearing the coefficient of self-learning control value

WORK ITEM	CONDITION	USAGE
EVAP SYSTEM CLOSE	CLOSE THE EVAP CANISTER VENT CONTROL VALVE IN ORDER TO MAKE EVAP SYSTEM CLOSE UNDER THE FOLLOWING CONDITIONS. ● IGN SW ON ● ENGINE NOT RUNNING ● AMBIENT TEMPERATURE IS ABOVE 0°C (32°F). ● NO VACUUM AND NO HIGH PRESSURE IN EVAP SYSTEM ● FUEL TANK TEMP. IS MORE THAN 0°C (32°F). ● WITHIN 10 MINUTES AFTER STARTING “EVAP SYSTEM CLOSE” ● WHEN TRYING TO EXECUTE “EVAP SYSTEM CLOSE” UNDER THE CONDITION EXCEPT ABOVE, CONSULT-II WILL DISCONTINUE IT AND DISPLAY APPROPRIATE INSTRUCTION. **NOTE:** **WHEN STARTING ENGINE, CONSULT-II MAY DISPLAY “BATTERY VOLTAGE IS LOW. CHARGE BATTERY”, EVEN IN USING CHARGED BATTERY.**	When detecting EVAP vapor leak point of EVAP system
VIN REGISTRATION	● IN THIS MODE, VIN IS REGISTERED IN ECM	When registering VIN in ECM
TARGET IDLE RPM ADJ*	● IDLE CONDITION	When setting target idle speed
TARGET IGN TIM ADJ*	● IDLE CONDITION	When adjusting target ignition timing

*: This function is not necessary in the usual service procedure.

SELF-DIAG RESULTS MODE

Self Diagnostic Item

Regarding items of “DTC and 1st trip DTC”, refer to EC-698, "EMISSION-RELATED DIAGNOSTIC INFORMATION ITEMS" .

Freeze Frame Data and 1st Trip Freeze Frame Data

Freeze frame data item*1	Description
DIAG TROUBLE CODE [PXXXX]	● The engine control component part/control system has a trouble code, it is displayed as “PXXXX”. (Refer to EC-658, "INDEX FOR DTC" .)
FUEL SYS-B1	● “Fuel injection system status” at the moment a malfunction is detected is displayed. ● One mode in the following is displayed. “Mode 2”: Open loop due to detected system malfunction “Mode 3”: Open loop due to driving conditions (power enrichment, deceleration enleanment) “Mode 4”: Closed loop - using oxygen sensor(s) as feedback for fuel control “Mode 5”: Open loop - has not yet satisfied condition to go to closed loop
CAL/LD VALUE [%]	● The calculated load value at the moment a malfunction is detected is displayed.
COOLANT TEMP [°C] or [°F]	● The engine coolant temperature at the moment a malfunction is detected is displayed.
L-FUEL TRM-B1 [%]	● “Long-term fuel trim” at the moment a malfunction is detected is displayed. ● The long-term fuel trim indicates much more gradual feedback compensation to the base fuel schedule than short-term fuel trim.
S-FUEL TRM-B1 [%]	● “Short-term fuel trim” at the moment a malfunction is detected is displayed. ● The short-term fuel trim indicates dynamic or instantaneous feedback compensation to the base fuel schedule.
ENGINE SPEED [rpm]	● The engine speed at the moment a malfunction is detected is displayed.
VEHICL SPEED [km/h] or [mph]	● The vehicle speed at the moment a malfunction is detected is displayed.

Freeze frame data item*1	Description
B/FUEL SCHDL [msec]	● The base fuel schedule at the moment a malfunction is detected is displayed.
INT/A TEMP SE [°C] or [°F]	● The intake air temperature at the moment a malfunction is detected is displayed.

*1: The items are the same as those of 1st trip freeze frame data.

DATA MONITOR MODE
Monitored Item

×: Applicable

Monitored item [Unit]	ECM INPUT SIG-NALS	MAIN SIG-NALS	Description	Remarks
ENG SPEED [rpm]	×	×	● Indicates the engine speed computed from the signals of the crankshaft position sensor (POS) and camshaft position sensor (PHASE).	● Accuracy becomes poor if engine speed drops below the idle rpm. ● If the signal is interrupted while the engine is running, an abnormal value may be indicated.
MAS A/F SE-B1 [V]	×	×	● The signal voltage of the mass air flow sensor is displayed.	● When the engine is stopped, a certain value is indicated.
B/FUEL SCHDL [msec]		×	● "Base fuel schedule" indicates the fuel injection pulse width programmed into ECM, prior to any learned on board correction.	
A/F ALPHA-B1 [%]		×	● The mean value of the air-fuel ratio feedback correction factor per cycle is indicated.	● When the engine is stopped, a certain value is indicated. ● This data also includes the data for the air-fuel ratio learning control.
COOLAN TEMP/S [°C] or [°F]	×	×	● The engine coolant temperature (determined by the signal voltage of the engine coolant temperature sensor) is displayed.	● When the engine coolant temperature sensor is open or short-circulated, ECM enters fail-safe mode. The engine coolant temperature determined by the ECM is displayed.
A/F SEN1 (B1) [V]*2	×	×	● The A/F signal computed from the input signal of the A/F sensor 1 is displayed.	
HO2S1 (B1) [V]*1	×	×	● The signal voltage of the heated oxygen sensor 1 is displayed.	
HO2S2 (B1) [V]	×		● The signal voltage of the heated oxygen sensor 2 is displayed.	
HO2S1 MNTR (B1) [RICH/LEAN]*1	×	×	● Display of heated oxygen sensor 1 signal during air-fuel ratio feedback control: RICH: Means the mixture became rich, and control is being affected toward a leaner mixture. LEAN: Means the mixture became lean, and control is being affected toward a rich mixture.	● After turning ON the ignition switch, "RICH" is displayed until air-fuel mixture ratio feedback control begins. ● When the air-fuel ratio feedback is clamped, the value just before the clamping is displayed continuously.
HO2S2 MNTR (B1) [RICH/LEAN]	×		● Display of heated oxygen sensor 2 signal: RICH... means the amount of oxygen after three way catalyst is relatively small. LEAN... means the amount of oxygen after three way catalyst is relatively large.	● When the engine is stopped, a certain value is indicated.

Monitored item [Unit]	ECM INPUT SIG-NALS	MAIN SIG-NALS	Description	Remarks
VHCL SPEED SE [km/h] or [mph]	×	×	● The vehicle speed computed from the vehicle speed signal sent from combination meter is displayed.	
BATTERY VOLT [V]	×	×	● The power supply voltage of ECM is displayed.	
ACCEL SEN 1 [V]	×	×	● The accelerator pedal position sensor signal voltage is displayed.	● ACCEL SEN 2 signal is converted by ECM internally. Thus, it differs from ECM terminal voltage signal.
ACCEL SEN 2 [V]	×			
THRTL SEN 1 [V]	×	×	● The throttle position sensor signal voltage is displayed.	● THRTL SEN 2 signal is converted by ECM internally. Thus, it differs from ECM terminal voltage signal.
THRTL SEN 2 [V]	×			
FUEL T/TEMP SE [°C] or [°F]	×		● The fuel temperature (determined by the signal voltage of the fuel tank temperature sensor) is displayed.	
VEHICLE SPEED [km/h] or [MPH]	×	×	● Indicates the vehicle speed computed from the revolution sensor signal.	
INT/A TEMP SE [°C] or [°F]	×	×	● The intake air temperature (determined by the signal voltage of the intake air temperature sensor) is indicated.	
EVAP SYS PRES [V]	×		● The signal voltage of EVAP control system pressure sensor is displayed.	
FUEL LEVEL SE [V]	×		● The signal voltage of the fuel level sensor is displayed.	
START SIGNAL [ON/OFF]	×	×	● Indicates start signal status [ON/OFF] computed by the ECM according to the signals of engine speed and battery voltage.	● After starting the engine, [OFF] is displayed regardless of the starter signal.
CLSD THL POS [ON/OFF]	×	×	● Indicates idle position [ON/OFF] computed by ECM according to the accelerator pedal position sensor signal.	
AIR COND SIG [ON/OFF]	×	×	● Indicates [ON/OFF] condition of the air conditioner switch as determined by the air conditioner signal.	
P/N POSI SW [ON/OFF]	×	×	● Indicates [ON/OFF] condition from the park/neutral position (PNP) switch signal.	
PW/ST SIGNAL [ON/OFF]	×	×	● [ON/OFF] condition of the power steering system (determined by the power steering pressure sensor) signal voltage of the is indicated.	
LOAD SIGNAL [ON/OFF]	×	×	● Indicates [ON/OFF] condition from the electrical load signal. ON... Rear window defogger switch is ON and/or lighting switch is in 2nd position. OFF... Both rear window defogger switch and lighting switch are OFF.	
IGNITION SW [ON/OFF]	×	×	● Indicates [ON/OFF] condition from ignition switch.	
HEATER FAN SW [ON/OFF]	×		● Indicates [ON/OFF] condition from the heater fan switch signal.	
BRAKE SW [ON/OFF]	×		● Indicates [ON/OFF] condition from the stop lamp switch signal.	

Monitored item [Unit]	ECM INPUT SIG-NALS	MAIN SIG-NALS	Description	Remarks
INJ PULSE-B1 [msec]		×	● Indicates the actual fuel injection pulse width compensated by ECM according to the input signals.	● When the engine is stopped, a certain computed value is indicated.
IGN TIMING [BTDC]		×	● Indicates the ignition timing computed by ECM according to the input signals.	● When the engine is stopped, a certain value is indicated.
CAL/LD VALUE [%]			● “Calculated load value” indicates the value of the current airflow divided by peak airflow.	
MASS AIRFLOW [g·m/s]			● Indicates the mass airflow computed by ECM according to the signal voltage of the mass air flow sensor.	
PURG VOL C/V [%]			● Indicates the EVAP canister purge volume control solenoid valve control value computed by the ECM according to the input signals. ● The opening becomes larger as the value increases.	
INT/V TIM (B1) [°CA]			● Indicates [°CA] of intake camshaft advanced angle.	
INT/V SOL (B1) [%]			● The control value of the intake valve timing control solenoid valve (determined by ECM according to the input signal) is indicated. ● The advance angle becomes larger as the value increases.	
VIAS S/V [ON/OFF]			● The control condition of the VIAS control solenoid valve (determined by ECM according to the input signals) is indicated. ON... VIAS control solenoid valve is operating. OFF... VIAS control solenoid valve is not operating.	
AIR COND RLY [ON/OFF]		×	● The air conditioner relay control condition (determined by ECM according to the input signals) is indicated.	
FUEL PUMP RLY [ON/OFF]		×	● Indicates the fuel pump relay control condition determined by ECM according to the input signals.	
VENT CONT/V [ON/OFF]			● The control condition of the EVAP canister vent control valve (determined by ECM according to the input signals) is indicated. ON... Closed OFF... Open	
THRTL RELAY [ON/OFF]		×	● Indicates the throttle control motor relay control condition determined by the ECM according to the input signals.	
COOLING FAN [HI/LOW/OFF]			● Indicates the condition of the cooling fan (determined by ECM according to the input signals). HI... High speed operation LOW... Low speed operation OFF... Stop	

Monitored item [Unit]	ECM INPUT SIG-NALS	MAIN SIG-NALS	Description	Remarks
HO2S1 HTR (B1) [ON/OFF]*1			● Indicates [ON/OFF] condition of heated oxygen sensor 1 heater determined by ECM according to the input signals.	
HO2S2 HTR (B1) [ON/OFF]			● Indicates [ON/OFF] condition of heated oxygen sensor 2 heater determined by ECM according to the input signals.	
IDL A/V LEARN [YET/CMPLT]			● Display the condition of idle air volume learning YET... Idle Air Volume Learning has not been performed yet. CMPLT... Idle Air Volume Learning has already been performed successfully.	
TRVL AFTER MIL [km] or [mile]			● Distance traveled while MIL is activated.	
O2SEN HTR DTY [%]*1			● Indicates the heated oxygen sensor 1 heater control value computed by the ECM according to the input signals.	
A/F S1 HTR (B1) [%]*2			● Indicates A/F sensor 1 heater control value computed by ECM according to the input signals. ● The current flow to the heater becomes larger as the value increases.	
AC PRESS SEN [V]	×		● The signal voltage from the refrigerant pressure sensor is displayed.	
VHCL SPEED SE [km/h] or [mph]			● The vehicle speed computed from the vehicle speed signal sent from TCM is displayed.	
SET VHCL SPD [km/h] or [mph]			● The preset vehicle speed is displayed.	
MAIN SW [ON/OFF]			● Indicates [ON/OFF] condition from MAIN switch signal.	
CANCEL SW [ON/OFF]			● Indicates [ON/OFF] condition from CAN-CEL switch signal.	
RESUME/ACC SW [ON/OFF]			● Indicates [ON/OFF] condition from RESUME/ACCEL switch signal.	
SET SW [ON/OFF]			● Indicates [ON/OFF] condition from SET/COAST switch signal.	
BRAKE SW1 [ON/OFF]			● Indicates [ON/OFF] condition from ASCD brake switch signal, and ASCD clutch switch signal (M/T models).	
BRAKE SW2 [ON/OFF]			● Indicates [ON/OFF] condition of stop lamp switch signal.	
VHCL SPD CUT [NON/CUT]			● Indicates the vehicle cruise condition. NON... Vehicle speed is maintained at the ASCD set speed. CUT...Vehicle speed increased to excessively high compared with the ASCD set speed, and ASCD operation is cut off.	

Monitored item [Unit]	ECM INPUT SIG-NALS	MAIN SIG-NALS	Description	Remarks
LO SPEED CUT [NON/CUT]			● Indicates the vehicle cruise condition. NON... Vehicle speed is maintained at the ASCD set speed. CUT...Vehicle speed decreased to excessively low compared with the ASCD set speed, and ASCD operation is cut off.	
AT OD MONITOR [ON/OFF]			● Indicates [ON/OFF] condition of A/T O/D according to the input signal from the TCM.	● For M/T models always “OFF” is displayed.
AT OD CANCEL [ON/OFF]			● Indicates [ON/OFF] condition of A/T O/D cancel signal sent from the TCM.	● For M/T models always “OFF” is displayed.
CRUISE LAMP [ON/OFF]			● Indicates [ON/OFF] condition of CRUISE lamp determined by the ECM according to the input signals.	
SET LAMP [ON/OFF]			● Indicates [ON/OFF] condition of SET lamp determined by the ECM according to the input signals.	
Voltage [V]			● Voltage, frequency, duty cycle or pulse width measured by the probe.	● Only “#” is displayed if item is unable to be measured. ● Figures with “#”s are temporary ones. They are the same figures as an actual piece of data which was just previously measured.
Frequency [msec], [Hz] or [%]				
DUTY-HI				
DUTY-LOW				
PLS WIDTH-HI				
PLS WIDTH-LOW				

*1: A/T models ULEV and M/T models.
*2: A/T models except ULEV.

DATA MONITOR (SPEC) MODE

Monitored Item

Monitored item [Unit]	ECM INPUT SIG-NALS	MAIN SIG-NALS	Description	Remarks
ENG SPEED [rpm]	×		● Indicates the engine speed computed from the signal of the crankshaft position sensor (POS).	
MAS A/F SE-B1 [V]	×	×	● The signal voltage of the mass air flow sensor specification is displayed.	● When engine is running specification range is indicated.
B/FUEL SCHDL [msec]			● “Base fuel schedule” indicates the fuel injection pulse width programmed into ECM, prior to any learned on board correction.	● When engine is running specification range is indicated.
A/F ALPHA-B1 [%]		×	● The mean value of the air-fuel ratio feedback correction factor per cycle is indicated.	● When engine is running specification range is indicated. ● This data also includes the data for the air-fuel ratio learning control.

NOTE:
- Any monitored item that does not match the vehicle being diagnosed is deleted from the display automatically.

ACTIVE TEST MODE

Test Item

TEST ITEM	CONDITION	JUDGEMENT	CHECK ITEM (REMEDY)
FUEL INJECTION	● Engine: Return to the original trouble condition ● Change the amount of fuel injection using CONSULT-II.	If trouble symptom disappears, see CHECK ITEM.	● Harness and connectors ● Fuel injector ● Heated oxygen sensor 1*1 ● Air fuel ratio (A/F) sensor 1*2
IGNITION TIMING	● Engine: Return to the original trouble condition ● Timing light: Set ● Retard the ignition timing using CONSULT-II.	If trouble symptom disappears, see CHECK ITEM.	● Perform Idle Air Volume Learning.
POWER BALANCE	● Engine: After warming up, idle the engine. ● A/C switch OFF ● Shift lever P or N (A/T), Neutral (M/T) ● Cut off each injector signal one at a time using CONSULT-II.	Engine runs rough or dies.	● Harness and connectors ● Compression ● Fuel injector ● Power transistor ● Spark plug ● Ignition coil
COOLING FAN	● Ignition switch: ON ● Turn the cooling fan “LOW”, “HI” and “OFF” with CONSULT-II.	Cooling fan moves and stops.	● Harness and connectors ● Cooling fan relay ● Cooling fan motor
ENG COOLANT TEMP	● Engine: Return to the original trouble condition ● Change the engine coolant temperature using CONSULT-II.	If trouble symptom disappears, see CHECK ITEM.	● Harness and connectors ● Engine coolant temperature sensor ● Fuel injector
FUEL PUMP RELAY	● Ignition switch: ON (Engine stopped) ● Turn the fuel pump relay ON and OFF using CONSULT-II and listen to operating sound.	Fuel pump relay makes the operating sound.	● Harness and connectors ● Fuel pump relay
VIAS SOL VALVE	● Ignition switch: ON ● Turn solenoid valve ON and OFF with CONSULT-II and listen for operating sound.	Solenoid valve makes an operating sound.	● Harness and connectors ● Solenoid valve
PURG VOL CONT/V	● Engine: After warming up, run engine at 1,500 rpm. ● Change the EVAP canister purge volume control solenoid valve opening percent using CONSULT-II.	Engine speed changes according to the opening percent.	● Harness and connectors ● Solenoid valve
FUEL/T TEMP SEN	● Change the fuel tank temperature using CONSULT-II.		
VENT CONTROL/V	● Ignition switch: ON (Engine stopped) ● Turn solenoid valve “ON” and “OFF” with the CONSULT-II and listen to operating sound.	Solenoid valve makes an operating sound.	● Harness and connectors ● Solenoid valve
V/T ASSIGN ANGLE	● Engine: Return to the original trouble condition ● Change intake valve timing using CONSULT-II.	If trouble symptom disappears, see CHECK ITEM.	● Harness and connectors ● Intake valve timing control solenoid valve

*1: A/T models ULEV and M/T models.
*2: A/T models except ULEV.

DTC & SRT CONFIRMATION MODE

SRT STATUS Mode

For details, refer to EC-702, "SYSTEM READINESS TEST (SRT) CODE" .

SRT WORK SUPPORT Mode

This mode enables a technician to drive a vehicle to set the SRT while monitoring the SRT status.

DTC WORK SUPPORT Mode

Test mode	Test item	Condition	Reference page
EVAPORATIVE SYSTEM	PURGE FLOW P0441	Refer to corresponding trouble diagnosis for DTC.	EC-1016
	EVAP SML LEAK P0442/P1442*1		EC-1022
	EVAP V/S SML LEAK P0456/P1456*1		EC-1069
	PURG VOL CN/V P1444		EC-1234
HO2S1*2	HO2S1 (B1) P0133		EC-912
	HO2S1 (B1) P0134		EC-922
	HO2S1 (B1) P1143		EC-1131
	HO2S1 (B1) P1144		EC-1137
A/F SEN1*3	A/F SEN1 (B1) P1276		EC-1209
	A/F SEN1 (B1) P1278		EC-1216
	A/F SEN1 (B1) P1279		EC-1225
HO2S2	HO2S2 (B1) P0139		EC-935
	HO2S2 (B1) P1146		EC-1143
	HO2S2 (B1) P1147		EC-1151

*1: DTC P1442 and P1456 does not apply to B15 models but appears in DTC WORK SUPPORT Mode screens.
*2: A/T models ULEV and M/T models.
*3: A/T models except ULEV.

REAL TIME DIAGNOSIS IN DATA MONITOR MODE (RECORDING VEHICLE DATA)

Description

CONSULT-II has two kinds of triggers and they can be selected by touching “SETTING” in “DATA MONITOR” mode.

1. “AUTO TRIG” (Automatic trigger):
   - The malfunction will be identified on the CONSULT-II screen in real time.
     In other words, DTC/1st trip DTC and malfunction item will be displayed if the malfunction is detected by ECM.
     At the moment a malfunction is detected by ECM, “MONITOR” in “DATA MONITOR” screen is changed to “Recording Data ... xx%” as shown at right, and the data after the malfunction detection is recorded. Then when the percentage reached 100%, “REAL-TIME DIAG” screen is displayed. If “STOP” is touched on the screen during “Recording Data ... xx%”, “REAL-TIME DIAG” screen is also displayed.
     The recording time after the malfunction detection and the recording speed can be changed by “TRIGGER POINT” and “Recording Speed”. Refer to CONSULT-II Operation Manual.
2. “MANU TRIG” (Manual trigger):
   - DTC/1st trip DTC and malfunction item will not be displayed automatically on CONSULT-II screen even though a malfunction is detected by ECM.
     DATA MONITOR can be performed continuously even though a malfunction is detected.

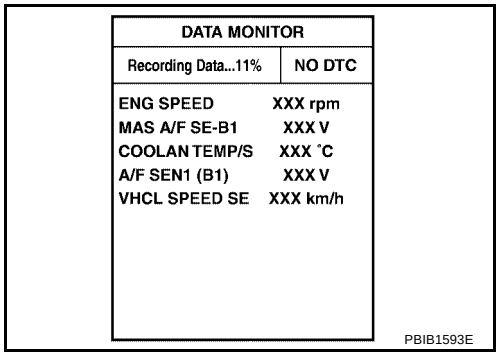

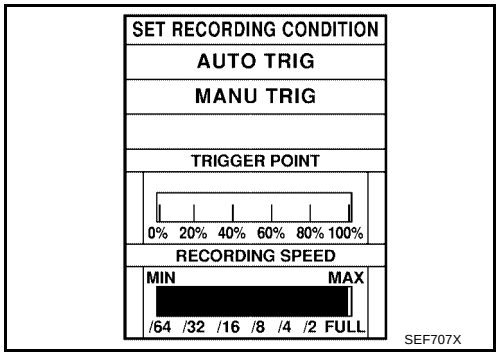

Operation

1. “AUTO TRIG”
   - While trying to detect the DTC/1st trip DTC by performing the DTC Confirmation Procedure, be sure to select to “DATA MONITOR (AUTO TRIG)” mode. You can confirm the malfunction at the moment it is detected.
   - While narrowing down the possible causes, CONSULT-II should be set in “DATA MONITOR (AUTO TRIG)” mode, especially in case the incident is intermittent.
     When you are inspecting the circuit by gently shaking (or twisting) the suspicious connectors, components and harness in the DTC Confirmation Procedure, the moment a malfunction is found the DTC/1st trip DTC will be displayed. (Refer to “Incident Simulation Tests” in GI-27, "How to Perform Efficient Diagnosis for an Electrical Incident" .)
2. “MANU TRIG”
   - If the malfunction is displayed as soon as “DATA MONITOR” is selected, reset CONSULT-II to “MANU TRIG”. By selecting “MANU TRIG” you can monitor and store the data. The data can be utilized for further diagnosis, such as a comparison with the value for the normal operating condition.

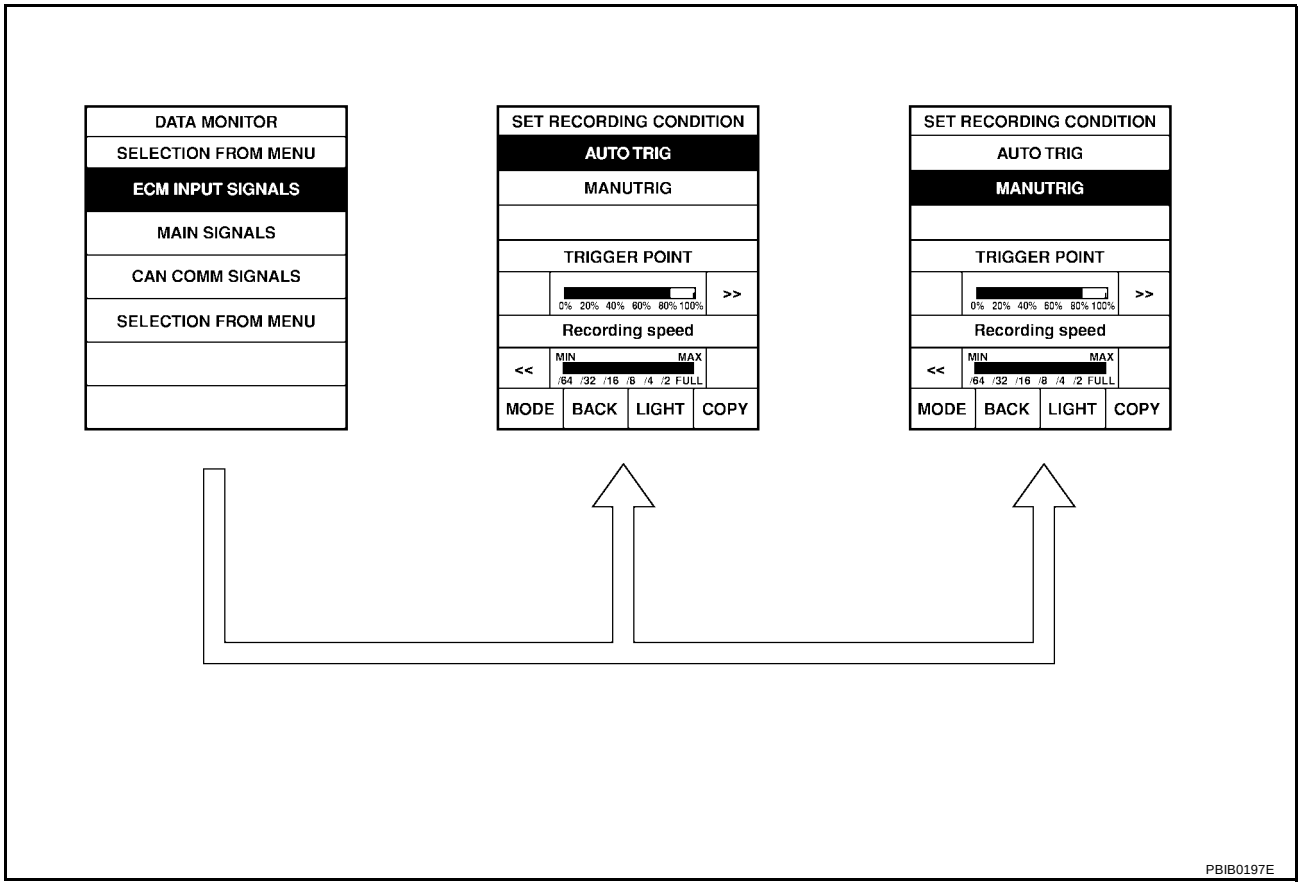

Generic Scan Tool (GST) Function

UBS00JA4

DESCRIPTION

Generic Scan Tool (OBDII scan tool) complying with SAE J1978 has 8 different functions explained below.
ISO9141 is used as the protocol.
The name “GST” or “Generic Scan Tool” is used in this service manual.

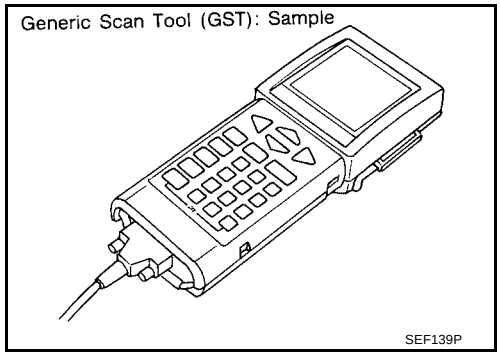

FUNCTION

Diagnostic service		Function
Service $01	READINESS TESTS	This diagnostic service gains access to current emission-related data values, including analog inputs and outputs, digital inputs and outputs, and system status information.
Service $02	(FREEZE DATA)	This diagnostic service gains access to emission-related data value which were stored by ECM during the freeze frame. For details, refer to EC-702, "FREEZE FRAME DATA AND 1ST TRIP FREEZE FRAME DATA" .
Service $03	DTCs	This diagnostic service gains access to emission-related power train trouble codes which were stored by ECM.

Diagnostic service		Function
Service $04	CLEAR DIAG INFO	This diagnostic service can clear all emission-related diagnostic information. This includes: ● Clear number of diagnostic trouble codes (Service $01) ● Clear diagnostic trouble codes (Service $03) ● Clear trouble code for freeze frame data (Service $01) ● Clear freeze frame data (Service $02) ● Reset status of system monitoring test (Service $01) ● Clear on board monitoring test results (Service $06 and $07)
Service $06	(ON BOARD TESTS)	This diagnostic service accesses the results of on board diagnostic monitoring tests of specific components/systems that are not continuously monitored.
Service $07	(ON BOARD TESTS)	This diagnostic service enables the off board test drive to obtain test results for emission-related powertrain components/systems that are continuously monitored during normal driving conditions.
Service $08	—	This diagnostic service can close EVAP system in ignition switch ON position (Engine stopped). When this diagnostic service is performed, EVAP canister vent control valve can be closed. In the following conditions, this diagnostic service cannot function. ● Low ambient temperature ● Low battery voltage ● Engine running ● Ignition switch OFF ● Low fuel temperature ● Too much pressure is applied to EVAP system
Service $09	(CALIBRATION ID)	This diagnostic service enables the off-board test device to request specific vehicle information such as Vehicle Identification Number (VIN) and Calibration IDs.

INSPECTION PROCEDURE

1. Turn ignition switch OFF.
2. Connect GST to data link connector, which is located under LH dash panel near the fuse box cover.
3. Turn ignition switch ON.

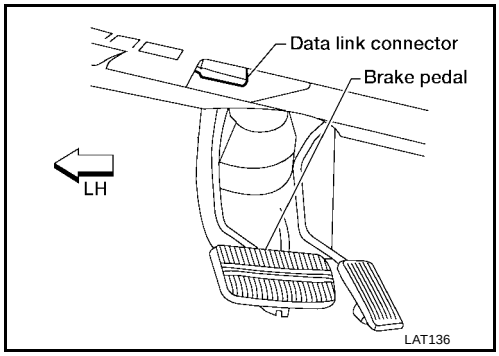

4. Enter the program according to instruction on the screen or in the operation manual.

(*: Regarding GST screens in this section, sample screens are shown.)

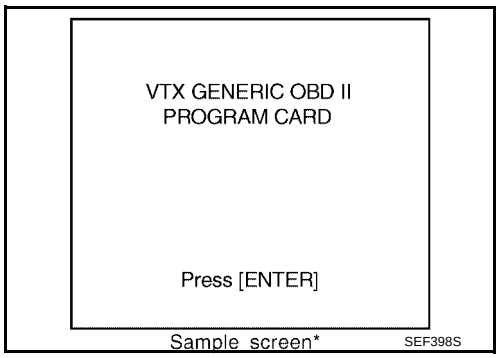

5. Perform each diagnostic service according to each service procedure.

For further information, see the GST Operation Manual of the tool maker.

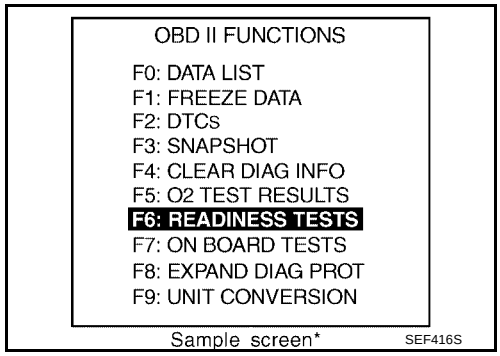

CONSULT-II Reference Value in Data Monitor Mode

UBS00KJK

Remarks:
- Specification data are reference values.
- Specification data are output/input values which are detected or supplied by the ECM at the connector.
  * Specification data may not be directly related to their components signals/values/operations.
  i.e. Adjust ignition timing with a timing light before monitoring IGN TIMING, because the monitor may show the specification data in spite of the ignition timing not being adjusted to the specification data. This IGN TIMING monitors the data calculated by the ECM according to the signals input from the camshaft position sensor and other ignition timing related sensors.

MONITOR ITEM	CONDITION		SPECIFICATION
ENG SPEED	● Run engine and compare the CONSULT-II value with tachometer indication.		Almost the same speed as the tachometer indication.
MAS A/F SE-B1	● See EC-815, "TROUBLE DIAGNOSIS - SPECIFICATION VALUE" .		
B/FUEL SCHDL	● See EC-815, "TROUBLE DIAGNOSIS - SPECIFICATION VALUE" .		
A/F ALPHA-B1	● See EC-815, "TROUBLE DIAGNOSIS - SPECIFICATION VALUE" .		
COOLAN TEMP/S	● Engine: After warming up		More than 70°C (158°F)
HO2S1 (B1)*2	● Engine: After warming up	Maintaining engine speed at 2,000 rpm	0 - 0.3V ←→ Approx. 0.6 - 1.0V
A/F SEN1 (B1)* 3	● Engine: After warming up	Maintaining engine speed at 2,000 rpm	Fluctuates around 1.5V
HO2S2 (B1)	● Warm-up condition ● After keeping engine speed between 3,500 and 4,000 rpm for 1 minute and at idle for 1 minute under no load.	Revving engine from idle to 3,000 rpm quickly.	0 - 0.3V ←→ Approx. 0.6 - 1.0V
HO2S1 MNTR (B1)*2	● Engine: After warming up	Maintaining engine speed at 2,000 rpm	LEAN ←→ RICH Changes more than 5 times during 10 seconds.
HO2S2 MNTR (B1)	● Engine: After warming up ● After keeping engine speed between 3,500 and 4,000 rpm for 1 minute and at idle for 1 minute under no load.	Revving engine from idle to 3,000 rpm quickly.	LEAN ←→ RICH
VEH SPEED SE	● Turn drive wheels and compare the CONSULT-II value with speedometer indication.		Almost the same speed as the speedometer indication.
BATTERY VOLT	● Ignition switch: ON (Engine stopped)		11 - 14V
ACCEL SEN 1	● Ignition switch: ON (Engine stopped) ● Shift lever: D (A/T), 1ST (M/T)	Accelerator pedal: Fully released	0.65 - 0.87V
		Accelerator pedal: Fully depressed	More than 4.3V
ACCEL SEN 2*1	● Ignition switch: ON (Engine stopped) ● Shift lever: D (A/T), 1ST (M/T)	Accelerator pedal: Fully released	0.56 - 0.96V
		Accelerator pedal: Fully depressed	More than 4.0V
THRTL SEN 1 THRTL SEN 2*1	● Ignition switch: ON (Engine stopped) ● Shift lever: D (A/T), 1ST (M/T)	Accelerator pedal: Fully released	More than 0.36V
		Accelerator pedal: Fully depressed	Less than 4.75V
EVAP SYS PRES	● Ignition switch: ON		1.8 - 4.8V

MONITOR ITEM	CONDITION		SPECIFICATION
START SIGNAL	● Ignition switch: ON → START → ON		OFF → ON → OFF
CLSD THL POS	● Ignition switch: ON (Engine stopped)	Accelerator pedal: Fully released	ON
		Accelerator pedal: Slightly depressed	OFF
AIR COND SIG	● Engine: After warming up, idle the engine	Air conditioner switch: OFF	OFF
		Air conditioner switch: ON (Compressor operates.)	ON
P/N POSI SW	● Ignition switch: ON	Shift lever: P or N (A/T), Neutral (M/T)	ON
		Shift lever: Except above position	OFF
PW/ST SIGNAL	● Engine: After warming up, idle the engine	Steering wheel is not being turned. (Forward direction)	OFF
		Steering wheel is being turned.	ON
LOAD SIGNAL	● Ignition switch: ON	Rear window defogger switch is ON and/or lighting switch is in 2nd.	ON
		Rear window defogger switch is OFF and lighting switch is OFF.	OFF
IGNITION SW	● Ignition switch: ON → OFF → ON		ON → OFF → ON
HEATER FAN SW	● Engine: After warming up, idle the engine	Heater fan is operating.	ON
		Heater fan is not operating	OFF
BRAKE SW	● Ignition switch: ON	Brake pedal: Fully released	OFF
		Brake pedal: Slightly depressed	ON
INJ PULSE-B1	● Engine: After warming up ● Shift lever: P or N (A/T), Neutral (M/T) ● Air conditioner switch: OFF ● No-load	Idle	2.0 - 3.0 msec
		2,000 rpm	1.9 - 2.9 msec
IGN TIMING	● Engine: After warming up ● Shift lever: P or N (A/T), Neutral (M/T) ● Air conditioner switch: OFF ● No-load	Idle	10° - 20° BTDC
		2,000 rpm	25° - 45° BTDC
CAL/LD VALUE	● Engine: After warming up ● Shift lever: P or N (A/T), Neutral (M/T) ● Air conditioner switch: OFF ● No-load	Idle	10% - 35%
		2,500 rpm	10% - 35%
MASS AIRFLOW	● Engine: After warming up ● Shift lever: P or N (A/T), Neutral (M/T) ● Air conditioner switch: OFF ● No-load	Idle	1.0 - 4.0 g·m/s
		2,500 rpm	4.0 - 10.0 g·m/s
PURG VOL C/V	● Engine: After warming up ● Shift lever: P or N (A/T), Neutral (M/T) ● Air conditioner switch: OFF ● No-load	Idle (Accelerator pedal is not depressed even slightly, after engine starting)*3	0%
		2,000 rpm	20 - 30%
INT/V TIM (B1)	● Engine: After warming up ● Shift lever: P or N (A/T), Neutral (M/T) ● Air conditioner switch: OFF ● No-load	Idle	–5° - 5°CA
		2,000 rpm	Approx. 0° - 20°CA

MONITOR ITEM	CONDITION		SPECIFICATION
INT/V SOL (B1)	● Engine: After warming up ● Shift lever: P or N (A/T), Neutral (M/T) ● Air conditioner switch: OFF ● No-load	Idle	0% - 2%
		2,000 rpm	Approx. 25% - 60%
AIR COND RLY	● Engine: After warming up, idle the engine	Air conditioner switch: OFF	OFF
		Air conditioner switch: ON (Compressor operates)	ON
VIAS S/V	● Engine: After warming up	Idle	OFF
		More than 5,000 rpm	ON
FUEL PUMP RLY	● For 1 seconds after turning ignition switch ON ● Engine running or cranking		ON
	● Except above conditions		OFF
VENT CONT/V	● Ignition switch: ON		OFF
THRTL RELAY	● Ignition switch: ON		ON
COOLING FAN	● Engine: After warming up, idle the engine ● Air conditioner switch: OFF	Engine coolant temperature is 94°C (201°F) or less	OFF
		Engine coolant temperature is between 95°C (203°F) and 99°C (210°F)	LOW
		Engine coolant temperature is 100°C (212°F) or more	HIGH
HO2S1 HTR (B1)*2	● Engine: After warming up ● Engine speed: Below 3,600 rpm		ON
	● Engine speed: Above 3,600 rpm		OFF
HO2S2 HTR (B1)	● Engine speed: Below 3,600 rpm after the following conditions are met ● Engine: After warming up ● Keeping the engine speed between 3,500 and 4,000 rpm for 1 minute and at idle for 1 minute under no load.		ON
	● Engine speed: Above 3,600 rpm		OFF
TRVL AFTER MIL	● Ignition switch: ON	Vehicle has traveled after MIL has turned ON.	0 - 65,535 km (0 - 40,723 mile)
A/F S1 HTR (B1)*3	● Engine: After warming up, idle the engine		0 - 100%
O2SEN HTR DTY*2	● Engine coolant temperature when engine started: More than 80°C (176°F) ● Engine speed: Below 3,600 rpm		Approx. 50%
AC PRESS SEN	● Ignition switch: ON (Engine stopped)		Approx. 0V
	● Engine: Idle ● Air conditioner switch: OFF		1.0 - 4.0V
VEH SPEED SE	● Turn drive wheels and compare the CONSULT-II value with speedometer indication.		Almost the same speed as the speedometer indication.
SET VHCL SPD	● Engine: Running	ASCD: Operating	The preset vehicle speed is displayed.
MAIN SW	● Ignition switch: ON	MAIN switch: Pressed	ON
		MAIN switch: Released	OFF
CANCEL SW	● Ignition switch: ON	CANCEL switch: Pressed	ON
		CANCEL switch: Released	OFF

MONITOR ITEM	CONDITION		SPECIFICATION
RESUME/ACC SW	● Ignition switch: ON	RESUME/ACCELERATE switch: Pressed	ON
		RESUME/ACCELERATE switch: Released	OFF
SET SW	● Ignition switch: ON	SET/COAST switch: Pressed	ON
		SET/COAST switch: Released	OFF
BRAKE SW1 (ASCD brake switch)	● Ignition switch: ON	Clutch pedal (M/T) and brake pedal: Fully released	ON
		Clutch pedal and/or brake pedal: Slightly depressed	OFF
BRAKE SW2 (STOP lamp switch)	● Ignition switch: ON	Brake pedal: Fully released	OFF
		Brake pedal: Slightly depressed	ON
CRUISE LAMP	● Ignition switch: ON	MAIN switch is pressed at 1st time → 2nd time	ON → OFF
SET LAMP	● MAIN switch: ON ● When vehicle is between 40 km/h (25 MPH) and 144 km/h (89 MPH)	ASCD is operating	ON
		ASCD is not operating	OFF

*1: Accelerator pedal position sensor 2 signal and throttle position sensor 2 signal are converted by ECM internally. Thus, they differ from ECM terminals voltage signal.
*2: A/T models ULEV and M/T models.
*3: A/T models except ULEV.

Major Sensor Reference Graph in Data Monitor Mode

UBS00KJL

The following are the major sensor reference graphs in “DATA MONITOR” mode.

CLSD THL POS, ACCEL SEN 1, THRTL SEN 1

Below is the data for “CLSD THL POS”, “ACCEL SEN 1” and “THRTL SEN 1” when depressing the accelerator pedal with the ignition switch ON and with shift lever in D position (A/T), 1st position (M/T).
The signal of “ACCEL SEN 1” and “THRTL SEN 1” should rise gradually without any intermittent drop or rise after “CLSD THL POS” is changed from “ON” to “OFF”.

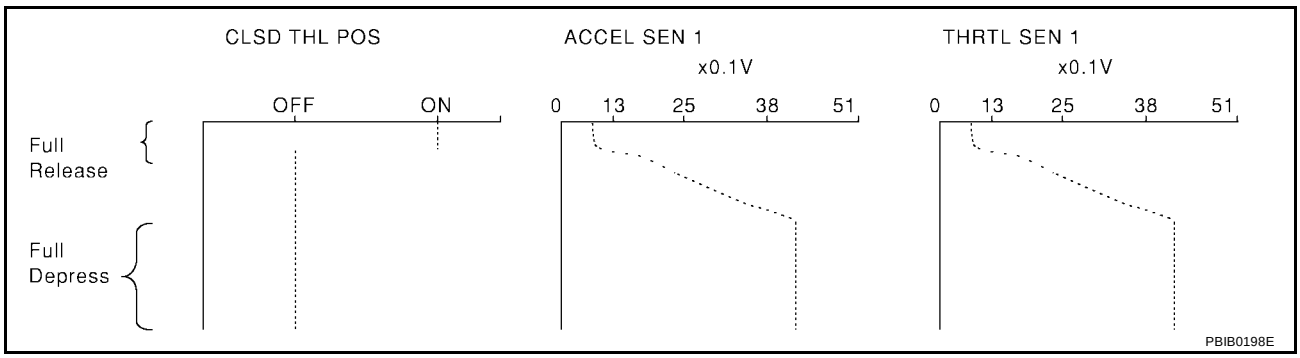

ENG SPEED, MAS A/F SE-B1, THRTL SEN 1, HO2S2 (B1), HO2S1 (B1), INJ PULSE-B1(A/T MODELS ULEV AND M/T MODELS)

Below is the data for “ENG SPEED”, “MAS A/F SE-B1”, “THRTL SEN 1”, “HO2S2 (B1)”, “HO2S1 (B1)” and “INJ PULSE-B1” when revving engine quickly up to 4,800 rpm under no load after warming up engine sufficiently.

Each value is for reference, the exact value may vary.

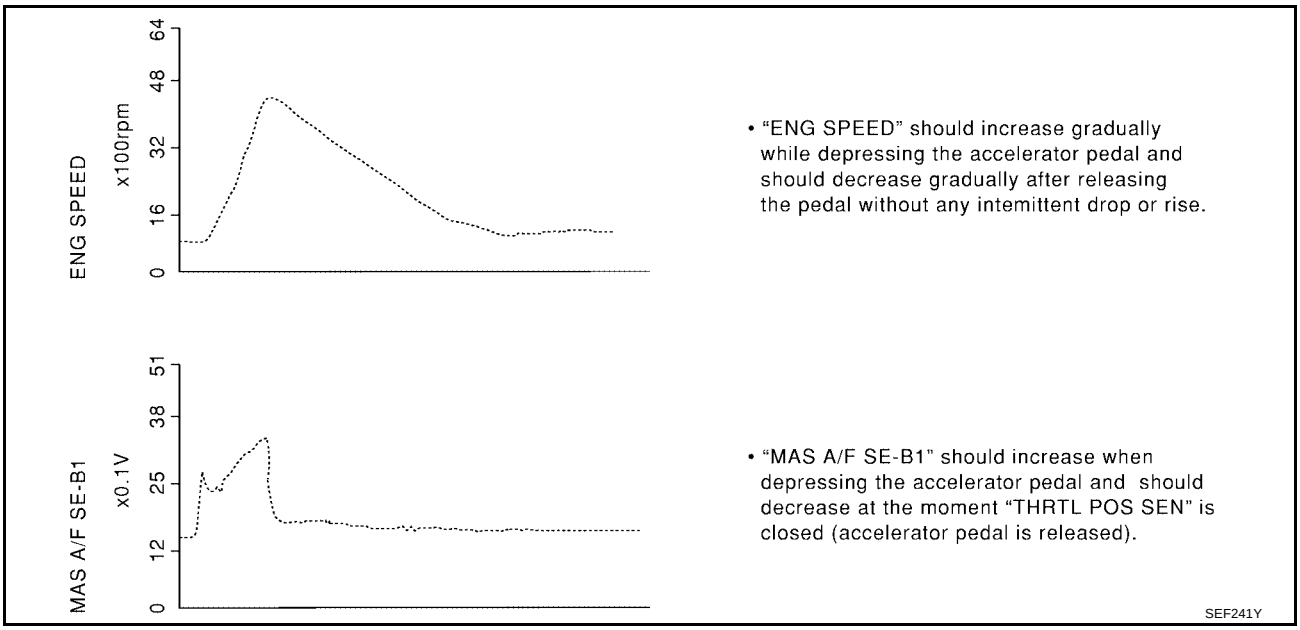

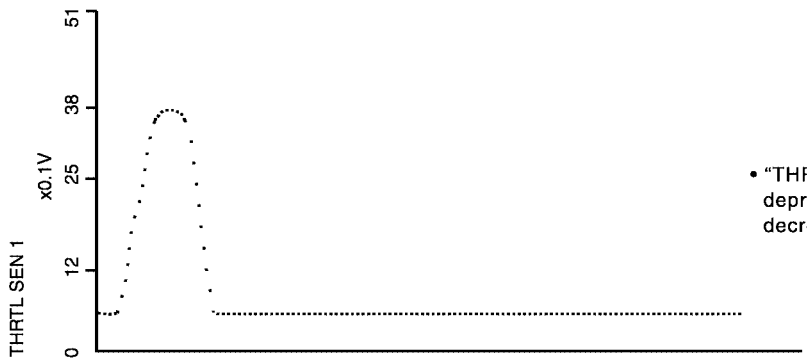

- "THRTL SEN 1" should increase while depressing the accelerator pedal and should decrease while releasing it.

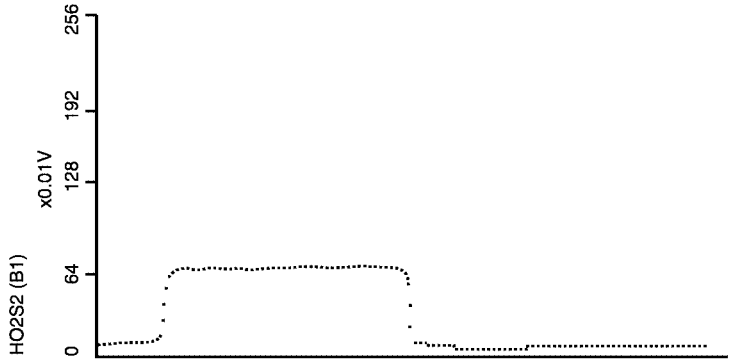

- "HO2S2 (B1)" may increase immediately after depressing the accelerator pedal and may decrease after releasing the pedal.

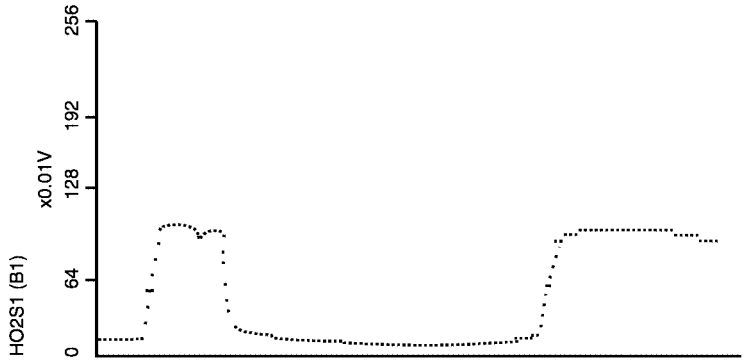

- "HO2S1 (B1)" may increase immediately after depressing the accelerator pedal and may decrease after releasing the pedal.

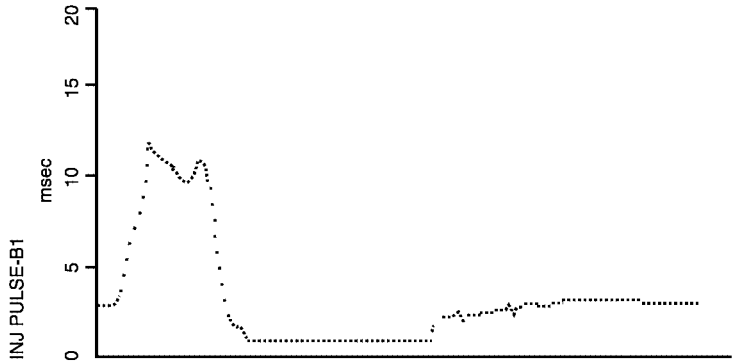

- "INJ PULSE-B1" should increase when depressing the accelerator pedal and should decrease when the pedal is released.

PBIB0668E

ENG SPEED, MAS A/F SE-B1, THRTL SEN 1, HO2S2 (B1), INJ PULSE-B1(A/T MODELS EXCEPT ULEV)

Below is the data for “ENG SPEED”, “MAS A/F SE-B1”, “THRTL SEN 1”, “HO2S2 (B1)”, “HO2S1 (B1)” and “INJ PULSE-B1” when revving engine quickly up to 4,800 rpm under no load after warming up engine sufficiently.
Each value is for reference, the exact value may vary.

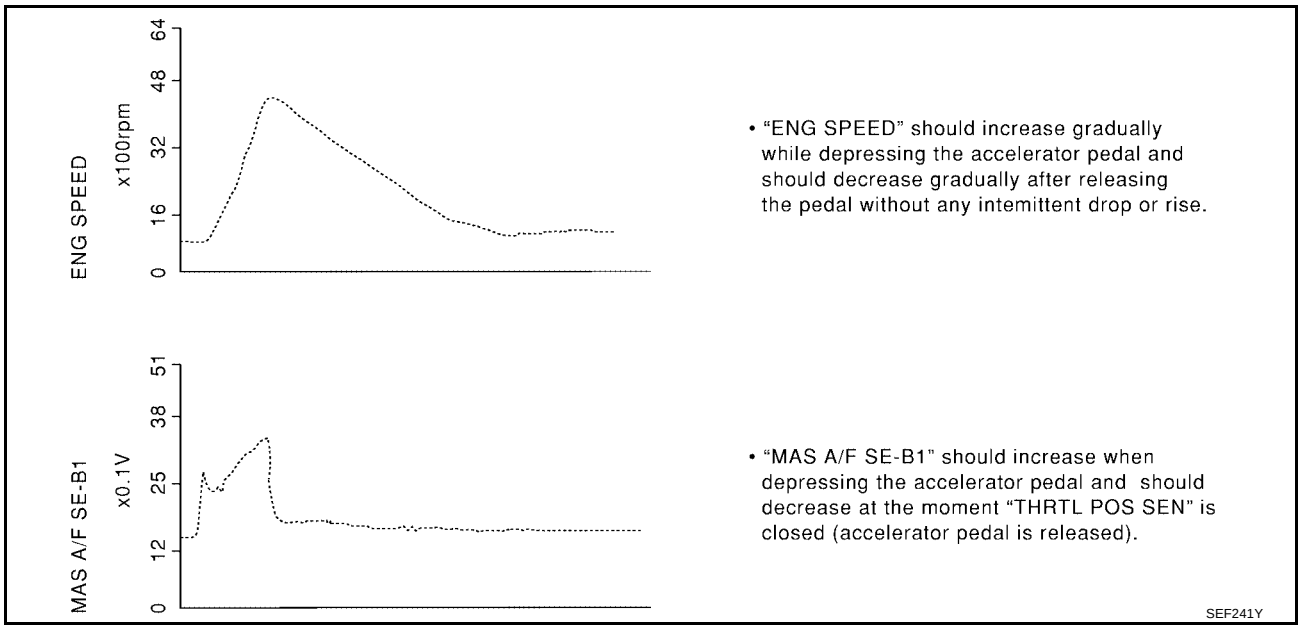

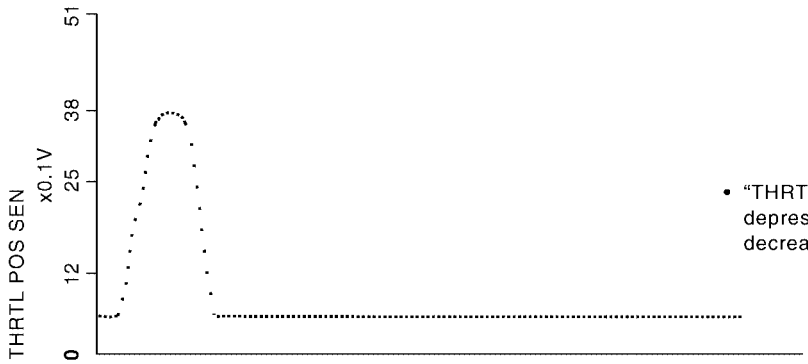

- "THRTL SEN1" should increase while depressing the accelerator pedal and should decrease while releasing it.

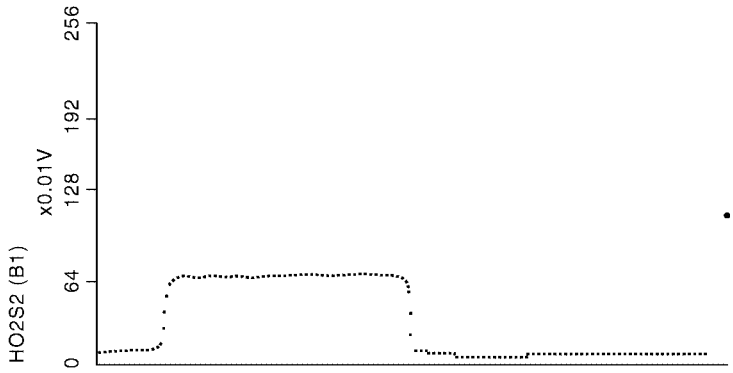

- "HO2S2 (B1)" may increase immediately after depressing the accelerator pedal and may decrease after releasing the pedal.

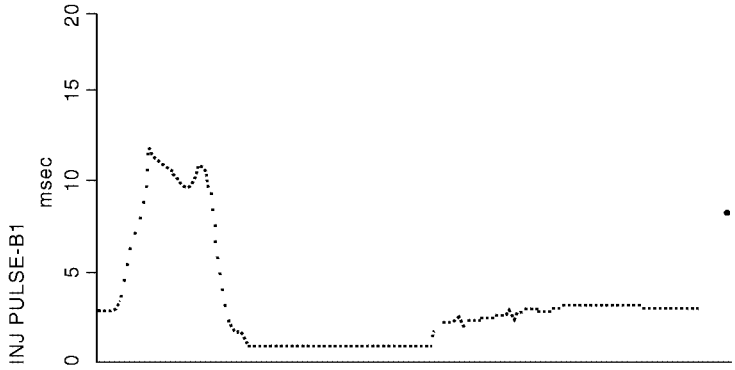

- "INJ PULSE-B1" should increase when depressing the accelerator pedal and should decrease when the pedal is released.

PBIB1594E

TROUBLE DIAGNOSIS - SPECIFICATION VALUE

PFP:00031

Description

UBS00JA7

The specification (SP) value indicates the tolerance of the value that is displayed in “DATA MONITOR (SPEC)” mode of CONSULT-II during normal operation of the Engine Control System. When the value in “DATA MONITOR (SPEC)” mode is within the SP value, the Engine Control System is confirmed OK. When the value in “DATA MONITOR (SPEC)” mode is NOT within the SP value, the Engine Control System may have one or more malfunctions.
The SP value is used to detect malfunctions that may affect the Engine Control System, but will not light the MIL.
The SP value will be displayed for the following three items:

- B/FUEL SCHDL (The fuel injection pulse width programmed into ECM prior to any learned on board correction)
- A/F ALPHA-B1 (The mean value of air-fuel ratio feedback correction factor per cycle)
- MAS A/F SE-B1 (The signal voltage of the mass air flow sensor)

Testing Condition

UBS00JA8

- Vehicle driven distance: More than 5,000 km (3,017 miles)
- Barometric pressure: 98.3 - 104.3 kPa (1.003 - 1.064 kg/cm^2 , 14.25 - 15.12 psi)
- Atmospheric temperature: 20 - 30°C (68 - 86°F)
- Engine coolant temperature: 75 - 95°C (167 - 203°F)
- Transmission: Warmed-up*1
- Electrical load: Not applied*2
- Engine speed: Idle

*1: For A/T models, after the engine is warmed up to normal operating temperature, drive vehicle until “FLUID TEMP SE” (A/T fluid temperature sensor signal) indicates more than 60°C (140°F).
For M/T models, after the engine is warmed up to normal operating temperature, drive vehicle for 5 minutes.
*2: Rear window defogger switch, air conditioner switch, lighting switch are OFF. Steering wheel is straight ahead.

Inspection Procedure

UBS00JA9

NOTE:
Perform “DATA MONITOR (SPEC)” mode in maximum scale display.

1. Perform EC-722, "Basic Inspection" .
2. Confirm that the testing conditions indicated above are met.
3. Select “B/FUEL SCHDL”, “A/F ALPHA-B1” and “MAS A/F SE-B1” in “DATA MONITOR (SPEC)” mode with CONSULT-II.
4. Make sure that monitor items are within the SP value.
5. If NG, go to EC-816, "Diagnostic Procedure (A/T Models ULEV and M/T Models)" , EC-825, "Diagnostic Procedure (A/T Models except ULEV)" .

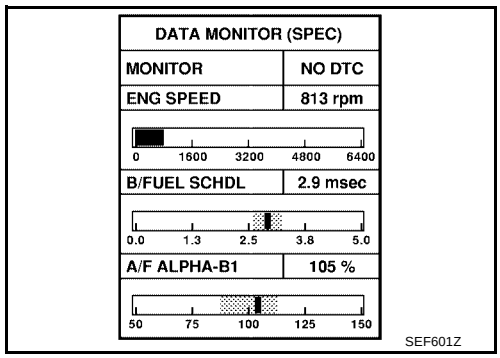

Diagnostic Procedure (A/T Models ULEV and M/T Models)

UBS00JAA

OVERALL SEQUENCE

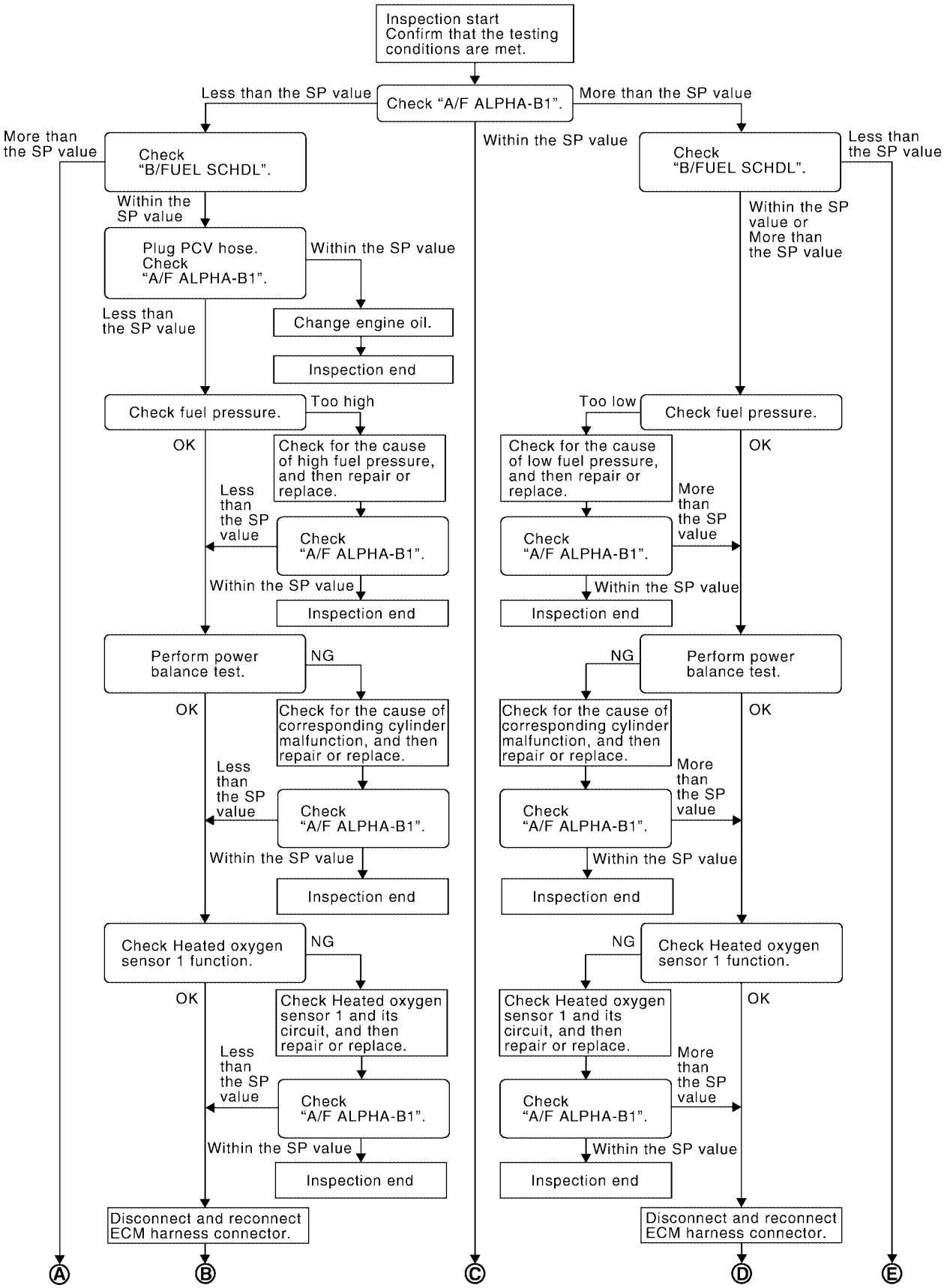

PBIB2384E

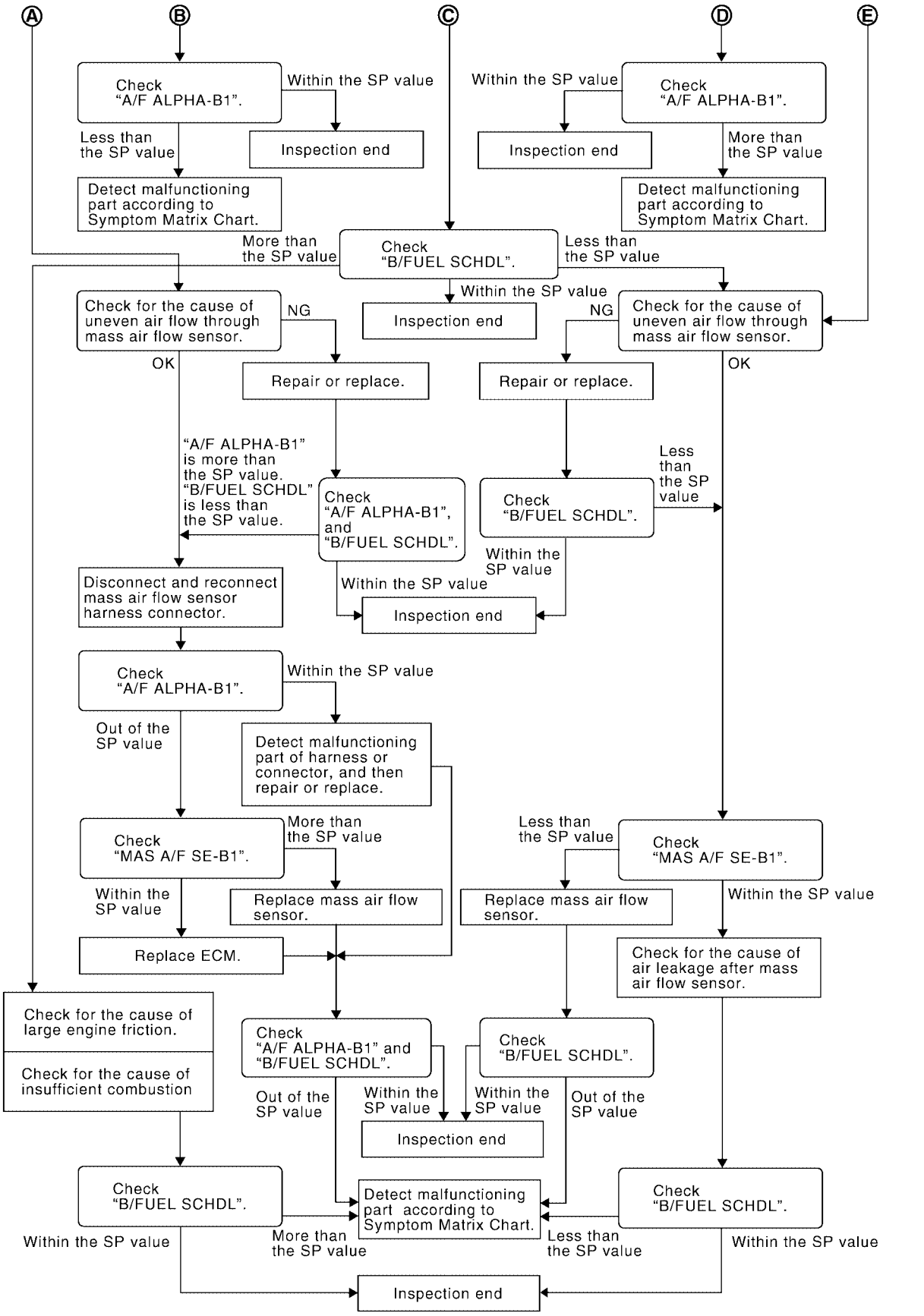
Ⓐ
Ⓑ
Ⓒ
Ⓓ
Ⓔ
Check "A/F ALPHA-B1".
Within the SP value
Inspection end
Less than the SP value
Detect malfunctioning part according to Symptom Matrix Chart.
Check "A/F ALPHA-B1".
Within the SP value
Inspection end
More than the SP value
Detect malfunctioning part according to Symptom Matrix Chart.
More than the SP value
Check "B/FUEL SCHDL".
Less than the SP value
Within the SP value
Inspection end
Check for the cause of uneven air flow through mass air flow sensor.
NG
OK
Repair or replace.
Check for the cause of uneven air flow through mass air flow sensor.
NG
OK
Repair or replace.
"A/F ALPHA-B1" is more than the SP value. "B/FUEL SCHDL" is less than the SP value.
Check "A/F ALPHA-B1", and "B/FUEL SCHDL".
Check "B/FUEL SCHDL".
Less than the SP value
Within the SP value
Within the SP value
Inspection end
Disconnect and reconnect mass air flow sensor harness connector.
Check "A/F ALPHA-B1".
Within the SP value
Out of the SP value
Detect malfunctioning part of harness or connector, and then repair or replace.
Check "MAS A/F SE-B1".
More than the SP value
Within the SP value
Replace mass air flow sensor.
Replace ECM.
Less than the SP value
Check "MAS A/F SE-B1".
Replace mass air flow sensor.
Within the SP value
Check for the cause of air leakage after mass air flow sensor.
Check for the cause of large engine friction.
Check for the cause of insufficient combustion
Check "A/F ALPHA-B1" and "B/FUEL SCHDL".
Check "B/FUEL SCHDL".
Out of the SP value
Within the SP value
Within the SP value
Out of the SP value
Inspection end
Check "B/FUEL SCHDL".
Detect malfunctioning part according to Symptom Matrix Chart.
Check "B/FUEL SCHDL".
Within the SP value
More than the SP value
Less than the SP value
Within the SP value
Inspection end

PBIB2509E

DETAILED PROCEDURE

1. CHECK “A/F ALPHA-B1”

1. Start engine.
2. Confirm that the testing conditions are met. Refer to EC-815, "Testing Condition" .
3. Select “A/F ALPHA-B1” in “DATA MONITOR (SPEC)” mode, and make sure that the indication is within the SP value.

   NOTE:
   Check “A/F ALPHA-B1” for approximately 1 minute because they may fluctuate. It is NG if the indication is out of the SP value even a little.

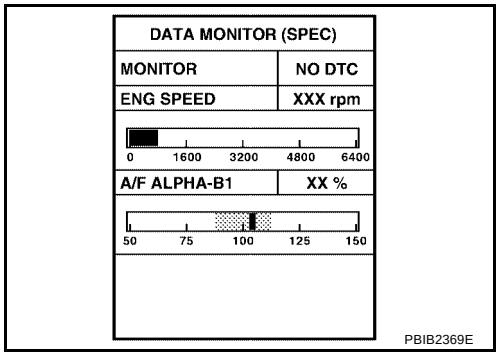

OK or NG

OK >> GO TO 17.
NG (Less than the SP value)>>GO TO 2.
NG (More than the SP value)>>GO TO 3.

2. CHECK “B/FUEL SCHDL”

Select “B/FUEL SCHDL” in “DATA MONITOR (SPEC)” mode, and make sure that the indication is within the SP value.

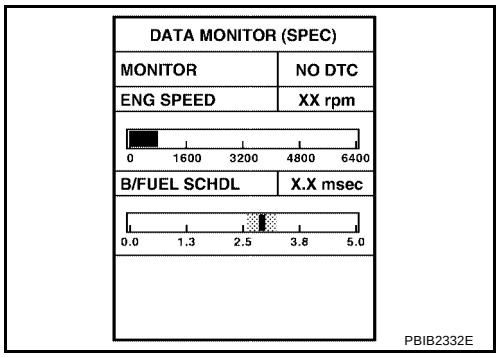

OK or NG

OK >> GO TO 4.
NG (More than the SP value)>>GO TO 19.

3. CHECK “B/FUEL SCHDL”

Select “B/FUEL SCHDL” in “DATA MONITOR (SPEC)” mode, and make sure that the indication is within the SP value.

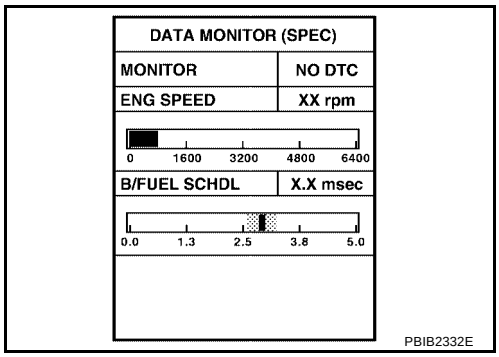

OK or NG

OK >> GO TO 6.
NG (More than the SP value)>>GO TO 6.
NG (Less than the SP value)>>GO TO 25.

4. CHECK “A/F ALPHA-B1”

1. Stop the engine.
2. Disconnect PCV hose, and then plug it.
3. Start engine.
4. Select “A/F ALPHA-B1” in “DATA MONITOR (SPEC)” mode, and make sure that the indication is within the SP value.

OK or NG

OK >> GO TO 5.
NG >> GO TO 6.

5. CHANGE ENGINE OIL

1. Stop the engine.
2. Change engine oil.

NOTE:
This symptom may occur when a large amount of gasoline is mixed with engine oil because of driving conditions (such as when engine oil temperature does not rise enough since a journey distance is too short during winter). The symptom will not be detected after changing engine oil or changing driving condition.

>> **INSPECTION END**

6. CHECK FUEL PRESSURE

Check fuel pressure. (Refer to EC-753, "FUEL PRESSURE CHECK" .)

OK or NG

OK >> GO TO 9.
NG (Fuel pressure is too high)>>Replace fuel pressure regulator, refer to EC-753 . GO TO 8.
NG (Fuel pressure is too low)>>GO TO 7.

7. DETECT MALFUNCTIONING PART

1. Check the following.
- Clogged and bent fuel hose and fuel tube
- Clogged fuel filter
- Fuel pump and its circuit (Refer to EC-1342, "FUEL PUMP CIRCUIT" .)
2. If NG, repair or replace the malfunctioning part. (Refer to EC-753 .)
If OK, replace fuel pressure regulator.

>> GO TO 8.

8. CHECK “A/F ALPHA-B1”

1. Start engine.
2. Select “A/F ALPHA-B1” in “DATA MONITOR (SPEC)” mode, and make sure that the indication is within the SP value.

OK or NG

OK >> **INSPECTION END**
NG >> GO TO 9.

9. PERFORM POWER BALANCE TEST

1. Perform “POWER BALANCE” in “ACTIVE TEST” mode.
2. Make sure that the each cylinder produces a momentary engine speed drop.

OK or NG

OK >> GO TO 12.
NG >> GO TO 10.

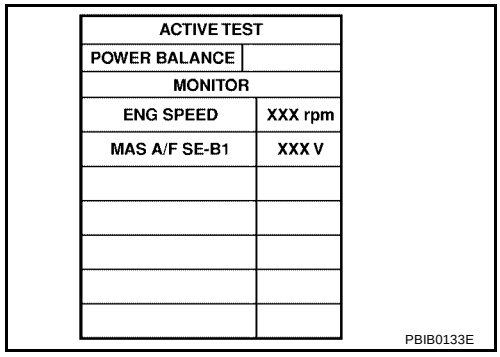

ACTIVE TEST	
POWER BALANCE	
MONITOR	
ENG SPEED	XXX rpm
MAS A/F SE-B1	XXX V

PBIB0133E

10. DETECT MALFUNCTIONING PART

1. Check the following.
- Ignition coil and its circuit (Refer to EC-1314, "IGNITION SIGNAL" .)
- Fuel injector and its circuit (Refer to EC-1336, "INJECTOR CIRCUIT" .)
- Intake air leakage
- Low compression pressure (Refer to EM-148, "CHECKING COMPRESSION PRESSURE" .)
2. If NG, repair or replace the malfunctioning part.
   If OK, replace fuel injector. (It may be caused by leakage from fuel injector or clogging.)

>> GO TO 11.

11. CHECK “A/F ALPHA-B1”

1. Start engine.
2. Select “A/F ALPHA-B1” in “DATA MONITOR (SPEC)” mode, and make sure that the indication is within the SP value.

OK or NG

OK >> **INSPECTION END**
NG >> GO TO 12.

12. CHECK HEATED OXYGEN SENSOR 1 FUNCTION

1. Run engine at about 2,000 rpm for about 2 minutes under no-load.
2. Select “HO2S1 MNTR (B1)”, in “DATA MONITOR” mode.
3. Running engine at 2,000 rpm under no-load (The engine is warmed up to normal operating temperature.), check that the monitor fluctuates between LEAN and RICH more than 5 times during 10 seconds.

   1 time : RICH → LEAN → RICH

   2 times : RICH → LEAN → RICH → LEAN → RICH

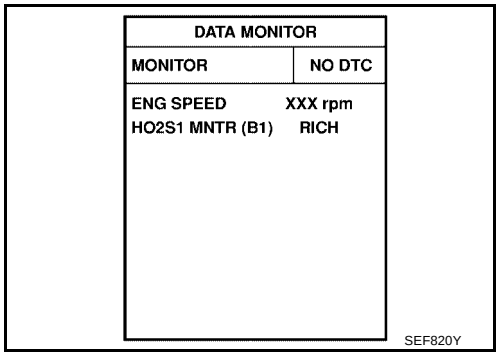

OK or NG

OK >> GO TO 15.
NG >> GO TO 13.

13. CHECK HEATED OXYGEN SENSOR 1 CIRCUIT

Check heated oxygen sensor 1 and its circuit. Refer to EC-905, "DTC P0132 HO2S1"

>> GO TO 14.

14. CHECK “A/F ALPHA-B1”

1. Start engine.
2. Select “A/F ALPHA-B1” in “DATA MONITOR (SPEC)” mode, and make sure that the indication is within the SP value.

OK or NG

OK >> **INSPECTION END**
NG >> GO TO 15.

15. DISCONNECT AND RECONNECT ECM HARNESS CONNECTOR

1. Stop the engine.
2. Disconnect ECM harness connector. Check pin terminal and connector for damage, and then reconnect it.

>> GO TO 16.

16. CHECK “A/F ALPHA-B1”

1. Start engine.
2. Select “A/F ALPHA-B1” in “DATA MONITOR (SPEC)” mode, and make sure that the indication is within the SP value.

OK or NG

OK >> **INSPECTION END**
NG >> Detect malfunctioning part according to EC-765, "Symptom Matrix Chart" .

17. CHECK “B/FUEL SCHDL”

Select “B/FUEL SCHDL” in “DATA MONITOR (SPEC)” mode, and make sure that the indication is within the SP value.

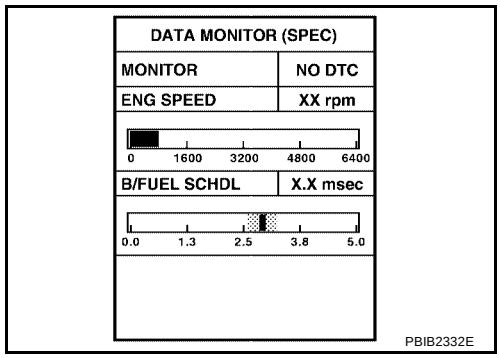

OK or NG

OK >> **INSPECTION END**
NG (More than the SP value)>>GO TO 18.
NG (Less than the SP value)>>GO TO 25.

18. DETECT MALFUNCTIONING PART

1. Check for the cause of large engine friction. Refer to the following.
- Engine oil level is too high
- Engine oil viscosity
- Belt tension of power steering, alternator, A/C compressor, etc. is excessive
- Noise from engine
- Noise from transmission, etc.
2. Check for the cause of insufficient combustion. Refer to the following.
- Valve clearance malfunction
- Intake valve timing control function malfunction
- Camshaft sprocket installation malfunction, etc.

>> Repair or replace malfunctioning part, and then GO TO 30.

19. CHECK INTAKE SYSTEM

Check for the cause of uneven air flow through mass air flow sensor. Refer to the following.

- Crushed air ducts
- Malfunctioning seal of air cleaner element
- Uneven dirt of air cleaner element
- Improper specification of intake air system

OK or NG

OK >> GO TO 21.
NG >> Repair or replace malfunctioning part, and then GO TO 20.

20. CHECK “A/F ALPHA-B1”, AND “B/FUEL SCHDL”

Select “A/F ALPHA-B1” and “B/FUEL SCHDL” in “DATA MONITOR (SPEC)” mode, and make sure that the indication is within the SP value.

OK or NG

OK >> **INSPECTION END**
NG (“B/FUEL SCHDL” is more, “A/F ALPHA-B1” is less than the SP value)>>GO TO 21.

21. DISCONNECT AND RECONNECT MASS AIR FLOW SENSOR HARNESS CONNECTOR

1. Stop the engine.
2. Disconnect mass air flow sensor harness connector. Check pin terminal and connector for damage and then reconnect it again.

>> GO TO 22.

22. CHECK “A/F ALPHA-B1”

1. Start engine.
2. Select “A/F ALPHA-B1” in “DATA MONITOR (SPEC)” mode, and make sure that the indication is within the SP value.

OK or NG

OK >> 1. Detect malfunctioning part of mass air flow sensor circuit and repair it. Refer to EC-870, "DTC P0102, P0103 MAF SENSOR" .
2. GO TO 29.

NG >> GO TO 23.

23. CHECK “MAS A/F SE-B1”

Select “MAS A/F SE-B1” in “DATA MONITOR (SPEC)” mode, and make sure that the indication is within the SP value.

OK or NG

OK >> GO TO 24.
NG (More than the SP value)>>Replace mass air flow sensor, and then GO TO 29.

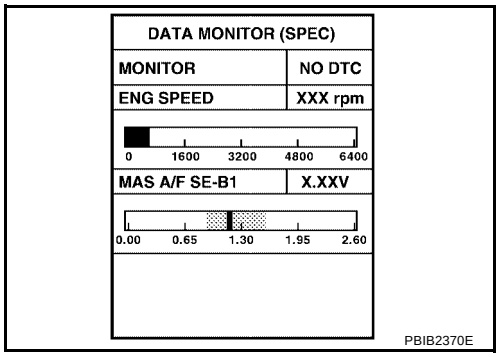

24. REPLACE ECM

1. Replace ECM.
2. Perform initialization of NVIS (NATS) system and registration of all NVIS (NATS) ignition key IDs. Refer to BL-96, "NVIS (NISSAN VEHICLE IMMOBILIZER SYSTEM — NATS)" .
3. Perform EC-749, "VIN Registration" .
4. Perform EC-749, "Accelerator Pedal Released Position Learning" .
5. Perform EC-749, "Throttle Valve Closed Position Learning" .
6. Perform EC-750, "Idle Air Volume Learning" .

>> GO TO 29.

25. CHECK INTAKE SYSTEM

Check for the cause of uneven air flow through mass air flow sensor. Refer to the following.

- Crushed air ducts
- Malfunctioning seal of air cleaner element
- Uneven dirt of air cleaner element
- Improper specification of intake air system

OK or NG

OK >> GO TO 27.
NG >> Repair or replace malfunctioning part, and then GO TO 26.

26. CHECK "B/FUEL SCHDL"

Select "B/FUEL SCHDL" in "DATA MONITOR (SPEC)" mode, and make sure that the indication is within the SP value.

OK or NG

OK >> **INSPECTION END**
NG (Less than the SP value)>>GO TO 27.

27. CHECK "MAS A/F SE-B1"

Select "MAS A/F SE-B1" in "DATA MONITOR (SPEC)" mode, and make sure that the indication is within the SP value.

OK or NG

OK >> GO TO 28.
NG (Less than the SP value)>>Replace mass air flow sensor, and then GO TO 30.

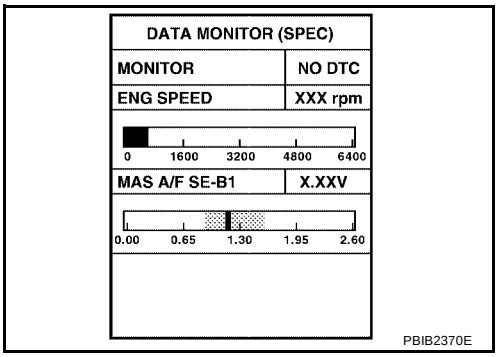

28. CHECK INTAKE SYSTEM

Check for the cause of air leak after the mass air flow sensor. Refer to the following.

- Disconnection, looseness, and cracks in air duct
- Looseness of oil filler cap
- Disconnection of oil level gauge
- Open stuck, breakage, hose disconnection, or cracks of PCV valve
- Disconnection or cracks of EVAP purge hose, open stuck of EVAP canister purge volume control solenoid valve
- Malfunctioning seal of rocker cover gasket
- Disconnection, looseness, or cracks of hoses, such as vacuum hose, connecting to intake air system parts
- Malfunctioning seal of intake air system, etc.

>> GO TO 30.

29. CHECK "A/F ALPHA-B1" AND "B/FUEL SCHDL"

Select "A/F ALPHA-B1" and "B/FUEL SCHDL" in "DATA MONITOR (SPEC)" mode, and make sure that the indication is within the SP value.

OK or NG

OK >> **INSPECTION END**
NG >> Detect malfunctioning part according to EC-765, "Symptom Matrix Chart" .

30. CHECK “B/FUEL SCHDL”

Select “B/FUEL SCHDL” in “DATA MONITOR (SPEC)” mode, and then make sure that the indication is within the SP value.

OK or NG

OK >> **INSPECTION END**
NG >> Detect malfunctioning part according to EC-765, "Symptom Matrix Chart" .

Diagnostic Procedure (A/T Models except ULEV)

UBS00KK3

OVERALL SEQUENCE

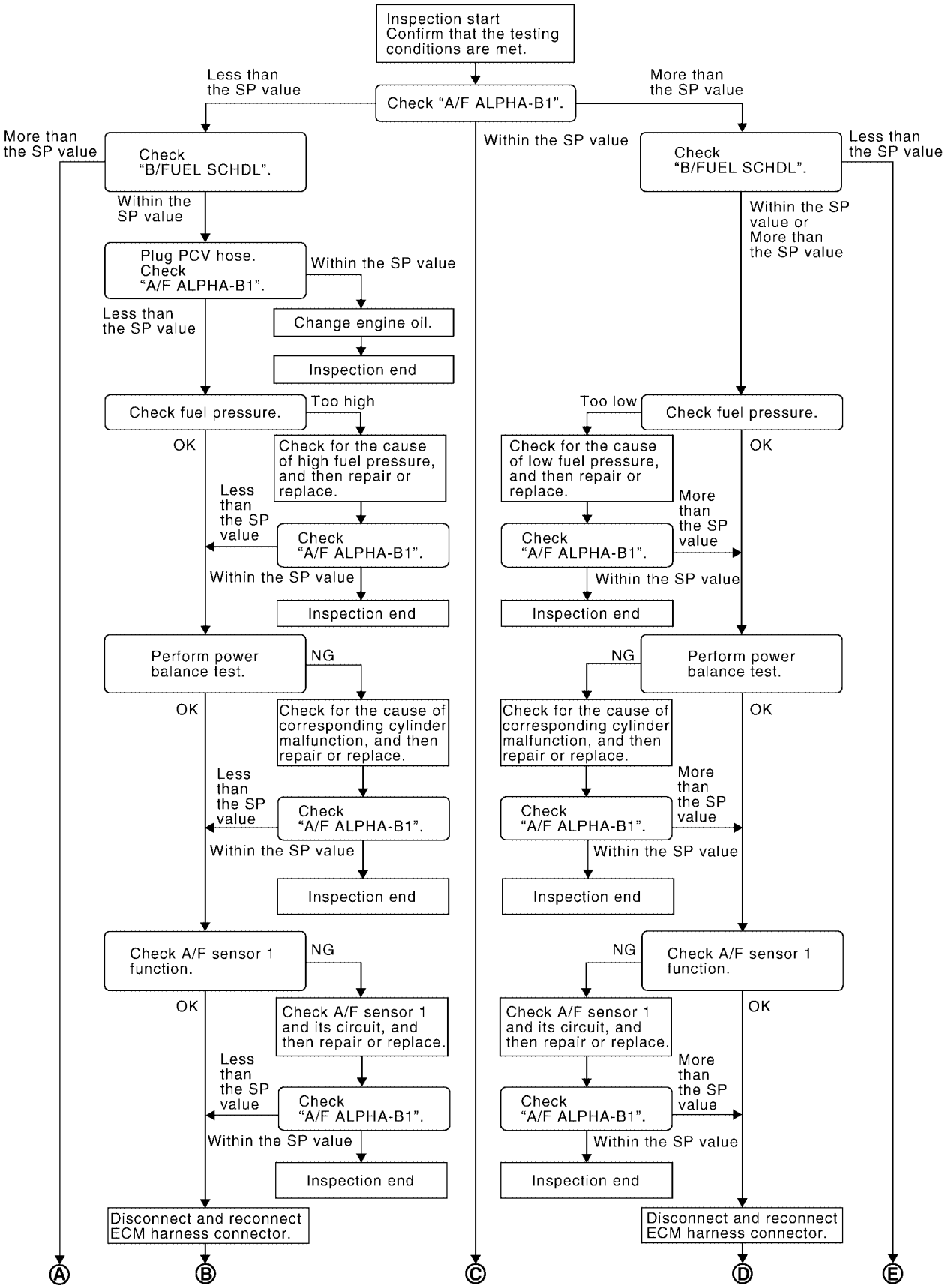

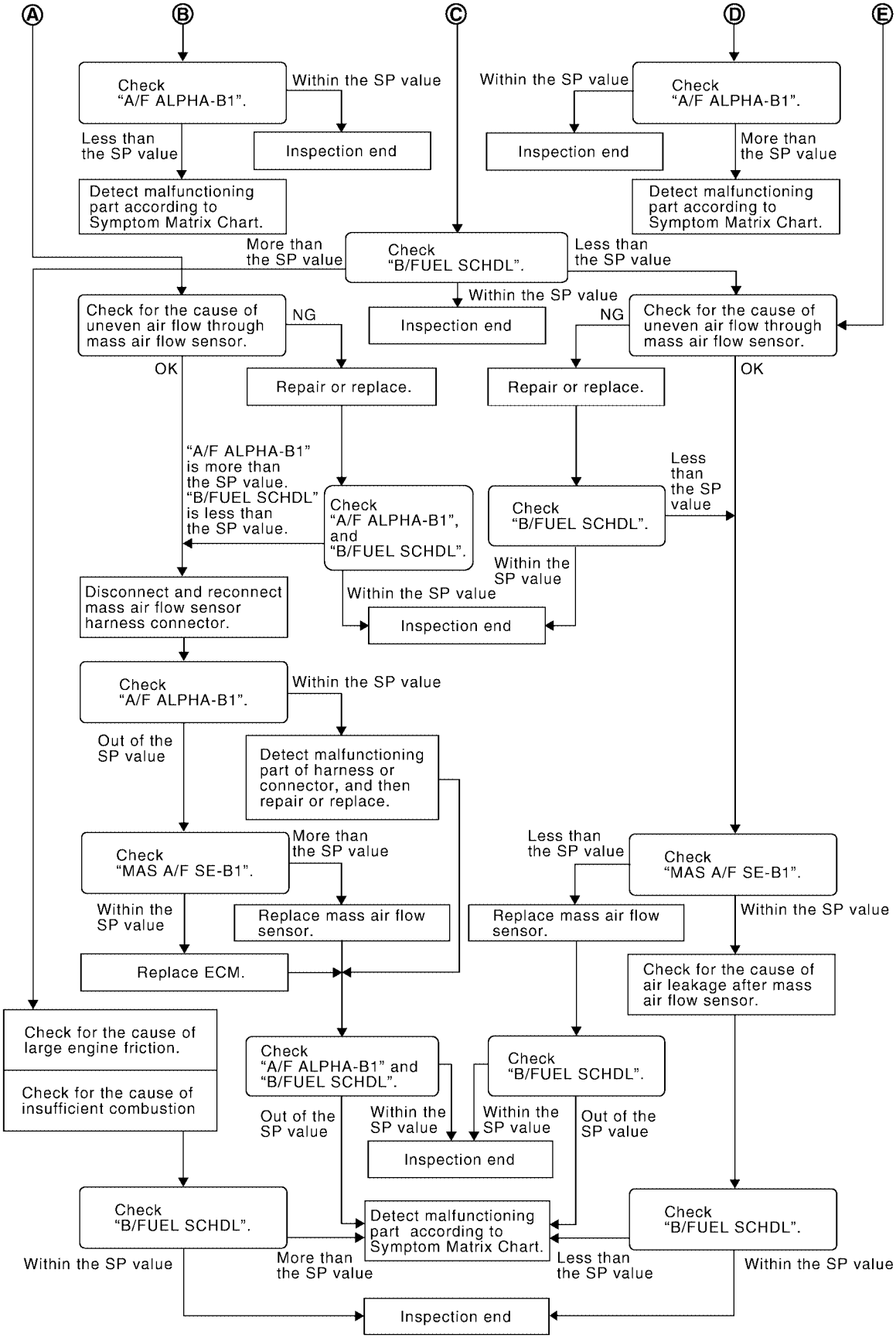
Ⓐ
Ⓑ
Ⓒ
Ⓓ
Ⓔ
Check "A/F ALPHA-B1".
Within the SP value
Inspection end
Less than the SP value
Detect malfunctioning part according to Symptom Matrix Chart.
Check "A/F ALPHA-B1".
Within the SP value
Inspection end
More than the SP value
Detect malfunctioning part according to Symptom Matrix Chart.
More than the SP value
Check "B/FUEL SCHDL".
Less than the SP value
Within the SP value
Inspection end
Check for the cause of uneven air flow through mass air flow sensor.
NG
OK
Repair or replace.
Check for the cause of uneven air flow through mass air flow sensor.
NG
OK
Repair or replace.
"A/F ALPHA-B1" is more than the SP value. "B/FUEL SCHDL" is less than the SP value.
Check "A/F ALPHA-B1", and "B/FUEL SCHDL".
Check "B/FUEL SCHDL".
Less than the SP value
Within the SP value
Within the SP value
Inspection end
Disconnect and reconnect mass air flow sensor harness connector.
Check "A/F ALPHA-B1".
Within the SP value
Out of the SP value
Detect malfunctioning part of harness or connector, and then repair or replace.
Check "MAS A/F SE-B1".
More than the SP value
Within the SP value
Replace mass air flow sensor.
Replace ECM.
Less than the SP value
Check "MAS A/F SE-B1".
Replace mass air flow sensor.
Within the SP value
Check for the cause of air leakage after mass air flow sensor.
Check for the cause of large engine friction.
Check for the cause of insufficient combustion
Check "A/F ALPHA-B1" and "B/FUEL SCHDL".
Check "B/FUEL SCHDL".
Out of the SP value
Within the SP value
Within the SP value
Out of the SP value
Inspection end
Check "B/FUEL SCHDL".
Detect malfunctioning part according to Symptom Matrix Chart.
Check "B/FUEL SCHDL".
Within the SP value
More than the SP value
Less than the SP value
Within the SP value
Inspection end
PBIB2509E

DETAILED PROCEDURE

1. CHECK “A/F ALPHA-B1”

1. Start engine.
2. Confirm that the testing conditions are met. Refer to EC-815, "Testing Condition" .
3. Select “A/F ALPHA-B1” in “DATA MONITOR (SPEC)” mode, and make sure that the indication is within the SP value.

   NOTE:
   Check “A/F ALPHA-B1” for approximately 1 minute because they may fluctuate. It is NG if the indication is out of the SP value even a little.

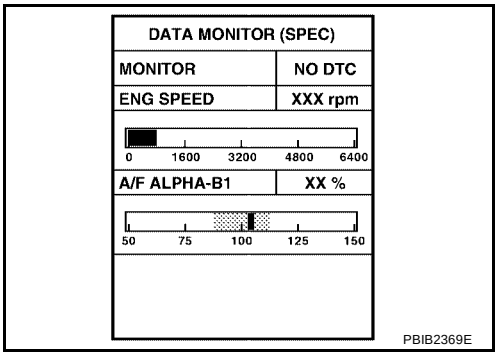

OK or NG

OK >> GO TO 17.
NG (Less than the SP value)>>GO TO 2.
NG (More than the SP value)>>GO TO 3.

2. CHECK “B/FUEL SCHDL”

Select “B/FUEL SCHDL” in “DATA MONITOR (SPEC)” mode, and make sure that the indication is within the SP value.

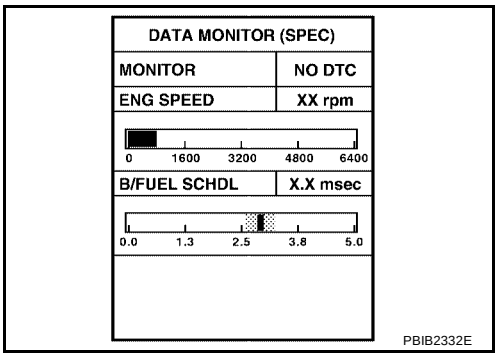

OK or NG

OK >> GO TO 4.
NG (More than the SP value)>>GO TO 19.

3. CHECK “B/FUEL SCHDL”

Select “B/FUEL SCHDL” in “DATA MONITOR (SPEC)” mode, and make sure that the indication is within the SP value.

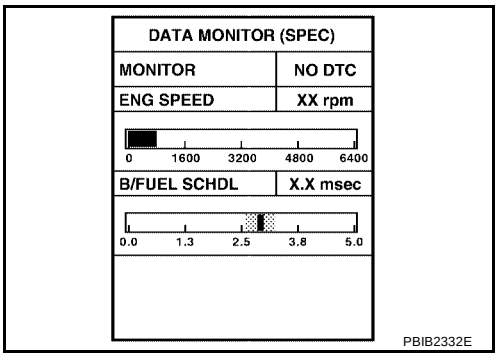

OK or NG

OK >> GO TO 6.
NG (More than the SP value)>>GO TO 6.
NG (Less than the SP value)>>GO TO 25.

4. CHECK “A/F ALPHA-B1”

1. Stop the engine.
2. Disconnect PCV hose, and then plug it.
3. Start engine.
4. Select “A/F ALPHA-B1” in “DATA MONITOR (SPEC)” mode, and make sure that the indication is within the SP value.

OK or NG

OK >> GO TO 5.
NG >> GO TO 6.

5. CHANGE ENGINE OIL

1. Stop the engine.
2. Change engine oil.

NOTE:
This symptom may occur when a large amount of gasoline is mixed with engine oil because of driving conditions (such as when engine oil temperature does not rise enough since a journey distance is too short during winter). The symptom will not be detected after changing engine oil or changing driving condition.

>> **INSPECTION END**

6. CHECK FUEL PRESSURE

Check fuel pressure. (Refer to EC-752, "Fuel Pressure Check" .)

OK or NG

OK >> GO TO 9.
NG (Fuel pressure is too high)>>Replace fuel pressure regulator, refer to EC-752 . GO TO 8.
NG (Fuel pressure is too low)>>GO TO 7.

7. DETECT MALFUNCTIONING PART

1. Check the following.

- Clogged and bent fuel hose and fuel tube
- Clogged fuel filter
- Fuel pump and its circuit (Refer to EC-1342, "FUEL PUMP CIRCUIT" .)

2. If NG, repair or replace the malfunctioning part. (Refer to EC-752 .)
If OK, replace fuel pressure regulator.

>> GO TO 8.

8. CHECK “A/F ALPHA-B1”

1. Start engine.
2. Select “A/F ALPHA-B1” in “DATA MONITOR (SPEC)” mode, and make sure that the indication is within the SP value.

OK or NG

OK >> **INSPECTION END**
NG >> GO TO 9.

9. PERFORM POWER BALANCE TEST

1. Perform “POWER BALANCE” in “ACTIVE TEST” mode.
2. Make sure that the each cylinder produces a momentary engine speed drop.

OK or NG

OK >> GO TO 12.
NG >> GO TO 10.

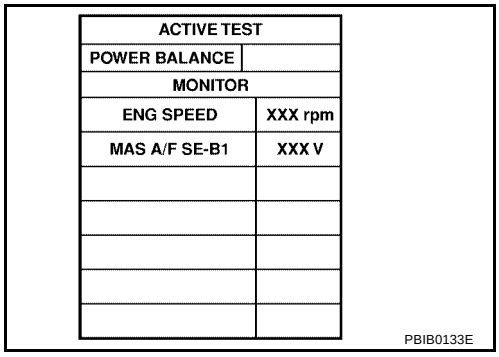

ACTIVE TEST	
POWER BALANCE	
MONITOR	
ENG SPEED	XXX rpm
MAS A/F SE-B1	XXX V

PBIB0133E

10. DETECT MALFUNCTIONING PART

1. Check the following.
- Ignition coil and its circuit (Refer to EC-1314, "IGNITION SIGNAL" .)
- Fuel injector and its circuit (Refer to EC-1336, "INJECTOR CIRCUIT" .)
- Intake air leakage
- Low compression pressure (Refer to EM-148, "CHECKING COMPRESSION PRESSURE" .)
2. If NG, repair or replace the malfunctioning part.
If OK, replace fuel injector. (It may be caused by leakage from fuel injector or clogging.)

>> GO TO 11.

11. CHECK “A/F ALPHA-B1”

1. Start engine.
2. Select “A/F ALPHA-B1” in “DATA MONITOR (SPEC)” mode, and make sure that the indication is within the SP value.

OK or NG

OK >> **INSPECTION END**
NG >> GO TO 12.

12. CHECK A/F SENSOR 1 FUNCTION

Perform all DTC Confirmation Procedure related with A/F sensor 1.
- For DTC P1271, refer to EC-1183, "DTC Confirmation Procedure" .
- For DTC P1272, refer to EC-1189, "DTC Confirmation Procedure" .
- For DTC P1273, refer to EC-1195, "DTC Confirmation Procedure" .
- For DTC P1274, refer to EC-1202, "DTC Confirmation Procedure" .
- For DTC P1276, refer to EC-1209, "DTC Confirmation Procedure" .
- For DTC P1278, refer to EC-1217, "DTC Confirmation Procedure" .
- For DTC P1279, refer to EC-1226, "DTC Confirmation Procedure" .

OK or NG

OK >> GO TO 15.
NG >> GO TO 13.

13. CHECK A/F SENSOR 1 CIRCUIT

Perform Diagnostic Procedure according to corresponding DTC.

>> GO TO 14.

14. CHECK “A/F ALPHA-B1”

1. Start engine.
2. Select “A/F ALPHA-B1” in “DATA MONITOR (SPEC)” mode, and make sure that the indication is within the SP value.

OK or NG

OK >> **INSPECTION END**
NG >> GO TO 15.

15. DISCONNECT AND RECONNECT ECM HARNESS CONNECTOR

1. Stop the engine.
2. Disconnect ECM harness connector. Check pin terminal and connector for damage, and then reconnect it.

>> GO TO 16.

16. CHECK “A/F ALPHA-B1”

1. Start engine.
2. Select “A/F ALPHA-B1” in “DATA MONITOR (SPEC)” mode, and make sure that the indication is within the SP value.

OK or NG

OK >> **INSPECTION END**
NG >> Detect malfunctioning part according to EC-106, "Symptom Matrix Chart" .

17. CHECK “B/FUEL SCHDL”

Select “B/FUEL SCHDL” in “DATA MONITOR (SPEC)” mode, and make sure that the indication is within the SP value.

OK or NG

OK >> **INSPECTION END**
NG (More than the SP value)>>GO TO 18.
NG (Less than the SP value)>>GO TO 25.

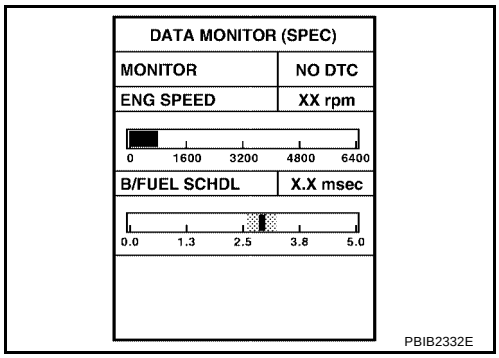

18. DETECT MALFUNCTIONING PART

1. Check for the cause of large engine friction. Refer to the following.
- Engine oil level is too high
- Engine oil viscosity
- Belt tension of power steering, alternator, A/C compressor, etc. is excessive
- Noise from engine
- Noise from transmission, etc.
2. Check for the cause of insufficient combustion. Refer to the following.
- Valve clearance malfunction
- Intake valve timing control function malfunction
- Camshaft sprocket installation malfunction, etc.

>> Repair or replace malfunctioning part, and then GO TO 30.

19. CHECK INTAKE SYSTEM

Check for the cause of uneven air flow through mass air flow sensor. Refer to the following.

- Crushed air ducts
- Malfunctioning seal of air cleaner element
- Uneven dirt of air cleaner element
- Improper specification of intake air system

OK or NG

OK >> GO TO 21.
NG >> Repair or replace malfunctioning part, and then GO TO 20.

20. CHECK “A/F ALPHA-B1” AND “B/FUEL SCHDL”

Select “A/F ALPHA-B1” and “B/FUEL SCHDL” in “DATA MONITOR (SPEC)” mode, and make sure that the each indication is within the SP value.

OK or NG

OK >> **INSPECTION END**
NG (“B/FUEL SCHDL” is more, “A/F ALPHA-B1” is less than the SP value)>>GO TO 21.

21. DISCONNECT AND RECONNECT MASS AIR FLOW SENSOR HARNESS CONNECTOR

1. Stop the engine.
2. Disconnect mass air flow sensor harness connector. Check pin terminal and connector for damage and then reconnect it again.

>> GO TO 22.

22. CHECK “A/F ALPHA-B1”

1. Start engine.
2. Select “A/F ALPHA-B1” in “DATA MONITOR (SPEC)” mode, and make sure that the indication is within the SP value.

OK or NG

OK >> 1. Detect malfunctioning part of mass air flow sensor circuit and repair it. Refer to EC-870 .
2. GO TO 29.
NG >> GO TO 23.

23. CHECK “MAS A/F SE-B1”

Select “MAS A/F SE-B1” in “DATA MONITOR (SPEC)” mode, and make sure that the indication is within the SP value.

OK or NG

OK >> GO TO 24.
NG (More than the SP value)>>Replace mass air flow sensor, and then GO TO 29.

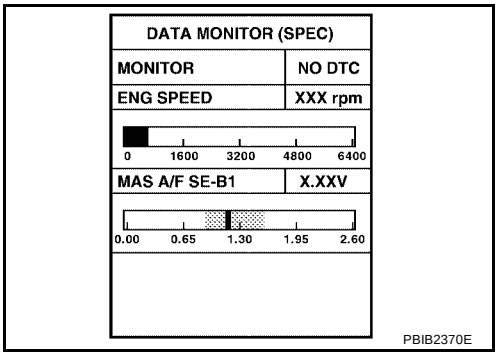

24. REPLACE ECM

1. Replace ECM.
2. Perform initialization of NVIS(NATS) system and registration of all NVIS(NATS) ignition key IDs. Refer to BL-96, "NVIS (NISSAN VEHICLE IMMOBILIZER SYSTEM — NATS)" .
3. Perform EC-749, "VIN Registration" .
4. Perform EC-749, "Accelerator Pedal Released Position Learning" .
5. Perform EC-749, "Throttle Valve Closed Position Learning" .
6. Perform EC-750, "Idle Air Volume Learning" .

>> GO TO 29.

25. CHECK INTAKE SYSTEM

Check for the cause of uneven air flow through mass air flow sensor. Refer to the following.

- Crushed air ducts
- Malfunctioning seal of air cleaner element
- Uneven dirt of air cleaner element
- Improper specification of intake air system

OK or NG

OK >> GO TO 27.
NG >> Repair or replace malfunctioning part, and then GO TO 26.

26. CHECK "B/FUEL SCHDL"

Select "B/FUEL SCHDL" in "DATA MONITOR (SPEC)" mode, and make sure that the indication is within the SP value.

OK or NG

OK >> **INSPECTION END**
NG (Less than the SP value)>>GO TO 27.

27. CHECK "MAS A/F SE-B1"

Select "MAS A/F SE-B1" in "DATA MONITOR (SPEC)" mode, and make sure that the indication is within the SP value.

OK or NG

OK >> GO TO 28.
NG (Less than the SP value)>>Replace mass air flow sensor, and then GO TO 30.

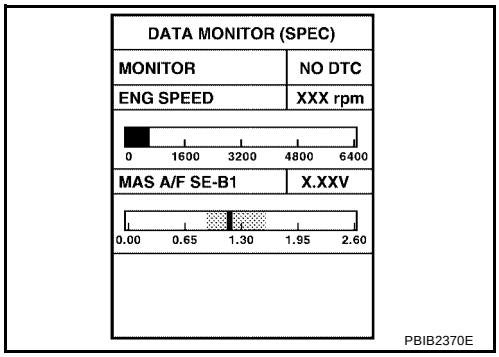

28. CHECK INTAKE SYSTEM

Check for the cause of air leak after the mass air flow sensor. Refer to the following.

- Disconnection, looseness, and cracks in air duct
- Looseness of oil filler cap
- Disconnection of oil level gauge
- Open stuck, breakage, hose disconnection, or cracks of PCV valve
- Disconnection or cracks of EVAP purge hose, open stuck of EVAP canister purge volume control solenoid valve
- Malfunctioning seal of rocker cover gasket
- Disconnection, looseness, or cracks of hoses, such as vacuum hose, connecting to intake air system parts
- Malfunctioning seal of intake air system, etc.

>> GO TO 30.

29. CHECK "A/F ALPHA-B1" AND "B/FUEL SCHDL"

Select "A/F ALPHA-B1" and "B/FUEL SCHDL" in "DATA MONITOR (SPEC)" mode, and make sure that the each indication is within the SP value.

OK or NG

OK >> **INSPECTION END**
NG >> Detect malfunctioning part according to EC-106, "Symptom Matrix Chart" .

30. CHECK “B/FUEL SCHDL”

Select “B/FUEL SCHDL” in “DATA MONITOR (SPEC)” mode, and then make sure that the indication is within the SP value.

OK or NG

OK >> **INSPECTION END**
NG >> Detect malfunctioning part according to EC-106, "Symptom Matrix Chart" .

TROUBLE DIAGNOSIS FOR INTERMITTENT INCIDENT

PFP:00006

Description

UBS00JAB

Intermittent incidents may occur. In many cases, the malfunction resolves itself (the part or circuit function returns to normal without intervention). It is important to realize that the symptoms described in the customer's complaint often do not recur on (1st trip) DTC visits. Realize also that the most frequent cause of I/I occurrences is poor electrical connections. Because of this, the conditions under which the incident occurred may not be clear. Therefore, circuit checks made as part of the standard diagnostic procedure may not indicate the specific malfunctioning area.

Common Intermittent Incidents Report Situations

STEP in Work Flow	Situation
2	The CONSULT-II is used. The SELF-DIAG RESULTS screen shows time data other than 0 or [1t].
3 or 4	The symptom described by the customer does not recur.
5	(1st trip) DTC does not appear during the DTC Confirmation Procedure.
10	The Diagnostic Procedure for PXXXX does not indicate the malfunctioning area.

Diagnostic Procedure

UBS00JAC

1. INSPECTION START

Erase (1st trip) DTCs. Refer to EC-712, "HOW TO ERASE EMISSION-RELATED DIAGNOSTIC INFORMATION" .

>> GO TO 2.

2. CHECK GROUND TERMINALS

Check ground terminals for corroding or loose connection.
Refer to EC-841, "Ground Inspection" .

OK or NG

OK >> GO TO 3.
NG >> Repair or replace.

3. SEARCH FOR ELECTRICAL INCIDENT

Perform GI-27, "How to Perform Efficient Diagnosis for an Electrical Incident" , “INCIDENT SIMULATION TESTS”.

OK or NG

OK >> GO TO 4.
NG >> Repair or replace.

4. CHECK CONNECTOR TERMINALS

Refer to GI-24, "How to Check Terminal" , “HOW TO PROBE CONNECTORS”, “How to Check Enlarged Contact Spring of Terminal”.

OK or NG

OK >> **INSPECTION END**
NG >> Repair or replace connector.

POWER SUPPLY AND GROUND CIRCUIT

PFP:24110

Wiring Diagram

UBS00JAD

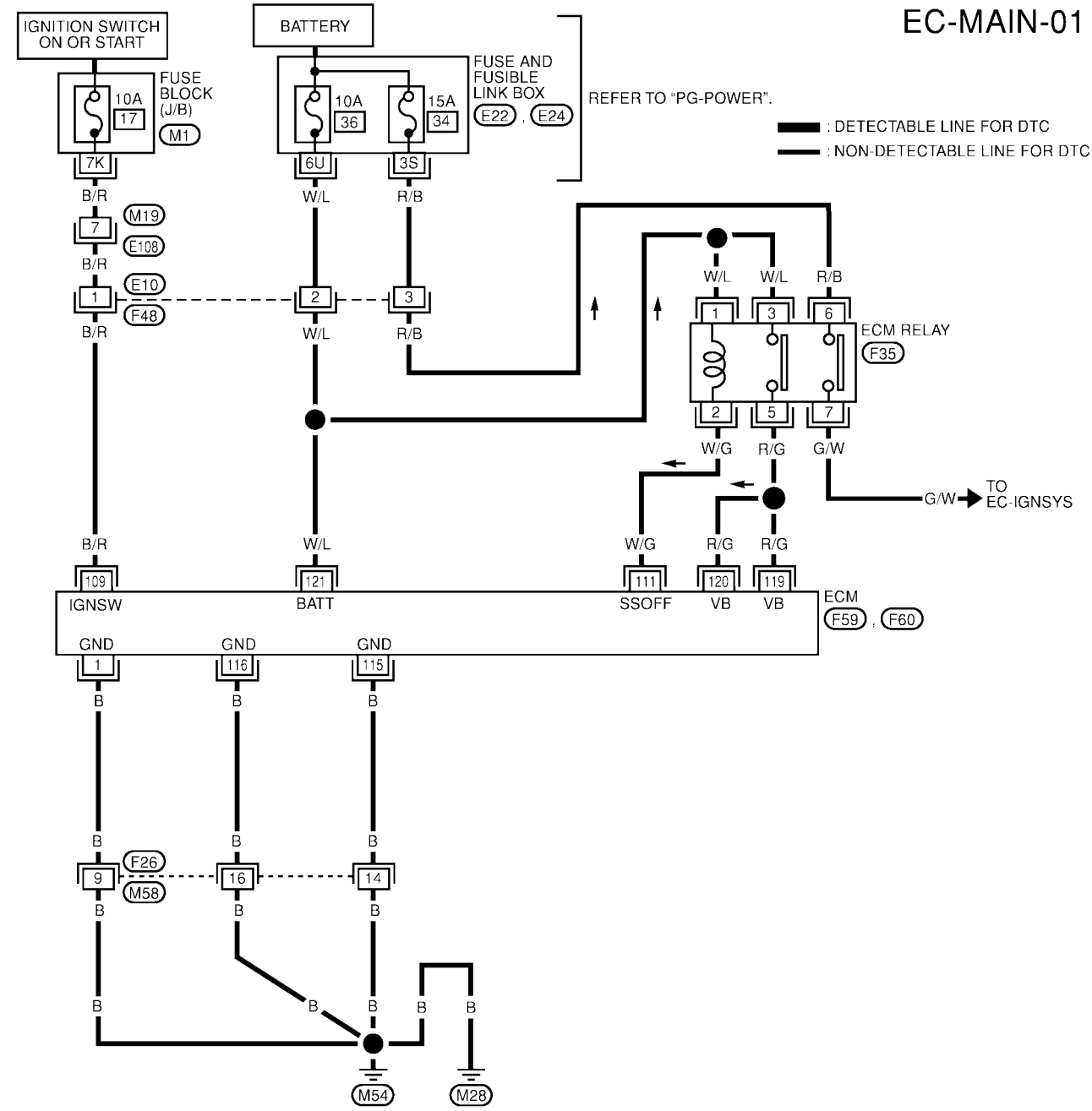

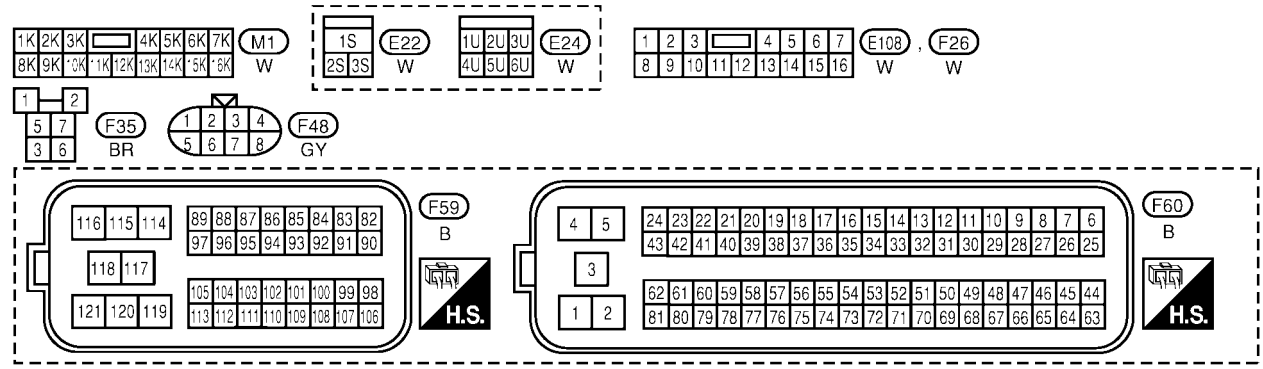

BBWA1387E

Specification data are reference values and are measured between each terminal and ground.

CAUTION:

Do not use ECM ground terminals when measuring input/output voltage. Doing so may result in damage to the ECM's transistor. Use a ground other than ECM terminals, such as the ground.

TERMINAL NO.	WIRE COLOR	ITEM	CONDITION	DATA (DC Voltage)
1	B	ECM ground	**[Engine is running]** ● Idle speed	Engine ground
109	B/R	Ignition switch	**[Ignition switch: OFF]**	0V
			[Ignition switch: ON]	BATTERY VOLTAGE (11 - 14V)
111	W/G	ECM relay (Self shut-off)	**[Engine is running]** **[Ignition switch: OFF]** ● A few seconds after turning ignition switch OFF	0 - 1.0V
			[Ignition switch: OFF] ● More than a few seconds after turning ignition switch OFF	BATTERY VOLTAGE (11 - 14V)
115 116	B	ECM ground	**[Engine is running]** ● Idle speed	Engine ground
119 120	R/G	Power supply for ECM	**[Ignition switch: ON]**	BATTERY VOLTAGE (11 - 14V)
121	W/L	Power supply for ECM (Back-up)	**[Ignition switch: OFF]**	BATTERY VOLTAGE (11 - 14V)

Diagnostic Procedure

UBS00JAE

1. INSPECTION START

Start engine.

Is engine running?

Yes or No

Yes >> GO TO 10.
No >> GO TO 2.

2. CHECK ECM POWER SUPPLY CIRCUIT-I

1. Turn ignition switch OFF and then ON.
2. Check voltage between ECM terminal 109 and ground with CONSULT-II or tester.

Voltage: Battery voltage

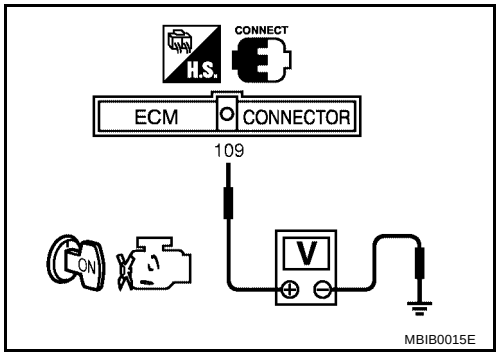

OK or NG

OK >> GO TO 4.
NG >> GO TO 3.

3. DETECT MALFUNCTIONING PART

Check the following.

- Fuse block (J/B) connector M1
- 10A fuse
- Harness connectors M19, E108
- Harness connectors E10, F48
- Harness for open or short between ECM and fuse

>> Repair open circuit or short to ground or short to power in harness or connectors.

4. CHECK GROUND CONNECTIONS

1. Turn ignition switch OFF.
2. Loosen and retighten two ground screws on the body.
   Refer to EC-841, "Ground Inspection" .

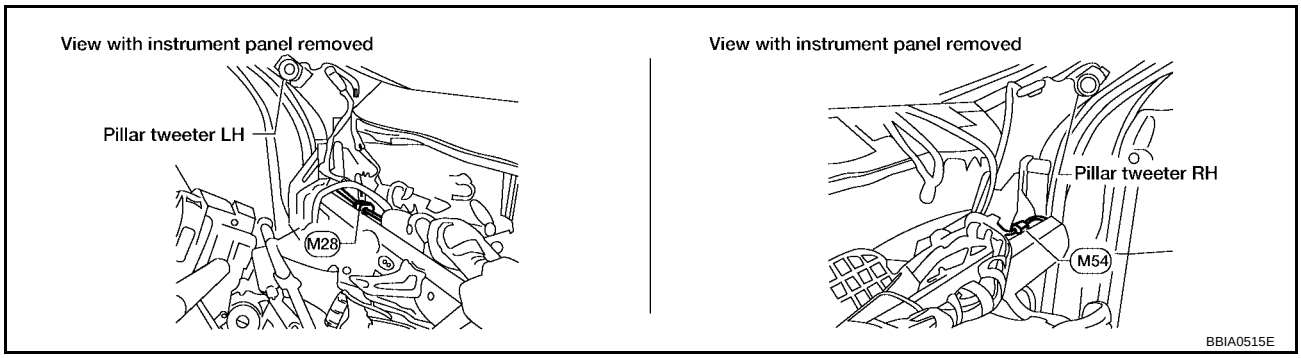

OK or NG

OK >> GO TO 5.
NG >> Repair or replace ground connections.

5. CHECK ECM GROUND CIRCUIT FOR OPEN AND SHORT-I

1. Disconnect ECM harness connector.
2. Check harness continuity between ECM terminals 1, 115, 116 and ground.
   Refer to Wiring Diagram.

   Continuity should exist.

3. Also check harness for short to power.

OK or NG

OK >> GO TO 6.
NG >> Repair open circuit or short to power in harness or connectors.

6. CHECK ECM POWER SUPPLY CIRCUIT-II

1. Disconnect ECM relay.

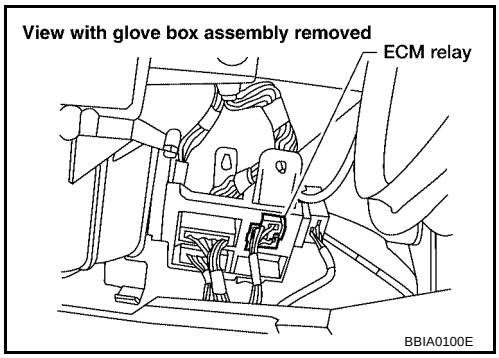

2. Check voltage between ECM relay terminals 1, 6 and ground with CONSULT-II or tester.

Voltage: Battery voltage

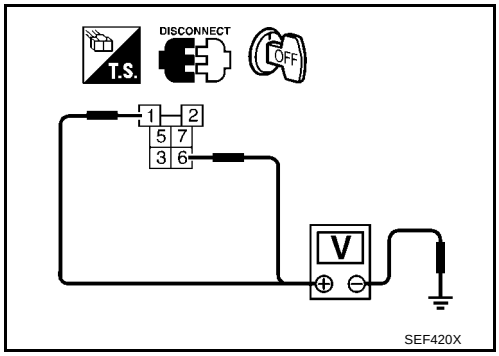

OK or NG

OK >> GO TO 8.
NG >> GO TO 7.

7. DETECT MALFUNCTIONING PART

Check the following.

- Harness connectors E10, F48
- 10A fuse
- 15A fuse
- Harness for open or short between ECM relay and battery

>> Repair open circuit or short to ground or short to power in harness or connectors.

8. CHECK OUTPUT SIGNAL CIRCUIT FOR OPEN AND SHORT

1. Check harness continuity between ECM terminal 111 and ECM relay terminal 2.
Refer to Wiring Diagram.

Continuity should exist.

2. Also check harness for short to ground and short to power.

OK or NG

OK >> GO TO 9.
NG >> Repair open circuit or short to ground or short to power in harness or connectors.

9. CHECK ECM RELAY

Refer to EC-841, "Component Inspection" .

OK or NG

OK >> Go to EC-1314, "IGNITION SIGNAL" .
NG >> Replace ECM relay.

10. CHECK ECM POWER SUPPLY CIRCUIT-III

1. Stop engine and wait at least 10 seconds.
2. Turn ignition switch ON and then OFF.
3. Check voltage between ECM terminals 119, 120 and ground with CONSULT-II or tester.

Voltage: After turning ignition switch OFF, battery voltage will exist for a few seconds, then drop approximately 0V.

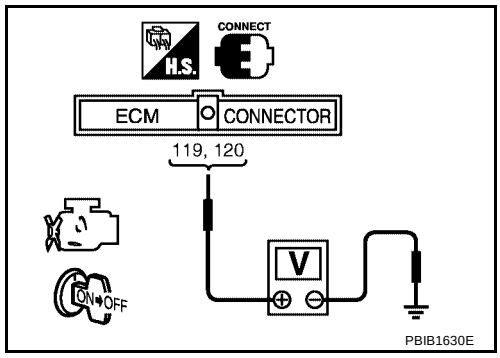

OK or NG

OK >> GO TO 15.
NG (Battery voltage does not exist.)>>GO TO 11.
NG (Battery voltage exists for more than a few seconds.)>>GO TO 13.

11. CHECK ECM POWER SUPPLY CIRCUIT-IV

1. Disconnect ECM relay.

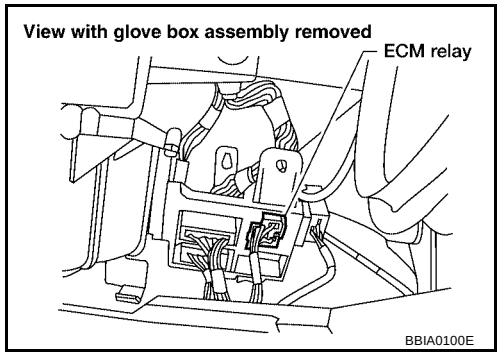

2. Check voltage between ECM relay terminal 3 and ground with CONSULT-II or tester.

Voltage: Battery voltage

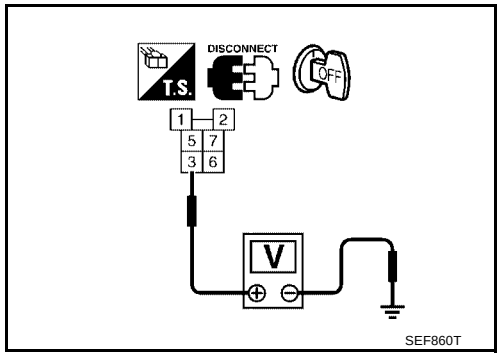

OK or NG

OK >> GO TO 13.
NG >> GO TO 12.

12. DETECT MALFUNCTIONING PART

Check the following.

- Harness connectors E10, F48
- 10A fuse
- Harness for open or short between ECM relay and battery

>> Repair open circuit or short to ground or short to power in harness or connectors.

13. CHECK ECM POWER SUPPLY CIRCUIT-V

1. Disconnect ECM harness connector.
2. Check harness continuity between ECM terminals 119, 120 and ECM relay terminal 5.
   Refer to Wiring Diagram.

   Continuity should exist.

3. Also check harness for short to ground and short to power.

OK or NG

OK >> GO TO 14.
NG >> Repair open circuit or short to ground or short to power in harness or connectors.

14. CHECK ECM RELAY

Refer to EC-841, "Component Inspection" .

OK or NG

OK >> GO TO 15.
NG >> Replace ECM relay.

15. CHECK GROUND CONNECTIONS

1. Loosen and retighten two ground screws on the body.
   Refer to EC-841, "Ground Inspection" .

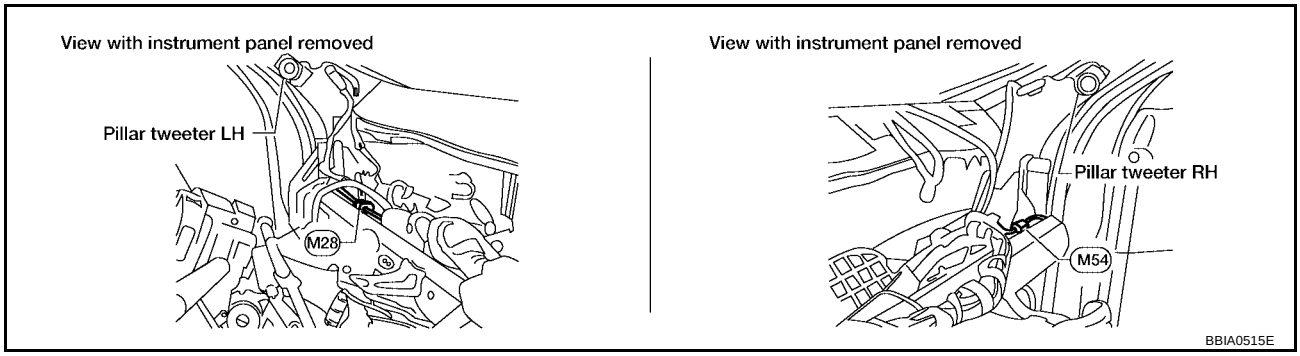

OK or NG

OK >> GO TO 16.
NG >> Repair or replace ground connections.

16. CHECK ECM GROUND CIRCUIT FOR OPEN AND SHORT-II

1. Disconnect ECM harness connector.
2. Check harness continuity between ECM terminals 1, 115, 116 and ground.
   Refer to Wiring Diagram.

   Continuity should exist.

3. Also check harness for short to power.

OK or NG

OK >> GO TO 17.
NG >> Repair open circuit or short to power in harness or connectors.

17. CHECK INTERMITTENT INCIDENT

Refer to EC-834, "TROUBLE DIAGNOSIS FOR INTERMITTENT INCIDENT" .

>> **INSPECTION END**

Component Inspection

UBS00KK5

ECM RELAY

1. Apply 12V direct current between ECM relay terminals 1 and 2.
2. Check continuity between relay terminals 3 and 5, 6 and 7.

Condition	Continuity
12V direct current supply between terminals 1 and 2	Yes
OFF	No

3. If NG, replace ECM relay.

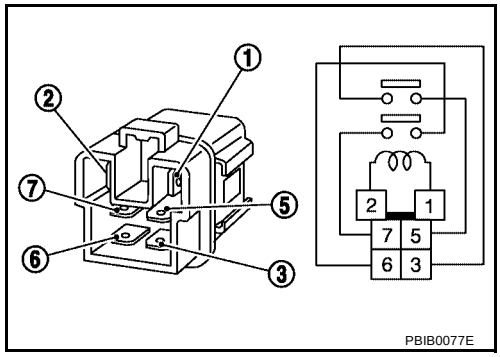

Ground Inspection

UBS00JAF

Ground connections are very important to the proper operation of electrical and electronic circuits. Ground connections are often exposed to moisture, dirt and other corrosive elements. The corrosion (rust) can become an unwanted resistance. This unwanted resistance can change the way a circuit works.
Electronically controlled circuits are very sensitive to proper grounding. A loose or corroded ground can drastically affect an electronically controlled circuit. A poor or corroded ground can easily affect the circuit. Even when the ground connection looks clean, there can be a thin film of rust on the surface.
When inspecting a ground connection follow these rules:

- Remove the ground bolt or screw.
- Inspect all mating surfaces for tarnish, dirt, rust, etc.
- Clean as required to assure good contact.
- Reinstall bolt or screw securely.
- Inspect for “add-on” accessories which may be interfering with the ground circuit.
- If several wires are crimped into one ground eyelet terminal, check for proper crimps. Make sure all of the wires are clean, securely fastened and providing a good ground path. If multiple wires are cased in one eyelet make sure no ground wires have excess wire insulation.

For detailed ground distribution information, refer to PG-13, "Ground Distribution" .

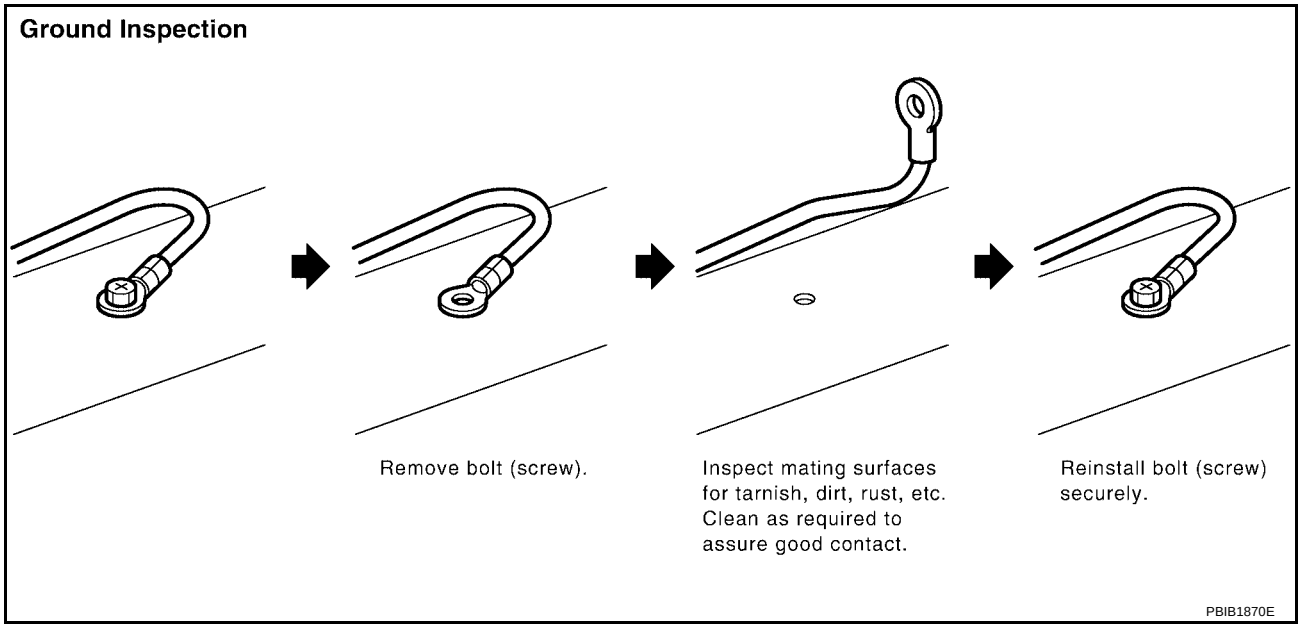

DTC U1000, U1001 CAN COMMUNICATION LINE

PFP:23710

Description

UBS00JAG

CAN (Controller Area Network) is a serial communication line for real time application. It is an on-vehicle multiplex communication line with high data communication speed and excellent error detection ability. Many electronic control units are equipped onto a vehicle, and each control unit shares information and links with other control units during operation (not independent). In CAN communication, control units are connected with 2 communication lines (CAN H line, CAN L line) allowing a high rate of information transmission with less wiring. Each control unit transmits/receives data but selectively reads required data only.

On Board Diagnosis Logic

UBS00JAH

DTC No.	Trouble diagnosis name	DTC detecting condition	Possible cause
U1000*1 1000*1	CAN communication line	● ECM cannot communicate to other control units. ● ECM cannot communicate for more than the specified time.	● Harness or connectors (CAN communication line is open or shorted)
U1001*2 1001*2			

*1: **This self-diagnosis has the one trip detection logic. (A/T models)**
The MIL will not light up for this diagnosis. (M/T models)
*2: **The MIL will not light up for this diagnosis.**

DTC Confirmation Procedure

UBS00JAI

1. Turn ignition switch ON and wait at least 3 seconds.
2. Select “DATA MONITOR” mode with CONSULT-II.
3. If 1st trip DTC is detected, go to EC-844, "Diagnostic Procedure" .

Wiring Diagram

UBS00JAJ

EC-CAN-01

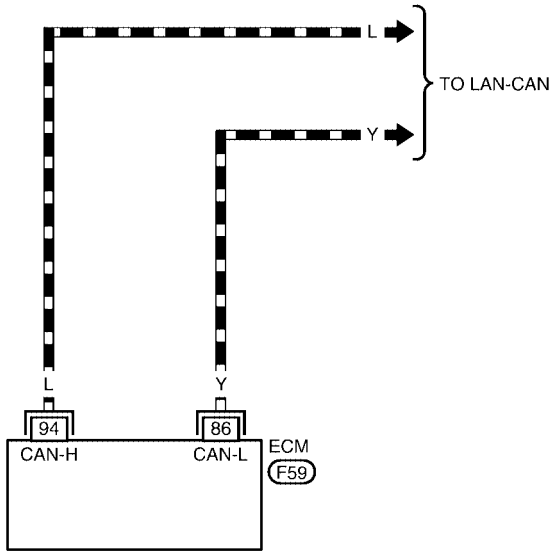

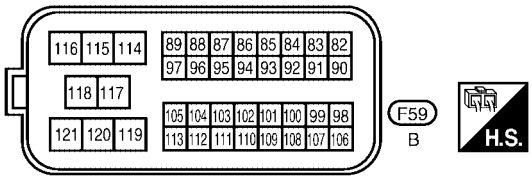

BBWA0274E

Diagnostic Procedure

UBS00JAK

Go to LAN-4, "CAN COMMUNICATION" .

DTC P0011 IVT CONTROL

PFP:23796

Description

UBS00JAL

SYSTEM DESCRIPTION

Sensor	Input signal to ECM	ECM function	Actuator
Crankshaft position sensor (POS)	Engine speed	Intake valve timing control	Intake valve timing control solenoid valve
Camshaft position sensor (PHASE)			
Engine coolant temperature sensor	Engine coolant temperature		
Vehicle speed sensor*	Vehicle speed		

*: This signal is sent to ECM through CAN communication line.

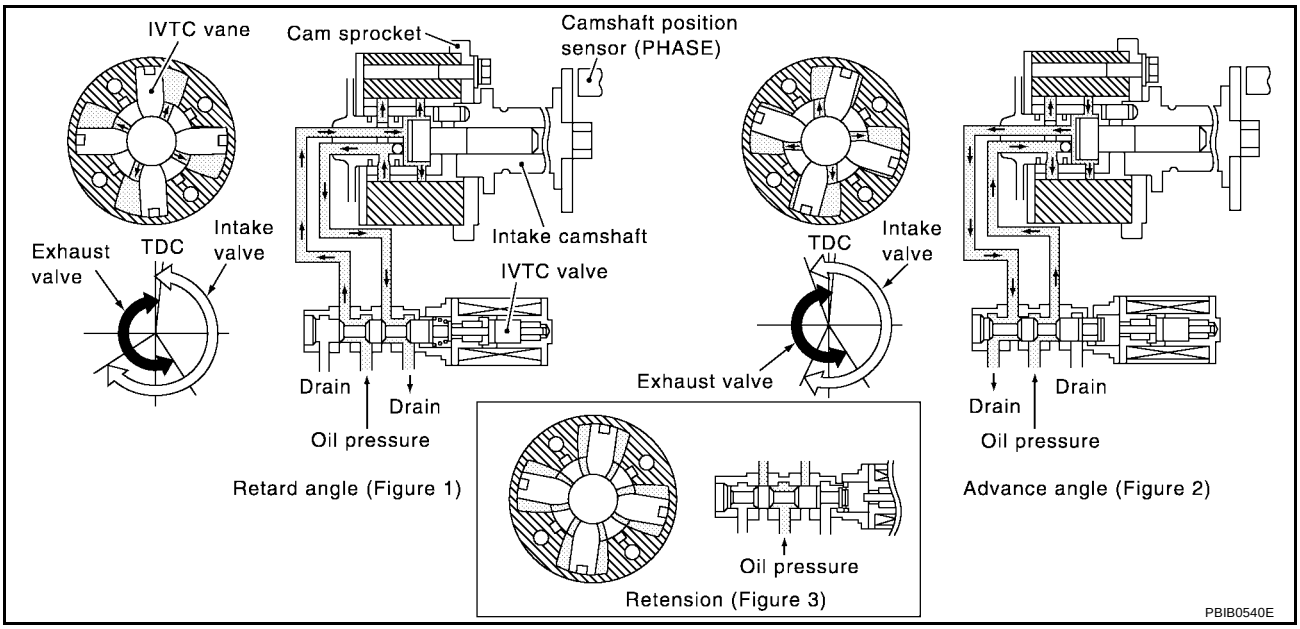

This mechanism hydraulically controls cam phases continuously with the fixed operating angle of the intake valve.

The ECM receives signals such as crankshaft position, camshaft position, engine speed, and engine coolant temperature. Then, the ECM sends ON/OFF pulse duty signals to the intake valve timing control solenoid valve depending on driving status. This makes it possible to control the shut/open timing of the intake valve to increase engine torque in low/mid speed range and output in high-speed range.

CONSULT-II Reference Value in Data Monitor Mode

UBS00JAM

Specification data are reference values.

MONITOR ITEM	CONDITION		SPECIFICATION
INT/V TIM (B1)	● Engine: After warming up ● Shift lever: P or N (A/T), Neutral (M/T) ● Air conditioner switch: OFF ● No-load	Idle	–5° - 5°CA
		2,000 rpm	Approx. 0° - 20°CA
INT/V SOL (B1)	● Engine: After warming up ● Shift lever: P or N (A/T), Neutral (M/T) ● Air conditioner switch: OFF ● No-load	Idle	0% - 2%
		2,000 rpm	Approx. 25% - 60%

On Board Diagnosis Logic

UBS00JAN

DTC No.	Trouble diagnosis name	Detecting condition	Possible cause
P0011 0011	Intake valve timing control performance	There is a gap between angle of target and phase-control angle degree.	● Crankshaft position sensor (POS) ● Camshaft position sensor (PHASE) ● Intake valve control solenoid valve ● Accumulation of debris to the signal pick-up portion of the camshaft ● Timing chain installation ● Foreign matter caught in the oil groove for intake valve timing control

FAIL-SAFE MODE

ECM enters fail-safe mode when the malfunction is detected.

Detected items	Engine operating condition in fail-safe mode
Intake valve timing control	The signal is not energized to the solenoid valve and the valve control does not function

DTC Confirmation Procedure

UBS00JAO

CAUTION:
Always drive at a safe speed.

NOTE:
- **If DTC P0011 is displayed with DTC P1111, first perform trouble diagnosis for DTC P1111. See EC-1108 .**
- If DTC Confirmation Procedure has been previously conducted, always turn ignition switch OFF and wait at least 10 seconds before conducting the next test.

TESTING CONDITION:
Before performing the following procedure, confirm that battery voltage is between 10V and 16V at idle.

WITH CONSULT-II

1. Turn ignition switch ON and select “DATA MONITOR” mode with CONSULT-II.
2. Start engine and warm it up to the normal operating temperature.
3. Maintain the following conditions for at least 6 consecutive seconds.
   Hold the accelerator pedal as steady as possible.

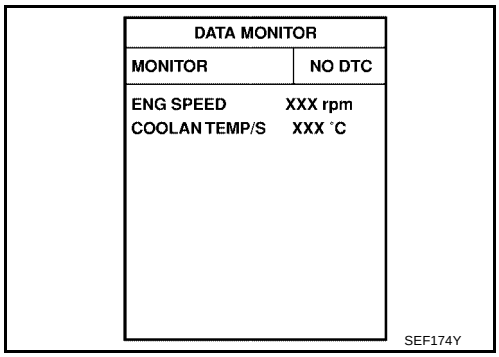

ENG SPEED	500 - 2,000 rpm (A constant rotation is maintained.)
COOLANT TEMPS	70 - 120°C (158 - 248°F)
B/FUEL SCHDL	More than 4 msec
Selector lever	P or N position

4. Let engine idle for 10 seconds.
5. If the 1st trip DTC is detected, go to EC-847, "Diagnostic Procedure" .
   If the 1st trip DTC is not detected, go to next step.
6. Maintain the following conditions for at least 6 consecutive seconds.

ENG SPEED	1,800 - 3,175 rpm (A constant rotation is maintained.)
COOLANT TEMPS	70 - 105°C (158 - 221°F)
Selector lever	1st or 2nd position
Driving location uphill	Driving vehicle uphill (Increased engine load will help maintain the driving conditions required for this test.)

7. If the 1st trip DTC is detected, go to EC-847, "Diagnostic Procedure" .

WITH GST

Follow the procedure “WITH CONSULT-II” above.

Diagnostic Procedure

UBS00JAP

1. CHECK OIL PRESSURE WARNING LAMP

1. Start engine.
2. Check oil pressure warning lamp and confirm it is not illuminated.

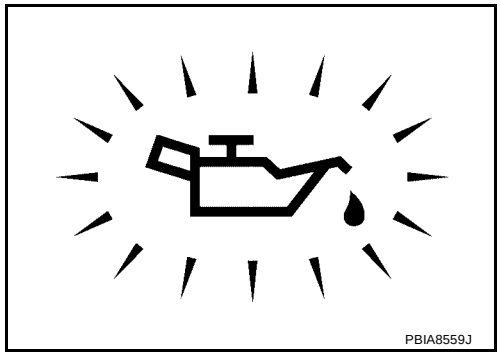

OK or NG

OK >> GO TO 2.
KG >> Go to LU-16, "OIL PRESSURE CHECK" .

2. CHECK INTAKE VALVE TIMING CONTROL SOLENOID VALVE

Refer to EC-848, "Component Inspection" .

OK or NG

OK >> GO TO 3.
NG >> Replace intake valve timing control solenoid valve.

3. CHECK CRANKSHAFT POSITION SENSOR (POS)

Refer to EC-997, "Component Inspection" .

OK or NG

OK >> GO TO 4.
NG >> Replace crankshaft position sensor (POS).

4. CHECK CAMSHAFT POSITION SENSOR (PHASE)

Refer to EC-1004, "Component Inspection" .

OK or NG

OK >> GO TO 5.
NG >> Replace camshaft position sensor (PHASE).

5. CHECK CAMSHAFT (INTAKE)

Check the following.

- Accumulation of debris to the signal plate of camshaft rear end
- Chipping signal plate of camshaft rear end

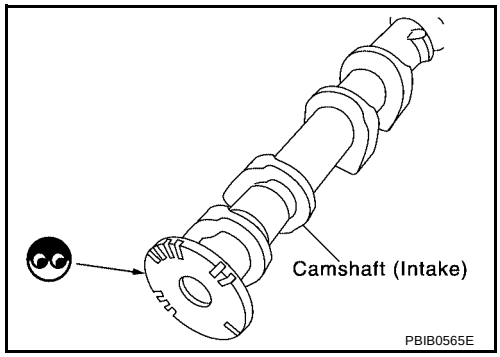

OK or NG

OK >> GO TO 6.
NG >> Remove debris and clean the signal plate of camshaft rear end or replace camshaft.

6. CHECK TIMING CHAIN INSTALLATION

Check service records for any recent repairs that may cause timing chain misaligned.

OK or NG

OK >> Check timing chain installation. Refer to EM-136, "TIMING CHAIN" .
NG >> GO TO 7.

7. CHECK LUBRICATION CIRCUIT

Refer to EM-133, "INSPECTION OF CAMSHAFT SPROCKET (INT) OIL GROOVE" .

OK or NG

OK >> GO TO 8.
NG >> Clean lubrication line.

8. CHECK INTERMITTENT INCIDENT

Refer to EC-834, "TROUBLE DIAGNOSIS FOR INTERMITTENT INCIDENT" .
For Wiring Diagram, refer to EC-994 for CKP sensor (POS) and EC-1001 for CMP sensor (PHASE).

>> **INSPECTION END**

Component Inspection

UBS00JAQ

INTAKE VALVE TIMING CONTROL SOLENOID VALVE

1. Disconnect intake valve timing control solenoid valve harness connector.
2. Check resistance between intake valve timing control solenoid valve as follows.

Terminal	Resistance
1 and 2	8Ω [at 20°C (68°F)]
1 or 2 and ground	(Continuity should not exist.)

If NG, replace intake valve timing control solenoid valve.
If OK, go to next step.

3. Remove intake valve timing control solenoid valve.

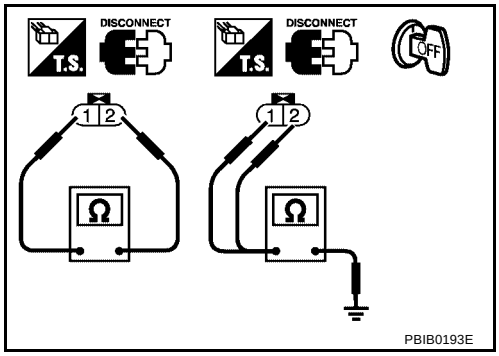

4. Provide 12V DC between intake valve timing control solenoid valve terminals and then interrupt it. Make sure that the plunger moves as shown in the figure.

CAUTION:
Do not apply 12V DC continuously for 5 seconds or more. Doing so may result in damage to the coil in intake valve timing control solenoid valve.
If NG, replace intake valve timing control solenoid valve.

NOTE:
Always replace O-ring when intake valve timing control solenoid valve is removed.

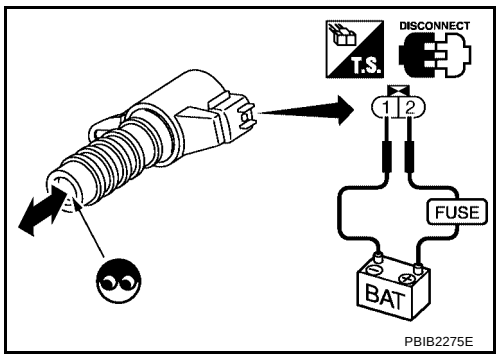

Removal and Installation

UBS00JAR

INTAKE VALVE TIMING CONTROL SOLENOID VALVE

Refer to EM-136, "TIMING CHAIN" .

DTC P0031, P0032 HO2S1 HEATER

PFP:22690

Description

UBS00JTC

SYSTEM DESCRIPTION

Sensor	Input Signal to ECM	ECM function	Actuator
Camshaft position sensor (PHASE) Crankshaft position sensor (POS)	Engine speed	Heated oxygen sensor 1 heater control	Heated oxygen sensor 1 heater
Engine coolant temperature sensor	Engine coolant temperature		

The ECM performs ON/OFF duty control of the heated oxygen sensor 1 heater corresponding to the engine speed and engine coolant temperature. The duty percent varies with engine coolant temperature when engine is started.

OPERATION

Engine speed rpm	Heated oxygen sensor 1 heater
Above 3,600	OFF
Below 3,600	ON

CONSULT-II Reference Value in Data Monitor Mode

UBS00JTD

Specification data are reference values.

MONITOR ITEM	CONDITION	SPECIFICATION
HO2S1 HTR (B1)	● Engine: After warming up ● Engine speed: Below 3,600 rpm	ON
	● Engine speed: Above 3,600 rpm	OFF
O2SEN HTR DTY	● Engine coolant temperature when engine started: More than 80°C (176°F) ● Engine speed: Below 3,600 rpm	Approx. 50%

On Board Diagnosis Logic

UBS00JTE

DTC No.	Trouble diagnosis name	DTC detecting condition	Possible cause
P0031 0031	Heated oxygen sensor 1 heater control circuit low	The current amperage in the heated oxygen sensor 1 heater circuit is out of the normal range. (An excessively low voltage signal is sent to ECM through the heated oxygen sensor 1 heater.)	● Harness or connectors (The heated oxygen sensor 1 heater circuit is open or shorted.) ● Heater oxygen sensor 1 heater
P0032 0032	Heated oxygen sensor 1 heater control circuit high	The current amperage in the heated oxygen sensor 1 heater circuit is out of the normal range. (An excessively high voltage signal is sent to ECM through the heated oxygen sensor 1 heater.)	● Harness or connectors (The heated oxygen sensor 1 heater circuit is shorted.) ● Heater oxygen sensor 1 heater

DTC Confirmation Procedure

UBS00JTF

NOTE:
If DTC Confirmation Procedure has been previously conducted, always turn ignition switch OFF and wait at least 10 seconds before conducting the next test.

TESTING CONDITION:
Before performing the following procedure, confirm that battery voltage is between 10.5V and 16V at idle.

WITH CONSULT-II

1. Start engine and warm it up to normal operating temperature.
2. Turn ignition switch OFF and wait at least 10 seconds.

3. Turn ignition switch ON and select “DATA MONITOR” mode with CONSULT-II.
4. Start engine and run it for at least 6 seconds at idle speed.
5. If 1st trip DTC is detected, go to EC-852, "Diagnostic Procedure"
.

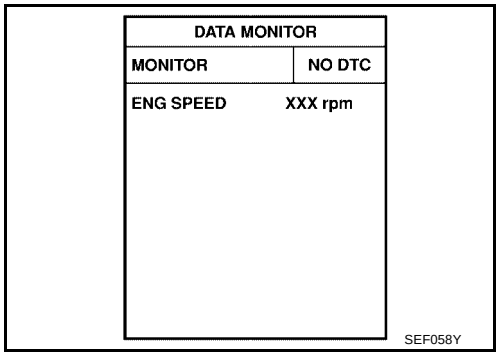

WITH GST

Follow the procedure “WITH CONSULT-II” above

Wiring Diagram

UBS00JTG

EC-HO2S1H-01

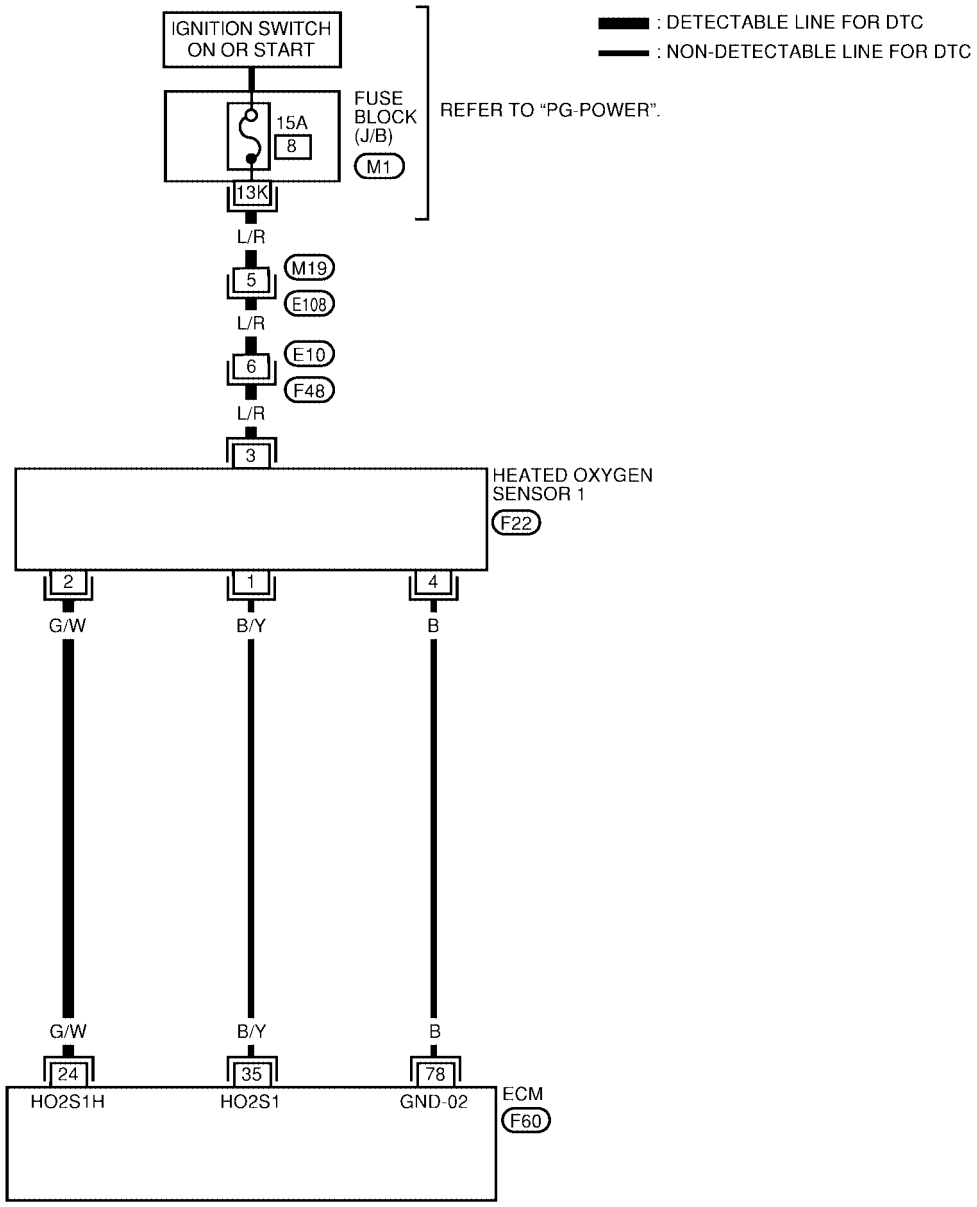

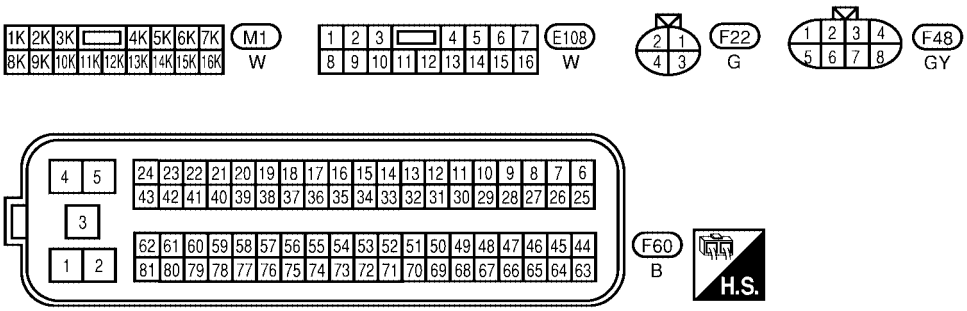

BBWA1388E

Specification data are reference values and are measured between each terminal and ground.
Pulse signal is measured by CONSULT-II.

CAUTION:
Do not use ECM ground terminals when measuring input/output voltage. Doing so may result in damage to the ECM's transistor. Use a ground other than ECM terminals, such as the ground.

TERMINAL NO.	WIRE COLOR	ITEM	CONDITION	DATA (DC Voltage)
24	G/W	Heated oxygen sensor 1 heater	**[Engine is running]** ● **Warm-up condition.** ● Engine speed is below 3,600 rpm.	Approximately 7.0V★ 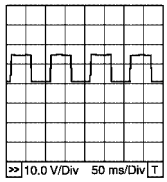 PBIB0519E
			[Engine is running] ● Engine speed is above 3,600 rpm.	BATTERY VOLTAGE (11 - 14V)

★: Average voltage for pulse signal (Actual pulse signal can be confirmed by oscilloscope.)

Diagnostic Procedure

UBS00JTH

1. CHECK GROUND CONNECTIONS

1. Turn ignition switch OFF.
2. Loosen and retighten two ground screws on the body.
   Refer to EC-841, "Ground Inspection" .

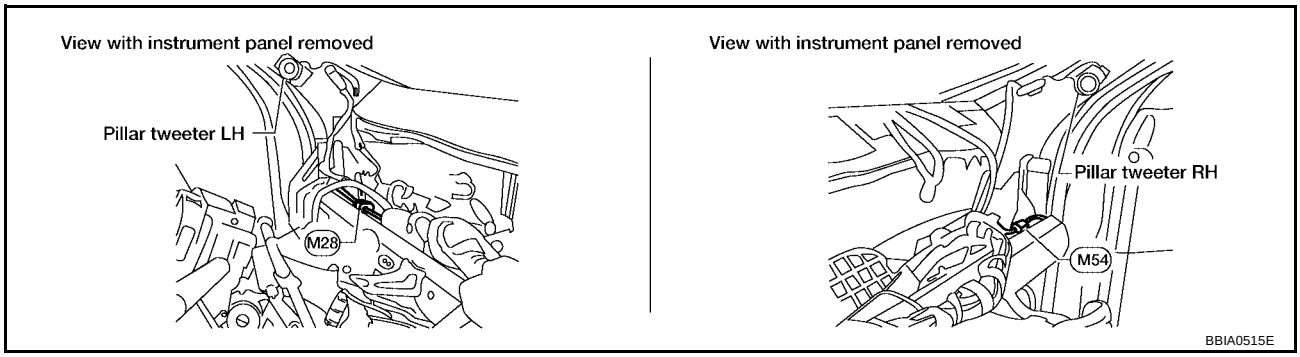

OK or NG

OK >> GO TO 2.
NG >> Repair or replace ground connections.

2. CHECK HO2S1 POWER SUPPLY CIRCUIT

1. Disconnect heated oxygen sensor 1 harness connector.
2. Turn ignition switch ON.

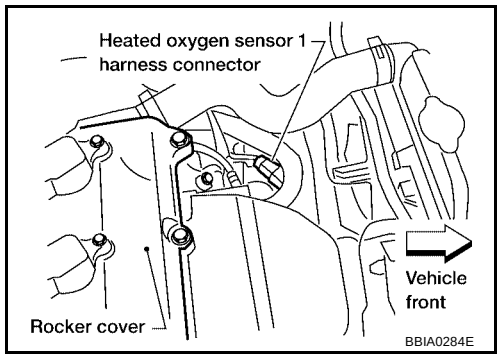

3. Check voltage between HO2S1 terminal 3 and ground with CONSULT-II or tester.

Voltage: Battery voltage

OK or NG

OK >> GO TO 4.
NG >> GO TO 3.

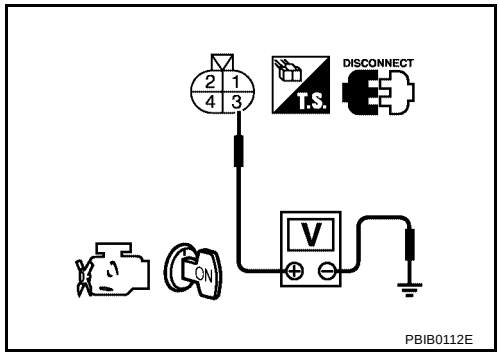

3. DETECT MALFUNCTIONING PART

Check the following.

- Harness connectors M19, E108
- Harness connectors E10, F48
- Fuse block (J/B) connector M1
- 15A fuse
- Harness for open or short between heated oxygen sensor 1 and fuse

>> Repair open circuit or short to ground or short to power in harness or connectors.

4. CHECK HO2S1 OUTPUT SIGNAL CIRCUIT FOR OPEN AND SHORT

1. Turn ignition switch OFF.
2. Disconnect ECM harness connector.
3. Check harness continuity between ECM terminal 24 and HO2S1 terminal 2. Refer to Wiring Diagram.

Continuity should exist.

4. Also check harness for short to ground and short to power.

OK or NG

OK >> GO TO 5.
NG >> Repair open circuit or short to ground or short to power in harness or connectors.

5. CHECK HEATED OXYGEN SENSOR 1 HEATER

Refer to EC-854, "Component Inspection" .

OK or NG

OK >> GO TO 6.
NG >> Replace heated oxygen sensor 1.

6. CHECK INTERMITTENT INCIDENT

Refer to EC-834, "TROUBLE DIAGNOSIS FOR INTERMITTENT INCIDENT" .

>> **INSPECTION END**

Component Inspection

UBS00JTI

HEATED OXYGEN SENSOR 1 HEATER

1. Check resistance between HO2S1 terminals as follows.

Terminal No.	Resistance
2 and 3	3.3 - 4.0 Ω [at 25°C (77°F)]
1 and 2, 3, 4	∞ Ω (Continuity should not exist)
4 and 1, 2, 3	

2. If NG, replace heated oxygen sensor 1.

CAUTION:

- **Discard any heated oxygen sensor which has been dropped from a height of more than 0.5 m (19.7 in) onto a hard surface such as a concrete floor; use a new one.**
- **Before installing new oxygen sensor, clean exhaust system threads using Oxygen Sensor Thread Cleaner tool J-43897-18 or J-43897-12 and approved anti-seize lubricant.**

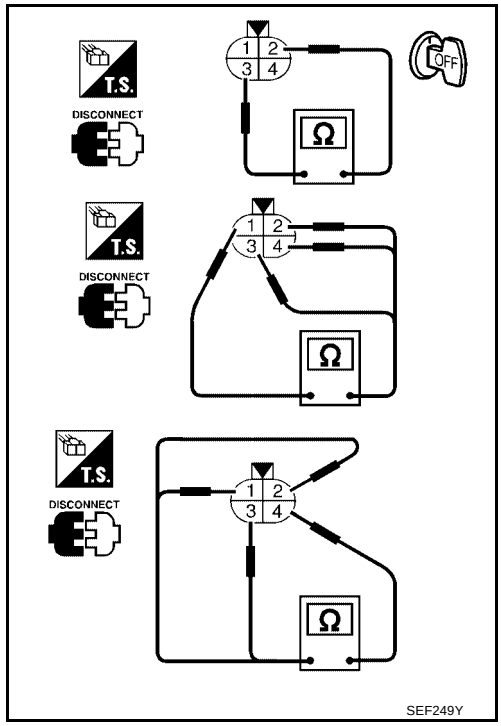

Removal and Installation

UBS00JTJ

HEATED OXYGEN SENSOR 1

Refer to EM-113, "Removal and Installation" .

DTC P0037, P0038 HO2S2 HEATER

PFP:226A0

Description

UBS00JTK

SYSTEM DESCRIPTION

Sensor	Input Signal to ECM	ECM Function	Actuator
Camshaft position sensor (PHASE)	Engine speed	Heated oxygen sensor 2 heater control	Heated oxygen sensor 2 heater
Crankshaft position sensor (POS)			
Engine coolant temperature sensor	Engine coolant temperature		
Mass air flow sensor	Amount of intake air		

The ECM performs ON/OFF control of the heated oxygen sensor 2 heater corresponding to the engine speed, amount of intake air and engine coolant temperature.

OPERATION

Engine speed rpm	Heated oxygen sensor 2 heater
Above 3,600	OFF
Below 3,600 rpm after the following conditions are met. ● Engine: After warming up ● Keeping the engine speed between 3,500 and 4,000 rpm for 1 minute and at idle for 1 minute under no load	ON

CONSULT-II Reference Value in Data Monitor Mode

UBS00JTL

Specification data are reference values.

MONITOR ITEM	CONDITION	SPECIFICATION
HO2S2 HTR (B1)	● Engine speed: Below 3,600 rpm after the following conditions are met ● Engine: After warming up ● Keeping the engine speed between 3,500 and 4,000 rpm for 1 minute and at idle for 1 minute under no load.	ON
	● Engine speed: Above 3,600 rpm	OFF

On Board Diagnosis Logic

UBS00JTM

DTC No.	Trouble diagnosis name	DTC detecting condition	Possible cause
P0037 0037	Heated oxygen sensor 2 heater control circuit low	The current amperage in the heated oxygen sensor 2 heater circuit is out of the normal range. (An excessively low voltage signal is sent to ECM through the heated oxygen sensor 2 heater.)	● Harness or connectors (The heated oxygen sensor 2 heater circuit is open or shorted.) ● Heater oxygen sensor 2 heater
P0038 0038	Heated oxygen sensor 2 heater control circuit high	The current amperage in the heated oxygen sensor 2 heater circuit is out of the normal range. (An excessively high voltage signal is sent to ECM through the heated oxygen sensor 2 heater.)	● Harness or connectors (The heated oxygen sensor 2 heater circuit is shorted.) ● Heater oxygen sensor 2 heater

DTC Confirmation Procedure

UBS00JTN

NOTE:
If DTC Confirmation Procedure has been previously conducted, always turn ignition switch OFF and wait at least 10 seconds before conducting the next test.

TESTING CONDITION:
Before performing the following procedure, confirm that battery voltage is between 10.5V and 16V at idle.

WITH CONSULT-II

1. Turn ignition switch ON and select “DATA MONITOR” mode with CONSULT-II.
2. Start engine and warm it up to the normal operating temperature.
3. Turn ignition switch OFF and wait at least 10 seconds.

4. Start engine and keep the engine speed between 3,500 and 4,000 rpm for at least 1 minute under no load.
5. Let engine idle for 1 minute.
6. If 1st trip DTC is detected, go to EC-858, "Diagnostic Procedure".

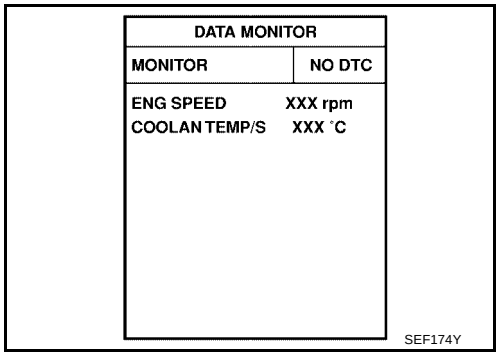

WITH GST

Follow the procedure “WITH CONSULT-II” above.

Wiring Diagram

UBS00JTO

EC-HO2S2H-01

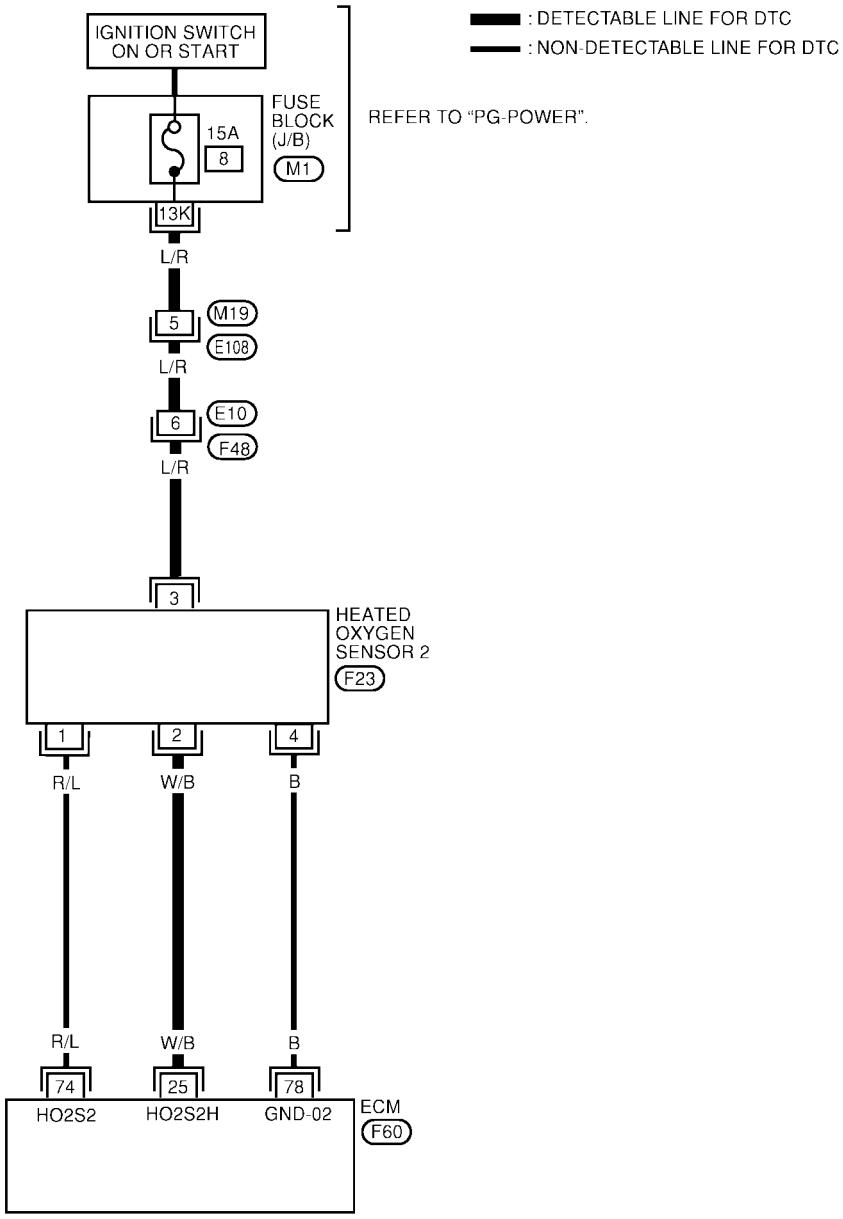

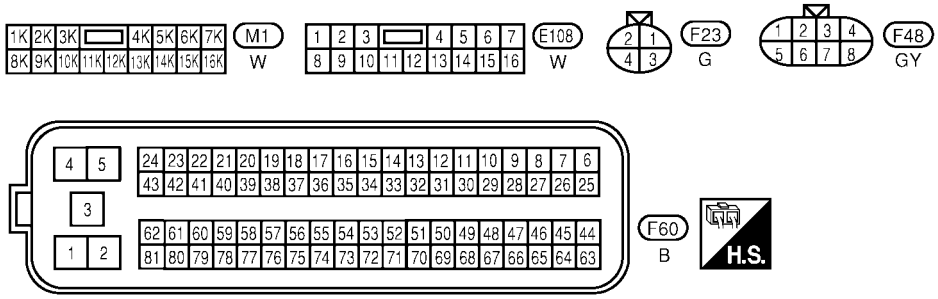

BBWA1389E

Specification data are reference values and are measured between each terminal and ground.

CAUTION:

Do not use ECM ground terminals when measuring input/output voltage. Doing so may result in damage to the ECM's transistor. Use a ground other than ECM terminals, such as the ground.

TERMINAL NO.	WIRE COLOR	ITEM	CONDITION	DATA (DC Voltage)
25	W/B	Heated oxygen sensor 2 heater	**[Engine is running]** ● **Warm-up condition** ● Engine speed: Below 3,600 rpm after the following conditions are met. ● Keeping the engine speed between 3,500 and 4,000 rpm for 1 minute and at idle for 1 minute under on load	0 - 1.0V
			[Ignition switch: ON] ● Engine stopped. **[Engine is running]** ● Engine speed is above 3,600 rpm.	BATTERY VOLTAGE (11 - 14V)

Diagnostic Procedure

UBS00JTP

1. CHECK GROUND CONNECTIONS

1. Turn ignition switch OFF.
2. Loosen and retighten two ground screws on the body.
   Refer to EC-841, "Ground Inspection" .

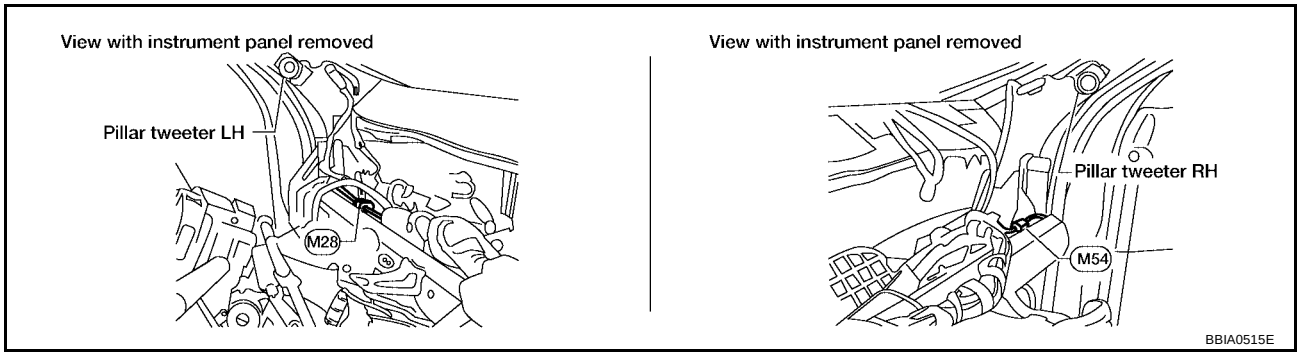

OK or NG

OK >> GO TO 2.
NG >> Repair or replace ground connections.

2. CHECK HO2S2 POWER SUPPLY CIRCUIT

1. Disconnect heated oxygen sensor 2 harness connector.
2. Turn ignition switch ON.

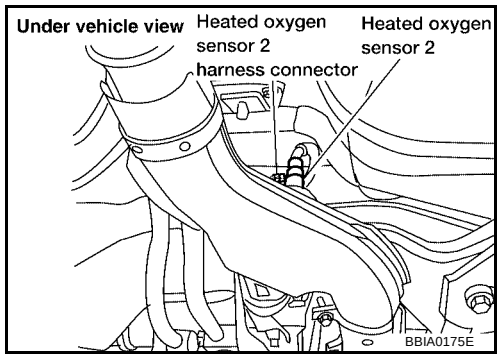

3. Check voltage between HO2S2 terminal 3 and ground with CONSULT-II or tester.

Voltage: Battery voltage

OK or NG

OK >> GO TO 4.
NG >> GO TO 3.

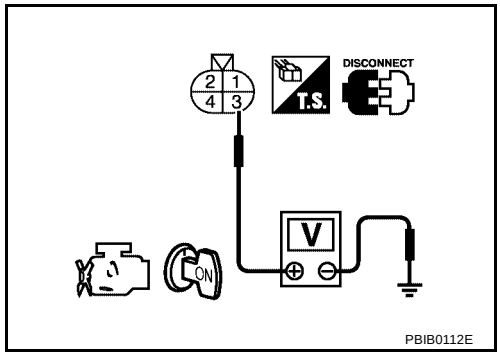

3. DETECT MALFUNCTIONING PART

Check the following.

- Harness connectors M19, E108
- Harness connectors E10, F48
- Fuse block (J/B) connector M1
- 15A fuse
- Harness for open or short between heated oxygen sensor 2 and fuse

>> Repair open circuit or short to ground or short to power in harness or connectors.

4. CHECK HO2S2 OUTPUT SIGNAL CIRCUIT FOR OPEN AND SHORT

1. Turn ignition switch OFF.
2. Disconnect ECM harness connector.
3. Check harness continuity between ECM terminal 25 and HO2S2 terminal 2.
   Refer to Wiring Diagram.

Continuity should exist.

4. Also check harness for short to ground and short to power.

OK or NG

OK >> GO TO 5.
NG >> Repair open circuit or short to ground or short to power in harness or connectors.

5. CHECK HEATED OXYGEN SENSOR 2 HEATER

Refer to EC-860, "Component Inspection" .

OK or NG

OK >> GO TO 6.
NG >> Replace heated oxygen sensor 2.

6. CHECK INTERMITTENT INCIDENT

Refer to EC-834, "TROUBLE DIAGNOSIS FOR INTERMITTENT INCIDENT" .

>> **INSPECTION END**

Component Inspection

UBS00JTQ

HEATED OXYGEN SENSOR 2 HEATER

1. Check resistance between HO2S2 terminals as follows.

Terminal No.	Resistance
2 and 3	5.0 - 7.0 Ω [at 25°C (77°F)]
1 and 2, 3, 4	∞ Ω (Continuity should not exist)
4 and 1, 2, 3	

2. If NG, replace heated oxygen sensor 2.

CAUTION:

- **Discard any heated oxygen sensor which has been dropped from a height of more than 0.5 m (19.7 in) onto a hard surface such as a concrete floor; use a new one.**
- **Before installing new oxygen sensor, clean exhaust system threads using Oxygen Sensor Thread Cleaner tool J-43897-18 or J-43897-12 and approved anti-seize lubricant.**

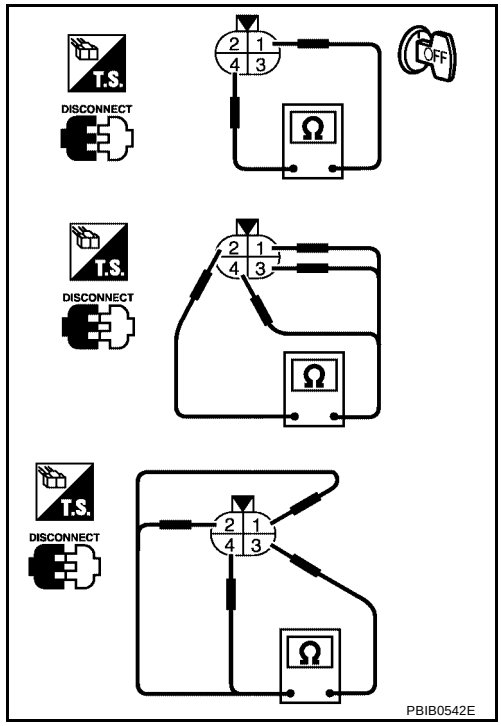

Removal and Installation

UBS00JTR

HEATED OXYGEN SENSOR 2

Refer to EM-113, "Removal and Installation" .

DTC P0101 MAF SENSOR

PFP:22680

Component Description

UBS00JB0

The mass air flow sensor is placed in the stream of intake air. It measures the intake flow rate by measuring a part of the entire intake flow. The mass air flow sensor controls the temperature of the hot wire to a certain amount. The heat generated by the hot wire is reduced as the intake air flows around it. The more air, the greater the heat loss.

Therefore, the electric current supplied to hot wire is changed to maintain the temperature of the hot wire as air flow increases. The ECM detects the air flow by means of this current change.

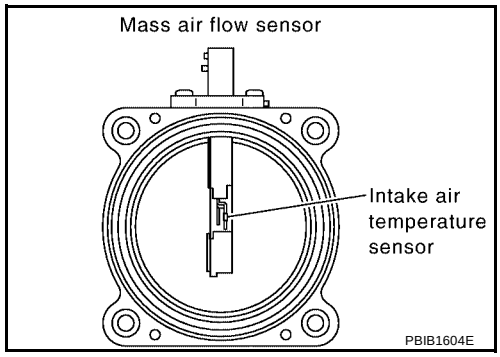

CONSULT-II Reference Value in Data Monitor Mode

UBS00JB1

Specification data are reference values.

MONITOR ITEM	CONDITION		SPECIFICATION
MAS A/F SE-B1	● See EC-815, "TROUBLE DIAGNOSIS - SPECIFICATION VALUE" .		
CAL/LD VALUE	● Engine: After warming up ● Shift lever: P or N (A/T), Neutral (M/T) ● Air conditioner switch: OFF ● No-load	Idle	10% - 35%
		2,500 rpm	10% - 35%
MASS AIRFLOW	● Engine: After warming up ● Shift lever: P or N (A/T), Neutral (M/T) ● Air conditioner switch: OFF ● No-load	Idle	1.0 - 4.0 g·m/s
		2,500 rpm	4.0 - 10.0 g·m/s

On Board Diagnosis Logic

UBS00JB2

DTC No.	Trouble diagnosis name	DTC detecting condition		Possible cause
P0101 0101	Mass air flow sensor circuit range/performance problem	A)	A high voltage from the sensor is sent to ECM under light load driving condition.	● Harness or connectors (The sensor circuit is open or shorted.) ● Mass air flow sensor ● EVAP control system pressure sensor ● Intake air temperature sensor
		B)	A low voltage from the sensor is sent to ECM under heavy load driving condition.	● Harness or connectors (The sensor circuit is open or shorted.) ● Intake air leaks ● Mass air flow sensor ● EVAP control system pressure sensor ● Intake air temperature sensor

DTC Confirmation Procedure

UBS00JB3

Perform PROCEDURE FOR MALFUNCTION A first.
If the DTC cannot be confirmed, perform PROCEDURE FOR MALFUNCTION B.

NOTE:
If DTC Confirmation Procedure has been previously conducted, always turn ignition switch OFF and wait at least 10 seconds before conducting the next test.

PROCEDURE FOR MALFUNCTION A

NOTE:

If engine will not start or stops soon, wait at least 10 seconds with engine stopped (Ignition switch ON) instead of running engine at idle speed.

With CONSULT-II

1. Turn ignition switch ON.
2. Select “DATA MONITOR” mode with CONSULT-II.
3. Start engine and warm it up to normal operating temperature.
4. Run engine for at least 10 seconds at idle speed.
5. If 1st trip DTC is detected, go to EC-865, "Diagnostic Procedure" .

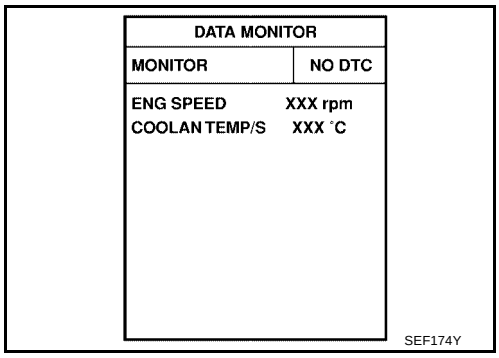

With GST

Follow the procedure “With CONSULT-II” above.

PROCEDURE FOR MALFUNCTION B

CAUTION:

Always drive vehicle at a safe speed.

With CONSULT-II

1. Turn ignition switch ON.
2. Start engine and warm it up to normal operating temperature.
   If engine cannot be started, go to EC-865, "Diagnostic Procedure" .
3. Select “DATA MONITOR” mode with CONSULT-II.
4. Check the voltage of “MAS A/F SE-B1” with “DATA MONITOR”.
5. Increases engine speed to about 4,000 rpm.
6. Monitor the linear voltage rise in response to engine speed increases.
   If NG, go to EC-865, "Diagnostic Procedure" .
   If OK, go to following step.

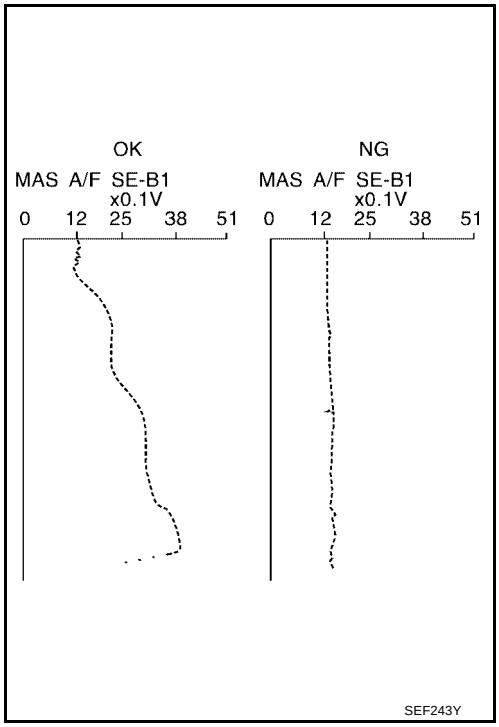

7. Maintain the following conditions for at least 10 consecutive seconds.

ENG SPEED	More than 2,000 rpm
THRTL SEN 1	More than 3V
THRTL SEN 2	More than 3V
Shift lever	Suitable position
Driving location	Driving vehicle uphill (Increased engine load) will help maintain the driving conditions required for this test.

8. If 1st trip DTC is detected, go to EC-865, "Diagnostic Procedure" .

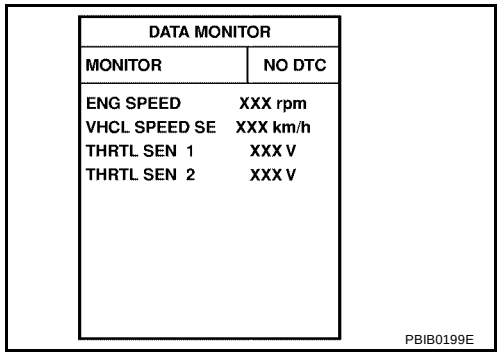

Overall Function Check

UBS00JB4

PROCEDURE FOR MALFUNCTION B

Use this procedure to check the overall function of the mass air flow sensor circuit. During this check, a 1st DTC might not be confirmed.

With GST

1. Start engine and warm it up to normal operating temperature.
2. Select Service $01 with GST.
3. Check the mass air flow sensor signal with Service $01.
4. Check for linear mass air flow sensor signal value rise in response to increases to about 4,000 rpm in engine speed.
5. If NG, go to EC-865, "Diagnostic Procedure" .

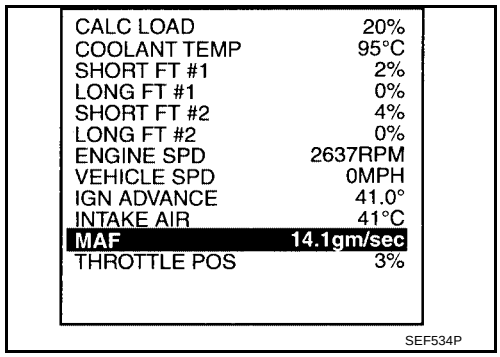

Wiring Diagram

UBS00JB5

EC-MAFS-01

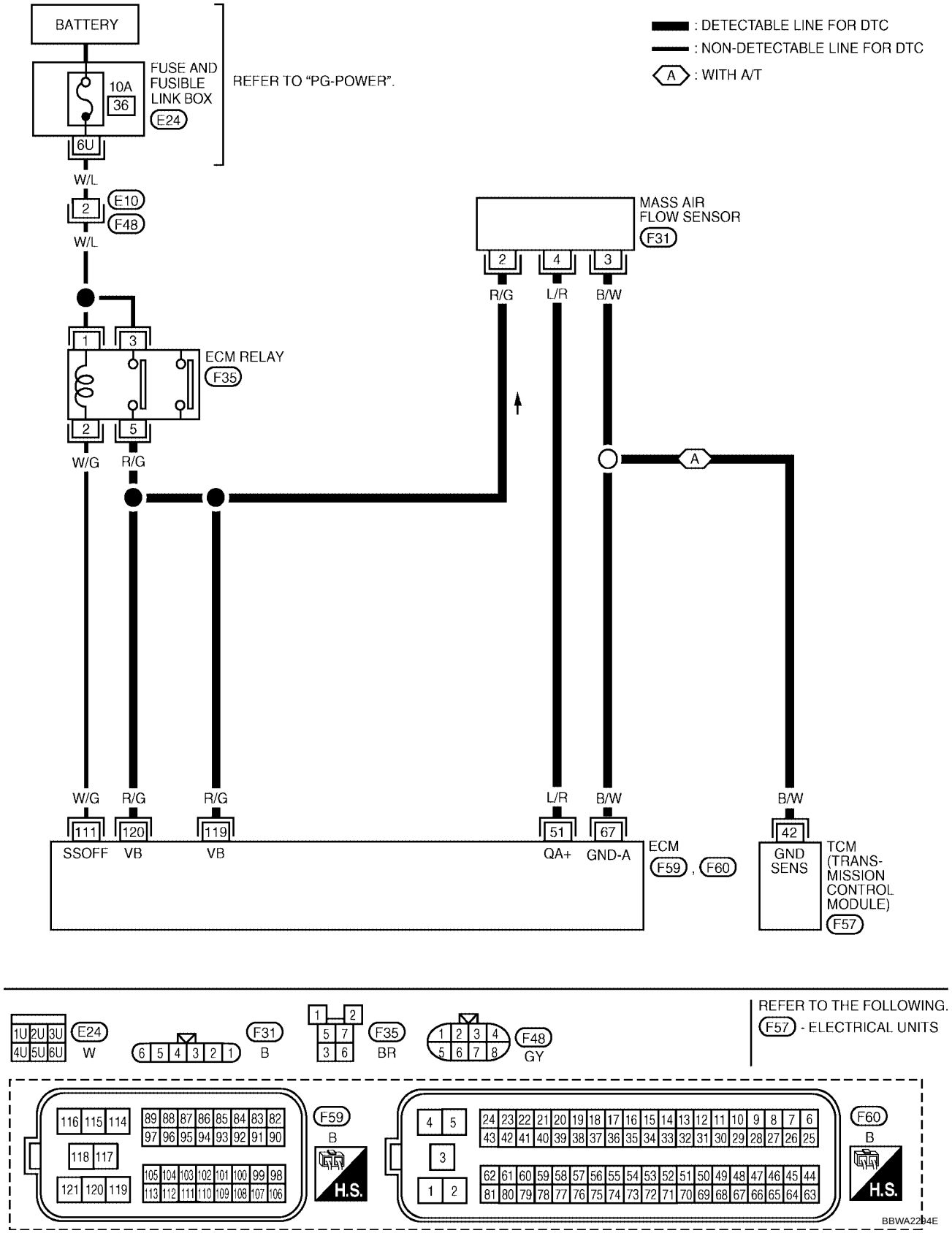

Specification data are reference values and are measured between each terminal and ground.

CAUTION:

Do not use ECM ground terminals when measuring input/output voltage. Doing so may result in damage to the ECM's transistor. Use a ground other than ECM terminals, such as the ground.

TERMINAL NO.	WIRE COLOR	ITEM	CONDITION	DATA (DC Voltage)
51	L/R	Mass air flow sensor	**[Engine is running]** ● **Warm-up condition** ● Idle speed	0.9 - 1.1V
			[Engine is running] ● **Warm-up condition** ● Engine speed is 2,500 rpm.	1.5 - 1.8V
67	B/W	Sensor ground	**[Engine is running]** ● **Warm-up condition** ● Idle speed	Approximately 0V
111	W/G	ECM relay (Self shut-off)	**[Engine is running]** **[Ignition switch: OFF]** ● A few seconds after turning ignition switch OFF	0 - 1.0V
			[Ignition switch: OFF] ● More than a few seconds after turning ignition switch OFF	BATTERY VOLTAGE (11 - 14V)
119 120	R/G	Power supply for ECM	**[Ignition switch: ON]**	BATTERY VOLTAGE (11 - 14V)

Diagnostic Procedure

UBS00JB6

1. INSPECTION START

Which malfunction (A or B) is duplicated?

A or B

A >> GO TO 3.
B >> GO TO 2.

2. CHECK INTAKE AIR LEAK

Check the following for connections.

- Air duct
- Vacuum hoses
- Intake air passage between air duct and intake manifold

OK or NG

OK >> GO TO 3.
NG >> Reconnect the parts.

3. CHECK GROUND CONNECTIONS

1. Turn ignition switch OFF.
2. Loosen and retighten two ground screws on the body.
   Refer to EC-841, "Ground Inspection" .

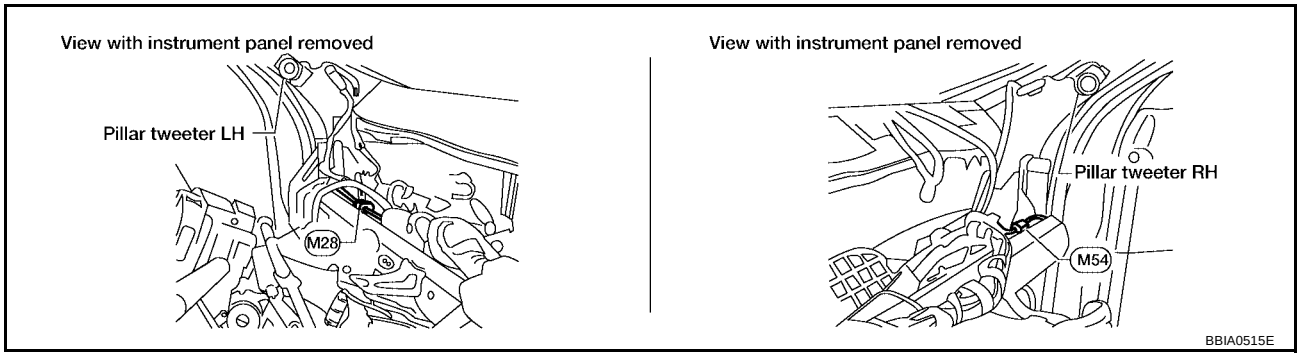

OK or NG

OK >> GO TO 4.
NG >> Repair or replace ground connections.

4. CHECK MAF SENSOR POWER SUPPLY CIRCUIT

1. Disconnect mass air flow (MAF) sensor harness connector.
2. Turn ignition switch ON.

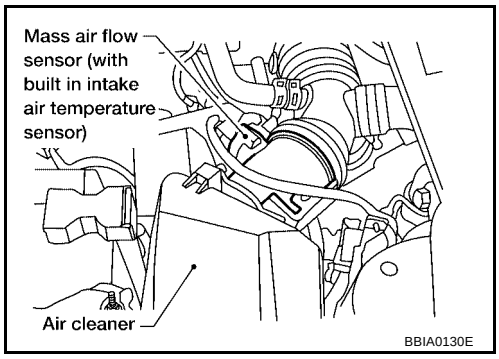

3. Check voltage between MAF sensor terminal 2 and ground with CONSULT-II or tester.

   Voltage: Battery voltage

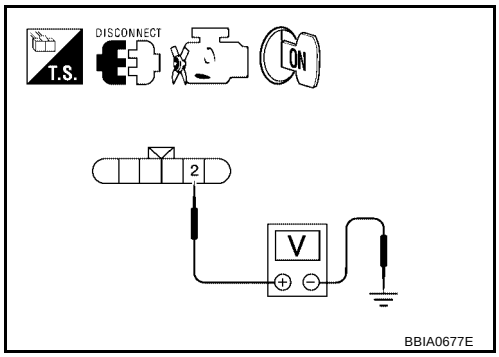

OK or NG

OK >> GO TO 6.
NG >> GO TO 5.

5. DETECT MALFUNCTIONING PART

Check the following.

- Harness for open or short between mass air flow sensor and ECM relay
- Harness for open or short between mass air flow sensor and ECM

>> Repair open circuit or short to ground or short to power in harness or connectors.

6. CHECK MAF SENSOR GROUND CIRCUIT FOR OPEN AND SHORT

1. Turn ignition switch OFF.
2. Disconnect ECM harness connector.
3. Disconnect TCM harness connector (A/T models).
4. Check harness continuity between the following;
   MAF sensor terminal 3 and ECM terminal 67,
   MAF sensor terminal 3 and TCM terminal 42 (A/T models).
   Refer to Wiring Diagram.

   Continuity should exist.

5. Also check harness for short to ground and short to power.

OK or NG

OK >> GO TO 8.
NG >> GO TO 7.

7. DETECT MALFUNCTIONING PART

Check the following.

- Harness for open or short between mass air flow sensor and ECM.
- Harness for open or short between mass air flow sensor and TCM (A/T models).

>> Repair open circuit or short to ground or short to power in harness or connectors.

8. CHECK MAF SENSOR INPUT SIGNAL CIRCUIT FOR OPEN AND SHORT

1. Check harness continuity between MAF sensor terminal 4 and ECM terminal 51.
   Refer to Wiring Diagram.

   Continuity should exist.

2. Also check harness for short to ground and short to power.

OK or NG

OK >> GO TO 9.
NG >> Repair open circuit or short to ground or short to power in harness or connectors.

9. CHECK INTAKE AIR TEMPERATURE SENSOR

Refer to EC-882, "Component Inspection" .

OK or NG

OK >> GO TO 10.
NG >> Replace intake air temperature sensor.

10. CHECK EVAP CONTROL SYSTEM PRESSURE SENSOR

Refer to EC-1047, "Component Inspection" .

OK or NG

OK >> GO TO 11.
NG >> Replace EVAP control system pressure sensor.

11. CHECK MASS AIR FLOW SENSOR

Refer to EC-868, "Component Inspection" .

OK or NG

OK >> GO TO 12.
NG >> Replace mass air flow sensor.

12. CHECK INTERMITTENT INCIDENT

Perform EC-834, "TROUBLE DIAGNOSIS FOR INTERMITTENT INCIDENT" .

>> **INSPECTION END**

Component Inspection

UBS00JB7

MASS AIR FLOW SENSOR

With CONSULT-II

1. Reconnect all harness connectors disconnected.
2. Start engine and warm it up to normal operating temperature.
3. Connect CONSULT-II and select “DATA MONITOR” mode.
4. Select “MAS A/F SE-B1” and check indication under the following conditions.

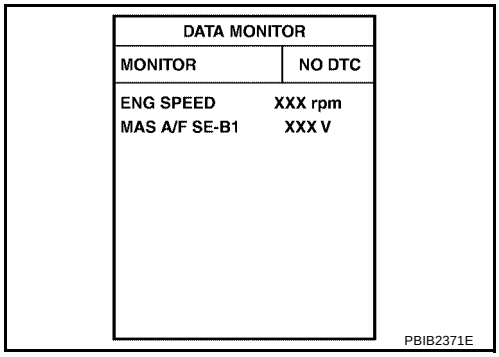

Condition	MAS A/F SE-B1 (V)
Ignition switch ON (Engine stopped.)	Approx 0.4
Idle (Engine is warmed-up to normal operating temperature.)	0.9 - 1.1
2,500 rpm (Engine is warmed-up to normal operating temperature.)	1.5 - 1.8
Idle to about 4,000 rpm*	0.9 - 1.1 to 2.4

*: Check for linear voltage rise in response to engine being increased to about 4,000 rpm.

5. If the voltage is out of specification, proceed the following.

a. Check for the cause of uneven air flow through mass air flow sensor. Refer to following.
   - Crushed air ducts
   - Malfunctioning seal of air cleaner element
   - Uneven dirt of air cleaner element
   - Improper specification of intake air system parts

b. If NG, repair or replace malfunctioning part and perform step 2 to 4 again.
   If OK, go to next step.

6. Turn ignition switch OFF.
7. Disconnect mass air flow sensor harness connector and reconnect it again.
8. Perform step 2 to 4 again.
9. If NG, clean or replace mass air flow sensor.

Without CONSULT-II

1. Reconnect all harness connectors disconnected.
2. Start engine and warm it up to normal operating temperature.
3. Check voltage between ECM terminal 51 (Mass air flow sensor signal) and ground.

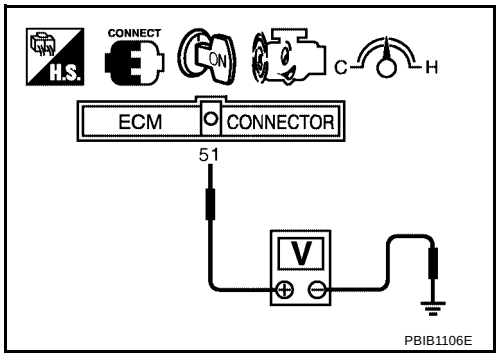

Condition	Voltage V
Ignition switch ON (Engine stopped.)	Approx 0.4
Idle (Engine is warmed-up to normal operating temperature.)	0.9 - 1.1
2,500 rpm (Engine is warmed-up to normal operating temperature.)	1.5 - 1.8
Idle to about 4,000 rpm*	0.9 - 1.1 to 2.4

*: Check for linear voltage rise in response to engine being increased to about 4,000 rpm.

4. If the voltage is out of specification, proceed the following.

a. Check for the cause of uneven air flow through mass air flow sensor. Refer to following.
   - Crushed air ducts
   - Malfunctioning seal of air cleaner element
   - Uneven dirt of air cleaner element
   - Improper specification of intake air system parts

b. If NG, repair or replace malfunctioning part and perform step 2 to 4 again.
   If OK, go to next step.

5. Turn ignition switch OFF.
6. Disconnect mass air flow sensor harness connector and reconnect it again.
7. Perform step 2 and 3 again.
8. If NG, clean or replace mass air flow sensor.

Removal and Installation

UBS00JB8

MASS AIR FLOW SENSOR

Refer to EM-106, "AIR CLEANER AND AIR DUCT" .

DTC P0102, P0103 MAF SENSOR

PFP:22680

Component Description

UBS00JB9

The mass air flow sensor is placed in the stream of intake air. It measures the intake flow rate by measuring a part of the entire intake flow. The mass air flow sensor controls the temperature of the hot wire to a certain amount. The heat generated by the hot wire is reduced as the intake air flows around it. The more air, the greater the heat loss.
Therefore, the electric current supplied to hot wire is changed to maintain the temperature of the hot wire as air flow increases. The ECM detects the air flow by means of this current change.

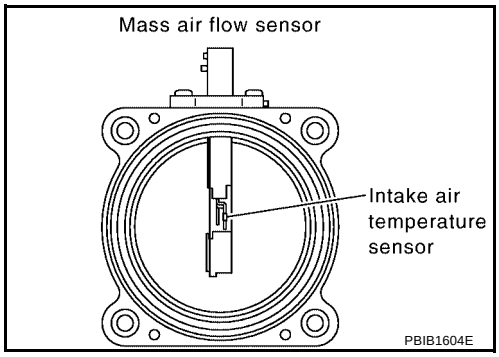

CONSULT-II Reference Value in Data Monitor Mode

UBS00JBA

Specification data are reference values.

MONITOR ITEM	CONDITION		SPECIFICATION
MAS A/F SE-B1	● See EC-815, "TROUBLE DIAGNOSIS - SPECIFICATION VALUE" .		
CAL/LD VALUE	● Engine: After warming up ● Shift lever: P or N (A/T), Neutral (M/T) ● Air conditioner switch: OFF ● No-load	Idle	10% - 35%
		2,500 rpm	10% - 35%
MASS AIRFLOW	● Engine: After warming up ● Shift lever: P or N (A/T), Neutral (M/T) ● Air conditioner switch: OFF ● No-load	Idle	1.0 - 4.0 g·m/s
		2,500 rpm	4.0 - 10.0 g·m/s

On Board Diagnosis Logic

UBS00JBB

These self-diagnoses have the one trip detection logic.

DTC No.	Trouble diagnosis name	DTC detecting condition	Possible cause
P0102 0102	Mass air flow sensor circuit low input	An excessively low voltage from the sensor is sent to ECM.	● Harness or connectors (The sensor circuit is open or shorted.) ● Intake air leaks ● Mass air flow sensor
P0103 0103	Mass air flow sensor circuit high input	An excessively high voltage from the sensor is sent to ECM.	● Harness or connectors (The sensor circuit is open or shorted.) ● Mass air flow sensor

FAIL-SAFE MODE

When the malfunction is detected, the ECM enters fail-safe mode and the MIL lights up.

Detected items	Engine operating condition in fail-safe mode
Mass air flow sensor circuit	Engine speed will not rise more than 2,400 rpm due to the fuel cut.

DTC Confirmation Procedure

UBS00JBC

NOTE:
If DTC Confirmation Procedure has been previously conducted, always turn ignition switch OFF and wait at least 10 seconds before conducting the next test.

PROCEDURE FOR DTC P0102

With CONSULT-II

1. Turn ignition switch ON.

2. Select “DATA MONITOR” mode with CONSULT-II.
3. Start engine and wait at least 5 seconds.
4. If DTC is detected, go to EC-873, "Diagnostic Procedure" .

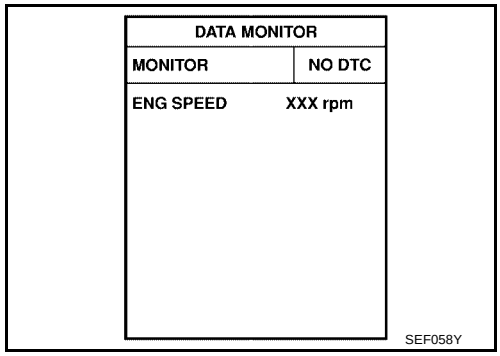

With GST

Follow the procedure “With CONSULT-II” above.

PROCEDURE FOR DTC P0103

With CONSULT-II

1. Turn ignition switch ON.
2. Select “DATA MONITOR” mode with CONSULT-II.
3. Wait at least 5 seconds.
4. If DTC is detected, go to EC-873, "Diagnostic Procedure" .
   If DTC is not detected, go to next step.
5. Start engine and wait at least 5 seconds.
6. If DTC is detected, go to EC-873, "Diagnostic Procedure" .

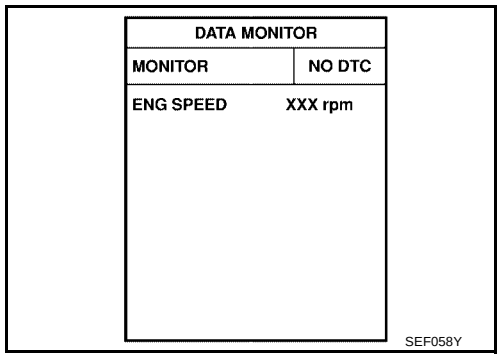

With GST

Follow the procedure “With CONSULT-II” above.

Wiring Diagram

UBS00JBD

EC-MAFS-01

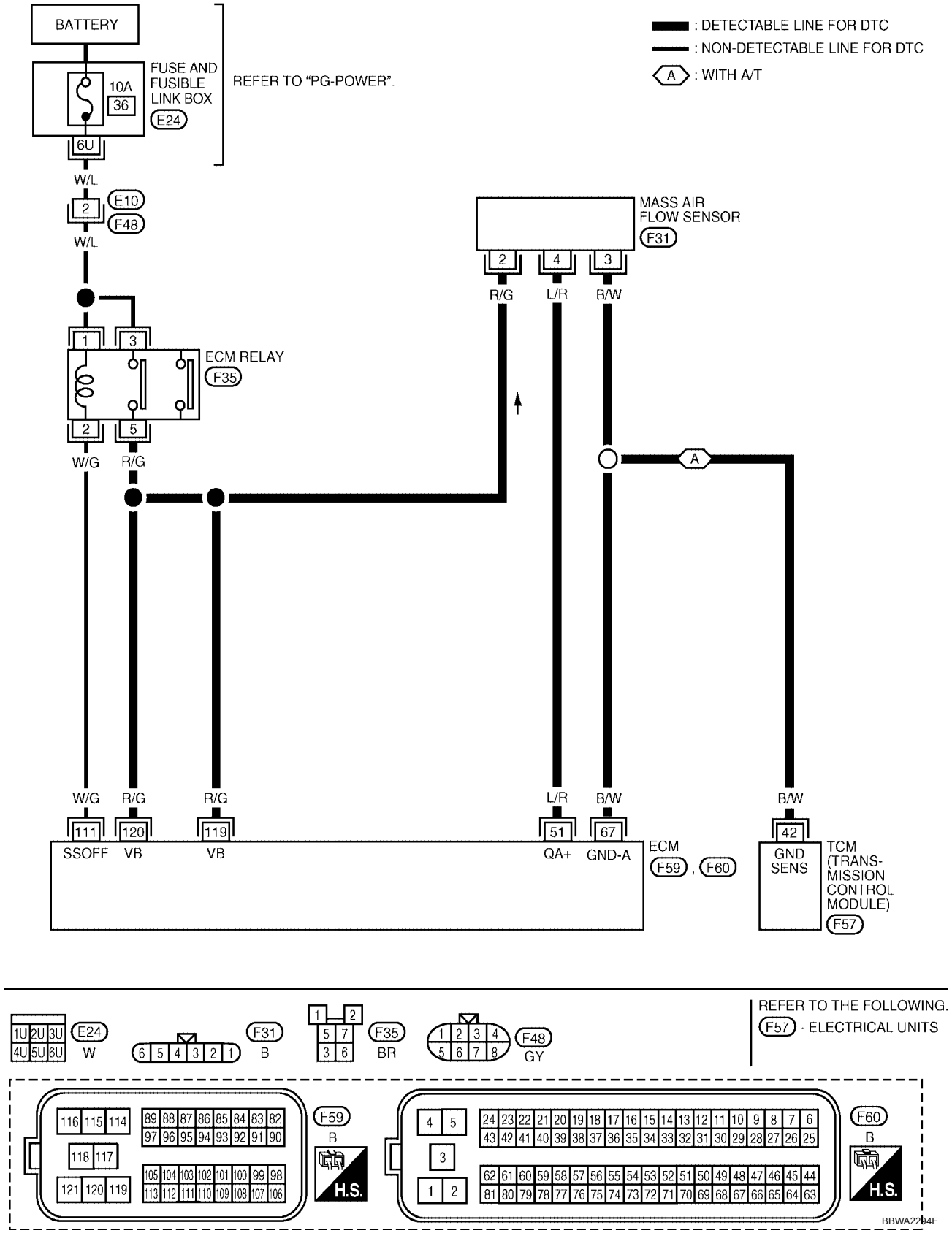

Specification data are reference values and are measured between each terminal and ground.

CAUTION:

Do not use ECM ground terminals when measuring input/output voltage. Doing so may result in damage to the ECM's transistor. Use a ground other than ECM terminals, such as the ground.

TERMINAL NO.	WIRE COLOR	ITEM	CONDITION	DATA (DC Voltage)
51	L/R	Mass air flow sensor	**[Engine is running]** ● **Warm-up condition** ● Idle speed	0.9 - 1.1V
			[Engine is running] ● **Warm-up condition** ● Engine speed is 2,500 rpm.	1.5 - 1.8V
67	B/W	Sensor ground	**[Engine is running]** ● **Warm-up condition** ● Idle speed	Approximately 0V
111	W/G	ECM relay (Self shut-off)	**[Engine is running]** **[Ignition switch: OFF]** ● A few seconds after turning ignition switch OFF	0 - 1.0V
			[Ignition switch: OFF] ● More than a few seconds after turning ignition switch OFF	BATTERY VOLTAGE (11 - 14V)
119 120	R/G	Power supply for ECM	**[Ignition switch: ON]**	BATTERY VOLTAGE (11 - 14V)

Diagnostic Procedure

UBS00JBE

1. INSPECTION START

Which malfunction (P0102 or P0103) is duplicated?

P0102 or P0103

P0102 >> GO TO 2.
P0103 >> GO TO 3.

2. CHECK INTAKE SYSTEM

Check the following for connections.

- Air duct
- Vacuum hoses
- Intake air passage between air duct and intake manifold

OK or NG

OK >> GO TO 3.
NG >> Reconnect the parts.

3. CHECK GROUND CONNECTIONS

1. Turn ignition switch OFF.
2. Loosen and retighten two ground screws on the body.
   Refer to EC-841, "Ground Inspection" .

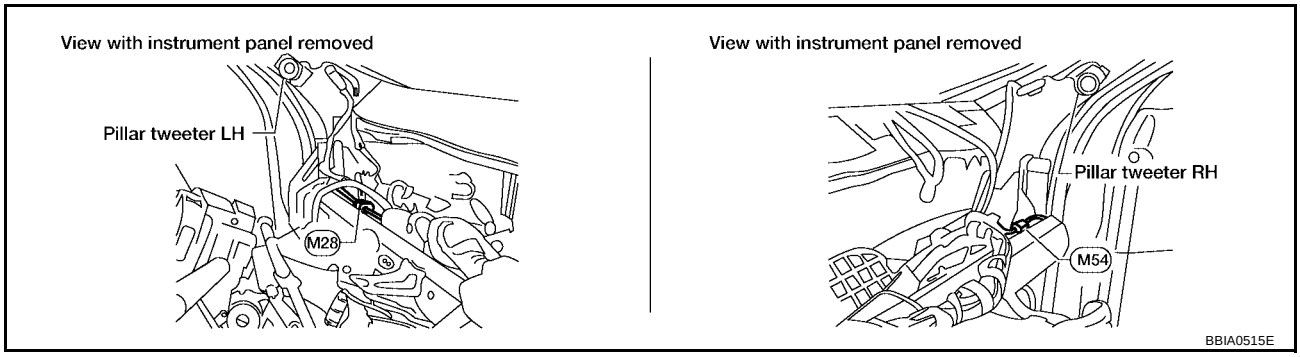

OK or NG

OK >> GO TO 4.
NG >> Repair or replace ground connections.

4. CHECK MAF SENSOR POWER SUPPLY CIRCUIT

1. Disconnect mass air flow (MAF) sensor harness connector.
2. Turn ignition switch ON.

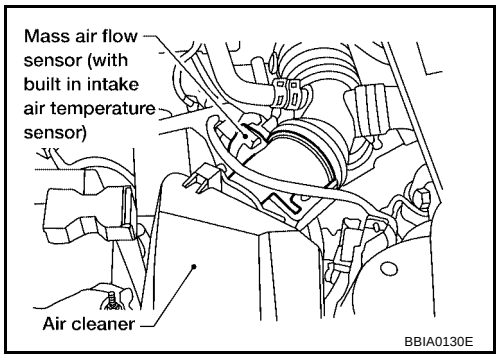

3. Check voltage between MAF sensor terminal 2 and ground with CONSULT-II or tester.

   Voltage: Battery voltage

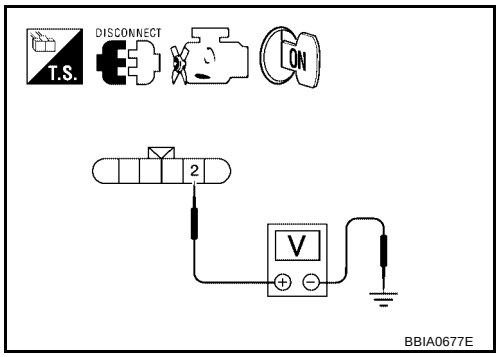

OK or NG

OK >> GO TO 6.
NG >> GO TO 5.

5. DETECT MALFUNCTIONING PART

Check the following.

- Harness for open or short between ECM relay and mass air flow sensor
- Harness for open or short between mass air flow sensor and ECM

>> Repair open circuit or short to ground or short to power in harness or connectors.

6. CHECK MAF SENSOR GROUND CIRCUIT FOR OPEN AND SHORT

1. Turn ignition switch OFF.
2. Disconnect ECM harness connector.
3. Disconnect TCM harness connector (A/T models).
4. Check harness continuity between the following;
   MAF sensor terminal 3 and ECM terminal 67,
   MAF sensor terminal 3 and TCM terminal 42 (A/T models).
   Refer to Wiring Diagram.

   Continuity should exist.

5. Also check harness for short to ground and short to power.

OK or NG

OK >> GO TO 8.
NG >> GO TO 7.

7. DETECT MALFUNCTIONING PART

Check the following.

- Harness for open or short between mass air flow sensor and ECM
- Harness for open or short between mass air flow sensor and ECM relay

>> Repair open circuit or short to ground or short to power in harness or connectors.

8. CHECK MAF SENSOR INPUT SIGNAL CIRCUIT FOR POEN AND SHORT

1. Check harness continuity between MAF sensor terminal 4 and ECM terminal 51.
   Refer to Wiring Diagram.

   Continuity should exist.

2. Also check harness for short to ground and short to power.

OK or NG

OK >> GO TO 9.
NG >> Repair open circuit or short to ground or short to power in harness or connectors.

9. CHECK MASS AIR FLOW SENSOR

Refer to EC-875, "Component Inspection" .

OK or NG

OK >> GO TO 10.
NG >> Replace mass air flow sensor.

10. CHECK INTERMITTENT INCIDENT

Perform EC-834, "TROUBLE DIAGNOSIS FOR INTERMITTENT INCIDENT" .

>> **INSPECTION END**

Component Inspection

UBS00JBF

MASS AIR FLOW SENSOR

With CONSULT-II

1. Reconnect all harness connectors disconnected.
2. Start engine and warm it up to normal operating temperature.
3. Connect CONSULT-II and select “DATA MONITOR” mode.

4. Select “MAS A/F SE-B1” and check indication under the following conditions.

Condition	MAS A/F SE-B1 (V)
Ignition switch ON (Engine stopped.)	Approx 0.4
Idle (Engine is warmed-up to normal operating temperature.)	0.9 - 1.1
2,500 rpm (Engine is warmed-up to normal operating temperature.)	1.5 - 1.8
Idle to about 4,000 rpm*	0.9 - 1.1 to 2.4

*: Check for linear voltage rise in response to engine being increased to about 4,000 rpm.

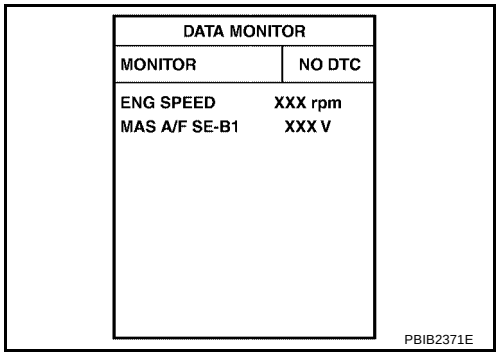

5. If the voltage is out of specification, proceed the following.

a. Check for the cause of uneven air flow through mass air flow sensor. Refer to following.
   - Crushed air ducts
   - Malfunctioning seal of air cleaner element
   - Uneven dirt of air cleaner element
   - Improper specification of intake air system parts

b. If NG, repair or replace malfunctioning part and perform step 2 to 4 again.
   If OK, go to next step.

6. Turn ignition switch OFF.
7. Disconnect mass air flow sensor harness connector and reconnect it again.
8. Perform step 2 to 4 again.
9. If NG, clean or replace mass air flow sensor.

Without CONSULT-II

1. Reconnect all harness connectors disconnected.
2. Start engine and warm it up to normal operating temperature.
3. Check voltage between ECM terminal 51 (Mass air flow sensor signal) and ground.

Condition	Voltage V
Ignition switch ON (Engine stopped.)	Approx 0.4
Idle (Engine is warmed-up to normal operating temperature.)	0.9 - 1.1
2,500 rpm (Engine is warmed-up to normal operating temperature.)	1.5 - 1.8
Idle to about 4,000 rpm*	0.9 - 1.1 to 2.4

*: Check for linear voltage rise in response to engine being increased to about 4,000 rpm.

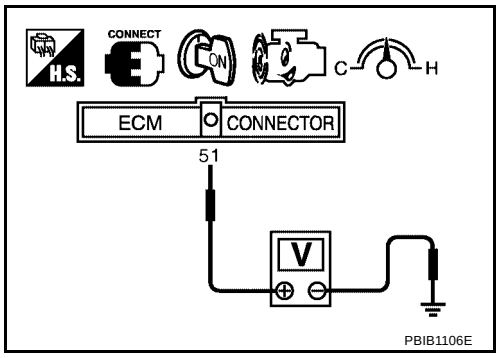

4. If the voltage is out of specification, proceed the following.

a. Check for the cause of uneven air flow through mass air flow sensor. Refer to following.
   - Crushed air ducts
   - Malfunctioning seal of air cleaner element
   - Uneven dirt of air cleaner element
   - Improper specification of intake air system parts

b. If NG, repair or replace malfunctioning part and perform step 2 to 4 again.
   If OK, go to next step.

5. Turn ignition switch OFF.
6. Disconnect mass air flow sensor harness connector and reconnect it again.
7. Perform step 2 and 3 again.
8. If NG, clean or replace mass air flow sensor.

Removal and Installation

UBS00JBG

MASS AIR FLOW SENSOR

Refer to EM-106, "AIR CLEANER AND AIR DUCT" .

DTC P0112, P0113 IAT SENSOR

PFP:22630

Component Description

UBS00JBH

The intake air temperature sensor is built into mass air flow sensor. The sensor detects intake air temperature and transmits a signal to the ECM.
The temperature sensing unit uses a thermistor which is sensitive to the change in temperature. Electrical resistance of the thermistor decreases in response to the temperature rise.

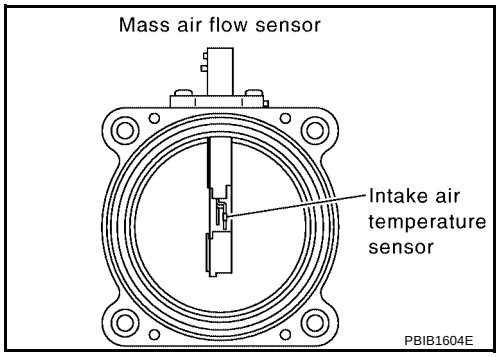

<Reference data>

Intake air temperature °C (°F)	Voltage* V	Resistance kΩ
25 (77)	3.32	1.94 - 2.06
80 (176)	1.23	0.295 - 0.349

*: This data is reference value and is measured between ECM terminal 34 (Intake air temperature sensor) and ground.

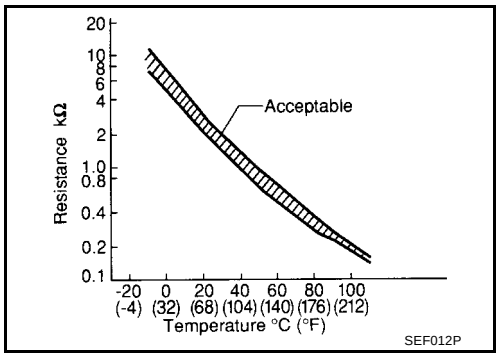

CAUTION:
Do not use ECM ground terminals when measuring input/output voltage. Doing so may result in damage to the ECM's transistor. Use a ground other than ECM terminals, such as the ground.

On Board Diagnosis Logic

UBS00JBI

DTC No.	Trouble diagnosis name	DTC detecting condition	Possible cause
P0112 0112	Intake air temperature sensor circuit low input	An excessively low voltage from the sensor is sent to ECM.	● Harness or connectors (The sensor circuit is open or shorted.) ● Intake air temperature sensor
P0113 0113	Intake air temperature sensor circuit high input	An excessively low voltage from the sensor is sent to ECM.	

DTC Confirmation Procedure

UBS00JBJ

NOTE:
If DTC Confirmation Procedure has been previously conducted, always turn ignition switch OFF and wait at least 10 seconds before conducting the next test.

WITH CONSULT-II

1. Turn ignition switch ON.
2. Select “DATA MONITOR” mode with CONSULT-II.
3. Wait at least 5 seconds.
4. If 1st trip DTC is detected, go to EC-881, "Diagnostic Procedure"
.

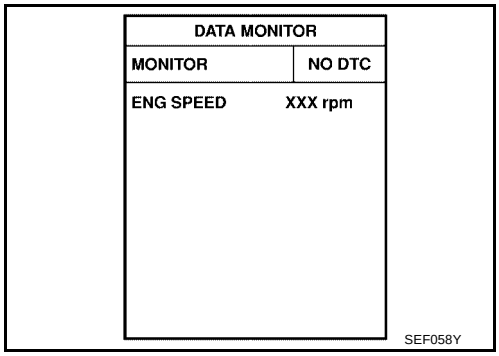

WITH GST

Follow the procedure “WITH CONSULT-II” above.

Wiring Diagram

UBS00JBK

EC-IATS-01

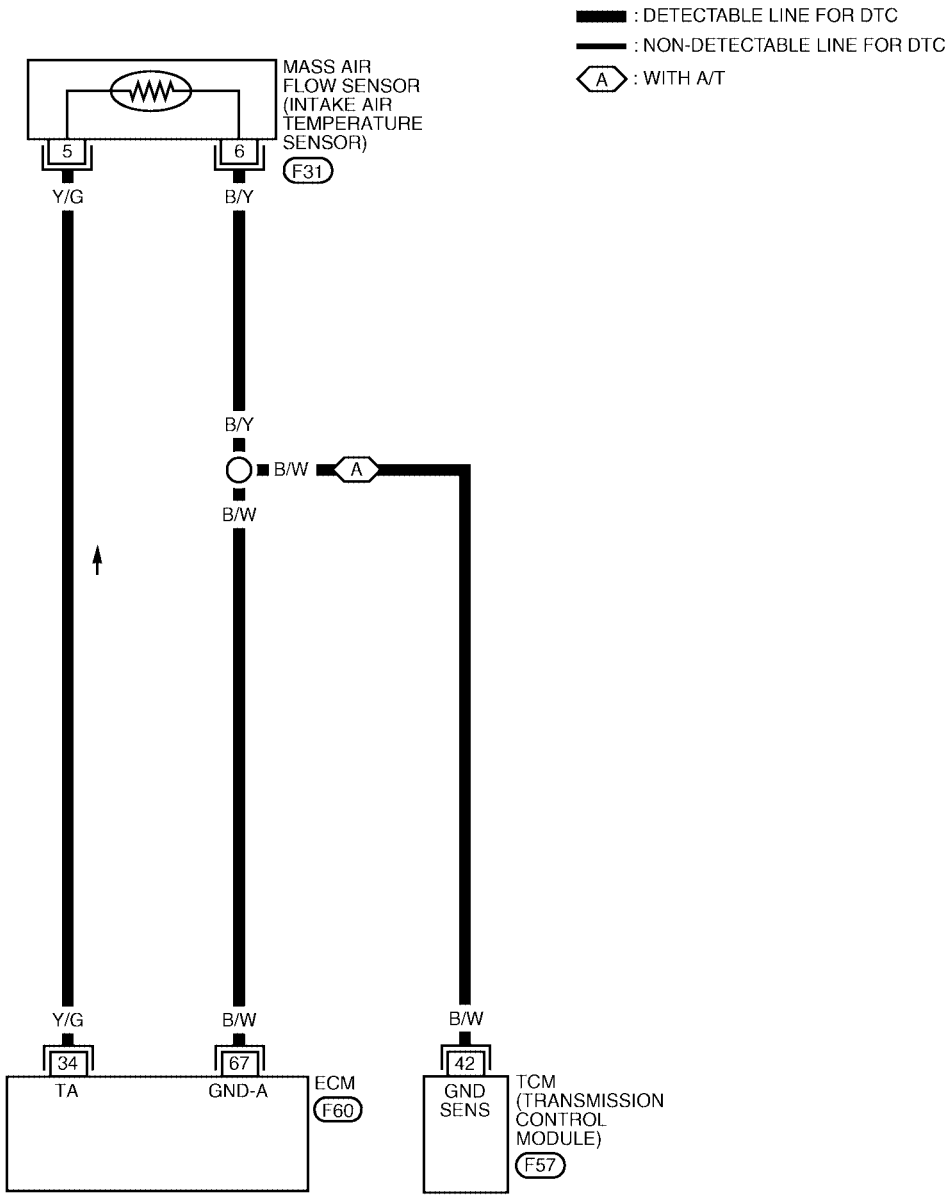

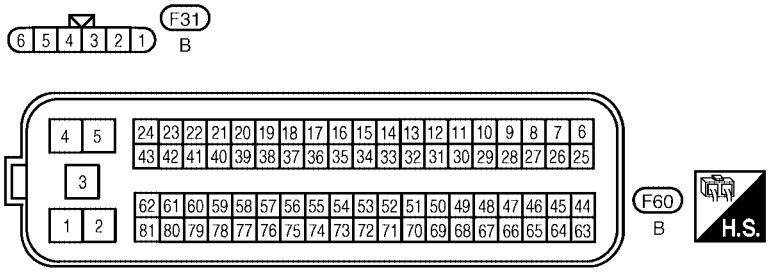

REFER TO THE FOLLOWING.
F57 - ELECTRICAL UNITS

BBWA2295E

Diagnostic Procedure

UBS00JBL

1. CHECK GROUND CONNECTIONS

1. Turn ignition switch OFF.
2. Loosen and retighten two ground screws on the body.
   Refer to EC-841, "Ground Inspection" .

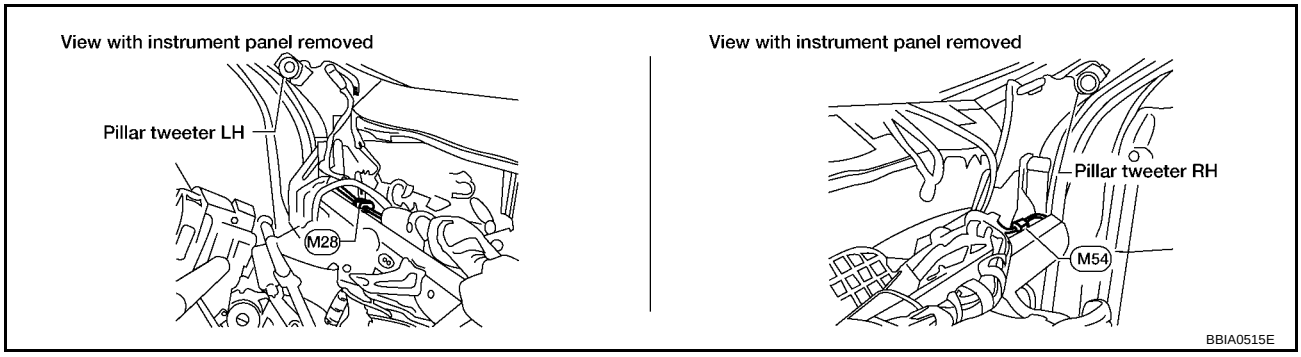

OK or NG

OK >> GO TO 2.
NG >> Repair or replace ground connections.

2. CHECK INTAKE AIR TEMPERATURE SENSOR POWER SUPPLY

1. Disconnect mass air flow sensor (intake air temperature sensor is built-into) sensor harness connector.
2. Turn ignition switch ON.

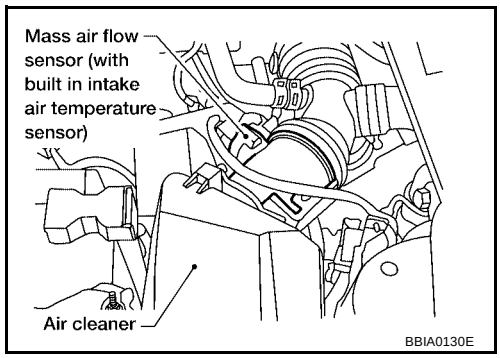

3. Check voltage between MAF sensor terminal 5 and ground with CONSULT-II or tester.

Voltage: Approximately 5V

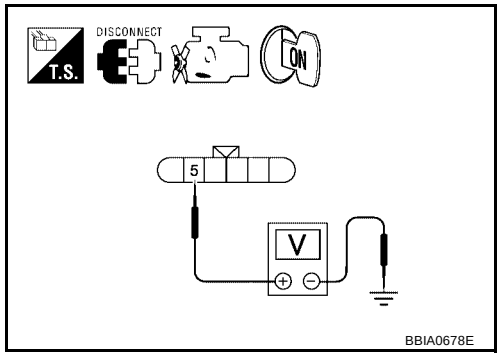

OK or NG

OK >> GO TO 3.
NG >> Repair open circuit or short to ground or short to power in harness or connectors.

3. CHECK INTAKE AIR TEMPERATURE SENSOR GROUND CIRCUIT FOR OPEN AND SHORT

1. Turn ignition switch OFF.
2. Disconnect ECM harness connector.
3. Disconnect TCM harness connector (A/T models).
4. Check harness continuity between mass air flow sensor terminal 6 and ECM terminal 67, TCM terminal 42 (A/T models).
   Refer to wiring diagram.

   Continuity should exist.

5. Also check harness for short to ground and short to power.

OK or NG

OK >> GO TO 5.
NG >> GO TO 4.

4. DETECT MALFUNCTIONING PART

Check the following.

- Harness for open or short between TCM and MAF sensor (A/T models).
- Harness for open or short between ECM and MAF sensor.

>> Repair open circuit or short to ground or short to power in harness or connectors.

5. CHECK INTAKE AIR TEMPERATURE SENSOR

Refer to EC-882, "Component Inspection" .

OK or NG

OK >> GO TO 6.
NG >> Replace mass air flow sensor (with intake temperature sensor).

6. CHECK INTERMITTENT INCIDENT

Perform EC-834, "TROUBLE DIAGNOSIS FOR INTERMITTENT INCIDENT" .

>> **INSPECTION END**

Component Inspection

UBS00JBM

INTAKE AIR TEMPERATURE SENSOR

1. Check resistance between intake air temperature sensor terminals 5 and 6 under the following conditions.

Intake air temperature °C (°F)	Resistance kΩ
25 (77)	1.96 - 2.06

2. If NG, replace mass air flow sensor (with intake air temperature sensor).

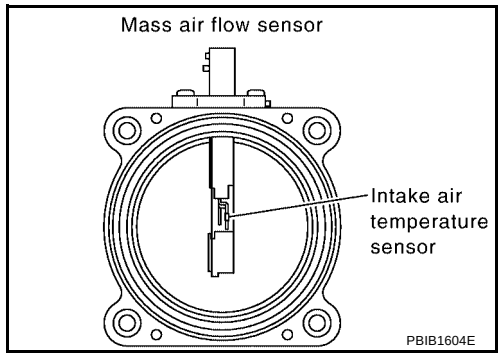

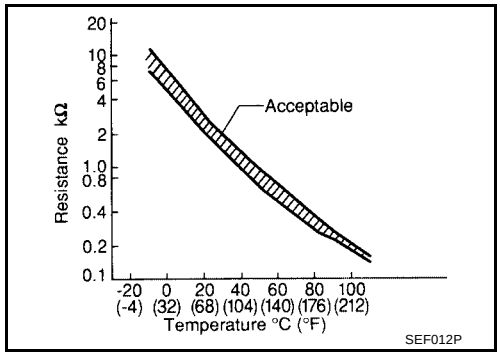

Removal and Installation

UBS00JBN

MASS AIR FLOW SENSOR

Refer to EM-106, "AIR CLEANER AND AIR DUCT" .

DTC P0117, P0118 ECT SENSOR

PFP:22630

Component Description

UBS00JBO

The engine coolant temperature sensor is used to detect the engine coolant temperature. The sensor modifies a voltage signal from the ECM. The modified signal returns to the ECM as the engine coolant temperature input. The sensor uses a thermistor which is sensitive to the change in temperature. The electrical resistance of the thermistor decreases as temperature increases.

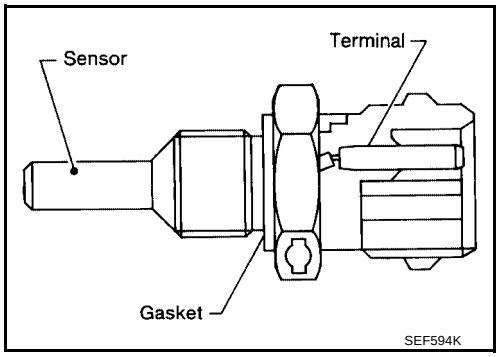

<Reference data>

Engine coolant temperature °C (°F)	Voltage* V	Resistance kΩ
–10 (14)	4.4	7.0 - 11.4
20 (68)	3.5	2.1 - 2.9
50 (122)	2.2	0.68 - 1.00
90 (194)	0.9	0.236 - 0.260

*: These data are reference values and are measured between ECM terminal 73 (Engine coolant temperature sensor) and ground.

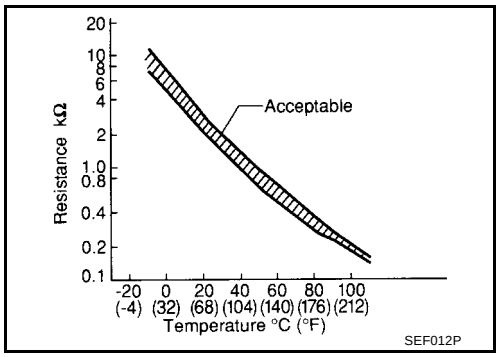

CAUTION:

Do not use ECM ground terminals when measuring input/output voltage. Doing so may result in damage to the ECM's transistor. Use a ground other than ECM terminals, such as the ground.

On Board Diagnosis Logic

UBS00JBP

These self-diagnoses have the one trip detection logic.

DTC No.	Trouble Diagnosis Name	DTC Detecting Condition	Possible Cause
P0117 0117	Engine coolant temperature sensor circuit low input	An excessively low voltage from the sensor is sent to ECM.	● Harness or connectors (The sensor circuit is open or shorted.) ● Engine coolant temperature sensor
P0118 0118	Engine coolant temperature sensor circuit high input	An excessively high voltage from the sensor is sent to ECM.	

FAIL-SAFE MODE

When this malfunction is detected, the ECM enters fail-safe mode and the MIL lights up.

Detected items	Engine operating condition in fail-safe mode	
Engine coolant temperature sensor circuit	Engine coolant temperature will be determined by ECM based on the time after turning ignition switch ON or START. CONSULT-II displays the engine coolant temperature decided by ECM.	
	Condition	Engine coolant temperature decided (CONSULT-II display)
	Just as ignition switch is turned ON or START	40°C (104°F)
	More than approx. 4 minutes after ignition ON or START	80°C (176°F)
	Except as shown above	40 - 80°C (104 - 176°F) (Depends on the time)
	When the fail-safe system for engine coolant temperature sensor is activated, the cooling fan operates while engine is running.	

DTC Confirmation Procedure

UBS00JBQ

NOTE:
If DTC Confirmation Procedure has been previously conducted, always turn ignition switch OFF and wait at least 10 seconds before conducting the next test.

WITH CONSULT-II

1. Turn ignition switch ON.
2. Select “DATA MONITOR” mode with CONSULT-II.
3. Wait at least 5 seconds.
4. If DTC is detected, go to EC-887, "Diagnostic Procedure" .

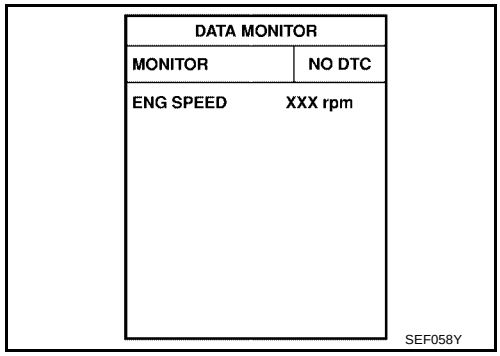

WITH GST

Follow the procedure “WITH CONSULT-II” above.

Wiring Diagram

UBS00JBR

EC-ECTS-01

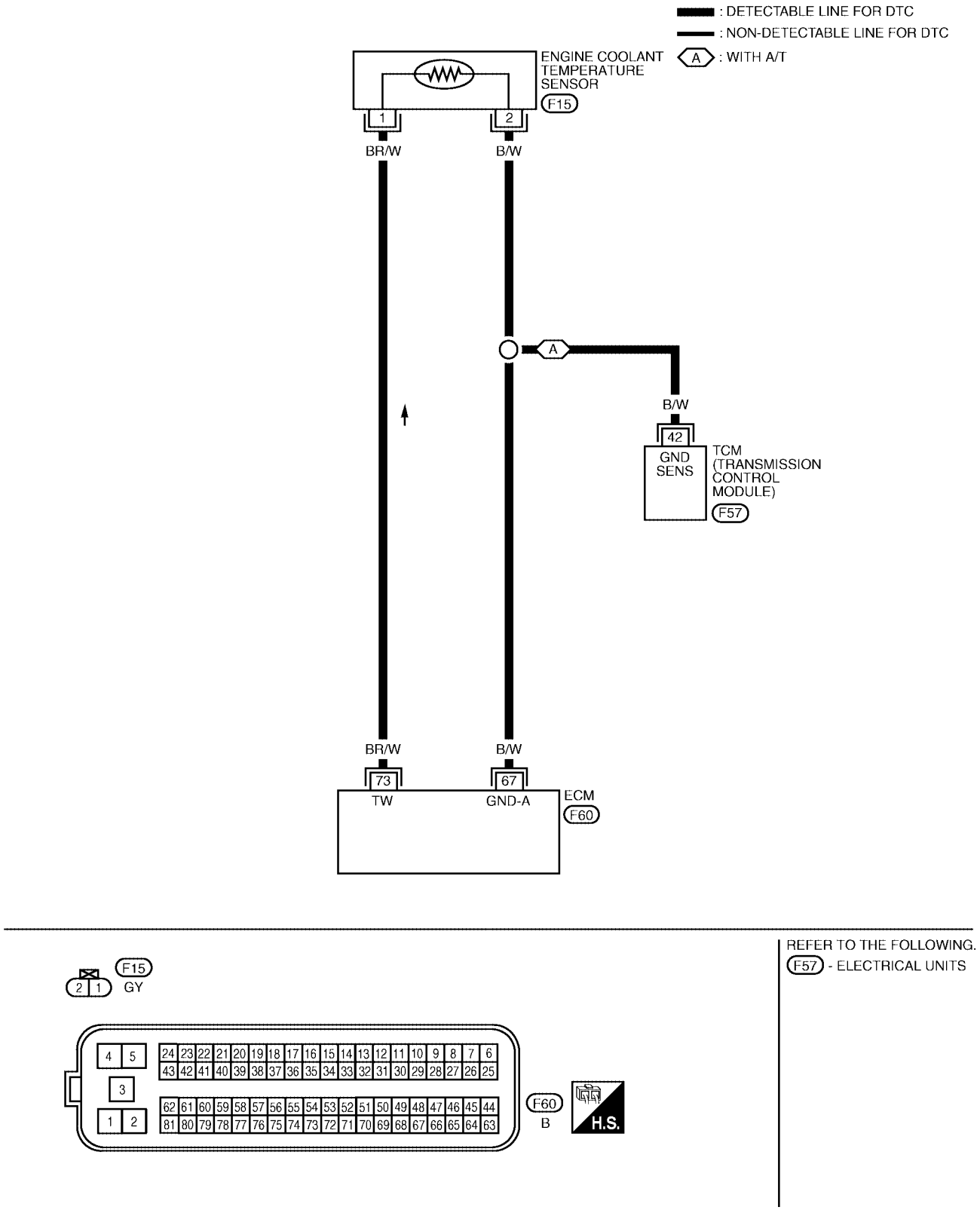

Diagnostic Procedure

UBS00JBS

1. CHECK GROUND CONNECTIONS

1. Turn ignition switch OFF.
2. Loosen and retighten two ground screws on the body. Refer to EC-841, "Ground Inspection" .

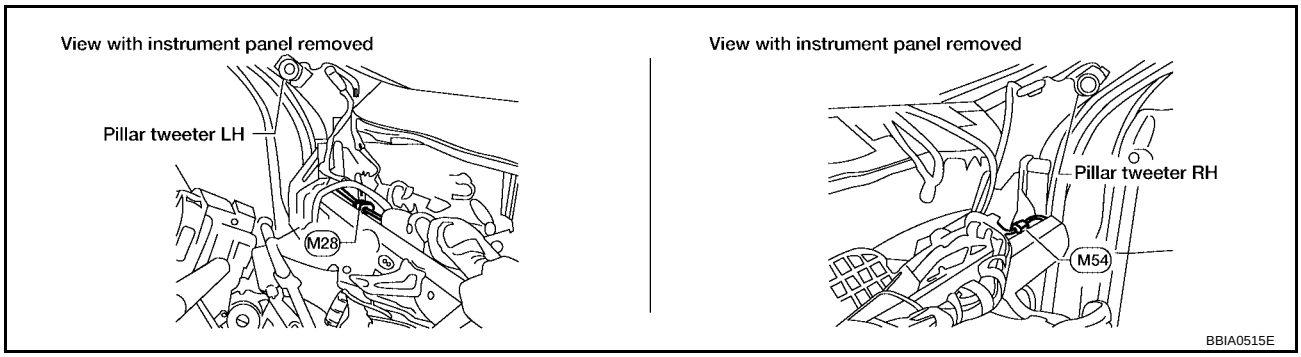

OK or NG

OK >> GO TO 2.
NG >> Repair or replace ground connections.

2. CHECK ECT SENSOR POWER SUPPLY CIRCUIT

1. Disconnect engine coolant temperature (ECT) sensor harness connector.
2. Turn ignition switch ON.

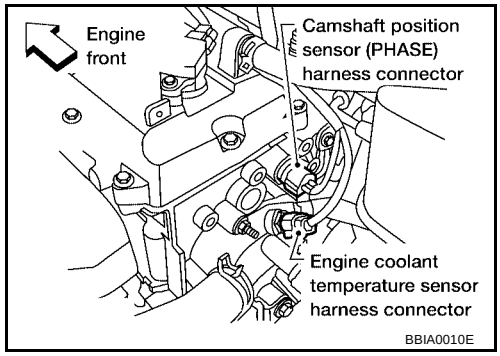

3. Check voltage between ECT sensor terminal 1 and ground with CONSULT-II or tester.

Voltage: Approximately 5V

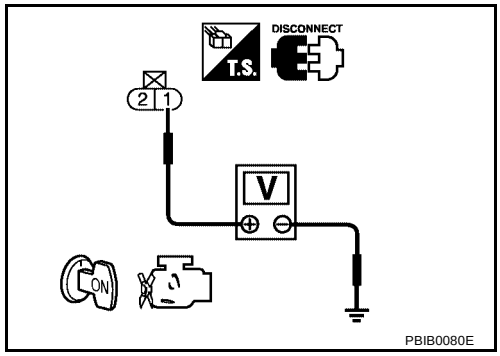

OK or NG

OK >> GO TO 3.
NG >> Repair open circuit or short to ground or short to power in harness or connectors.

3. CHECK ECT SENSOR GROUND CIRCUIT FOR OPEN AND SHORT

1. Turn ignition switch OFF.
2. Disconnect ECM harness connector.
3. Disconnect TCM harness connector (A/T models).
4. Check harness continuity between ECT sensor terminal 2 and ECM terminal 67, TCM terminal 42 (A/T models).
   Refer to Wiring Diagram.

   Continuity should exist.

5. Also check harness for short to ground and short to power.

OK or NG

OK >> GO TO 5.
NG >> GO TO 4.

4. DETECT MALFUNCTIONING PART

Check the following.

- Harness for open or short between TCM and engine coolant temperature sensor (A/T models).
- Harness for open or short between ECM and engine coolant temperature sensor.

>> Repair open circuit or short to ground or short to power in harness or connectors.

5. CHECK ENGINE COOLANT TEMPERATURE SENSOR

Refer to CO-30, "THERMOSTAT AND THERMOSTAT HOUSING" .

OK or NG

OK >> GO TO 6.
NG >> Replace engine coolant temperature sensor.

6. CHECK INTERMITTENT INCIDENT

Refer to EC-834, "TROUBLE DIAGNOSIS FOR INTERMITTENT INCIDENT" .

>> **INSPECTION END**

Component Inspection

UBS00JBT

ENGINE COOLANT TEMPERATURE SENSOR

1. Check resistance between engine coolant temperature sensor terminals 1 and 2 as shown in the figure.

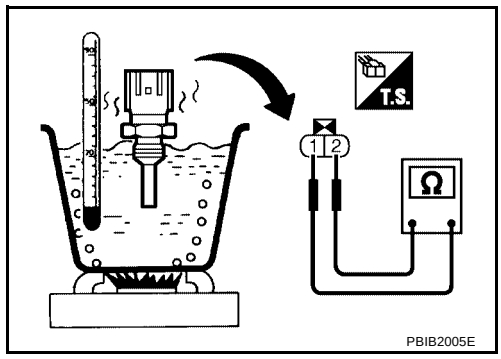

<Reference data>

Engine coolant temperature °C (°F)	Resistance kΩ
20 (68)	2.1 - 2.9
50 (122)	0.68 - 1.00
90 (194)	0.236 - 0.260

2. If NG, replace engine coolant temperature sensor.

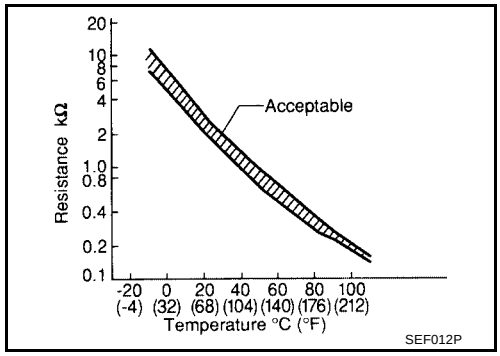

UBS00JBU

Removal and Installation

ENGINE COOLANT TEMPERATURE SENSOR

Refer to CO-30, "THERMOSTAT AND THERMOSTAT HOUSING" .

DTC P0122, P0123 TP SENSOR

PFP:16119

Component Description

UBS00JBV

Electric throttle control actuator consists of throttle control motor, throttle position sensor, etc. The throttle position sensor responds to the throttle valve movement.
The throttle position sensor has the two sensors. These sensors are a kind of potentiometers which transform the throttle valve position into output voltage, and emit the voltage signal to the ECM. In addition, these sensors detect the opening and closing speed of the throttle valve and feed the voltage signals to the ECM. The ECM judges the current opening angle of the throttle valve from these signals and the ECM controls the throttle control motor to make the throttle valve opening angle properly in response to driving condition.

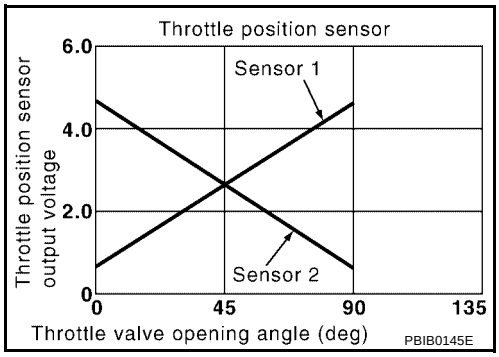

CONSULT-II Reference Value in Data Monitor Mode

UBS00JBW

Specification data are reference values.

MONITOR ITEM	CONDITION		SPECIFICATION
THRTL SEN1 THRTL SEN2*	● Ignition switch: ON (Engine stopped)	Accelerator pedal: Fully released	More than 0.36V
	● Shift lever: D (A/T), 1ST (M/T)	Accelerator pedal: Fully depressed	Less than 4.75V

*: Throttle position sensor 2 signal is converted by ECM internally. thus it differs from ECM terminal voltage signal.

On Board Diagnosis Logic

UBS00JBX

These self-diagnoses have the one trip detection logic.

DTC No.	Trouble diagnosis name	DTC detecting condition	Possible cause
P0122 0122	Throttle position sensor 2 circuit low input	An excessively low voltage from the TP sensor 2 is sent to ECM.	● Harness or connectors (The TP sensor 2 circuit is open or shorted.) (APP sensor 2 circuit is shorted.) ● Electric throttle control actuator (TP sensor 2) ● Accelerator pedal position sensor (APP sensor 2)
P0123 0123	Throttle position sensor 2 circuit high input	An excessively high voltage from the TP sensor 2 is sent to ECM.	

FAIL-SAFE MODE

When the malfunction is detected, the ECM enters fail-safe mode and the MIL lights up.

Engine operation condition in fail-safe mode
The ECM controls the electric throttle control actuator in regulating the throttle opening in order for the idle position to be within +10 degrees. The ECM regulates the opening speed of the throttle valve to be slower than the normal condition. So, the acceleration will be poor.

DTC Confirmation Procedure

UBS00JBY

NOTE:
If DTC Confirmation Procedure has been previously conducted, always turn ignition switch OFF and wait at least 10 seconds before conducting the next test.
TESTING CONDITION:
Before performing the following procedure, confirm that battery voltage is more than 10V at idle.

WITH CONSULT-II

1. Turn ignition switch ON.

2. Select “DATA MONITOR” mode with CONSULT-II.
3. Start engine and let it idle for 1 second.
4. If DTC is detected, go to EC-893, "Diagnostic Procedure" .

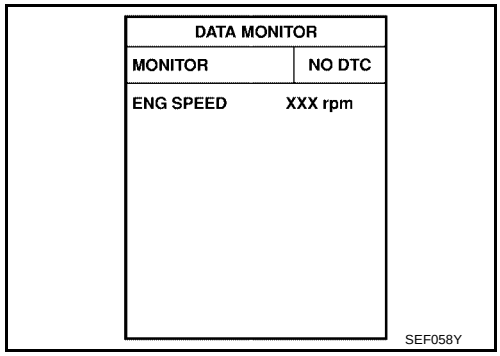

WITH GST

Follow the procedure “WITH CONSULT-II” above.

Wiring Diagram

UBS00JBZ

EC-TPS2-01

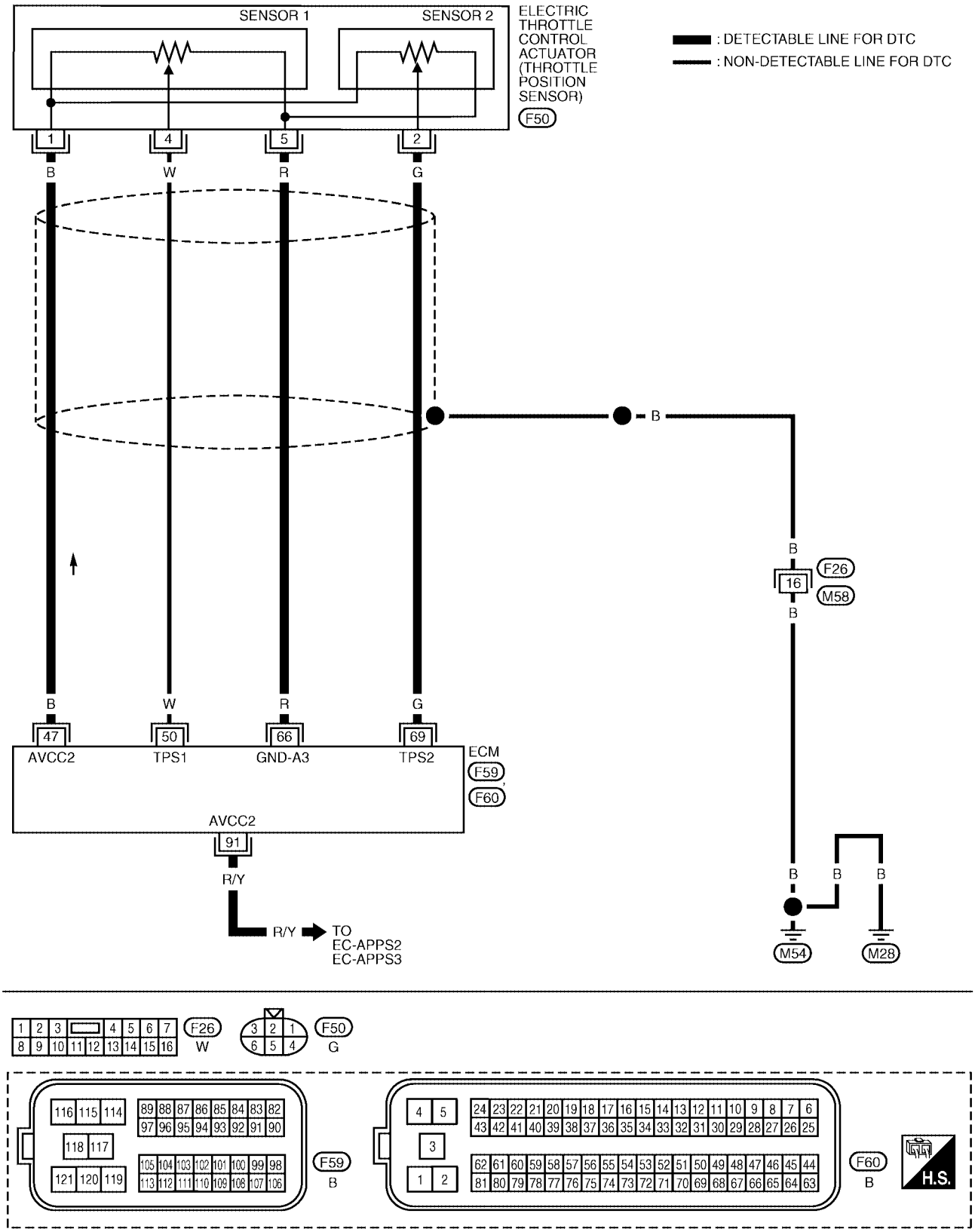

Specification data are reference values and are measured between each terminal and ground.

CAUTION:

Do not use ECM ground terminals when measuring input/output voltage. Doing so may result in damage to the ECM's transistor. Use a ground other than ECM terminals, such as the ground.

TERMINAL NO.	WIRE COLOR	ITEM	CONDITION	DATA (DC Voltage)
47	B	Sensor power supply (Throttle position sensor)	**[Ignition switch: ON]**	Approximately 5V
50	W	Throttle position sensor 1	**[Ignition switch: ON]** ● Engine stopped ● Shift lever: D (A/T), 1ST (M/T) ● Accelerator pedal: Fully released	More than 0.36V
			[Ignition switch: ON] ● Engine stopped ● Shift lever: D (A/T), 1ST (M/T) ● Accelerator pedal: Fully depressed	Less than 4.75V
66	R	Sensor ground (Throttle position sensor)	**[Engine is running]** ● **Warm-up condition** ● Idle speed	Approximately 0V
69	G	Throttle position sensor 2	**[Ignition switch: ON]** ● Engine stopped ● Shift lever: D (A/T), 1ST (M/T) ● Accelerator pedal: Fully released	Less than 4.75V
			[Ignition switch: ON] ● Engine stopped ● Shift lever: D (A/T), 1ST (M/T) ● Accelerator pedal: Fully depressed	More than 0.36V
91	R/Y	Sensor power supply (Accelerator pedal position sensor 2)	**[Ignition switch: ON]**	Approximately 5V

Diagnostic Procedure

UBS00JC0

1. CHECK GROUND CONNECTIONS

1. Turn ignition switch OFF.
2. Loosen and retighten two ground screws on the body. Refer to EC-841, "Ground Inspection" .

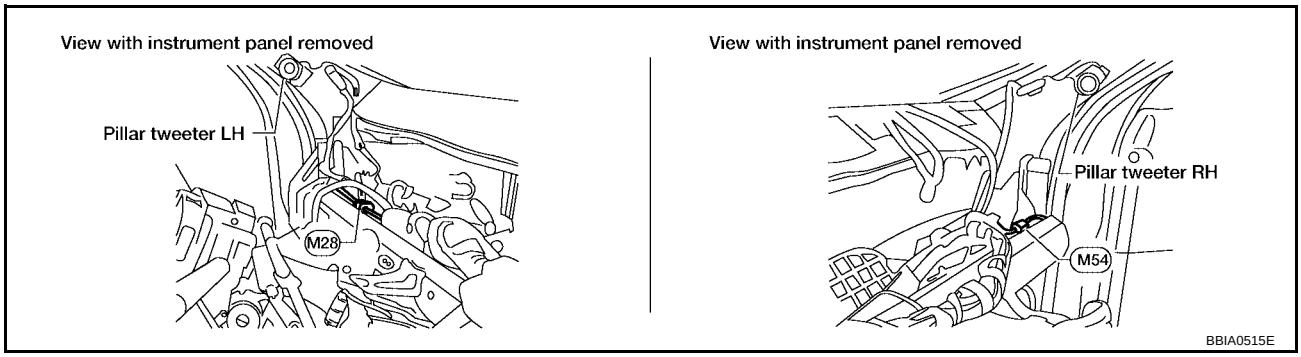

OK or NG

OK >> GO TO 2.
NG >> Repair or replace ground connections.

2. CHECK THROTTLE POSITION SENSOR 2 POWER SUPPLY CIRCUIT-I

1. Disconnect electric throttle control actuator harness connector.
2. Turn ignition switch ON.

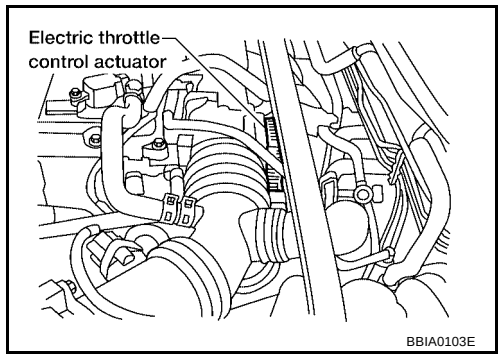

3. Check voltage between electric throttle control actuator terminal 1 and ground with CONSULT-II or tester.

Voltage: Approximately 5V

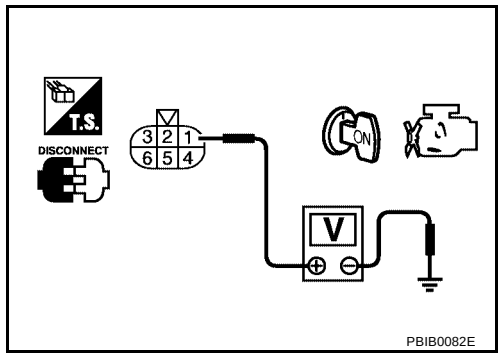

OK or NG

OK >> GO TO 7.
NG >> GO TO 3.

3. CHECK THROTTLE POSITION SENSOR 2 POWER SUPPLY CIRCUIT-II

1. Turn ignition switch OFF.
2. Disconnect ECM harness connector.
3. Check harness continuity between electric throttle control actuator terminal 1 and ECM terminal 47. Refer to Wiring Diagram.

Continuity should exist.

OK or NG

OK >> GO TO 4.
NG >> Repair or replace open circuit.

4. CHECK THROTTLE POSITION SENSOR 2 POWER SUPPLY CIRCUIT-III

Check the following.

- Harness for short to power and short to ground, between the following terminals.

ECM terminal	Sensor terminal	Reference Wiring Diagram
47	Electric throttle control actuator terminal 1	EC-892
91	APP sensor terminal 1	EC-1284

OK or NG

OK >> GO TO 5.
NG >> Repair short to ground or short to power in harness or connectors.

5. CHECK APP SENSOR

Refer to EC-1289, "Component Inspection"

OK or NG

OK >> GO TO 11.
NG >> GO TO 6.

6. REPLACE ACCELERATOR PEDAL ASSEMBLY

1. Replace accelerator pedal assembly.
2. Perform EC-749, "Accelerator Pedal Released Position Learning" .
3. Perform EC-749, "Throttle Valve Closed Position Learning" .
4. Perform EC-750, "Idle Air Volume Learning" .

>> **INSPECTION END**

7. CHECK THROTTLE POSITION SENSOR 2 GROUND CIRCUIT FOR OPEN AND SHORT

1. Turn ignition switch OFF.
2. Disconnect ECM harness connector.
3. Check harness continuity between ECM terminal 66 and electric throttle control actuator terminal 5. Refer to Wiring Diagram.

Continuity should exist.

4. Also check harness for short to ground and short to power.

OK or NG

OK >> GO TO 8.
NG >> Repair open circuit or short to ground or short to power in harness or connectors.

8. CHECK THROTTLE POSITION SENSOR 2 INPUT SIGNAL CIRCUIT FOR OPEN AND SHORT

1. Check harness continuity between ECM terminal 69 and electric throttle control actuator terminal 2. Refer to Wiring Diagram.

Continuity should exist.

2. Also check harness for short to ground and short to power.

OK or NG

OK >> GO TO 9.
NG >> Repair open circuit or short to ground or short to power in harness or connectors.

9. CHECK THROTTLE POSITION SENSOR

Refer to EC-896, "Component Inspection" .

OK or NG

OK >> GO TO 11.
NG >> GO TO 10.

10. REPLACE ELECTRIC THROTTLE CONTROL ACTUATOR

1. Replace the electric throttle control actuator.
2. Perform EC-749, "Throttle Valve Closed Position Learning" .
3. Perform EC-750, "Idle Air Volume Learning" .

>> **INSPECTION END**

11. CHECK INTERMITTENT INCIDENT

Refer to EC-834, "TROUBLE DIAGNOSIS FOR INTERMITTENT INCIDENT" .

>> **INSPECTION END**

Component Inspection

UBS00JC1

THROTTLE POSITION SENSOR

1. Reconnect all harness connectors disconnected.
2. Perform EC-749, "Throttle Valve Closed Position Learning" .
3. Turn ignition switch ON.
4. Set shift lever to D position (A/T models) or 1st position (M/T models).
5. Check voltage between ECM terminals 50 (TP sensor 1), 69 (TP sensor 2) and ground under the following conditions.

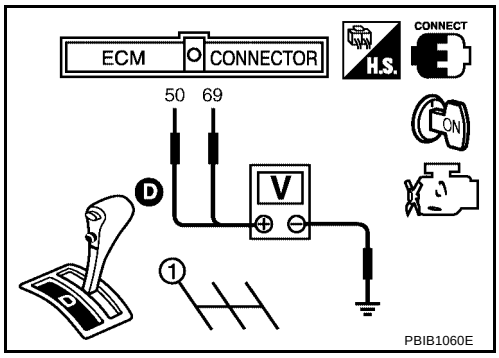

Terminal	Accelerator pedal	Voltage
50 (Throttle position sensor 1)	Fully released	More than 0.36V
	Fully depressed	Less than 4.75V
69 (Throttle position sensor 2)	Fully released	Less than 4.75V
	Fully depressed	More than 0.36V

6. If NG, replace electric throttle control actuator and go to the next step.
7. Perform EC-749, "Throttle Valve Closed Position Learning" .
8. Perform EC-750, "Idle Air Volume Learning" .

Remove and Installation

UBS00JC2

ELECTRIC THROTTLE CONTROL ACTUATOR

Refer to EM-108, "INTAKE MANIFOLD" .

DTC P0125 ECT SENSOR

PFP:22630

Description

UBS00JC3

NOTE:
If DTC P0125 is displayed with P0117 or P0118, first perform the trouble diagnosis for DTC P0117 or P0118. Refer to EC-884 .

COMPONENT DESCRIPTION

The engine coolant temperature sensor is used to detect the engine coolant temperature. The sensor modifies a voltage signal from the ECM. The modified signal returns to the ECM as the engine coolant temperature input. The sensor uses a thermistor which is sensitive to the change in temperature. The electrical resistance of the thermistor decreases as temperature increases.

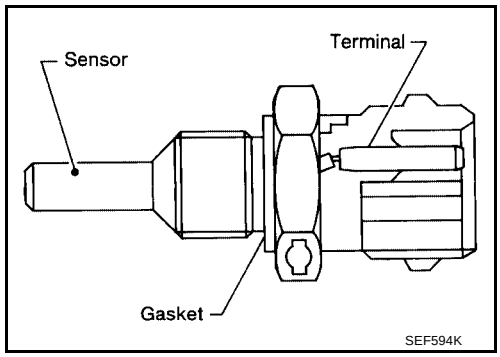

< Reference data>

Engine coolant temperature °C (°F)	Voltage* V	Resistance kΩ
–10 (14)	4.4	7.0 - 11.4
20 (68)	3.5	2.1 - 2.9
50 (122)	2.2	0.68 - 1.00
90 (194)	0.9	0.236 - 0.260

*: This data is reference value and is measured between ECM terminal 73 (Engine coolant temperature sensor) and ground.

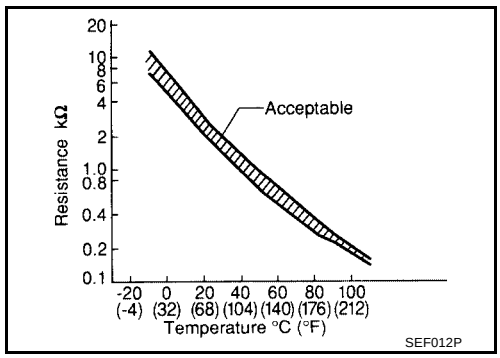

CAUTION:
Do not use ECM ground terminals when measuring input/output voltage. Doing so may result in damage to the ECM's transistor. Use a ground other than ECM terminals, such as the ground.

On Board Diagnosis Logic

UBS00JC4

This self-diagnosis has the one trip detection logic.

DTC No.	Trouble diagnosis name	DTC detecting condition	Possible cause
P0125 0125	Insufficient engine coolant temperature for closed loop fuel control	● Voltage sent to ECM from the sensor is not practical, even when some time has passed after starting the engine. ● Engine coolant temperature is insufficient for closed loop fuel control.	● Harness or connectors (High resistance in the circuit) ● Engine coolant temperature sensor ● Thermostat

DTC Confirmation Procedure

UBS00JC5

CAUTION:
Be careful not to overheat engine.

NOTE:
If DTC Confirmation Procedure has been previously conducted, always turn ignition switch OFF and wait at least 10 seconds before conducting the next test.

WITH CONSULT-II

1. Turn ignition switch ON.

2. Select “DATA MONITOR” mode with CONSULT-II.
3. Check that “COOLAN TEMP/S” is above 10°C (50°F).
   If it is above 10°C (50°F), the test result will be OK.
   If it is below 10°C (50°F), go to following step.
4. Start engine and run it for 65 minutes at idle speed.
   If “COOLAN TEMP/S” increases to more than 10°C (50°F) within 65 minutes, stop engine because the test result will be OK.
5. If DTC is detected, go to EC-898, "Diagnostic Procedure" .

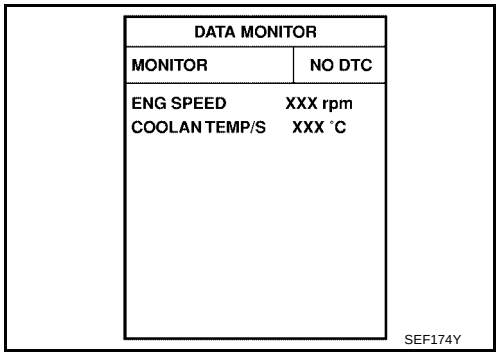

WITH GST

Follow the procedure “WITH CONSULT-II” above.

Diagnostic Procedure

UBS00JC6

1. CHECK GROUND CONNECTIONS

1. Turn ignition switch OFF.
2. Loosen and retighten two ground screws on the body. Refer to EC-841, "Ground Inspection" .

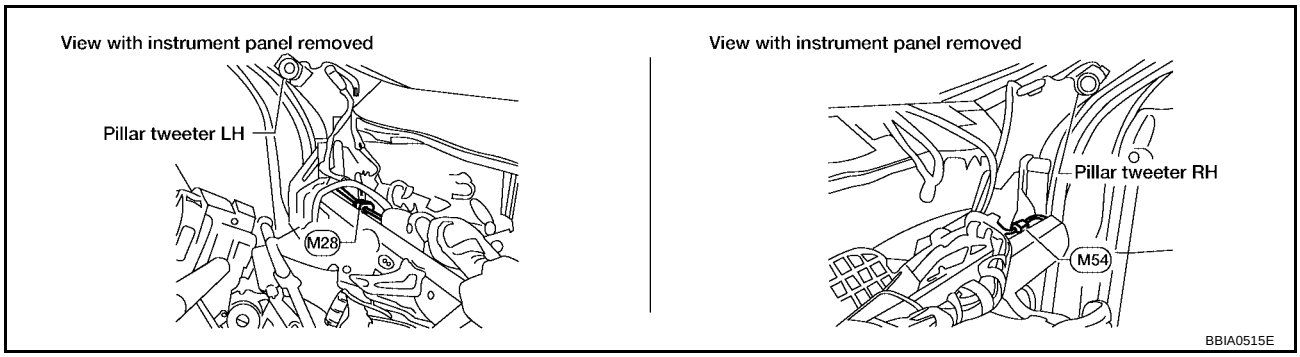

OK or NG

OK >> GO TO 2.
NG >> Repair or replace ground connections.

2. CHECK ENGINE COOLANT TEMPERATURE SENSOR

Refer to EC-899, "Component Inspection" .

OK or NG

OK >> GO TO 3.
NG >> Replace engine coolant temperature sensor.

3. CHECK THERMOSTAT OPERATION

When the engine is cold [lower than 70°C (158°F)] condition, grasp lower radiator hose and confirm the engine coolant does not flow.

OK or NG

OK >> GO TO 4.
NG >> Repair or replace thermostat. Refer to CO-30, "THERMOSTAT AND THERMOSTAT HOUSING" .

4. CHECK INTERMITTENT INCIDENT

Refer to EC-834, "TROUBLE DIAGNOSIS FOR INTERMITTENT INCIDENT" .

>> **INSPECTION END**

Component Inspection

UBS00JC7

ENGINE COOLANT TEMPERATURE SENSOR

1. Check resistance between engine coolant temperature sensor terminals 1 and 2 as shown in the figure.

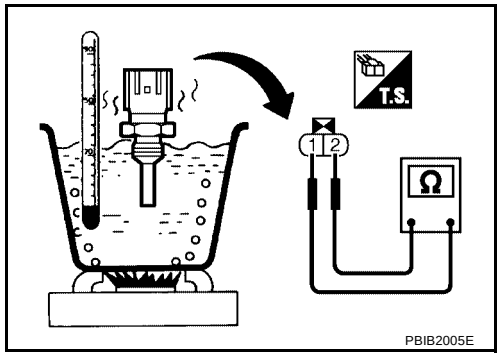

<Reference data>

Engine coolant temperature °C (°F)	Resistance kΩ
20 (68)	2.1 - 2.9
50 (122)	0.68 - 1.00
90 (194)	0.236 - 0.260

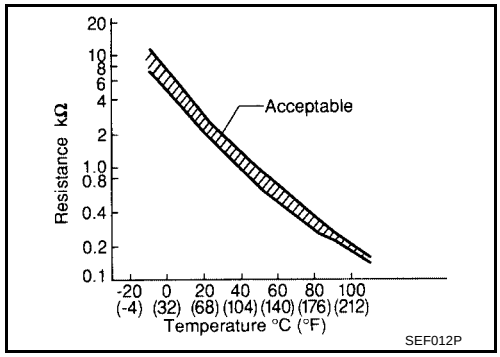

2. If NG, replace engine coolant temperature sensor.

Removal and Installation

UBS00JC8

ENGINE COOLANT TEMPERATURE SENSOR

Refer to CO-30, "THERMOSTAT AND THERMOSTAT HOUSING"

DTC P0127 IAT SENSOR

PFP:22630

Component Description

UBS00JC9

The intake air temperature sensor is built into mass air flow sensor. The sensor detects intake air temperature and transmits a signal to the ECM.
The temperature sensing unit uses a thermistor which is sensitive to the change in temperature. Electrical resistance of the thermistor decreases in response to the temperature rise.

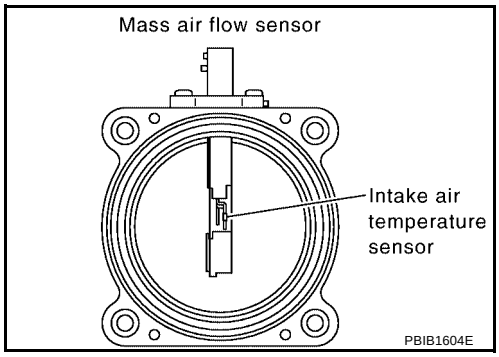

<Reference data>

Intake air temperature °C (°F)	Voltage* V	Resistance kΩ
25 (77)	3.32	1.94 - 2.06
80 (176)	1.23	0.295 - 0.349

*: This data is reference value and is measured between ECM terminal 34 (Intake air temperature sensor) and ground.

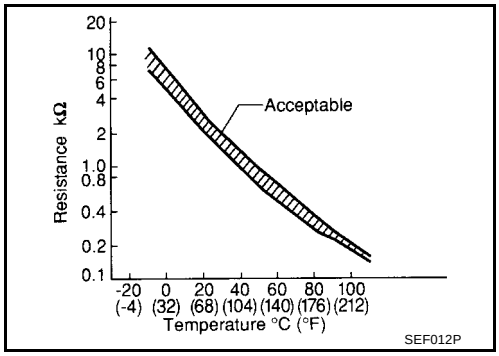

CAUTION:
Do not use ECM ground terminals when measuring input/output voltage. Doing so may result in damage to the ECM's transistor. Use a ground other than ECM terminals, such as the ground.

On Board Diagnosis Logic

UBS00JCA

DTC No.	Trouble diagnosis name	DTC detecting condition	Possible cause
P0127 0127	Intake air temperature too high	Rationally incorrect voltage from the sensor is sent to ECM, compared with the voltage signal from engine coolant temperature sensor.	● Harness or connectors (The sensor circuit is open or shorted) ● Intake air temperature sensor

DTC Confirmation Procedure

UBS00JCB

CAUTION:
Always drive vehicle at a safe speed.

NOTE:
If DTC Confirmation Procedure has been previously conducted, always turn ignition switch OFF and wait at least 10 seconds before conducting the next test.

TESTING CONDITION:
This test may be conducted with the drive wheels lifted in the shop or by driving the vehicle. If a road test is expected to be easier, it is unnecessary to lift the vehicle.

WITH CONSULT-II

1. Wait until engine coolant temperature is less than 90°C (194°F)

a. Turn ignition switch ON.

b. Select “DATA MONITOR” mode with CONSULT-II.
c. Check the engine coolant temperature.
d. If the engine coolant temperature is not less than 90°C (194°F), turn ignition switch OFF and cool down engine.
   - Perform the following steps before engine coolant temperature is above 90°C (194°F).
2. Turn ignition switch ON.
3. Select “DATA MONITOR” mode with CONSULT-II.
4. Start engine.
5. Hold vehicle speed at more than 70 km/h (43 MPH) for 100 consecutive seconds.
6. If 1st trip DTC is detected, go to EC-901, "Diagnostic Procedure" .

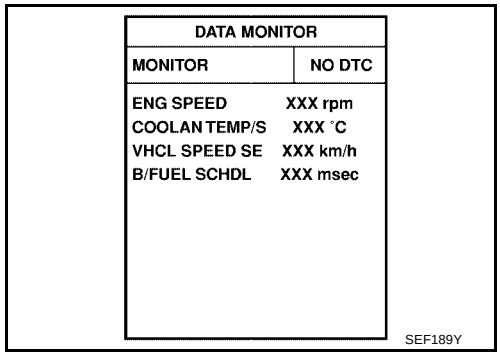

WITH GST

Follow the procedure “WITH CONSULT-II” above.

Diagnostic Procedure

UBS00JCC

1. CHECK GROUND CONNECTIONS

1. Turn ignition switch OFF.
2. Loosen and retighten two ground screws on the body. Refer to EC-841, "Ground Inspection" .

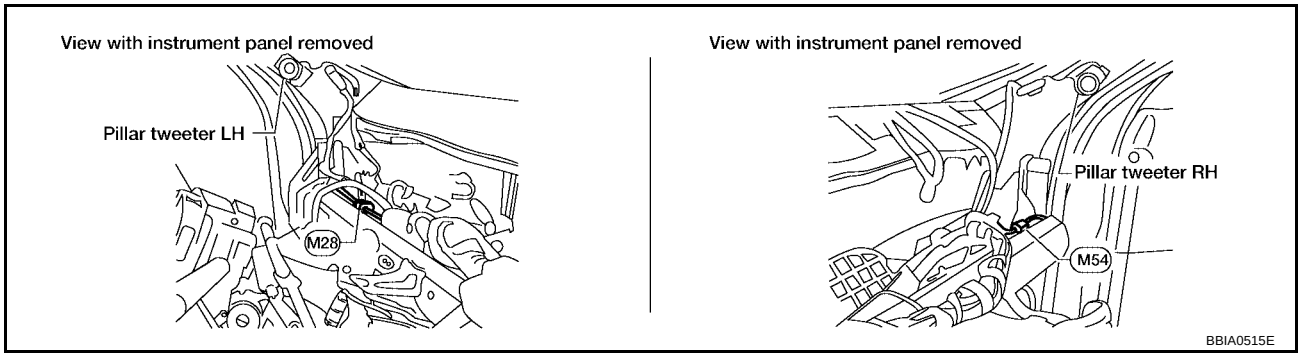

OK or NG

OK >> GO TO 2.
NG >> Repair or replace ground connections.

2. CHECK INTAKE AIR TEMPERATURE SENSOR

Refer to EC-902, "Component Inspection" .

OK or NG

OK >> GO TO 3.
NG >> Replace mass air flow sensor (with intake air temperature sensor).

3. CHECK INTERMITTENT INCIDENT

Refer to EC-834, "TROUBLE DIAGNOSIS FOR INTERMITTENT INCIDENT" .
Refer to EC-880, "Wiring Diagram" .

>> **INSPECTION END**

Component Inspection

UBS00JCD

INTAKE AIR TEMPERATURE SENSOR

1. Check resistance between intake air temperature sensor terminals 5 and 6 under the following conditions.

Intake air temperature °C (°F)	Resistance kΩ
25 (77)	1.96 - 2.06

2. If NG, replace mass air flow sensor (with intake air temperature sensor).

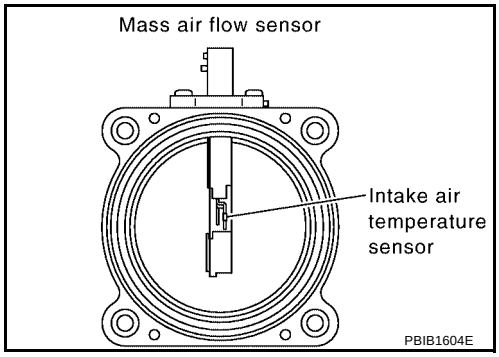

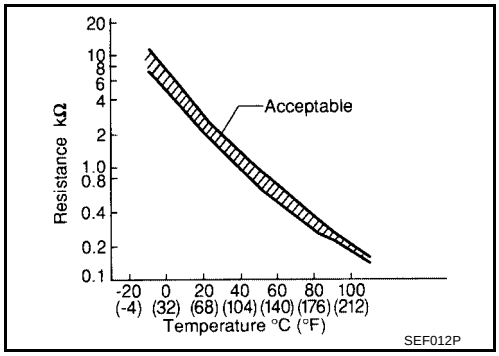

Removal and Installation

UBS00JCE

MASS AIR FLOW SENSOR

Refer to EM-106, "AIR CLEANER AND AIR DUCT" .

DTC P0128 THERMOSTAT FUNCTION

PFP:21200

On Board Diagnosis Logic

UBS00JCF

Engine coolant temperature has not risen enough to open the thermostat even though the engine has run long enough.
This is due to a leak in the seal or the thermostat stuck open.

DTC No.	Trouble diagnosis name	DTC detecting condition	Possible cause
P0128 0128	Thermostat function	The engine coolant temperature does not reach to specified temperature even though the engine has run long enough.	● Thermostat ● Leakage from sealing portion of thermostat ● Engine coolant temperature sensor

DTC Confirmation Procedure

UBS00JCG

NOTE:
If DTC Confirmation Procedure has been previously conducted, always turn ignition switch OFF and wait at least 10 seconds before conducting the next test.

TESTING CONDITION:

- **For best results, perform at ambient temperature of –10°C (14°F) or higher.**
- **For best results, perform at engine coolant temperature of –10°C (14°F) to 68°C (154°F).**

WITH CONSULT-II

1. Replace thermostat with new one. Refer to CO-30, "THERMOSTAT AND THERMOSTAT HOUSING" . Use only a genuine NISSAN thermostat as a replacement. If an incorrect thermostat is used, the MIL may come on.
2. Turn ignition switch ON.
3. Select “COOLAN TEMP/S” in “DATA MONITOR” mode with CONSULT-II.
4. Check that the “COOLAN TEMP/S” is above 68°C (154°F).
   If it is below 68°C (154°F), go to following step.
   If it is above 68°C (154°F), stop engine and cool down the engine to less than 68°C (154°F), then retry from step 1.
5. Drive vehicle for 10 consecutive minutes under the following conditions.

VHCL SPEED SE	80 - 120 km/h (50 - 75 MPH)

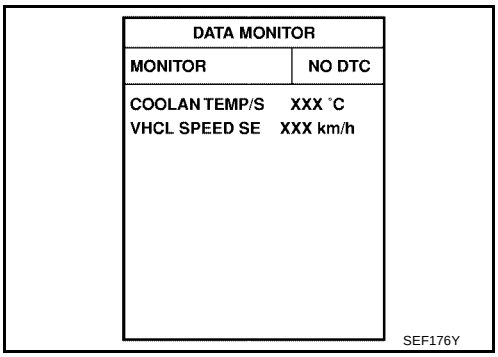

If 1st trip DTC is detected, go to EC-903, "Diagnostic Procedure" .

WITH GST

Follow the procedure “WITH CONSULT-II” above.

Diagnostic Procedure

UBS00JCH

1. CHECK ENGINE COOLANT TEMPERATURE SENSOR

Refer to EC-904, "Component Inspection" .

OK or NG

OK >> **INSPECTION END**
NG >> Replace engine coolant temperature sensor.

Component Inspection

UBS00JCI

ENGINE COOLANT TEMPERATURE SENSOR

1. Check resistance between engine coolant temperature sensor terminals 1 and 2 as shown in the figure.

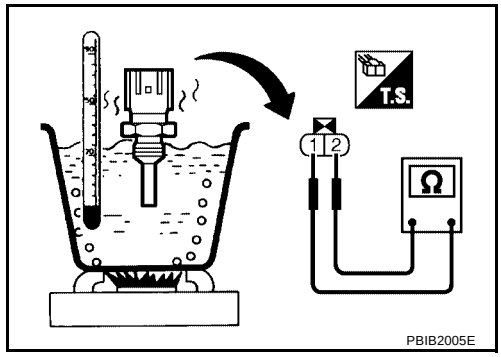

<Reference data>

Engine coolant temperature °C (°F)	Resistance kΩ
20 (68)	2.1 - 2.9
50 (122)	0.68 - 1.00
90 (194)	0.236 - 0.260

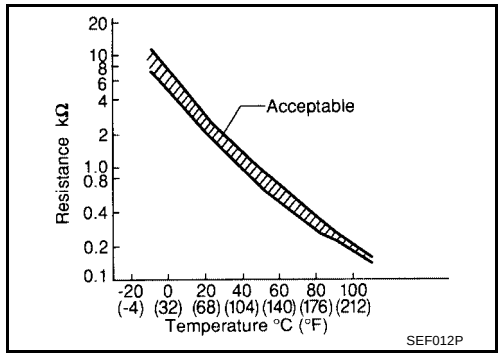

2. If NG, replace engine coolant temperature sensor.

Removal and Installation

UBS00JCJ

ENGINE COOLANT TEMPERATURE SENSOR

Refer to CO-30, "THERMOSTAT AND THERMOSTAT HOUSING" .

DTC P0132 HO2S1

PFP:22690

Component Description

UBS00JTS

The heated oxygen sensor 1 is placed into the exhaust manifold. It detects the amount of oxygen in the exhaust gas compared to the outside air. The heated oxygen sensor 1 has a closed-end tube made of ceramic zirconia. The zirconia generates voltage from approximately 1V in richer conditions to 0V in leaner conditions. The heated oxygen sensor 1 signal is sent to the ECM. The ECM adjusts the injection pulse duration to achieve the ideal air-fuel ratio. The ideal air-fuel ratio occurs near the radical change from 1V to 0V.

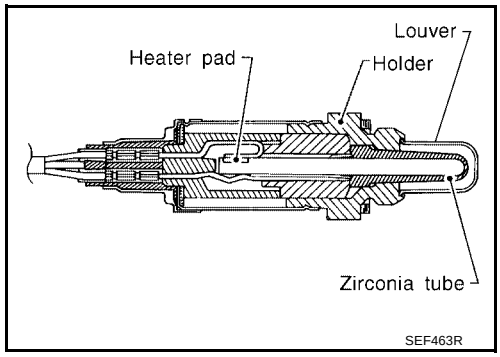

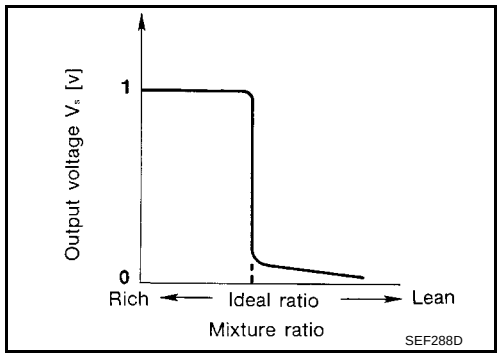

CONSULT-II Reference Value in Data Monitor Mode

UBS00JTT

Specification data are reference values.

MONITOR ITEM	CONDITION		SPECIFICATION
HO2S1 (B1)	● Engine: After warming up	Maintaining engine speed at 2,000 rpm	0 - 0.3V ←→ Approx. 0.6 - 1.0V
HO2S1 MNTR (B1)	● Engine: After warming up	Maintaining engine speed at 2,000 rpm	LEAN ←→ RICH Changes more than 5 times during 10 seconds.

On Board Diagnosis Logic

UBS00JTU

To judge the malfunction, the diagnosis checks that the heated oxygen sensor 1 output is not inordinately high.

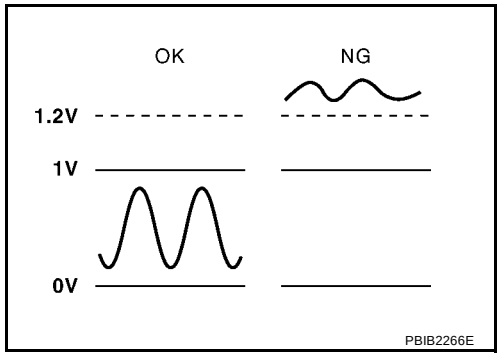

DTC No.	Trouble diagnosis name	DTC detecting condition	Possible cause
P0132 0132	Heated oxygen sensor 1 circuit high voltage	An excessively high voltage from the sensor is sent to ECM.	● Harness or connectors (The sensor circuit is open or shorted) ● Heated oxygen sensor 1

DTC Confirmation Procedure

UBS00JTV

NOTE:
If DTC Confirmation Procedure has been previously conducted, always turn ignition switch OFF and wait at least 10 seconds before conducting the next test.

WITH CONSULT-II

1. Start engine and warm it up to normal operating temperature.
2. Turn ignition switch OFF and wait at least 10 seconds.
3. Turn ignition switch ON.
4. Select “DATA MONITOR” mode with CONSULT-II.
5. Restart engine and let it idle for 2 minutes.
6. If 1st trip DTC is detected, go to EC-908, "Diagnostic Procedure"
.

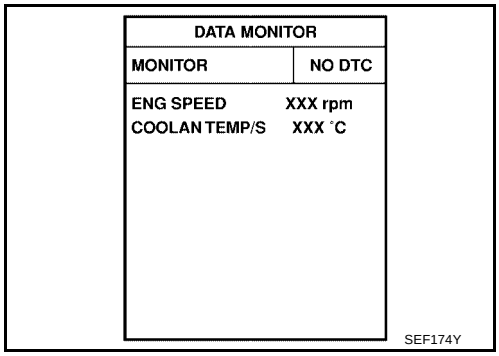

WITH GST

Follow the procedure “WITH CONSULT-II” above.

Wiring Diagram

UBS00JTW

EC-HO2S1-01

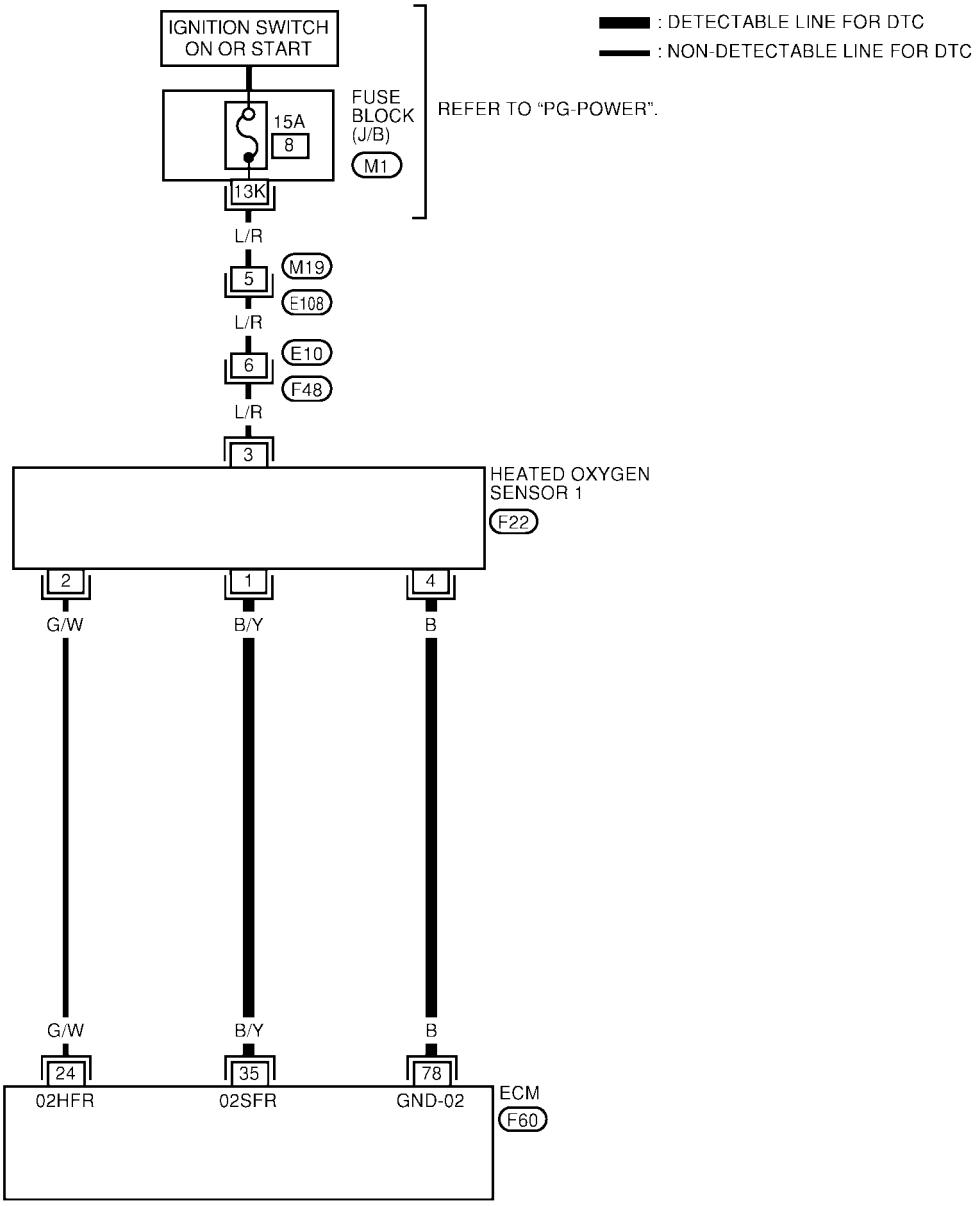

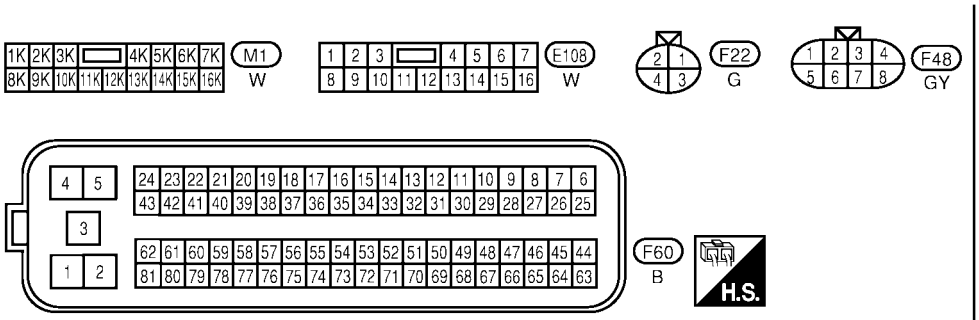

BBWA1393E

Specification data are reference values and are measured between each terminal and ground.

CAUTION:

Do not use ECM ground terminals when measuring input/output voltage. Doing so may result in damage to the ECM's transistor. Use a ground other than ECM terminals, such as the ground.

TERMINAL NO.	WIRE COLOR	ITEM	CONDITION	DATA (DC Voltage)
35	B/Y	Heated oxygen sensor 1	**[Engine is running]** ● **Warm-up condition** ● Engine speed is 2,000 rpm.	0 - Approximately 1.0V (Periodically change)
78	B	Sensor ground (Heated oxygen sensor)	**[Engine is running]** ● **Warm-up condition** ● Idle speed	Approximately 0V

Diagnostic Procedure

UBS00JTX

1. CHECK GROUND CONNECTIONS

1. Turn ignition switch OFF.
2. Loosen and retighten ground two screws on the body.
   Refer to EC-841, "Ground Inspection" .

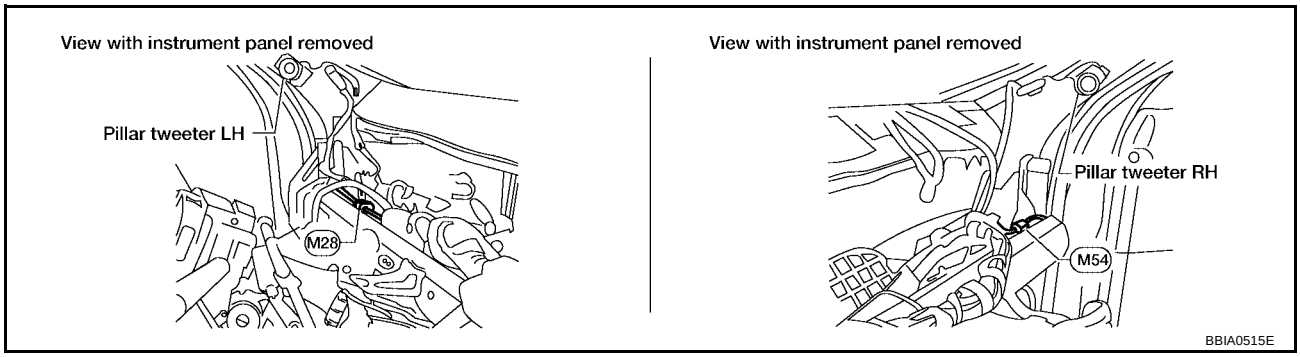

OK or NG

OK >> GO TO 2.
NG >> Repair or replace ground connections.

2. RETIGHTEN HEATED OXYGEN SENSOR 1

Loosen and retighten heated oxygen sensor 1.

Tightening torque: 40 - 60 N·m (4.1 - 6.1 kg-m, 30 - 44 ft-lb)

>> GO TO 3.

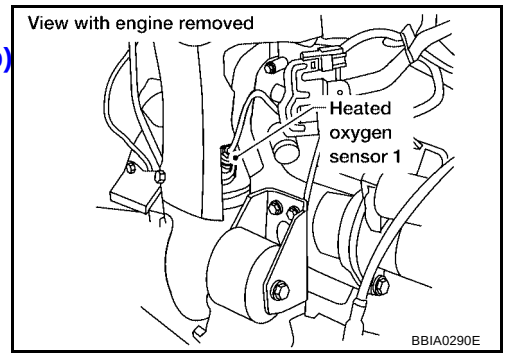

3. CHECK HO2S1 GROUND CIRCUIT FOR OPEN AND SHORT

1. Disconnect heated oxygen sensor 1 harness connector.
2. Disconnect ECM harness connector.
3. Check harness continuity between HO2S1 terminal 4 and ECM terminal 78.
   Refer to Wiring Diagram.

   Continuity should exist.

4. Also check harness for short to ground and short to power.

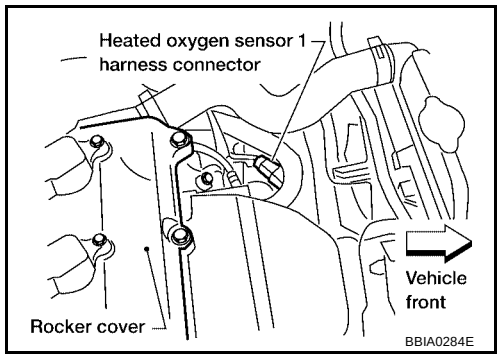

OK or NG

OK >> GO TO 4.
NG >> Repair open circuit or short to ground or short to power in harness or connectors.

4. CHECK HO2S1 INPUT SIGNAL CIRCUIT FOR OPEN AND SHORT

1. Check harness continuity between HO2S1 terminal 1 and ECM terminal 35.
   Refer to Wiring Diagram.

   Continuity should exist.

2. Check harness continuity between ECM terminal 35 or HO2S1 terminal 1 and ground.
   Refer to Wiring Diagram.

   Continuity should not exist.

3. Also check harness for short to power.

OK or NG

OK >> GO TO 5.
NG >> Repair open circuit or short to ground or short to power in harness or connectors.

5. CHECK HO2S1 CONNECTOR FOR WATER

Check heated oxygen sensor 1 connectors for water.

Water should not exist.

OK or NG

OK >> GO TO 6.
NG >> Repair or replace harness or connectors.

6. CHECK HEATED OXYGEN SENSOR 1

Refer to EC-910, "Component Inspection" .

OK or NG

OK >> GO TO 7.
NG >> Replace heated oxygen sensor 1.

7. CHECK INTERMITTENT INCIDENT

Refer to EC-834, "TROUBLE DIAGNOSIS FOR INTERMITTENT INCIDENT" .

>> **INSPECTION END**

Component Inspection

UBS00JTY

HEATED OXYGEN SENSOR 1

With CONSULT-II

1. Start engine and warm it up to normal operating temperature.
2. Select “MANU TRIG” and adjust “TRIGGER POINT” to 100% in “DATA MONITOR” mode with CONSULT-II.
3. Select “HO2S1 (B1)” and “HO2S1 MNTR (B1)”.
4. Hold engine speed at 2,000 rpm under no load during the following steps.
5. Touch “RECORD” on CONSULT-II screen.

DATA MONITOR	
MONITOR	NO DTC
ENG SPEED	XXX rpm
MAS A/F SE-B1	XXX V
COOLAN TEMP/S	XXX °C
HO2S1 (B1)	XXX V
HO2S1 MNTR (B1)	LEAN

SEF646Y

6. Check the following.
   - “HO2S1 MNTR (B1)” in “DATA MONITOR” mode changes from “RICH” to “LEAN” to “RICH” more than 5 times in 10 seconds.
     5 times (cycles) are counted as shown at right.
   - “HO2S1 (B1)” voltage goes above 0.6V at least once.
   - “HO2S1 (B1)” voltage goes below 0.3V at least once.
   - “HO2S1 (B1)” voltage never exceeds 1.0V.

cycle	1	2	3	4	5
HO2S1 MNTR (B1)	R-L-R-L-R-L-R-L-R-L-R				

R means HO2S1 MNTR (B1) indicates RICH
L means HO2S1 MNTR (B1) indicates LEAN

SEF217YA

Trigger	ENG SPEED	HO2S1 (B1)
	rpm	V
XXX	XXX	XXX
XXX	XXX	XXX
XXX	XXX	XXX
XXX	XXX	XXX
XXX	XXX	XXX
XXX	XXX	XXX
XXX	XXX	XXX
XXX	XXX	XXX
XXX	XXX	XXX
XXX	XXX	XXX
XXX	XXX	XXX
XXX	XXX	XXX
XXX	XXX	XXX

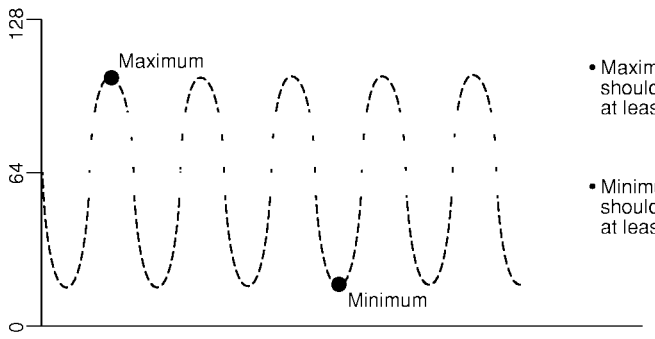

- Maximum voltage should be over 0.6V at least one time.
- Minimum voltage should be below 0.30V at least one time.

SEF648Y

CAUTION:

- **Discard any heated oxygen sensor which has been dropped from a height of more than 0.5 m (19.7 in) onto a hard surface such as a concrete floor; use a new one.**
- **Before installing new oxygen sensor, clean exhaust system threads using Oxygen Sensor Thread Cleaner tool J-43897-18 or J-43897-12 and approved anti-seize lubricant.**

Without CONSULT-II

1. Start engine and warm it up to normal operating temperature.
2. Set voltmeter probes between ECM terminal 35 [HO2S1 (B1) signal] and ground.

3. Check the following with engine speed held at 2,000 rpm constant under no load.
   - The voltage fluctuates between 0 to 0.3V and 0.6 to 1.0V more than 5 times within 10 seconds.
   - The maximum voltage is over 0.6V at least 1 time.
   - The minimum voltage is below 0.3V at least 1 time.
   - The voltage never exceeds 1.0V.

   1 time: 0 - 0.3V → 0.6 - 1.0V → 0 - 0.3V
   2 times: 0 - 0.3V → 0.6 - 1.0V → 0 - 0.3V → 0.6 - 1.0V → 0 - 0.3V

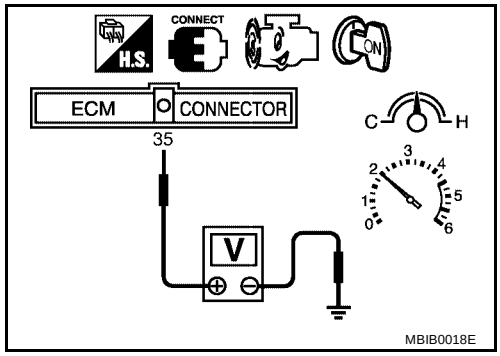

CAUTION:
- **Discard any heated oxygen sensor which has been dropped from a height of more than 0.5 m (19.7 in) onto a hard surface such as a concrete floor; use a new one.**
- **Before installing new oxygen sensor, clean exhaust system threads using Oxygen Sensor Thread Cleaner tool J-43897-18 or J-43897-12 and approved anti-seize lubricant.**

Removal and Installation

UBS00JTZ

HEATED OXYGEN SENSOR 1

Refer to EM-113, "EXHAUST MANIFOLD AND THREE WAY CATALYST" .

DTC P0133 HO2S1

PFP:22690

Component Description

UBS00JU0

The heated oxygen sensor 1 is placed into the exhaust manifold. It detects the amount of oxygen in the exhaust gas compared to the outside air. The heated oxygen sensor 1 has a closed-end tube made of ceramic zirconia. The zirconia generates voltage from approximately 1V in richer conditions to 0V in leaner conditions. The heated oxygen sensor 1 signal is sent to the ECM. The ECM adjusts the injection pulse duration to achieve the ideal air-fuel ratio. The ideal air-fuel ratio occurs near the radical change from 1V to 0V.

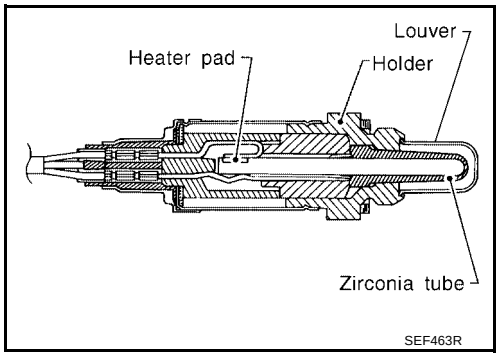

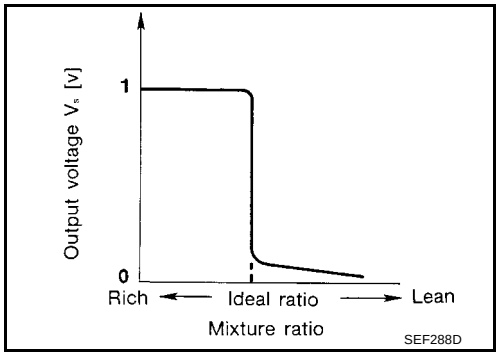

CONSULT-II Reference Value in Data Monitor Mode

UBS00JU1

Specification data are reference values.

MONITOR ITEM	CONDITION		SPECIFICATION
HO2S1 (B1)	● Engine: After warming up	Maintaining engine speed at 2,000 rpm	0 - 0.3V ←→ 0.6 - 1.0V
HO2S1 MNTR (B1)	● Engine: After warming up	Maintaining engine speed at 2,000 rpm	LEAN ←→ RICH Changes more than 5 times during 10 seconds.

On Board Diagnosis Logic

UBS00JU2

To judge the malfunction of heated oxygen sensor 1, this diagnosis measures response time of heated oxygen sensor 1 signal. The time is compensated by engine operating (speed and load), fuel feedback control constant, and heated oxygen sensor 1 temperature index. Judgment is based on whether the compensated time (heated oxygen sensor 1 cycling time index) is inordinately long or not.

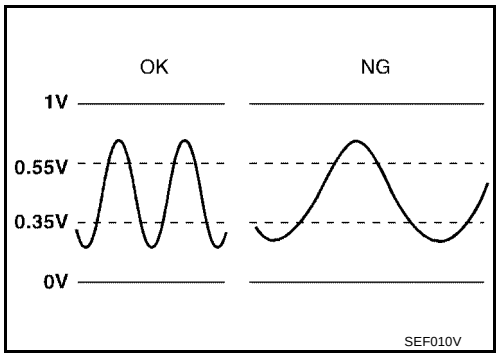

DTC No.	Trouble diagnosis name	DTC detecting condition	Possible cause
P0133 0133	Heated oxygen sensor 1 circuit slow response	The response of the voltage signal from the sensor takes more than the specified time.	● Harness or connectors (The sensor circuit is open or shorted) ● Heated oxygen sensor 1 ● Fuel pressure ● Fuel injector ● Intake air leaks ● Exhaust gas leaks ● PCV valve ● Mass air flow sensor

DTC Confirmation Procedure

UBS00JU3

CAUTION:
Always drive vehicle at a safe speed.

NOTE:
If DTC Confirmation Procedure has been previously conducted, always turn ignition switch OFF and wait at least 10 seconds before conducting the next test.

TESTING CONDITION:

- **Always perform at a temperature above –10°C (14°F).**
- **Before performing the following procedure, confirm that battery voltage is more than 11V at idle.**

WITH CONSULT-II

1. Start engine and warm it up to normal operating temperature.
2. Stop engine and wait at least 10 seconds.
3. Turn ignition switch ON and select “HO2S1 (B1) P0133” of “HO2S1” in “DTC WORK SUPPORT” mode with CONSULT-II.
4. Touch “START”.
5. Start engine and let it idle for at least 3 minutes.

   NOTE:
   Never raise engine speed above 3,600 rpm after this step. If the engine speed limit is exceeded, return to step 5.

HO2S1 (B1) P0133	
OUT OF CONDITION	
MONITOR	
ENG SPEED	XXX rpm
B/FUEL SCHDL	XXX msec
COOLAN TEMP/S	XXX °C
VHCL SPEED SEN	XXX km/h

SEF338Z

6. When the following conditions are met, “TESTING” will be displayed on the CONSULT-II screen. Maintain the conditions continuously until “TESTING” changes to “COMPLETED”. (It will take approximately 20 to 50 seconds.)

ENG SPEED	1,200 - 3,200 rpm
Vehicle speed	More than 80 km/h (50 MPH)
B/FUEL SCHDL	1.9 - 13.0 msec
Shift lever	Suitable position

   If “TESTING” is not displayed after 5 minutes, retry from step 2.

HO2S1 (B1) P0133	
TESTING	
MONITOR	
ENG SPEED	XXX rpm
B/FUEL SCHDL	XXX msec
COOLAN TEMP/S	XXX °C
VHCL SPEED SEN	XXX km/h

SEF339Z

7. Make sure that “OK” is displayed after touching “SELF-DIAG RESULTS”. If “NG” is displayed, refer to EC-916, "Diagnostic Procedure" .

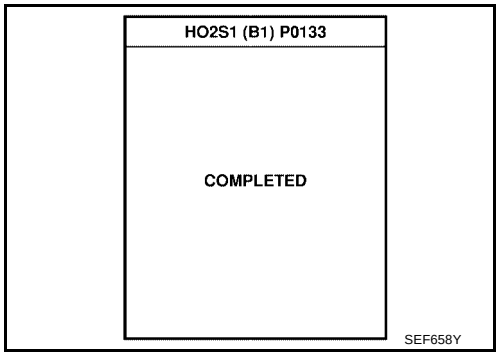

Overall Function Check

UBS00JU4

Use this procedure to check the overall function of the heated oxygen sensor 1 circuit. During this check, a 1st trip DTC might not be confirmed.

WITH GST

1. Start engine and warm it up to normal operating temperature.
2. Set voltmeter probes between ECM terminal 35 [HO2S1(B1) signal] and ground.
3. Check the following with engine speed held at 2,000 rpm constant under no load.
   - The voltage fluctuates between 0 to 0.3V and 0.6 to 1.0V more than 5 times within 10 seconds.

     1 time : 0 - 0.3V → 0.6 - 1.0V → 0 - 0.3V

     2 times : 0 - 0.3V → 0.6 - 1.0V → 0 - 0.3V → 0.6 - 1.0V → 0 - 0.3V
4. If NG, go to EC-916, "Diagnostic Procedure" .

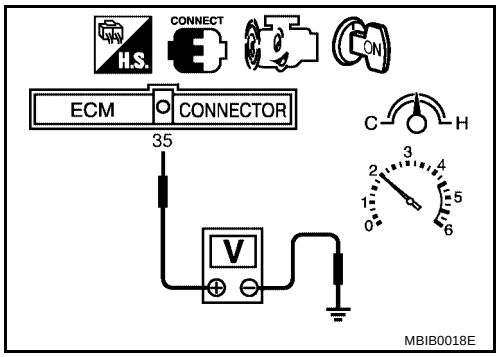

Wiring Diagram

UBS00JU5

EC-HO2S1-01

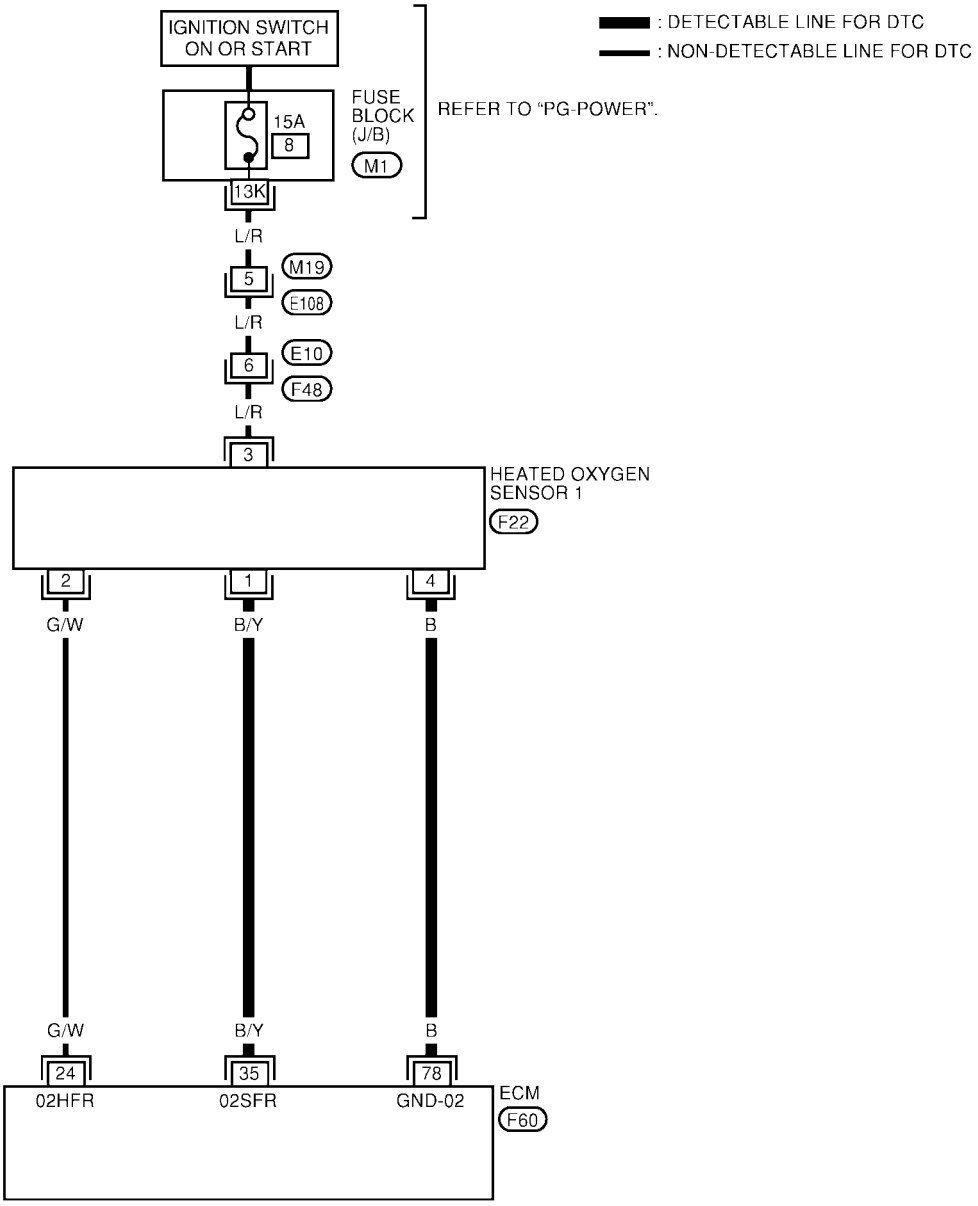

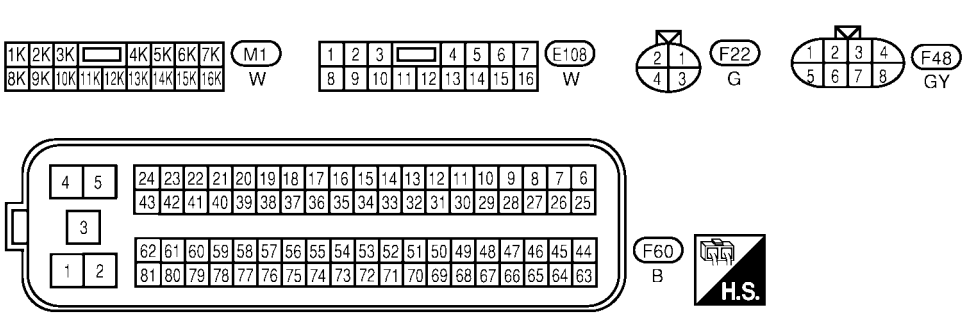

BBWA1393E

Specification data are reference values and are measured between each terminal and ground.

CAUTION:

Do not use ECM ground terminals when measuring input/output voltage. Doing so may result in damage to the ECM's transistor. Use a ground other than ECM terminals, such as the ground.

TERMINAL NO.	WIRE COLOR	ITEM	CONDITION	DATA (DC Voltage)
35	B/Y	Heated oxygen sensor 1	**[Engine is running]** ● **Warm-up condition** ● Engine speed is 2,000 rpm.	0 - Approximately 1.0V (Periodically change)
78	B	Sensor ground (Heated oxygen sensor)	**[Engine is running]** ● **Warm-up condition** ● Idle speed	Approximately 0V

Diagnostic Procedure

UBS00JU6

1. CHECK GROUND CONNECTIONS

1. Turn ignition switch OFF.
2. Loosen and retighten engine two screws on the body.
   Refer to EC-841, "Ground Inspection" .

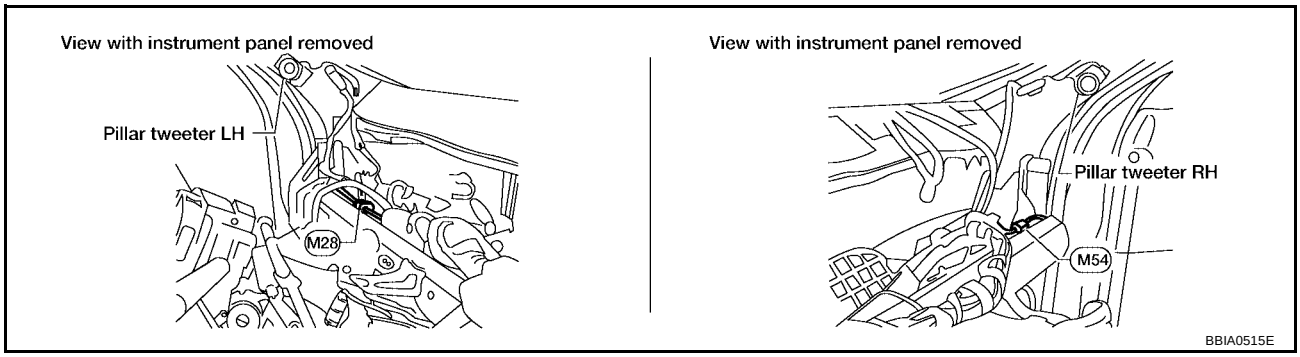

OK or NG

OK >> GO TO 2.
NG >> Repair or replace ground connections.

2. RETIGHTEN HEATED OXYGEN SENSOR 1

Loosen and retighten heated oxygen sensor 1.

Tightening torque: 40 - 60 N·m (4.1 - 6.1 kg-m, 30 - 44 ft-lb)

>> GO TO 3.

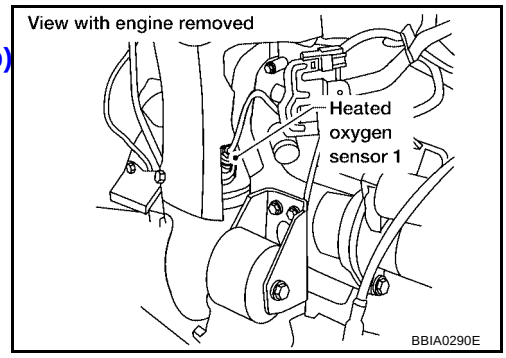

3. CHECK FOR EXHAUST GAS LEAK

1. Start engine and run it at idle.
2. Listen for an exhaust gas leak before three way catalyst (Manifold).

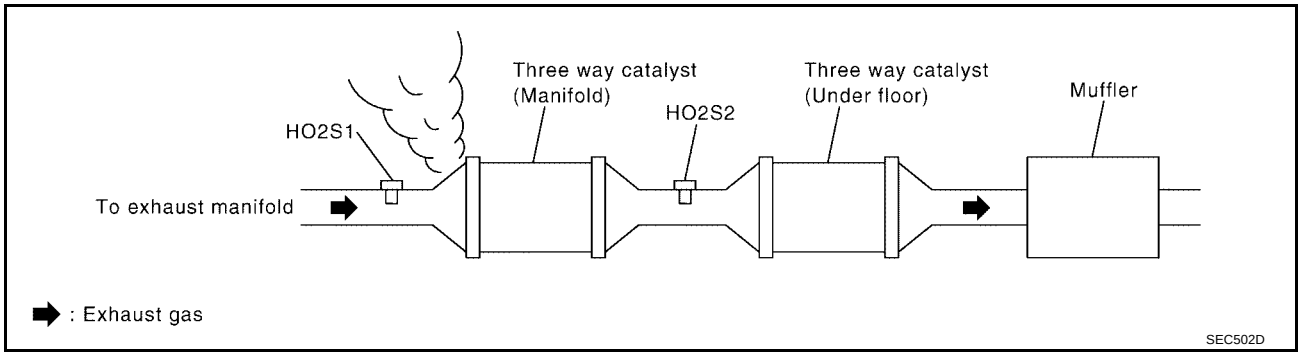

OK or NG

OK >> GO TO 4.
NG >> Repair or replace.

4. CHECK FOR INTAKE AIR LEAK

Listen for an intake air leak after the mass air flow sensor.

OK or NG

OK >> GO TO 5.
NG >> Repair or replace.

5. CLEAR THE SELF-LEARNING DATA

With CONSULT-II

1. Start engine and warm it up to normal operating temperature.
2. Select “SELF-LEARNING CONT” in “WORK SUPPORT” mode with CONSULT-II.
3. Clear the self-learning control coefficient by touching “CLEAR”.
4. Run engine for at least 10 minutes at idle speed.
   Is the 1st trip DTC P0171 or P0172 detected?
   Is it difficult to start engine?

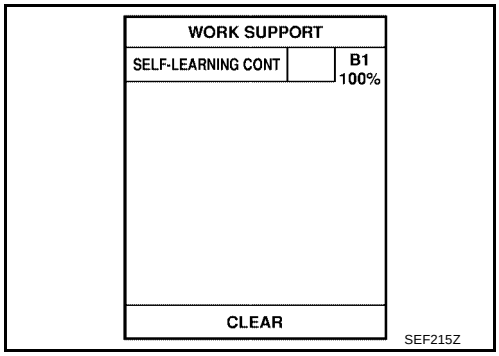

Without CONSULT-II

1. Start engine and warm it up to normal operating temperature.
2. Turn ignition switch OFF.
3. Disconnect mass air flow sensor harness connector, and restart and run engine for at least 5 seconds at idle speed.
4. Stop engine and reconnect mass air flow sensor harness connector.
5. Make sure DTC P0102 is displayed.
6. Erase the DTC memory. Refer to EC-712, "HOW TO ERASE EMISSION-RELATED DIAGNOSTIC INFORMATION" .
7. Make sure DTC P0000 is displayed.
8. Run engine for at least 10 minutes at idle speed.
   Is the 1st trip DTC P0171 or P0172 detected?
   Is it difficult to start engine?

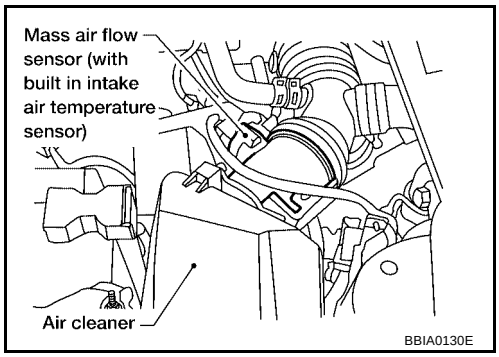

Yes or No

Yes >> Perform trouble diagnosis for DTC P0171 or DTC P0172 (Refer to EC-943 or EC-954).
No >> GO TO 6.

6. CHECK HO2S1 GROUND CIRCUIT FOR OPEN AND SHORT

1. Turn ignition switch OFF.
2. Disconnect heated oxygen sensor 1 harness connector.
3. Disconnect ECM harness connector.
4. Check harness continuity between ECM terminal 78 and HO2S1 terminal 4.
   Refer to Wiring Diagram.

   Continuity should exist.

5. Also check harness for short to ground and short to power.

OK or NG

OK >> GO TO 7.
NG >> Repair open circuit or short to ground short to power in harness or connectors.

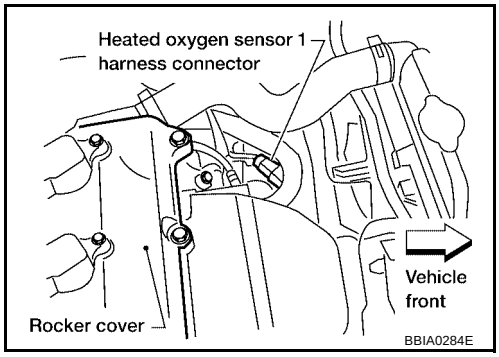

7. CHECK HO2S1 INPUT SIGNAL CIRCUIT FOR OPEN AND SHORT

1. Check harness continuity between ECM terminal 35 and HO2S1 terminal 1.
   Refer to Wiring Diagram.

   Continuity should exist.

2. Check harness continuity between ECM terminal 35 or HO2S1 terminal 1 and ground.
   Refer to Wiring Diagram.

   Continuity should not exist.

3. Also check harness for short to power.

OK or NG

OK >> GO TO 8.
NG >> Repair open circuit or short to ground or short to power in harness or connectors.

8. CHECK MASS AIR FLOW SENSOR

Refer to EC-868, "Component Inspection" .

OK or NG

OK >> GO TO 9.
NG >> Replace mass air flow sensor.

9. CHECK PCV VALVE

Refer to EC-694, "Component Inspection" .

OK or NG

OK >> GO TO 10.
NG >> Replace PCV valve.

10. CHECK HEATED OXYGEN SENSOR 1

Refer to EC-920, "Component Inspection" .

OK or NG

OK >> GO TO 11.
NG >> Replace heated oxygen sensor 1.

11. CHECK INTERMITTENT INCIDENT

Refer to EC-834, "TROUBLE DIAGNOSIS FOR INTERMITTENT INCIDENT" .

>> **INSPECTION END**

Component Inspection

UBS00JU7

HEATED OXYGEN SENSOR 1

With CONSULT-II

1. Start engine and warm it up to normal operating temperature.
2. Select “MANU TRIG” and adjust “TRIGGER POINT” to 100% in “DATA MONITOR” mode with CONSULT-II.
3. Select “HO2S1 (B1)” and “HO2S1 MNTR (B1)”.
4. Hold engine speed at 2,000 rpm under no load during the following steps.
5. Touch “RECORD” on CONSULT-II screen.

DATA MONITOR	
MONITOR	NO DTC
ENG SPEED	XXX rpm
MAS A/F SE-B1	XXX V
COOLAN TEMP/S	XXX °C
HO2S1 (B1)	XXX V
HO2S1 MNTR (B1)	LEAN

SEF646Y

6. Check the following.
   - “HO2S1 MNTR (B1)” in “DATA MONITOR” mode changes from “RICH” to “LEAN” to “RICH” more than 5 times in 10 seconds.
     5 times (cycles) are counted as shown in the figure.
   - “HO2S1 (B1)” voltage goes above 0.6V at least once.
   - “HO2S1 (B1)” voltage goes below 0.3V at least once.
   - “HO2S1 (B1)” voltage never exceeds 1.0V.

cycle	1	2	3	4	5
HO2S1 MNTR (B1)	R-L-R-L-R-L-R-L-R-L-R				

R means HO2S1 MNTR (B1) indicates RICH
L means HO2S1 MNTR (B1) indicates LEAN

SEF217YA

Trigger	ENG SPEED	HO2S1 (B1)
	rpm	V
XXX	XXX	XXX
XXX	XXX	XXX
XXX	XXX	XXX
XXX	XXX	XXX
XXX	XXX	XXX
XXX	XXX	XXX
XXX	XXX	XXX
XXX	XXX	XXX
XXX	XXX	XXX
XXX	XXX	XXX
XXX	XXX	XXX
XXX	XXX	XXX
XXX	XXX	XXX

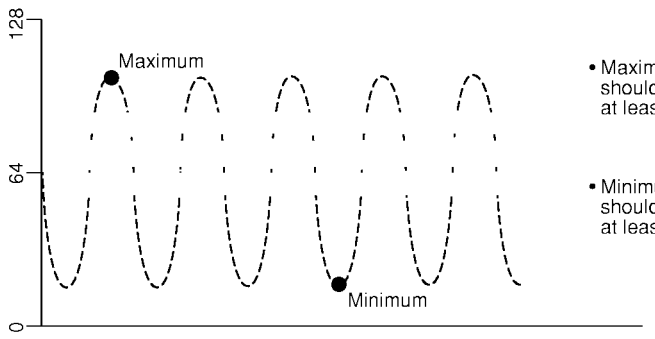

- Maximum voltage should be over 0.6V at least one time.
- Minimum voltage should be below 0.30V at least one time.

SEF648Y

CAUTION:

- **Discard any heated oxygen sensor which has been dropped from a height of more than 0.5 m (19.7 in) onto a hard surface such as a concrete floor; use a new one.**
- **Before installing new oxygen sensor, clean exhaust system threads using Oxygen Sensor Thread Cleaner tool J-43897-18 or J-43897-12 and approved anti-seize lubricant.**

Without CONSULT-II

1. Start engine and warm it up to normal operating temperature.
2. Set voltmeter probes between ECM terminal 35 [HO2S1 (B1) signal] and ground.

3. Check the following with engine speed held at 2,000 rpm constant under no load.
   - The voltage fluctuates between 0 to 0.3V and 0.6 to 1.0V more than 5 times within 10 seconds.
   - The maximum voltage is over 0.6V at least 1 time.
   - The minimum voltage is below 0.3V at least 1 time.
   - The voltage never exceeds 1.0V.

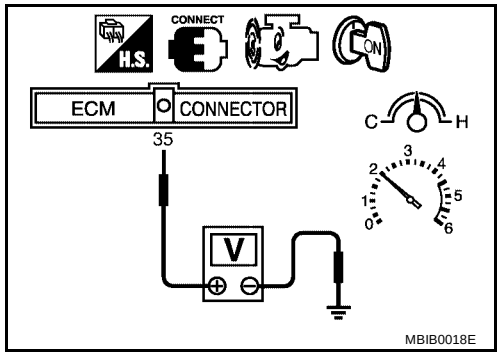

1 time : 0 - 0.3V → 0.6 - 1.0V → 0 - 0.3V

2 times : 0 - 0.3V → 0.6 - 1.0V → 0 - 0.3V →0.6 - 1.0V → 0 - 0.3V

CAUTION:
- **Discard any heated oxygen sensor which has been dropped from a height of more than 0.5 m (19.7 in) onto a hard surface such as a concrete floor; use a new one.**
- **Before installing new oxygen sensor, clean exhaust system threads using Oxygen Sensor Thread Cleaner tool J-43897-18 or J-43897-12 and approved anti-seize lubricant.**

Removal and Installation

UBS00JU8

HEATED OXYGEN SENSOR 1

Refer to EM-113, "EXHAUST MANIFOLD AND THREE WAY CATALYST" .

DTC P0134 HO2S1

PFP:22690

Component Description

UBS00JU9

The heated oxygen sensor 1 is placed into the exhaust manifold. It detects the amount of oxygen in the exhaust gas compared to the outside air. The heated oxygen sensor 1 has a closed-end tube made of ceramic zirconia. The zirconia generates voltage from approximately 1V in richer conditions to 0V in leaner conditions. The heated oxygen sensor 1 signal is sent to the ECM. The ECM adjusts the injection pulse duration to achieve the ideal air-fuel ratio. The ideal air-fuel ratio occurs near the radical change from 1V to 0V.

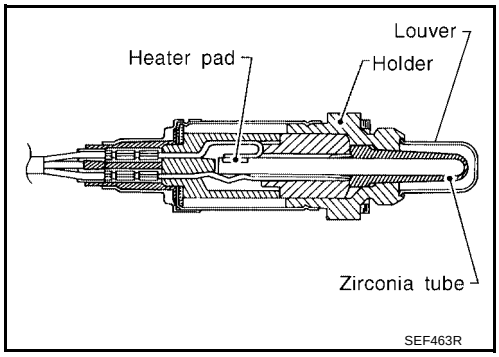

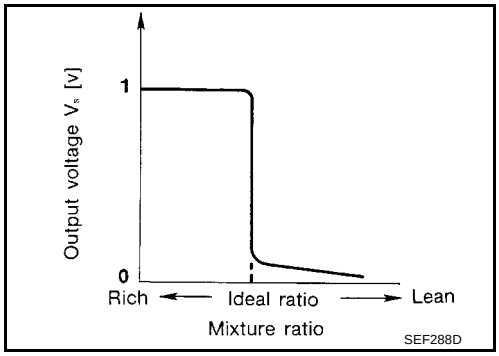

CONSULT-II Reference Value in Data Monitor Mode

UBS00JUA

Specification data are reference values.

MONITOR ITEM	CONDITION		SPECIFICATION
HO2S1 (B1)	● Engine: After warming up	Maintaining engine speed at 2,000 rpm	0 - 0.3V ←→ 0.6 - 1.0V
HO2S1 MNTR (B1)	● Engine: After warming up	Maintaining engine speed at 2,000 rpm	LEAN ←→ RICH Changes more than 5 times during 10 seconds.

On Board Diagnosis Logic

UBS00JUB

Under the condition in which the heated oxygen sensor 1 signal is not input, the ECM circuits will read a continuous approximately 0.3V. Therefore, for this diagnosis, the time that output voltage is within 200 to 400 mV range is monitored, and the diagnosis checks that this time is not inordinately long.

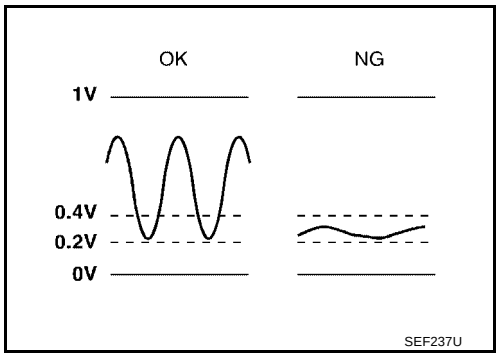

DTC No.	Trouble diagnosis name	DTC detecting condition	Possible cause
P0134 0134	Heated oxygen sensor 1 circuit no activity detected	The voltage from the sensor is constantly approx. 0.3V.	● Harness or connectors (The sensor circuit is open or shorted) ● Heated oxygen sensor 1

DTC Confirmation Procedure

UBS00JUC

CAUTION:
Always drive vehicle at a safe speed.

NOTE:
If DTC Confirmation Procedure has been previously conducted, always turn ignition switch OFF and wait at least 10 seconds before conducting the next test.

TESTING CONDITION:
Before performing the following procedure, confirm that battery voltage is more than 11V at idle.

WITH CONSULT-II

1. Start engine and warm it up to normal operating temperature.
2. Select “HO2S1 (B1) P0134” of “HO2S1” in “DTC WORK SUPPORT” mode with CONSULT-II.
3. Touch “START”.
4. Let it idle for at least 3 minutes.

   NOTE:
   Never raise engine speed above 3,600 rpm after this step. If the engine speed limit is exceeded, return to step 4.

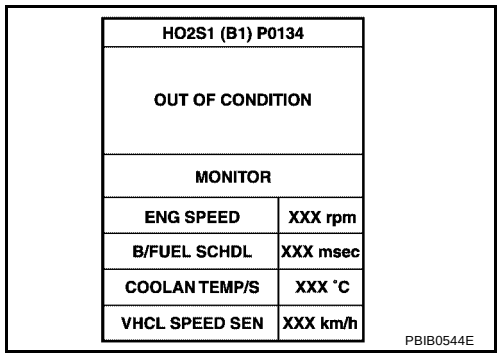

5. When the following conditions are met, “TESTING” will be displayed on the CONSULT-II screen. Maintain the conditions continuously until “TESTING” changes to “COMPLETED”. (It will take approximately 10 to 60 seconds.)

ENG SPEED	1,200 - 3,200 rpm
Vehicle speed	More than 64 km/h (40 MPH)
B/FUEL SCHDL	1.9 - 13.0 msec
Shift lever	Suitable position

   If “TESTING” is not displayed after 5 minutes, retry from step 2.

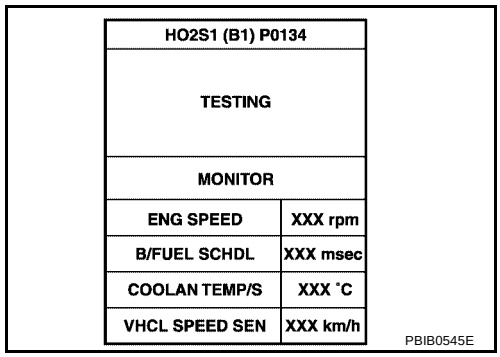

6. Make sure that “OK” is displayed after touching “SELF-DIAG RESULTS”. If “NG” is displayed, refer to EC-926, "Diagnostic Procedure" .

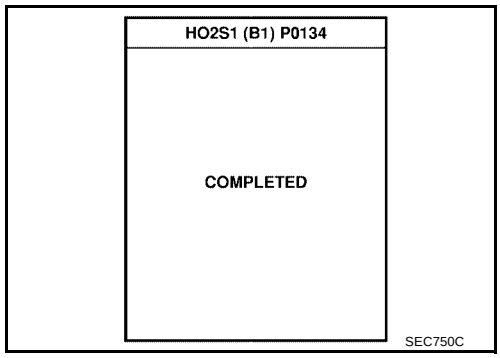

Overall Function Check

UBS00JUD

Use this procedure to check the overall function of the heated oxygen sensor 1 circuit. During this check, a 1st trip DTC might not be confirmed.

WITH GST

1. Start engine and warm it up to normal operating temperature.
2. Set voltmeter probes between ECM terminal 35 [HO2S1 (B1) signal] and ground.
3. Check the following with engine speed held at 2,000 rpm constant under no load.
   - The voltage does not remain in the range of 0.2 to 0.4V.
4.

   If NG, go to EC-926, "Diagnostic Procedure" .

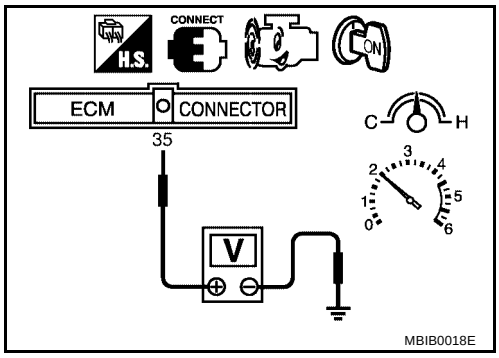

Wiring Diagram

UBS00JUE

EC-HO2S1-01

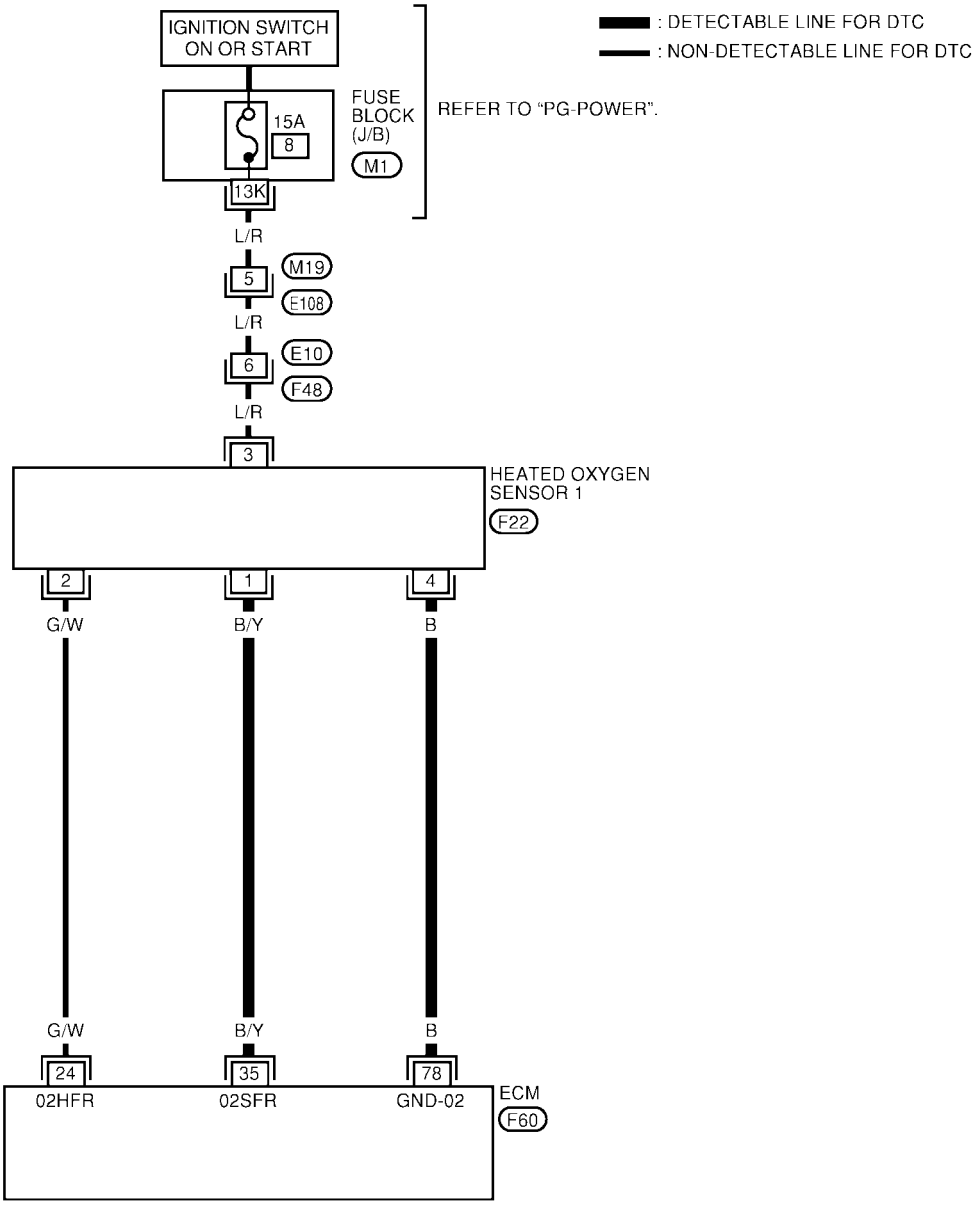

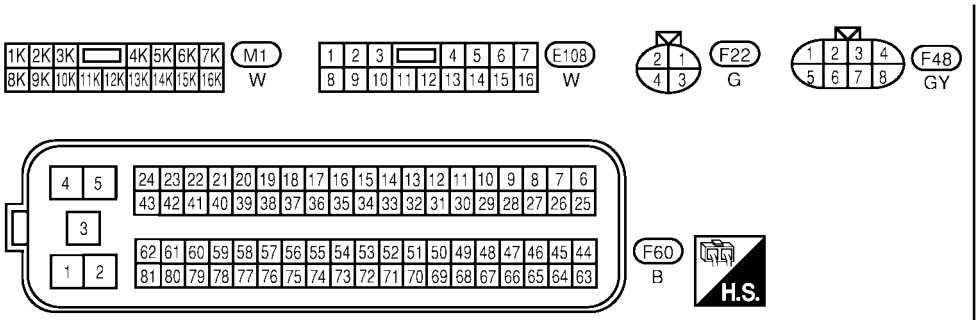

BBWA1393E

Specification data are reference values and are measured between each terminal and ground.

CAUTION:

Do not use ECM ground terminals when measuring input/output voltage. Doing so may result in damage to the ECM's transistor. Use a ground other than ECM terminals, such as the ground.

TERMINAL NO.	WIRE COLOR	ITEM	CONDITION	DATA (DC Voltage)
35	B/Y	Heated oxygen sensor 1	**[Engine is running]** ● **Warm-up condition** ● Engine speed is 2,000 rpm.	0 - Approximately 1.0V (Periodically change)
78	B	Sensor ground (Heated oxygen sensor)	**[Engine is running]** ● **Warm-up condition** ● Idle speed	Approximately 0V

Diagnostic Procedure

UBS00JUF

1. CHECK GROUND CONNECTIONS

1. Turn ignition switch OFF.
2. Loosen and retighten engine two screws on the body.
   Refer to EC-841, "Ground Inspection" .

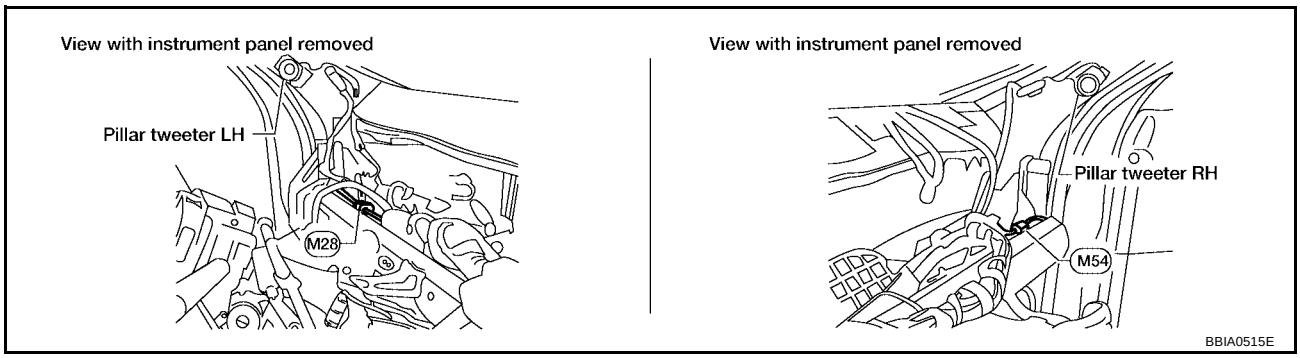

OK or NG

OK >> GO TO 2.
NG >> Repair or replace ground connections.

2. CHECK HO2S1 GROUND CIRCUIT FOR OPEN AND SHORT

1. Disconnect heated oxygen sensor 1 harness connector.
2. Disconnect ECM harness connector.
3. Check harness continuity between ECM terminal 78 and HO2S1 terminal 4.
   Refer to Wiring Diagram.

   Continuity should exist.

4. Also check harness for short to ground and short to power.

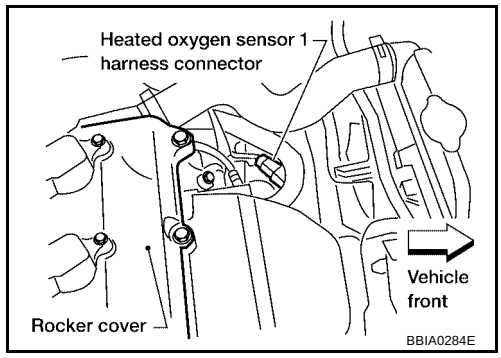

OK or NG

OK >> GO TO 3.
NG >> Repair open circuit or short to ground or short to power in harness or connectors.

3. CHECK HO2S1 INPUT SIGNAL CIRCUIT FOR OPEN AND SHORT

1. Check harness continuity between ECM terminal 35 and HO2S1 terminal 1.
   Refer to Wiring Diagram.

   Continuity should exist.

2. Check harness continuity between ECM terminal 35, HO2S1 terminal 1 and ground.
   Refer to Wiring Diagram.

   Continuity should not exist.

3. Also check harness for short to power.

OK or NG

OK >> GO TO 4.
NG >> Repair open circuit or short to ground or short to power in harness or connectors.

4. CHECK HEATED OXYGEN SENSOR 1

Refer to EC-927, "Component Inspection" .

OK or NG

OK >> GO TO 5.
NG >> Replace heated oxygen sensor 1.

5. CHECK INTERMITTENT INCIDENT

Refer to EC-834, "TROUBLE DIAGNOSIS FOR INTERMITTENT INCIDENT" .

>> **INSPECTION END**

Component Inspection

UBS00JUG

HEATED OXYGEN SENSOR 1

With CONSULT-II

1. Start engine and warm it up to normal operating temperature.
2. Select “MANU TRIG” and adjust “TRIGGER POINT” to 100% in “DATA MONITOR” mode with CONSULT-II.
3. Select “HO2S1 (B1)” and “HO2S1 MNTR (B1)”.
4. Hold engine speed at 2,000 rpm under no load during the following steps.
5. Touch “RECORD” on CONSULT-II screen.

DATA MONITOR	
MONITOR	NO DTC
ENG SPEED	XXX rpm
MAS A/F SE-B1	XXX V
COOLAN TEMP/S	XXX °C
HO2S1 (B1)	XXX V
HO2S1 MNTR (B1)	LEAN

SEF646Y

6. Check the following.
   - “HO2S1 MNTR (B1)” in “DATA MONITOR” mode changes from “RICH” to “LEAN” to “RICH” more than 5 times in 10 seconds.
     5 times (cycles) are counted as shown at right.
   - “HO2S1 (B1)” voltage goes above 0.6V at least once.
   - “HO2S1 (B1)” voltage goes below 0.3V at least once.
   - “HO2S1 (B1)” voltage never exceeds 1.0V.

cycle	1	2	3	4	5
HO2S1 MNTR (B1)	R-L-R-L-R-L-R-L-R-L-R				

R means HO2S1 MNTR (B1) indicates RICH
L means HO2S1 MNTR (B1) indicates LEAN

SEF217YA

Trigger	ENG SPEED	HO2S1 (B1)
	rpm	V
XXX	XXX	XXX
XXX	XXX	XXX
XXX	XXX	XXX
XXX	XXX	XXX
XXX	XXX	XXX
XXX	XXX	XXX
XXX	XXX	XXX
XXX	XXX	XXX
XXX	XXX	XXX
XXX	XXX	XXX
XXX	XXX	XXX
XXX	XXX	XXX

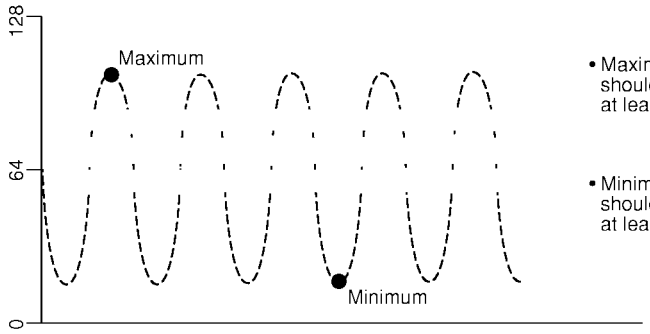

CAUTION:

- **Discard any heated oxygen sensor which has been dropped from a height of more than 0.5 m (19.7 in) onto a hard surface such as a concrete floor; use a new one.**
- **Before installing new oxygen sensor, clean exhaust system threads using Oxygen Sensor Thread Cleaner tool J-43897-18 or J-43897-12 and approved anti-seize lubricant.**

Without CONSULT-II

1. Start engine and warm it up to normal operating temperature.
2. Set voltmeter probes between ECM terminal 35 [HO2S1 (B1) signal] and ground.
3. Check the following with engine speed held at 2,000 rpm constant under no load.
   - The voltage fluctuates between 0 to 0.3V and 0.6 to 1.0V more than 5 times within 10 seconds.
   - The maximum voltage is over 0.6V at least 1 time.
   - The minimum voltage is below 0.3V at least 1 time.
   - The voltage never exceeds 1.0V.

   1 time: 0 - 0.3V → 0.6 - 1.0V → 0 - 0.3V
   2 times: 0 - 0.3V → 0.6 - 1.0V → 0 - 0.3V → 0.6 - 1.0V → 0 - 0.3V

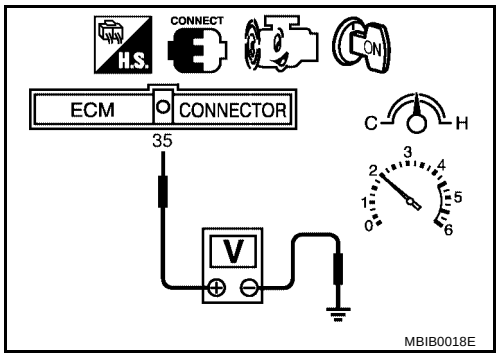

CAUTION:

- **Discard any heated oxygen sensor which has been dropped from a height of more than 0.5 m (19.7 in) onto a hard surface such as a concrete floor; use a new one.**
- **Before installing new oxygen sensor, clean exhaust system threads using Oxygen Sensor Thread Cleaner tool J-43897-18 or J-43897-12 and approved anti-seize lubricant.**

Removal and Installation

UBS00JUH

HEATED OXYGEN SENSOR 1

Refer to EM-113, "EXHAUST MANIFOLD AND THREE WAY CATALYST" .

DTC P0138 HO2S2

PFP:226A0

Component Description

UBS00JUI

The heated oxygen sensor 2, after three way catalyst (manifold), monitors the oxygen level in the exhaust gas.
Even if switching characteristics of the heated oxygen sensor 1 (A/T models ULEV and M/T models) or air fuel ratio (A/F) sensor 1 (A/T models except ULEV) are shifted, the air-fuel ratio is controlled to stoichiometric, by the signal from the heated oxygen sensor 2.
This sensor is made of ceramic zirconia. The zirconia generates voltage from approximately 1V in richer conditions to 0V in leaner conditions.
Under normal conditions the heated oxygen sensor 2 is not used for engine control operation.

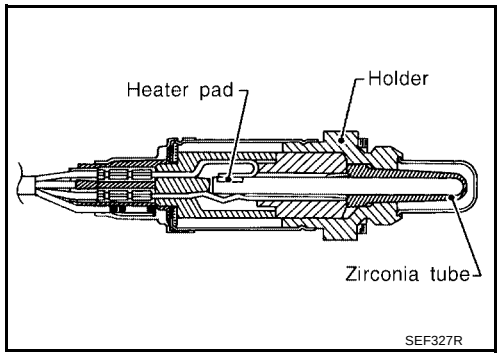

CONSULT-II Reference Value in Data Monitor Mode

UBS00JUJ

Specification data are reference values.

MONITOR ITEM	CONDITION		SPECIFICATION
HO2S2 (B1)	● Engine: After warming up ● Keeping the engine speed between 3,500 and 4,000 rpm for 1 minute and at idle for 1 minute under no load	Revving engine from idle to 3,000 rpm quickly	0 - 0.3V ←→ 0.6 - 1.0V
HO2S2 MNTR (B1)			LEAN ←→ RICH

On Board Diagnosis Logic

UBS00JUK

The heated oxygen sensor 2 has a much longer switching time between rich and lean than the heated oxygen sensor 1 (A/T models ULEV and M/T models) or the air fuel ratio (A/F) sensor 1 (A/T models except ULEV). The oxygen storage capacity before the three way catalyst (manifold) causes the longer switching time. To judge the malfunctions of rear heated oxygen sensor 2, ECM monitors whether the voltage is unusually high during the various driving condition such as fuel-cut.

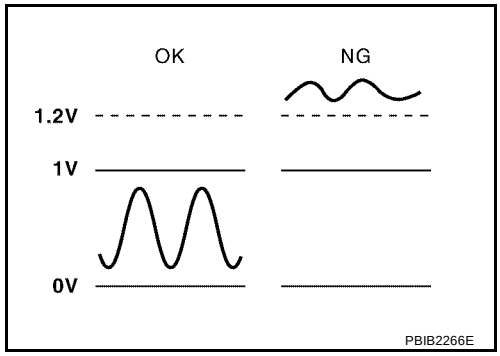

DTC No.	Trouble diagnosis name	DTC detecting condition	Possible cause
P0138 0138	Heated oxygen sensor 2 circuit high voltage	An excessively high voltage from the sensor is sent to ECM.	● Harness or connectors (The sensor circuit is open or shorted.) ● Heated oxygen sensor 2

DTC Confirmation Procedure

UBS00JUL

CAUTION:

Always drive vehicle at a safe speed.

NOTE:

If DTC Confirmation Procedure has been previously conducted, always turn ignition switch OFF and wait at least 10 seconds before conducting the next test.

WITH CONSULT-II

1. Turn ignition switch ON and select “DATA MONITOR” mode with CONSULT-II.
2. Start engine and warm it up to the normal operating temperature.
3. Turn ignition switch OFF and wait at least 10 seconds.
4. Start engine and keep the engine speed between 3,500 and 4,000 rpm for at least 1 minute under no load.
5. Let engine idle for 2 minutes.
6. If 1st trip DTC is detected, go to EC-932, "Diagnostic Procedure".

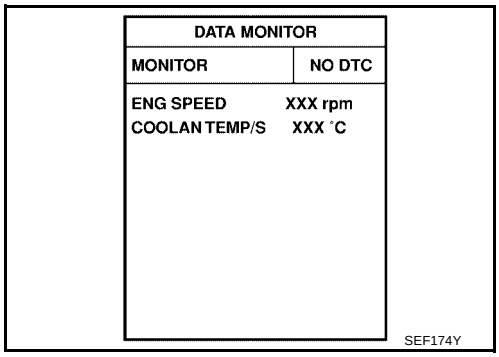

WITH GST

Follow the procedure “WITH CONSULT-II” above.

Wiring Diagram

UBS00JUM

EC-HO2S2-01

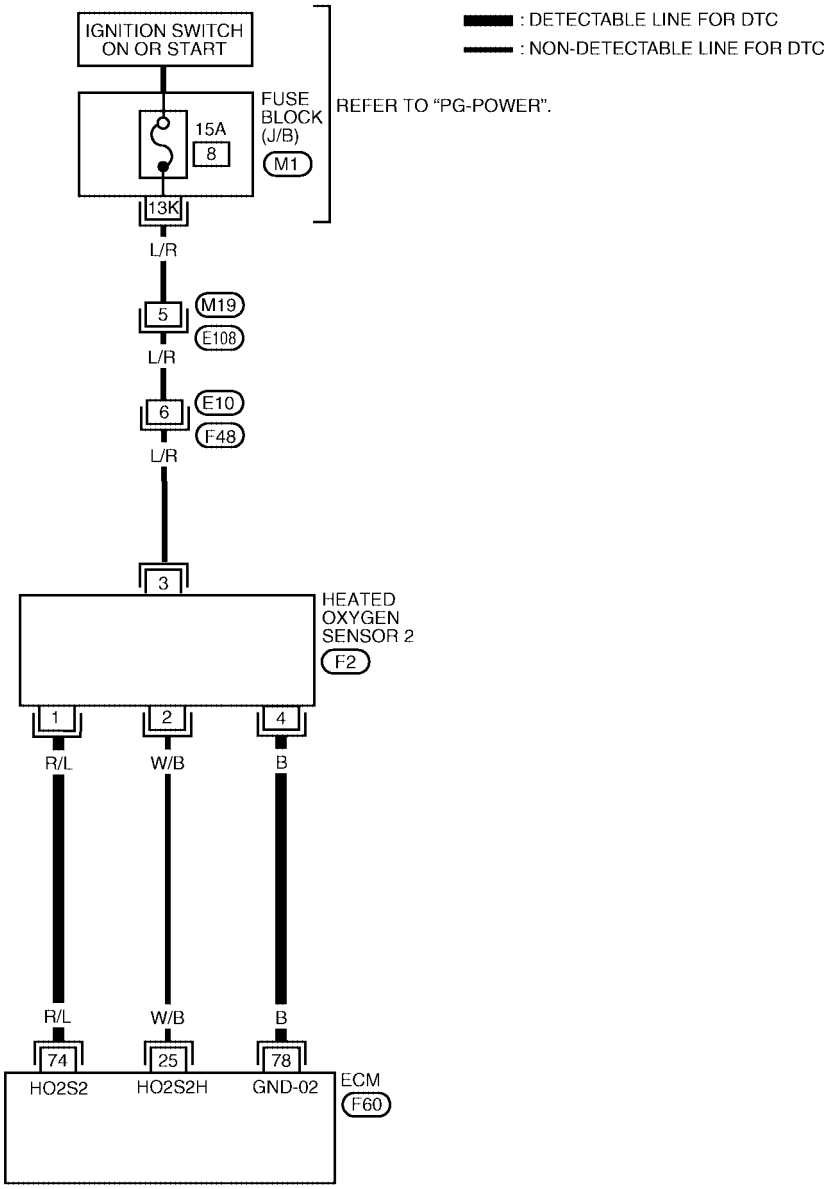

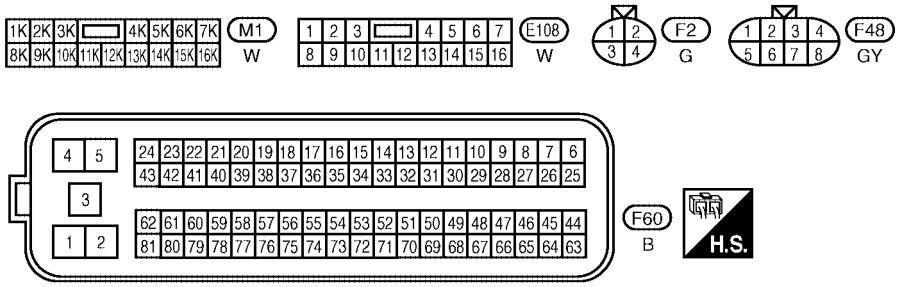

BBWA1427E

Specification data are reference values and are measured between each terminal and ground.

CAUTION:

Do not use ECM ground terminals when measuring input/output voltage. Doing so may result in damage to the ECM's transistor. Use a ground other than ECM terminals, such as the ground.

TERMINAL NO.	WIRE COLOR	ITEM	CONDITION	DATA (DC Voltage)
74	R/L	Heated oxygen sensor 2	**[Engine is running]** ● **Warm-up condition** ● Revving engine from idle up to 3,000 rpm quickly after the following conditions are met. ● Keeping the engine speed between 3,500 and 4,000 rpm for 1 minute and at idle for 1 minute under no load.	0 - Approximately 1.0V
78	B	Sensor ground (Heated oxygen sensor)	**[Engine is running]** ● **Warm-up condition** ● Idle speed	Approximately 0V

Diagnostic Procedure

UBS00JUN

1. CHECK GROUND CONNECTIONS

1. Turn ignition switch OFF.
2. Loosen and retighten engine two screws on the body.
   Refer to EC-841, "Ground Inspection" .

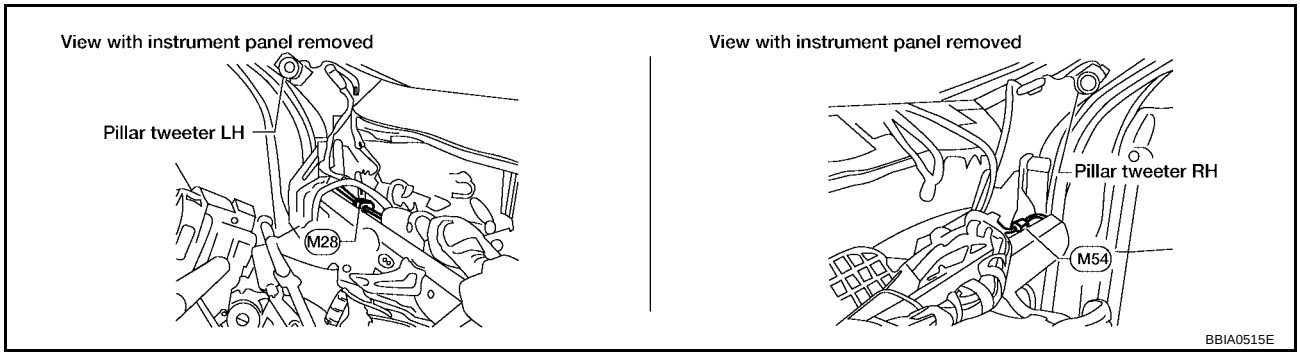

OK or NG

OK >> GO TO 2.
NG >> Repair or replace ground connections.

2. CHECK HO2S2 GROUND CIRCUIT FOR OPEN AND SHORT

1. Disconnect heated oxygen sensor 2 harness connector.
2. Disconnect ECM harness connector.
3. Check harness continuity between ECM terminal 78 and HO2S2 terminal 4.
   Refer to Wiring Diagram.

   Continuity should exist.

4. Also check harness for short to ground and short to power.

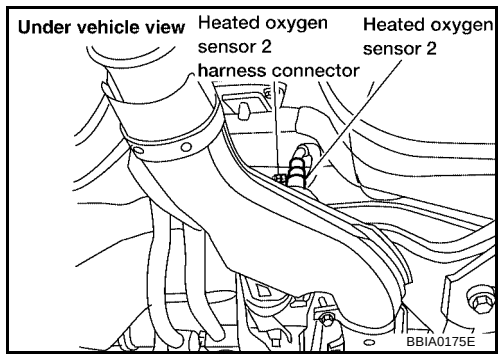

OK or NG

OK >> GO TO 3.
NG >> Repair open circuit or short to ground or short to power in harness or connectors.

3. CHECK HO2S2 INPUT SIGNAL CIRCUIT FOR OPEN AND SHORT

1. Check harness continuity between ECM terminal 74 and HO2S2 terminal 1.
   Refer to Wiring Diagram.

   Continuity should exist.

2. Check harness continuity between ECM terminal 74 or HO2S2 terminal 1 and ground.
   Refer to Wiring Diagram.

   Continuity should not exist.

3. Also check harness for short to power.

OK or NG

OK >> GO TO 4.
NG >> Repair open circuit or short to ground or short to power in harness or connectors.

4. CHECK HO2S2 CONNECTOR FOR WATER

Check connectors for water.

Water should not exist.

OK or NG

OK >> GO TO 5.
NG >> Repair or replace harness or connectors.

5. CHECK HEATED OXYGEN SENSOR 2

Refer to EC-910, "Component Inspection" .

OK or NG

OK >> GO TO 6.
NG >> Replace heated oxygen sensor 2.

6. CHECK INTERMITTENT INCIDENT

Refer to EC-834, "TROUBLE DIAGNOSIS FOR INTERMITTENT INCIDENT" .

>> **INSPECTION END**

Component Inspection

UBS00JUO

HEATED OXYGEN SENSOR 2

With CONSULT-II

1. Start engine and warm it up to the normal operating temperature.
2. Turn ignition switch OFF and wait at least 10 seconds.
3. Start engine and keep the engine speed between 3,500 and 4,000 rpm for at least 1 minute under no load.
4. Let engine idle for 1 minute.
5. Select “FUEL INJECTION” in “ACTIVE TEST” mode, and select “HO2S2 (B1)” as the monitor item with CONSULT-II.

ACTIVE TEST	
FUEL INJECTION	25 %
MONITOR	
ENG SPEED	XXX rpm
HO2S2 (B1)	XXX V

PBIB1783E

6. Check “HO2S2 (B1)” at idle speed when adjusting “FUEL INJECTION” to ±25%.

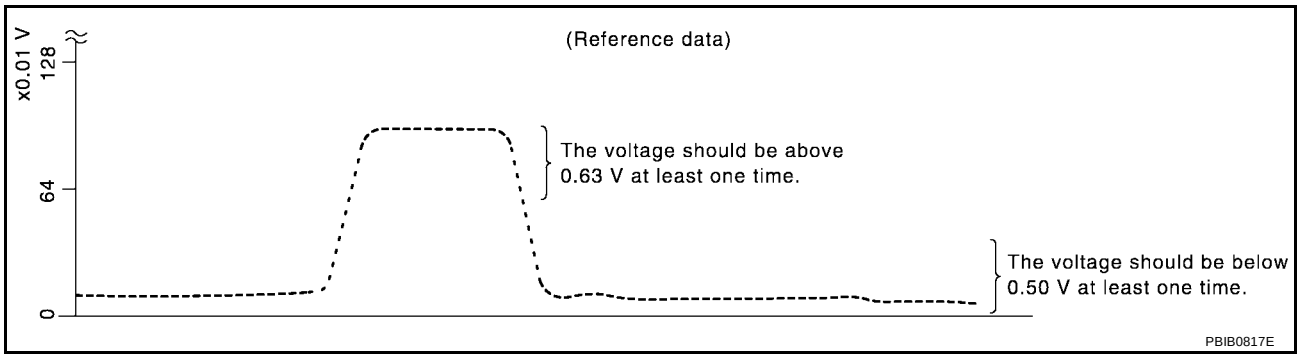

“HO2S2 (B1)” should be above 0.63V at least once when the “FUEL INJECTION” is +25%.
“HO2S2 (B1)” should be below 0.50V at least once when the “FUEL INJECTION” is –25%.

CAUTION:

- **Discard any heated oxygen sensor which has been dropped from a height of more than 0.5 m (19.7 in) onto a hard surface such as a concrete floor; use a new one.**
- **Before installing new oxygen sensor, clean exhaust system threads using Oxygen Sensor Thread Cleaner tool J-43897-18 or J-43897-12 and approved anti-seize lubricant.**

Without CONSULT-II

1. Start engine and warm it up to the normal operating temperature.
2. Turn ignition switch OFF and wait at least 10 seconds.
3. Start engine and keep the engine speed at between 3,500 and 4,000 rpm for at least 1 minute under no load.
4. Let engine idle for 1 minute.
5. Set voltmeter probes between ECM terminal 74 (HO2S2 signal) and ground.
6. Check the voltage when revving up to 4,000 rpm under no load at least 10 times.
   (Depress and release accelerator pedal as soon as possible.)
   The voltage should be above 0.63V at least once during this procedure.
   If the voltage is above 0.63V at step 6, step 7 is not necessary.
7. Keep vehicle idling for 10 minutes, then check voltage. Or check the voltage when coasting from 80 km/h (50 MPH) in D position with “OD” OFF (A/T models) 3rd gear position (M/T models).
   The voltage should be below 0.50V at least once during this procedure.

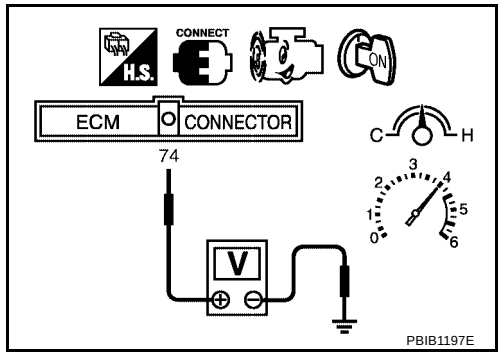

8. If NG, replace heated oxygen sensor 2.

CAUTION:

- **Discard any heated oxygen sensor which has been dropped from a height of more than 0.5 m (19.7 in) onto a hard surface such as a concrete floor; use a new one.**
- **Before installing new oxygen sensor, clean exhaust system threads using Oxygen Sensor Thread Cleaner tool J-43897-18 or J-43897-12 and approved anti-seize lubricant.**

Removal and Installation

UBS00JUP

HEATED OXYGEN SENSOR 2

Refer to EM-113, "EXHAUST MANIFOLD AND THREE WAY CATALYST" .

DTC P0139 HO2S2

PFP:226A0

Component Description

UBS00JUQ

The heated oxygen sensor 2, after three way catalyst (manifold), monitors the oxygen level in the exhaust gas.
Even if switching characteristics of the heated oxygen sensor 1 (A/T models ULEV and M/T models) or the air fuel ratio (A/F) sensor 1 (A/T models except ULEV) are shifted, the air-fuel ratio is controlled to stoichiometric, by the signal from the heated oxygen sensor 2.
This sensor is made of ceramic zirconia. The zirconia generates voltage from approximately 1V in richer conditions to 0V in leaner conditions.
Under normal conditions the heated oxygen sensor 2 is not used for engine control operation.

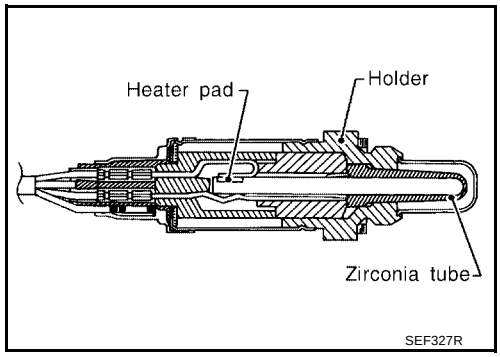

CONSULT-II Reference Value in Data Monitor Mode

UBS00JUR

Specification data are reference values.

MONITOR ITEM	CONDITION		SPECIFICATION
HO2S2 (B1)	● Engine: After warming up ● Keeping the engine speed between 3,500 and 4,000 rpm for 1 minute and at idle for 1 minute under no load	Revving engine from idle to 3,000 rpm quickly	0 - 0.3V ←→ 0.6 - 1.0V
HO2S2 MNTR (B1)			LEAN ←→ RICH

On Board Diagnosis Logic

UBS00JUS

The heated oxygen sensor 2 has a much longer switching time between rich and lean than the heated oxygen sensor 1 (A/T models ULEV and M/T models) or the air fuel ratio (A/F) sensor 1 (A/T models except ULEV). The oxygen storage capacity before the three way catalyst (manifold) causes the longer switching time. To judge the malfunctions of heated oxygen sensor 2, ECM monitors whether the switching response of the sensor's voltage is faster than specified during the various driving condition such as fuel-cut.

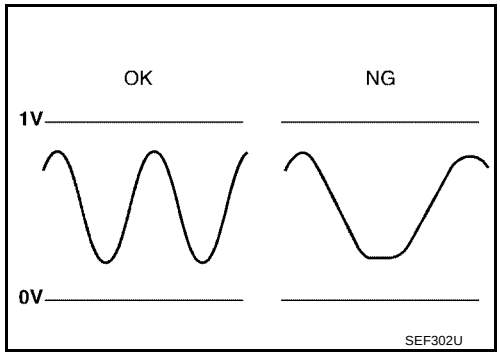

DTC No.	Trouble diagnosis name	DTC detecting condition	Possible cause
P0139 0139	Heated oxygen sensor 2 circuit slow response	It takes more time for the sensor to respond between rich and lean than the specified time.	● Harness or connectors (The sensor circuit is open or shorted.) ● Heated oxygen sensor 2 ● Fuel pressure ● Fuel injector ● Intake air leaks

DTC Confirmation Procedure

UBS00JUT

NOTE:
If DTC Confirmation Procedure has been previously conducted, always turn ignition switch OFF and wait at least 10 seconds before conducting the next test.
TESTING CONDITION:
For the best results, perform “DTC WORK SUPPORT” at a temperature of 0 to 30°C (32 to 86°F).

WITH CONSULT-II

1. Turn ignition switch ON and select “DATA MONITOR” mode with CONSULT-II.
2. Start engine and warm it up to normal operating temperature.
3. Turn ignition switch OFF and wait at least 10 seconds.
4. Start engine and keep the engine speed between 3,500 and 4,000 rpm for at lest 1 minute under no load.
5. Let engine idle for 1 minute.
6. Make sure that “COOLAN TEMP/S” indicates more than 70°C (158°F).
   If not, warm up engine and go to next step when “COOLAN TEMP/S” indication reaches to 70°C (158°F).

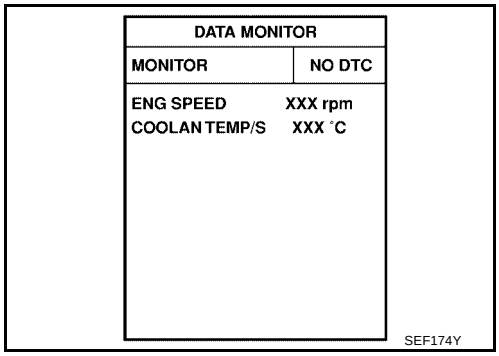

7. Select “HO2S2 (B1) P0139” of “HO2S2” in “DTC WORK SUPPORT” mode with CONSULT-II and follow the instruction of CONSULT-II.

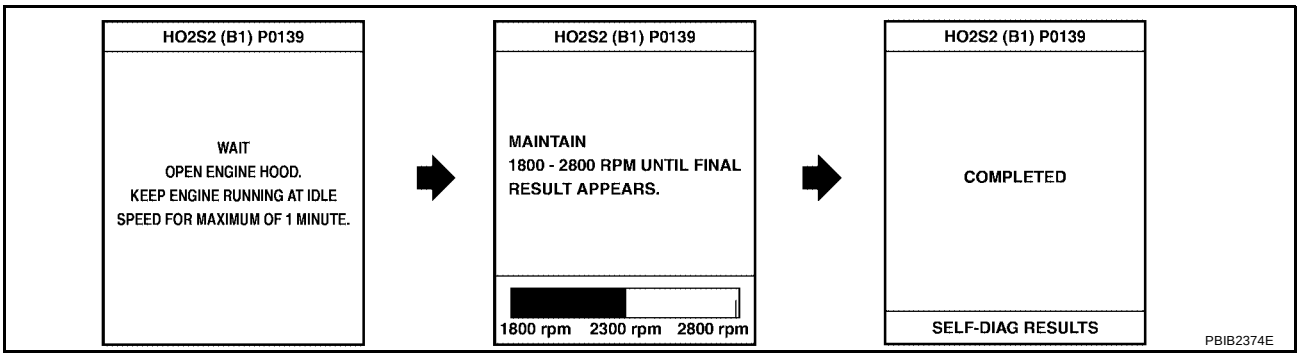

NOTE:
It will take at most 10 minutes until “COMPLETED” is displayed.

8. Make sure that “OK” is displayed after touching “SELF-DIAG RESULTS”.
   If “NG” is displayed, refer to EC-939, "Diagnostic Procedure" .
   If “CAN NOT BE DIAGNOSED” is displayed, perform the following.

a. Turn ignition switch OFF and leave the vehicle in a cool place (soak the vehicle).
b. Return to step 1.

Overall Function Check

UBS00JUU

Use this procedure to check the overall function of the heated oxygen sensor 2 circuit. During this check, a 1st trip DTC might not be confirmed.

WITH GST

1. Start engine and warm it up to the normal operating temperature.
2. Turn ignition switch OFF and wait at least 10 seconds.
3. Start engine and keep the engine speed between 3,500 and 4,000 rpm for at least 1 minute under no load.
4. Let engine idle for 1 minute.
5. Set voltmeter probes between ECM terminal 74 (HO2S2 signal) and ground.

6. Check the voltage when revving up to 4,000 rpm under no load at least 10 times.
   (Depress and release accelerator pedal as soon as possible.)
   A change of voltage should be more than 0.06V for 1 second during this procedure.
   If the voltage can be confirmed in step 6, step 7 is not necessary.
7. Keep vehicle at idling for 10 minutes, then check the voltage. Or check the voltage when coasting from 80 km/h (50 MPH) in D position with “OD” OFF (A/T models) 3rd gear position (M/T models).
   A change of voltage should be more than 0.06V for 1 second during this procedure.
8. If NG, go to EC-939, "Diagnostic Procedure" .

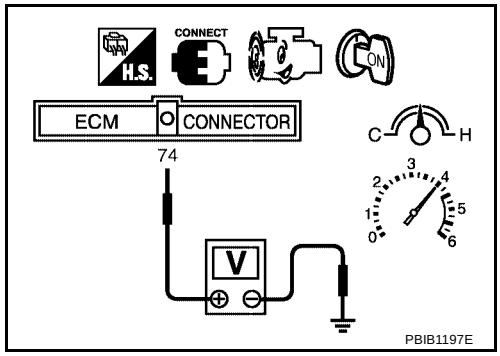

Wiring Diagram

UBS00JUV

EC-HO2S2-01

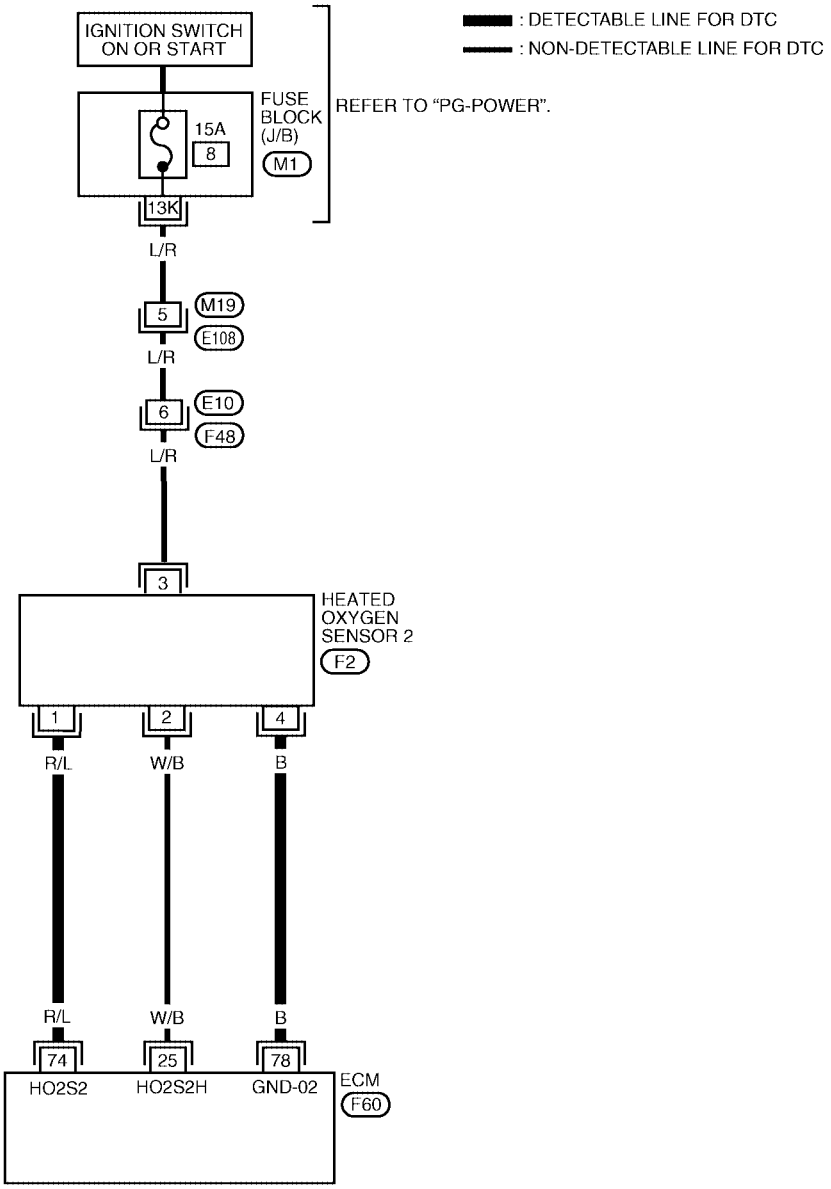

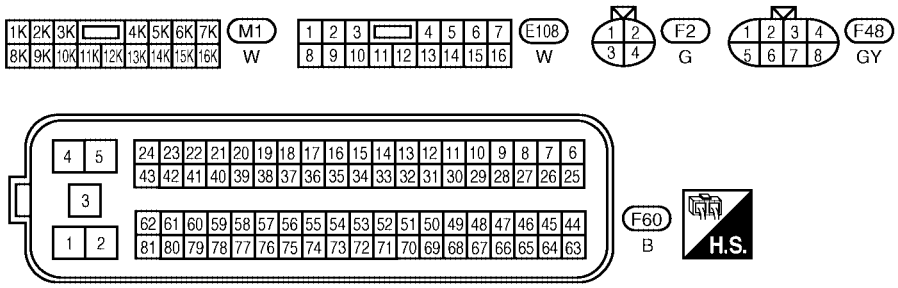

BBWA1427E

Specification data are reference values and are measured between each terminal and ground.

CAUTION:

Do not use ECM ground terminals when measuring input/output voltage. Doing so may result in damage to the ECM's transistor. Use a ground other than ECM terminals, such as the ground.

TERMINAL NO.	WIRE COLOR	ITEM	CONDITION	DATA (DC Voltage)
74	R/L	Heated oxygen sensor 2	**[Engine is running]** ● **Warm-up condition** ● Revving engine from idle up to 3,000 rpm quickly after the following conditions are met. ● Keeping the engine speed between 3,500 and 4,000 rpm for 1 minute and at idle for 1 minute under no load.	0 - Approximately 1.0V
78	B	Sensor ground (Heated oxygen sensor)	**[Engine is running]** ● **Warm-up condition** ● Idle speed	Approximately 0V

Diagnostic Procedure

UBS00JUW

1. CHECK GROUND CONNECTIONS

1. Turn ignition switch OFF.
2. Loosen and retighten engine two screws on the body.
   Refer to EC-841, "Ground Inspection" .

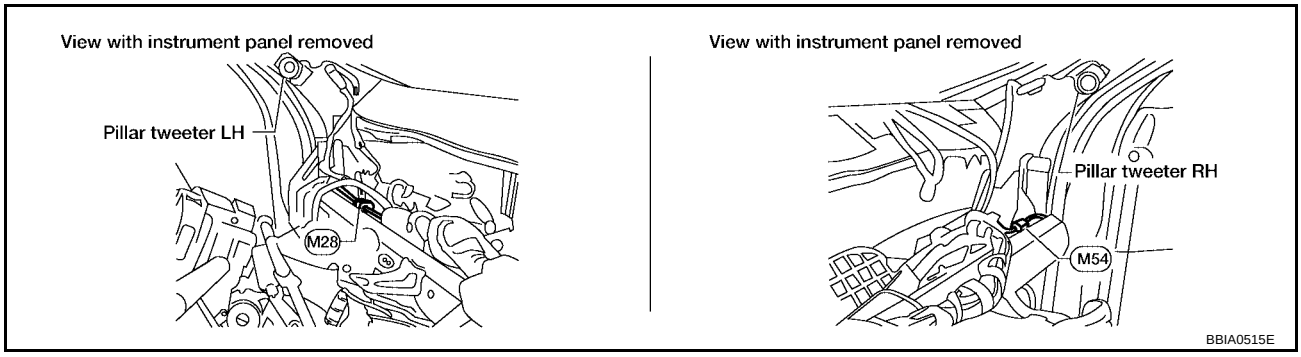

OK or NG

OK >> GO TO 2.
NG >> Repair or replace ground connections.

2. CLEAR THE SELF-LEARNING DATA

With CONSULT-II

1. Start engine and warm it up to normal operating temperature.
2. Select “SELF-LEARNING CONT” in “WORK SUPPORT” mode with CONSULT-II.
3. Clear the self-learning control coefficient by touching “CLEAR”.
4. Run engine for at least 10 minutes at idle speed.
   Is the 1st trip DTC P0171 or P0172 detected?
   Is it difficult to start engine?

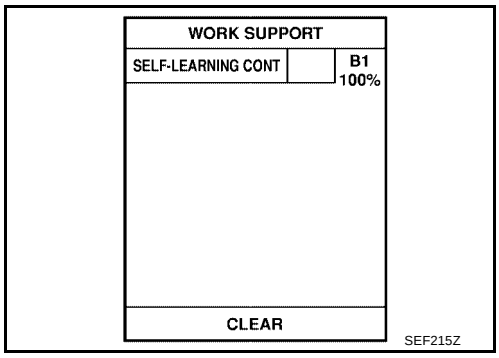

Without CONSULT-II

1. Start engine and warm it up to normal operating temperature.
2. Turn ignition switch OFF.
3. Disconnect mass air flow sensor harness connector, and restart and run engine for at least 5 seconds at idle speed.
4. Stop engine and reconnect mass air flow sensor harness connector.
5. Make sure that DTC P0102 is displayed.
6. Erase the DTC memory. Refer to EC-712, "HOW TO ERASE EMISSION-RELATED DIAGNOSTIC INFORMATION" .
7. Make sure that DTC P0000 is displayed.
8. Run engine for at least 10 minutes at idle speed.
   Is the 1st trip DTC P0171 or P0172 detected?
   Is it difficult to start engine?

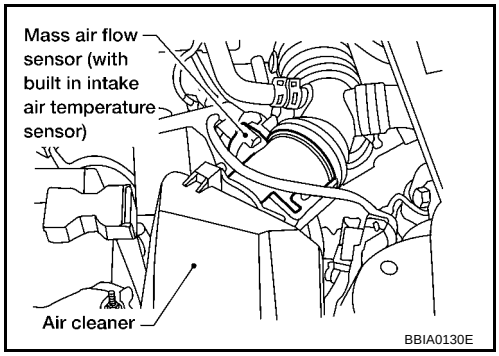

Yes or No

Yes >> Perform trouble diagnosis for DTC P0171 or P0172. Refer to EC-943 or EC-954 .
No >> GO TO 3.

3. CHECK HO2S2 GROUND CIRCUIT FOR OPEN AND SHORT

1. Turn ignition switch OFF.
2. Disconnect heated oxygen sensor 2 harness connector.
3. Disconnect ECM harness connector.
4. Check harness continuity between ECM terminal 78 and HO2S2 terminal 4.
   Refer to Wiring Diagram.

   Continuity should exist.

5. Also check harness for short to ground and short to power.

OK or NG

OK >> GO TO 4.
NG >> Repair open circuit or short to ground or short to power in harness or connectors.

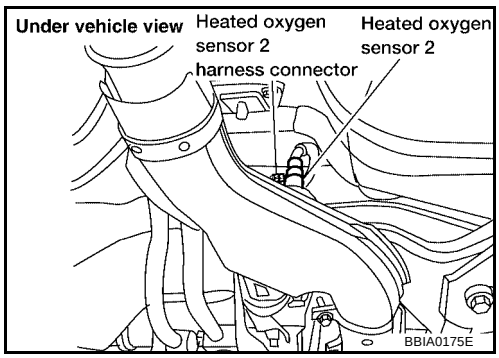

4. CHECK HO2S2 INPUT SIGNAL CIRCUIT FOR OPEN AND SHORT

1. Check harness continuity between ECM terminal 74 and HO2S2 terminal 1.
   Refer to Wiring Diagram.

   Continuity should exist.

2. Check harness continuity between ECM terminal 74 or HO2S2 terminal 1 and ground.
   Refer to Wiring Diagram.

   Continuity should not exist.

3. Also check harness for short to power.

OK or NG

OK >> GO TO 5.
NG >> Repair open circuit or short to ground or short to power in harness or connectors.

5. CHECK HEATED OXYGEN SENSOR 2

Refer to EC-941, "Component Inspection" .

OK or NG

OK >> GO TO 6.
NG >> Replace heated oxygen sensor 2.

6. CHECK INTERMITTENT INCIDENT

Refer to EC-834, "TROUBLE DIAGNOSIS FOR INTERMITTENT INCIDENT" .

>> **INSPECTION END**

Component Inspection

UBS00JUX

HEATED OXYGEN SENSOR 2

With CONSULT-II

1. Turn ignition switch ON and select “DATA MONITOR” mode with CONSULT-II.
2. Start engine and warm it up to the normal operating temperature.
3. Turn ignition switch OFF and wait at least 10 seconds.
4. Start engine and keep the engine speed between 3,500 and 4,000 rpm for at least 1 minute under no load.
5. Let engine idle for 1 minute.

DATA MONITOR	
MONITOR	NO DTC
ENG SPEED	XXX rpm
COOLAN TEMP/S	XXX °C

SEF174Y

6. Select “FUEL INJECTION” in “ACTIVE TEST” mode, and select “HO2S2 (B1)” as the monitor item with CONSULT-II.

ACTIVE TEST	
FUEL INJECTION	25 %
MONITOR	
ENG SPEED	XXX rpm
HO2S2 (B1)	XXX V

PBIB1783E

7. Check “HO2S2 (B1)” at idle speed when adjusting “FUEL INJECTION” to ±25%.

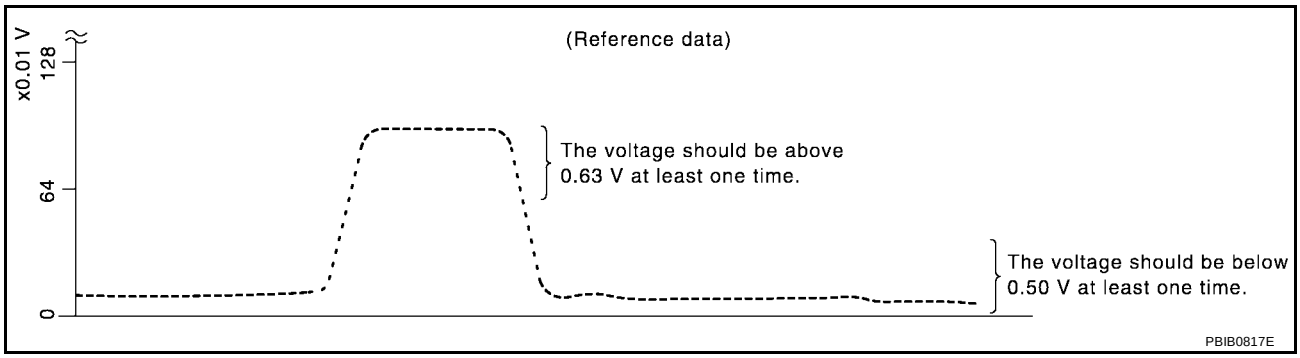

“HO2S2 (B1)” should be above 0.63V at least once when the “FUEL INJECTION” is +25%.
“HO2S2 (B1)” should be below 0.50V at least once when the “FUEL INJECTION” is –25%.

CAUTION:

- **Discard any heated oxygen sensor which has been dropped from a height of more than 0.5 m (19.7 in) onto a hard surface such as a concrete floor; use a new one.**
- **Before installing new oxygen sensor, clean exhaust system threads using Oxygen Sensor Thread Cleaner tool J-43897-18 or J-43897-12 and approved anti-seize lubricant.**

Without CONSULT-II

1. Start engine and warm it up to the normal operating temperature.
2. Turn ignition switch OFF and wait at least 10 seconds.
3. Start engine and keep the engine speed between 3,500 and 4,000 rpm for at least 1 minute under no load.
4. Let engine idle for 1 minute.
5. Set voltmeter probes between ECM terminal 74 (HO2S2 signal) and ground.
6. Check the voltage when revving up to 4,000 rpm under no load at least 10 times.
   (Depress and release accelerator pedal as soon as possible.)
   The voltage should be above 0.63V at least once during this procedure.
   If the voltage is above 0.63V at step 6, step 7 is not necessary.
7. Keep vehicle idling for 10 minutes, then check voltage. Or check the voltage when coasting from 80 km/h (50 MPH) in 3rd gear position.
   The voltage should be below 0.50V at least once during this procedure.

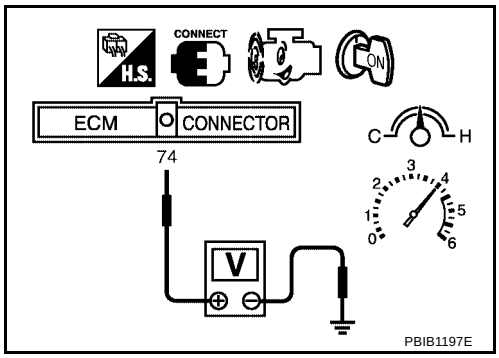

8. If NG, replace heated oxygen sensor 2.

CAUTION:

- **Discard any heated oxygen sensor which has been dropped from a height of more than 0.5 m (19.7 in) onto a hard surface such as a concrete floor; use a new one.**
- **Before installing new oxygen sensor, clean exhaust system threads using Oxygen Sensor Thread Cleaner tool J-43897-18 or J-43897-12 and approved anti-seize lubricant.**

Removal and Installation

UBS00JUY

HEATED OXYGEN SENSOR 2

Refer to EM-113, "EXHAUST MANIFOLD AND THREE WAY CATALYST" .

DTC P0171 FUEL INJECTION SYSTEM FUNCTION

PFP:16600

On Board Diagnosis Logic

UBS00JUZ

With the Air-Fuel Mixture Ratio Self-Learning Control, the actual mixture ratio can be brought closely to the theoretical mixture ratio based on the mixture ratio feedback signal from the heated oxygen sensor 1 (A/T models ULEV and M/T models) or the air fuel ratio (A/F) sensor 1 (A/T models except ULEV). The ECM calculates the necessary compensation to correct the offset between the actual and the theoretical ratios.
In case the amount of the compensation value is extremely large (The actual mixture ratio is too lean.), the ECM judges the condition as the fuel injection system malfunction and lights up the MIL (2 trip detection logic).

Sensor	Input Signal to ECM	ECM function	Actuator
Heated oxygen sensor 1*1	Density of oxygen in exhaust gas (Mixture ratio feedback signal)	Fuel injection control	Fuel injector
Air fuel ratio (A/F) sensor 1*2			

*1: A/T models ULEV and M/T models.
*2: A/T models except ULEV.

DTC No.	Trouble diagnosis name	DTC detecting condition	Possible Cause
P0171 0171	Fuel injection system too lean	● Fuel injection system does not operate properly. ● The amount of mixture ratio compensation is too large. (The mixture ratio is too lean.)	● Intake air leaks ● Heated oxygen sensor 1*1 ● Air fuel ratio (A/F) sensor 1*2 ● Fuel injector ● Exhaust gas leaks ● Incorrect fuel pressure ● Lack of fuel ● Mass air flow sensor ● Incorrect PCV hose connection

*1: A/T models ULEV and M/T models
*2: A/T models except ULEV

DTC Confirmation Procedure

UBS00JV0

NOTE:
If DTC Confirmation Procedure has been previously conducted, always turn ignition switch OFF and wait at least 10 seconds before conducting the next test.

WITH CONSULT-II

1. Start engine and warm it up to normal operating temperature.
2. Turn ignition switch OFF and wait at least 10 seconds.
3. Turn ignition switch ON and select “SELF-LEARNING CONT” in “WORK SUPPORT” mode with CONSULT-II.
4. Clear the self-learning control coefficient by touching “CLEAR”.
5. Select “DATA MONITOR” mode with CONSULT-II.
6. Start engine again and let it idle for at least 10 minutes.
   The 1st trip DTC P0171 should be detected at this stage, if a malfunction exists. If so, go to EC-947, "Diagnostic Procedure" .

   NOTE:
   If 1st trip DTC is not detected during above procedure, performing the following procedure is advised.

a. Turn ignition switch OFF and wait at least 10 seconds.
b. Start engine and drive the vehicle under the similar conditions to (1st trip) Freeze Frame Data for 10 minutes. Refer to the table below.
   Hold the accelerator pedal as steady as possible.

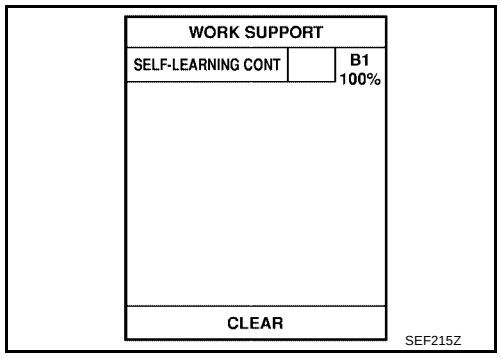

The similar conditions to (1st trip) Freeze Frame Data means the vehicle operation that the following conditions should be satisfied at the same time.

Engine speed	Engine speed in the freeze frame data ± 400 rpm
Vehicle speed	Vehicle speed in the freeze frame data ± 10 km/h (6 MPH)
Engine coolant temperature (T) condition	When the freeze frame data shows lower than 70 °C (158 °F), T should be lower than 70 °C (158 °F).
	When the freeze frame data shows higher than or equal to 70 °C (158 °F), T should be higher than or equal to 70 °C (158 °F).

7. If it is difficult to start engine at step 6, the fuel injection system has a malfunction, too.
8. Crank engine while depressing accelerator pedal. If engine starts, go to EC-947, "Diagnostic Procedure" . If engine does not start, check exhaust and intake air leak visually.

WITH GST

1. Start engine and warm it up to normal operating temperature.
2. Turn ignition switch OFF and wait at least 10 seconds.
3. Disconnect mass air flow sensor harness connector.
4. Restart engine and let it idle for at least 5 seconds.
5. Stop engine and reconnect mass air flow sensor harness connector.
6. Select Service $03 with GST. Make sure DTC P0102 is detected.
7. Select Service $04 with GST and erase the DTC P0102.
8. Start engine again and let it idle for at least 10 minutes.
9. Select Service $07 with GST. The 1st trip DTC P0171 should be detected at this stage, if a malfunction exists. If so, go to EC-947, "Diagnostic Procedure" .

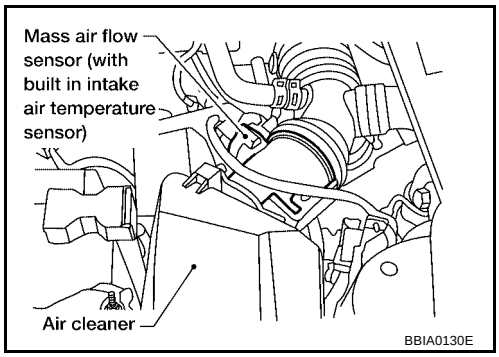

NOTE:
If 1st trip DTC is not detected during above procedure, performing the following procedure is advised.

a. Turn ignition switch OFF and wait at least 10 seconds.
b. Start engine and drive the vehicle under the similar conditions to (1st trip) Freeze Frame Data for 10 minutes. Refer to the table below.
Hold the accelerator pedal as steady as possible.

The similar conditions to (1st trip) Freeze Frame Data means the vehicle operation that the following conditions should be satisfied at the same time.

Engine speed	Engine speed in the freeze frame data ± 400 rpm
Vehicle speed	Vehicle speed in the freeze frame data ± 10 km/h (6 MPH)
Engine coolant temperature (T) condition	When the freeze frame data shows lower than 70 °C (158 °F), T should be lower than 70 °C (158 °F).
	When the freeze frame data shows higher than or equal to 70 °C (158 °F), T should be higher than or equal to 70 °C (158 °F).

10. If it is difficult to start engine at step 8, the fuel injection system has a malfunction.
11. Crank engine while depressing accelerator pedal. If engine starts, go to EC-947, "Diagnostic Procedure" . If engine does not start, check exhaust and intake air leak visually.

Wiring Diagram

UBS00JV1

A/T MODELS ULEV AND M/T MODELS

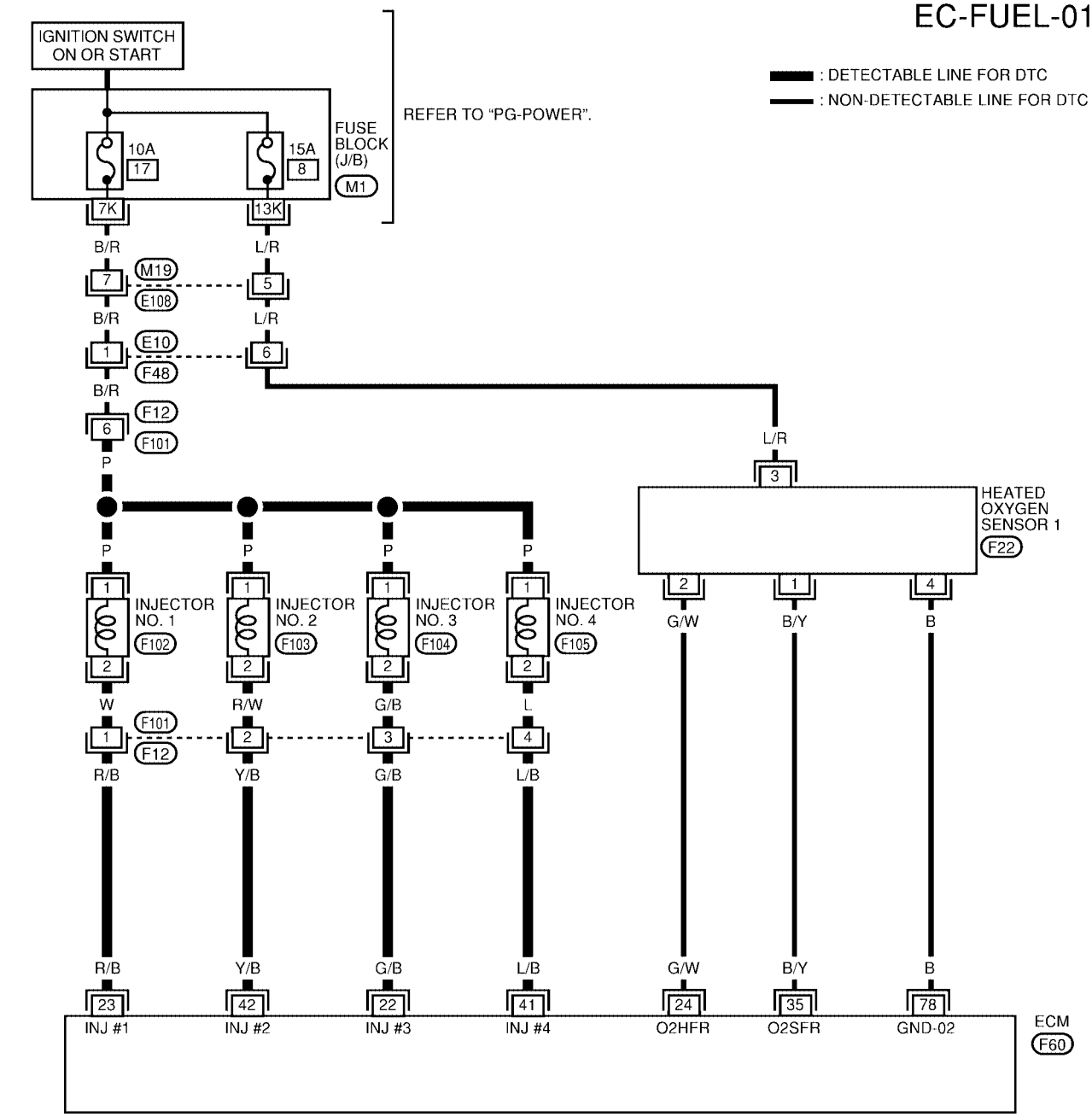

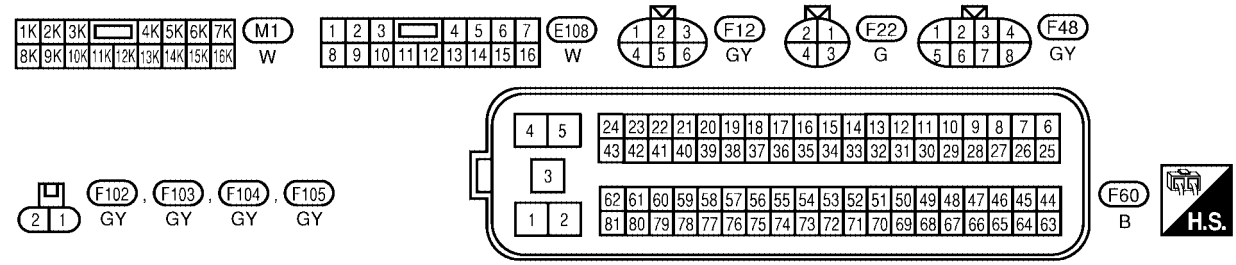

BBWA1396E

A/T MODELS EXCEPT ULEV

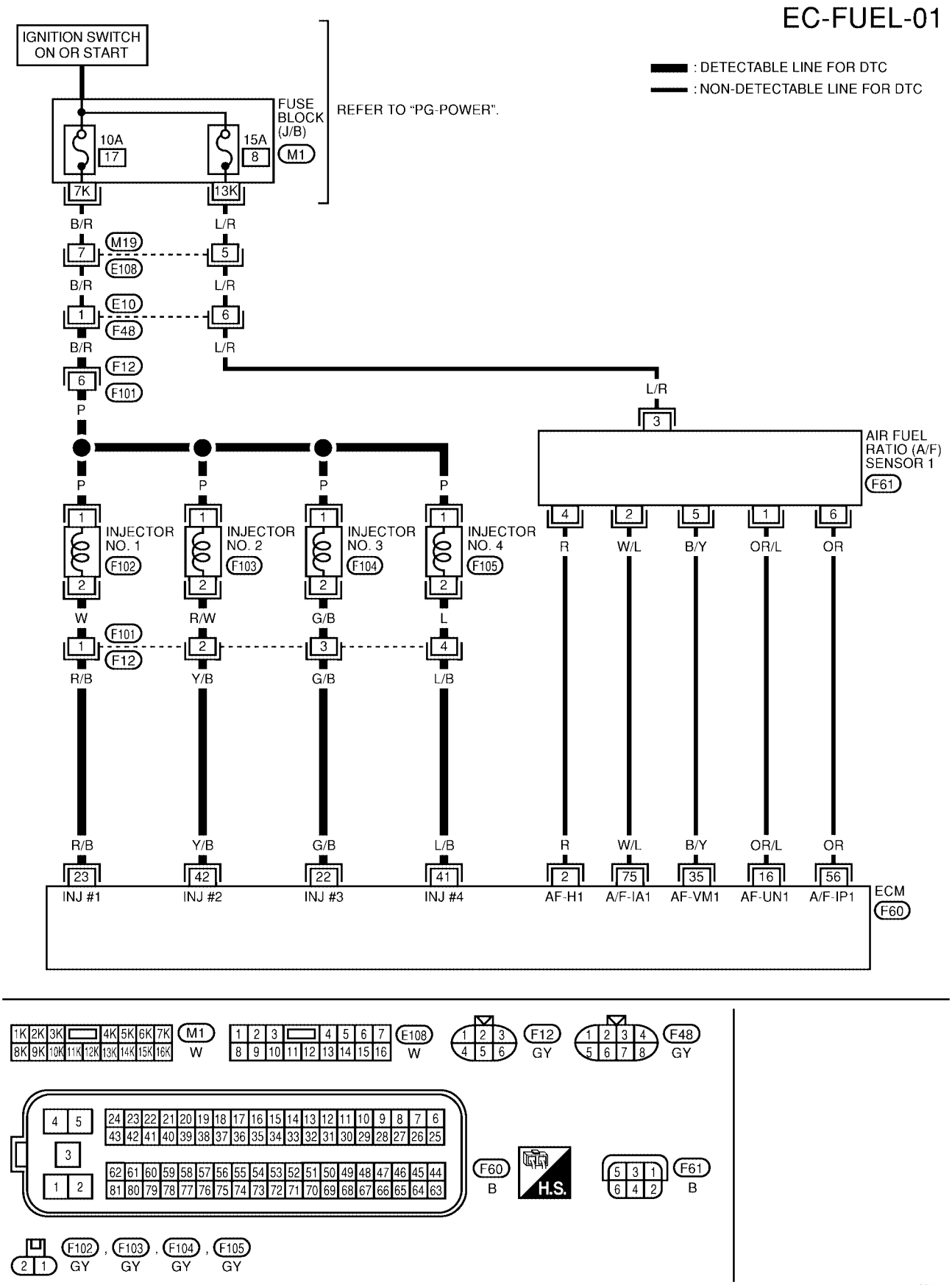

Diagnostic Procedure

UBS00JV2

A/T MODELS ULEV AND M/T MODELS

1. CHECK EXHAUST GAS LEAK

1. Start engine and run it at idle.
2. Listen for an exhaust gas leak before three way catalyst (manifold).

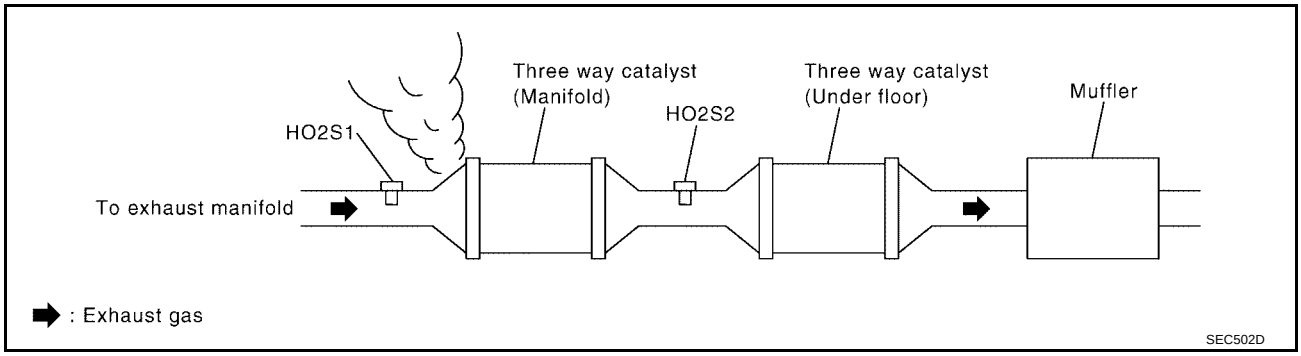

OK or NG

OK >> GO TO 2.
NG >> Repair or replace.

2. CHECK FOR INTAKE AIR LEAK AND PCV HOSE

1. Listen for an intake air leak after the mass air flow sensor.
2. Check PCV hose connection.

OK or NG

OK >> GO TO 3.
NG >> Repair or replace.

3. CHECK HEATED OXYGEN SENSOR 1 CIRCUIT FOR OPEN AND SHORT

1. Turn ignition switch OFF.
2. Disconnect heated oxygen sensor 1 (HO2S1) harness connector.
3. Disconnect ECM harness connector.
4. Check harness continuity between ECM terminal 35 and HO2S1 terminal 1.
   Refer to Wiring Diagram.

   Continuity should exist.

5. Check harness continuity between ECM terminal 35 or HO2S1 terminal 1 and ground.
   Refer to Wiring Diagram.

   Continuity should not exist.

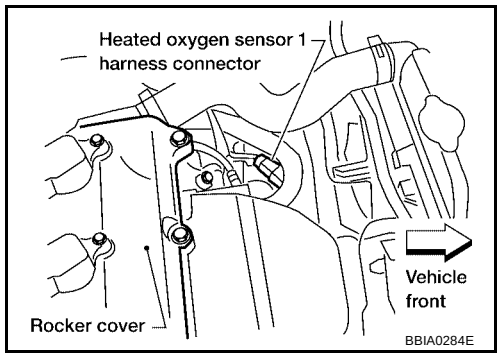

6. Also check harness for short to power.

OK or NG

OK >> GO TO 4.
NG >> Repair open circuit or short to ground or short to power in harness or connectors.

4. CHECK FUEL PRESSURE

1. Release fuel pressure to zero. Refer to EC-752, "FUEL PRESSURE RELEASE" .
2. Install fuel pressure gauge and check fuel pressure. Refer to EC-753, "FUEL PRESSURE CHECK" .

At idling: Approximately 350 kPa (3.57 kg/cm^2 , 51 psi)

OK or NG

OK >> GO TO 6.
NG >> GO TO 5.

5. DETECT MALFUNCTIONING PART

Check the following.

- Fuel pump and circuit (Refer to EC-1342, "FUEL PUMP CIRCUIT" .)
- Fuel pressure regulator (Refer to EC-752, "Fuel Pressure Check" .)
- Fuel lines (Refer to EM-121, "FUEL INJECTOR AND FUEL TUBE" .)
- Fuel filter for clogging

>> Repair or replace.

6. CHECK MASS AIR FLOW SENSOR

With CONSULT-II

1. Install all removed parts.
2. Check “MASS AIR FLOW” in “DATA MONITOR” mode with CONSULT-II.

1.4 - 4.0 g·m/sec: at idling
4.0 - 10 g·m/sec: at 2,500 rpm

With GST

1. Install all removed parts.
2. Check mass air flow sensor signal in Service $01 with GST.

1.4 - 4.0 g·m/sec: at idling
4.0 - 10 g·m/sec: at 2,500 rpm

OK or NG

OK >> GO TO 7.
NG >> Check connectors for rusted terminals or loose connections in the mass air flow sensor circuit or ground. Refer to EC-861, "DTC P0101 MAF SENSOR" .

7. CHECK FUNCTION OF INJECTORS

With CONSULT-II

1. Start engine.
2. Perform “POWER BALANCE” in “ACTIVE TEST” mode with CONSULT-II.
3. Make sure that each circuit produces a momentary engine speed drop.

ACTIVE TEST	
POWER BALANCE	
MONITOR	
ENG SPEED	XXX rpm
MAS A/F SE-B1	XXX V

PBIB0133E

Without CONSULT-II

1. Start engine.
2. Listen to each injector operating sound.

Clicking noise should be heard.

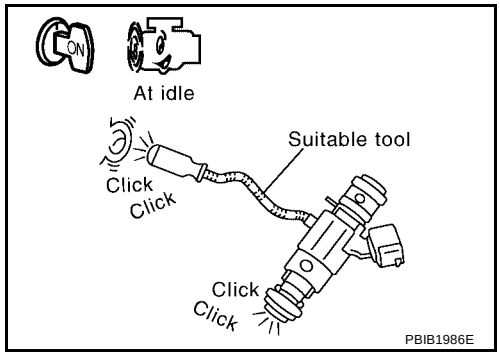

PBIB1986E

OK or NG

OK >> GO TO 8.
NG >> Perform trouble diagnosis for EC-1336, "INJECTOR CIRCUIT" .

8. CHECK INJECTOR

1. Confirm that the engine is cooled down and there are no fire hazards near the vehicle.
2. Turn ignition switch OFF.
3. Disconnect injector harness connectors.
4. Remove injector gallery assembly. Refer to EM-121, "FUEL INJECTOR AND FUEL TUBE" .
   Keep fuel hose and all injectors connected to injector gallery.
   The injector harness connectors should remain connected.
5. Disconnect all ignition coil harness connectors.
6. Prepare pans or saucers under each injector.
7. Crank engine for about 3 seconds. Make sure that fuel sprays out from injectors.

Fuel should be sprayed evenly for each injector.

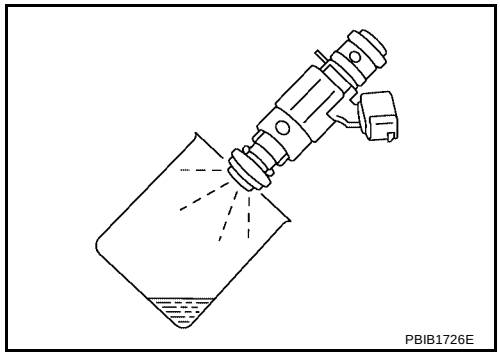

PBIB1726E

OK or NG

OK >> GO TO 9.
NG >> Replace injectors from which fuel does not spray out. Always replace O-ring with new ones.

9. CHECK INTERMITTENT INCIDENT

Refer to EC-834, "TROUBLE DIAGNOSIS FOR INTERMITTENT INCIDENT" .

>> **INSPECTION END**

A/T MODELS EXCEPT ULEV

1. CHECK EXHAUST AIR LEAK

1. Start engine and run it at idle.
2. Listen for an exhaust air leak before three way catalyst (manifold).

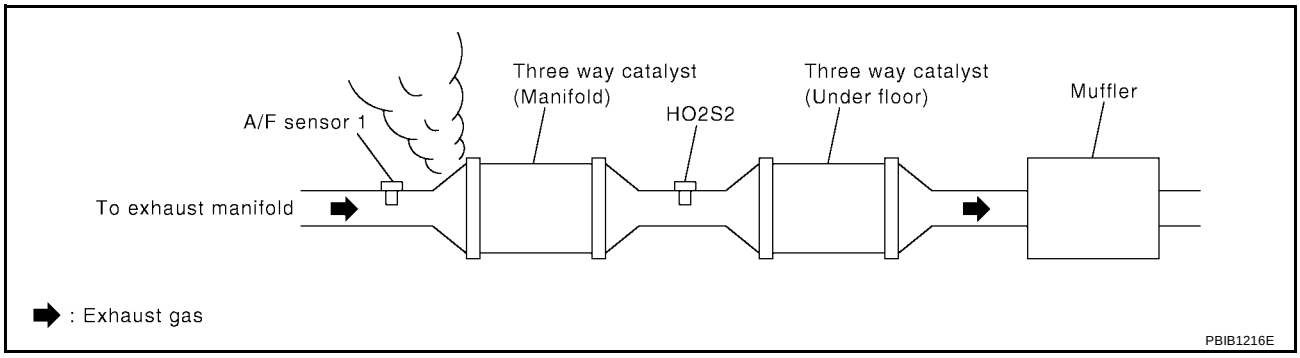

OK or NG

OK >> GO TO 2.
NG >> Repair or replace.

2. CHECK FOR INTAKE AIR LEAK AND PCV HOSE

1. Listen for an intake air leak after the mass air flow sensor.
2. Check PCV hose connection.

OK or NG

OK >> GO TO 3.
NG >> Repair or replace.

3. CHECK AIR FUEL RATIO (A/F) SENSOR 1 CIRCUIT FOR OPEN AND SHORT

1. Turn ignition switch OFF.
2. Disconnect A/F sensor 1 harness connector and ECM harness connector.
3. Check harness continuity between ECM terminals and A/F sensor 1 terminals as follows.
   Refer to Wiring Diagram.

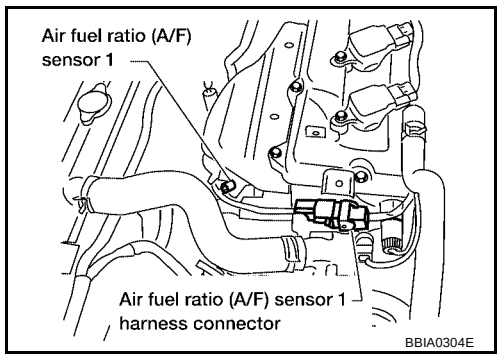

ECM terminal	A/F sensor 1
16	1
35	5
56	6
75	2

Continuity should exist.

4. Check harness continuity between ECM terminals 16, 35, 56, 75 and ground, or A/F sensor 1 terminals 1, 2, 5, 6 and ground.
   Refer to Wiring Diagram.

Continuity should not exist.

5. Also check harness for short to ground and short to power.

OK or NG

OK >> GO TO 4.
NG >> Repair open circuit or short to ground or short to power in harness or connectors.

4. CHECK FUEL PRESSURE

1. Release fuel pressure to zero.
   Refer to EC-752, "FUEL PRESSURE RELEASE" .
2. Install fuel pressure gauge and check fuel pressure. Refer to EC-753, "FUEL PRESSURE CHECK" .

At idling: Approximately 350 kPa (3.57 kg/cm^2 , 51 psi)

OK or NG

OK >> GO TO 6.
NG >> GO TO 5.

5. DETECT MALFUNCTIONING PART

Check the following.

- Fuel pump and circuit (Refer to EC-1342, "FUEL PUMP CIRCUIT" .)
- Fuel pressure regulator (Refer to EC-752, "Fuel Pressure Check" .)
- Fuel lines (Refer to EM-121, "FUEL INJECTOR AND FUEL TUBE" .)
- Fuel filter for clogging

>> Repair or replace.

6. CHECK MASS AIR FLOW SENSOR

With CONSULT-II

1. Install all removed parts.
2. Check “MASS AIR FLOW” in “DATA MONITOR” mode with CONSULT-II.

at idling:	**1.4 - 4.0 g·m/sec**
at 2,500 rpm:	**4.0 - 10.0 g·m/sec**

With GST

1. Install all removed parts.
2. Check mass air flow sensor signal in Service $01 with GST.

at idling:	**1.4 - 4.0 g·m/sec**
at 2,500 rpm:	**4.0 - 10.0 g·m/sec**

OK or NG

OK >> GO TO 7.
NG >> Check connectors for rusted terminals or loose connections in the mass air flow sensor circuit or ground. Refer to EC-861, "DTC P0101 MAF SENSOR" .

7. CHECK FUNCTION OF INJECTORS

With CONSULT-II

1. Start engine.
2. Perform “POWER BALANCE” in “ACTIVE TEST” mode with CONSULT-II.
3. Make sure that each circuit produces a momentary engine speed drop.

ACTIVE TEST	
POWER BALANCE	
MONITOR	
ENG SPEED	XXX rpm
MAS A/F SE-B1	XXX V

PBIB0133E

Without CONSULT-II

1. Start engine.
2. Listen to each injector operating sound.
   Clicking noise should be heard.

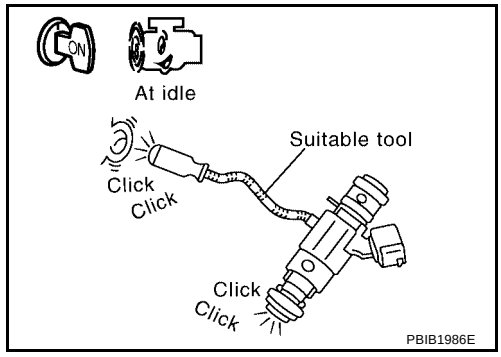

OK or NG

OK >> GO TO 8.
NG >> Perform trouble diagnosis for EC-1336, "INJECTOR CIRCUIT" .

8. CHECK INJECTOR

1. Confirm that the engine is cooled down and there are no fire hazards near the vehicle.
2. Turn ignition switch OFF.
3. Disconnect all injector harness connectors.
4. Remove injector gallery assembly. Refer to EM-121, "FUEL INJECTOR AND FUEL TUBE" .
   Keep fuel hose and all injectors connected to injector gallery.
   The injector harness connectors should remain connected.
5. Disconnect all ignition coil harness connectors.
6. Prepare pans or saucers under each injector.
7. Crank engine for about 3 seconds.Make sure that fuel sprays out from injectors.

Fuel should be sprayed evenly for each injector.

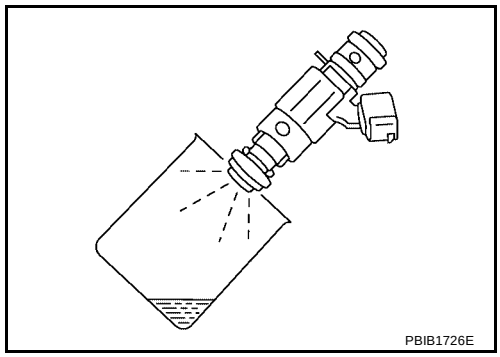

OK or NG

OK >> GO TO 9.
NG >> Replace injectors from which fuel does not spray out. Always replace O-ring with new ones.

9. CHECK INTERMITTENT INCIDENT

Perform EC-834, "TROUBLE DIAGNOSIS FOR INTERMITTENT INCIDENT" .

>> **INSPECTION END**

DTC P0172 FUEL INJECTION SYSTEM FUNCTION

PFP:16600

On Board Diagnosis Logic

UBS00JV3

With the Air-Fuel Mixture Ratio Self-Learning Control, the actual mixture ratio can be brought closely to the theoretical mixture ratio based on the mixture ratio feedback signal from the heated oxygen sensor 1 (A/T models ULEV and M/T models) or the air fuel ratio (A/F) sensor 1 (A/T models except ULEV). The ECM calculates the necessary compensation to correct the offset between the actual and the theoretical ratios.
In case the amount of the compensation value is extremely large (The actual mixture ratio is too rich.), the ECM judges the condition as the fuel injection system malfunction and lights up the MIL (2 trip detection logic).

Sensor	Input Signal to ECM	ECM function	Actuator
Heated oxygen sensor 1*1	Density of oxygen in exhaust gas (Mixture ratio feedback signal)	Fuel injection control	Fuel injector
Air fuel ratio (A/F) sensor 1*2			

*1: A/T models ULEV and M/T models
*2: A/T models except ULEV

DTC No.	Trouble diagnosis name	DTC detecting condition	Possible Cause
P0172 0172	Fuel injection system too rich	● Fuel injection system does not operate properly. ● The amount of mixture ratio compensation is too large. (The mixture ratio is too rich.)	● Heated oxygen sensor 1*1 ● Air fuel ratio (A/F) sensor 1*2 ● Fuel injector ● Exhaust gas leaks ● Incorrect fuel pressure ● Mass air flow sensor

*1: A/T models ULEV and M/T models.
*2: A/T models except ULEV.

DTC Confirmation Procedure

UBS00JV4

NOTE:
If DTC Confirmation Procedure has been previously conducted, always turn ignition switch OFF and wait at least 10 seconds before conducting the next test.

WITH CONSULT-II

1. Start engine and warm it up to normal operating temperature.
2. Turn ignition switch OFF and wait at least 10 seconds.
3. Turn ignition switch ON and select “SELF-LEARNING CONT” in “WORK SUPPORT” mode with CONSULT-II.
4. Clear the self-learning control coefficient by touching “CLEAR”.
5. Select “DATA MONITOR” mode with CONSULT-II.
6. Start engine again and let it idle for at least 10 minutes.
   The 1st trip DTC P0172 should be detected at this stage, if a malfunction exists. If so, go to EC-958, "Diagnostic Procedure" .

   NOTE:
   If 1st trip DTC is not detected during above procedure, performing the following procedure is advised.

a. Turn ignition switch OFF and wait at least 10 seconds.
b. Start engine and drive the vehicle under the similar conditions to (1st trip) Freeze Frame Data for a certain time. Refer to the table below.
   Hold the accelerator pedal as steady as possible.

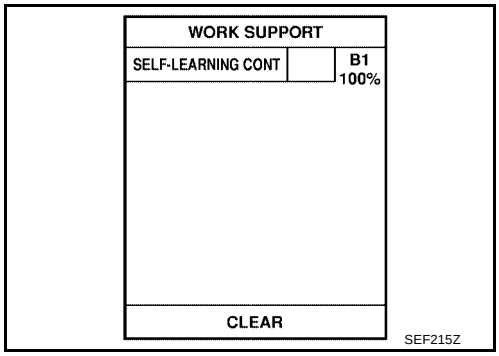

The similar conditions to (1st trip) Freeze Frame Data means the vehicle operation that the following conditions should be satisfied at the same time.

Engine speed	Engine speed in the freeze frame data ± 400 rpm
Vehicle speed	Vehicle speed in the freeze frame data ± 10 km/h (6 MPH)
Engine coolant temperature (T) condition	When the freeze frame data shows lower than 70 °C (158 °F), T should be lower than 70 °C (158 °F).
	When the freeze frame data shows higher than or equal to 70 °C (158 °F), T should be higher than or equal to 70 °C (158 °F).

7. If it is difficult to start engine at step 6, the fuel injection system has a malfunction, too.
8. Crank engine while depressing accelerator pedal.
   If engine starts, go to EC-958, "Diagnostic Procedure" . If engine does not start, remove spark plugs and check for fouling, etc.

WITH GST

1. Start engine and warm it up to normal operating temperature.
2. Turn ignition switch OFF and wait at least 10 seconds.
3. Disconnect mass air flow sensor harness connector. Then restart and run engine for at least 5 seconds at idle speed.
4. Stop engine and reconnect mass air flow sensor harness connector.
5. Select Service $03 with GST. Make sure DTC P0102 is detected.
6. Select Service $04 with GST and erase the DTC P0102.
7. Start engine again and let it idle for at least 10 minutes.
8. Select Service $07 with GST. The 1st trip DTC P0172 should be detected at this stage, if a malfunction exists. If so, go to EC-958, "Diagnostic Procedure" .

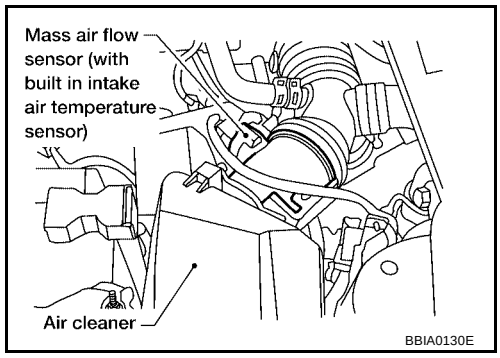

NOTE:
If 1st trip DTC is not detected during above procedure, performing the following procedure is advised.

a. Turn ignition switch OFF and wait at least 10 seconds.
b. Start engine and drive the vehicle under the similar conditions to (1st trip) Freeze Frame Data for a certain time. Refer to the table below.
   Hold the accelerator pedal as steady as possible.

   The similar conditions to (1st trip) Freeze Frame Data means the vehicle operation that the following conditions should be satisfied at the same time.

Engine speed	Engine speed in the freeze frame data ± 400 rpm
Vehicle speed	Vehicle speed in the freeze frame data ± 10 km/h (6 MPH)
Engine coolant temperature (T) condition	When the freeze frame data shows lower than 70 °C (158 °F), T should be lower than 70 °C (158 °F).
	When the freeze frame data shows higher than or equal to 70 °C (158 °F), T should be higher than or equal to 70 °C (158 °F).

9. If it is difficult to start engine at step 7, the fuel injection system has a malfunction.
10. Crank engine while depressing accelerator pedal.
    If engine starts, go to EC-958, "Diagnostic Procedure" . If engine does not start, remove ignition plugs and check for fouling, etc.

Wiring Diagram

UBS00JV5

A/T MODELS ULEV AND M/T MODELS

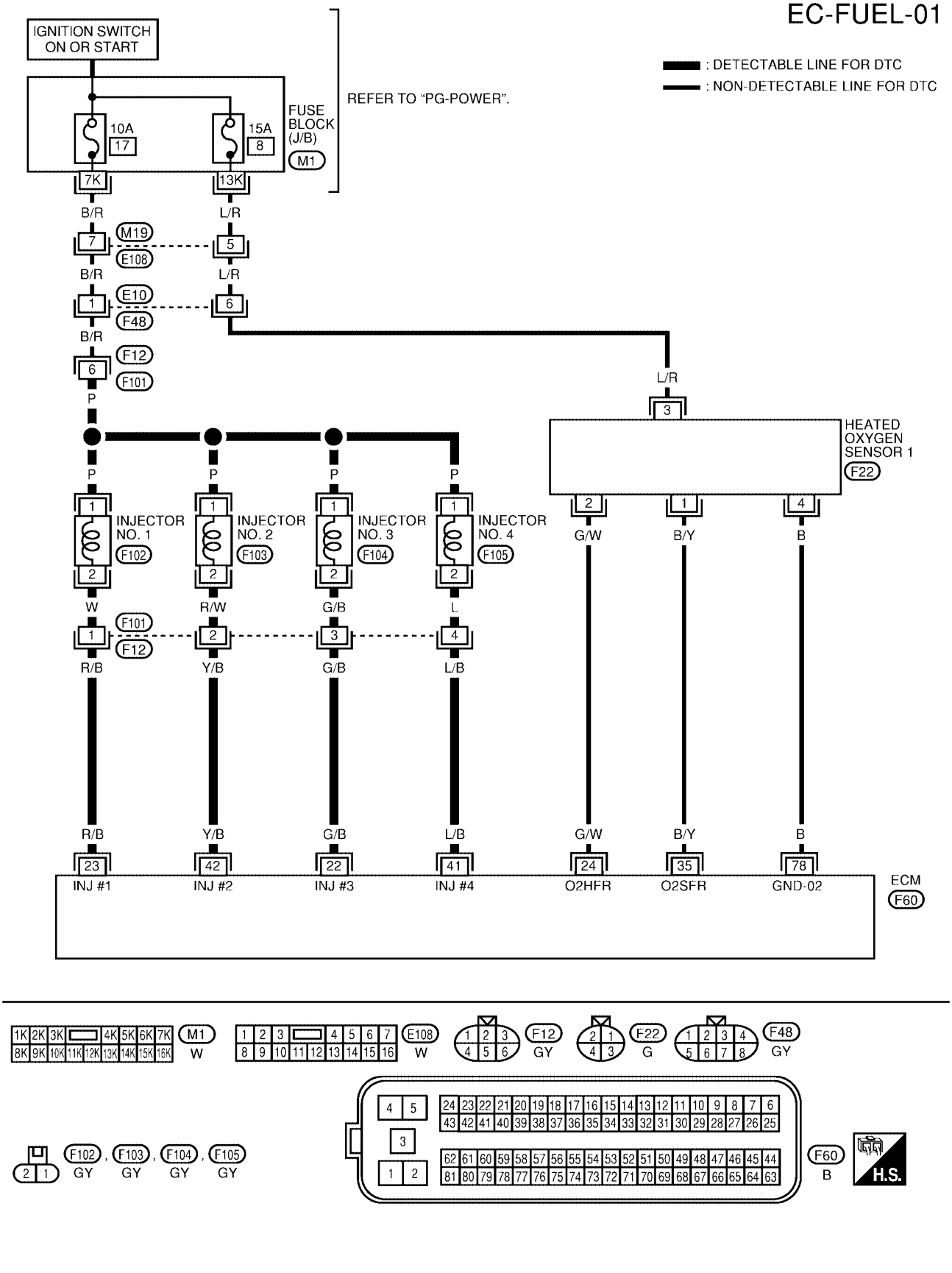

A/T MODELS EXCEPT ULEV

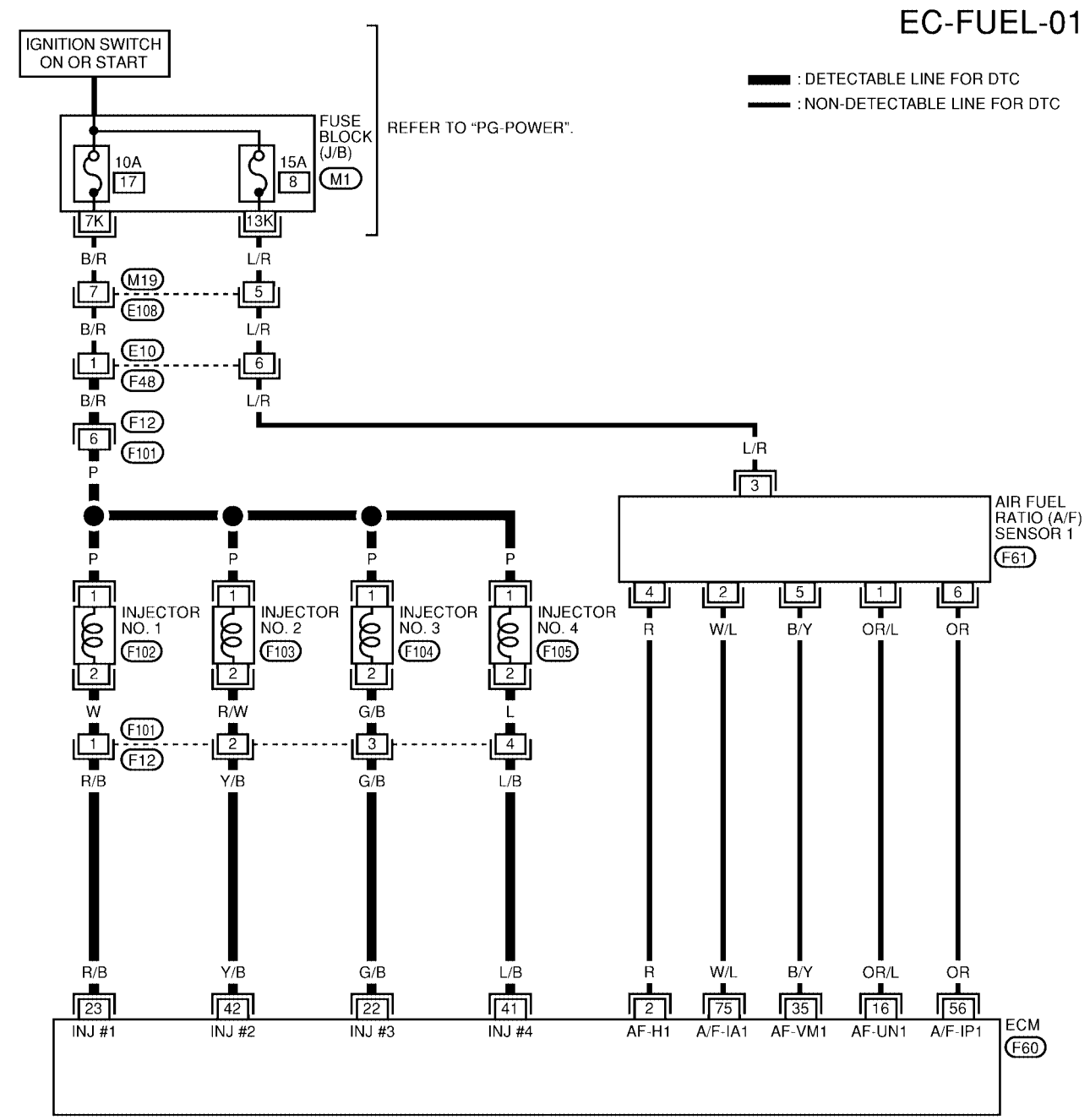

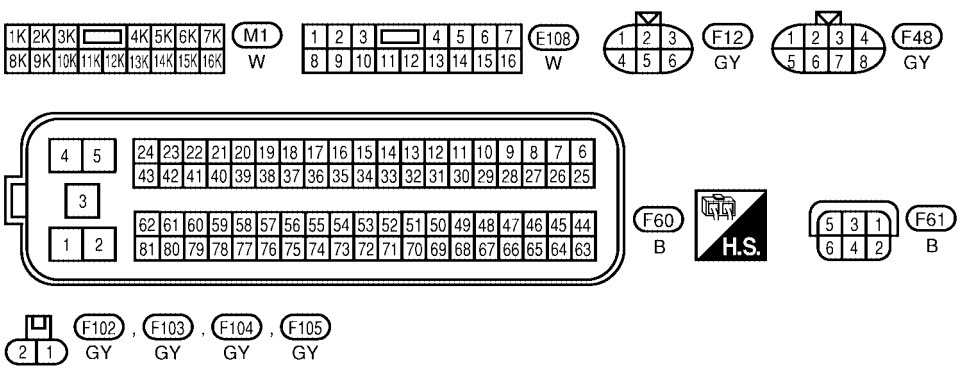

BBWA1397E

Diagnostic Procedure

UBS00JV6

A/T MODELS ULEV AND M/T MODELS

1. CHECK EXHAUST GAS LEAK

1. Start engine and run it at idle.
2. Listen for an exhaust gas leak before three way catalyst (manifold).

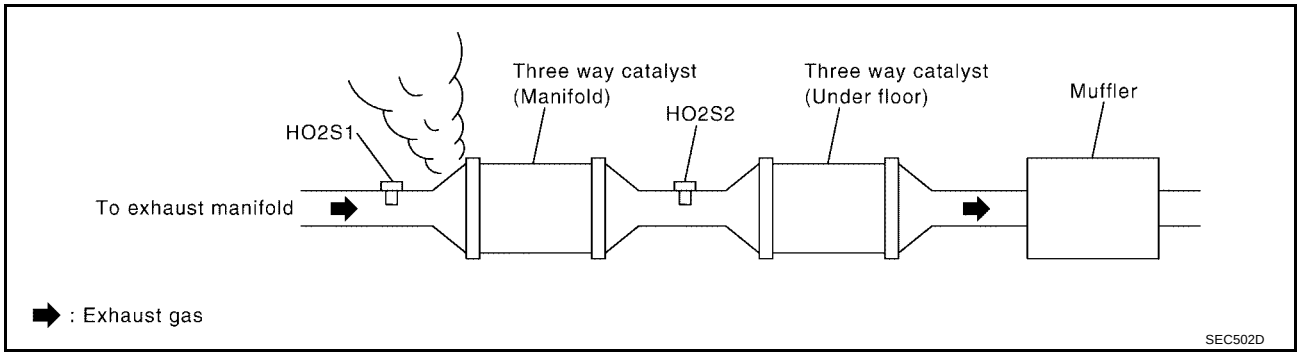

OK or NG

OK >> GO TO 2.
NG >> Repair or replace.

2. CHECK FOR INTAKE AIR LEAK

Listen for an intake air leak after the mass air flow sensor.

OK or NG

OK >> GO TO 3.
NG >> Repair or replace.

3. CHECK HEATED OXYGEN SENSOR 1 CIRCUIT FOR OPEN AND SHORT

1. Turn ignition switch OFF.
2. Disconnect heated oxygen sensor 1 (HO2S1) harness connector.
3. Disconnect ECM harness connector.
4. Check harness continuity between ECM terminal 35 and HO2S1 terminal 1.
   Refer to Wiring Diagram.

   Continuity should exist.

5. Check harness continuity between ECM terminal 35 or HO2S1 terminal 1 and ground.
   Refer to Wiring Diagram.

   Continuity should not exist.

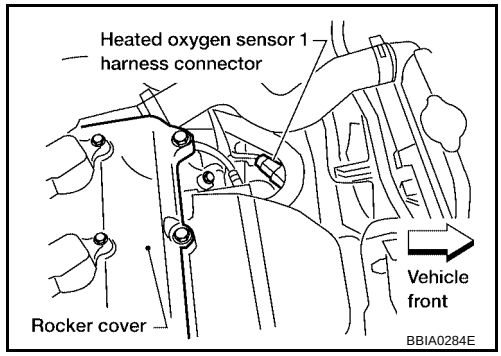

6. Also check harness for short to power.

OK or NG

OK >> GO TO 4.
NG >> Repair open circuit or short to ground or short to power in harness or connectors.

4. CHECK FUEL PRESSURE

1. Release fuel pressure to zero. Refer to EC-752, "FUEL PRESSURE RELEASE" .
2. Install fuel pressure gauge and check fuel pressure. Refer to EC-753, "FUEL PRESSURE CHECK" .

At idling: Approximately 350 kPa (3.57 kg/cm^2 , 51 psi)

OK or NG

OK >> GO TO 6.
NG >> GO TO 5.

5. DETECT MALFUNCTIONING PART

Check the following.

- Fuel pump and circuit (Refer to EC-1342, "FUEL PUMP CIRCUIT" .)
- Fuel pressure regulator (Refer to EC-753, "FUEL PRESSURE CHECK" .)
- Fuel lines (Refer to EM-121, "FUEL INJECTOR AND FUEL TUBE" .)
- Fuel filter for clogging

>> Repair or replace.

6. CHECK MASS AIR FLOW SENSOR

With CONSULT-II

1. Install all removed parts.
2. Check “MASS AIR FLOW” in “DATA MONITOR” mode with CONSULT-II.

1.0 - 4.0 g·m/sec: at idling
4.0 - 10 g·m/sec: at 2,500 rpm

With GST

1. Install all removed parts.
2. Check mass air flow sensor signal in Service $01 with GST.

1.4 - 4.0 g·m/sec: at idling
4.0 - 10 g·m/sec: at 2,500 rpm

OK or NG

OK >> GO TO 7.
NG >> Check connectors for rusted terminals or loose connections in the mass air flow sensor circuit or ground. Refer to EC-861, "DTC P0101 MAF SENSOR" .

7. CHECK FUNCTION OF INJECTORS

With CONSULT-II

1. Start engine.
2. Perform “POWER BALANCE” in “ACTIVE TEST” mode with CONSULT-II.
3. Make sure that each circuit produces a momentary engine speed drop.

ACTIVE TEST	
POWER BALANCE	
MONITOR	
ENG SPEED	XXX rpm
MAS A/F SE-B1	XXX V

PBIB0133E

Without CONSULT-II

1. Start engine.
2. Listen to each injector operating sound.

Clicking noise should be heard.

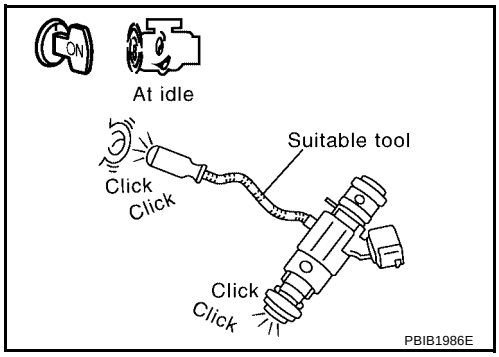

PBIB1986E

OK or NG

OK >> GO TO 8.
NG >> Perform trouble diagnosis for EC-1336, "INJECTOR CIRCUIT" .

8. CHECK INJECTOR

1. Remove injector assembly. Refer to EM-121, "FUEL INJECTOR AND FUEL TUBE" .
   Keep fuel hose and all injectors connected to injector gallery.
2. Confirm that the engine is cooled down and there are no fire hazards near the vehicle.
3. Disconnect injector harness connectors.
   The injector harness connectors should remain connected.
4. Disconnect all ignition coil harness connectors.
5. Prepare pans or saucers under each injectors.
6. Crank engine for about 3 seconds.
   Make sure fuel does not drip from injector.

OK or NG

OK (Does not drip.)>>GO TO 9.
NG (Drips.)>>Replace the injectors from which fuel is dripping. Always replace O-ring with new one.

9. CHECK INTERMITTENT INCIDENT

Refer to EC-834, "TROUBLE DIAGNOSIS FOR INTERMITTENT INCIDENT" .

>> **INSPECTION END**

A/T MODELS EXCEPT ULEV

1. CHECK FOR EXHAUST AIR LEAK

1. Start engine and run it at idle.
2. Listen for an exhaust air leak before three way catalyst (manifold).

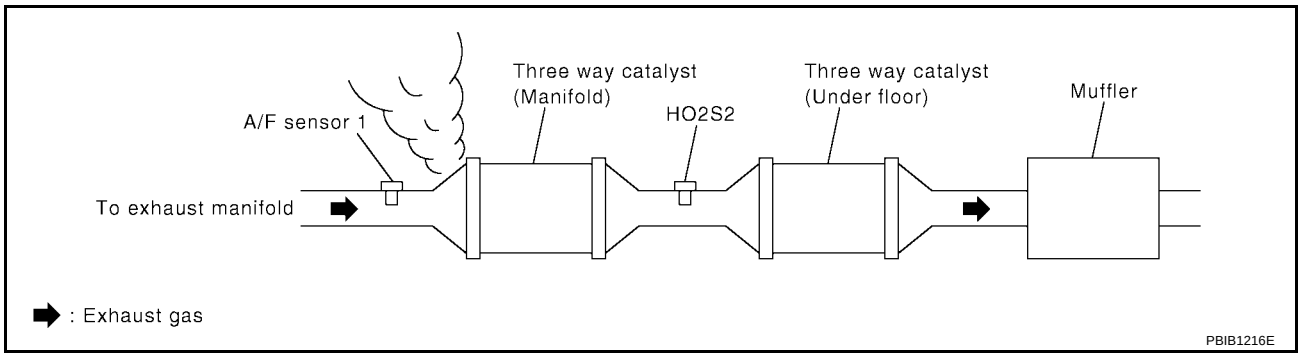

OK or NG

OK >> GO TO 2.
NG >> Repair or replace.

2. CHECK FOR INTAKE AIR LEAK

Listen for an intake air leak after the mass air flow sensor.

OK or NG

OK >> GO TO 3.
NG >> Repair or replace.

3. CHECK AIR FUEL RATIO (A/F) SENSOR 1 CIRCUIT FOR OPEN AND SHORT

1. Turn ignition switch OFF.
2. Disconnect A/F sensor 1 harness connector and ECM harness connector.
3. Check harness continuity between ECM terminals and A/F sensor 1 terminals as follows.
   Refer to Wiring Diagram.

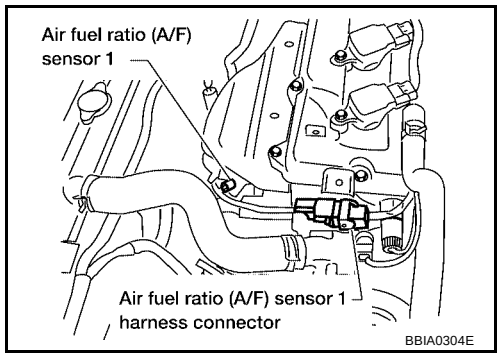

ECM terminal	A/F sensor 1
16	1
35	5
56	6
75	2

Continuity should exist.

4. Check harness continuity between ECM terminals 16, 35, 56, 75 and ground, or A/F sensor 1 terminals 1, 2, 5, 6 and ground.
   Refer to Wiring Diagram.

Continuity should not exist.

5. Also check harness for short to ground and short to power.

OK or NG

OK >> GO TO 4.
NG >> Repair open circuit or short to ground or short to power in harness or connectors.

4. CHECK FUEL PRESSURE

1. Release fuel pressure to zero.
   Refer to EC-752, "FUEL PRESSURE RELEASE" .
2. Install fuel pressure gauge and check fuel pressure.

At idling: Approximately 350 kPa (3.57 kg/cm^2 , 51 psi)

OK or NG

OK >> GO TO 6.
NG >> GO TO 5.

5. DETECT MALFUNCTIONING PART

Check the following.

- Fuel pump and circuit (Refer to EC-1342, "FUEL PUMP CIRCUIT" .)
- Fuel pressure regulator (Refer to EC-753, "FUEL PRESSURE CHECK" .)
- Fuel lines (Refer to EM-121, "FUEL INJECTOR AND FUEL TUBE" .)
- Fuel filter for clogging

>> Repair or replace.

6. CHECK MASS AIR FLOW SENSOR

With CONSULT-II

1. Install all removed parts.
2. Check “MASS AIR FLOW” in “DATA MONITOR” mode with CONSULT-II.

at idling	**: 1.4 - 4.0 g·m/sec**
at 2,500 rpm	**: 5.0 - 10.0 g·m/sec**

With GST

1. Install all removed parts.
2. Check mass air flow sensor signal in Service $01 with GST.

at idling	**: 1.4 - 4.0 g·m/sec**
at 2,500 rpm	**: 5.0 - 10.0 g·m/sec**

OK or NG

OK >> GO TO 7.
NG >> Check connectors for rusted terminals or loose connections in the mass air flow sensor circuit or ground. Refer to EC-861, "DTC P0101 MAF SENSOR" .

7. CHECK FUNCTION OF INJECTORS

With CONSULT-II

1. Start engine.
2. Perform “POWER BALANCE” in “ACTIVE TEST” mode with CONSULT-II.
3. Make sure that each circuit produces a momentary engine speed drop.

ACTIVE TEST	
POWER BALANCE	
MONITOR	
ENG SPEED	XXX rpm
MAS A/F SE-B1	XXX V

PBIB0133E

Without CONSULT-II

1. Start engine.
2. Listen to each injector operating sound.
   Clicking noise should be heard.

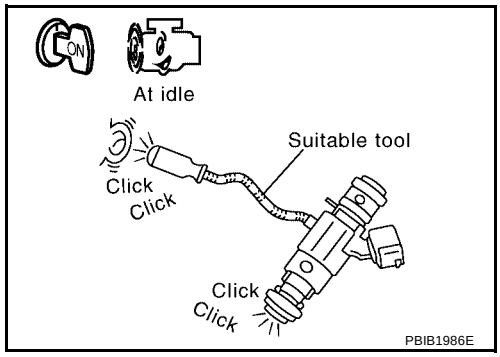

OK or NG

OK >> GO TO 8.
NG >> Perform trouble diagnosis for EC-1336, "INJECTOR CIRCUIT" .

8. CHECK INJECTOR

1. Remove injector assembly. Refer to EM-121, "FUEL INJECTOR AND FUEL TUBE" .
   Keep fuel hose and all injectors connected to injector gallery.
2. Confirm that the engine is cooled down and there are no fire hazards near the vehicle.
3. Disconnect all injector harness connectors.
   The injector harness connectors should remain connected.
4. Disconnect all ignition coil harness connectors.
5. Prepare pans or saucers under each injectors.
6. Crank engine for about 3 seconds.
   Make sure fuel does not drip from injector.

OK or NG

OK (Does not drip.)>>GO TO 9.
NG (Drips.)>>Replace the injectors from which fuel is dripping. Always replace O-ring with new one.

9. CHECK INTERMITTENT INCIDENT

Perform EC-834, "TROUBLE DIAGNOSIS FOR INTERMITTENT INCIDENT" .

>> **INSPECTION END**

DTC P0181 FTT SENSOR

PFP:22630

Component Description

UBS00JV7

The fuel tank temperature sensor is used to detect the fuel temperature inside the fuel tank. The sensor modifies a voltage signal from the ECM. The modified signal returns to the ECM as the fuel temperature input. The sensor uses a thermistor which is sensitive to the change in temperature. The electrical resistance of the thermistor decreases as temperature increases.

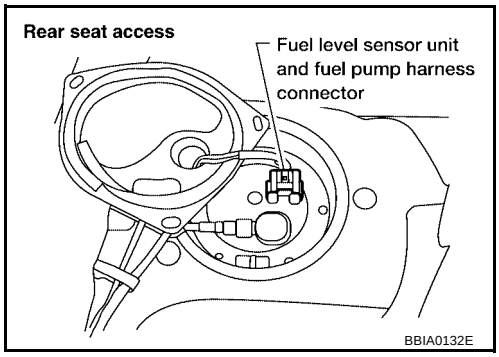

<Reference data>

Fluid temperature °C (°F)	Voltage* V	Resistance kΩ
20 (68)	3.5	2.3 - 2.7
50 (122)	2.2	0.79 - 0.90

*: This data is reference value and is measured between ECM terminal 107 (Fuel tank temperature sensor) and ground.

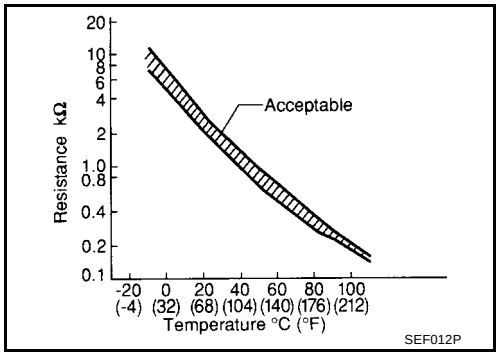

CAUTION:
Do not use ECM ground terminals when measuring input/output voltage. Doing so may damage the ECM's transistor. Use ground other than ECM, such as ground.

On Board Diagnosis Logic

UBS00JV8

DTC No.	Trouble diagnosis name	DTC detecting condition	Possible cause
P0181 0181	Fuel tank temperature sensor circuit range/ performance	Rationally incorrect voltage from the sensor is sent to ECM, compared with the voltage signals from engine coolant temperature sensor and intake air temperature sensor.	● Harness or connectors (The sensor circuit is open or shorted) ● Fuel tank temperature sensor

DTC Confirmation Procedure

UBS00JV9

NOTE:
If DTC Confirmation Procedure has been previously conducted, always turn ignition switch OFF and wait at least 10 seconds before conducting the next test.

WITH CONSULT-II

1. Turn ignition switch ON.
2. Select “DATA MONITOR” mode with CONSULT-II.
3. Wait at least 10 seconds.
   If the result is NG, go to EC-967, "Diagnostic Procedure" .
   If the result is OK, go to following step.
4. Check “COOLAN TEMP/S” value.
   If the “COOLANT TEMP/S” is less than 60°C (140°F), the result will be OK.
   If the “COOLANT TEMP/S” is above 60°C (140°F), go to the following step.
5. Cool engine down until “COOLAN TEMP/S” signal is less than 60°C (140°F).
6. Wait at least 10 seconds.
7. If 1st trip DTC is detected, go to EC-967, "Diagnostic Procedure" .

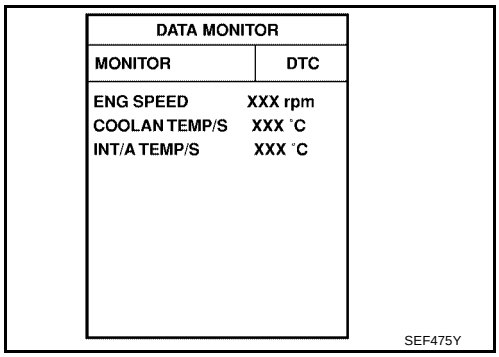

WITH GST

Follow the procedure “WITH CONSULT-II” above.

Wiring Diagram

UBS00JVA

EC-FTTS-01

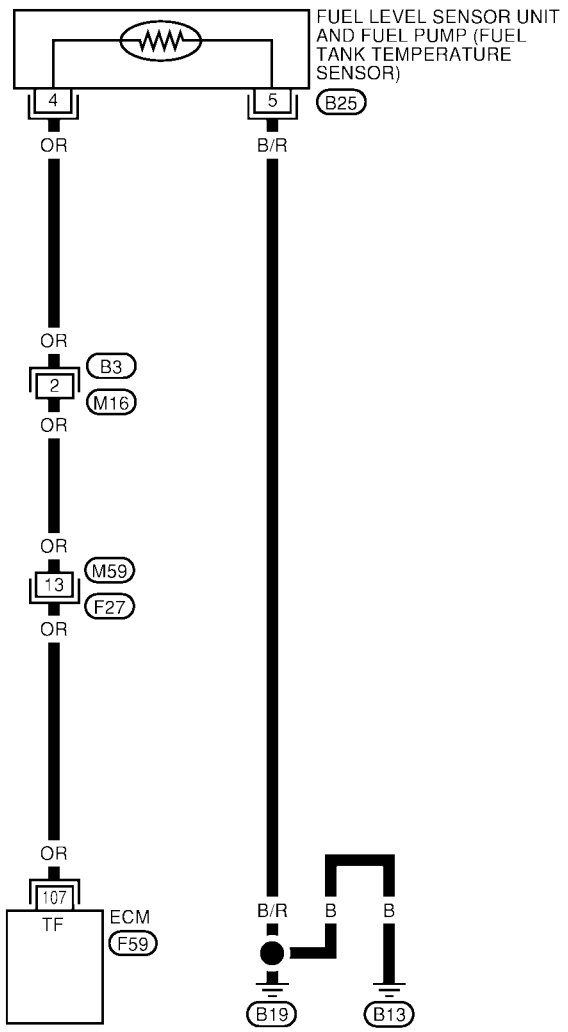

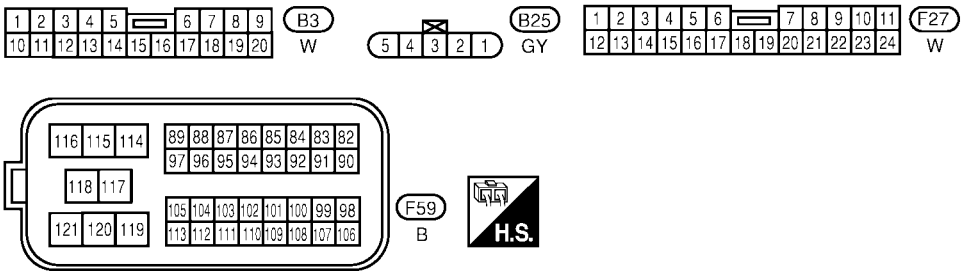

BBWA1398E

Diagnostic Procedure

UBS00JVB

1. CHECK GROUND CONNECTIONS

1. Turn ignition switch OFF.
2. Loosen and retighten engine two screws on the body.
   Refer to EC-841, "Ground Inspection" .

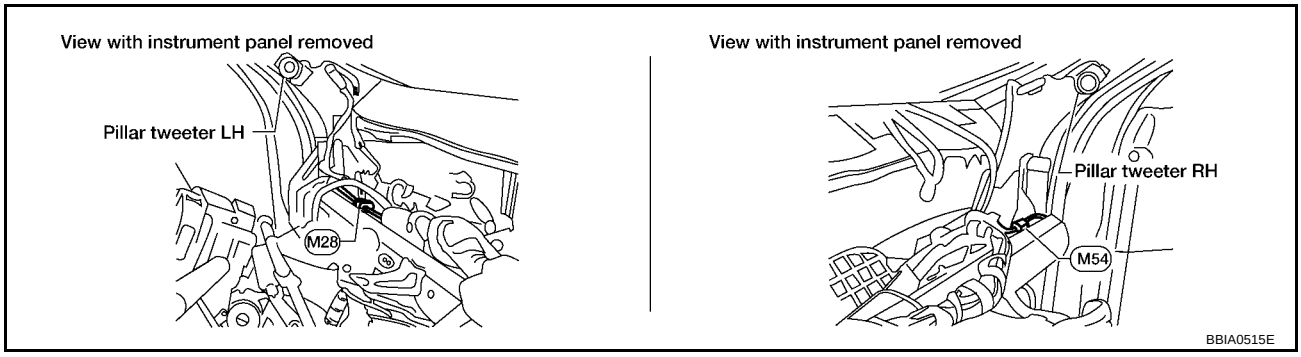

OK or NG

OK >> GO TO 2.
NG >> Repair or replace ground connections.

2. CHECK FUEL TANK TEMPERATURE SENSOR POWER SUPPLY CIRCUIT

1. Turn ignition switch OFF.
2. Disconnect “fuel level sensor unit and fuel pump” harness connector.
3. Turn ignition switch ON.

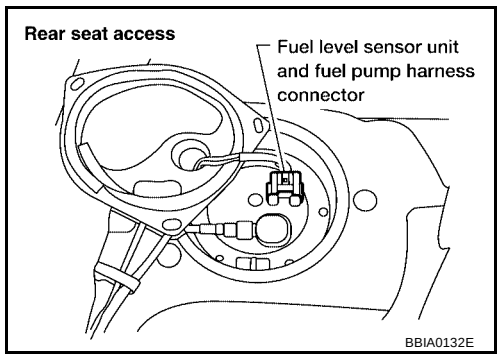

4. Check voltage between “fuel level sensor unit and fuel pump” terminal 4 and ground with CONSULT-II or tester.

   Voltage: Approximately 5V

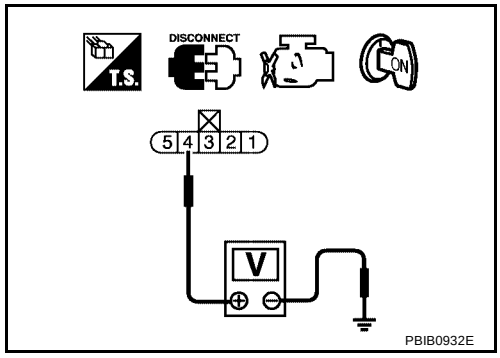

OK or NG

OK >> GO TO 4.
NG >> GO TO 3.

3. DETECT MALFUNCTIONING PART

Check the following.

- Harness connectors M59, F27
- Harness connectors B3, M16
- Harness for open or short between ECM and “fuel level sensor unit and fuel pump”

>> Repair open circuit or short to ground or short to power in harness or connector.

4. CHECK FUEL TANK TEMPERATURE SENSOR GROUND CIRCUIT FOR OPEN AND SHORT

1. Turn ignition switch OFF.
2. Check harness continuity between “fuel level sensor unit and fuel pump” terminal 5 and ground. Refer to Wiring Diagram.

Continuity should exist.

3. Also check harness for short to power.

OK or NG

OK >> GO TO 5.
NG >> Repair open circuit or short to power in harness or connectors.

5. CHECK FUEL TANK TEMPERATURE SENSOR

Refer to, EC-968, "Component Inspection" .

OK or NG

OK >> GO TO 6.
NG >> Replace fuel level sensor unit.

6. CHECK INTERMITTENT INCIDENT

Perform EC-834, "TROUBLE DIAGNOSIS FOR INTERMITTENT INCIDENT" .

>> **INSPECTION END**

Component Inspection

UBS00JVC

FUEL TANK TEMPERATURE SENSOR

Check resistance by heating with hot water or heat gun as shown in the figure.

Temperature °C (°F)	Resistance kΩ
20 (68)	2.3 - 2.7
50 (122)	0.79 - 0.90

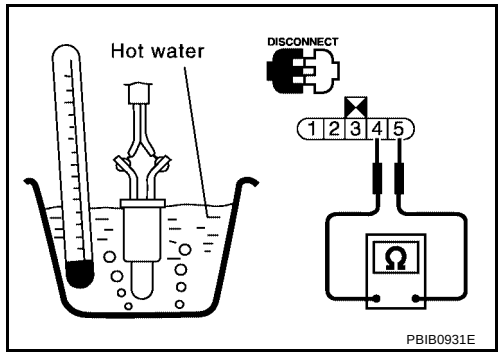

Removal and Installation

UBS00JVD

FUEL TANK TEMPERATURE SENSOR

Refer to FL-3, "FUEL LEVEL SENSOR UNIT, FUEL FILTER AND FUEL PUMP ASSEMBLY" .

DTC P0182, P0183 FTT SENSOR

PFP:22630

Component Description

UBS00JVE

The fuel tank temperature sensor is used to detect the fuel temperature inside the fuel tank. The sensor modifies a voltage signal from the ECM. The modified signal returns to the ECM as the fuel temperature input. The sensor uses a thermistor which is sensitive to the change in temperature. The electrical resistance of the thermistor decreases as temperature increases.

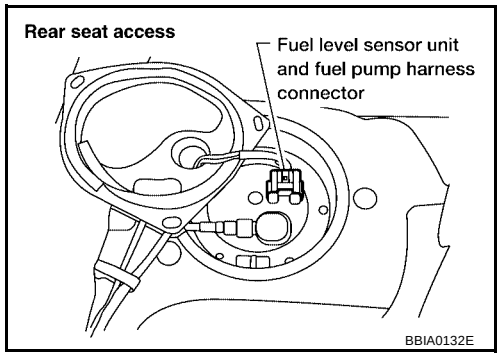

<Reference data>

Fluid temperature °C (°F)	Voltage* V	Resistance kΩ
20 (68)	3.5	2.3 - 2.7
50 (122)	2.2	0.79 - 0.90

*: This data is reference value and is measured between ECM terminal 107 (Fuel tank temperature sensor) and ground.

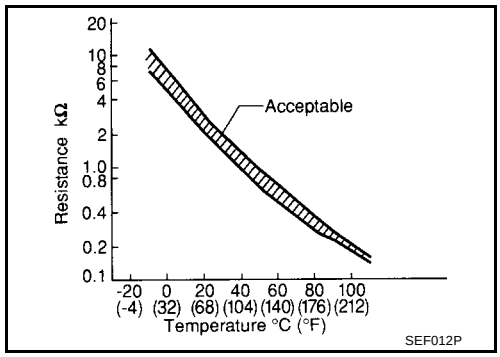

CAUTION:
Do not use ECM ground terminals when measuring input/output voltage. Doing so may damage the ECM's transistor. Use ground other than ECM, such as ground.

On Board Diagnosis Logic

UBS00JVF

DTC No.	Trouble diagnosis name	DTC detecting condition	Possible cause
P0182 0182	Fuel tank temperature sensor circuit low input	An excessively low voltage from the sensor is sent to ECM.	● Harness or connectors (The sensor circuit is open or shorted.) ● Fuel tank temperature sensor
P0183 0183	Fuel tank temperature sensor circuit high input	An excessively high voltage from the sensor is sent to ECM.	

DTC Confirmation Procedure

UBS00JVG

NOTE:
If DTC Confirmation Procedure has been previously conducted, always turn ignition switch OFF and wait at least 10 seconds before conducting the next test.

WITH CONSULT-II

1. Turn ignition switch ON.
2. Select “DATA MONITOR” mode with CONSULT-II.
3. Wait at least 5 seconds.
4. If 1st trip DTC is detected, go to EC-971, "Diagnostic Procedure".

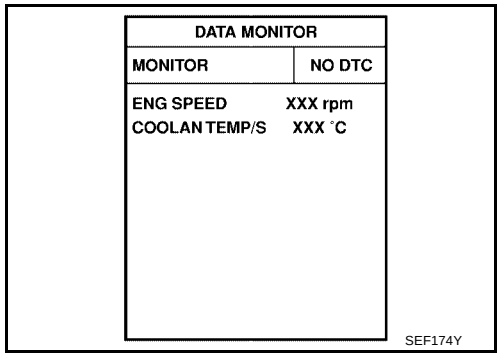

WITH GST

Follow the procedure “WITH CONSULT-II” above.

Wiring Diagram

UBS00JVH

EC-FTTS-01

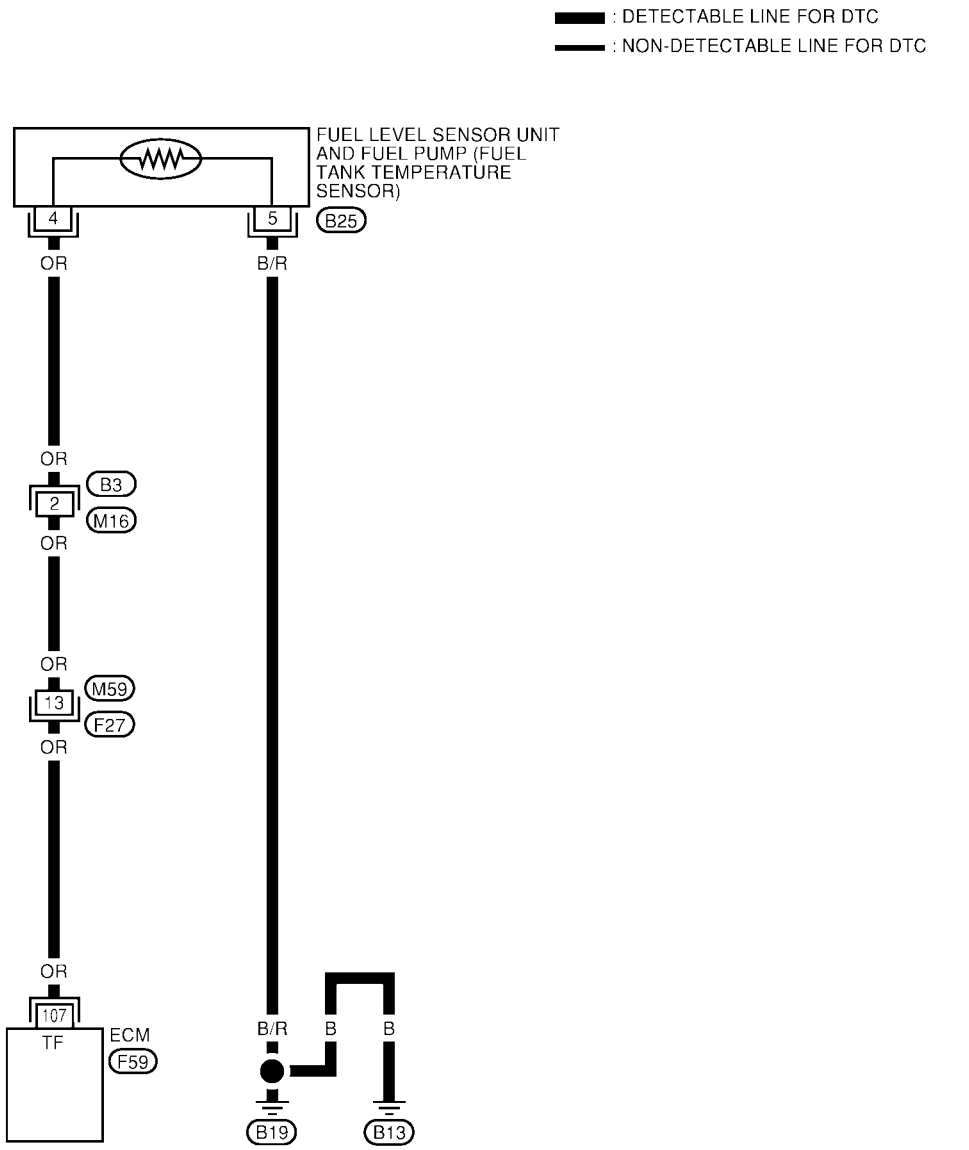

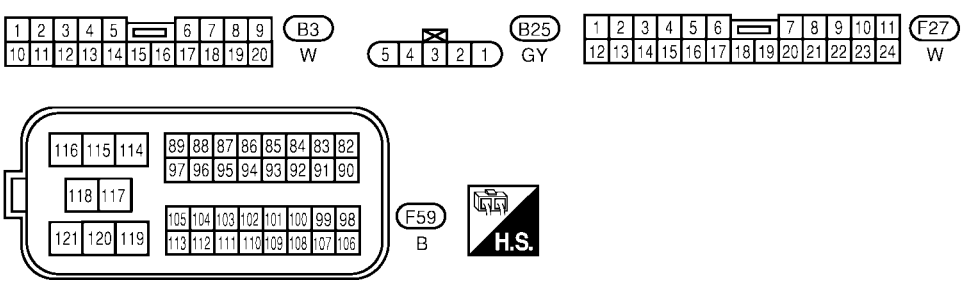

BBWA1398E

Diagnostic Procedure

UBS00JVI

1. CHECK GROUND CONNECTIONS

1. Turn ignition switch OFF.
2. Loosen and retighten engine two screws on the body.
   Refer to EC-841, "Ground Inspection" .

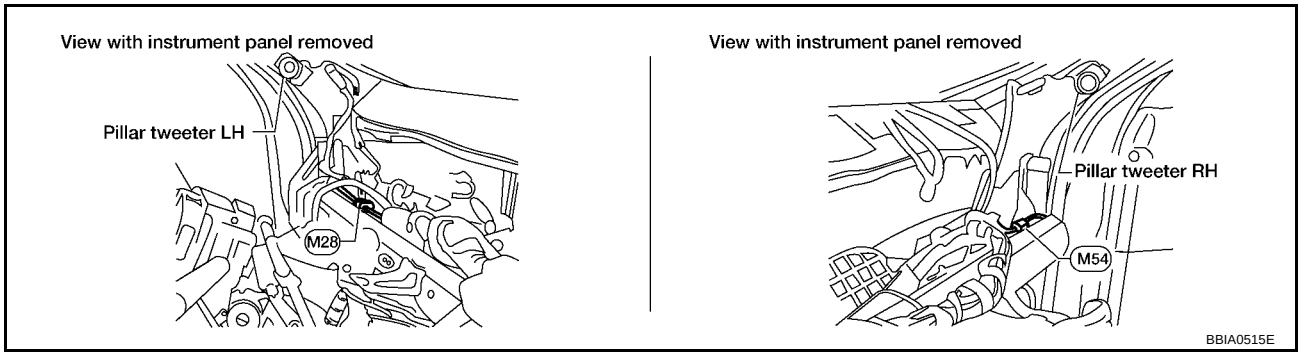

OK or NG

OK >> GO TO 2.
NG >> Repair or replace ground connections.

2. CHECK FUEL TANK TEMPERATURE SENSOR POWER SUPPLY CIRCUIT

1. Turn ignition switch OFF.
2. Disconnect “fuel level sensor unit and fuel pump” harness connector.
3. Turn ignition switch ON.

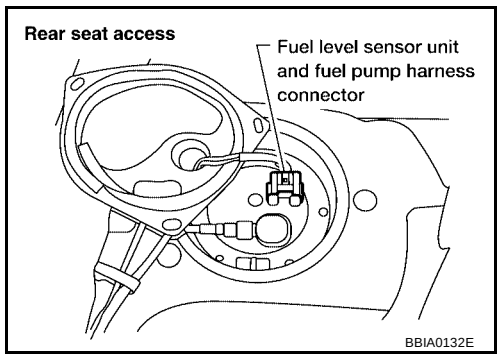

4. Check voltage between “fuel level sensor unit and fuel pump” terminal 4 and ground with CONSULT-II or tester.

   Voltage: Approximately 5V

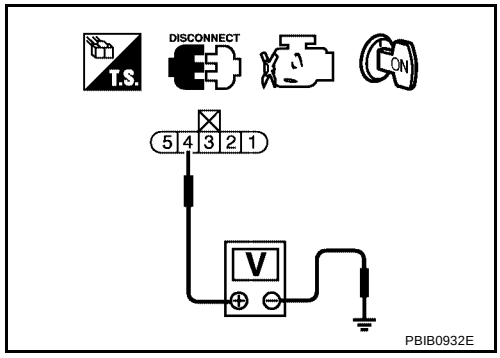

OK or NG

OK >> GO TO 4.
NG >> GO TO 3.

3. DETECT MALFUNCTIONING PART

Check the following.

- Harness connectors M59, F27
- Harness connectors B3, M16
- Harness for open or short between ECM and “fuel level sensor unit and fuel pump”

>> Repair open circuit or short to ground or short to power in harness or connector.

4. CHECK FUEL TANK TEMPERATURE SENSOR GROUND CIRCUIT FOR OPEN AND SHORT

1. Turn ignition switch OFF.
2. Check harness continuity between “fuel level sensor unit and fuel pump” terminal 5 and ground. Refer to Wiring Diagram.

Continuity should exist.

3. Also check harness for short to power.

OK or NG

OK >> GO TO 5.
NG >> Repair open circuit or short to power in harness or connectors.

5. CHECK FUEL TANK TEMPERATURE SENSOR

Refer to, EC-972, "Component Inspection" .

OK or NG

OK >> GO TO 6.
NG >> Replace “fuel level sensor unit and fuel pump”.

6. CHECK INTERMITTENT INCIDENT

Perform EC-834, "TROUBLE DIAGNOSIS FOR INTERMITTENT INCIDENT" .

>> **INSPECTION END**

Component Inspection

UBS00JVJ

FUEL TANK TEMPERATURE SENSOR

Check resistance by heating with hot water or heat gun as shown in the figure.

Temperature °C (°F)	Resistance kΩ
20 (68)	2.3 - 2.7
50 (122)	0.79 - 0.90

If NG, replace “fuel level sensor unit and fuel pump”.

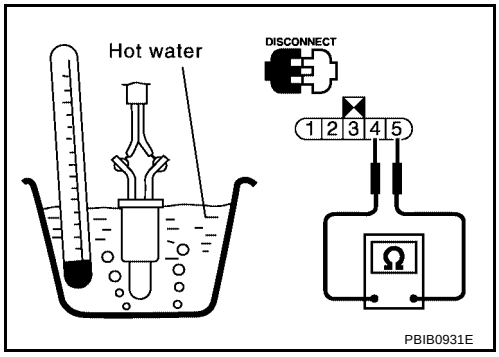

Removal and Installation

UBS00JVK

FUEL TANK TEMPERATURE SENSOR

Refer to FL-3, "FUEL LEVEL SENSOR UNIT, FUEL FILTER AND FUEL PUMP ASSEMBLY" .

DTC P0222, P0223 TP SENSOR

PFP:16119

Component Description

UBS00JDN

Electric throttle control actuator consists of throttle control motor, throttle position sensor, etc. The throttle position sensor responds to the throttle valve movement.
The throttle position sensor has two sensors. These sensors are a kind of potentiometers which transform the throttle valve position into output voltage, and emit the voltage signal to the ECM. In addition, these sensors detect the opening and closing speed of the throttle valve and feed the voltage signals to the ECM. The ECM judges the current opening angle of the throttle valve from these signals and the ECM controls the throttle control motor to make the throttle valve opening angle properly in response to driving condition.

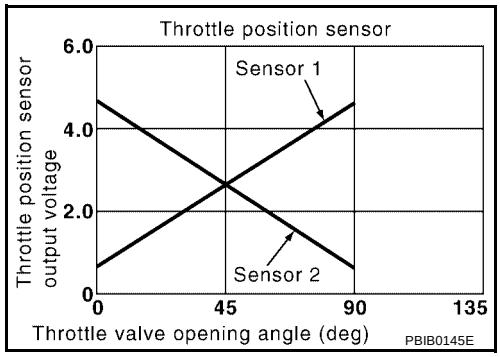

CONSULT-II Reference Value in Data Monitor Mode

UBS00JDO

Specification data are reference values.

MONITOR ITEM	CONDITION		SPECIFICATION
THRTL SEN1 THRTL SEN2*	● Ignition switch: ON (Engine stopped)	Accelerator pedal: Fully released	More than 0.36V
	● Shift lever: D (A/T), 1ST (M/T)	Accelerator pedal: Fully depressed	Less than 4.75V

*: Throttle position sensor 2 signal are converted by ECM internally. Thus, it differ from ECM terminals voltage signal.

On Board Diagnosis Logic

UBS00JDP

These self-diagnoses have the one trip detection logic.

DTC No.	Trouble diagnosis name	DTC detecting condition	Possible cause
P0222 0222	Throttle position sensor 1 circuit low input	An excessively low voltage from the TP sensor 1 is sent to ECM.	● Harness or connectors (The TP sensor 1 circuit is open or shorted.) (APP sensor 2 circuit is shorted.) ● Electric throttle control actuator (TP sensor 1) ● Accelerator pedal position sensor (APP sensor 2)
P0223 0223	Throttle position sensor 1 circuit high input	An excessively high voltage from the TP sensor 1 is sent to ECM.	

FAIL-SAFE MODE

When the malfunction is detected, the ECM enters fail-safe mode and the MIL lights up.

Engine operation condition in fail-safe mode
The ECM controls the electric throttle control actuator in regulating the throttle opening in order for the idle position to be within +10 degrees. The ECM regulates the opening speed of the throttle valve to be slower than the normal condition. So, the acceleration will be poor.

DTC Confirmation Procedure

UBS00JDQ

NOTE:
If DTC Confirmation Procedure has been previously conducted, always turn ignition switch OFF and wait at least 10 seconds before conducting the next test.
TESTING CONDITION:
Before performing the following procedure, confirm that battery voltage is more than 10V at idle.

WITH CONSULT-II

1. Turn ignition switch ON.

2. Select “DATA MONITOR” mode with CONSULT-II.
3. Start engine and let it idle for 1 second.
4. If DTC is detected, go to EC-976, "Diagnostic Procedure" .

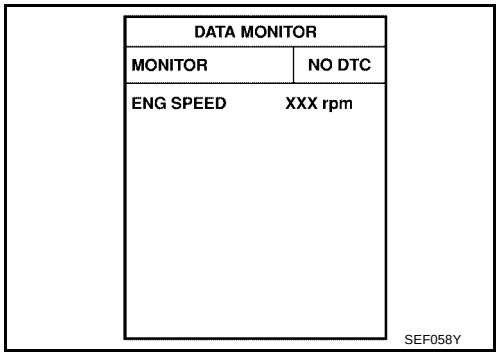

WITH GST

Follow the procedure “WITH CONSULT-II” above.

Wiring Diagram

UBS00JDR

EC-TPS1-01

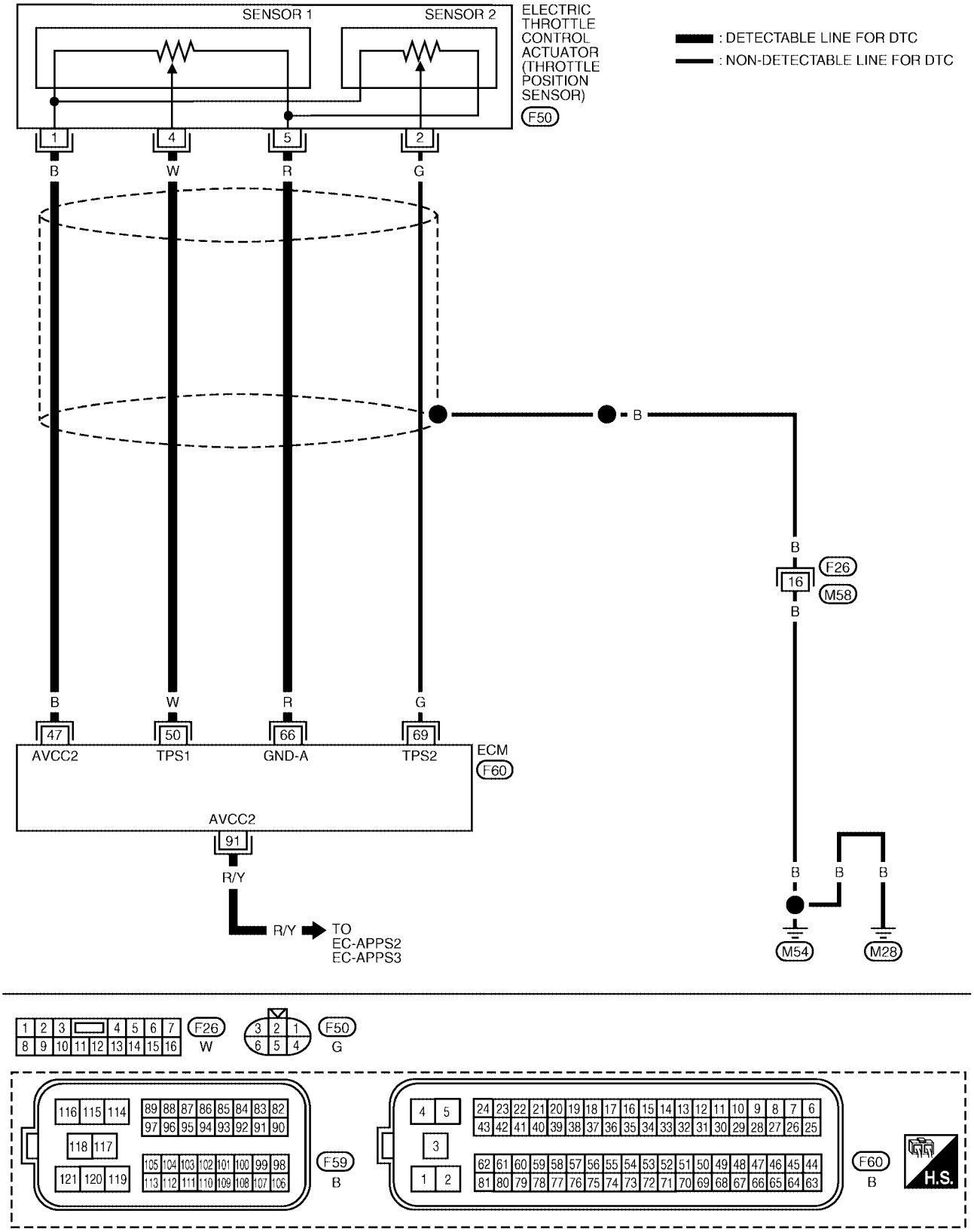

BBWA2297E

Specification data are reference values and are measured between each terminal and ground.

CAUTION:

Do not use ECM ground terminals when measuring input/output voltage. Doing so may result in damage to the ECM's transistor. Use a ground other than ECM terminals, such as the ground.

TERMINAL NO.	WIRE COLOR	ITEM	CONDITION	DATA (DC Voltage)
47	B	Sensor power supply (Throttle position sensor)	**[Ignition switch: ON]**	Approximately 5V
50	W	Throttle position sensor 1	**[Ignition switch: ON]** ● Engine stopped ● Shift lever: D (A/T), 1ST (M/T) ● Accelerator pedal: Fully released	More than 0.36V
			[Ignition switch: ON] ● Engine stopped ● Shift lever: D (A/T), 1ST (M/T) ● Accelerator pedal: Fully depressed	Less than 4.75V
66	R	Sensor ground (Throttle position sensor)	**[Engine is running]** ● **Warm-up condition** ● Idle speed	Approximately 0V
69	G	Throttle position sensor 2	**[Ignition switch: ON]** ● Engine stopped ● Shift lever: D (A/T), 1ST (M/T) ● Accelerator pedal: Fully released	Less than 4.75V
			[Ignition switch: ON] ● Engine stopped ● Shift lever: D (A/T), 1ST (M/T) ● Accelerator pedal: Fully depressed	More than 0.36V
91	R/Y	Sensor power supply (Accelerator pedal position sensor 2)	**[Ignition switch: ON]**	Approximately 5V

Diagnostic Procedure

UBS00JDS

1. CHECK GROUND CONNECTIONS

1. Turn ignition switch OFF.
2. Loosen and retighten two ground screws on the body. Refer to EC-841, "Ground Inspection" .

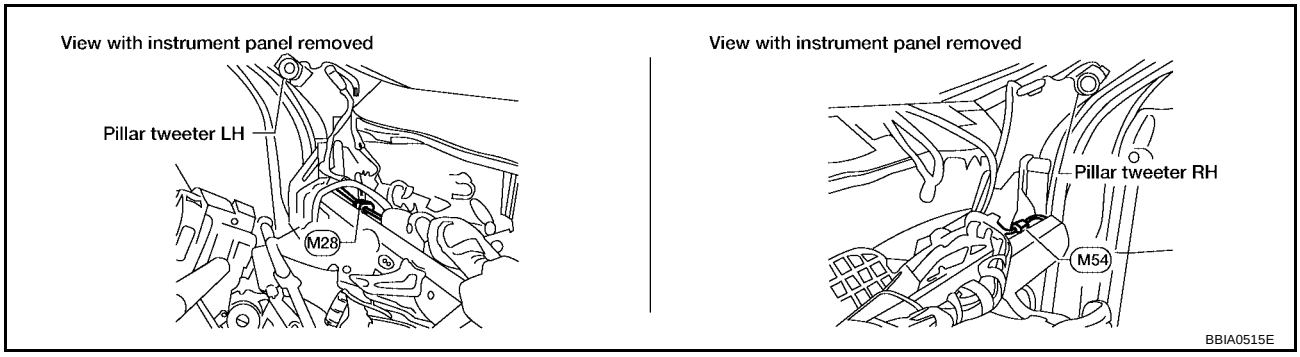

OK or NG

OK >> GO TO 2.
NG >> Repair or replace ground connections.

2. CHECK THROTTLE POSITION SENSOR 1 POWER SUPPLY CIRCUIT-I

1. Disconnect electric throttle control actuator harness connector.
2. Turn ignition switch ON.

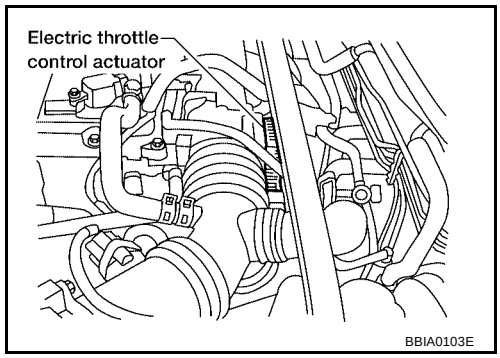

3. Check voltage between electric throttle control actuator terminal 1 and ground with CONSULT-II or tester.

Voltage: Approximately 5V

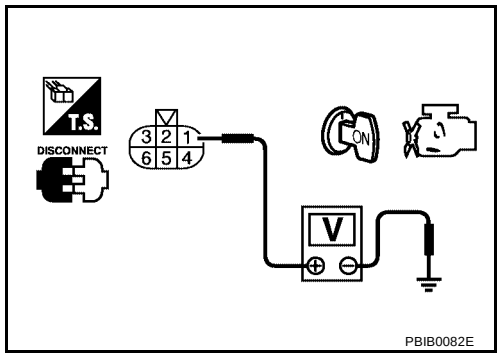

OK or NG

OK >> GO TO 7.
NG >> GO TO 3.

3. CHECK THROTTLE POSITION SENSOR 1 POWER SUPPLY CIRCUIT-II

1. Turn ignition switch OFF.
2. Disconnect ECM harness connector.
3. Check harness continuity between electric throttle control actuator terminal 1 and ECM terminal 47. Refer to Wiring Diagram.

Continuity should exist.

OK or NG

OK >> GO TO 4.
NG >> Repair or replace open circuit.

4. CHECK THROTTLE POSITION SENSOR 1 POWER SUPPLY CIRCUIT-III

Check the following.

- Harness for short to power and short to ground, between the following terminals.

ECM terminal	Sensor terminal	Reference Wiring Diagram
47	Electric throttle control actuator terminal 1	EC-975
91	APP sensor terminal 1	EC-1286

OK or NG

OK >> GO TO 5.
NG >> Repair short to ground or short to power in harness or connectors.

5. CHECK APP SENSOR

Refer to EC-1289, "Component Inspection" .

OK or NG

OK >> GO TO 11.
NG >> GO TO 6.

6. REPLACE ACCELERATOR PEDAL ASSEMBLY

1. Replace accelerator pedal assembly.
2. Perform EC-749, "Accelerator Pedal Released Position Learning" .
3. Perform EC-749, "Throttle Valve Closed Position Learning" .
4. Perform EC-750, "Idle Air Volume Learning" .

>> **INSPECTION END**

7. CHECK THROTTLE POSITION SENSOR 1 GROUND CIRCUIT FOR OPEN AND SHORT

1. Turn ignition switch OFF.
2. Disconnect ECM harness connector.
3. Check harness continuity between ECM terminal 66 and electric throttle control actuator terminal 5. Refer to Wiring Diagram.

Continuity should exist.

4. Also check harness for short to ground or short to power.

OK or NG

OK >> GO TO 8.
NG >> Repair open circuit or short to ground or short to power in harness or connectors.

8. CHECK THROTTLE POSITION SENSOR 1 INPUT SIGNAL CIRCUIT FOR OPEN AND SHORT

1. Check harness continuity between ECM terminal 50 and electric throttle control actuator terminal 4. Refer to Wiring Diagram.

Continuity should exist.

2. Also check harness for short to ground and short to power.

OK or NG

OK >> GO TO 9.
NG >> Repair open circuit or short to ground or short to power in harness or connectors.

9. CHECK THROTTLE POSITION SENSOR

Refer to EC-979, "Component Inspection" .

OK or NG

OK >> GO TO 11.
NG >> GO TO 10.

10. REPLACE ELECTRIC THROTTLE CONTROL ACTUATOR

1. Replace the electric throttle control actuator.
2. Perform EC-749, "Throttle Valve Closed Position Learning" .
3. Perform EC-750, "Idle Air Volume Learning" .

>> **INSPECTION END**

11. CHECK INTERMITTENT INCIDENT

Refer to EC-834, "TROUBLE DIAGNOSIS FOR INTERMITTENT INCIDENT" .

>> **INSPECTION END**

Component Inspection

UBS00JDT

THROTTLE POSITION SENSOR

1. Reconnect all harness connectors disconnected.
2. Perform EC-749, "Throttle Valve Closed Position Learning" .
3. Turn ignition switch ON.
4. Set shift lever to D position (A/T) or 1st position (M/T).
5. Check voltage between ECM terminals 50 (TP sensor 1 signal), 69 (TP sensor 2 signal) and ground under the following conditions.

Terminal	Accelerator pedal	Voltage
50 (Throttle position sensor 1)	Fully released	More than 0.36V
	Fully depressed	Less than 4.75V
69 (Throttle position sensor 2)	Fully released	Less than 4.75V
	Fully depressed	More than 0.36V

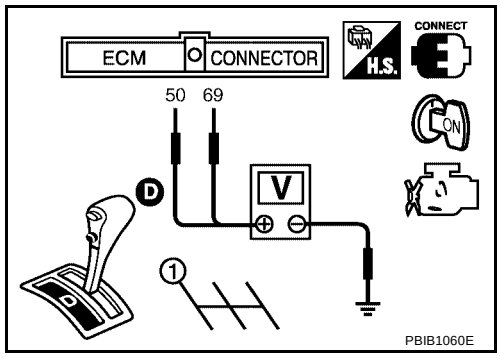

6. If NG, replace electric throttle control actuator and go to the next step.
7. Perform EC-749, "Throttle Valve Closed Position Learning" .
8. Perform EC-750, "Idle Air Volume Learning" .

Remove and Installation

UBS00JDU

ELECTRIC THROTTLE CONTROL ACTUATOR

Refer to EM-108, "INTAKE MANIFOLD" .

DTC P0300 - P0304 NO. 4 - 1 CYLINDER MISFIRE, MULTIPLE CYLINDER MISFIRE

PFP:00020

On Board Diagnosis Logic

UBS00JVL

When a misfire occurs, engine speed will fluctuate. If the engine speed fluctuates enough to cause the crankshaft position (CKP) sensor (POS) signal to vary, ECM can determine that a misfire is occurring.

Sensor	Input Signal to ECM	ECM function
Crankshaft position sensor (POS)	Engine speed	On board diagnosis of misfire

The misfire detection logic consists of the following two conditions.

1. One Trip Detection Logic (Three Way Catalyst Damage)
   On the first trip that a misfire condition occurs that can damage the three way catalyst (TWC) due to overheating, the MIL will blink.
   When a misfire condition occurs, the ECM monitors the CKP sensor signal every 200 engine revolutions for a change.
   When the misfire condition decreases to a level that will not damage the TWC, the MIL will turn off.
   If another misfire condition occurs that can damage the TWC on a second trip, the MIL will blink.
   When the misfire condition decreases to a level that will not damage the TWC, the MIL will remain on.
   If another misfire condition occurs that can damage the TWC, the MIL will begin to blink again.
2. Two Trip Detection Logic (Exhaust quality deterioration)
   For misfire conditions that will not damage the TWC (but will affect vehicle emissions), the MIL will only light when the misfire is detected on a second trip. During this condition, the ECM monitors the CKP sensor signal every 1,000 engine revolutions.
   A misfire malfunction can be detected on any one cylinder or on multiple cylinders.

DTC No.	Trouble diagnosis name	DTC detecting condition	Possible cause
P0300 0300	Multiple cylinder misfire detected	Multiple cylinder misfire.	● Improper spark plug ● Insufficient compression ● Incorrect fuel pressure ● The injector circuit is open or shorted ● Fuel injector ● Intake air leak ● The ignition signal circuit is open or shorted ● Lack of fuel ● Signal plate ● Heated oxygen sensor 1*1 ● Air fuel ratio (A/F) sensor 1*2 ● Incorrect PCV hose connection
P0301 0301	No.1 cylinder misfire detected	No. 1 cylinder misfires.	
P0302 0302	No. 2 cylinder misfire detected	No. 2 cylinder misfires.	
P0303 0303	No. 3 cylinder misfire detected	No. 3 cylinder misfires.	
P0304 0304	No. 4 cylinder misfire detected	No. 4 cylinder misfires.	

*1: A/T models ULEV and M/T models.
*2: A/T models except ULEV.

DTC Confirmation Procedure

UBS00JVM

CAUTION:
Always drive vehicle in safe manner according to traffic conditions and obey all traffic laws when driving.

NOTE:
If DTC Confirmation Procedure has been previously conducted, always turn ignition switch OFF and wait at least 10 seconds before conducting the next test.

WITH CONSULT-II

1. Turn ignition switch ON, and select “DATA MONITOR” mode with CONSULT-II.
2. Start engine and warm it up to normal operating temperature.
3. Turn ignition switch OFF and wait at least 10 seconds.
4. Restart engine and let it idle for about 15 minutes.
5. If 1st trip DTC is detected, go to EC-981, "Diagnostic Procedure".

   NOTE:
   If 1st trip DTC is not detected during above procedure, performing the following procedure is advised.

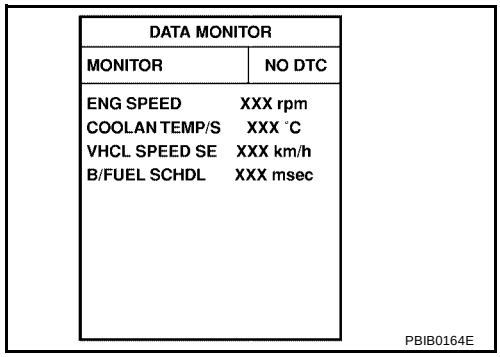

a. Turn ignition switch OFF and wait at least 10 seconds.
b. Start engine and drive the vehicle under the similar conditions to (1st trip) Freeze Frame Data for a certain time. Refer to the table below.
   Hold the accelerator pedal as steady as possible.

   The similar conditions to (1st trip) Freeze Frame Data means the vehicle operation that the following conditions should be satisfied at the same time.

Engine speed	Engine speed in the freeze frame data ± 400 rpm
Vehicle speed	Vehicle speed in the freeze frame data ± 10 km/h (6 MPH)
Engine coolant temperature (T) condition	When the freeze frame data shows lower than 70 °C (158 °F), T should be lower than 70 °C (158 °F).
	When the freeze frame data shows higher than or equal to 70 °C (158 °F), T should be higher than or equal to 70 °C (158 °F).

The time to driving varies according to the engine speed in the freeze frame data.

Engine speed	Time
Around 1,000 rpm	Approximately 10 minutes
Around 2,000 rpm	Approximately 5 minutes
More than 3,000 rpm	Approximately 3.5 minutes

WITH GST

Follow the procedure “WITH CONSULT-II” above.

Diagnostic Procedure

UBS00JVN

1. CHECK FOR INTAKE AIR LEAK AND PCV HOSE

1. Start engine and run it at idle speed.
2. Listen for the sound of the intake air leak.
3. Check PCV hose connection.

OK or NG

OK >> GO TO 2.
NG >> Discover air leak location and repair.

2. CHECK FOR EXHAUST SYSTEM CLOGGING

Stop engine and visually check exhaust tube, three way catalyst (manifold) and muffler for dents.

OK or NG

OK >> GO TO 3.
NG >> Repair or replace it.

3. PERFORM POWER BALANCE TEST

With CONSULT-II

1. Perform “POWER BALANCE” in “ACTIVE TEST” mode.
2. Is there any cylinder which does not produce a momentary engine speed drop?

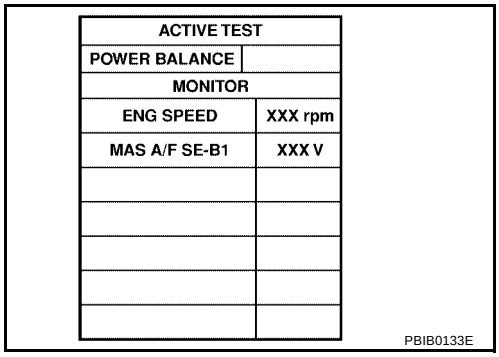

ACTIVE TEST	
POWER BALANCE	
MONITOR	
ENG SPEED	XXX rpm
MAS A/F SE-B1	XXX V

PBIB0133E

Without CONSULT-II

When disconnecting each injector harness connector one at a time, is there any cylinder which does not produce a momentary engine speed drop?

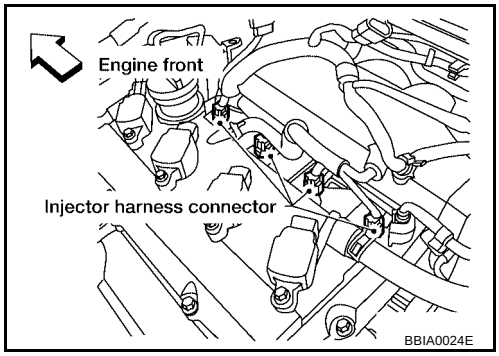

BBIA0024E

Yes or No

Yes >> GO TO 4.
No >> GO TO 7.

4. CHECK INJECTOR

Does each injector make an operating sound at idle?

Yes or No

Yes >> GO TO 5.
No >> Check injector(s) and circuit(s). Refer to EC-1336, "INJECTOR CIRCUIT" .

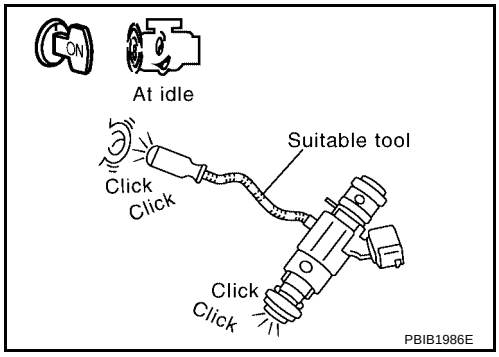

PBIB1986E

5. CHECK FUNCTION OF IGNITION COIL-I

CAUTION:
Do the following procedure in the place where ventilation is good without the combustible.

1. Turn ignition switch OFF.
2. Remove fuel pump fuse located in fuse box to release fuel pressure.

   NOTE:
   Do not use CONSULT-II to release fuel pressure, or fuel pressure applies again during the following procedure.
3. Start engine.
4. After engine stalls, crank it 2 or 3 times to release all fuel pressure.
5. Turn ignition switch OFF.
6. Remove all ignition coil harness connectors to avoid the electrical discharge from the ignition coils.

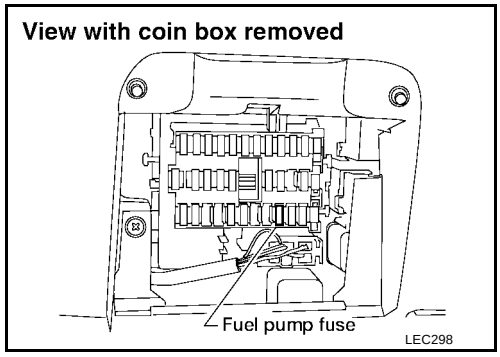

7. Remove ignition coil and spark plug of the cylinder to be checked.
8. Crank engine for 5 seconds or more to remove combustion gas in the cylinder.
9. Connect spark plug and harness connector to ignition coil.
10. Fix ignition coil using a rope etc. with gap of 13 - 17 mm between the edge of the spark plug and grounded metal portion as shown in the figure.
11. Crank engine for about three seconds, and check whether spark is generated between the spark plug and the grounded metal portion.

    Spark should be generated.

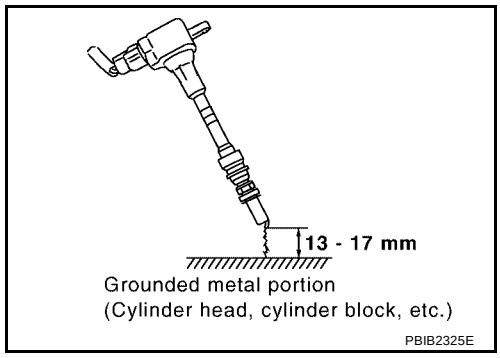

CAUTION:
- **Do not approach to the spark plug and the ignition coil within 50cm. Be careful not to get an electrical shock while checking, because the electrical discharge voltage becomes 20kV or more.**
- **It might cause to damage the ignition coil if the gap of 17 mm or more is taken.**

NOTE:
When the gap is 13 mm or less, the spark might be generated even if the coil is malfunctioning.

OK or NG

OK >> GO TO 9.
NG >> GO TO 6.

6. CHECK FUNCTION OF IGNITION COIL-II

1. Turn ignition switch OFF.
2. Disconnect spark plug and connect a known-good spark plug.
3. Crank engine for about 3 seconds, and recheck whether spark is generated between the spark plug and the grounded metal portion.

   Spark should be generated.

OK or NG

OK >> GO TO 7.
NG >> Check ignition coil, power transistor and their circuits. Refer to EC-1314, "IGNITION SIGNAL" .

7. CHECK SPARK PLUGS

Check the spark plugs and check for fouling, etc.

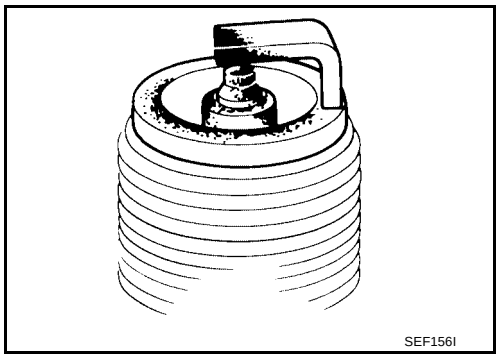

OK or NG

OK >> GO TO 8.
NG >> Repair or replace spark plug (s) with standard type one (s). For spark plug type ignition coil. Refer to MA-28, "Changing Spark Plugs (Double Platinum - Tipped Type)" .

8. CHECK FUNCTION OF IGNITION COIL-III

1. Reconnect the initial spark plugs.
2. Crank engine for about 3 seconds, and recheck whether spark is generated between the spark plug and the grounded portion.

Spark should be generated.

OK or NG

OK >> **INSPECTION END**
NG >> Replace spark plug(s) with standard type one(s). For spark plug type, refer to MA-28, "Changing Spark Plugs (Double Platinum - Tipped Type)" .

9. CHECK COMPRESSION PRESSURE

Check compression pressure.
Refer to EM-148, "CHECKING COMPRESSION PRESSURE" .

Standard:	**1,250 kPa (12,8 kg/cm^2 , 181 psi)/300 rpm**
Minimum:	**1,060 kPa (10,8 kg/cm^2 , 154 psi)/300 rpm**
Difference between each cylinder:	**98 kPa (1.0 kg/cm^2 , 14 psi)/300 rpm**

OK or NG

OK >> GO TO 10.
NG >> Check pistons, piston rings, valves, valve seats and cylinder head gaskets.

10. CHECK FUEL PRESSURE

1. Install all removed parts.
2. Release fuel pressure to zero. Refer to EC-752, "FUEL PRESSURE RELEASE" .
3. Install fuel pressure gauge and check fuel pressure.

At idle: Approximately 350 kPa (3.57 kg/cm^2 , 51 psi)

OK or NG

OK >> GO TO 12.
NG >> GO TO 11.

11. DETECT MALFUNCTIONING PART

Check the following.

- Fuel pump and circuit (Refer to EC-1342, "FUEL PUMP CIRCUIT" .)
- Fuel pressure regulator (Refer to EC-753, "FUEL PRESSURE CHECK" .)
- Fuel lines (Refer to EM-121, "FUEL INJECTOR AND FUEL TUBE" .)
- Fuel filter for clogging

>> Repair or replace.

12. CHECK IGNITION TIMING

Checking the following items. Refer to EC-722, "Basic Inspection" .

Items	Specifications	
Target idle speed	M/T	700 ± 50 rpm (in Neutral position)
	A/T	700 ± 50 rpm (in P or N position)
Ignition timing	M/T	15 ± 5° BTDC (in Neutral position)
	A/T	15 ± 5° BTDC (in P or N position)

OK or NG

OK (A/T models ULEV and M/T models)>>GO TO 13.
OK (A/T models except ULEV)>>GO TO 14.
NG >> Follow the EC-722, "Basic Inspection" .

13. CHECK HEATED OXYGEN SENSOR 1

Refer to EC-910, "Component Inspection" .

OK or NG

OK >> GO TO 16.
NG >> Replace heated oxygen sensor 1.

14. CHECK A/F SENSOR 1 INPUT SIGNAL CIRCUIT

1. Turn ignition switch OFF.
2. Disconnect ECM harness connector and A/F sensor 1 harness connector.
3. Check harness continuity between the following terminals. Refer to Wiring Diagram.

A/F sensor 1 terminal	ECM terminal
1	16
5	35
6	56
2	75

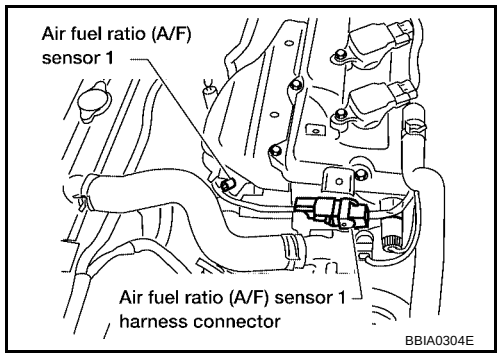

Continuity should exist.

4. Check harness continuity between ECM terminals 16, 35, 56, 75 or A/F sensor 1 terminals 1, 2, 5, 6 and ground. Refer to Wiring Diagram.

Continuity should not exist.

5. Also check harness for short to power.

OK or NG

OK >> GO TO 15.
NG >> Repair open circuit or short to ground or short to power in harness or connectors.

15. CHECK A/F SENSOR 1 HEATER

Refer to EC-1103, "Component Inspection" .

OK or NG

OK >> GO TO 16.
NG >> Replace A/F sensor 1.

16. CHECK MASS AIR FLOW SENSOR

With CONSULT-II

Check “MASS AIR FLOW” in “DATA MONITOR” mode with CONSULT-II.

1.0 - 4.0 g·m/sec:	**at idling**
4.0 - 10.0 g·m/sec:	**at 2,500 rpm**

With GST

Check mass air flow sensor signal in “Service $01” with GST.

1.0 - 4.0 g·m/sec:	**at idling**
4.0 - 10.0 g·m/sec:	**at 2,500 rpm**

OK or NG

OK >> GO TO 17.
NG >> Check connectors for rusted terminals or loose connections in the mass air flow sensor circuit or ground. Refer to EC-861, "DTC P0101 MAF SENSOR" .

17. CHECK SYMPTOM MATRIX CHART

Check items on the rough idle symptom in EC-765, "Symptom Matrix Chart" .

OK or NG

OK >> GO TO 18.
NG >> Repair or replace.

18. ERASE THE 1ST TRIP DTC

Some tests may cause a 1st trip DTC to be set.
Erase the 1st trip DTC from the ECM memory after performing the tests. Refer to EC-712, "HOW TO ERASE EMISSION-RELATED DIAGNOSTIC INFORMATION" .

>> GO TO 19.

19. CHECK INTERMITTENT INCIDENT

Perform EC-834, "TROUBLE DIAGNOSIS FOR INTERMITTENT INCIDENT" .

>> **INSPECTION END**

DTC P0327, P0328 KS

PFP:22060

Component Description

UBS00JDY

The knock sensor is attached to the cylinder block. It senses engine knocking using a piezoelectric element. A knocking vibration from the cylinder block is sensed as vibrational pressure. This pressure is converted into a voltage signal and sent to the ECM.

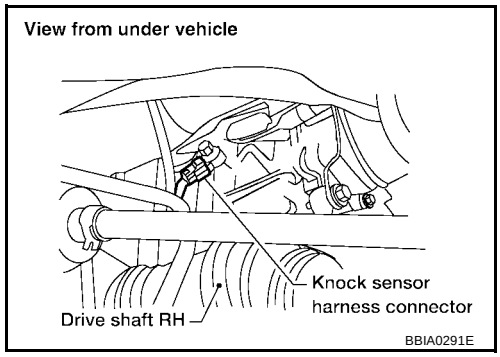

On Board Diagnosis Logic

UBS00JDZ

The MIL will not light up for these diagnoses.

DTC No.	Trouble Diagnosis Name	DTC Detected Condition	Possible Cause
P0327 0327	Knock sensor circuit low input	An excessively low voltage from the sensor is sent to ECM.	● Harness or connectors (The sensor circuit is open or shorted.) ● Knock sensor
P0328 0328	Knock sensor circuit high input	An excessively high voltage from the sensor is sent to ECM.	

DTC Confirmation Procedure

UBS00JE0

NOTE:
If DTC Confirmation Procedure has been previously conducted, always turn ignition switch OFF and wait at least 10 seconds before conducting the next test.
TESTING CONDITION:
Before performing the following procedure, confirm that battery voltage is more than 10V at idle.

WITH CONSULT-II

1. Turn ignition switch ON and select “DATA MONITOR” mode with CONSULT-II.
2. Start engine and run it for at least 5 seconds at idle speed.
3. If 1st trip DTC is detected, go to EC-989, "Diagnostic Procedure"
.

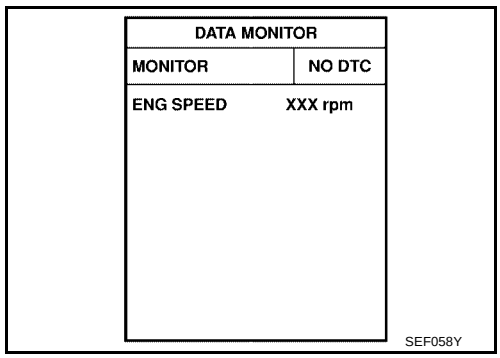

WITH GST

Follow the procedure “WITH CONSULT-II” above.

Wiring Diagram

UBS00JE1

EC-KS-01

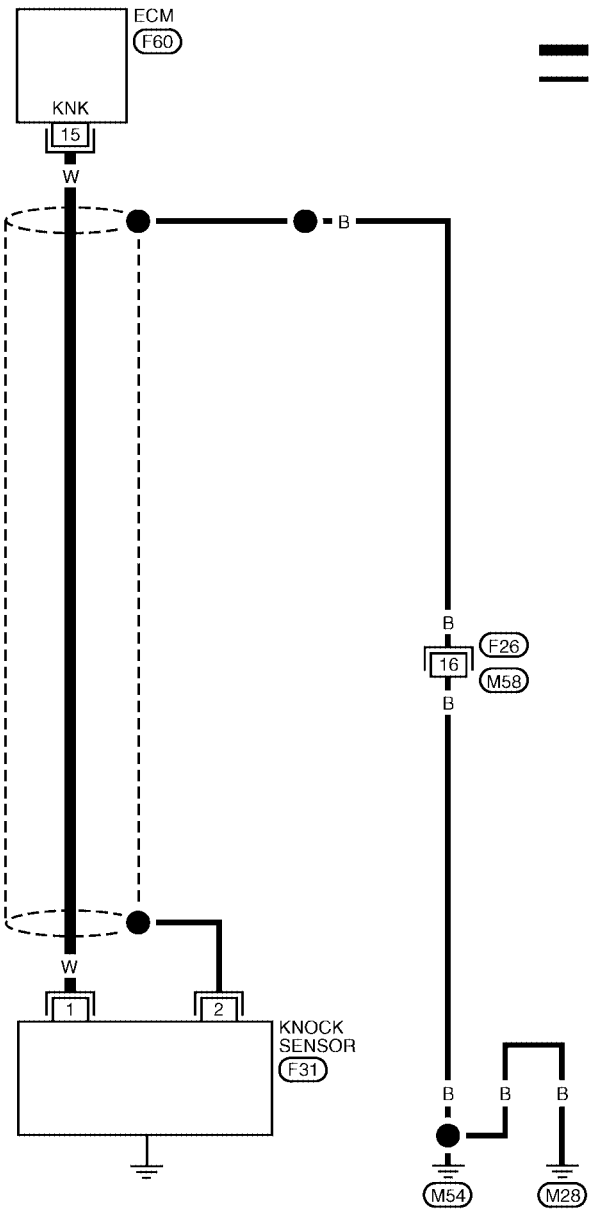

: DETECTABLE LINE FOR DTC

: NON-DETECTABLE LINE FOR DTC

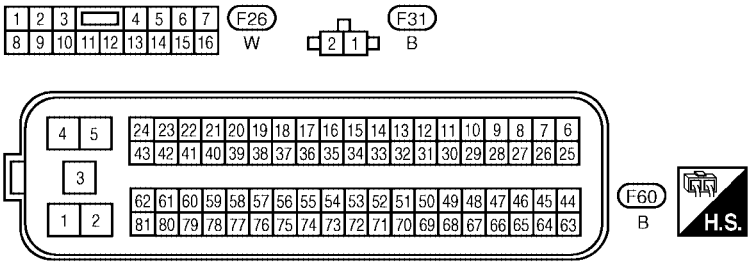

BBWA1462E

Specification data are reference values and are measured between each terminal and ground.

CAUTION:

Do not use ECM ground terminals when measuring input/output voltage. Doing so may result in damage to the ECM's transistor. Use a ground other than ECM terminals, such as the ground.

TERMINAL NO.	WIRE COLOR	ITEM	CONDITION	DATA (DC Voltage)
15	W	Knock sensor	**[Engine is running]** ● Idle speed	Approximately 2.5V

Diagnostic Procedure

UBS00JE2

1. CHECK KNOCK SENSOR INPUT SIGNAL CIRCUIT-I

1. Turn ignition switch OFF.
2. Disconnect ECM harness connector.
3. Check resistance between ECM terminal 15 and ground. Refer to Wiring Diagram.

   NOTE:
   It is necessary to use an ohmmeter which can measure more than 10 MΩ.

   Resistance: Approximately 530 - 590kΩ [at 20°C (68°F)]

4. Also check harness for short to ground and short to power.

OK or NG

OK >> GO TO 4.
NG >> GO TO 2.

2. CHECK KNOCK SENSOR INPUT SIGNAL CIRCUIT-II

1. Disconnect knock sensor harness connector.
2. Check harness continuity between ECM terminal 15 and knock sensor terminal 1.
   Refer to Wiring Diagram.

   Continuity should exist.

3. Also check harness for short to ground and short to power.

OK or NG

OK >> GO TO 3.
NG >> Repair open circuit or short to ground or short to power in harness or connectors.

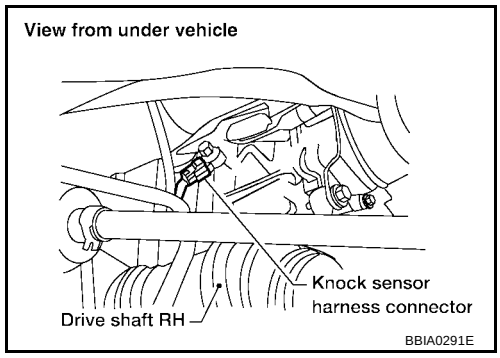

3. CHECK KNOCK SENSOR

Refer to EC-990, "Component Inspection" .

OK or NG

OK >> GO TO 6.
NG >> Replace knock sensor.

4. CHECK GROUND CONNECTIONS

Loosen and retighten ground two screws on the body.
Refer to EC-841, "Ground Inspection" .

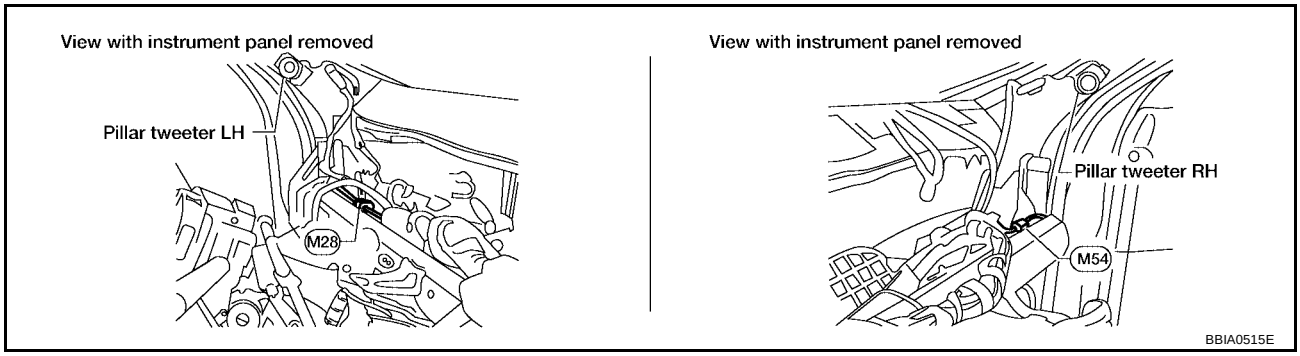

OK or NG

OK >> GO TO 5.
NG >> Repair or replace ground connections.

5. CHECK KNOCK SENSOR SHIELD CIRCUIT FOR OPEN AND SHORT

1. Reconnect knock sensor harness connector.
2. Check harness continuity between knock sensor terminal 2 and ground.

Continuity should exist

3. Also check harness for short to power.

OK or NG

OK >> GO TO 7.
NG >> GO TO 6.

6. DETECT MALFUNCTIONING RART

Check the following.

- Harness connectors F26, M58
- Harness for open or short between knock sensor terminal 2 and ground

>> Repair open circuit or short to power in harness or connectors.

7. CHECK INTERMITTENT INCIDENT

Refer to EC-834, "TROUBLE DIAGNOSIS FOR INTERMITTENT INCIDENT" .

>> **INSPECTION END**

Component Inspection

UBS00JE3

KNOCK SENSOR

Check resistance between knock sensor terminal 1 and ground.

NOTE:
It is necessary to use an ohmmeter which can measure more than 10 MΩ.

Resistance: Approximately 530 - 590kΩ [at 20°C (68°F)]

CAUTION:
Do not use any knock sensors that have been dropped or physically damaged. Use only new ones.

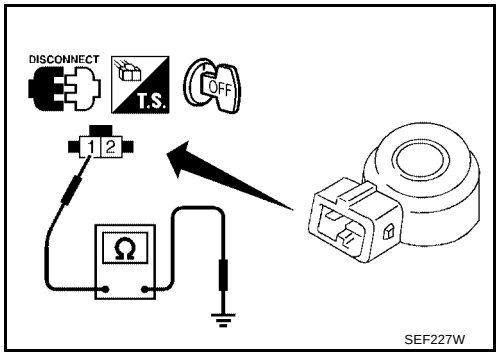

Removal and Installation

UBS00JE4

KNOCK SENSOR

Refer to EM-164, "CYLINDER BLOCK" .

DTC P0335 CKP SENSOR (POS)

PFP:23731

Component Description

UBS00JE5

The crankshaft position sensor (POS) is located on the cylinder block rear housing facing the gear teeth (cogs) of the signal plate at the end of the crankshaft. It detects the fluctuation of the engine revolution.
The sensor consists of a permanent magnet and Hall IC.
When the engine is running, the high and low parts of the teeth cause the gap with the sensor to change.
The changing gap causes the magnetic field near the sensor to change.
Due to the changing magnetic field, the voltage from the sensor changes.
The ECM receives the voltage signal and detects the fluctuation of the engine revolution.
ECM receives the signals as shown in the figure.

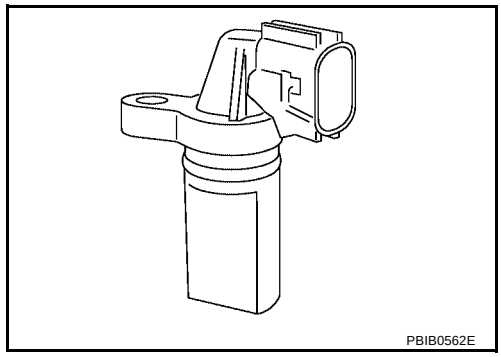

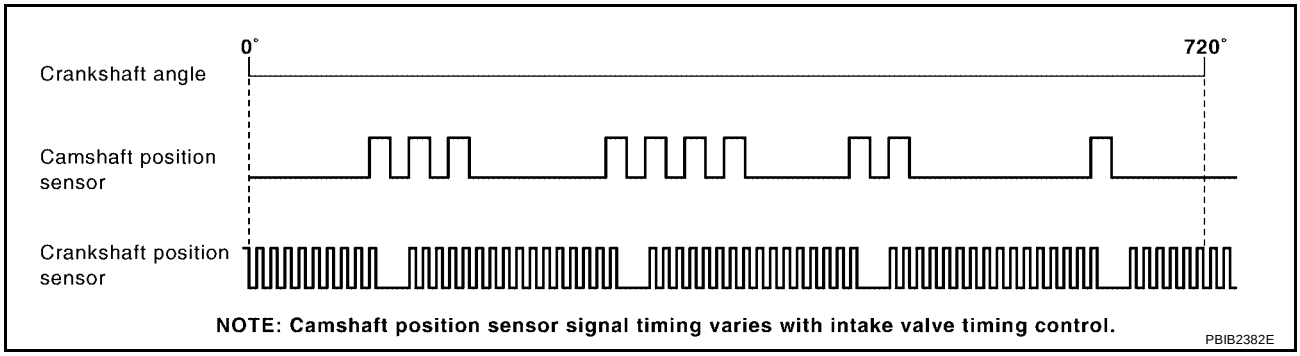

CONSULT-II Reference Value in Data Monitor Mode

UBS00JE6

Specification data are reference values.

MONITOR ITEM	CONDITION	SPECIFICATION
ENG SPEED	● Run engine and compare the CONSULT-II value with tachometer indication.	Almost the same speed as the tachometer indication.

On Board Diagnosis Logic

UBS00JE7

DTC No.	Trouble diagnosis name	DTC detecting condition	Possible cause
P0335 0335	Crankshaft position sensor (POS) circuit	● The crankshaft position sensor (POS) signal is not detected by the ECM during the first few seconds of engine cranking. ● The proper pulse signal from the crankshaft position sensor (POS) is not sent to ECM while the engine is running. ● The crankshaft position sensor (POS) signal is not in the normal pattern during engine running.	● Harness or connectors (The sensor circuit is open or shorted) ● Crankshaft position sensor (POS) ● Signal plate

DTC Confirmation Procedure

UBS00JE8

NOTE:
If DTC Confirmation Procedure has been previously conducted, always turn ignition switch OFF and wait at least 10 seconds before conducting the next test.
TESTING CONDITION:
Before performing the following procedure, confirm that battery voltage is more than 10.5V with ignition switch ON.

WITH CONSULT-II

1. Turn ignition switch ON and select “DATA MONITOR” mode with CONSULT-II.
2. Crank engine for at least 2 seconds and run it for at least 5 seconds at idle speed.
3. If 1st trip DTC is detected, go to EC-995, "Diagnostic Procedure".

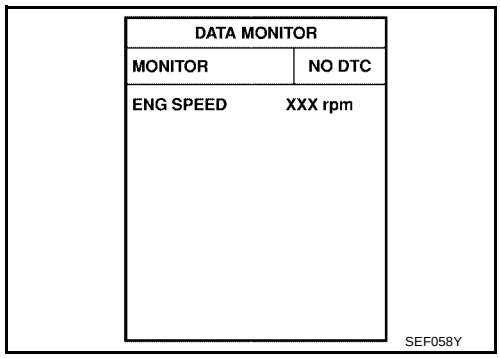

WITH GST

Follow the procedure “WITH CONSULT-II” above.

Wiring Diagram

UBS00JE9

EC-POS-01

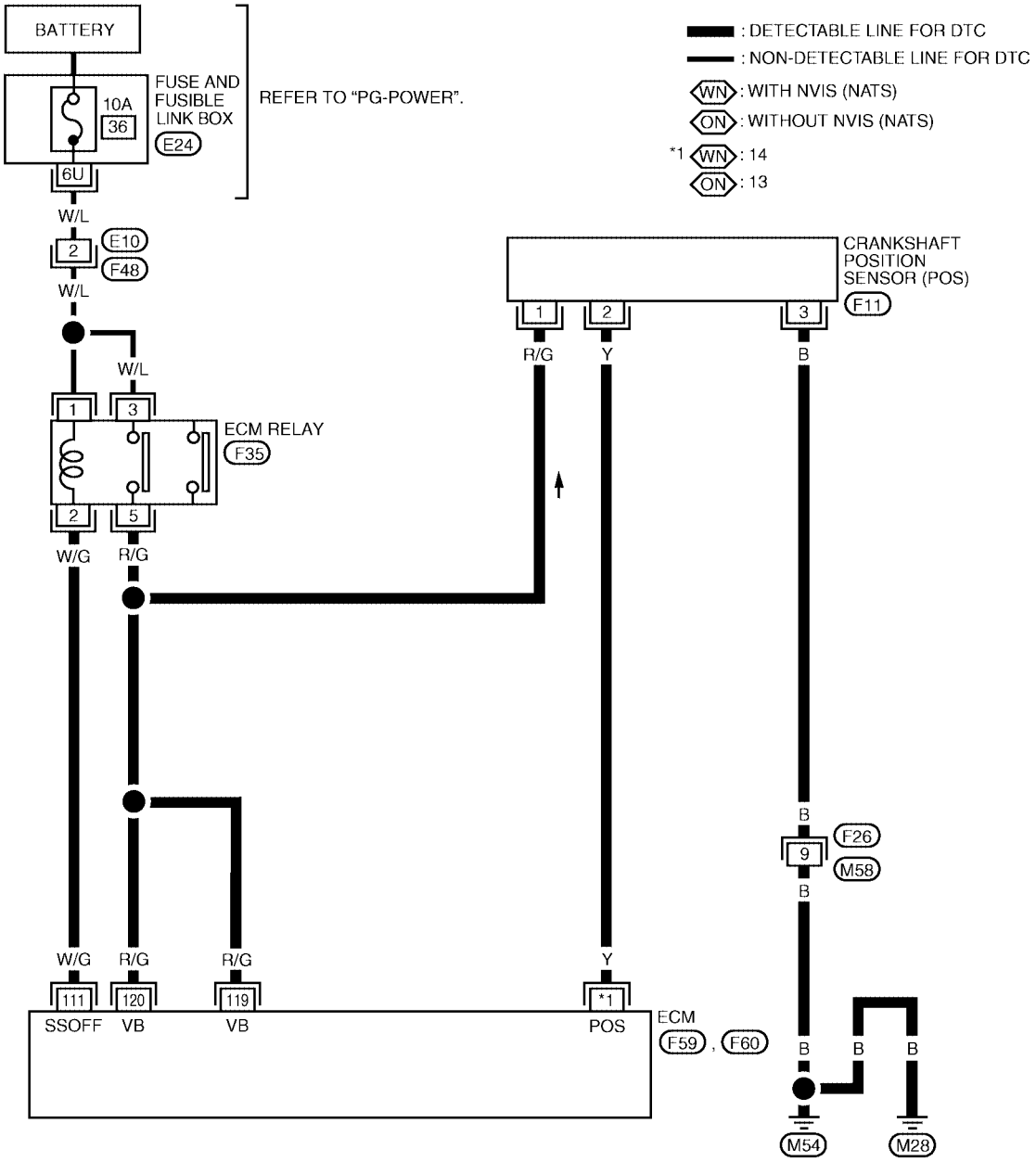

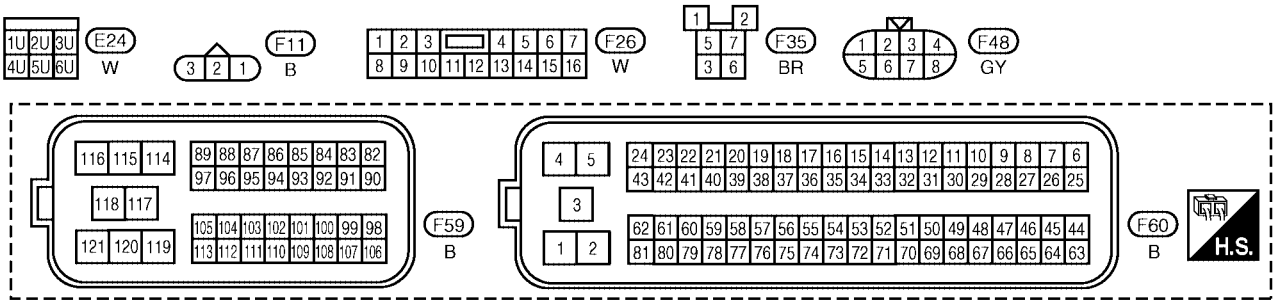

BBWA1408E

Specification data are reference values and are measured between each terminal and ground.
Pulse signal is measured by CONSULT-II.

CAUTION:
Do not use ECM ground terminals when measuring input/output voltage. Doing so may result in damage to the ECM's transistor. Use a ground other than ECM terminals, such as the ground.

TERMINAL NO.	WIRE COLOR	ITEM	CONDITION	DATA (DC Voltage)
13*1 (14)*2	Y	Crankshaft position sensor (POS)	**[Engine is running]** ● **Warm-up condition** ● Idle speed	Approximately 3.0V★ 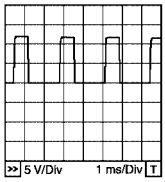 PBIB0527E
			[Engine is running] ● Engine speed is 2,000 rpm	Approximately 3.0V★ 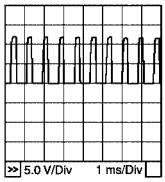 PBIB0528E

★: Average voltage for pulse signal (Actual pulse signal can be confirmed by oscilloscope.)
*1: Without NVIS (NATS).
*2: With NVIS (NATS).

Diagnostic Procedure

UBS00JEA

1. CHECK GROUND CONNECTIONS

1. Turn ignition switch OFF.
2. Loosen and retighten two ground screws on the body. Refer to EC-841, "Ground Inspection" .

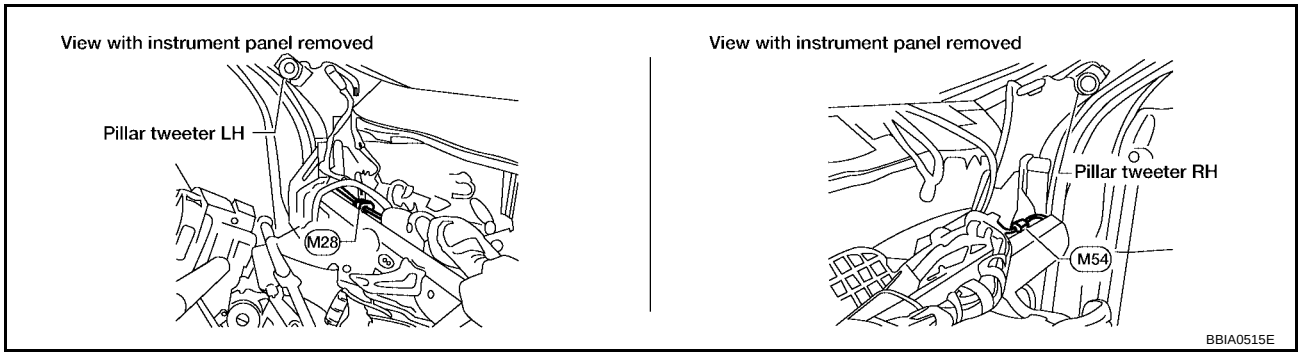

OK or NG

OK >> GO TO 2.
NG >> Repair or replace ground connections.

2. CHECK CRANKSHAFT POSITION (CKP) SENSOR (POS) POWER SUPPLY CIRCUIT

1. Disconnect crankshaft position (CKP) sensor (POS) harness connector.
2. Turn ignition switch ON.

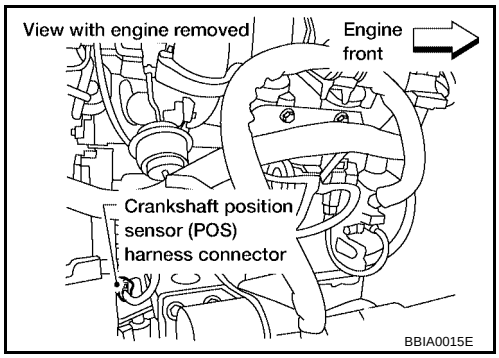

3. Check voltage between CKP sensor (POS) terminal 1 and ground with CONSULT-II or tester.

   Voltage: Battery voltage

4. Also check harness for short to ground and short to power.

OK or NG

OK >> GO TO 4.
NG >> GO TO 3.

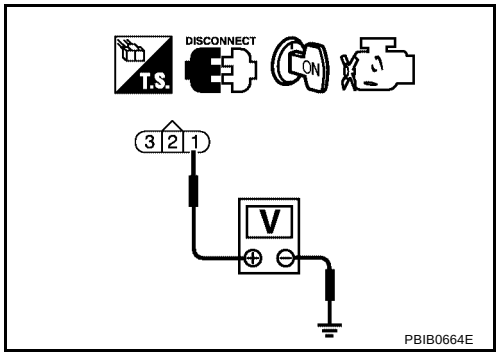

3. DETECT MALFUNCTIONING PART

Check the following.

- Harness for open or short between crankshaft position sensor (POS) and ECM
- Harness for open or short between crankshaft position sensor (POS) and ECM relay

>> Repair open circuit or short to ground or short to power in harness or connectors.

4. CHECK CKP (POS) GROUND CIRCUIT FOR OPEN AND SHORT

1. Turn ignition switch OFF.
2. Check harness continuity between CKP sensor (POS) terminal 3 and ground.
   Refer to Wiring Diagram.

   Continuity should exist.

3. Also check harness for and short to power.

OK or NG

OK >> GO TO 6.
NG >> GO TO 5.

5. DETECT MALFUNCTIONING PART

Check the following.

- Harness connectors F26, M58
- Harness for open or short between crankshaft position sensor (POS) and ground.

>> Repair open circuit or short to power in harness or connectors.

6. CHECK CKP SENSOR (POS) INPUT SIGNAL CIRCUIT FOR OPEN AND SHORT

1. Disconnect ECM harness connector.
2. Check harness continuity between ECM terminal 13 [Without NVIS (NATS)] or 14 [With NVIS (NATS)] and CKP sensor (POS) terminal 2.
   Refer to Wiring Diagram.

   Continuity should exist.

3. Also check harness for short to ground and short to power.

OK or NG

OK >> GO TO 7.
NG >> Repair open circuit or short to ground or short to power in harness or connectors.

7. CHECK CRANKSHAFT POSITION SENSOR (POS)

Refer to EC-997, "Component Inspection" .

OK or NG

OK >> GO TO 8.
NG >> Replace crankshaft position sensor (POS).

8. CHECK GEAR TOOTH

Visually check for chipping signal plate gear tooth.

OK or NG

OK >> GO TO 9.
NG >> Replace the signal plate.

9. CHECK INTERMITTENT INCIDENT

Refer to EC-834, "TROUBLE DIAGNOSIS FOR INTERMITTENT INCIDENT" .

>> **INSPECTION END**

Component Inspection

UBS00JEB

CRANKSHAFT POSITION SENSOR (POS)

1. Loosen the fixing bolt of the sensor.
2. Disconnect crankshaft position sensor (POS) harness connector.
3. Remove the sensor.
4. Visually check the sensor for chipping.

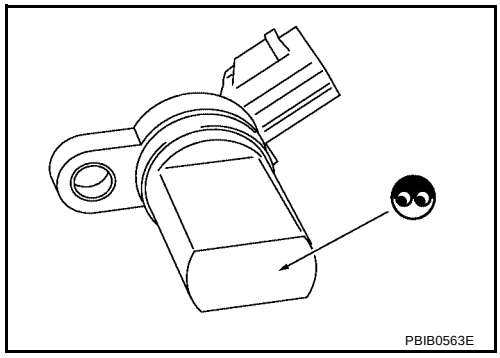

5. Check resistance as shown in the figure.

Terminal No. (Polarity)	Resistance Ω [at 25°C (77°F)]
1 (+) - 2 (-)	Except 0 or ∞
1 (+) - 3 (-)	
2 (+) - 3 (-)	

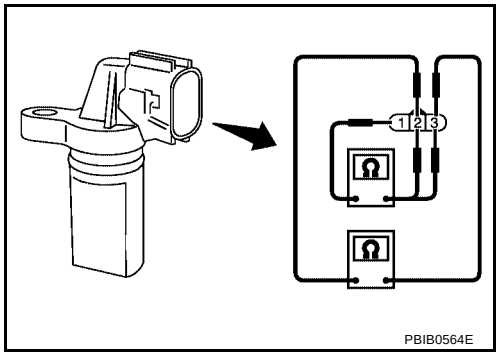

6. If NG, replace crankshaft position sensor (POS).

Removal and Installation

UBS00JEC

CRANKSHAFT POSITION SENSOR (POS)

Refer to EM-164, "CYLINDER BLOCK" .

DTC P0340 CMP SENSOR (PHASE)

PFP:23731

Component Description

UBS00JED

The camshaft position sensor (PHASE) senses the retraction with camshaft (intake) to identify a particular cylinder. The camshaft position sensor (PHASE) senses the piston position.
When the crankshaft position sensor (POS) system becomes inoperative, the camshaft position sensor (PHASE) provides various controls of engine parts instead, utilizing timing of cylinder identification signals.
The sensor consists of a permanent magnet and Hall IC.
When engine is running, the high and low parts of the teeth cause the gap with the sensor to change.
The changing gap causes the magnetic field near the sensor to change.
Due to the changing magnetic field, the voltage from the sensor changes.
ECM receives the signals as shown in the figure.

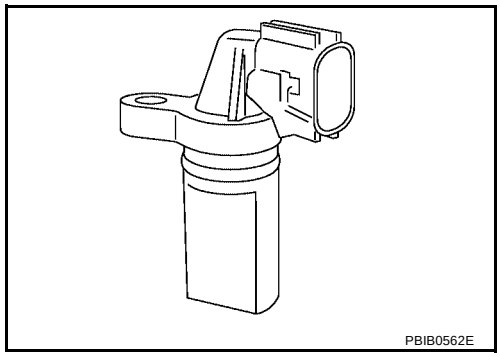

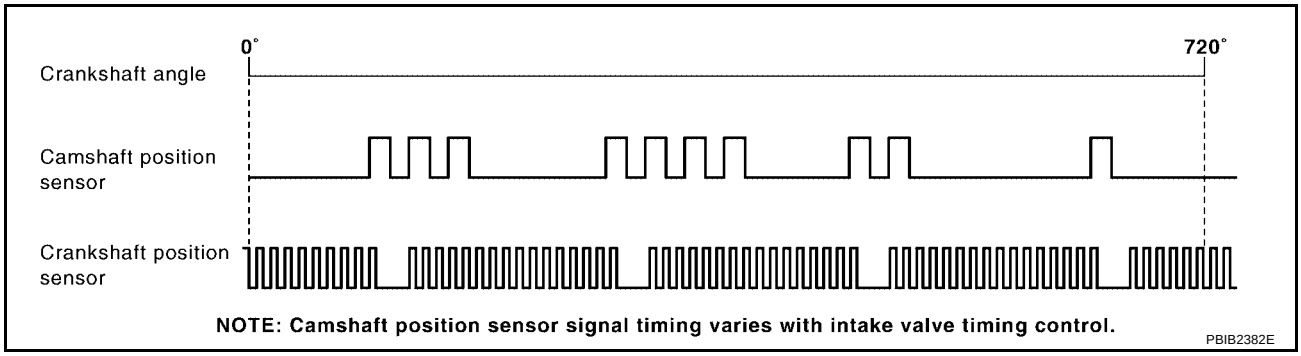

On Board Diagnosis Logic

UBS00JEE

DTC No.	Trouble diagnosis name	DTC detecting condition	Possible cause
P0340 0340	Camshaft position sensor (PHASE) circuit	● The cylinder No. signal is not sent to ECM for the first few seconds during engine cranking. ● The cylinder No. signal is not set to ECM during engine running. ● The cylinder No. signal is not in the normal pattern during engine running.	● Harness or connectors (The sensor circuit is open or shorted) ● Camshaft position sensor (PHASE) ● Camshaft (Intake) ● Starter motor (Refer to SC-21 .) ● Starting system circuit (Refer to SC-9 .) ● Dead (Weak) battery

DTC Confirmation Procedure

UBS00JEF

NOTE:
If DTC Confirmation Procedure has been previously conducted, always turn ignition switch OFF and wait at least 10 seconds before conducting the next test.
TESTING CONDITION:
Before performing the following procedure, confirm that battery voltage is more than 10.5V with ignition switch ON.

WITH CONSULT-II

1. Turn ignition switch ON.

2. Select “DATA MONITOR” mode with CONSULT-II.
3. Crank engine for at least 2 seconds and run it for at least 5 seconds at idle speed.
4. If 1st trip DTC is detected, go to EC-1002, "Diagnostic Procedure" .
   If 1st trip DTC is not detected, go to next step.
5. Maintaining engine speed at more than 800 rpm for at least 5 seconds.
6. If 1st trip DTC is detected, go to EC-1002, "Diagnostic Procedure" .

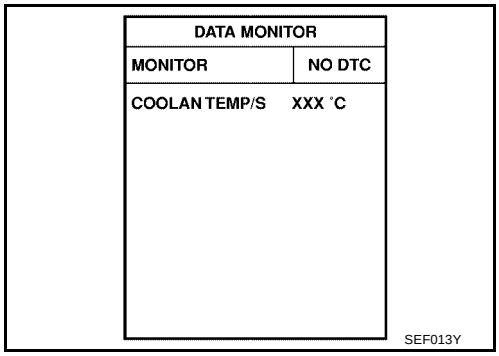

WITH GST

Follow the procedure “WITH CONSULT-II” above.

Wiring Diagram

UBS00JEG

EC-PHASE-01

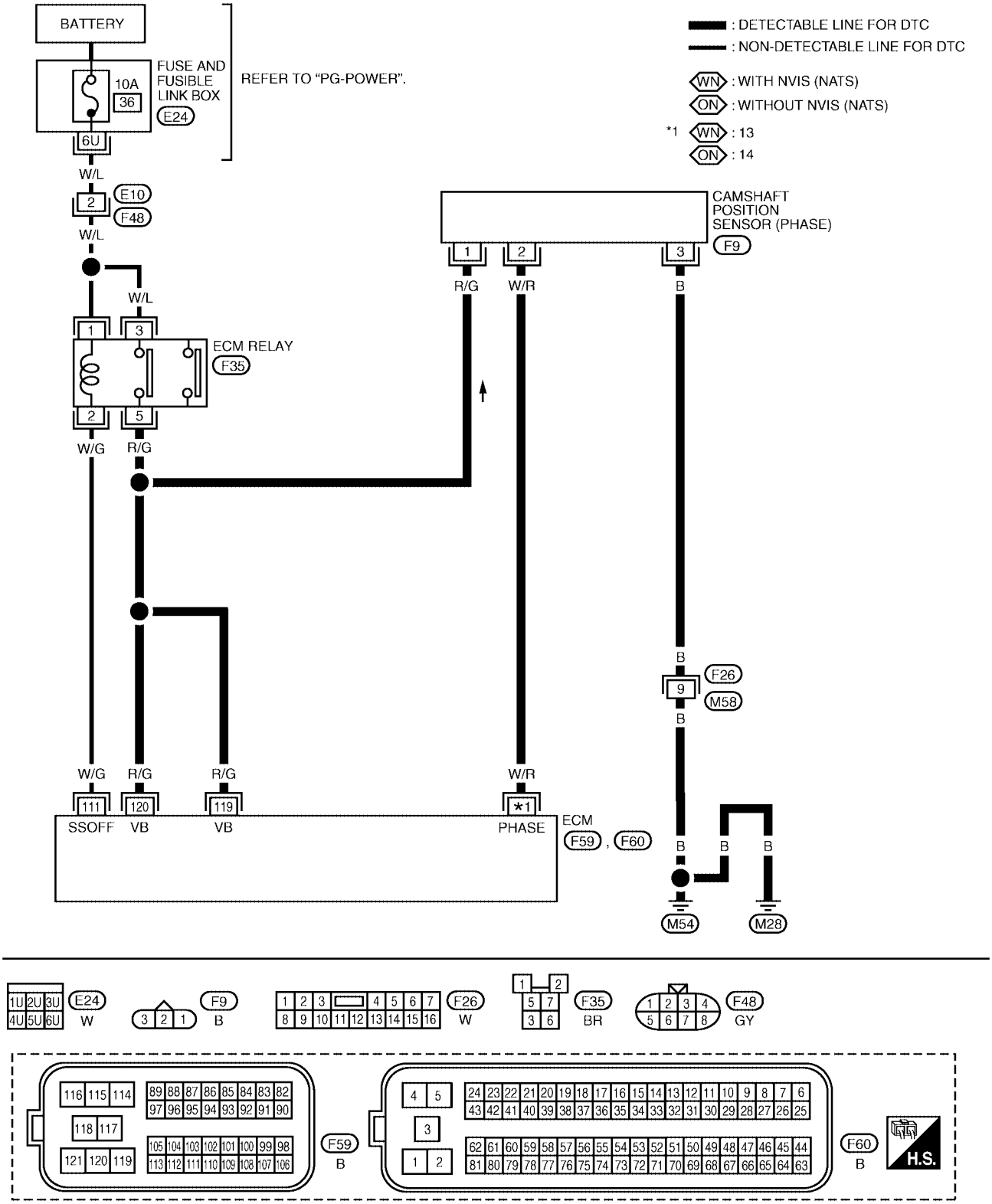

BBWA1417E

Specification data are reference values and are measured between each terminal and ground.
Pulse signal is measured by CONSULT-II.

CAUTION:
Do not use ECM ground terminals when measuring input/output voltage. Doing so may result in damage to the ECM's transistor. Use a ground other than ECM terminals, such as the ground.

TERMINAL NO.	WIRE COLOR	ITEM	CONDITION	DATA (DC Voltage)
13*1 (14)*2	Y	Crankshaft position sensor (PHASE)	**[Engine is running]** ● **Warm-up condition** ● Idle speed	Approximately 3.0V★ 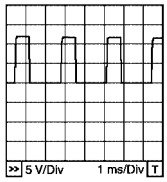 PBIB0527E
			[Engine is running] ● Engine speed is 2,000 rpm	Approximately 3.0V★ 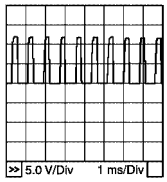 PBIB0528E

★: Average voltage for pulse signal (Actual pulse signal can be confirmed by oscilloscope.)
*1: Without NVIS (NATS).
*2: With NVIS (NATS).

Diagnostic Procedure

UBS00JEH

1. CHECK STARTING SYSTEM

Turn ignition switch to START position.

Does the engine turn over?
Does the starter motor operate?

Yes or No

Yes >> GO TO 2.
No >> Check starting system. (Refer to SC-9, "STARTING SYSTEM" .)

2. CHECK GROUND CONNECTIONS

1. Turn ignition switch OFF.
2. Loosen and retighten two ground screws on the body. Refer to EC-841, "Ground Inspection" .

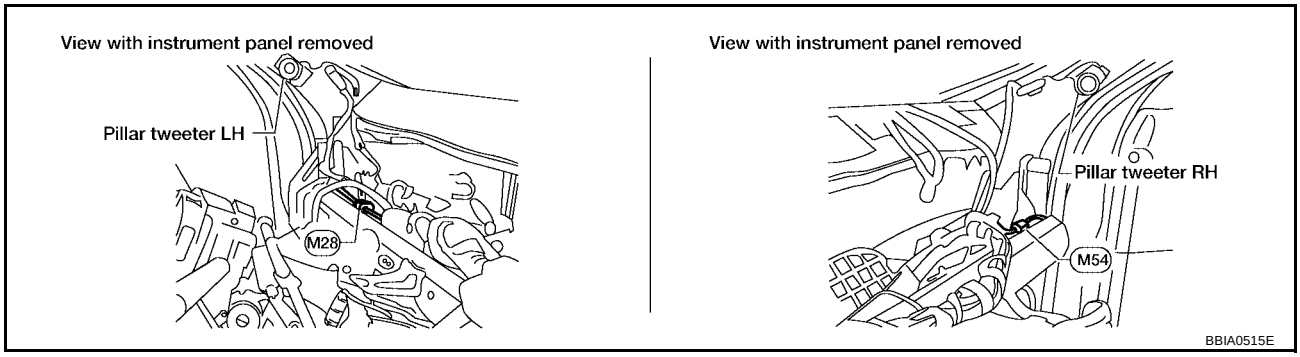

OK or NG

OK >> GO TO 3.
NG >> Repair or replace ground connections.

3. CHECK CAMSHAFT POSITION (CMP) SENSOR (PHASE) POWER SUPPLY CIRCUIT

1. Disconnect camshaft position (CMP) sensor (PHASE) harness connector.
2. Turn ignition switch ON.

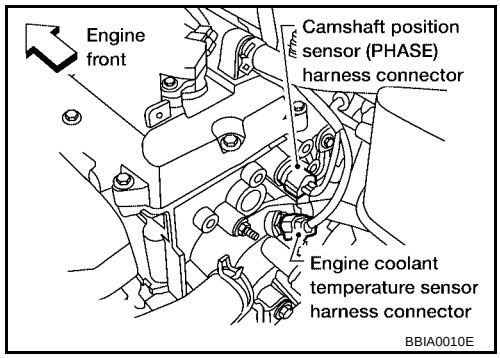

3. Check voltage between CMP sensor (PHASE) terminal 1 and ground with CONSULT-II or tester.

Voltage: Battery voltage

4. Also check harness for short to ground and short to power.

OK or NG

OK >> GO TO 5.
NG >> GO TO 4.

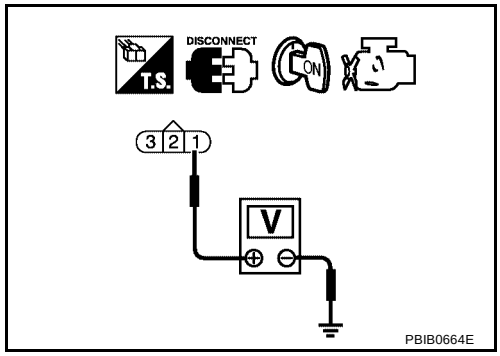

4. DETECT MALFUNCTIONING PART

Check the following.

- Harness for open or short between camshaft position sensor (PHASE) and ECM
- Harness for open or short between camshaft position sensor (PHASE) and ECM relay

>> Repair open circuit or short to ground or short to power in harness or connectors.

5. CHECK CMP SENSOR (PHASE) GROUND CIRCUIT FOR OPEN AND SHORT

1. Turn ignition switch OFF.
2. Check harness continuity between CMP sensor (PHASE) terminal 3 and ground.

Continuity should exist.

3. Also check harness for short to power.

OK or NG

OK >> GO TO 7.
NG >> GO TO 6.

6. DETECT MALFUNCTIONING PART

Check the following.

- Harness connector F26, M58
- Harness for open or short between CMP sensor (PHASE) and ground.

>> Repair open circuit or short to power in harness or connectors.

7. CHECK CMP SENSOR (PHASE) INPUT SIGNAL CIRCUIT FOR OPEN AND SHORT

1. Disconnect ECM harness connector.
2. Check harness continuity between ECM terminal 14 [Without NVIS (NATS)] or 13 [With NVIS (NATS)] and CMP sensor (PHASE) terminal 2.
   Refer to Wiring Diagram.

   Continuity should exist.

3. Also check harness for short to ground or short to power.

OK or NG

OK >> GO TO 8.
NG >> Repair open circuit or short to ground or short to power in harness or connectors.

8. CHECK CAMSHAFT POSITION SENSOR (PHASE)

Refer to EC-1004, "Component Inspection" .

OK or NG

OK >> GO TO 9.
NG >> Replace camshaft position sensor (PHASE).

9. CHECK CAMSHAFT (INTAKE)

Check the following.

- Accumulation of debris to the signal plate of camshaft rear end
- Chipping signal plate of camshaft rear end

OK or NG

OK >> GO TO 10.
NG >> Remove debris and clean the signal plate of camshaft rear end or replace camshaft.

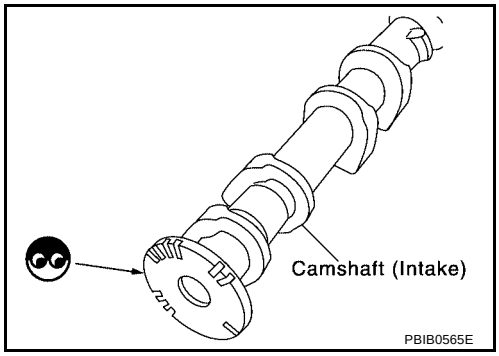

10. CHECK INTERMITTENT INCIDENT

Refer to EC-834, "TROUBLE DIAGNOSIS FOR INTERMITTENT INCIDENT" .

>> **INSPECTION END**

Component Inspection

UBS00JEI

CAMSHAFT POSITION SENSOR (PHASE)

1. Loosen the fixing bolt of the sensor.
2. Disconnect camshaft position sensor (PHASE) harness connector.
3. Remove the sensor.
4. Visually check the sensor for chipping.

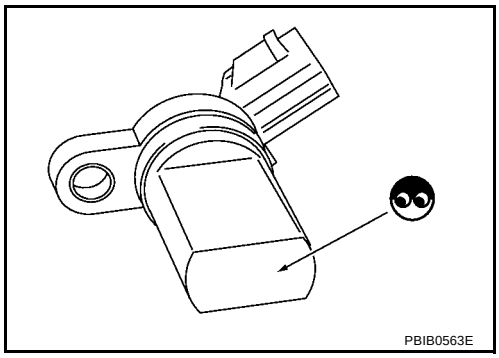

5. Check resistance as shown in the figure.

Terminal No. (Polarity)	Resistance Ω [at 25°C (77°F)]
1 (+) - 2 (-)	Except 0 or ∞
1 (+) - 3 (-)	
2 (+) - 3 (-)	

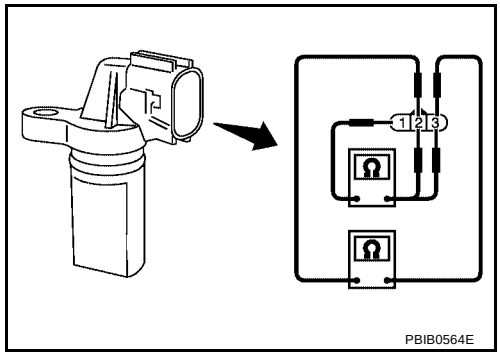

UBS00JEJ

Removal and Installation
CAMSHAFT POSITION SENSOR (PHASE)

Refer to EM-126, "CAMSHAFT" .

DTC P0420 THREE WAY CATALYST FUNCTION

PFP:20905

On Board Diagnosis Logic

UBS00JVO

A/T MODELS ULEV AND M/T MODELS

The ECM monitors the switching frequency ratio of heated oxygen sensor 1 and 2.
A three way catalyst (manifold) with high oxygen storage capacity will indicate a low switching frequency of heated oxygen sensor 2.
As oxygen storage capacity decreases, the heated oxygen sensor 2 switching frequency will increase.
When the frequency ratio of heated oxygen sensor 1 and 2 approaches a specified limit value, the three way catalyst (manifold) malfunction is diagnosed.

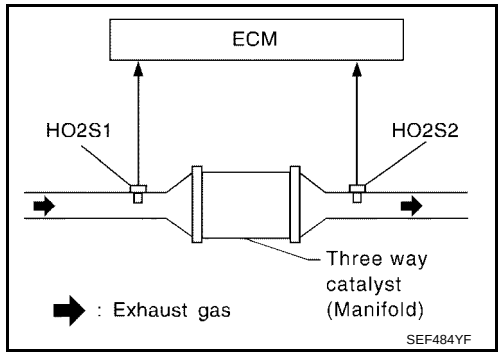

DTC No.	Trouble diagnosis name	DTC detecting condition	Possible cause
P0420 0420	Catalyst system efficiency below threshold	● Three way catalyst (manifold) does not operate properly. ● Three way catalyst (manifold) does not have enough oxygen storage capacity.	● Three way catalyst (manifold) ● Exhaust tube ● Intake air leaks ● Fuel injector ● Fuel injector leaks ● Spark plug ● Improper ignition timing

A/T MODELS EXCEPT ULEV

The ECM monitors the switching frequency ratio of air fuel ratio (A/F) sensor 1 and heated oxygen sensor 2.
A three way catalyst (manifold) with high oxygen storage capacity will indicate a low switching frequency of heated oxygen sensor 2.
As oxygen storage capacity decreases, the heated oxygen sensor 2 switching frequency will increase.
When the frequency ratio of air fuel ratio (A/F) sensor 1 and heated oxygen sensor 2 approaches a specified limit value, the three way catalyst (manifold) malfunction is diagnosed.

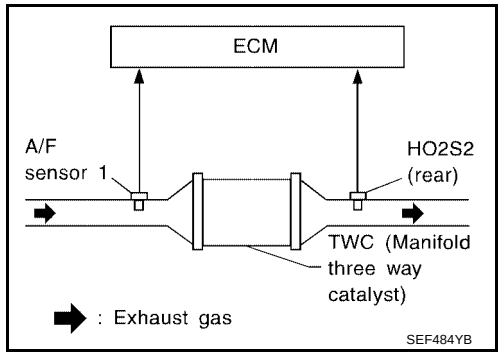

DTC No.	Trouble diagnosis name	DTC detecting condition	Possible cause
P0420 0420	Catalyst system efficiency below threshold	● Three way catalyst (manifold) does not operate properly. ● Three way catalyst (manifold) does not have enough oxygen storage capacity.	● Three way catalyst (manifold) ● Exhaust tube ● Intake air leaks ● Fuel injector ● Fuel injector leaks ● Spark plug ● Improper ignition timing

DTC Confirmation Procedure

UBS00JVP

A/T MODELS ULEV AND M/T MODELS

NOTE:
If DTC Confirmation Procedure has been previously conducted, always turn ignition switch OFF and wait at least 10 seconds before conducting the next test.

With CONSULT-II

TESTING CONDITION:

- **Open engine hood before conducting the following procedure.**
- **Do not hold engine speed for more than the specified minutes below.**

1. Turn ignition switch ON and select “DATA MONITOR” mode with CONSULT-II.
2. Start engine and warm it up to the normal operating temperature.
3. Turn ignition switch OFF and wait at least 10 seconds.
4. Start engine and keep the engine speed between 3,500 and 4,000 rpm for at least 1 minute under no load.
5. Let engine idle for 1 minute.

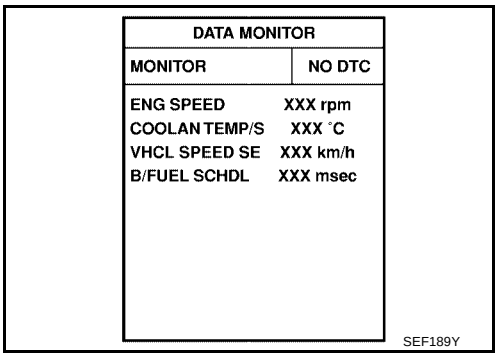

6. Make sure that “COOLANT TEMP/S” indicates more than 70°C (158°F).
7. Open engine hood.
8. Select “DTC & SRT CONFIRMATION” then “SRT WORK SUPPORT” mode with CONSULT-II.
9. Rev engine up to 2,000 to 3,000 rpm and hold it for 3 consecutive minutes then release the accelerator pedal completely.
   If “INCMP” of “CATALYST” changed to “COMPLT”, go to step 7
10. Wait 5 seconds at idle.

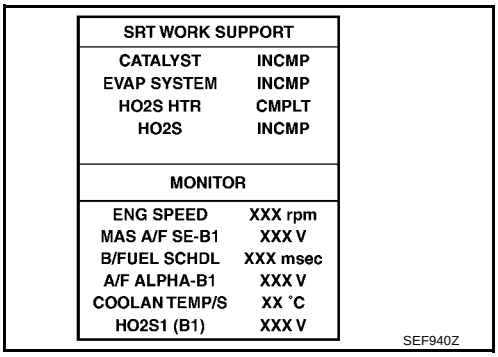

11. Rev engine up to 2,000 to 3,000 rpm and maintain it until “INCMP” of “CATALYST” changes to “CMPLT” (It will take approximately 5 minutes).
    If not “CMPLT”, stop engine and cool it down to less than 70°C (158°F) and then retest from step 1.

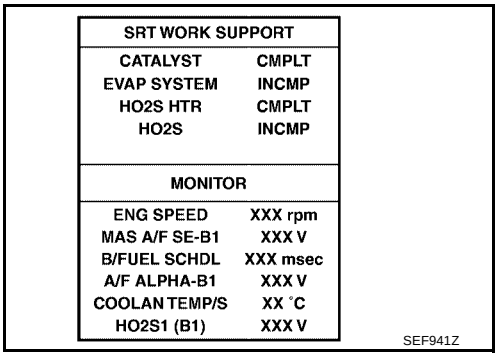

12. Select “SELF-DIAG RESULTS” mode with CONSULT-II.
13. Confirm that the 1st trip DTC is not detected.
    If the 1st trip DTC is detected, go to EC-1010, "Diagnostic Procedure" .

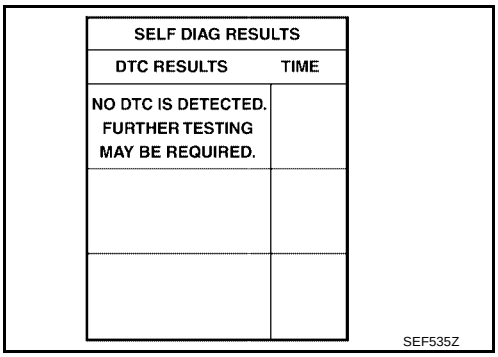

A/T MODELS EXCEPT ULEV

NOTE:
If DTC Confirmation Procedure has been previously conducted, always turn ignition switch OFF and wait at least 10 seconds before conducting the next test.

With CONSULT-II

TESTING CONDITION:
Do not hold engine speed for more than the specified minutes below.

1. Turn ignition switch ON and select “DATA MONITOR” mode with CONSULT-II.
2. Start engine and warm it up to normal operating temperature.
3. Turn ignition switch OFF and wait at least 10 seconds.
4. Start engine and keep the engine speed between 3,500 and 4,000 rpm for at least 1 minute under no load.
5. Let engine idle for 1 minute.
6. Make sure that “COOLAN TEMP/S” indicates more than 70°C (158°F).
7. Open engine hood.
8. Select “DTC & SRT CONFIRMATION” then “SRT WORK SUPPORT” mode with CONSULT-II.
9. Rev engine up to 2,500 to 3,500 rpm and hold it for 3 consecutive minutes, then release the accelerator pedal completely.
   If “CMPLT” of “CATALYST” changed to “COMPLT”, go to STEP 12.
10. Wait 5 seconds at idle.

DATA MONITOR	
MONITOR	NO DTC
ENG SPEED	XXX rpm
COOLAN TEMP/S	XXX ˚C
VHCL SPEED SE	XXX km/h
B/FUEL SCHDL	XXX msec

SEF189Y

SRT WORK SUPPORT	
CATALYST	INCMP
EVAP SYSTEM	INCMP
HO2S HTR	CMPLT
HO2S	INCMP
MONITOR	
ENG SPEED	XXX rpm
MAS A/F SE-B1	XXX V
B/FUEL SCHDL	XXX msec
A/F ALPHA-B1	XXX V
COOLAN TEMP/S	XX ˚C
A/F SEN1 (B1)	XXX V

PBIB1784E

11. Rev engine up to 2,000 to 3,000 rpm and maintain it until “IMCMP” of “CATALYST” changes to “CMPLT” (it will take approximately 5 minutes).
    If not “CMPLT”, stop engine and cool it down to less than 70°C (158°F) and then retest step 1.

SRT WORK SUPPORT	
CATALYST	CMPLT
EVAP SYSTEM	INCMP
HO2S HTR	CMPLT
HO2S	INCMP
MONITOR	
ENG SPEED	XXX rpm
MAS A/F SE-B1	XXX V
B/FUEL SCHDL	XXX msec
A/F ALPHA-B1	XXX V
COOLAN TEMP/S	XX ˚C
A/F SEN1 (B1)	XXX V

PBIB1785E

12. Select “SELF-DIAG RESULTS” mode with CONSULT-II.
13. Confirm that the 1st trip DTC is not detected.
    If the 1st trip DTC is detected, go to EC-1010, "Diagnostic Procedure" .

SELF DIAG RESULTS	
DTC RESULTS	TIME
NO DTC IS DETECTED. FURTHER TESTING MAY BE REQUIRED.	

SEF535Z

Overall Function Check

UBS00JVQ

Use this procedure to check the overall function of the three way catalyst (Manifold). During this check, a DTC might not be confirmed.

CAUTION:
Always drive vehicle at a safe speed.

A/T MODELS ULEV AND M/T MODELS

With GST

1. Start engine and warm it up to the normal operating temperature.
2. Turn ignition switch OFF and wait at least 10 seconds.
3. Start engine and keep the engine speed between 3,500 and 4,000 rpm for at least 1 minute under no load.
4. Let engine idle for 1 minute.
5. Set voltmeters probes between ECM terminal 35 (HO2S1 signal) and ground, and ECM terminal 74 (HO2S2 signal) and engine ground.
6. Keep engine speed at 2,000 rpm constant under no load.

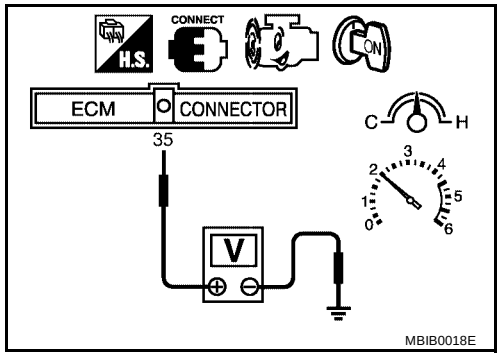

7. Make sure that the voltage switching frequency (high & low) between ECM terminal 74 and engine ground is very less than that of ECM terminal 35 and engine ground.
   Switching frequency ratio = A/B
   A: Heated oxygen sensor 2 voltage switching frequency
   B: Heated oxygen sensor 1 voltage switching frequency
   This ratio should be less than 0.75.
   If the ratio is greater than above, it means three way catalyst does not operate properly. Go to EC-1010, "Diagnostic Procedure" .

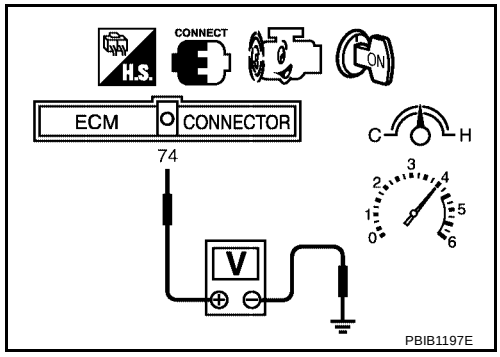

NOTE:
If the voltage at terminal 35 does not switch periodically more than 5 times within 10 seconds at step 7, perform trouble diagnosis for “DTC P0133” first. (See EC-916 .)

AT MODELS EXCEPT ULEV

With GST

1. Start engine and warm it up to the normal operating temperature.
2. Turn ignition switch OFF and wait at least 10 seconds.
3. Start engine and keep the engine speed between 3,500 and 4,000 rpm for at least 1 minute under no load.
4. Let engine idle for 1 minute.
5. Open engine hood.
6. Set voltmeter probe between ECM terminal 74 and ground.
7. Keep engine speed at 2,500 rpm constant under no load.
8. Make sure that the voltage does not vary for more than 5 seconds.
   If the voltage fluctuation cycle takes less than 5 seconds, go to EC-1010, "Diagnostic Procedure" .
   - 1 cycle: 0.6 - 1.0 V → 0 - 0.3 V → 0.6 - 1.0 V

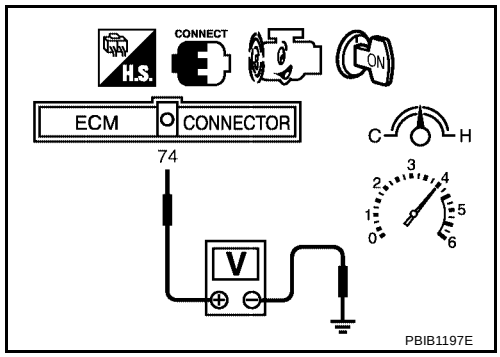

Diagnostic Procedure

UBS00JVR

A/T MODELS ULEV AND M/T MODELS

1. CHECK EXHAUST SYSTEM

Visually check exhaust tubes and muffler for dent.

OK or NG

OK >> GO TO 2.
NG >> Repair or replace.

2. CHECK EXHAUST GAS LEAK

1. Start engine and run it at idle.
2. Listen for an exhaust gas leak before the three way catalyst (manifold).

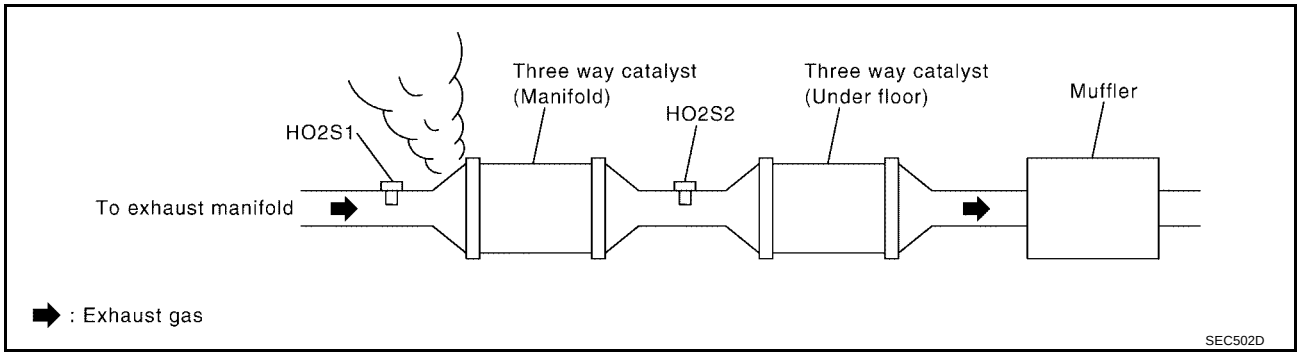

OK or NG

OK >> GO TO 3.
NG >> Repair or replace.

3. CHECK INTAKE AIR LEAK

Listen for an intake air leak after the mass air flow sensor.

OK or NG

OK >> GO TO 4.
NG >> Repair or replace.

4. CHECK IGNITION TIMING

Check for ignition timing. Refer to EC-722, "Basic Inspection" .

Items	Specifications	
Target idle speed	A/T	700 ± 50 rpm (in P or N position)
	M/T	700 ± 50 rpm (in Neutral position)
Ignition timing	A/T	15 ± 5° BTDC (in P or N position)
	M/T	15 ± 5° BTDC (in Neutral position)

OK or NG

OK >> GO TO 5.
NG >> Follow the EC-722, "Basic Inspection" .

5. CHECK INJECTORS

1. Refer to Wiring Diagram for Injectors, EC-1337 .
2. Stop engine and then turn ignition switch ON.
3. Check voltage between ECM terminals 22, 23, 41, 42 and ground with CONSULT-II or tester.

Battery voltage should exist.

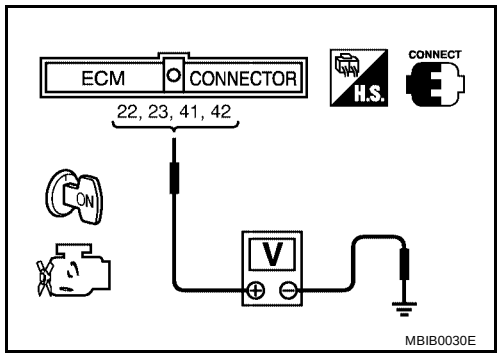

OK or NG

OK >> GO TO 6.
NG >> Perform EC-1338, "Diagnostic Procedure" .

6. CHECK FUNCTION OF IGNITION COIL-I

CAUTION:
Do the following procedure in the place where ventilation is good without the combustible.

1. Turn ignition switch OFF.
2. Remove fuel pump fuse located in fuse box to release fuel pressure.

   NOTE:
   Do not use CONSULT-II to release fuel pressure, or fuel pressure applies again during the following procedure.

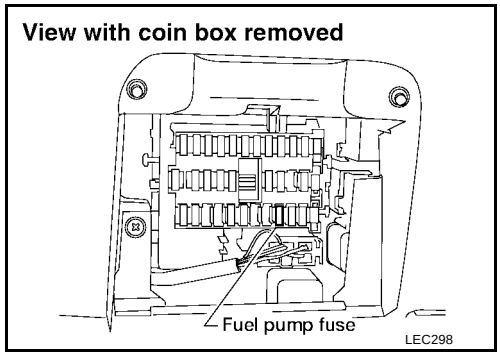

3. Start engine.
4. After engine stalls, crank it 2 or 3 times to release all fuel pressure.
5. Turn ignition switch OFF.
6. Remove all ignition coil harness connectors to avoid the electrical discharge from the ignition coils.
7. Remove ignition coil and spark plug of the cylinder to be checked.
8. Crank engine for 5 seconds or more to remove combustion gas in the cylinder.
9. Connect spark plug and harness connector to ignition coil.
10. Fix ignition coil using a rope etc. with gap of 13 - 17 mm between the edge of the spark plug and grounded metal portion as shown in the figure.
11. Crank engine for about three seconds, and check whether spark is generated between the spark plug and the grounded metal portion.

Spark should be generated.

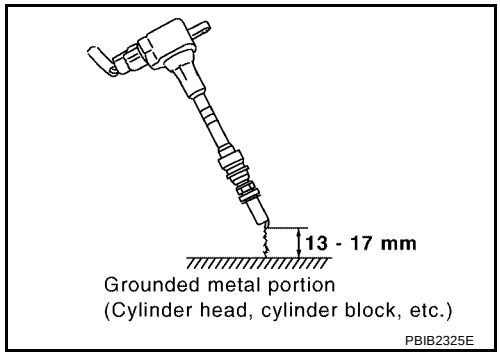

CAUTION:

- **Do not approach to the spark plug and the ignition coil within 50cm. Be careful not to get an electrical shock while checking, because the electrical discharge voltage becomes 20kV or more.**
- **It might cause to damage the ignition coil if the gap of 17 mm or more is taken.**

NOTE:
When the gap is 13 mm or less, the spark might be generated even if the coil is malfunctioning.

OK or NG

OK >> GO TO 10.
NG >> GO TO 7.

7. CHECK FUNCTION OF IGNITION COIL-II

1. Turn ignition switch OFF.
2. Disconnect spark plug and connect a known-good spark plug.
3. Crank engine for about 3 seconds, and recheck whether spark is generated between the spark plug and the grounded metal portion.

Spark should be generated.

OK or NG

OK >> GO TO 8.
NG >> Check ignition coil, power transistor and their circuits. Refer to EC-1314, "IGNITION SIGNAL" .

8. CHECK SPARK PLUGS

Check the spark plugs and check for fouling, etc.

OK or NG

OK >> GO TO 9.
NG >> Repair or replace spark plug (s) with standard type one (s). For spark plug type ignition coil. Refer to MA-28, "Changing Spark Plugs (Double Platinum - Tipped Type)" .

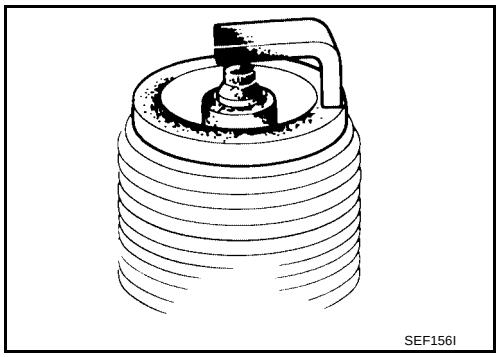

9. CHECK FUNCTION OF IGNITION COIL-III

1. Reconnect the initial spark plugs.
2. Crank engine for about 3 seconds, and recheck whether spark is generated between the spark plug and the grounded portion.

Spark should be generated.

OK or NG

OK >> **INSPECTION END**
NG >> Replace spark plug(s) with standard type one(s). For spark plug type, refer to MA-28, "Changing Spark Plugs (Double Platinum - Tipped Type)" .

10. CHECK INJECTOR

1. Turn ignition switch OFF.
2. Remove injector assembly. Refer to EM-121, "FUEL INJECTOR AND FUEL TUBE" .
   Keep fuel hose and all injectors connected to injector gallery.
3. Disconnect ignition coil assembly harness connector.
4. Reconnect all injector harness connectors.
5. Turn ignition switch ON.
   Make sure fuel does not drip from injector.

OK or NG

OK (Does not drip)>>GO TO 11.
NG (Drips)>>Replace the injector(s) from which fuel is dripping.

11. CHECK INTERMITTENT INCIDENT

Perform EC-834, "TROUBLE DIAGNOSIS FOR INTERMITTENT INCIDENT" .

Trouble is fixed>>**INSPECTION END**
Trouble is not fixed>>Replace three way catalyst (manifold).

A/T MODELS EXCEPT ULEV

1. CHECK EXHAUST SYSTEM

Visually check exhaust tubes and muffler for dent.

OK or NG

OK >> GO TO 2.
NG >> Repair or replace.

2. CHECK EXHAUST GAS LEAK

1. Start engine and run it at idle.
2. Listen for an exhaust gas leak before the three way catalyst (manifold).

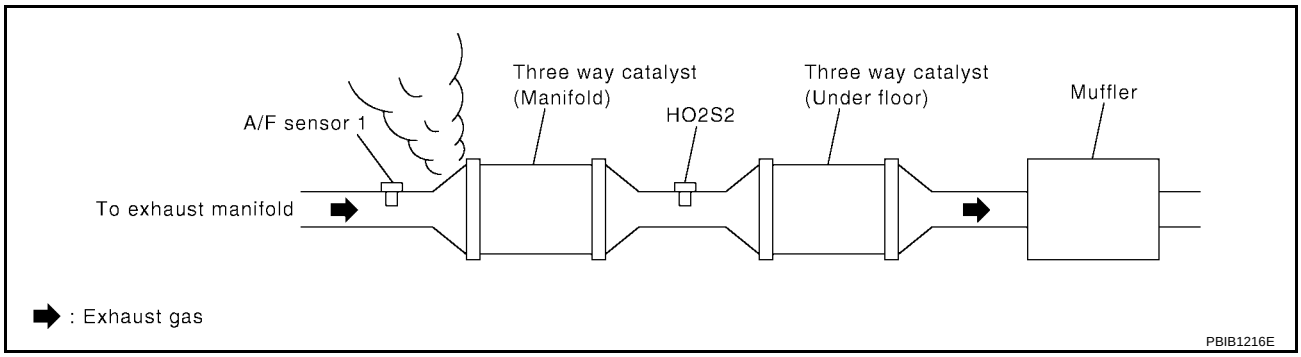

OK or NG

OK >> GO TO 3.
NG >> Repair or replace.

3. CHECK INTAKE AIR LEAK

Listen for an intake air leak after the mass air flow sensor.

OK or NG

OK >> GO TO 4.
NG >> Repair or replace.

4. CHECK IGNITION TIMING

Check for ignition timing. Refer to EC-722, "Basic Inspection" .

Items	Specifications	
Target idle speed	A/T	700 ± 50 rpm (in P or N position)
	M/T	700 ± 50 rpm (in Neutral position)
Ignition timing	A/T	15 ± 5° BTDC (in P or N position)
	M/T	15 ± 5° BTDC (in Neutral position)

OK or NG

OK >> GO TO 5.
NG >> Follow the Basic Inspection.

5. CHECK INJECTORS

1. Refer to Wiring Diagram for Injectors, EC-1337 .
2. Stop engine and then turn ignition switch ON.
3. Check voltage between ECM terminals 22, 23, 41, 42 and ground with CONSULT-II or tester.

   Battery voltage should exist.

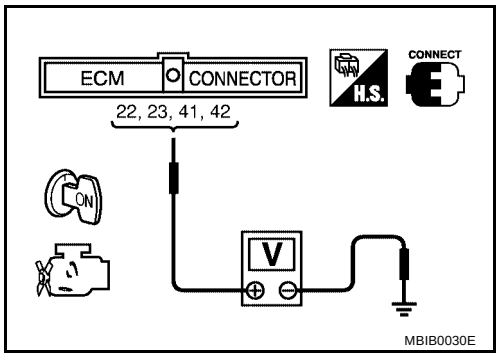

OK or NG

OK >> GO TO 6.
NG >> Perform EC-1338, "Diagnostic Procedure" .

6. CHECK FUNCTION OF IGNITION COIL-I

CAUTION:
Do the following procedure in the place where ventilation is good without the combustible.

1. Turn ignition switch OFF.
2. Remove fuel pump fuse located in fuse box to release fuel pressure.

   NOTE:
   Do not use CONSULT-II to release fuel pressure, or fuel pressure applies again during the following procedure.

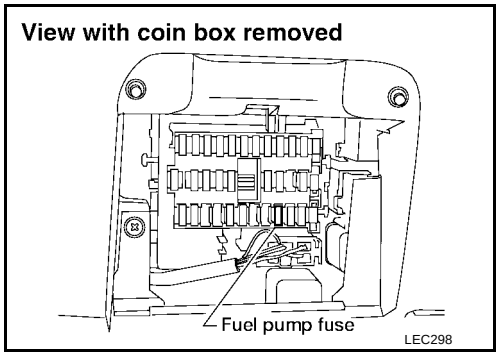

3. Start engine.
4. After engine stalls, crank it 2 or 3 times to release all fuel pressure.
5. Turn ignition switch OFF.
6. Remove all ignition coil harness connectors to avoid the electrical discharge from the ignition coils.
7. Remove ignition coil and spark plug of the cylinder to be checked.
8. Crank engine for 5 seconds or more to remove combustion gas in the cylinder.
9. Connect spark plug and harness connector to ignition coil.
10. Fix ignition coil using a rope etc. with gap of 13 - 17 mm between the edge of the spark plug and grounded metal portion as shown in the figure.
11. Crank engine for about three seconds, and check whether spark is generated between the spark plug and the grounded metal portion.

    Spark should be generated.

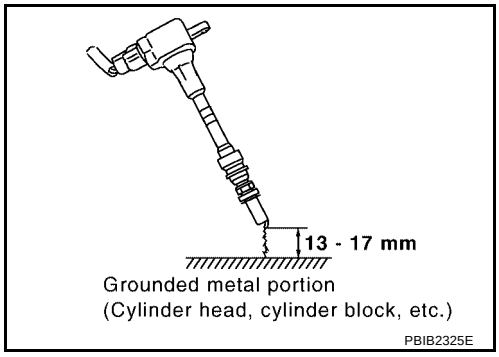

    CAUTION:
    - **Do not approach to the spark plug and the ignition coil within 50cm. Be careful not to get an electrical shock while checking, because the electrical discharge voltage becomes 20kV or more.**
    - **It might cause to damage the ignition coil if the gap of 17 mm or more is taken.**

    NOTE:
    When the gap is 13 mm or less, the spark might be generated even if the coil is malfunctioning.

OK or NG

OK >> GO TO 10.
NG >> GO TO 7.

7. CHECK FUNCTION OF IGNITION COIL-II

1. Turn ignition switch OFF.
2. Disconnect spark plug and connect a known-good spark plug.
3. Crank engine for about 3 seconds, and recheck whether spark is generated between the spark plug and the grounded metal portion.

Spark should be generated.

OK or NG

OK >> GO TO 8.
NG >> Check ignition coil, power transistor and their circuits. Refer to EC-1314, "IGNITION SIGNAL" .

8. CHECK SPARK PLUG

Check the initial spark plug for fouling, etc.

OK or NG

OK >> Replace spark plug(s) with standard type one(s). For spark plug type, refer to MA-28, "Changing Spark Plugs (Double Platinum - Tipped Type)" .
NG >> 1. Repair or clean spark plug.
2. GO TO 9.

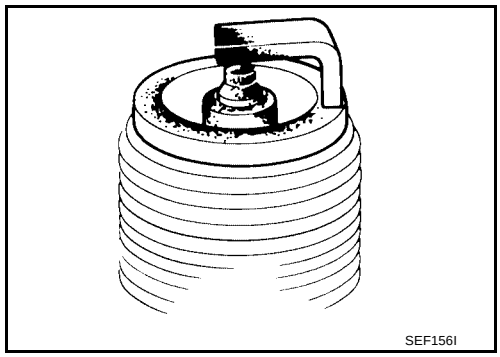

9. CHECK FUNCTION OF IGNITION COIL-III

1. Reconnect the initial spark plugs.
2. Crank engine for about 3 seconds, and recheck whether spark is generated between the spark plug and the grounded portion.

Spark should be generated.

OK or NG

OK >> **INSPECTION END**
NG >> Replace spark plug(s) with standard type one(s). For spark plug type, refer to MA-28, "Changing Spark Plugs (Double Platinum - Tipped Type)" .

10. CHECK INJECTOR

1. Turn ignition switch OFF.
2. Remove injector assembly. Refer to EM-121, "FUEL INJECTOR AND FUEL TUBE" .
Keep fuel hose and all injectors connected to injector gallery.
3. Disconnect ignition coil assembly harness connector.
4. Reconnect all injector harness connectors.
5. Turn ignition switch ON.
Make sure fuel does not drip from injector.

OK or NG

OK (Does not drip)>>GO TO 11.
NG (Drips)>>Replace the injector(s) from which fuel is dripping.

11. CHECK INTERMITTENT INCIDENT

Perform EC-834, "TROUBLE DIAGNOSIS FOR INTERMITTENT INCIDENT" .

Trouble is fixed>>**INSPECTION END**
Trouble is not fixed>>Replace three way catalyst (manifold).

DTC P0441 EVAP CONTROL SYSTEM

PFP:14950

System Description

UBS00JVS

NOTE:
If DTC P0441 is displayed with other DTC such as P2122, P2123 P2127, P2128, P2138, first perform trouble diagnosis for other DTC.

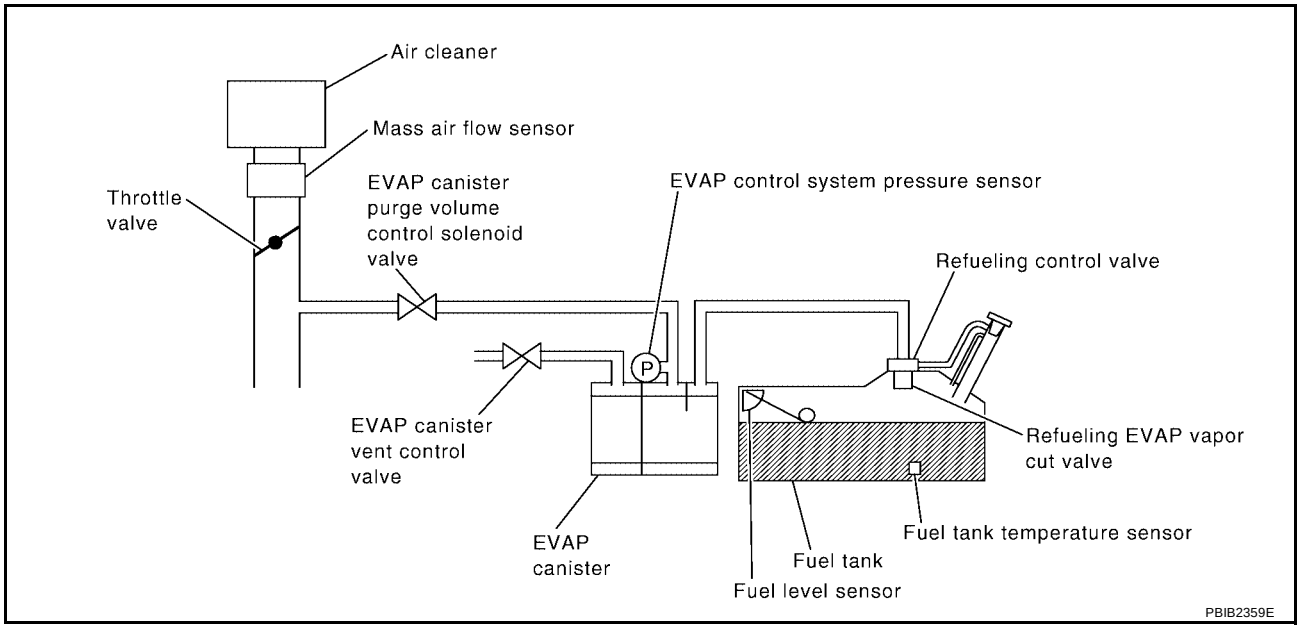

In this evaporative emission (EVAP) control system, purge flow occurs during non-closed throttle conditions. Purge volume is related to air intake volume. Under normal purge conditions (non-closed throttle), the EVAP canister purge volume control solenoid valve is open to admit purge flow. Purge flow exposes the EVAP control system pressure sensor to intake manifold vacuum.

On Board Diagnosis Logic

UBS00JVT

Under normal conditions (non-closed throttle), sensor output voltage indicates if pressure drop and purge flow are adequate. If not, a malfunction is determined.

DTC No.	Trouble diagnosis name	DTC detecting condition	Possible cause
P0441 0441	EVAP control system incorrect purge flow	EVAP control system does not operate properly, EVAP control system has a leak between intake manifold and EVAP control system pressure sensor.	● EVAP canister purge volume control solenoid valve stuck closed ● EVAP control system pressure sensor and the circuit ● Loose, disconnected or improper connection of rubber tube ● Blocked rubber tube ● Cracked EVAP canister ● EVAP canister purge volume control solenoid valve circuit ● Accelerator pedal position sensor ● Blocked purge port ● EVAP canister vent control valve

DTC Confirmation Procedure

UBS00JVU

CAUTION:
Always drive vehicle at a safe speed.

NOTE:
If DTC Confirmation Procedure has been previously conducted, always turn ignition switch OFF and wait at least 10 seconds before conducting the next test.

TESTING CONDITION:
Always perform test at a temperature of 5°C (41°F) or more.

WITH CONSULT-II

1. Start engine and warm it up to normal operating temperature.
2. Turn ignition switch OFF and wait at least 10 seconds.
3. Start engine and let it idle for at least 70 seconds.
4. Select “PURG FLOW P0441” of “EVAPORATIVE SYSTEM” in “DTC CONFIRMATION” mode with CONSULT-II.
5. Touch “START”.
   If “COMPLETED” is displayed, go to step 7.
6. When the following conditions are met, “TESTING” will be displayed on the CONSULT-II screen. Maintain the conditions continuously until “TESTING” changes to “COMPLETED”. (It will take at least 35 seconds.)

Selector lever	Suitable position
Vehicle speed	32 - 120 km/h (20 - 75 MPH)
ENG SPEED	500 - 3,800 rpm
B/FUEL SCHDL	1.0 - 10.0 msec
Engine coolant temperature	More than 0°C

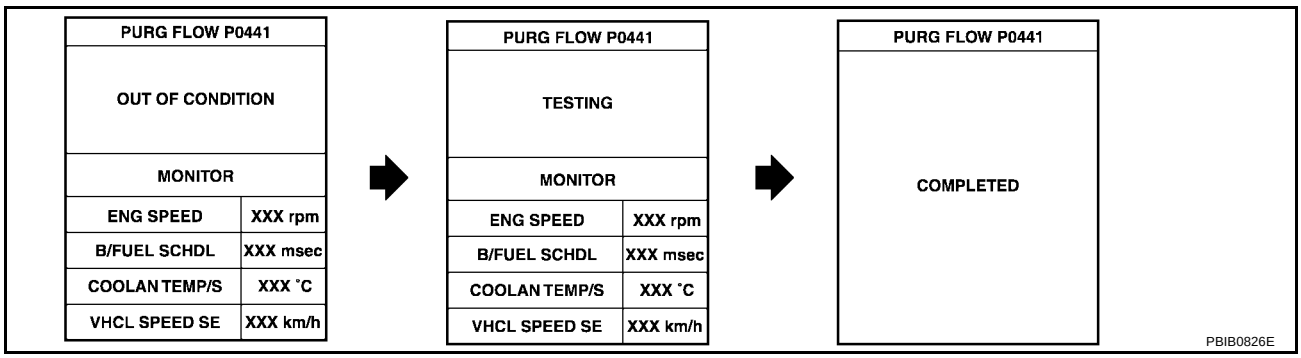

If TESTING is not changed for a long time, retry from step 2.

7. Make sure that “OK” is displayed after touching “SELF-DIAG RESULTS”. If “NG” is displayed, refer to EC-1018, "Diagnostic Procedure" .

Overall Function Check

UBS00JVV

Use this procedure to check the overall monitoring function of the EVAP control system purge flow monitoring. During this check, a 1st trip DTC might not be confirmed.

WITH GST

1. Lift up drive wheels.
2. Start engine and warm it up to normal operating temperature.
3. Turn ignition switch OFF, wait at least 10 seconds.
4. Start engine and wait at least 70 seconds.

5. Set voltmeter probes to ECM terminals 32 (EVAP control system pressure sensor signal) and ground.
6. Check EVAP control system pressure sensor value at idle speed and note it.
7. Establish and maintain the following conditions for at least 1 minute.

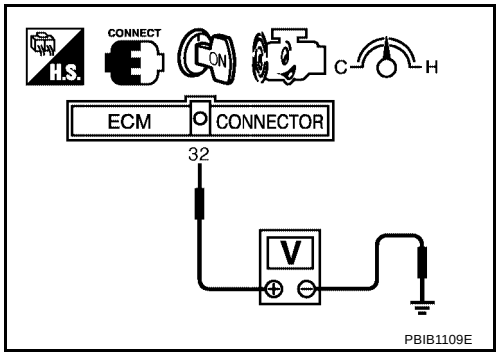

Air conditioner switch	ON
Headlamp switch	ON
Rear window defogger switch	ON
Engine speed	Approx. 3,000 rpm
Shift lever	Any position other than P, N or R (A/T), Neutral (M/T)

8. Verify that EVAP control system pressure sensor value stays 0.1V less than the value at idle speed (measured at step 6) for at least 1 second.
9. If NG, go to EC-1018, "Diagnostic Procedure" .

Diagnostic Procedure

UBS00JVW

1. CHECK EVAP CANISTER

1. Turn ignition switch OFF.
2. Check EVAP canister for cracks.

OK or NG

OK (With CONSULT-II)>>GO TO 2.
OK (Without CONSULT-II)>>GO TO 3.
NG >> Replace EVAP canister.

2. CHECK PURGE FLOW

With CONSULT-II

1. Disconnect vacuum hose connected to EVAP canister purge volume control solenoid valve at EVAP service port and install vacuum gauge.
2. Start engine and let it idle.
3. Select “PURG VOL CONT/V” in “ACTIVE TEST” mode with CONSULT-II.
4. Rev engine up to 2,000 rpm.

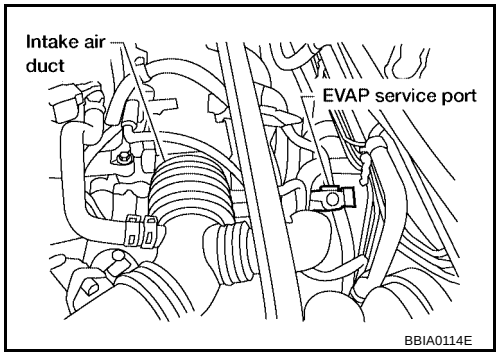

5. Touch “Qd” and “Qu” on CONSULT-II screen to adjust “PURG VOL CONT/V” opening and check vacuum existence.

PURG VOL CONT/V	VACUUM
100%	Should exist.
0%	should not exist.

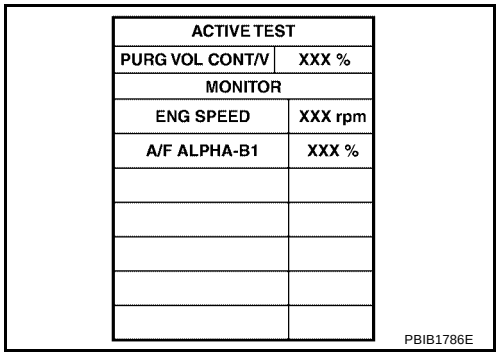

OK or NG

OK >> GO TO 7.
NG >> GO TO 4.

3. CHECK PURGE FLOW

Without CONSULT-II

1. Start engine and warm it up to normal operating temperature.
2. Stop engine.
3. Disconnect vacuum hose connected to EVAP canister purge volume control solenoid valve at EVAP service port and install vacuum gauge. For the location of EVAP service port, refer to EC-682, "EVAPORATIVE EMISSION LINE DRAWING" .
4. Start engine and let it idle.
   Do not depress accelerator pedal even slightly.
5. Check vacuum gauge indication before 60 seconds passed after starting engine.

   Vacuum should not exist.

6. Revving engine up to 2,000 rpm after 100 seconds passed after starting engine.

   Vacuum should exist.

OK or NG

OK >> GO TO 7.
NG >> GO TO 4.

4. CHECK EVAP PURGE LINE

1. Turn ignition switch OFF.
2. Check EVAP purge line for improper connection or disconnection.
   Refer to EC-682, "EVAPORATIVE EMISSION LINE DRAWING" .

OK or NG

OK >> GO TO 5.
NG >> Repair it.

5. CHECK EVAP PURGE HOSE AND PURGE PORT

1. Disconnect purge hoses connected to EVAP service port **A** and EVAP canister purge volume control solenoid valve **B** .
2. Blow air into each hose and EVAP purge port **C** .

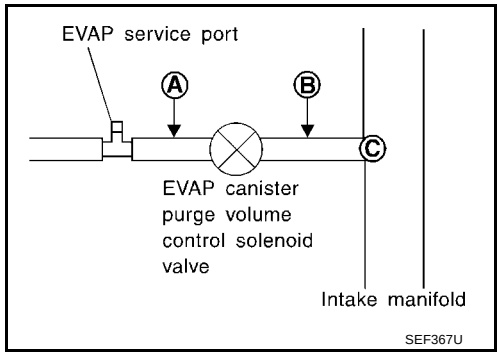

3. Check that air flows freely.

OK or NG

OK (With CONSULT-II)>>GO TO 6.
OK (Without CONSULT-II)>>GO TO 7.
NG >> Repair or clean hoses and/or purge port.

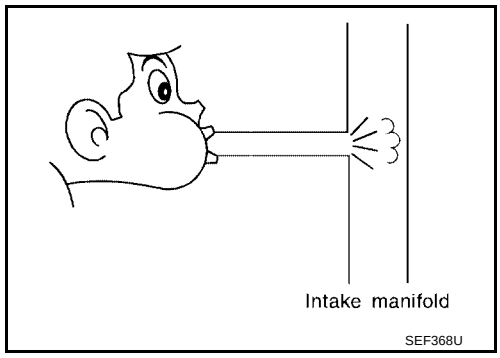

6. CHECK EVAP CANISTER PURGE VOLUME CONTROL SOLENOID VALVE

With CONSULT-II

1. Start engine.
2. Perform “PURG VOL CONT/V” in “ACTIVE TEST” mode with CONSULT-II. Check that engine speed varies according to the valve opening.

ACTIVE TEST	
PURG VOL CONT/V	XXX %
MONITOR	
ENG SPEED	XXX rpm
A/F ALPHA-B1	XXX %

PBIB1786E

OK or NG

OK >> GO TO 8.
NG >> GO TO 7.

7. CHECK EVAP CANISTER PURGE VOLUME CONTROL SOLENOID VALVE

Refer to EC-1031 .

OK or NG

OK >> GO TO 8.
NG >> Replace EVAP canister purge volume control solenoid valve.

8. CHECK EVAP CONTROL SYSTEM PRESSURE SENSOR CONNECTOR

1. Disconnect EVAP control system pressure sensor harness connector.
2. Check connectors for water.

Water should not exist

OK or NG

OK >> GO TO 9.
NG >> Replace EVAP control system pressure sensor.

9. CHECK EVAP CONTROL SYSTEM PRESSURE SENSOR FUNCTION

Refer to DTC Confirmation Procedure for DTC P0452, EC-1048 P0453, EC-1054 .

OK or NG

OK >> GO TO 10.
NG >> Replace EVAP control system pressure sensor.

10. CHECK RUBBER TUBE FOR CLOGGING

1. Disconnect rubber tube connected to EVAP canister vent control valve.
2. Check the rubber tube for clogging.

OK or NG

OK >> GO TO 11.
NG >> Clean the rubber tube using an air blower.

11. CHECK EVAP CANISTER VENT CONTROL VALVE

Refer to EC-1043 .

OK or NG

OK >> GO TO 12.
NG >> Replace EVAP canister vent control valve.

12. CHECK EVAP PURGE LINE

Inspect EVAP purge line (pipe and rubber tube). Check for evidence of leaks.
Refer to EC-682, "EVAPORATIVE EMISSION LINE DRAWING" .

OK or NG

OK >> GO TO 13.
NG >> Replace it.

13. CLEAN EVAP PURGE LINE

Clean EVAP purge line (pipe and rubber tube) using air blower.

>> GO TO 14.

14. CHECK INTERMITTENT INCIDENT

Refer to EC-834, "TROUBLE DIAGNOSIS FOR INTERMITTENT INCIDENT" .

>> **INSPECTION END**

DTC P0442 EVAP CONTROL SYSTEM

PFP:14950

On Board Diagnosis Logic

UBS00JVX

This diagnosis detects leaks in the EVAP purge line using engine intake manifold vacuum.
If pressure does not increase, the ECM will check for leaks in the line between the fuel tank and EVAP canister purge volume control solenoid valve, under the following Vacuum test conditions.
The EVAP canister vent control valve is closed to shut the EVAP purge line off. The EVAP canister purge volume control solenoid valve will then be opened to depressurize the EVAP purge line using intake manifold vacuum. After this occurs, the EVAP canister purge volume control solenoid valve will be closed.

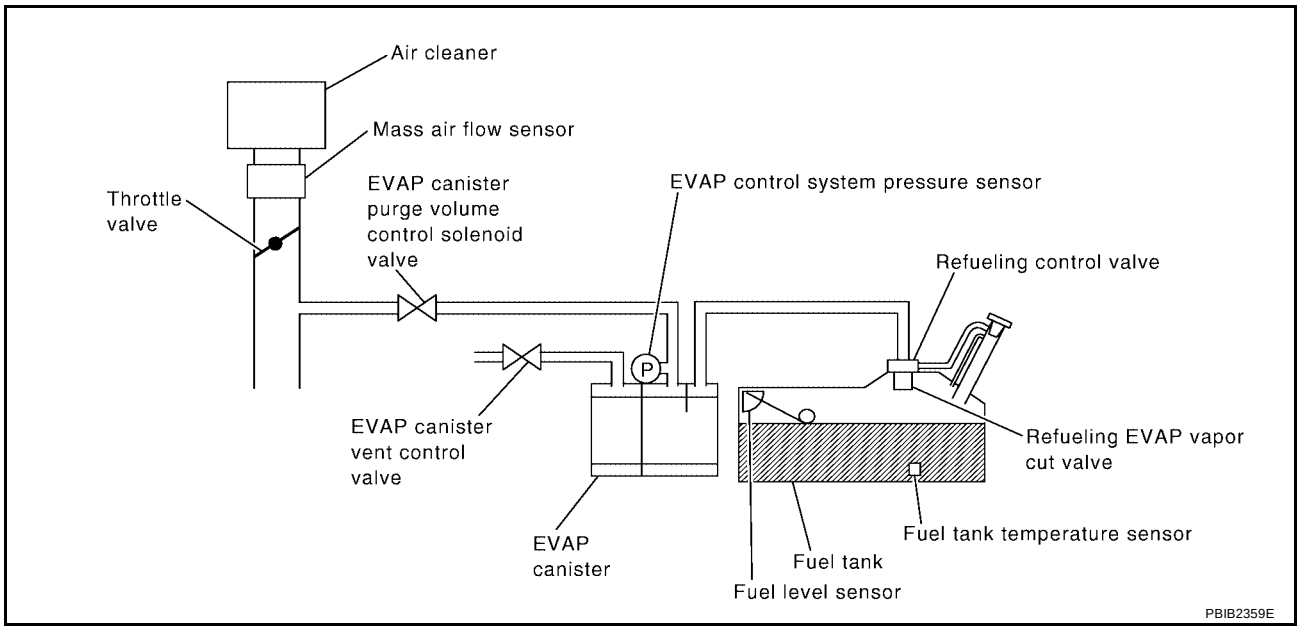

DTC No.	Trouble diagnosis name	DTC detecting condition	Possible cause
P0442 0442	EVAP control system small leak detected (negative pressure)	EVAP control system has a leak, EVAP control system does not operate properly.	● Incorrect fuel tank vacuum relief valve ● Incorrect fuel filler cap used ● Fuel filler cap remains open or fails to close. ● Foreign matter caught in fuel filler cap. ● Leak is in line between intake manifold and EVAP canister purge volume control solenoid valve. ● Foreign matter caught in EVAP canister vent control valve. ● EVAP canister or fuel tank leaks ● EVAP purge line (pipe and rubber tube) leaks ● EVAP purge line rubber tube bent ● Loose or disconnected rubber tube ● EVAP canister vent control valve and the circuit ● EVAP canister purge volume control solenoid valve and the circuit ● Fuel tank temperature sensor ● O-ring of EVAP canister vent control valve is missing or damaged ● EVAP canister is saturated with water ● EVAP control system pressure sensor ● Fuel level sensor and the circuit ● Refueling EVAP vapor cut valve ● Refueling control valve ● ORVR system leaks

CAUTION:

- **Use only a genuine NISSAN fuel filler cap as a replacement. If an incorrect fuel filler cap is used, the MIL may come on.**
- **If the fuel filler cap is not tightened properly, the MIL may come on.**
- **Use only a genuine NISSAN rubber tube as a replacement.**

DTC Confirmation Procedure

UBS00JVY

NOTE:
If DTC Confirmation Procedure has been previously conducted, always turn ignition switch OFF and wait at least 10 seconds before conducting the next test.

TESTING CONDITION:

- **Perform "DTC WORK SUPPORT" when the fuel level is between 1/4 and 3/4 full, and vehicle is placed on flat level surface.**
- **Always perform test at a temperature of 0 to 30°C (32 to 86°F).**
- **Open engine hood before conducting following procedure.**

WITH CONSULT-II

1. Turn ignition switch ON.
2. Turn ignition switch OFF and wait at least 10 seconds.
3. Turn ignition switch ON and select "DATA MONITOR" mode with CONSULT-II.
4. Check the following conditions are met.
   COOLAN TEMP/S: 0 - 70°C (32 - 158°F)
   INT/A TEMP SE: 0 - 30°C (32 - 86°F)

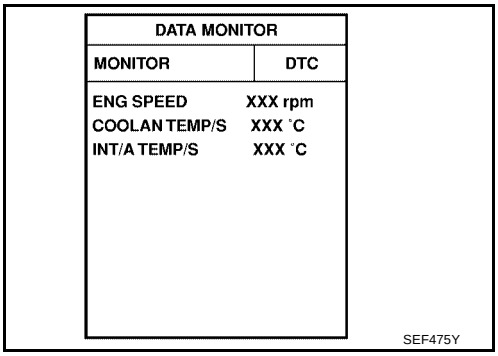

5. Select "EVAP SML LEAK P0442/P1442" of "EVAPORATIVE SYSTEM" in "DTC WORK SUPPORT" mode with CONSULT-II.
   Follow the instruction displayed.

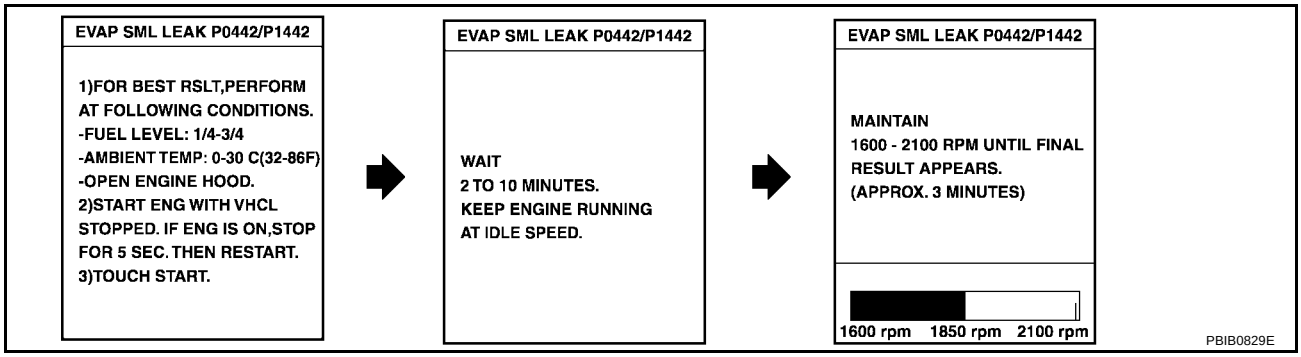

NOTE:
If the engine speed cannot be maintained within the range displayed on the CONSULT-II screen, go to EC-722, "Basic Inspection" .

6. Make sure that “OK” is displayed.
   If “NG” is displayed, refer to EC-1025, "Diagnostic Procedure" .

   NOTE:
   Make sure that EVAP hoses are connected to the EVAP canister purge volume control solenoid valve properly.

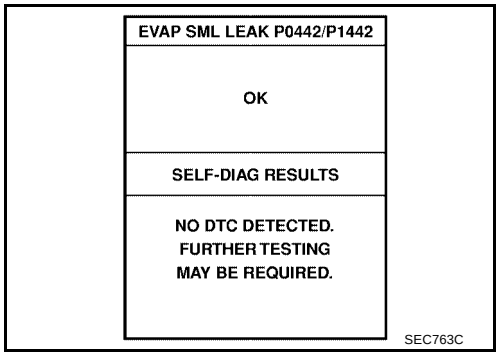

WITH GST

NOTE:
Be sure to read the explanation of EC-708, "Driving Pattern" before driving vehicle.

1. Start engine.
2. Drive vehicle according to EC-708, "Driving Pattern"
3. Stop vehicle.
4. Turn ignition switch OFF, wait at least 10 seconds and then turn ignition switch ON.
5. Select Service $07 with GST.

- If P0442 is displayed on the screen, go to EC-1022, "DTC P0442 EVAP CONTROL SYSTEM" .
- If P0441 is displayed on the screen, go to Diagnostic Procedure for DTC P0441, EC-1018, "Diagnostic Procedure" .

Diagnostic Procedure

UBS00JVZ

1. CHECK FUEL FILLER CAP DESIGN

1. Turn ignition switch OFF.
2. Check for genuine NISSAN fuel filler cap design.

OK or NG

OK >> GO TO 2.
NG >> Replace with genuine NISSAN fuel filler cap.

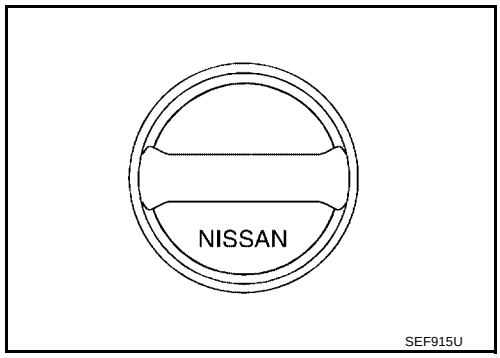

2. CHECK FUEL FILLER CAP INSTALLATION

Check that the cap is tightened properly by rotating the cap clockwise.

OK or NG

OK >> GO TO 3.
NG >> 1. Open fuel filler cap, then clean cap and fuel filler neck threads using air blower.
2. Retighten until reteaching sound is heard.

3. CHECK FUEL FILLER CAP FUNCTION

Check for air releasing sound while opening the fuel filler cap.

OK or NG

OK >> GO TO 5.
NG >> GO TO 4.

4. CHECK FUEL TANK VACUUM RELIEF VALVE

Refer to EC-684, "FUEL TANK VACUUM RELIEF VALVE (BUILT INTO FUEL FULLER CAP)" .

OK or NG

OK >> GO TO 5.
NG >> Replace fuel filler cap with a genuine one.

5. INSTALL THE PRESSURE PUMP

To locate the EVAP leak, install EVAP service port adapter and pressure pump to EVAP service port securely.
For the location of EVAP service port, refer to EC-682, "EVAPORATIVE EMISSION LINE DRAWING" .

NOTE:
Improper installation of the EVAP service port adapter to the EVAP service port may cause leaking.

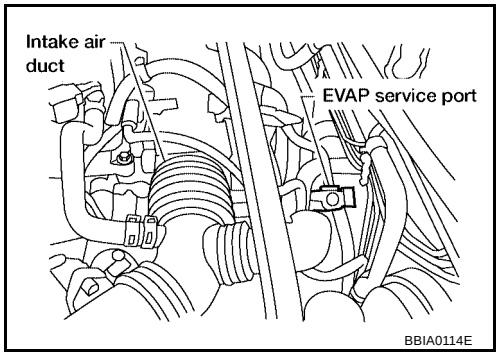

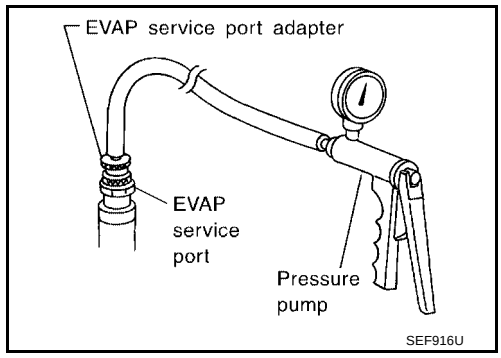

With CONSULT-II>>GO TO 6.
Without CONSULT-II>>GO TO 7.

6. CHECK FOR EVAP LEAK

With CONSULT-II

1. Turn ignition switch ON.
2. Select “EVAP SYSTEM CLOSE” of “WORK SUPPORT” mode with CONSULT-II.
3. Touch “START” and apply pressure into the EVAP line until the pressure indicator reaches the middle of the bar graph.

   CAUTION:
   - **Never use compressed air or a high pressure pump.**
   - **Do not exceed 4.12 kPa (0.042 kg/cm^2 , 0.6 psi) of pressure in the system.**

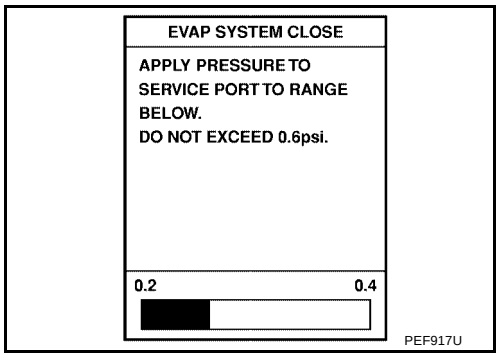

4. Using EVAP leak detector, locate the EVAP leak. For the leak detector, refer to the instruction manual for more details.
   Refer to EC-682, "EVAPORATIVE EMISSION LINE DRAWING"
   .

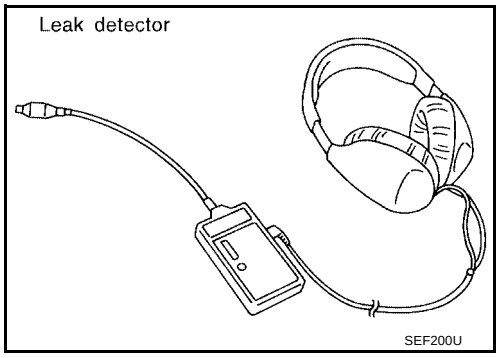

OK or NG

OK >> GO TO 8.
NG >> Repair or replace.

7. CHECK FOR EVAP LEAK

Without CONSULT-II

1. Turn ignition switch OFF.
2. Apply 12 volts DC to EVAP canister vent control valve. The valve will close. (Continue to apply 12 volts until the end of test.)

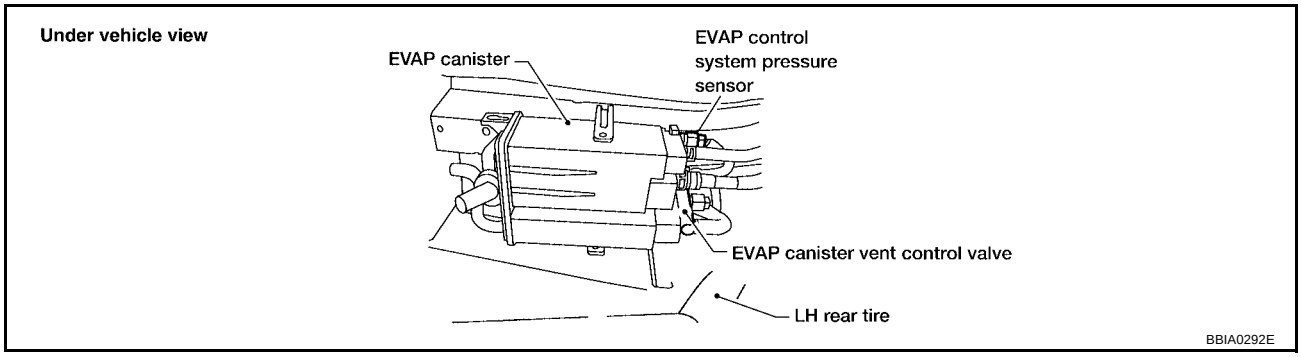

3. Pressurize the EVAP line using pressure pump with 1.3 to 2.7 kPa (10 to 20 mmHg, 0.39 to 0.79 inHg), then remove pump and EVAP service port adapter.

   CAUTION:
   - **Never use compressed air or a high pressure pump.**
   - **Do not exceed 4.12 kPa (0.042 kg/cm^2 , 0.6 psi) of pressure in the system.**

4. Using EVAP leak detector, locate the EVAP leak. For the leak detector, refer to the instruction manual for more details. Refer to EC-682, "EVAPORATIVE EMISSION LINE DRAWING" .

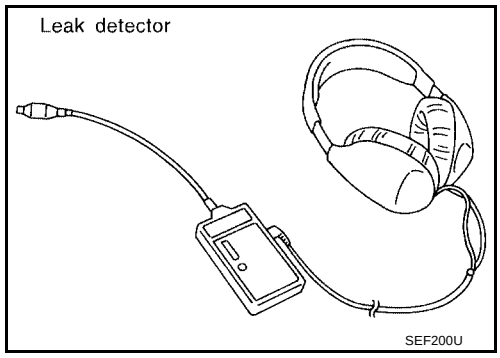

OK or NG

OK >> GO TO 8.
NG >> Repair or replace.

8. CHECK EVAP CANISTER VENT CONTROL VALVE

Check the following,

- EVAP canister vent control valve is installed properly.
  Refer to EC-685, "Removal and Installation" .
- EVAP canister vent control valve.
  Refer to EC-684, "Component Inspection" .

OK or NG

OK >> GO TO 9.
NG >> Repair or replace EVAP canister vent control valve and O-ring.

9. CHECK IF EVAP CANISTER SATURATED WITH WATER

1. Remove EVAP canister with EVAP canister vent control valve and EVAP control system pressure sensor attached.
2. Does water drain from the EVAP canister?

Yes or No

Yes >> GO TO 10.
No (With CONSULT-II)>>GO TO 12.
No (Without CONSULT-II)>>GO TO 13.

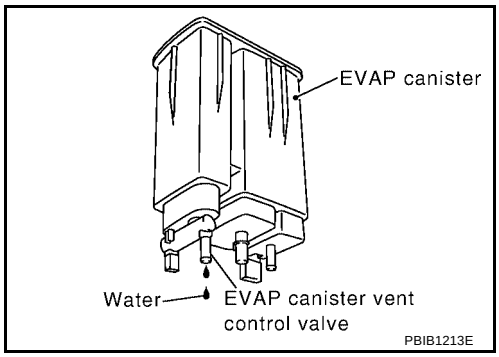

10. CHECK EVAP CANISTER

Weigh the EVAP canister with the EVAP canister vent control valve and EVAP control system pressure sensor attached.

The weight should be less than 1.9 kg (4.2 lb).

OK or NG

OK (With CONSULT-II)>>GO TO 12.
OK (Without CONSULT-II)>>GO TO 13.
NG >> GO TO 11.

11. DETECT MALFUNCTIONING PART

Check the following.

- EVAP canister for damage
- EVAP hose connected to EVAP canister for clogging or poor connection

>> Repair hose or replace EVAP canister.

12. CHECK EVAP CANISTER PURGE VOLUME CONTROL SOLENOID VALVE OPERATION

With CONSULT-II

1. Disconnect vacuum hose to EVAP canister purge volume control solenoid valve at EVAP service port.
2. Start engine.
3. Perform “PURG VOL CONT/V” in “ACTIVE TEST” mode.
4. Touch “Qu” on CONSULT-II screen to increase “PURG VOL CONT/V” opening to 100%.
5. Check vacuum hose for vacuum when revving engine up to 2,000 rpm.

OK or NG

OK >> GO TO 15.
NG >> GO TO 14.

ACTIVE TEST	
PURG VOL CONT/V	XXX %
MONITOR	
ENG SPEED	XXX rpm
A/F ALPHA-B1	XXX %

PBIB1786E

13. CHECK EVAP CANISTER PURGE VOLUME CONTROL SOLENOID VALVE OPERATION

Without CONSULT-II

1. Start engine and warm it up to normal operating temperature.
2. Stop engine.
3. Disconnect vacuum hose to EVAP canister purge volume control solenoid valve at EVAP service port.
4. Start engine and let it idle for at least 80 seconds.
5. Check vacuum hose for vacuum when revving engine up to 2,000 rpm.

OK or NG

OK >> GO TO 16.
NG >> GO TO 14.

14. CHECK VACUUM HOSE

Check vacuum hoses for clogging or disconnection. Refer to EC-682, "EVAPORATIVE EMISSION LINE DRAWING" .

OK or NG

OK >> GO TO 15.
NG >> Repair or reconnect the hose.

15. CHECK EVAP CANISTER PURGE VOLUME CONTROL SOLENOID VALVE

Refer to EC-684, "Component Inspection" .

OK or NG

OK >> GO TO 16.
NG >> Replace EVAP canister purge volume control solenoid valve.

16. CHECK FUEL TANK TEMPERATURE SENSOR

Refer to EC-968, "Component Inspection" .

OK or NG

OK >> GO TO 17.
NG >> Replace fuel level sensor unit.

17. CHECK EVAP CONTROL SYSTEM PRESSURE SENSOR

Refer to EC-1047, "Component Inspection" .

OK or NG

OK >> GO TO 18.
NG >> Replace EVAP control system pressure sensor.

18. CHECK EVAP PURGE LINE

Check EVAP purge line (pipe, rubber tube, fuel tank and EVAP canister) for cracks or improper connection. Refer to EC-681, "EVAPORATIVE EMISSION SYSTEM" .

OK or NG

OK >> GO TO 19.
NG >> Repair or reconnect the hose.

19. CLEAN EVAP PURGE LINE

Clean EVAP purge line (pipe and rubber tube) using air blower.

>> GO TO 20.

20. CHECK EVAP/ORVR LINE

Check EVAP/ORVR line between EVAP canister and fuel tank for clogging, kink, looseness and improper connection. For location, refer to EC-688, "ON BOARD REFUELING VAPOR RECOVERY (ORVR)" .

OK or NG

OK >> GO TO 21.
NG >> Repair or replace hoses and tubes.

21. CHECK SIGNAL LINE AND RECIRCULATION LINE

Check signal line and recirculation line between filler neck tube and fuel tank for clogging, kink, cracks, looseness and improper connection.

OK or NG

OK >> GO TO 22.
NG >> Repair or replace hoses, tubes or filler neck tube.

22. CHECK REFUELING CONTROL VALVE

Refer to EC-691, "Component Inspection" .

OK or NG

OK >> GO TO 24.
NG >> Replace refueling control valve.

23. CHECK REFUELING EVAP VAPOR CUT VALVE

Refer to EC-691, "Component Inspection" .

OK or NG

OK >> GO TO 24.
NG >> Replace refueling EVAP vapor cut valve with fuel tank.

24. CHECK FUEL LEVEL SENSOR

Refer to FL-3, "FUEL LEVEL SENSOR UNIT, FUEL FILTER AND FUEL PUMP ASSEMBLY" .

OK or NG

OK >> GO TO 25.
NG >> Replace fuel level sensor unit.

25. CHECK INTERMITTENT INCIDENT

Refer to EC-834, "TROUBLE DIAGNOSIS FOR INTERMITTENT INCIDENT" .

>> **INSPECTION END**

DTC P0444, P0445 EVAP CANISTER PURGE VOLUME CONTROL SOLENOID VALVE

PFP:14920

Description

UBS00JW0

SYSTEM DESCRIPTION

Sensor	Input Signal to ECM	ECM function	Actuator
Crankshaft position sensor (POS) Camshaft position sensor (PHASE)	Engine speed*1	EVAP canister purge flow control	EVAP canister purge volume control solenoid valve
Mass air flow sensor	Amount of intake air		
Engine coolant temperature sensor	Engine coolant temperature		
Battery	Battery voltage*1		
Throttle position sensor	Throttle position		
Accelerator pedal position sensor	Accelerator pedal position		
Heated oxygen sensor 1*3	Density of oxygen in exhaust gas (Mixture ratio feedback signal)		
Air fuel ratio (A/F) sensor 1*4			
Fuel tank temperature sensor	Fuel temperature in fuel tank		
Vehicle speed signal*2	Vehicle speed		

*1: The ECM determines the start signal status by the signal of engine speed and battery voltage.
*2: This signal is sent to the ECM through CAN communication line.
*3: A/T models ULEV and M/T models.
*4: A/T models except ULEV.

This system controls flow rate of fuel vapor from the EVAP canister. The opening of the vapor by-pass passage in the EVAP canister purge volume control solenoid valve changes to control the flow rate. The EVAP canister purge volume control solenoid valve repeats ON/OFF operation according to the signal sent from the ECM. The opening of the valve varies for optimum engine control. The optimum value stored in the ECM is determined by considering various engine conditions. When the engine is operating, the flow rate of fuel vapor from the EVAP canister is regulated as the air flow changes.

COMPONENT DESCRIPTION

The EVAP canister purge volume control solenoid valve uses a ON/OFF duty to control the flow rate of fuel vapor from the EVAP canister. The EVAP canister purge volume control solenoid valve is moved by ON/OFF pulses from the ECM. The longer the ON pulse, the greater the amount of fuel vapor that will flow through the valve.

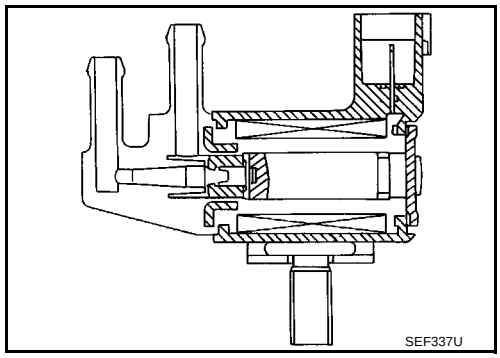

CONSULT-II Reference Value in Data Monitor Mode

UBS00JW1

Specification data are reference values.

MONITOR ITEM	CONDITION		SPECIFICATION
PURG VOL C/V	● Engine: After warming up ● Shift lever: P or N (A/T), Neutral (M/T) ● Air conditioner switch: OFF ● No-load	Idle (Accelerator pedal is not depressed even slightly, after engine starting)*	0%
		2,000 rpm	20 - 30%

*: A/T models except ULEV

On Board Diagnosis Logic

UBS00JW2

DTC No.	Trouble diagnosis name	DTC detecting condition	Possible cause
P0444 0444	EVAP canister purge volume control solenoid valve circuit open	An excessively low voltage signal is sent to ECM through the valve	● Harness or connectors (The solenoid valve circuit is open or shorted.) ● EVAP canister purge volume control solenoid valve
P0445 0445	EVAP canister purge volume control solenoid valve circuit shorted	An excessively high voltage signal is sent to ECM through the valve	● Harness or connectors (The solenoid valve circuit is shorted.) ● EVAP canister purge volume control solenoid valve

DTC Confirmation Procedure

UBS00JW3

NOTE:
If DTC Confirmation Procedure has been previously conducted, always turn ignition switch OFF and wait at least 10 seconds before conducting the next test.
TESTING CONDITION:
Before performing the following procedure, confirm battery voltage is more than 11V at idle.

WITH CONSULT-II

1. Turn ignition switch ON.
2. Select “DATA MONITOR” mode with CONSULT-II.
3. Start engine and let it idle for at least 13 seconds.
4. If 1st trip DTC is detected, go to EC-1035, "Diagnostic Procedure" .

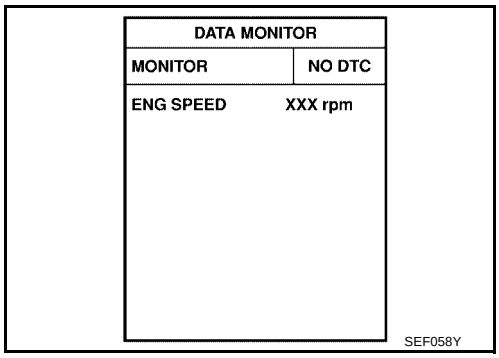

WITH GST

Follow the procedure “WITH CONSULT-II” above.

Wiring Diagram

UBS00JW4

EC-PGC/V-01

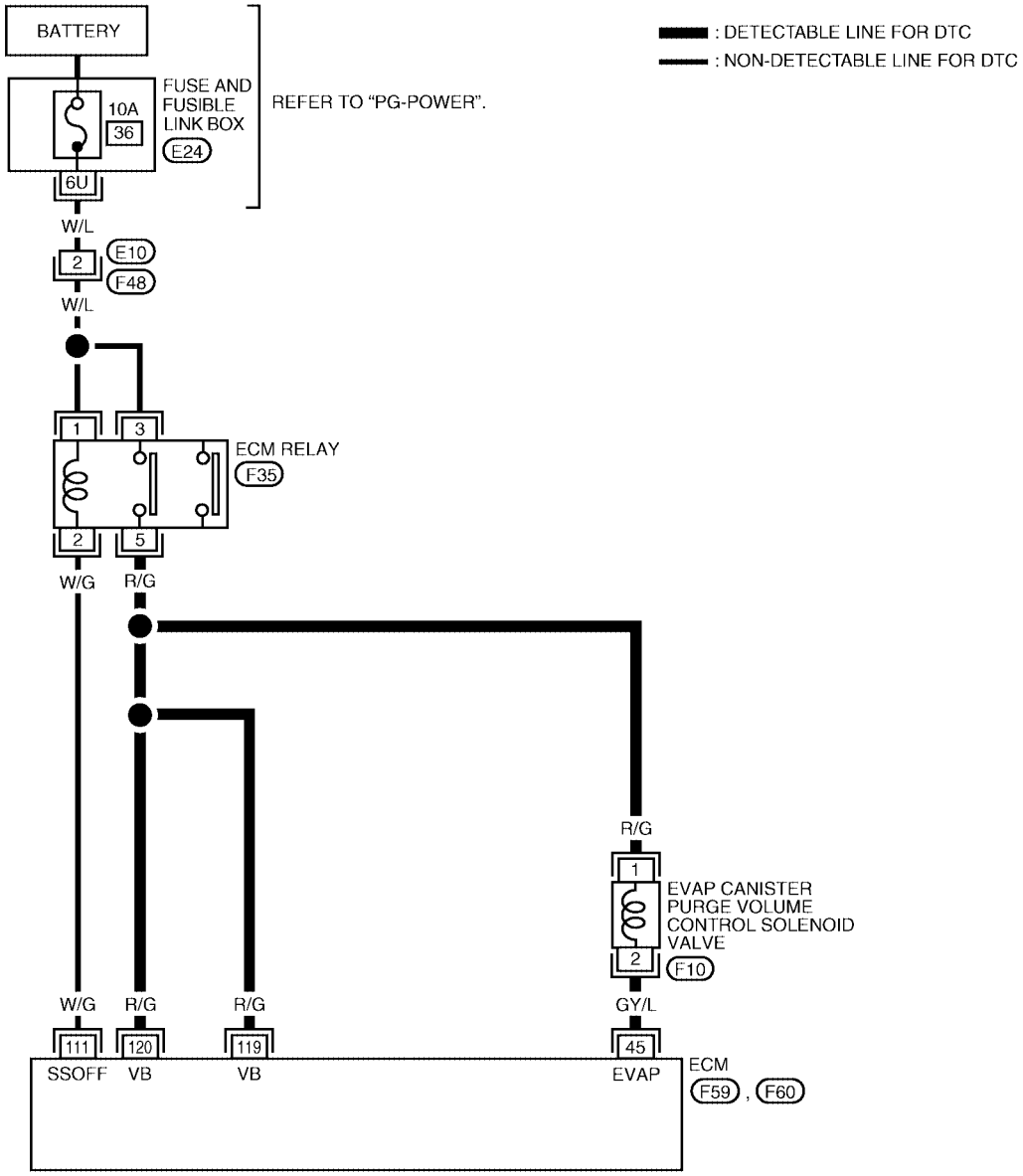

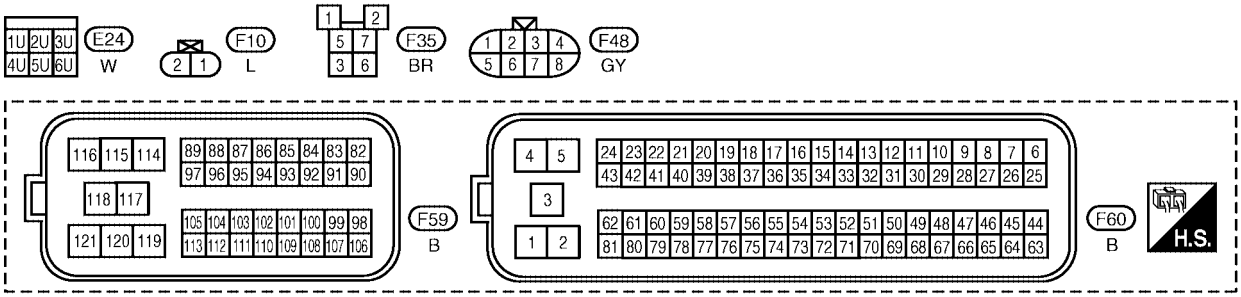

BBWA1418E

Specification data are reference values and are measured between each terminal and ground.
Pulse signal is measured by CONSULT-II.

CAUTION:

Do not use ECM ground terminals when measuring input/output voltage. Doing so may result in damage to the ECM's transistor. Use a ground other than ECM terminals, such as the ground.

TERMINAL NO.	WIRE COLOR	ITEM	CONDITION	DATA (DC Voltage)
45	GY/L	EVAP canister purge volume control solenoid valve	**[Engine is running]** ● Idle speed ● Accelerator pedal is not depressed even slightly, after engine starting*	BATTERY VOLTAGE (11 - 14V)★ 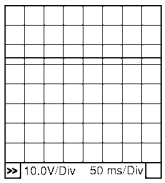 PBIB0050E
			[Engine is running] ● Engine speed is about 2,000 rpm (More than 100 seconds after starting engine)	Approximately 10V★ 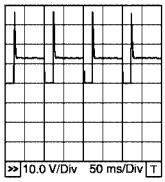 PBIB0520E
119 120	R/G	Power supply for ECM	**[Ignition switch: ON]**	BATTERY VOLTAGE (11 - 14V)

*: A/T models except ULEV

★: Average voltage for pulse signal (Actual pulse signal can be confirmed by oscilloscope.)

Diagnostic Procedure

UBS00JW5

1. CHECK EVAP CANISTER PURGE VOLUME CONTROL SOLENOID VALVE POWER SUPPLY CIRCUIT

1. Turn ignition switch OFF.
2. Disconnect EVAP canister purge volume control solenoid valve harness connector.
3. Turn ignition switch ON.

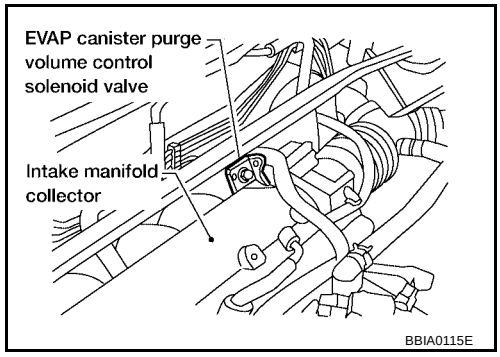

4. Check voltage between EVAP canister purge volume control solenoid valve terminal 1 and ground with CONSULT-II or tester.

Voltage: Battery voltage

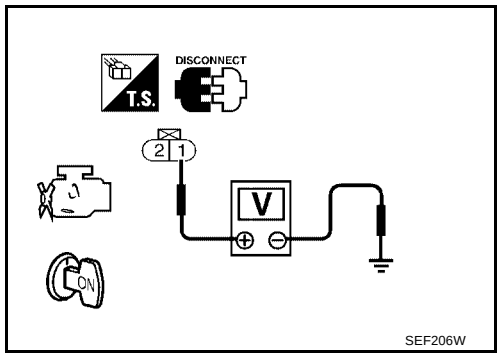

OK or NG

OK >> GO TO 3.
NG >> GO TO 2.

2. DETECT MALFUNCTIONING PART

Check the following.

- Harness for open or short between EVAP canister purge volume control solenoid valve and ECM
- Harness for open or short between EVAP canister purge volume control solenoid valve and ECM relay.

>> Repair open circuit or short to ground or short to power in harness or connectors.

3. CHECK EVAP CANISTER PURGE VOLUME CONTROL SOLENOID VALVE OUTPUT SIGNAL CIRCUIT FOR OPEN AND SHORT

1. Turn ignition switch OFF.
2. Disconnect ECM harness connector.
3. Check harness continuity between ECM terminal 45 and EVAP canister purge volume control solenoid valve terminal 2.
   Refer to Wiring Diagram.

Continuity should exist.

4. Also check harness for short to ground and short to power.

OK or NG

OK (With CONSULT-II)>>GO TO 4.
OK (Without CONSULT-II)>>GO TO 5.
NG >> Repair open circuit or short to ground or short to power in harness or connectors.

4. CHECK EVAP CANISTER PURGE VOLUME CONTROL SOLENOID VALVE OPERATION

With CONSULT-II

1. Reconnect all harness connectors disconnected.
2. Start engine.
3. Perform “PURG VOL CONT/V” in “ACTIVE TEST” mode with CONSULT-II. Check that engine speed varies according to the valve opening.

OK or NG

OK >> GO TO 6.
NG >> GO TO 5.

ACTIVE TEST	
PURG VOL CONT/V	XXX %
MONITOR	
ENG SPEED	XXX rpm
A/F ALPHA-B1	XXX %

PBIB1786E

5. CHECK EVAP CANISTER PURGE VOLUME CONTROL SOLENOID VALVE

Refer to EC-1036, "Component Inspection" .

OK or NG

OK >> GO TO 6.
NG >> Replace EVAP canister purge volume control solenoid valve.

6. CHECK INTERMITTENT INCIDENT

Refer to EC-834, "TROUBLE DIAGNOSIS FOR INTERMITTENT INCIDENT" .

>> **INSPECTION END**

Component Inspection

UBS00JW6

EVAP CANISTER PURGE VOLUME CONTROL SOLENOID VALVE

With CONSULT-II

Check air passage continuity of EVAP canister purge volume control solenoid valve under the following conditions.

Condition (PURG VOL CONT/V value)	Air passage continuity between A and B
100%	Yes
0%	No

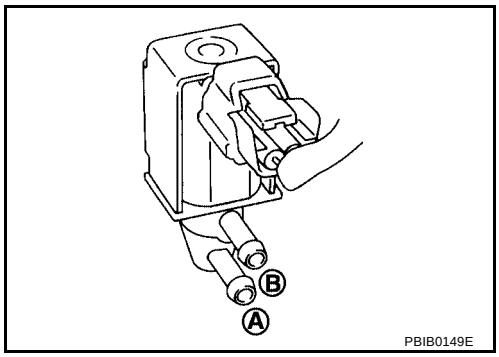

PBIB0149E

Without CONSULT-II

Check air passage continuity of EVAP canister purge volume control solenoid valve under the following conditions.

Condition	Air passage continuity between A and B
12V direct current supply between terminals 1 and 2	Yes
No supply	No

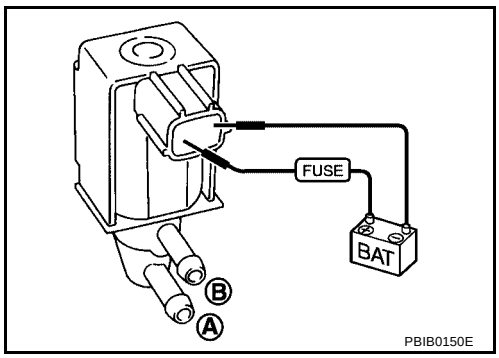

PBIB0150E

Removal and Installation

UBS00JW7

EVAP CANISTER PURGE VOLUME CONTROL SOLENOID VALVE

Refer to EM-108, "INTAKE MANIFOLD" .

DTC P0447 EVAP CANISTER VENT CONTROL VALVE

PFP:14935

Component Description

UBS00JW8

The EVAP canister vent control valve is located on the EVAP canister and is used to seal the canister vent.
This solenoid valve responds to signals from the ECM. When the ECM sends an ON signal, the coil in the solenoid valve is energized. A plunger will then move to seal the canister vent. The ability to seal the vent is necessary for the on board diagnosis of other evaporative emission control system components.
This solenoid valve is used only for diagnosis, and usually remains opened.
When the vent is closed, under normal purge conditions, the evaporative emission control system is depressurized and allows EVAP Control System diagnoses.

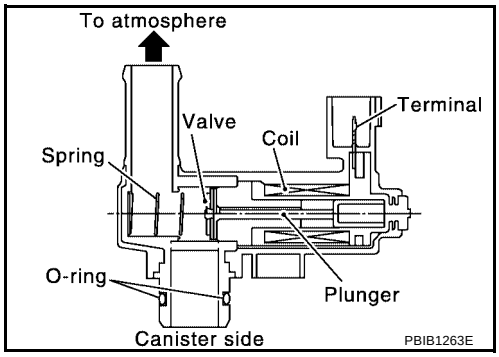

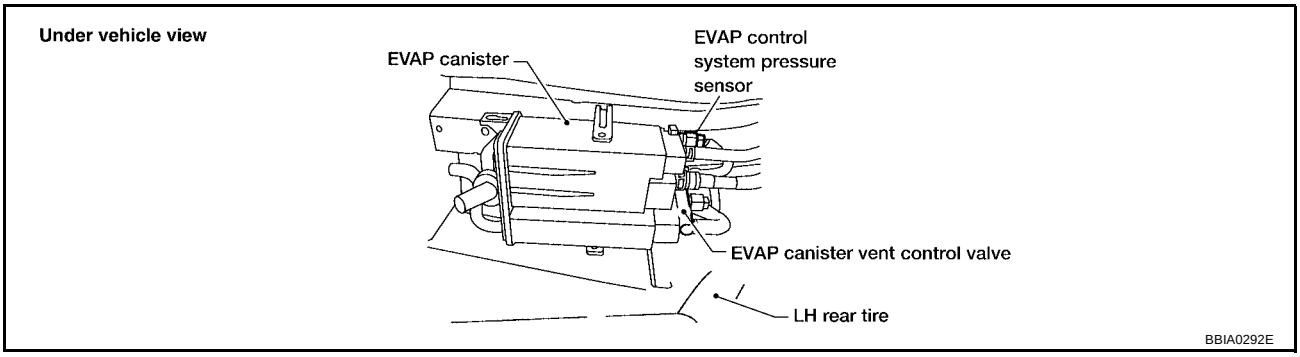

CONSULT-II Reference Value in Data Monitor Mode

UBS00JW9

Specification data are reference values.

MONITOR ITEM	CONDITION	SPECIFICATION
VENT CONT/V	● Ignition switch: ON	OFF

On Board Diagnosis Logic

UBS00JWA

DTC No.	Trouble diagnosis name	DTC detecting condition	Possible cause
P0447 0447	EVAP canister vent control valve circuit open	An improper voltage signal is sent to ECM through EVAP canister vent control valve.	● Harness or connectors (The valve circuit is open or shorted.) ● EVAP canister vent control valve

DTC Confirmation Procedure

UBS00JWB

NOTE:
If DTC Confirmation Procedure has been previously conducted, always turn ignition switch OFF and wait at least 10 seconds before conducting the next test.
TESTING CONDITION:
Before performing the following procedure, confirm battery voltage is more than 11V at idle.

WITH CONSULT-II

1. Turn ignition switch ON.

2. Select “DATA MONITOR” mode with CONSULT-II.
3. Start engine and wait at least 8 seconds.
4. If 1st trip DTC is detected, go to EC-1041, "Diagnostic Procedure" .

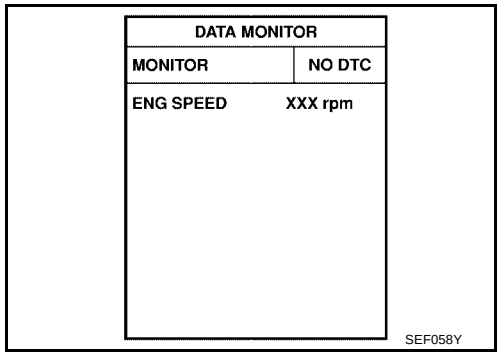

WITH GST

Follow the procedure “WITH CONSULT-II” above.

Wiring Diagram

UBS00JWC

EC-VENT/V-01

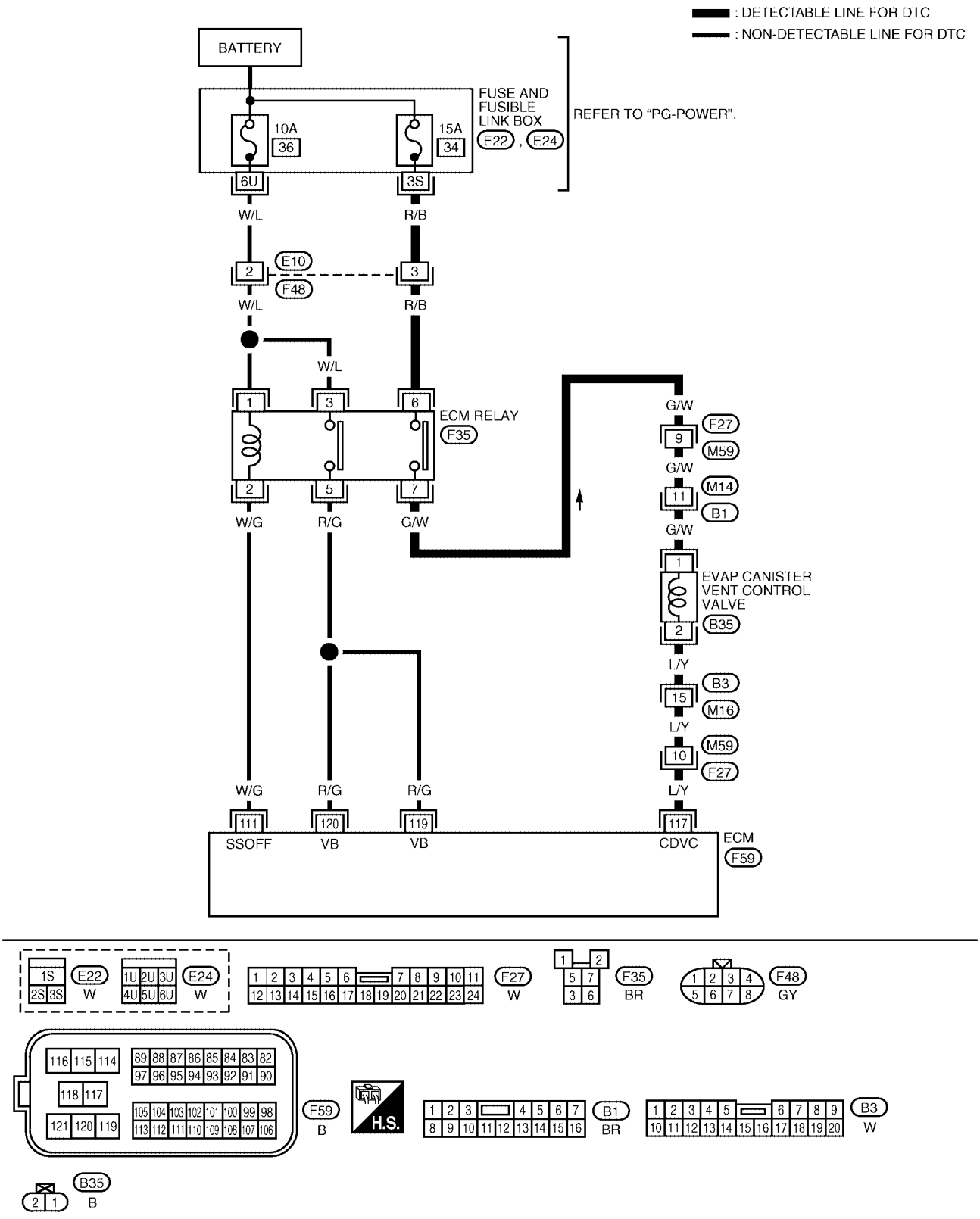

BBWA1419E

Specification data are reference values and are measured between each terminal and ground.

CAUTION:

Do not use ECM ground terminals when measuring input/output voltage. Doing so may result in damage to the ECM's transistor. Use a ground other than ECM terminals, such as the ground.

TERMINAL NO.	WIRE COLOR	ITEM	CONDITION	DATA (DC Voltage)
111	W/G	ECM relay (Self shut-off)	**[Engine is running]** **[Ignition switch: OFF]** ● A few seconds after turning ignition switch OFF	0 - 1.0V
			[Ignition switch: OFF] ● More than a few seconds after turning ignition switch OFF	BATTERY VOLTAGE (11 - 14V)
117	L/Y	EVAP canister vent control valve	**[Ignition switch: ON]**	BATTERY VOLTAGE (11 - 14V)
119 120	R/G	Power supply for ECM	**[Ignition switch: ON]**	BATTERY VOLTAGE (11 - 14V)

Diagnostic Procedure

UBS00JWD

1. INSPECTION START

1. Do you have CONSULT-II?

Yes or No

Yes >> GO TO 2.
No >> GO TO 3.

2. CHECK EVAP CANISTER VENT CONTROL VALVE CIRCUIT

With CONSULT-II

1. Turn ignition switch OFF and then turn ON.
2. Select “VENT CONTROL/V” in “ACTIVE TEST” mode with CONSULT-II.
3. Touch “ON/OFF” on CONSULT-II screen.
4. Check for operating sound of the valve.
   Clicking noise should be heard.

OK or NG

OK >> GO TO 7.
NG >> GO TO 3.

ACTIVE TEST	
VENT CONTROL/V	OFF
MONITOR	
ENG SPEED	XXX rpm
A/F ALPHA-B1	XXX %
HO2S1 (B1)	XXX V

PBIB0834E

3. CHECK EVAP CANISTER VENT CONTROL VALVE POWER SUPPLY CIRCUIT

1. Turn ignition switch OFF.
2. Disconnect EVAP canister vent control valve harness connector.

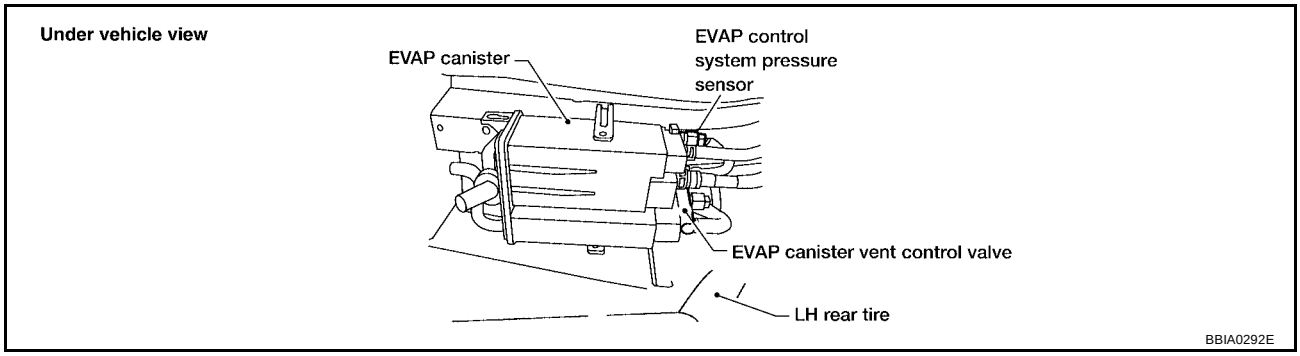

3. Turn ignition switch ON.
4. Check voltage between EVAP canister vent control valve terminal 1 and ground with CONSULT-II or tester.

Voltage: Battery voltage

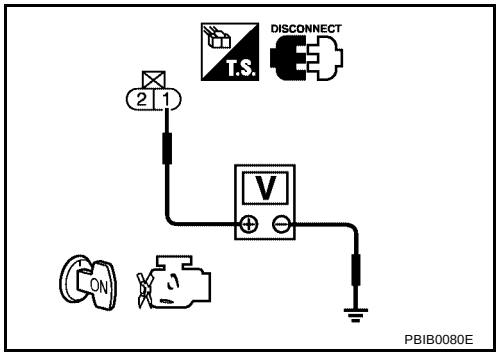

OK or NG

OK >> GO TO 5.
NG >> GO TO 4.

4. DETECT MALFUNCTIONING PART

Check the following.

- Harness connectors F27, M59
- Harness connectors B1, M14
- Harness for open or short between EVAP canister vent control valve and ECM relay

>> Repair open circuit or short to ground or short to power in harness or connectors.

5. CHECK EVAP CANISTER VENT CONTROL VALVE OUTPUT SIGNAL CIRCUIT FOR OPEN AND SHORT

1. Turn ignition switch OFF.
2. Disconnect ECM harness connector.
3. Check harness continuity between ECM terminal 117 and EVAP canister vent control valve terminal 2. Refer to Wiring Diagram.

Continuity should exist.

4. Also check harness for short to ground and short to power.

OK or NG

OK >> GO TO 7.
NG >> GO TO 6.

6. DETECT MALFUNCTIONING PART

Check the following.

- Harness connectors B3, M16
- Harness connectors M59, F27
- Harness for open or short between EVAP canister vent control valve and ECM

>> Repair open circuit or short to ground or short to power in harness or connectors.

7. CHECK RUBBER TUBE FOR CLOGGING

1. Disconnect rubber tube connected to EVAP canister vent control valve.
2. Check the rubber tube for clogging.

OK or NG

OK >> GO TO 8.
NG >> Clean the rubber tube using an air blower.

8. CHECK EVAP CANISTER VENT CONTROL VALVE

Refer to EC-1043, "Component Inspection" .

OK or NG

OK >> GO TO 9.
NG >> Replace EVAP canister vent control valve.

9. CHECK INTERMITTENT INCIDENT

Refer to EC-834, "TROUBLE DIAGNOSIS FOR INTERMITTENT INCIDENT" .

>> **INSPECTION END**

Component Inspection

UBS00JWE

EVAP CANISTER VENT CONTROL VALVE

With CONSULT-II

1. Remove EVAP canister vent control valve from EVAP canister.
2. Check portion **B** of EVAP canister vent control valve for being rusted.
   If NG, replace EVAP canister vent control valve.
   If OK, go to next step.
3. Reconnect harness connectors disconnected.
4. Turn ignition switch ON.

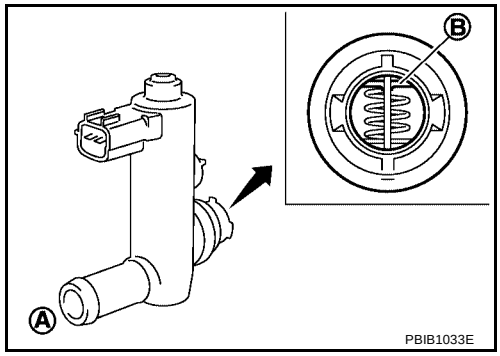

5. Perform “VENT CONTROL/V” in “ACTIVE TEST” mode.
6. Check air passage continuity and operation delay time.
   Make sure new O-ring is installed properly.

Condition VENT CONTROL/V	Air passage continuity between A and B
ON	No
OFF	Yes

Operation takes less than 1 second.

If NG, replace EVAP canister vent control valve.
If OK, go to next step.

ACTIVE TEST	
VENT CONTROL/V	OFF
MONITOR	
ENG SPEED	XXX rpm
A/F ALPHA-B1	XXX %
HO2S1 (B1)	XXX V

PBIB0834E

7. Clean the air passage (Portion **A** to **B**) of EVAP canister vent control valve using an air blower.
8. Perform step 6 again.

Without CONSULT-II

1. Remove EVAP canister vent control valve from EVAP canister.
2. Check portion **B** of EVAP canister vent control valve for being rusted.

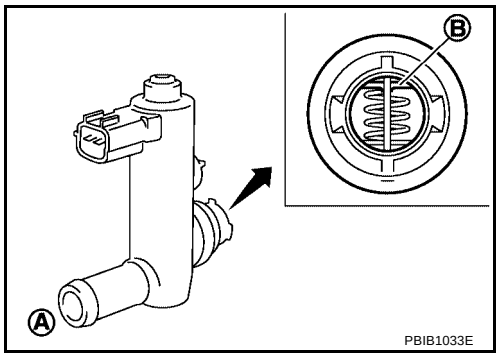

PBIB1033E

3. Check air passage continuity and operation delay time under the following conditions.
   Make sure new O-ring is installed properly.

Condition	Air passage continuity between A and B
12V direct current supply between terminals 1 and 2	No
OFF	Yes

Operation takes less than 1 second.

If NG, replace EVAP canister vent control valve.
If OK, go to next step.

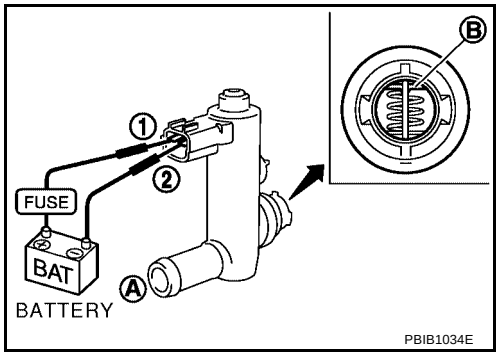

PBIB1034E

4. Clean the air passage (Portion **A** to **B**) of EVAP canister vent control valve using an air blower.
5. Perform step 3 again.

DTC P0451 EVAP CONTROL SYSTEM PRESSURE SENSOR

PFP:22365

Component Description

UBS00JFB

The EVAP control system pressure sensor detects pressure in the purge line. The sensor output voltage to the ECM increases as pressure increases.

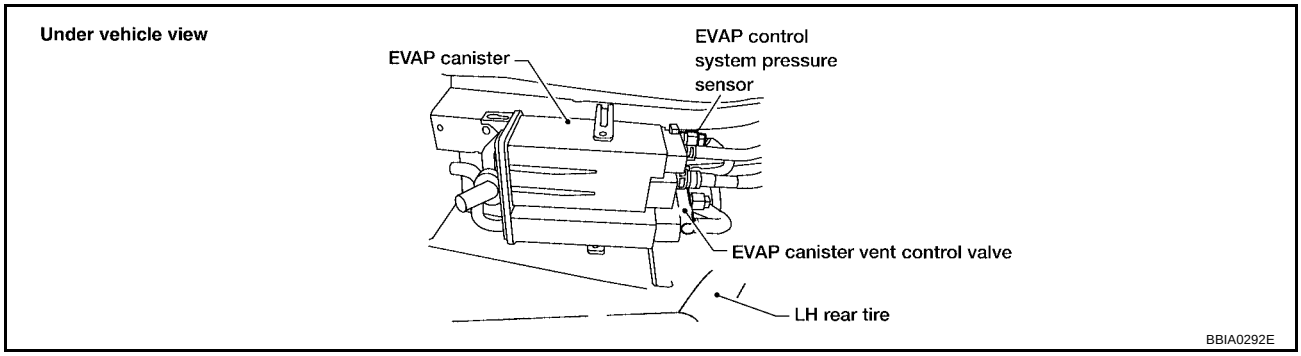

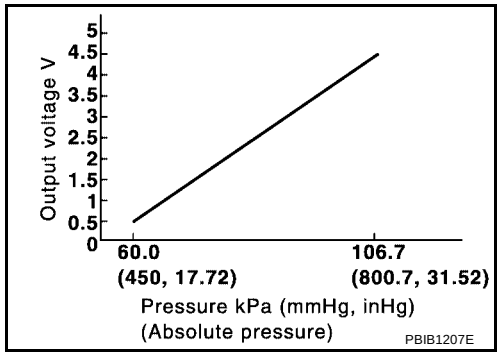

CONSULT-II Reference Value in Data Monitor Mode

UBS00JFC

Specification data are reference values.

MONITOR ITEM	CONDITION	SPECIFICATION
EVAP SYS PRES	● Ignition switch: ON	Approx. 1.8 - 4.8V

On Board Diagnosis Logic

UBS00JFD

NOTE:
If DTC P0451 is displayed with DTC P1229, first perform the trouble diagnosis for DTC P1229. Refer to EC-1178 .

DTC No.	Trouble diagnosis name	DTC detecting condition	Possible cause
P0451 0451	EVAP control system pressure sensor performance	ECM detects a sloshing signal from the EVAP control system pressure sensor	● Harness or connectors ● EVAP control system pressure sensor

DTC Confirmation Procedure

UBS00JFE

NOTE:
If DTC Confirmation Procedure has been previously conducted, always turn ignition switch OFF and wait at least 10 seconds before conducting the next test.

WITH CONSULT-II

1. Turn ignition switch OFF and wait at least 10 seconds.
2. Turn ignition switch ON and select “DATA MONITOR” mode with CONSULT-II.
3. Start engine and wait at least 40 seconds.

   NOTE:
   Do not depress accelerator pedal even slightly.
   If 1st trip DTC is detected, go to EC-1046, "Diagnostic Procedure" .

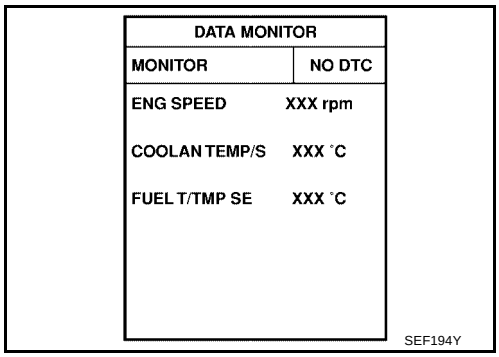

WITH GST

Follow the procedure “WITH CONSULT-II” above.

Diagnostic Procedure

UBS00JFF

1. CHECK GROUND CONNECTIONS

1. Turn ignition switch OFF.
2. Loosen and retighten two ground screws on the body. Refer to EC-841, "Ground Inspection" .

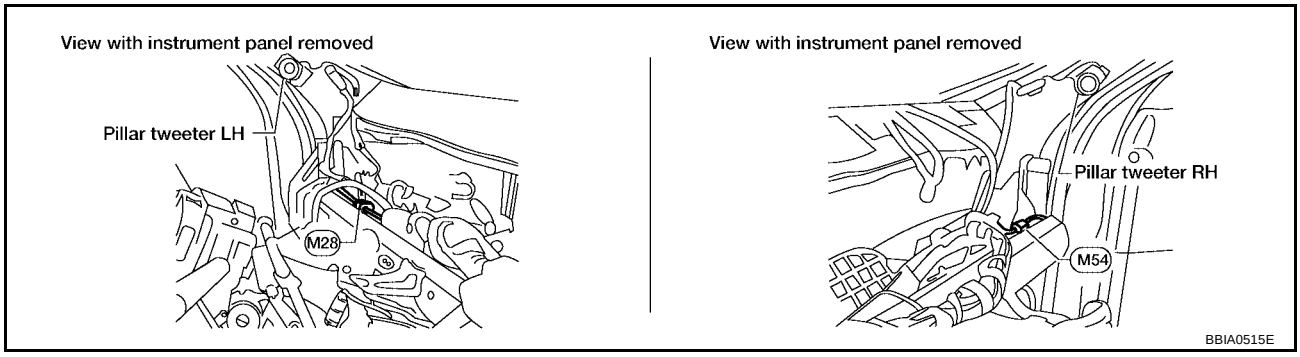

OK or NG

OK >> GO TO 2.
NG >> Repair or replace ground connections.

2. CHECK EVPA CONTROL SYSTEM PRESSURE SENSOR CONNECTOR FOR WATER

1. Disconnect EVAP control system pressure sensor harness connector.

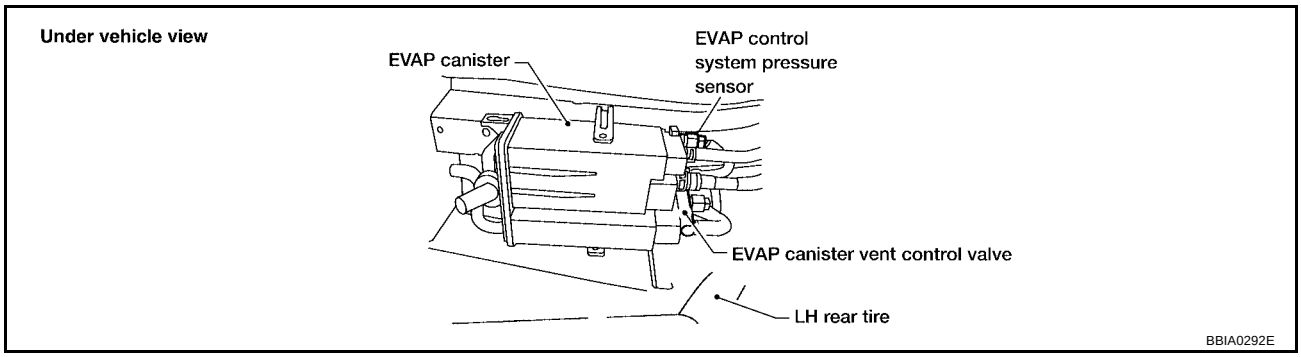

2. Check sensor harness connector for water.

Water should not exist.

OK or NG

OK >> GO TO 3.
NG >> Repair or replace harness connector.

3. CHECK EVAP CONTROL SYSTEM PRESSURE SENSOR

Refer to EC-1047, "Component Inspection" .

OK or NG

OK >> GO TO 4.
NG >> Replace EVAP control system pressure sensor.

4. CHECK INTERMITTENT INCIDENT

Refer to EC-834, "TROUBLE DIAGNOSIS FOR INTERMITTENT INCIDENT" .
For wiring diagram, refer to EC-1050 .

>> **INSPECTION END**

Component Inspection

UBS00JFG

EVAP CONTROL SYSTEM PRESSURE SENSOR

1. Remove EVAP control system pressure sensor with its harness connector connected from EVAP canister. **Do not reuse the O-ring, replace it with a new one.**
2. Install a vacuum pump to EVAP control system pressure sensor.
3. Turn ignition switch ON and check output voltage between ECM terminal 32 and ground under the following conditions.

Applied vacuum kPa (mmHg, inHg)	Voltage V
Not applied	1.8 - 4.8
-26.7 (-200, -7.87)	2.1 to 2.5V lower than above value

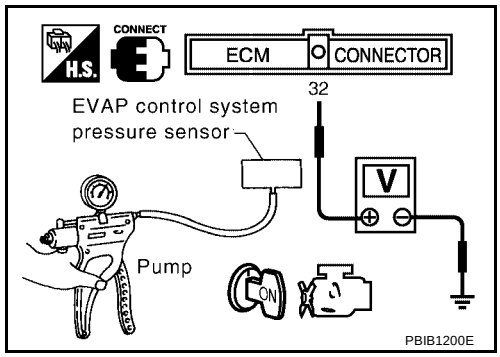

CAUTION:
- **Always calibrate the vacuum pump gauge when using it.**
- **Do not apply below -93.3 kPa (-700 mmHg, -27.56 inHg) or pressure over 101.3 kPa (760 mmHg, 29.92 inHg).**

4. If NG, replace EVAP control system pressure sensor.

DTC P0452 EVAP CONTROL SYSTEM PRESSURE SENSOR

PFP:25085

Component Description

UBS00JFH

The EVAP control system pressure sensor detects pressure in the purge line. The sensor output voltage to the ECM increases as pressure increases.

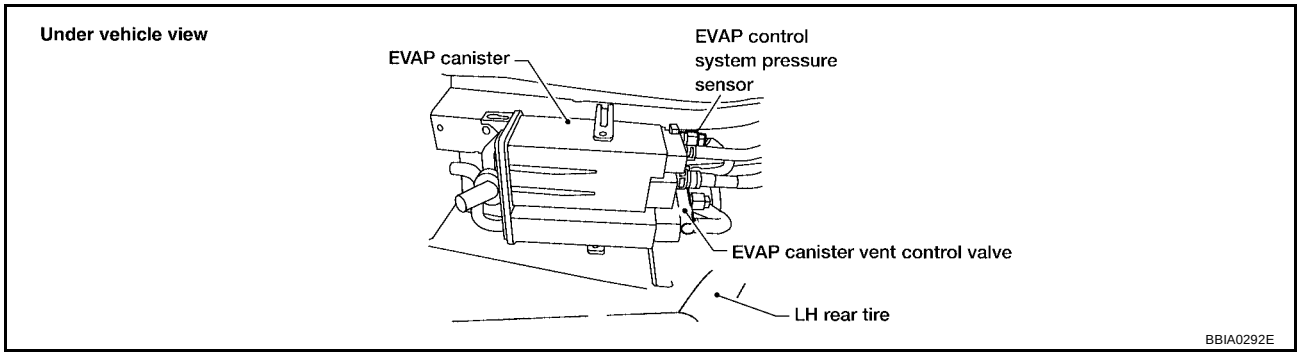

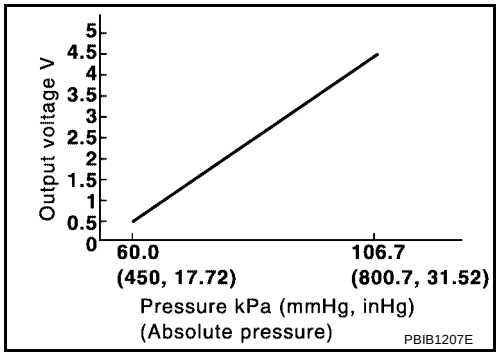

CONSULT-II Reference Value in Data Monitor Mode

UBS00JFI

Specification data are reference values.

MONITOR ITEM	CONDITION	SPECIFICATION
EVAP SYS PRES	● Ignition switch: ON	Approx. 1.8 - 4.8V

On Board Diagnosis Logic

UBS00JFJ

NOTE:
If DTC P0452 is displayed with DTC P1229, first perform the trouble diagnosis for DTC P1229. Refer to EC-1178 .

DTC No.	Trouble diagnosis name	DTC detecting condition	Possible cause
P0452 0452	EVAP control system pressure sensor low input	An excessively low voltage from the sensor is sent to ECM.	● Harness or connectors (The sensor circuit is open or shorted.) ● EVAP control system pressure sensor

DTC Confirmation Procedure

UBS00JFK

NOTE:
If DTC Confirmation Procedure has been previously conducted, always turn ignition switch OFF and wait at least 10 seconds before conducting the next test.
TESTING CONDITION:
Always perform test at a temperature of 5°C (41°F) or more.

WITH CONSULT-II

1. Start engine and warm it up to normal operating temperature.
2. Turn ignition switch OFF and wait at least 10 seconds.
3. Turn ignition switch ON.
4. Select “DATA MONITOR” mode with CONSULT-II.
5. Make sure that “FUEL T/TMP SE” is more than 0°C (32°F).
6. Start engine and wait at least 20 seconds.
   If 1st trip DTC is detected, go to EC-1051, "Diagnostic Procedure" .

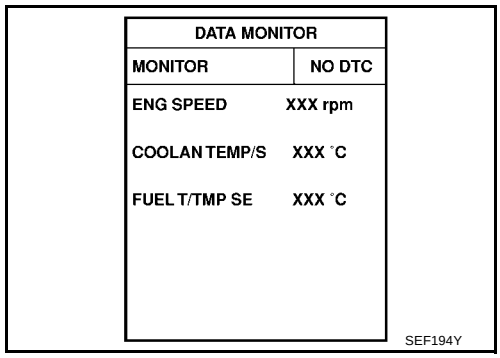

WITH GST

1. Start engine and warm it up to normal operating temperature.
2. Check that voltage between ECM terminal 107 (Fuel tank temperature sensor signal) and ground is less than 4.2V.
3. Turn ignition switch OFF and wait at least 10 seconds.
4. Start engine and wait at least 20 seconds.
5. Select Service $07 with GST.
   If 1st trip DTC is detected, go to EC-1051, "Diagnostic Procedure" .

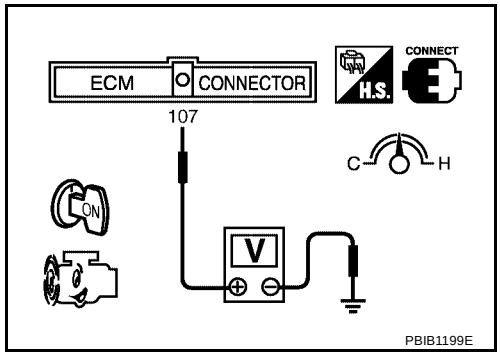

Wiring Diagram

UBS00JFL

EC-PRE/SE-01

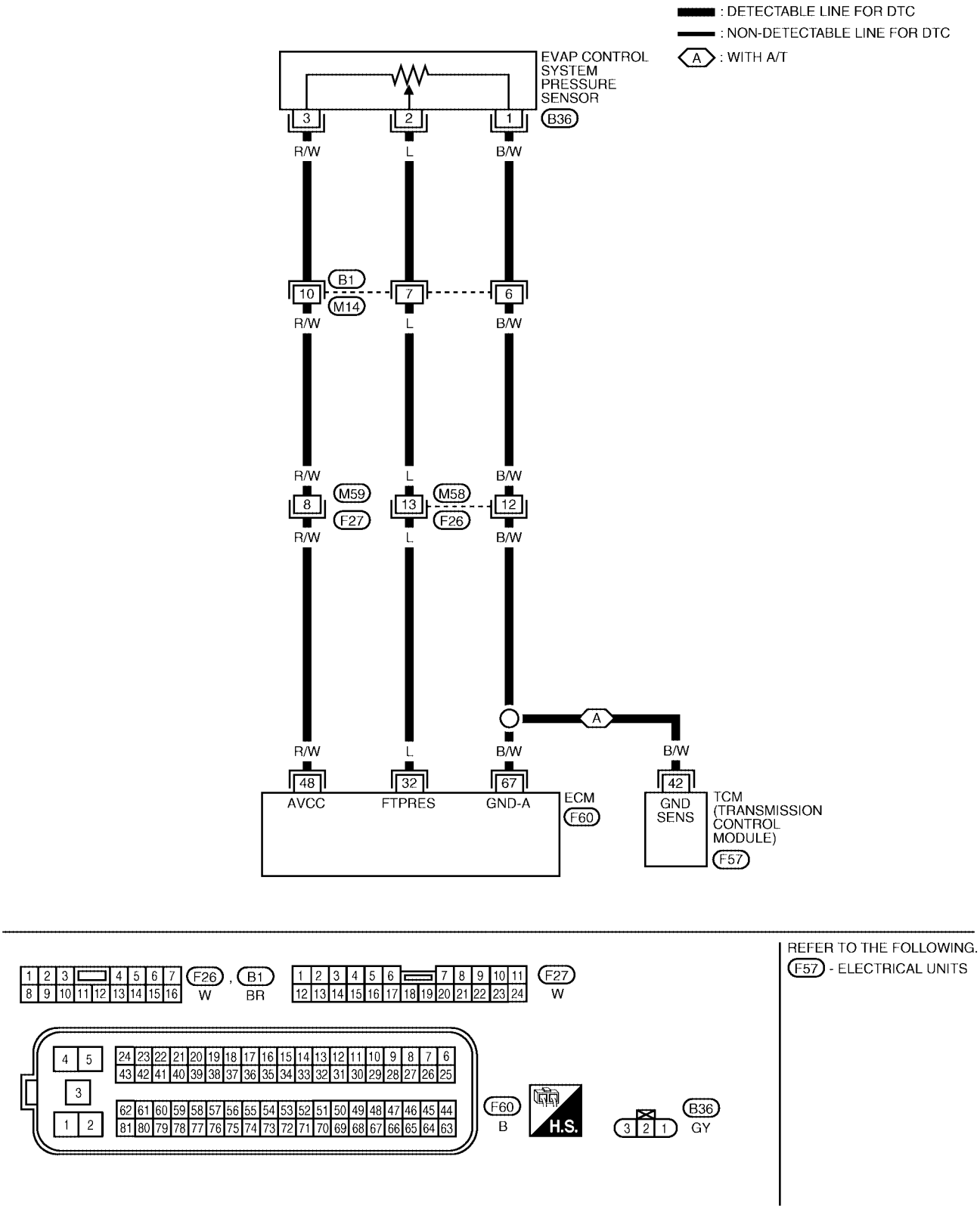

BBWA1469E

Specification data are reference values and are measured between each terminal and ground.

CAUTION:

Do not use ECM ground terminals when measuring input/output voltage. Doing so may result in damage to the ECM's transistor. Use a ground other than ECM terminals, such as the ground.

TERMINAL NO.	WIRE COLOR	ITEM	CONDITION	DATA (DC Voltage)
32	L	EVAP control system pressure sensor	**[Ignition switch: ON]**	Approximately 1.8 - 4.8V
48	R/W	Sensor power supply (EVAP control system pressure sensor)	**[Ignition switch: ON]**	Approximately 5V
67	B/W	Sensor ground	**[Engine is running]** ● **Warm-up condition** ● Idle speed	Approximately 0V

Diagnostic Procedure

UBS00JFM

1. CHECK GROUND CONNECTIONS

1. Turn ignition switch OFF.
2. Loosen and retighten engine two screws on the body.
   Refer to EC-841, "Ground Inspection" .

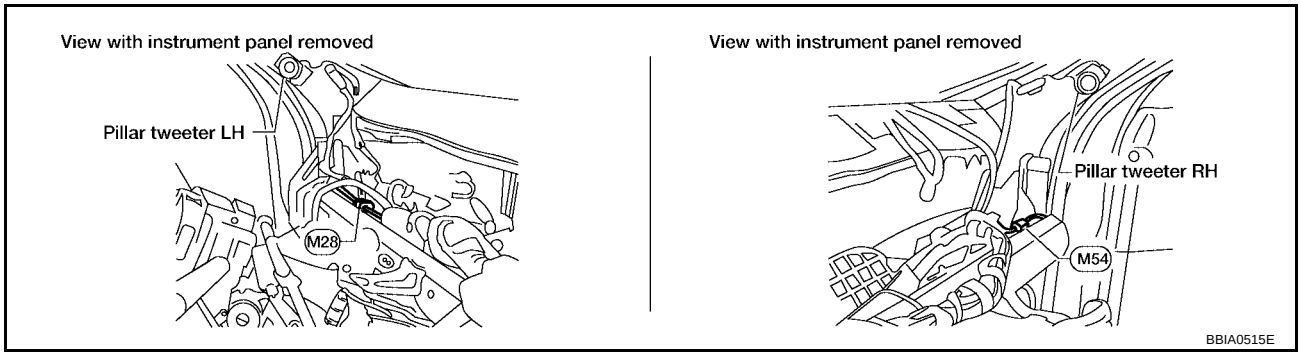

OK or NG

OK >> GO TO 2.
NG >> Repair or replace ground connections.

2. CHECK CONNECTOR

1. Disconnect EVAP control system pressure sensor harness connector.

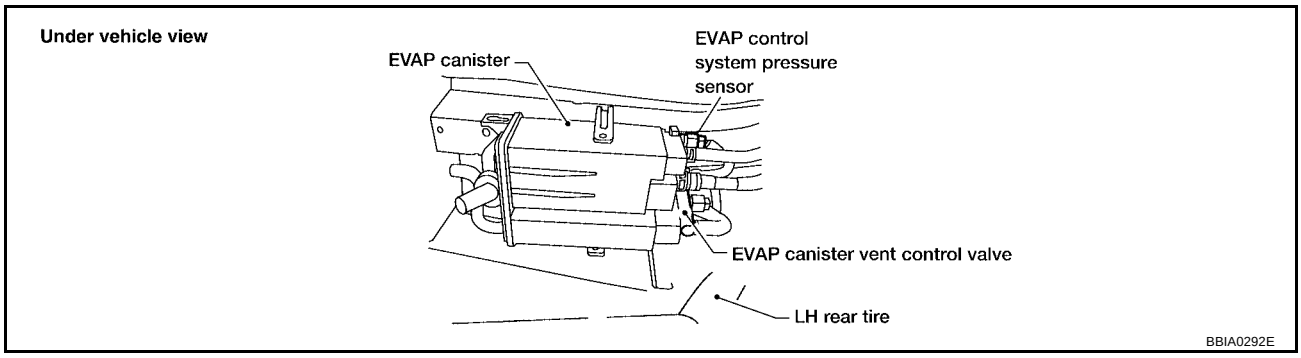

2. Check sensor harness connector for water.

Water should not exist.

OK or NG

OK >> GO TO 3.
NG >> Repair or replace harness connector.

3. CHECK EVAP CONTROL SYSTEM PRESSURE SENSOR POWER SUPPLY CIRCUIT

1. Turn ignition switch ON.
2. Check voltage between EVAP control system pressure sensor terminal 3 and ground with CONSULT-II or tester.

Voltage: Approximately 5V

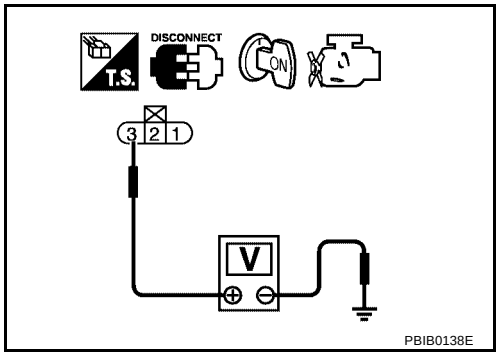

OK or NG

OK >> GO TO 5.
NG >> GO TO 4.

4. DETECT MALFUNCTIONING PART

Check the following.

- Harness connectors B1, M14
- Harness for open or short between EVAP control system pressure sensor and ECM

>> Repair open circuit or short to ground or short to power in harness or connectors.

5. CHECK EVAP CONTROL SYSTEM PRESSURE SENSOR GROUND CIRCUIT FOR OPEN AND SHORT

1. Turn ignition switch OFF.
2. Disconnect ECM harness connector.
3. Disconnect TCM harness connector (A/T models).
4. Check harness continuity between EVAP control system pressure sensor terminal 1 and ECM terminal 67, TCM terminal 42 (A/T models).
   Refer to Wiring Diagram.

Continuity should exist.

5. Also check harness for short to ground and short to power.

OK or NG

OK >> GO TO 7.
NG >> GO TO 6.

6. DETECT MALFUNCTIONING PART

Check the following.

- Harness connectors M58, F26
- Harness connectors B1, M14
- Harness for open or short between EVAP control system pressure sensor and ECM
- Harness for open or short between EVAP control system pressure sensor and TCM (A/T models)

>> Repair open circuit or short to ground or short to power in harness or connectors.

7. CHECK EVAP CONTROL SYSTEM PRESSURE SENSOR INPUT SIGNAL CIRCUIT FOR OPEN AND SHORT

1. Check harness continuity between ECM terminal 32 and EVAP control system pressure sensor terminal 2.
   Refer to Wiring Diagram.

   Continuity should exist.

2. Also check harness for short to ground and short to power.

OK or NG

OK >> GO TO 9.
NG >> GO TO 8.

8. DETECT MALFUNCTIONING PART

Check the following.

- Harness connectors M58, F26
- Harness connectors B1, M14
- Harness for open or short between ECM and EVAP control system pressure sensor

>> Repair open circuit or short to ground or short to power in harness or connectors.

9. CHECK EVAP CONTROL SYSTEM PRESSURE SENSOR

Refer to EC-1053, "Component Inspection" .

OK or NG

OK >> GO TO 10.
NG >> Replace EVAP control system pressure sensor.

10. CHECK INTERMITTENT INCIDENT

Refer to EC-834, "TROUBLE DIAGNOSIS FOR INTERMITTENT INCIDENT" .

>> **INSPECTION END**

Component Inspection

UBS00JFN

EVAP CONTROL SYSTEM PRESSURE SENSOR

1. Remove EVAP control system pressure sensor with its harness connector connected from EVAP canister. **Do not reuse the O-ring, replace it with a new one.**
2. Install a vacuum pump to EVAP control system pressure sensor.
3. Turn ignition switch ON and check output voltage between ECM terminal 32 and ground under the following conditions.

Applied vacuum kPa (mmHg, inHg)	Voltage V
Not applied	1.8 - 4.8
-26.7 (-200, -7.87)	2.1 to 2.5V lower than above value

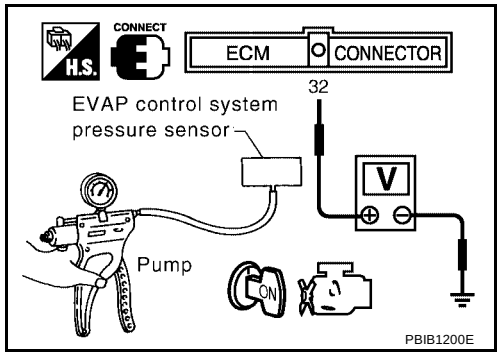

CAUTION:

- **Always calibrate the vacuum pump gauge when using it.**
- **Do not apply below -93.3 kPa (-700 mmHg, -27.56 inHg) or pressure over 101.3 kPa (760 mmHg, 29.92 inHg).**

4. If NG, replace EVAP control system pressure sensor.

DTC P0453 EVAP CONTROL SYSTEM PRESSURE SENSOR

PFP:25085

Component Description

UBS00JFO

The EVAP control system pressure sensor detects pressure in the purge line. The sensor output voltage to the ECM increases as pressure increases.

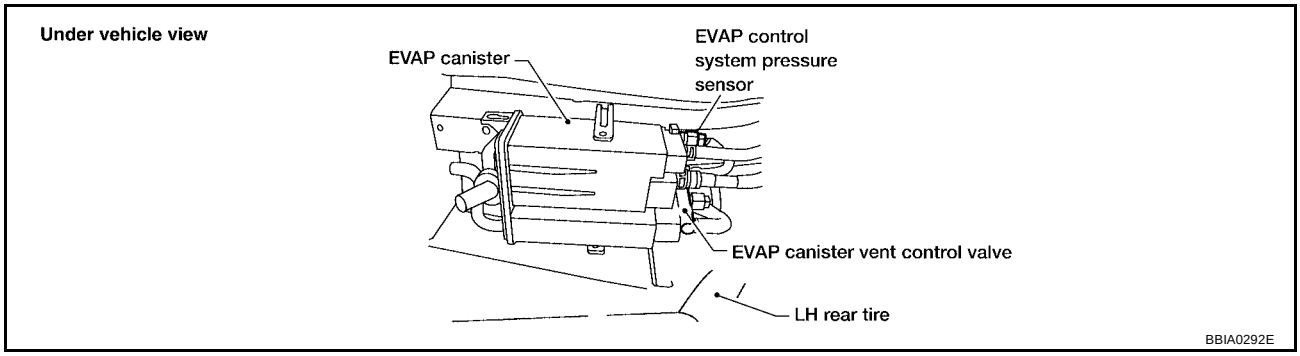

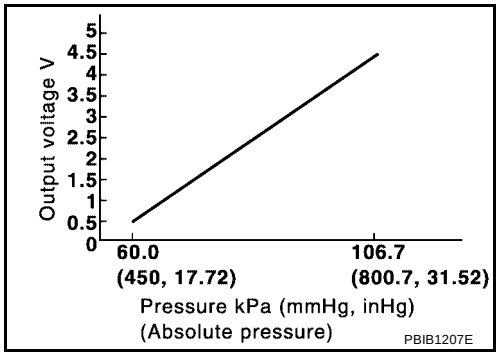

CONSULT-II Reference Value in Data Monitor Mode

UBS00JFP

Specification data are reference values.

MONITOR ITEM	CONDITION	SPECIFICATION
EVAP SYS PRES	● Ignition switch: ON	Approx. 1.8 - 4.8V

On Board Diagnosis Logic

UBS00JFQ

NOTE:
If DTC P0453 is displayed with DTC P1229, first perform the trouble diagnosis for DTC P1229. Refer to EC-1178 .

DTC No.	Trouble diagnosis name	DTC detecting condition	Possible cause
P0453 0453	EVAP control system pressure sensor high input	An excessively high voltage from the sensor is sent to ECM.	● Harness or connectors (The sensor circuit is open or shorted.) ● EVAP control system pressure sensor ● EVAP canister vent control valve ● EVAP canister ● Rubber hose to EVAP canister vent control valve

DTC Confirmation Procedure

UBS00JFR

NOTE:
If DTC Confirmation Procedure has been previously conducted, always turn ignition switch OFF and wait at least 10 seconds before conducting the next test.
TESTING CONDITION:
Always perform test at a temperature of 5°C (41°F) or more.

WITH CONSULT-II

1. Start engine and warm it up to normal operating temperature.
2. Turn ignition switch OFF and wait at least 10 seconds.
3. Turn ignition switch ON.
4. Select “DATA MONITOR” mode with CONSULT-II.
5. Make sure that “FUEL T/TMP SE” is more than 0°C (32°F).
6. Wait at least 10 seconds.
   If 1st trip DTC is detected, go to EC-1057, "Diagnostic Procedure" .

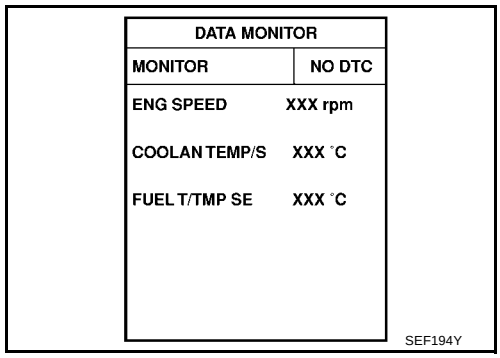

WITH GST

1. Start engine and warm it up to normal operating temperature.
2. Check that voltage between ECM terminal 107 (Fuel tank temperature sensor signal) and ground is less than 4.2V.
3. Turn ignition switch OFF and wait at least 10 seconds.
4. Wait at least 10 seconds.
5. Select Service $07 with GST.
   If 1st trip DTC is detected, go to EC-1057, "Diagnostic Procedure" .

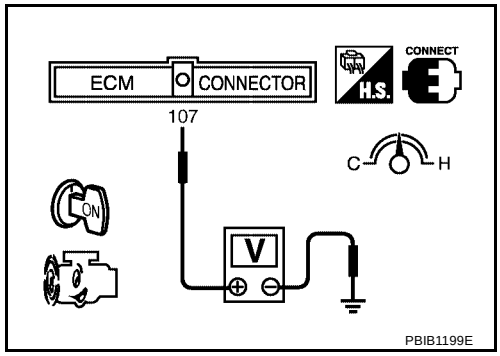

Wiring Diagram

UBS00JFS

EC-PRE/SE-01

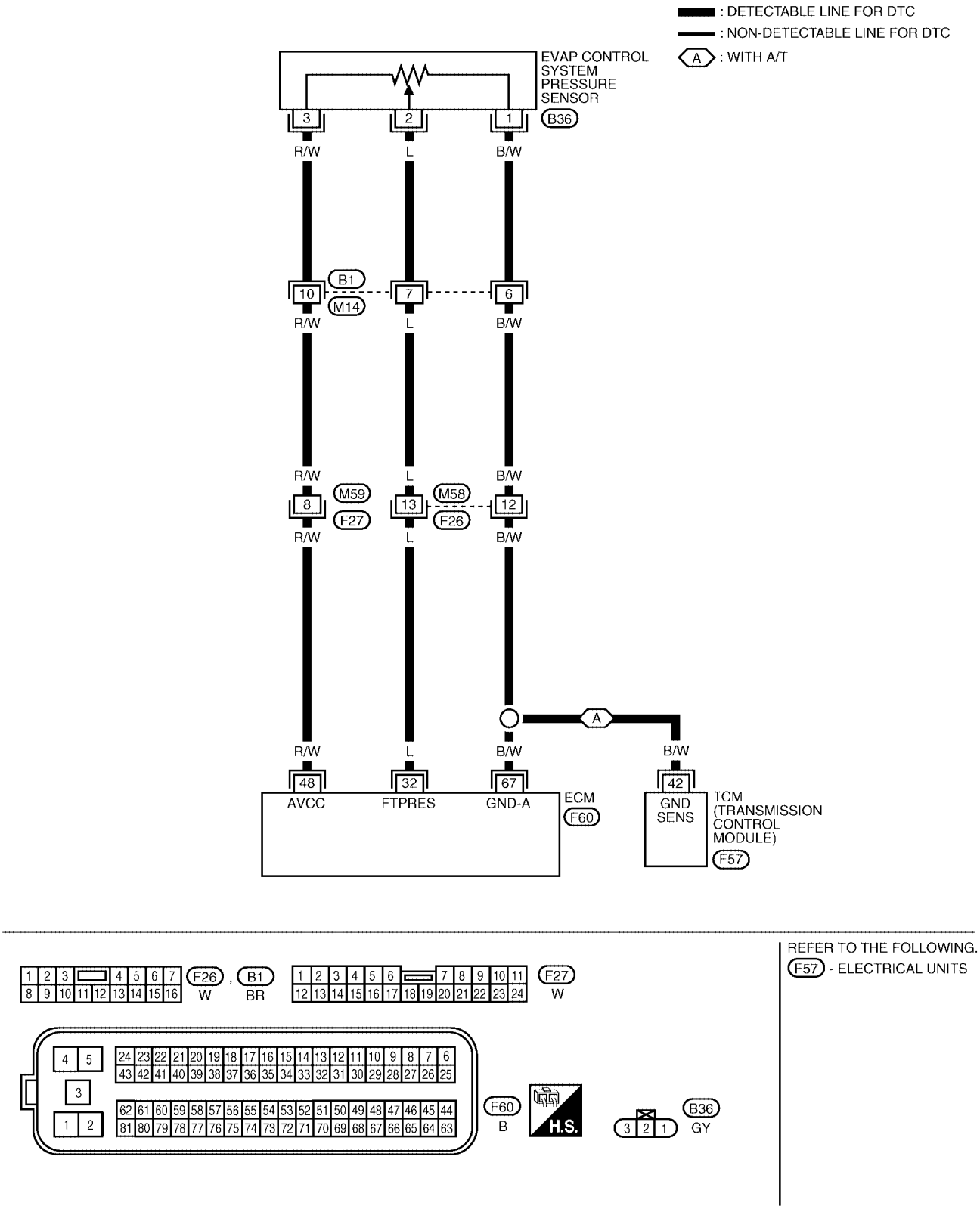

Specification data are reference values and are measured between each terminal and ground.

CAUTION:

Do not use ECM ground terminals when measuring input/output voltage. Doing so may result in damage to the ECM's transistor. Use a ground other than ECM terminals, such as the ground.

TERMINAL NO.	WIRE COLOR	ITEM	CONDITION	DATA (DC Voltage)
32	L	EVAP control system pressure sensor	**[Ignition switch: ON]**	Approximately 1.8 - 4.8V
48	R/W	Sensor power supply (EVAP control system pressure sensor)	**[Ignition switch: ON]**	Approximately 5V
67	B/W	Sensor ground	**[Engine is running]** ● **Warm-up condition** ● Idle speed	Approximately 0V

Diagnostic Procedure

UBS00JFT

1. CHECK GROUND CONNECTIONS

1. Turn ignition switch OFF.
2. Loosen and retighten engine two screws on the body.
   Refer to EC-841, "Ground Inspection" .

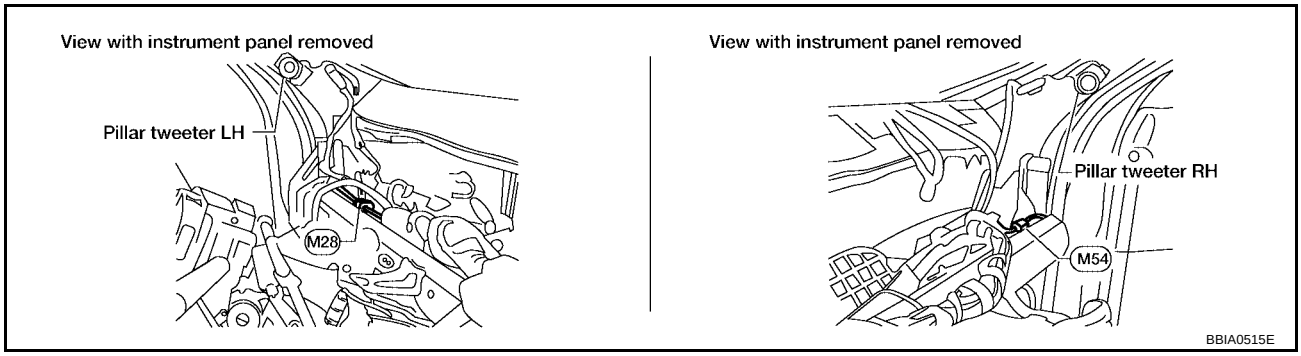

OK or NG

OK >> GO TO 2.
NG >> Repair or replace ground connections.

2. CHECK CONNECTOR

1. Disconnect EVAP control system pressure sensor harness connector.

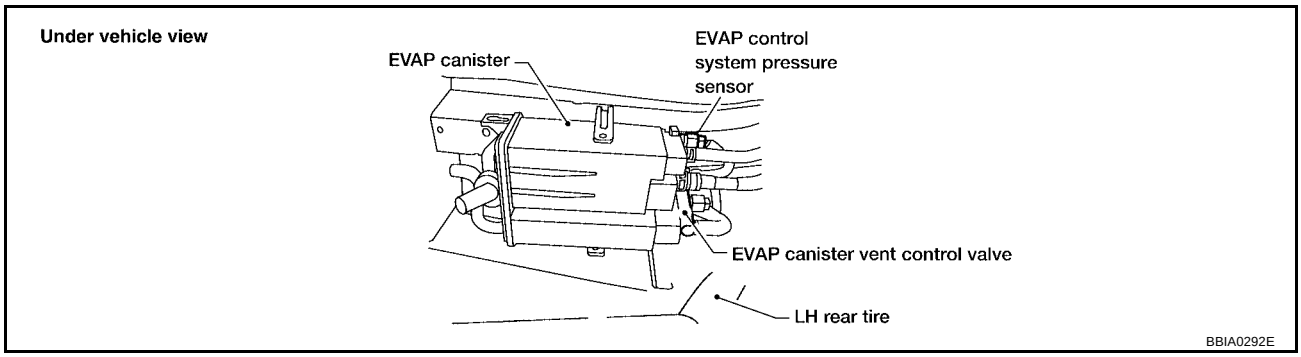

2. Check sensor harness connector for water.

Water should not exist.

OK or NG

OK >> GO TO 3.
NG >> Repair or replace harness connector.

3. CHECK EVAP CONTROL SYSTEM PRESSURE SENSOR POWER SUPPLY CIRCUIT

1. Turn ignition switch ON.
2. Check voltage between EVAP control system pressure sensor terminal 3 and ground with CONSULT-II or tester.

Voltage: Approximately 5V

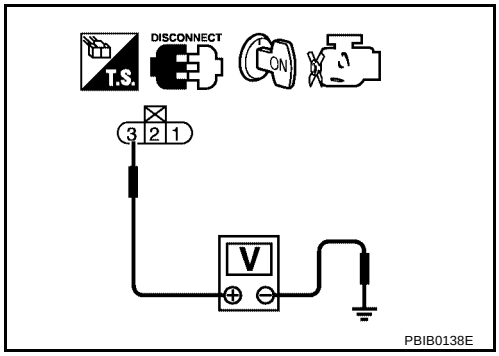

OK or NG

OK >> GO TO 5.
NG >> GO TO 4.

4. DETECT MALFUNCTIONING PART

Check the following.

- Harness connectors B1, M14
- Harness for open or short between EVAP control system pressure sensor and ECM

>> Repair open circuit or short to ground or short to power in harness or connectors.

5. CHECK EVAP CONTROL SYSTEM PRESSURE SENSOR GROUND CIRCUIT FOR OPEN AND SHORT

1. Turn ignition switch OFF.
2. Disconnect ECM harness connector.
3. Disconnect TCM harness connectors (A/T models).
4. Check harness continuity between EVAP control system pressure sensor terminal 1 and ECM terminal 67, TCM terminal 42 (A/T models).
   Refer to Wiring Diagram.

Continuity should exist.

5. Also check harness for short to ground and short to power.

OK or NG

OK >> GO TO 7.
NG >> GO TO 6.

6. DETECT MALFUNCTIONING PART

Check the following.

- Harness connectors M58, F26
- Harness connectors B1, M14
- Harness for open or short between EVAP control system pressure sensor and ECM
- Harness for open or short between EVAP control system pressure sensor and TCM (A/T models)

>> Repair open circuit or short to ground or short to power in harness or connectors.

7. CHECK EVAP CONTROL SYSTEM PRESSURE SENSOR INPUT SIGNAL CIRCUIT FOR OPEN AND SHORT

1. Check harness continuity between ECM terminal 32 and EVAP control system pressure sensor terminal 2.
   Refer to Wiring Diagram.

   Continuity should exist.

2. Also check harness for short to ground and short to power.

OK or NG

OK >> GO TO 9.
NG >> GO TO 8.

8. DETECT MALFUNCTIONING PART

Check the following.

- Harness connectors M58, F26
- Harness connectors B1, M14
- Harness for open or short between ECM and EVAP control system pressure sensor

>> Repair open circuit or short to ground or short to power in harness or connectors.

9. CHECK RUBBER TUBE

1. Disconnect rubber tube connected to EVAP canister vent control valve.
2. Check the rubber tube for clogging, vent and kinked.

OK or NG

OK >> GO TO 10.
NG >> Clean the rubber tube using an air blower, repair or replace rubber tube.

10. CHECK EVAP CANISTER VENT CONTROL VALVE

Refer to EC-684, "Component Inspection" .

OK or NG

OK >> GO TO 11.
NG >> Replace EVAP canister vent control valve.

11. CHECK EVAP CONTROL SYSTEM PRESSURE SENSOR

Refer to EC-1060, "Component Inspection" .

OK or NG

OK >> GO TO 12.
NG >> Replace EVAP control system pressure sensor.

12. CHECK IF EVAP CANISTER SATURATED WITH WATER

1. Remove EVAP canister with EVAP canister vent control valve and EVAP control system pressure sensor attached.
2. Check if water will drain from the EVAP canister.

Yes or No

Yes >> GO TO 13.
No >> GO TO 15.

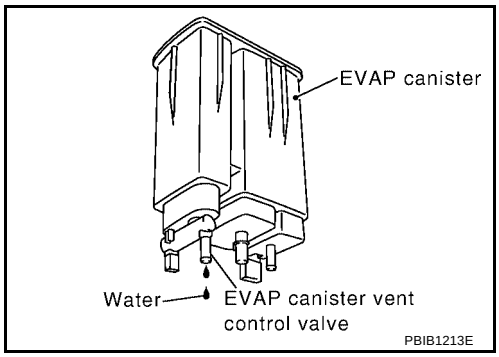

13. CHECK EVAP CANISTER

Weigh the EVAP canister with the EVAP canister vent control valve and EVAP control system pressure sensor attached.
The weight should be less than 2.1 kg (4.6 lb).

OK or NG

OK >> GO TO 15.
NG >> GO TO 14.

14. DETECT MALFUNCTIONING PART

Check the following.

- EVAP canister for damage
- EVAP hose connected to EVAP canister for clogging or poor connection

>> Repair hose or replace EVAP canister.

15. CHECK INTERMITTENT INCIDENT

Refer to EC-834, "TROUBLE DIAGNOSIS FOR INTERMITTENT INCIDENT" .

>> **INSPECTION END**

Component Inspection

UBS00JFU

EVAP CONTROL PRESSURE SENSOR

1. Remove EVAP control system pressure sensor with its harness connector connected from EVAP canister. **Do not reuse the O-ring, replace it with a new one.**
2. Install a vacuum pump to EVAP control system pressure sensor.
3. Turn ignition switch ON and check output voltage between ECM terminal 32 and ground under the following conditions.

Applied vacuum kPa (mmHg, inHg)	Voltage V
Not applied	1.8 - 4.8
-26.7 (-200, -7.87)	2.1 to 2.5V lower than above value

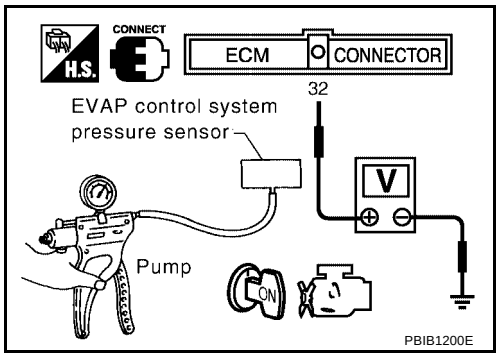

CAUTION:

- **Always calibrate the vacuum pump gauge when using it.**
- **Do not apply below -93.3 kPa (-700 mmHg, -27.56 inHg) or pressure over 101.3 kPa (760 mmHg, 29.92 inHg).**

4. If NG, replace EVAP control system pressure sensor.

DTC P0455 EVAP CONTROL SYSTEM

PFP:14950

On Board Diagnosis Logic

UBS00JWF

This diagnosis detects a very large leak (fuel filler cap fell off etc.) in EVAP system between the fuel tank and EVAP canister purge volume control solenoid valve.

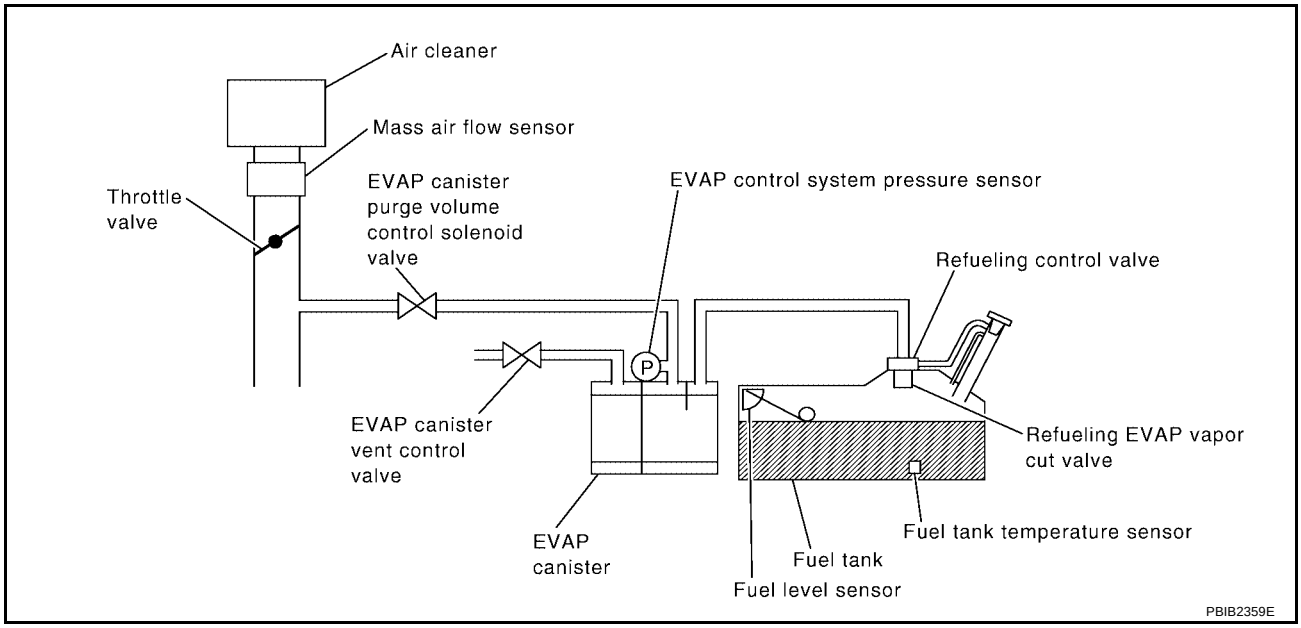

DTC No.	Trouble diagnosis name	DTC detecting condition	Possible cause
P0455 0455	EVAP control system gross leak detected	EVAP control system has a very large leak such as fuel filler cap fell off, EVAP control system does not operate properly.	● Fuel filler cap remains open or fails to close. ● Incorrect fuel tank vacuum relief valve ● Incorrect fuel filler cap used ● Foreign matter caught in fuel filler cap. ● Leak is in line between intake manifold and EVAP canister purge volume control solenoid valve. ● Foreign matter caught in EVAP canister vent control valve. ● EVAP canister or fuel tank leaks ● EVAP purge line (pipe and rubber tube) leaks ● EVAP purge line rubber tube bent. ● Loose or disconnected rubber tube ● EVAP canister vent control valve and the circuit ● EVAP canister purge volume control solenoid valve and the circuit ● Fuel tank temperature sensor ● O-ring of EVAP canister vent control valve is missing or damaged. ● EVAP control system pressure sensor ● Refueling EVAP vapor cut valve ● ORVR system leaks

CAUTION:

- **Use only a genuine NISSAN fuel filler cap as a replacement. If an incorrect fuel filler cap is used, the MIL may come on.**
- **If the fuel filler cap is not tightened properly, the MIL may come on.**
- **Use only a genuine NISSAN rubber tube as a replacement.**

DTC Confirmation Procedure

UBS00JWG

CAUTION:
Never remove fuel filler cap during the DTC Confirmation Procedure.

NOTE:
- **Make sure that EVAP hose are connected to EVAP canister purge volume control solenoid valve properly.**
- If DTC Confirmation Procedure has been previously conducted, always turn ignition switch OFF and wait at least 10 seconds before conducting the next test.

TESTING CONDITION:
- **Perform "DTC WORK SUPPORT" when the fuel level is between 1/4 and 3/4 full, and vehicle is placed on flat level surface.**
- **Open engine hood before conducting the following procedure.**

WITH CONSULT-II

1. Tighten fuel filler cap securely until reteaching sound is heard.
2. Turn ignition switch ON.
3. Turn ignition switch OFF and wait at least 10 seconds.
4. Turn ignition switch ON and select "DATA MONITOR" mode with CONSULT-II.
5. Make sure that the following conditions are met.
   COOLAN TEMP/S: 0 - 70°C (32 - 158°F)
   INT/A TEMP SE: 0 - 60°C (32 - 140°F)

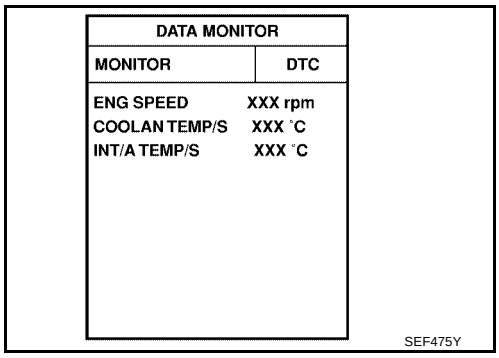

6. Select "EVAP SML LEAK P0442/P1442" of "EVAPORATIVE SYSTEM" in "DTC WORK SUPPORT" mode with CONSULT-II.
   Follow the instruction displayed.

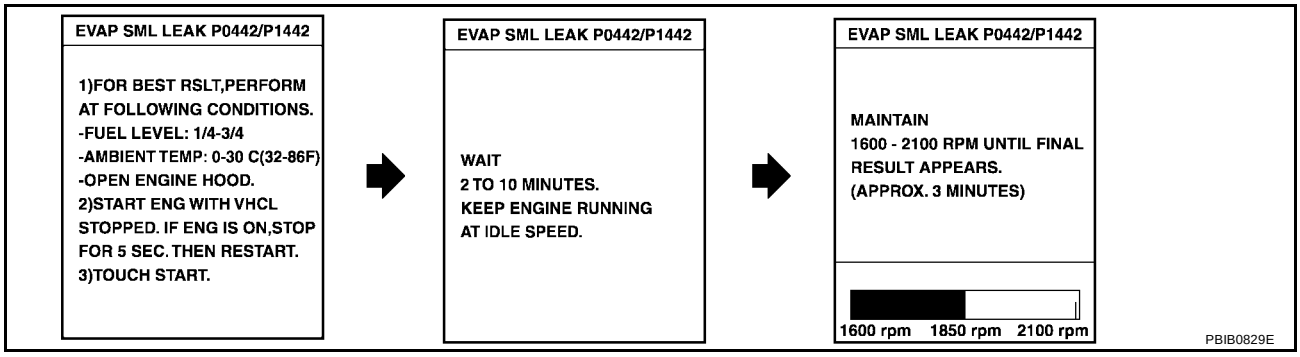

NOTE:
If the engine speed cannot be maintained within the range displayed on the CONSULT-II screen, go to EC-722, "Basic Inspection" .

7. Make sure that "OK" is displayed.

If “NG” is displayed, select “SELF-DIAG RESULTS” mode with CONSULT-II and make sure that “EVAP GROSS LEAK [P0455]” is displayed. If it is displayed, refer to EC-1063, "Diagnostic Procedure" .
If P0442 is displayed, perform Diagnostic Procedure for DTC P0442, EC-1025 .

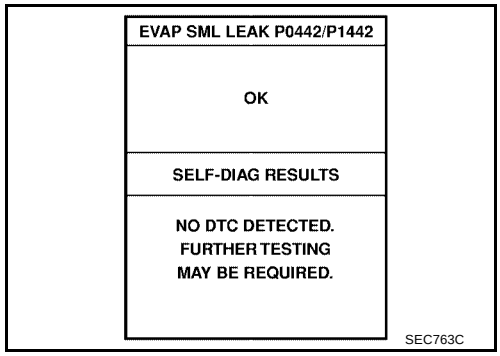

WITH GST

NOTE:
Be sure to read the explanation of EC-708, "Driving Pattern" before driving vehicle.

1. Start engine.
2. Drive vehicle according to EC-708, "Driving Pattern" .
3. Stop vehicle.
4. Turn ignition switch OFF, wait at least 10 seconds and then turn ignition switch ON.
5. Select Service $07 with GST.

- If P0455 is displayed on the screen, go to EC-1063, "Diagnostic Procedure" .
- If P0442 is displayed on the screen, go to Diagnostic Procedure, for DTC P0442, EC-1025 .
- If P0441 is displayed on the screen, go to Diagnostic Procedure for DTC P0441, EC-1018 .

Diagnostic Procedure

UBS00JWH

1. CHECK FUEL FILLER CAP DESIGN

1. Turn ignition switch OFF.
2. Check for genuine NISSAN fuel filler cap design.

OK or NG

OK >> GO TO 2.
NG >> Replace with genuine NISSAN fuel filler cap.

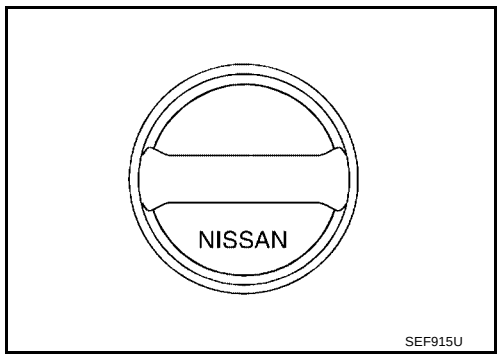

2. CHECK FUEL FILLER CAP INSTALLATION

Check that the cap is tightened properly by rotating the cap clockwise.

OK or NG

OK >> GO TO 3.
NG >> 1. Open fuel filler cap, then clean cap and fuel filler neck threads using air blower.
2. Retighten until reteaching sound is heard.

3. CHECK FUEL FILLER CAP FUNCTION

Check for air releasing sound while opening the fuel filler cap.

OK or NG

OK >> GO TO 5.
NG >> GO TO 4.

4. CHECK FUEL TANK VACUUM RELIEF VALVE

Refer to EC-684, "FUEL TANK VACUUM RELIEF VALVE (BUILT INTO FUEL FULLER CAP)"

OK or NG

OK >> GO TO 5.
NG >> Replace fuel filler cap with a genuine one.

5. CHECK EVAP PURGE LINE

Check EVAP purge line (pipe, rubber tube, fuel tank and EVAP canister) for cracks, improper connection or disconnection.
Refer to EC-681, "EVAPORATIVE EMISSION SYSTEM" .

OK or NG

OK >> GO TO 6.
NG >> Repair or reconnect the hose.

6. CLEAN EVAP PURGE LINE

Clean EVAP purge line (pipe and rubber tube) using air blower.

>> GO TO 7.

7. CHECK EVAP CANISTER VENT CONTROL VALVE

Check the following.

- EVAP canister vent control is installed properly.
  Refer to EC-685, "Removal and Installation"
- EVAP canister vent control valve.
  Refer to EC-1043, "Component Inspection"

OK or NG

OK >> GO TO 8.
NG >> Repair or replace EVAP canister vent control valve and O-ring.

8. INSTALL THE PRESSURE PUMP

To locate the EVAP leak, install EVAP service port adapter and pressure pump to EVAP service port securely.

NOTE:
Improper installation of the EVAP service port adapter to the EVAP service port may cause leaking.

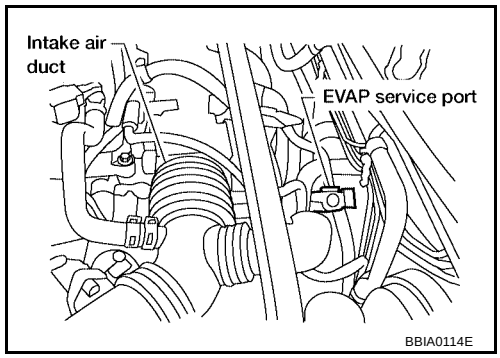

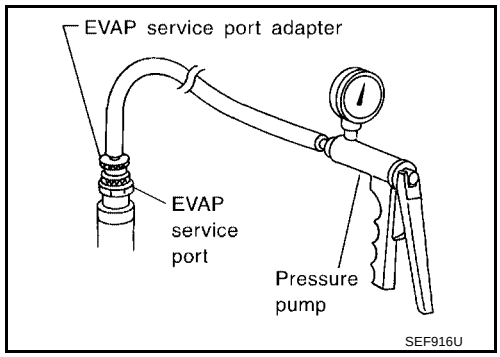

With CONSULT-II>>GO TO 9.
Without CONSULT-II>>GO TO 10.

9. CHECK FOR EVAP LEAK

With CONSULT-II

1. Turn ignition switch ON.
2. Select “EVAP SYSTEM CLOSE” of “WORK SUPPORT” mode with CONSULT-II.
3. Touch “START” and apply pressure into the EVAP line until the pressure indicator reaches the middle of the bar graph.

   CAUTION:
   - **Never use compressed air or a high pressure pump.**
   - **Do not exceed 4.12 kPa (0.042 kg/cm^2 , 0.6 psi) of pressure in the system.**

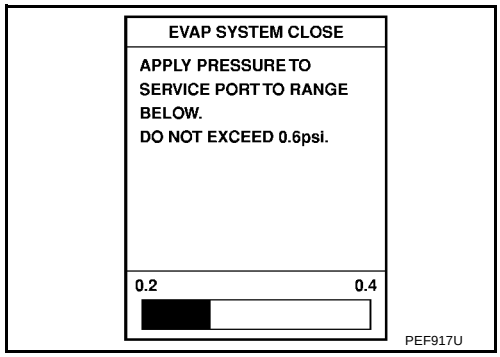

4. Using EVAP leak detector, locate the EVAP leak. For the leak detector, refer to the instruction manual for more details.
   Refer to EC-682, "EVAPORATIVE EMISSION LINE DRAWING"
   .

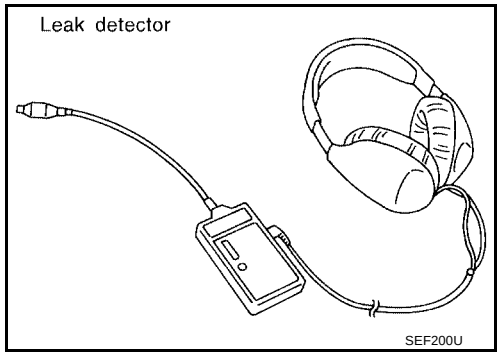

OK or NG

OK >> GO TO 11.
NG >> Repair or replace.

10. CHECK FOR EVAP LEAK

Without CONSULT-II

1. Turn ignition switch OFF.
2. Apply 12 volts DC to EVAP canister vent control valve. The valve will close. (Continue to apply 12 volts until the end of test.)

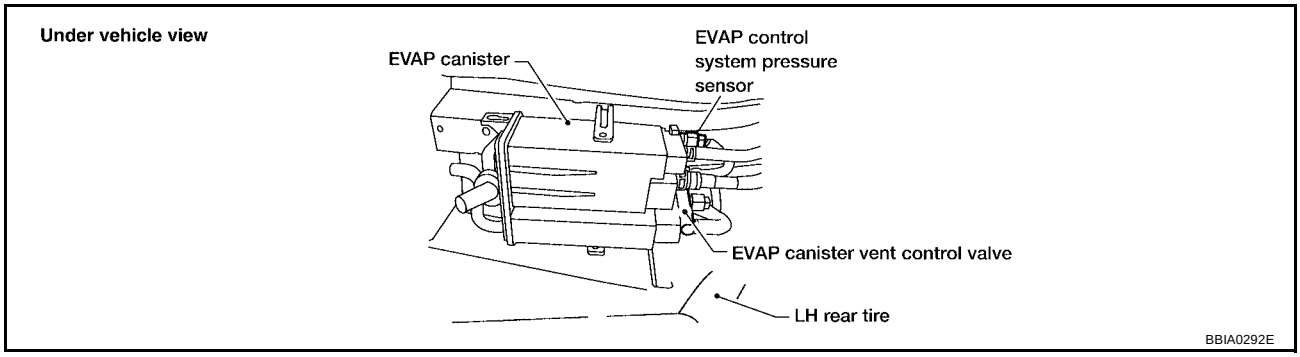

3. Pressurize the EVAP line using pressure pump with 1.3 to 2.7 kPa (10 to 20 mmHg, 0.39 to 0.79 inHg), then remove pump and EVAP service port adapter.

   CAUTION:
   - **Never use compressed air or a high pressure pump.**
   - **Do not exceed 4.12 kPa (0.042 kg/cm^2 , 0.6 psi) of pressure in the system.**

4. Using EVAP leak detector, locate the EVAP leak. For the leak detector, refer to the instruction manual for more details. Refer to EC-682, "EVAPORATIVE EMISSION LINE DRAWING" .

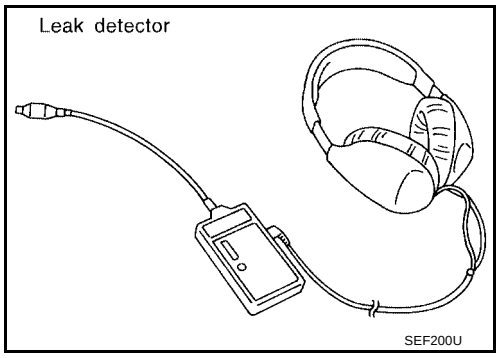

OK or NG

OK >> GO TO 12.
NG >> Repair or replace.

11. CHECK EVAP CANISTER PURGE VOLUME CONTROL SOLENOID VALVE OPERATION

With CONSULT-II

1. Disconnect vacuum hose to EVAP canister purge volume control solenoid valve at EVAP service port.
2. Start engine.
3. Perform “PURG VOL CONT/V” in “ACTIVE TEST” mode.
4. Touch “Qu” on CONSULT-II screen to increase “PURG VOL CONT/V” opening to 100%.
5. Check vacuum hose for vacuum when revving engine up to 2,000 rpm.

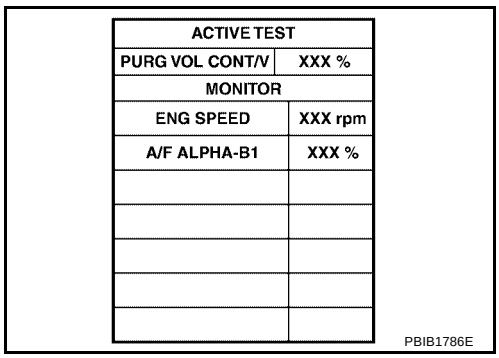

ACTIVE TEST	
PURG VOL CONT/V	XXX %
MONITOR	
ENG SPEED	XXX rpm
A/F ALPHA-B1	XXX %

PBIB1786E

OK or NG

OK >> GO TO 14.
NG >> GO TO 13.

12. CHECK EVAP CANISTER PURGE VOLUME CONTROL SOLENOID VALVE OPERATION

Without CONSULT-II

1. Start engine and warm it up to normal operating temperature.
2. Stop engine.
3. Disconnect vacuum hose to EVAP canister purge volume control solenoid valve at EVAP service port.
4. Start engine and let it idle for at least 80 seconds.
5. Check vacuum hose for vacuum when revving engine up to 2,000 rpm.

OK or NG

OK >> GO TO 15.
NG >> GO TO 13.

13. CHECK VACUUM HOSE

Check vacuum hoses for clogging or disconnection. Refer to EC-682, "EVAPORATIVE EMISSION LINE DRAWING" .

OK or NG

OK (With CONSULT-II)>>GO TO 14.
OK (Without CONSULT-II)>>GO TO 15.
NG >> Repair or reconnect the hose.

14. CHECK EVAP CANISTER PURGE VOLUME CONTROL SOLENOID VALVE

With CONSULT-II

1. Start engine.
2. Perform “PURG VOL CONT/V” in “ACTIVE TEST” mode with CONSULT-II. Check that engine speed varies according to the valve opening.

OK or NG

OK >> GO TO 16.
NG >> GO TO 15.

ACTIVE TEST	
PURG VOL CONT/V	XXX %
MONITOR	
ENG SPEED	XXX rpm
A/F ALPHA-B1	XXX %

PBIB1786E

15. CHECK EVAP CANISTER PURGE VOLUME CONTROL SOLENOID VALVE

Refer to EC-1036, "Component Inspection" .

OK or NG

OK >> GO TO 16.
NG >> Replace EVAP canister purge volume control solenoid valve.

16. CHECK FUEL TANK TEMPERATURE SENSOR

Refer to EC-968, "Component Inspection" .

OK or NG

OK >> GO TO 17.
NG >> Replace fuel level sensor unit.

17. CHECK EVAP CONTROL SYSTEM PRESSURE SENSOR

Refer to EC-1047, "Component Inspection" .

OK or NG

OK >> GO TO 18.
NG >> Replace EVAP control system pressure sensor.

18. CHECK EVAP/ORVR LINE

Check refueling EVAP/ORVR line between EVAP canister and fuel tank for clogging, kink, looseness and improper connection. For location, refer to EC-688, "ON BOARD REFUELING VAPOR RECOVERY (ORVR)" .

OK or NG

OK >> GO TO 19.
>> Repair or replace hoses and tubes.

19. CHECK SIGNAL LINE AND RECIRCULATION LINE

Check signal line and recirculation line between filler neck tube and fuel tank for clogging, kink, cracks, looseness and improper connection.

OK or NG

OK >> GO TO 20.
>> Repair or replace hoses, tubes or filler neck tube.

20. CHECK REFUELING CONTROL VALVE

Refer to EC-691, "Component Inspection" .

OK or NG

OK >> GO TO 21.
>> Replace refueling EVAP control valve.

21. CHECK INTERMITTENT INCIDENT

Refer to EC-834, "TROUBLE DIAGNOSIS FOR INTERMITTENT INCIDENT" .

>> **INSPECTION END**

DTC P0456 EVAP CONTROL SYSTEM

PFP:14950

On Board Diagnosis Logic

UBS00JWI

This diagnosis detects very small leaks in the EVAP line between fuel tank and EVAP canister purge volume control solenoid valve, using the intake manifold vacuum in the same way as conventional EVAP small leak diagnosis.
If ECM judges a leak which corresponds to a very small leak, the very small leak P0456 will be detected.
If ECM judges a leak equivalent to a small leak, EVAP small leak P0442 will be detected.
If ECM judges there are no leaks, the diagnosis will be OK.

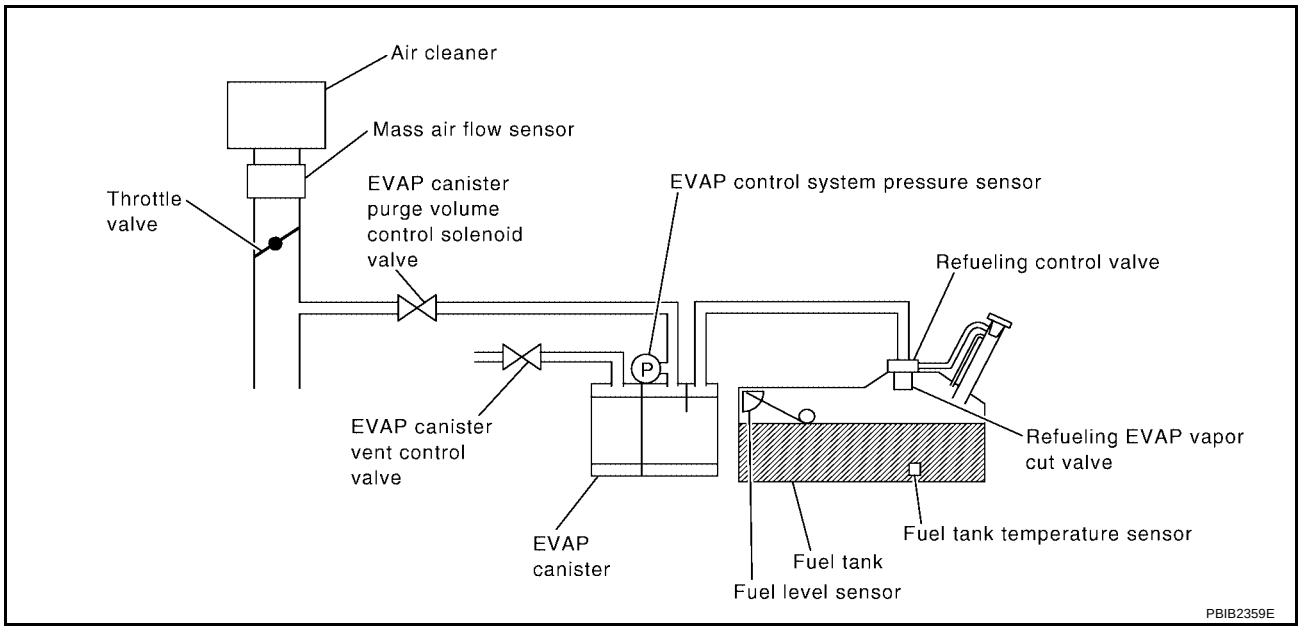

DTC No.	Trouble diagnosis name	DTC detecting condition	Possible cause
P0456 0456	Evaporative emission control system very small leak (negative pressure check)	● EVAP system has a very small leak. ● EVAP system does not operate properly.	● Incorrect fuel tank vacuum relief valve ● Incorrect fuel filler cap used ● Fuel filler cap remains open or fails to close. ● Foreign matter caught in fuel filler cap. ● Leak is in line between intake manifold and EVAP canister purge volume control solenoid valve. ● Foreign matter caught in EVAP canister vent control valve. ● EVAP canister or fuel tank leaks ● EVAP purge line (pipe and rubber tube) leaks ● EVAP purge line rubber tube bent ● Loose or disconnected rubber tube ● EVAP canister vent control valve and the circuit ● EVAP canister purge volume control solenoid valve and the circuit ● Fuel tank temperature sensor ● O-ring of EVAP canister vent control valve is missing or damaged ● EVAP canister is saturated with water ● EVAP control system pressure sensor ● Refueling EVAP vapor cut valve ● Refueling control valve ● ORVR system leaks ● Fuel level sensor and the circuit ● Foreign matter caught in EVAP canister purge volume control solenoid valve

CAUTION:

- **Use only a genuine NISSAN fuel filler cap as a replacement. If an incorrect fuel filler cap is used, the MIL may come on.**
- **If the fuel filler cap is not tightened properly, the MIL may come on.**
- **Use only a genuine NISSAN rubber tube as a replacement.**

DTC Confirmation Procedure

UBS00JWJ

NOTE:

- **If DTC P0456 is displayed with P0442, first perform trouble diagnosis for DTC P0456.**
- **After repair, make sure that the hoses and clips are installed properly.**
- If DTC Confirmation Procedure has been previously conducted, always turn ignition switch OFF and wait at least 10 seconds before conducting the next test.

TESTING CONDITION:

- **Open engine hood before conducting following procedure.**
- **If any of following conditions are met just before the DTC confirmation procedure, leave the vehicle for more than 1 hour.**
  - **Fuel filler cap is removed.**
  - **Refilled or drained the fuel.**
  - **EVAP component parts is/are removed.**
- **Before performing the following procedure, confirm that battery voltage is more than 11V at idle.**

WITH CONSULT-II

1. Turn ignition switch ON and select “DATA MONITOR” mode with CONSULT-II.
2. Make sure the following conditions are met.
   FUEL LEVEL SE: 0.25 - 1.4V
   COOLAN TEMP/S: 0 - 32°C (32 - 90°F)
   FUEL T/TMP SE: 0 - 35°C (32 - 95°F)
   INT A/TEMP SE: More than 0°C (32°F)
   If NG, turn ignition switch OFF and leave the vehicle in a cool place (soak the vehicle) or refilling/draining fuel until the output voltage condition of the “FUEL LEVEL SE” meets within the range above and leave the vehicle for more than 1 hour. Then start from step 1).

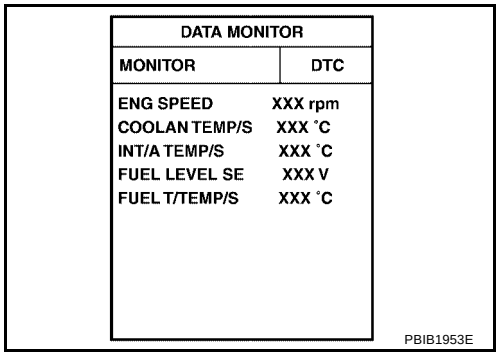

3. Turn ignition switch OFF and wait at least 10 seconds.
4. Turn ignition switch ON.
5. Select “EVAP V/S LEAK P0456” of “EVAPORATIVE SYSTEM” in “DTC WORK SUPPORT” mode with CONSULT-II.
   Follow the instruction displayed.

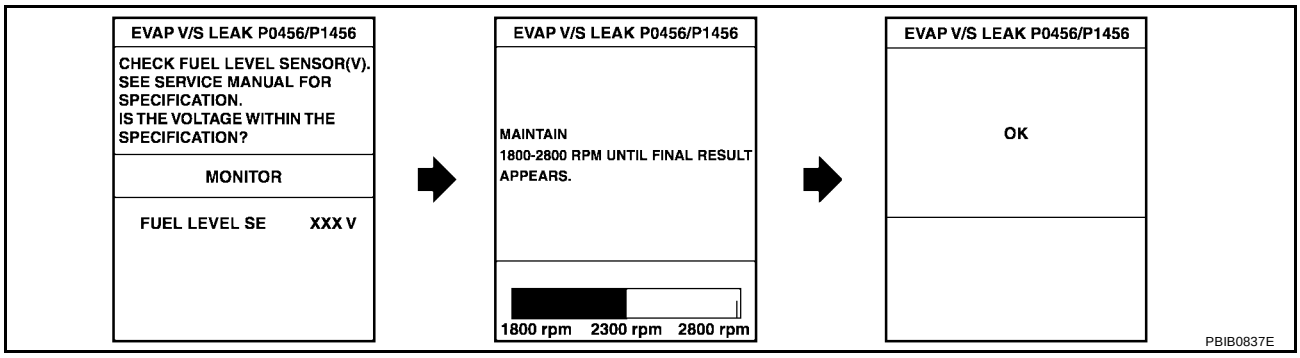

6. Make sure that “OK” is displayed.
   If “NG” is displayed, refer to EC-1072, "Diagnostic Procedure" .

   NOTE:
   - **If the engine speed cannot be maintained within the range displayed on CONSULT-II screen, go to EC-722, "Basic Inspection" .**

- **Make sure that EVAP hoses are connected to EVAP canister purge volume control solenoid valve properly.**

Overall Function Check

UBS00JWK

WITH GST

Use this procedure to check the overall function of the EVAP very small leak function. During this check, a 1st trip DTC might not be confirmed.

CAUTION:

- **Never use compressed air, doing so may damage the EVAP system.**
- **Do not start engine.**
- **Do not exceeded 4.12 kPa (0.042 kg/cm^2 , 0.6 psi).**

1. Attach the EVAP service port adapter securely to the EVAP service port.

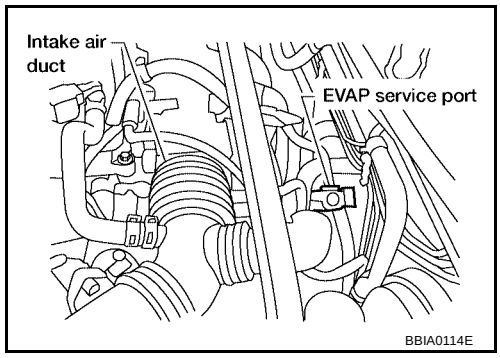

2. Set the pressure pump and a hose.
3. Also set the pressure pump with pressure gauge to the EVAP service port adapter.
4. Turn ignition switch ON.
5. Connect GST and select Service $08.
6. Using Service $08 control the EVAP canister vent control valve (close).
7. Apply pressure and make sure the following conditions are satisfied.
   Pressure to be applied: 2.7 kPa (20 mmHg, 0.79 inHg)
   Time to be waited after the pressure drawn in to the EVAP system and the pressure to be dropped: 60 seconds and the pressure should not be dropped more than 0.4 kPa (3 mmHg, 0.12 inHg).
   If NG, go to EC-1072, "Diagnostic Procedure" .
   If OK, go to next step.

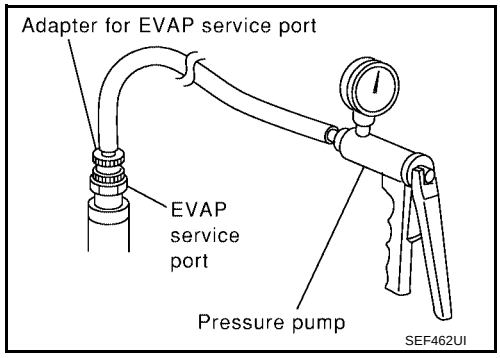

8. Disconnect GST.
9. Start engine and warm it up to normal operating temperature.
10. Turn ignition switch OFF and wait at least 10 seconds.
11. Restart engine and let it idle for 90 seconds.
12. Keep engine speed at 2,000 rpm for 30 seconds.
13. Turn ignition switch OFF.

    NOTE:
    For more information, refer to GST Instruction Manual.

Diagnostic Procedure

UBS00JWL

1. CHECK FUEL FILLER CAP DESIGN

1. Turn ignition switch OFF.
2. Check for genuine NISSAN fuel filler cap design.

OK or NG

OK >> GO TO 2.
NG >> Replace with genuine NISSAN fuel filler cap.

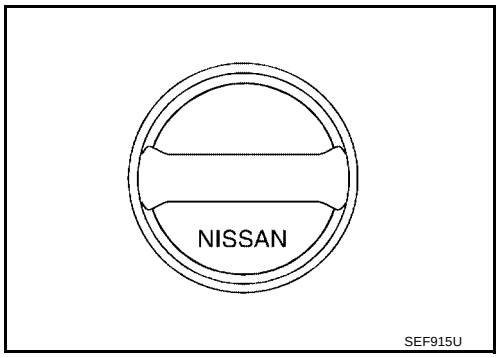

2. CHECK FUEL FILLER CAP INSTALLATION

Check that the cap is tightened properly by rotating the cap clockwise.

OK or NG

OK >> GO TO 3.
NG >> 1. Open fuel filler cap, then clean cap and fuel filler neck threads using air blower.
2. Retighten until reteaching sound is heard.

3. CHECK FUEL FILLER CAP FUNCTION

Check for air releasing sound while opening the fuel filler cap.

OK or NG

OK >> GO TO 5.
NG >> GO TO 4.

4. CHECK FUEL TANK VACUUM RELIEF VALVE

Refer to EC-684, "FUEL TANK VACUUM RELIEF VALVE (BUILT INTO FUEL FULLER CAP)" .

OK or NG

OK >> GO TO 5.
NG >> Replace fuel filler cap with a genuine one.

5. INSTALL THE PRESSURE PUMP

To locate the EVAP leak, install EVAP service port adapter and pressure pump to EVAP service port securely.

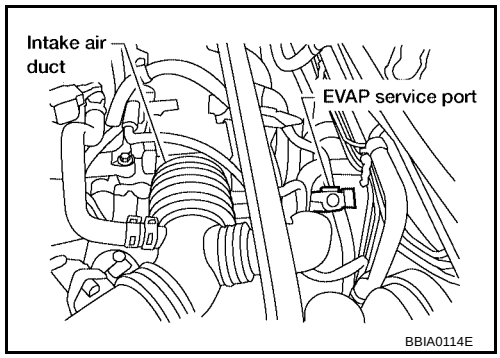

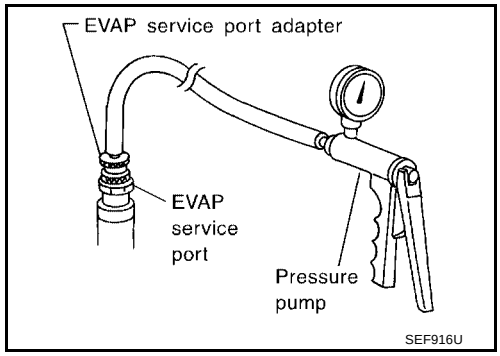

NOTE:
Improper installation of the EVAP service port adapter to the EVAP service port may cause leaking.

With CONSULT-II>>GO TO 6.
Without CONSULT-II>>GO TO 7.

6. CHECK FOR EVAP LEAK

With CONSULT-II

1. Turn ignition switch ON.
2. Select “EVAP SYSTEM CLOSE” of “WORK SUPPORT” mode with CONSULT-II.
3. Touch “START” and apply pressure into the EVAP line until the pressure indicator reaches the middle of the bar graph.

   CAUTION:
   - **Never use compressed air or a high pressure pump.**
   - **Do not exceed 4.12 kPa (0.042 kg/cm^2 , 0.6 psi) of pressure in the system.**

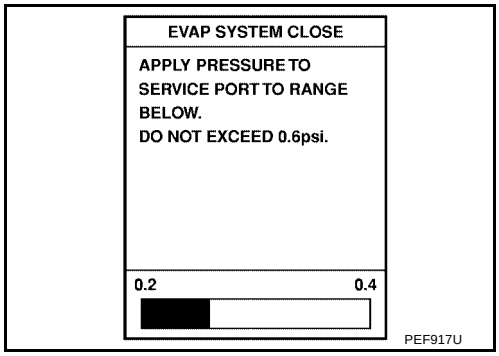

4. Using EVAP leak detector, locate the EVAP leak. For the leak detector, refer to the instruction manual for more details.
   Refer to EC-682, "EVAPORATIVE EMISSION LINE DRAWING"
   .

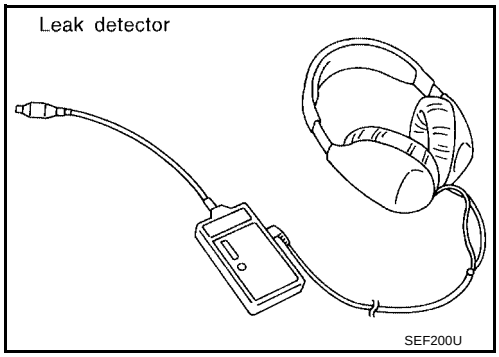

OK or NG

OK >> GO TO 8.
NG >> Repair or replace.

7. CHECK FOR EVAP LEAK

Without CONSULT-II

1. Turn ignition switch OFF.
2. Apply 12 volts DC to EVAP canister vent control valve. The valve will close. (Continue to apply 12 volts until the end of test.)

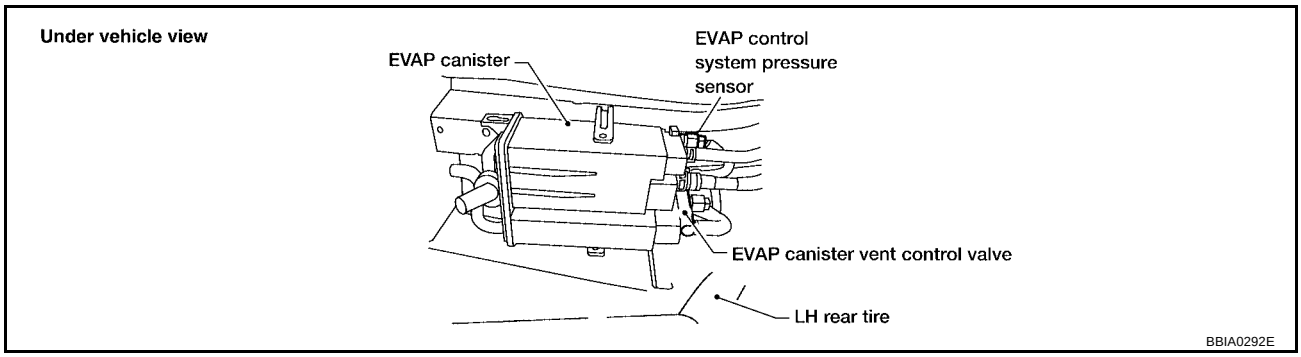

3. Pressurize the EVAP line using pressure pump with 1.3 to 2.7 kPa (10 to 20 mmHg, 0.39 to 0.79 inHg), then remove pump and EVAP service port adapter.

   CAUTION:
   - **Never use compressed air or a high pressure pump.**
   - **Do not exceed 4.12 kPa (0.042 kg/cm^2 , 0.6 psi) of pressure in the system.**

4. Using EVAP leak detector, locate the EVAP leak. For the leak detector, refer to the instruction manual for more details. Refer to EC-682, "EVAPORATIVE EMISSION LINE DRAWING" .

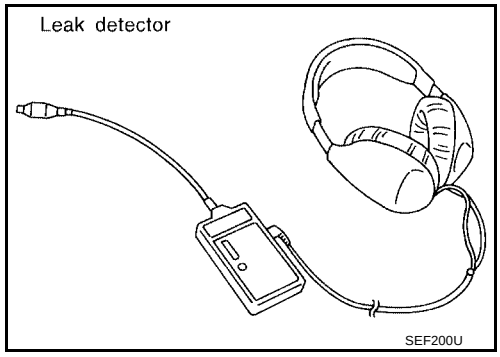

OK or NG

OK >> GO TO 8.
NG >> Repair or replace.

8. CHECK EVAP CANISTER VENT CONTROL VALVE

Check the following.

- EVAP canister vent control valve is installed properly.
  Refer to EC-685, "Removal and Installation"
- EVAP canister vent control valve.
  Refer to EC-1043, "Component Inspection"

OK or NG

OK >> GO TO 9.
NG >> Repair or replace EVAP canister vent control valve and O-ring.

9. CHECK IF EVAP CANISTER SATURATED WITH WATER

1. Remove EVAP canister with EVAP canister vent control valve and EVAP control system pressure sensor attached.
2. Does water drain from the EVAP canister?

Yes or No

Yes >> GO TO 10.
No (With CONSULT-II)>>GO TO 12.
No (Without CONSULT-II)>>GO TO 13.

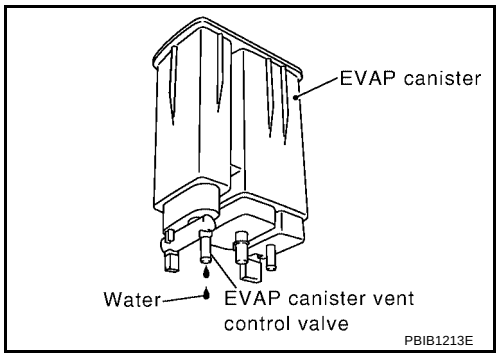

10. CHECK EVAP CANISTER

Weigh the EVAP canister with the EVAP canister vent control valve and EVAP control system pressure sensor attached.

The weight should be less than 1.9 kg (4.2 lb).

OK or NG

OK (With CONSULT-II)>>GO TO 12.
OK (Without CONSULT-II)>>GO TO 13.
NG >> GO TO 11.

11. DETECT MALFUNCTIONING PART

Check the following.

- EVAP canister for damage
- EVAP hose between EVAP canister and vehicle frame for clogging or poor connection

>> Repair hose or replace EVAP canister.

12. CHECK EVAP CANISTER PURGE VOLUME CONTROL SOLENOID VALVE OPERATION

With CONSULT-II

1. Disconnect vacuum hose to EVAP canister purge volume control solenoid valve at EVAP service port.
2. Start engine.
3. Perform “PURG VOL CONT/V” in “ACTIVE TEST” mode.
4. Touch “Qu” on CONSULT-II screen to increase “PURG VOL CONT/V” opening to 100%.
5. Check vacuum hose for vacuum when revving engine up to 2,000 rpm.

OK or NG

OK >> GO TO 15.
NG >> GO TO 14.

ACTIVE TEST	
PURG VOL CONT/V	XXX %
MONITOR	
ENG SPEED	XXX rpm
A/F ALPHA-B1	XXX %

PBIB1786E

13. CHECK EVAP CANISTER PURGE VOLUME CONTROL SOLENOID VALVE OPERATION

Without CONSULT-II

1. Start engine and warm it up to normal operating temperature.
2. Stop engine.
3. Disconnect vacuum hose to EVAP canister purge volume control solenoid valve at EVAP service port.
4. Start engine and let it idle for at least 80 seconds.
5. Check vacuum hose for vacuum when revving engine up to 2,000 rpm.

OK or NG

OK >> GO TO 16.
NG >> GO TO 14.

14. CHECK VACUUM HOSE

Check vacuum hoses for clogging or disconnection. Refer to EC-779, "Vacuum Hose Drawing" .

OK or NG

OK >> GO TO 15.
NG >> Repair or reconnect the hose.

15. CHECK EVAP CANISTER PURGE VOLUME CONTROL SOLENOID VALVE

Refer to EC-1036, "Component Inspection" .

OK or NG

OK >> GO TO 16.
NG >> Replace EVAP canister purge volume control solenoid valve.

16. CHECK FUEL TANK TEMPERATURE SENSOR

Refer to EC-968, "Component Inspection" .

OK or NG

OK >> GO TO 17.
NG >> Replace fuel level sensor unit.

17. CHECK EVAP CONTROL SYSTEM PRESSURE SENSOR

Refer to EC-1047, "Component Inspection" .

OK or NG

OK >> GO TO 18.
NG >> Replace EVAP control system pressure sensor.

18. CHECK EVAP PURGE LINE

Check EVAP purge line (pipe, rubber tube, fuel tank and EVAP canister) for cracks or improper connection. Refer to EC-682, "EVAPORATIVE EMISSION LINE DRAWING" .

OK or NG

OK >> GO TO 19.
NG >> Repair or reconnect the hose.

19. CLEAN EVAP PURGE LINE

Clean EVAP purge line (pipe and rubber tube) using air blower.

>> GO TO 20.

20. CHECK EVAP/ORVR LINE

Check EVAP/ORVR line between EVAP canister and fuel tank for clogging, kink, looseness and improper connection. For location, refer to EC-688, "ON BOARD REFUELING VAPOR RECOVERY (ORVR)" .

OK or NG

OK >> GO TO 21.
NG >> Repair or replace hoses and tubes.

21. CHECK SIGNAL LINE AND RECIRCULATION LINE

Check signal line recirculation line between filler neck tube and fuel tank for clogging, kink, cracks, looseness and improper connection.

OK or NG

OK >> GO TO 22.
NG >> Repair or replace hose, tube or filler neck tube.

22. CHECK REFUELING CONTROL VALVE

Refer to EC-691, "Component Inspection" .

OK or NG

OK >> GO TO 23.
NG >> Replace refueling control valve.

23. CHECK REFUELING EVAP VAPOR CUT VALVE

Refer to EC-691, "Component Inspection" .

OK or NG

OK >> GO TO 24.
NG >> Replace refueling EVAP vapor cut valve with fuel tank.

24. CHECK FUEL LEVEL SENSOR

Refer to FL-3, "FUEL LEVEL SENSOR UNIT, FUEL FILTER AND FUEL PUMP ASSEMBLY" .

OK or NG

OK >> GO TO 25.
NG >> Replace fuel level sensor unit.

25. CHECK INTERMITTENT INCIDENT

Refer to EC-834, "TROUBLE DIAGNOSIS FOR INTERMITTENT INCIDENT" .

>> **INSPECTION END**

DTC P0460 FUEL LEVEL SENSOR

PFP:25060

Component Description

UBS00JWM

The fuel level sensor is mounted in the fuel level sensor unit. The sensor detects a fuel level in the fuel tank and transmits a signal to the combination meter. The combination meter. sends the fuel level sensor signal to the ECM through CAN communication line.
It consists of two parts, one is mechanical float and the other is variable resistor. Fuel level sensor output voltage changes depending on the movement of the fuel mechanical float.

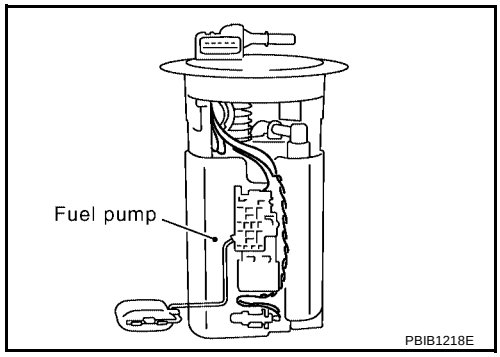

On Board Diagnostic Logic

UBS00JWN

NOTE:
If DTC P0460 is displayed with DTC U1000, U1001, first perform the trouble diagnosis for DTC U1000, U1001. Refer to EC-842, "DTC U1000, U1001 CAN COMMUNICATION LINE" .
When the vehicle is parked, naturally the fuel level in the fuel tank is stable. It means that output signal of the fuel level sensor does not change. If ECM senses sloshing signal from the sensor, fuel level sensor malfunction is detected.

DTC No.	Trouble diagnosis name	DTC detecting condition	Possible cause
P0460 0460	Fuel level sensor circuit noise	Even though the vehicle is parked, a signal being varied is sent from the fuel level sensor to ECM.	● Harness or connectors (The CAN communication line is open or shorted) ● Harness or connectors (The sensor circuit is open or shorted) ● Combination meter. ● Fuel level sensor

DTC Confirmation Procedure

UBS00JWO

NOTE:
If DTC Confirmation Procedure has been previously conducted, always turn ignition switch OFF and wait at least 10 seconds before conducting the next test.

WITH CONSULT-II

1. Turn ignition switch ON.
2. Select “DATA MONITOR” mode with CONSULT-II.
3. Start engine and wait maximum of 2 consecutive minutes.
4. If 1st trip DTC is detected, go to EC-1080, "Diagnostic Procedure" .

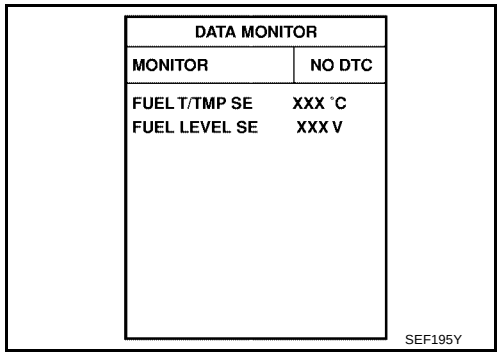

WITH GST

Follow the procedure “WITH CONSULT-II” above.

Diagnostic Procedure

UBS00JWP

1. CHECK FUEL GAUGE OPERATION

Refer to DI-16, "Meter/Gauge Operation and Odo/Trip Meter Segment Check in Diagnosis Mode" .

OK or NG

OK >> GO TO 2.
NG >> Follow the instruction of DI-16, "Meter/Gauge Operation and Odo/Trip Meter Segment Check in Diagnosis Mode" .

2. CHECK FUEL LEVEL SENSOR AND CIRCUIT

Refer to DI-26, "FUEL LEVEL SENSOR UNIT CHECK" .

OK or NG

OK >> GO TO 3.
NG >> Repair or replace malfunctioning parts.

3. CHECK INTERMITTENT INCIDENT

Refer to EC-834, "TROUBLE DIAGNOSIS FOR INTERMITTENT INCIDENT" .

>> **INSPECTION END**

Removal and Installation

UBS00JWQ

FUEL LEVEL SENSOR

Refer to FL-3, "FUEL LEVEL SENSOR UNIT, FUEL FILTER AND FUEL PUMP ASSEMBLY" .

DTC P0461 FUEL LEVEL SENSOR

PFP:25060

Component Description

UBS00JWR

The fuel level sensor is mounted in the fuel level sensor unit. The sensor detects a fuel level in the fuel tank and transmits a signal to the combination meter. The combination meter. sends the fuel level sensor signal to the ECM through CAN communication line.
It consists of two parts, one is mechanical float and the other is variable resistor. Fuel level sensor output voltage changes depending on the movement of the fuel mechanical float.

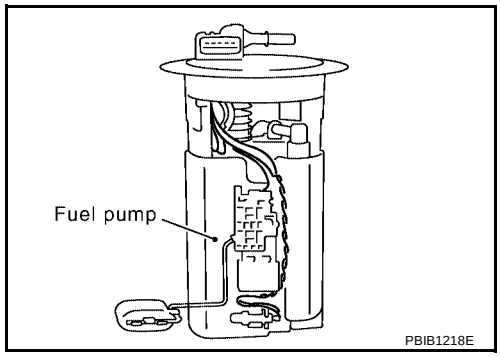

On Board Diagnostic Logic

UBS00JWS

NOTE:
If DTC P0461 is displayed with DTC U1000, U1001, first perform the trouble diagnosis for DTC U1000, U1001. Refer to EC-842, "DTC U1000, U1001 CAN COMMUNICATION LINE" .
Driving long distances naturally affect fuel gauge level.
This diagnosis detects the fuel gauge malfunction of the gauge not moving even after a long distance has been driven.

DTC No.	Trouble diagnosis name	DTC detecting condition	Possible cause
P0461 0461	Fuel level sensor circuit range/performance	The output signal of the fuel level sensor does not change within the specified range even though the vehicle has been driven a long distance.	● Harness or connectors (the CAN communication line is open or shorted) ● Harness or connectors (The sensor circuit is open or shorted) ● Combination meter. ● Fuel level sensor

Overall Function Check

UBS00JWT

Use this procedure to check the overall function of the fuel level sensor function. During this check, a 1st trip DTC might not be confirmed.

WARNING:
When performing following procedure, be sure to observe the handling of the fuel. Refer to FL-7, "FUEL TANK" .
TESTING CONDITION:
Before starting overall function check, preparation of draining fuel and refilling fuel is required.

WITH CONSULT-II

NOTE:
Start from step 11, if it is possible to confirm that the fuel cannot be drained by 30 ℓ (7-7/8 US gal, 6-5/8 Imp gal) in advance.

1. Prepare a fuel container and a spare hose.
2. Release fuel pressure from fuel line, refer to EC-752, "FUEL PRESSURE RELEASE" .
3. Remove the fuel feed hose on the fuel level sensor unit.
4. Connect a spare fuel hose where the fuel feed hose was removed.

5. Turn ignition switch OFF and wait at least 10 seconds then turn ON.
6. Select “FUEL LEVEL SE” in “DATA MONITOR” mode with CONSULT-II.
7. Check “FUEL LEVEL SE” output voltage and note it.
8. Select “FUEL PUMP” in “ACTIVE TEST” mode with CONSULT-II.
9. Touch “ON” and drain fuel approximately 30 ℓ (7-7/8 US gal, 6-5/8 Imp gal) and stop it.
10. Check “FUEL LEVEL SE” output voltage and note it.
11. Fill fuel into the fuel tank for 30 ℓ (7-7/8 US gal, 6-5/8 Imp gal).
12. Check “FUEL LEVEL SE” output voltage and confirm whether the voltage changes more than 0.03V during step 7 to 10 and 10 to 12.
    If NG, go to Diagnostic Procedure EC-1082 .

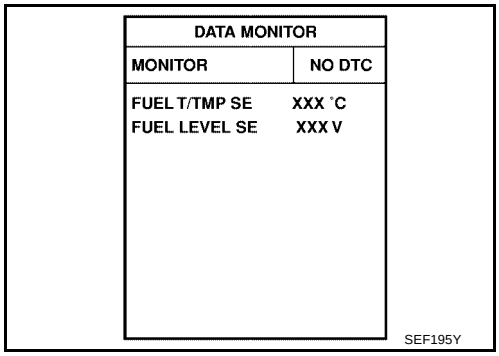

WITH GST

NOTE:
Start from step 8, if it is possible to confirm that the fuel cannot be drained by 30 ℓ (7-7/8 US gal, 6-5/8 Imp gal) in advance.

1. Prepare a fuel container and a spare hose.
2. Release fuel pressure from fuel line, refer to EC-752, "FUEL PRESSURE RELEASE" .
3. Remove the fuel feed hose on the fuel level sensor unit.
4. Connect a spare fuel hose where the fuel feed hose was removed.
5. Turn ignition switch ON.
6. Drain fuel by 30 ℓ (7-7/8 US gal, 6-5/8 Imp gal) from the fuel tank using proper equipment.
7. Confirm that the fuel gauge indication varies.
8. Fill fuel into the fuel tank for 30 ℓ (7-7/8 US gal, 6-5/8 Imp gal).
9. Confirm that the fuel gauge indication varies.
10. If NG, go to Diagnostic Procedure, EC-1082 .

Diagnostic Procedure

UBS00JWU

1. CHECK FUEL GAUGE OPERATION

Refer to DI-16, "Meter/Gauge Operation and Odo/Trip Meter Segment Check in Diagnosis Mode" .

OK or NG

OK >> GO TO 2.
NG >> Follow the instruction of DI-16, "Meter/Gauge Operation and Odo/Trip Meter Segment Check in Diagnosis Mode" .

2. CHECK FUEL LEVEL SENSOR AND CIRCUIT

Refer to DI-26, "FUEL LEVEL SENSOR UNIT CHECK" .

OK or NG

OK >> GO TO 3.
NG >> Repair or replace malfunctioning parts.

3. CHECK INTERMITTENT INCIDENT

Refer to EC-834, "TROUBLE DIAGNOSIS FOR INTERMITTENT INCIDENT" .

>> **INSPECTION END**

Removal and Installation

UBS00JWV

FUEL LEVEL SENSOR

Refer to FL-3, "FUEL LEVEL SENSOR UNIT, FUEL FILTER AND FUEL PUMP ASSEMBLY" .

DTC P0462, P0463 FUEL LEVEL SENSOR

PFP:25060

Component Description

UBS00JWW

The fuel level sensor is mounted in the fuel level sensor unit. The sensor detects a fuel level in the fuel tank and transmits a signal to the combination meter. The combination meter. sends the fuel level sensor signal to the ECM through CAN communication.
It consists of two parts, one is mechanical float and the other is variable resistor. Fuel level sensor output voltage changes depending on the movement of the fuel mechanical float.

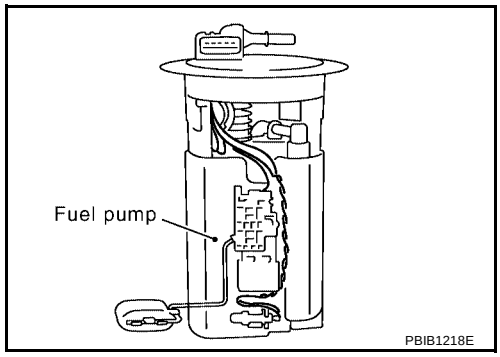

On Board Diagnostic Logic

UBS00JWX

NOTE:
If DTC P0462 or P0463 is displayed with DTC U1000, U1001, first perform the trouble diagnosis for DTC U1000, U1001. Refer to EC-842, "DTC U1000, U1001 CAN COMMUNICATION LINE" .

DTC No.	Trouble diagnosis name	DTC detecting condition	Possible cause
P0462 0462	Fuel level sensor circuit low input	An excessively low voltage it from the sensor to ECM.	● Harness or connectors (The CAN communication line is open or shorted) ● Harness or connectors (The sensor circuit is open or shorted) ● Combination meter. ● Fuel level sensor
P0463 0463	Fuel level sensor circuit high input	An excessively high voltage from the sensor to ECM.	

DTC Confirmation Procedure

UBS00JWY

NOTE:
If DTC Confirmation Procedure has been previously conducted, always turn ignition switch OFF and wait at least 10 seconds before conducting the next test.
TESTING CONDITION:
Before performing the following procedure, confirm that battery voltage is more than 11V at ignition switch ON.

WITH CONSULT-II

1. Turn ignition switch ON.
2. Select “DATA MONITOR” mode with CONSULT-II.
3. Wait at least 5 seconds.
4. If 1st trip DTC is detected, go to EC-1084, "Diagnostic Procedure" .

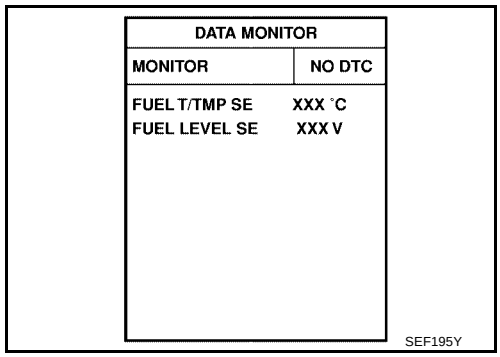

WITH GST

Follow the procedure “WITH CONSULT-II” above.

Diagnostic Procedure

UBS00JWZ

1. CHECK FUEL GAUGE OPERATION

Refer to DI-16, "Meter/Gauge Operation and Odo/Trip Meter Segment Check in Diagnosis Mode" .

OK or NG

OK >> GO TO 2.
NG >> Follow the instruction of DI-16, "Meter/Gauge Operation and Odo/Trip Meter Segment Check in Diagnosis Mode" .

2. CHECK FUEL LEVEL SENSOR AND CIRCUIT

Refer to DI-26, "FUEL LEVEL SENSOR UNIT CHECK" .

OK or NG

OK >> GO TO 3.
NG >> Repair or replace malfunctioning parts.

3. CHECK INTERMITTENT INCIDENT

Refer to EC-834, "TROUBLE DIAGNOSIS FOR INTERMITTENT INCIDENT" .

>> **INSPECTION END**

Removal and Installation

UBS00JX0

FUEL LEVEL SENSOR

Refer to FL-3, "FUEL LEVEL SENSOR UNIT, FUEL FILTER AND FUEL PUMP ASSEMBLY" .

DTC P0500 VSS

PFP:32702

Component Description

UBS00JGH

NOTE:
If DTC P0500 is displayed with DTC U1000 or U1001, first perform the trouble diagnosis for DTC U1000, U1001. Refer to EC-842, "DTC U1000, U1001 CAN COMMUNICATION LINE" .
The vehicle speed sensor is installed in the transaxle. It contains a pulse generator which provides a vehicle speed signal to the combination meter. The combination meter then sends a signal to the ECM through CAN communication line.

On Board Diagnosis Logic

UBS00JGI

DTC No.	Trouble diagnosis name	DTC detecting condition	Possible cause
P0500 0500	Vehicle speed sensor	The almost 0 km/h (0 MPH) signal from vehicle speed sensor is sent to ECM even when vehicle is being driven.	● Harness or connectors (The CAN communication line is open or shorted) ● Harness or connectors (The vehicle speed signal circuit is open or shorted) ● Vehicle speed sensor ● Combination meter

DTC Confirmation Procedure

UBS00JGJ

CAUTION:
Always drive vehicle at a safe speed.

NOTE:
If DTC Confirmation Procedure has been previously conducted, always turn ignition switch OFF and wait at least 10 seconds before conducting the next test.

TESTING CONDITION:
Steps 1 and 2 may be conducted with the drive wheels lifted in the shop or by driving the vehicle. If a road test is expected to be easier, it is unnecessary to lift the vehicle.

WITH CONSULT-II

1. Start engine (TCS switch OFF).
2. Read “VHCL SPEED SE” in “DATA MONITOR” mode with CONSULT-II. The vehicle speed on CONSULT-II should exceed 10 km/h (6 MPH) when rotating wheels with suitable gear position.
   If NG, go to EC-1086, "Diagnostic Procedure" .
   If OK, go to following step.
3. Select “DATA MONITOR” mode with CONSULT-II.
4. Warm engine up to normal operating temperature.
5. Maintain the following conditions for at least 60 consecutive seconds.

ENG SPEED	1,200 - 6,000 rpm (A/T models) 1,800 - 6,000 rpm (M/T models)
COOLANT TEMP/S	More than 70°C (158°F)
B/FUEL SCHDL	More then 6.0 msec (A/T models) More than 5.0 msec (M/T models)
Selector lever	Suitable position
PW/ST SIGNAL	OFF

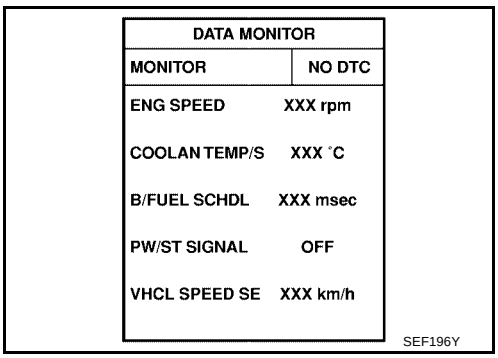

6. If 1st trip DTC is detected, go to EC-1086, "Diagnostic Procedure" .

Overall Function Check

UBS00JGK

Use this procedure to check the overall function of the vehicle speed signal circuit. During this check, a 1st trip DTC might not be confirmed.

WITH GST

1. Lift up drive wheels.
2. Start engine.
3. Read vehicle speed sensor signal in Service $01 with GST.
   The vehicle speed sensor on GST should be able to exceed 10 km/h (6 MPH) when rotating wheels with suitable gear position.
4. If NG, go to EC-1086, "Diagnostic Procedure" .

Diagnostic Procedure

UBS00JGL

1. CHECK VEHICLE SPEED SENSOR CITCUIT

Refer to DI-4, "METERS AND GAUGES" .

OK or NG

OK >> GO TO 2.
NG >> Repair or replace.

2. CHECK DTC WITH COMBINATION METER

Refer to DI-16, "Meter/Gauge Operation and Odo/Trip Meter Segment Check in Diagnosis Mode" .

>> **INSPECTION END**

DTC P0506 ISC SYSTEM

PFP:23781

Description

UBS00JGM

NOTE:
If DTC P0506 is displayed with other DTC, first perform the trouble diagnosis for the other DTC displayed.

The ECM controls the engine idle speed to a specified level through the fine adjustment of the air, which is let into the intake manifold, by operating the electric throttle control actuator. The operating of the throttle valve is varied to allow for optimum control of the engine idling speed. The crankshaft position sensor (POS) detects the actual engine speed and sends a signal to the ECM.
The ECM controls the electric throttle control actuator so that the engine speed coincides with the target value memorized in the ECM. The target engine speed is the lowest speed at which the engine can operate steadily. The optimum value stored in the ECM is determined by taking into consideration various engine conditions, such as during warming up, deceleration, and engine load (air conditioner, power steering and cooling fan operation, etc.).

On Board Diagnosis Logic

UBS00JGN

DTC No.	Trouble diagnosis name	DTC detecting condition	Possible cause
P0506 0506	Idle speed control system RPM lower than expected	The idle speed is less than the target idle speed by 100 rpm or more.	● Electric throttle control actuator ● Intake air leak

DTC Confirmation Procedure

UBS00JGO

NOTE:
- If DTC Confirmation Procedure has been previously conducted, always turn ignition switch OFF and wait at least 10 seconds before conducting the next test.
- **If the target idle speed is out of the specified value, perform EC-750, "Idle Air Volume Learning" , before conducting DTC Confirmation Procedure. For the target idle speed, refer to the EC-1385, "SERVICE DATA AND SPECIFICATIONS (SDS)" .**

TESTING CONDITION:
- **Before performing the following procedure, confirm that battery voltage is more than 11V at idle.**
- **Always perform the test at a temperature above –10°C (14°F).**

WITH CONSULT-II

1. Open engine hood.
2. Start engine and warm it up to normal operating temperature.
3. Turn ignition switch OFF and wait at least 10 seconds.
4. Turn ignition switch ON again and select “DATA MONITOR” mode with CONSULT-II.
5. Start engine and run it for at least 1 minute at idle speed.
6. If 1st trip DTC is detected, go to EC-1088, "Diagnostic Procedure" .

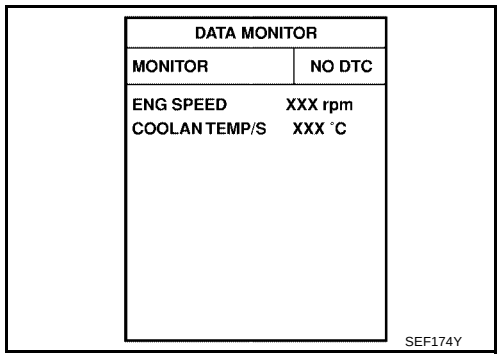

WITH GST

Follow the procedure “WITH CONSULT-II” above.

Diagnostic Procedure

UBS00JGP

1. CHECK INTAKE AIR LEAK

1. Start engine and let it idle.
2. Listen for an intake air leak after the mass air flow sensor.

OK or NG

OK >> GO TO 2.
NG >> Discover air leak location and repair.

2. REPLACE ECM

1. Stop engine.
2. Replace ECM.
3. Perform initialization of NVIS (NATS) system and registration of all NVIS (NATS) ignition key IDs. Refer to EC-696, "NVIS (NISSAN VEHICLE IMMOBILIZER SYSTEM-NATS)" .
4. Perform EC-749, "VIN Registration" .
5. Perform EC-749, "Accelerator Pedal Released Position Learning" .
6. Perform EC-749, "Throttle Valve Closed Position Learning" .
7. Perform EC-750, "Idle Air Volume Learning" .

>> **INSPECTION END**

DTC P0507 ISC SYSTEM

PFP:23781

Description

UBS00JGQ

NOTE:
If DTC P0507 is displayed with other DTC, first perform the trouble diagnosis for the other DTC displayed.

The ECM controls the engine idle speed to a specified level through the fine adjustment of the air, which is let into the intake manifold, by operating the electric throttle control actuator. The operating of the throttle valve is varied to allow for optimum control of the engine idling speed. The crankshaft position sensor (POS) detects the actual engine speed and sends a signal to the ECM.
The ECM controls the electric throttle control actuator so that the engine speed coincides with the target value memorized in the ECM. The target engine speed is the lowest speed at which the engine can operate steadily. The optimum value stored in the ECM is determined by taking into consideration various engine conditions, such as during warming up, deceleration, and engine load (air conditioner, power steering and cooling fan operation, etc.).

On Board Diagnosis Logic

UBS00JGR

DTC No.	Trouble diagnosis name	DTC detecting condition	Possible cause
P0507 0507	Idle speed control system RPM higher than expected	The idle speed is more than the target idle speed by 200 rpm or more.	● Electric throttle control actuator ● Intake air leak ● PCV system

DTC Confirmation Procedure

UBS00JGS

NOTE:
- If DTC Confirmation Procedure has been previously conducted, always turn ignition switch OFF and wait at least 10 seconds before conducting the next test.
- **If the target idle speed is out of the specified value, perform EC-750, "Idle Air Volume Learning" , before conducting “DTC Confirmation Procedure”. For the target idle speed, refer to the EC-1385, "SERVICE DATA AND SPECIFICATIONS (SDS)" .**

TESTING CONDITION:
- **Before performing the following procedure, confirm that battery voltage is more than 11V at idle.**
- **Always perform the test at a temperature above –10°C (14°F).**

WITH CONSULT-II

1. Open engine hood.
2. Start engine and warm it up to normal operating temperature.
3. Turn ignition switch OFF and wait at least 10 seconds.
4. Turn ignition switch ON again and select “DATA MONITOR” mode with CONSULT-II.
5. Start engine and run it for at least 1 minute at idle speed.
6. If 1st trip DTC is detected, go to EC-1090, "Diagnostic Procedure" .

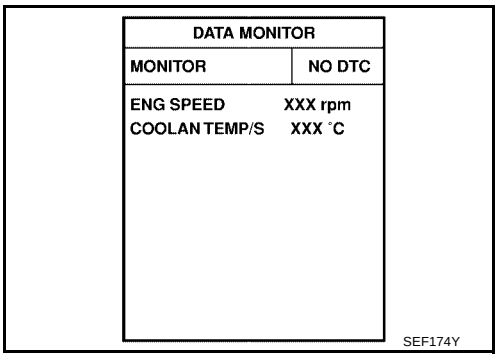

WITH GST

Follow the procedure “WITH CONSULT-II” above.

Diagnostic Procedure

UBS00JGT

1. CHECK PCV HOSE CONNECTION

Confirm that PCV hose is connected correctly.

OK or NG

OK >> GO TO 2.
NG >> Repair or replace.

2. CHECK INTAKE AIR LEAK

1. Start engine and let it idle.
2. Listen for an intake air leak after the mass air flow sensor.

OK or NG

OK >> GO TO 3.
NG >> Discover air leak location and repair.

3. REPLACE ECM

1. Stop engine.
2. Replace ECM.
3. Perform initialization of NVIS (NATS) system and registration of all NVIS (NATS) ignition key IDs. Refer to EC-696, "NVIS (NISSAN VEHICLE IMMOBILIZER SYSTEM-NATS)" .
4. Perform EC-749, "VIN Registration" .
5. Perform EC-749, "Accelerator Pedal Released Position Learning" .
6. Perform EC-749, "Throttle Valve Closed Position Learning" .
7. Perform EC-750, "Idle Air Volume Learning" .

>> **INSPECTION END**

DTC P0550 PSP SENSOR

PFP:49763

Component Description

UBS00JGU

Power steering pressure (PSP) sensor is installed to the power steering high-pressure tube and detects a power steering load. This sensor is a potentiometer which transforms the power steering load into output voltage, and emits the voltage signal to the ECM. The ECM controls the electric throttle control actuator and adjusts the throttle valve opening angle to increase the engine speed and adjusts the idle speed for the increased load.

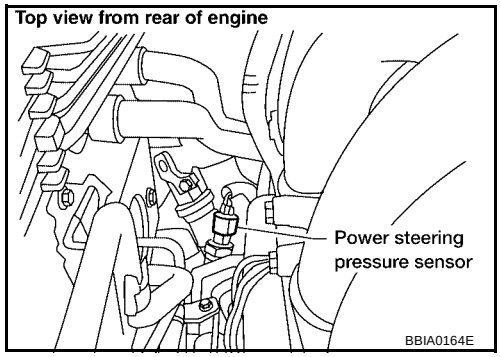

CONSULT-II Reference Value in Data Monitor Mode

UBS00JGV

Specification data are reference values.

MONITOR ITEM	CONDITION		SPECIFICATION
PW/ST SIGNAL	● Engine: After warming up, idle the engine	Steering wheel is in not being turned. (Forward direction)	OFF
		Steering wheel is being turned.	ON

On Board Diagnosis Logic

UBS00JGW

The MIL will not light up for this diagnosis.

NOTE:
If DTC P0550 is displayed with DTC P1229, first perform the trouble diagnosis for DTC P1229. Refer to EC-1178 .

DTC No.	Trouble diagnosis name	DTC detecting condition	Possible cause
P0550 0550	Power steering pressure sensor circuit	An excessively low or high voltage from the sensor is sent to ECM.	● Harness or connectors (The sensor circuit is open or shorted.) ● Power steering pressure sensor

DTC Confirmation Procedure

UBS00JGX

NOTE:
If DTC Confirmation Procedure has been previously conducted, always turn ignition switch OFF and wait at least 10 seconds before conducting the next test.

WITH CONSULT-II

1. Turn ignition switch ON.
2. Select “DATA MONITOR” mode with CONSULT-II.
3. Start engine and let it idle for at least 5 seconds.
4. If 1st trip DTC is detected, go to EC-1093, "Diagnostic Procedure" .

WITH GST

Follow the procedure “WITH CONSULT-II” above.

Wiring Diagram

UBS00JGY

EC-PS/SEN-01

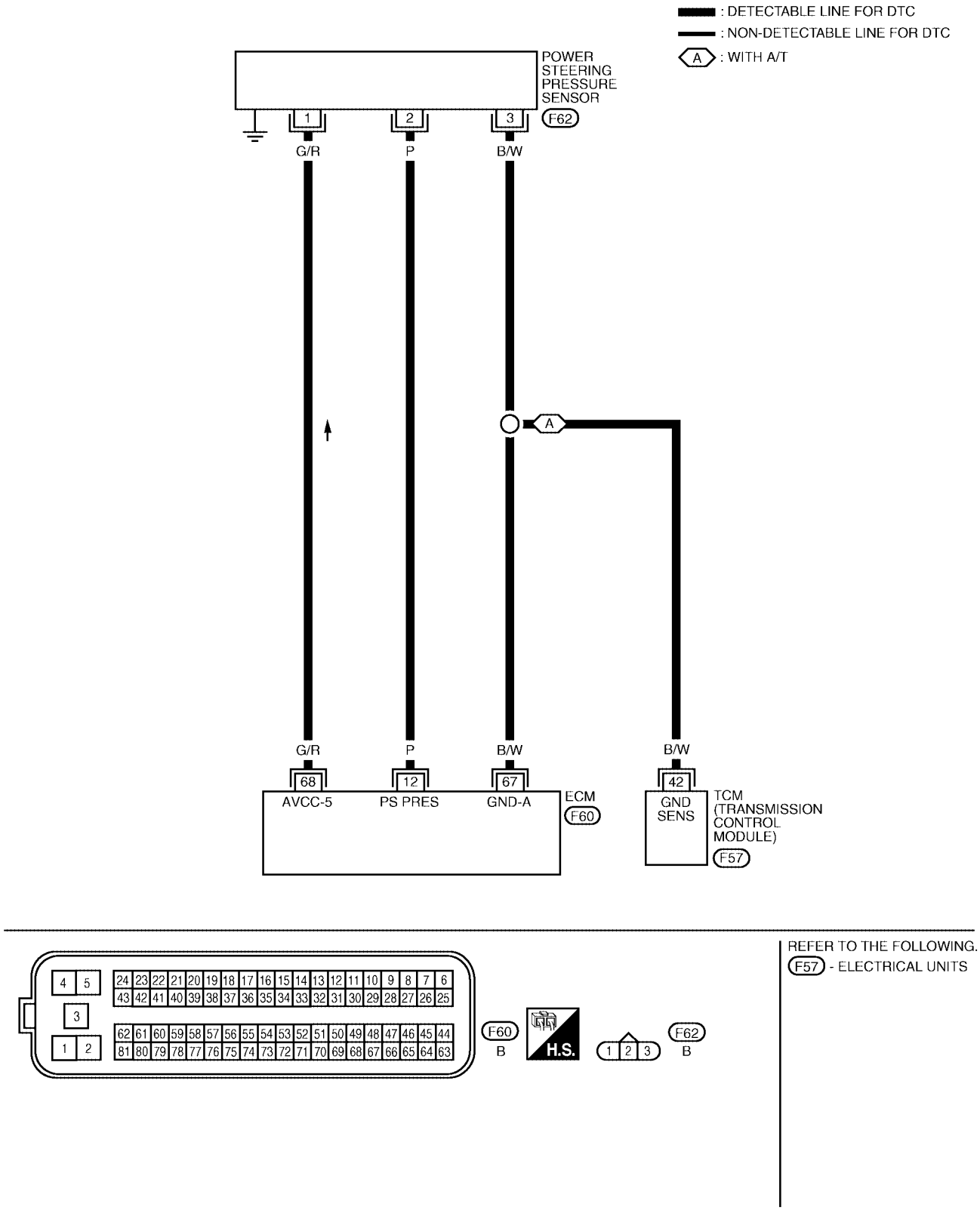

Specification data are reference values and are measured between each terminal and ground.

CAUTION:

Do not use ECM ground terminals when measuring input/output voltage. Doing so may result in damage to the ECM's transistor. Use a ground other than ECM terminals, such as the ground.

TERMINAL NO.	WIRE COLOR	ITEM	CONDITION	DATA (DC Voltage)
12	P	Power steering pressure sensor	**[Engine is running]** ● Steering wheel is being turned	0.5 - 4.0V
			[Engine is running] ● Steering wheel is not being turned	0.4 - 0.8V
67	B/W	Sensor ground	**[Engine is running]** ● **Warm-up condition** ● Idle speed	Approximately 0V
68	G/R	Sensor power supply (Power steering pressure sensor)	**[Ignition switch: ON]**	Approximately 5V

Diagnostic Procedure

UBS00JGZ

1. CHECK GROUND CONNECTIONS

1. Turn ignition switch OFF.
2. Loosen and retighten engine two screws on the body.
   Refer to EC-841, "Ground Inspection" .

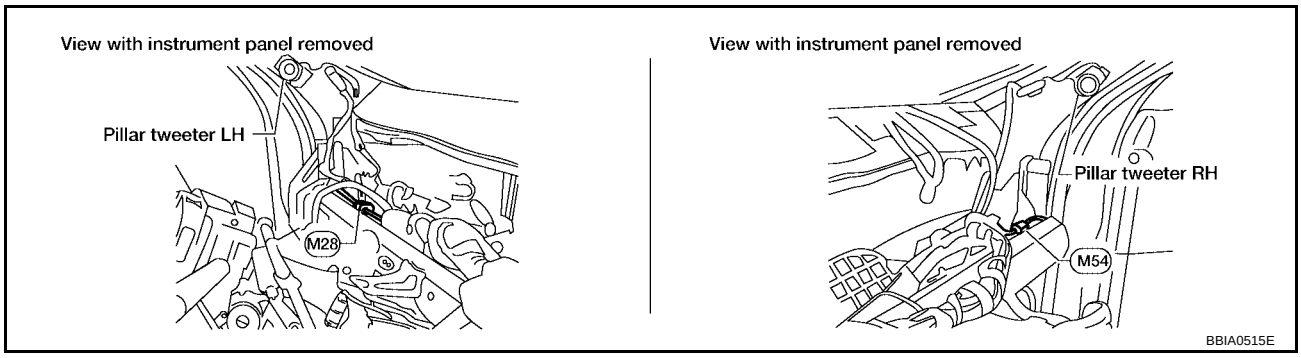

OK or NG

OK >> GO TO 2.
NG >> Repair or replace ground connections.

2. CHECK POWER STEERING PRESSURE SENSOR POWER SUPPLY CIRCUIT

1. Disconnect power steering pressure (PSP) sensor harness connector.
2. Turn ignition switch ON.

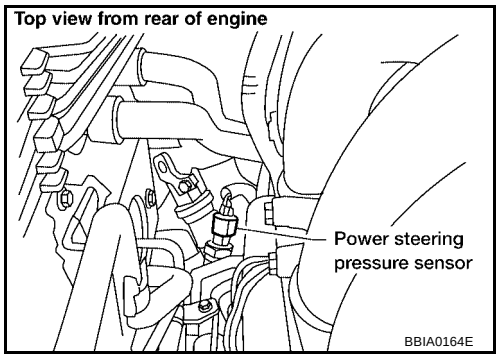

3. Check voltage between power steering pressure sensor terminal 1 and ground with CONSULT-II or tester.

Voltage: Approximately 5V

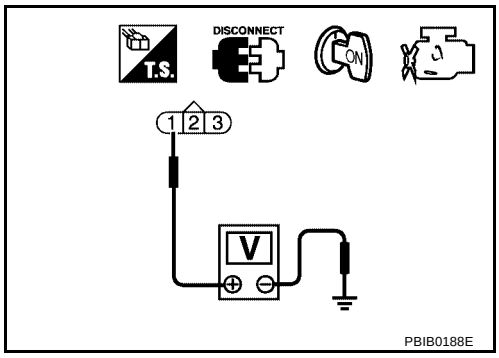

OK or NG

OK >> GO TO 3.
NG >> Repair open circuit or short to ground or short to power in harness or connectors.

3. CHECK POWER STEERING PRESSURE SENSOR GROUND CIRCUIT FOR OPEN AND SHORT

1. Turn ignition switch OFF.
2. Disconnect ECM harness connector.
3. Disconnect TCM harness connector (A/T models).
4. Check harness continuity between power steering pressure sensor terminal 3 and ECM terminal 67, TCM terminal 42 (A/T models).

Continuity should exist.

5. Also check harness for short to ground or short to power.

OK or NG

OK >> GO TO 5.
NG >> GO TO 4.

4. DETECT MALFUNCTIONING PART

Check the following.

- Harness for open or short between power steering pressure sensor and ECM
- Harness for open or short between power steering pressure sensor and TCM (A/T models)

>> Repair open circuit or short to ground or short to power in harness or connectors.

5. CHECK POWER STEERING PRESSURE SENSOR INPUT SIGNAL CIRCUIT FOR OPEN AND SHORT

1. Disconnect ECM harness connector.
2. Check harness continuity between ECM terminal 12 and power steering pressure sensor terminal 2.

   Continuity should exist.

3. Also check harness for short to ground and short to power.

OK or NG

OK >> GO TO 6.
NG >> Repair open circuit or short to ground or short to power in harness or connectors.

6. CHECK POWER STEERING PRESSURE SENSOR

Refer to EC-1095, "Component Inspection" .

OK or NG

OK >> GO TO 7.
NG >> Replace power steering pressure sensor.

7. CHECK INTERMITTENT INCIDENT

Refer to EC-834, "TROUBLE DIAGNOSIS FOR INTERMITTENT INCIDENT" .

>> **INSPECTION END**

Component Inspection

UBS00JH0

POWER STEERING PRESSURE SENSOR

1. Reconnect all harness connectors disconnected.
2. Start engine and let it idle.
3. Check voltage between ECM terminal 12 and ground under the following conditions.

Condition	Voltage
Steering wheel is being turned.	0.5 - 4.5V
Steering wheel is not being turned.	0.4 - 0.8V

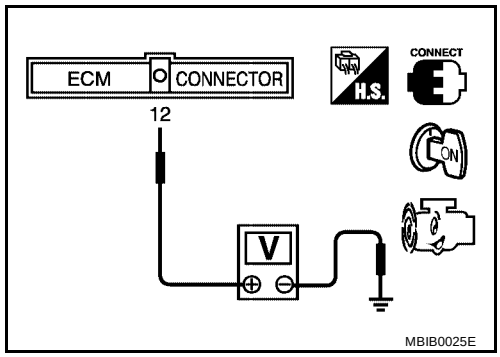

Removal and Installation

UBS00KPE

POWER STEERING PRESSURE SENSOR

Refer to PS-25, "HYDRAULIC LINE" .

DTC P0605 ECM

PFP:23710

Component Description

UBS00JH1

The ECM consists of a microcomputer and connectors for signal input and output and for power supply. The ECM controls the engine.

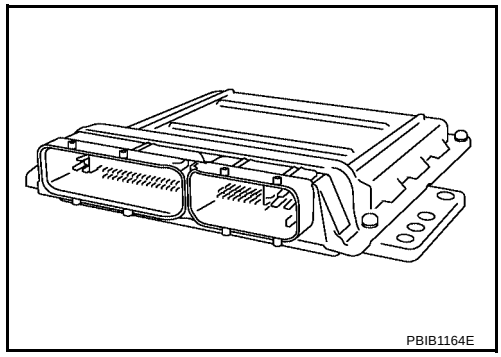

On Board Diagnosis Logic

UBS00JH2

This self-diagnosis has one or two trip detection logic.

DTC No.	Trouble diagnosis name	DTC detecting condition		Possible cause
P0605 0605	Engine control module	A)	ECM calculation function is malfunctioning.	● ECM
		B)	ECM EEP-ROM system is malfunctioning.	
		C)	ECM self shut-off function is malfunctioning.	

FAIL-SAFE MODE

ECM enters fail-safe mode when malfunction A is detected.

Detected items	Engine operation condition in fail-safe mode
Malfunction A	● ECM stops the electric throttle control actuator control, throttle valve is maintained at a fixed opening (approx. 5 degrees) by the return spring. ● ECM deactivates ASCD operation.

DTC Confirmation Procedure

UBS00JH3

Perform PROCEDURE FOR MALFUNCTION A first. If the 1st trip DTC cannot be confirmed, perform PROCEDURE FOR MALFUNCTION B. If there is no malfunction on PROCEDURE FOR MALFUNCTION B, perform PROCEDURE FOR MALFUNCTION C.

NOTE:

If DTC Confirmation Procedure has been previously conducted, always turn ignition switch OFF and wait at least 10 seconds before conducting the next test.

PROCEDURE FOR MALFUNCTION A

With CONSULT-II

1. Turn ignition switch ON.
2. Select “DATA MONITOR” mode with CONSULT-II.
3. If 1st trip DTC is detected, go to EC-1097, "Diagnostic Procedure" .

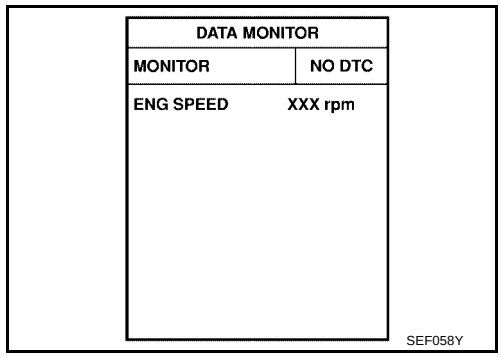

With GST

Follow the procedure “With CONSULT-II” above.

PROCEDURE FOR MALFUNCTION B

With CONSULT-II

1. Turn ignition switch ON and wait at least 1 second.
2. Select “DATA MONITOR” mode with CONSULT-II.
3. Turn ignition switch OFF, wait at least 10 seconds, and then turn ON.
4. If 1st trip DTC is detected, go to EC-1097, "Diagnostic Procedure" .

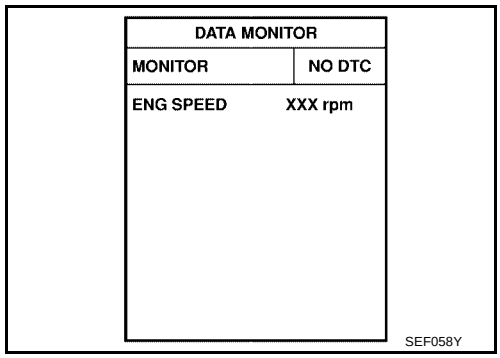

With GST

Follow the procedure “With CONSULT-II” above.

PROCEDURE FOR MALFUNCTION C

With CONSULT-II

1. Turn ignition switch ON and wait at least 1 second.
2. Select “DATA MONITOR” mode with CONSULT-II.
3. Turn ignition switch OFF, wait at least 10 seconds, and then turn ON.
4. Repeat step 3 for 32 times.
5. If 1st trip DTC is detected, go to EC-1097, "Diagnostic Procedure" .

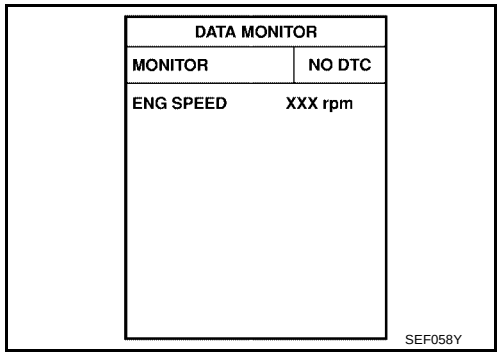

With GST

Follow the procedure “With CONSULT-II” above.

Diagnostic Procedure

UBS00JH4

1. INSPECTION START

With CONSULT-II

1. Turn ignition switch ON.
2. Select “SELF DIAG RESULTS” mode with CONSULT-II.
3. Touch “ERASE”.
4. **Perform DTC Confirmation Procedure.**
   See EC-1096 .
5. Is the 1st trip DTC P0605 displayed again?

With GST

1. Turn ignition switch ON.
2. Select Service $04 with GST.
3. Touch “ERASE”.
4. **Perform DTC Confirmation Procedure.**
   See EC-1096 .
5. Is the 1st trip DTC P0605 displayed again?

Yes or No

Yes >> GO TO 2.
No >> **INSPECTION END**

2. REPLACE ECM

1. Replace ECM.
2. Perform initialization of NVIS (NATS) system and registration of all NVIS (NATS) ignition key IDs. Refer to EC-696, "NVIS (NISSAN VEHICLE IMMOBILIZER SYSTEM-NATS)" .
3. Perform EC-749, "VIN Registration" .
4. Perform EC-749, "Accelerator Pedal Released Position Learning" .
5. Perform EC-749, "Throttle Valve Closed Position Learning" .
6. Perform EC-750, "Idle Air Volume Learning" .

>> **INSPECTION END**

DTC P1031, P1032 A/F SENSOR 1 HEATER

PFP:22693

Description

UBS00JH5

SYSTEM DESCRIPTION

Sensor	Input Signal to ECM	ECM function	Actuator
Camshaft position sensor (PHASE) Crankshaft position sensor (POS)	Engine speed	Air fuel ratio (A/F) sensor 1 heater control	Air fuel ratio (A/F) sensor 1 heater
Mass air flow sensor	Amount of intake air		

The ECM performs ON/OFF duty control of the A/F sensor 1 heater corresponding to the engine operating condition to keep the temperature of A/F sensor 1 element at the specified range.

CONSULT-II Reference Value in Data Monitor Mode

UBS00JH6

Specification data are reference values.

MONITOR ITEM	CONDITION	SPECIFICATION
A/F S1 HTR (B1)	● Engine: After warming up, idle the engine	0 - 100%

On Board Diagnosis Logic

UBS00JH7

DTC No.	Trouble diagnosis name	DTC detecting condition	Possible cause
P1031 1031	Air fuel ratio (A/F) sensor 1 heater control circuit low	The current amperage in the air fuel ratio (A/F) sensor 1 heater circuit is out of the normal range. (An excessively low voltage signal is sent to ECM through the air fuel ratio (A/F) sensor 1 heater.)	● Harness or connectors (The A/F sensor 1 heater circuit is open or shorted.) ● Air fuel ratio (A/F) sensor 1 heater
P1032 1032	Air fuel ratio (A/F) sensor 1 heater control circuit high	The current amperage in the air fuel ratio (A/F) sensor 1 heater circuit is out of the normal range. (An excessively high voltage signal is sent to ECM through the air fuel ratio (A/F) sensor 1 heater.)	● Harness or connectors (The A/F sensor 1 heater circuit is shorted.) ● Air fuel ratio (A/F) sensor 1 heater

DTC Confirmation Procedure

UBS00JH8

NOTE:
If DTC Confirmation Procedure has been previously conducted, always turn ignition switch OFF and wait at least 10 seconds before conducting the next test.

TESTING CONDITION:
Before performing the following procedure, confirm that battery voltage is between 10.5V and 16V at idle.

With CONSULT-II

WITH CONSULT-II

1. Turn ignition switch ON and select “DATA MONITOR” mode with CONSULT-II.
2. Start engine and run it for at least 10 seconds at idle speed.
3. If 1st trip DTC is detected, go to EC-1101, "Diagnostic Procedure" .

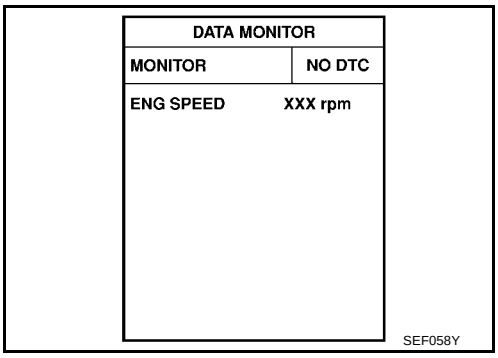

WITH GST

Follow the procedure ″WITH CONSULT-II″ above.

Wiring Diagram

UBS00JH9

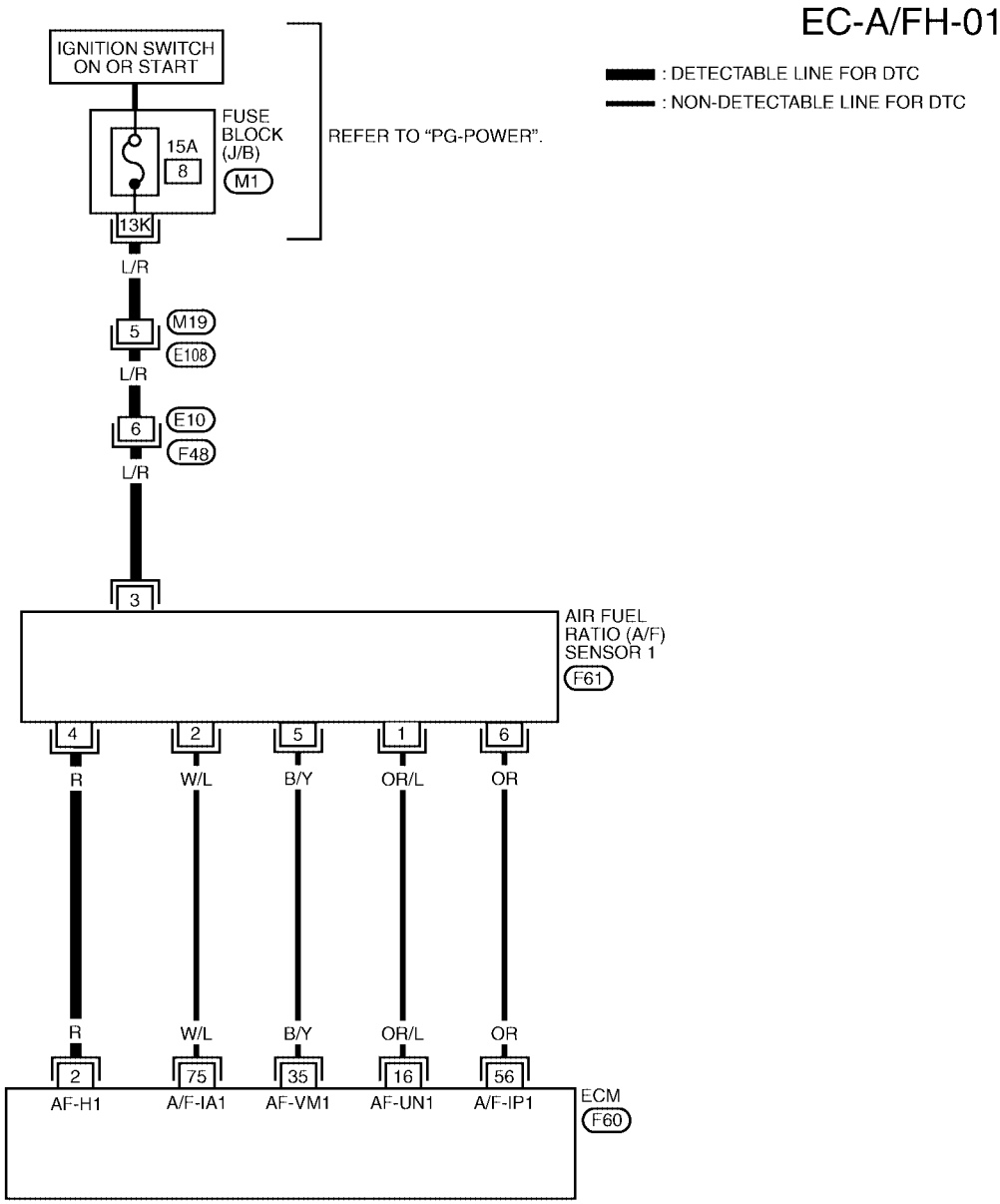

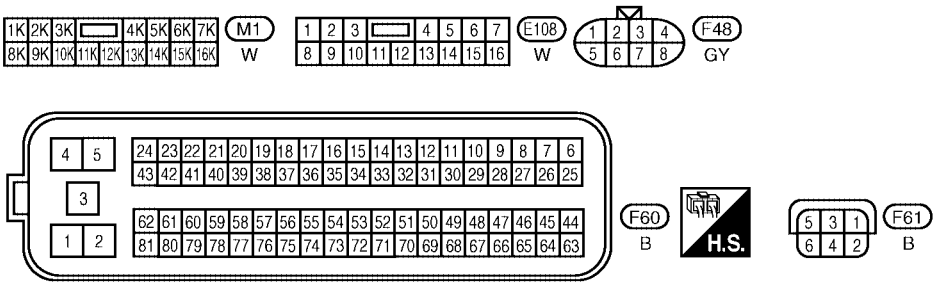

BBWA1471E

Specification data are reference values and are measured between each terminal and ground.
Pulse signal is measured by CONSULT-II.

CAUTION:
Do not use ECM ground terminals when measuring input/output voltage. Doing so may result in damage to the ECM's transistor. Use a ground other than ECM terminals, such as the ground.

TERMINAL NO.	WIRE COLOR	ITEM	CONDITION	DATA (DC Voltage)
2	R	A/F sensor 1 heater	**[Engine is running]** ● **Warm-up condition** ● Idle speed	Approximately 5V★ 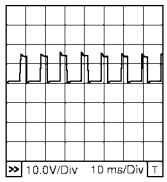 PBIB1584E

★: Average voltage for pulse signal (Actual pulse signal can be confirmed by oscilloscope.)

Diagnostic Procedure

UBS00JHA

1. CHECK GROUND CONNECTIONS

1. Turn ignition switch OFF.
2. Loosen and retighten engine two screws on the body.
   Refer to EC-841, "Ground Inspection" .

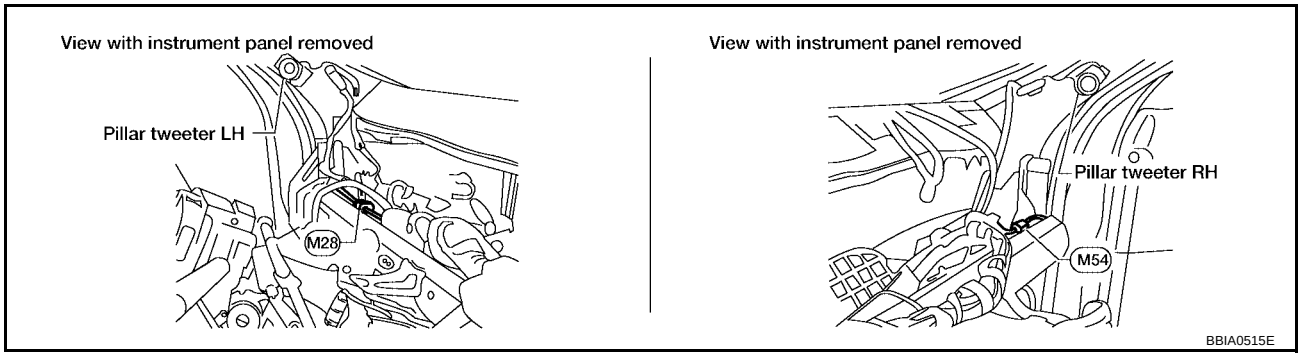

OK or NG

OK >> GO TO 2.
NG >> Repair or replace ground connections.

2. CHECK AIR FUEL RATIO (A/F) SENSOR 1 POWER SUPPLY CIRCUIT

1. Disconnect air fuel ratio (A/F) sensor 1 harness connector.
2. Turn ignition switch ON.

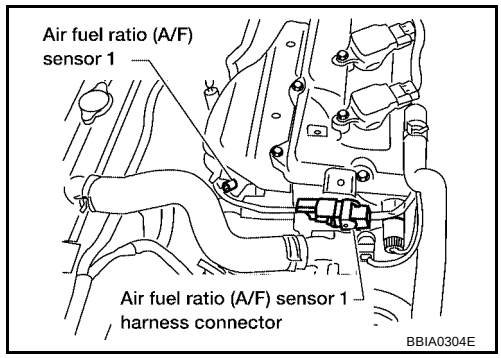

3. Check voltage between A/F sensor 1 terminal 3 and ground with CONSULT-II or tester.

Voltage: Battery voltage

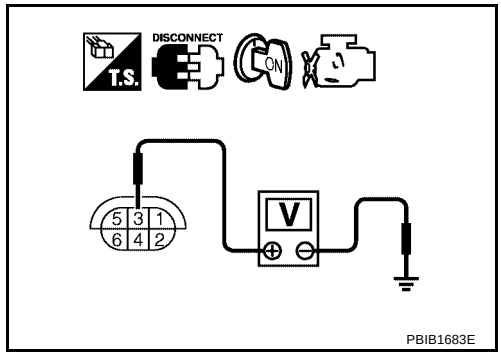

OK or NG

OK >> GO TO 4.
NG >> GO TO 3.

3. DETECT MALFUNCTIONING PART

Check the following.

- Harness connectors M19, E108
- Harness connectors E10, F48
- Fuse block (J/B) connector M1
- 15A fuse
- Harness for open or short between A/F sensor 1 and fuse

>> Repair or replace harness or connectors.

4. CHECK A/F SENSOR 1 HEATER OUTPUT SIGNAL CIRCUIT

1. Turn ignition switch OFF.
2. Disconnect ECM harness connector.
3. Check harness continuity between ECM terminal 2 and A/F sensor 1 terminal 4. Refer to Wiring Diagram.

Continuity should exist.

4. Also check harness for short to ground short to power.

OK or NG

OK >> GO TO 5.
NG >> Repair open circuit or short to ground or short to power in harness or connectors.

5. CHECK A/F SENSOR 1 HEATER

Refer to EC-1103, "Component Inspection" .

OK or NG

OK >> GO TO 6.
NG >> Replace A/F sensor 1.

6. CHECK INTERMITTENT INCIDENT

Perform EC-834, "TROUBLE DIAGNOSIS FOR INTERMITTENT INCIDENT" .

OK or NG

OK >> Replace A/F sensor 1.
NG >> Repair or replace.

Component Inspection

UBS00JHB

AIR FUEL RATIO (A/F) SENSOR 1 HEATER

Check resistance between terminals 3 and 4.

Resistance: 2.3 - 4.3Ω [at 25°C (77°F)]

Check continuity between terminals 3 and 1, 2, 5, 6, terminals 4 and 1, 2, 5, 6.

Continuity should not exist.

If NG, replace the A/F sensor 1.

CAUTION:

- **Discard any A/F sensor which has been dropped from a height of more than 0.5 m (19.7 in) onto a hard surface such as a concrete floor; use a new one.**
- **Before installing new A/F sensor, clean exhaust system threads using Heated Oxygen Sensor Thread Cleaner tool J-43897-18 or J-43897-12 and approved anti-seize lubricant.**

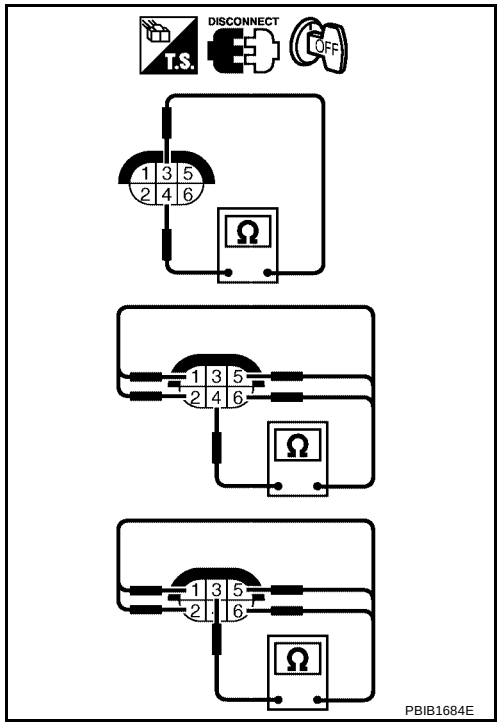

Removal and Installation

UBS00JHC

AIR FUEL RATIO SENSOR HEATER

Refer to EM-113, "EXHAUST MANIFOLD AND THREE WAY CATALYST" .

DTC P1065 ECM POWER SUPPLY

PFP:23710

Component Description

UBS00JHD

Battery voltage is supplied to the ECM even when the ignition switch is turned OFF for the ECM memory function of the DTC memory, the air-fuel ratio feedback compensation value memory, the Idle Air Volume Learning value memory, etc.

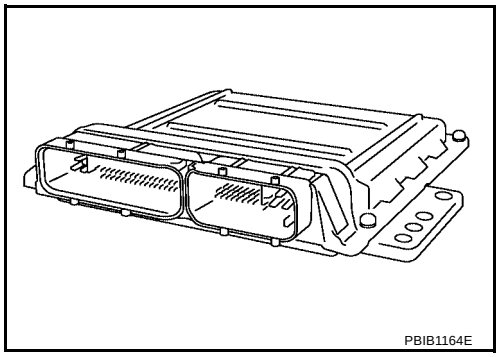

On Board Diagnosis Logic

UBS00JHE

DTC No.	Trouble diagnosis name	DTC detecting condition	Possible cause
P1065 1065	ECM power supply circuit	ECM back-up RAM system does not function properly.	● Harness or connectors [ECM power supply (back-up) circuit is open or shorted.] ● ECM

DTC Confirmation Procedure

UBS00JHF

NOTE:
If DTC Confirmation Procedure has been previously conducted, always turn ignition switch OFF and wait at least 10 seconds before conducting the next test.

WITH CONSULT-II

1. Turn ignition switch ON and wait at least 1 second.
2. Select “DATA MONITOR” mode with CONSULT-II.
3. Start engine and let it idle for 1 second.
4. Turn ignition switch OFF, wait at least 10 seconds, and then turn ON.
5. Repeat steps 3 and 4 for 4 times.
6. If 1st trip DTC is detected, go to EC-1106, "Diagnostic Procedure" .

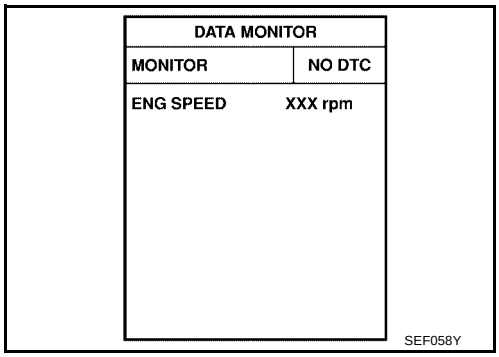

WITH GST

Follow the procedure “WITH CONSULT-II” above.

Wiring Diagram

UBS00JHG

EC-ECM/PW-01

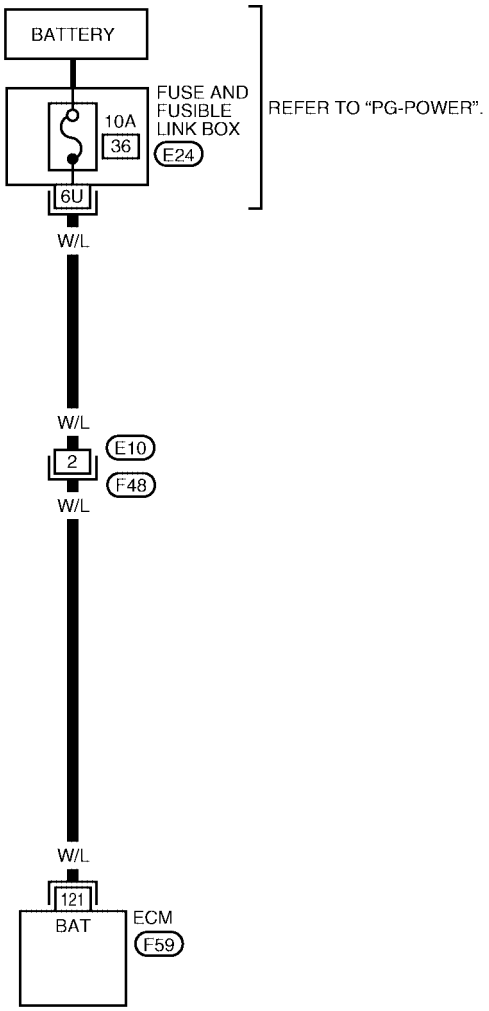

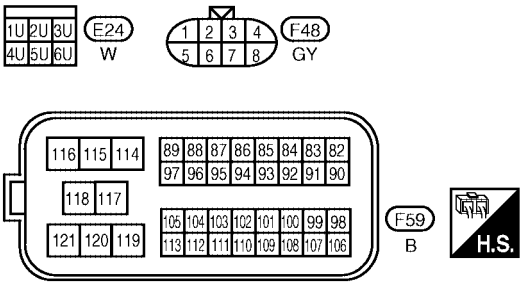

BBWA1437E

Specification data are reference values and are measured between each terminal and ground.

CAUTION:

Do not use ECM ground terminals when measuring input/output voltage. Doing so may result in damage to the ECM's transistor. Use a ground other than ECM terminals, such as the ground.

TERMINAL NO.	WIRE COLOR	ITEM	CONDITION	DATA (DC Voltage)
121	W/L	Power supply for ECM (Back-up)	**[Ignition switch: OFF]**	BATTERY VOLTAGE (11 - 14V)

Diagnostic Procedure

UBS00JHH

1. CHECK ECM POWER SUPPLY

1. Turn ignition switch OFF.
2. Disconnect ECM harness connector.
3. Check voltage between ECM terminal 121 and ground with CONSULT-II or tester.

Voltage: Battery voltage

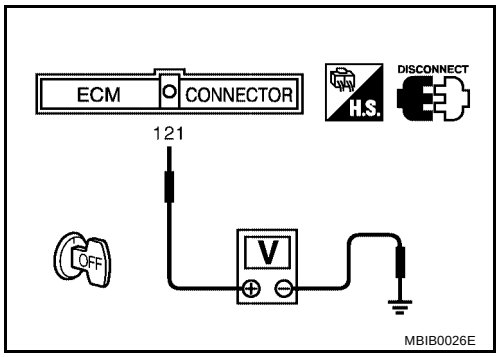

OK or NG

OK >> GO TO 3.
NG >> GO TO 2.

2. DETECT MALFUNCTIONING PART

Check the following.

- Harness connectors E10, F48
- 10A fuse
- Harness for open or short between ECM and battery
- Fuse and fusible link box connector E24

>> Repair or replace harness or connectors.

3. CHECK INTERMITTENT INCIDENT

Refer to EC-834, "TROUBLE DIAGNOSIS FOR INTERMITTENT INCIDENT" .

OK or NG

OK >> GO TO 4.
NG >> Repair open circuit or short to ground or short to power in harness or connectors.

4. PERFORM DTC CONFIRMATION PROCEDURE

With CONSULT-II

1. Turn ignition switch ON.
2. Select “SELF DIAG RESULTS” mode with CONSULT-II.
3. Touch “ERASE”.
4. **Perform DTC Confirmation Procedure.**
   See EC-1104 .
5. Is the 1st trip DTC P1065 displayed again?

With GST

1. Turn ignition switch ON.
2. Select Service $04 with GST.
3. Touch “ERASE”.
4. **Perform “DTC Confirmation Procedure”.**
   See EC-1104 .
5. Is the 1st trip DTC P1065 displayed again?

Yes or No

Yes >> GO TO 5.
No >> **INSPECTION END**

5. REPLACE ECM

1. Replace ECM.
2. Perform initialization of NVIS (NATS) system and registration of all NVIS (NATS) ignition key IDs. Refer to BL-96, "NVIS (NISSAN VEHICLE IMMOBILIZER SYSTEM — NATS)" .
3. Perform EC-749, "VIN Registration" .
4. Perform EC-749, "Accelerator Pedal Released Position Learning" .
5. Perform EC-749, "Throttle Valve Closed Position Learning" .
6. Perform EC-750, "Idle Air Volume Learning" .

>> **INSPECTION END**

DTC P1111 IVT CONTROL SOLENOID VALVE

PFP:23796

Component Description

UBS00JHI

Intake valve timing control solenoid valve is activated by ON/OFF pulse duty (ratio) signals from the ECM.
The intake valve timing control solenoid valve changes the oil amount and direction of flow through intake valve timing control unit or stops oil flow.
The longer pulse width advances valve angle.
The shorter pulse width retards valve angle.
When ON and OFF pulse widths become equal, the solenoid valve stops oil pressure flow to fix the intake valve angle at the control position.

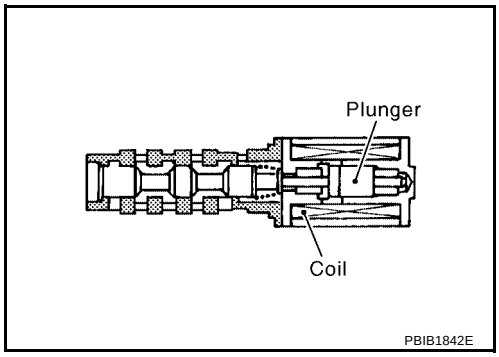

CONSULT-II Reference Value in Data Monitor Mode

UBS00JHJ

Specification data are reference values.

MONITOR ITEM	CONDITION		SPECIFICATION
INT/V SOL (B1)	● Engine: After warming up ● Shift lever: P or N (A/T), Neutral (M/T) ● Air conditioner switch: OFF ● No-load	Idle	0% - 2%
		2,000 rpm	Approx. 25% - 60%

On Board Diagnosis Logic

UBS00JHK

DTC No.	Trouble diagnosis name	DTC detecting condition	Possible cause
P1111 1111	Intake valve timing control solenoid valve circuit	An improper voltage is sent to the ECM through intake valve timing control solenoid valve.	● Harness or connectors (Intake valve timing control solenoid valve circuit is open or shorted.) ● Intake valve timing control solenoid valve

DTC Confirmation Procedure

UBS00JHL

NOTE:
If DTC Confirmation Procedure has been previously conducted, always turn ignition switch OFF and wait at least 10 seconds before conducting the next test.

WITH CONSULT-II

1. Turn ignition switch ON.
2. Select “DATA MONITOR” mode with CONSULT-II.
3. Start engine and let it idle for 5 seconds.
4. If 1st trip DTC is detected, go to EC-1110, "Diagnostic Procedure" .

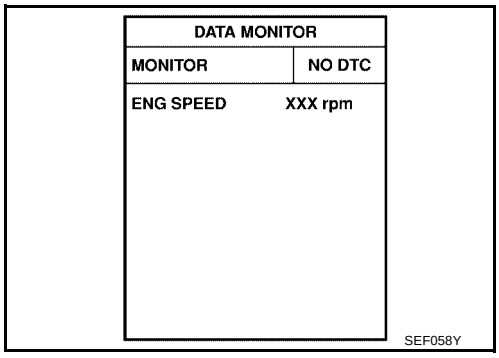

WITH GST

Following the procedure “WITH CONSULT-II” above.

Wiring Diagram

UBS00JHM

EC-IVC-01

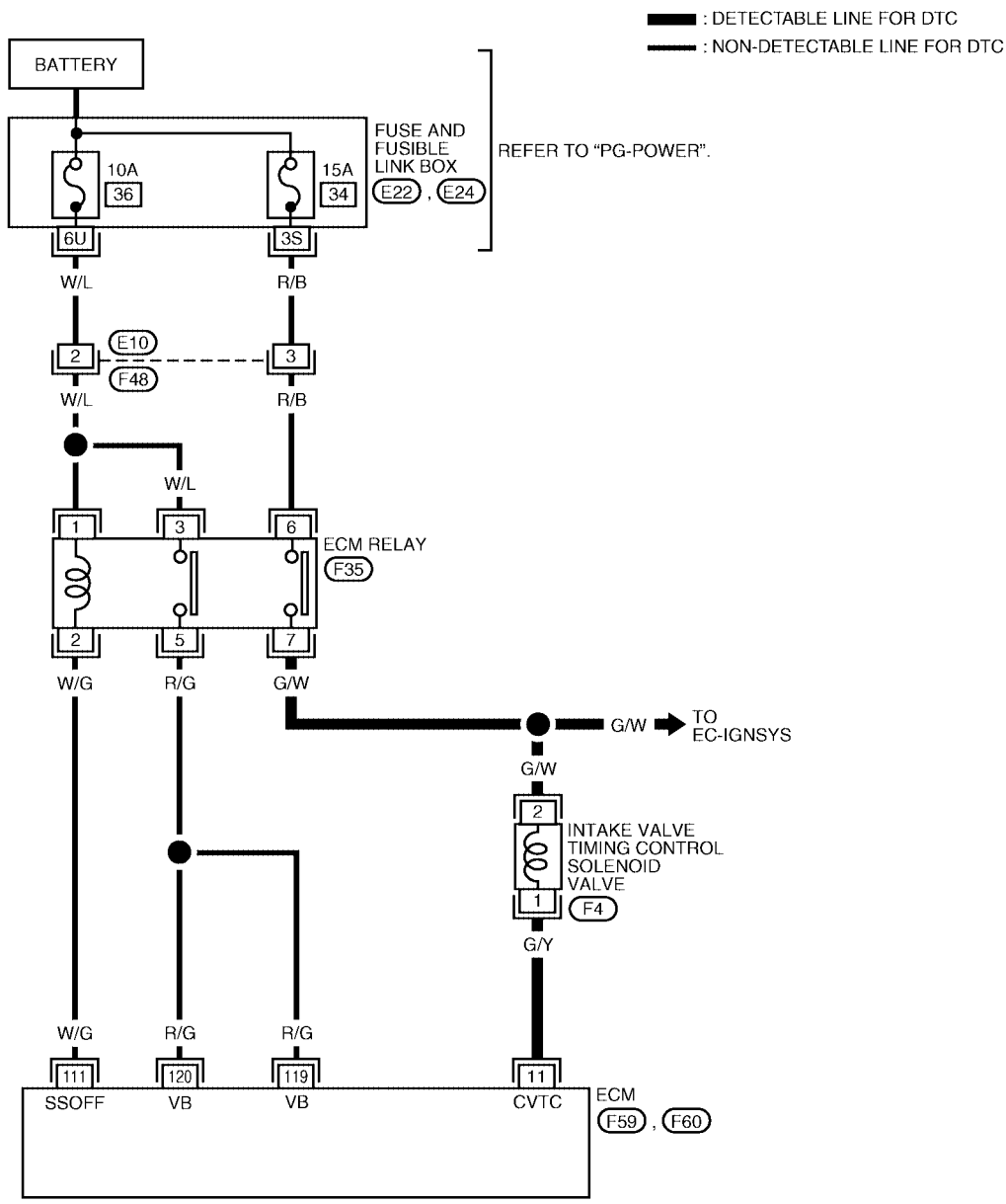

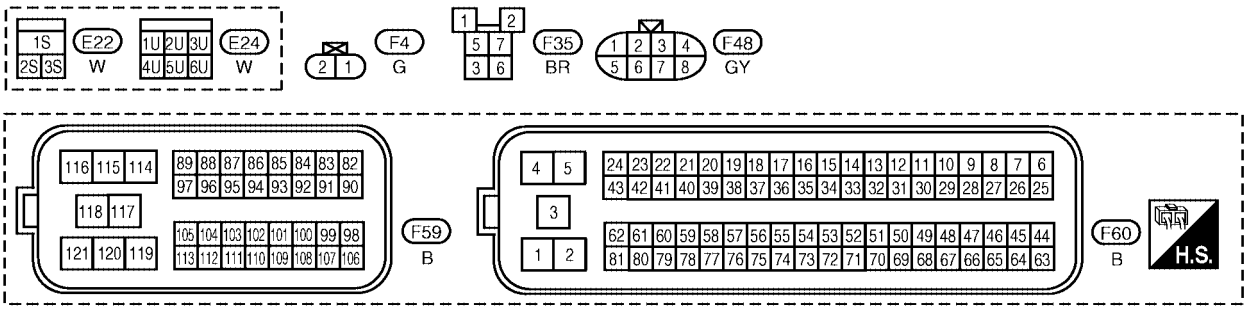

BBWA1465E

Specification data are reference values and are measured between each terminal and ground.
Pulse signal is measured by CONSULT-II.

CAUTION:
Do not use ECM ground terminals when measuring input/output voltage. Doing so may result in damage to the ECM's transistor. Use a ground other than ECM terminals, such as the ground.

TERMINAL NO.	WIRE COLOR	ITEM	CONDITION	DATA (DC Voltage)
11	G/Y	Intake valve timing control solenoid valve	**[Engine is running]** ● **Warm-up condition** ● Idle speed	BATTERY VOLTAGE (11 - 14V)
			[Engine is running] ● **Warm-up condition** ● Engine speed 2,500 rpm	7 - 10V★ 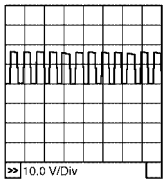 PBIB1790E

★: Average voltage for pulse signal (Actual pulse signal can be confirmed by oscilloscope.)

Diagnostic Procedure

UBS00JHN

1. CHECK INTAKE VALVE TIMING CONTROL SOLENOID VALVE POWER SUPPLY CIRCUIT

1. Turn ignition switch OFF.
2. Disconnect intake valve timing control solenoid valve harness connector.
3. Turn ignition switch ON.

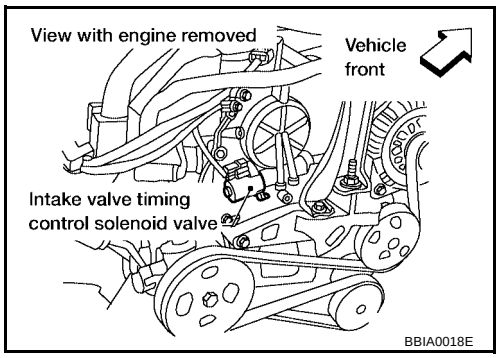

4. Check voltage between intake valve timing control solenoid valve terminal 2 and ground with CONSULT-II or tester.

Voltage: Battery voltage

OK or NG

OK >> GO TO 2.
NG >> Repair open circuit or short to ground or short to power in harness or connectors.

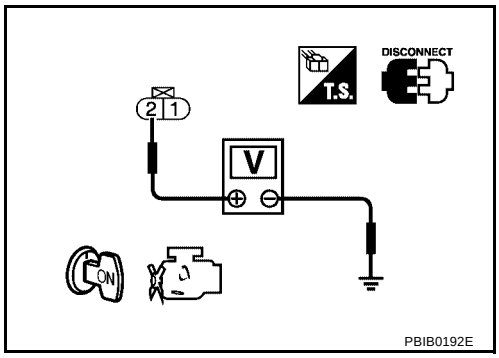

2. CHECK INTAKE VALVE TIMING CONTROL SOLENOID VALVE OUTPUT SIGNAL CIRCUIT FOR OPEN AND SHORT

1. Turn ignition switch OFF.
2. Disconnect ECM harness connector.
3. Check harness continuity between ECM terminal 11 and intake valve timing control solenoid valve terminal 1. Refer to Wiring Diagram.

   Continuity should exist.

4. Also check harness for short to ground and short to power.

OK or NG

OK >> GO TO 3.
NG >> Repair open circuit or short to ground or short to power in harness or connectors.

3. CHECK INTAKE VALVE TIMING CONTROL SOLENOID VALVE

Refer to EC-1111, "Component Inspection" .

OK or NG

OK >> GO TO 4.
NG >> Replace intake valve timing control solenoid valve.

4. CHECK INTERMITTENT INCIDENT

Refer to EC-834, "TROUBLE DIAGNOSIS FOR INTERMITTENT INCIDENT" .

>> **INSPECTION END**

Component Inspection

UBS00JHO

INTAKE VALVE TIMING CONTROL SOLENOID VALVE

1. Disconnect intake valve timing control solenoid valve harness connector.
2. Check resistance between intake valve timing control solenoid valve as follows.

Terminal	Resistance
1 and 2	Approximately 8 Ω [at 20°C (68°F)]
1 or 2 and ground	(Continuity should not exist.)

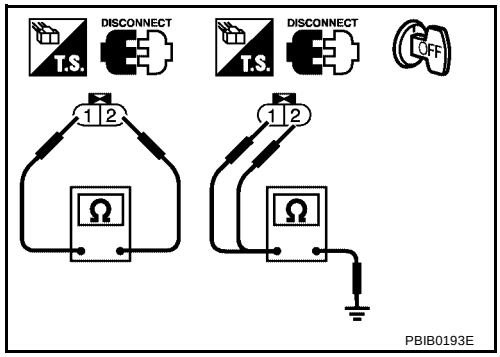

If NG, replace intake valve timing control solenoid valve.
If OK, go to next step.

3. Remove intake valve timing control solenoid valve.
4. Provide 12V DC between intake valve timing control solenoid valve terminals and then interrupt it. Make sure that the plunger moves as shown in the figure.

   CAUTION:
   Do not apply 12V DC continuously for 5 seconds or more. Doing so may result in damage to the coil in intake valve timing control solenoid valve.
   If NG, replace intake valve timing control solenoid valve.

   NOTE:
   Always replace O-ring when intake valve timing control solenoid valve is removed.

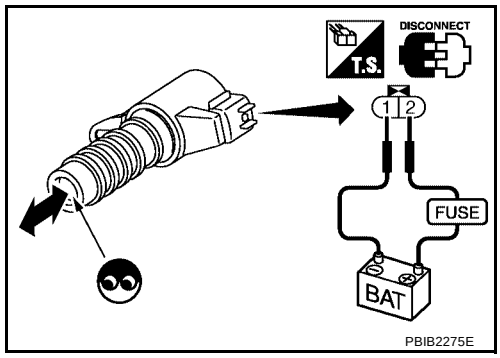

Removal and Installation

UBS00JHP

INTAKE VALVE TIMING CONTROL SOLENOID VALVE

Refer to EM-136, "TIMING CHAIN" .

DTC P1121 ELECTRIC THROTTLE CONTROL ACTUATOR

PFP:16119

Component Description

UBS00JHQ

Electric throttle control actuator consists of throttle control motor, throttle position sensor, etc.
The throttle control motor is operated by the ECM and it opens and closes the throttle valve.
The throttle position sensor detects the throttle valve position, and the opening and closing speed of the throttle valve and feeds the voltage signals to the ECM. The ECM judges the current opening angle of the throttle valve from these signals and the ECM controls the throttle control motor to make the throttle valve opening angle properly in response to driving condition.

On Board Diagnosis Logic

UBS00JHR

This self-diagnosis has the one trip detection logic.

DTC No.	Trouble diagnosis name	DTC detecting condition		Possible cause
P1121 1121	Electric throttle control actuator	A)	Electric throttle control actuator does not function properly due to the return spring malfunction.	● Electric throttle control actuator
		B)	Throttle valve opening angle in fail-safe mode is not in specified range.	
		C)	ECM detects the throttle valve is stuck open.	

FAIL-SAFE MODE

When the malfunction is detected, ECM enters fail-safe mode and the MIL lights up.

Detected items	Engine operating condition in fail-safe mode
Malfunction A	ECM controls the electric throttle actuator by regulating the throttle opening around the idle position. The engine speed will not rise more than 2,000 rpm.
Malfunction B	ECM controls the electric throttle control actuator by regulating the throttle opening to 20 degrees or less.
Malfunction C	While the vehicle is driving, it slows down gradually by fuel cut. After the vehicle stops, the engine stalls. The engine can restart in N or P position, and engine speed will not exceed 1,000 rpm or more.

DTC Confirmation Procedure

UBS00JHS

NOTE:

- **Perform PROCEDURE FOR MALFUNCTION A AND B first. If the DTC cannot be confirmed, perform PROCEDURE FOR MALFUNCTION C.**
- If DTC Confirmation Procedure has been previously conducted, always turn ignition switch OFF and wait at least 10 seconds before conducting the next test.

PROCEDURE FOR MALFUNCTION A AND B

With CONSULT-II

1. Turn ignition switch ON and wait at least 1 second.
2. Select “DATA MONITOR” mode with CONSULT-II.
3. Shift shift lever to D position (A/T) or 1st position (M/T), and wait at least 3 seconds.
4. Shift shift lever to P position (A/T) or Neutral position (M/T).
5. Turn ignition switch OFF and wait at least 10 seconds.
6. Turn ignition switch ON and wait at least 1 second.
7. Shift shift lever to D position (A/T) or 1st position (M/T), and wait at least 3 seconds.
8. Shift shift lever to P position (A/T) or Neutral position (M/T).
9. Turn ignition switch OFF, wait at least 10 seconds, and then turn ON.
10. If DTC is detected, go to EC-1113, "Diagnostic Procedure" .

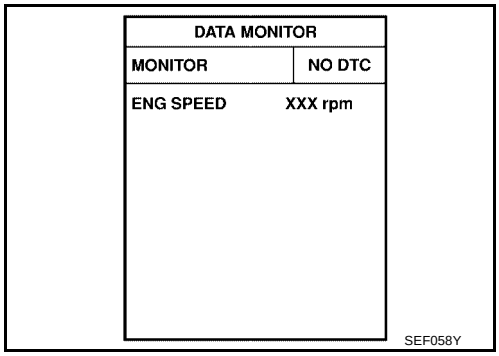

With GST

Follow the procedure “With CONSULT-II” above.

PROCEDURE FOR MALFUNCTION C

With CONSULT-II

1. Turn ignition switch ON and wait at least 1 second.
2. Select “DATA MONITOR” mode with CONSULT-II.
3. Shift shift lever to D position (A/T) or 1st position (M/T) and wait at least 3 seconds.
4. Shift shift lever to N, P position (A/T) or Neutral (M/T) position.
5. Start engine and let it idle for 3 seconds.
6. If DTC is detected, go to EC-1113, "Diagnostic Procedure" .

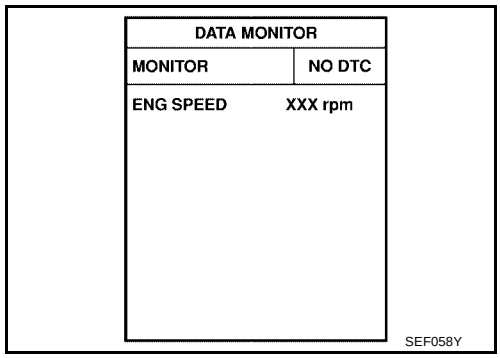

With GST

Follow the procedure “With CONSULT-II” above.

Diagnostic Procedure

UBS00JHT

1. CHECK ELECTRIC THROTTLE CONTROL ACTUATOR VISUALLY

1. Remove the intake air duct.
2. Check if a foreign matter is caught between the throttle valve and the housing.

OK or NG

OK >> GO TO 2.
NG >> Remove the foreign matter and clean the electric throttle control actuator inside.

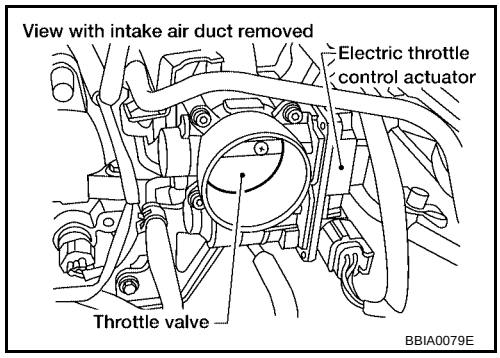

2. REPLACE ELECTRIC THROTTLE CONTROL ACTUATOR

1. Replace the electric throttle control actuator.
2. Perform EC-749, "Throttle Valve Closed Position Learning" .
3. Perform EC-750, "Idle Air Volume Learning" .

>> **INSPECTION END**

DTC P1122 ELECTRIC THROTTLE CONTROL FUNCTION

PFP:16119

Description

UBS00JHU

NOTE:
If DTC P1122 is displayed with DTC P1121 or 1126, first perform the trouble diagnosis for DTC P1121 or P1126. Refer to EC-1112 or EC-1121 .
Electric throttle control actuator consists of throttle control motor, throttle position sensor, etc.
The throttle control motor is operated by the ECM and it opens and closes the throttle valve.
The current opening angle of the throttle valve is detected by the throttle position sensor and it provides feedback to the ECM to control the throttle control motor to make the throttle valve opening angle properly in response to driving condition.

On Board Diagnosis Logic

UBS00JHV

This self-diagnosis has the one trip detection logic.

DTC No.	Trouble diagnosis name	DTC detecting condition	Possible cause
P1122 1122	Electric throttle control performance problem	Electric throttle control function does not operate properly.	● Harness or connectors (Throttle control motor circuit is open or shorted) ● Electric throttle control actuator

FAIL-SAFE MODE

When the malfunction is detected, the ECM enters fail-safe mode and the MIL lights up.

Engine operating condition in fail-safe mode
ECM stops the electric throttle control actuator control, throttle valve is maintained at a fixed opening (approx. 5 degrees) by the return spring.

DTC Confirmation Procedure

UBS00JHW

NOTE:
If DTC Confirmation Procedure has been previously conducted, always turn ignition switch OFF and wait at least 10 seconds before conducting the next test.
TESTING CONDITION:
Before performing the following procedure, confirm that battery voltage is more than 11V when engine is running.

WITH CONSULT-II

1. Turn ignition switch ON and wait at least 2 seconds.
2. Select “DATA MONITOR” mode with CONSULT-II.
3. Start engine and let it idle for 5 seconds.
4. If DTC is detected, go to EC-1116, "Diagnostic Procedure" .

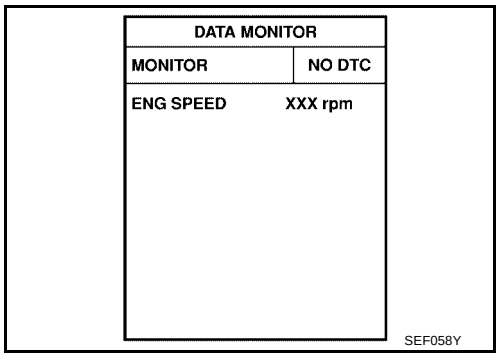

WITH GST

Follow the procedure “WITH CONSULT-II” above.

Wiring Diagram

UBS00JHX

EC-ETC1-01

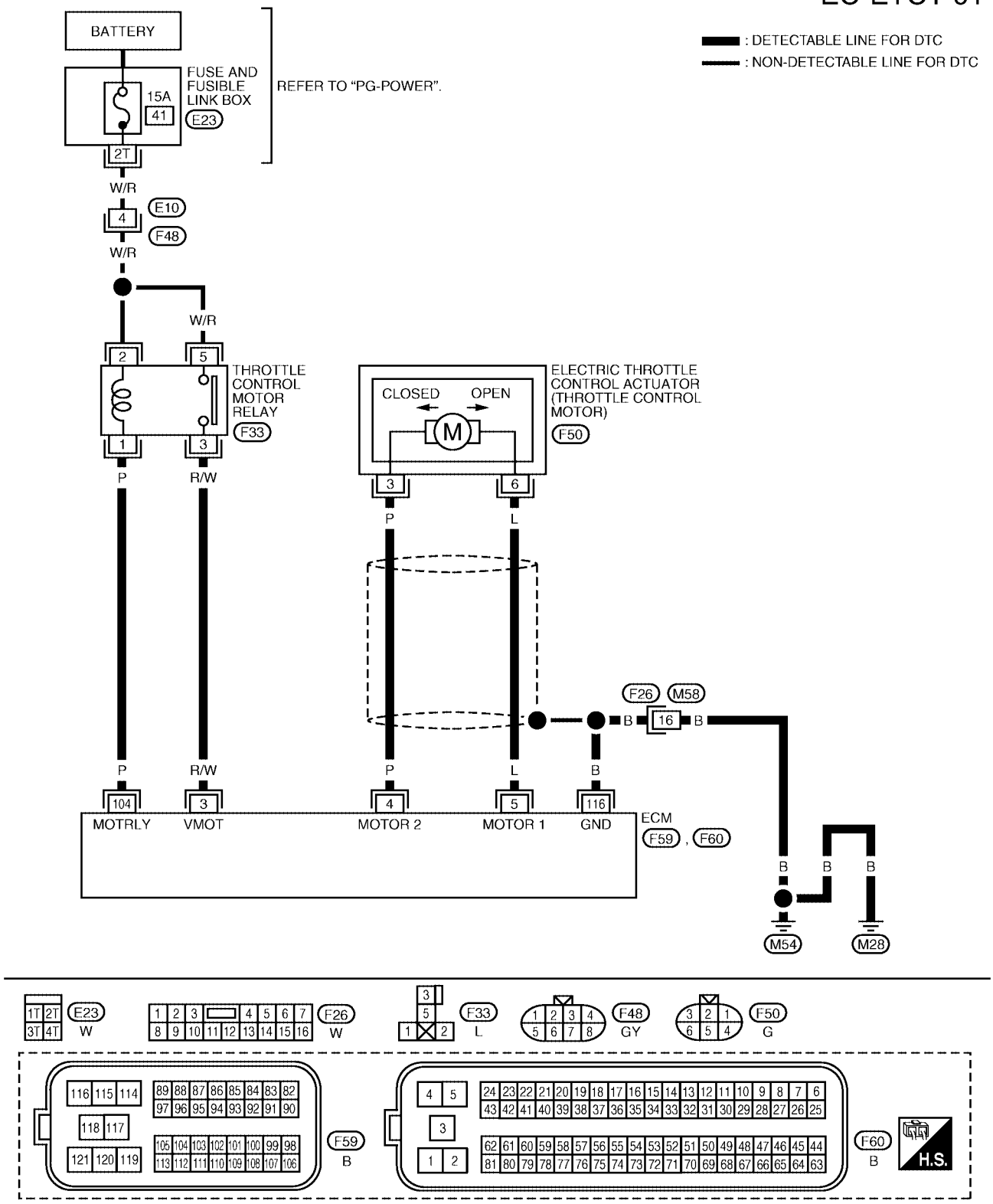

BBWA1466E

Specification data are reference values and are measured between each terminal and ground.
Pulse signal is measured by CONSULT-II.

CAUTION:
Do not use ECM ground terminals when measuring input/output voltage. Doing so may result in damage to the ECM's transistor. Use a ground other than ECM terminals, such as the ground.

TERMINAL NO.	WIRE COLOR	ITEM	CONDITION	DATA (DC Voltage)
3	R/W	Throttle control motor power supply	**[Ignition switch: ON]**	BATTERY VOLTAGE (11 - 14V)
4	P	Throttle control motor (Close)	**[Ignition switch: ON]** ● Engine stopped ● Shift lever: D (A/T), 1ST (M/T) ● Accelerator pedal: Fully released	0 - 14V★ 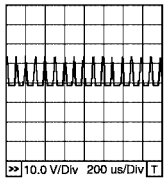 PBIB0534E
5	L	Throttle control motor (Open)	**[Ignition switch: ON]** ● Engine stopped ● Shift lever: D (A/T), 1ST (M/T) ● Accelerator pedal: Fully depressed	0 - 14V★ 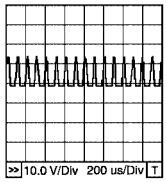 PBIB0533E
104	P	Throttle control motor relay	**[Ignition switch: OFF]**	BATTERY VOLTAGE (11 - 14V)
			[Ignition switch: ON]	0 - 1.0V

★: Average voltage for pulse signal (Actual pulse signal can be confirmed by oscilloscope.)

Diagnostic Procedure

UBS00JHY

1. CHECK GROUND CONNECTIONS

1. Turn ignition switch OFF.
2. Loosen and retighten engine two screws on the body.
   Refer to EC-841, "Ground Inspection" .

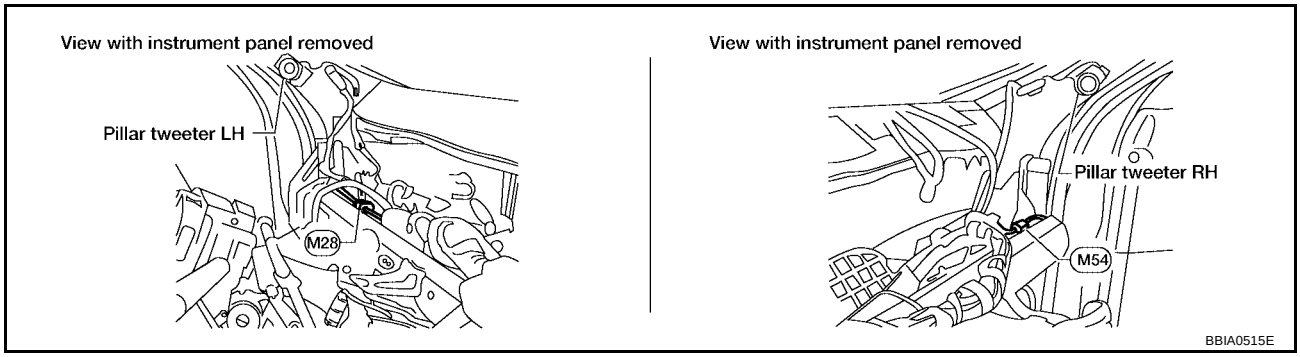

OK or NG

OK >> GO TO 2.
NG >> Repair or replace ground connections.

2. CHECK THROTTLE CONTROL MOTOR RELAY SIGNAL CIRCUIT

Check voltage between ECM terminal 3 and ground under the following conditions with CONSULT-II or tester.

Ignition switch	Voltage
OFF	Approximately 0V
ON	Battery voltage (11 - 14V)

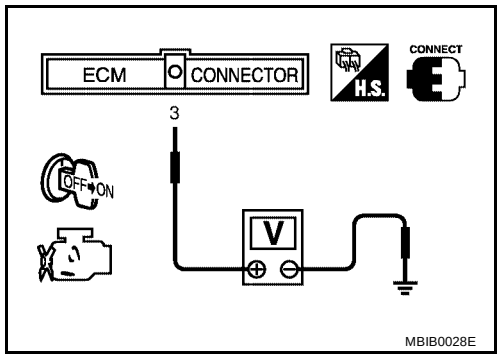

OK or NG

OK >> GO TO 8.
NG >> GO TO 3.

3. CHECK THROTTLE CONTROL MOTOR RELAY POWER SUPPLY CIRCUIT

1. Turn ignition switch OFF.
2. Disconnect throttle control motor relay.

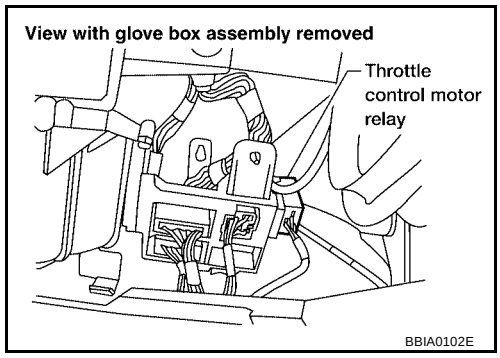

3. Check voltage between throttle control motor relay terminals 2, 5 and ground.

Voltage: Battery voltage

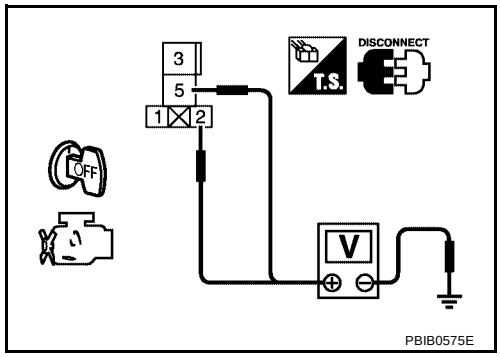

OK or NG

OK >> GO TO 5.
NG >> GO TO 4.

4. DETECT MALFUNCTIONING PART

Check the following.

- Harness connectors E10, F48
- Fuse and fusible link box connector E23
- 15A fuse
- Harness for open or short between throttle control motor relay and fuse

>> Repair open circuit or short to ground or short to power in harness or connectors.

5. CHECK THROTTLE CONTROL MOTOR RELAY INPUT SIGNAL CIRCUIT FOR OPEN AND SHORT

1. Disconnect ECM harness connector.
2. Check harness continuity between ECM terminal 3 and throttle control motor relay terminal 3.
   Refer to Wiring Diagram.

   Continuity should exist.

3. Also check harness for short to ground and short to power.

OK or NG

OK >> GO TO 6.
NG >> Repair open circuit or short to ground or short to power in harness or connectors.

6. CHECK THROTTLE CONTROL MOTOR RELAY OUTPUT SIGNAL CIRCUIT FOR OPEN AND SHORT

1. Check continuity between ECM terminal 104 and throttle control motor relay terminal 1.
   Refer to Wiring Diagram.

   Continuity should exist.

2. Also check harness for short to ground and short to power.

OK or NG

OK >> GO TO 7.
NG >> Repair open circuit or short to ground or short to power in harness or connectors.

7. CHECK THROTTLE CONTROL MOTOR RELAY

Refer to EC-1119, "Component Inspection" .

OK or NG

OK >> GO TO 11.
NG >> Replace throttle control motor relay.

8. CHECK THROTTLE CONTROL MOTOR OUTPUT SIGNAL CIRCUIT FOR OPEN OR SHORT

1. Turn ignition switch OFF.
2. Disconnect electric throttle control actuator harness connector.
3. Disconnect ECM harness connector.
4. Check harness continuity between the following terminals.
   Refer to Wiring Diagram.

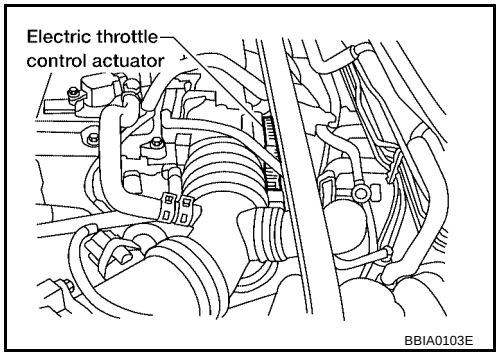

Electric throttle control actuator terminal	ECM terminal	Continuity
3	4	Should exist
	5	Should not exist
6	4	Should not exist
	5	Should exist

5. Also check harness for short to ground and short to power.

OK or NG

OK >> GO TO 9.
NG >> Repair open circuit or short to ground or short to power in harness or connectors.

9. CHECK ELECTRIC THROTTLE CONTROL ACTUATOR VISUALLY

1. Remove the intake air duct.
2. Check if foreign matter is caught between the throttle valve and the housing.

OK or NG

OK >> GO TO 10.
NG >> Remove the foreign matter and clean the electric throttle control actuator inside.

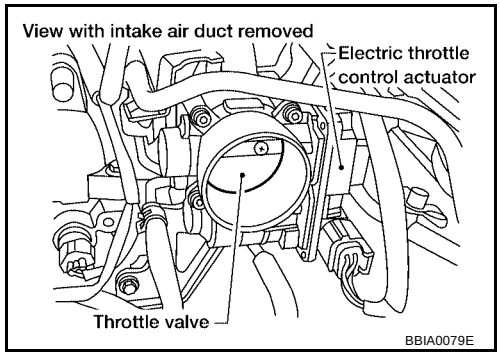

10. CHECK THROTTLE CONTROL MOTOR

Refer to EC-1119, "Component Inspection" .

OK or NG

OK >> GO TO 11.
NG >> GO TO 12.

11. CHECK INTERMITTENT INCIDENT

Refer to EC-834, "TROUBLE DIAGNOSIS FOR INTERMITTENT INCIDENT"

OK or NG

OK >> GO TO 12.
NG >> Repair or replace harness or connectors.

12. REPLACE ELECTRIC THROTTLE CONTROL ACTUATOR

1. Replace the electric throttle control actuator.
2. Perform EC-749, "Throttle Valve Closed Position Learning" .
3. Perform EC-750, "Idle Air Volume Learning" .

>> **INSPECTION END**

Component Inspection

UBS00JHZ

THROTTLE CONTROL MOTOR RELAY

1. Apply 12V direct current between relay terminals 1 and 2.
2. Check continuity between relay terminals 3 and 5.

Conditions	Continuity
12V direct current supply between terminals 1 and 2	Yes
No current supply	No

3. If NG, replace throttle control motor relay.

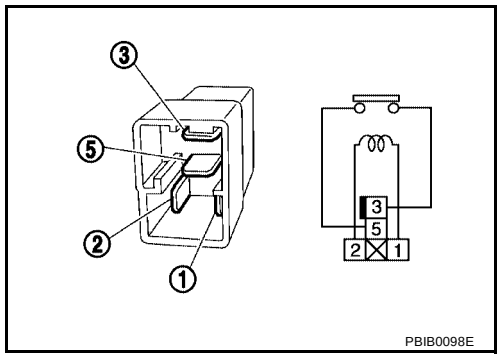

THROTTLE CONTROL MOTOR

1. Disconnect electric throttle control actuator harness connector.

2. Check resistance between terminals 3 and 6.

   Resistance: Approximately 1 - 15 Ω [at 25 °C (77°F)]

3. If NG, replace electric throttle control actuator and go to next step.
4. Perform EC-749, "Throttle Valve Closed Position Learning" .
5. Perform EC-750, "Idle Air Volume Learning" .

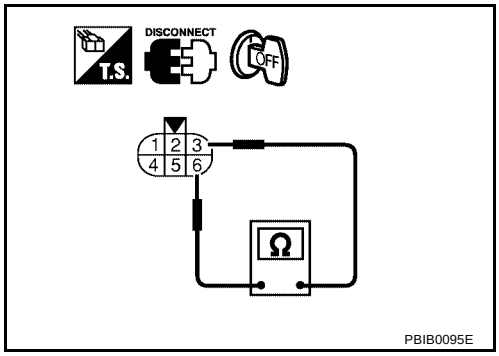

Remove and Installation

UBS00JI0

ELECTRIC THROTTLE CONTROL ACTUATOR

Refer to EM-108, "INTAKE MANIFOLD" .

DTC P1124, P1126 THROTTLE CONTROL MOTOR RELAY

PFP:16119

Component Description

UBS00JI1

Power supply for the throttle control motor is provided to the ECM via throttle control motor relay. The throttle control motor relay is ON/OFF controlled by the ECM. When the ignition switch is turned ON, the ECM sends an ON signal to throttle control motor relay and battery voltage is provided to the ECM. When the ignition switch is turned OFF, the ECM sends an OFF signal to throttle control motor relay and battery voltage is not provided to the ECM.

CONSULT-II Reference Value in Data Monitor Mode

UBS00JI2

Specification data are reference values.

MONITOR ITEM	CONDITION	SPECIFICATION
THRTL RELAY	● Ignition switch: ON	ON

On Board Diagnosis Logic

UBS00JI3

These self-diagnoses have one trip detection logic.

DTC No.	Trouble diagnosis name	DTC detecting condition	Possible cause
P1124 1124	Throttle control motor relay circuit short	ECM detects the throttle control motor relay is stuck ON.	● Harness or connectors (Throttle control motor relay circuit is shorted) ● Throttle control motor relay
P1126 1126	Throttle control motor relay circuit open	ECM detects a voltage of power source for throttle control motor is excessively low.	● Harness or connectors (Throttle control motor relay circuit is open) ● Throttle control motor relay

FAIL-SAFE MODE

When the malfunction is detected, ECM enters fail-safe mode and the MIL lights up.

Engine operating condition in fail-safe mode
ECM stops the electric throttle control actuator control, throttle valve is maintained at a fixed opening (approx. 5 degrees) by the return spring.

DTC Confirmation Procedure

UBS00JI4

NOTE:
If DTC Confirmation Procedure has been previously conducted, always turn ignition switch OFF and wait at least 10 seconds before conducting the next test.

PROCEDURE FOR DTC P1124

TESTING CONDITION:
Before performing the following procedure, confirm that battery voltage is more than 10V at idle.

With CONSULT-II

1. Turn ignition switch ON and wait at least 1 second.
2. Select “DATA MONITOR” mode with CONSULT-II.
3. If DTC is detected, go to EC-1124, "Diagnostic Procedure" .

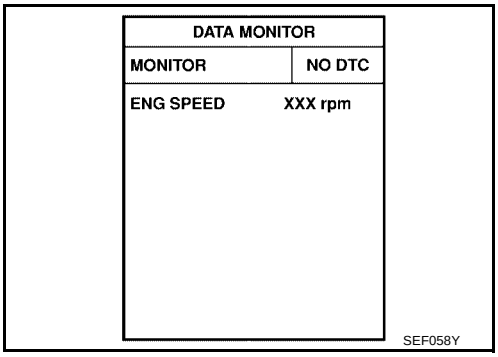

With GST

Follow the procedure “With CONSULT-II” above.

PROCEDURE FOR DTC P1126

With CONSULT-II

1. Turn ignition switch ON and wait at least 2 seconds.
2. Select “DATA MONITOR” mode with CONSULT-II.
3. Start engine and let it idle for 5 seconds.
4. If DTC is detected, go to EC-1124, "Diagnostic Procedure" .

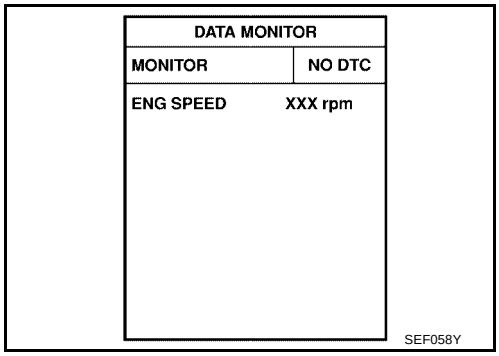

With GST

Follow the procedure “With CONSULT-II” above.

Wiring Diagram

UBS00JI5

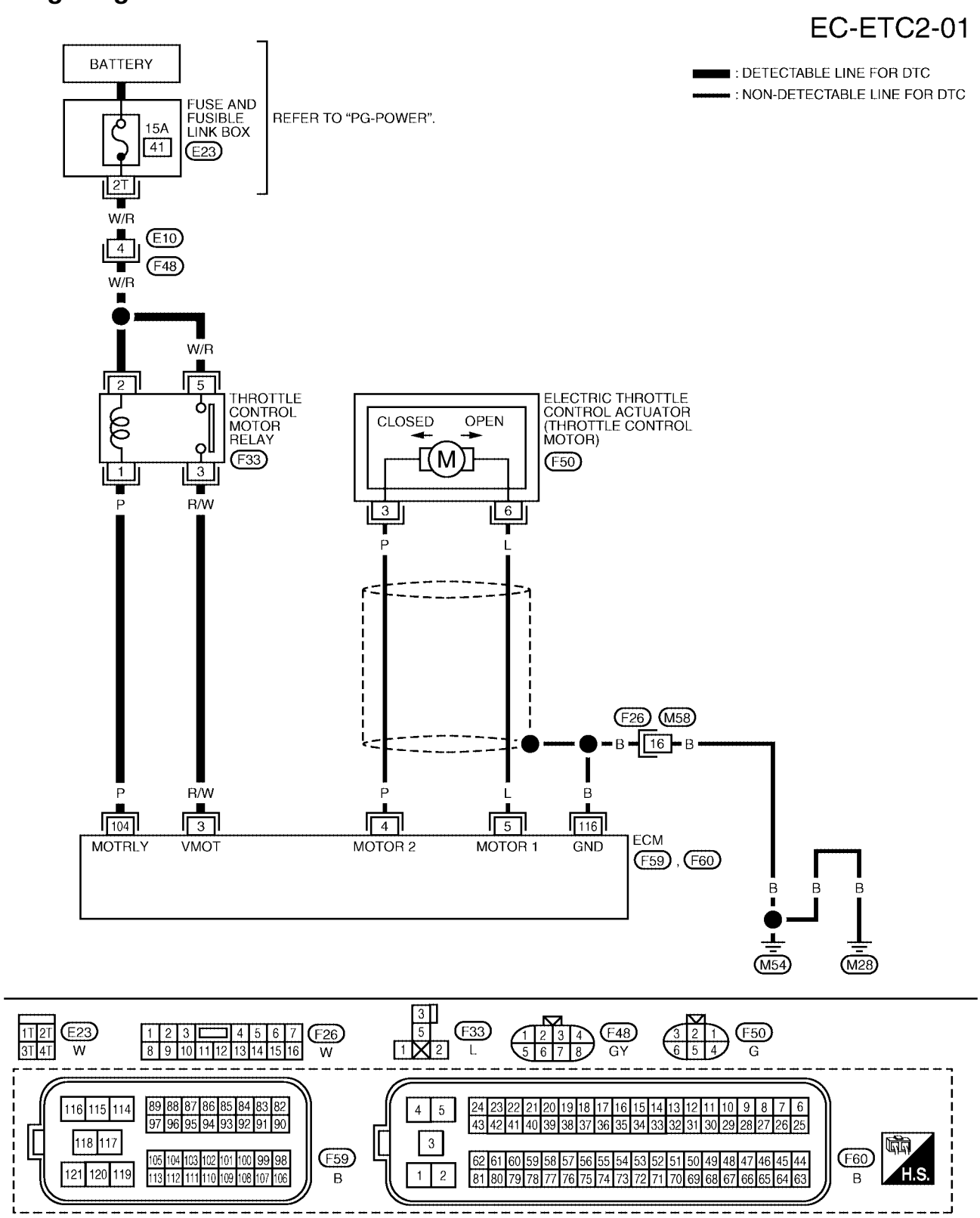

BBWA1467E

Specification data are reference values and are measured between each terminal and ground.

CAUTION:

Do not use ECM ground terminals when measuring input/output voltage. Doing so may result in damage to the ECM's transistor. Use a ground other than ECM terminals, such as the ground.

TERMINAL NO.	WIRE COLOR	ITEM	CONDITION	DATA (DC Voltage)
3	R/W	Throttle control motor power supply	**[Ignition switch: ON]**	BATTERY VOLTAGE (11 - 14V)
104	P	Throttle control motor relay	**[Ignition switch: OFF]**	BATTERY VOLTAGE (11 - 14V)
			[Ignition switch: ON]	0 - 1.0V

Diagnostic Procedure

UBS00JI6

1. CHECK THROTTLE CONTROL MOTOR RELAY POWER SUPPLY CIRCUIT

1. Turn ignition switch OFF.
2. Disconnect throttle control motor relay harness connector.

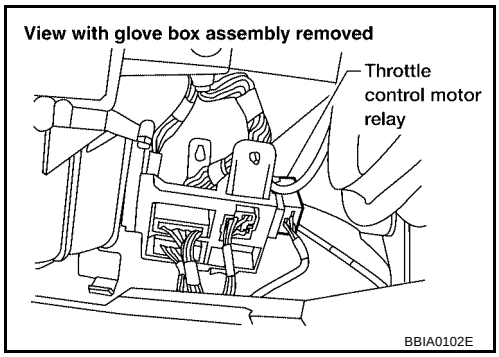

3. Check voltage between throttle control motor relay terminal 2, 5 and ground with CONSULT-II or tester.

Voltage: Battery voltage

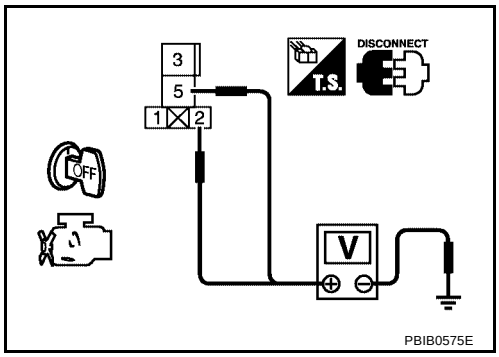

OK or NG

OK >> GO TO 3.
NG >> GO TO 2.

2. DETECT MALFUNCTIONING PART

Check the following.

- Harness connectors E10, F48
- Fuse and fusible link box connector E23
- 15A fuse
- Harness for open or short between throttle control motor relay and battery

>> Repair or replace harness or connectors.

3. CHECK THROTTLE CONTROL MOTOR RELAY INPUT SIGNAL CIRCUIT FOR OPEN AND SHORT

1. Disconnect ECM harness connector.
2. Check continuity between ECM terminal 3 and throttle control motor relay terminal 3.
   Refer to Wiring Diagram.

   Continuity should exist.

3. Also check harness for short to ground and short to power.

OK or NG

OK >> GO TO 4.
NG >> Repair open circuit or short to ground or short to power in harness or connectors.

4. CHECK THROTTLE CONTROL MOTOR RELAY OUTPUT SIGNAL CIRCUIT FOR OPEN AND SHORT

1. Check continuity between ECM terminal 104 and throttle control motor relay terminal 1.
   Refer to Wiring Diagram.

   Continuity should exist.

2. Also check harness for short to ground and short to power.

OK or NG

OK >> GO TO 5.
NG >> Repair open circuit or short to ground or short to power in harness or connectors.

5. CHECK THROTTLE CONTROL MOTOR RELAY

Refer to EC-1125, "Component Inspection" .

OK or NG

OK >> GO TO 6.
NG >> Replace throttle control motor relay.

6. CHECK INTERMITTENT INCIDENT

Refer to EC-834, "TROUBLE DIAGNOSIS FOR INTERMITTENT INCIDENT" .

>> **INSPECTION END**

Component Inspection

UBS00KK6

THROTTLE CONTROL MOTOR RELAY

1. Apply 12V direct current between relay terminals 1 and 2.
2. Check continuity between relay terminals 3 and 5.

Conditions	Continuity
12V direct current supply between terminals 1 and 2	Yes
No current supply	No

3. If NG, replace throttle control motor relay.

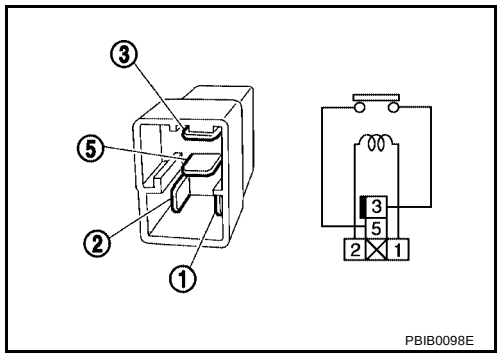

PBIB0098E

DTC P1128 THROTTLE CONTROL MOTOR

PFP:16119

Component Description

UBS00JI7

The throttle control motor is operated by the ECM and it opens and closes the throttle valve.
The current opening angle of the throttle valve is detected by the throttle position sensor and it provides feedback to the ECM to control the throttle control motor to make the throttle valve opening angle properly in response to driving condition.

On Board Diagnosis Logic

UBS00JI8

This self-diagnosis has the one trip detection logic.

DTC No.	Trouble diagnosis name	DTC detecting condition	Possible cause
P1128 1128	Throttle control motor circuit short	ECM detects short in both circuits between ECM and throttle control motor.	● Harness or connectors (Throttle control motor circuit is shorted.) ● Electric throttle control actuator (Throttle control motor)

FAIL-SAFE MODE
When the malfunction is detected, ECM enters fail-safe mode and the MIL lights up.

Engine operating condition in fail-safe mode
ECM stops the electric throttle control actuator control, throttle valve is maintained at a fixed opening (approx. 5 degrees) by the return spring.

DTC Confirmation Procedure

UBS00JI9

NOTE:
If DTC Confirmation Procedure has been previously conducted, always turn ignition switch OFF and wait at least 10 seconds before conducting the next test.

WITH CONSULT-II

1. Turn ignition switch ON and wait at least 2 seconds.
2. Select “DATA MONITOR” mode with CONSULT-II.
3. Start engine and let it idle for 5 seconds.
4. If DTC is detected, go to EC-1128, "Diagnostic Procedure" .

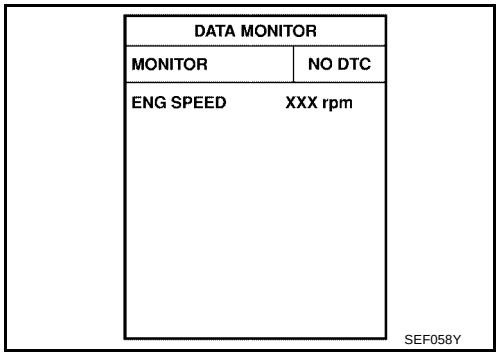

WITH GST

Follow the procedure “WITH CONSULT-II” above.

Wiring Diagram

UBS00JIA

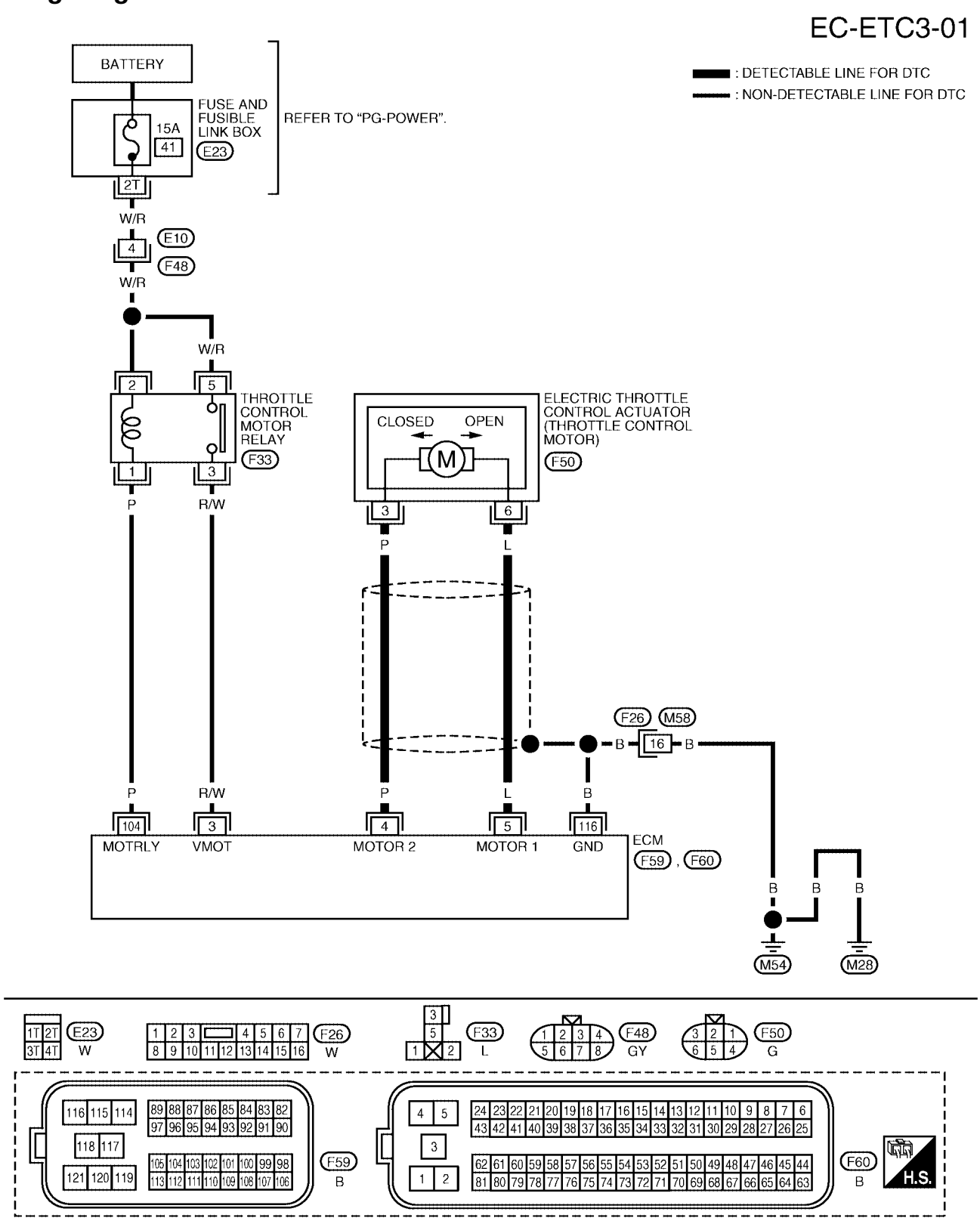

BBWA1468E

Specification data are reference values and are measured between each terminal and ground.
Pulse signal is measured by CONSULT-II.

CAUTION:
Do not use ECM ground terminals when measuring input/output voltage. Doing so may result in damage to the ECM's transistor. Use a ground other than ECM terminals, such as the ground.

TERMINAL NO.	WIRE COLOR	ITEM	CONDITION	DATA (DC Voltage)
4	P	Throttle control motor (Close)	**[Ignition switch: ON]** ● Engine stopped ● Shift lever: D (A/T), 1ST (M/T) ● Accelerator pedal: Fully released	0 - 14V★ 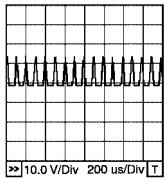 PBIB0534E
5	L	Throttle control motor (Open)	**[Ignition switch: ON]** ● Engine stopped ● Shift lever: D (A/T), 1ST (M/T) ● Accelerator pedal: Fully depressed	0 - 14V★ 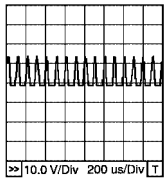 PBIB0533E

★: Average voltage for pulse signal (Actual pulse signal can be confirmed by oscilloscope.)

Diagnostic Procedure

UBS00JIB

1. CHECK GROUND CONNECTIONS

1. Turn ignition switch OFF.
2. Loosen and retighten engine two screws on the body.
   Refer to EC-841, "Ground Inspection" .

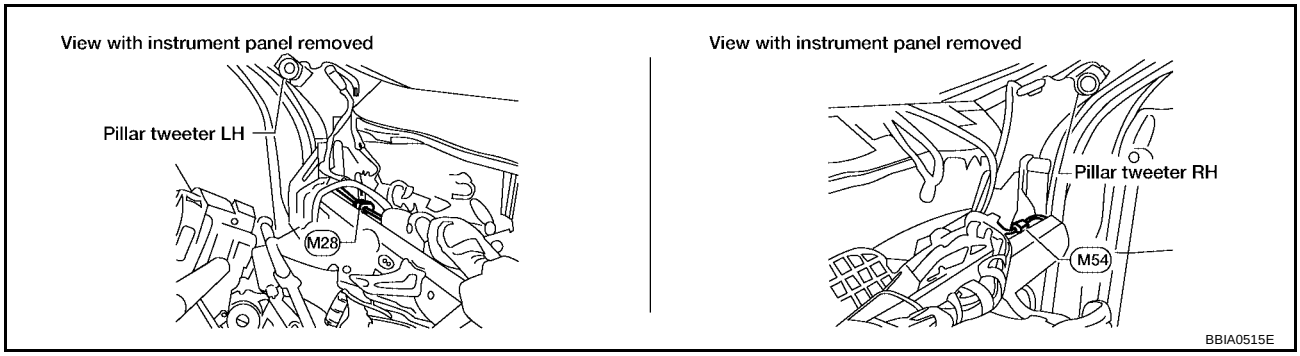

OK or NG

OK >> GO TO 2.
NG >> Repair or replace ground connections.

2. CHECK THROTTLE CONTROL MOTOR OUTPUT SIGNAL CIRCUIT FOR OPEN OR SHORT

1. Disconnect electric throttle control actuator harness connector.
2. Disconnect ECM harness connector.
3. Check harness continuity between the following terminals. Refer to Wiring Diagram.

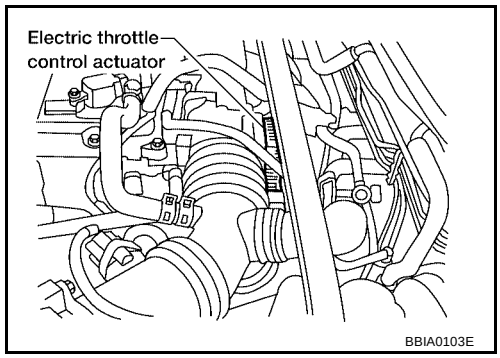

Electric throttle control actuator terminal	ECM terminal	Continuity
3	4	Should exist
	5	Should not exist
6	4	Should not exist
	5	Should exist

4. Also check harness for short to ground and short to power.

OK or NG

OK >> GO TO 3.
NG >> Repair open circuit or short to ground or short to power in harness or connectors.

3. CHECK THROTTLE CONTROL MOTOR

Refer to EC-1129, "Component Inspection" .

OK or NG

OK >> GO TO 4.
NG >> GO TO 5.

4. CHECK INTERMITTENT INCIDENT

Refer to EC-834, "TROUBLE DIAGNOSIS FOR INTERMITTENT INCIDENT" .

OK or NG

OK >> GO TO 5.
NG >> Repair or replace harness or connectors.

5. REPLACE ELECTRIC THROTTLE CONTROL ACTUATOR

1. Replace the electric throttle control actuator.
2. Perform EC-749, "Throttle Valve Closed Position Learning" .
3. Perform EC-750, "Idle Air Volume Learning" .

>> **INSPECTION END**

Component Inspection

UBS00JIC

THROTTLE CONTROL MOTOR

1. Disconnect electric throttle control actuator harness connector.
2. Check resistance between terminals 3 and 6.

Resistance: Approximately 1 - 15 Ω [at 25 °C (77°F)]

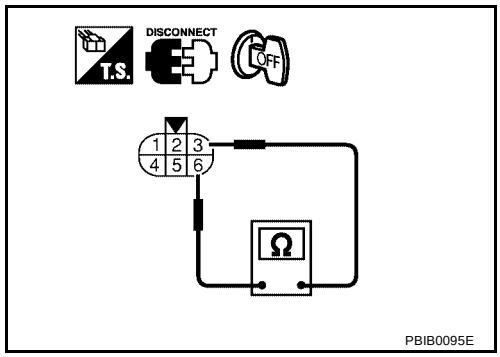

3. If NG, replace electric throttle control actuator and go to next step.
4. Perform EC-749, "Throttle Valve Closed Position Learning" .
5. Perform EC-750, "Idle Air Volume Learning" .

Removal and Installation

UBS00JID

ELECTRIC THROTTLE CONTROL ACTUATOR

Refer to EM-108, "INTAKE MANIFOLD" .

DTC P1143 HO2S1

PFP:22690

Component Description

UBS00JX1

The heated oxygen sensor 1 is placed into the exhaust manifold. It detects the amount of oxygen in the exhaust gas compared to the outside air. The heated oxygen sensor 1 has a closed-end tube made of ceramic zirconia. The zirconia generates voltage from approximately 1V in richer conditions to 0V in leaner conditions. The heated oxygen sensor 1 signal is sent to the ECM. The ECM adjusts the injection pulse duration to achieve the ideal air-fuel ratio. The ideal air-fuel ratio occurs near the radical change from 1V to 0V.

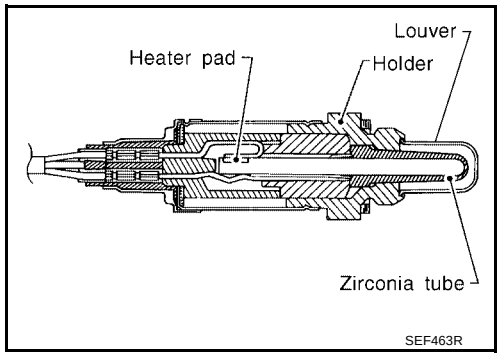

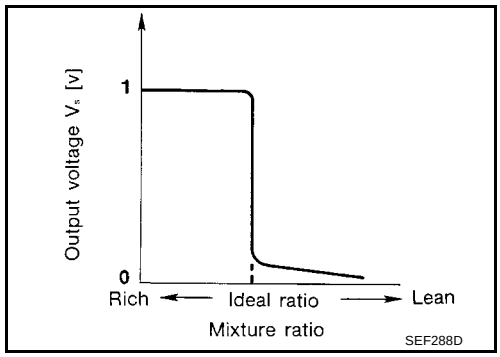

CONSULT-II Reference Value in Data Monitor Mode

UBS00JX2

Specification data are reference values.

MONITOR ITEM	CONDITION		SPECIFICATION
HO2S1 (B1)	● Engine: After warming up	Maintaining engine speed at 2,000 rpm	0 - 0.3V ←→ 0.6 - 1.0V
HO2S1 MNTR (B1)	● Engine: After warming up	Maintaining engine speed at 2,000 rpm	LEAN ←→ RICH Changes more than 5 times during 10 seconds.

On Board Diagnosis Logic

UBS00JX3

To judge the malfunction, the output from the heated oxygen sensor 1 is monitored to determine whether the rich output is sufficiently high and whether the lean output is sufficiently low. When both the outputs are shifting to the lean side, the malfunction will be detected.

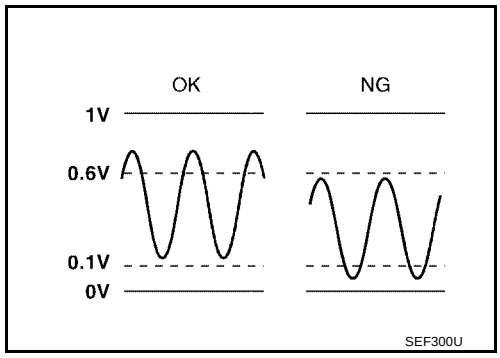

DTC No.	Trouble diagnosis name	DTC detecting condition	Possible cause
P1143 1143	Heated oxygen sensor 1 lean shift monitoring	The maximum and minimum voltage from the sensor are not reached to the specified voltages.	● Heated oxygen sensor 1 ● Heated oxygen sensor 1 heater ● Fuel pressure ● Fuel injector ● Intake air leaks

DTC Confirmation Procedure

UBS00JX4

CAUTION:

Always drive vehicle at a safe speed.

NOTE:

If DTC Confirmation Procedure has been previously conducted, always turn ignition switch OFF and wait at least 10 seconds before conducting the next test.

TESTING CONDITION:

- **Always perform at a temperature above –10°C (14°F).**
- **Before performing following procedure, confirm that battery voltage is more than 11V at idle.**

WITH CONSULT-II

1. Start engine and warm it up to normal operating temperature.
2. Stop engine and wait at least 10 seconds.
3. Turn ignition switch ON and select “HO2S1 (B1) P1143” of “HO2S1” in “DTC WORK SUPPORT” mode with CONSULT-II.
4. Touch “START”.
5. Start engine and let it idle for at least 3 minutes.

   NOTE:

   Never raise engine speed above 3,600 rpm after this step. If the engine speed limit is exceeded, return to step 5.

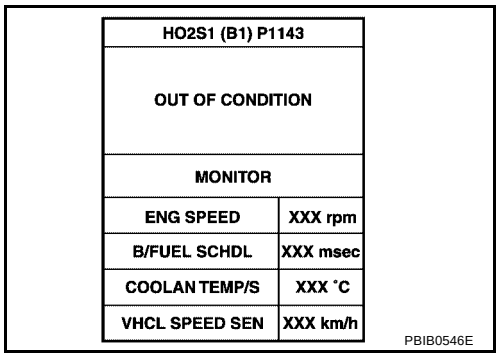

6. When the following conditions are met, “TESTING” will be displayed on the CONSULT-II screen. Maintain the conditions continuously until “TESTING” changes to “COMPLETED”. (It will take approximately 50 seconds or more.)

ENG SPEED	1,200 - 3,200 rpm
Vehicle speed	Less than 100 km/h (62 MPH)
B/FUEL SCHDL	1.9 - 13.0 msec
Shift lever	Suitable position

   If “TESTING” is not displayed after 5 minutes, retry from step 2.

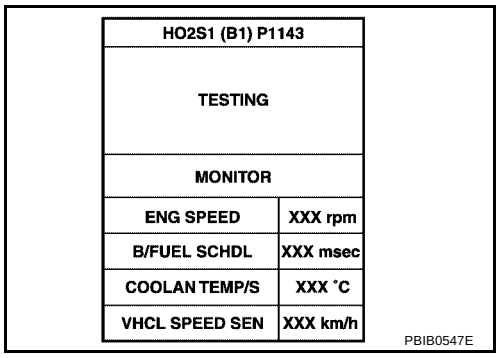

7. Make sure that “OK” is displayed after touching “SELF-DIAG RESULTS”. If “NG” is displayed, refer to EC-1133, "Diagnostic Procedure" .

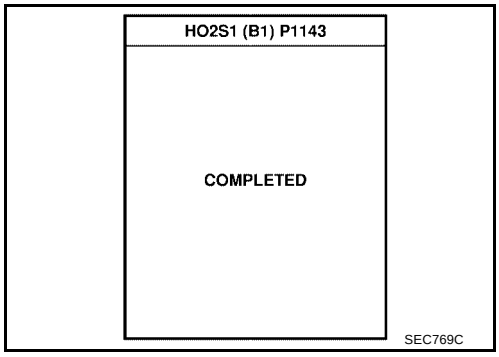

Overall Function Check

UBS00JX5

Use this procedure to check the overall function of the heated oxygen sensor 1 circuit. During this check, a 1st trip DTC might not be confirmed.

WITH GST

1. Start engine and warm it up to normal operating temperature.

2. Set voltmeter probes between ECM terminal 35 [HO2S1(B1) signal] and engine ground.
3. Check one of the following with engine speed held at 2,000 rpm constant under no load.
   - The maximum voltage is over 0.6V at least 1 time.
   - The minimum voltage is over 0.1V at least 1 time.
4. If NG, go to EC-1133, "Diagnostic Procedure" .

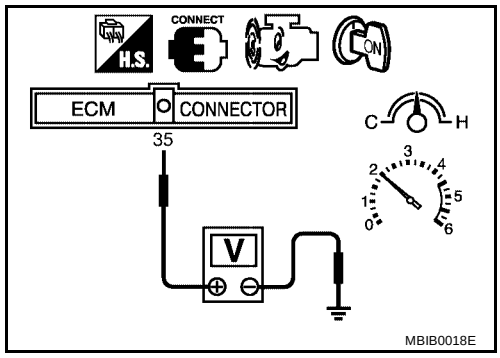

Diagnostic Procedure

UBS00JX6

1. CHECK GROUND CONNECTIONS

1. Turn ignition switch OFF.
2. Loosen and retighten engine two screws on the body.
   Refer to EC-841, "Ground Inspection" .

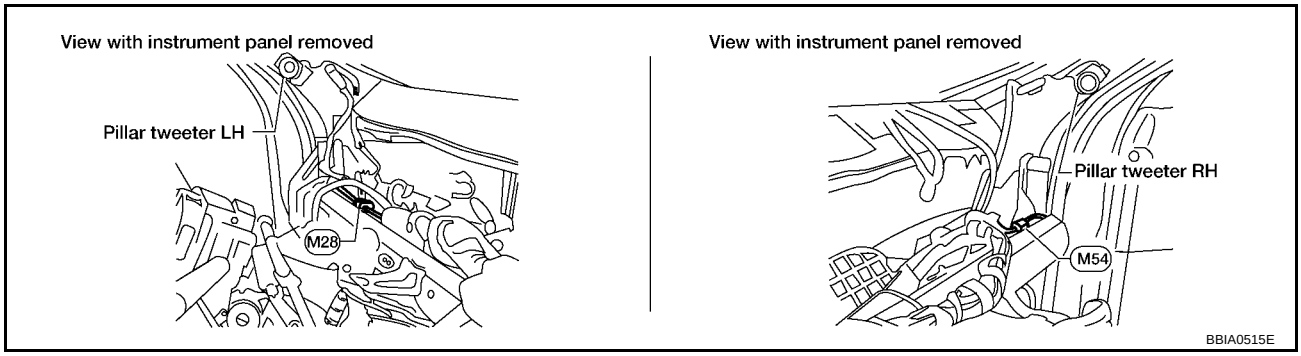

OK or NG

OK >> GO TO 2.
NG >> Repair or replace ground connections.

2. RETIGHTEN HEATED OXYGEN SENSOR 1

Loosen and retighten heated oxygen sensor 1.

Tightening torque:

40 - 60 N·m (4.1 - 6.1 kg-m, 30 - 44 ft-lb)

>> GO TO 3.

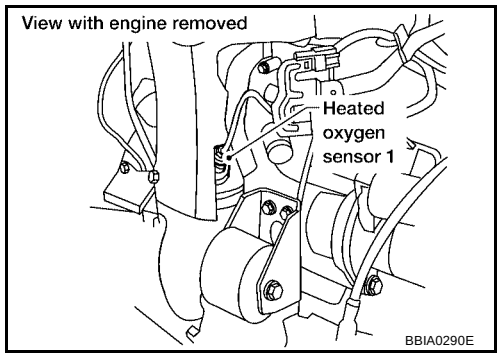

3. CLEAR THE SELF-LEARNING DATA

With CONSULT-II

1. Start engine and warm it up to normal operating temperature.
2. Select “SELF-LEARNING CONT” in “WORK SUPPORT” mode with CONSULT-II.
3. Clear the self-learning control coefficient by touching “CLEAR”.
4. Run engine for at least 10 minutes at idle speed.
   Is the 1st trip DTC P0171 detected?
   Is it difficult to start engine?

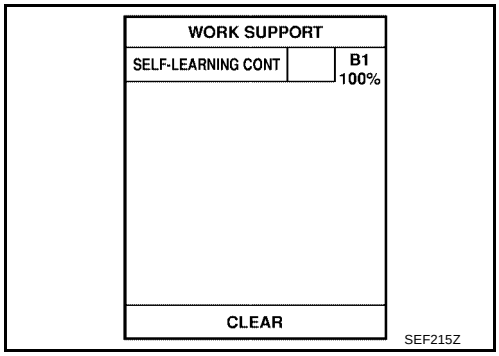

Without CONSULT-II

1. Start engine and warm it up to normal operating temperature.
2. Turn ignition switch OFF.
3. Disconnect mass air flow sensor harness connector, and restart and run engine for at least 5 seconds at idle speed.
4. Stop engine and reconnect mass air flow sensor harness connector.
5. Make sure DTC P0102 is displayed.
6. Erase the DTC memory. Refer to EC-712, "HOW TO ERASE EMISSION-RELATED DIAGNOSTIC INFORMATION" .
7. Make sure DTC P0000 is displayed.
8. Run engine for at least 10 minutes at idle speed.
   Is the 1st trip DTC P0171 detected?
   Is it difficult to start engine?

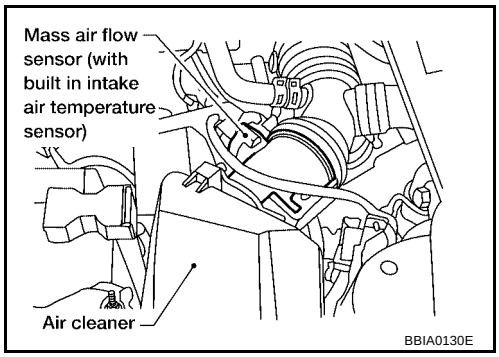

Yes or No

Yes >> Perform trouble diagnosis for DTC P0171. Refer to EC-943 .
No >> GO TO 4.

4. CHECK HEATED OXYGEN SENSOR 1 HEATER

Refer to EC-854, "Component Inspection" .

OK or NG

OK >> GO TO 5.
NG >> Replace heated oxygen sensor 1.

5. CHECK HEATED OXYGEN SENSOR 1

Refer to EC-1135, "Component Inspection" .

OK or NG

OK >> GO TO 6.
NG >> Replace heated oxygen sensor 1.

6. CHECK INTERMITTENT INCIDENT

Refer to EC-834, "TROUBLE DIAGNOSIS FOR INTERMITTENT INCIDENT" .
For circuit, refer to EC-907, "Wiring Diagram" .

>> **INSPECTION END**

Component Inspection

UBS00JX7

HEATED OXYGEN SENSOR 1

With CONSULT-II

1. Start engine and warm it up to normal operating temperature.
2. Select “MANU TRIG” and adjust “TRIGGER POINT” to 100% in “DATA MONITOR” mode with CONSULT-II.
3. Select “HO2S1 (B1)” and “HO2S1 MNTR (B1)”.
4. Hold engine speed at 2,000 rpm under no load during the following steps.
5. Touch “RECORD” on CONSULT-II screen.

DATA MONITOR	
MONITOR	NO DTC
ENG SPEED	XXX rpm
MAS A/F SE-B1	XXX V
COOLAN TEMP/S	XXX °C
HO2S1 (B1)	XXX V
HO2S1 MNTR (B1)	LEAN

SEF646Y

6. Check the following.
   - “HO2S1 MNTR (B1)” in “DATA MONITOR” mode changes from “RICH” to “LEAN” to “RICH”more than 5 times in 10 seconds.
     5 times (cycles) are counted as shown at right.
   - “HO2S1 (B1)” voltage goes above 0.6V at least once.
   - “HO2S1 (B1)” voltage goes below 0.3V at least once.
   - “HO2S1 (B1)” voltage never exceeds 1.0V.

cycle	1	2	3	4	5
HO2S1 MNTR (B1)	R-L-R-L-R-L-R-L-R-L-R				

R means HO2S1 MNTR (B1) indicates RICH
L means HO2S1 MNTR (B1) indicates LEAN

SEF217YA

Trigger	ENG SPEED	HO2S1 (B1)
	rpm	V
XXX	XXX	XXX
XXX	XXX	XXX
XXX	XXX	XXX
XXX	XXX	XXX
XXX	XXX	XXX
XXX	XXX	XXX
XXX	XXX	XXX
XXX	XXX	XXX
XXX	XXX	XXX
XXX	XXX	XXX
XXX	XXX	XXX
XXX	XXX	XXX
XXX	XXX	XXX

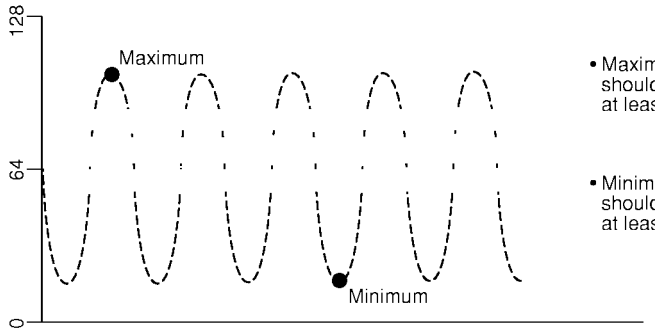

- Maximum voltage should be over 0.6V at least one time.
- Minimum voltage should be below 0.30V at least one time.

SEF648Y

CAUTION:

- **Discard any heated oxygen sensor which has been dropped from a height of more than 0.5 m (19.7 in) onto a hard surface such as a concrete floor; use a new one.**
- **Before installing new oxygen sensor, clean exhaust system threads using Oxygen Sensor Thread Cleaner tool J-43897-18 or J-43897-12 and approved anti-seize lubricant.**

Without CONSULT-II

1. Start engine and warm it up to normal operating temperature.

2. Set voltmeter probes between ECM terminal 35 [HO2S1 (B1) signal] and ground.
3. Check the following with engine speed held at 2,000 rpm constant under no load.
   - The voltage fluctuates between 0 to 0.3V and 0.6 to 1.0V more than 5 times within 10 seconds.
   - The maximum voltage is over 0.6V at least 1 time.
   - The minimum voltage is below 0.3V at least 1 time.
   - The voltage never exceeds 1.0V.

   1 time: 0 - 0.3V → 0.6 - 1.0V → 0 - 0.3V
   2 times: 0 - 0.3V → 0.6 - 1.0V → 0 - 0.3V → 0.6 - 1.0V → 0 - 0.3V

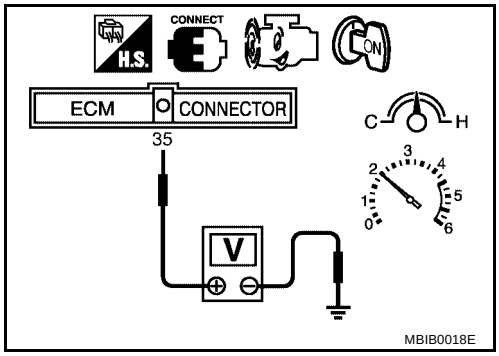

CAUTION:
- **Discard any heated oxygen sensor which has been dropped from a height of more than 0.5 m (19.7 in) onto a hard surface such as a concrete floor; use a new one.**
- **Before installing new oxygen sensor, clean exhaust system threads using Oxygen Sensor Thread Cleaner tool J-43897-18 or J-43897-12 and approved anti-seize lubricant.**

Removal and Installation

UBS00JX8

HEATED OXYGEN SENSOR 1

Refer to EM-113, "EXHAUST MANIFOLD AND THREE WAY CATALYST" .

DTC P1144 HO2S1

PFP:22690

Component Description

UBS00JX9

The heated oxygen sensor 1 is placed into the exhaust manifold. It detects the amount of oxygen in the exhaust gas compared to the outside air. The heated oxygen sensor 1 has a closed-end tube made of ceramic zirconia. The zirconia generates voltage from approximately 1V in richer conditions to 0V in leaner conditions. The heated oxygen sensor 1 signal is sent to the ECM. The ECM adjusts the injection pulse duration to achieve the ideal air-fuel ratio. The ideal air-fuel ratio occurs near the radical change from 1V to 0V.

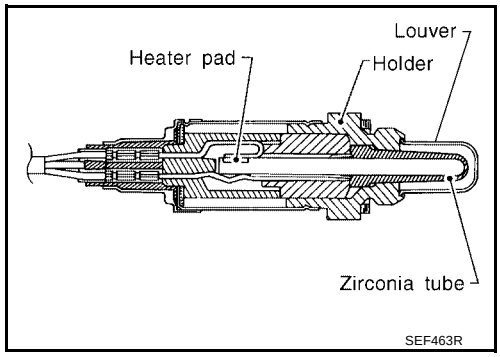

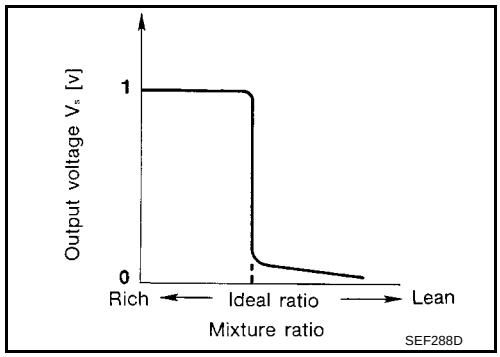

CONSULT-II Reference Value in Data Monitor Mode

UBS00JXA

Specification data are reference values.

MONITOR ITEM	CONDITION		SPECIFICATION
HO2S1 (B1)	● Engine: After warming up	Maintaining engine speed at 2,000 rpm	0 - 0.3V ←→ 0.6 - 1.0V
HO2S1 MNTR (B1)	● Engine: After warming up	Maintaining engine speed at 2,000 rpm	LEAN ←→ RICH Changes more than 5 times during 10 seconds.

On Board Diagnosis Logic

UBS00JXB

To judge the malfunction, the output from the heated oxygen sensor 1 is monitored to determine whether the rich output is sufficiently high and lean output is sufficiently low. When both the outputs are shifting to the rich side, the malfunction will be detected.

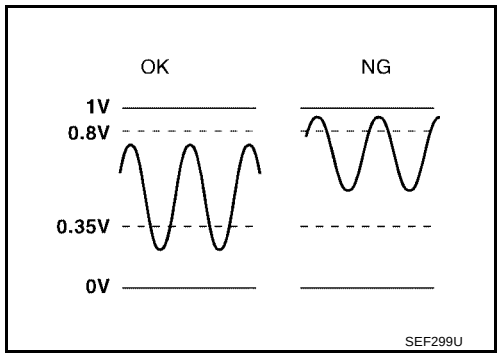

DTC No.	Trouble diagnosis name	DTC detecting condition	Possible cause
P1144 1144	Heated oxygen sensor 1 rich shift monitoring	The maximum and minimum voltages from the sensor are beyond the specified voltages.	● Heated oxygen sensor 1 ● Heated oxygen sensor 1 heater ● Fuel pressure ● Fuel injector

DTC Confirmation Procedure

UBS00JXC

CAUTION:

Always drive vehicle at a safe speed.

NOTE:

If DTC Confirmation Procedure has been previously conducted, always turn ignition switch OFF and wait at least 10 seconds before conducting the next test.

TESTING CONDITION:

- **Always perform at a temperature above –10°C (14°F).**
- **Before performing the following procedure, confirm that battery voltage is more than 11V at idle.**

WITH CONSULT-II

1. Start engine and warm it up to normal operating temperature.
2. Stop engine and wait at least 5 seconds.
3. Turn ignition switch ON and select “HO2S1 (B1) P1144” of “HO2S1” in “DTC WORK SUPPORT” mode with CONSULT-II.
4. Touch “START”.
5. Start engine and let it idle for at least 3 minutes.

   NOTE:

   Never raise engine speed above 3,600 rpm after this step. If the engine speed limit is exceeded, return to step 5.

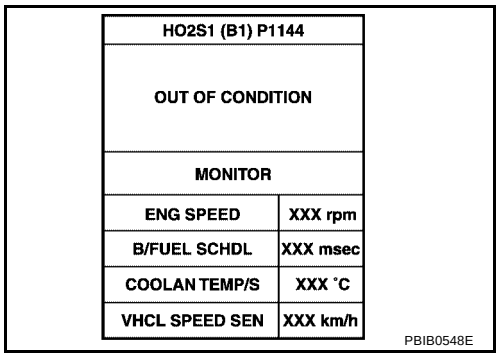

6. When the following conditions are met, “TESTING” will be displayed on the CONSULT-II screen. Maintain the conditions continuously until “TESTING” changes to “COMPLETED”. (It will take approximately 50 seconds or more.)

ENG SPEED	1,200 - 3,200 rpm
Vehicle speed	Less than 100 km/h (62 MPH)
B/FUEL SCHDL	1.9 - 13.0 msec
Shift lever	Suitable position

   If “TESTING” is not displayed after 5 minutes, retry from step 2.

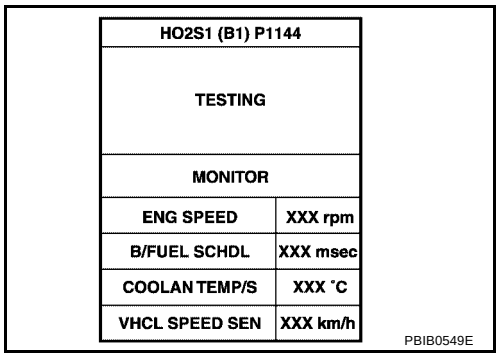

7. Make sure that “OK” is displayed after touching “SELF-DIAG RESULTS”. If “NG” is displayed, refer to EC-1139, "Diagnostic Procedure" .

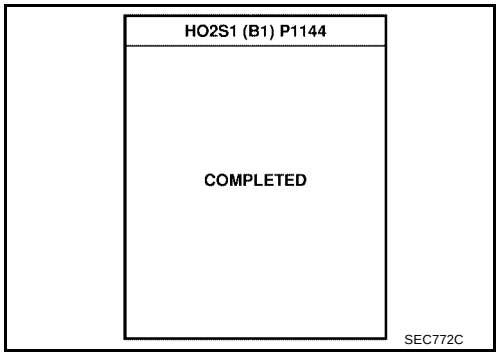

Overall Function Check

UBS00JXD

Use this procedure to check the overall function of the heated oxygen sensor 1 circuit. During this check, a 1st trip DTC might not be confirmed.

WITH GST

1. Start engine and warm it up to normal operating temperature.

2. Set voltmeter probes between ECM terminal 35 [HO2S1(B1) signal] and ground.
3. Check one of the following with engine speed held at 2,000 rpm constant under no load.
   - The maximum voltage is below 0.8V at least 1 time.
   - The minimum voltage is below 0.35V at least 1 time.
4. If NG, go to EC-1139, "Diagnostic Procedure" .

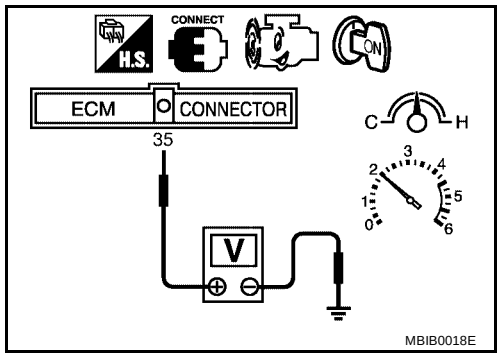

Diagnostic Procedure

UBS00JXE

1. CHECK GROUND CONNECTIONS

1. Turn ignition switch OFF.
2. Loosen and retighten engine two screws on the body.
   Refer to EC-841, "Ground Inspection" .

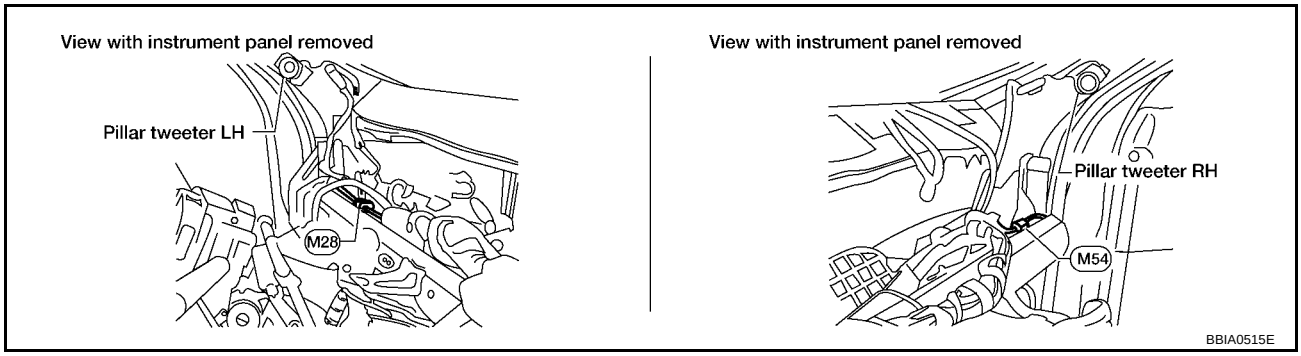

OK or NG

OK >> GO TO 2.
NG >> Repair or replace ground connections.

2. RETIGHTEN HEATED OXYGEN SENSOR 1

Loosen and retighten heated oxygen sensor 1.

Tightening torque: 40 - 60 N·m (4.1 - 6.1 kg-m, 30 - 44 ft-lb)

>> GO TO 3.

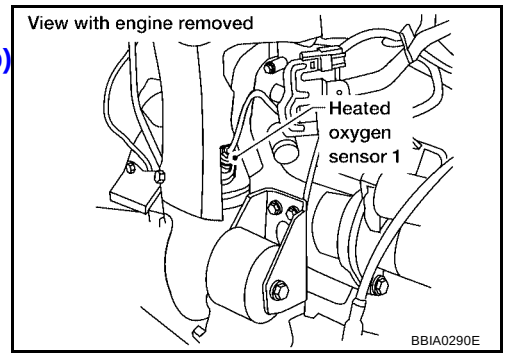

3. CLEAR THE SELF-LEARNING DATA

With CONSULT-II

1. Start engine and warm it up to normal operating temperature.
2. Select “SELF-LEARNING CONT” in “WORK SUPPORT” mode with CONSULT-II.
3. Clear the self-learning control coefficient by touching “CLEAR”.
4. Run engine for at least 10 minutes at idle speed.
   Is the 1st trip DTC P0172 detected?
   Is it difficult to start engine?

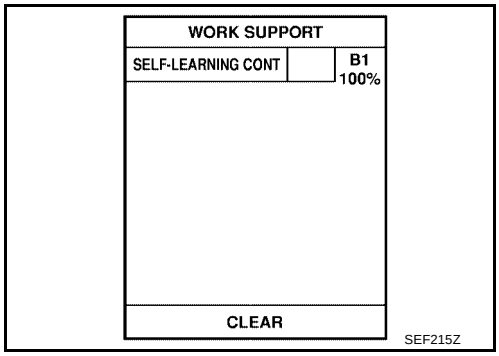

Without CONSULT-II

1. Start engine and warm it up to normal operating temperature.
2. Turn ignition switch OFF.
3. Disconnect mass air flow sensor harness connector, and restart and run engine for at least 5 seconds at idle speed.
4. Stop engine and reconnect mass air flow sensor harness connector.
5. Make sure DTC P0102 is displayed.
6. Erase the DTC memory. Refer to EC-712, "HOW TO ERASE EMISSION-RELATED DIAGNOSTIC INFORMATION" .
7. Make sure DTC P0000 is displayed.
8. Run engine for at least 10 minutes at idle speed.
   Is the 1st trip DTC P0172 detected?
   Is it difficult to start engine?

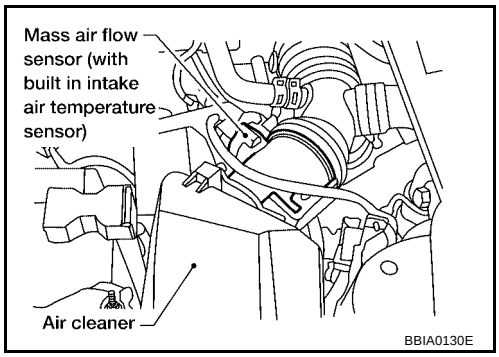

Yes or No

Yes >> Perform trouble diagnosis for DTC P0172. Refer to EC-954 .
No >> GO TO 4.

4. CHECK HO2S1 CONNECTOR FOR WATER

1. Turn ignition switch OFF.
2. Disconnect heated oxygen sensor 1 harness connector.
3. Check connectors for water.

Water should not exist.

OK or NG

OK >> GO TO 5.
NG >> Repair or replace harness or connectors.

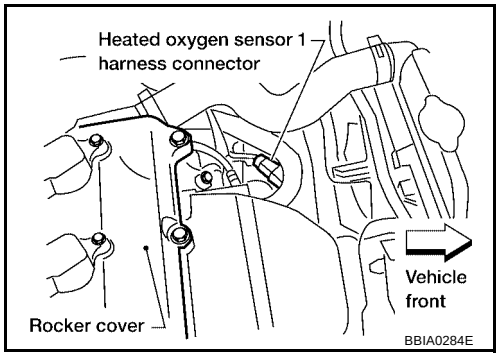

5. CHECK HEATED OXYGEN SENSOR 1 HEATER

Refer to EC-854, "Component Inspection" .

OK or NG

OK >> GO TO 6.
NG >> Replace heated oxygen sensor 1.

6. CHECK HEATED OXYGEN SENSOR 1

Refer to EC-1141, "Component Inspection" .

OK or NG

OK >> GO TO 7.
NG >> Replace heated oxygen sensor 1.

7. CHECK INTERMITTENT INCIDENT

Refer to EC-834, "TROUBLE DIAGNOSIS FOR INTERMITTENT INCIDENT" .
For circuit, refer to EC-907, "Wiring Diagram" .

>> **INSPECTION END**

Component Inspection

UBS00JXF

HEATED OXYGEN SENSOR 1

With CONSULT-II

1. Start engine and warm it up to normal operating temperature.
2. Select “MANU TRIG” and adjust “TRIGGER POINT” to 100% in “DATA MONITOR” mode with CONSULT-II.
3. Select “HO2S1 (B1)” and “HO2S1 MNTR (B1)”.
4. Hold engine speed at 2,000 rpm under no load during the following steps.
5. Touch “RECORD” on CONSULT-II screen.

DATA MONITOR	
MONITOR	NO DTC
ENG SPEED	XXX rpm
MAS A/F SE-B1	XXX V
COOLAN TEMP/S	XXX °C
HO2S1 (B1)	XXX V
HO2S1 MNTR (B1)	LEAN

SEF646Y

6. Check the following.
   - “HO2S1 MNTR (B1)” in “DATA MONITOR” mode changes from “RICH” to “LEAN” to “RICH” more than 5 times in 10 seconds.
     5 times (cycles) are counted as shown at right.
   - “HO2S1 (B1)” voltage goes above 0.6V at least once.
   - “HO2S1 (B1)” voltage goes below 0.3V at least once.
   - “HO2S1 (B1)” voltage never exceeds 1.0V.

cycle	1	2	3	4	5
HO2S1 MNTR (B1)	R-L-R-L-R-L-R-L-R-L-R				

R means HO2S1 MNTR (B1) indicates RICH
L means HO2S1 MNTR (B1) indicates LEAN

SEF217YA

Trigger	ENG SPEED	HO2S1 (B1)
	rpm	V
XXX	XXX	XXX
XXX	XXX	XXX
XXX	XXX	XXX
XXX	XXX	XXX
XXX	XXX	XXX
XXX	XXX	XXX
XXX	XXX	XXX
XXX	XXX	XXX
XXX	XXX	XXX
XXX	XXX	XXX
XXX	XXX	XXX
XXX	XXX	XXX
XXX	XXX	XXX

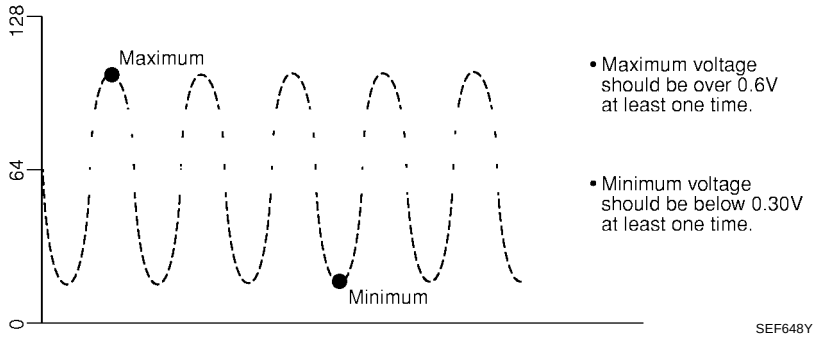

CAUTION:

- **Discard any heated oxygen sensor which has been dropped from a height of more than 0.5 m (19.7 in) onto a hard surface such as a concrete floor; use a new one.**

- **Before installing new oxygen sensor, clean exhaust system threads using Oxygen Sensor Thread Cleaner tool J-43897-18 or J-43897-12 and approved anti-seize lubricant.**

Without CONSULT-II

1. Start engine and warm it up to normal operating temperature.
2. Set voltmeter probes between ECM terminal 35 [HO2S1 (B1) signal] and ground.
3. Check the following with engine speed held at 2,000 rpm constant under no load.
   - The voltage fluctuates between 0 to 0.3V and 0.6 to 1.0V more than 5 times within 10 seconds.
   - The maximum voltage is over 0.6V at least 1 time.
   - The minimum voltage is below 0.3V at least 1 time.
   - The voltage never exceeds 1.0V.

   1 time: 0 - 0.3V → 0.6 - 1.0V → 0 - 0.3V
   2 times: 0 - 0.3V → 0.6 - 1.0V → 0 - 0.3V → 0.6 - 1.0V → 0 - 0.3V

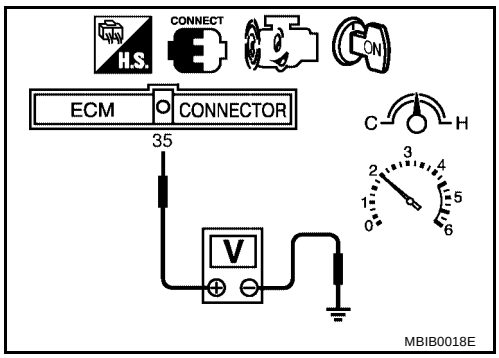

CAUTION:

- **Discard any heated oxygen sensor which has been dropped from a height of more than 0.5 m (19.7 in) onto a hard surface such as a concrete floor; use a new one.**
- **Before installing new oxygen sensor, clean exhaust system threads using Oxygen Sensor Thread Cleaner tool J-43897-18 or J-43897-12 and approved anti-seize lubricant.**

Removal and Installation

UBS00JXG

HEATED OXYGEN SENSOR 1

Refer to EM-113, "EXHAUST MANIFOLD AND THREE WAY CATALYST" .

DTC P1146 HO2S2

PFP:226A0

Component Description

UBS00JXH

The heated oxygen sensor 2, after three way catalyst (manifold), monitors the oxygen level in the exhaust gas.
Even if switching characteristics of the heated oxygen sensor 1 (A/T models ULEV and M/T models) or the air fuel ratio (A/F) sensor 1 (A/T models except ULEV) are shifted, the air-fuel ratio is controlled to stoichiometric, by the signal from the heated oxygen sensor 2.
This sensor is made of ceramic zirconia. The zirconia generates voltage from approximately 1V in richer conditions to 0V in leaner conditions.
Under normal conditions the heated oxygen sensor 2 is not used for engine control operation.

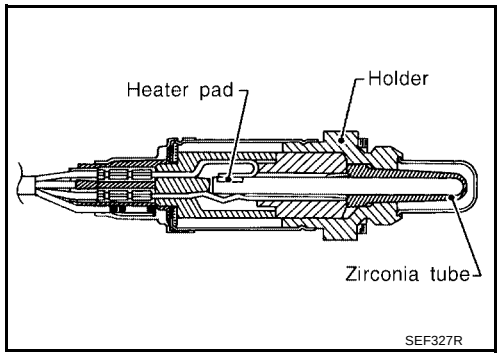

CONSULT-II Reference Value in Data Monitor Mode

UBS00JXI

Specification data are reference values.

MONITOR ITEM	CONDITION		SPECIFICATION
HO2S2 (B1)	● Engine: After warming up ● Keeping the engine speed between 3,500 and 4,000 rpm for 1 minute and at idle for 1 minute under no load	Revving engine from idle to 3,000 rpm quickly	0 - 0.3V ←→ 0.6 - 1.0V
HO2S2 MNTR (B1)			LEAN ←→ RICH

On Board Diagnosis Logic

UBS00JXJ

The heated oxygen sensor 2 has a much longer switching time between rich and lean than the heated oxygen sensor 1 (A/T models ULEV and M/T models) or the air fuel ratio (A/F) sensor 1 (A/T models except ULEV). The oxygen storage capacity of the three way catalyst (manifold) causes the longer switching time. To judge the malfunctions of heated oxygen sensor 2, ECM monitors whether the minimum voltage of sensor is sufficiently low during the various driving condition such as fuel-cut.

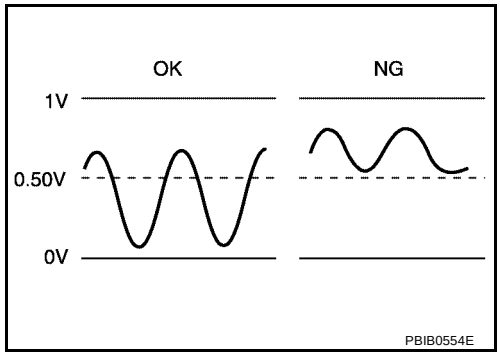

DTC No.	Trouble diagnosis name	DTC detecting condition	Possible cause
P1146 1146	Heated oxygen sensor 2 minimum voltage monitoring	The minimum voltage from the sensor is not reached to the specified voltage.	● Harness or connectors (The sensor circuit is open or shorted.) ● Heated oxygen sensor 2 ● Fuel pressure ● Fuel injector

DTC Confirmation Procedure

UBS00JXK

NOTE:
If DTC confirmation Procedure has been previously conducted, always turn ignition switch OFF and wait at least 10 seconds before conducting the next test.

WITH CONSULT-II

TESTING CONDITION:
For the best results, perform DTC WORK SUPPORT at a temperature of 0 to 30°C (32 to 86°F).

1. Turn ignition switch ON and select “DATA MONITOR ” mode with CONSULT-II
2. Start engine and warm it up to the normal operating temperature.
3. Turn ignition switch OFF and wait at least 10 seconds.
4. Start engine and keep the engine speed between 3,500 and 4,000 rpm for at least 1 minute under no load.
5. Let engine idle for 1 minute.
6. Make sure that “COOLAN TEMP/S” indicates more than 70°C (158°F).
   If not, warm up engine and go to next step when “COOLAN TEMP/S” indication reaches to 70°C (158°F).

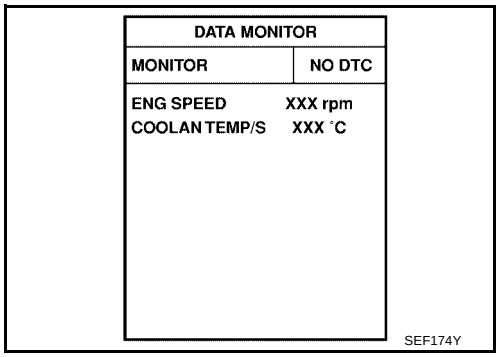

7. Open engine hood.
8. Select “HO2S2 (B1) P1146” of “HO2S2” in “DTC WORK SUPPORT” mode with CONSULT-II.
9. Start engine and following the instruction of COSULT-II.

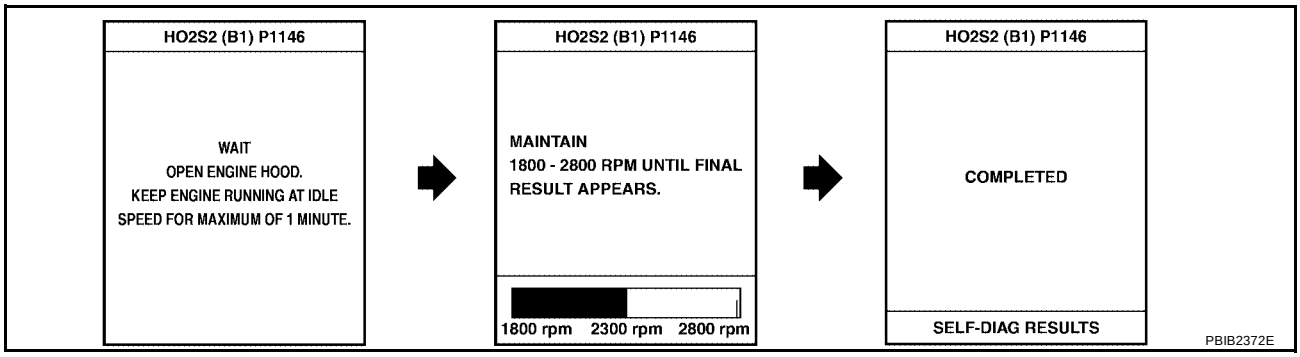

NOTE:
It will take at most 10 minutes until “COMPLETED” is displayed.

10. Make sure that “OK” is displayed after touching “SELF-DIAG RESULTS”.
    If “NG” is displayed, refer to EC-1147, "Diagnostic Procedure" .
    If “CAN NOT BE DIAGNOSED” is displayed, perform the following.

a. Turn ignition switch OFF and leave the vehicle in a cool place (soak the vehicle).
b. Return to step 1.

Overall Function Check

UBS00JXL

Use this procedure to check the overall function of the heated oxygen sensor 2 circuit. During this check, a 1st trip DTC might not be confirmed.

WITH GST

1. Start engine and warm it up to the normal operating temperature.
2. Turn ignition switch OFF and wait at least 10 seconds.
3. Start engine and keep the engine speed between 3,500 and 4,000 rpm for at least 1 minute under no load.
4. Let engine idle 1 minute.
5. Set voltmeter probes between ECM terminal 74 (HO2S2 signal) and ground.

6. Check the voltage when revving up to 4,000 rpm under no load at least 10 times.
   (Depress and release accelerator pedal as soon as possible.)
   The voltage should be below 0.50V at least once during this procedure.
   If the voltage can be confirmed in step 6, step 7 is not necessary.
7. Keep vehicle at idling for 10 minutes, then check the voltage. Or check the voltage when coasting from 80 km/h (50 MPH) in D position with “OD” OFF (A/T models) 3rd gear position (M/T models).
   The voltage should be below 0.50V at least once during this procedure.
8. If NG, go to EC-1147, "Diagnostic Procedure" .

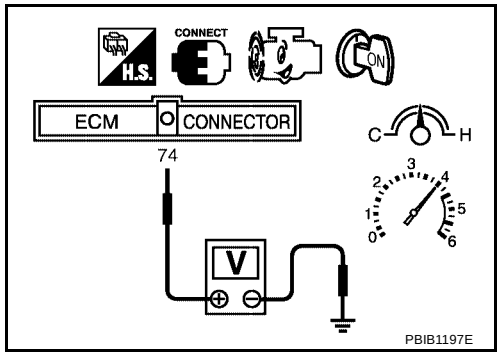

Wiring Diagram

UBS00JXM

EC-HO2S2-01

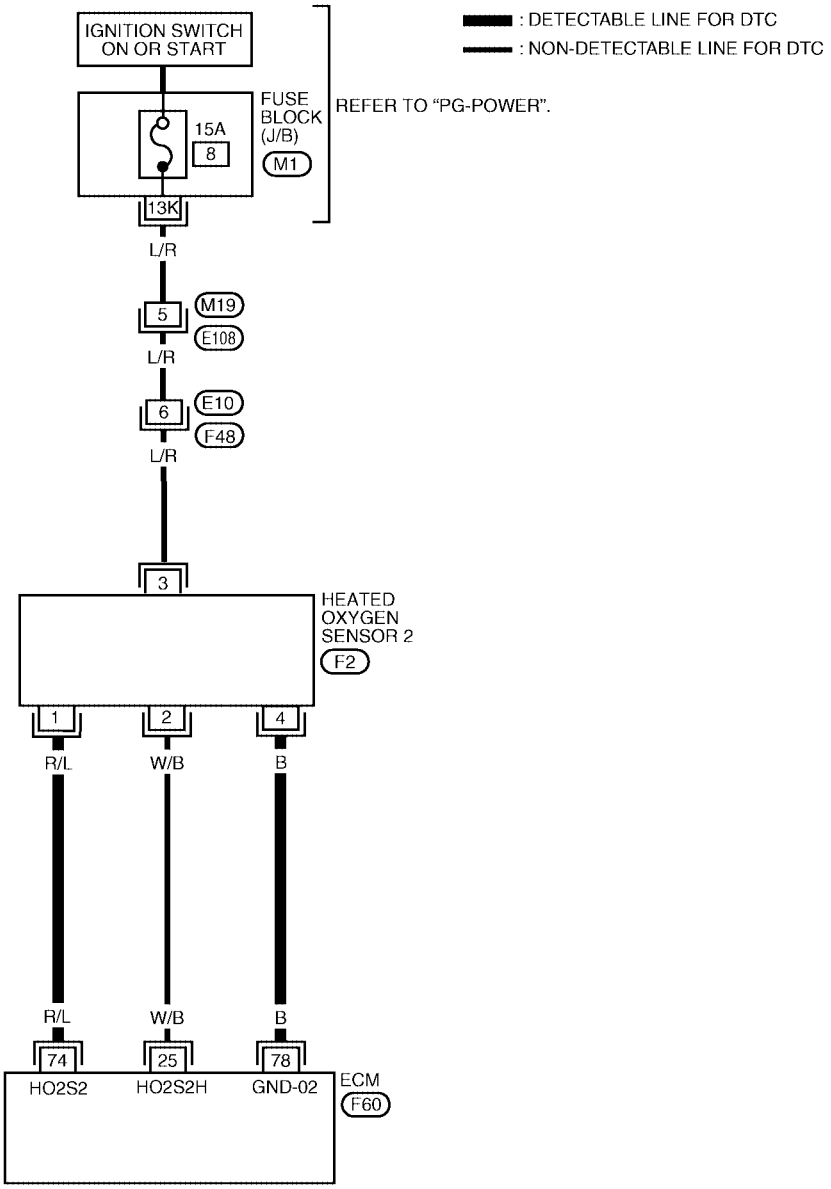

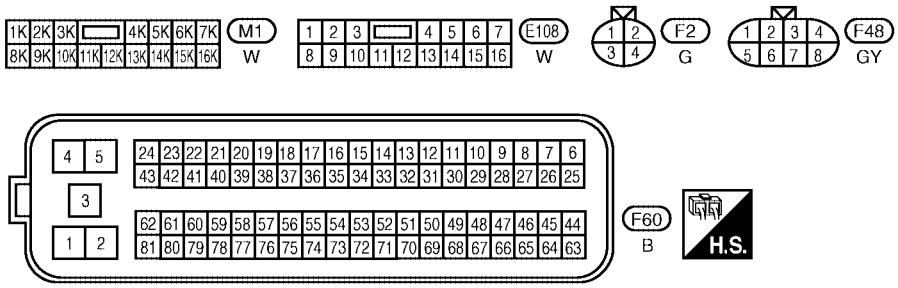

BBWA1427E

Specification data are reference values and are measured between each terminal and ground.

CAUTION:

Do not use ECM ground terminals when measuring input/output voltage. Doing so may result in damage to the ECM's transistor. Use a ground other than ECM terminals, such as the ground.

TERMINAL NO.	WIRE COLOR	ITEM	CONDITION	DATA (DC Voltage)
74	R/L	Heated oxygen sensor 2	**[Engine is running]** ● **Warm-up condition** ● Revving engine from idle up to 3,000 rpm quickly after the following conditions are met. ● Keeping the engine speed between 3,500 and 4,000 rpm for 1 minute and at idle for 1 minute under no load.	0 - Approximately 1.0V
78	B	Sensor ground (Heated oxygen sensor)	**[Engine is running]** ● **Warm-up condition** ● Idle speed	Approximately 0V

Diagnostic Procedure

UBS00JXN

1. CHECK GROUND CONNECTIONS

1. Turn ignition switch OFF.
2. Loosen and retighten engine two screws on the body.
   Refer to EC-841, "Ground Inspection" .

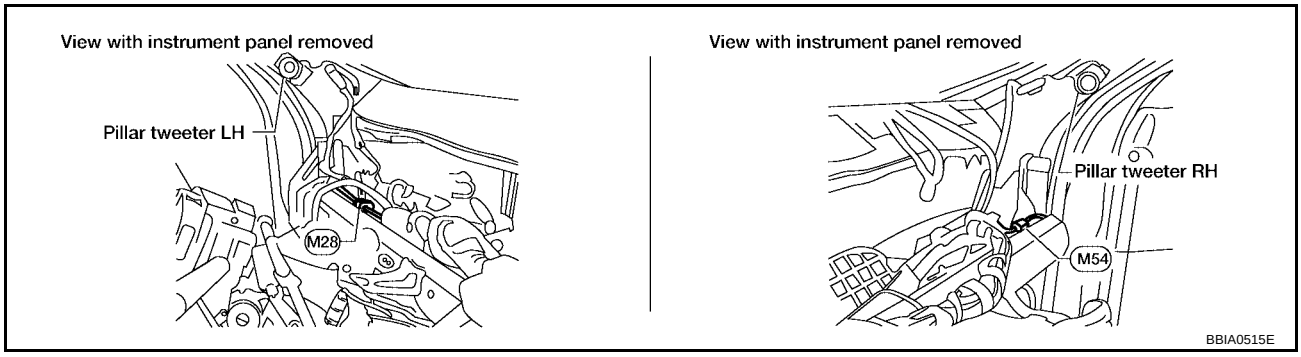

OK or NG

OK >> GO TO 2.
NG >> Repair or replace ground connections.

2. CLEAR THE SELF-LEARNING DATA

With CONSULT-II

1. Start engine and warm it up to normal operating temperature.
2. Select “SELF-LEARNING CONT” in “WORK SUPPORT” mode with CONSULT-II.
3. Clear the self-learning control coefficient by touching “CLEAR”.
4. Run engine for at least 10 minutes at idle speed.
   Is the 1st trip DTC P0172 detected?
   Is it difficult to start engine?

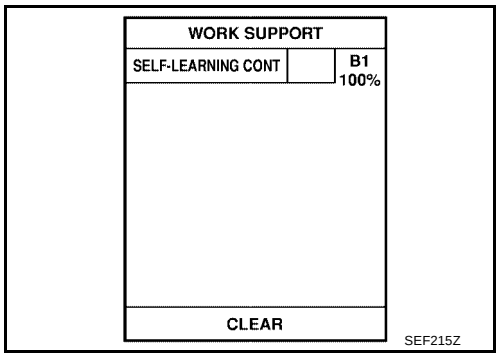

Without CONSULT-II

1. Start engine and warm it up to normal operating temperature.
2. Turn ignition switch OFF.
3. Disconnect mass air flow sensor harness connector, and restart and run engine for at least 5 seconds at idle speed.
4. Stop engine and reconnect mass air flow sensor harness connector.
5. Make sure that DTC P0102 is displayed.
6. Erase the DTC memory. Refer to EC-712, "HOW TO ERASE EMISSION-RELATED DIAGNOSTIC INFORMATION" .
7. Make sure that DTC P0000 is displayed.
8. Run engine for at least 10 minutes at idle speed.
   Is the 1st trip DTC P0172 detected?
   Is it difficult to start engine?

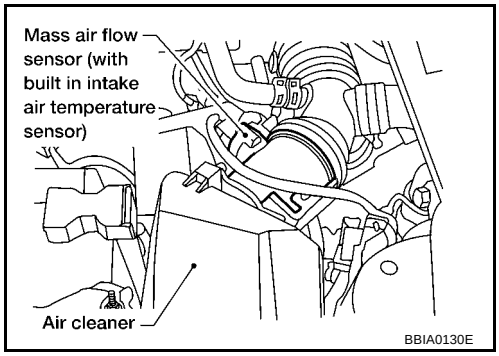

Yes or No

Yes >> Perform trouble diagnosis for DTC P0172. Refer to EC-954 .
No >> GO TO 3.

3. CHECK HO2S2 GROUND CIRCUIT FOR OPEN AND SHORT

1. Turn ignition switch OFF.
2. Disconnect heated oxygen sensor 2 harness connector.
3. Disconnect ECM harness connector.
4. Check harness continuity between ECM terminal 78 and HO2S2 terminal 4.
   Refer to Wiring Diagram.

   Continuity should exist.

5. Also check harness for short to ground and short to power.

OK or NG

OK >> GO TO 4.
NG >> Repair open circuit or short to ground or short to power in harness or connectors.

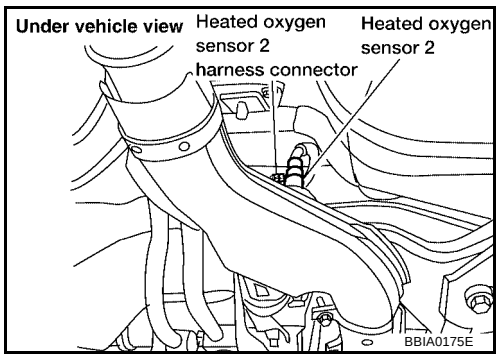

4. CHECK HO2S2 INPUT SIGNAL CIRCUIT FOR OPEN AND SHORT

1. Check harness continuity between ECM terminal 74 and HO2S2 terminal 1.
   Refer to Wiring Diagram.

   Continuity should exist.

2. Check harness continuity between ECM terminal 74 or HO2S2 terminal 1 and ground.
   Refer to Wiring Diagram.

   Continuity should not exist.

3. Also check harness for short to power.

OK or NG

OK >> GO TO 5.
NG >> Repair open circuit or short to ground or short to power in harness or connectors.

5. CHECK HEATED OXYGEN SENSOR 2

Refer to EC-1149, "Component Inspection" .

OK or NG

OK >> GO TO 6.
NG >> Replace heated oxygen sensor 2.

6. CHECK INTERMITTENT INCIDENT

Refer to EC-834, "TROUBLE DIAGNOSIS FOR INTERMITTENT INCIDENT" .

>> **INSPECTION END**

Component Inspection

UBS00JXO

HEATED OXYGEN SENSOR 2

With CONSULT-II

1. Start engine and warm it up to the normal operating temperature.
2. Turn ignition switch OFF and wait at least 10 seconds.
3. Start engine and keep the engine speed between 3,500 and 4,000 rpm for at least 1 minute under no load.
4. Let engine idle and wait until 2 minutes have passed from starting the engine.
5. Select “FUEL INJECTION” in “ACTIVE TEST” mode, and select “HO2S2 (B1)” as the monitor item with CONSULT-II.

ACTIVE TEST	
FUEL INJECTION	25 %
MONITOR	
ENG SPEED	XXX rpm
HO2S2 (B1)	XXX V

PBIB1783E

6. Check “HO2S2 (B1)” at idle speed when adjusting “FUEL INJECTION” to ±25%.

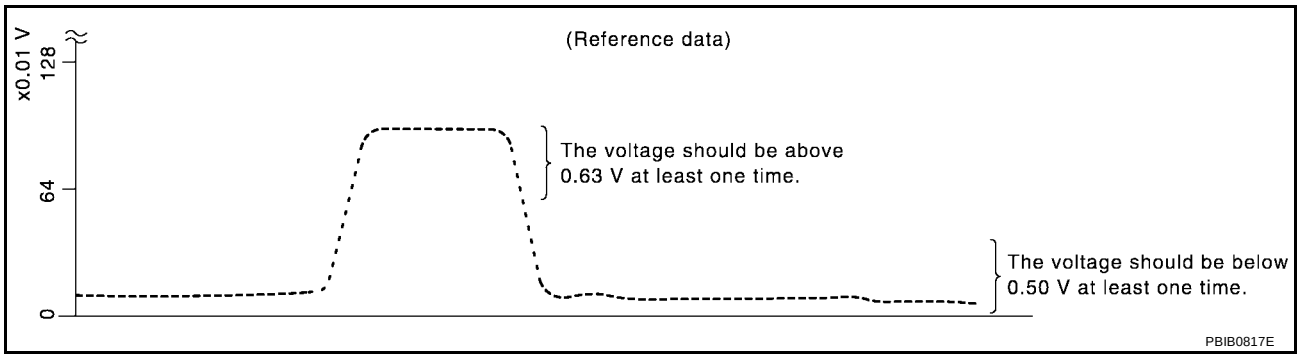

“HO2S2 (B1)” should be above 0.63V at least once when the “FUEL INJECTION” is +25%.
“HO2S2 (B1)” should be below 0.50V at least once when the “FUEL INJECTION” is –25%.

CAUTION:

- **Discard any heated oxygen sensor which has been dropped from a height of more than 0.5 m (19.7 in) onto a hard surface such as a concrete floor; use a new one.**
- **Before installing new oxygen sensor, clean exhaust system threads using Oxygen Sensor Thread Cleaner tool J-43897-18 or J-43897-12 and approved anti-seize lubricant.**

Without CONSULT-II

1. Start engine and warm it up to the normal operating temperature.
2. Turn ignition switch OFF and wait at least 10 seconds.
3. Start engine and keep the engine speed between 3,500 and 4,000 rpm for at least 1 minute under no load.
4. Let engine idle for 1 minute.
5. Set voltmeter probes between ECM terminal 74 (HO2S2 signal) and ground.
6. Check the voltage when revving up to 4,000 rpm under no load at least 10 times.
   (Depress and release accelerator pedal as soon as possible.)
   The voltage should be above 0.63V at least once during this procedure.
   If the voltage is above 0.63V at step 6, step 7 is not necessary.
7. Keep vehicle at idling for 10 minutes, then check voltage. Or check the voltage when coasting from 80 km/h (50 MPH) in D position with“OD” OFF (A/T models) or 3rd gear position (M/T models).
   The voltage should be below 0.50V at least once during this procedure.

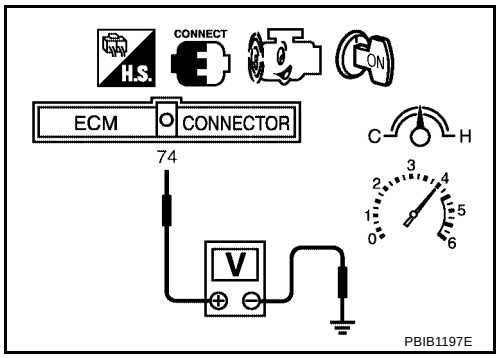

8. If NG, replace heated oxygen sensor 2.

CAUTION:

- **Discard any heated oxygen sensor which has been dropped from a height of more than 0.5 m (19.7 in) onto a hard surface such as a concrete floor; use a new one.**
- **Before installing new oxygen sensor, clean exhaust system threads using Oxygen Sensor Thread Cleaner tool J-43897-18 or J-43897-12 and approved anti-seize lubricant.**

Removal and Installation

UBS00JXP

HEATED OXYGEN SENSOR 2

Refer to EM-113, "EXHAUST MANIFOLD AND THREE WAY CATALYST" .

DTC P1147 HO2S2

PFP:226A0

Component Description

UBS00JXQ

The heated oxygen sensor 2, after three way catalyst (manifold), monitors the oxygen level in the exhaust gas.
Even if switching characteristics of the heated oxygen sensor 1 (A/T models ULEV and M/T models) or the air fuel ratio (A/F) sensor 1 (A/T models except ULEV) are shifted, the air-fuel ratio is controlled to stoichiometric, by the signal from the heated oxygen sensor 2.
This sensor is made of ceramic zirconia. The zirconia generates voltage from approximately 1V in richer conditions to 0V in leaner conditions.
Under normal conditions the heated oxygen sensor 2 is not used for engine control operation.

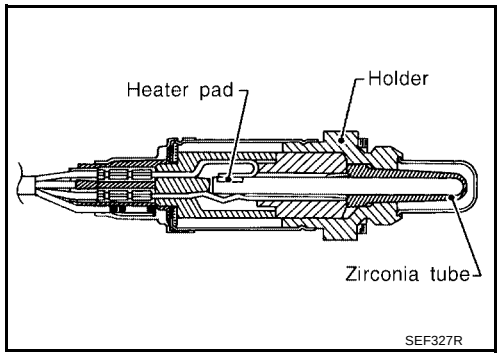

CONSULT-II Reference Value in Data Monitor Mode

UBS00JXR

Specification data are reference values.

MONITOR ITEM	CONDITION		SPECIFICATION
HO2S2 (B1)	● Engine: After warming up ● Keeping the engine speed between 3,500 and 4,000 rpm for 1 minute and at idle for 1 minute under no load	Revving engine from idle to 3,000 rpm quickly	0 - 0.3V ←→ 0.6 - 1.0V
HO2S2 MNTR (B1)			LEAN ←→ RICH

On Board Diagnosis Logic

UBS00JXS

The heated oxygen sensor 2 has a much longer switching time between rich and lean than the heated oxygen sensor 1 (A/T models ULEV and M/T models) or the air fuel ratio (A/F) sensor 1 (A/T models except ULEV). The oxygen storage capacity before the three way catalyst (manifold) causes the longer switching time. To judge the malfunctions of heated oxygen sensor 2, ECM monitors whether the maximum voltage of the sensor is sufficiently high during the various driving condition such as fuel-cut.

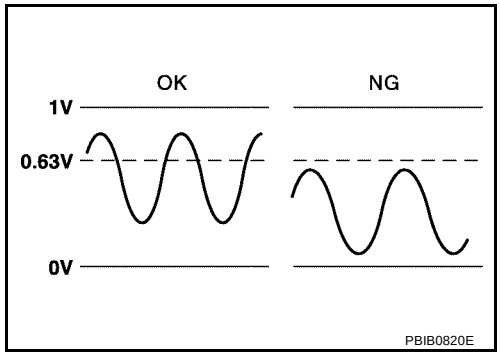

DTC No.	Trouble diagnosis name	DTC detecting condition	Possible cause
P1147 1147	Heated oxygen sensor 2 maximum voltage monitoring	The maximum voltage from the sensor is not reached to the specified voltage.	● Harness or connectors (The sensor circuit open or shorted.) ● Heated oxygen sensor 2 ● Fuel pressure ● Fuel injector ● Intake air leaks

DTC Confirmation Procedure

UBS00JXT

NOTE:
If DTC confirmation Procedure has been previously conducted, always turn ignition switch OFF and wait at least 10 seconds before conducting the next test.

WITH CONSULT-II

TESTING CONDITION:
For the best results, perform DTC WORK SUPPORT at a temperature of 0 to 30°C (32 to 86°F).

1. Turn ignition switch ON and select “DATA MONITOR” mode with CONSULT-II.
2. Start engine and warm it up to the normal operating temperature.
3. Turn ignition switch OFF and wait at least 10 seconds.
4. Start engine and keep the engine speed between 3,500 and 4,000 rpm for at least 1 minute under no load.
5. Let engine idle for 1 minute.
6. Make sure that “COOLAN TEMP/S” indicates more than 70°C (158°F).
   If not, warm up engine and go to next step when “COOLAN TEMP/S” indication reaches to 70°C (158°F).

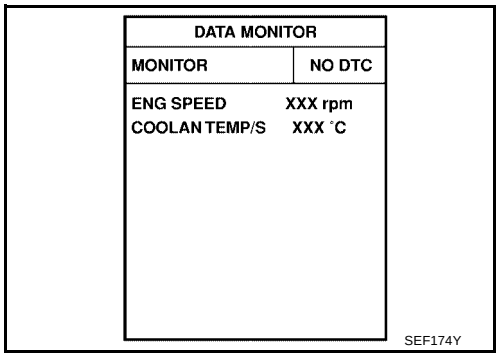

7. Open engine hood.
8. Select “HO2S2 (B1) P1147” of “HO2S2” in “DTC WORK SUPPORT” mode with CONSULT-II.
9. Start engine and following the instruction of CONSULT-II.

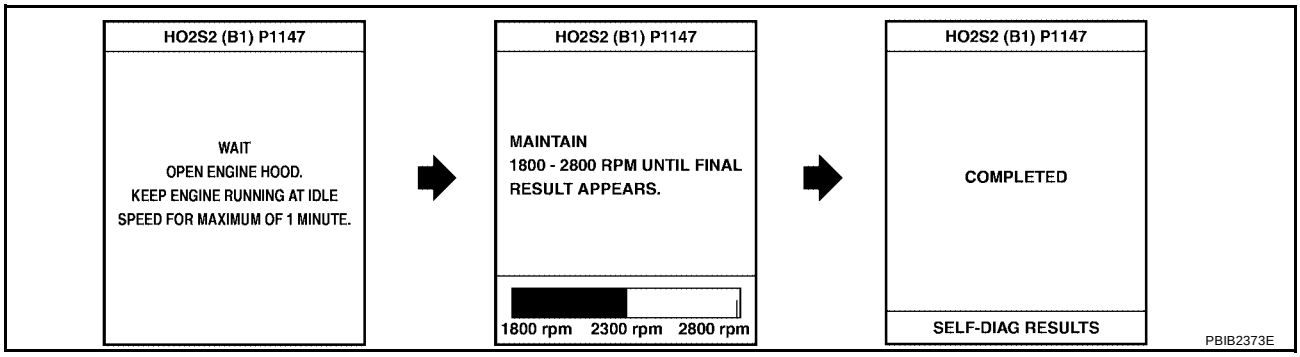

NOTE:
It will take at most 10 minutes until “COMPLETED” is displayed.

10. Make sure that “OK” is displayed after touching “SELF-DIAG RESULTS”.
    If “NG” is displayed, refer to EC-1155, "Diagnostic Procedure" .
    If “CAN NOT BE DIAGNOSED” is displayed, perform the following.

a. Turn ignition switch OFF and leave the vehicle in a cool place (soak the vehicle).
b. Return to step 1.

Overall Function Check

UBS00JXU

Use this procedure to check the overall function of the heated oxygen sensor 2 circuit. During this check, a 1st trip DTC might not be confirmed.

WITH GST

1. Start engine and warm it up to the normal operating temperature.
2. Turn ignition switch OFF and wait at least 10 seconds.
3. Start engine and keep the engine speed between 3,500 and 4,000 rpm for at least 1 minute under no load.
4. Let engine idle 1 minute.
5. Set voltmeter probes between ECM terminal 74 (HO2S2 signal) and ground.

6. Check the voltage when revving up to 4,000 rpm under no load at least 10 times.
   (Depress and release accelerator pedal as soon as possible.)
   The voltage should be above 0.63V at least once during this procedure.
   If the voltage can be confirmed in step 6, step 7 is not necessary.
7. Keep vehicle idling for 10 minutes, then check the voltage. Or check the voltage when coasting from 80 km/h (50 MPH) in D position with “OD” OFF (A/T models) 3rd gear position (M/T models).
   The voltage should be above 0.63V at least once during this procedure.
8. If NG, go to EC-1155, "Diagnostic Procedure" .

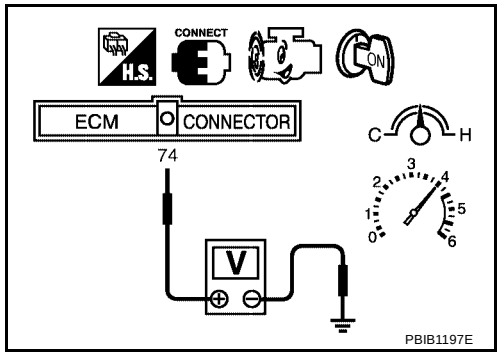

Wiring Diagram

UBS00JXV

EC-HO2S2-01

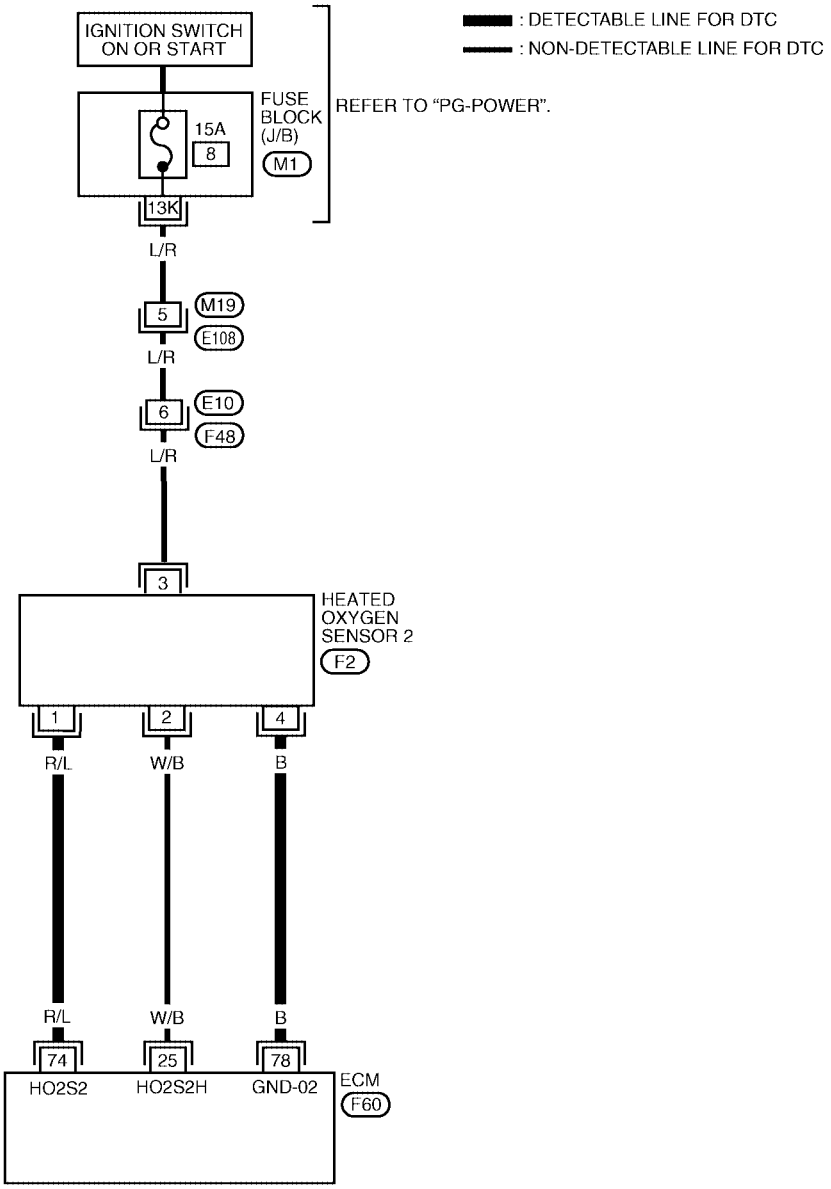

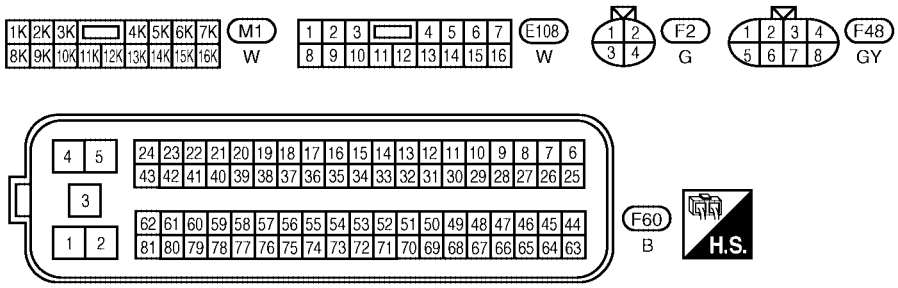

BBWA1427E

Specification data are reference values and are measured between each terminal and ground.

CAUTION:

Do not use ECM ground terminals when measuring input/output voltage. Doing so may result in damage to the ECM's transistor. Use a ground other than ECM terminals, such as the ground.

TERMINAL NO.	WIRE COLOR	ITEM	CONDITION	DATA (DC Voltage)
74	R/L	Heated oxygen sensor 2	**[Engine is running]** ● **Warm-up condition** ● Revving engine from idle up to 3,000 rpm quickly after the following conditions are met. ● Keeping the engine speed between 3,500 and 4,000 rpm for 1 minute and at idle for 1 minute under no load.	0 - Approximately 1.0V
78	B	Sensor ground (Heated oxygen sensor)	**[Engine is running]** ● **Warm-up condition** ● Idle speed	Approximately 0V

Diagnostic Procedure

UBS00JXW

1. CHECK GROUND CONNECTIONS

1. Turn ignition switch OFF.
2. Loosen and retighten engine two screws on the body.
   Refer to EC-841, "Ground Inspection" .

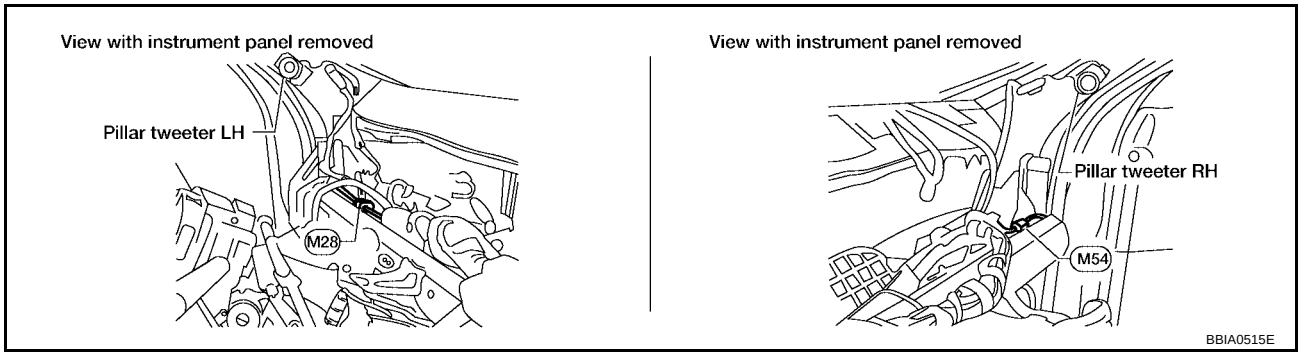

OK or NG

OK >> GO TO 2.
NG >> Repair or replace ground connections.

2. CLEAR THE SELF-LEARNING DATA

With CONSULT-II

1. Start engine and warm it up to normal operating temperature.
2. Select “SELF-LEARNING CONT” in “WORK SUPPORT” mode with CONSULT-II.
3. Clear the self-learning control coefficient by touching “CLEAR”.
4. Run engine for at least 10 minutes at idle speed.
   Is the 1st trip DTC P0171 detected?
   Is it difficult to start engine?

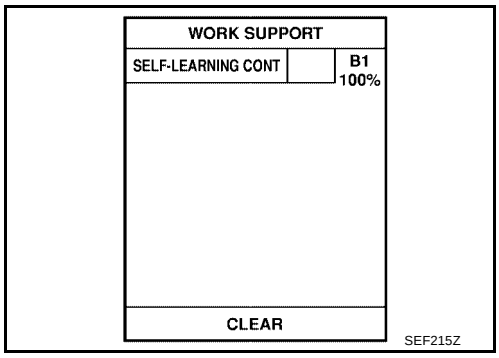

Without CONSULT-II

1. Start engine and warm it up to normal operating temperature.
2. Turn ignition switch OFF.
3. Disconnect mass air flow sensor harness connector, and restart and run engine for at least 5 seconds at idle speed.
4. Stop engine and reconnect mass air flow sensor harness connector.
5. Make sure that DTC P0102 is displayed.
6. Erase the DTC memory. Refer to EC-712, "HOW TO ERASE EMISSION-RELATED DIAGNOSTIC INFORMATION" .
7. Make sure that DTC P0000 is displayed.
8. Run engine for at least 10 minutes at idle speed.
   Is the 1st trip DTC P0171 detected?
   Is it difficult to start engine?

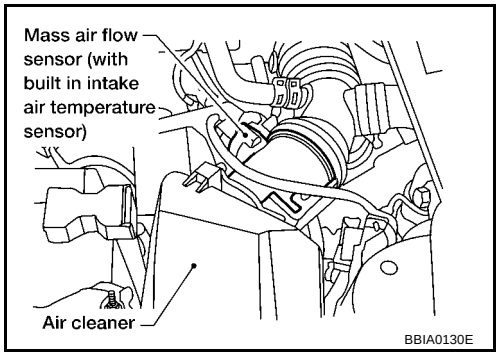

Yes or No

Yes >> Perform trouble diagnosis for DTC P0171. Refer to EC-943 .
No >> GO TO 3.

3. CHECK HO2S2 GROUND CIRCUIT FOR OPEN AND SHORT

1. Turn ignition switch OFF.
2. Disconnect heated oxygen sensor 2 harness connector.
3. Disconnect ECM harness connector.
4. Check harness continuity between ECM terminal 78 and HO2S2 terminal 4.
   Refer to Wiring Diagram.

   Continuity should exist.

5. Also check harness for short to ground and short to power.

OK or NG

OK >> GO TO 4.
NG >> Repair open circuit or short to ground or short to power in harness or connectors.

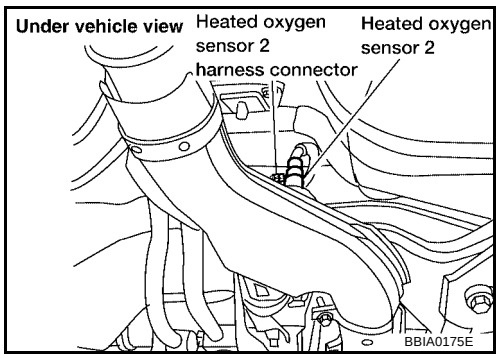

4. CHECK HO2S2 INPUT SIGNAL CIRCUIT FOR OPEN AND SHORT

1. Check harness continuity between ECM terminal 74 and HO2S2 terminal 1.
   Refer to Wiring Diagram.

   Continuity should exist.

2. Check harness continuity between ECM terminal 74 or HO2S2 terminal 1 and ground.
   Refer to Wiring Diagram.

   Continuity should not exist.

3. Also check harness for short to power.

OK or NG

OK >> GO TO 5.
NG >> Repair open circuit or short to ground or short to power in harness or connectors.

5. CHECK HEATED OXYGEN SENSOR 2

Refer to EC-1157, "Component Inspection" .

OK or NG

OK >> GO TO 6.
NG >> Replace heated oxygen sensor 2.

6. CHECK INTERMITTENT INCIDENT

Refer to EC-834, "TROUBLE DIAGNOSIS FOR INTERMITTENT INCIDENT" .

>> **INSPECTION END**

Component Inspection

UBS00JXX

HEATED OXYGEN SENSOR 2

With CONSULT-II

1. Start engine and warm it up to the normal operating temperature.
2. Turn ignition switch OFF and wait at least 10 seconds.
3. Start engine and keep the engine speed between 3,500 and 4,000 rpm for at least 1 minute under no load.
4. Let engine idle 1 minute.
5. Select “FUEL INJECTION” in “ACTIVE TEST” mode, and select “HO2S2 (B1)” as the monitor item with CONSULT-II.

ACTIVE TEST	
FUEL INJECTION	25 %
MONITOR	
ENG SPEED	XXX rpm
HO2S2 (B1)	XXX V

PBIB1783E

6. Check “HO2S2 (B1)” at idle speed when adjusting “FUEL INJECTION” to ±25%.

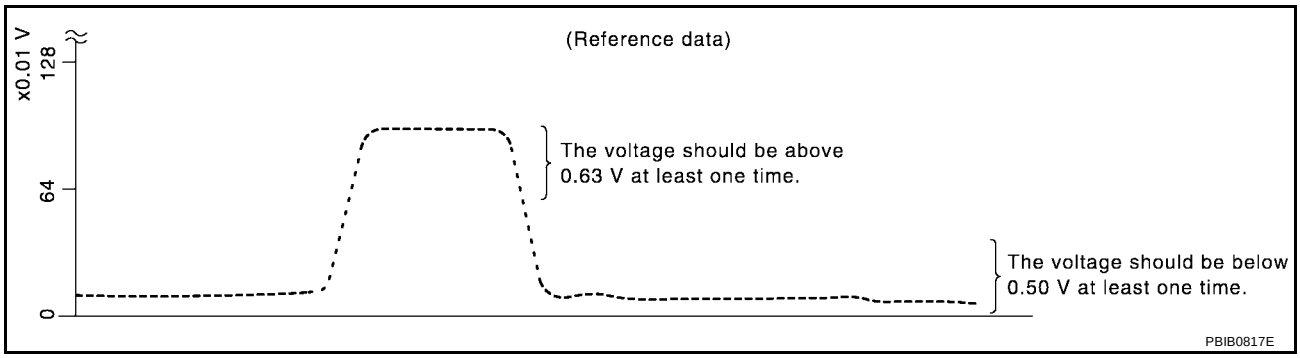

“HO2S2 (B1)” should be above 0.63V at least once when the “FUEL INJECTION” is +25%.
“HO2S2 (B1)” should be below 0.50V at least once when the “FUEL INJECTION” is –25%.

CAUTION:

- **Discard any heated oxygen sensor which has been dropped from a height of more than 0.5 m (19.7 in) onto a hard surface such as a concrete floor; use a new one.**
- **Before installing new oxygen sensor, clean exhaust system threads using Oxygen Sensor Thread Cleaner tool J-43897-18 or J-43897-12 and approved anti-seize lubricant.**

Without CONSULT-II

1. Start engine and warm it up to the normal operating temperature.
2. Turn ignition switch OFF and wait at least 10 seconds.
3. Start engine and keep the engine speed between 3,500 and 4,000 rpm for at least 1 minute under no load.
4. Let engine idle for 1 minute.
5. Set voltmeter probes between ECM terminal 74 (HO2S2 signal) and ground.
6. Check the voltage when revving up to 4,000 rpm under no load at least 10 times.
   (Depress and release accelerator pedal as soon as possible.)
   The voltage should be above 0.63V at least once during this procedure.
   If the voltage is above 0.63V at step 6, step 7 is not necessary.
7. Keep vehicle idling for 10 minutes, then check voltage. Or check the voltage when coasting from 80 km/h (50 MPH) in D position with “OD” OFF (A/T models) 3rd gear position (M/T models).
   The voltage should be below 0.50V at least once during this procedure.

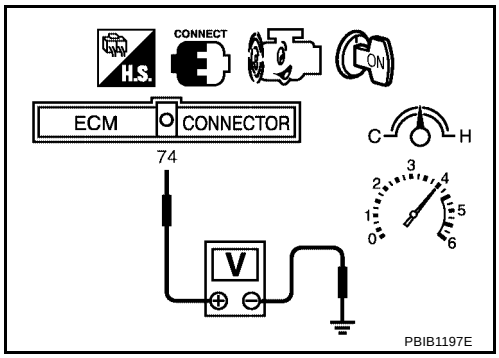

8. If NG, replace heated oxygen sensor 2.

CAUTION:

- **Discard any heated oxygen sensor which has been dropped from a height of more than 0.5 m (19.7 in) onto a hard surface such as a concrete floor; use a new one.**
- **Before installing new oxygen sensor, clean exhaust system threads using Oxygen Sensor Thread Cleaner tool J-43897-18 or J-43897-12 and approved anti-seize lubricant.**

Removal and Installation

UBS00JXY

HEATED OXYGEN SENSOR 2

Refer to EM-113, "EXHAUST MANIFOLD AND THREE WAY CATALYST" .

DTC P1148 CLOSED LOOP CONTROL

PFP:22690

On Board Diagnosis Logic

UBS00JXZ

A/T MODELS ULEV AND M/T MODELS

This self-diagnosis has the one trip detection logic.

DTC No.	Trouble diagnosis name	DTC detecting condition	Possible cause
P1148 1148	Closed loop control function	The closed loop control function does not operate even when vehicle is driving in the specified condition.	● The heated oxygen sensor 1 circuit is open or shorted. ● Heated oxygen sensor 1 ● Heated oxygen sensor heater

A/T MODELS EXCEPT ULEV

This self-diagnosis has the one trip detection logic.

DTC No.	Trouble diagnosis name	DTC detecting condition	Possible cause
P1148 1148	Closed loop control function	The closed loop control function for bank 1 does not operate even when vehicle is driving in the specified condition.	● The air fuel ratio (A/F) sensor 1 circuit is open or shorted. ● Air fuel ratio (A/F) sensor 1 ● Air fuel ratio (A/F) sensor 1 heater

DTC P1148 is displayed with another DTC for air fuel ratio (A/F) sensor 1. Perform the trouble diagnosis for the corresponding DTC.

DTC Confirmation Procedure (A/T MODELS ULEV AND M/T MODELS)

UBS00JY0

CAUTION:
Always drive vehicle at a safe speed.

NOTE:
If DTC Confirmation Procedure has been previously conducted, always turn ignition switch OFF and wait at least 10 seconds before conducting the next test.

TESTING CONDITION:

- **Never raise engine speed above 3,600 rpm during the DTC Confirmation Procedure. If the engine speed limit is exceeded, retry the procedure from step 2.**
- **Before performing the following procedure, confirm that battery voltage is more than 11V at idle.**

WITH CONSULT-II

1. Start engine and warm it up to normal operating temperature.
2. Select “DATA MONITOR” mode with CONSULT-II.
3. Hold engine speed at 2,000 rpm and check one of the following.
   - “HO2S1 (B1)” voltage should go above 0.70V at least once.
   - “HO2S1 (B1)” voltage should go below 0.21V at least once.

   If the check result is NG, perform EC-1160, "Diagnostic Procedure (A/T MODELS ULEV AND M/T MODELS)" .
   If the check result is OK, perform the following step.
4. Let engine idle at least 5 minutes.
5. Maintain the following condition at least 50 consecutive seconds.

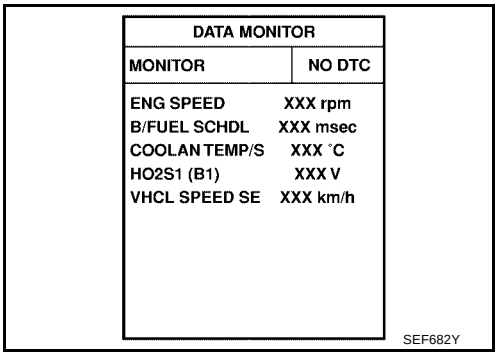

B/FUEL SCHDL	2.8 msec or more
ENG SPEED	More than 1,600 rpm
Shift lever	Suitable position
VHCL SPEED SE	More than 70 km/h (43 MPH)

During this test, P0134 may be displayed on CONSULT-II screen.

6. If DTC is detected, go to EC-1160, "Diagnostic Procedure (A/T MODELS ULEV AND M/T MODELS)" .

Overall Function Check (A/T MODELS ULEV AND M/T MODELS)

UBS00JY1

Use this procedure to check the overall function of the closed loop control. During this check, a DTC might not be confirmed.

WITH GST

1. Start engine and warm it up to normal operating temperature.
2. Set voltmeter probes between ECM terminal 35 [HO2S1 (B1) signal] and ground.
3. Check the following with engine speed held at 2,000 rpm constant under no-load.
   - The voltage should go above 0.70V at least once.
   - The voltage should go below 0.21V at least once.
4. If NG, go to EC-1160, "Diagnostic Procedure (A/T MODELS ULEV AND M/T MODELS)" .

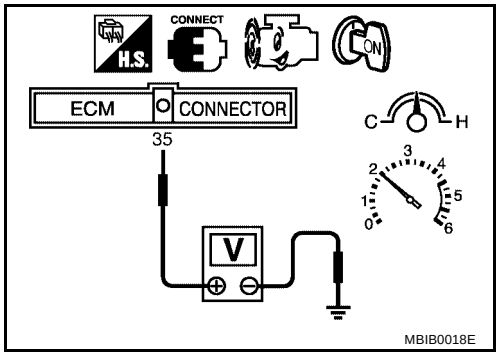

Diagnostic Procedure (A/T MODELS ULEV AND M/T MODELS)

UBS00JY2

Perform trouble diagnosis for DTC P0133, EC-916 .

DTC P1217 ENGINE OVER TEMPERATURE

PFP:00000

System Description

UBS00KJM

COOLING FAN CONTROL

Sensor	Input Signal to ECM	ECM function	Actuator
Camshaft position sensor (PHASE) Crankshaft position sensor (POS)	Engine speed*1	Cooling fan control	Cooling fan relay
Battery	Battery voltage*1		
Vehicle speed sensor	Vehicle speed*1		
Engine coolant temperature sensor	Engine coolant temperature		
Air conditioner switch	Air conditioner ON signal		
Refrigerant pressure sensor	Refrigerant pressure		

*1: The ECM determines the start signal status by the signals of engine speed and battery voltage.
*2: This signal is sent to ECM through CAN communication line.

The ECM controls the cooling fan corresponding to the vehicle speed, engine coolant temperature, refrigerant pressure, and air conditioner ON signal. The control system has 3-step control [HIGH/LOW/OFF].

OPERATION

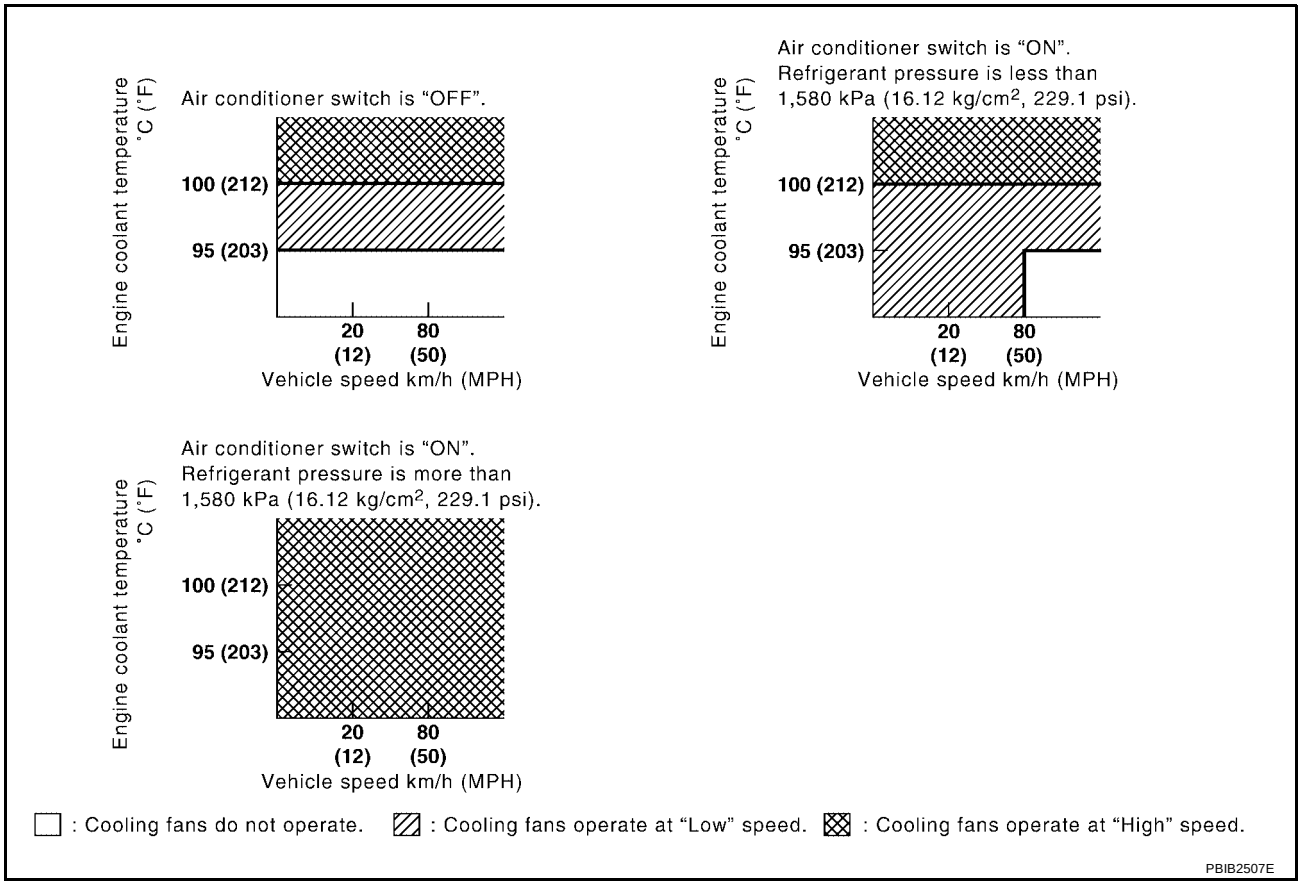

CONSULT-II Reference Value in Data Monitor Mode

UBS00KJN

Specification data are reference values.

MONITOR ITEM	CONDITION		SPECIFICATION
AIR COND SIG	● Engine: After warming up, idle the engine	A/C switch: OFF	OFF
		A/C switch: ON (Compressor operates)	ON

MONITOR ITEM	CONDITION		SPECIFICATION
COOLING FAN	● Engine: After warming up, idle the engine ● Air conditioner switch: OFF	Engine coolant temperature is 94°C (201°F) or less	OFF
		Engine coolant temperature is between 95°C (203°F) and 99°C (210°F)	LOW
		Engine coolant temperature is 100°C (212°F) or more	HIGH

On Board Diagnosis Logic

UBS00KJO

If the cooling fan or another component in the cooling system malfunctions, engine coolant temperature will rise.
When the engine coolant temperature reaches an abnormally high temperature condition, a malfunction is indicated.
This self-diagnosis has the one trip detection logic.

DTC No.	Trouble diagnosis name	DTC detecting condition	Possible Cause
P1217 1217	Engine over temperature (Overheat)	● Cooling fan does not operate properly (Overheat). ● Cooling fan system does not operate properly (Overheat). ● Engine coolant was not added to the system using the proper filling method. ● Engine coolant is not within the specified range.	● Harness or connectors (The cooling fan circuit is open or shorted.) ● Cooling fan ● Cooling fan relays ● Radiator hose ● Radiator ● Radiator cap ● Water pump ● Thermostat For more information, refer to EC-1172, "Main 12 Causes of Overheating" .

CAUTION:
When a malfunction is indicated, be sure to replace the coolant. Refer to MA-23, "Changing Engine Coolant" . Also, replace the engine oil. Refer to MA-26, "Changing Engine Oil" .

1. **Fill radiator with coolant up to specified level with a filling speed of 2 liters per minute. Be sure to use coolant with the proper mixture ratio. Refer to MA-14, "Anti-freeze Coolant Mixture Ratio" .**
2. **After refilling coolant, run engine to ensure that no water-flow noise is emitted.**

Overall Function Check

UBS00KJP

Use this procedure to check the overall function of the cooling fan. During this check, a DTC might not be confirmed.

WARNING:
Never remove the radiator cap when the engine is hot. Serious burns could be caused by high pressure fluid escaping from the radiator.
Wrap a thick cloth around cap. Carefully remove the cap by turning it a quarter turn to allow built-up pressure to escape. Then turn the cap all the way off.

WITH CONSULT-II

1. Check the coolant level in the reservoir tank and radiator.

   NOTE:
   Allow engine to cool before checking coolant level.
   If the coolant level in the reservoir tank and/or radiator is below the proper range, skip the following steps and go to EC-1165, "Diagnostic Procedure" .
2. Confirm whether customer filled the coolant or not. If customer filled the coolant, skip the following steps and go to EC-1165, "Diagnostic Procedure" .
3. Turn ignition switch ON.

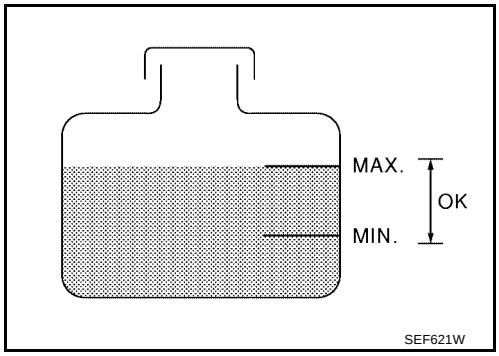

4. Perform “COOLING FAN” in “ACTIVE TEST” mode with CONSULT-II.
5. If the results are NG, go to EC-1165, "Diagnostic Procedure" .

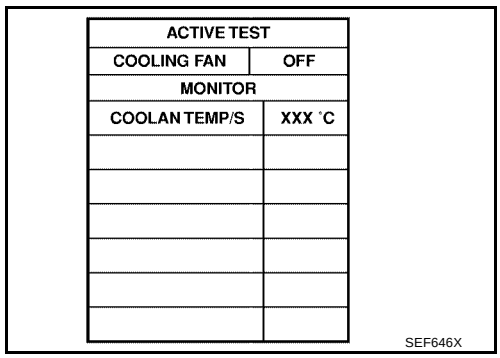

ACTIVE TEST	
COOLING FAN	OFF
MONITOR	
COOLAN TEMP/S	XXX °C

SEF646X

WITH GST

1. Check the coolant level in the reservoir tank and radiator.

   NOTE:
   Allow engine to cool before checking coolant level.
   If the coolant level in the reservoir tank and/or radiator is below the proper range, skip the following steps and go to EC-1165, "Diagnostic Procedure" .

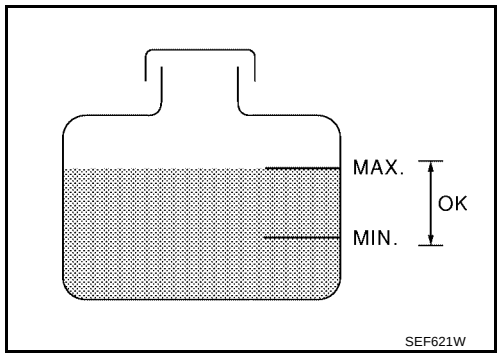

2. Confirm whether customer filled the coolant or not. If customer filled the coolant, skip the following steps and go to EC-1165, "Diagnostic Procedure" .
3. Start engine.

   CAUTION:
   Be careful not to overheat engine.
4. Set temperature control lever to full cold position.
5. Turn air conditioner switch ON.
6. Turn blower fan switch ON.
7. Run engine at idle for a few minutes with air conditioner operating.

   CAUTION:
   Be careful not to overheat engine.

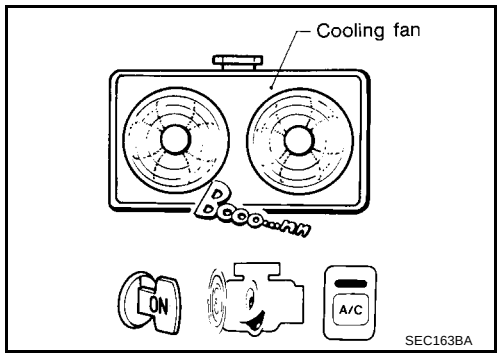

8. Make sure that cooling fan operates at low speed.
   If NG, go to EC-1165, "Diagnostic Procedure" .
   If OK, go to the following step.
9. Turn ignition switch OFF.
10. Turn air conditioner switch and blower fan switch OFF.
11. Disconnect engine coolant temperature sensor harness connector.
12. Connect 150Ω resistor to engine coolant temperature sensor harness connector.
13. Restart engine and make sure that cooling fan operates at higher speed than low speed.

    CAUTION:
    Be careful not to overheat engine.
14. If NG, go to EC-1165, "Diagnostic Procedure" .

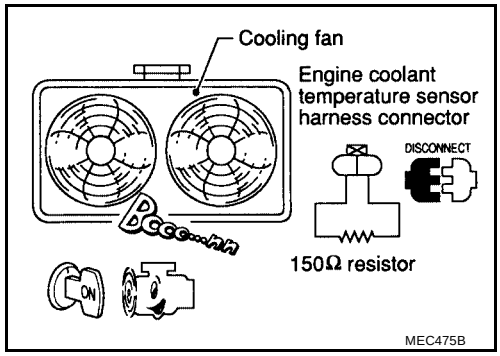

Wiring Diagram

UBS00KJQ

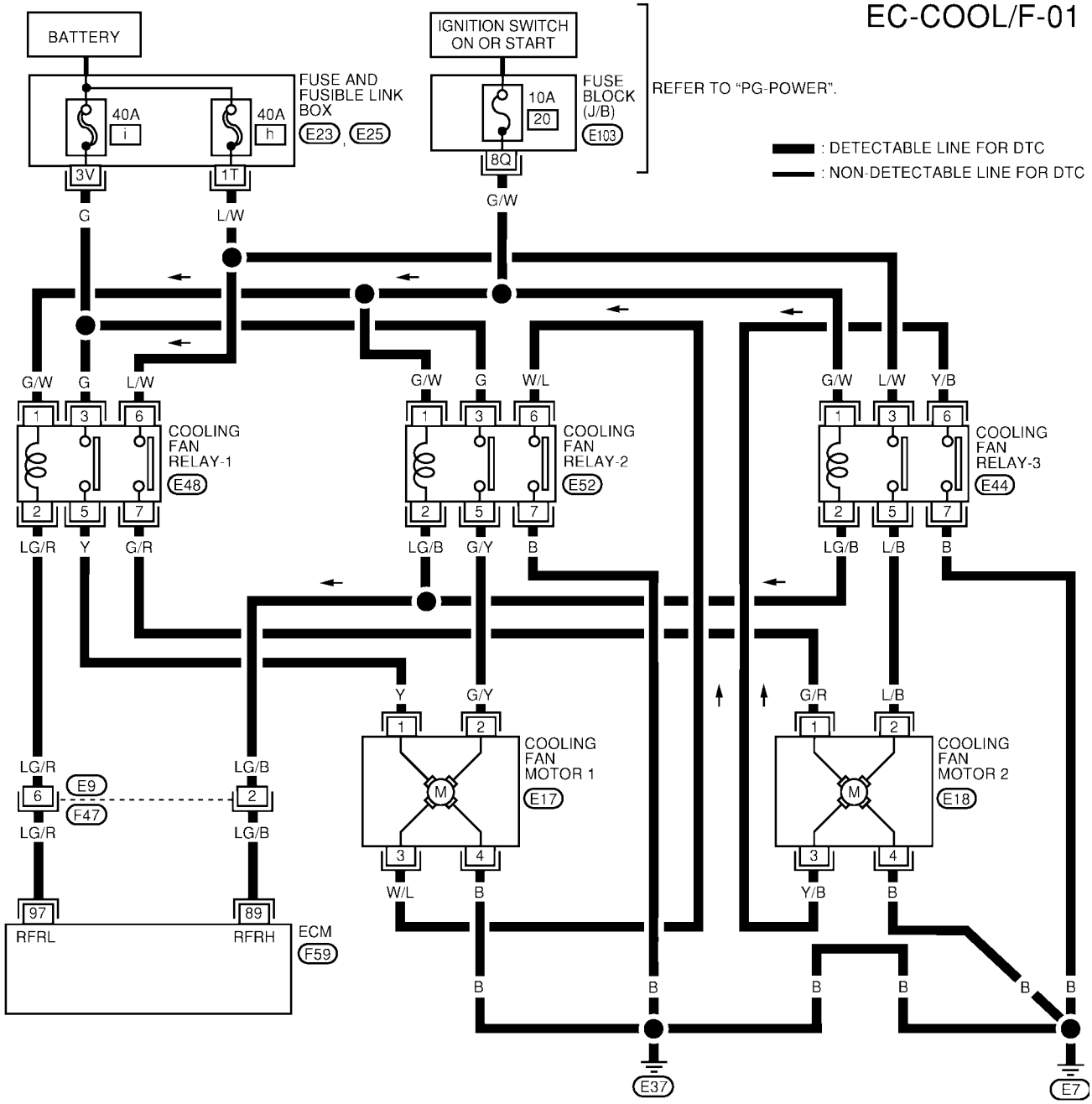

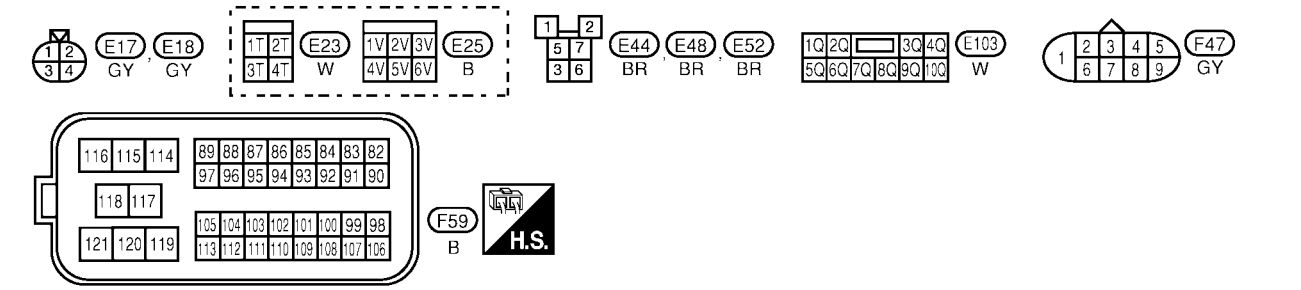

BBWA1476E

Specification data are reference values and are measured between each terminal and ground.

CAUTION:

Do not use ECM ground terminals when measuring input/output voltage. Doing so may result in damage to the ECM's transistor. Use a ground other than ECM terminals, such as the ground.

TERMINAL NO.	WIRE COLOR	ITEM	CONDITION	DATA (DC Voltage)
89	LG/B	Cooling fan relay (High)	**[Engine is running]** ● Cooling fan is not operating	BATTERY VOLTAGE (11 - 14V)
			[Engine is running] ● Cooling fan is high speed operating	0 - 1.0V
97	LG/R	Cooling fan relay (Low)	**[Ignition switch: ON]** ● Cooling fan is not operating	BATTERY VOLTAGE (11 - 14V)
			[Ignition switch: ON] ● Cooling fan is operating	0 - 1.0V

Diagnostic Procedure

UBS00KJR

1. INSPECTION START

Do you have CONSULT-II?

Yes or No

Yes >> GO TO 2.
No >> GO TO 4.

2. CHECK COOLING FAN LOW SPEED OPERATION

With CONSULT-II

1. Turn ignition switch ON.
2. Perform “COOLING FAN” in “ACTIVE TEST” mode with CONSULT-II and touch “LOW” on the CONSULT-II screen.
3. Make sure that cooling fans-1 and -2 operate at low speed.

OK or NG

OK >> GO TO 3.
NG >> Check cooling fan low speed control circuit. (Go to PROCEDURE A, EC-1169 .)

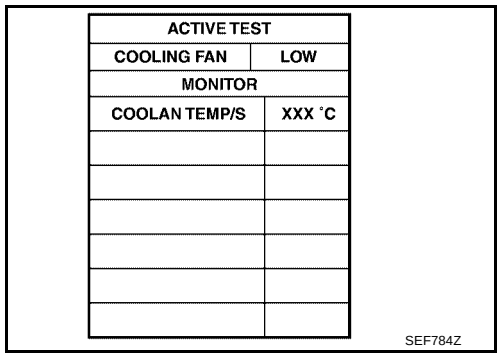

3. CHECK COOLING FAN HIGH SPEED OPERATION

With CONSULT-II

1. Touch “HI” on the CONSULT-II screen.
2. Make sure that cooling fans-1 and -2 operates at high speed.

OK or NG

OK >> GO TO 6.
NG >> Check cooling fan high speed control circuit. (Go to PROCEDURE B, EC-1171 .)

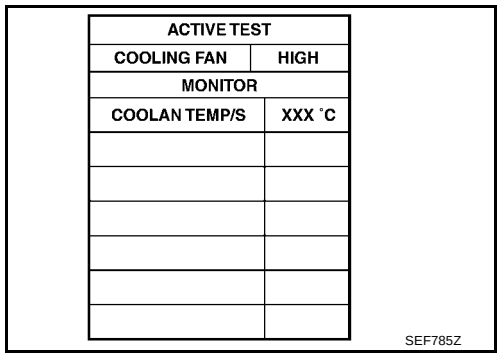

4. CHECK COOLING FAN LOW SPEED OPERATION

Without CONSULT-II

1. Turn ignition switch OFF.
2. Disconnect cooling fan relay-2 and relay-3.
3. Start engine and let it idle.
4. Set temperature lever at full cold position.
5. Turn air conditioner switch ON.
6. Turn blower fan switch ON.

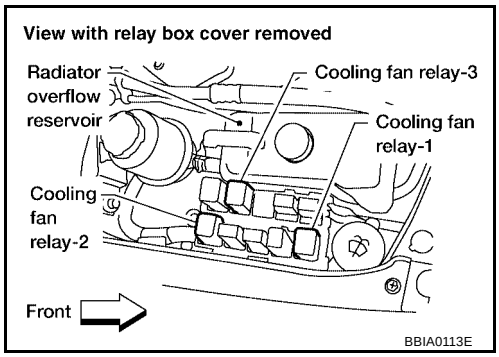

7. Make sure that cooling fans-1 and -2 operate at low speed.

OK or NG

OK >> GO TO 5.
NG >> Check cooling fan low speed control circuit. (Go to PROCEDURE A, EC-1169 .)

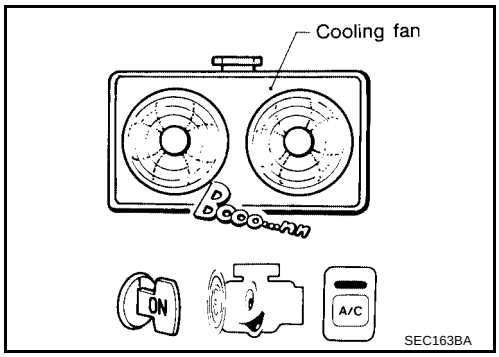

5. CHECK COOLING FAN HIGH SPEED OPERATION

Without CONSULT-II

1. Turn ignition switch OFF.
2. Reconnect cooling fan relay-2 and relay-3.
3. Turn air conditioner switch and blower fan switch OFF.
4. Disconnect engine coolant temperature sensor harness connector.
5. Connect 150Ω resistor to engine coolant temperature sensor harness connector.
6. Restart engine and make sure that cooling fans-1 and -2 operates at high speed.

OK or NG

OK >> GO TO 6.
NG >> Check cooling fan high speed control circuit. (Go to PROCEDURE B, EC-1171 .)

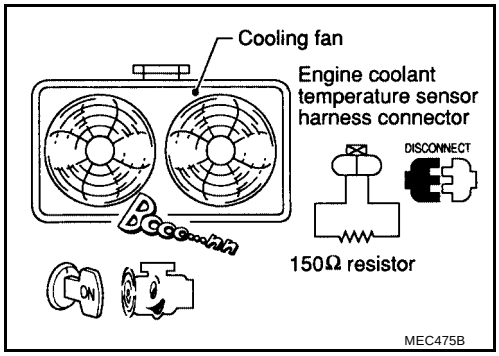

6. CHECK COOLING SYSTEM FOR LEAK

Apply pressure to the cooling system with a tester, and check if the pressure drops.

Testing pressure: 157 kPa (1.6 kg/cm^2 , 23 psi)

CAUTION:
Higher than the specified pressure may cause radiator damage.
Pressure should not drop.

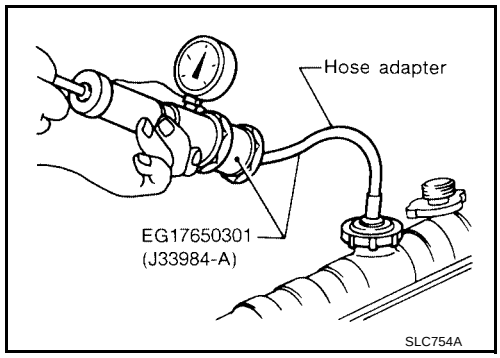

OK or NG

OK >> GO TO 8.
NG >> GO TO 7.

7. DETECT MALFUNCTIONING PART

Check the following for leak.

- Hose
- Radiator
- Water pump (Refer to CO-28, "WATER PUMP" .)

>> Repair or replace.

8. CHECK RADIATOR CAP

Apply pressure to cap with a tester.

Radiator cap relief pressure:

59 - 98 kPa (0.6 - 1.0 kg/cm^2 , 9 - 14 psi)

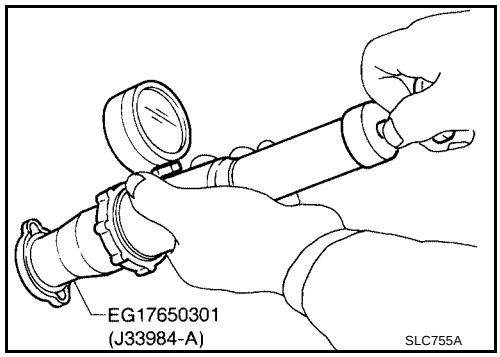

OK or NG

OK >> GO TO 9.
NG >> Replace radiator cap.

9. CHECK THERMOSTAT

1. Check valve seating condition at normal room temperatures.
   It should seat tightly.
2. Check valve opening temperature and valve lift.

   Valve opening temperature:

   82°C (180°F) [standard]

   Valve lift:

   More than 8 mm/95°C (0.31 in/203°F)

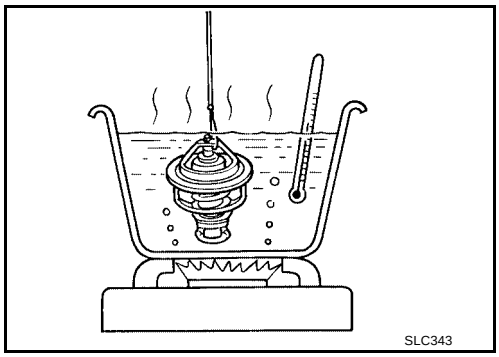

3. Check if valve is closed at 5°C (9°F) below valve opening temperature.

For details, refer to CO-30, "THERMOSTAT AND THERMOSTAT HOUSING" .

OK or NG

OK >> GO TO 10.
NG >> Replace thermostat.

10. CHECK ENGINE COOLANT TEMPERATURE SENSOR

Refer to EC-1173, "Component Inspection" .

OK or NG

OK >> GO TO 11.
NG >> Replace engine coolant temperature sensor.

11. CHECK MAIN 12 CAUSES

If the cause cannot be isolated, go to EC-1172, "Main 12 Causes of Overheating" .

>> **INSPECTION END**

PROCEDURE A

1. CHECK POWER SUPPLY

1. Turn ignition switch OFF.
2. Disconnect cooling fan relay-1.
3. Turn ignition switch ON.
4. Check voltage between cooling fan relay-1 terminals 1, 3, 6 and ground with CONSULT-II or tester.

Voltage: Battery voltage

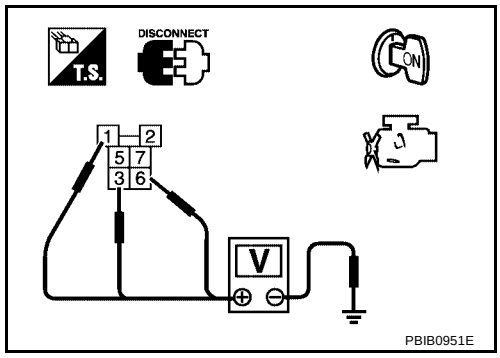

OK or NG

OK >> GO TO 3.
NG >> GO TO 2.

2. DETECT MALFUNCTIONING PART

Check the following.

- Fuse block (J/B) connector E103
- Fuse and fusible link box connectors E23, E25
- 10A fuse
- 40A fusible links
- Harness for open or short between cooling fan relay-1 and fuse
- Harness for open or short between cooling fan relay-1 and battery

>> Repair open circuit or short to ground or short to power in harness or connectors.

3. CHECK COOLING FAN GROUND CIRCUIT FOR OPEN AND SHORT

1. Turn ignition switch OFF.
2. Disconnect cooling fan motor-1 harness connector and cooling fan motor-2 harness connector.
3. Check harness continuity between the following;
   cooling fan relay-1 terminal 5 and cooling fan motor-1 terminal 1,
   cooling fan motor-1 terminal 4 and ground.
   Refer to Wiring Diagram.

Continuity should exist.

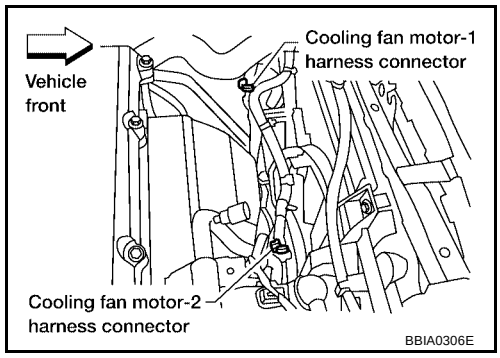

4. Also check harness for short to ground and short to power.
5. Check harness continuity between the following;
   cooling fan relay-1 terminal 7 and cooling fan motor-2 terminal 1,
   cooling fan motor-2 terminal 4 and ground.
   Refer to Wiring Diagram.

Continuity should exist.

6. Also check harness for short to ground and short to power.

OK or NG

OK >> GO TO 4.
NG >> Repair open circuit or short to ground or short to power in harness or connectors.

4. CHECK OUTPUT SIGNAL CIRCUIT

1. Disconnect ECM harness connector.
2. Check harness continuity between ECM terminal 97 and cooling fan relay-1 terminal 2.
   Refer to Wiring Diagram.

   Continuity should exist.

3. Also check harness for short to ground and short to power.

OK or NG

OK >> GO TO 6.
NG >> GO TO 5.

5. DETECT MALFUNCTIONING PART

Check the following.

- Harness connectors E9, F47
- Harness for open or short between cooling fan relay-1 and ECM

>> Repair open circuit or short to ground or short to power in harness or connectors.

6. CHECK COOLING FAN RELAY-1

Refer to EC-1173, "Component Inspection" .

OK or NG

OK >> GO TO 7.
NG >> Replace cooling fan relay.

7. CHECK COOLING FAN MOTORS-1 AND -2

Refer to EC-1173, "Component Inspection" .

OK or NG

OK >> GO TO 8.
NG >> Replace cooling fan motors.

8. CHECK INTERMITTENT INCIDENT

Perform EC-834, "TROUBLE DIAGNOSIS FOR INTERMITTENT INCIDENT" .

>> **INSPECTION END**

PROCEDURE B

1. CHECK COOLING FAN POWER SUPPLY CIRCUIT

1. Turn ignition switch OFF.
2. Disconnect cooling fan relay-2 and relay-3.
3. Turn ignition switch ON.
4. Check voltage between cooling fan relay-2 and relay-3 terminals 1, 3 and ground with CONSULT-II or tester.

   Voltage: Battery voltage

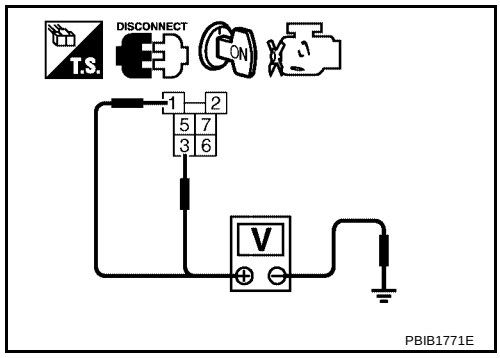

OK or NG

OK >> GO TO 3.
NG >> GO TO 2.

2. DETECT MALFUNCTIONING PART

Check the following.

- Harness for open or short between cooling fan relay-2, relay-3 and fuse
- Harness for open or short between cooling fan relay-2, relay-3 and fusible link

>> Repair harness or connectors.

3. CHECK COOLING FAN MOTORS CIRCUIT

1. Turn ignition switch OFF.
2. Disconnect cooling fan motor-1 harness connector and cooling fan motor-2 harness connector.
3. Check harness continuity between the following;
   cooling fan motor-1 terminal 2 and cooling fan relay-2 terminal 5,
   cooling fan motor-1 terminal 3 and cooling fan relay-2 terminal 6,
   cooling fan relay-2 terminal 7and ground.
   Refer to wiring diagram.

   Continuity should exist.

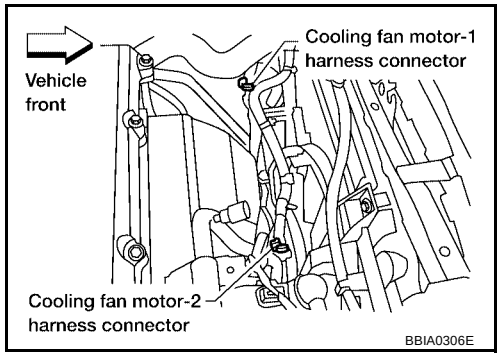

4. Also check harness for short to ground and short to power.
5. Check harness continuity between the following;
   cooling fan motor-2 terminal 2 and cooling fan relay-3 terminal 5,
   cooling fan motor-2 terminal 3 and cooling fan relay-3 terminal 6,
   cooling fan relay-3 terminal 7and ground.
   Refer to wiring diagram.

   Continuity should exist.

6. Also check harness for short to ground and short to power.

OK or NG

OK >> GO TO 4.
NG >> Repair open circuit or short to ground or short to power in harness or connectors.

4. CHECK COOLING FAN OUTPUT SIGNAL CIRCUIT FOR OPEN AND SHORT

1. Disconnect ECM harness connector.
2. Check harness continuity between ECM terminal 89 and cooling fan relay-2 and relay-3 terminals 2. Refer to Wiring Diagram.

Continuity should exist.

3. Also check harness for short to ground and short to power.

OK or NG

OK >> GO TO 6.
NG >> GO TO 5.

5. DETECT MALFUNCTIONING PART

Check the following.

- Harness connectors E9, F47
- Harness for open or short between cooling fan relay-2 and ECM
- Harness for open or short between cooling fan relay-3 and ECM

>> Repair open circuit or short to ground or short to power in harness or connectors.

6. CHECK COOLING FAN RELAY-2 AND RELAY-3

Refer to EC-1173, "Component Inspection" .

OK or NG

OK >> GO TO 7.
NG >> Replace cooling fan relays.

7. CHECK COOLING FAN MOTORS-1 AND -2

Refer to EC-1173, "Component Inspection" .

OK or NG

OK >> GO TO 8.
NG >> Replace cooling fan motors.

8. CHECK INTERMITTENT INCIDENT

Perform EC-834, "TROUBLE DIAGNOSIS FOR INTERMITTENT INCIDENT" .

>> **INSPECTION END**

Main 12 Causes of Overheating

UBS00KJS

Engine	Step	Inspection item	Equipment	Standard	Reference page
OFF	1	● Blocked radiator ● Blocked condenser ● Blocked radiator grille ● Blocked bumper	● Visual	No blocking	—
	2	● Coolant mixture	● Coolant tester	50 - 50% coolant mixture	See MA-14 .
	3	● Coolant level	● Visual	Coolant up to MAX level in reservoir tank and radiator filler neck	See MA-23 .
	4	● Radiator cap	● Pressure tester	59 - 98 kPa (0.6 - 1.0 kg/cm^2 , 9 - 14 psi) (Limit)	See CO-27 .
ON*2	5	● Coolant leaks	● Visual	No leaks	See CO-26 .

Engine	Step	Inspection item	Equipment	Standard	Reference page
ON*2	6	● Thermostat	● Touch the upper and lower radiator hoses	Both hoses should be hot	See CO-30 and CO-32 .
ON*1	7	● Cooling fan	● CONSULT-II	Operating	See trouble diagnosis for DTC P1217 (EC-1161).
OFF	8	● Combustion gas leak	● Color checker chemical tester 4 Gas analyzer	Negative	—
ON*3	9	● Coolant temperature gauge	● Visual	Gauge less than 3/4 when driving	—
		● Coolant overflow to reservoir tank	● Visual	No overflow during driving and idling	See CO-26 .
OFF*4	10	● Coolant return from reservoir tank to radiator	● Visual	Should be initial level in reservoir tank	See CO-26 .
OFF	11	● Cylinder head	● Straight gauge feeler gauge	0.1 mm (0.004 in) Maximum distortion (warping)	See EM-164 .
	12	● Cylinder block and pistons	● Visual	No scuffing on cylinder walls or piston	See EM-164 .

*1: Turn the ignition switch ON.
*2: Engine running at 3,000 rpm for 10 minutes.
*3: Drive at 90 km/h (56 MPH) for 30 minutes and then let idle for 10 minutes.
*4: After 60 minutes of cool down time.
For more information, refer to CO-23, "OVERHEATING CAUSE ANALYSIS" .

Component Inspection

UBS00KJT

COOLING FAN RELAYS-1 AND -2

Check continuity between terminals 3 and 5, 6 and 7.

Conditions	Continuity
12V direct current supply between terminals 1 and 2	Yes
No current supply	No

If NG, replace relay.

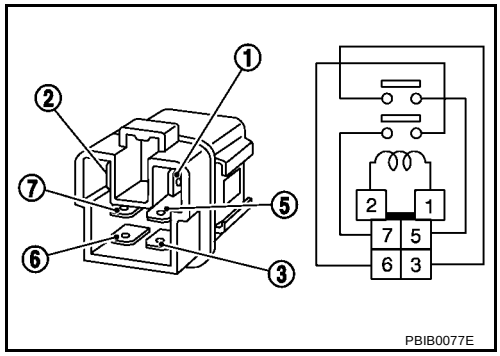

COOLING FAN MOTOR-1 AND MOTOR-2

1. Disconnect cooling fan motor harness connectors.
2. Supply cooling fan motor terminals with battery voltage and check operation.

	Speed	Terminals	
		(+)	(–)
Cooling fan motor	Low	1	4
	High	1, 2	3, 4

Cooling fan motor should operate.
If NG, replace cooling fan motor.

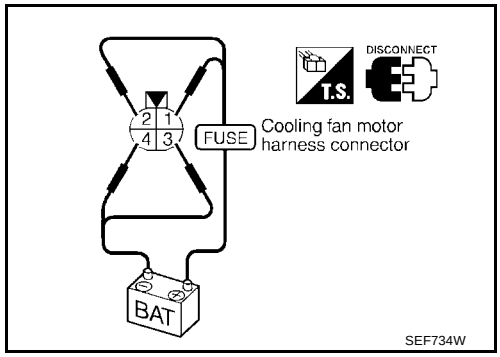

DTC P1225 TP SENSOR

PFP:16119

Component Description

UBS00JJ5

Electric throttle control actuator consists of throttle control motor, throttle position sensor, etc. The throttle position sensor responds to the throttle valve movement.
The throttle position sensor has two sensors. These sensors are a kind of potentiometers which transform the throttle valve position into output voltage, and emit the voltage signal to the ECM. In addition, these sensors detect the opening and closing speed of the throttle valve and feed the voltage signals to the ECM. The ECM judges the current opening angle of the throttle valve from these signals and the ECM controls the throttle control motor to make the throttle valve opening angle properly in response to driving condition.

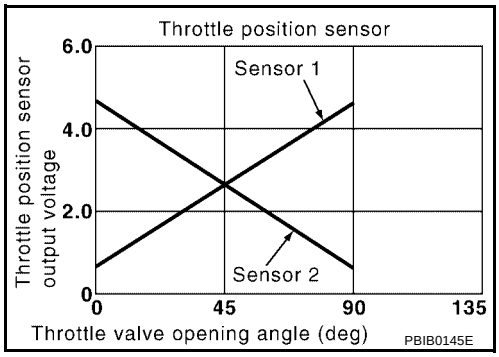

On Board Diagnosis Logic

UBS00JJ6

The MIL will not light up for this diagnosis.

DTC No.	Trouble diagnosis name	DTC detecting condition	Possible cause
P1225 1225	Closed throttle position learning performance problem	Closed throttle position learning value is excessively low.	● Electric throttle control actuator (TP sensor 1 and 2)

DTC Confirmation Procedure

UBS00JJ7

NOTE:
If DTC Confirmation Procedure has been previously conducted, always turn ignition switch OFF and wait at least 10 seconds before conducting the next test.
TESTING CONDITION:
Before performing the following procedure, confirm that battery voltage is more than 10V at idle.

WITH CONSULT-II

1. Turn ignition switch ON.
2. Select “DATA MONITOR” mode with CONSULT-II.
3. Turn ignition switch OFF, wait at least 10 seconds.
4. Turn ignition switch ON.
5. If 1st trip DTC is detected, go to EC-1175, "Diagnostic Procedure" .

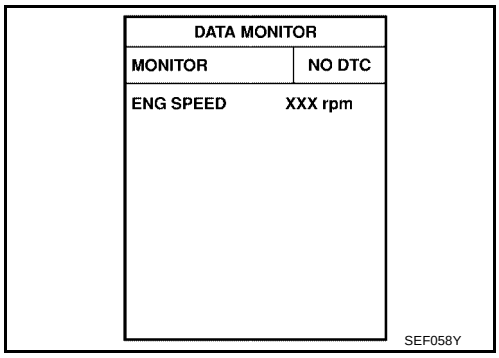

WITH GST

Follow the procedure “WITH CONSULT-II” above.

Diagnostic Procedure

UBS00JJ8

1. CHECK ELECTRIC THROTTLE CONTROL ACTUATOR VISUALLY

1. Turn ignition switch OFF.
2. Remove the intake air duct.
3. Check if foreign matter is caught between the throttle valve and the housing.

OK or NG

OK >> GO TO 2.
NG >> Remove the foreign matter and clean the electric throttle control actuator inside.

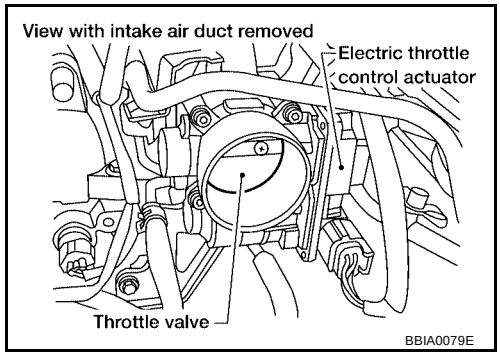

2. REPLACE ELECTRIC THROTTLE CONTROL ACTUATOR

1. Replace the electric throttle control actuator.
2. Perform EC-749, "Throttle Valve Closed Position Learning" .
3. Perform EC-750, "Idle Air Volume Learning" .

>> **INSPECTION END**

Remove and Installation

UBS00JJ9

ELECTRIC THROTTLE CONTROL ACTUATOR

Refer to EM-108, "INTAKE MANIFOLD" .

DTC P1226 TP SENSOR

PFP:16119

Component Description

UBS00JJA

Electric throttle control actuator consists of throttle control motor, throttle position sensor, etc. The throttle position sensor responds to the throttle valve movement.
The throttle position sensor has two sensors. These sensors are a kind of potentiometers which transform the throttle valve position into output voltage, and emit the voltage signal to the ECM. In addition, these sensors detect the opening and closing speed of the throttle valve and feed the voltage signals to the ECM. The ECM judges the current opening angle of the throttle valve from these signals and the ECM controls the throttle control motor to make the throttle valve opening angle properly in response to driving condition.

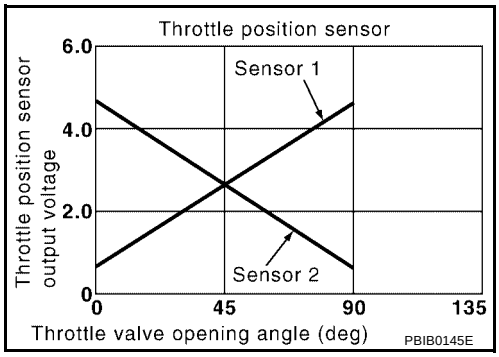

On Board Diagnosis Logic

UBS00JJB

The MIL will not light up for this diagnosis.

DTC No.	Trouble diagnosis name	DTC detecting condition	Possible cause
P1226 1226	Closed throttle position learning performance problem	Closed throttle position learning is not performed successfully, repeatedly.	● Electric throttle control actuator (TP sensor 1 and 2)

DTC Confirmation Procedure

UBS00JJC

NOTE:
If DTC Confirmation Procedure has been previously conducted, always turn ignition switch OFF and wait at least 10 seconds before conducting the next test.
TESTING CONDITION:
Before performing the following procedure, confirm that battery voltage is more than 10V at idle.

WITH CONSULT-II

1. Turn ignition switch ON.
2. Select “DATA MONITOR” mode with CONSULT-II.
3. Turn ignition switch OFF, wait at least 10 seconds.
4. Turn ignition switch ON.
5. Repeat steps 3 and 4 for 32 times.
6. If 1st trip DTC is detected, go to EC-1177, "Diagnostic Procedure" .

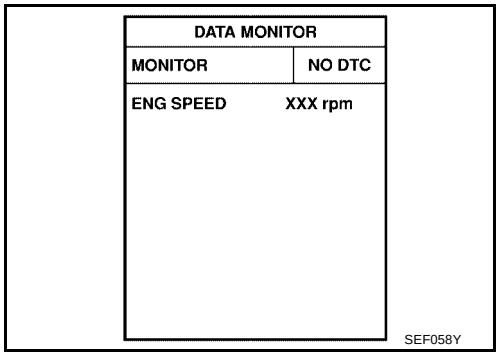

WITH GST

Follow the procedure “WITH CONSULT-II” above.

Diagnostic Procedure

UBS00JJD

1. CHECK ELECTRIC THROTTLE CONTROL ACTUATOR VISUALLY

1. Turn ignition switch OFF.
2. Remove the intake air duct.
3. Check if foreign matter is caught between the throttle valve and the housing.

OK or NG

OK >> GO TO 2.
NG >> Remove the foreign matter and clean the electric throttle control actuator inside.

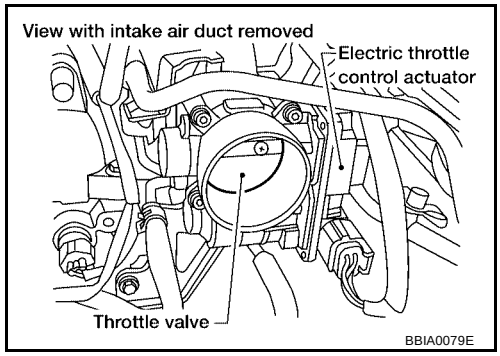

2. REPLACE ELECTRIC THROTTLE CONTROL ACTUATOR

1. Replace the electric throttle control actuator.
2. Perform EC-749, "Throttle Valve Closed Position Learning" .
3. Perform EC-750, "Idle Air Volume Learning" .

>> **INSPECTION END**

Remove and Installation

UBS00JJE

ELECTRIC THROTTLE CONTROL ACTUATOR

Refer to EM-108, "INTAKE MANIFOLD" .

DTC P1229 SENSOR POWER SUPPLY

PFP:16119

On Board Diagnosis Logic

UBS00JJF

This self-diagnosis has the one trip detection logic.

DTC No.	Trouble diagnosis name	DTC detecting condition	Possible cause
P1229 1229	Sensor power supply circuit short	ECM detects a voltage of power source for sensor is excessively low or high.	● Harness or connectors (APP sensor 1 circuit is shorted.) (PSP sensor circuit is shorted.) (Refrigerant pressure sensor circuit is shorted.) (EVAP control system pressure sensor circuit is shorted.) ● Accelerator pedal position sensor (APP sensor 1) ● Power steering pressure sensor ● Refrigerant pressure sensor ● EVAP control system pressure sensor

FAIL-SAFE MODE

When the malfunction is detected, the ECM enters fail-safe mode and the MIL lights up.

Engine operation condition in fail-safe mode
ECM stops the electric throttle control actuator control, throttle valve is maintained at a fixed opening (approx. 5 degrees) by the return spring.

DTC Confirmation Procedure

UBS00JJG

NOTE:
If DTC Confirmation Procedure has been previously conducted, always turn ignition switch OFF and wait at least 10 seconds before conducting the next test.
TESTING CONDITION:
Before performing the following procedure, confirm that battery voltage is more than 10V at idle.

WITH CONSULT-II

1. Turn ignition switch ON.
2. Select “DATA MONITOR” mode with CONSULT-II.
3. Start engine and let it idle for 1 second.
4. If DTC is detected, go to EC-1180, "Diagnostic Procedure" .

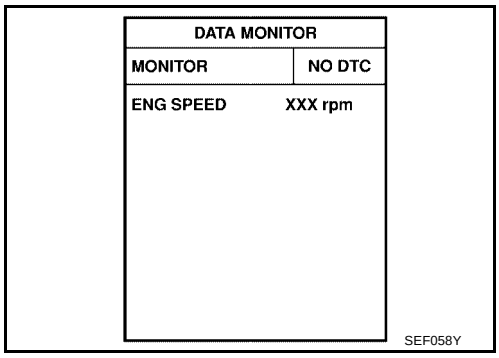

WITH GST

Follow the procedure “WITH CONSULT-II” above.

Wiring Diagram

UBS00JJH

EC-SEN/PW-01

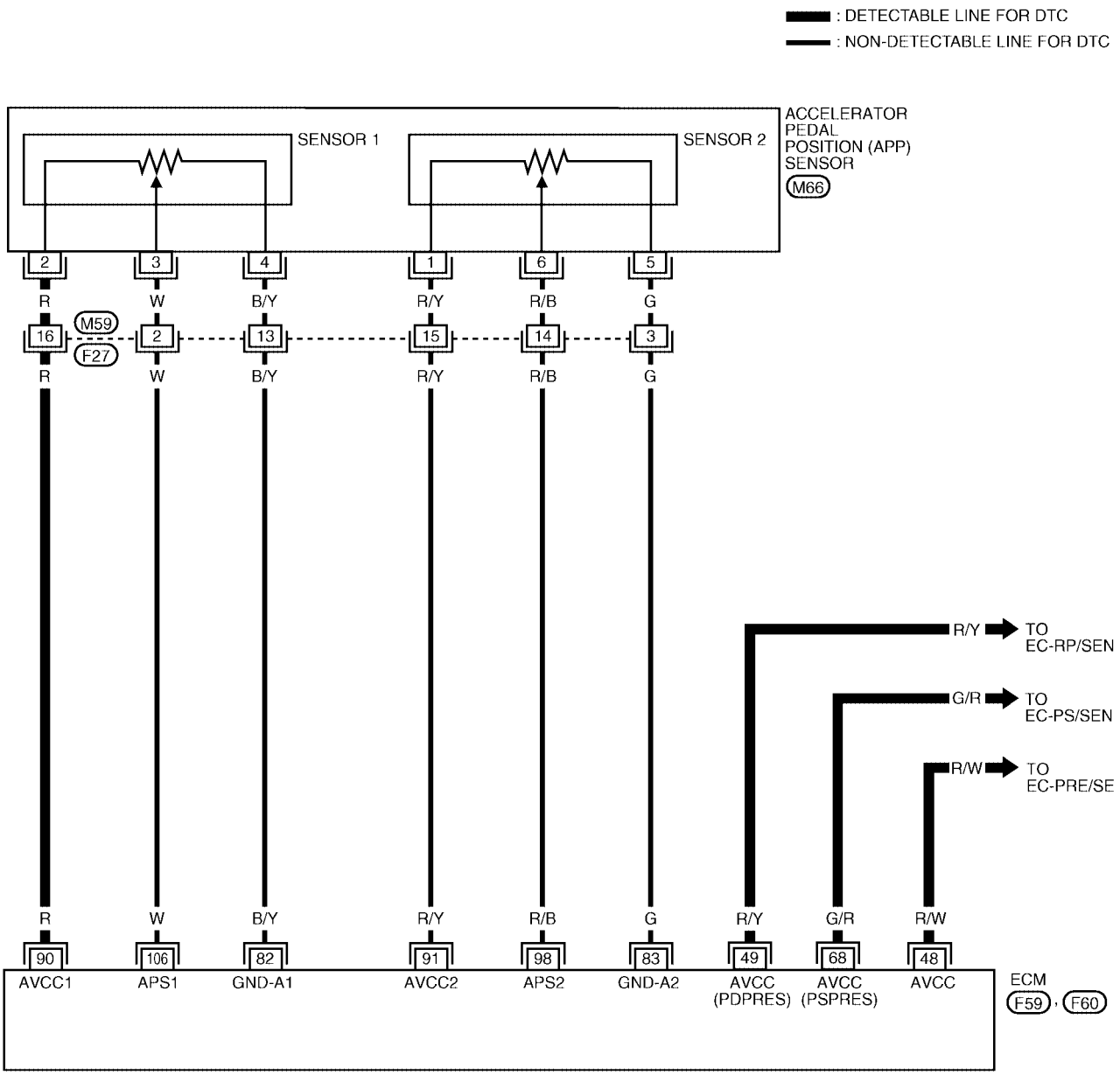

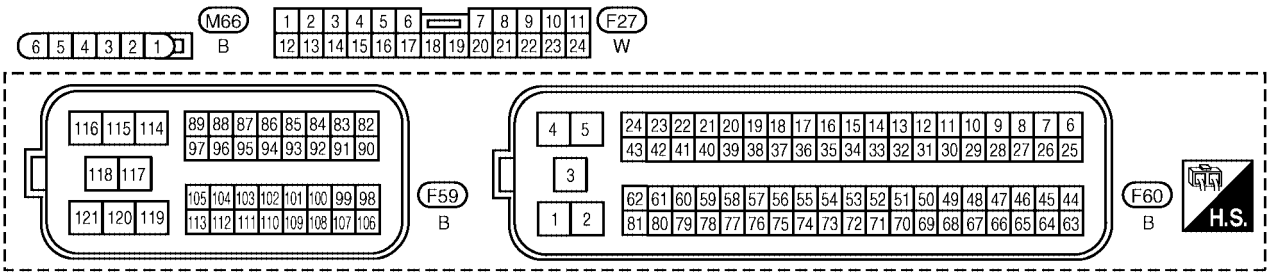

BBWA2300E

Specification data are reference values and are measured between each terminal and ground.

CAUTION:

Do not use ECM ground terminals when measuring input/output voltage. Doing so may result in damage to the ECM's transistor. Use a ground other than ECM terminals, such as the ground.

TERMINAL NO.	WIRE COLOR	ITEM	CONDITION	DATA (DC Voltage)
48	R/W	Sensor power supply (EVAP control system pressure sensor)	**[Ignition switch: ON]**	Approximately 5V
49	R/Y	Sensor power supply (Refrigerant pressure sensor)	**[Ignition switch: ON]**	Approximately 5V
68	G/R	Sensor power supply (Power steering pressure sensor)	**[Ignition switch: ON]**	Approximately 5V
90	R	Sensor power supply (Accelerator pedal position sensor 1)	**[Ignition switch: ON]**	Approximately 5V

Diagnostic Procedure

UBS00JJI

1. CHECK GROUND CONNECTIONS

1. Turn ignition switch OFF.
2. Loosen and retighten engine two screws on the body.
   Refer to EC-841, "Ground Inspection" .

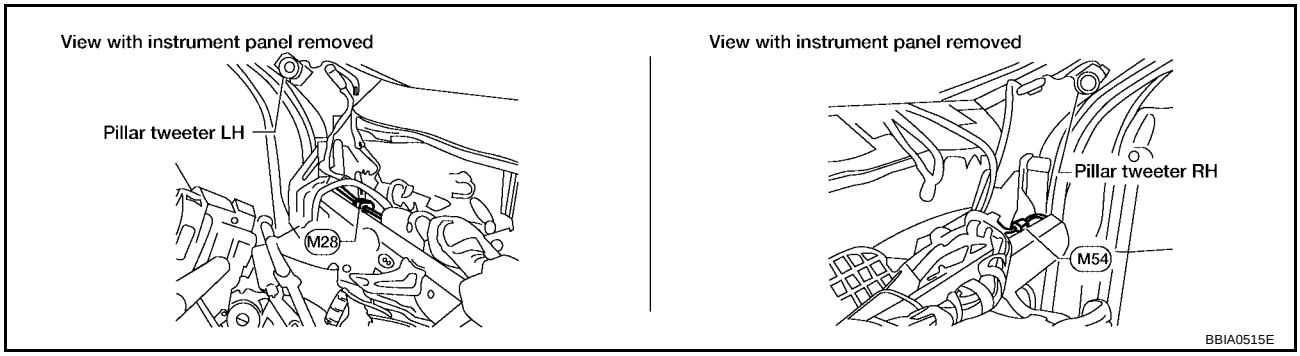

OK or NG

OK >> GO TO 2.
NG >> Repair or replace ground connections.

2. CHECK ACCELERATOR PEDAL POSITION SENSOR 1 POWER SUPPLY CIRCUIT

1. Disconnect accelerator pedal position (APP) sensor harness connector.
2. Turn ignition switch ON.

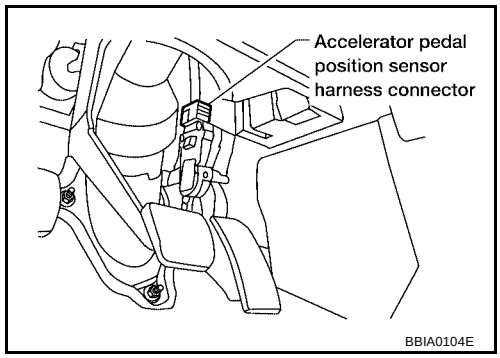

3. Check voltage between APP sensor terminal 2 and ground with CONSULT-II or tester.

Voltage: Approximately 5V

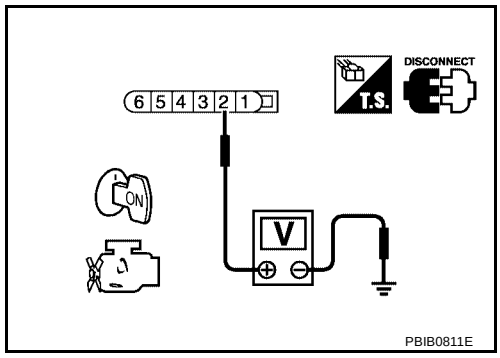

OK or NG

OK >> GO TO 5.
NG >> GO TO 3.

3. CHECK SENSOR POWER SUPPLY CIRCUITS

Check the following.

- Harness for short to power and short to ground, between the following terminals.

ECM terminal	Sensor terminal	Reference Wiring Diagram
90	APP sensor terminal 2	EC-1293
48	EVAP control system pressure sensor terminal 3	EC-1050
49	Refrigerant pressure sensor terminal 1	EC-1348
68	PSP sensor terminal 1	EC-1092

OK or NG

OK >> GO TO 4.
NG >> Repair short to ground or short to power in harness or connectors.

4. CHECK COMPONENTS

Check the following.

- Refrigerant pressure sensor (Refer to EC-1347 .)
- Power steering pressure sensor (Refer to EC-1095 .)
- EVAP control system pressure sensor (Refer to EC-1060 .)

OK or NG

OK >> GO TO 7.
NG >> Replace malfunctioning component.

5. CHECK APP SENSOR

Refer to EC-1298, "Component Inspection" .

OK or NG

OK >> GO TO 7.
NG >> GO TO 6.

6. REPLACE ACCELERATOR PEDAL ASSEMBLY

1. Replace accelerator pedal assembly.
2. Perform EC-749, "Accelerator Pedal Released Position Learning" .
3. Perform EC-749, "Throttle Valve Closed Position Learning" .
4. Perform EC-750, "Idle Air Volume Learning" .

>> **INSPECTION END**

7. CHECK INTERMITTENT INCIDENT

Refer to EC-834, "TROUBLE DIAGNOSIS FOR INTERMITTENT INCIDENT" .

>> **INSPECTION END**

DTC P1271 A/F SENSOR 1

PFP:22693

Component Description

UBS00JJJ

The A/F sensor 1 is a planar dual-cell limit current sensor. The sensor element of the A/F sensor 1 is the combination of a Nernst concentration cell (sensor cell) with an oxygen-pump cell, which transports ions. It has a heater in the element.

The sensor is capable of precise measurement $\lambda = 1$, but also in the lean and rich range. Together with its control electronics, the sensor outputs a clear, continuous signal throughout a wide λ range ($0.7 < \lambda <$ air).

The exhaust gas components diffuse through the diffusion gap at the electrode of the oxygen pump and Nernst concentration cell, where they are brought to thermodynamic balance.

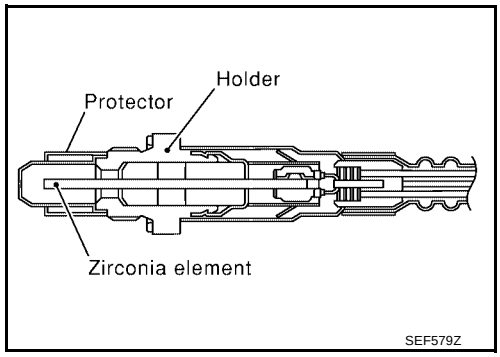

An electronic circuit controls the pump current through the oxygen-pump cell so that the composition of the exhaust gas in the diffusion gap remains constant at $\lambda = 1$. Therefore, the A/F sensor 1 is able to indicate air-fuel ratio by this pumping of current. In addition, a heater is integrated in the sensor to ensure the required operating temperature of 700 - 800°C (1,292 - 1,472°F).

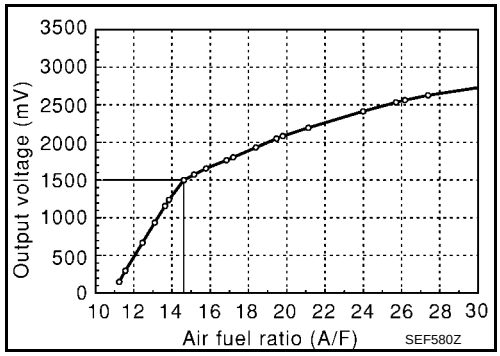

CONSULT-II Reference Value in Data Monitor Mode

UBS00JJK

Specification data are reference values.

MONITOR ITEM	CONDITION		SPECIFICATION
A/F SEN1 (B1)	● Engine: After warming up	Maintaining engine speed at 2,000 rpm	Fluctuates around 1.5V

On Board Diagnosis Logic

UBS00JJL

To judge the malfunction, the diagnosis checks that the A/F signal computed by ECM from the air fuel ratio (A/F) sensor 1 signal is not inordinately low.

DTC No.	Trouble diagnosis name	DTC detecting condition	Possible Cause
P1271 1271	Air fuel ratio (A/F) sensor 1 circuit no activity detected	The A/F signal computed by ECM from the A/F sensor 1 signal is constantly approx. 0V.	● Harness or connectors (The sensor circuit is open or shorted.) ● Air fuel ratio (A/F) sensor 1

DTC Confirmation Procedure

UBS00JJM

NOTE:
If DTC Confirmation Procedure has been previously conducted, always turn ignition switch OFF and wait at least 10 seconds before conducting the next test.

TESTING CONDITION:
Before performing the following procedure, confirm that battery voltage is more than 11V at idle.

WITH CONSULT-II

1. Start engine and warm it up to normal operating temperature.
2. Select “A/F SEN1 (B1)” in “DATA MONITOR” mode with CONSULT-II.

3. Check “A/F SEN1 (B1)” indication.
   If the indication is constantly approx. 0V, go to EC-1186, "Diagnostic Procedure" .
   If the indication is not constantly approx. 0V, go to next step.
4. Turn ignition switch OFF, wait at least 10 seconds and then restart engine.
5. Drive and accelerate vehicle to more than 40 km/h (25 MPH) within 20 seconds after restarting engine.
6. Maintain the following conditions for about 20 consecutive seconds.

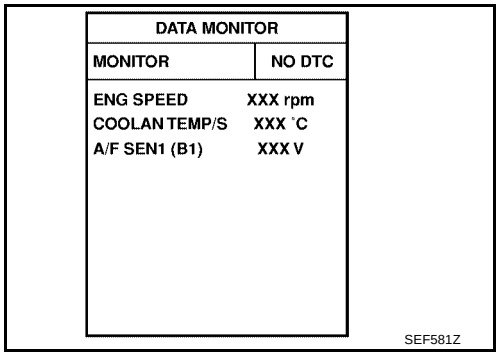

ENG SPEED	1,000 - 3,200 rpm
VHCL SPEED SE	More than 40 km/h (25 MPH)
B/FUEL SCHDL	1.5 - 9.0 msec
COOLANT TEMP/S	Less than 70°C (158°F)
Shift lever	Suitable position

NOTE:
- **Keep the accelerator pedal as steady as possible during the cruising.**
- **If this procedure is not completed within 1 minute after restarting engine at step 4, return to step 4.**

7. If 1st trip DTC is displayed, go to EC-1186, "Diagnostic Procedure" .

WITH GST

Follow the procedure “WITH CONSULT-II” above.

Wiring Diagram

UBS00JJN

EC-A/F-01

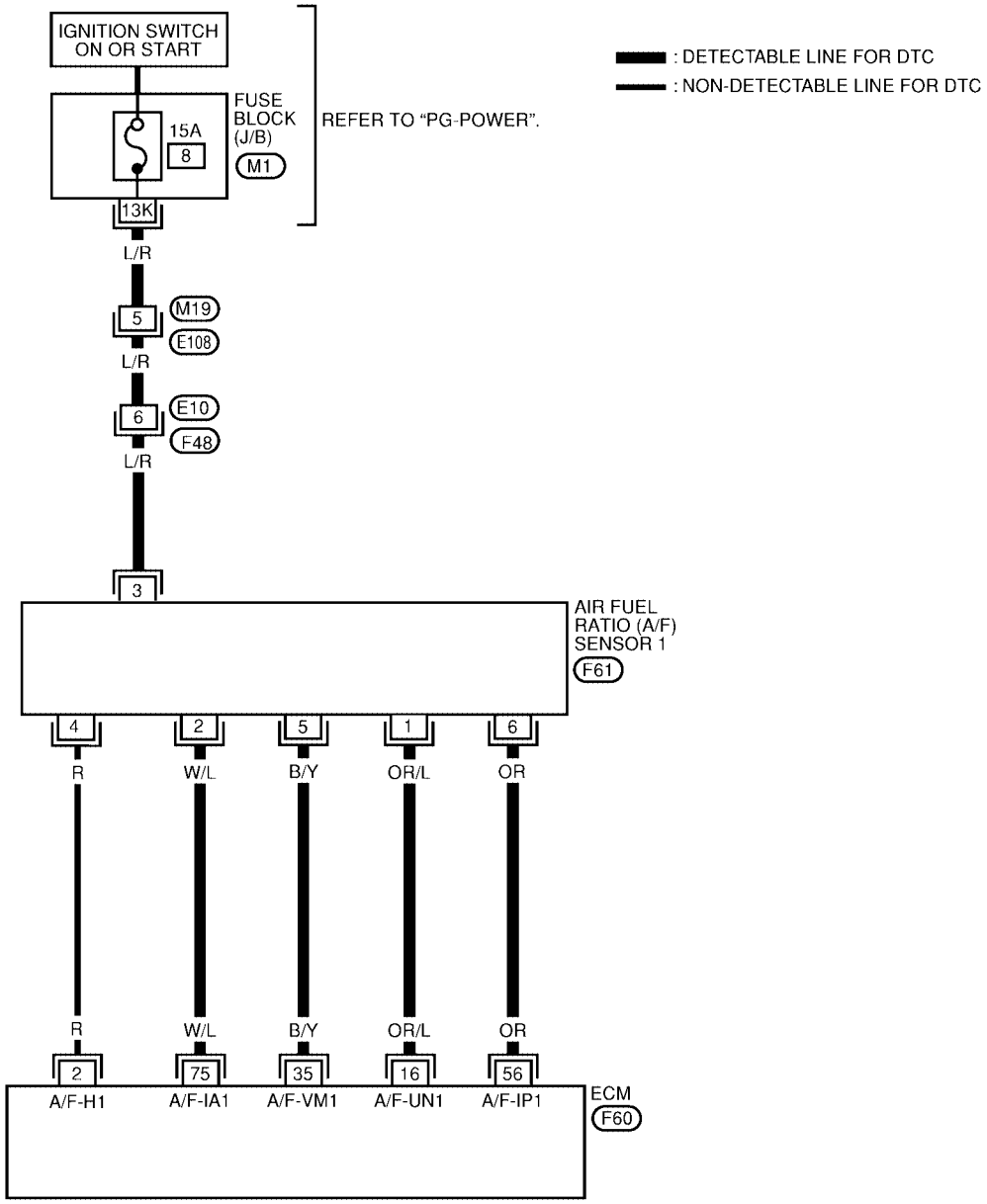

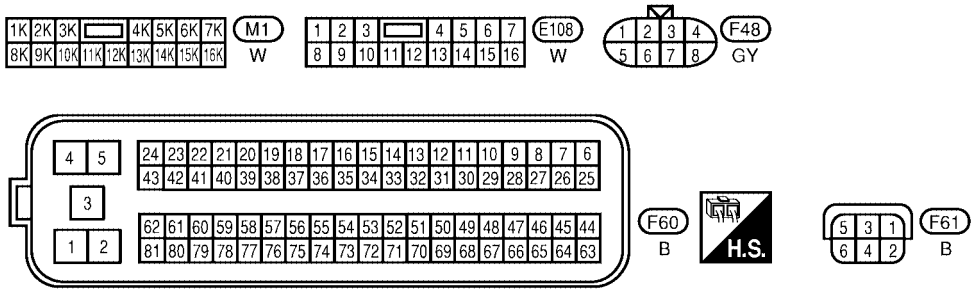

BBWA1478E

Specification data are reference values and are measured between each terminal and ground.

CAUTION:

Do not use ECM ground terminals when measuring input/output voltage. Doing so may result in damage to the ECM's transistor. Use a ground other than ECM terminals, such as the ground.

TERMINAL NO.	WIRE COLOR	ITEM	CONDITION	DATA (DC Voltage)
16	OR/L	A/F sensor 1	**[Engine is running]** ● **Warm-up condition** ● Idle speed	Approximately 3.1V
35	B/Y			Approximately 2.6V
56	OR			2 - 3V
75	W/L			2 - 3V

Diagnostic Procedure

UBS00JJO

1. CHECK GROUND CONNECTIONS

1. Turn ignition switch OFF.
2. Loosen and retighten engine two screws on the body.
   Refer to EC-841, "Ground Inspection" .

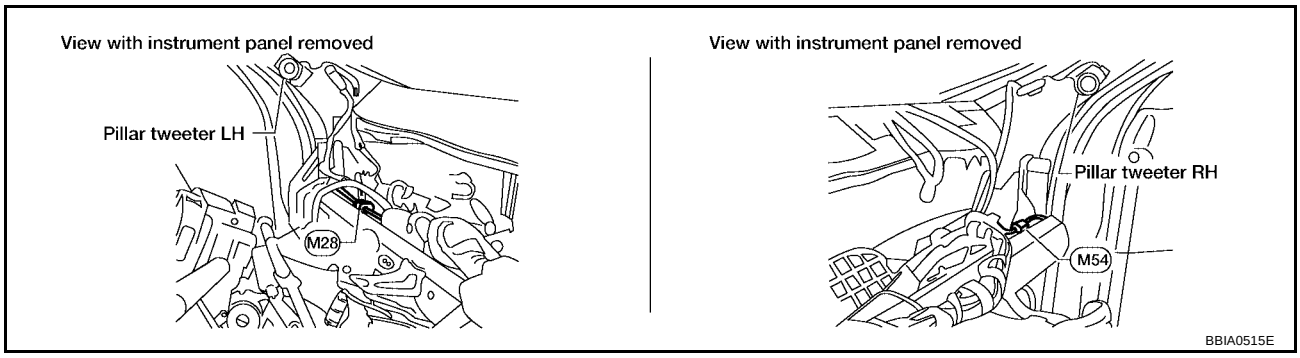

OK or NG

OK >> GO TO 2.
NG >> Repair or replace ground connections.

2. CHECK AIR FUEL RATIO (A/F) SENSOR 1 POWER SUPPLY CIRCUIT

1. Disconnect A/F sensor 1 harness connector.
2. Turn ignition switch ON.

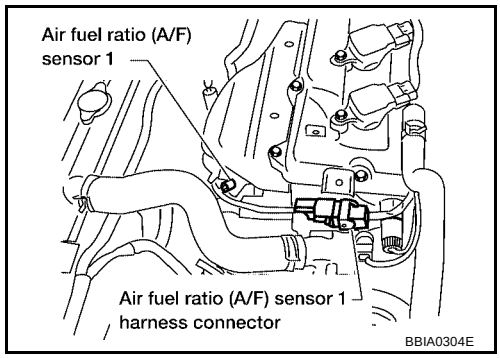

3. Check voltage between A/F sensor 1 terminal 3 and ground with CONSULT-II or tester.

Voltage: Battery voltage

OK or NG

OK >> GO TO 4.
NG >> GO TO 3.

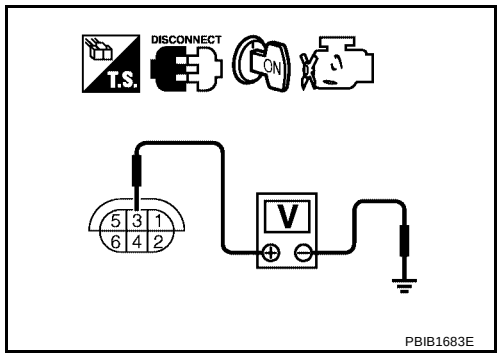

3. DETECT MALFUNCTIONING PART

Check the following.

- Harness connectors M19, E108
- Harness connectors E10, F48
- Fuse block (J/B) connector M1
- 15A fuse
- Harness for open or short between A/F sensor 1 and fuse

>> Repair or replace harness or connectors.

4. CHECK A/F SENSOR 1 INPUT SIGNAL CIRCUIT FOR OPEN AND SHORT

1. Turn ignition switch OFF.
2. Disconnect ECM harness connector.
3. Check harness continuity between the following terminals. Refer to Wiring Diagram.

A/F sensor 1 terminal	ECM terminal
1	16
5	35
6	56
2	75

Continuity should exist.

4. Check harness continuity between ECM terminals 16, 35, 56, 75 or A/F sensor 1 terminals 1, 2, 5, 6 and ground. Refer to Wiring Diagram.

Continuity should not exist.

5. Also check harness for short to power.

OK or NG

OK >> GO TO 5.
NG >> Repair open circuit or short to ground or short to power in harness or connectors.

5. CHECK INTERMITTENT INCIDENT

Perform EC-834, "TROUBLE DIAGNOSIS FOR INTERMITTENT INCIDENT" .

OK or NG

OK >> Replace A/F sensor 1.
NG >> Repair or replace.

Removal and Installation

UBS00JJP

AIR FUEL RATIO SENSOR

Refer to EM-113, "EXHAUST MANIFOLD AND THREE WAY CATALYST" .

DTC P1272 A/F SENSOR 1

PFP:22693

Component Description

UBS00JJQ

The A/F sensor 1 is a planar dual-cell limit current sensor. The sensor element of the A/F sensor 1 is the combination of a Nernst concentration cell (sensor cell) with an oxygen-pump cell, which transports ions. It has a heater in the element.

The sensor is capable of precise measurement λ = 1, but also in the lean and rich range. Together with its control electronics, the sensor outputs a clear, continuous signal throughout a wide λ range (0.7 < λ < air).

The exhaust gas components diffuse through the diffusion gap at the electrode of the oxygen pump and Nernst concentration cell, where they are brought to thermodynamic balance.

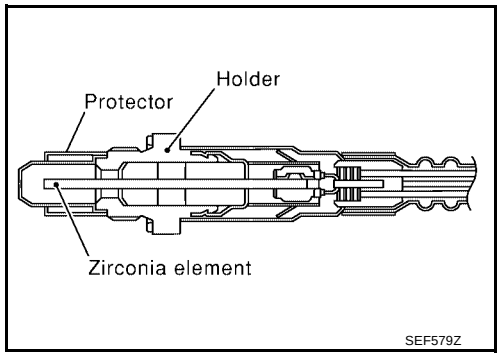

An electronic circuit controls the pump current through the oxygen-pump cell so that the composition of the exhaust gas in the diffusion gap remains constant at λ = 1. Therefore, the A/F sensor 1 is able to indicate air-fuel ratio by this pumping of current. In addition, a heater is integrated in the sensor to ensure the required operating temperature of 700 - 800°C (1,292 - 1,472°F).

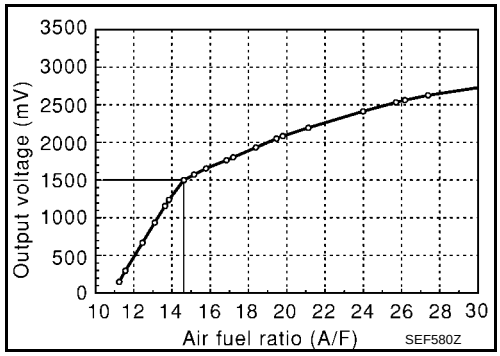

CONSULT-II Reference Value in Data Monitor Mode

UBS00JJR

Specification data are reference values.

MONITOR ITEM	CONDITION		SPECIFICATION
A/F SEN1 (B1)	● Engine: After warming up	Maintaining engine speed at 2,000 rpm	Fluctuates around 1.5V

On Board Diagnosis Logic

UBS00JJS

To judge the malfunction, the diagnosis checks that the A/F signal computed by ECM from the air fuel ratio (A/F) sensor 1 signal is not inordinately high.

DTC No.	Trouble diagnosis name	DTC detecting condition	Possible Cause
P1272 1272	Air fuel ratio (A/F) sensor 1 circuit no activity detected	The A/F signal computed by ECM from the A/F sensor 1 signal is constantly approx. 5V.	● Harness or connectors (The sensor circuit is open or shorted.) ● Air fuel ratio (A/F) sensor 1

DTC Confirmation Procedure

UBS00JJT

NOTE:
If DTC Confirmation Procedure has been previously conducted, always turn ignition switch OFF and wait at least 10 seconds before conducting the next test.

TESTING CONDITION:
Before performing the following procedure, confirm that battery voltage is more than 11V at idle.

WITH CONSULT-II

1. Start engine and warm it up to normal operating temperature.
2. Select “A/F SEN1 (B1)” in “DATA MONITOR” mode with CONSULT-II.

3. Check “A/F SEN1 (B1)” indication.
   If the indication is constantly approx. 5V, go to EC-1192, "Diagnostic Procedure" .
   If the indication is not constantly approx. 5V, go to next step.
4. Turn ignition switch OFF, wait at least 10 seconds and then restart engine.
5. Drive and accelerate vehicle to more than 40 km/h (25 MPH) within 20 seconds after restarting engine.
6. Maintain the following conditions for about 20 consecutive seconds.

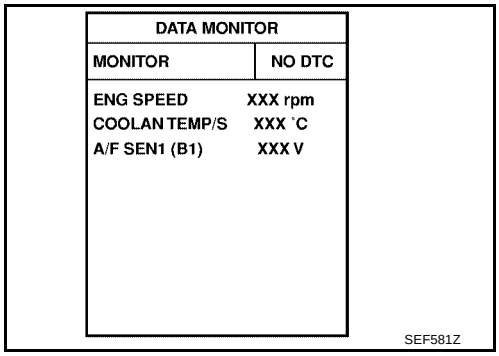

ENG SPEED	1,000 - 3,200 rpm
VHCL SPEED SE	More than 40 km/h (25 MPH)
B/FUEL SCHDL	1.5 - 9.0 msec
COOLANT TEMP/S	Less than 70°C (158°F)
Shift lever	Suitable position

NOTE:
- **Keep the accelerator pedal as steady as possible during the cruising.**
- **If this procedure is not completed within 1 minute after restarting engine at step 4, return to step 4.**

7. If 1st trip DTC is displayed, go to EC-1192, "Diagnostic Procedure" .

WITH GST

Follow the procedure “WITH CONSULT-II” above.

Wiring Diagram

UBS00JJU

EC-A/F-01

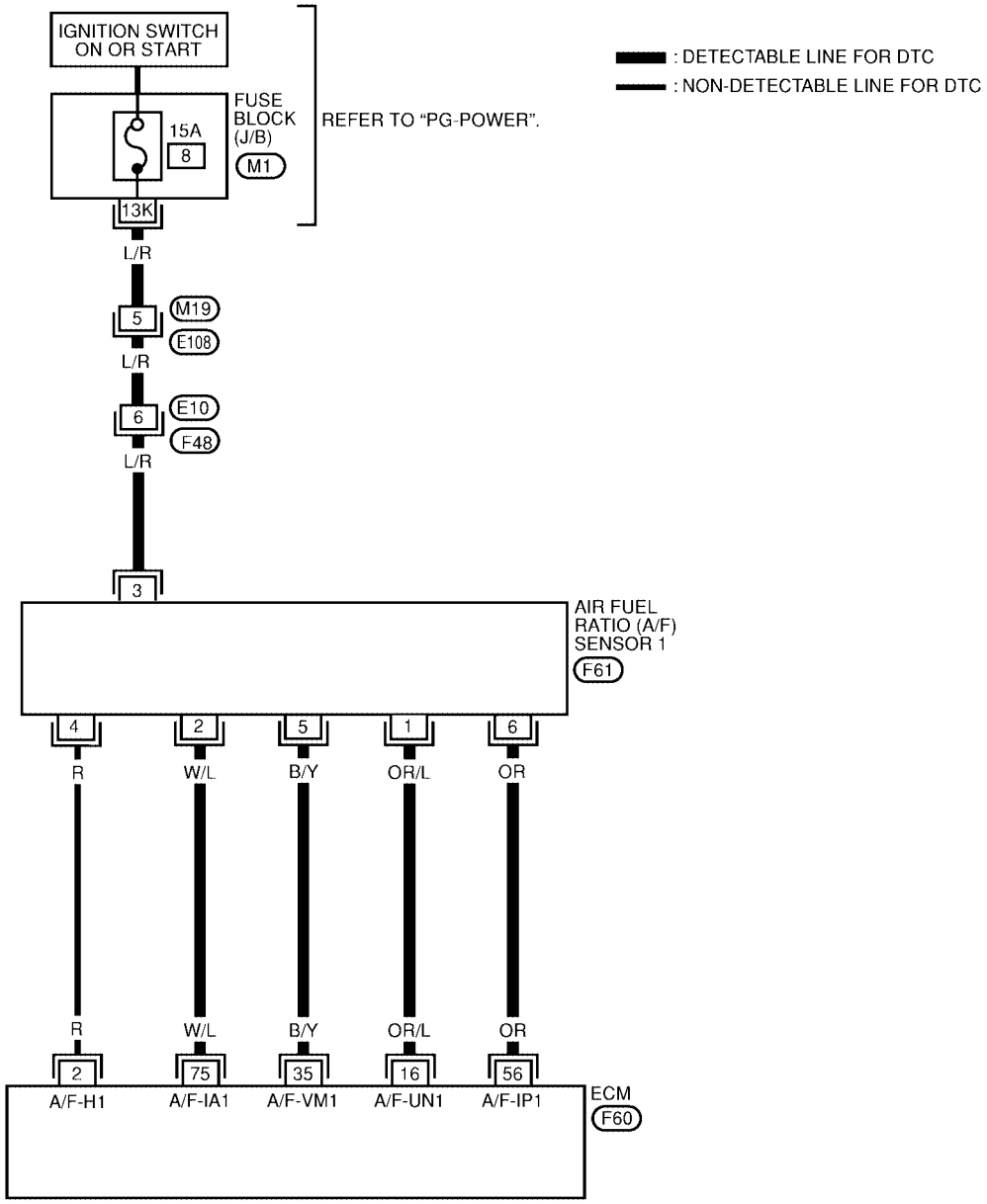

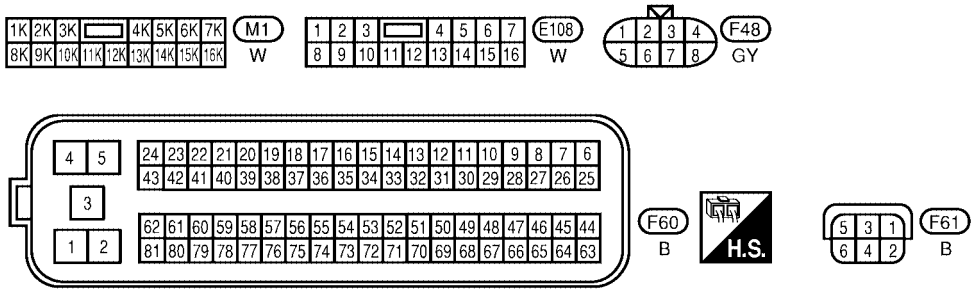

BBWA1478E

Specification data are reference values and are measured between each terminal and ground.

CAUTION:

Do not use ECM ground terminals when measuring input/output voltage. Doing so may result in damage to the ECM's transistor. Use a ground other than ECM terminals, such as the ground.

TERMINAL NO.	WIRE COLOR	ITEM	CONDITION	DATA (DC Voltage)
16	OR/L	A/F sensor 1	**[Engine is running]** ● **Warm-up condition** ● Idle speed	Approximately 3.1V
35	B/Y			Approximately 2.6V
56	OR			2 - 3V
75	W/L			2 - 3V

Diagnostic Procedure

UBS00JJV

1. CHECK GROUND CONNECTIONS

1. Turn ignition switch OFF.
2. Loosen and retighten engine two screws on the body.
   Refer to EC-841, "Ground Inspection" .

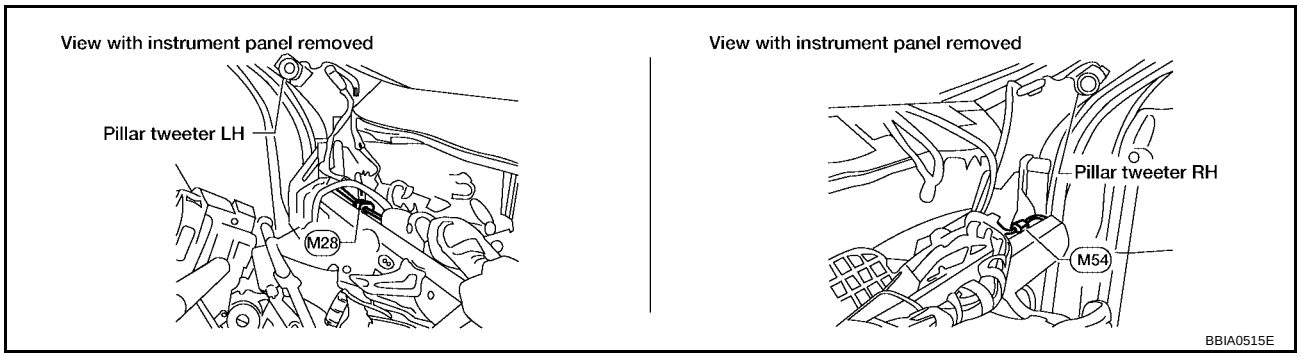

OK or NG

OK >> GO TO 2.
NG >> Repair or replace ground connections.

2. CHECK AIR FUEL RATIO (A/F) SENSOR 1 POWER SUPPLY CIRCUIT

1. Disconnect A/F sensor 1 harness connector.
2. Turn ignition switch ON.

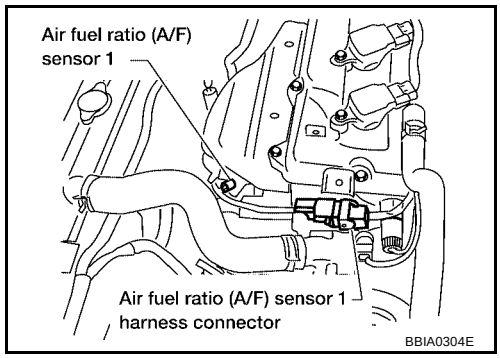

3. Check voltage between A/F sensor 1 terminal 3 and ground with CONSULT-II or tester.

Voltage: Battery voltage

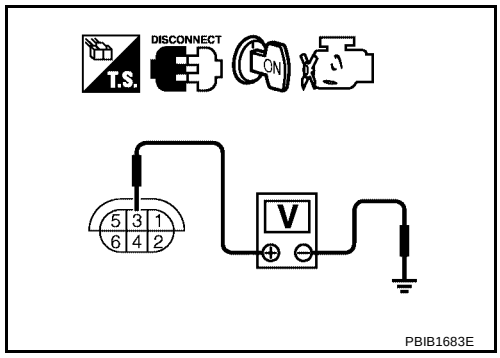

OK or NG

OK >> GO TO 4.
NG >> GO TO 3.

3. DETECT MALFUNCTIONING PART

Check the following.

- Harness connectors M19, E108
- Harness connectors E10, F48
- Fuse block (J/B) connector M1
- 15A fuse
- Harness for open or short between A/F sensor 1 and fuse

>> Repair or replace harness or connectors.

4. CHECK A/F SENSOR 1 INPUT SIGNAL CIRCUIT FOR OPEN AND SHORT

1. Turn ignition switch OFF.
2. Disconnect ECM harness connector.
3. Check harness continuity between the following terminals. Refer to Wiring Diagram.

A/F sensor 1 terminal	ECM terminal
1	16
5	35
6	56
2	75

Continuity should exist.

4. Check harness continuity between ECM terminals 16, 35, 56, 75 or A/F sensor 1 terminals 1, 2, 5, 6 and ground. Refer to Wiring Diagram.

Continuity should not exist.

5. Also check harness for short to power.

OK or NG

OK >> GO TO 5.
NG >> Repair open circuit or short to ground or short to power in harness or connectors.

5. CHECK INTERMITTENT INCIDENT

Perform EC-834, "TROUBLE DIAGNOSIS FOR INTERMITTENT INCIDENT" .

OK or NG

OK >> Replace A/F sensor 1.
NG >> Repair or replace.

Removal and Installation

UBS00JJW

AIR FUEL RATIO SENSOR

Refer to EM-113, "EXHAUST MANIFOLD AND THREE WAY CATALYST" .

DTC P1273 A/F SENSOR 1

PFP:22693

Component Description

UBS00JJX

The A/F sensor 1 is a planar dual-cell limit current sensor. The sensor element of the A/F sensor 1 is the combination of a Nernst concentration cell (sensor cell) with an oxygen-pump cell, which transports ions. It has a heater in the element.

The sensor is capable of precise measurement λ = 1, but also in the lean and rich range. Together with its control electronics, the sensor outputs a clear, continuous signal throughout a wide λ range (0.7 < λ < air).

The exhaust gas components diffuse through the diffusion gap at the electrode of the oxygen pump and Nernst concentration cell, where they are brought to thermodynamic balance.

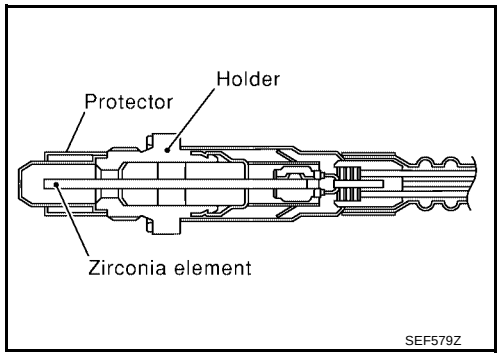

An electronic circuit controls the pump current through the oxygen-pump cell so that the composition of the exhaust gas in the diffusion gap remains constant at λ = 1. Therefore, the A/F sensor 1 is able to indicate air-fuel ratio by this pumping of current. In addition, a heater is integrated in the sensor to ensure the required operating temperature of 700 - 800°C (1,292 - 1,472°F).

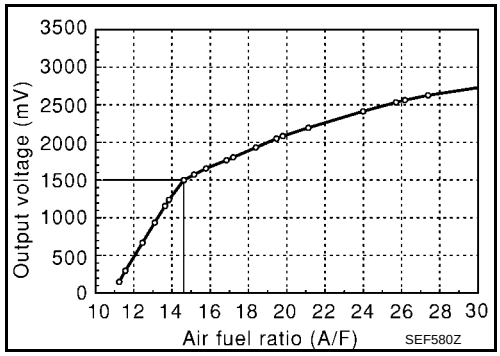

CONSULT-II Reference Value in Data Monitor Mode

UBS00JJY

Specification data are reference values.

MONITOR ITEM	CONDITION		SPECIFICATION
A/F SEN1 (B1)	● Engine: After warming up	Maintaining engine speed at 2,000 rpm	Fluctuates around 1.5V

On Board Diagnosis Logic

UBS00JJZ

To judge the malfunction, the A/F signal computed by ECM from the air fuel ratio (A/F) sensor 1 signal is monitored not to be shifted lean side or rich side. When the A/F sensor 1 signal is shifting to the lean side, the malfunction will be detected.

DTC No.	Trouble diagnosis name	DTC detecting condition	Possible Cause
P1273 1273	Air fuel ratio (A/F) sensor 1 lean shift monitoring	The output voltage computed by ECM from the A/F sensor 1 signal is shifted to the lean side for a specified period.	● Air fuel ratio (A/F) sensor 1 ● Air fuel ratio (A/F) sensor heater 1 ● Fuel pressure ● Fuel injector ● Intake air leaks

DTC Confirmation Procedure

UBS00JK0

NOTE:
If DTC Confirmation Procedure has been previously conducted, always turn ignition switch OFF and wait at least 10 seconds before conducting the next test.

TESTING CONDITION:
Before performing the following procedure, confirm that battery voltage is more than 11V at idle.

WITH CONSULT-II

1. Start engine and warm it up to normal operating temperature.
2. Turn ignition switch OFF and wait at least 10 seconds.

3. Turn ignition switch ON and select “SELF-LEARNING CONT” in “WORK SUPPORT” mode with CONSULT-II.
4. Clear the self-learning coefficient by touching “CLEAR”.
5. Turn ignition switch OFF and wait at least 10 seconds.
6. Start engine and keep the engine speed between 3,500 and 4,000 rpm for 1 minute under no load.
7. Let engine idle for 1 minute.
8. Keep engine speed between 2,500 and 3,000 rpm for 20 minutes.
9. If 1st trip DTC is detected, go to EC-1198, "Diagnostic Procedure" .

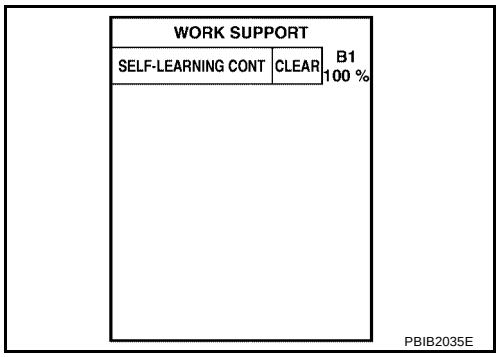

WITH GST

1. Start engine and warm it up to normal operating temperature.
2. Turn ignition switch OFF and wait at least 10 seconds.
3. Disconnect mass air flow sensor harness connector.
4. Start engine and let it idle for at least 5 seconds.
5. Stop engine and reconnect mass air flow sensor harness connector.
6. Select Service $03 with GST and make sure that DTC P0102 is detected.
7. Select Service $04 with GST and erase the DTC P0102.
8. Start engine and keep the engine speed between 3,500 and 4,000 rpm for 1 minute under no load.
9. Let engine idle for 1 minute.
10. Keep engine speed between 2,500 and 3,000 rpm for 20 minutes.
11. Select Service $07 with GST.
    If 1st trip DTC is detected, go to EC-1198, "Diagnostic Procedure" .

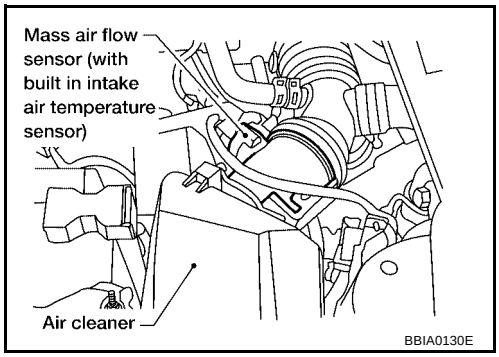

Wiring Diagram

UBS00JK1

EC-A/F-01

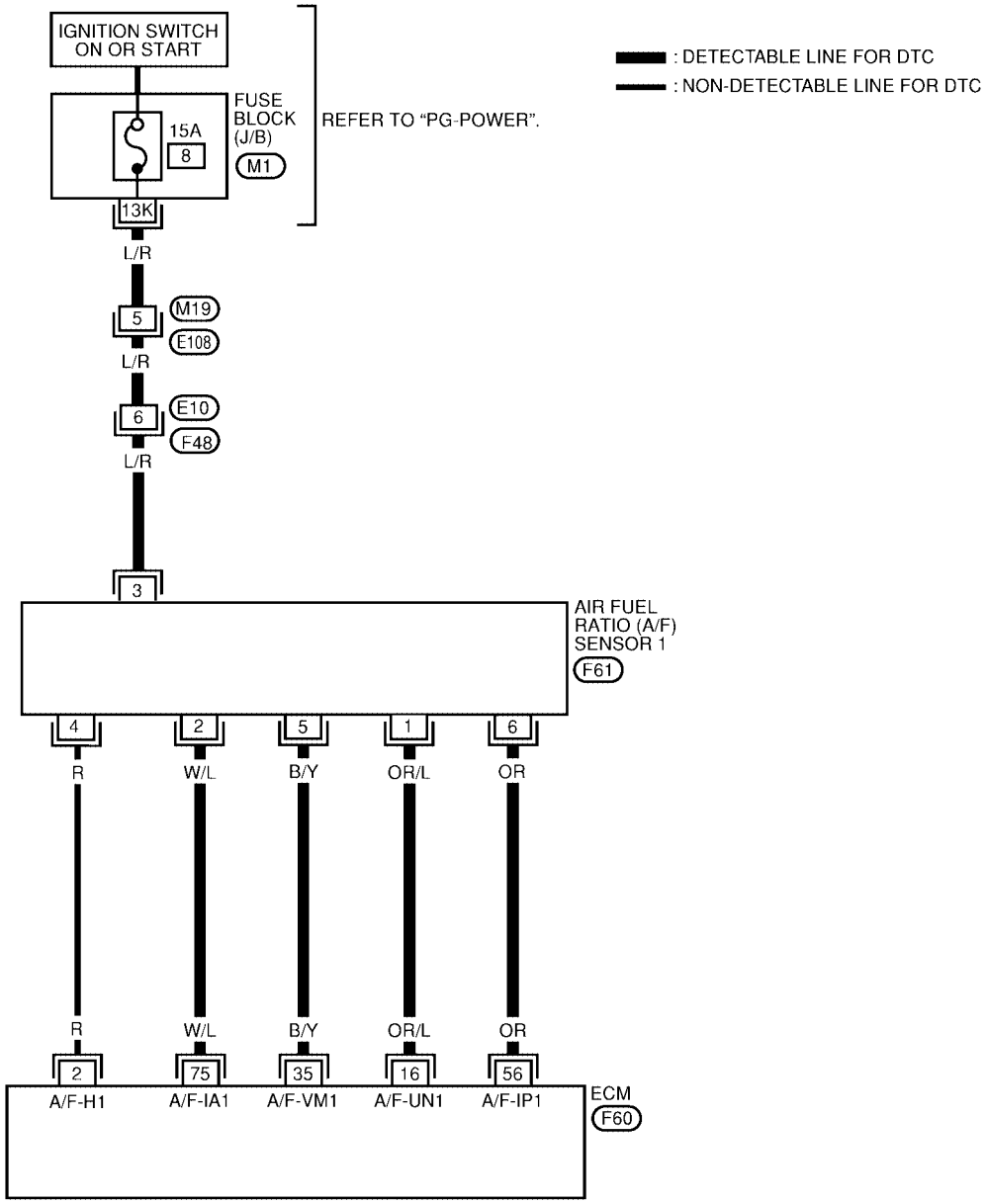

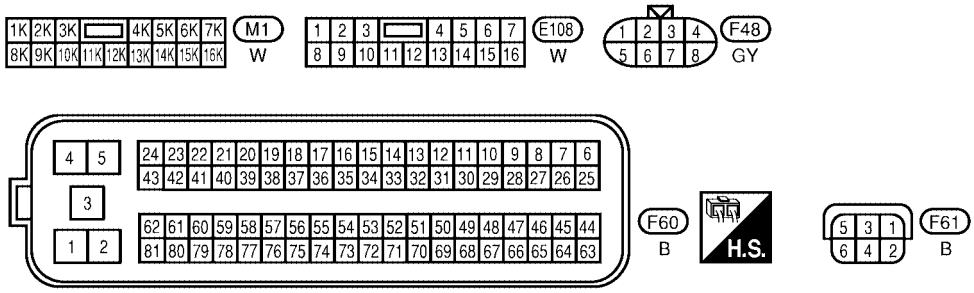

BBWA1478E

Specification data are reference values and are measured between each terminal and ground.

CAUTION:

Do not use ECM ground terminals when measuring input/output voltage. Doing so may result in damage to the ECM's transistor. Use a ground other than ECM terminals, such as the ground.

TERMINAL NO.	WIRE COLOR	ITEM	CONDITION	DATA (DC Voltage)
16	OR/L	A/F sensor 1	**[Engine is running]** ● **Warm-up condition** ● Idle speed	Approximately 3.1V
35	B/Y			Approximately 2.6V
56	OR			2 - 3V
75	W/L			2 - 3V

Diagnostic Procedure

UBS00JK2

1. CHECK GROUND CONNECTIONS

1. Turn ignition switch OFF.
2. Loosen and retighten engine two screws on the body.
   Refer to EC-841, "Ground Inspection" .

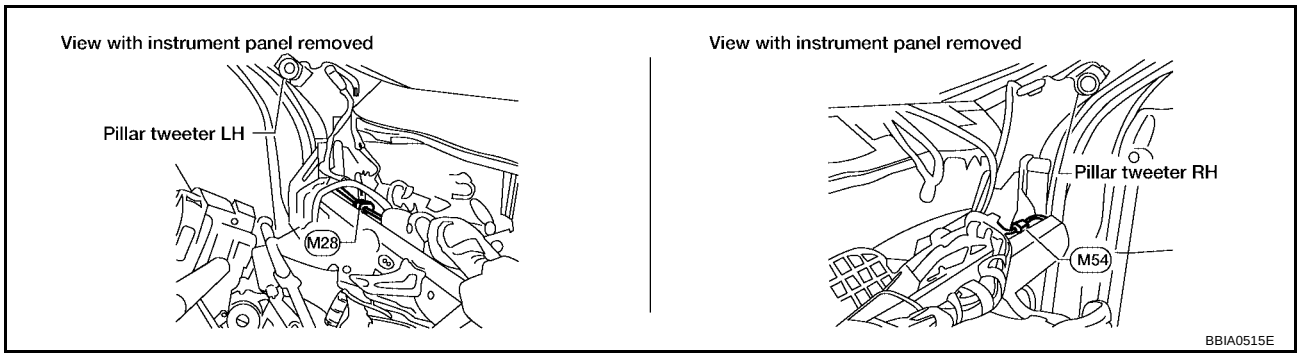

OK or NG

OK >> GO TO 2.
NG >> Repair or replace ground connections.

2. RETIGHTEN AIR FUEL RATIO (A/F) SENSOR 1

Loosen and retighten the air fuel ratio (A/F) sensor 1.

Tightening torque: 40 - 60 N-m (4.1 - 6.1 kg-m, 30 - 44 ft-lb)

>> GO TO 3.

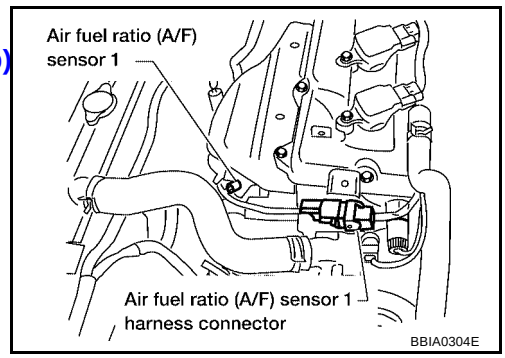

3. CLEAR THE SELF-LEARNING DATA.

With CONSULT-II

1. Start engine and warm it up to normal operating temperature.
2. Select “SELF-LEARNING CONT” in “WORK SUPPORT” mode with CONSULT-II.
3. Clear the self-learning control coefficient by touching “CLEAR”.
4. Run engine for at least 10 minutes at idle speed.
   Is the 1st trip DTC P0171 detected? Is it difficult to start engine?

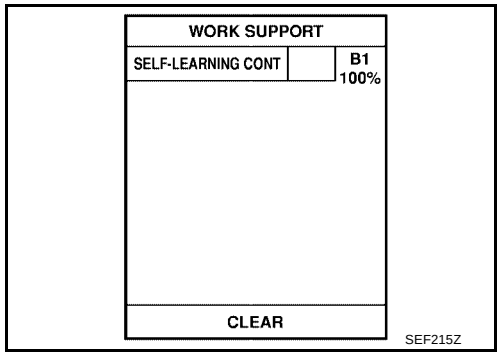

Without CONSULT-II

1. Start engine and warm it up to normal operating temperature.
2. Turn ignition switch OFF.
3. Disconnect mass air flow sensor harness connector, and restart and run engine for at least 5 seconds at idle speed.
4. Stop engine and reconnect mass air flow sensor harness connector.
5. Make sure DTC P0102 is displayed.
6. Erase the DTC memory. Refer to EC-712, "HOW TO ERASE EMISSION-RELATED DIAGNOSTIC INFORMATION" .
7. Make sure DTC P0000 is displayed.
8. Run engine for at least 10 minutes at idle speed.
   Is the 1st trip DTC P0171 detected? Is it difficult to start engine?

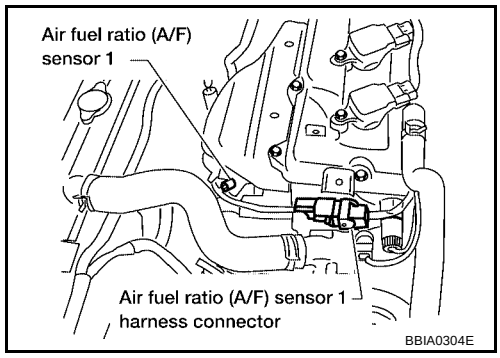

Yes or No

Yes >> Perform trouble diagnosis for DTC P0171. Refer to EC-943 .
No >> GO TO 4.

4. CHECK AIR FUEL RATIO (A/F) SENSOR 1 POWER SUPPLY CIRCUIT

1. Turn ignition switch OFF.
2. Disconnect A/F sensor 1 harness connector.
3. Turn ignition switch ON.

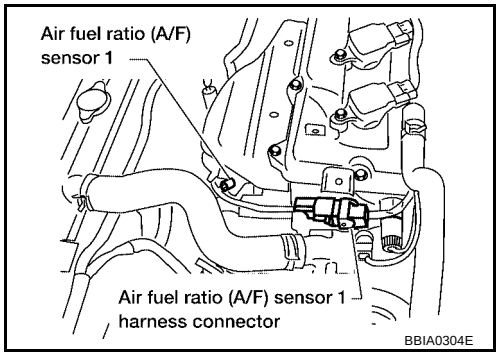

4. Check voltage between A/F sensor 1 terminal 3 and ground with CONSULT-II or tester.

Voltage: Battery voltage

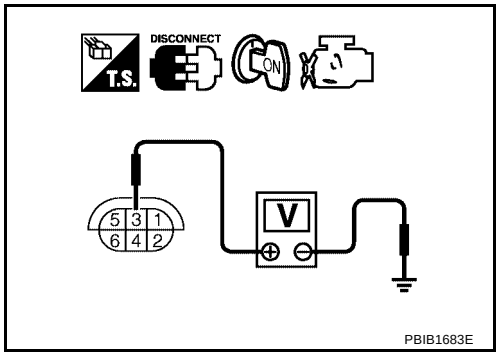

OK or NG

OK >> GO TO 6.
NG >> GO TO 5.

5. DETECT MALFUNCTIONING PART

Check the following.

- Harness connectors M19, E108
- Harness connectors E10, F48
- Fuse block (J/B) connector M1
- 15A fuse
- Harness for open or short between A/F sensor 1 and fuse

>> Repair or replace harness or connectors.

6. CHECK A/F SENSOR 1 INPUT SIGNAL CIRCUIT FOR OPEN AND SHORT

1. Turn ignition switch OFF.
2. Disconnect ECM harness connector.
3. Check harness continuity between the following terminals. Refer to Wiring Diagram.

A/F sensor 1 terminal	ECM terminal
1	16
5	35
6	56
2	75

Continuity should exist.

4. Check harness continuity between ECM terminals 16, 35, 56, 75 or A/F sensor 1 terminals 1, 2, 5, 6 and ground. Refer to Wiring Diagram.

Continuity should not exist.

5. Also check harness for short to power.

OK or NG

OK >> GO TO 7.
NG >> Repair open circuit or short to ground or short to power in harness or connectors.

7. CHECK A/F SENSOR 1 HEATER

Refer to EC-1103, "Component Inspection" .

OK or NG

OK >> GO TO 8.
NG >> Replace A/F sensor 1.

8. CHECK INTERMITTENT INCIDENT

Perform EC-834, "TROUBLE DIAGNOSIS FOR INTERMITTENT INCIDENT" .

OK or NG

OK >> Replace A/F sensor 1.
NG >> Repair or replace.

Removal and Installation

UBS00JK3

AIR FUEL RATIO SENSOR

Refer to EM-113, "EXHAUST MANIFOLD AND THREE WAY CATALYST" .

DTC P1274 A/F SENSOR 1

PFP:22693

Component Description

UBS00JK4

The A/F sensor 1 is a planar dual-cell limit current sensor. The sensor element of the A/F sensor 1 is the combination of a Nernst concentration cell (sensor cell) with an oxygen-pump cell, which transports ions. It has a heater in the element.

The sensor is capable of precise measurement λ = 1, but also in the lean and rich range. Together with its control electronics, the sensor outputs a clear, continuous signal throughout a wide λ range (0.7 < λ < air).

The exhaust gas components diffuse through the diffusion gap at the electrode of the oxygen pump and Nernst concentration cell, where they are brought to thermodynamic balance.

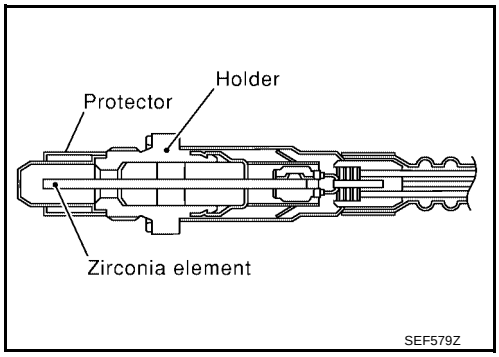

An electronic circuit controls the pump current through the oxygen-pump cell so that the composition of the exhaust gas in the diffusion gap remains constant at λ = 1. Therefore, the A/F sensor 1 is able to indicate air-fuel ratio by this pumping of current. In addition, a heater is integrated in the sensor to ensure the required operating temperature of 700 - 800°C (1,292 - 1,472°F).

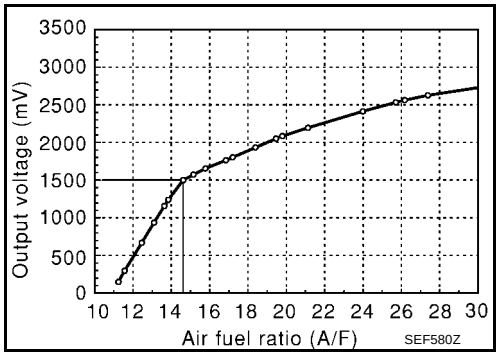

CONSULT-II Reference Value in Data Monitor Mode

UBS00JK5

Specification data are reference values.

MONITOR ITEM	CONDITION		SPECIFICATION
A/F SEN1 (B1)	● Engine: After warming up	Maintaining engine speed at 2,000 rpm	Fluctuates around 1.5V

On Board Diagnosis Logic

UBS00JK6

To judge the malfunction, the A/F signal computed by ECM from the air fuel ratio (A/F) sensor 1 signal is monitored not to be shifted to the lean side or rich side. When the A/F sensor 1 signal is shifting to the rich side, the malfunction will be detected.

DTC No.	Trouble diagnosis name	DTC detecting condition	Possible Cause
P1274 1274	Air fuel ratio (A/F) sensor 1 rich shift monitoring	The A/F signal computed by ECM from the A/F sensor 1 signal is shifted to the rich side for a specified period.	● Air fuel ratio (A/F) sensor 1 ● Air fuel ratio (A/F) sensor heater 1 ● Fuel pressure ● Fuel injector

DTC Confirmation Procedure

UBS00JK7

NOTE:
If DTC Confirmation Procedure has been previously conducted, always turn ignition switch OFF and wait at least 10 seconds before conducting the next test.

TESTING CONDITION:
Before performing the following procedure, confirm that battery voltage is more than 11V at idle.

WITH CONSULT-II

1. Start engine and warm it up to normal operating temperature.
2. Turn ignition switch OFF and wait at least 10 seconds.
3. Turn ignition switch ON and select “SELF-LEARNING CONT” in “WORK SUPPORT” mode with CONSULT-II.

4. Clear the self-learning coefficient by touching “CLEAR”.
5. Turn ignition switch OFF and wait at least 10 seconds.
6. Start engine and keep the engine speed between 3,500 and 4,000 rpm for 1 minute under no load.
7. Let engine idle for 1 minute.
8. Keep engine speed between 2,500 and 3,000 rpm for 20 minutes.
9. If 1st trip DTC is detected, go to EC-1205, "Diagnostic Procedure" .

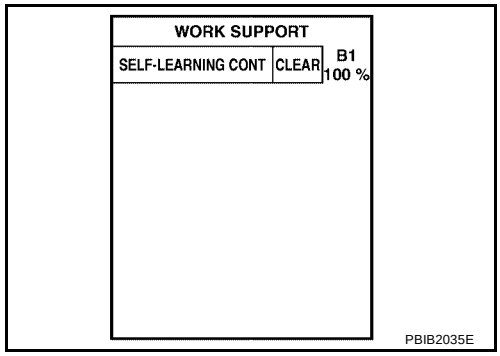

WITH GST

1. Start engine and warm it up to normal operating temperature.
2. Turn ignition switch OFF and wait at least 10 seconds.
3. Disconnect mass air flow sensor harness connector.
4. Start engine and let it idle for at least 5 seconds.
5. Stop engine and reconnect mass air flow sensor harness connector.
6. Select Service $03 with GST and make sure that DTC P0102 is detected.
7. Select Service $04 with GST and erase the DTC P0102.
8. Start engine and keep the engine speed between 3,500 and 4,000 rpm for 1 minute under no load.
9. Let engine idle for 1 minute.
10. Keep engine speed between 2,500 and 3,000 rpm for 20 minutes.
11. Select Service $07 with GST.
    If 1st trip DTC is detected, go to EC-1205, "Diagnostic Procedure" .

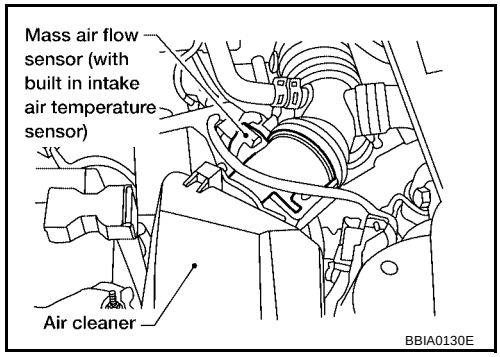

Wiring Diagram

UBS00JK8

EC-A/F-01

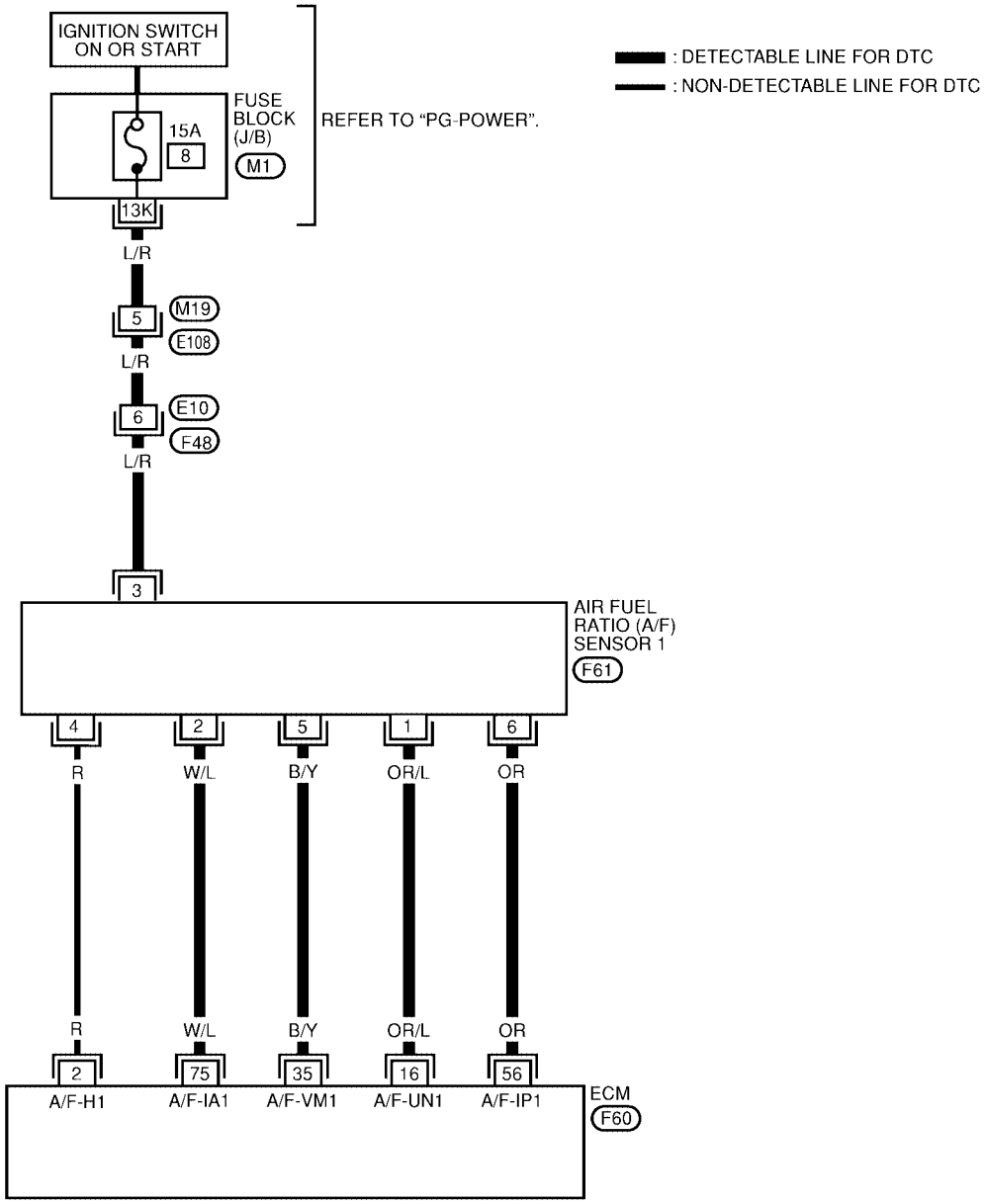

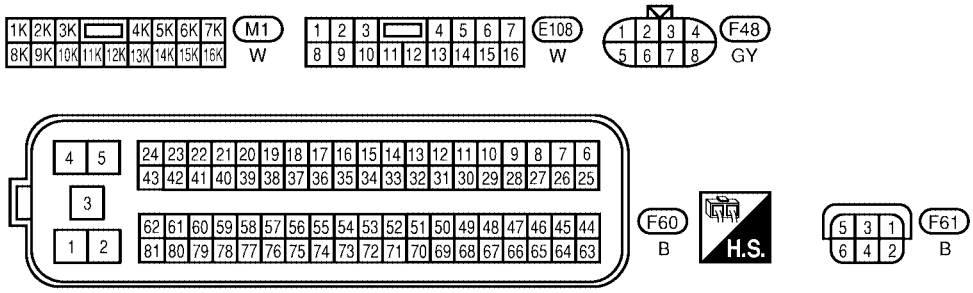

BBWA1478E

Specification data are reference values and are measured between each terminal and ground.

CAUTION:

Do not use ECM ground terminals when measuring input/output voltage. Doing so may result in damage to the ECM's transistor. Use a ground other than ECM terminals, such as the ground.

TERMINAL NO.	WIRE COLOR	ITEM	CONDITION	DATA (DC Voltage)
16	OR/L	A/F sensor 1	**[Engine is running]** ● **Warm-up condition** ● Idle speed	Approximately 3.1V
35	B/Y			Approximately 2.6V
56	OR			2 - 3V
75	W/L			2 - 3V

Diagnostic Procedure

UBS00JK9

1. CHECK GROUND CONNECTIONS

1. Turn ignition switch OFF.
2. Loosen and retighten engine two screws on the body.
   Refer to EC-841, "Ground Inspection" .

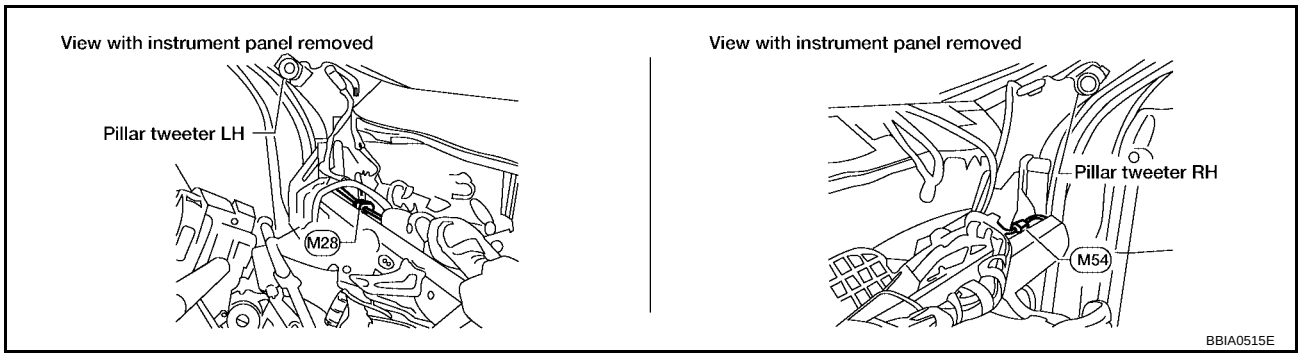

OK or NG

OK >> GO TO 2.
NG >> Repair or replace ground connections.

2. RETIGHTEN AIR FUEL RATIO (A/F) SENSOR 1

Loosen and retighten the air fuel ratio (A/F) sensor 1.

Tightening torque: 40 - 60 N-m (4.1 - 6.1 kg-m, 30 - 44 ft-lb)

>> GO TO 3.

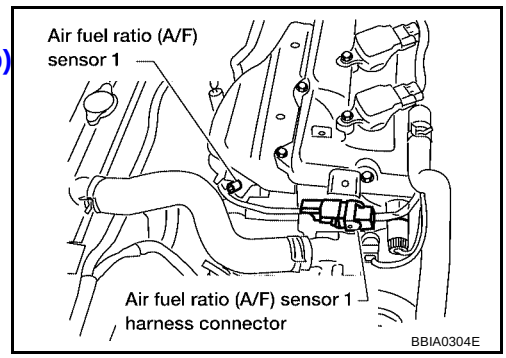

3. CLEAR THE SELF-LEARNING DATA

With CONSULT-II

1. Start engine and warm it up to normal operating temperature.
2. Select “SELF-LEARNING CONT” in “WORK SUPPORT” mode with CONSULT-II.
3. Clear the self-learning control coefficient by touching “CLEAR”.
4. Run engine for at least 10 minutes at idle speed.
   Is the 1st trip DTC P0172 detected? Is it difficult to start engine?

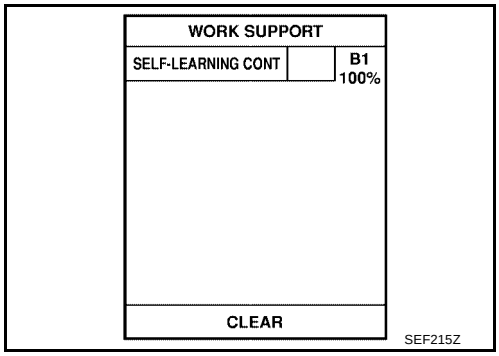

Without CONSULT-II

1. Start engine and warm it up to normal operating temperature.
2. Turn ignition switch OFF.
3. Disconnect mass air flow sensor harness connector, and restart and run engine for at least 5 seconds at idle speed.
4. Stop engine and reconnect mass air flow sensor harness connector.
5. Make sure DTC P0102 is displayed.
6. Erase the DTC memory. Refer to EC-712, "HOW TO ERASE EMISSION-RELATED DIAGNOSTIC INFORMATION" .
7. Make sure DTC P0000 is displayed.
8. Run engine for at least 10 minutes at idle speed.
   Is the 1st trip DTC P0172 detected? Is it difficult to start engine?

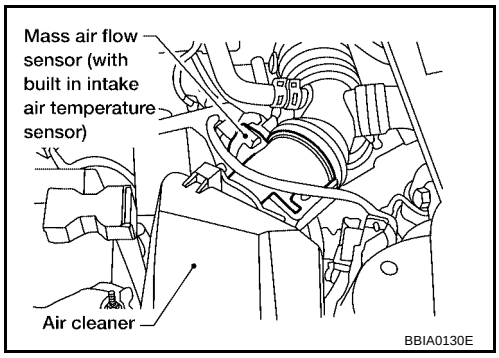

Yes or No

Yes >> Perform trouble diagnosis for DTC P0172. Refer to EC-954 .
No >> GO TO 4.

4. CHECK HARNESS CONNECTOR

1. Turn ignition switch OFF.
2. Disconnect A/F sensor 1 harness connector.
3. Check harness connector for water.
   Water should not exit.

OK or NG

OK >> GO TO 5.
NG >> Repair or replace harness connector.

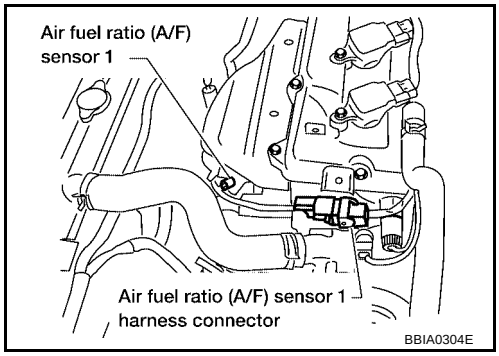

5. CHECK AIR FUEL RATIO (A/F) SENSOR 1 POWER SUPPLY CIRCUIT

1. Turn ignition switch ON.
2. Check voltage between A/F sensor 1 terminal 3 and ground with CONSULT-II or tester.

Voltage: Battery voltage

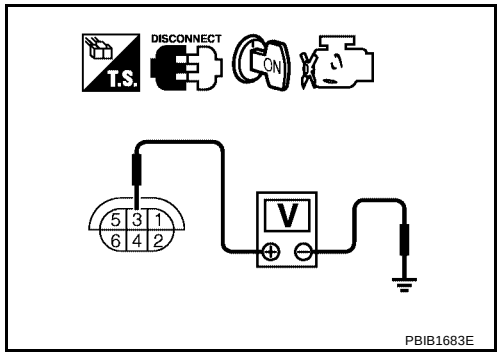

OK or NG

OK >> GO TO 7.
NG >> GO TO 6.

6. DETECT MALFUNCTIONING PART

Check the following.

- Harness connectors M19, E108
- Harness connectors E10, F48
- Fuse block (J/B) connector M1
- 15A fuse
- Harness for open or short between A/F sensor 1 and fuse

>> Repair or replace harness or connectors.

7. CHECK A/F SENSOR 1 INPUT SIGNAL CIRCUIT FOR OPEN AND SHORT

1. Turn ignition switch OFF.
2. Disconnect ECM harness connector.
3. Check harness continuity between the following terminals. Refer to Wiring Diagram.

A/F sensor 1 terminal	ECM terminal
1	16
5	35
6	56
2	75

Continuity should exist.

4. Check harness continuity between ECM terminals 16, 35, 56, 75 or A/F sensor 1 terminals 1, 2, 5, 6 and ground. Refer to Wiring Diagram.

Continuity should not exist.

5. Also check harness for short to power.

OK or NG

OK >> GO TO 8.
NG >> Repair open circuit or short to ground or short to power in harness or connectors.

8. CHECK A/F SENSOR 1 HEATER

Refer to EC-1103, "Component Inspection" .

OK or NG

OK >> GO TO 9.
NG >> Replace A/F sensor 1.

9. CHECK INTERMITTENT INCIDENT

Perform EC-834, "TROUBLE DIAGNOSIS FOR INTERMITTENT INCIDENT" .

OK or NG

OK >> Replace A/F sensor 1.
NG >> Repair or replace.

Removal and Installation

UBS00JKA

AIR FUEL RATIO SENSOR

Refer to EM-113, "EXHAUST MANIFOLD AND THREE WAY CATALYST" .

DTC P1276 A/F SENSOR 1

PFP:22693

Component Description

UBS00JKB

The A/F sensor 1 is a planar dual-cell limit current sensor. The sensor element of the A/F sensor 1 is the combination of a Nernst concentration cell (sensor cell) with an oxygen-pump cell, which transports ions. It has a heater in the element.

The sensor is capable of precise measurement $\lambda = 1$, but also in the lean and rich range. Together with its control electronics, the sensor outputs a clear, continuous signal throughout a wide λ range ($0.7 < \lambda <$ air).

The exhaust gas components diffuse through the diffusion gap at the electrode of the oxygen pump and Nernst concentration cell, where they are brought to thermodynamic balance.

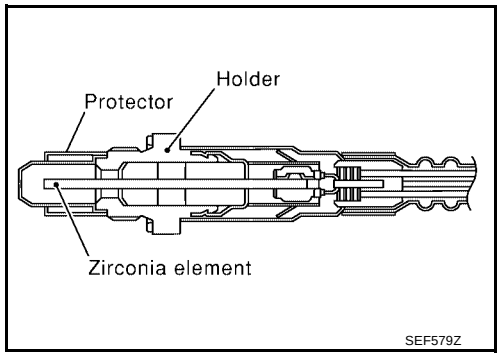

An electronic circuit controls the pump current through the oxygen-pump cell so that the composition of the exhaust gas in the diffusion gap remains constant at $\lambda = 1$. Therefore, the A/F sensor 1 is able to indicate air-fuel ratio by this pumping of current. In addition, a heater is integrated in the sensor to ensure the required operating temperature of 700 - 800°C (1,292 - 1,472°F).

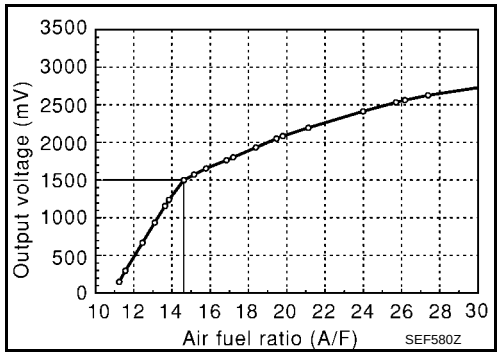

CONSULT-II Reference Value in Data Monitor Mode

UBS00JKC

Specification data are reference values.

MONITOR ITEM	CONDITION		SPECIFICATION
A/F SEN1 (B1)	● Engine: After warming up	Maintaining engine speed at 2,000 rpm	Fluctuates around 1.5V

On Board Diagnosis Logic

UBS00JKD

To judge the malfunction, the diagnosis checks that the A/F signal computed by ECM from the air fuel ratio (A/F) sensor 1 signal fluctuates according to fuel feedback control.

DTC No.	Trouble diagnosis name	DTC detecting condition	Possible Cause
P1276 1276	Air fuel ratio (A/F) sensor 1 circuit high voltage	The A/F signal computed by ECM from the A/F sensor 1 signal is constantly approx. 1.5V.	● Harness or connectors (The sensor circuit is open or shorted.) ● Air fuel ratio (A/F) sensor 1

DTC Confirmation Procedure

UBS00JKE

CAUTION:

Always drive vehicle at a safe speed.

NOTE:

If DTC Confirmation Procedure has been previously conducted, always turn ignition switch OFF and wait at least 10 seconds before conducting the next test.

TESTING CONDITION:

Before performing the following procedure, confirm that battery voltage is more than 11V at idle.

WITH CONSULT-II

1. Start engine and warm it up to normal operating temperature.
2. Select “A/F SEN1 (B1)” in “DATA MONITOR” mode with CONSULT-II.
3. Check “A/F SEN1 (B1)” indication.

If the indication is constantly approx. 1.5V and does not fluctuates, go to EC-1213, "Diagnostic Procedure".
If the indication fluctuates around 1.5V, go to next step.

4. Select “A/F SEN1 (B1) P1276” of “A/F SEN1” in “DTC WORK SUPPORT” mode with CONSULT-II.
5. Touch “START”.
6. When the following conditions are met, “TESTING” will be displayed on the CONSULT-II screen.

ENG SPEED	1,750 - 3,200 rpm
Vehicle speed	More than 64 km/h (40 MPH)
B/FUEL SCHDL	1.0 - 8.0 msec
COOLANT TEMP/S	More than 70°C (158°F)
Shift lever	D position with OD ON (A/T models)
	5th position (M/T models)

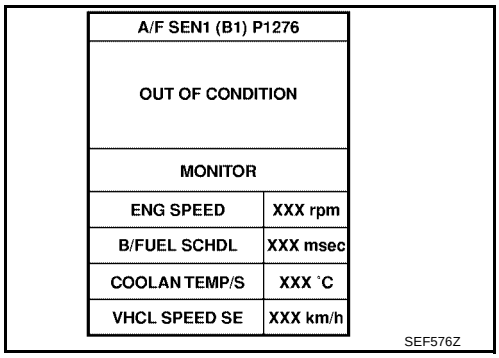

If “TESTING” is not displayed after 20 seconds, retry from step 2.

7. Release accelerator pedal fully.
   NOTE:
   Never apply brake during releasing the accelerator pedal.

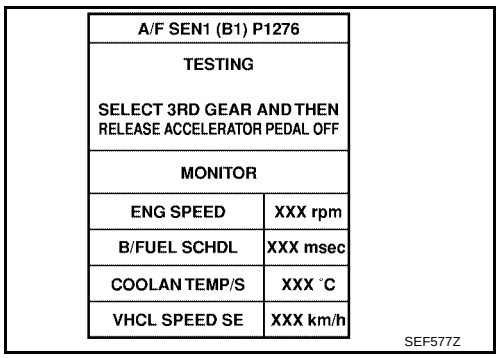

8. Make sure that “TESTING” changes to “COMPLETED”.
   If “TESTING” changed to “OUT OF CONDITION”, retry from step 6.
9. Make sure that “OK” is displayed after touching “SELF-DIAG RESULT”.
   If “NG” is displayed, go to EC-1213, "Diagnostic Procedure" .

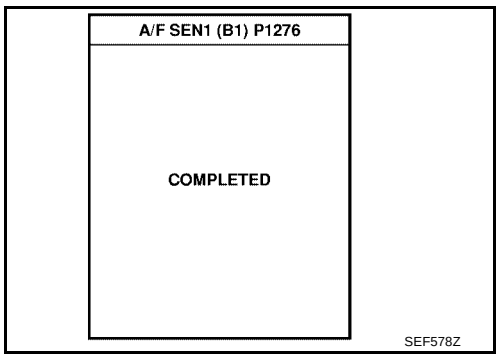

Overall Function Check

UBS00JKF

Use this procedure to check the overall function of the A/F sensor 1 circuit. During this check, a 1st trip DTC might not be confirmed.

WITH GST

1. Start engine and warm it up to normal operating temperature.
2. Drive the vehicle at a speed of 80 km/h (50 MPH) for a few minutes in the suitable gear position.
3. Set D position with “OD” ON (A/T) or 5th position (M/T), then release the accelerator pedal fully until the vehicle speed decreases to 50 km/h (30 MPH).
   NOTE:
   Never apply brake during releasing the accelerator pedal.
4. Repeat steps 2 to 3 for 5 times.
5. Stop the vehicle and turn ignition switch OFF.
6. Wait at least 10 seconds and restart engine.

7. Repeat steps 2 to 3 for 5 times.
8. Stop the vehicle and connect GST to the vehicle.
9. Make sure that no 1st trip DTC is displayed.
   If the 1st trip DTC is displayed, go to EC-1213, "Diagnostic Procedure" .

Wiring Diagram

UBS00JKG

EC-A/F-01

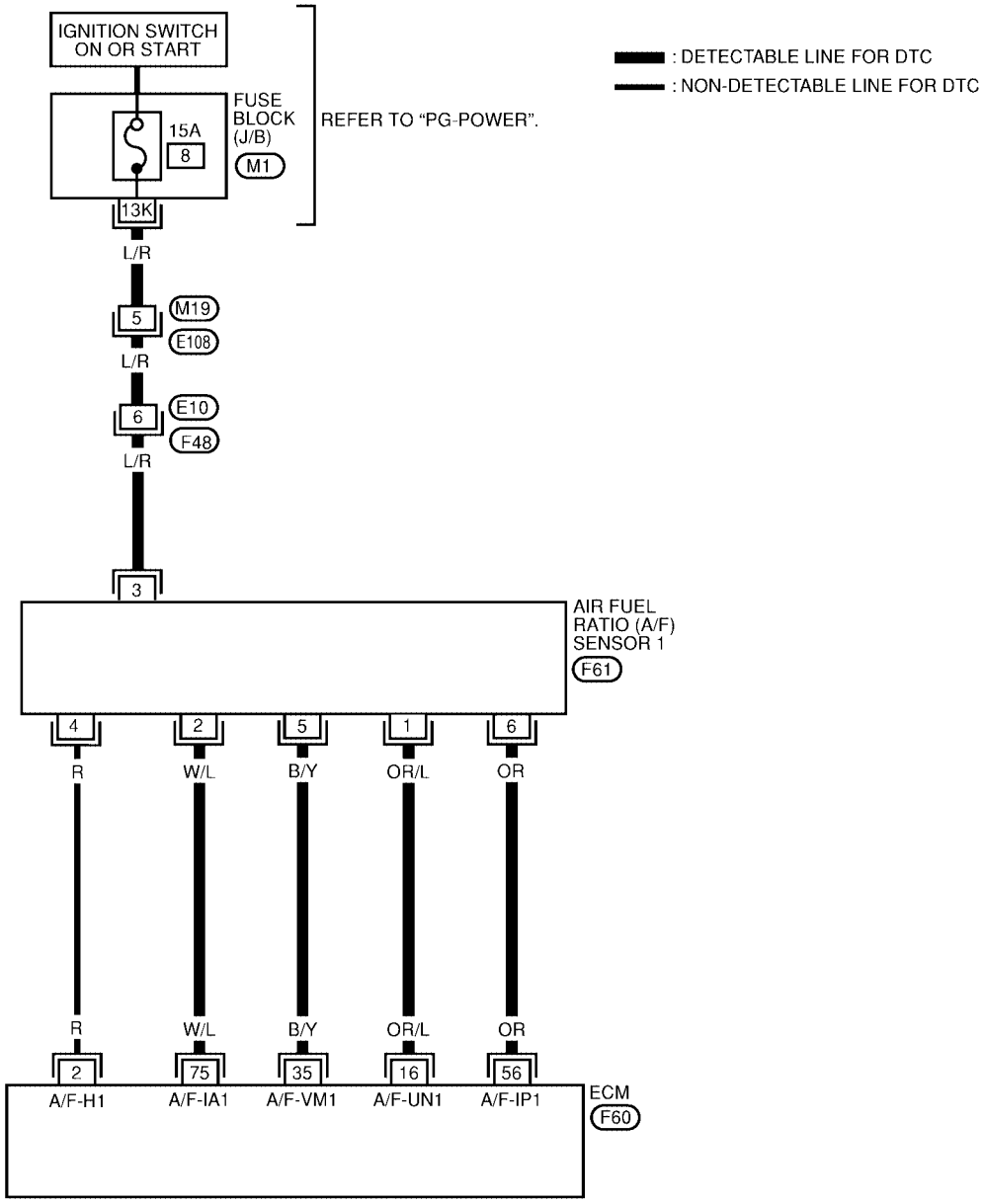

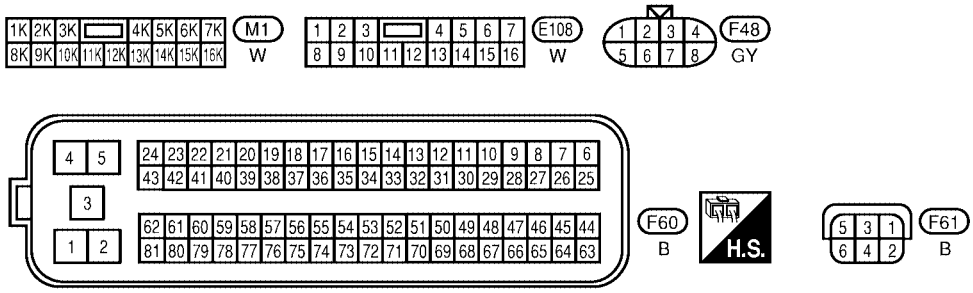

BBWA1478E

Specification data are reference values and are measured between each terminal and ground.

CAUTION:

Do not use ECM ground terminals when measuring input/output voltage. Doing so may result in damage to the ECM's transistor. Use a ground other than ECM terminals, such as the ground.

TERMINAL NO.	WIRE COLOR	ITEM	CONDITION	DATA (DC Voltage)
16	OR/L	A/F sensor 1	**[Engine is running]** ● **Warm-up condition** ● Idle speed	Approximately 3.1V
35	B/Y			Approximately 2.6V
56	OR			2 - 3V
75	W/L			2 - 3V

Diagnostic Procedure

UBS00JKH

1. CHECK GROUND CONNECTIONS

1. Turn ignition switch OFF.
2. Loosen and retighten engine two screws on the body.
   Refer to EC-841, "Ground Inspection" .

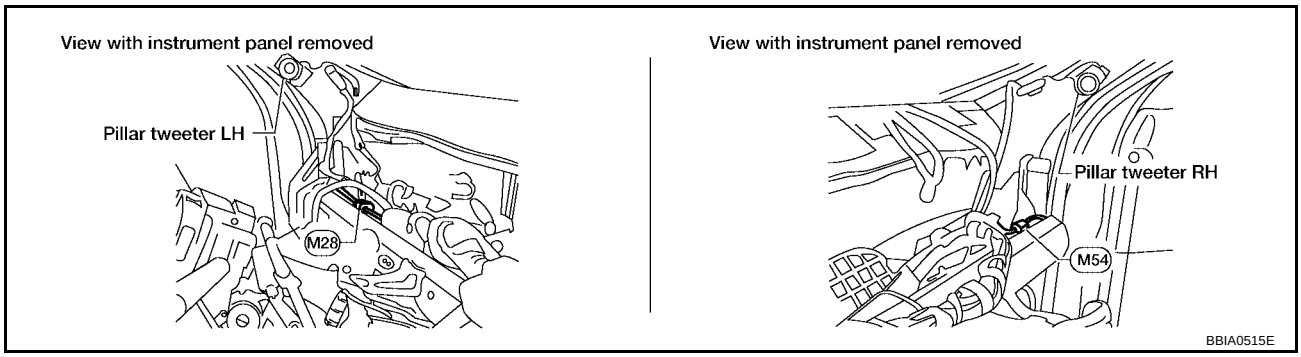

OK or NG

OK >> GO TO 2.
NG >> Repair or replace ground connections.

2. CHECK AIR FUEL RATIO (A/F) SENSOR 1 POWER SUPPLY CIRCUIT

1. Disconnect A/F sensor 1 harness connector.
2. Turn ignition switch ON.

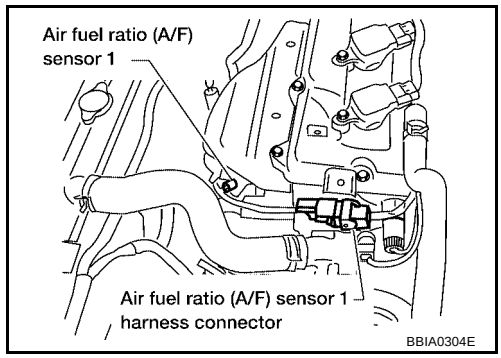

3. Check voltage between A/F sensor 1 terminal 3 and ground with CONSULT-II or tester.

Voltage: Battery voltage

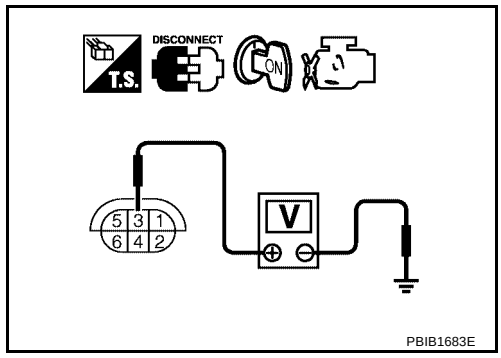

OK or NG

OK >> GO TO 4.
NG >> GO TO 3.

3. DETECT MALFUNCTIONING PART

Check the following.

- Harness connectors M19, E108
- Harness connectors E10, F48
- Fuse block (J/B) connector M1
- 15A fuse
- Harness for open or short between A/F sensor 1 and fuse

>> Repair or replace harness or connectors.

4. CHECK A/F SENSOR 1 INPUT SIGNAL CIRCUIT FOR OPEN AND SHORT

1. Turn ignition switch OFF.
2. Disconnect ECM harness connector.
3. Check harness continuity between the following terminals. Refer to Wiring Diagram.

A/F sensor 1 terminal	ECM terminal
1	16
5	35
6	56
2	75

Continuity should exist.

4. Check harness continuity between ECM terminals 16, 35, 56, 75 or A/F sensor 1 terminals 1, 2, 5, 6 and ground. Refer to Wiring Diagram.

Continuity should not exist.

5. Also check harness for short to power.

OK or NG

OK >> GO TO 5.
NG >> Repair open circuit or short to ground or short to power in harness or connectors.

5. CHECK INTERMITTENT INCIDENT

Perform EC-834, "TROUBLE DIAGNOSIS FOR INTERMITTENT INCIDENT" .

OK or NG

OK >> Replace A/F sensor 1.
NG >> Repair or replace.

Removal and Installation

UBS00JKI

AIR FUEL RATIO SENSOR

Refer to EM-113, "EXHAUST MANIFOLD AND THREE WAY CATALYST"

DTC P1278 A/F SENSOR 1

PFP:22693

Component Description

UBS00JKJ

The A/F sensor 1 is a planar dual-cell limit current sensor. The sensor element of the A/F sensor 1 is the combination of a Nernst concentration cell (sensor cell) with an oxygen-pump cell, which transports ions. It has a heater in the element.

The sensor is capable of precise measurement λ = 1, but also in the lean and rich range. Together with its control electronics, the sensor outputs a clear, continuous signal throughout a wide λ range (0.7 < λ < air).

The exhaust gas components diffuse through the diffusion gap at the electrode of the oxygen pump and Nernst concentration cell, where they are brought to thermodynamic balance.

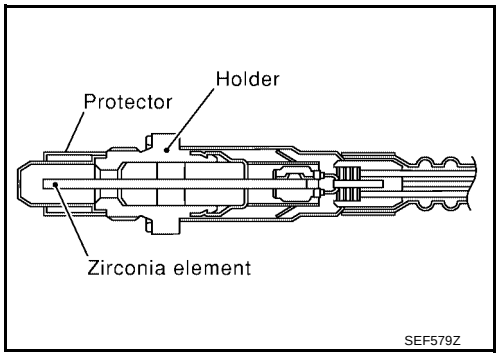

An electronic circuit controls the pump current through the oxygen-pump cell so that the composition of the exhaust gas in the diffusion gap remains constant at λ = 1. Therefore, the A/F sensor 1 is able to indicate air-fuel ratio by this pumping of current. In addition, a heater is integrated in the sensor to ensure the required operating temperature of 700 - 800°C (1,292 - 1,472°F).

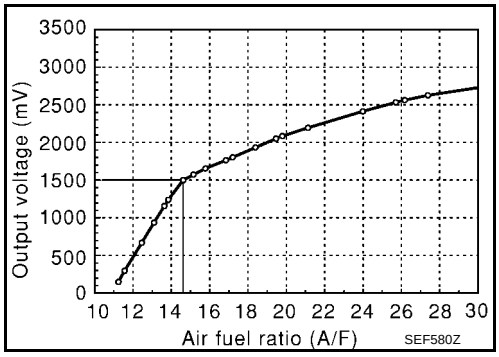

CONSULT-II Reference Value in Data Monitor Mode

UBS00JKK

Specification data are reference values.

MONITOR ITEM	CONDITION		SPECIFICATION
A/F SEN1 (B1)	● Engine: After warming up	Maintaining engine speed at 2,000 rpm	Fluctuates around 1.5V

On Board Diagnosis Logic

UBS00JKL

To judge the malfunction of air fuel ratio (A/F) sensor 1, this diagnosis measures response time of the A/F signal computed by ECM from the air fuel ratio (A/F) sensor 1 signal. The time is compensated by engine operating (speed and load), fuel feedback control constant, and the air fuel ratio (A/F) sensor 1 temperature index. Judgment is based on whether the compensated time (the A/F sensor 1 signal cycling time index) is inordinately long or not.

DTC No.	Trouble diagnosis name	DTC detecting condition	Possible Cause
P1278 1278	Air fuel ratio (A/F) sensor 1 circuit slow response	The response (from RICH to LEAN) of the A/F signal computed by ECM from A/F sensor 1 signal takes more than the specified time.	● Harness or connectors (The sensor circuit is open or shorted.) ● Air fuel ratio (A/F) sensor 1 ● Air fuel ratio (A/F) sensor heater 1 ● Fuel pressure ● Fuel injector ● Intake air leaks ● Exhaust gas leaks ● PCV ● Mass air flow sensor

DTC Confirmation Procedure

UBS00JKM

NOTE:
If DTC Confirmation Procedure has been previously conducted, always turn ignition switch OFF and wait at least 10 seconds before conducting the next test.
TESTING CONDITION:
Before performing the following procedure, confirm that battery voltage is more than 11V at idle.

WITH CONSULT-II

1. Start engine and warm it up to normal operating temperature.
2. Turn ignition switch OFF and wait at least 10 seconds.
3. Start engine and keep the engine speed between 3,500 and 4,000 rpm for at least 1minute under no load.
4. Let engine idle for 1 minute.
5. Select “A/F SEN1(B1) P1278/P1279” of “A/F SEN1” in “DTC WORK SUPPORT” mode with CONSULT-II.
6. Touch “START”.
   If “COMPLETED” appears on CONSULT-II screen, go to step 10.
   If “COMPLETED” does not appear on CONSULT-II screen, go to the following step.

A/F SEN1 (B1) P1278/P1279	
OUT OF CONDITION	
MONITOR	
ENG SPEED	XXX rpm
B/FUEL SCHDL	XXX msec
COOLAN TEMP/S	XXX °C
VHCL SPEED SE	XXX km/h

PBIB0756E

7. After perform the following procedure, “TESTING” will be displayed on the CONSULT-II screen.
   a. Increase the engine speed up to 4,000 to 5,000 rpm and keep it for 10 seconds.
   b. Fully release accelerator pedal and then let engine idle for about 10 seconds.
   If “TESTING” is not displayed after 10 seconds, refer to EC-815, "TROUBLE DIAGNOSIS - SPECIFICATION VALUE" .
8. Wait for about 20 seconds at idle at under the condition that “TESTING” is displayed on the CONSULT-II screen.

A/F SEN1 (B1) P1278/P1279	
TESTING	
MONITOR	
ENG SPEED	XXX rpm
B/FUEL SCHDL	XXX msec
COOLAN TEMP/S	XXX °C
VHCL SPEED SE	XXX km/h

PBIB1925E

9. Make sure that “TESTING” changes to “COMPLETED”.
   If “TESTING” changed to “OUT OF CONDITION”, refer to EC-815, "TROUBLE DIAGNOSIS - SPECIFICATION VALUE" .
10. Make sure that “OK” is displayed after touching “SELF-DIAG RESULT”.
    If “NG” is displayed, go to EC-1220, "Diagnostic Procedure" .

A/F SEN1 (B1) P1278/P1279
COMPLETED

PBIB0758E

WITH GST

1. Start engine and warm it up to normal operating temperature.
2. Select Service $01 with GST.
3. Calculate the total value of “Short term fuel trim” and “Long term fuel trim” indications.
   Make sure that the total percentage should be within ±15%.
   If OK, go to the following step.
   If NG, check the following.
   - Intake air leaks

- Exhaust gas leaks
- Incorrect fuel pressure
- Lack of fuel
- Fuel injector
- Incorrect PCV hose connection
- PCV valve
- Mass air flow sensor

4. Turn ignition switch OFF and wait at least 10 seconds.
5. Start engine and keep the engine speed between 3,500 and 4,000 rpm for at least 1minute under no load.
6. Let engine idle for 1 minute.
7. Increase the engine speed up to 4,000 to 5,000 rpm and keep it for 10 seconds.
8. Fully release accelerator pedal and then let engine idle for about 1 minute.
9. Select Service $07 with GST.
   If 1st trip DTC is detected, go to EC-1220, "Diagnostic Procedure" .

Wiring Diagram

UBS00JKN

EC-A/F-01

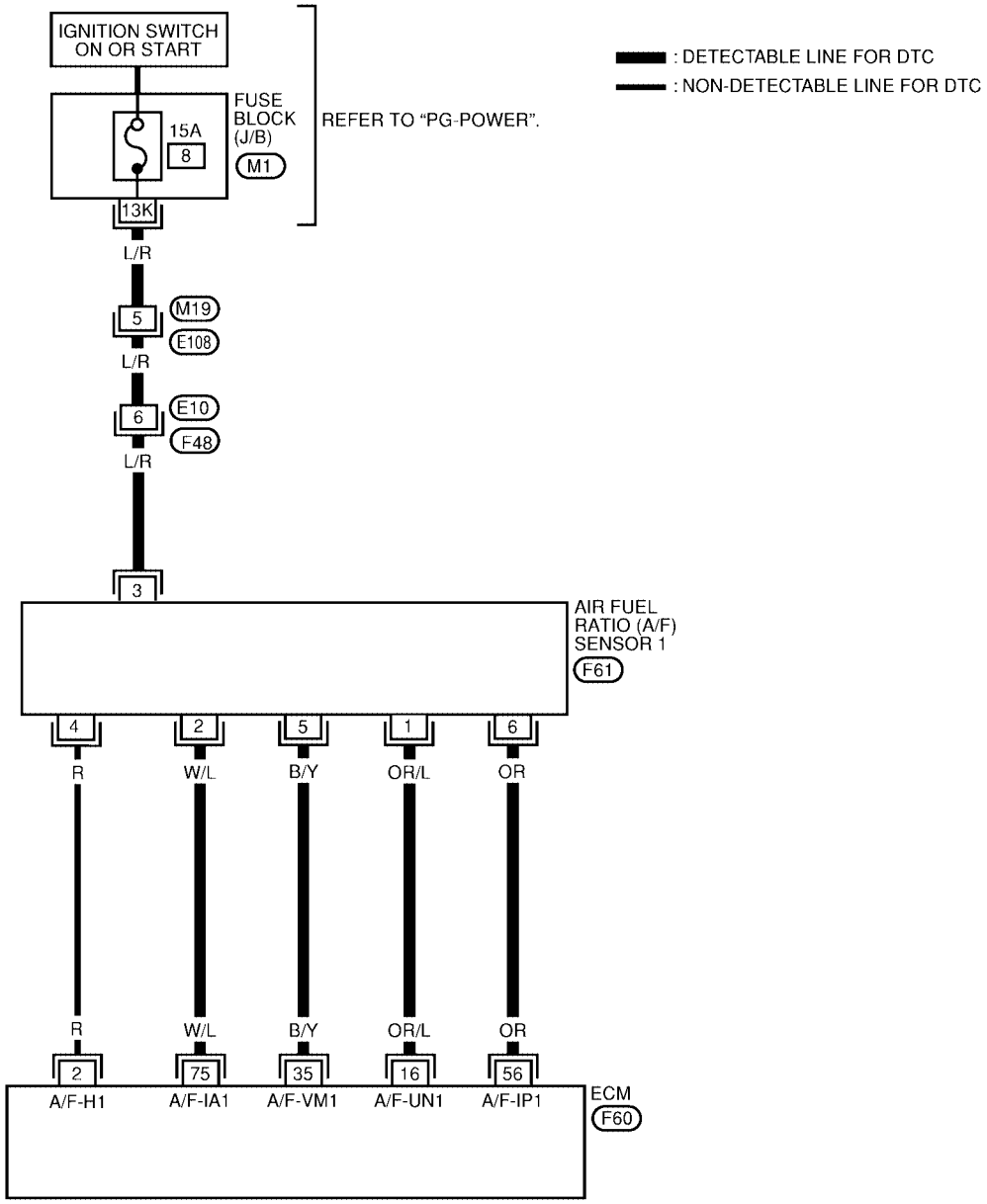

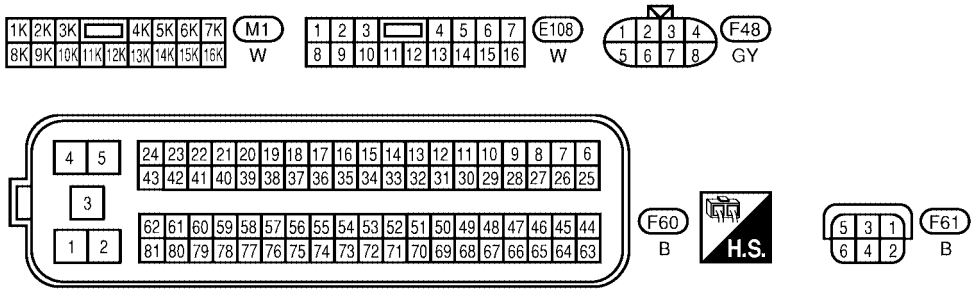

BBWA1478E

Specification data are reference values and are measured between each terminal and ground.

CAUTION:

Do not use ECM ground terminals when measuring input/output voltage. Doing so may result in damage to the ECM's transistor. Use a ground other than ECM terminals, such as the ground.

TERMINAL NO.	WIRE COLOR	ITEM	CONDITION	DATA (DC Voltage)
16	OR/L	A/F sensor 1	**[Engine is running]** ● **Warm-up condition** ● Idle speed	Approximately 3.1V
35	B/Y			Approximately 2.6V
56	OR			2 - 3V
75	W/L			2 - 3V

Diagnostic Procedure

UBS00JKO

1. CHECK GROUND CONNECTIONS

1. Turn ignition switch OFF.
2. Loosen and retighten engine two screws on the body.
   Refer to EC-841, "Ground Inspection" .

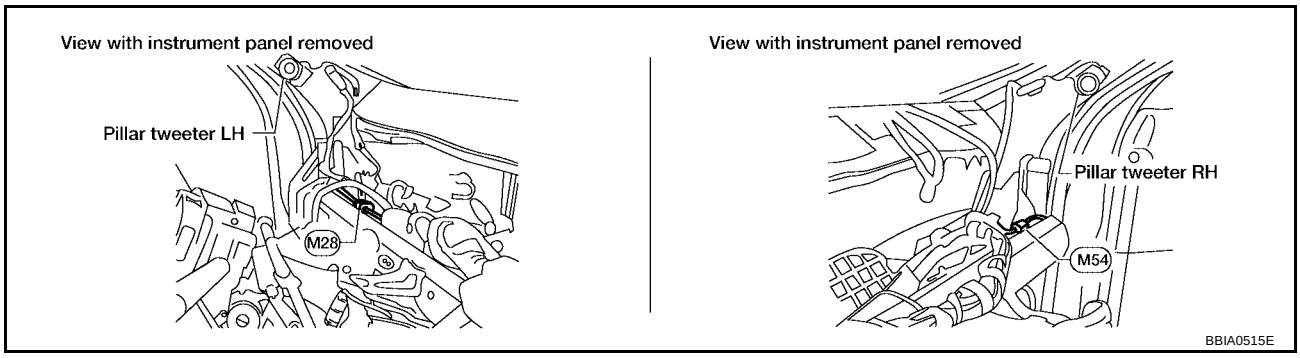

OK or NG

OK >> GO TO 2.
NG >> Repair or replace ground connections.

2. RETIGHTEN AIR FUEL RATIO (A/F) SENSOR 1

Loosen and retighten the air fuel ratio (A/F) sensor 1.

Tightening torque: 40 - 60 N-m (4.1 - 6.1 kg-m, 30 - 44 ft-lb)

>> GO TO 3.

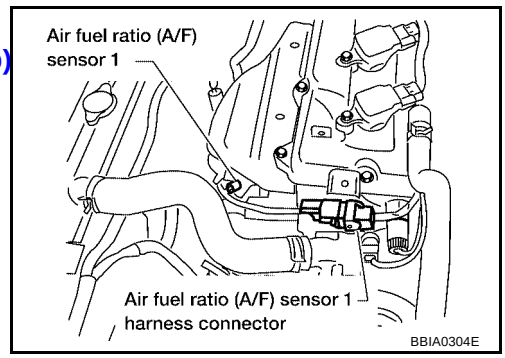

3. CHECK EXHAUST GAS LEAK

1. Start engine and run it at idle.
2. Listen for an exhaust gas leak before three way catalyst (manifold).

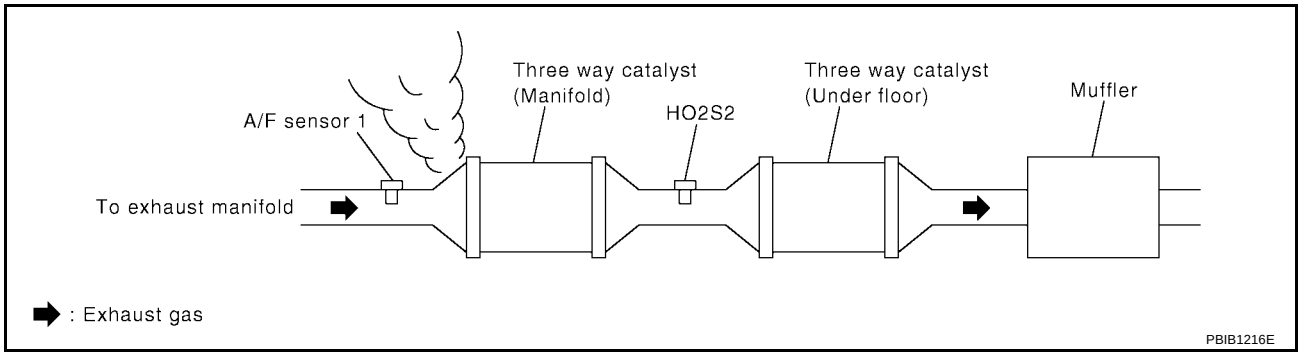

OK or NG

OK >> GO TO 4.
NG >> Repair or replace.

4. CHECK FOR INTAKE AIR LEAK

Listen for an intake air leak after the mass air flow sensor.

OK or NG

OK >> GO TO 5.
NG >> Repair or replace.

5. CLEAR THE SELF-LEARNING DATA

With CONSULT-II

1. Start engine and warm it up to normal operating temperature.
2. Select “SELF-LEARNING CONT” in “WORK SUPPORT” mode with CONSULT-II.
3. Clear the self-learning control coefficient by touching “CLEAR” or “START”.
4. Run engine for at least 10 minutes at idle speed.
   Is the 1st trip DTC P0171 or P0172 detected? Is it difficult to start engine?

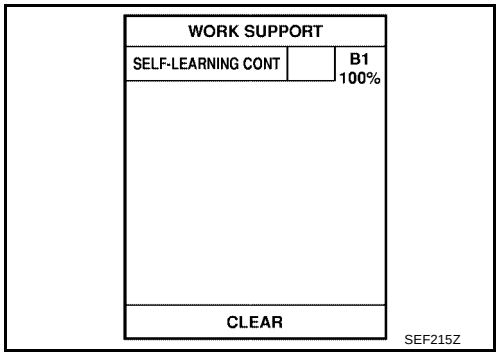

Without CONSULT-II

1. Start engine and warm it up to normal operating temperature.
2. Turn ignition switch OFF.
3. Disconnect mass air flow sensor harness connector, and restart and run engine for at least 5 seconds at idle speed.
4. Stop engine and reconnect mass air flow sensor harness connector.
5. Make sure DTC P0102 is displayed.
6. Erase the DTC memory. Refer to EC-712, "HOW TO ERASE EMISSION-RELATED DIAGNOSTIC INFORMATION" .
7. Make sure DTC P0000 is displayed.
8. Run engine for at least 10 minutes at idle speed.
   Is the 1st trip DTC P0171 or P0172 detected? Is it difficult to start engine?

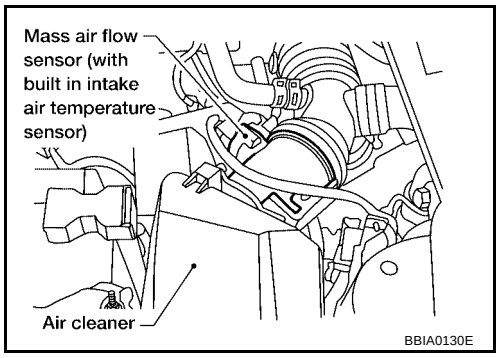

Yes or No

Yes >> Perform trouble diagnosis for DTC P0171, P0172. Refer to EC-943 , EC-954 .
No >> GO TO 6.

6. CHECK AIR FUEL RATIO (A/F) SENSOR 1 POWER SUPPLY CIRCUIT

1. Turn ignition switch OFF.
2. Disconnect A/F sensor 1 harness connector.
3. Turn ignition switch ON.

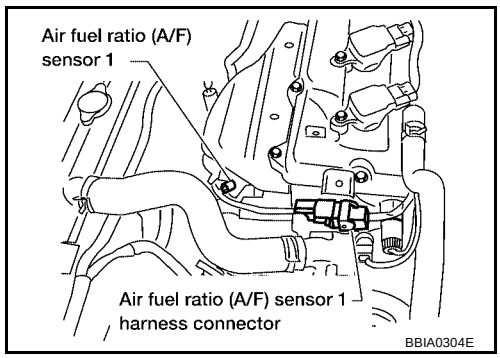

4. Check voltage between A/F sensor 1 terminal 3 and ground with CONSULT-II or tester.

Voltage: Battery voltage

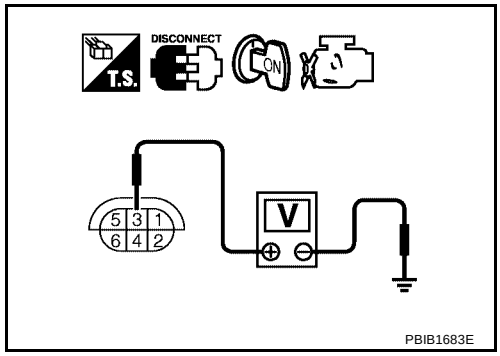

OK or NG

OK >> GO TO 8.
NG >> GO TO 7.

7. DETECT MALFUNCTIONING PART

Check the following.

- Harness connectors M19, E108
- Harness connectors E10, F48
- Fuse block (J/B) connector M1
- 15A fuse
- Harness for open or short between A/F sensor 1 and fuse

>> Repair or replace harness or connectors.

8. CHECK A/F SENSOR 1 INPUT SIGNAL CIRCUIT FOR OPEN AND SHORT

1. Turn ignition switch OFF.
2. Disconnect ECM harness connector.
3. Check harness continuity between the following terminals. Refer to Wiring Diagram.

A/F sensor 1 terminal	ECM terminal
1	16
5	35
6	56
2	75

Continuity should exist.

4. Check harness continuity between ECM terminals 16, 35, 56, 75 or A/F sensor 1 terminals 1, 2, 5, 6 and ground. Refer to Wiring Diagram.

Continuity should not exist.

5. Also check harness for short to power.

OK or NG

OK >> GO TO 9.
NG >> Repair open circuit or short to ground or short to power in harness or connectors.

9. CHECK AIR FUEL RATIO (A/F) SENSOR 1 HEATER

Refer to EC-1103, "Component Inspection" .

OK or NG

OK >> GO TO 10.
NG >> Replace A/F sensor 1.

10. CHECK MASS AIR FLOW SENSOR

Refer to EC-868, "Component Inspection" .

OK or NG

OK >> GO TO 11.
NG >> Replace mass air flow sensor.

11. CHECK PCV VALVE

Refer to EC-694, "Component Inspection" .

OK or NG

OK >> GO TO 12.
NG >> Repair or replace PCV valve.

12. CHECK INTERMITTENT INCIDENT

Perform EC-834, "TROUBLE DIAGNOSIS FOR INTERMITTENT INCIDENT" .

OK or NG

OK >> Replace A/F sensor 1.
NG >> Repair or replace.

Removal and Installation

UBS00JKP

AIR FUEL RATIO SENSOR

Refer to EM-113, "EXHAUST MANIFOLD AND THREE WAY CATALYST" .

DTC P1279 A/F SENSOR 1

PFP:22693

Component Description

UBS00JKQ

The A/F sensor 1 is a planar dual-cell limit current sensor. The sensor element of the A/F sensor 1 is the combination of a Nernst concentration cell (sensor cell) with an oxygen-pump cell, which transports ions. It has a heater in the element.

The sensor is capable of precise measurement $\lambda = 1$, but also in the lean and rich range. Together with its control electronics, the sensor outputs a clear, continuous signal throughout a wide λ range ($0.7 < \lambda <$ air).

The exhaust gas components diffuse through the diffusion gap at the electrode of the oxygen pump and Nernst concentration cell, where they are brought to thermodynamic balance.

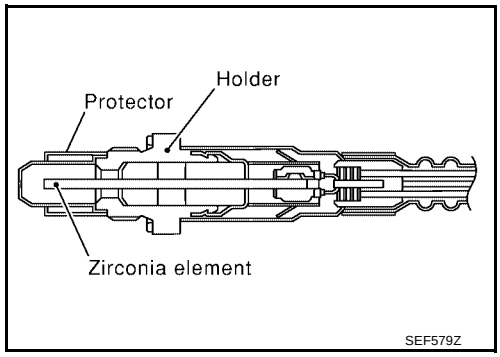

An electronic circuit controls the pump current through the oxygen-pump cell so that the composition of the exhaust gas in the diffusion gap remains constant at $\lambda = 1$. Therefore, the A/F sensor 1 is able to indicate air-fuel ratio by this pumping of current. In addition, a heater is integrated in the sensor to ensure the required operating temperature of 700 - 800°C (1,292 - 1,472°F).

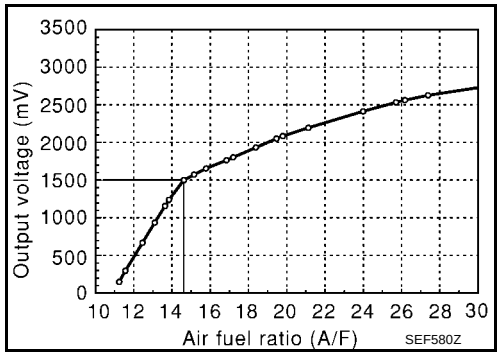

CONSULT-II Reference Value in Data Monitor Mode

UBS00JKR

Specification data are reference values.

MONITOR ITEM	CONDITION		SPECIFICATION
A/F SEN1 (B1)	● Engine: After warming up	Maintaining engine speed at 2,000 rpm	Fluctuates around 1.5V

On Board Diagnosis Logic

UBS00JKS

To judge the malfunction of air fuel ratio (A/F) sensor 1, this diagnosis measures response time of the A/F signals computed by ECM from the air fuel ratio (A/F) sensor 1 signal. The time is compensated by engine operating (speed and load), fuel feedback control constant, and the air fuel ratio (A/F) sensor 1 temperature index. Judgment is based on whether the compensated time (the A/F sensor 1 signal cycling time index) is inordinately long or not.

DTC No.	Trouble diagnosis name	DTC detecting condition	Possible Cause
P1279 1279	Air-fuel ratio (A/F) sensor 1 circuit slow response	The response (from LEAN to RICH) of the A/F signal computed by ECM from A/F sensor 1 signal takes more than the specified time.	● Harness or connectors (The sensor circuit is open or shorted.) ● Air-fuel ratio (A/F) sensor 1 ● Air-fuel ratio (A/F) sensor heater 1 ● Fuel pressure ● Fuel injector ● Intake air leaks ● Exhaust gas leaks ● PCV ● Mass air flow sensor

DTC Confirmation Procedure

UBS00JKT

NOTE:
If DTC Confirmation Procedure has been previously conducted, always turn ignition switch OFF and wait at least 10 seconds before conducting the next test.
TESTING CONDITION:
Before performing the following procedure, confirm that battery voltage is more than 11V at idle.

WITH CONSULT-II

1. Start engine and warm it up to normal operating temperature.
2. Turn ignition switch OFF and wait at least 10 seconds.
3. Start engine and keep the engine speed between 3,500 and 4,000 rpm for at least 1minute under no load.
4. Let engine idle for 1 minute.
5. Select “A/F SEN1(B1) P1278/P1279” of “A/F SEN1” in “DTC WORK SUPPORT” mode with CONSULT-II.
6. Touch “START”.
   If “COMPLETED” appears on CONSULT-II screen, go to step 10.
   If “COMPLETED” does not appear on CONSULT-II screen, go to the following step.

A/F SEN1 (B1) P1278/P1279	
OUT OF CONDITION	
MONITOR	
ENG SPEED	XXX rpm
B/FUEL SCHDL	XXX msec
COOLAN TEMP/S	XXX °C
VHCL SPEED SE	XXX km/h

PBIB0756E

7. After perform the following procedure, “TESTING” will be displayed on the CONSULT-II screen.
   a. Increase the engine speed up to 4,000 to 5,000 rpm and keep it for 10 seconds.
   b. Fully release accelerator pedal and then let engine idle for about 10 seconds.
   If “TESTING” is not displayed after 10 seconds, refer to EC-815, "TROUBLE DIAGNOSIS - SPECIFICATION VALUE" .
8. Wait for about 20 seconds at idle at under the condition that “TESTING” is displayed on the CONSULT-II screen.

A/F SEN1 (B1) P1278/P1279	
TESTING	
MONITOR	
ENG SPEED	XXX rpm
B/FUEL SCHDL	XXX msec
COOLAN TEMP/S	XXX °C
VHCL SPEED SE	XXX km/h

PBIB1925E

9. Make sure that “TESTING” changes to “COMPLETED”.
   If “TESTING” changed to “OUT OF CONDITION”, refer to EC-815, "TROUBLE DIAGNOSIS - SPECIFICATION VALUE" .
10. Make sure that “OK” is displayed after touching “SELF-DIAG RESULT”.
    If “NG” is displayed, go to EC-1229, "Diagnostic Procedure" .

A/F SEN1 (B1) P1278/P1279
COMPLETED

PBIB0758E

WITH GST

1. Start engine and warm it up to normal operating temperature.
2. Select Service $01 with GST.
3. Calculate the total value of “Short term fuel trim” and “Long term fuel trim” indications.
   Make sure that the total percentage should be within ±15%.
   If OK, go to the following step.
   If NG, check the following.
   - Intake air leaks

- Exhaust gas leaks
- Incorrect fuel pressure
- Lack of fuel
- Fuel injectors
- Incorrect PCV hose connection
- PCV valve
- Mass air flow sensor

4. Turn ignition switch OFF and wait at least 10 seconds.
5. Start engine and keep the engine speed between 3,500 and 4,000 rpm for at least 1minute under no load.
6. Let engine idle for 1 minute.
7. Increase the engine speed up to 4,000 to 5,000 rpm and keep it for 10 seconds.
8. Fully release accelerator pedal and then let engine idle for about 1 minute.
9. Select Service $07 with GST.
   If 1st trip DTC is detected, go to EC-1229, "Diagnostic Procedure" .

Wiring Diagram

UBS00JKU

EC-A/F-01

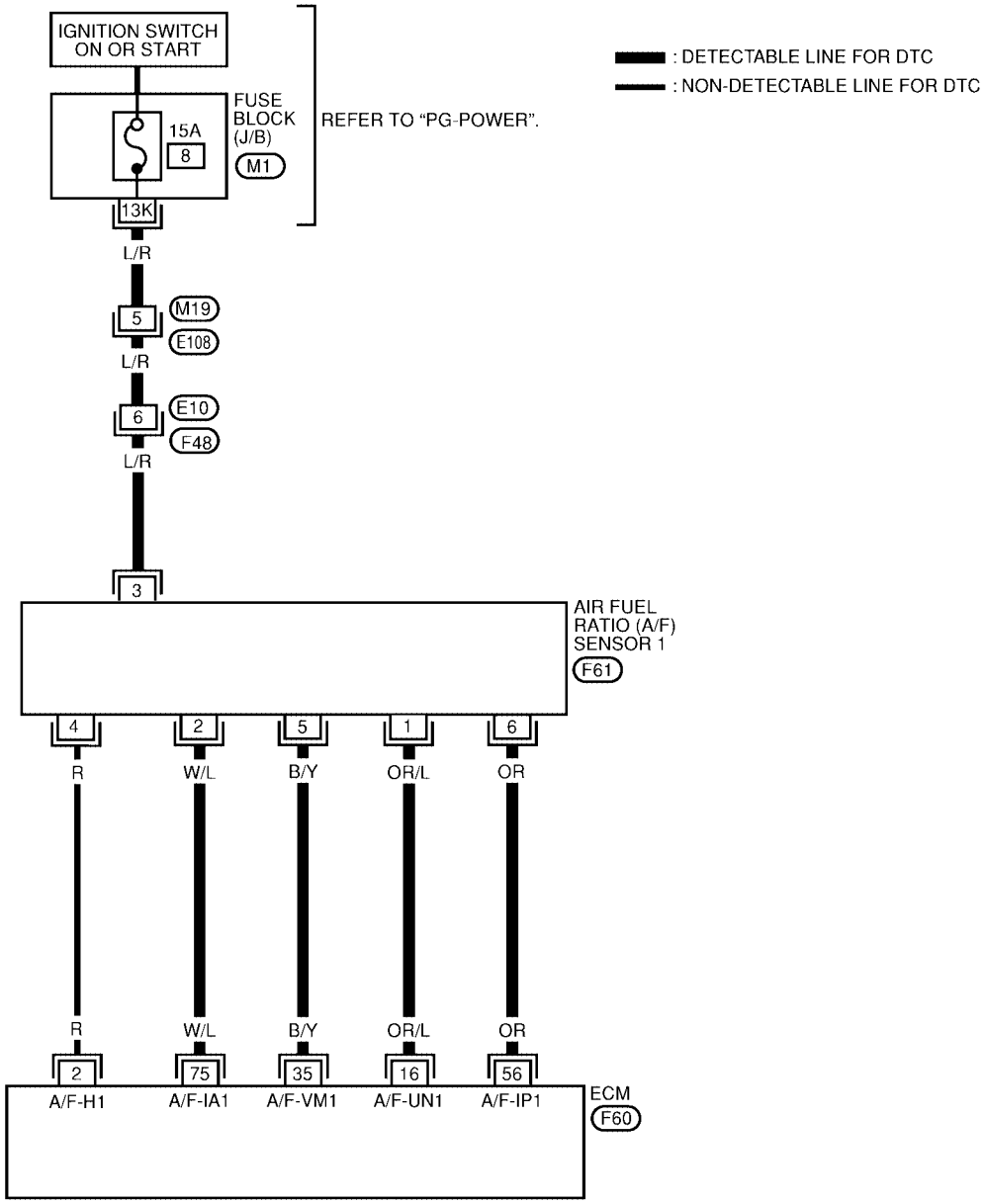

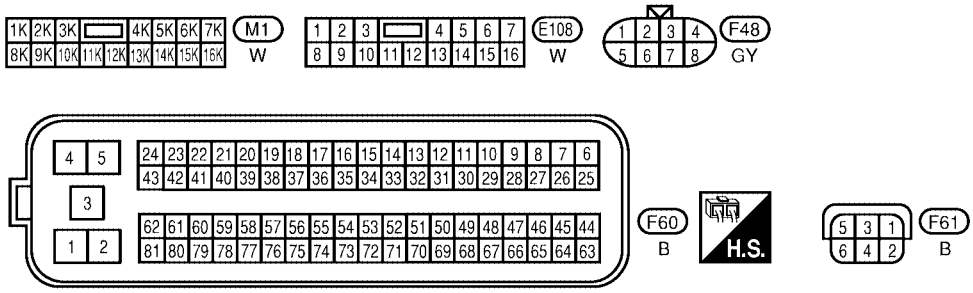

BBWA1478E

Specification data are reference values and are measured between each terminal and ground.

CAUTION:

Do not use ECM ground terminals when measuring input/output voltage. Doing so may result in damage to the ECM's transistor. Use a ground other than ECM terminals, such as the ground.

TERMINAL NO.	WIRE COLOR	ITEM	CONDITION	DATA (DC Voltage)
16	OR/L	A/F sensor 1	**[Engine is running]** ● **Warm-up condition** ● Idle speed	Approximately 3.1V
35	B/Y			Approximately 2.6V
56	OR			2 - 3V
75	W/L			2 - 3V

Diagnostic Procedure

UBS00JKV

1. CHECK GROUND CONNECTIONS

1. Turn ignition switch OFF.
2. Loosen and retighten engine two screws on the body.
   Refer to EC-841, "Ground Inspection" .

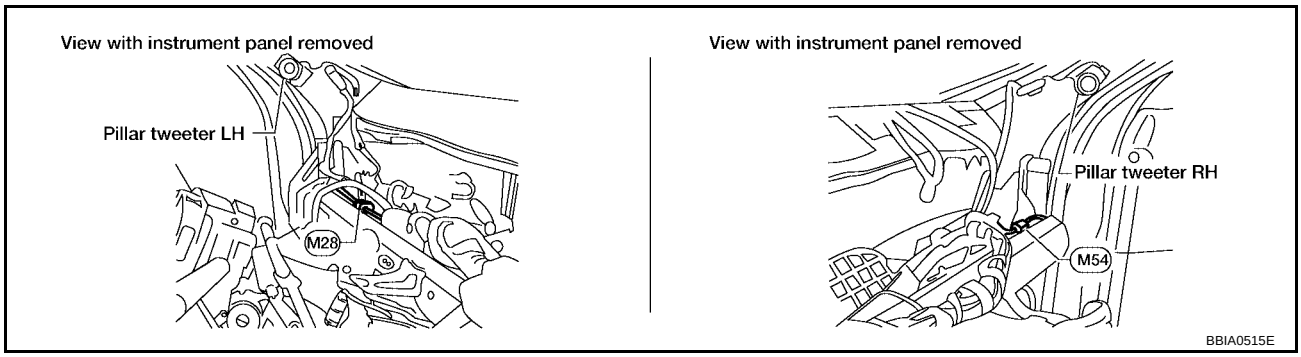

OK or NG

OK >> GO TO 2.
NG >> Repair or replace ground connections.

2. RETIGHTEN AIR FUEL RATIO (A/F) SENSOR 1

Loosen and retighten the air fuel ratio (A/F) sensor 1.

Tightening torque: 40 - 60 N-m (4.1 - 6.1 kg-m, 30 - 44 ft-lb)

>> GO TO 3.

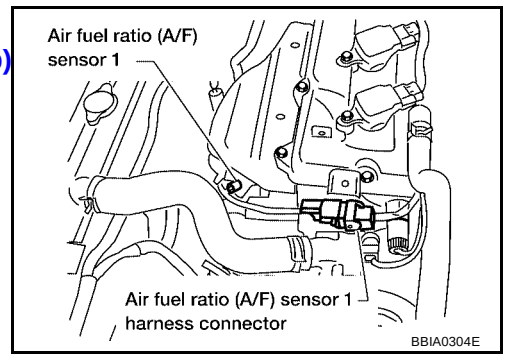

3. CHECK EXHAUST GAS LEAK

1. Start engine and run it at idle.
2. Listen for an exhaust gas leak before three way catalyst (manifold).

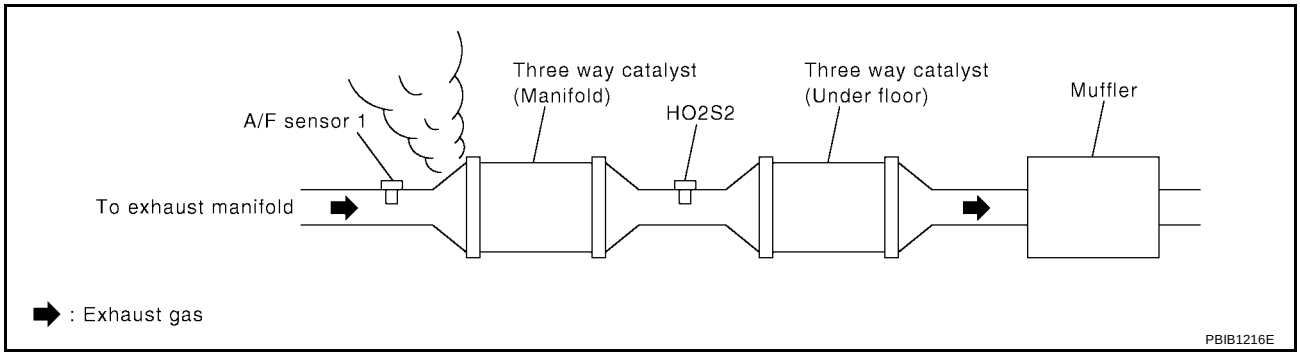

OK or NG

OK >> GO TO 4.
NG >> Repair or replace.

4. CHECK FOR INTAKE AIR LEAK

Listen for an intake air leak after the mass air flow sensor.

OK or NG

OK >> GO TO 5.
NG >> Repair or replace.

5. CLEAR THE SELF-LEARNING DATA

With CONSULT-II

1. Start engine and warm it up to normal operating temperature.
2. Select “SELF-LEARNING CONT” in “WORK SUPPORT” mode with CONSULT-II.
3. Clear the self-learning control coefficient by touching “CLEAR” or “START”.
4. Run engine for at least 10 minutes at idle speed.
   Is the 1st trip DTC P0171 or P0172 detected? Is it difficult to start engine?

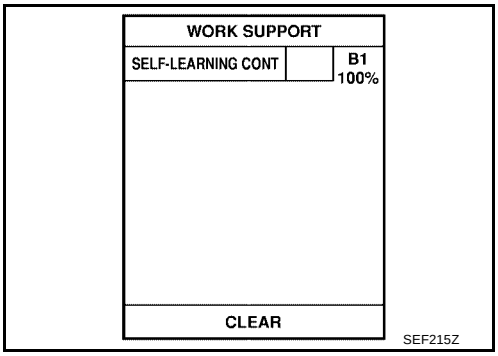

Without CONSULT-II

1. Start engine and warm it up to normal operating temperature.
2. Turn ignition switch OFF.
3. Disconnect mass air flow sensor harness connector, and restart and run engine for at least 5 seconds at idle speed.
4. Stop engine and reconnect mass air flow sensor harness connector.
5. Make sure DTC P0102 is displayed.
6. Erase the DTC memory. Refer to EC-712, "HOW TO ERASE EMISSION-RELATED DIAGNOSTIC INFORMATION" .
7. Make sure DTC P0000 is displayed.
8. Run engine for at least 10 minutes at idle speed.
   Is the 1st trip DTC P0171 or P0172 detected? Is it difficult to start engine?

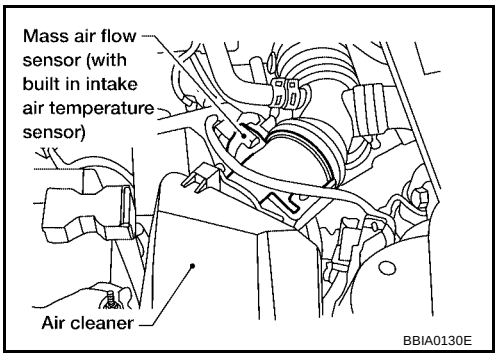

Yes or No

Yes >> Perform trouble diagnosis for DTC P0171, P0172. Refer to EC-943 , EC-954 .
No >> GO TO 6.

6. CHECK AIR FUEL RATIO (A/F) SENSOR 1 POWER SUPPLY CIRCUIT

1. Turn ignition switch OFF.
2. Disconnect A/F sensor 1 harness connector.
3. Turn ignition switch ON.

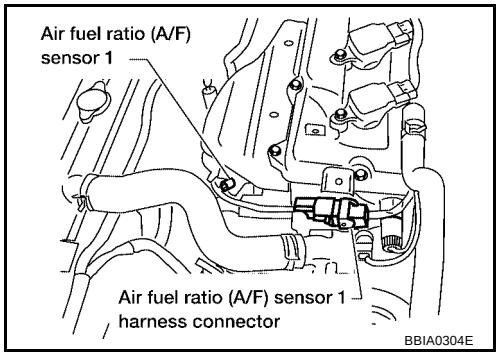

4. Check voltage between A/F sensor 1 terminal 3 and ground with CONSULT-II or tester.

Voltage: Battery voltage

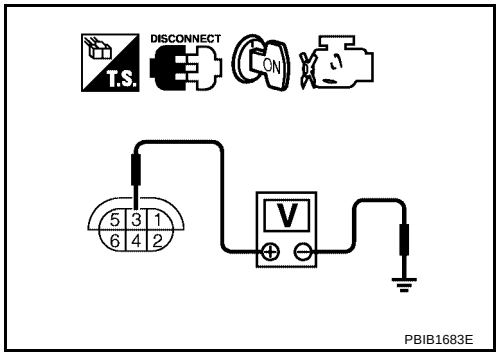

OK or NG

OK >> GO TO 8.
NG >> GO TO 7.

7. DETECT MALFUNCTIONING PART

Check the following.

- Harness connectors M19, E108
- Harness connectors E10, F48
- Fuse block (J/B) connector M1
- 15A fuse
- Harness for open or short between A/F sensor 1 and fuse

>> Repair or replace harness or connectors.

8. CHECK A/F SENSOR 1 INPUT SIGNAL CIRCUIT FOR OPEN AND SHORT

1. Turn ignition switch OFF.
2. Disconnect ECM harness connector.
3. Check harness continuity between the following terminals. Refer to Wiring Diagram.

A/F sensor 1 terminal	ECM terminal
1	16
5	35
6	56
2	75

Continuity should exist.

4. Check harness continuity between ECM terminals 16, 35, 56, 75 or A/F sensor 1 terminals 1, 2, 5, 6 and ground. Refer to Wiring Diagram.

Continuity should not exist.

5. Also check harness for short to power.

OK or NG

OK >> GO TO 9.
NG >> Repair open circuit or short to ground or short to power in harness or connectors.

9. CHECK AIR FUEL RATIO (A/F) SENSOR 1 HEATER

Refer to EC-1103, "Component Inspection" .

OK or NG

OK >> GO TO 10.
NG >> Replace A/F sensor 1.

10. CHECK MASS AIR FLOW SENSOR

Refer to EC-868, "Component Inspection" .

OK or NG

OK >> GO TO 11.
NG >> Replace mass air flow sensor.

11. CHECK PCV VALVE

Refer to EC-694, "Component Inspection" .

OK or NG

OK >> GO TO 12.
NG >> Repair or replace PCV valve.

12. CHECK INTERMITTENT INCIDENT

Perform EC-834, "TROUBLE DIAGNOSIS FOR INTERMITTENT INCIDENT" .

OK or NG

OK >> Replace A/F sensor 1.
NG >> Repair or replace.

Removal and Installation

UBS00JKW

AIR FUEL RATIO SENSOR

Refer to EM-113, "EXHAUST MANIFOLD AND THREE WAY CATALYST" .

DTC P1444 EVAP CANISTER PURGE VOLUME CONTROL SOLENOID VALVE

PFP:14920

Description

UBS00JY3

SYSTEM DESCRIPTION

Sensor	Input Signal to ECM	ECM function	Actuator
Crankshaft position sensor (POS) Camshaft position sensor (PHASE)	Engine speed*1	EVAP canister purge flow control	EVAP canister purge volume control solenoid valve
Mass air flow sensor	Amount of intake air		
Engine coolant temperature sensor	Engine coolant temperature		
Battery	Battery voltage*1		
Throttle position sensor	Throttle position		
Accelerator pedal position sensor	Accelerator pedal position		
Heated oxygen sensor 1*3	Density of oxygen in exhaust gas (Mixture ratio feedback signal)		
Air fuel ratio (A/F) sensor 1*4			
Fuel tank temperature sensor	Fuel temperature in fuel tank		
Vehicle speed sensor	Vehicle speed*2		

*1: ECM determines the start signal status by the signals of engine speed and battery voltage.
*2: This signal is sent to the ECM though CAN communication line.
*3: A/T models ULEV and M/T models.
*4: A/T models except ULEV.

This system controls flow rate of fuel vapor from the EVAP canister. The opening of the vapor by-pass passage in the EVAP canister purge volume control solenoid valve changes to control the flow rate. The EVAP canister purge volume control solenoid valve repeats ON/OFF operation according to the signal sent from the ECM. The opening of the valve varies for optimum engine control. The optimum value stored in the ECM is determined by considering various engine conditions. When the engine is operating, the flow rate of fuel vapor from the EVAP canister is regulated as the air flow changes.

COMPONENT DESCRIPTION

The EVAP canister purge volume control solenoid valve uses a ON/OFF duty to control the flow rate of fuel vapor from the EVAP canister. The EVAP canister purge volume control solenoid valve is moved by ON/OFF pulses from the ECM. The longer the ON pulse, the greater the amount of fuel vapor that will flow through the valve.

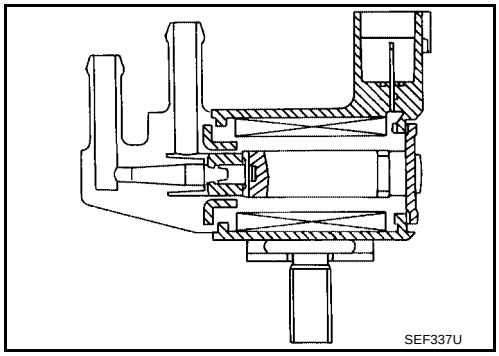

CONSULT-II Reference Value in Data Monitor Mode

UBS00JY4

Specification data are reference values.

MONITOR ITEM	CONDITION		SPECIFICATION
PURG VOL C/V	● Engine: After warming up ● Shift lever: P or N (A/T), Neutral (M/T) ● Air conditioner switch: OFF ● No-load	Idle (Accelerator pedal is not depressed even slightly, after engine starting)*3	0%
		2,000 rpm	20 - 30%

*: A/T models except ULEV

On Board Diagnosis Logic

UBS00JY5

DTC No.	Trouble diagnosis name	DTC detecting condition	Possible cause
P1444 1444	EVAP canister purge volume control solenoid valve	The canister purge flow is detected during the specified driving conditions, even when EVAP canister purge volume control solenoid valve is completely closed.	● EVAP control system pressure sensor ● EVAP canister purge volume control solenoid valve (The valve is stuck open.) ● EVAP canister vent control valve ● EVAP canister ● Hoses (Hoses are connected incorrectly or clogged.)

DTC Confirmation Procedure

UBS00JY6

NOTE:
If DTC Confirmation Procedure has been previously conducted, always turn ignition switch OFF and wait at least 10 seconds before conducting the next test.
TESTING CONDITION:
Always perform test at a temperature of 5°C (41°F) or more.

WITH CONSULT-II

1. Start engine and warm it up to normal operating temperature.
2. Turn ignition switch OFF and wait at least 10 seconds.
3. Turn ignition switch ON.
4. Select “PURG VOL CN/V P1444” of “EVAPORATIVE SYSTEM” in “DTC WORK SUPPORT” mode with CONSULT-II.
5. Touch “START”.

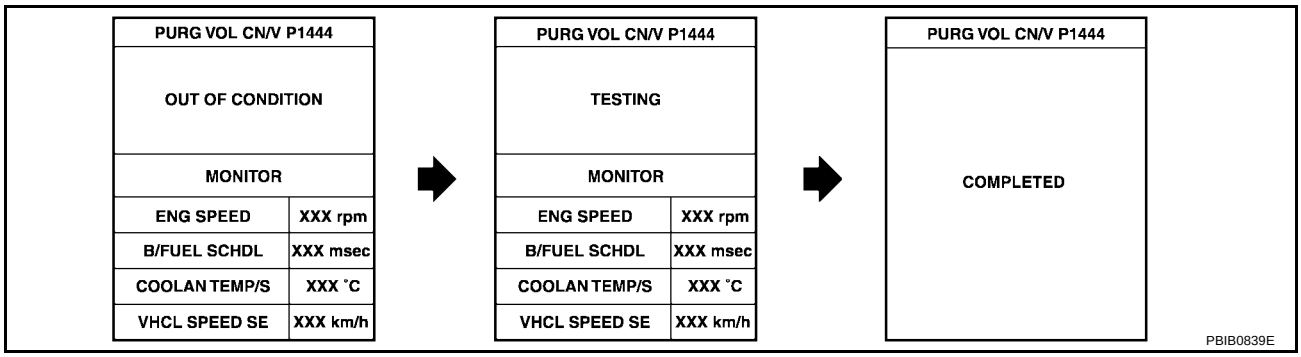

6. Start engine and let it idle until “TESTING” on CONSULT-II changes to “COMPLETED”. (It will take approximately 10 seconds.)
   If “TESTING” is not displayed after 5 minutes, retry from step 2.
7. Make sure that “OK” is displayed after touching “SELF-DIAG RESULTS”. If “NG” is displayed, refer to EC-1238, "Diagnostic Procedure" .

WITH GST

1. Start engine and warm it up to normal operating temperature.
2. Turn ignition switch OFF and wait at least 10 seconds.
3. Start engine and let it idle for at least 20 seconds.
4. Select Service $07 with GST.
5. If 1st trip DTC is detected, go to EC-1238, "Diagnostic Procedure" .

Wiring Diagram

UBS00JY7

EC-PGC/V-01

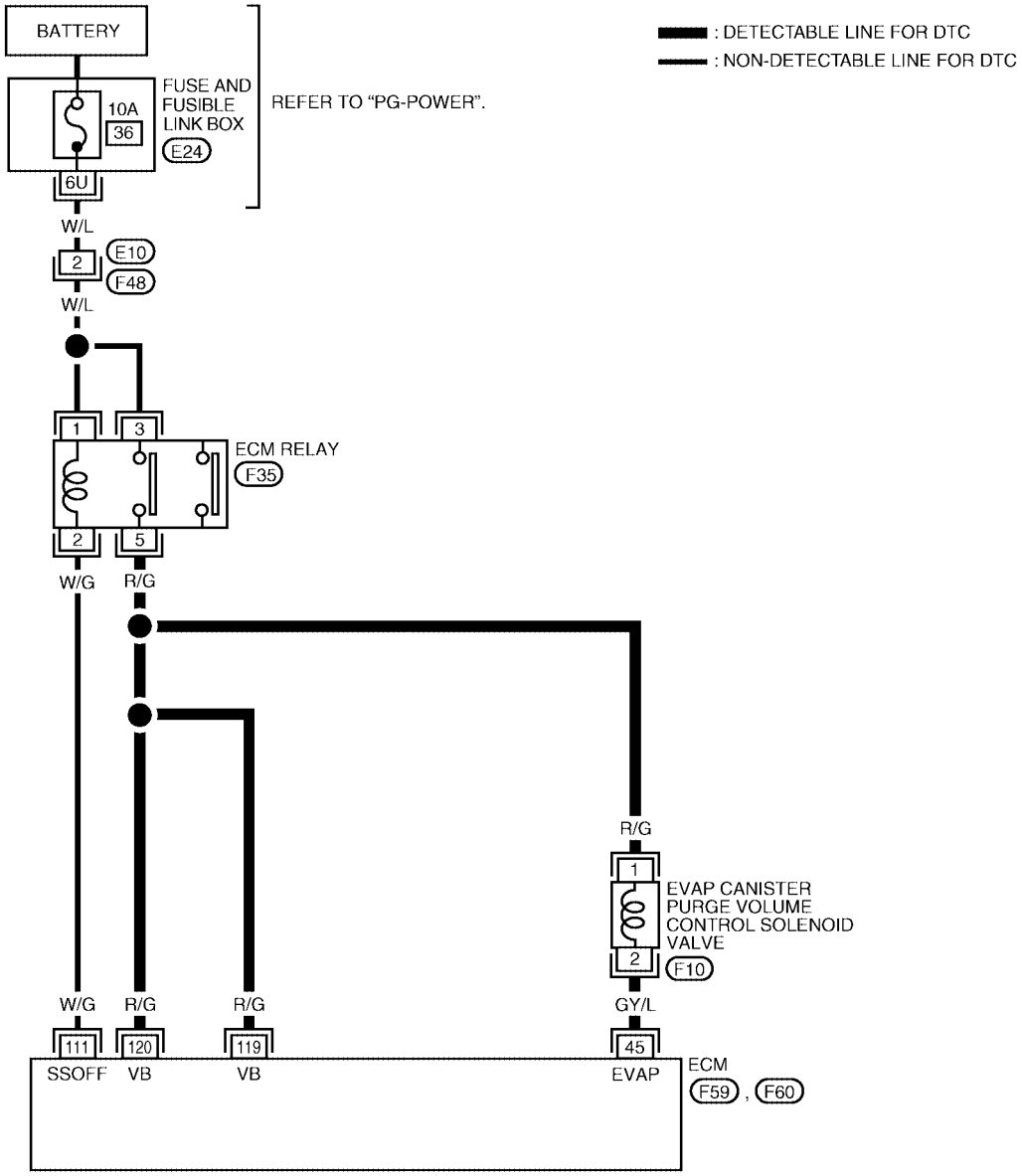

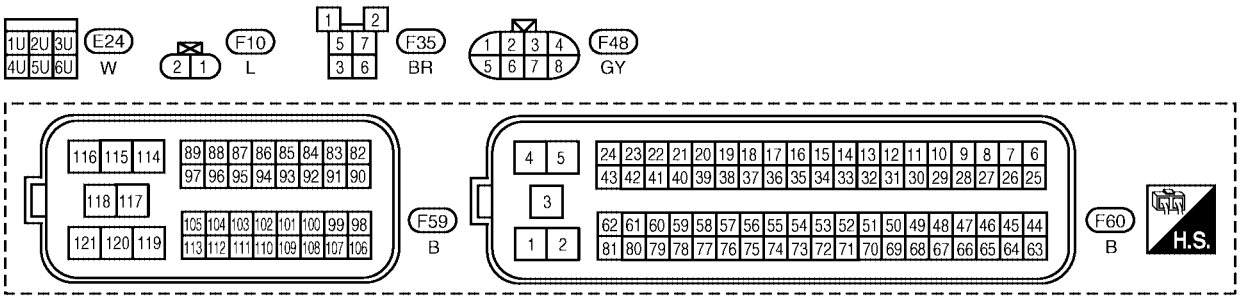

BBWA1418E

Specification data are reference values and are measured between each terminal and ground.
Pulse signal is measured by CONSULT-II.

CAUTION:

Do not use ECM ground terminals when measuring input/output voltage. Doing so may result in damage to the ECM's transistor. Use a ground other than ECM terminals, such as the ground.

TERMINAL NO.	WIRE COLOR	ITEM	CONDITION	DATA (DC Voltage)
45	GY/L	EVAP canister purge volume control solenoid valve	**[Engine is running]** ● Idle speed ● Accelerator pedal is not depressed even slightly, after engine starting*	BATTERY VOLTAGE (11 - 14V)★ 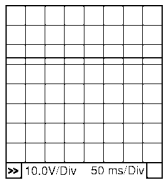 PBIB0050E
			[Engine is running] ● Engine speed is about 2,000 rpm (More than 100 seconds after starting engine)	Approximately 10V★ 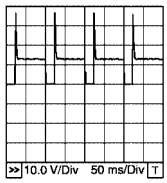 PBIB0520E
111	W/G	ECM relay (Self shut-off)	**[Engine is running]** **[Ignition switch: OFF]** ● A few seconds after turning ignition switch OFF	0 - 1.0V
			[Ignition switch: OFF] ● More than a few seconds after turning ignition switch OFF	BATTERY VOLTAGE (11 - 14V)
119 120	R/G	Power supply for ECM	**[Ignition switch: ON]**	BATTERY VOLTAGE (11 - 14V)

★: Average voltage for pulse signal (Actual pulse signal can be confirmed by oscilloscope.)
*: A/T models except ULEV

Diagnostic Procedure

UBS00JY8

1. CHECK EVAP CANISTER PURGE VOLUME CONTROL SOLENOID VALVE POWER SUPPLY CIRCUIT

1. Turn ignition switch OFF.
2. Disconnect EVAP canister purge volume control solenoid valve harness connector.
3. Turn ignition switch ON.

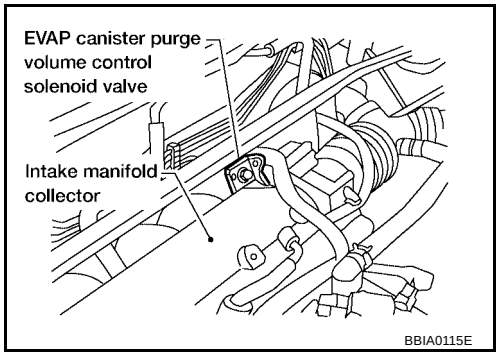

4. Check voltage between EVAP canister purge volume control solenoid valve terminal 1 and engine ground with CONSULT-II or tester.

Voltage: Battery voltage

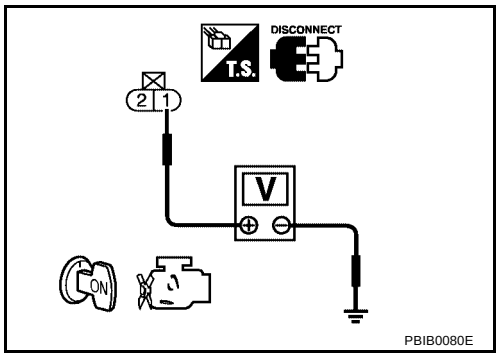

OK or NG

OK >> GO TO 3.
NG >> GO TO 2.

2. DETECT MALFUNCTIONING PART

Check the following.

- Harness for open or short between EVAP canister purge volume control solenoid valve and ECM relay
- Harness for open or short between EVAP canister purge volume control solenoid valve and ECM

>> Repair open circuit or short to ground or short to power in harness or connectors.

3. CHECK EVAP CANISTER PURGE VOLUME CONTROL SOLENOID VALVE OUTPUT SIGNAL CIRCUIT FOR OPEN AND SHORT

1. Turn ignition switch OFF.
2. Disconnect ECM harness connector.
3. Check harness continuity between ECM terminal 45 and EVAP canister purge volume control solenoid valve terminal 2. Refer to Wiring Diagram.

Continuity should exist.

4. Also check harness for short to ground and short to power.

OK or NG

OK >> GO TO 4.
NG >> Repair open circuit or short to ground or short to power in harness or connectors.

4. CHECK EVAP CONTROL SYSTEM PRESSURE SENSOR CONNECTOR

1. Disconnect EVAP control system pressure sensor harness connector.

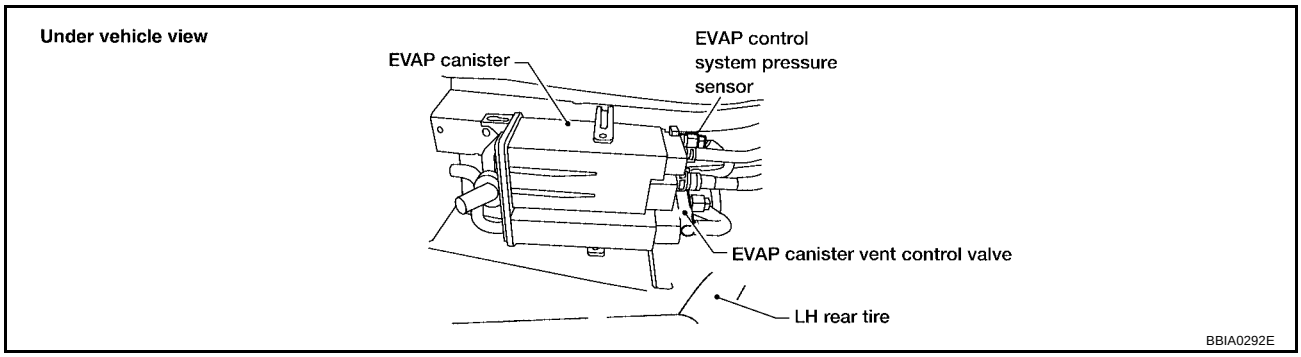

2. Check connectors for water.

Water should not exist.

OK or NG

OK >> GO TO 5.
NG >> Replace EVAP control system pressure sensor.

5. CHECK EVAP CONTROL SYSTEM PRESSURE SENSOR

Refer to EC-1047, "Component Inspection" .

OK or NG

OK (With CONSULT-II)>>GO TO 6.
OK (Without CONSULT-II)>>GO TO 7.
NG >> Replace EVAP control system pressure sensor.

6. CHECK EVAP CANISTER PURGE VOLUME CONTROL SOLENOID VALVE

With CONSULT-II

1. Turn ignition switch OFF.
2. Reconnect harness connectors disconnected.
3. Start engine.
4. Perform “PURG VOL CONT/V” in “ACTIVE TEST” mode with CONSULT-II. Check that engine speed varies according to the valve opening.

ACTIVE TEST	
PURG VOL CONT/V	XXX %
MONITOR	
ENG SPEED	XXX rpm
A/F ALPHA-B1	XXX %

PBIB1786E

OK or NG

OK >> GO TO 8.
NG >> GO TO 7.

7. CHECK EVAP CANISTER PURGE VOLUME CONTROL SOLENOID VALVE

Refer to EC-1241, "Component Inspection" .

OK or NG

OK >> GO TO 8.
NG >> Replace EVAP canister purge volume control solenoid valve.

8. CHECK RUBBER TUBE FOR CLOGGING

1. Disconnect rubber tube connected to EVAP canister vent control valve.
2. Check the rubber tube for clogging.

OK or NG

OK >> GO TO 9.
NG >> Clean the rubber tube using an air blower.

9. CHECK EVAP CANISTER VENT CONTROL VALVE

Refer to EC-684, "Component Inspection" .

OK or NG

OK >> GO TO 10.
NG >> Replace EVAP canister vent control valve.

10. CHECK IF EVAP CANISTER SATURATED WITH WATER

1. Remove EVAP canister with EVAP canister vent control valve attached.
2. Check if water will drain from the EVAP canister.

YES or NO

YES >> GO TO 11.
NO >> GO TO 13.

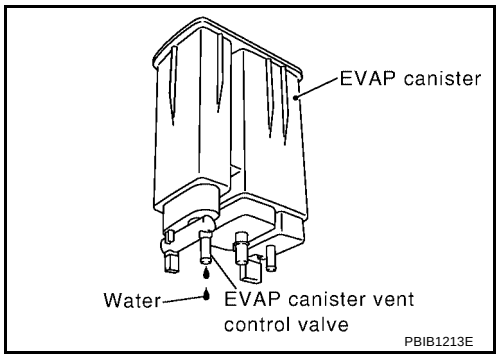

11. CHECK EVAP CANISTER

Weigh the EVAP canister with the EVAP canister vent control valve and EVAP control system pressure sensor attached.

The weight should be less than 1.9 kg (4.2 lb).

OK or NG

OK >> GO TO 13.
NG >> GO TO 12.

12. DETECT MALFUNCTIONING PART

Check the following.

- EVAP canister for damage
- EVAP hose between EVAP canister and vehicle frame for clogging or poor connection

>> Repair hose or replace EVAP canister.

13. CHECK INTERMITTENT INCIDENT

Refer to EC-834, "TROUBLE DIAGNOSIS FOR INTERMITTENT INCIDENT" .

>> **INSPECTION END**

Component Inspection

UBS00JY9

EVAP CANISTER PURGE VOLUME CONTROL SOLENOID VALVE

With CONSULT-II

Check air passage continuity of EVAP canister purge volume control solenoid valve under the following conditions.

Condition (PURG VOL CONT/V value)	Air passage continuity between A and B
100%	Yes
0%	No

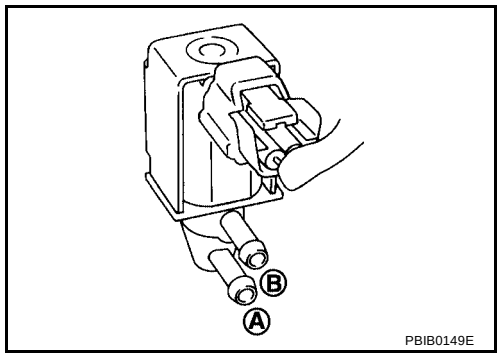

Without CONSULT-II

Check air passage continuity of EVAP canister purge volume control solenoid valve under the following conditions.

Condition	Air passage continuity between A and B
12V direct current supply between terminals 1 and 2	Yes
No supply	No

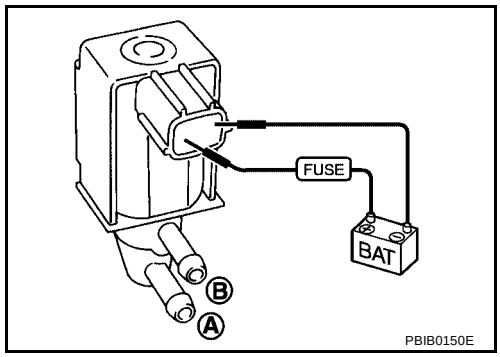

Removal and Installation

UBS00JYA

EVAP CANISTER PURGE VOLUME CONTROL SOLENOID VALVE

Refer to EM-108, "INTAKE MANIFOLD" .

DTC P1446 EVAP CANISTER VENT CONTROL VALVE

PFP:14935

Component Description

UBS00JYB

The EVAP canister vent control valve is located on the EVAP canister and is used to seal the canister vent.
This solenoid valve responds to signals from the ECM. When the ECM sends an ON signal, the coil in the solenoid valve is energized. A plunger will then move to seal the canister vent. The ability to seal the vent is necessary for the on board diagnosis of other evaporative emission control system components.
This solenoid valve is used only for diagnosis, and usually remains opened.
When the vent is closed, under normal purge conditions, the evaporative emission control system is depressurized and allows “EVAP Control System” diagnoses.

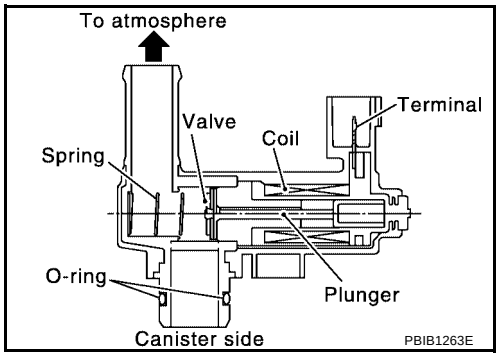

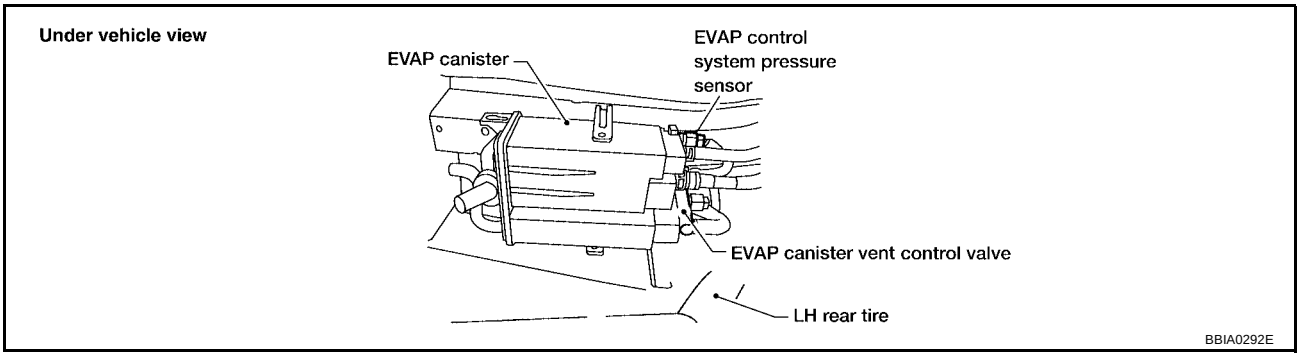

CONSULT-II Reference Value in Data Monitor Mode

UBS00JYC

Specification data are reference values.

MONITOR ITEM	CONDITION	SPECIFICATION
VENT CONT/V	● Ignition switch: ON	OFF

On Board Diagnosis Logic

UBS00JYD

DTC No.	Trouble diagnosis name	DTC detecting condition	Possible cause
P1446 1446	EVAP canister vent control valve close	EVAP canister vent control valve remains closed under specified driving conditions.	● EVAP canister vent control valve ● EVAP control system pressure sensor and the circuit ● Blocked rubber tube to EVAP canister vent control valve ● EVAP canister is saturated with water

DTC Confirmation Procedure

UBS00JYE

CAUTION:
Always drive vehicle at a safe speed.

NOTE:
If DTC Confirmation Procedure has been previously conducted, always turn ignition switch OFF and wait at least 10 seconds before conducting the next test.

WITH CONSULT-II

1. Turn ignition switch ON and wait at least 5 seconds.
2. Turn ignition switch OFF and wait at least 10 seconds.
3. Turn ignition switch ON and select “DATA MONITOR” mode with CONSULT-II.
4. Start engine and let it idle for at least 1 minute.
5. Repeat next procedures 3 times.

a. Increase the engine speed up to 3,000 to 3,500 rpm and keep it for 2 minutes and 50 seconds to 3 minutes.
Never exceed 3 minutes.

b. Fully released accelerator pedal and keep engine idle for about 5 seconds.

6. If 1st trip DTC is detected, go to EC-1147, "Diagnostic Procedure" .
If 1st trip DTC is not detected, go to the next step.

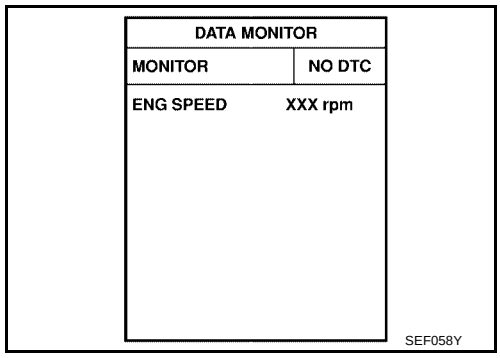

7. Repeat next procedure 20 times.

a. Quickly increase the engine speed up to 4,000 to 4,500 rpm or more and keep it for 25 to 30 seconds.

b. Fully released accelerator pedal and keep engine idle for at least 35 seconds.

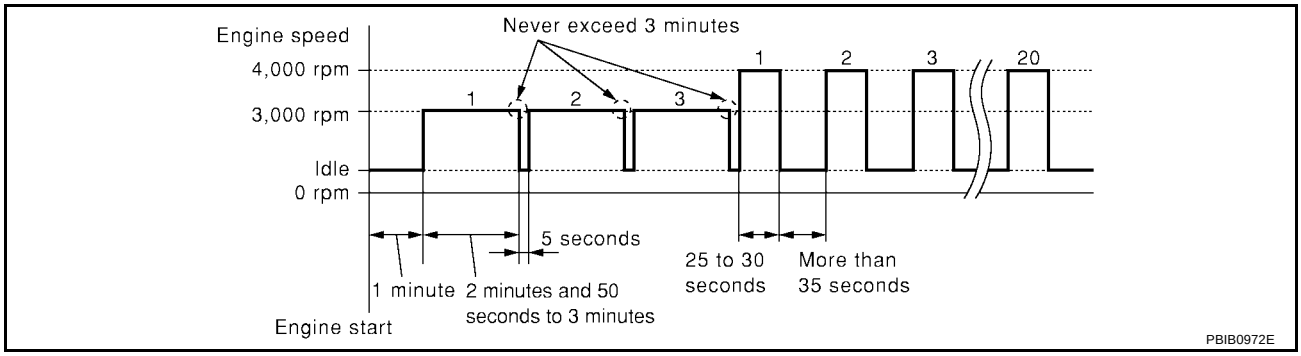

8. If 1st trip DTC is detected, go to EC-1147, "Diagnostic Procedure" .

WITH GST

Follow the procedure “WITH CONSULT-II” above.

Wiring Diagram

UBS00JYF

EC-VENT/V-01

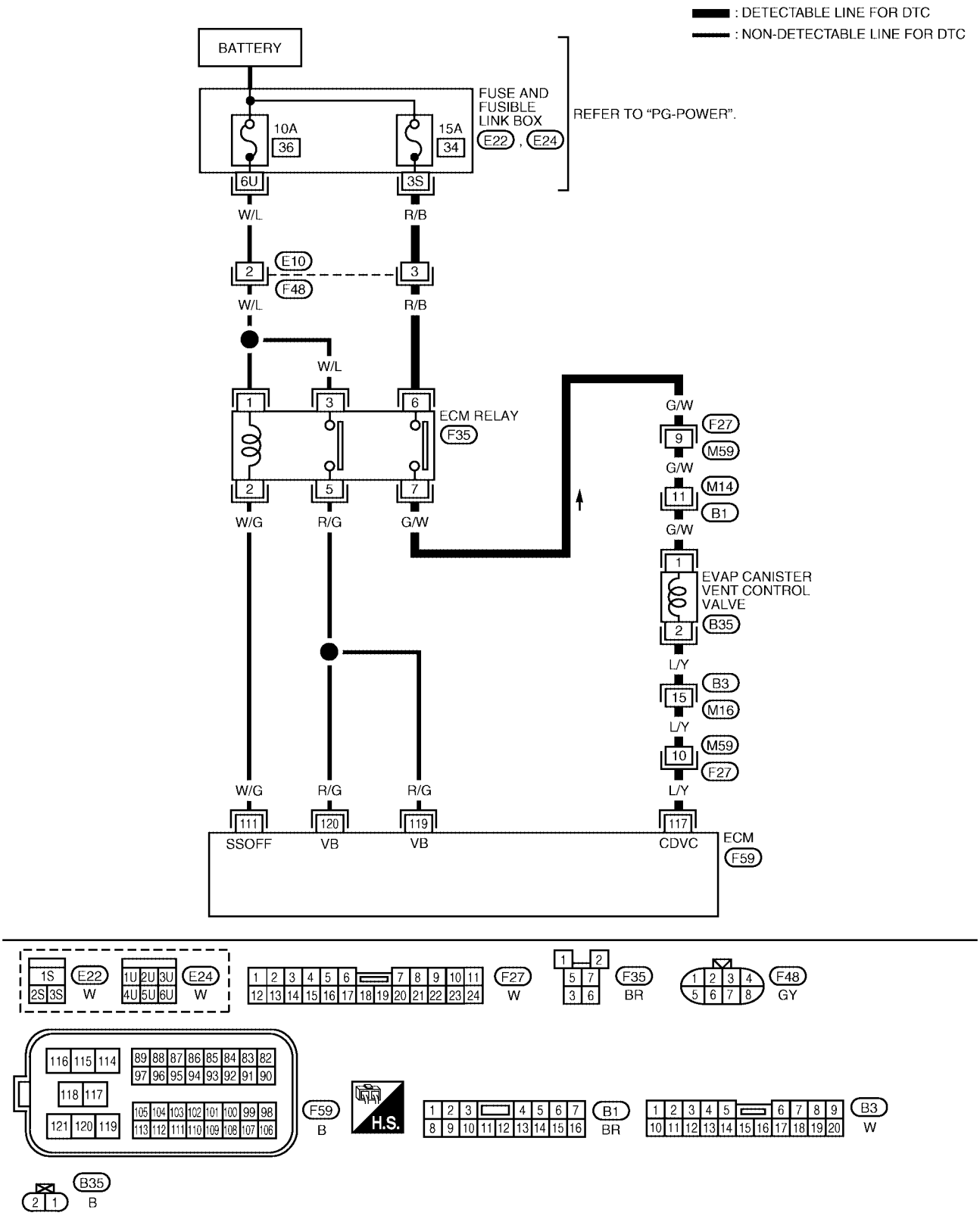

BBWA1419E

Specification data are reference values and are measured between each terminal and ground.

CAUTION:

Do not use ECM ground terminals when measuring input/output voltage. Doing so may result in damage to the ECM's transistor. Use a ground other than ECM terminals, such as the ground.

TERMINAL NO.	WIRE COLOR	ITEM	CONDITION	DATA (DC Voltage)
111	W/B	ECM relay (Self shut-off)	**[Engine is running]** **[Ignition switch: OFF]** ● A few seconds after turning ignition switch OFF	0 - 1.0V
			[Ignition switch: OFF] ● More than a few seconds after turning ignition switch OFF	BATTERY VOLTAGE (11 - 14V)
117	L/Y	EVAP canister vent control valve	**[Ignition switch: ON]**	BATTERY VOLTAGE (11 - 14V)
119 120	R/G	Power supply for ECM	**[Ignition switch: ON]**	BATTERY VOLTAGE (11 - 14V)

Diagnostic Procedure

UBS00JYG

1. CHECK RUBBER TUBE

1. Turn ignition switch OFF.
2. Disconnect rubber tube connected to EVAP canister vent control valve.
3. Check the rubber tube for clogging.

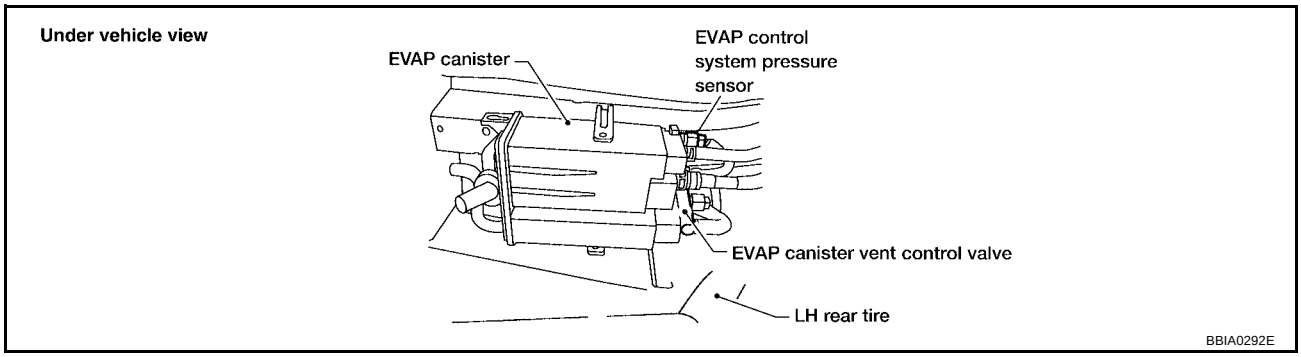

OK or NG

OK >> GO TO 2.
NG >> Clean rubber tube using an air blower.

2. CHECK EVAP CANISTER VENT CONTROL VALVE-I

Refer to EC-1149, "Component Inspection" .

OK or NG

OK >> GO TO 3.
NG >> Replace EVAP canister vent control valve.

3. CHECK IF EVAP CANISTER SATURATED WITH WATER

1. Remove EVAP canister with EVAP canister vent control valve attached.
2. Check if water will drain from the EVAP canister.

Yes or No

Yes >> GO TO 4.
No >> GO TO 6.

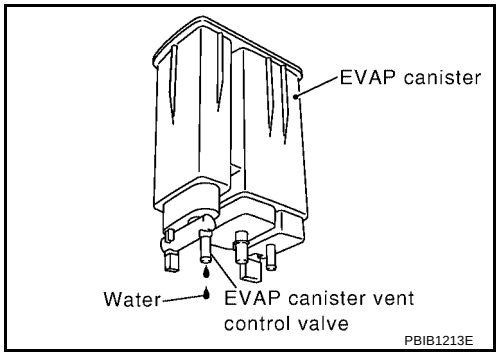

4. CHECK EVAP CANISTER

Weigh the EVAP canister with the EVAP canister vent control valve and EVAP control system pressure sensor attached.

The weight should be less than 1.9 kg (4.2 lb).

OK or NG

OK >> GO TO 6.
NG >> GO TO 5.

5. DETECT MALFUNCTIONING PART

Check the following.

- EVAP canister for damage
- EVAP hose between EVAP canister and vehicle frame for clogging or poor connection

>> Repair hose or replace EVAP canister.

6. CHECK EVAP CONTROL SYSTEM PRESSURE SENSOR CONNECTOR

1. Disconnect EVAP control system pressure sensor harness connector.

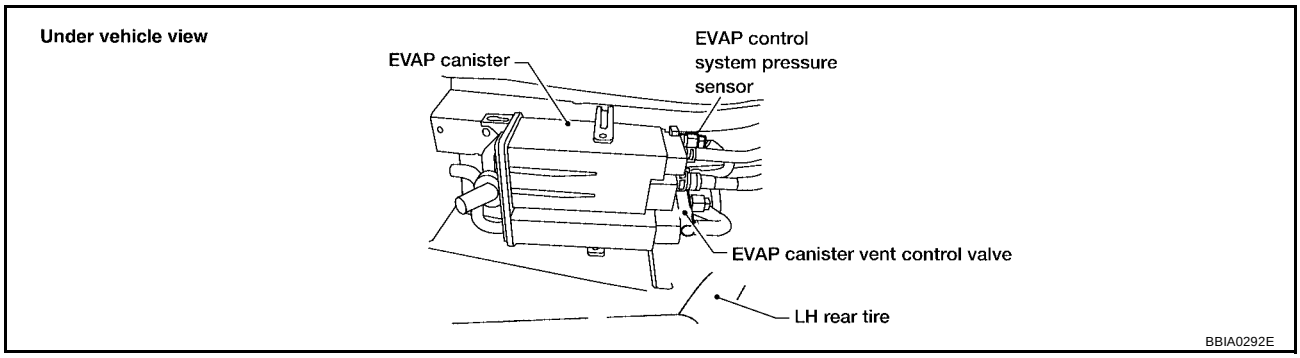

2. Check connectors for water.

Water should not exist.

OK or NG

OK >> GO TO 7.
NG >> Replace EVAP control system pressure sensor.

7. CHECK EVAP CONTROL SYSTEM PRESSURE SENSOR

Refer to EC-1047, "Component Inspection" .

OK or NG

OK >> GO TO 8.
NG >> Replace EVAP control system pressure sensor.

8. CHECK INTERMITTENT INCIDENT

Refer to EC-834, "TROUBLE DIAGNOSIS FOR INTERMITTENT INCIDENT" .

>> **INSPECTION END**

Component Inspection

UBS00JYH

EVAP CANISTER VENT CONTROL VALVE

With CONSULT-II

1. Remove EVAP canister vent control valve from EVAP canister.
2. Check portion **B** of EVAP canister vent control valve for being rusted.
   If NG, replace EVAP canister vent control valve.
   If OK, go to next step.
3. Reconnect harness connectors disconnected.
4. Turn ignition switch ON.

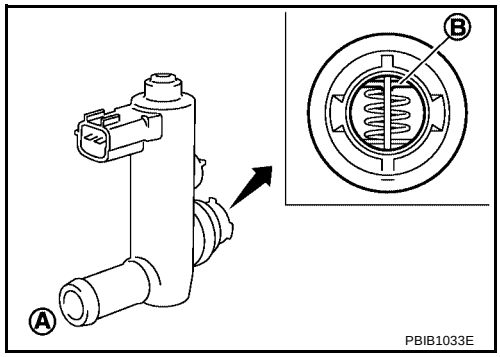

5. Perform “VENT CONTROL/V” in “ACTIVE TEST” mode.
6. Check air passage continuity and operation delay time.

Condition VENT CONTROL/V	Air passage continuity between A and B
ON	No
OFF	Yes

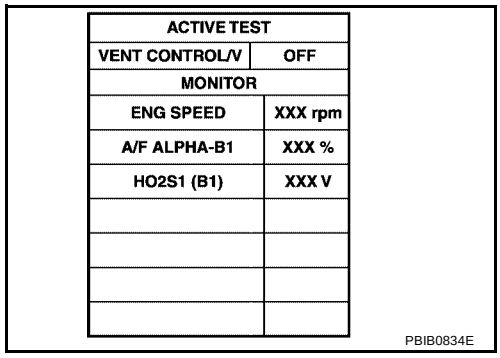

Operation takes less than 1 second.
Make sure new O-ring is installed properly.
If NG, replace EVAP canister vent control valve.
If OK, go to next step.

7. Clean the air passage (Portion **A** to **B**) of EVAP canister vent control valve using an air blower.
8. Perform step 5 again.

Without CONSULT-II

1. Remove EVAP canister vent control valve from EVAP canister.
2. Check portion **B** of EVAP canister vent control valve for being rusted.

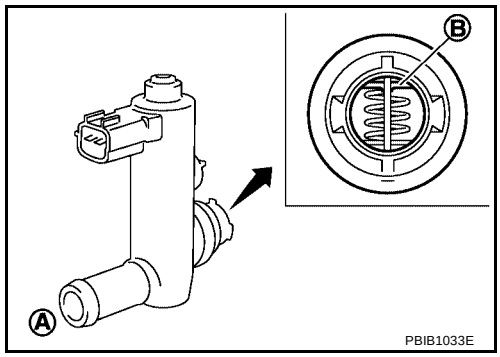

3. Check air passage continuity and operation delay time under the following conditions.

Condition	Air passage continuity between A and B
12V direct current supply between terminals 1 and 2	No
OFF	Yes

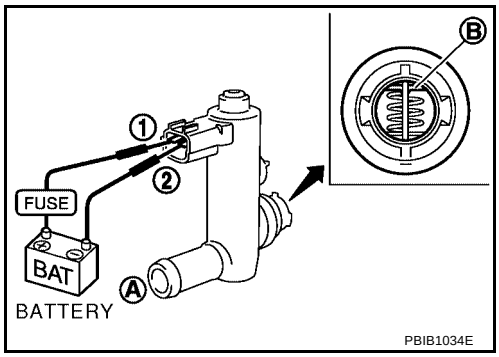

Operation takes less than 1 second.
Make sure new O-ring is installed properly.
If NG, replace EVAP canister vent control valve.
If OK, go to next step.

4. Clean the air passage (Portion **A** to **B**) of EVAP canister vent control valve using an air blower.
5. Perform step 3 again.

DTC P1564 ASCD STEERING SWITCH

PFP:25551

Component Description

UBS00JLC

ASCD steering switch has variant values of electrical resistance for each button. ECM reads voltage variation of switch, and determines which button is operated.

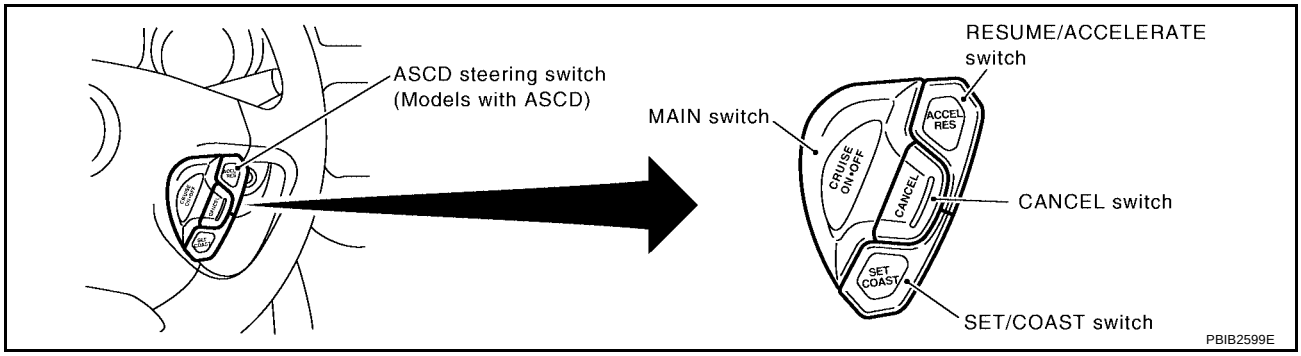

Refer to EC-678, "AUTOMATIC SPEED CONTROL DEVICE (ASCD)" for ASCD functions.

CONSULT-II Reference Value in Data Monitor Mode

UBS00JLD

Specification data are reference values.

MONITOR ITEM	CONDITION		SPECIFICATION
MAIN SW	● Ignition switch: ON	MAIN switch: Pressed	ON
		MAIN switch: Released	OFF
CANCEL SW	● Ignition switch: ON	CANCEL switch: Pressed	ON
		CANCEL switch: Released	OFF
RESUME/ACC SW	● Ignition switch: ON	RESUME/ACCELERATE switch: Pressed	ON
		RESUME/ACCELERATE switch: Released	OFF
SET SW	● Ignition switch: ON	SET/COAST switch: Pressed	ON
		SET/COAST switch: Released	OFF

On Board Diagnosis Logic

UBS00JLE

This self-diagnosis has the one trip detection logic.
The MIL will not light up for this diagnosis.

NOTE:
If DTC P1564 is displayed with DTC P0605, first perform the trouble diagnosis for DTC P0605. Refer to EC-1096 .

DTC No.	Trouble Diagnosis Name	DTC Detecting Condition	Possible Cause
P1564 1564	ASCD steering switch	● An excessively high voltage signal from the ASCD steering switch is sent to ECM. ● ECM detects that input signal from the ASCD steering switch is out of the specified range. ● ECM detects that the ASCD steering switch is stuck ON.	● Harness or connectors (The switch circuit is open or shorted.) ● ASCD steering switch ● ECM

DTC Confirmation Procedure

UBS00JLF

NOTE:
If DTC Confirmation Procedure has been previously conducted, always turn ignition switch OFF and wait at least 10 seconds before conducting the next test.

WITH CONSULT-II

1. Turn ignition switch ON.

2. Select “DATA MONITOR” mode with CONSULT-II.
3. Wait at least 10 seconds.
4. Press MAIN switch for at least 10 seconds, then release it and wait at least 10 seconds.
5. Press RESUME/ACCELERATE switch for at least 10 seconds, then release it and wait at least 10 seconds.
6. Press SET/COAST switch for at least 10 seconds, then release it and wait at least 10 seconds.
7. Press CANCEL switch for at least 10 seconds, then release it and wait at least 10 seconds.
8. If DTC is detected, go to EC-1252, "Diagnostic Procedure" .

WITH GST

Follow the procedure “WITH CONSULT-II” above.

Wiring Diagram

UBS00JLG

EC-ASC/SW-01

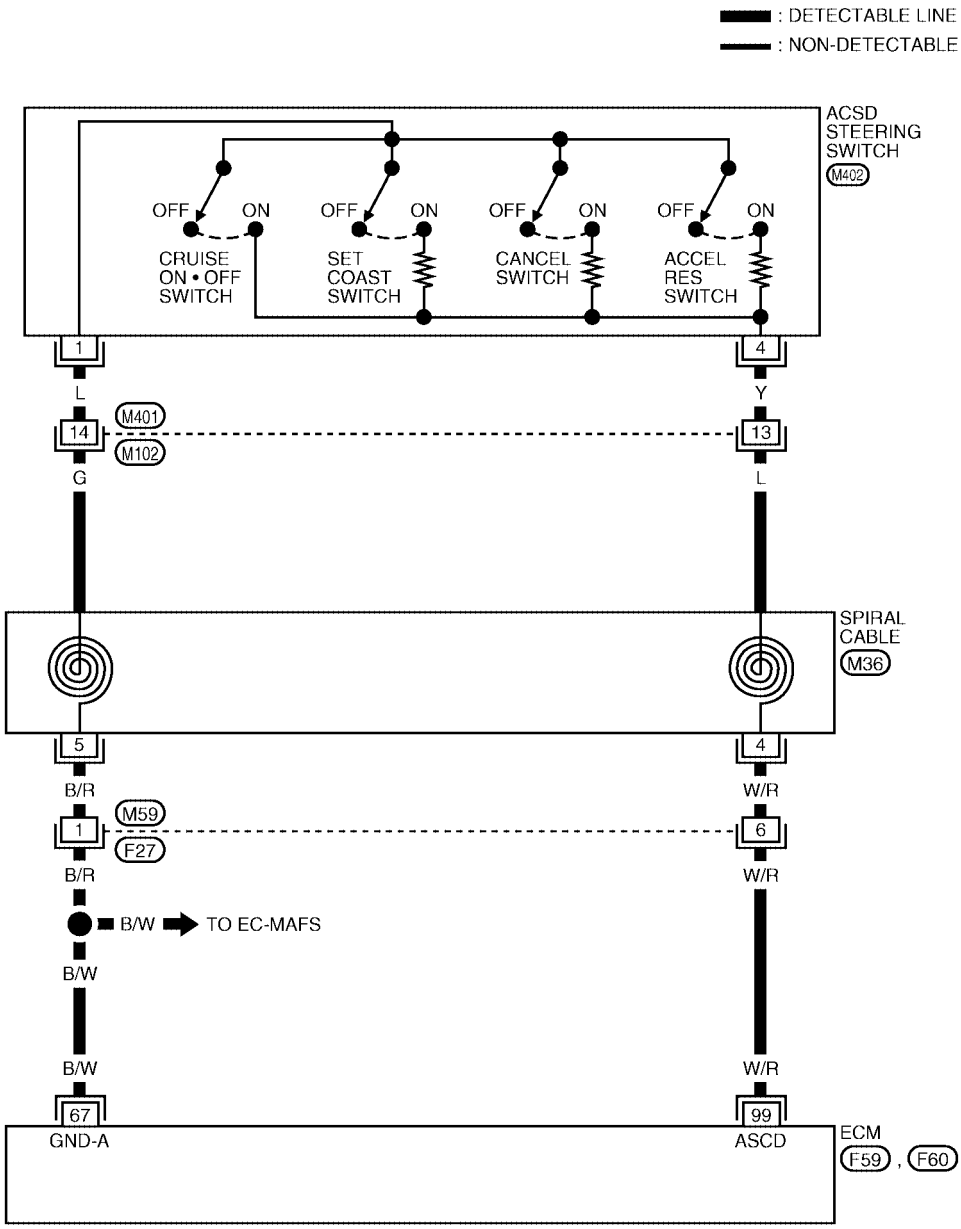

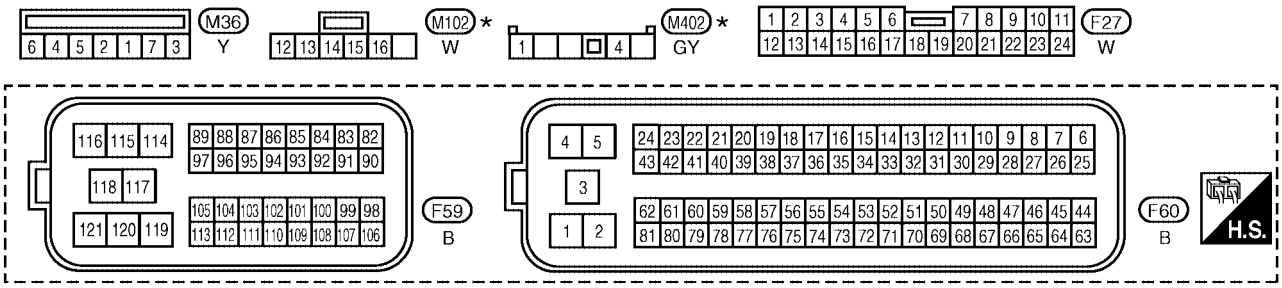

*: THIS CONNECTOR IS NOT SHOWN IN "HARNESS LAYOUT" OF PG SECTION.

BBWA2301E

Specification data are reference values and are measured between each terminal and ground.

CAUTION:

Do not use ECM ground terminals when measuring input/output voltage. Doing so may result in damage to the ECM's transistor. Use a ground other than ECM terminals, such as the ground.

TERMINAL NO.	WIRE COLOR	ITEM	CONDITION	DATA (DC Voltage)
67	B/W	Sensor ground	**[Engine is running]** ● **Warm-up condition** ● Idle speed	Approximately 0V
99	W/R	ASCD steering switch	**[Ignition switch: ON]** ● ASCD steering switch is OFF.	Approximately 4V
			[Ignition switch: ON] ● MAIN switch is ON.	Approximately 0V
			[Ignition switch: ON] ● CANCEL switch is ON.	Approximately 1V
			[Ignition switch: ON] ● RESUME/ACCELERATE switch is ON.	Approximately 3V
			[Ignition switch: ON] ● SET/COAST switch is ON.	Approximately 2V

Diagnostic Procedure

UBS00JLH

1. CHECK GROUND CONNECTIONS

1. Turn ignition switch OFF.
2. Loosen and retighten engine two screws on the body.
   Refer to EC-841, "Ground Inspection" .

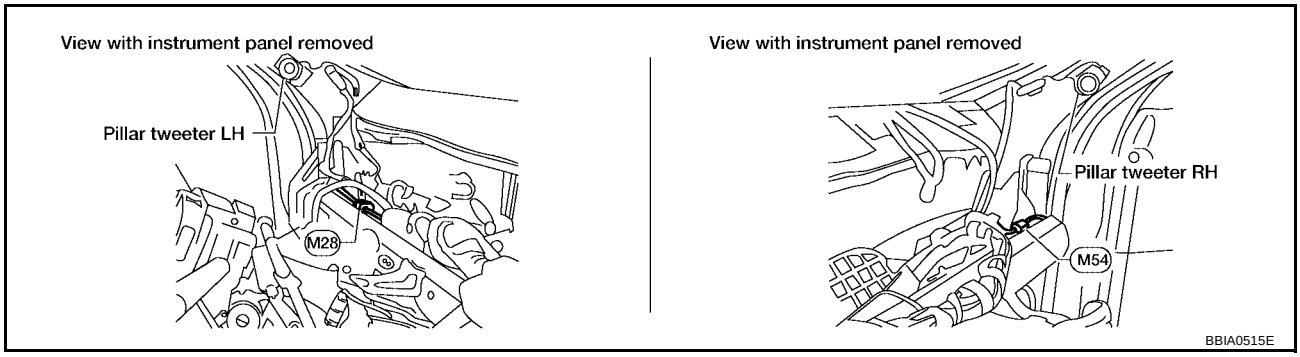

OK or NG

OK >> GO TO 2.
NG >> Repair or replace ground connections.

2. CHECK ASCD STEERING SWITCH CIRCUIT

With CONSULT-II

1. Turn ignition switch ON.
2. Select “MAIN SW”, “RESUME/ACC SW”, “SET SW and “CANCEL SW” in “DATA MONITOR” mode with CONSULT-II.
3. Check each item indication under the following conditions.

Switch	Monitor item	Condition	Indication
MAIN switch	MAIN SW	Pressed	ON
		Released	OFF
CANCEL switch	CANCEL SW	Pressed	ON
		Released	OFF
RESUME/ ACCELERATE switch	RESUME/ACC SW	Pressed	ON
		Released	OFF
SET/COAST switch	SET SW	Pressed	ON
		Released	OFF

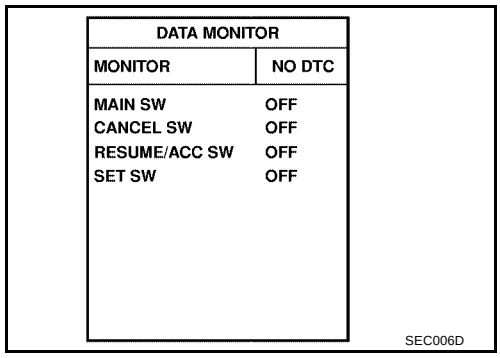

Without CONSULT-II

1. Turn ignition switch ON.
2. Check voltage between ECM terminal 99 and ground with pressing each button.

Switch	Condition	Voltage [V]
MAIN switch	Pressed	Approx. 0
	Released	Approx. 4.0
CANCEL switch	Pressed	Approx. 1.0
	Released	Approx. 4.0
RESUME/ACCELERATE switch	Pressed	Approx. 3.0
	Released	Approx. 4.0
SET/COAST switch	Pressed	Approx. 2.0
	Released	Approx. 4.0

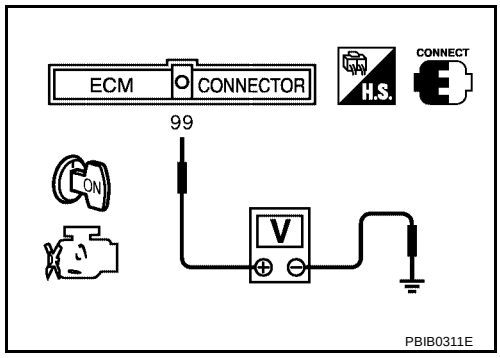

OK or NG

OK >> GO TO 8.
NG >> GO TO 3.

3. CHECK ASCD STEERING SWITCH GROUND CIRCUIT FOR OPEN AND SHORT

1. Turn ignition switch OFF.
2. Disconnect ASCD steering switch harness connector.

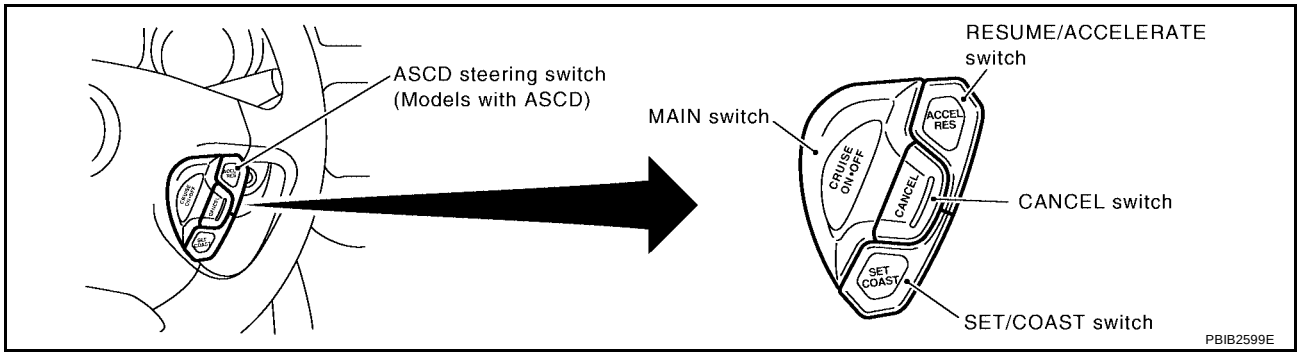

3. Disconnect ECM harness connector.
4. Check harness continuity between ASCD steering switch terminal 1 and ECM terminal 67.
   Refer to Wiring Diagram.

   Continuity should exist.

5. Also check harness for short to ground and short to power.

OK or NG

OK >> GO TO 5.
NG >> GO TO 4.

4. DETECT MALFUNCTIONING PART

Check the following.

- Harness connectors M401, M102
- Harness connectors M59, F27
- Spiral cable
- Harness for open or short between ECM and ASCD steering switch

>> Repair open circuit or short to ground or short to power in harness or connectors.

5. CHECK ASCD STEERING SWITCH INPUT SIGNAL CIRCUIT FOR OPEN AND SHORT

1. Check harness continuity between ECM terminal 99 and ASCD steering switch terminal 4.
   Refer to Wiring Diagram.

   Continuity should exist.

2. Also check harness for short to ground and short to power.

OK or NG

OK >> GO TO 7.
NG >> GO TO 6.

6. DETECT MALFUNCTIONING PART

Check the following.

- Harness connectors M401, M102
- Harness connectors M59, F27
- Spiral cable
- Harness for open or short between ECM and ASCD steering switch

>> Repair open circuit or short to ground or short to power in harness or connectors.

7. CHECK ASCD STEERING SWITCH

Refer to EC-1255, "Component Inspection" .

OK or NG

OK >> GO TO 8.
NG >> Replace ASCD steering switch.

8. CHECK INTERMITTENT INCIDENT

Refer to EC-834, "TROUBLE DIAGNOSIS FOR INTERMITTENT INCIDENT" .

>> **INSPECTION END**

Component Inspection

UBS00JLI

ASCD STEERING SWITCH

1. Disconnect ASCD steering switch.
2. Check continuity between ASCD steering switch terminals 1 and 4 with pushing each switch.

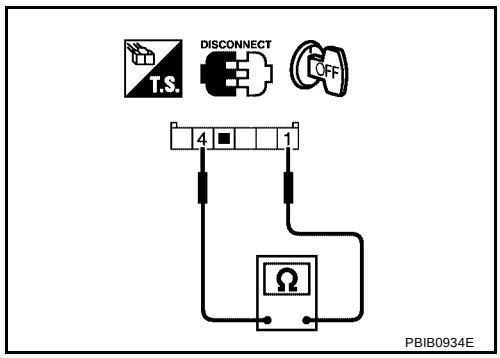

Switch	Condition	Resistance [Ω]
MAIN SW	Pressed	Approx. 0
	Released	Approx. 4,000
CANCEL SW	Pressed	Approx. 250
	Released	Approx. 4,000
RESUME/ACCELERATE SW	Pressed	Approx. 1,480
	Released	Approx. 4,000
COAST/SET SW	Pressed	Approx. 660
	Released	Approx. 4,000

DTC P1572 ASCD BRAKE SWITCH

PFP:25320

Component Description

UBS00JLJ

When the brake pedal is depressed, ASCD brake switch is turned OFF and stop lamp switch is turned ON. ECM detects the state of the brake pedal by this input of two kinds (ON/OFF signal).
Refer to EC-678, "AUTOMATIC SPEED CONTROL DEVICE (ASCD)" for ASCD functions.

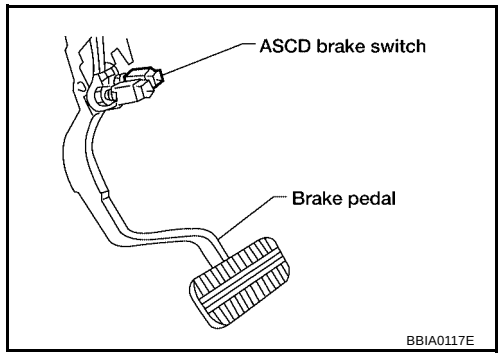

CONSULT-II Reference Value in Data Monitor Mode

UBS00JLK

Specification data are reference values.

MONITOR ITEM	CONDITION		SPECIFICATION
BRAKE SW1 (ASCD brake switch)	● Ignition switch: ON	● Clutch pedal (M/T) and brake pedal: Fully released	ON
		● Clutch (M/T) and/or brake pedal: Slightly depressed	OFF
BRAKE SW2 (STOP lamp switch)	● Ignition switch: ON	Brake pedal: Fully released	OFF
		Brake pedal: Slightly depressed	ON

On Board Diagnosis Logic

UBS00JLL

This self-diagnosis has the one trip detection logic.
The MIL will not light up for this diagnosis.

NOTE:

- **If DTC P1572 is displayed with DTC P0605, first perform the trouble diagnosis for DTC P0605. Refer to EC-1096 .**
- **This self-diagnosis has the one trip detection logic. When malfunction A is detected, DTC is not stored in ECM memory. And in that case, 1st trip DTC and 1st trip freeze frame data are displayed. 1st trip DTC is erased when ignition switch OFF. And even when malfunction A is detected in two consecutive trips, DTC is not stored in ECM memory.**

DTC No.	Trouble Diagnosis Name	DTC Detecting Condition		Possible Cause
P1572 1572	ASCD brake switch	A)	● When the vehicle speed is above 30km/h (19 MPH), ON signals from the stop lamp switch and the ASCD brake switch are sent to ECM at the same time.	● Harness or connectors (The stop lamp switch circuit is shorted.) ● Harness or connectors (The ASCD brake switch circuit is shorted.) ● Harness or connectors (The ASCD clutch switch circuit is shorted.) (M/T models) ● Stop lamp switch ● ASCD brake switch ● ASCD clutch switch (M/T models) ● Incorrect stop lamp switch installation ● Incorrect ASCD brake switch installation ● Incorrect ASCD clutch switch installation (M/T models) ● ECM
		B)	● ASCD brake switch signal is not sent to ECM for extremely long time while the vehicle is driving	

DTC Confirmation Procedure

UBS00JLM

CAUTION:
Always drive vehicle at a safe speed.

NOTE:
- If DTC Confirmation Procedure has been previously conducted, always turn ignition switch OFF and wait at least 10 seconds before conducting the next test.
- Procedure for malfunction B is not described here. It takes extremely long time to complete procedure for malfunction B. By performing procedure for malfunction A, the incident that causes malfunction B can be detected.

TESTING CONDITION:
Steps 4 and 5 may be conducted with the drive wheels lifted in the shop or by driving the vehicle. If a road test is expected to be easier, it is unnecessary to lift the vehicle.

WITH CONSULT-II

1. Start engine.
2. Select “DATA MONITOR” mode with CONSULT-II.
3. Press MAIN switch and make sure that CRUISE indicator lights up.
4. Drive the vehicle for at least 5 consecutive seconds under the following condition.

VHCL SPEED SE	More than 30 km/h (19 MPH)
Shift lever	Suitable position

If 1st trip DTC is detected, go to EC-1260, "Diagnostic Procedure" .
If 1st trip DTC is not detected, go to the following step.

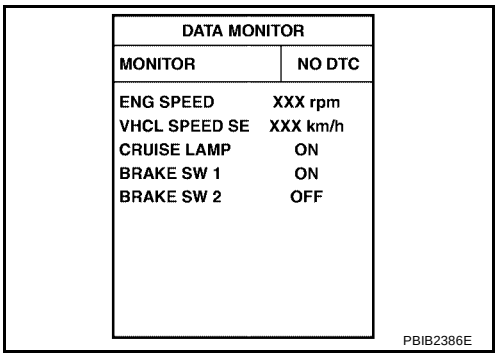

5. Drive the vehicle for at least 5 consecutive seconds under the following condition.

VHCL SPEED SE	More than 30 km/h (19 MPH)
Shift lever	Suitable position
Driving location	Depress the brake pedal for more than 5 seconds so as not to come off from the above-mentioned vehicle speed.

6. If 1st trip DTC is detected, go to EC-1260, "Diagnostic Procedure" .

WITH GST

Follow the procedure “WITH CONSULT-II” above.

Wiring Diagram

UBS00JLN

EC-ASC/BS-01

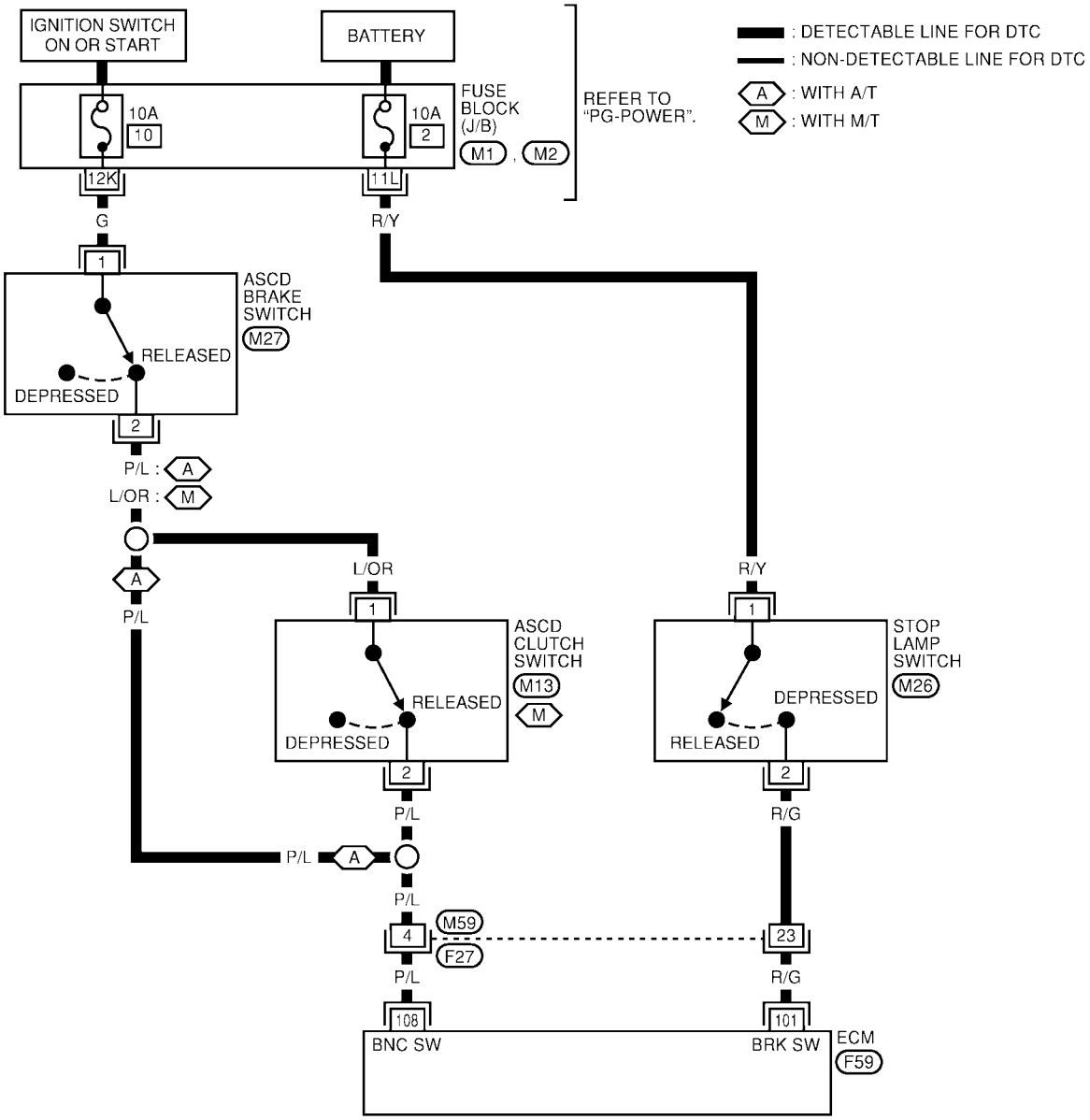

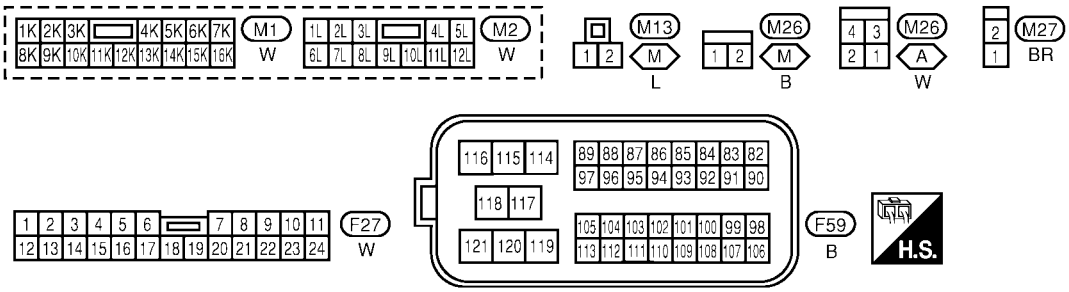

BBWA1394E

Specification data are reference values and are measured between each terminal and ground.

CAUTION:

Do not use ECM ground terminals when measuring input/output voltage. Doing so may result in damage to the ECM's transistor. Use a ground other than ECM terminals, such as the ground.

TERMINAL NO.	WIRE COLOR	ITEM	CONDITION	DATA (DC Voltage)
101	R/G	Stop lamp switch	**[Ignition switch: OFF]** ● Brake pedal: Fully released	Approximately 0V
			[Ignition switch: OFF] ● Brake pedal: Slightly depressed	BATTERY VOLTAGE (11 - 14V)
108	P/L	ASCD brake switch	**[Ignition switch: ON]** ● Brake pedal: Slightly depressed (A/T) ● Brake pedal and/or clutch pedal: Slightly depressed (M/T)	Approximately 0V
			[Ignition switch: ON] ● Brake pedal: Fully released (A/T) ● Brake pedal and clutch pedal: Fully released (M/T)	BATTERY VOLTAGE (11 - 14V)

Diagnostic Procedure

UBS00JLO

1. CHECK OVERALL FUNCTION-I

With CONSULT-II

1. Turn ignition switch ON.
2. Select “BRAKE SW1” in “DATA MONITOR” mode with CONSULT-II.
3. Check “BRAKE SW1” indication under the following conditions.

A/T models

CONDITION	INDICATION
Brake pedal: Slightly depressed	OFF
Brake pedal: Fully released	ON

M/T models

CONDITION	INDICATION
Clutch pedal and/or brake pedal: Slightly depressed	OFF
Clutch pedal and brake pedal: Fully released	ON

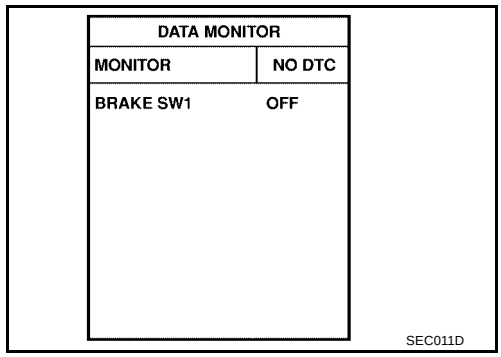

Without CONSULT-II

1. Turn ignition switch ON.
2. Check voltage between ECM terminal 108 and ground under the following conditions.

A/T models

CONDITION	VOLTAGE
Brake pedal: Slightly depressed	Approximately 0V
Brake pedal: Fully released	Battery voltage

M/T models

CONDITION	VOLTAGE
Clutch pedal and/or brake pedal: Slightly depressed	Approximately 0V
Clutch pedal and brake pedal: Fully released	Battery voltage

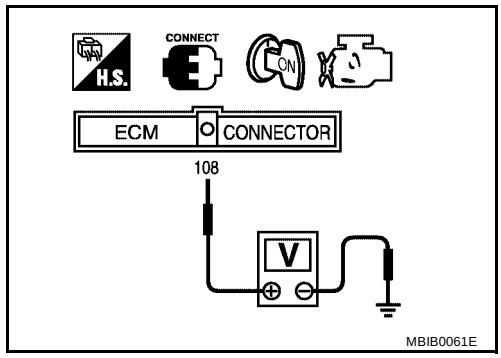

OK or NG

OK >> GO TO 2.
NG (M/T models) >>GO TO 3.
NG (A/T models) >>GO TO 4.

2. CHECK OVERALL FUNCTION-II

With CONSULT-II

Check “BRAKE SW2” indication in “DATA MONITOR” mode.

CONDITION	INDICATION
Brake pedal: Fully released	OFF
Brake pedal: Slightly depressed	ON

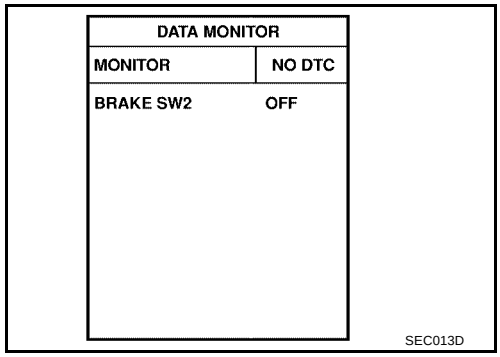

Without CONSULT-II

Check voltage between ECM terminal 101 and ground under the following conditions.

CONDITION	VOLTAGE
Brake pedal: Fully released	Approximately 0V
Brake pedal: Slightly depressed	Battery voltage

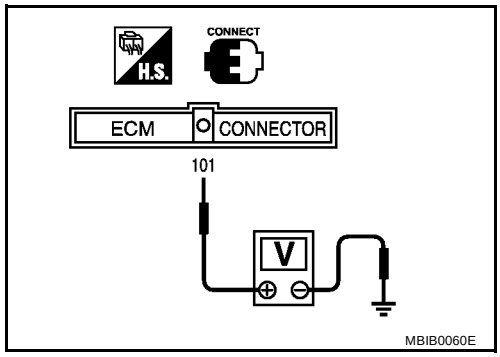

OK or NG

OK >> GO TO 18.
NG >> GO TO 13.

3. CHECK ASCD CLUTCH SWITCH POWER SUPPLY CIRCUIT

1. Turn ignition switch OFF.
2. Disconnect ASCD clutch switch harness connector.
3. Turn ignition switch ON.

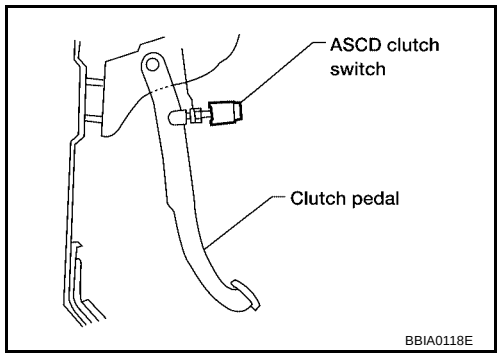

4. Check voltage between ASCD clutch switch terminal 1 and ground under the following conditions with CONSULT-II or tester.

CONDITION	VOLTAGE
Brake pedal: Fully released	Battery voltage
Brake pedal: Slightly depressed	Approx. 0V

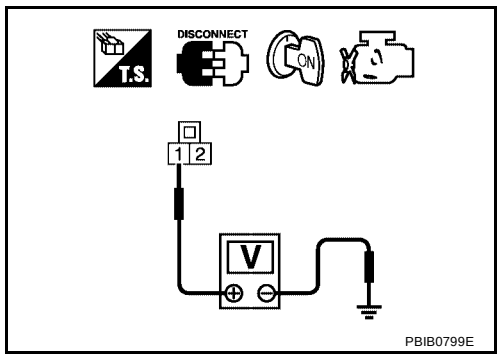

OK or NG

OK >> GO TO 10.
NG >> GO TO 4.

4. CHECK ASCD BRAKE SWITCH POWER SUPPLY CIRCUIT

1. Turn ignition switch OFF.
2. Disconnect ASCD brake switch harness connector.
3. Turn ignition switch ON.

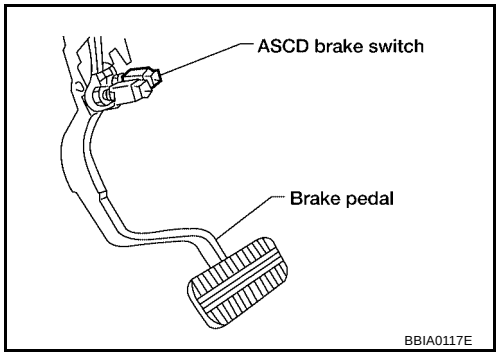

4. Check voltage between ASCD brake switch terminal 1 and ground with CONSULT-II or tester.

Voltage: Battery voltage

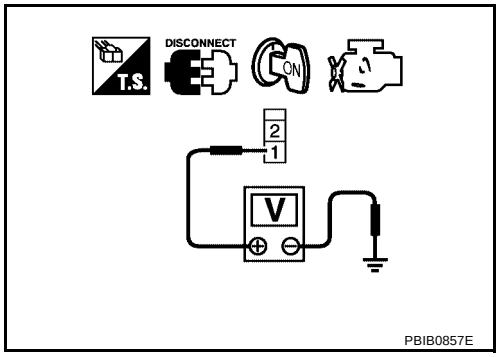

OK or NG

OK (M/T models)>>GO TO 6.
OK (A/T models)>>GO TO 7.
NG >> GO TO 5.

5. DETECT MALFUNCTIONING PART

Check the following.

- Fuse block (J/B) connector M1
- 10A fuse
- Harness for open or short between ASCD brake switch and fuse

>> Repair open circuit or short to ground or short to power in harness or connectors.

6. CHECK ASCD BRAKE SWITCH INPUT SIGNAL CIRCUIT FOR OPEN AND SHORT

1. Turn ignition switch OFF.
2. Check harness continuity between ASCD brake switch terminal 2 and ASCD clutch switch terminal 1. Refer to Wiring Diagram.

Continuity should exist.

3. Also check harness for short to ground and short to power.

OK or NG

OK >> GO TO 9.
NG >> Repair open circuit or short to ground or short to power in harness or connectors.

7. CHECK ASCD BRAKE SWITCH INPUT SIGNAL CIRCUIT FOR OPEN AND SHORT

1. Turn ignition switch OFF.
2. Disconnect ECM harness connector.
3. Check harness continuity between ECM terminal 108 and ASCD brake switch terminal 2. Refer to Wiring Diagram.

   Continuity should exist.

4. Also check harness for short to ground or short to power.

OK or NG

OK >> GO TO 9.
NG >> GO TO 8.

8. DETECT MALFUNCTIONING PART

Check the following.

- Harness connectors M59, F27
- Harness for open or short between ECM and ASCD brake switch

>> Repair open circuit or short to ground or short to power in harness or connectors.

9. CHECK ASCD BRAKE SWITCH

Refer to EC-1265, "Component Inspection" .

OK or NG

OK >> GO TO 18.
NG >> Replace ASCD brake switch.

10. CHECK ASCD CLUTCH SWITCH INPUT SIGNAL CIRCUIT FOR OPEN AND SHORT

1. Turn ignition switch OFF.
2. Disconnect ECM harness connector.
3. Check harness continuity between ECM terminal 108 and ASCD clutch switch terminal 2. Refer to Wiring Diagram.

   Continuity should exist.

4. Also check harness for short to ground or short to power.

OK or NG

OK >> GO TO 12.
NG >> GO TO 11.

11. DETECT MALFUNCTIONING PART

Check the following.

- Harness connectors M59, F27
- Harness for open or short between ECM and ASCD clutch switch

>> Repair open circuit or short to ground or short to power in harness or connectors.

12. CHECK ASCD CLUTCH SWITCH

Refer to EC-1265, "Component Inspection" .

OK or NG

OK >> GO TO 18.
NG >> Replace ASCD clutch switch.

13. CHECK STOP LAMP SWITCH POWER SUPPLY CIRCUIT

1. Turn ignition switch OFF.
2. Disconnect stop lamp switch harness connector.

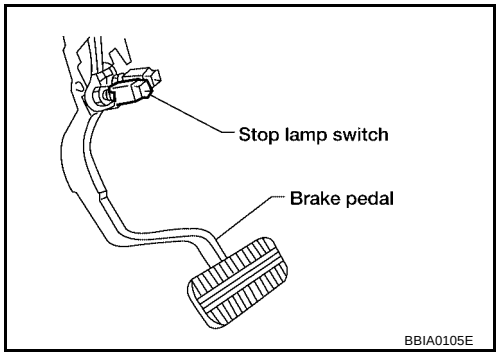

3. Check voltage between stop lamp switch terminal 1 and ground with CONSULT-II or tester.

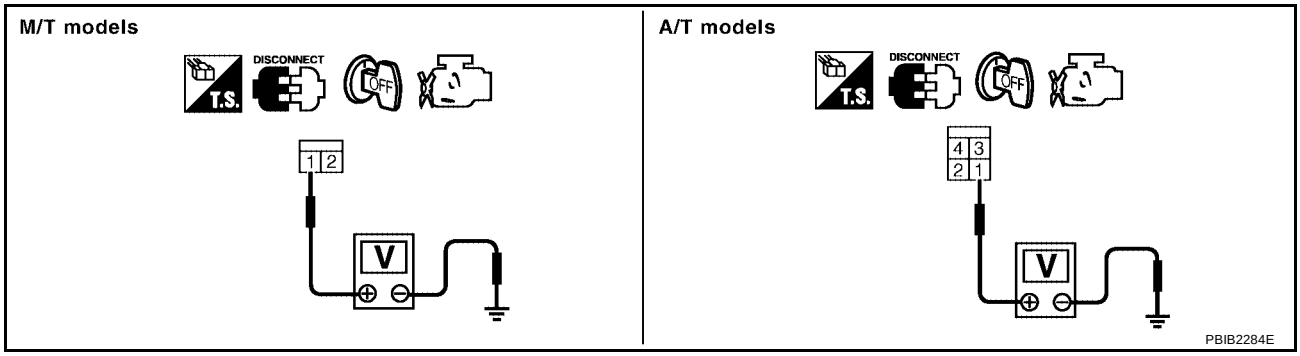

Voltage: Battery voltage

OK or NG

OK >> GO TO 15.
NG >> GO TO 14.

14. DETECT MALFUNCTIONING PART

Check the following.

- Fuse block (J/B) connector M2
- 10A fuse
- Harness for open or short between stop lamp switch and fuse

>> Repair open circuit or short to ground or short to power in harness or connectors.

15. CHECK STOP LAMP SWITCH INPUT SIGNAL CIRCUIT FOR OPEN AND SHORT

1. Disconnect ECM harness connector.
2. Check harness continuity between ECM terminal 101 and stop lamp switch terminal 2.
   Refer to Wiring Diagram.

Continuity should exist.

3. Also check harness for short to ground and short to power.

OK or NG

OK >> GO TO 17.
NG >> GO TO 16.

16. DETECT MALFUNCTIONING PART

Check the following.

- Harness connectors M59, F27
- Harness for open or short between ECM and stop lamp switch

>> Repair open circuit or short to ground or short to power in harness or connectors.

17. CHECK STOP LAMP SWITCH

Refer to EC-1265, "Component Inspection" .

OK or NG

OK >> GO TO 18.
NG >> Replace stop lamp switch.

18. CHECK INTERMITTENT INCIDENT

Refer to EC-834, "TROUBLE DIAGNOSIS FOR INTERMITTENT INCIDENT" .

>> **INSPECTION END**

Component Inspection

UBS00JLP

ASCD BRAKE SWITCH

1. Turn ignition switch OFF.
2. Disconnect ASCD brake switch harness connector.
3. Check harness continuity between ASCD brake switch terminals 1 and 2 under the following conditions.

Condition	Continuity
Brake pedal: Fully released.	Should exist.
Brake pedal: Slightly depressed.	Should not exist.

If NG, adjust ASCD brake switch installation, refer to BR-11, "BRAKE PEDAL AND BRACKET" , and perform step 3 again.

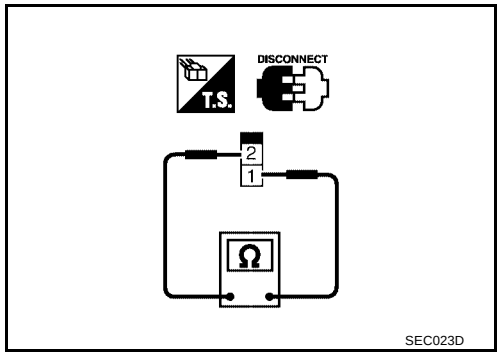

ASCD CLUTCH SWITCH (FOR M/T MODELS)

1. Turn ignition switch OFF.
2. Disconnect ASCD clutch switch harness connector.
3. Check harness continuity between ASCD clutch switch terminals 1 and 2 under the following conditions.

Condition	Continuity
Clutch pedal: Fully released.	Should exist.
Clutch pedal: Slightly depressed.	Should not exist.

If NG, adjust ASCD clutch switch installation, refer to CL-23, "CLUTCH SYSTEM" , and perform step 3 again.

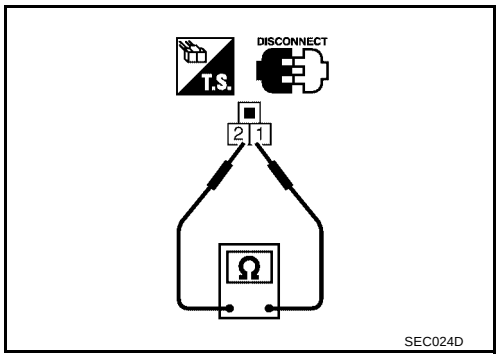

STOP LAMP SWITCH

1. Turn ignition switch OFF.
2. Disconnect stop lamp switch harness connector.
3. Check harness continuity between stop lamp switch terminals 1 and 2 under the following conditions.

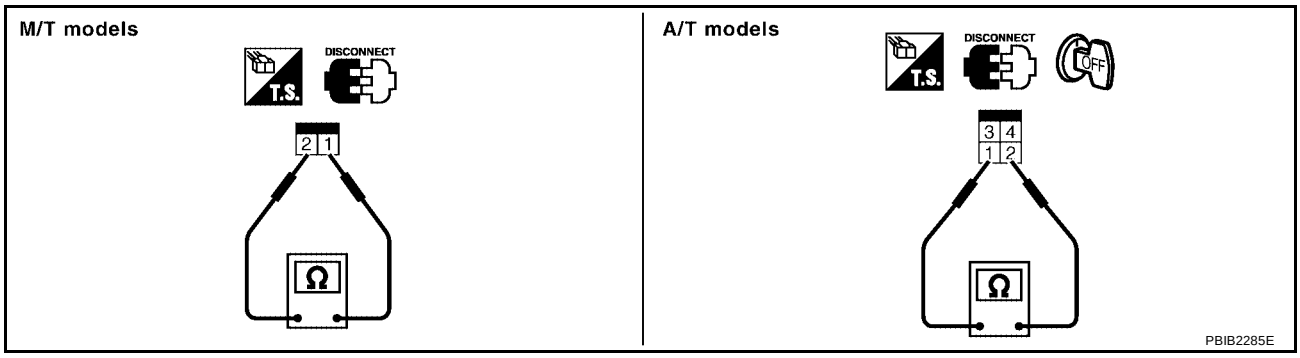

Condition	Continuity
Brake pedal: Fully released.	Should not exist.
Brake pedal: Slightly depressed.	Should exist.

If NG, adjust stop lamp switch installation, refer to BR-11, "BRAKE PEDAL AND BRACKET" , and perform step 3 again.

DTC P1574 ASCD VEHICLE SPEED SENSOR

PFP:31036

Component Description

UBS00JLQ

The ECM receives two vehicle speed sensor signals via CAN communication line. One is sent from combination meter, and the other is from TCM (Transmission control module). The ECM uses these signals for ASCD control. Refer to EC-678, "AUTOMATIC SPEED CONTROL DEVICE (ASCD)" for ASCD functions.

On Board Diagnosis Logic

UBS00JLR

This self-diagnosis has the one trip detection logic.
The MIL will not light up for this diagnosis.

NOTE:

- **If DTC P1574 is displayed with DTC U1000, U1001, first perform the trouble diagnosis for DTC U1000, U1001. Refer to EC-842, "DTC U1000, U1001 CAN COMMUNICATION LINE" .**
- **If DTC P1574 is displayed with DTC P0500, first perform the trouble diagnosis for DTC P0500. Refer to EC-1085, "DTC P0500 VSS"**
- **If DTC P1574 is displayed with DTC P0605, first perform the trouble diagnosis for DTC P0605. Refer to EC-1096, "DTC P0605 ECM"**

DTC No.	Trouble Diagnosis Name	DTC Detecting Condition	Possible Cause
P1574 1574	ASCD vehicle speed sensor	ECM detects a difference between two vehicle speed signals is out of the specified range.	● Harness or connectors (The CAN communication line is open or shorted.) ● TCM (A/T models) ● Combination meter ● Vehicle speed sensor ● ECM

DTC Confirmation Procedure

UBS00JLS

CAUTION:
Always drive vehicle at a safe speed.

NOTE:
If DTC Confirmation Procedure has been previously conducted, always turn ignition switch OFF and wait at least 10 seconds before conducting the next test.

TESTING CONDITION:
Step 3 may be conducted with the drive wheels lifted in the shop or by driving the vehicle. If a road test is expected to be easier, it is unnecessary to lift the vehicle.

WITH CONSULT-II

1. Start engine.
2. Select “DATA MONITOR” mode with CONSULT-II.
3. Drive the vehicle at more than 40 km/h (25MPH).
4. If DTC is detected, go to EC-1268, "Diagnostic Procedure" .

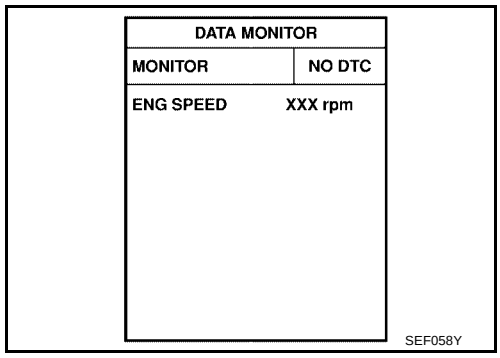

WITH GST

Follow the procedure “WITH CONSULT-II” above.

Diagnostic Procedure

UBS00JLT

1. CHECK DTC WITH TCM

Check DTC with TCM. Refer to AT-426, "ON BOARD DIAGNOSTIC SYSTEM DESCRIPTION" .

OK or NG

OK >> GO TO 2.
NG >> Perform trouble shooting relevant to DTC indicated.

2. CHECK COMBINATION METER

Check combination meter function.
Refer to DI-16, "Meter/Gauge Operation and Odo/Trip Meter Segment Check in Diagnosis Mode" .

>> **INSPECTION END**

DTC P1706 PNP SWITCH

PFP:32006

Component Description

UBS00KKM

When the shift position is P or N (A/T), Neutral (M/T) park/neutral position (PNP) switch is ON.
ECM detects the park/neutral position when continuity with ground exists.

CONSULT-II Reference Value in Data Monitor Mode

UBS00KKN

Specification data are reference values.

MONITOR ITEM	CONDITION		SPECIFICATION
P/N POSI SW	● Ignition switch: ON	Shift lever: P or N (A/T), Neutral (M/T)	ON
		Shift lever: Except above position	OFF

On Board Diagnosis Logic

UBS00KKO

DTC No.	Trouble diagnosis name	DTC detecting condition	Possible cause
P1706 1706	Park/neutral position switch	The signal of the park/neutral position (PNP) switch is not changed in the process of engine starting and driving.	● Harness or connectors [The park/neutral position (PNP) switch circuit is open or shorted.] ● Park/neutral position (PNP) switch

DTC Confirmation Procedure

UBS00KKP

CAUTION:
Always drive vehicle at a safe speed.

NOTE:
If DTC Confirmation Procedure has been previously conducted, always turn ignition switch OFF and wait at least 10 seconds before conducting the next test.

WITH CONSULT-II

1. Turn ignition switch ON.
2. Select “P/N POSI SW” in “DATA MONITOR” mode with CONSULT-II. Then check the “P/N POSI SW” signal under the following conditions.

Position (Selector lever)	Known good signal
P or N position (A/T) Neutral position (M/T)	ON
Except above position	OFF

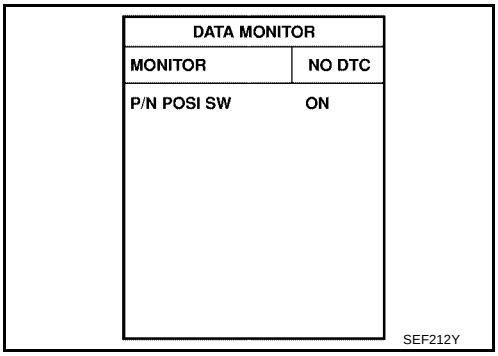

If NG, go to EC-1272, "Diagnostic Procedure" .
If OK, go to following step.

3. Select “DATA MONITOR” mode with CONSULT-II.
4. Start engine and warm it up to normal operating temperature.
5. Maintain the following conditions for at least 50 consecutive seconds.

ENG SPEED	More than 1,500 rpm
COOLANT TEMP/S	More than 70°C (158°F)
B/FUEL SCHDL	3.0 - 31.8 msec
VHCL SPEED SE	More than 64 km/h (40 MPH)
Shift lever	Suitable position

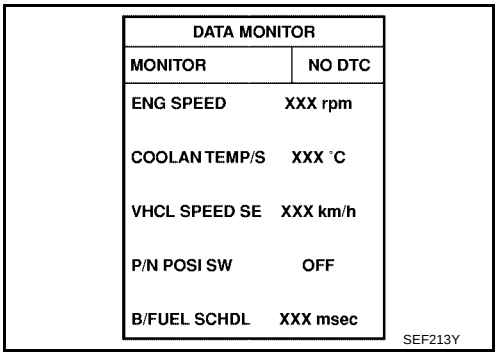

6. If 1st trip DTC is detected, go to EC-1272, "Diagnostic Procedure" .

Overall Function Check

UBS00KKQ

Use this procedure to check the overall function of the park/neutral position switch circuit. During this check, a 1st trip DTC might not be confirmed.

WITH GST

1. Turn ignition switch ON.
2. Check voltage between ECM terminal 102 (PNP switch signal) and ground under the following conditions.

Condition (Gear position)	Voltage (V) (Known-good data)
P or N position (A/T) Neutral position (M/T)	Approx. 0
Except above position	Battery voltage

3. If NG, go to EC-1272, "Diagnostic Procedure" .

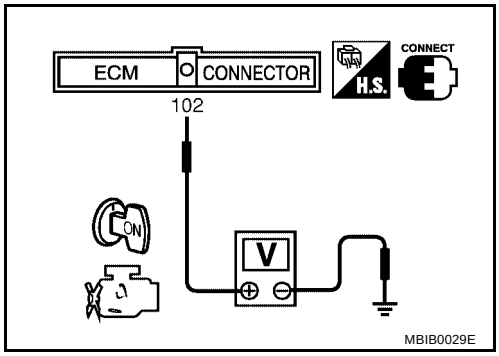

Wiring Diagram

UBS00KKR

EC-PNP/SW-01

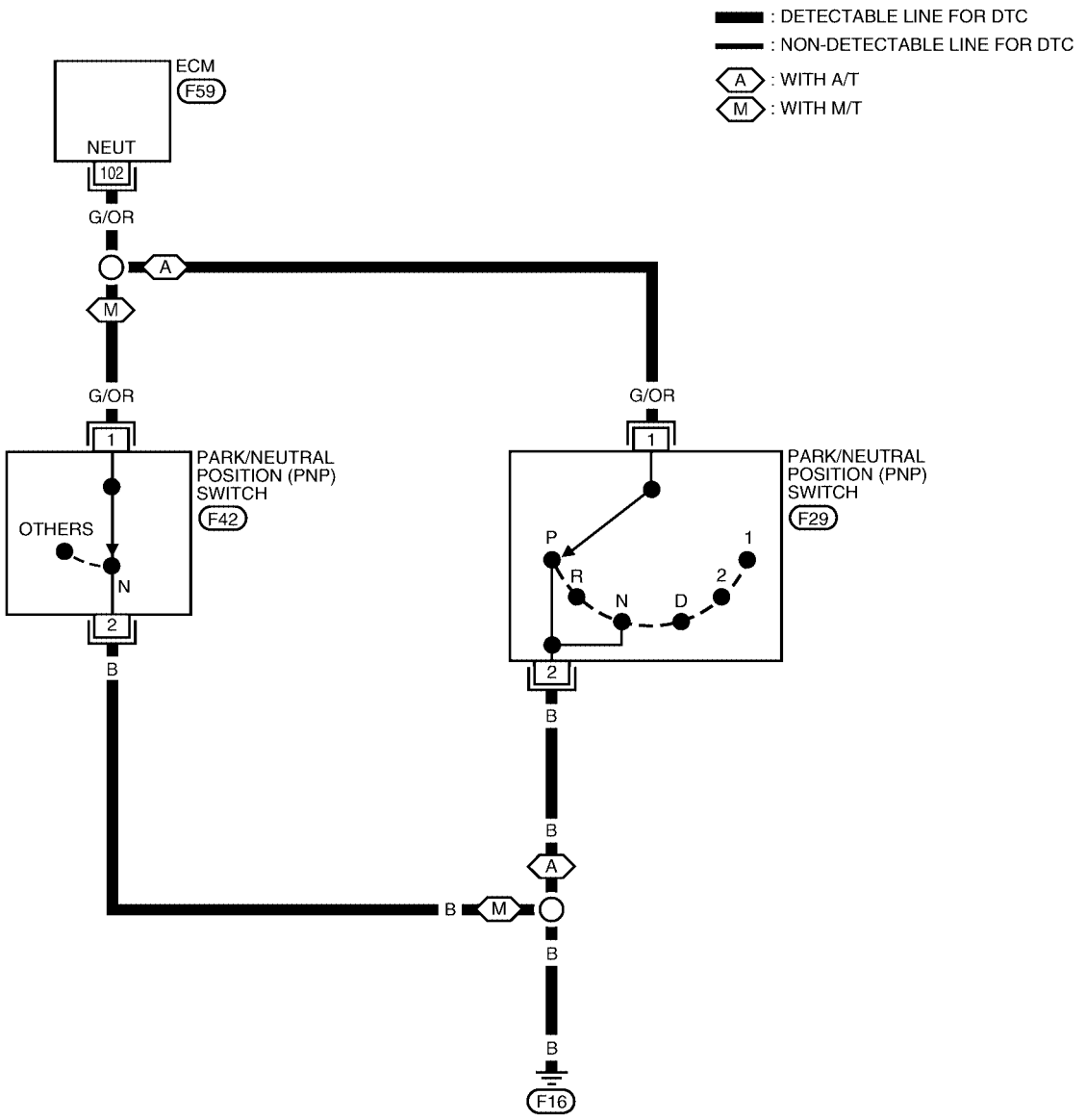

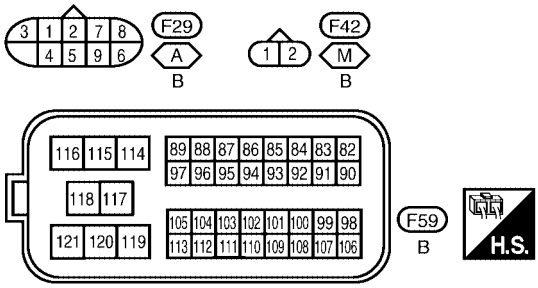

BBWA0749E

Specification data are reference values and are measured between each terminal and ground.

CAUTION:

Do not use ECM ground terminals when measuring input/output voltage. Doing so may result in damage to the ECM's transistor. Use a ground other than ECM terminals, such as the ground.

TERMINAL NO.	WIRE COLOR	ITEM	CONDITION	DATA (DC Voltage)
102	G/OR	PNP switch	**[Ignition switch: ON]** ● Shift lever: P or D (A/T), Neutral (M/T)	Approximately 0V
			[Ignition switch: ON] ● Except above gear position	BATTERY VOLTAGE (11 - 14V)

Diagnostic Procedure

UBS00KKS

1. CHECK GROUND CIRCUIT

1. Turn ignition switch OFF.
2. Disconnect PNP switch harness connector.
3. Check harness continuity between PNP switch terminal 2 and ground.
   Refer to Wiring Diagram.

   Continuity should exist.

4. Also check harness for short to power.

OK or NG

OK >> GO TO 2.
NG >> Repair open circuit or short to power in harness or connectors.

2. CHECK INPUT SIGNAL CIRCUIT

1. Disconnect ECM harness connector.
2. Check harness continuity between ECM terminal 102 and PNP switch terminal 1.
   Refer to Wiring Diagram.

   Continuity should exist.

3. Also check harness for short to ground and short to power.

OK or NG

OK >> GO TO 3.
NG >> Repair open circuit or short to ground or short to power in harness or connectors.

3. CHECK PNP SWITCH

Refer to AT-487, "DTC P0705 PARK/NEUTRAL POSITION SWITCH" (A/T models), MT-75, "POSITION SWITCH" (M/T models).

OK or NG

OK >> GO TO 4.
NG >> Replace PNP switch.

4. CHECK INTERMITTENT INCIDENT

Perform EC-834, "TROUBLE DIAGNOSIS FOR INTERMITTENT INCIDENT" .

>> **INSPECTION END**

DTC P1800 VIAS CONTROL SOLENOID VALVE

PFP:14955

Component Description

UBS00KK7

The VIAS control solenoid valve cuts the intake manifold vacuum signal for power valve actuator. It responds to ON/OFF signals from the ECM. When the solenoid is OFF, the vacuum signal from the intake manifold is cut. When the ECM sends an ON signal the coil pulls the plunger downward and feeds the vacuum signal to the power valve actuator.

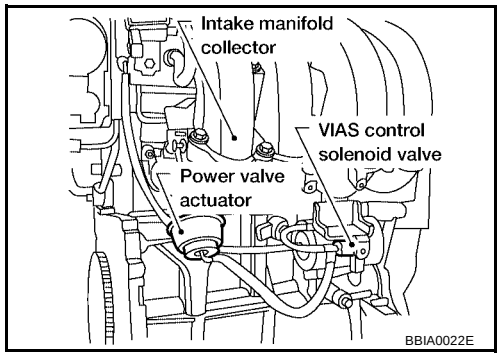

CONSULT-II Reference Value in Data Monitor Mode

UBS00KK8

Specification data are reference values.

MONITOR ITEM	CONDITION		SPECIFICATION
VIAS S/V	● Engine: After warming up	Idle	OFF
		More than 5,000 rpm	ON

On Board Diagnosis Logic

UBS00KK9

The MIL will not light up for this self-diagnosis.

DTC No.	Trouble diagnosis name	DTC detecting condition	Possible cause
P1800 1800	VIAS control solenoid valve circuit	An excessively low or high voltage signal is sent to ECM through the valve	● Harness or connectors (The solenoid valve circuit is open or shorted.) ● VIAS control solenoid valve

DTC Confirmation Procedure

UBS00KKA

NOTE:
If DTC Confirmation Procedure has been previously conducted, always turn ignition switch OFF and wait at least 10 seconds before conducting the next test.
TESTING CONDITION:
Before performing the following procedure, confirm that battery voltage is between 11V at idle.

WITH CONSULT-II

1. Turn ignition switch ON.
2. Select “DATA MONITOR” mode with CONSULT-II.
3. Start engine and let it idle for at least 5 seconds.
4. If 1st trip DTC is detected, go to EC-1275, "Diagnostic Procedure" .

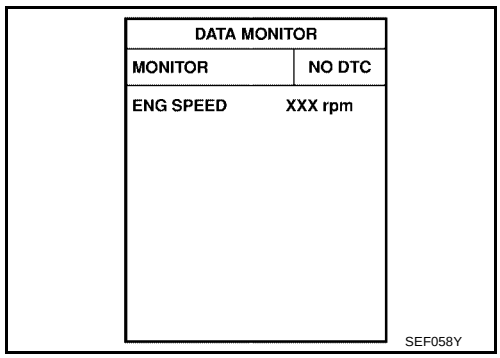

WITH GST

Follow the procedure “WITH CONSULT-II” above.

Wiring Diagram

UBS00KKB

EC-VIAS/V-01

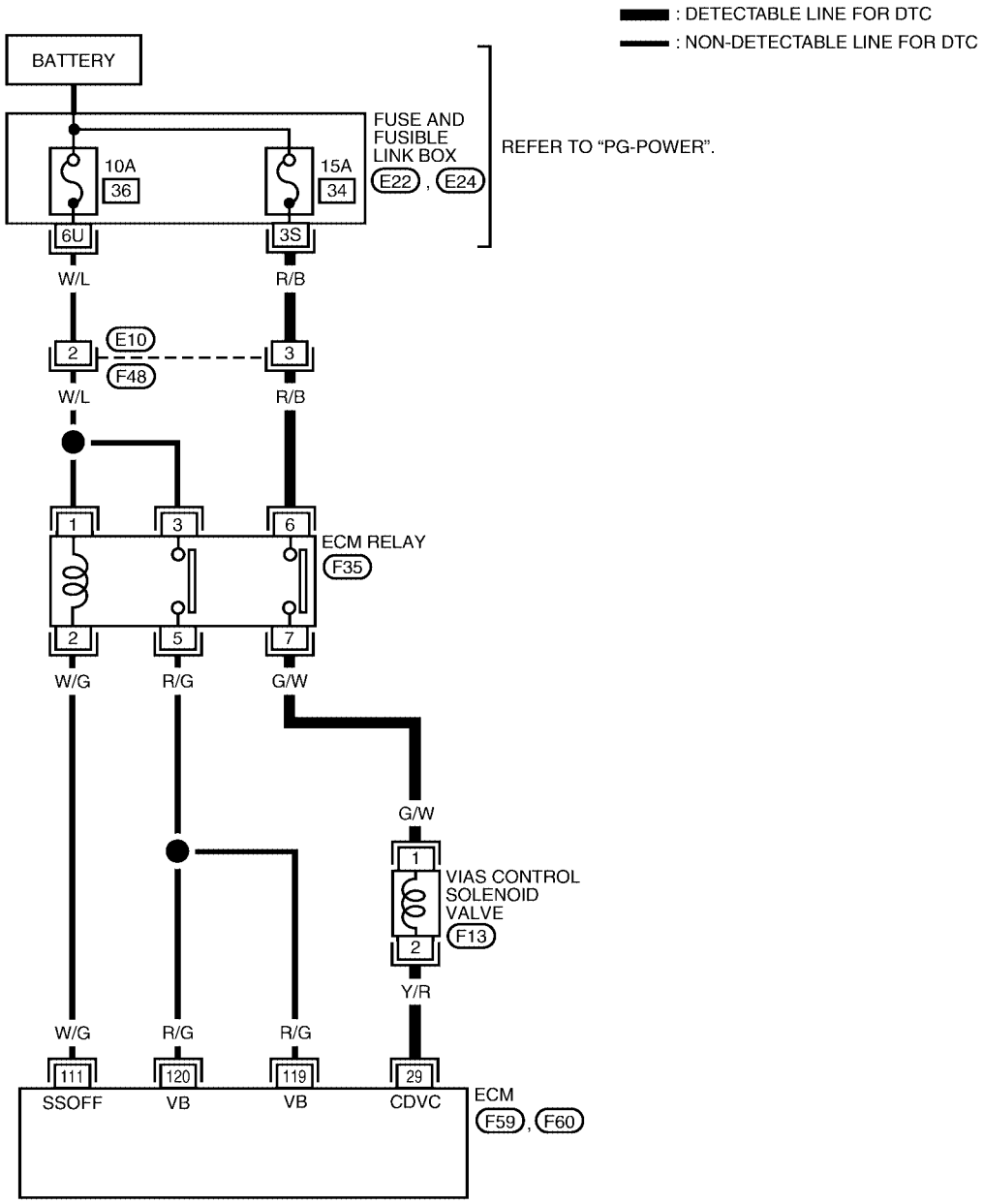

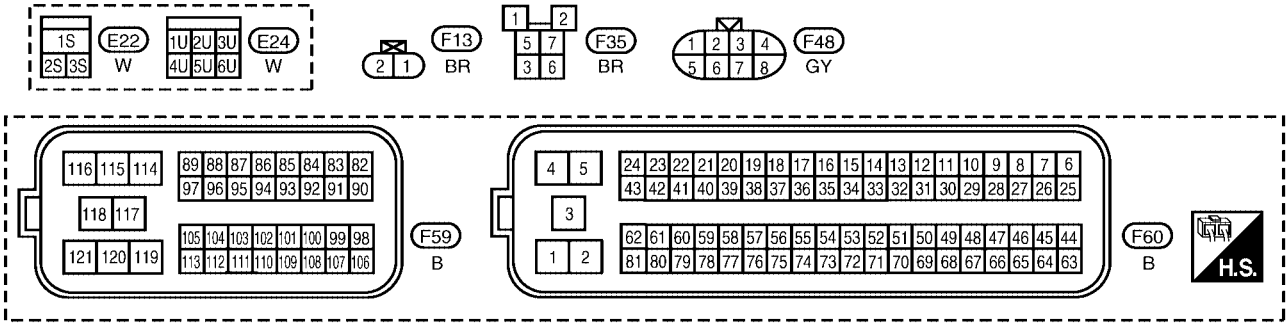

BBWA1658E

Specification data are reference values and are measured between each terminal and ground.

CAUTION:

Do not use ECM ground terminals when measuring input/output voltage. Doing so may result in damage to the ECM's transistor. Use a ground other than ECM terminals, such as the ground.

TERMINAL NO.	WIRE COLOR	ITEM	CONDITION	DATA (DC Voltage)
29	Y/R	VIAS control solenoid valve	**[Engine is running]** ● Idle speed	BATTERY VOLTAGE (11 - 14V)
			[Engine is running] ● Engine speed is above 5,000 rpm	0 - 1.0V
111	W/G	ECM relay (Self shut-off)	**[Engine is running]** **[Ignition switch: OFF]** ● A few seconds after turning ignition switch OFF	0 - 1.0V
			[Ignition switch: OFF] ● More than a few seconds after turning ignition switch OFF	BATTERY VOLTAGE (11 - 14V)
119 120	R/G	Power supply for ECM	**[Ignition switch: ON]**	BATTERY VOLTAGE (11 - 14V)

Diagnostic Procedure

UBS00KKC

1. CHECK VIAS CONTROL SOLENOID VALVE POWER SUPPLY CIRCUIT–I

1. Turn ignition switch OFF.
2. Disconnect VIAS control solenoid valve harness connector.
3. Turn ignition switch ON.

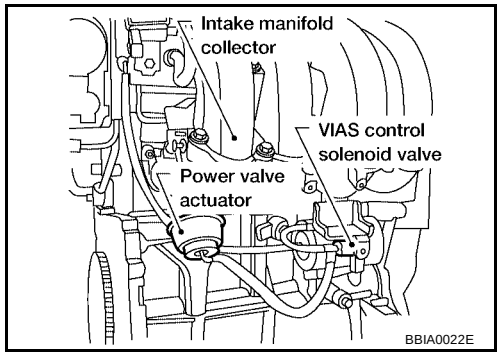

4. Check voltage between terminal 1 and ground with CONSULT-II or tester.

Voltage: Battery voltage

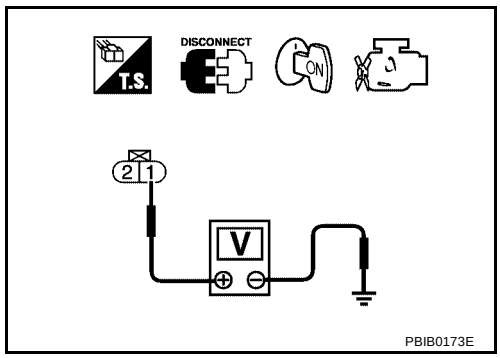

OK or NG

OK >> GO TO 6.
NG >> GO TO 2.

2. CHECK VIAS CONTROL SOLENOID VALVE POWER SUPPLY CIRCUIT-II

1. Turn ignition switch OFF.
2. Disconnect ECM relay.
3. Check harness continuity between ECM relay terminal 7 and VIAS control solenoid valve terminal 1.
   Refer to Wiring Diagram.

   Continuity should exist.

4. Also check harness for short to ground and short to power.

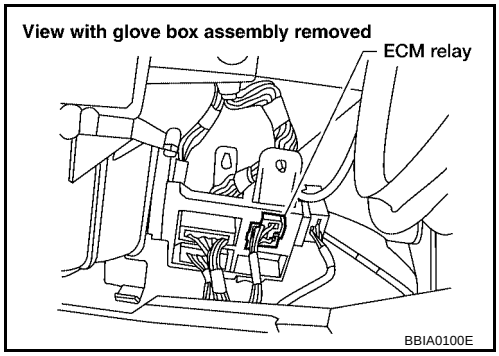

OK or NG

OK >> GO TO 3.
NG >> Repair open circuit or short to ground or short to power in harness or connectors.

3. CHECK VIAS CONTROL SOLENOID VALVE POWER SUPPLY CIRCUIT-III

Check voltage between ECM relay terminal 6 and ground with CONSULT-II or tester.

Voltage: Battery voltage

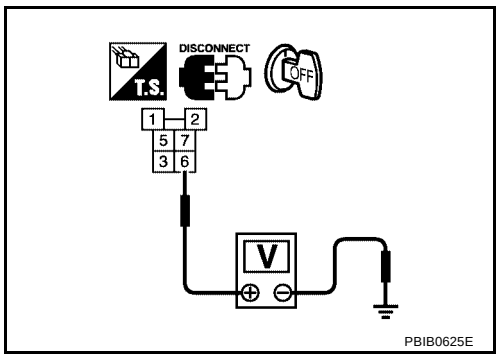

OK or NG

OK >> GO TO 5.
NG >> GO TO 4.

4. DETECT MALFUNCTIONING PART

Check the following.

- Harness connectors E10, F48
- Fuse and fusible link box connector E22
- 15A fuse
- Harness for open or short between ECM relay and battery

>> Repair or replace harness or connectors.

5. CHECK ECM RELAY

Refer to EC-1324, "Component Inspection" .

OK or NG

OK >> GO TO 8.
NG >> Replace ECM relay.

6. CHECK VIAS CONTROL SOLENOID VALVE OUTPUT SIGNAL CIRCUIT FOR OPEN AND SHORT

1. Turn ignition switch OFF.
2. Disconnect ECM harness connector.
3. Check harness continuity between ECM terminal 29 and VIAS control solenoid valve terminal 2. Refer to Wiring Diagram.

Continuity should exist.

4. Also check harness for short to ground and short to power.

OK or NG

OK >> GO TO 7.
NG >> Repair open circuit or short to ground or short to power in harness or connectors.

7. CHECK VIAS CONTROL SOLENOID VALVE

Refer to EC-1277, "Component Inspection" .

OK or NG

OK >> GO TO 8.
NG >> Replace VIAS control solenoid valve.

8. CHECK INTERMITTENT INCIDENT

Refer to EC-834, "TROUBLE DIAGNOSIS FOR INTERMITTENT INCIDENT" .

>> **INSPECTION END**

Component Inspection

UBS00KKD

VIAS CONTROL SOLENOID VALVE

With CONSULT-II

1. Reconnect harness connectors disconnected.
2. Turn ignition switch ON.
3. Perform “VIAS SOL VALVE” in “ACTIVE TEST” mode.
4. Check air passage continuity and operation delay time under the following conditions.

Condition VIAS SOL VALVE	Air passage continuity between A and B	Air passage continuity between A and C
ON	Yes	No
OFF	No	Yes

Operation takes less than 1 second.

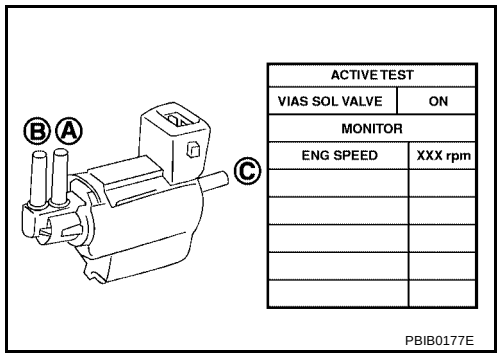

With GST

Check air passage continuity and operation delay time under the following conditions.

Condition	Air passage continuity between A and B	Air passage continuity between A and C
12V direct current supply between terminals 1 and 2	Yes	No
No supply	No	Yes

Operation takes less than 1 second.

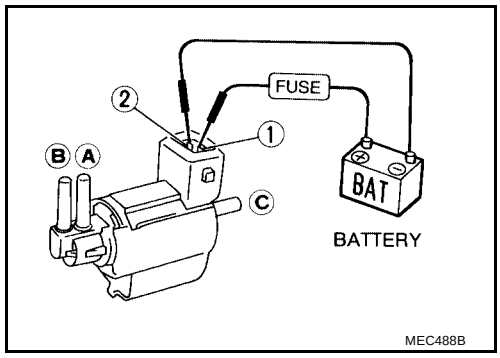

Removal and Installation

UBS00KKE

VIAS CONTROL SOLENOID VALVE

Refer to EM-108, "INTAKE MANIFOLD" .

DTC P1805 BRAKE SWITCH

PFP:25320

Description

UBS00KKF

Brake switch signal is applied to the ECM through the stop lamp switch when the brake pedal is depressed. This signal is used mainly to decrease the engine speed when the vehicle is driving.

CONSULT-II Reference Value in Data Monitor Mode

UBS00KKG

Specification data are reference values.

MONITOR ITEM	CONDITION		SPECIFICATION
BRAKE SW	● Ignition switch: ON	Brake pedal: Fully released	OFF
		Brake pedal: Slightly depressed	ON

On Board Diagnosis Logic

UBS00KKH

The MIL will not light up for this diagnosis.

DTC No.	Trouble diagnosis name	DTC detecting condition	Possible cause
P1805 1805	Brake switch	A brake switch signal is not sent to ECM for an extremely long time while the vehicle is driving.	● Harness or connectors (Stop lamp switch circuit is open or shorted.) ● Stop lamp switch

FALI-SAFE MODE

When the malfunction is detected, the ECM enters fail-safe mode.

Engine operating condition in fail-safe mode	
ECM controls the electric throttle control actuator by regulating the throttle opening to a small range. Therefore, acceleration will be poor.	
Vehicle condition	Driving condition
When engine is idling	Normal
When accelerating	Poor acceleration

DTC Confirmation Procedure

UBS00KKI

WITH CONSULT-II

1. Turn ignition switch ON.
2. Fully depress the brake pedal for at least 5 seconds.
3. Erase the DTC with CONSULT-II.
4. Select “DATA MONITOR” mode with CONSULT-II.
5. If 1st trip DTC is detected, go to EC-1281, "Diagnostic Procedure" .

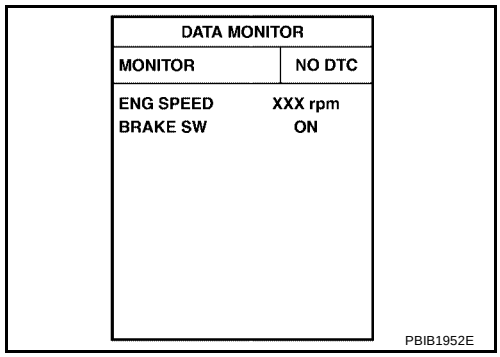

WITH GST

Follow the procedure “WITH CONSULT-II” above.

Wiring Diagram

UBS00KKJ

EC-BRK/SW-01

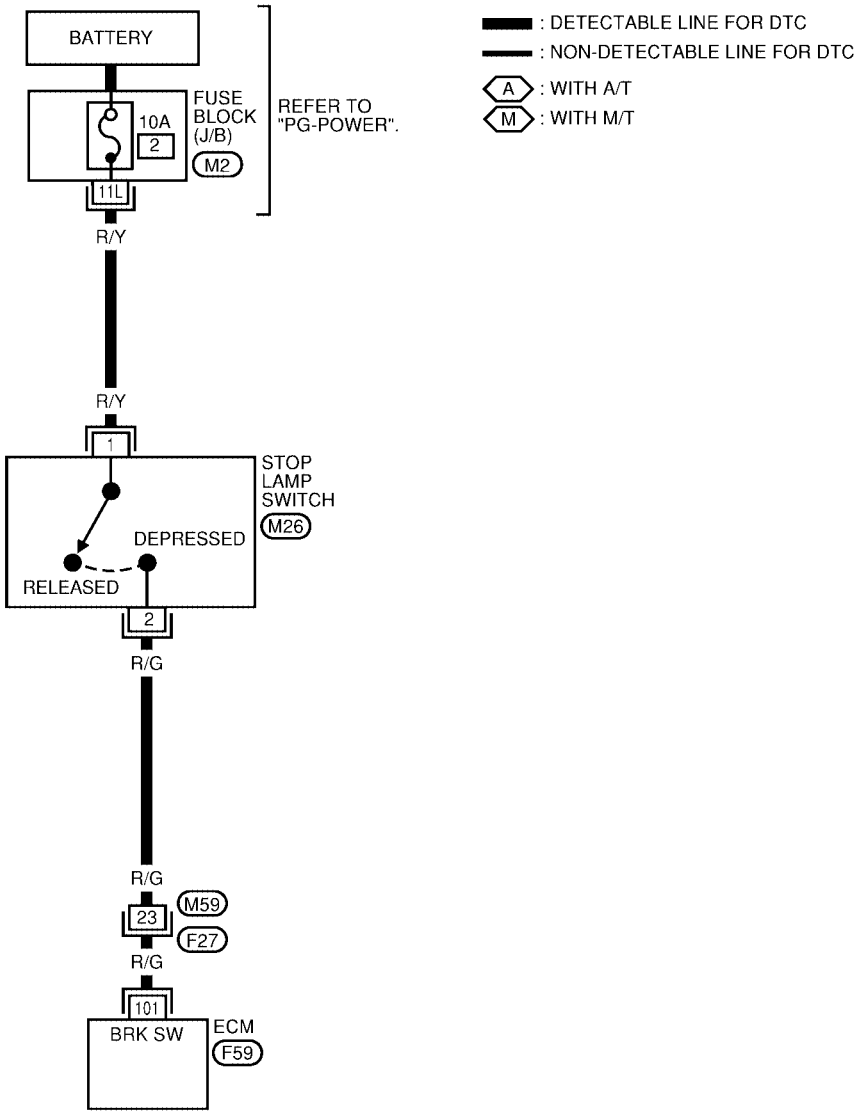

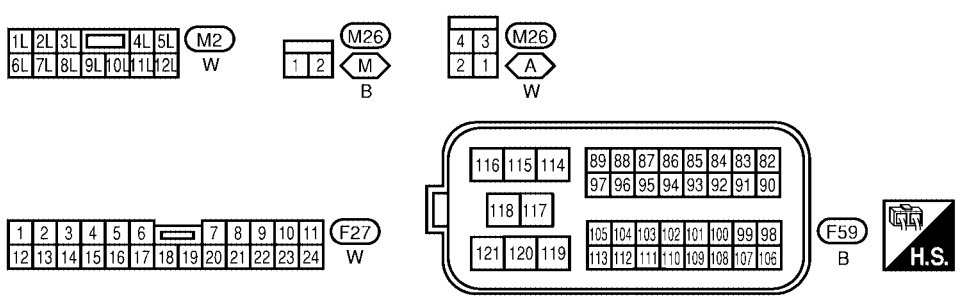

BBWA1392E

Specification data are reference values and are measured between each terminal and ground.

CAUTION:

Do not use ECM ground terminals when measuring input/output voltage. Doing so may result in damage to the ECM's transistor. Use a ground other than ECM terminals, such as the ground.

TERMINAL NO.	WIRE COLOR	ITEM	CONDITION	DATA (DC Voltage)
101	R/G	Stop lamp switch	**[Ignition switch: OFF]** ● Brake pedal: Fully released	Approximately 0V
			[Ignition switch: OFF] ● Brake pedal: Slightly depressed	BATTERY VOLTAGE (11 - 14V)

Diagnostic Procedure

UBS00KKK

1. CHECK STOP LAMP SWITCH CIRCUIT

1. Turn ignition switch OFF.
2. Check the stop lamp when depressing and releasing the brake pedal.

Brake pedal	Stop lamp
Fully released	Not illuminated
Slightly depressed	Illuminated

OK or NG

OK >> GO TO 4.
NG >> GO TO 2.

2. CHECK STOP LAMP SWITCH POWER SUPPLY CIRCUIT

1. Disconnect stop lamp switch harness connector.

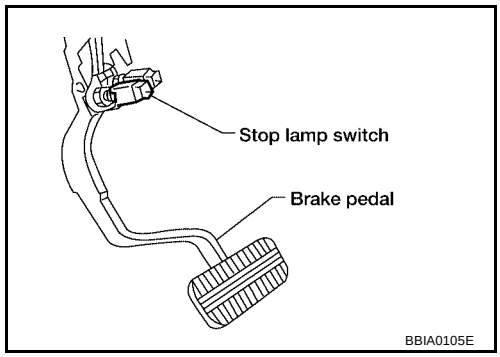

2. Check voltage between stop lamp switch terminal 1 and ground with CONSULT-II or tester.

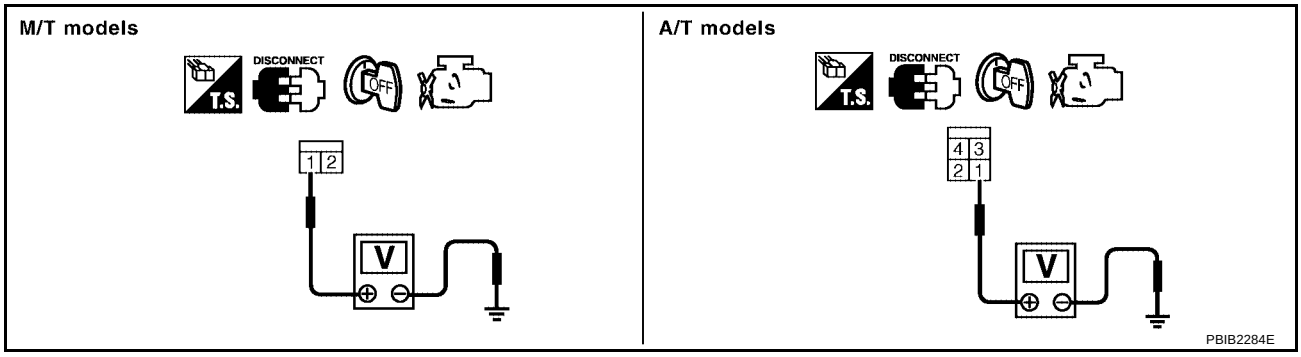

Voltage: Battery voltage

OK or NG

OK >> GO TO 4.
NG >> GO TO 3.

3. DETECT MALFUNCTIONING PART

Check the following.

- 10A fuse
- Fuse block (J/B) connector M2
- Harness for open or short between stop lamp switch and battery

>> Repair open circuit or short to ground or short to power in harness or connectors.

4. CHECK STOP LAMP SWITCH INPUT SIGNAL CIRCUIT FOR OPEN AND SHORT

1. Disconnect ECM harness connector.
2. Disconnect stop lamp switch harness connector.
3. Check harness continuity between ECM terminal 101 and stop lamp switch terminal 2.
   Refer to Wiring Diagram.

   Continuity should exist.

4. Also check harness for short to ground and short to power.

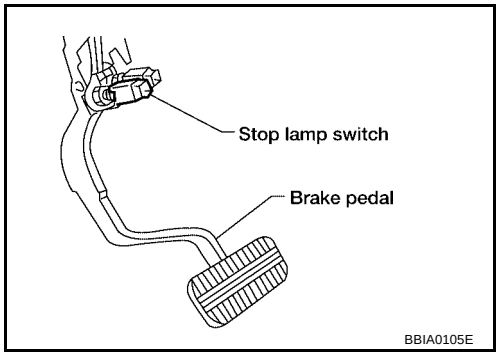

OK or NG

OK >> GO TO 6.
NG >> GO TO 5.

5. DETECT MALFUNCTIONING PART

Check the following.

- Harness connectors M59, F27
- Harness for open or short between ECM and stop lamp switch

>> Repair open circuit or short to ground or short to power in harness or connectors.

6. CHECK STOP LAMP SWITCH

Refer to EC-1283, "Component Inspection" .

OK or NG

OK >> GO TO 7.
NG >> Replace stop lamp switch.

7. CHECK INTERMITTENT INCIDENT

Refer to EC-834, "TROUBLE DIAGNOSIS FOR INTERMITTENT INCIDENT" .

>> **INSPECTION END**

Component Inspection

UBS00KKL

STOP LAMP SWITCH

1. Disconnect stop lamp switch harness connector.

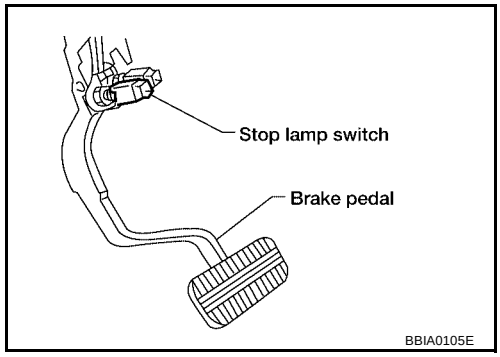

2. Check continuity between stop lamp switch terminals 1 and 2 under the following conditions.

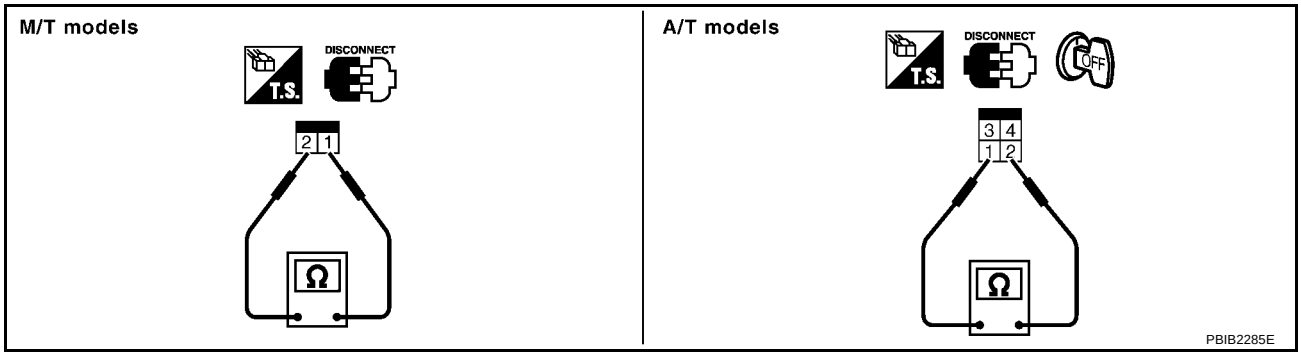

Conditions	Continuity
Brake pedal: Fully released	Should not exist.
Brake pedal: Slightly depressed	Should exist.

If NG, adjust brake pedal installation, refer to BR-11, "BRAKE PEDAL AND BRACKET" , and perform step 2 again.

DTC P2122, P2123 APP SENSOR

PFP:18002

Component Description

UBS00JMG

The accelerator pedal position sensor is installed on the upper end of the accelerator pedal assembly. The sensor detects the accelerator position and sends a signal to the ECM.
Accelerator pedal position sensor has two sensors. These sensors are a kind of potentiometers which transform the accelerator pedal position into output voltage, and emit the voltage signal to the ECM. In addition, these sensors detect the opening and closing speed of the accelerator pedal and feed the voltage signals to the ECM. The ECM judges the current opening angle of the accelerator pedal from these signals and controls the throttle control motor based on these signals.

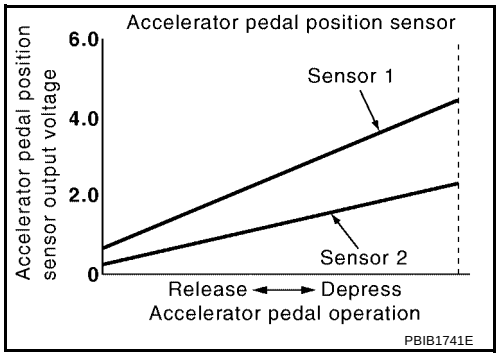

Idle position of the accelerator pedal is determined by the ECM receiving the signal from the accelerator pedal position sensor. The ECM uses this signal for the engine operation such as fuel cut.

CONSULT-II Reference Value in Data Monitor Mode

UBS00JMH

Specification data are reference values.

MONITOR ITEM	CONDITION		SPECIFICATION
ACCEL SEN1 ACCEL SEN2*	● Ignition switch: ON (Engine stopped) ● Shift lever: D (A/T), 1ST (M/T)	Accelerator pedal: Fully released	0.41 - 0.96V
		Accelerator pedal: Fully depressed	More than 4.2V
CLSD THL POS	● Ignition switch: ON (Engine stopped)	Accelerator pedal: Fully released	ON
		Accelerator pedal: Slightly depressed	OFF

*: Accelerator pedal position sensor 2 signal is converted by ECM internally. Thus, it differ from ECM terminals voltage signal.

On Board Diagnosis Logic

UBS00JMI

These self-diagnoses have the one trip detection logic.

NOTE:
If DTC P2122 or P2123 is displayed with DTC P1229, first perform the trouble diagnosis for DTC P1229. Refer to EC-1178 .

DTC No.	Trouble diagnosis name	DTC detecting condition	Possible cause
P2122 2122	Accelerator pedal position sensor 1 circuit low input	An excessively low voltage from the APP sensor 1 is sent to ECM.	● Harness or connectors (The APP sensor 1 circuit is open or shorted.) ● Accelerator pedal position sensor (Accelerator pedal position sensor 1)
P2123 2123	Accelerator pedal position sensor 1 circuit high input	An excessively high voltage from the APP sensor 1 is sent to ECM.	

FAIL-SAFE MODE

When the malfunction is detected, the ECM enters fail-safe mode and the MIL lights up.

Engine operating condition in fail-safe mode
The ECM controls the electric throttle control actuator in regulating the throttle opening in order for the idle position to be within +10 degrees. The ECM regulates the opening speed of the throttle valve to be slower than the normal condition. So, the acceleration will be poor.

DTC Confirmation Procedure

UBS00JMJ

NOTE:
If DTC Confirmation Procedure has been previously conducted, always turn ignition switch OFF and wait at least 10 seconds before conducting the next test.
TESTING CONDITION:
Before performing the following procedure, confirm that battery voltage is more than 10V at idle.

WITH CONSULT-II

1. Turn ignition switch ON.
2. Select “DATA MONITOR” mode with CONSULT-II.
3. Start engine and let it idle for 1 second.
4. If DTC is detected, go to EC-1287, "Diagnostic Procedure" .

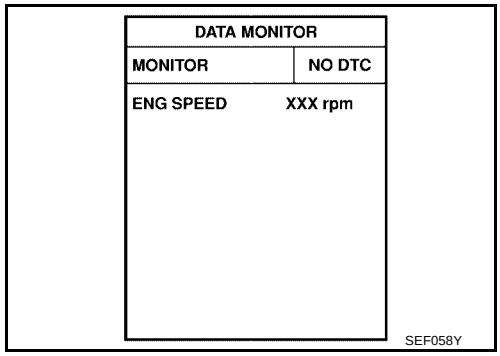

WITH GST

Follow the procedure “WITH CONSULT-II” above.

Wiring Diagram

UBS00JMK

EC-APPS1-01

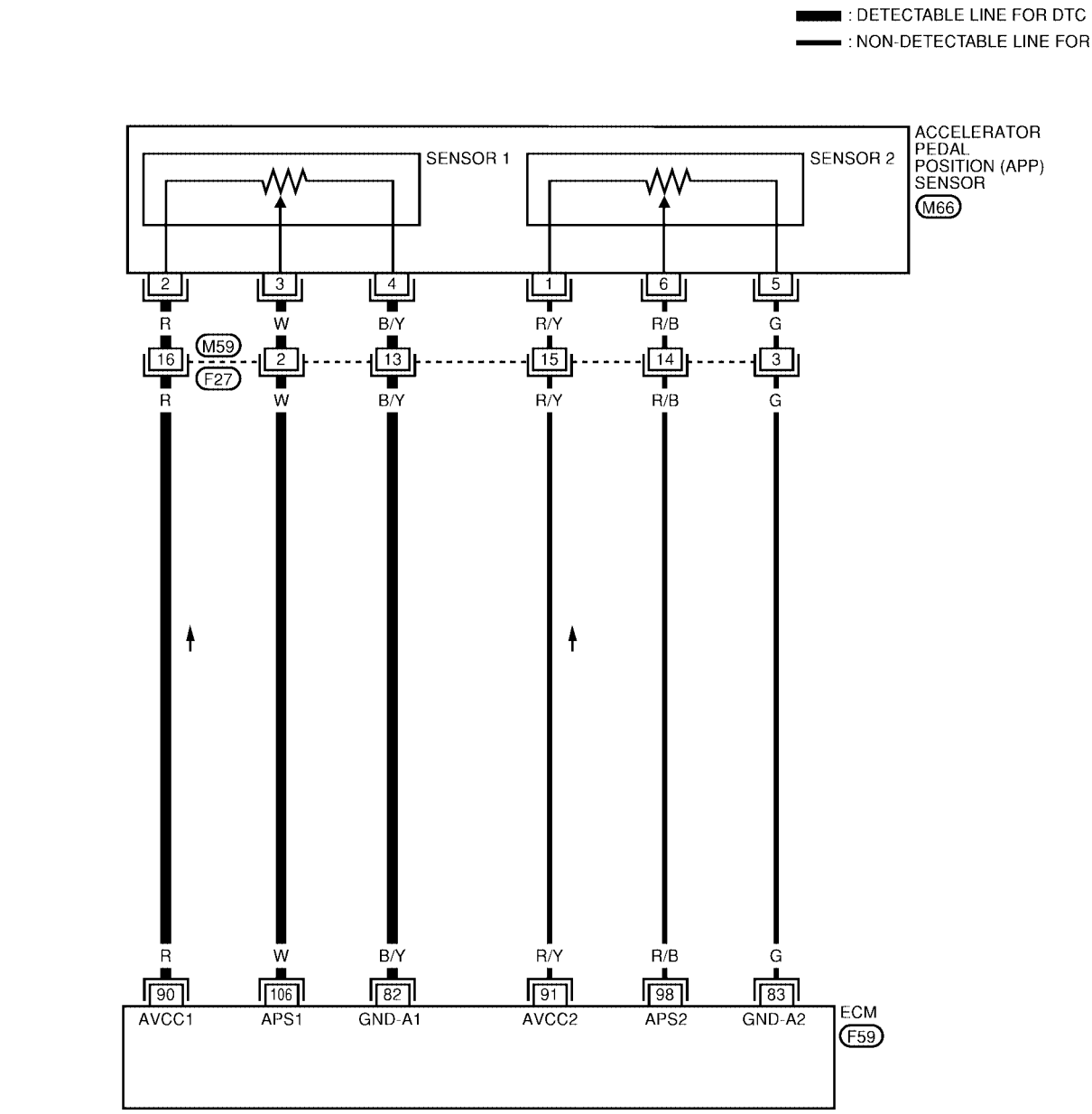

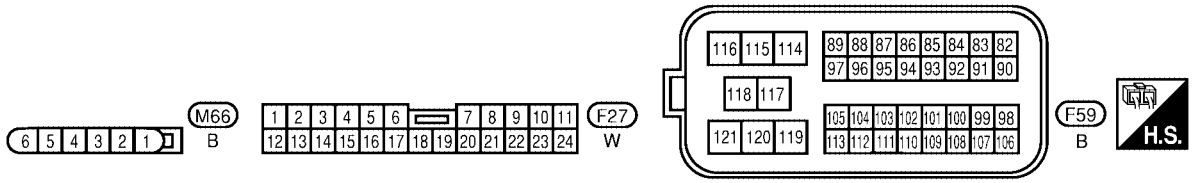

BBWA1399E

Specification data are reference values and are measured between each terminal and ground.

CAUTION:

Do not use ECM ground terminals when measuring input/output voltage. Doing so may result in damage to the ECM's transistor. Use a ground other than ECM terminals, such as the ground.

TERMINAL NO.	WIRE COLOR	ITEM	CONDITION	DATA (DC Voltage)
82	B/Y	Sensor ground (Accelerator pedal position sensor 1)	**[Engine is running]** ● **Warm-up condition** ● Idle speed	Approximately 0V
83	G	Sensor ground (Accelerator pedal position sensor 2)	**[Engine is running]** ● **Warm-up condition** ● Idle speed	Approximately 0V
90	R	Sensor power supply (Accelerator pedal position sensor 1)	**[Ignition switch: ON]**	Approximately 5V
91	R/Y	Sensor power supply (Accelerator pedal position sensor 2)	**[Ignition switch: ON]**	Approximately 5V
98	R/B	Accelerator pedal position sensor 2	**[Ignition switch: ON]** ● Engine stopped ● Accelerator pedal: Fully released	0.28 - 0.48V
			[Ignition switch: ON] ● Engine stopped ● Accelerator pedal: Fully depressed	More than 2.0V
106	W	Accelerator pedal position sensor 1	**[Ignition switch: ON]** ● Engine stopped ● Accelerator pedal: Fully released	0.65 - 0.87V
			[Ignition switch: ON] ● Engine stopped ● Accelerator pedal: Fully depressed	More than 4.3V

Diagnostic Procedure

UBS00JML

1. CHECK GROUND CONNECTIONS

1. Turn ignition switch OFF.
2. Loosen and retighten engine two screws on the body.
   Refer to EC-841, "Ground Inspection" .

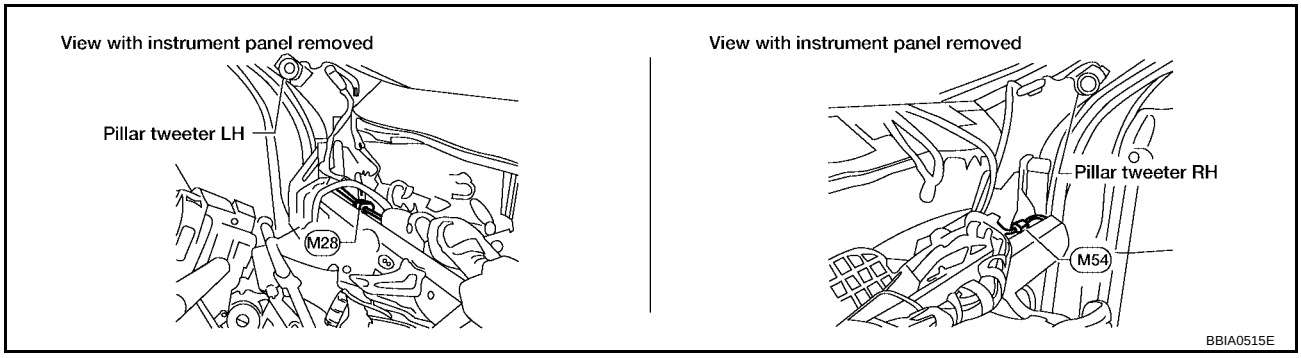

OK or NG

OK >> GO TO 2.
NG >> Repair or replace ground connections.

2. CHECK APP SENSOR 1 POWER SUPPLY CIRCUIT

1. Disconnect accelerator pedal position (APP) sensor harness connector.
2. Turn ignition switch ON.

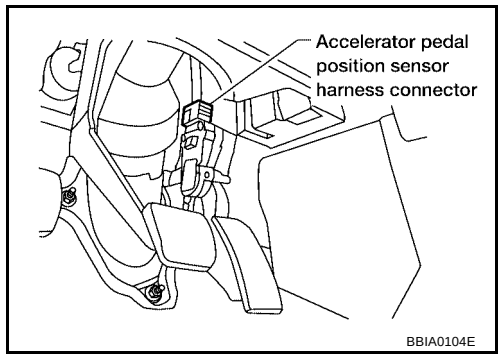

3. Check voltage between APP sensor terminal 2 and ground with CONSULT-II or tester.

Voltage: Approximately 5V

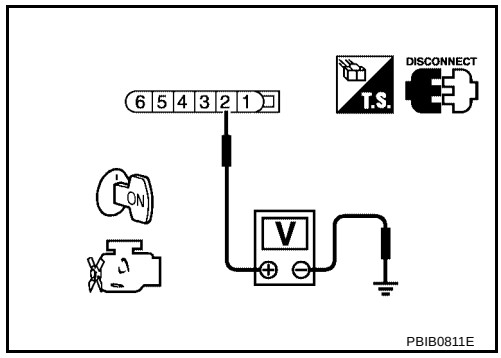

OK or NG

OK >> GO TO 4.
NG >> GO TO 3.

3. DETECT MALFUNCTIONING PART

Check the following.

- Harness connectors M59, F27
- Harness for open or short between ECM and accelerator pedal position sensor

>> Repair open circuit or short to ground or short to power in harness or connectors.

4. CHECK APP SENSOR 1 GROUND CIRCUIT FOR OPEN AND SHORT

1. Turn ignition switch OFF.
2. Disconnect ECM harness connector.
3. Check harness continuity between APP sensor terminal 4 and ECM terminal 82.
   Refer to Wiring Diagram.

Continuity should exist.

4. Also check harness for short to ground and short to power.

OK or NG

OK >> GO TO 6.
NG >> GO TO 5.

5. DETECT MALFUNCTIONING PART

Check the following.

- Harness connectors M59, F27
- Harness for open or short between ECM and accelerator pedal position sensor

>> Repair open circuit or short to ground or short to power in harness or connectors.

6. CHECK APP SENSOR 1 INPUT SIGNAL CIRCUIT FOR OPEN AND SHORT

1. Check harness continuity between ECM terminal 106 and APP sensor terminal 3.
   Refer to Wiring Diagram.

   Continuity should exist.

2. Also check harness for short to ground and short to power.

OK or NG

OK >> GO TO 8.
NG >> GO TO 7.

7. DETECT MALFUNCTIONING PART

Check the following.

- Harness connectors M59, F27
- Harness for open or short between ECM and accelerator pedal position sensor

>> Repair open circuit or short to ground or short to power in harness or connectors.

8. CHECK APP SENSOR

Refer to EC-1289, "Component Inspection" .

OK or NG

OK >> GO TO 10.
NG >> GO TO 9.

9. REPLACE ACCELERATOR PEDAL ASSEMBLY

1. Replace accelerator pedal assembly.
2. Perform EC-749, "Accelerator Pedal Released Position Learning" .
3. Perform EC-749, "Throttle Valve Closed Position Learning" .
4. Perform EC-750, "Idle Air Volume Learning" .

>> **INSPECTION END**

10. CHECK INTERMITTENT INCIDENT

Refer to EC-834, "TROUBLE DIAGNOSIS FOR INTERMITTENT INCIDENT" .

>> **INSPECTION END**

Component Inspection

UBS00JMM

ACCELERATOR PEDAL POSITION SENSOR

1. Reconnect all harness connectors disconnected.
2. Turn ignition switch ON.
3. Check voltage between ECM terminals 106 (APP sensor 1 signal), 98 (APP sensor 2 signal) and ground under the following conditions.

Terminal	Accelerator pedal	Voltage
106 (Accelerator pedal position sensor 1)	Fully released	0.65 - 0.87V
	Fully depressed	More than 4.3V
98 (Accelerator pedal position sensor 2)	Fully released	0.28 - 0.48V
	Fully depressed	More than 2.0V

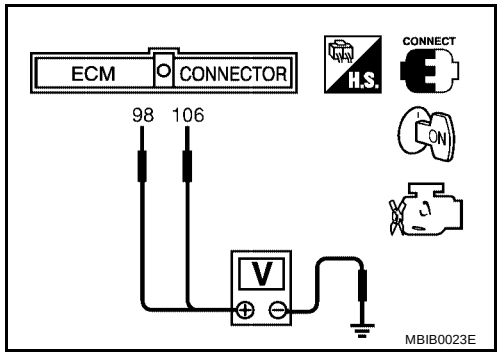

4. If NG, replace accelerator pedal assembly and go to the next step.
5. Perform EC-749, "Accelerator Pedal Released Position Learning" .
6. Perform EC-749, "Throttle Valve Closed Position Learning" .
7. Perform EC-750, "Idle Air Volume Learning" .

Removal and Installation

UBS00JMN

ACCELERATOR PEDAL

Refer to ACC-2, "ACCELERATOR CONTROL SYSTEM" .

DTC P2127, P2128 APP SENSOR

PFP:18002

Component Description

UBS00JMO

The accelerator pedal position sensor is installed on the upper end of the accelerator pedal assembly. The sensor detects the accelerator position and sends a signal to the ECM.
Accelerator pedal position sensor has two sensors. These sensors are a kind of potentiometers which transform the accelerator pedal position into output voltage, and emit the voltage signal to the ECM. In addition, these sensors detect the opening and closing speed of the accelerator pedal and feed the voltage signals to the ECM. The ECM judges the current opening angle of the accelerator pedal from these signals and controls the throttle control motor based on these signals.

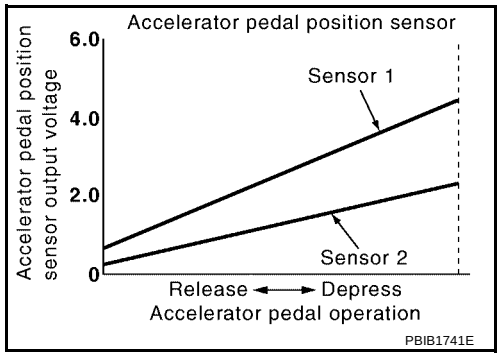

Idle position of the accelerator pedal is determined by the ECM receiving the signal from the accelerator pedal position sensor. The ECM uses this signal for the engine operation such as fuel cut.

CONSULT-II Reference Value in Data Monitor Mode

UBS00JMP

Specification data are reference values.

MONITOR ITEM	CONDITION		SPECIFICATION
ACCEL SEN1 ACCEL SEN2*	● Ignition switch: ON (Engine stopped) ● Shift lever: D (A/T) 1ST (M/T)	Accelerator pedal: Fully released	0.41 - 0.96V
		Accelerator pedal: Fully depressed	More than 4.2V
CLSD THL POS	● Ignition switch: ON (Engine stopped)	Accelerator pedal: Fully released	ON
		Accelerator pedal: Slightly depressed	OFF

*: Accelerator pedal position sensor 2 signal is converted by ECM internally. Thus, it differ from ECM terminals voltage signal.

On Board Diagnosis Logic

UBS00JMQ

These self-diagnoses have the one trip detection logic.

DTC No.	Trouble diagnosis name	DTC detecting condition	Possible cause
P2127 2127	Accelerator pedal position sensor 2 circuit low input	An excessively low voltage from the APP sensor 2 is sent to ECM.	● Harness or connectors (The APP sensor 2 circuit is open or shorted.) (TP sensor circuit is shorted.) ● Accelerator pedal position sensor (Accelerator pedal position sensor 2) ● Electric throttle control actuator (TP sensor 1 and 2)
P2128 2128	Accelerator pedal position sensor 2 circuit high input	An excessively high voltage from the APP sensor 2 is sent to ECM.	

FAIL-SAFE MODE

When the malfunction is detected, the ECM enters fail-safe mode and the MIL lights up.

Engine operating condition in fail-safe mode
The ECM controls the electric throttle control actuator in regulating the throttle opening in order for the idle position to be within +10 degrees. The ECM regulates the opening speed of the throttle valve to be slower than the normal condition. So, the acceleration will be poor.

DTC Confirmation Procedure

UBS00JMR

NOTE:
If DTC Confirmation Procedure has been previously conducted, always turn ignition switch OFF and wait at least 10 seconds before conducting the next test.
TESTING CONDITION:
Before performing the following procedure, confirm that battery voltage is more than 10V at idle.

WITH CONSULT-II

1. Turn ignition switch ON.
2. Select “DATA MONITOR” mode with CONSULT-II.
3. Start engine and let it idle for 1 second.
4. If DTC is detected, go to EC-1294, "Diagnostic Procedure" .

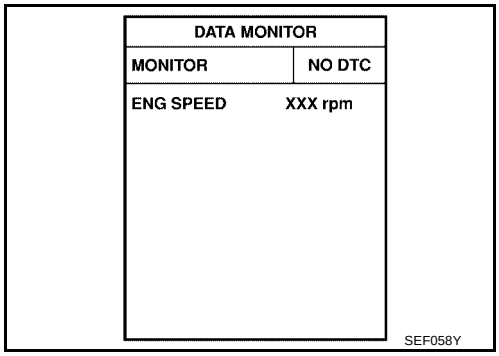

WITH GST

Follow the procedure “WITH CONSULT-II” above.

Wiring Diagram

UBS00JMS

EC-APPS2-01

: DETECTABLE LINE FOR DTC
: NON-DETECTABLE LINE FOR DTC

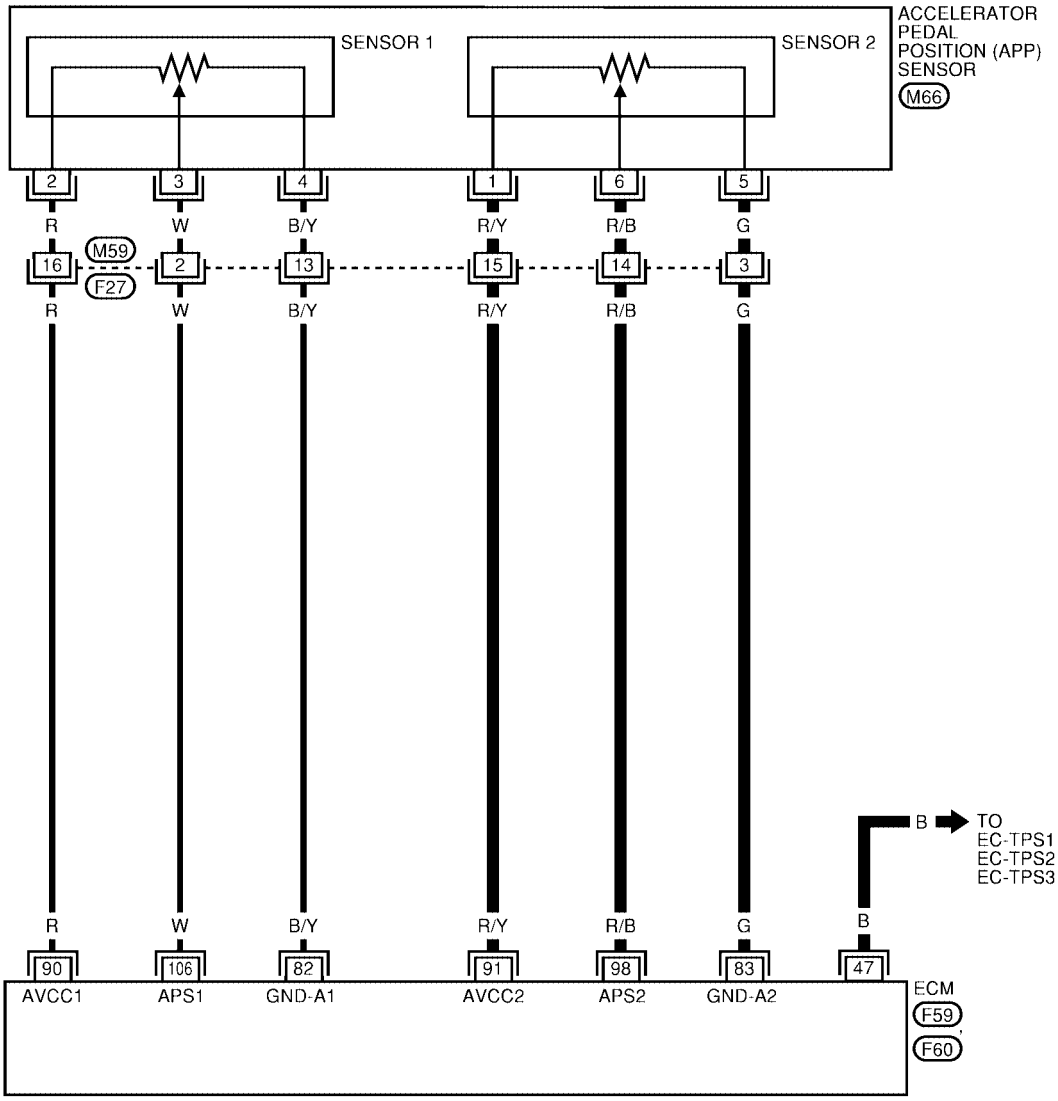

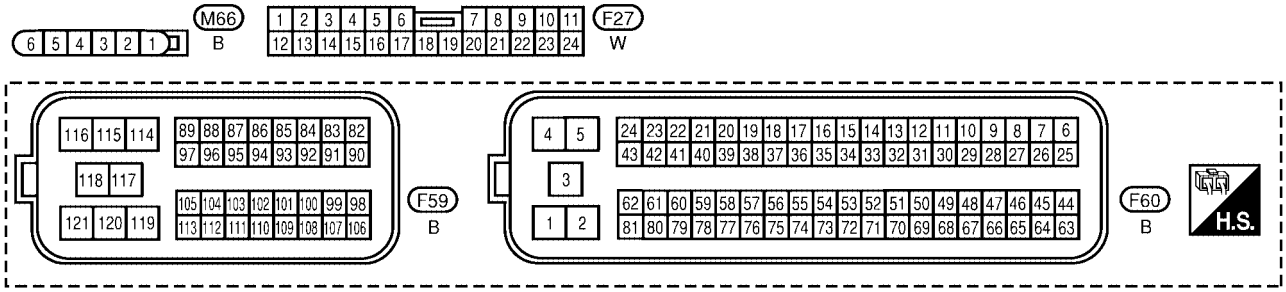

BBWA1400E

Specification data are reference values and are measured between each terminal and ground.

CAUTION:

Do not use ECM ground terminals when measuring input/output voltage. Doing so may result in damage to the ECM's transistor. Use a ground other than ECM terminals, such as the ground.

TERMINAL NO.	WIRE COLOR	ITEM	CONDITION	DATA (DC Voltage)
47	B	Sensor power supply (Throttle position sensor)	**[Ignition switch: ON]**	Approximately 5V
82	B/Y	Sensor ground (Accelerator pedal position sensor 1)	**[Engine is running]** ● **Warm-up condition** ● Idle speed	Approximately 0V
83	G	Sensor ground (Accelerator pedal position sensor 2)	**[Engine is running]** ● **Warm-up condition** ● Idle speed	Approximately 0V
90	R	Sensor power supply (Accelerator pedal position sensor 1)	**[Ignition switch: ON]**	Approximately 5V
91	R/Y	Sensor power supply (Accelerator pedal position sensor 2)	**[Ignition switch: ON]**	Approximately 5V
98	R/B	Accelerator pedal position sensor 2	**[Ignition switch: ON]** ● Engine stopped ● Accelerator pedal: Fully released	0.28 - 0.48V
			[Ignition switch: ON] ● Engine stopped ● Accelerator pedal: Fully depressed	More than 2.0V
106	W	Accelerator pedal position sensor 1	**[Ignition switch: ON]** ● Engine stopped ● Accelerator pedal: Fully released	0.65 - 0.87V
			[Ignition switch: ON] ● Engine stopped ● Accelerator pedal: Fully depressed	More than 4.3V

Diagnostic Procedure

UBS00JMT

1. CHECK GROUND CONNECTIONS

1. Turn ignition switch OFF.
2. Loosen and retighten engine two screws on the body.
   Refer to EC-841, "Ground Inspection" .

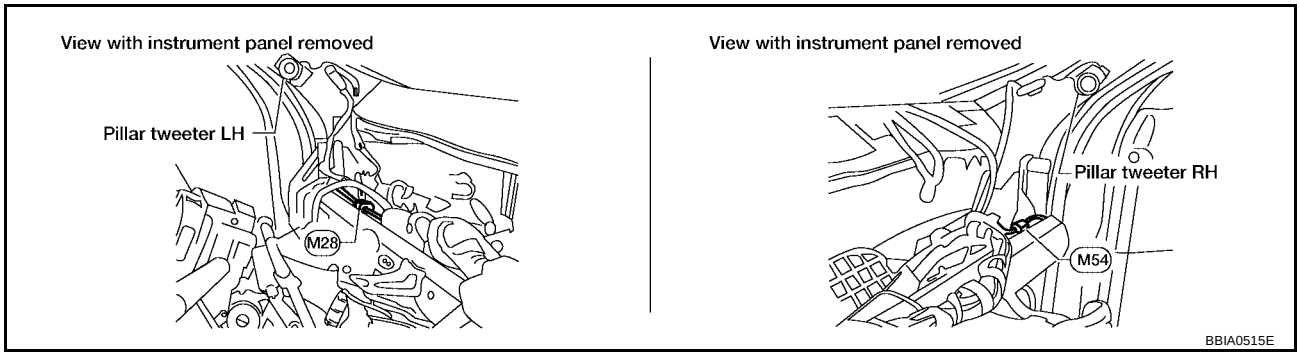

OK or NG

OK >> GO TO 2.
NG >> Repair or replace ground connections.

2. CHECK APP SENSOR 2 POWER SUPPLY CIRCUIT-I

1. Disconnect accelerator pedal position (APP) sensor harness connector.
2. Turn ignition switch ON.

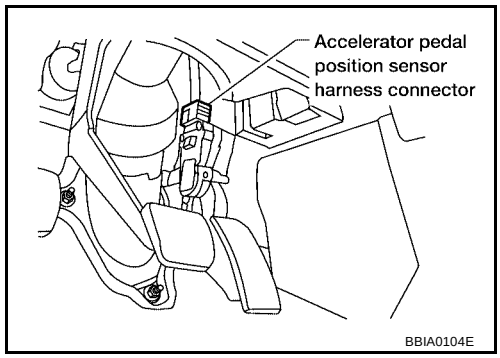

3. Check voltage between APP sensor terminal 1 and ground with CONSULT-II or tester.

Voltage: Approximately 5V

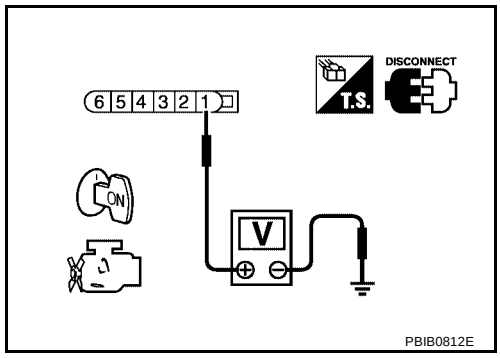

OK or NG

OK >> GO TO 8.
NG >> GO TO 3.

3. CHECK APP SENSOR 2 POWER SUPPLY CIRCUIT-II

1. Turn ignition switch OFF.
2. Disconnect ECM harness connector.
3. Check harness continuity between APP sensor terminal 1 and ECM terminal 91. Refer to Wiring Diagram.

Continuity should exist.

OK or NG

OK >> GO TO 5.
NG >> GO TO 4.

4. DETECT MALFUNCTIONING PART

Check the following.

- Harness connectors M59, F27
- Harness for open between ECM and accelerator pedal position sensor

>> Repair or replace open circuit.

5. CHECK APP SENSOR 2 POWER SUPPLY CIRCUIT-III

Check the following.

- Harness for short to power and short to ground, between the following terminals.

ECM terminal	Sensor terminal	Reference Wiring Diagram
91	APP sensor terminal 1	EC-1293
47	Electric throttle control actuator terminal 1	EC-1301

OK or NG

OK >> GO TO 6.
NG >> Repair short to ground or short to power in harness or connectors.

6. CHECK THROTTLE POSITION SENSOR

Refer to EC-1305, "Component Inspection" .

OK or NG

OK >> GO TO 14.
NG >> GO TO 7.

7. REPLACE ELECTRIC THROTTLE CONTROL ACTUATOR

1. Replace the electric throttle control actuator.
2. Perform EC-749, "Throttle Valve Closed Position Learning" .
3. Perform EC-750, "Idle Air Volume Learning" .

>> **INSPECTION END**

8. CHECK APP SENSOR 2 GROUND CIRCUIT FOR OPEN AND SHORT

1. Turn ignition switch OFF.
2. Disconnect ECM harness connector.
3. Check harness continuity between APP sensor terminal 5 and ECM terminal 83.
   Refer to Wiring Diagram.

   Continuity should exist.

4. Also check harness for short to ground and short to power.

OK or NG

OK >> GO TO 10.
NG >> GO TO 9.

9. DETECT MALFUNCTIONING PART

Check the following.

- Harness connectors M59, F27
- Harness for open or short between ECM and accelerator pedal position sensor

>> Repair open circuit or short to ground or short to power in harness or connectors.

10. CHECK APP SENSOR 2 INPUT SIGNAL CIRCUIT FOR OPEN AND SHORT

1. Check harness continuity between ECM terminal 98 and APP sensor terminal 6.
   Refer to Wiring Diagram.

   Continuity should exist.

2. Also check harness for short to ground and short to power.

OK or NG

OK >> GO TO 12.
NG >> GO TO 11.

11. DETECT MALFUNCTIONING PART

Check the following.

- Harness connectors M59, F27
- Harness for open or short between ECM and accelerator pedal position sensor

>> Repair open circuit or short to ground or short to power in harness or connectors.

12. CHECK APP SENSOR

Refer to EC-1298, "Component Inspection" .

OK or NG

OK >> GO TO 14.
NG >> GO TO 13.

13. REPLACE ACCELERATOR PEDAL ASSEMBLY

1. Replace accelerator pedal assembly.
2. Perform EC-749, "Accelerator Pedal Released Position Learning" .
3. Perform EC-749, "Throttle Valve Closed Position Learning" .
4. Perform EC-750, "Idle Air Volume Learning" .

>> **INSPECTION END**

14. CHECK INTERMITTENT INCIDENT

Refer to EC-834, "TROUBLE DIAGNOSIS FOR INTERMITTENT INCIDENT" .

>> **INSPECTION END**

Component Inspection

UBS00JMU

ACCELERATOR PEDAL POSITION SENSOR

1. Reconnect all harness connectors disconnected.
2. Turn ignition switch ON.
3. Check voltage between ECM terminals 106 (APP sensor 1 signal), 98 (APP sensor 2 signal) and ground under the following conditions.

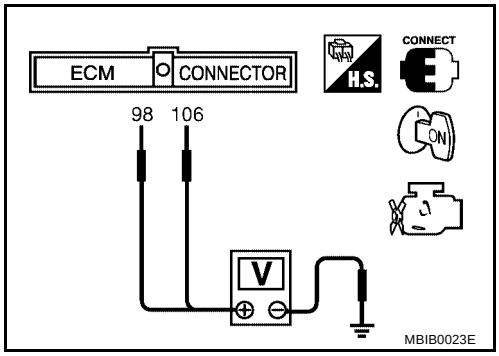

Terminal	Accelerator pedal	Voltage
106 (Accelerator pedal position sensor 1)	Fully released	0.65 - 0.87V
	Fully depressed	More than 4.3V
98 (Accelerator pedal position sensor 2)	Fully released	0.28 - 0.48V
	Fully depressed	More than 2.0V

4. If NG, replace accelerator pedal assembly and go to the next step.
5. Perform EC-749, "Accelerator Pedal Released Position Learning" .
6. Perform EC-749, "Throttle Valve Closed Position Learning" .
7. Perform EC-750, "Idle Air Volume Learning" .

Remove and Installation

UBS00JMV

ACCELERATOR PEDAL

Refer to ACC-2, "ACCELERATOR CONTROL SYSTEM" .

DTC P2135 TP SENSOR

PFP:16119

Component Description

UBS00JMW

Electric throttle control actuator consists of throttle control motor, throttle position sensor, etc. The throttle position sensor responds to the throttle valve movement.
The throttle position sensor has two sensors. These sensors are a kind of potentiometers which transform the throttle valve position into output voltage, and emit the voltage signal to the ECM. In addition, these sensors detect the opening and closing speed of the throttle valve and feed the voltage signals to the ECM. The ECM judges the current opening angle of the throttle valve from these signals and the ECM controls the throttle control motor to make the throttle valve opening angle properly in response to driving condition.

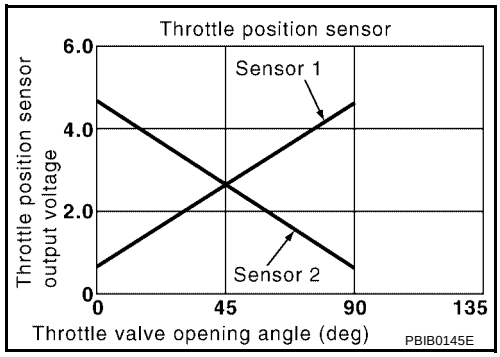

CONSULT-II Reference Value in Data Monitor Mode

UBS00JMX

Specification data are reference values.

MONITOR ITEM	CONDITION		SPECIFICATION
THRTL SEN1 THRTL SEN2*	● Ignition switch: ON (Engine stopped)	Accelerator pedal: Fully released	More than 0.36V
	● Shift lever: D (A/T), 1ST (M/T)	Accelerator pedal: Fully depressed	Less than 4.75V

*:Throttle position sensor 2 signal is converted by ECM internally. Thus, it differs from ECM terminals voltage signal.

On Board Diagnosis Logic

UBS00JMY

This self-diagnosis has the one trip detection logic.

DTC No.	Trouble diagnosis name	DTC detecting condition	Possible cause
P2135 2135	Throttle position sensor circuit range/performance problem	Rationally incorrect voltage is sent to ECM compared with the signals from TP sensor 1 and TP sensor 2.	● Harness or connector (The TP sensor 1 and 2 circuit is open or shorted.) (APP sensor 2 circuit is shorted.) ● Electric throttle control actuator (TP sensor 1 and 2) ● Accelerator pedal position sensor

FAIL-SAFE MODE

When the malfunction is detected, the ECM enters fail-safe mode and the MIL lights up.

Engine operation condition in fail-safe mode
The ECM controls the electric throttle control actuator in regulating the throttle opening in order for the idle position to be within +10 degrees. The ECM regulates the opening speed of the throttle valve to be slower than the normal condition. So, the acceleration will be poor.

DTC Confirmation Procedure

UBS00JMZ

NOTE:
If DTC Confirmation Procedure has been previously conducted, always turn ignition switch OFF and wait at least 10 seconds before conducting the next test.
TESTING CONDITION:
Before performing the following procedure, confirm that battery voltage is more than 10V at idle.

WITH CONSULT-II

1. Turn ignition switch ON.

2. Select “DATA MONITOR” mode with CONSULT-II.
3. Start engine and let it idle for 1 second.
4. If DTC is detected, go to EC-1302, "Diagnostic Procedure" .

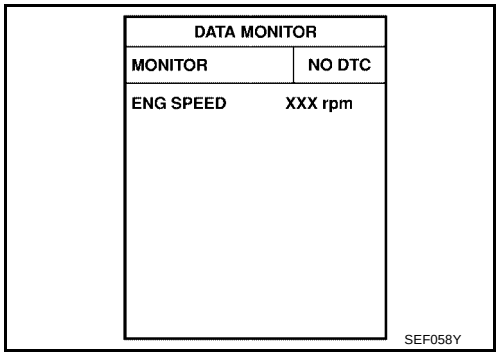

WITH GST

Follow the procedure “WITH CONSULT-II” above.

Wiring Diagram

UBS00JN0

EC-TPS3-01

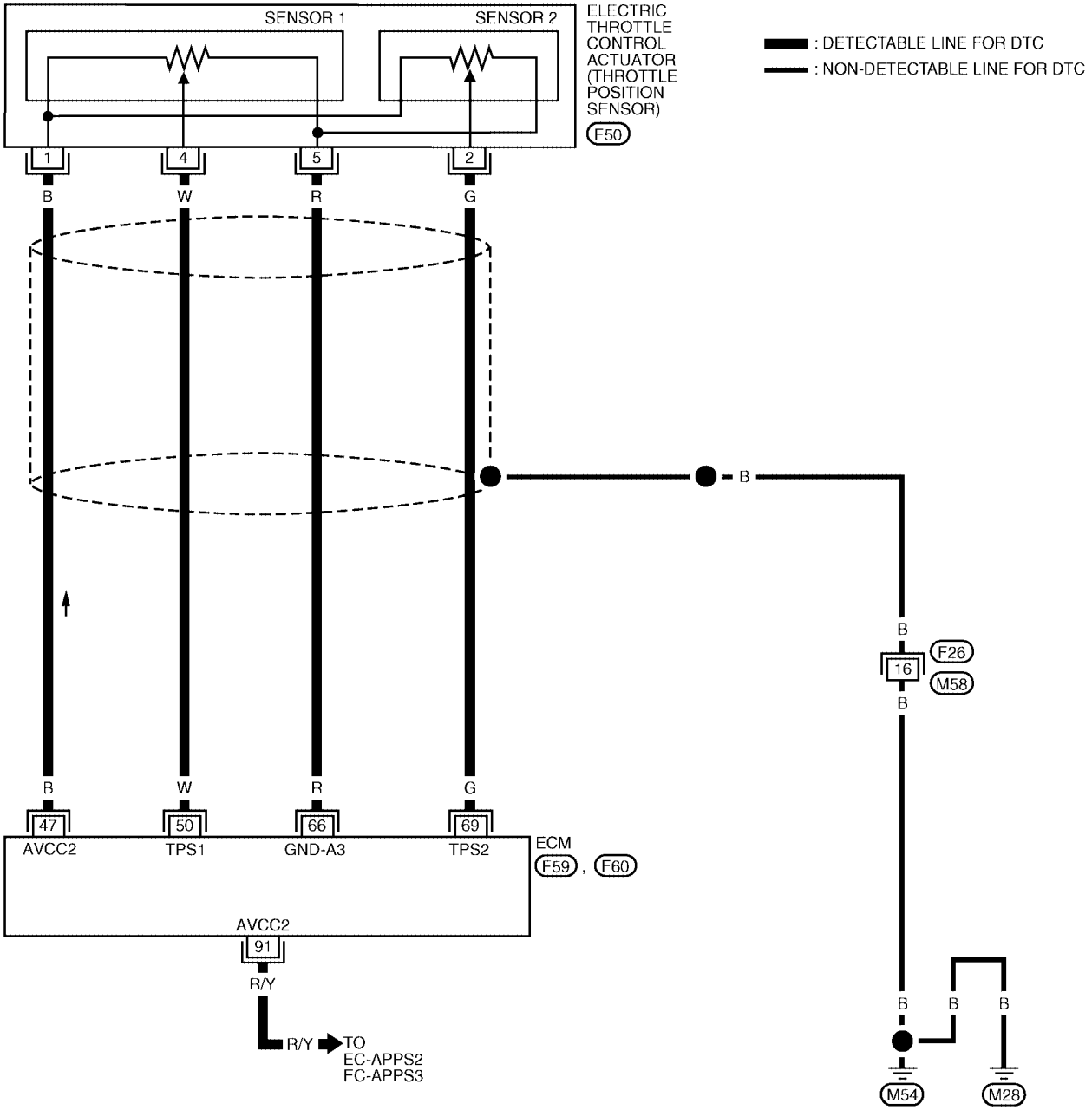

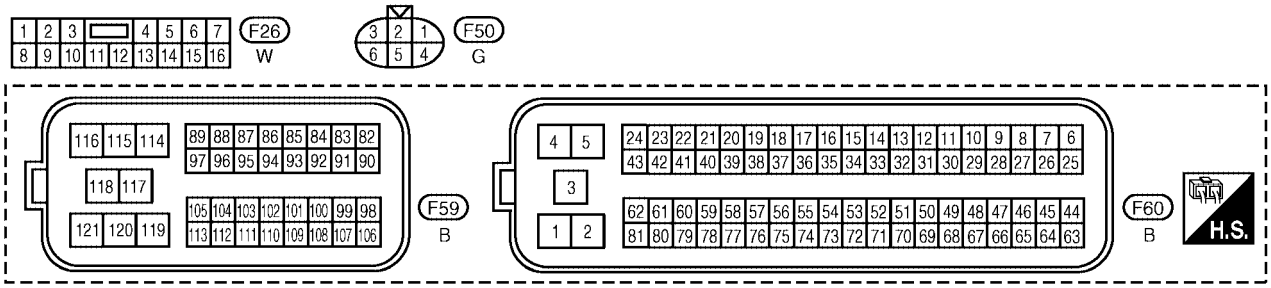

BBWA2305E

Specification data are reference values and are measured between each terminal and ground.

CAUTION:

Do not use ECM ground terminals when measuring input/output voltage. Doing so may result in damage to the ECM's transistor. Use a ground other than ECM terminals, such as the ground.

TERMINAL NO.	WIRE COLOR	ITEM	CONDITION	DATA (DC Voltage)
47	B	Sensor power supply (Throttle position sensor)	**[Ignition switch: ON]**	Approximately 5V
50	W	Throttle position sensor 1	**[Ignition switch: ON]** ● Engine stopped ● Shift lever: D (A/T), 1ST (M/T) ● Accelerator pedal: Fully released	More than 0.36V
			[Ignition switch: ON] ● Engine stopped ● Shift lever: D (A/T), 1ST (M/T) ● Accelerator pedal: Fully depressed	Less than 4.75V
66	R	Sensor ground (Throttle position sensor)	**[Engine is running]** ● **Warm-up condition** ● Idle speed	Approximately 0V
69	G	Throttle position sensor 2	**[Ignition switch: ON]** ● Engine stopped ● Shift lever: D (A/T), 1ST (M/T) ● Accelerator pedal: Fully released	Less than 4.75V
			[Ignition switch: ON] ● Engine stopped ● Shift lever: D (A/T), 1ST (M/T) ● Accelerator pedal: Fully depressed	More than 0.36V
91	R/Y	Sensor power supply (Accelerator pedal position sensor 2)	**[Ignition switch: ON]**	Approximately 5V

Diagnostic Procedure

UBS00JN1

1. CHECK GROUND CONNECTIONS

1. Turn ignition switch OFF.
2. Loosen and retighten engine two screws on the body.
   Refer to EC-841, "Ground Inspection" .

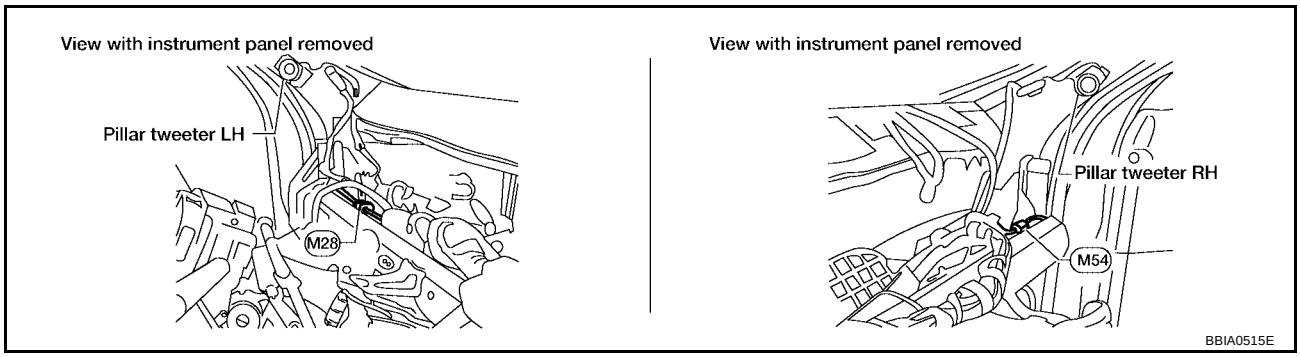

OK or NG

OK >> GO TO 2.
NG >> Repair or replace ground connections.

2. CHECK THROTTLE POSITION SENSOR POWER SUPPLY CIRCUIT-I

1. Disconnect electric throttle control actuator harness connector.
2. Turn ignition switch ON.

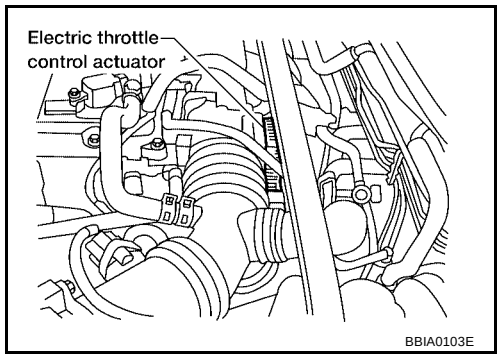

3. Check voltage between electric throttle control actuator terminal 1 and ground with CONSULT-II or tester.

Voltage: Approximately 5V

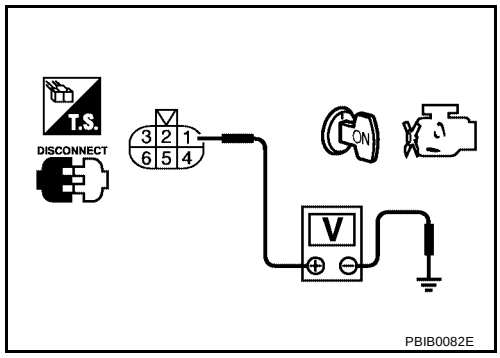

OK or NG

OK >> GO TO 7.
NG >> GO TO 3.

3. CHECK THROTTLE POSITION SENSOR POWER SUPPLY CIRCUIT-II

1. Turn ignition switch OFF.
2. Disconnect ECM harness connector.
3. Check harness continuity between electric throttle control actuator terminal 1 and ECM terminal 47. Refer to Wiring Diagram.

Continuity should exist.

OK or NG

OK >> GO TO 4.
NG >> Repair or replace open circuit.

4. CHECK THROTTLE POSITION SENSOR POWER SUPPLY CIRCUIT-III

Check the following.

- Harness for short to power and short to ground, between the following terminals.

ECM terminal	Sensor terminal	Reference Wiring Diagram
47	Electric throttle control actuator terminal 1	EC-1301
91	APP sensor terminal 1	EC-1293

OK or NG

OK >> GO TO 5.
NG >> Repair short to ground or short to power in harness or connectors.

5. CHECK APP SENSOR

Refer to EC-1298, "Component Inspection" .

OK or NG

OK >> GO TO 11.
NG >> GO TO 6.

6. REPLACE ACCELERATOR PEDAL ASSEMBLY

1. Replace accelerator pedal assembly.
2. Perform EC-749, "Accelerator Pedal Released Position Learning" .
3. Perform EC-749, "Throttle Valve Closed Position Learning" .
4. Perform EC-750, "Idle Air Volume Learning" .

>> **INSPECTION END**

7. CHECK THROTTLE POSITION SENSOR GROUND CIRCUIT FOR OPEN AND SHORT

1. Turn ignition switch OFF.
2. Disconnect ECM harness connector.
3. Check harness continuity between electric throttle control actuator terminal 5 and ECM terminal 66.
   Refer to Wiring Diagram.

   Continuity should exist.

4. Also check harness for short to ground and short to power.

OK or NG

OK >> GO TO 8.
NG >> Repair open circuit or short to ground or short to power in harness or connectors.

8. CHECK THROTTLE POSITION SENSOR INPUT SIGNAL CIRCUIT FOR OPEN AND SHORT

1. Check harness continuity between the following;
   ECM terminal 50 and electric throttle control actuator terminal 4,
   ECM terminal 69 and electric throttle control actuator terminal 2.
   Refer to Wiring Diagram.

   Continuity should exist.

2. Also check harness for short to ground and short to power.

OK or NG

OK >> GO TO 9.
NG >> Repair open circuit or short to ground or short to power in harness or connectors.

9. CHECK THROTTLE POSITION SENSOR

Refer to EC-1305, "Component Inspection" .

OK or NG

OK >> GO TO 11.
NG >> GO TO 10.

10. REPLACE ELECTRIC THROTTLE CONTROL ACTUATOR

1. Replace the electric throttle control actuator.
2. Perform EC-749, "Throttle Valve Closed Position Learning" .
3. Perform EC-750, "Idle Air Volume Learning" .

>> **INSPECTION END**

11. CHECK INTERMITTENT INCIDENT

Refer to EC-834, "TROUBLE DIAGNOSIS FOR INTERMITTENT INCIDENT" .

>> **INSPECTION END**

Component Inspection

UBS00JN2

THROTTLE POSITION SENSOR

1. Reconnect all harness connectors disconnected.
2. Perform EC-749, "Throttle Valve Closed Position Learning" .
3. Turn ignition switch ON.
4. Set shift lever to D position (A/T models) or 1st position (M/T models).
5. Check voltage between ECM terminals 50 (TP sensor 1), 69 (TP sensor 2) and ground under the following conditions.

Terminal	Accelerator pedal	Voltage
50 (Throttle position sensor 1)	Fully released	More than 0.36V
	Fully depressed	Less than 4.75V
69 (Throttle position sensor 2)	Fully released	Less than 4.75V
	Fully depressed	More than 0.36V

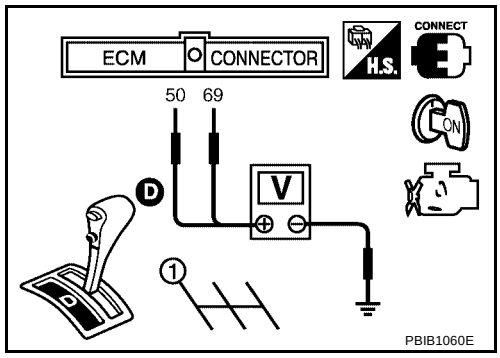

6. If NG, replace electric throttle control actuator and go to the next step.
7. Perform EC-749, "Throttle Valve Closed Position Learning" .
8. Perform EC-750, "Idle Air Volume Learning" .

Remove and Installation

UBS00JN3

ELECTRIC THROTTLE CONTROL ACTUATOR

Refer to EM-108, "INTAKE MANIFOLD" .

DTC P2138 APP SENSOR

PFP:18002

Component Description

UBS00JN4

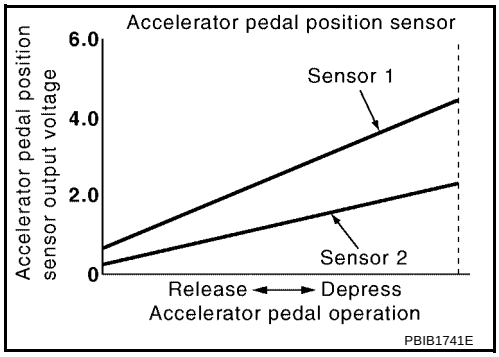

The accelerator pedal position sensor is installed on the upper end of the accelerator pedal assembly. The sensor detects the accelerator position and sends a signal to the ECM.
Accelerator pedal position sensor has two sensors. These sensors are a kind of potentiometers which transform the accelerator pedal position into output voltage, and emit the voltage signal to the ECM. In addition, these sensors detect the opening and closing speed of the accelerator pedal and feed the voltage signals to the ECM. The ECM judges the current opening angle of the accelerator pedal from these signals and controls the throttle control motor based on these signals.
Idle position of the accelerator pedal is determined by the ECM receiving the signal from the accelerator pedal position sensor. The ECM uses this signal for the engine operation such as fuel cut.

CONSULT-II Reference Value in Data Monitor Mode

UBS00JN5

Specification data are reference values.

MONITOR ITEM	CONDITION		SPECIFICATION
ACCEL SEN1 ACCEL SEN2*	● Ignition switch: ON (Engine stopped) ● Shift lever: D (A/T), 1ST (M/T)	Accelerator pedal: Fully released	0.41 - 0.96V
		Accelerator pedal: Fully depressed	More than 4.2V
CLSD THL POS	● Ignition switch: ON (Engine stopped)	Accelerator pedal: Fully released	ON
		Accelerator pedal: Slightly depressed	OFF

*: Accelerator pedal position sensor 2 signal is converted by ECM internally. Thus, it differs from ECM terminals voltage signal.

On Board Diagnosis Logic

UBS00JN6

This self-diagnosis has the one trip detection logic.

NOTE:
If DTC P2138 is displayed with DTC P1229, first perform the trouble diagnosis for DTC P1229. Refer to EC-1178 .

DTC No.	Trouble diagnosis name	DTC detecting condition	Possible cause
P2138 2138	Accelerator pedal position sensor circuit range/performance problem	Rationally incorrect voltage is sent to ECM compared with the signals from APP sensor 1 and APP sensor 2.	● Harness or connector (The APP sensor 1 and 2 circuit is open or shorted.) (TP sensor circuit is shorted.) ● Accelerator pedal position sensor 1 and 2 ● Electric throttle control actuator (TP sensor 1 and 2)

FAIL-SAFE MODE

When the malfunction is detected, the ECM enters fail-safe mode and the MIL lights up.

Engine operating condition in fail-safe mode
The ECM controls the electric throttle control actuator in regulating the throttle opening in order for the idle position to be within +10 degrees. The ECM regulates the opening speed of the throttle valve to be slower than the normal condition. So, the acceleration will be poor.

DTC Confirmation Procedure

UBS00JN7

NOTE:
If DTC Confirmation Procedure has been previously conducted, always turn ignition switch OFF and wait at least 10 seconds before conducting the next test.
TESTING CONDITION:

Before performing the following procedure, confirm that battery voltage is more than 10V at idle.

WITH CONSULT-II

1. Turn ignition switch ON.
2. Select “DATA MONITOR” mode with CONSULT-II.
3. Start engine and let it idle for 1 second.
4. If DTC is detected, go to EC-1309, "Diagnostic Procedure" .

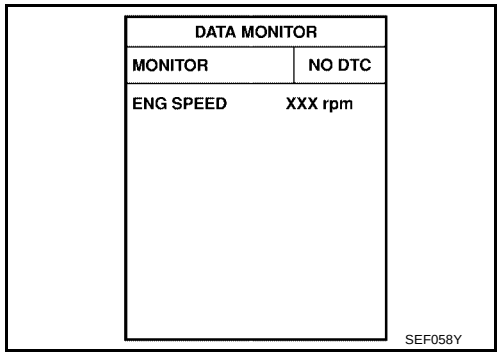

WITH GST

Follow the procedure “WITH CONSULT-II” above.

Wiring Diagram

UBS00JN8

EC-APPS3-01

: DETECTABLE LINE FOR DTC
: NON-DETECTABLE LINE FOR DTC

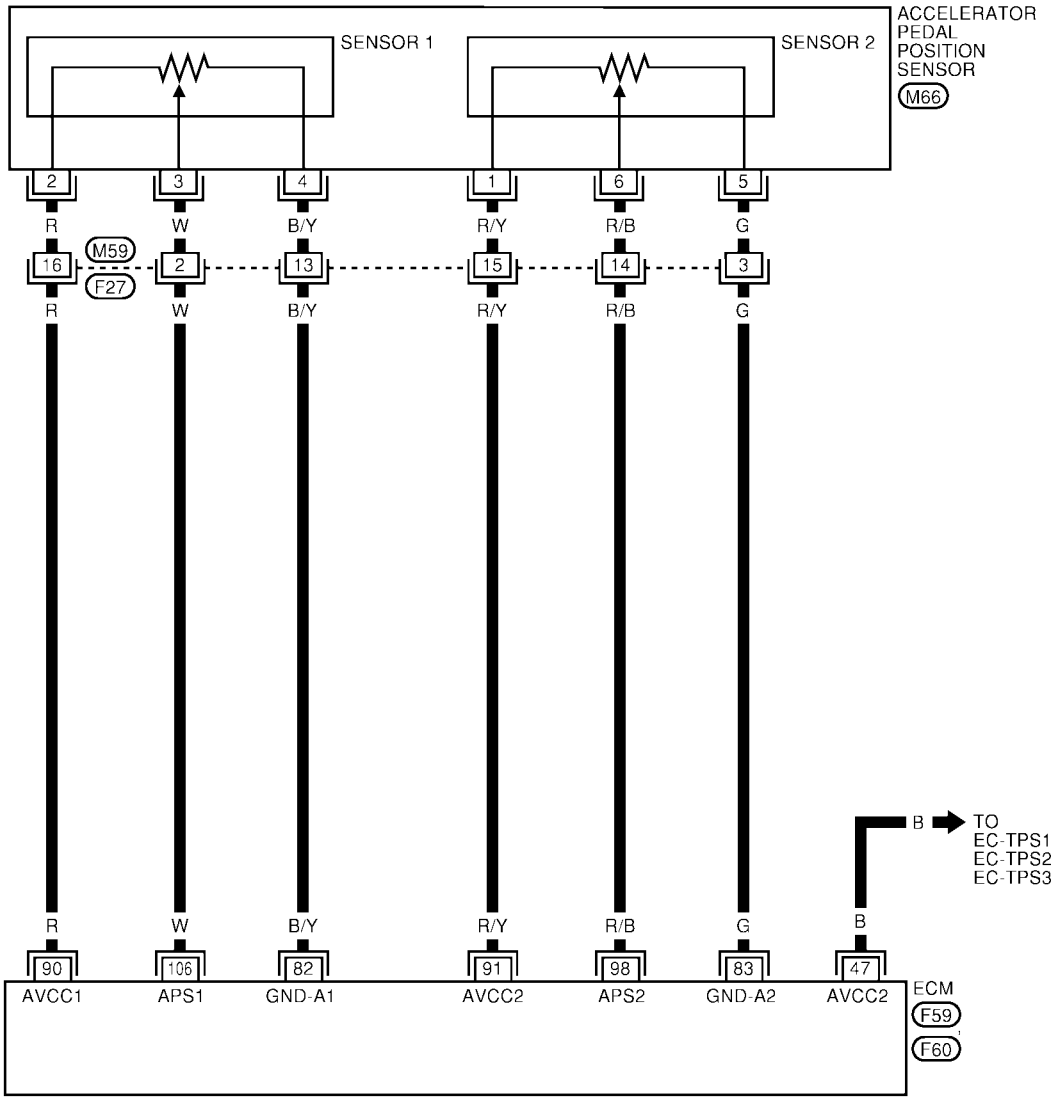

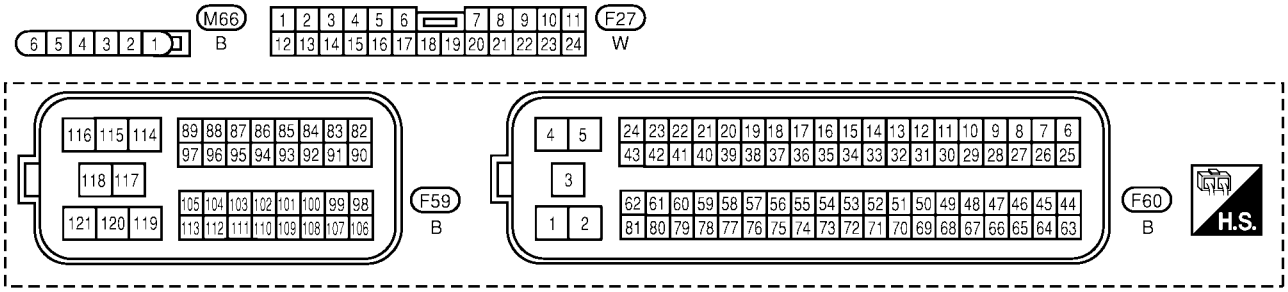

BBWA1401E

Specification data are reference values and are measured between each terminal and ground.

CAUTION:

Do not use ECM ground terminals when measuring input/output voltage. Doing so may result in damage to the ECM's transistor. Use a ground other than ECM terminals, such as the ground.

TERMINAL NO.	WIRE COLOR	ITEM	CONDITION	DATA (DC Voltage)
47	B	Sensor power supply (Throttle position sensor)	**[Ignition switch: ON]**	Approximately 5V
82	B/Y	Sensor ground (Accelerator pedal position sensor 1)	**[Engine is running]** ● **Warm-up condition** ● Idle speed	Approximately 0V
83	G	Sensor ground (Accelerator pedal position sensor 2)	**[Engine is running]** ● **Warm-up condition** ● Idle speed	Approximately 0V
90	R	Sensor power supply (Accelerator pedal position sensor 1)	**[Ignition switch: ON]**	Approximately 5V
91	R/Y	Sensor power supply (Accelerator pedal position sensor 2)	**[Ignition switch: ON]**	Approximately 5V
98	R/B	Accelerator pedal position sensor 2	**[Ignition switch: ON]** ● Engine stopped ● Accelerator pedal: Fully released	0.28 - 0.48V
			[Ignition switch: ON] ● Engine stopped ● Accelerator pedal: Fully depressed	More than 2.0V
106	W	Accelerator pedal position sensor 1	**[Ignition switch: ON]** ● Engine stopped ● Accelerator pedal: Fully released	0.65 - 0.87V
			[Ignition switch: ON] ● Engine stopped ● Accelerator pedal: Fully depressed	More than 4.3V

Diagnostic Procedure

UBS00JN9

1. CHECK GROUND CONNECTIONS

1. Turn ignition switch OFF.
2. Loosen and retighten engine two screws on the body.
   Refer to EC-841, "Ground Inspection" .

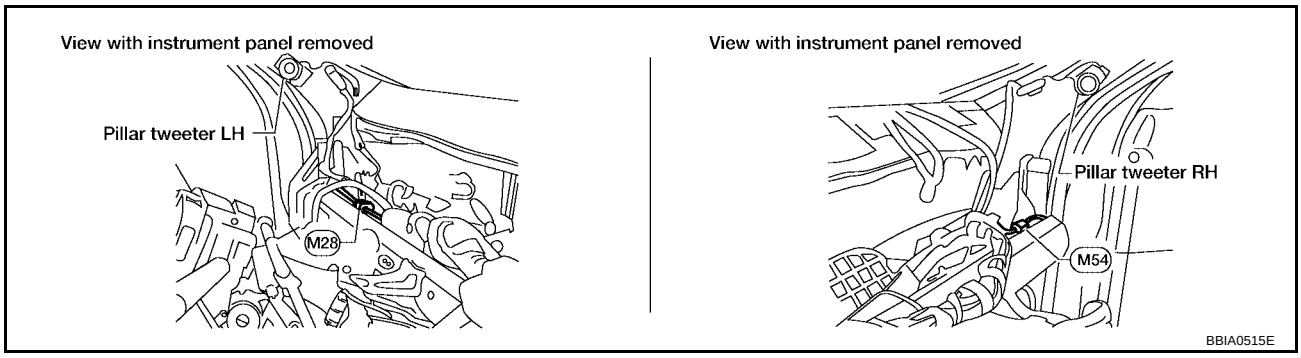

OK or NG

OK >> GO TO 2.
NG >> Repair or replace ground connections.

2. CHECK APP SENSOR 1 POWER SUPPLY CIRCUIT

1. Disconnect accelerator pedal position (APP) sensor harness connector.
2. Turn ignition switch ON.

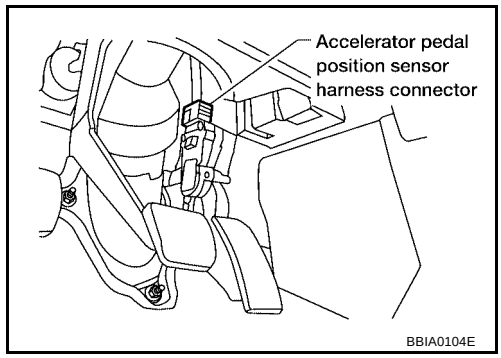

3. Check voltage between APP sensor terminal 2 and ground with CONSULT-II or tester.

Voltage: Approximately 5V

OK or NG

OK >> GO TO 4.
NG >> GO TO 3.

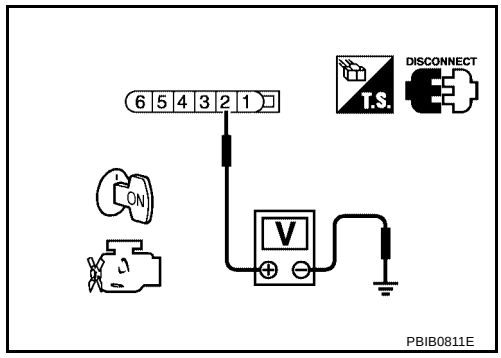

3. DETECT MALFUNCTIONING PART

Check the following.

- Harness connectors M59, F27
- Harness for open or short between ECM and accelerator pedal position sensor

>> Repair open circuit or short to ground or short to power in harness or connectors.

4. CHECK APP SENSOR 2 POWER SUPPLY CIRCUIT-I

Check voltage between APP sensor terminal 1 and ground with CONSULT-II or tester.

Voltage: Approximately 5V

OK or NG

OK >> GO TO 10.
NG >> GO TO 5.

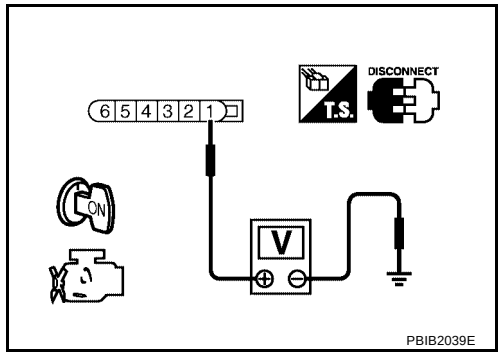

5. CHECK APP SENSOR 2 POWER SUPPLY CIRCUIT-II

1. Turn ignition switch OFF.
2. Disconnect ECM harness connector.
3. Check harness continuity between APP sensor terminal 1 and ECM terminal 91.
   Refer to Wiring Diagram.

Continuity should exist.

OK or NG

OK >> GO TO 7.
NG >> GO TO 6.

6. DETECT MALFUNCTIONING PART

Check the following.

- Harness connectors M59, F27
- Harness for open between ECM and accelerator pedal position sensor

>> Repair or replace open circuit.

7. CHECK APP SENSOR 2 POWER SUPPLY CIRCUIT-III

Check the following.

- Harness for short to power and short to ground, between the following terminals.

ECM terminal	Sensor terminal	Reference Wiring Diagram
91	APP sensor terminal 1	EC-1308
47	Electric throttle control actuator terminal 1	EC-1301

OK or NG

OK >> GO TO 8.
NG >> Repair short to ground or short to power in harness or connectors.

8. CHECK THROTTLE POSITION SENSOR

Refer to EC-1305, "Component Inspection" .

OK or NG

OK >> GO TO 16.
NG >> GO TO 9.

9. REPLACE ELECTRIC THROTTLE CONTROL ACTUATOR

1. Replace the electric throttle control actuator.
2. Perform EC-749, "Throttle Valve Closed Position Learning" .
3. Perform EC-750, "Idle Air Volume Learning" .

>> **INSPECTION END**

10. CHECK APP SENSOR GROUND CIRCUIT FOR OPEN AND SHORT

1. Turn ignition switch OFF.
2. Disconnect ECM harness connector.
3. Check harness continuity between the following;
   APP sensor terminal 4 and ECM terminal 82,
   APP sensor terminal 5 and ECM terminal 83.
   Refer to Wiring Diagram.

   Continuity should exist.

4. Also check harness for short to ground and short to power.

OK or NG

OK >> GO TO 12.
NG >> GO TO 11.

11. DETECT MALFUNCTIONING PART

Check the following.

- Harness connectors M59, F27
- Harness for open or short between ECM and accelerator pedal position sensor

>> Repair open circuit or short to ground or short to power in harness or connectors.

12. CHECK APP SENSOR INPUT SIGNAL CIRCUIT FOR OPEN AND SHORT

1. Check harness continuity between the following;
   ECM terminal 106 and APP sensor terminal 3,
   ECM terminal 98 and APP sensor terminal 6.
   Refer to Wiring Diagram.

   Continuity should exist.

2. Also check harness for short to ground and short to power.

OK or NG

OK >> GO TO 14.
NG >> GO TO 13.

13. DETECT MALFUNCTIONING PART

Check the following.

- Harness connectors M59, F27
- Harness for open or short between ECM and accelerator pedal position sensor

>> Repair open circuit or short to ground or short to power in harness or connectors.

14. CHECK APP SENSOR

Refer to EC-1313, "Component Inspection" .

OK or NG

OK >> GO TO 16.
NG >> GO TO 15.

15. REPLACE ACCELERATOR PEDAL ASSEMBLY

1. Replace accelerator pedal assembly.
2. Perform EC-749, "Accelerator Pedal Released Position Learning" .
3. Perform EC-749, "Throttle Valve Closed Position Learning" .
4. Perform EC-750, "Idle Air Volume Learning" .

>> **INSPECTION END**

16. CHECK INTERMITTENT INCIDENT

Refer to EC-834, "TROUBLE DIAGNOSIS FOR INTERMITTENT INCIDENT" .

>> **INSPECTION END**

Component Inspection

UBS00JNA

ACCELERATOR PEDAL POSITION SENSOR

1. Reconnect all harness connectors disconnected.
2. Turn ignition switch ON.
3. Check voltage between ECM terminals 106 (APP sensor 1 signal), 98 (APP sensor 2 signal) and ground under the following conditions.

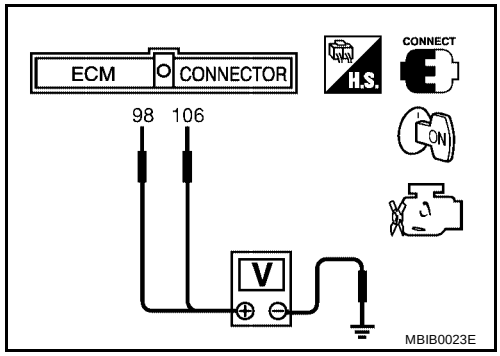

Terminal	Accelerator pedal	Voltage
106 (Accelerator pedal position sensor 1)	Fully released	0.65 - 0.87V
	Fully depressed	More than 4.3V
98 (Accelerator pedal position sensor 2)	Fully released	0.28 - 0.48V
	Fully depressed	More than 2.0V

4. If NG, replace accelerator pedal assembly and go to the next step.
5. Perform EC-749, "Accelerator Pedal Released Position Learning" .
6. Perform EC-749, "Throttle Valve Closed Position Learning" .
7. Perform EC-750, "Idle Air Volume Learning" .

Remove and Installation

UBS00JNB

ACCELERATOR PEDAL

Refer to ACC-2, "ACCELERATOR CONTROL SYSTEM" .

IGNITION SIGNAL

PFP:22448

Component Description

UBS00JYN

IGNITION COIL & POWER TRANSISTOR

The ignition signal from the ECM is sent to and amplified by the power transistor. The power transistor turns ON and OFF the ignition coil primary circuit. This ON-OFF operation induces the proper high voltage in the coil secondary circuit.

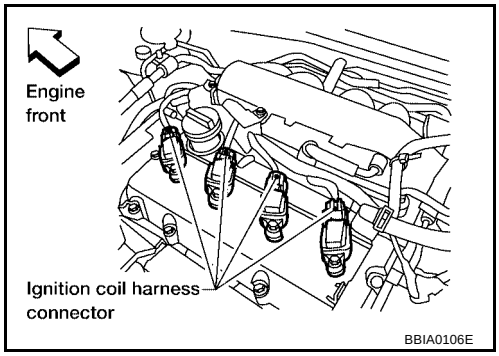

Wiring Diagram

UBS00JYO

EC-IGNSYS-01

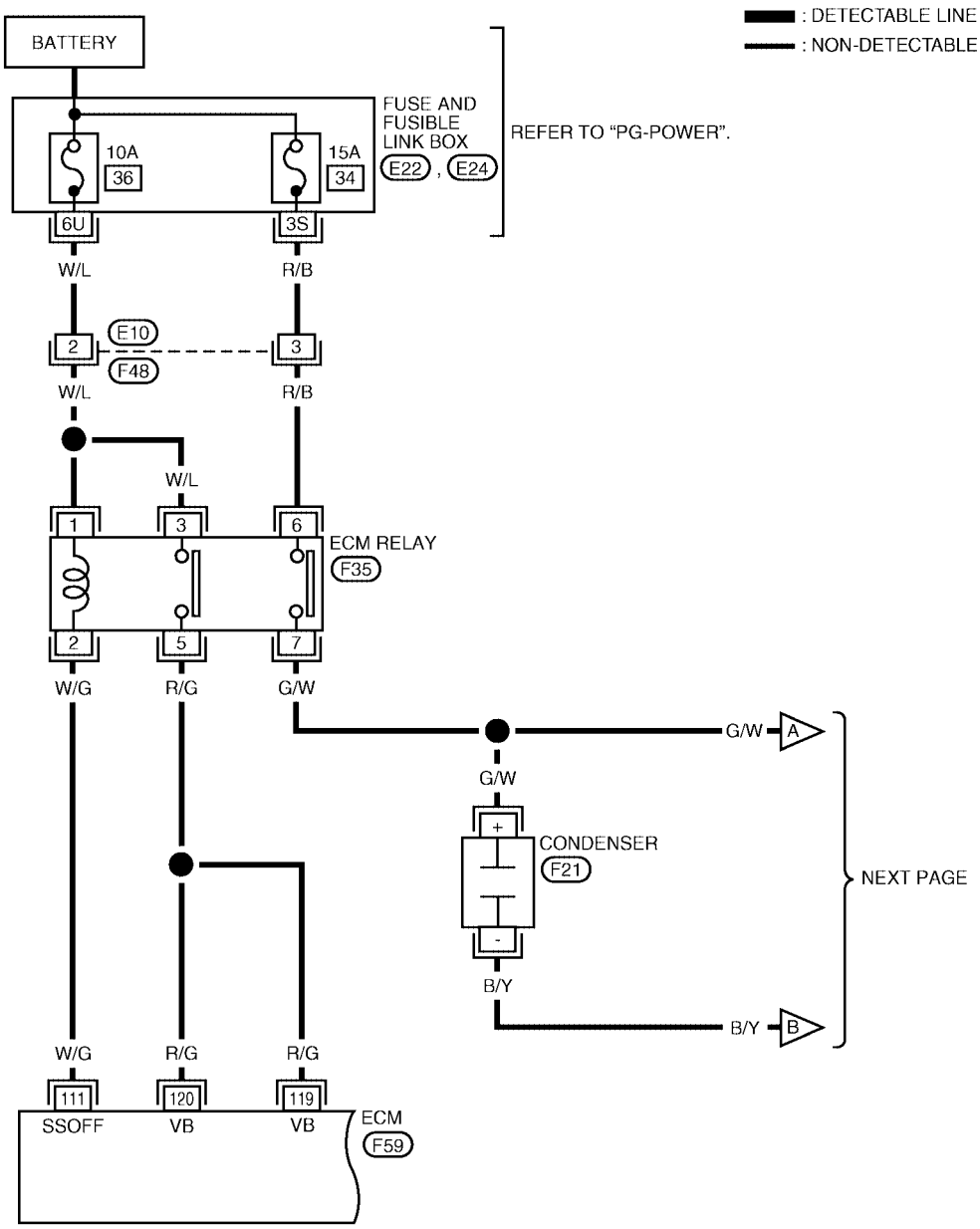

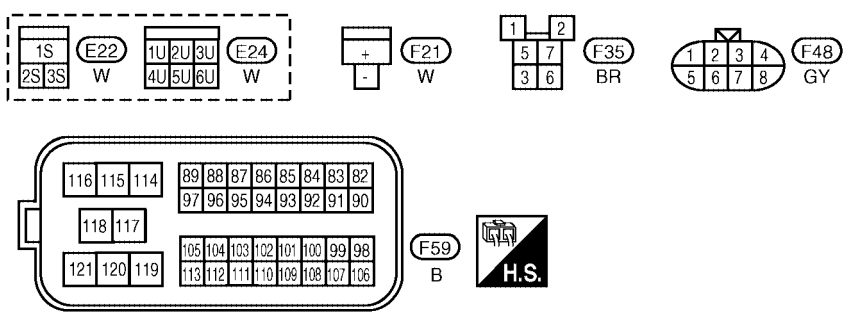

BBWA2306E

Specification data are reference values and are measured between each terminal and ground.

CAUTION:

Do not use ECM ground terminals when measuring input/output voltage. Doing so may result in damage to the ECM's transistor. Use a ground other than ECM terminals, such as the ground.

TERMINAL NO.	WIRE COLOR	ITEM	CONDITION	DATA (DC Voltage)
111	W/G	ECM relay (Self shut-off)	**[Engine is running]** **[Ignition switch: OFF]** ● A few seconds after turning ignition switch OFF	0 - 1.0V
			[Ignition switch: OFF] ● More than a few seconds after turning ignition switch OFF	BATTERY VOLTAGE (11 - 14V)
119 120	R/G	Power supply for ECM	**[Ignition switch: ON]**	BATTERY VOLTAGE (11 - 14V)

EC-IGNSYS-02

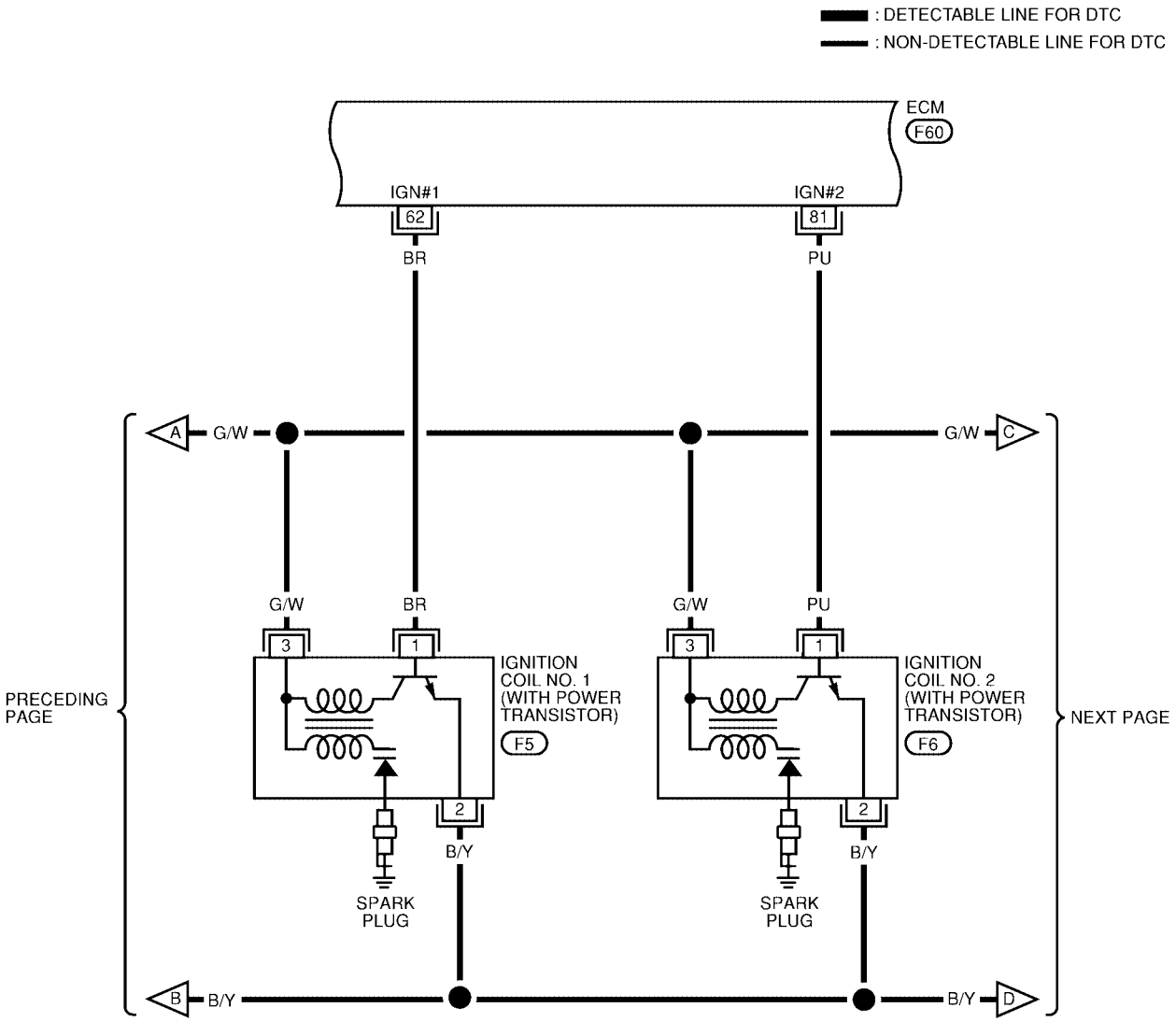

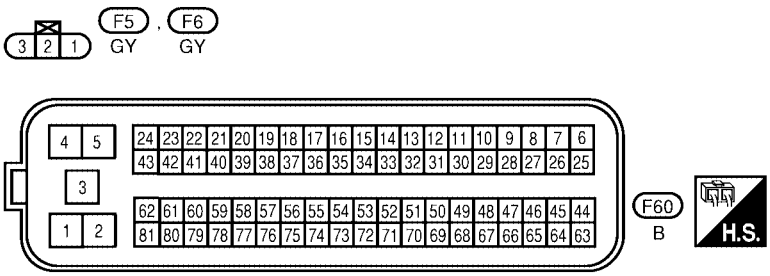

BBWA1480E

Specification data are reference values and are measured between each terminal and ground.
Pulse signal is measured by CONSULT-II.

CAUTION:

Do not use ECM ground terminals when measuring input/output voltage. Doing so may result in damage to the ECM's transistor. Use a ground other than ECM terminals, such as the ground.

TERMINAL NO.	WIRE COLOR	ITEM	CONDITION	DATA (DC Voltage)
62 81	BR PU	Ignition signal No. 1 Ignition signal No. 2	**[Engine is running]** ● **Warm-up condition** ● Idle speed	0 - 0.1V★ 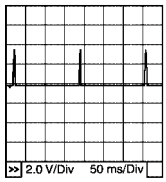 PBIB0521E
			[Engine is running] ● **Warm-up condition** ● Engine speed is 2,000 rpm.	0 - 0.2V★ 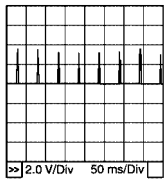 PBIB0522E

★: Average voltage for pulse signal (Actual pulse signal can be confirmed by oscilloscope.)

EC-IGNSYS-03

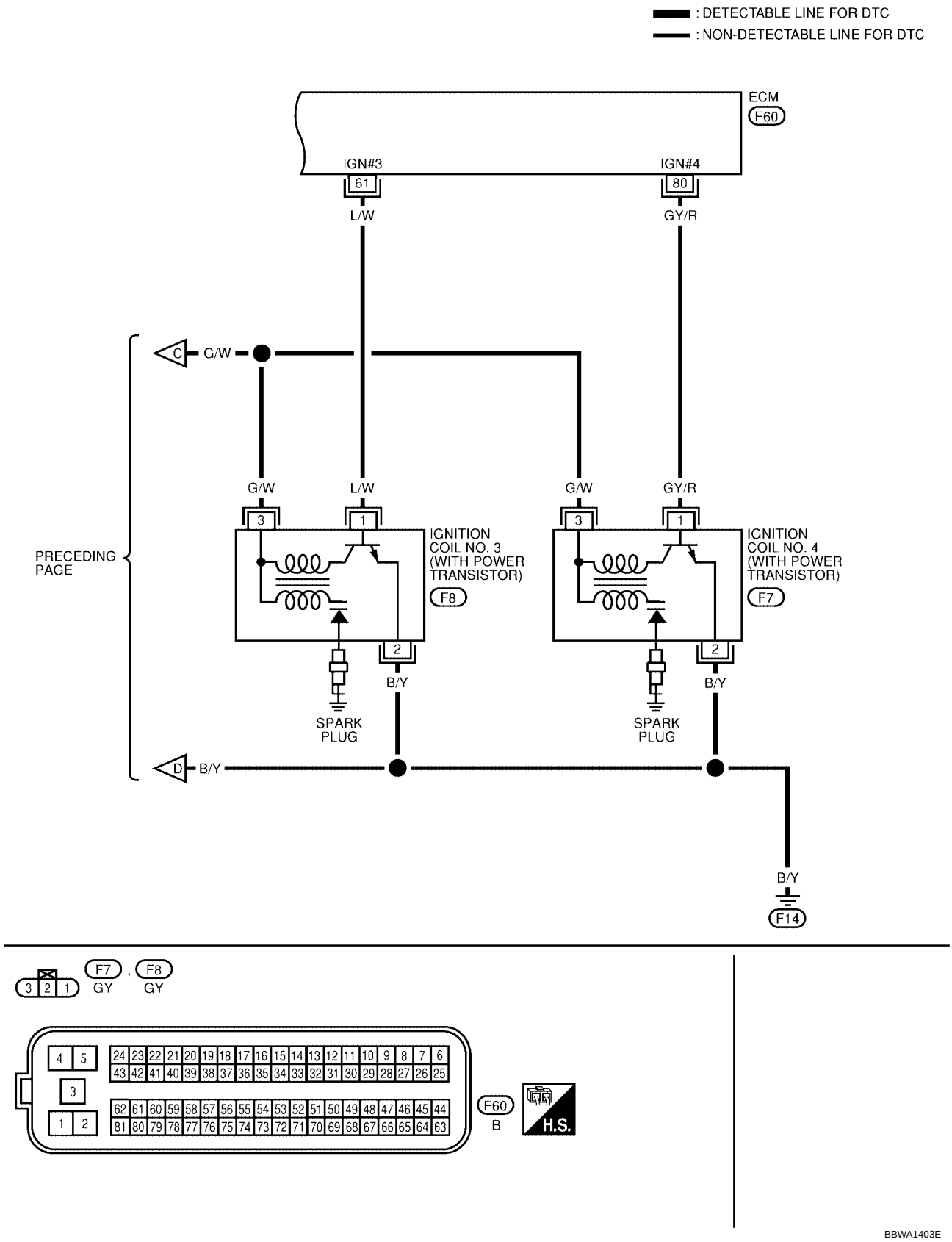
: DETECTABLE LINE FOR DTC
: NON-DETECTABLE LINE FOR DTC
ECM
F60
IGN#3
61
IGN#4
80
L/W
GY/R
C
G/W
G/W
L/W
G/W
GY/R
3
1
IGNITION COIL NO. 3 (WITH POWER TRANSISTOR)
F8
IGNITION COIL NO. 4 (WITH POWER TRANSISTOR)
F7
PRECEDING PAGE
2
B/Y
SPARK PLUG
D
B/Y
F14
F7
GY
F8
GY
F60
B
H.S.
BBWA1403E

Specification data are reference values and are measured between each terminal and ground.
Pulse signal is measured by CONSULT-II.

CAUTION:
Do not use ECM ground terminals when measuring input/output voltage. Doing so may result in damage to the ECM's transistor. Use a ground other than ECM terminals, such as the ground.

TERMINAL NO.	WIRE COLOR	ITEM	CONDITION	DATA (DC Voltage)
61 80	L/W GY/R	Ignition signal No. 3 Ignition signal No. 4	**[Engine is running]** ● **Warm-up condition** ● Idle speed	0 - 0.1V★ 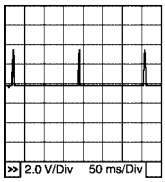 PBIB0521E
			[Engine is running] ● **Warm-up condition** ● Engine speed is 2,000 rpm.	0 - 0.2V★ 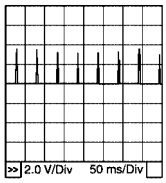 PBIB0522E

★: Average voltage for pulse signal (Actual pulse signal can be confirmed by oscilloscope.)

Diagnostic Procedure

UBS00JYP

1. CHECK ENGINE START

Turn ignition switch OFF, and restart engine.
Is engine running?

Yes or No

Yes (With CONSULT-II)>>GO TO 2.
Yes (Without CONSULT-II)>>GO TO 3.
No >> GO TO 4.

2. CHECK OVERALL FUNCTION

With CONSULT-II

1. Perform “POWER BALANCE” in “ACTIVE TEST” mode with CONSULT-II.
2. Make sure that all circuits do not produce a momentary engine speed drop.

OK or NG

OK >> **INSPECTION END**
NG >> GO TO 12.

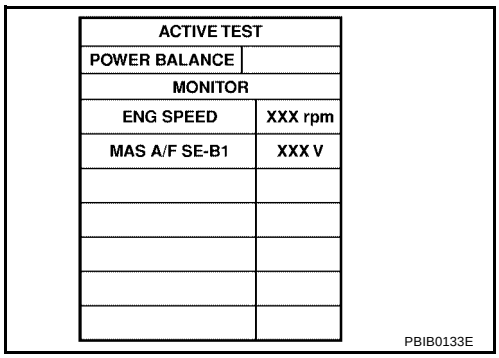

ACTIVE TEST	
POWER BALANCE	
MONITOR	
ENG SPEED	XXX rpm
MAS A/F SE-B1	XXX V

PBIB0133E

3. CHECK OVERALL FUNCTION

Without CONSULT-II

1. Let engine idle.
2. Read the voltage signal between ECM terminals 61, 62, 80, 81 and ground with an oscilloscope.
3. Verify that the oscilloscope screen shows the signal wave as shown below.

   NOTE:
   The pulse cycle changes depending on rpm at idle.

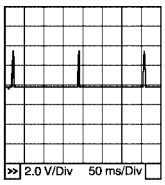

PBIB0521E

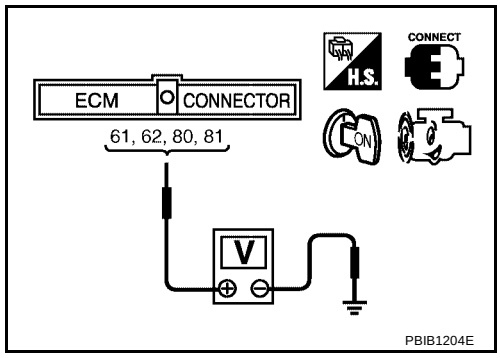

PBIB1204E

OK or NG

OK >> **INSPECTION END**
NG >> GO TO 12.

4. CHECK IGNITION COIL POWER SUPPLY CIRCUIT-I

1. Turn ignition switch ON.
2. Check voltage between ECM terminals 119, 120 and ground with CONSULT-II or tester.

   Voltage: Battery voltage

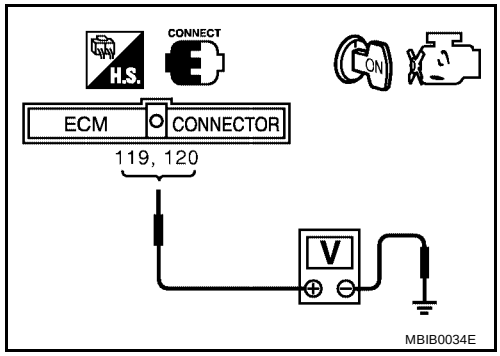

MBIB0034E

OK or NG

OK >> GO TO 5.
NG >> Go to EC-835, "POWER SUPPLY AND GROUND CIRCUIT" .

5. CHECK IGNITION COIL POWER SUPPLY CIRCUIT-II

1. Turn ignition switch OFF.
2. Disconnect condenser harness connector.
3. Turn ignition switch ON.
4. Check voltage between condenser terminal + and ground with CONSULT-II or tester.

   Voltage: Battery voltage

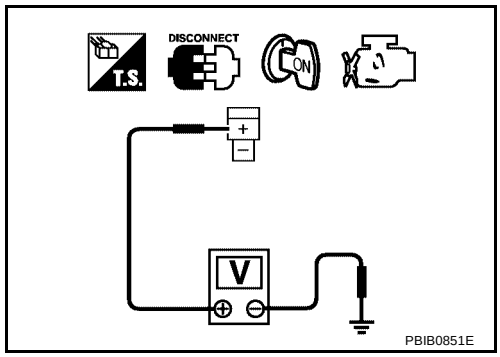

PBIB0851E

OK or NG

OK >> GO TO 10.
NG >> GO TO 6.

6. CHECK IGNITION COIL POWER SUPPLY CIRCUIT-III

1. Turn ignition switch OFF.
2. Disconnect ECM relay.
3. Check harness continuity between ECM relay terminal 7 and condenser terminal +.
   Refer to Wiring Diagram.

   Continuity should exist.

4. Also check harness for short to ground and short to power.

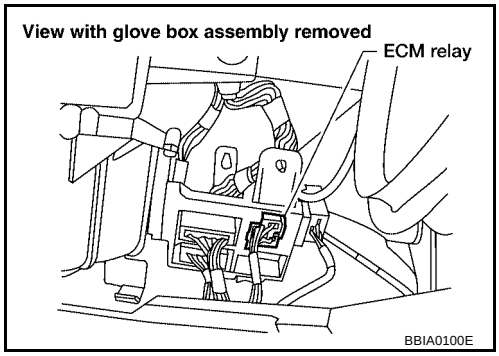

OK or NG

OK >> GO TO 7.
NG >> Repair open circuit or short to ground or short to power in harness or connectors.

7. CHECK IGNITION COIL POWER SUPPLY CIRCUIT-IV

Check voltage between ECM relay terminal 6 and ground with CONSULT-II or tester.

Voltage: Battery voltage

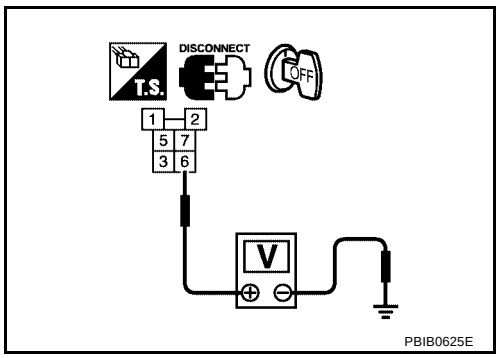

OK or NG

OK >> GO TO 9.
NG >> GO TO 8.

8. DETECT MALFUNCTIONING PART

Check the following.

- Harness connectors E10, F48
- Fuse and fusible link box connector E22
- 15A fuse
- Harness for open or short between ECM relay and battery

>> Repair or replace harness or connectors.

9. CHECK ECM RELAY

Refer to EC-1324, "Component Inspection" .

OK or NG

OK >> GO TO 16.
NG >> Replace ECM relay.

10. CHECK CONDENSER GROUND CIRCUIT FOR OPEN AND SHORT

1. Turn ignition switch OFF.
2. Disconnect condenser harness connector.
3. Check harness continuity between condenser terminal - and ground.
   Refer to Wiring diagram.

   Continuity should exist.

4. Also check harness for short to power.

OK or NG

OK >> GO TO 11.
NG >> Repair open circuit or short to power in harness or connector.

11. CHECK CONDENSER

Refer to EC-1324, "Component Inspection" .

OK or NG

OK >> GO TO 12.
NG >> Replace condenser.

12. CHECK IGNITION COIL POWER SUPPLY CIRCUIT-V

1. Turn ignition switch OFF.
2. Disconnect ignition coil harness connector.
3. Turn ignition switch ON.

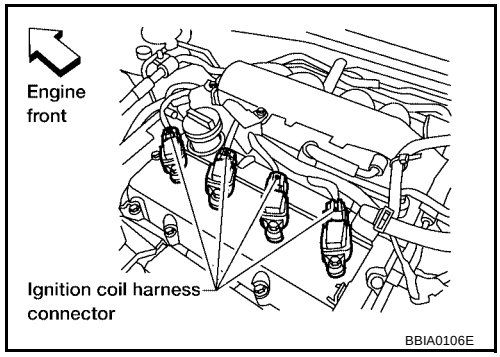

4. Check voltage between ignition coil terminal 3 and ground with CONSULT-II or tester.

   Voltage: Battery voltage

OK or NG

OK >> GO TO 13.
NG >> Repair open circuit or short to ground or short to power in harness or connectors.

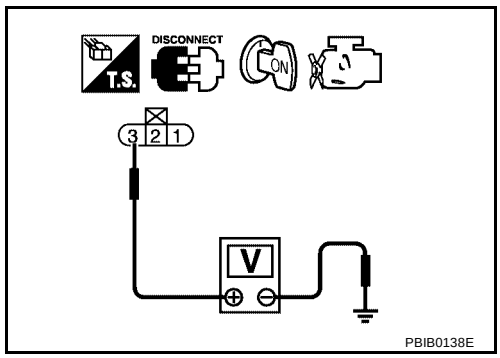

13. CHECK IGNITION COIL GROUND CIRCUIT FOR OPEN AND SHORT

1. Turn ignition switch OFF.
2. Check harness continuity between ignition coil terminal 2 and ground.
   Refer to Wiring Diagram.

   Continuity should exist.

3. Also check harness for short to power.

OK or NG

OK >> GO TO 14.
NG >> Repair open circuit or short to power in harness or connectors.

14. CHECK IGNITION COIL OUTPUT SIGNAL CIRCUIT FOR OPEN AND SHORT

1. Disconnect ECM harness connector.
2. Check harness continuity between ECM terminals 61, 62, 80, 81 and ignition coil terminal 1.
   Refer to Wiring Diagram.

   Continuity should exist.

3. Also check harness for short to ground and short to power.

OK or NG

OK >> GO TO 15.
NG >> Repair open circuit or short to ground or short to power in harness or connectors.

15. CHECK IGNITION COIL WITH POWER TRANSISTOR

Refer to EC-1324, "Component Inspection" .

OK or NG

OK >> GO TO 16.
NG >> Replace ignition coil with power transistor.

16. CHECK INTERMITTENT INCIDENT

Refer to EC-834, "TROUBLE DIAGNOSIS FOR INTERMITTENT INCIDENT" .

>> **INSPECTION END**

Component Inspection

UBS00JYQ

ECM RELAY

1. Apply 12V direct current between ECM relay terminals 1 and 2.
2. Check continuity between relay terminals 3 and 5, 6 and 7.

Condition	Continuity
12V direct current supply between terminals 1 and 2	Yes
OFF	No

3. If NG, replace ECM relay.

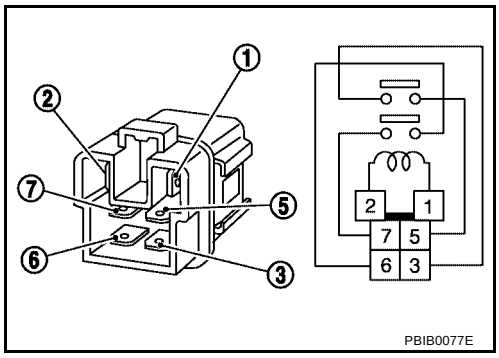

CONDENSER

1. Turn ignition switch OFF.
2. Disconnect condenser harness connector.

3. Check resistance between condenser terminals + and -.

Resistance: Above 1 MΩ [at 25°C (77°F)]

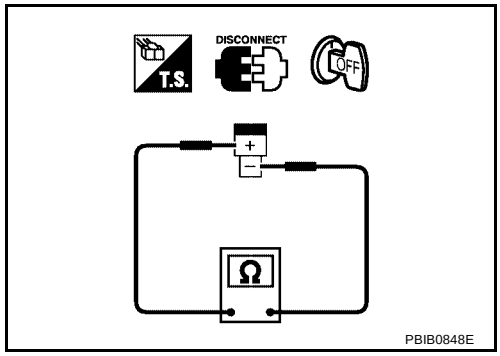

IGNITION COIL WITH POWER TRANSISTOR

CAUTION:

Do the following procedure in the place where ventilation is good without the combustible.

1. Turn ignition switch OFF.
2. Disconnect ignition coil harness connector.
3. Check resistance between ignition coil terminals as follows.

Terminal No. (Polarity)	Resistance Ω [at 25°C (77°F)]
1 and 2	Except 0 or ∞
1 and 3	Except 0
2 and 3	

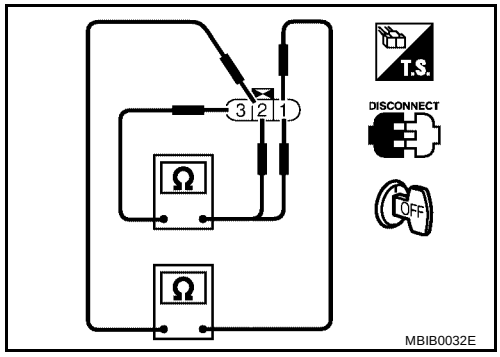

4. If NG, Replace ignition coil with power transistor.
   If OK, go to next step.
5. Turn ignition switch OFF.
6. Reconnect all harness connectors disconnected.
7. Remove fuel pump fuse in located in fuse box to release fuel pressure.

   NOTE:
   Do not use CONSULT-II to release fuel pressure, or fuel pressure applies again during the following procedure.

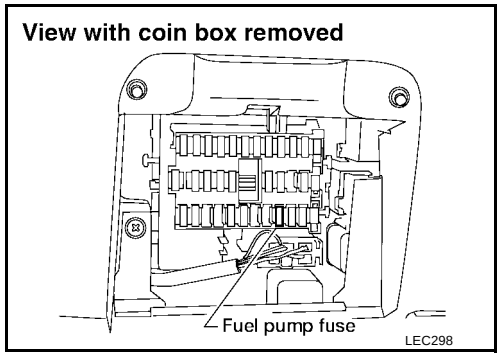

8. Start engine.
9. After engine stalls, crank it two or three times to release all fuel pressure.
10. Turn ignition switch OFF.
11. Remove ignition coil harness connectors to avoid the electrical discharge from the ignition coils.
12. Remove ignition coil and spark plug of the cylinder to be checked.
13. Crank engine for five seconds or more to remove combustion gas in the cylinder.
14. Connect spark plug and harness connector to ignition coil.
15. Fix ignition coil using a rope etc. with gap of 13 - 17 mm between the edge of the spark plug and grounded metal portion as shown in the figure.
16. Crank engine for about three seconds, and check whether spark is generated between the spark plug and the grounded part.

    Spark should be generated.

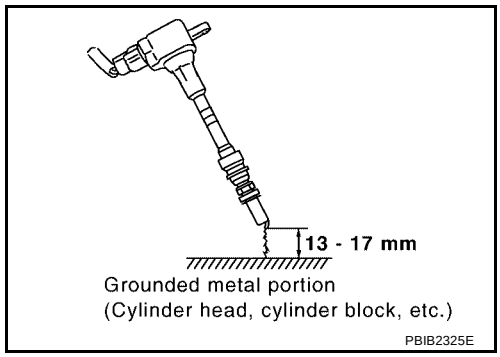

CAUTION:

- **Do not approach to the spark plug and the ignition coil within 50cm. Be careful not to get an electrical shock while checking, because the electrical discharge voltage becomes 20kV or more.**
- **It might cause to damage the ignition coil if the gap of 17 mm or more is taken.**

NOTE:
When the gap is 13 mm or less, the spark might be generated even if the coil is malfunctioning.

17. If NG, Replace ignition coil with power transistor.

Removal and Installation

UBS00JYR

IGNITION COIL WITH POWER TRANSISTOR

Refer to EM-118, "IGNITION COIL" .

VIAS

PFP:14956

Description

UBS00JYS

SYSTEM DESCRIPTION

Sensor	Input Signal to ECM	ECM function	Actuator
Mass air flow sensor	Amount of intake air	VIAS control	VIAS control solenoid valve
Throttle position sensor	Throttle position		
Accelerator pedal position sensor	Closed throttle position		
Battery	Battery voltage*		
Crankshaft position sensor (POS) Camshaft position sensor (PHASE)	Engine speed*		
Engine coolant temperature sensor	Engine coolant temperature		

*: ECM determines the start signal status by the signals of engine speed and battery voltage.

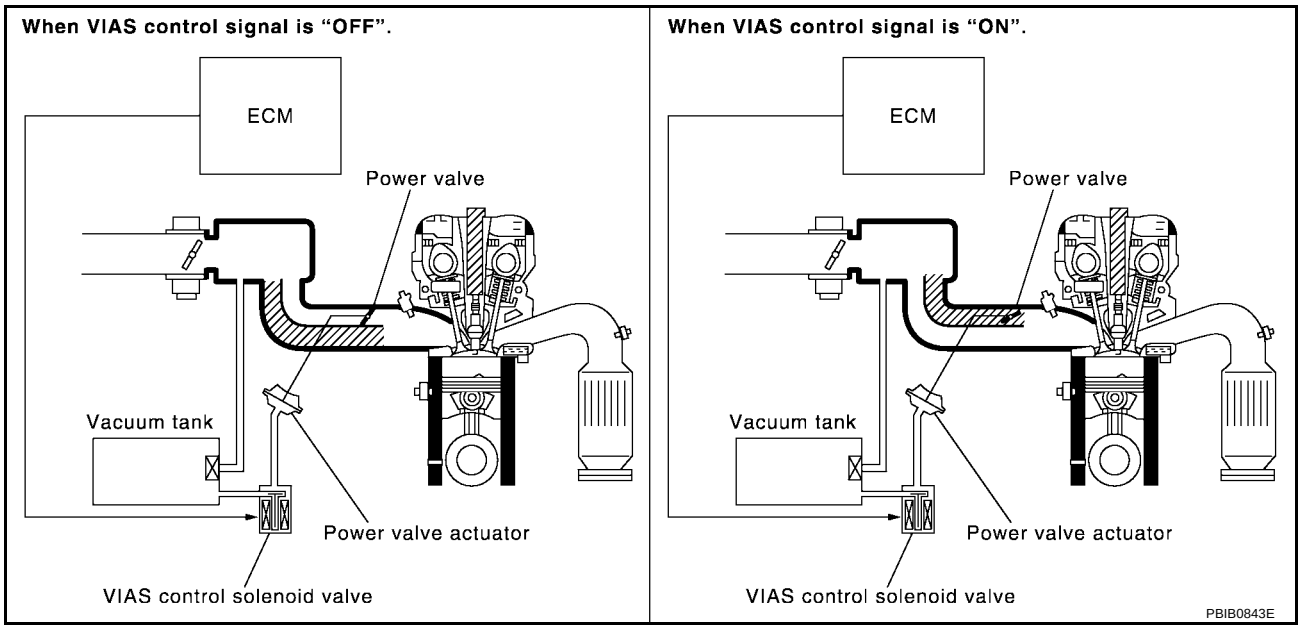

When the engine is running at low or medium speed, the power valve is fully closed. Under this condition, the effective suction port length is equivalent to the total length of the intake manifold collector's suction port including the intake valve. This long suction port provides increased air intake which results in improved suction efficiency and higher torque generation.

The surge tank and one-way valve are provided. When engine is running at high speed, the ECM sends the signal to the VIAS control solenoid valve. This signal introduces the intake manifold vacuum into the power valve actuator and therefore opens the power valve to two suction passages together in the collector.

Under this condition, the effective port length is equivalent to the length of the suction port provided independently for each cylinder. This shortened port length results in enhanced engine output with reduced suction resistance under high speeds.

COMPONENT DESCRIPTION

Power Valve

The power valve is installed in intake manifold collector and used to control the suction passage of the variable induction air control system. It is set in the fully closed or fully opened position by the power valve actuator operated by the vacuum stored in the surge tank. The vacuum in the surge tank is controlled by the VIAS control solenoid valve.

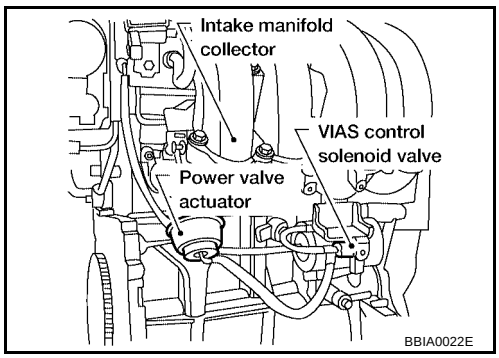

VIAS Control Solenoid Valve

The VIAS control solenoid valve cuts the intake manifold vacuum signal for power valve actuator. It responds to ON/OFF signals from the ECM. When the solenoid is OFF, the vacuum signal from the intake manifold is cut. When the ECM sends an ON signal the coil pulls the plunger downward and feeds the vacuum signal to the power valve actuator.

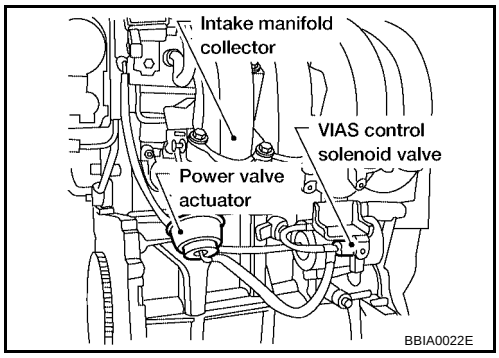

CONSULT-II Reference Value in Data Monitor Mode

UBS00JYT

MONITOR ITEM	CONDITION		SPECIFICATION
VIAS S/V	● Engine: After warming up	Idle	OFF
		More than 5,000 rpm	ON

Wiring Diagram

UBS00JYU

EC-VIAS-01

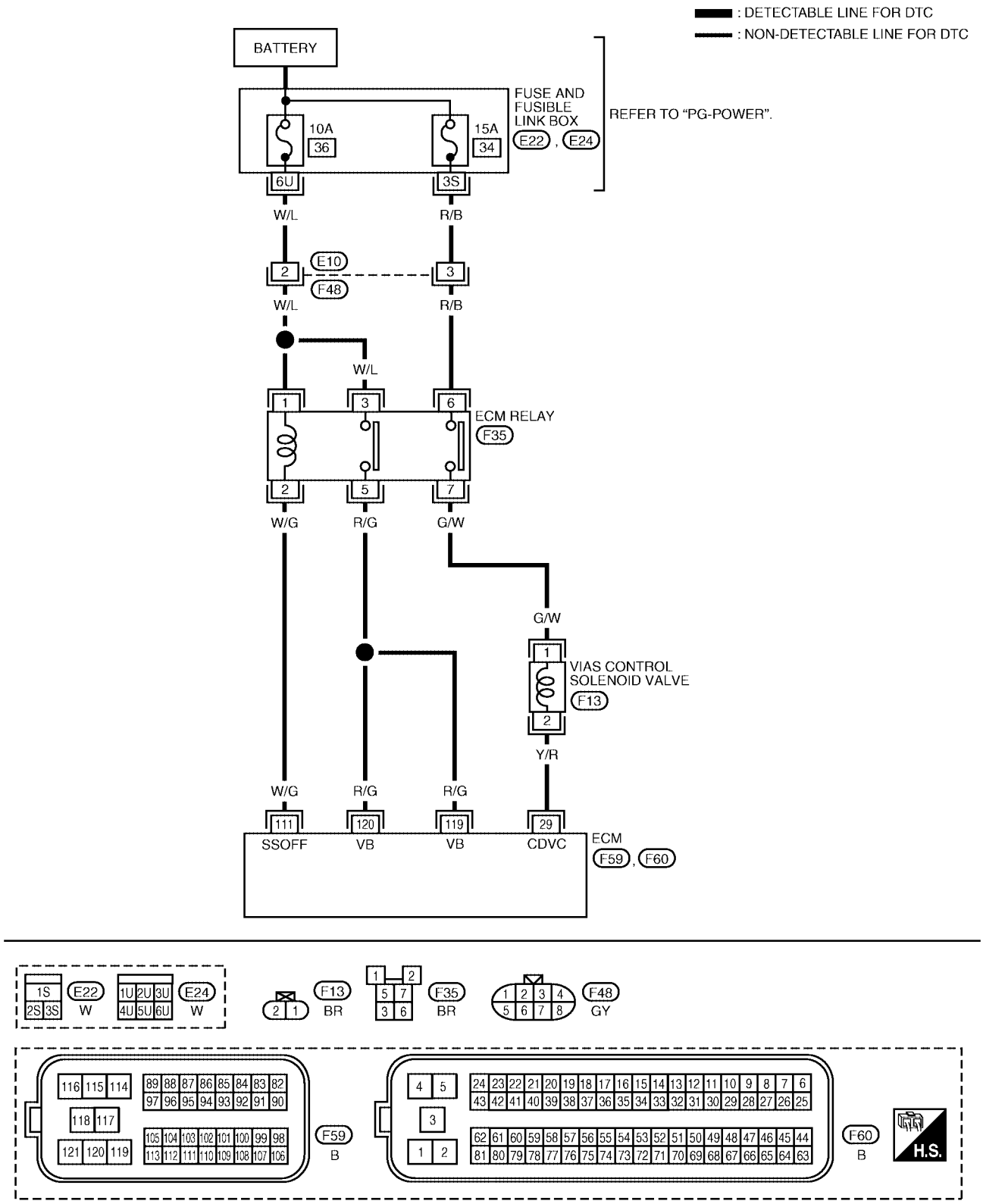

BBWA1410E

Specification data are reference values and are measured between each terminal and ground.

CAUTION:

Do not use ECM ground terminals when measuring input/output voltage. Doing so may result in damage to the ECM's transistor. Use a ground other than ECM terminals, such as the ground.

TERMINAL NO.	WIRE COLOR	ITEM	CONDITION	DATA (DC Voltage)
29	Y/R	VIAS control solenoid valve	**[Engine is running]** ● Idle speed	BATTERY VOLTAGE (11 - 14V)
			[Engine is running] ● Engine speed is above 5,000 rpm	0 - 1.0V

Diagnostic Procedure

UBS00JYV

1. CHECK OVERALL FUNCTION

With CONSULT-II

1. Start engine and warm it up to normal operating temperature.
2. Perform “VIAS SOL VALVE” in “ACTIVE TEST” mode with CONSULT-II.

ACTIVE TEST	
VIAS SOL VALVE	OFF
MONITOR	
ENG SPEED	XXX rpm

PBIB0844E

3. Turn VIAS control solenoid valve ON and OFF, and make sure that power valve actuator rod moves.

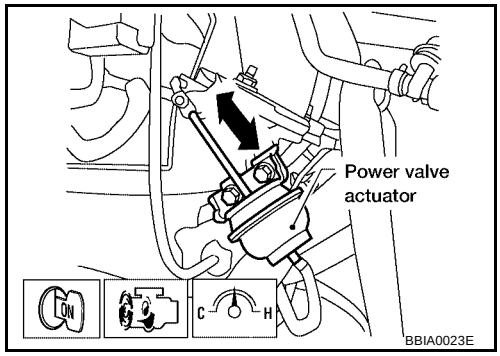

BBIA0023E

Without CONSULT-II

1. Start engine and warm it up to normal operating temperature.
2. Rev engine quickly up to above 5,000 rpm and make sure that power valve actuator rod moves.

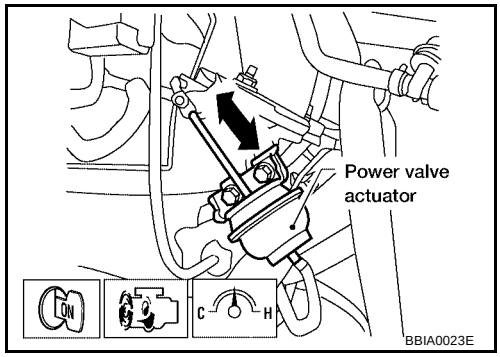

BBIA0023E

OK or NG

OK >> **INSPECTION END**
NG (With CONSULT-II)>>GO TO 2.
NG (Without CONSULT-II)>>GO TO 3.

2. CHECK VACUUM EXISTENCE

With CONSULT-II

1. Stop engine and disconnect vacuum hose connected to power valve actuator.
2. Start engine and let it idle.
3. Perform “VIAS SOL VALVE” in “ACTIVE TEST” mode with CONSULT-II.
4. Turn VIAS control solenoid valve “ON” and “OFF”, and check vacuum existence under the following conditions.

VIAS SOL VALVE	Vacuum
ON	Should exist.
OFF	Should not exist.

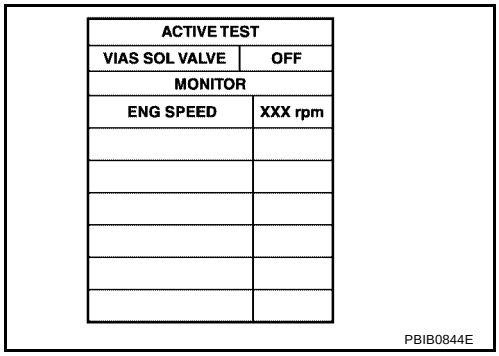

OK or NG

OK >> Repair or replace power valve actuator.
NG >> GO TO 4.

3. CHECK VACUUM EXISTENCE

Without CONSULT-II

1. Stop engine and disconnect vacuum hose connected to power valve actuator.
2. Disconnect VIAS control solenoid valve harness connector.
3. Start engine and let it idle.
4. Apply 12V of direct current between VIAS control solenoid valve terminals 1 and 2.
5. Check vacuum existence under the following conditions.

Condition	Vacuum
12V direct current supply	Should exist.
No supply	Should not exist.

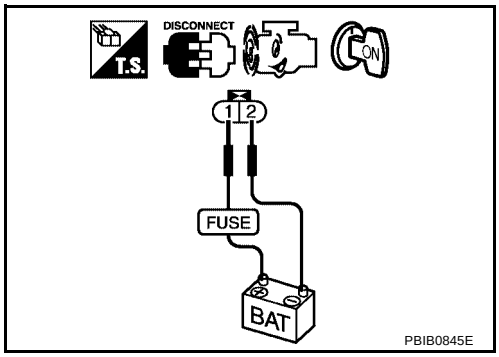

OK or NG

OK >> Repair or replace power valve actuator.
NG >> GO TO 4.

4. CHECK VACUUM HOSE

1. Stop engine.
2. Check hoses and tubes between intake manifold and power valve actuator for crack, clogging, improper connection or disconnection. Refer to EC-779, "Vacuum Hose Drawing" .

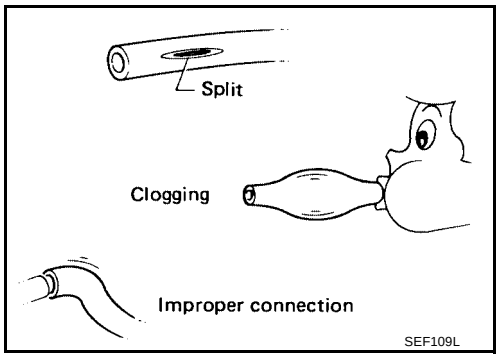

OK or NG

OK >> GO TO 5.
NG >> Repair hoses or tubes.

5. CHECK VACUUM TANK

Refer to EC-1334, "Component Inspection" .

OK or NG

OK >> GO TO 6.
NG >> Replace vacuum tank.

6. CHECK VIAS CONTROL SOLENOID VALVE POWER SUPPLY CIRCUIT-I

1. Turn ignition switch OFF.
2. Disconnect VIAS control solenoid valve harness connector.
3. Turn ignition switch ON.

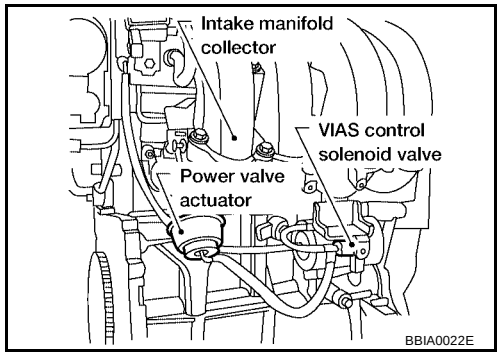

4. Check voltage between VIAS control solenoid valve terminal 1 and ground with CONSULT-II or tester.

Voltage: Battery voltage

OK or NG

OK >> GO TO 8.
NG >> GO TO 7.

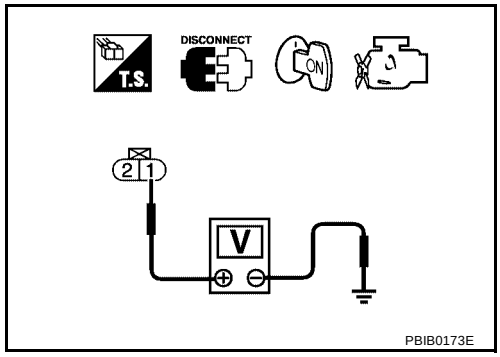

7. CHECK VIAS CONTROL SOLENOID VALVE POWER SUPPLY CIRCUIT-II

1. Turn ignition switch OFF.
2. Disconnect ECM relay.
3. Check harness continuity between ECM relay terminal 7 and VIAS control solenoid valve terminal 1.
   Refer to Wiring Diagram.

Continuity should exist.

4. Also check harness for short to ground and short to power.

OK or NG

OK >> GO TO 8.
NG >> Repair open circuit or short to ground or short to power in harness or connectors.

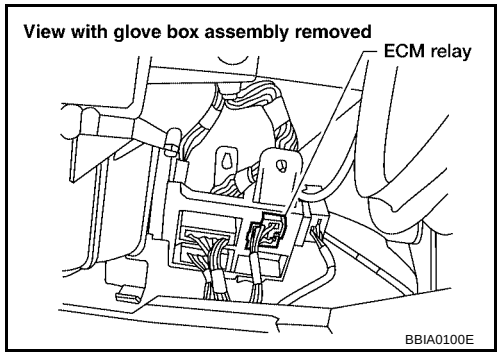

8. CHECK VIAS CONTROL SOLENOID VALVE POWER SUPPLY CIRCUIT-III

Check voltage between ECM relay terminal 6 and ground with CONSULT-II or tester.

Voltage: Battery voltage

OK or NG

OK >> GO TO 10.
NG >> GO TO 9.

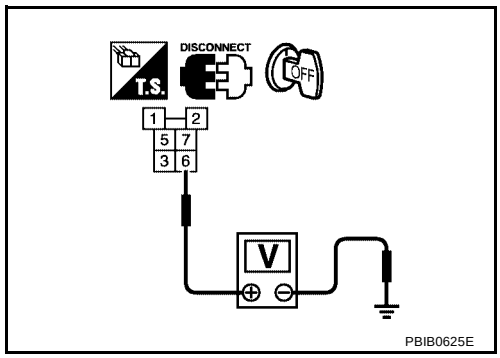

9. DETECT MALFUNCTIONING PART

Check the following.

- Harness connectors E10, F48
- Fuse and fusible link box connector E22
- 15A fuse
- Harness for open or short between ECM relay and battery

>> Repair or replace harness or connectors.

10. CHECK ECM RELAY

Refer to EC-1324, "Component Inspection" .

OK or NG

OK >> GO TO 13.
NG >> Replace ECM relay.

11. CHECK VIAS CONTROL SOLENOID VALVE OUTPUT SIGNAL CIRCUIT FOR OPEN AND SHORT

1. Turn ignition switch OFF.
2. Disconnect ECM harness connector.
3. Check harness continuity between ECM terminal 29 and VIAS control solenoid valve terminal 2. Refer to Wiring Diagram.

Continuity should exist.

4. Also check harness for short to ground and short to power.

OK or NG

OK >> GO TO 12.
NG >> Repair open circuit or short to ground or short to power in harness or connectors.

12. CHECK VIAS CONTROL SOLENOID VALVE

Refer to EC-1334, "Component Inspection" .

OK or NG

OK >> GO TO 13.
NG >> Replace VIAS control solenoid valve.

13. CHECK INTERMITTENT INCIDENT

Refer to EC-834, "TROUBLE DIAGNOSIS FOR INTERMITTENT INCIDENT" .

>> **INSPECTION END**

Component Inspection

UBS00JYW

VIAS CONTROL SOLENOID VALVE

With CONSULT-II

1. Reconnect harness connectors disconnected.
2. Turn ignition switch ON.
3. Perform “VIAS SOL VALVE” in “ACTIVE TEST” mode.

4. Check air passage continuity and operation delay time under the following conditions.

Condition VIAS SOL VALVE	Air passage continuity between **A** and **B**	Air passage continuity between **A** and **C**
ON	Yes	No
OFF	No	Yes

Operation takes less than 1 second.

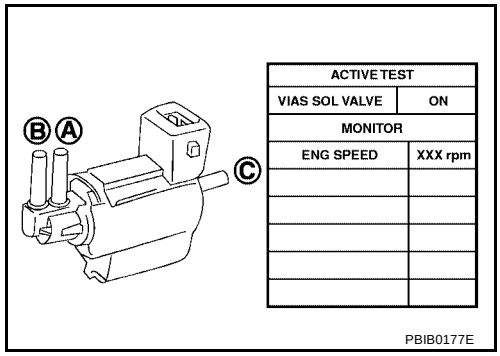

With GST

Check air passage continuity and operation delay time under the following conditions.

Condition	Air passage continuity between **A** and **B**	Air passage continuity between **A** and **C**
12V direct current supply between terminals 1 and 2	Yes	No
No supply	No	Yes

Operation takes less than 1 second.

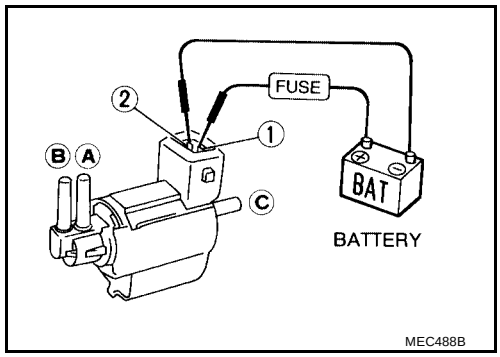

VACUUM TANK

1. Disconnect vacuum hose connected to vacuum tank.
2. Connect a vacuum pump to the port **A** of vacuum pump.
3. Apply vacuum and make sure that vacuum exists at the port **B** .

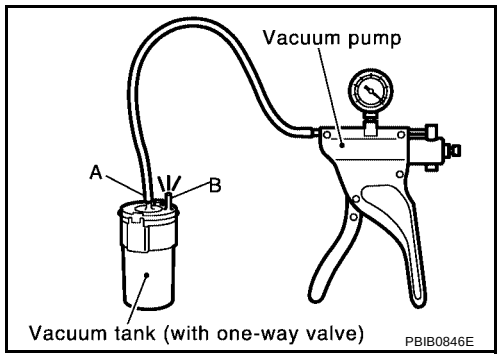

UBS00JYX

Removal and Installation

VIAS CONTROL SOLENOID VALVE

Refer to EM-108, "INTAKE MANIFOLD" .

INJECTOR CIRCUIT

PFP:16600

Component Description

UBS00JYY

The fuel injector is a small, precise solenoid valve. When the ECM supplies a ground to the injector circuit, the coil in the injector is energized. The energized coil pulls the ball valve back and allows fuel to flow through the injector into the intake manifold. The amount of fuel injected depends upon the injection pulse duration. Pulse duration is the length of time the injector remains open. The ECM controls the injection pulse duration based on engine fuel needs.

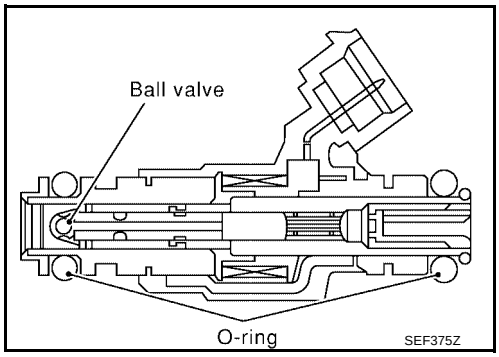

CONSULT-II Reference Value in Data Monitor Mode

UBS00JYZ

Specification data are reference values.

MONITOR ITEM	CONDITION		SPECIFICATION
B/FUEL SCHDL	● See EC-815, "TROUBLE DIAGNOSIS - SPECIFICATION VALUE" .		
INJ PULSE-B1	● Engine: After warming up ● Shift lever: P or N (A/T), Neutral (M/T) ● Air conditioner switch: OFF ● No-load	Idle	2.0 - 3.0 msec
		2,000 rpm	1.9 - 2.9 msec

Wiring Diagram

UBS00JZ0

EC-INJECT-01

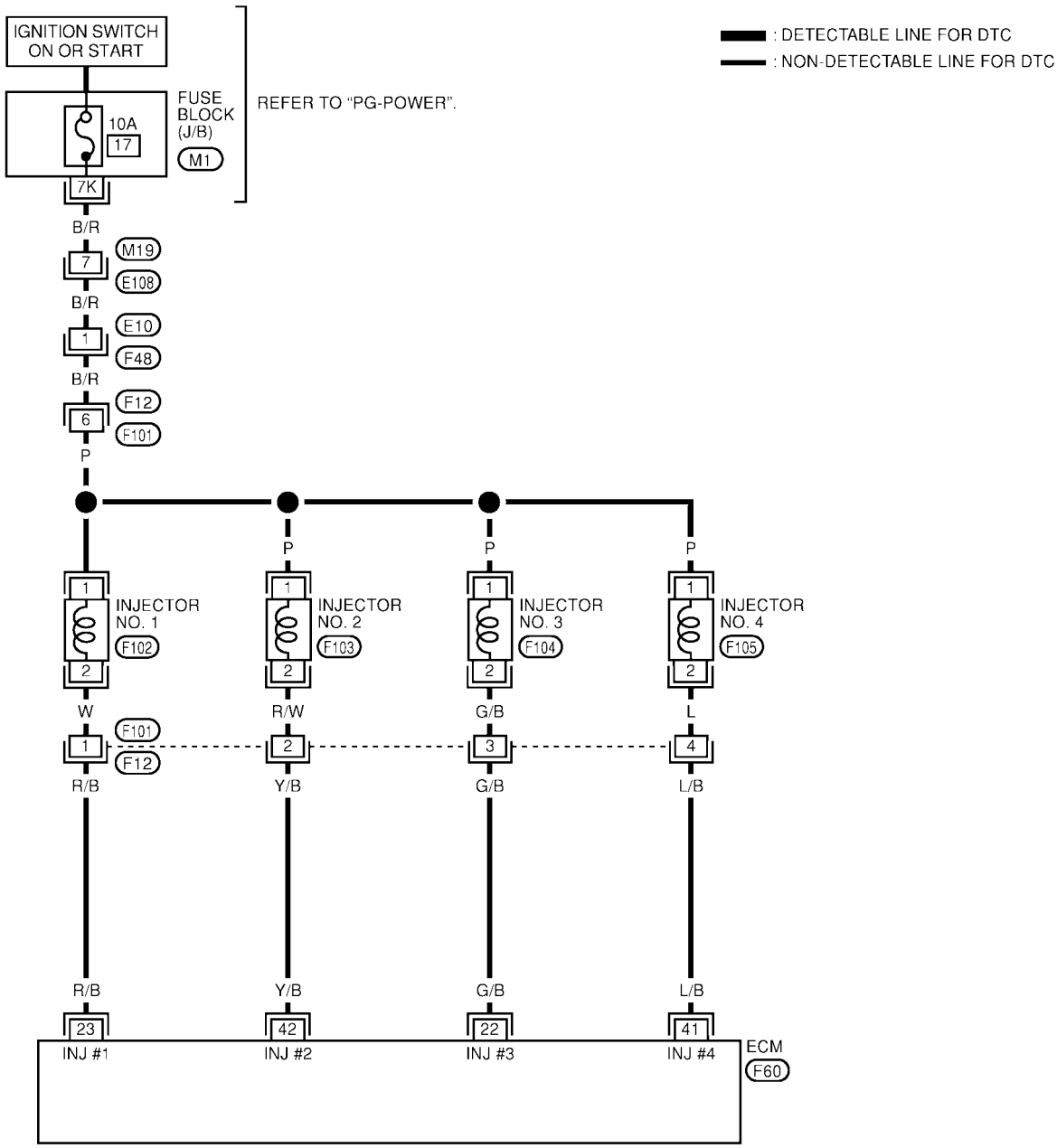

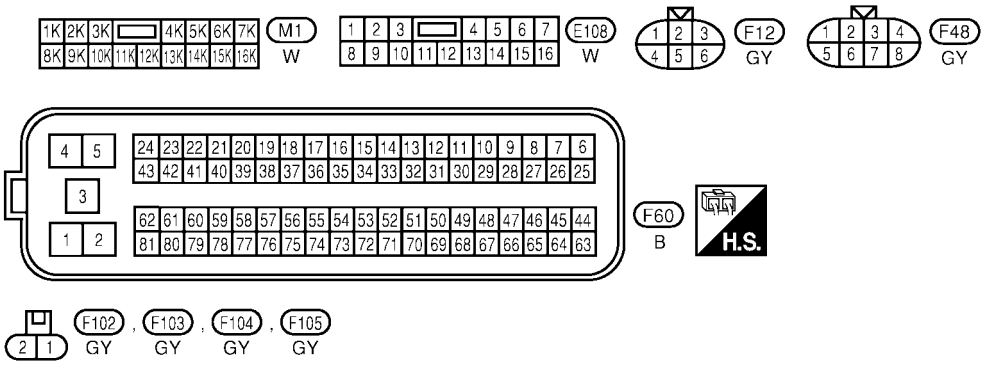

BBWA1404E

Specification data are reference values and are measured between each terminal and ground.
Pulse signal is measured by CONSULT-II.

CAUTION:
Do not use ECM ground terminals when measuring input/output voltage. Doing so may result in damage to the ECM's transistor. Use a ground other than ECM terminals, such as the ground.

TERMINAL NO.	WIRE COLOR	ITEM	CONDITION	DATA (DC Voltage)
22 23 41 42	G/B R/B L/B Y/B	Injector No. 3 Injector No. 1 Injector No. 4 Injector No. 2	**[Engine is running]** ● **Warm-up condition** ● Idle speed	BATTERY VOLTAGE (11 - 14V)★ 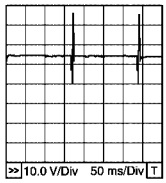 PBIB0529E
			[Engine is running] ● **Warm-up condition** ● Engine speed is 2,000 rpm	BATTERY VOLTAGE (11 - 14V)★ 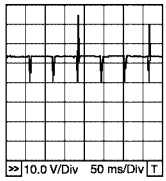 PBIB0530E

★: Average voltage for pulse signal (Actual pulse signal can be confirmed by oscilloscope.)

Diagnostic Procedure

UBS00JZ1

1. INSPECTION START

Turn ignition switch to START.
Is any cylinder ignited?

Yes or No

Yes >> GO TO 2.
No >> GO TO 3.

2. CHECK OVERALL FUNCTION

With CONSULT-II

1. Start engine.
2. Perform “POWER BALANCE” in “ACTIVE TEST” mode with CONSULT-II.
3. Make sure that each circuit produces a momentary engine speed drop.

ACTIVE TEST	
POWER BALANCE	
MONITOR	
ENG SPEED	XXX rpm
MAS A/F SE-B1	XXX V

PBIB0133E

Without CONSULT-II

1. Start engine.
2. Listen to each injector operating sound.
   Clicking noise should be heard.

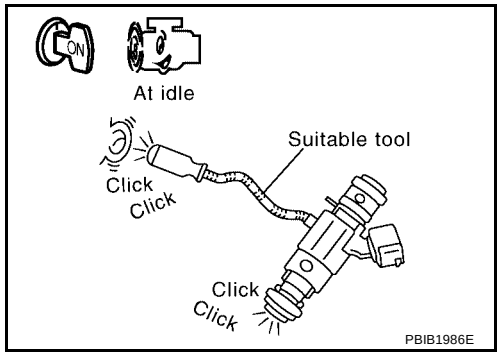

OK or NG

OK >> **INSPECTION END**
NG >> GO TO 3.

3. CHECK INJECTOR POWER SUPPLY CIRCUIT

1. Turn ignition switch OFF.
2. Disconnect injector harness connector.
3. Turn ignition switch ON.

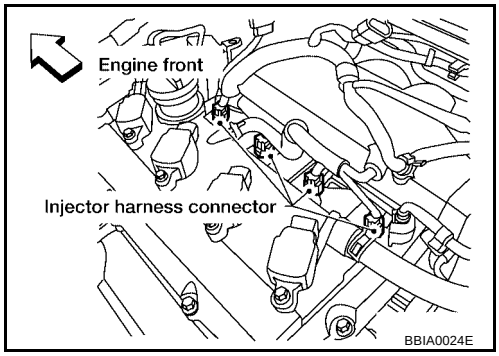

4. Check voltage between injector terminal 1 and ground with CONSULT-II or tester.

Voltage: Battery voltage

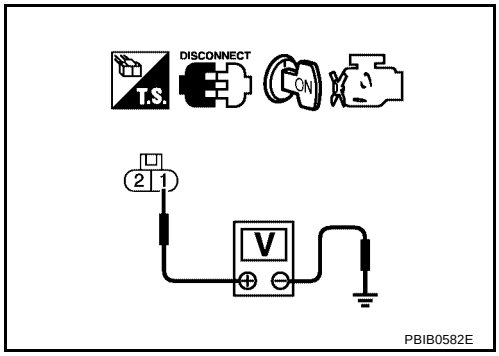

OK or NG

OK >> GO TO 5.
NG >> GO TO 4.

4. DETECT MALFUNCTIONING PART

Check the following.

- Harness connectors M19, E108
- Harness connectors E10, F48
- Harness connectors F12, F101
- Fuse block (J/B) connector M1
- 10A fuse
- Harness for open or short between injector and fuse

>> Repair open circuit or short to ground or short to power in harness or connectors.

5. CHECK INJECTOR OUTPUT SIGNAL CIRCUIT FOR OPEN AND SHORT

1. Turn ignition switch OFF.
2. Disconnect ECM harness connector.
3. Check harness continuity between injector terminal 2 and ECM terminals 22, 23, 41, 42. Refer to Wiring Diagram.

Continuity should exist.

4. Also check harness for short to ground and short to power.

OK or NG

OK >> GO TO 7.
NG >> GO TO 6.

6. DETECT MALFUNCTIONING PART

Check the following.

- Harness connectors F12, F101
- Harness for open or short between injector and ECM

>> Repair open circuit or short to ground or short to power in harness or connectors.

7. CHECK INJECTOR

Refer to EC-1341, "Component Inspection" .

OK or NG

OK >> GO TO 8.
NG >> Replace injector.

8. CHECK INTERMITTENT INCIDENT

Refer to EC-834, "TROUBLE DIAGNOSIS FOR INTERMITTENT INCIDENT" .

>> **INSPECTION END**

Component Inspection

UBS00JZ2

INJECTOR

1. Disconnect injector harness connector.
2. Check resistance between terminals as shown in the figure.

Resistance: 11.6 - 14.9Ω [at 10 - 60°C (50 - 140°F)]

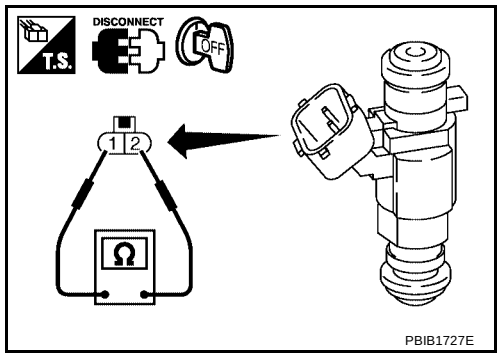

Removal and Installation

UBS00JZ3

INJECTOR

Refer to EM-121, "FUEL INJECTOR AND FUEL TUBE" .

FUEL PUMP CIRCUIT

PFP:17042

Description

UBS00JZ4

SYSTEM DESCRIPTION

Sensor	Input Signal to ECM	ECM Function	Actuator
Crankshaft position sensor (POS) Camshaft position sensor (PHASE)	Engine speed*	Fuel pump control	Fuel pump relay
Battery*	Battery voltage*		

*: ECM determines the start signal status by the signals of engine speed and battery voltage.

The ECM activates the fuel pump for 1 seconds after the ignition switch is turned ON to improve engine start ability. If the ECM receives a engine speed signal from the crankshaft position sensor (POS) and camshaft position sensor (PHASE), it knows that the engine is rotating, and causes the pump to operate. If the engine speed signal is not received when the ignition switch is ON, the engine stalls. The ECM stops pump operation and prevents battery discharging, thereby improving safety. The ECM does not directly drive the fuel pump. It controls the ON/OFF fuel pump relay, which in turn controls the fuel pump.

Condition	Fuel pump operation
Ignition switch is turned to ON	Operates for 1 second
Engine running or cranking	Operates
When engine is stopped	Stops in 1.5 seconds
Except as shown above	Stops

COMPONENT DESCRIPTION

A turbine type design fuel pump is used in the fuel tank.

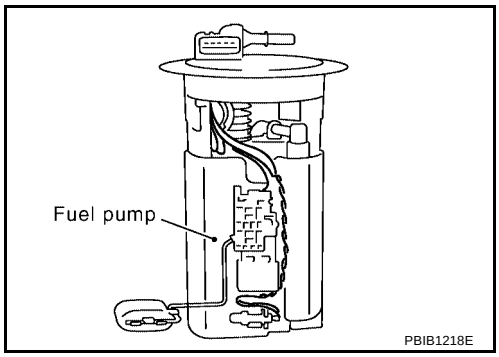

CONSULT-II Reference Value in Data Monitor Mode

UBS00JZ5

Specification data are reference values.

MONITOR ITEM	CONDITION	SPECIFICATION
FUEL PUMP RLY	● For 1 seconds after turning ignition switch ON ● Engine running or cranking	ON
	● Except above conditions	OFF

Wiring Diagram

UBS00JZ6

EC-F/PUMP-01

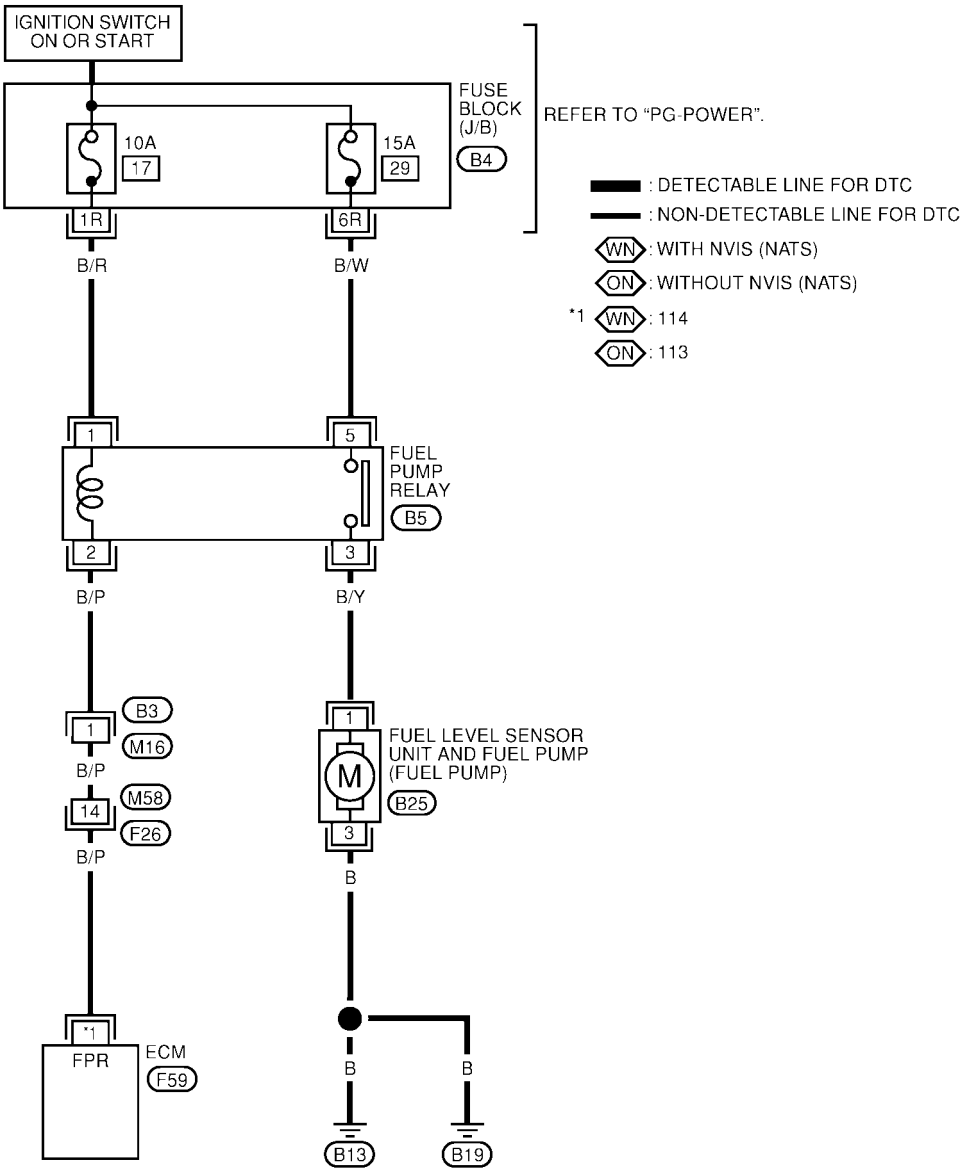

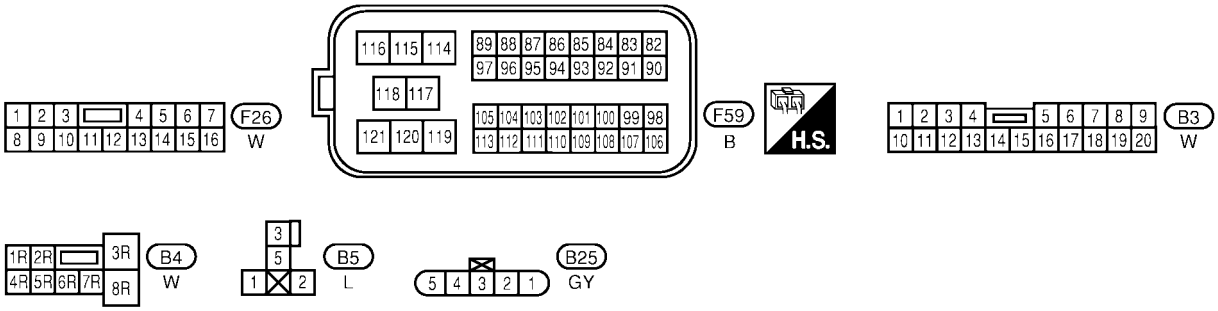

BBWA1405E

Specification data are reference values and are measured between each terminal and ground.

CAUTION:

Do not use ECM ground terminals when measuring input/output voltage. Doing so may result in damage to the ECM's transistor. Use a ground other than ECM terminals, such as the ground.

TERMINAL NO.	WIRE COLOR	ITEM	CONDITION	DATA (DC Voltage)
113 (Without NVIS)	B/P	Fuel pump relay	**[Ignition switch: ON]** ● For 1 second after turning ignition switch ON **[Engine is running]**	0 - 1.0V
114 (With NVIS)			**[Ignition switch: ON]** ● More than 1 second after turning ignition switch ON.	BATTERY VOLTAGE (11 - 14V)

Diagnostic Procedure

UBS00JZ7

1. CHECK OVERALL FUNCTION

1. Turn ignition switch ON.
2. Pinch fuel feed hose with two fingers.
   Fuel pressure pulsation should be felt on the fuel hose for 1 second after ignition switch is turned ON.

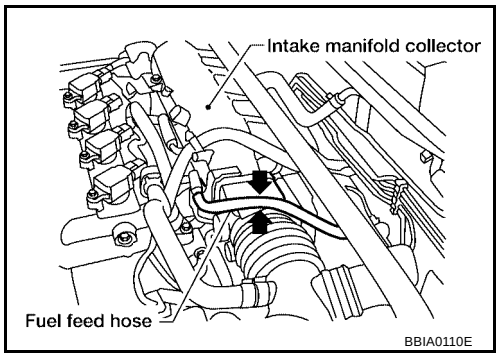

OK or NG

OK >> **INSPECTION END**
NG >> GO TO 2.

2. CHECK FUEL PUMP RELAY POWER SUPPLY CIRCUIT

1. Turn ignition switch OFF.
2. Disconnect fuel pump relay.
3. Turn ignition switch ON.

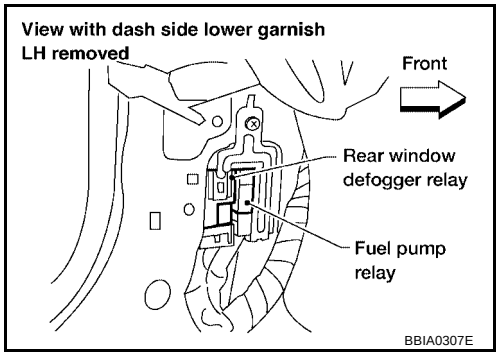

4. Check voltage between fuel pump relay terminals 1, 5 and ground with CONSULT-II or tester.

   Voltage: Battery voltage

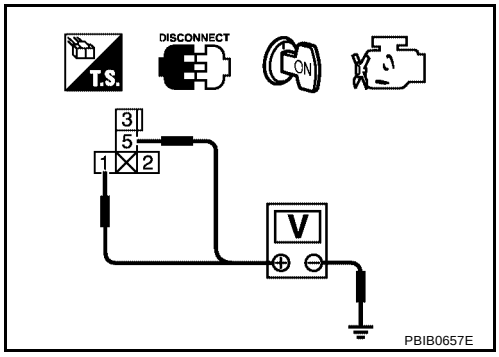

OK or NG

OK >> GO TO 4.
NG >> GO TO 3.

3. DETECT MALFUNCTIONING PART

Check the following.

- Fuse block (J/B) connector B4
- 10A fuse
- 15A fuse
- Harness for open or short between fuse and fuel pump relay

>> Repair open circuit or short to ground or short to power in harness or connectors.

4. CHECK FUEL PUMP POWER SUPPLY AND GROUND CIRCUIT FOR OPEN AND SHORT

1. Turn ignition switch OFF.
2. Disconnect “fuel level sensor unit and fuel pump” harness connector.
3. Check harness continuity between the following;
   fuel pump relay terminal 3 and fuel pump terminal 1,
   fuel pump terminal 3 and ground.
   Refer to Wiring Diagram.

   Continuity should exist.

4. Also check harness for short to ground and short to power.

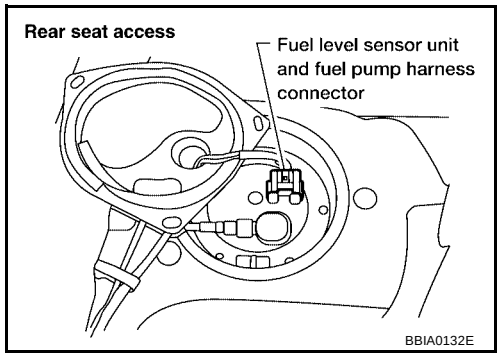

OK or NG

OK >> GO TO 5.
NG >> Repair open circuit or short to ground or short to power in harness or connectors.

5. CHECK FUEL PUMP RELAY OUTPUT SIGNAL CIRCUIT FOR OPEN AND SHORT

1. Disconnect ECM harness connector.
2. Check harness continuity between ECM terminal 113 [without NVIS (NATS)] or 114 [with NVIS (NATS)] and fuel pump relay terminal 2.
   Refer to Wiring Diagram.

   Continuity should exist.

3. Also check harness for short to ground and short to power.

OK or NG

OK >> GO TO 7.
NG >> GO TO 6.

6. DETECT MALFUNCTIONING PART

Check the following.

- Harness connectors B3, M16
- Harness connectors M58, F26
- Harness for open or short between ECM and fuel pump relay

>> Repair open circuit or short to ground or short to power in harness or connectors.

7. CHECK FUEL PUMP RELAY

Refer to EC-1346, "Component Inspection" .

OK or NG

OK >> GO TO 8.
NG >> Replace fuel pump relay.

8. CHECK FUEL PUMP

Refer to EC-1346, "Component Inspection" .

OK or NG

OK >> GO TO 9.
NG >> Replace fuel pump.

9. CHECK INTERMITTENT INCIDENT

Refer to EC-834, "TROUBLE DIAGNOSIS FOR INTERMITTENT INCIDENT" .

>> **INSPECTION END**

Component Inspection

UBS00JZ8

FUEL PUMP RELAY

Check continuity between terminals 3 and 5 under the following conditions.

Conditions	Continuity
12V direct current supply between terminals 1 and 2	Yes
No current supply	No

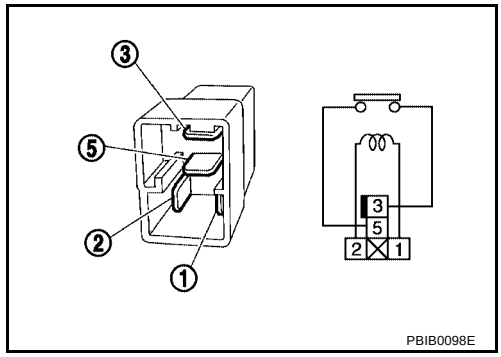

FUEL PUMP

1. Disconnect fuel level sensor unit and fuel pump harness connector.
2. Check resistance between “fuel level sensor unit and fuel pump” terminals 1 and 3.

Resistance: 0.2 - 5.0Ω [at 25°C (77°F)]

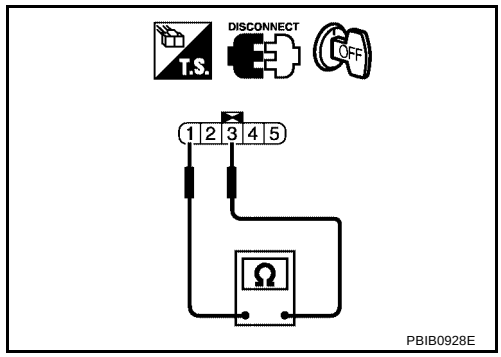

Removal and Installation

UBS00JZ9

FUEL PUMP

Refer to FL-3, "FUEL LEVEL SENSOR UNIT, FUEL FILTER AND FUEL PUMP ASSEMBLY" .

REFRIGERANT PRESSURE SENSOR

PFP:92136

Component Description

UBS00JZA

The refrigerant pressure sensor is installed at the liquid tank of the air conditioner system. The sensor uses an electrostatic volume pressure transducer to convert refrigerant pressure to voltage. The voltage signal is sent to ECM, and ECM controls cooling fan system.

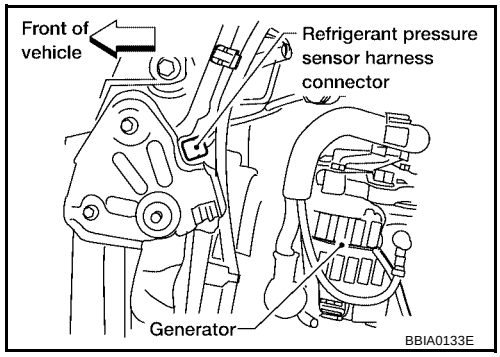

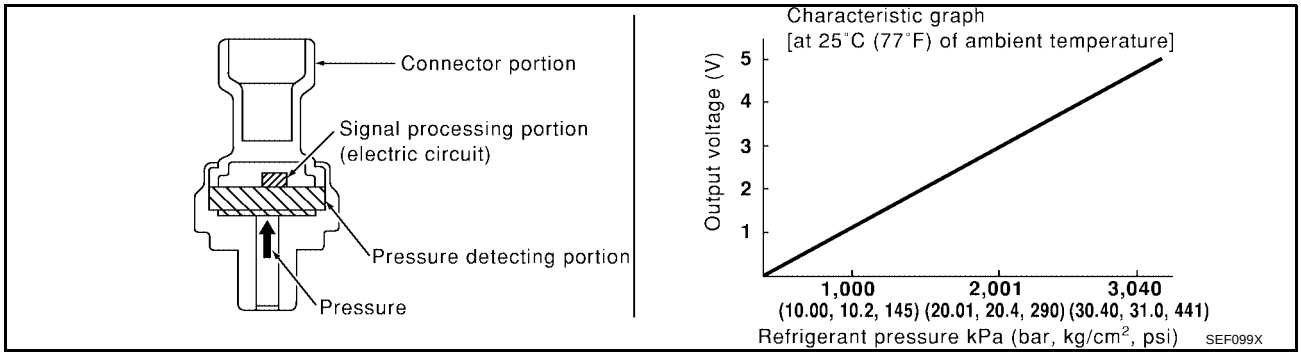

Wiring Diagram

UBS00JZB

EC-RP/SEN-01

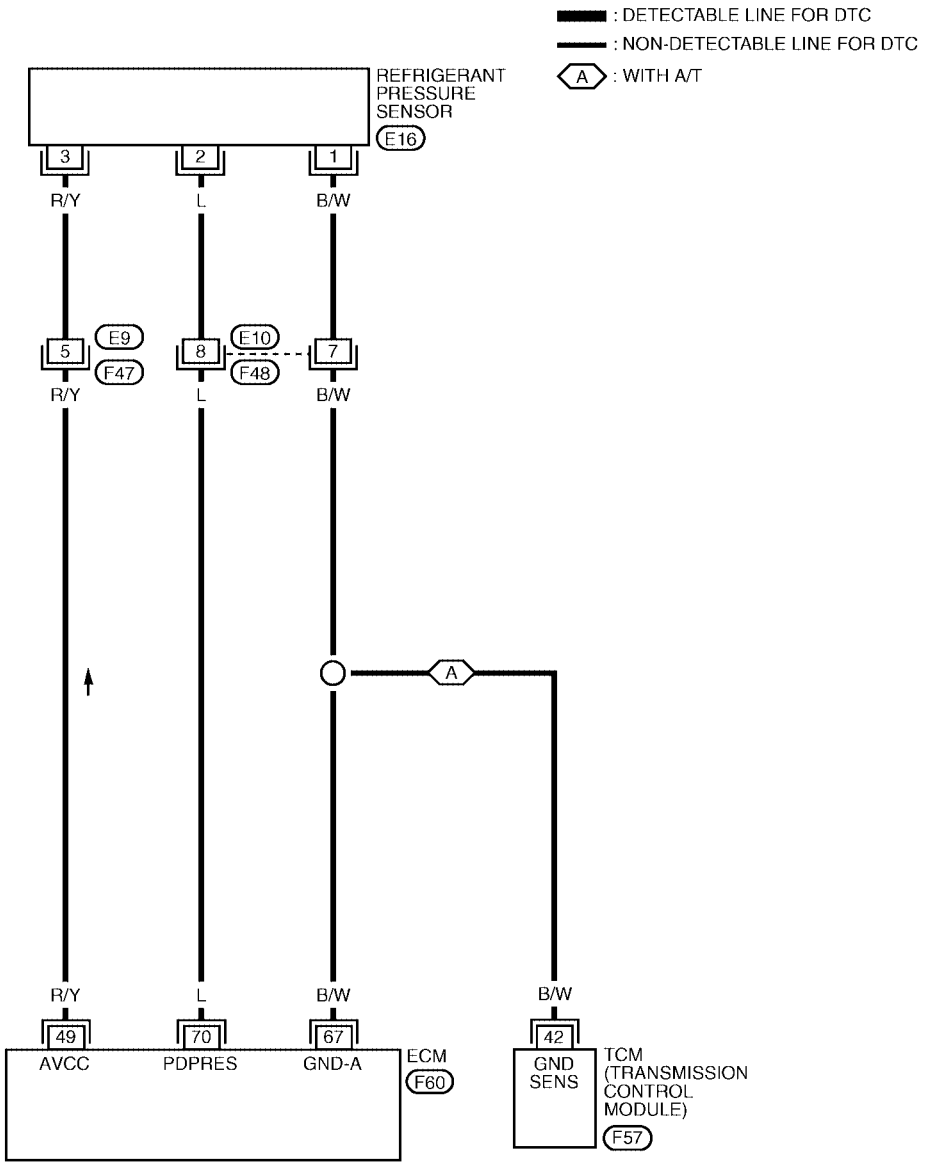

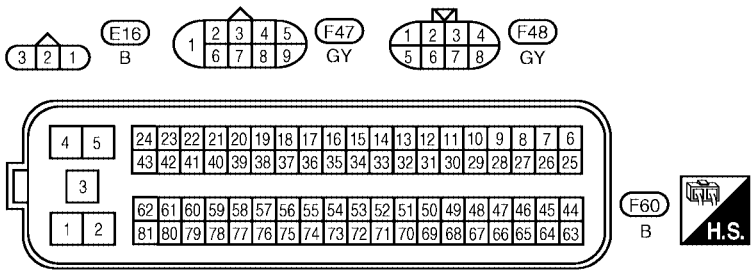

REFER TO THE FOLLOWING.
F57 - ELECTRICAL UNITS

BBWA1452E

Specification data are reference values and are measured between each terminal and ground.

CAUTION:

Do not use ECM ground terminals when measuring input/output voltage. Doing so may result in damage to the ECM's transistor. Use a ground other than ECM terminals, such as the ground.

TERMINAL NO.	WIRE COLOR	ITEM	CONDITION	DATA (DC Voltage)
49	R/Y	Sensor power supply (Refrigerant pressure sensor)	**[Ignition switch: ON]**	Approximately 5V
67	B/W	Sensor ground	**[Engine is running]** ● **Warm-up condition** ● Idle speed	Approximately 0V
70	L	Refrigerant pressure sensor	**[Engine is running]** ● **Warm-up condition** ● Both A/C switch and blower switch are ON (Compressor operates.)	1.0 - 4.0V

Diagnostic Procedure

UBS00JZC

1. CHECK REFRIGERANT PRESSURE SENSOR OVERALL FUNCTION

1. Start engine and warm it up to normal operating temperature.
2. Turn A/C switch and blower switch ON.
3. Check voltage between ECM terminal 70 and ground with CONSULT-II or tester.

Voltage: 1.0 - 4.0V

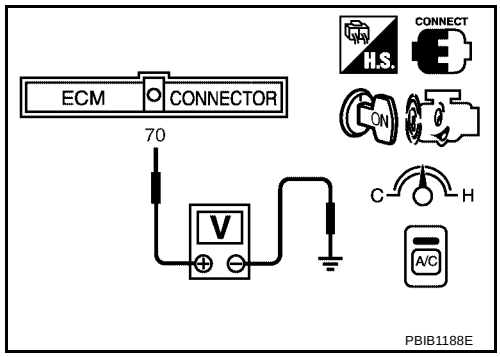

OK or NG

OK >> **INSPECTION END**
NG >> GO TO 2.

2. CHECK GROUND CONNECTIONS

1. Turn A/C switch and blower switch OFF.
2. Stop engine and turn ignition switch OFF.
3. Loosen and retighten engine two screws on the body.
   Refer to EC-841, "Ground Inspection" .

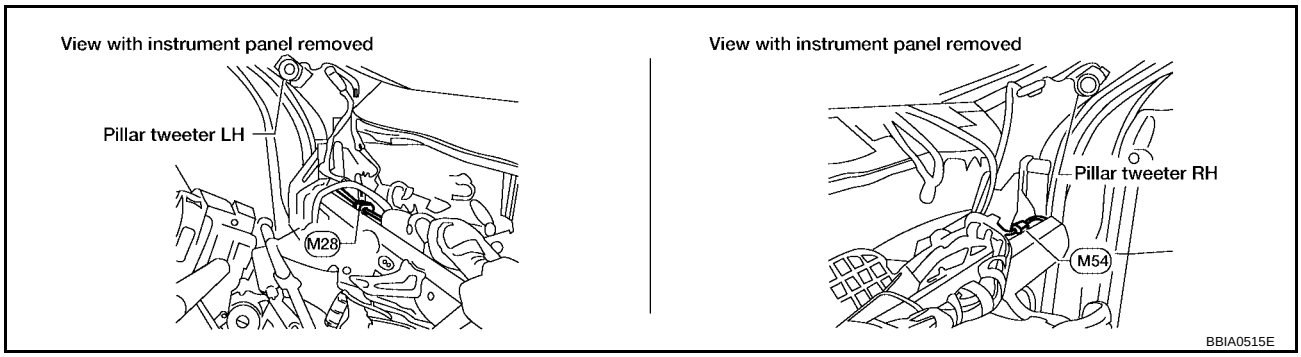

OK or NG

OK >> GO TO 3.
NG >> Repair or replace ground connections.

3. CHECK REFRIGERANT PRESSURE SENSOR POWER SUPPLY CIRCUIT

1. Disconnect refrigerant pressure sensor harness connector.
2. Turn ignition switch ON.

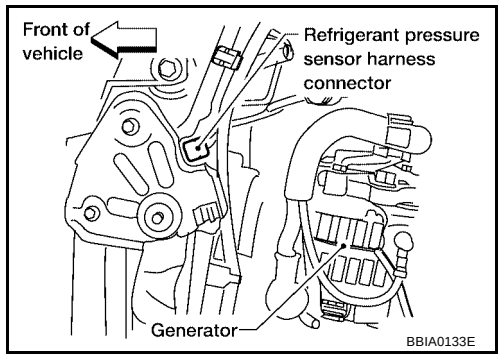

3. Check voltage between refrigerant pressure sensor terminal 3 and ground with CONSULT-II or tester.

Voltage: Approximately 5V

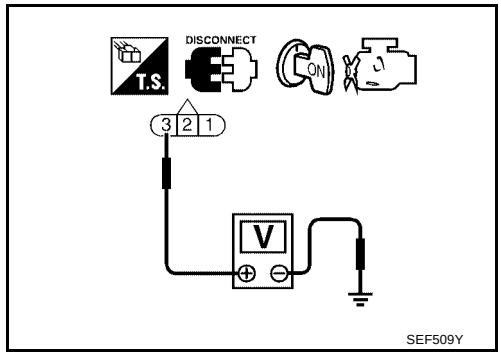

OK or NG

OK >> GO TO 5.
NG >> GO TO 4.

4. DETECT MALFUNCTIONING PART

Check the following.

- Harness connectors E9, F47
- Harness for open or short between ECM and refrigerant pressure sensor

>> Repair open circuit or short to ground or short to power in harness or connectors.

5. CHECK REFRIGERANT PRESSURE SENSOR GROUND CIRCUIT FOR OPEN AND SHORT

1. Turn ignition switch OFF.
2. Disconnect ECM harness connector.
3. Disconnect TCM harness connector (A/T models).
4. Check harness continuity between refrigerant pressure sensor terminal 1 and ECM terminal 67, TCM terminal 42.
   Refer to Wiring Diagram.

Continuity should exist.

5. Also check harness for short to ground and short to power.

OK or NG

OK >> GO TO 7.
NG >> GO TO 6.

6. DETECT MALFUNCTIONING PART

Check the following.

- Harness connectors E10, F48
- Harness for open or short between ECM and refrigerant pressure sensor
- Harness for open or short between TCM and refrigerant pressure sensor (A/T models)

>> Repair open circuit or short to ground or short to power in harness or connectors.

7. CHECK REFRIGERANT PRESSURE SENSOR INPUT SIGNAL CIRCUIT FOR OPEN AND SHORT

1. Disconnect ECM harness connector.
2. Check harness continuity between ECM terminal 70 and refrigerant pressure sensor terminal 2. Refer to Wiring Diagram.

Continuity should exist.

3. Also check harness for short to ground and short to power.

OK or NG

OK >> GO TO 9.
NG >> GO TO 8.

8. DETECT MALFUNCTIONING PART

Check the following.

- Harness connectors E10, F48
- Harness for open or short between ECM and refrigerant pressure sensor

>> Repair open circuit or short to ground or short to power in harness or connectors.

9. CHECK INTERMITTENT INCIDENT

Refer to EC-834, "TROUBLE DIAGNOSIS FOR INTERMITTENT INCIDENT" .

OK or NG

OK >> Replace refrigerant pressure sensor.
NG >> Repair or replace.

Removal and Installation

UBS00JZD

REFRIGERANT PRESSURE SENSOR

Refer to MTC-78, "REFRIGERANT LINES" .

ELECTRICAL LOAD SIGNAL

PFP:25350

CONSULT-II Reference Value in Data Monitor Mode

UBS00JZE

Specification data are reference values.

MONITOR ITEM	CONDITION		SPECIFICATION
LOAD SIGNAL	● Ignition switch: ON	Rear window defogger switch is ON and/or lighting switch is in 2nd and/or heater fan switch is ON.	ON
		Rear window defogger switch is OFF and lighting switch is OFF and heater fan switch ON.	OFF

Wiring Diagram
A/T MODELS ULEV AND M/T MODELS

UBS00JZF

EC-LOAD-01

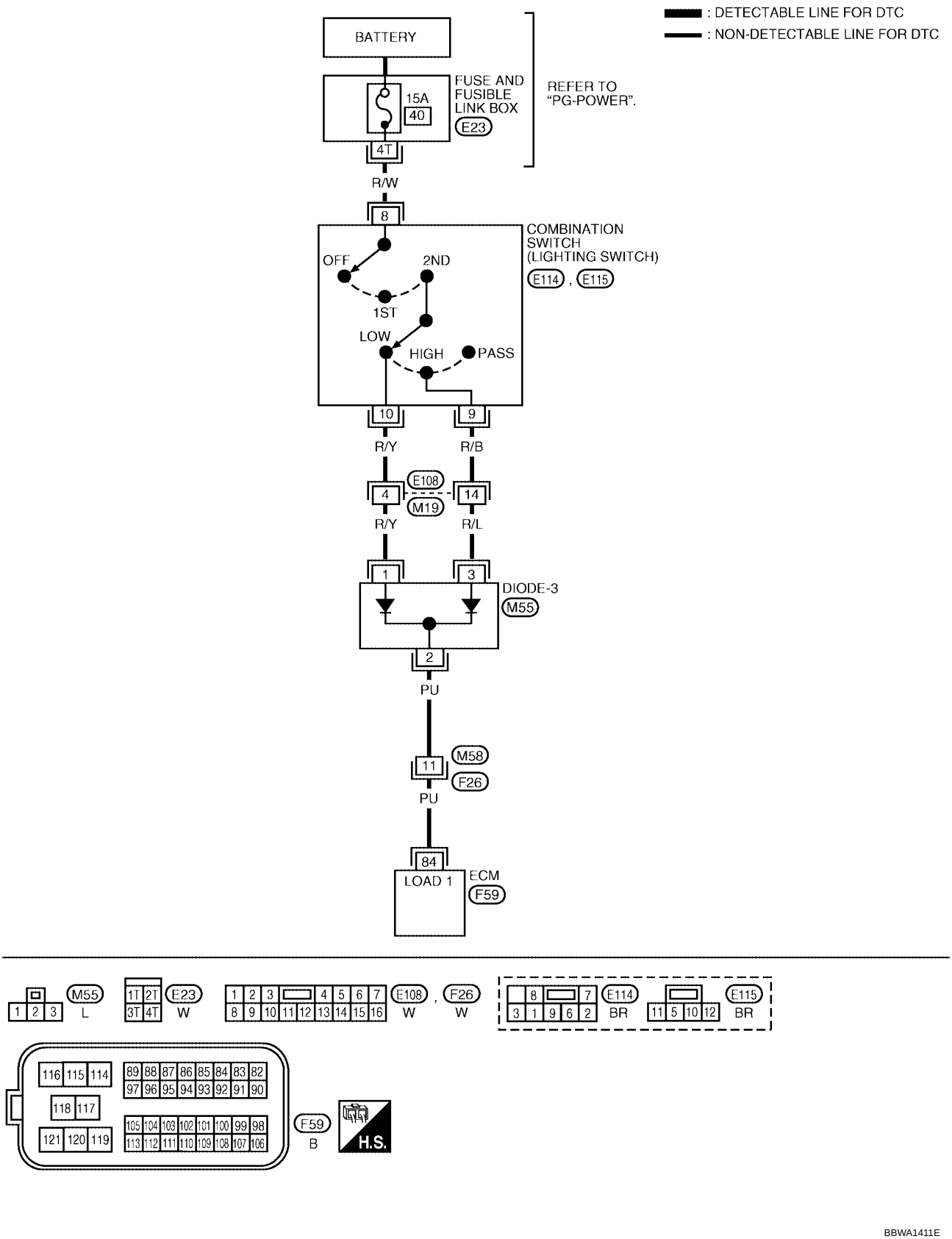

BBWA1411E

Specification data are reference values and are measured between each terminal and ground.

CAUTION:

Do not use ECM ground terminals when measuring input/output voltage. Doing so may result in damage to the ECM's transistor. Use a ground other than ECM terminals, such as the ground.

TERMINAL NO.	WIRE COLOR	ITEM	CONDITION	DATA (DC Voltage)
84	PU	Electrical load signal (Headlamp signal)	**[Lighting switch: ON]** ● Lighting switch: 2nd position	BATTERY VOLTAGE (11 - 14V)
			[Lighting switch: ON] ● Lighting switch: OFF	Approximately 0V

EC-LOAD-02

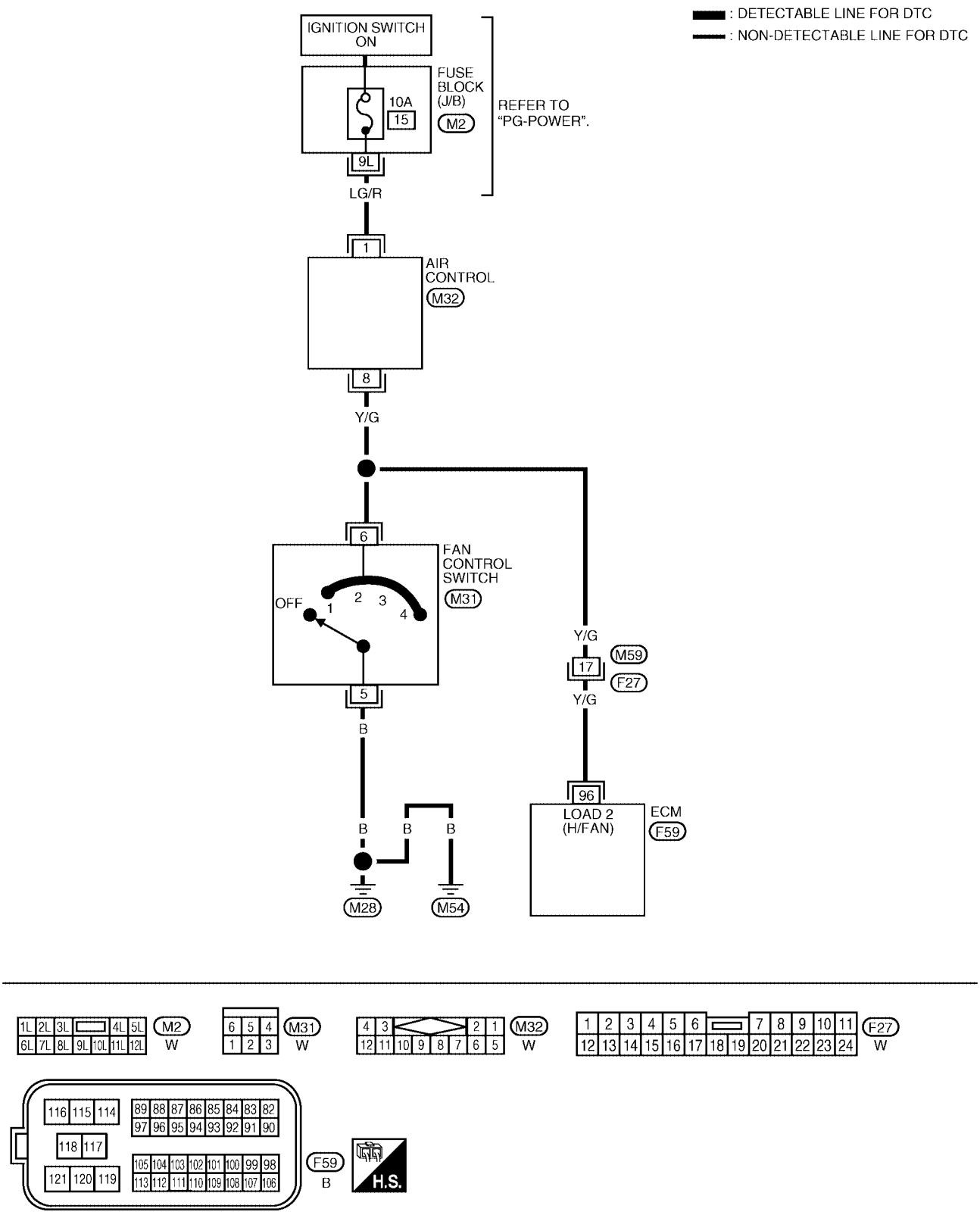
: DETECTABLE LINE FOR DTC
: NON-DETECTABLE LINE FOR DTC
IGNITION SWITCH ON
FUSE BLOCK (J/B)
M2
10A
15
REFER TO "PG-POWER".
9L
LG/R
1
AIR CONTROL
M32
8
Y/G
6
FAN CONTROL SWITCH
M31
OFF
1
2
3
4
5
B
Y/G
17
M59
F27
Y/G
96
LOAD 2 (H/FAN)
ECM
F59
B
B
B
M28
M54
M2
W
M31
W
M32
W
F27
W
F59
B
H.S.
BBWA1412E

Specification data are reference values and are measured between each terminal and ground.

CAUTION:

Do not use ECM ground terminals when measuring input/output voltage. Doing so may result in damage to the ECM's transistor. Use a ground other than ECM terminals, such as the ground.

TERMINAL NO.	WIRE COLOR	ITEM	CONDITION	DATA (DC Voltage)
96	Y/G	Heater fan switch	**[Engine is running]** ● Heater fan switch: ON	Approximately 0V
			[Engine is running] ● Heater fan switch: OFF	Approximately 5V

EC-LOAD-03

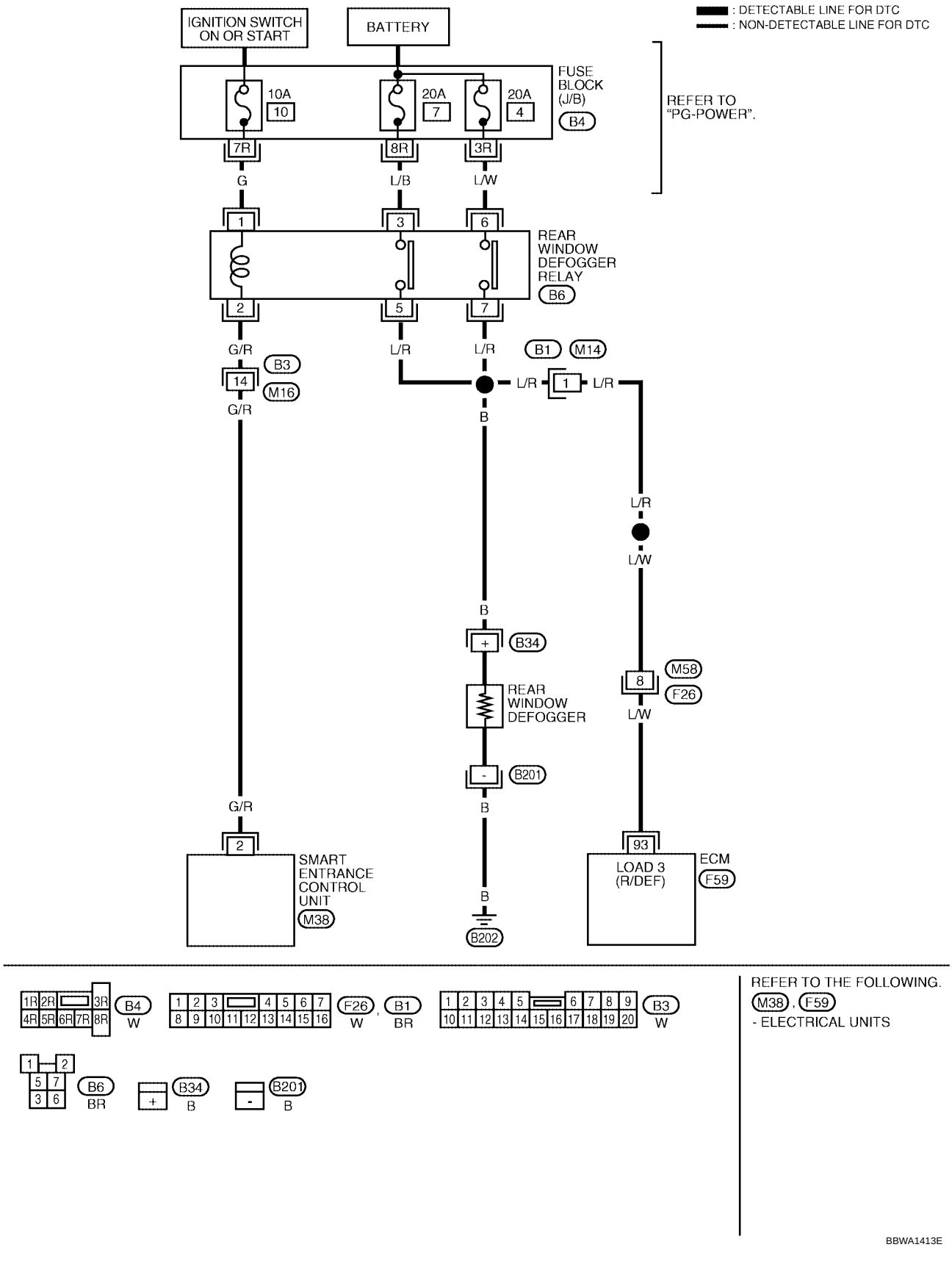
: DETECTABLE LINE FOR DTC
: NON-DETECTABLE LINE FOR DTC
IGNITION SWITCH ON OR START
BATTERY
FUSE BLOCK (J/B)
B4
10A
10
20A
7
20A
4
7R
8R
3R
REFER TO "PG-POWER".
G
L/B
L/W
REAR WINDOW DEFOGGER RELAY
B6
G/R
L/R
B3
14
M16
B1
M14
1
B
B34
REAR WINDOW DEFOGGER
M58
8
F26
B201
B202
2
SMART ENTRANCE CONTROL UNIT
M38
93
LOAD 3 (R/DEF)
ECM
F59
B4
W
F26
B1
BR
B3
B6
BR
B34
B
B201
B
REFER TO THE FOLLOWING.
M38 , F59
- ELECTRICAL UNITS
BBWA1413E

Specification data are reference values and are measured between each terminal and ground.

CAUTION:

Do not use ECM ground terminals when measuring input/output voltage. Doing so may result in damage to the ECM's transistor. Use a ground other than ECM terminals, such as the ground.

TERMINAL NO.	WIRE COLOR	ITEM	CONDITION	DATA (DC Voltage)
93	L/W	Electrical load signal (Rear window defogger signal)	**[Ignition switch: ON]** ● Rear window defogger switch: ON	BATTERY VOLTAGE (11 - 14V)
			[Ignition switch: ON] ● Rear window defogger switch: OFF	Approximately 0V

A/T MODELS EXCEPT ULEV

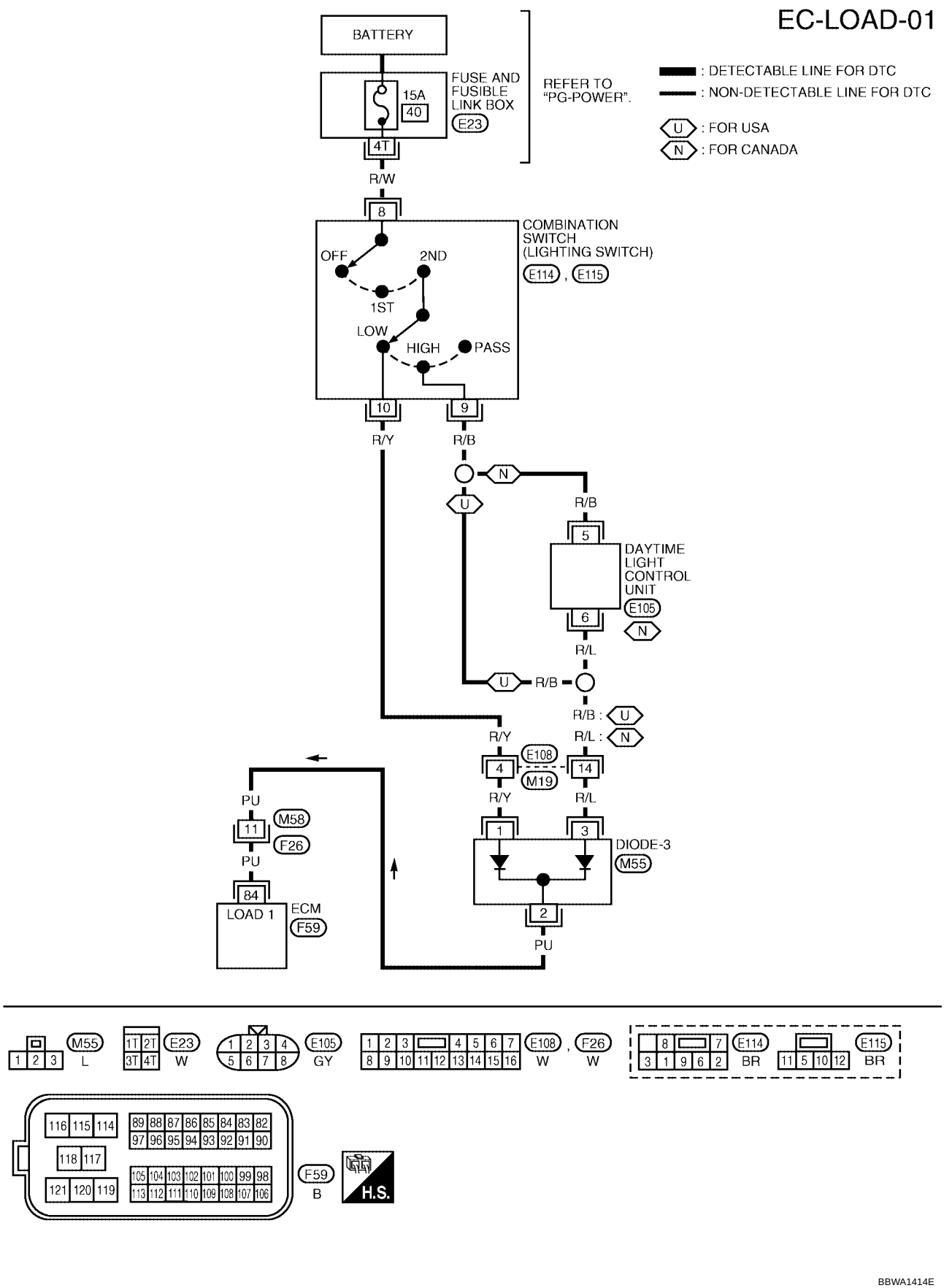

Specification data are reference values and are measured between each terminal and ground.

CAUTION:

Do not use ECM ground terminals when measuring input/output voltage. Doing so may result in damage to the ECM's transistor. Use a ground other than ECM terminals, such as the ground.

TERMINAL NO.	WIRE COLOR	ITEM	CONDITION	DATA (DC Voltage)
84	PU	Electrical load signal (Headlamp signal)	**[Lighting switch: ON]** ● Lighting switch: 2nd position	BATTERY VOLTAGE (11 - 14V)
			[Lighting switch: ON] ● Lighting switch: OFF	Approximately 0V

EC-LOAD-02

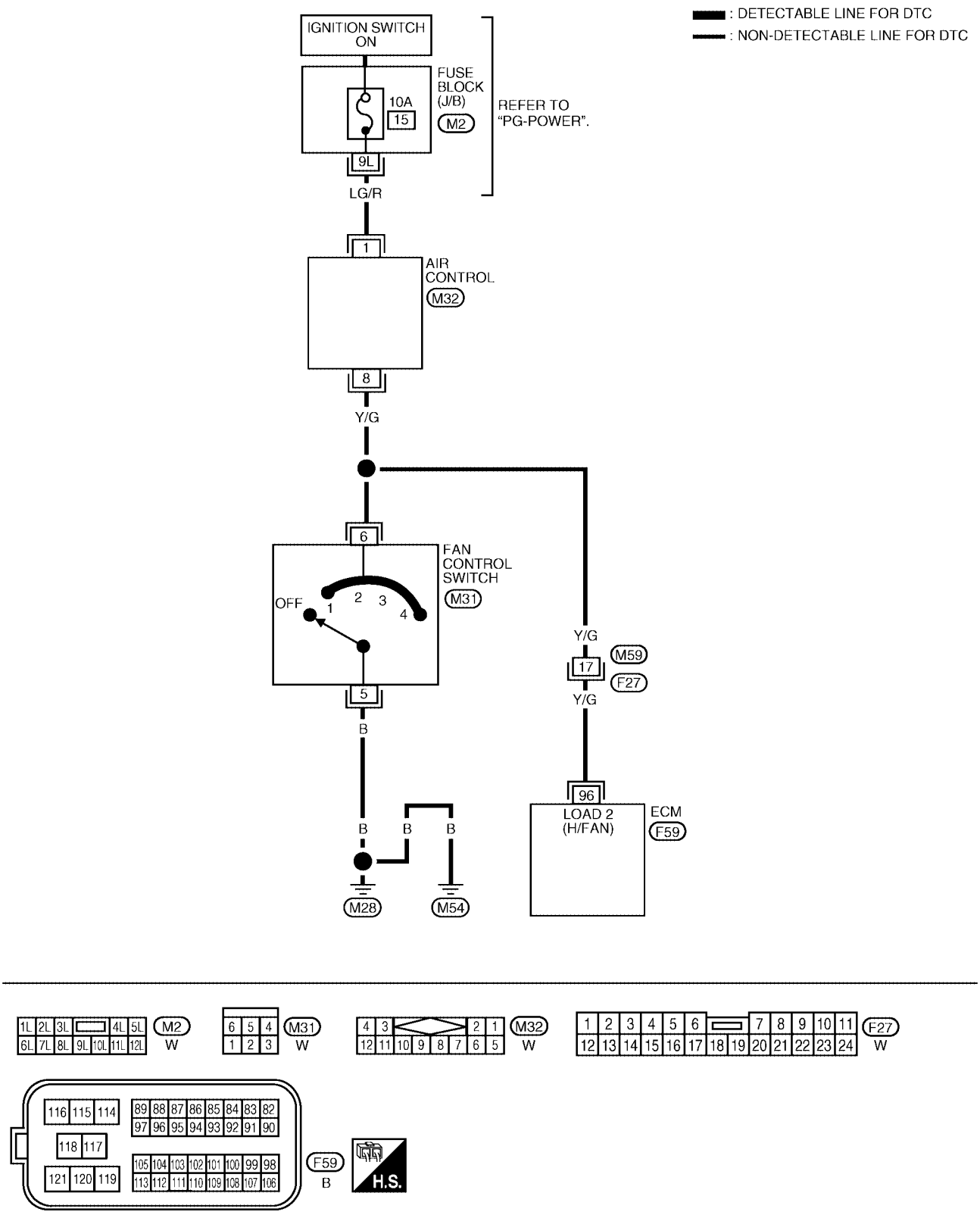
: DETECTABLE LINE FOR DTC
: NON-DETECTABLE LINE FOR DTC
IGNITION SWITCH ON
FUSE BLOCK (J/B)
M2
10A
15
REFER TO "PG-POWER".
9L
LG/R
1
AIR CONTROL
M32
8
Y/G
6
FAN CONTROL SWITCH
M31
OFF
1
2
3
4
5
B
Y/G
17
M59
F27
Y/G
96
LOAD 2 (H/FAN)
ECM
F59
B
B
B
M28
M54
M2
W
M31
W
M32
W
F27
W
F59
B
H.S.
BBWA1412E

Specification data are reference values and are measured between each terminal and ground.

CAUTION:

Do not use ECM ground terminals when measuring input/output voltage. Doing so may result in damage to the ECM's transistor. Use a ground other than ECM terminals, such as the ground.

TERMINAL NO.	WIRE COLOR	ITEM	CONDITION	DATA (DC Voltage)
96	Y/G	Heater fan switch	**[Engine is running]** ● Heater fan switch: ON	Approximately 0V
			[Engine is running] ● Heater fan switch: OFF	Approximately 5V

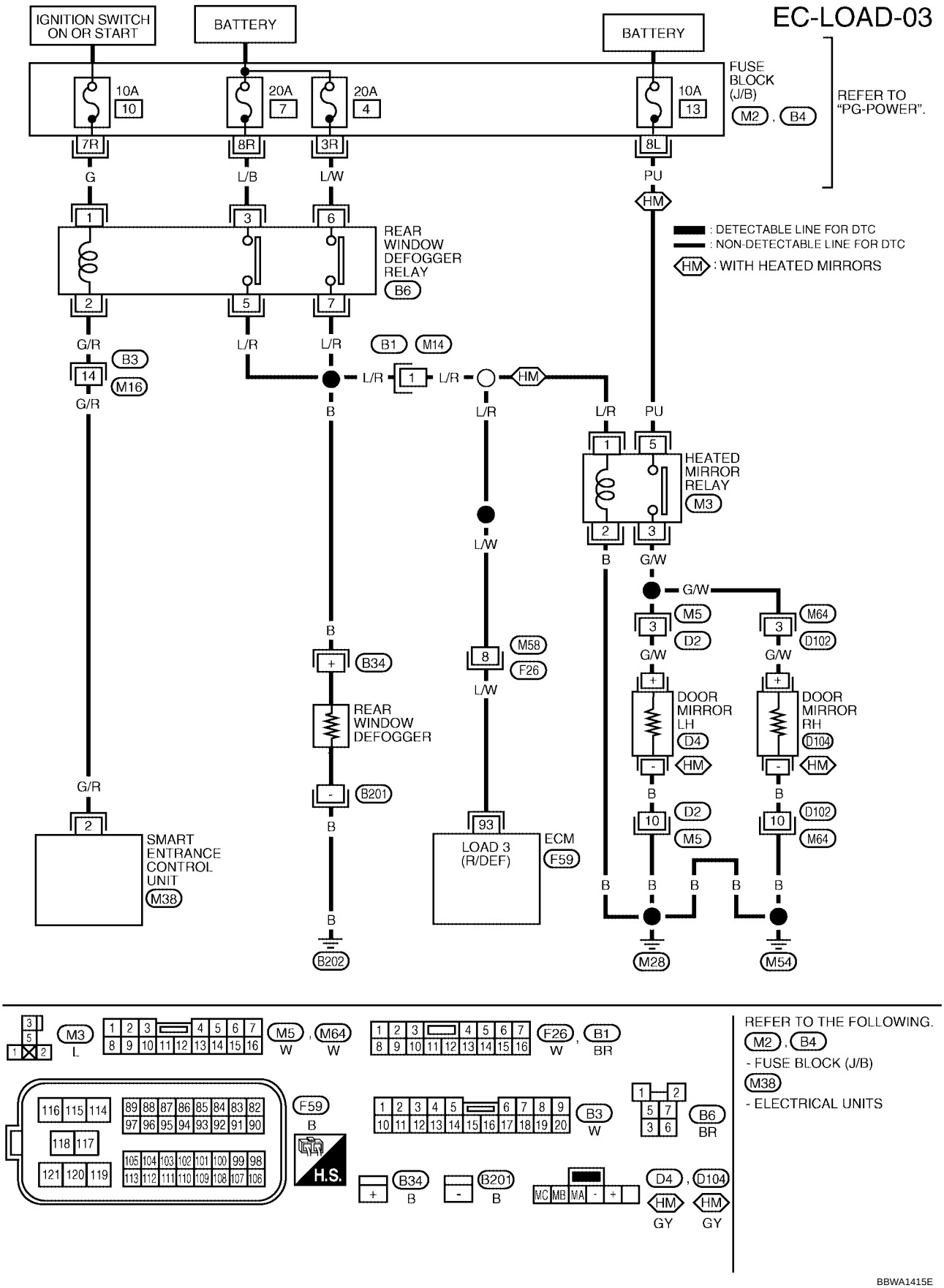
EC-LOAD-03
IGNITION SWITCH ON OR START
BATTERY
BATTERY
FUSE BLOCK (J/B)
M2 , B4
REFER TO "PG-POWER".
10A 10
20A 7
20A 4
10A 13
7R
8R
3R
8L
G
L/B
L/W
PU
HM
REAR WINDOW DEFOGGER RELAY
B6
: DETECTABLE LINE FOR DTC
: NON-DETECTABLE LINE FOR DTC
HM : WITH HEATED MIRRORS
G/R
L/R
L/R
B1
M14
B3
M16
G/R
L/R
L/R
HM
B
L/R
L/R
PU
HEATED MIRROR RELAY
M3
L/W
B
G/W
G/W
M5
D2
M64
D102
B
B34
M58
F26
L/W
G/W
G/W
REAR WINDOW DEFOGGER
DOOR MIRROR LH
D4
DOOR MIRROR RH
D104
HM
HM
B
B
G/R
B201
B
D2
M5
D102
M64
SMART ENTRANCE CONTROL UNIT
M38
LOAD 3 (R/DEF)
ECM
F59
B
B
B
B
B
B
B
B202
M28
M54
M3
L
M5 , M64
W W
F26 , B1
W BR
F59
B
H.S.
B3
W
B6
BR
B34
B
B201
B
MC MB MA
D4 , D104
HM HM
GY GY
REFER TO THE FOLLOWING.
M2 , B4
- FUSE BLOCK (J/B)
M38
- ELECTRICAL UNITS
BBWA1415E

Specification data are reference values and are measured between each terminal and ground.

CAUTION:

Do not use ECM ground terminals when measuring input/output voltage. Doing so may result in damage to the ECM's transistor. Use a ground other than ECM terminals, such as the ground.

TERMINAL NO.	WIRE COLOR	ITEM	CONDITION	DATA (DC Voltage)
93	L/W	Electrical load signal (Rear window defogger signal)	**[Ignition switch: ON]** ● Rear window defogger switch: ON	BATTERY VOLTAGE (11 - 14V)
			[Ignition switch: ON] ● Rear window defogger switch: OFF	Approximately 0V

Diagnostic Procedure

UBS00JZG

1. INSPECTION START

Do you have CONSULT-II?

Yes or No

Yes >> GO TO 2.
No >> GO TO 3.

2. CHECK LOAD SIGNAL CIRCUIT OVERALL FUNCTION-1

With CONSULT-II

1. Turn ignition switch ON.
2. Check “LOAD SIGNAL” in “DATA MONITOR” mode with CONSULT-II under the following conditions.

Condition	LOAD SIGNAL
Lighting switch: ON at 2nd position	ON
Lighting switch: OFF	OFF

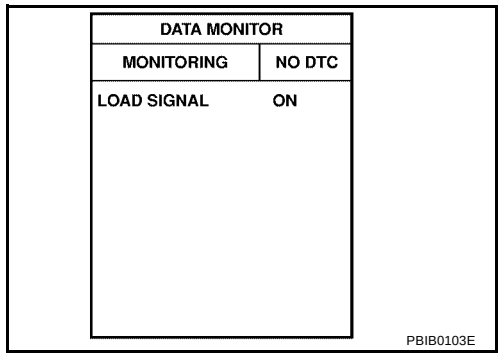

OK or NG

OK >> GO TO 4.
NG >> GO TO 8.

3. CHECK LOAD SIGNAL CIRCUIT OVERALL FUNCTION-1

Without CONSULT-II

1. Turn ignition switch ON.
2. Check voltage between ECM terminal 84 and ground under the following conditions.

Condition	Voltage
Lighting switch: ON at 2nd position	BATTERY VOLTAGE
Lighting switch: OFF	0V

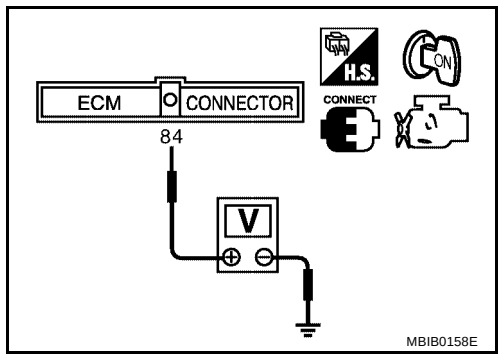

OK or NG

OK >> GO TO 5.
NG >> GO TO 8.

4. CHECK LOAD SIGNAL CIRCUIT OVERALL FUNCTION-2

With CONSULT-II

1. Turn ignition switch ON.
2. Check “LOAD SIGNAL” in “DATA MONITOR” mode with CONSULT-II under the following conditions.

Condition	LOAD SIGNAL
FAN control switch: ON in any position	ON
FAN control switch: OFF	OFF

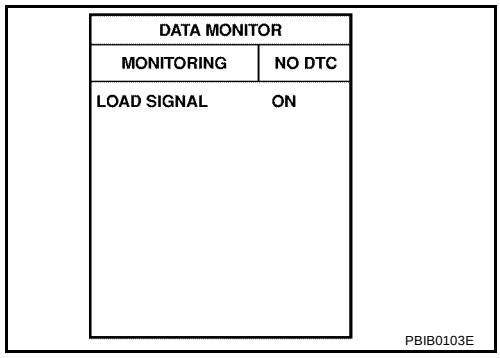

OK or NG

OK >> GO TO 6.
NG >> GO TO 13.

5. CHECK LOAD SIGNAL CIRCUIT OVERALL FUNCTION-2

Without CONSULT-II

1. Turn ignition switch ON.
2. Check voltage between ECM terminal 96 and ground under the following conditions.

Condition	Voltage
FAN control switch: ON in any position	Approximately 0V
FAN control switch: OFF	Approximately 5V

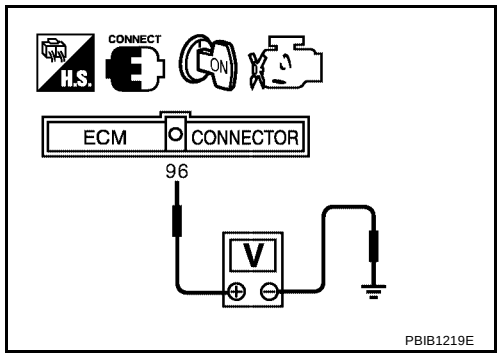

OK or NG

OK >> GO TO 7.
NG >> GO TO 13.

6. CHECK LOAD SIGNAL CIRCUIT OVERALL FUNCTION-3

With CONSULT-II

1. Turn ignition switch ON.
2. Check “LOAD SIGNAL” in “DATA MONITOR” mode with CONSULT-II under the following conditions.

Condition	LOAD SIGNAL
Rear window defogger switch: ON	ON
Rear window defogger switch: OFF	OFF

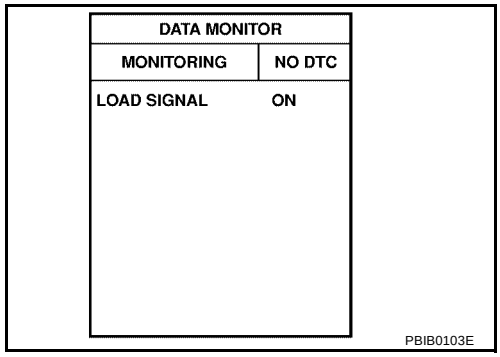

OK or NG

OK >> INSPECTION END.
NG >> GO TO 16.

7. CHECK LOAD SIGNAL CIRCUIT OVERALL FUNCTION-3

Without CONSULT-II

1. Turn ignition switch ON.
2. Check voltage between ECM terminal 93 and ground under the following conditions.

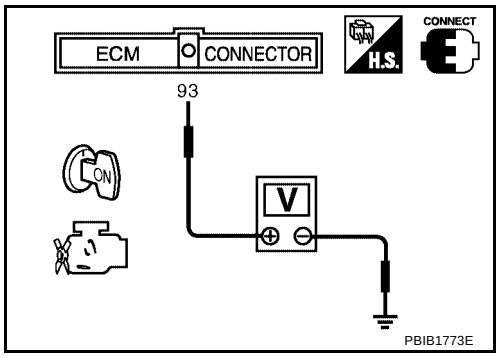

Condition	Voltage
Rear window defogger switch: ON	BATTERY VOLTAGE
Rear window defogger switch: OFF	Approximately 0V

OK or NG

OK >> INSPECTION END.
NG >> GO TO 16.

8. CHECK HEADLAMP FUNCTION

1. Start engine.
2. Turn the lighting switch ON at 2nd position.
3. Check that headlamps are illuminated.

OK or NG

OK (Models for USA)>>GO TO 9.
OK (Models for Canada)>>GO TO 11.
NG >> Refer to LT-6, "HEADLAMP (FOR USA)" or LT-10, "HEADLAMP (FOR CANADA) — DAYTIME LIGHT SYSTEM —" .

9. CHECK HEADLAMP INPUT SIGNAL CIRCUIT FOR OPEN AND SHORT

1. Stop engine and turn ignition switch OFF.
2. Disconnect ECM harness connector.
3. Disconnect lighting switch harness connectors.
4. Check harness continuity between ECM terminal 84 and lighting switch terminal 9, 10 under the following conditions.

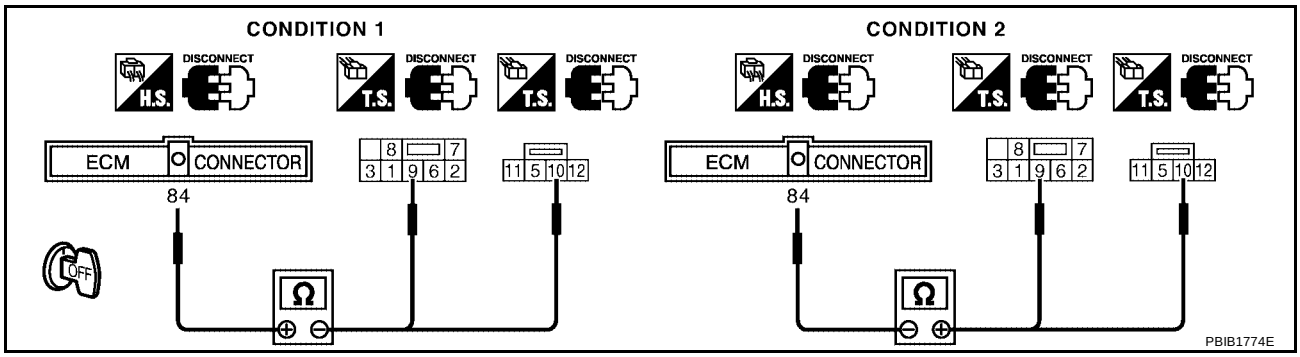

Condition	Continuity
1	Should exist
2	Should not exist

5. Also check harness for short to ground and short to power.

OK or NG

OK >> GO TO 19.
NG >> GO TO 10.

10. DETECT MALFUNCTIONING PART

Check the following.

- Harness connectors E108, M19
- Harness connectors M58, F26
- Diode M55
- Harness for open and short between ECM and lighting switch

>> Repair open circuit or short to ground or short to power in harness or connectors.

11. CHECK HEADLAMP INPUT SIGNAL CIRCUIT FOR OPEN AND SHORT

1. Stop engine and turn ignition switch OFF.
2. Disconnect ECM harness connector.
3. Disconnect lighting switch harness connector E115.
   Disconnect daytime light control unit harness connector.
4. Check harness continuity between ECM terminal 84 and lighting switch terminal 10, daytime light control unit terminal 6 under the following conditions.

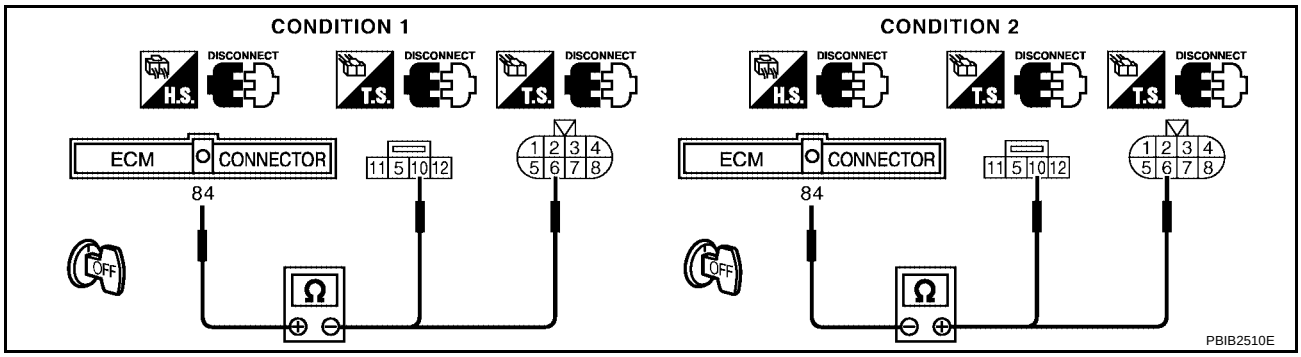

Condition	Continuity
1	Should exist
2	Should not exist

5. Also check harness for short to ground and short to power.

OK or NG

OK >> GO TO 19.
NG >> GO TO 12.

12. DETECT MALFUNCTIONING PART

Check the following.

- Harness connectors E108, M19
- Harness connectors M58, F26
- Diode M55
- Harness for open and short between ECM and lighting switch
- Harness for open and short between ECM and daytime light control unit
- Harness for open and short between daytime light control unit and lighting switch

>> Repair open circuit or short to ground or short to power in harness or connectors.

13. CHECK HEATER FAN SWITCH FUNCTION

1. Turn the fan control switch ON in any position.
2. Check that heater fan turns properly.

OK or NG

OK >> GO TO 14.
NG >> Refer to MTC-19, "TROUBLE DIAGNOSIS"

14. CHECK HEATER FAN INPUT SIGNAL CIRCUIT FOR OPEN AND SHORT

1. Turn ignition switch OFF.
2. Disconnect ECM harness connector.
3. Disconnect air control harness connector.
4. Check harness continuity between ECM terminal 96 and air control terminal 8, fan control switch terminal 6.
   Refer to Wiring Diagram.

   Continuity should exist.

5. Also check harness for short to ground and short to power.

OK or NG

OK >> GO TO 19.
NG >> GO TO 15.

15. DETECT MALFUNCTIONING PART

Check the following.

- Harness connectors M59, F27
- Harness for open or short between ECM and air control.
- Harness for open or short between ECM and fan control switch.

>> Repair open circuit or short to ground or short to power in harness or connectors.

16. CHECK REAR WINDOW DEFOGGER FUNCTION

1. Turn ignition switch OFF.
2. Turn ON the rear window defogger switch.
3. Check the rear windshield. Is the rear windshield and door mirror (with heated mirror models) heated up?

Yes or No

Yes >> GO TO 17.
No >> Refer to GW-17, "REAR WINDOW DEFOGGER"

17. CHECK REAR WINDOW DEFOGGER INPUT SIGNAL CIRCUIT FOR OPEN AND SHORT

1. Disconnect ECM harness connector.
2. Disconnect rear window defogger relay.
3. Check harness continuity between ECM terminal 93 and rear window defogger relay terminals 5, 7.
   Refer to Wiring Diagram.

   Continuity should exist.

4. Also check harness for short to ground and short to power.

OK or NG

OK >> GO TO 19.
NG >> GO TO 18.

18. DETECT MALFUNCTIONING PART

Check the following.

- Harness connectors B1, M14
- Harness connectors M58, F26
- Harness for open or short between ECM and rear window defogger relay.

>> Repair open circuit or short to ground or short to power in harness or connectors.

19. CHECK INTERMITTENT INCIDENT

Perform EC-834, "TROUBLE DIAGNOSIS FOR INTERMITTENT INCIDENT" .

>> **INSPECTION END**

ASCD BRAKE SWITCH

PFP:25320

Component Description

UBS00JZH

When depress on the brake pedal, ASCD brake switch is turned OFF and stop lamp switch is turned ON. ECM detects the state of the brake pedal by this input of two kinds (ON/OFF signal)
Refer to EC-678, "AUTOMATIC SPEED CONTROL DEVICE (ASCD)" for the ASCD function.

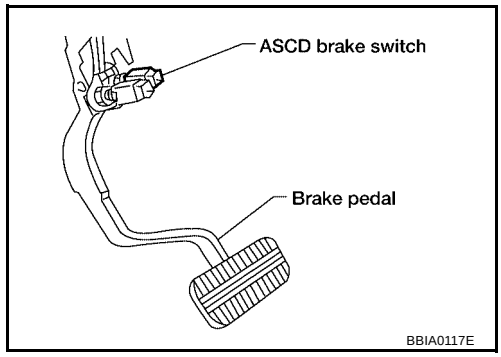

CONSULT-II Reference Value in Data Monitor Mode

UBS00JZI

Specification data are reference values.

MONITOR ITEM	CONDITION		SPECIFICATION
BRAKE SW1 (ASCD brake switch)	● Ignition switch: ON	Brake pedal: Fully released (A/T) ● Brake pedal and/or clutch pedal: Slightly depressed	ON
		Brake pedal: Slightly depressed (A/T) ● Brake pedal and clutch pedal: Fully released	OFF
BRAKE SW2 (STOP lamp switch)	● Ignition switch: ON	Brake pedal: Fully released	OFF
		Brake pedal: Slightly depressed	ON

Wiring Diagram

UBS00JZJ

EC-ASCBOF-01

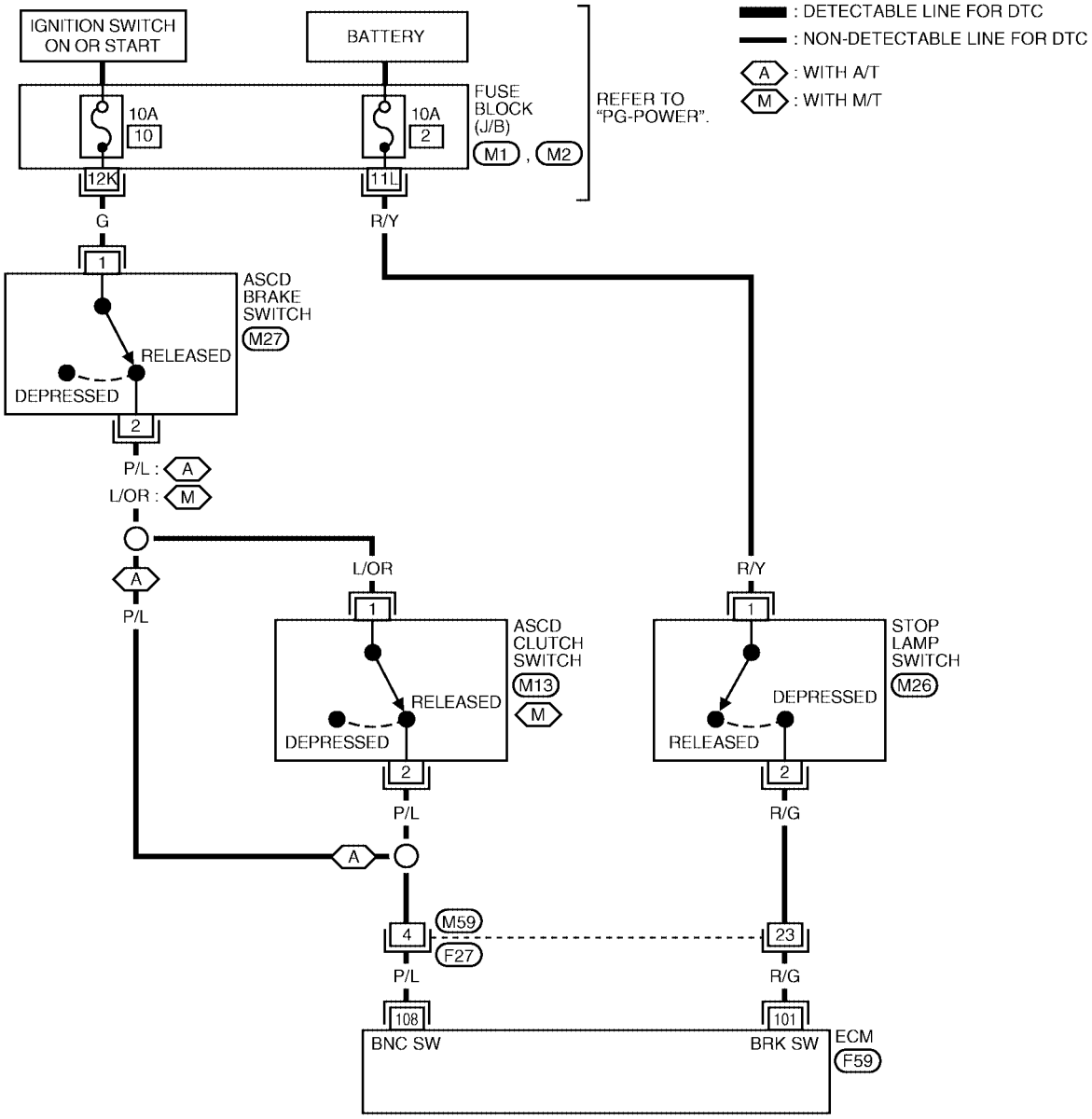

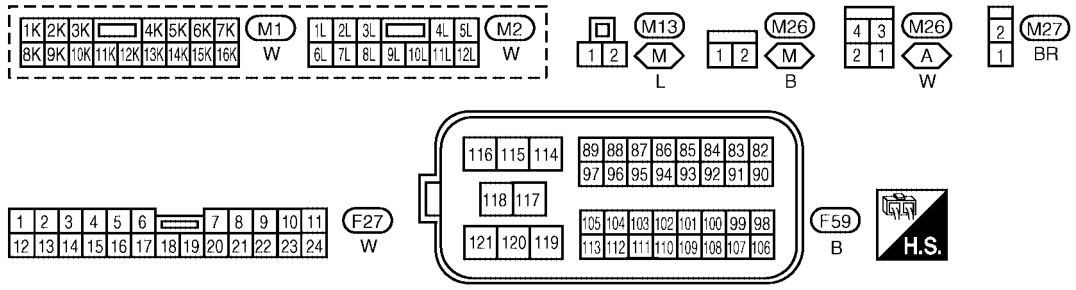

BBWA1416E

Specification data are reference values and are measured between each terminal and ground.

CAUTION:

Do not use ECM ground terminals when measuring input/output voltage. Doing so may result in damage to the ECM's transistor. Use a ground other than ECM terminals, such as the ground.

TERMINAL NO.	WIRE COLOR	ITEM	CONDITION	DATA (DC Voltage)
101	R/G	Stop lamp switch	**[Ignition switch: OFF]** ● Brake pedal: Fully released	Approximately 0V
			[Ignition switch: OFF] ● Brake pedal: Slightly depressed	BATTERY VOLTAGE (11 - 14V)
108	P/L	ASCD brake switch	**[Ignition switch: ON]** ● Brake pedal: Slightly depressed (A/T) ● Brake pedal and/or clutch pedal: Sightly depressed	Approximately 0V
			[Ignition switch: ON] ● Brake pedal: Fully released (A/T) ● Brake pedal and cluch pedal: Fully released	BATTERY VOLTAGE (11 - 14V)

Diagnostic Procedure

UBS00JZK

1. CHECK OVERALL FUNCTION-I

With CONSULT-II

1. Turn ignition switch ON.
2. Select “BRAKE SW1” in “DATA MONITOR” mode with CONSULT-II.
3. Check “BRAKE SW1” indication under the following conditions.

M/T models

CONDITION	INDICATION
Clutch pedal and/or brake pedal: Slightly depressed	OFF
Clutch pedal and brake pedal: Fully released	ON

A/T models

CONDITION	INDICATION
Brake pedal: Slightly depressed	OFF
Brake pedal: Fully released	ON

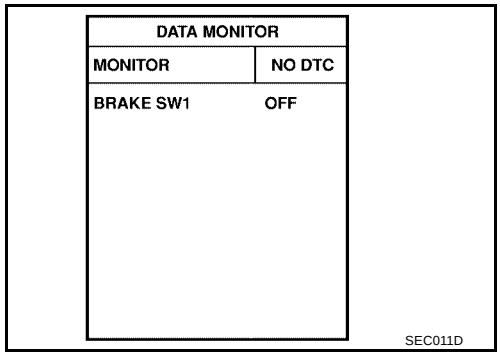

Without CONSULT-II

1. Turn ignition switch ON.
2. Check voltage between ECM terminal 108 and ground under the following conditions.

M/T models

CONDITION	VOLTAGE
Clutch pedal and/or brake pedal: Slightly depressed	Approximately 0V
Clutch pedal and brake pedal: Fully released	Battery voltage

A/T models

CONDITION	VOLTAGE
Brake pedal: Slightly depressed	Approximately 0V
Brake pedal: Fully released	Battery voltage

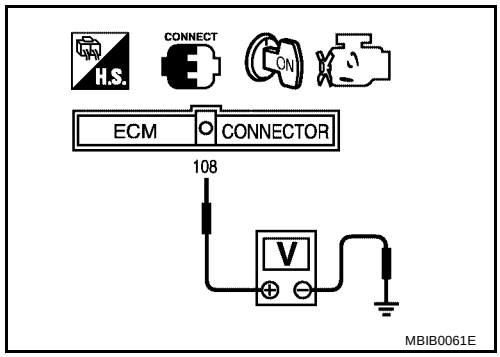

OK or NG

OK >> GO TO 2.
NG (M/T models) >>GO TO 3.
NG (A/T models) >>GO TO 4.

2. CHECK OVERALL FUNCTION-II

With CONSULT-II

Check “BRAKE SW2” indication in “DATA MONITOR” mode.

CONDITION	INDICATION
Brake pedal: Fully released	OFF
Brake pedal: Slightly depressed	ON

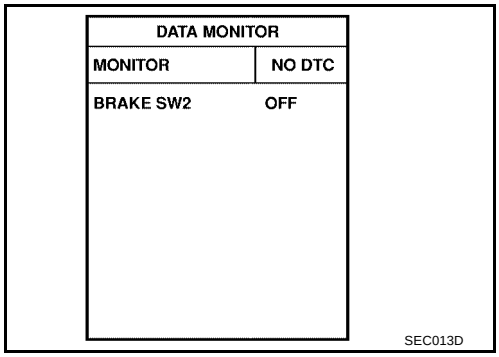

Without CONSULT-II

Check voltage between ECM terminal 101 and ground under the following conditions.

CONDITION	VOLTAGE
Brake pedal: Fully released	Approximately 0V
Brake pedal: Slightly depressed	Battery voltage

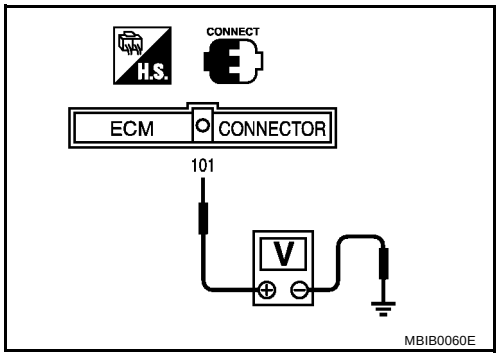

OK or NG

OK >> **INSPECTION END**
NG >> GO TO 13.

3. CHECK ASCD BRAKE SWITCH CIRCUIT

1. Turn ignition switch OFF.
2. Disconnect ASCD clutch switch harness connector.
3. Turn ignition switch ON.

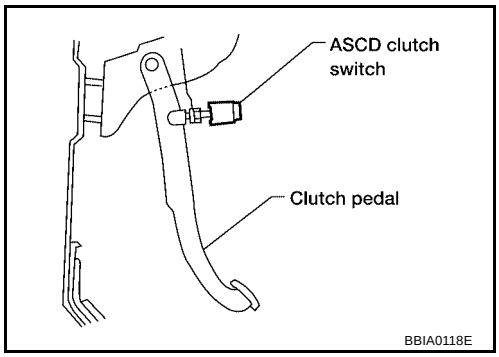

4. Check voltage between ASCD clutch switch terminal 1 and ground under the following conditions with CONSULT-II or tester.

CONDITION	VOLTAGE
Brake pedal: Fully released	Battery voltage
Brake pedal: Slightly depressed	Approx. 0V

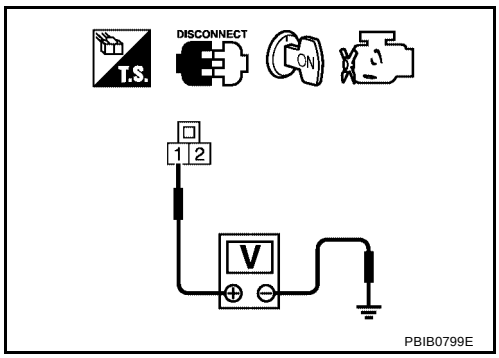

OK or NG

OK >> GO TO 10.
NG >> GO TO 4.

4. CHECK ASCD BRAKE SWITCH POWER SUPPLY CIRCUIT

1. Turn ignition switch OFF.
2. Disconnect ASCD brake switch harness connector.
3. Turn ignition switch ON.

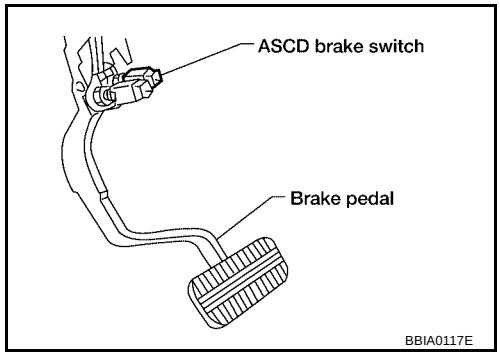

4. Check voltage between ASCD brake switch terminal 1 and ground with CONSULT-II or tester.

Voltage: Battery voltage

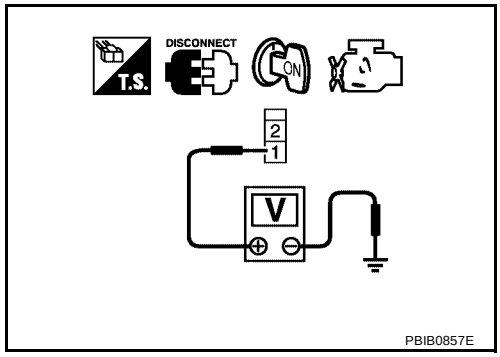

OK or NG

OK (M/T models)>>GO TO 6.
OK (A/T models)>>GO TO 7.
NG >> GO TO 5.

5. DETECT MALFUNCTIONING PART

Check the following.

- Fuse block (J/B) connector M1
- 10A fuse
- Harness for open or short between ASCD brake switch and fuse

>> Repair open circuit or short to ground or short to power in harness or connectors.

6. CHECK ASCD BRAKE SWITCH INPUT SIGNAL CIRCUIT FOR OPEN AND SHORT

1. Turn ignition switch OFF.
2. Check harness continuity between ASCD brake switch terminal 2 and ASCD clutch switch terminal 1. Refer to Wiring Diagram.

Continuity should exist.

3. Also check harness for short to ground and short to power.

OK or NG

OK >> GO TO 9.
NG >> Repair open circuit or short to ground or short to power in harness or connectors.

7. CHECK ASCD BRAKE SWITCH INPUT SIGNAL CIRCUIT FOR OPEN AND SHORT

1. Turn ignition switch OFF.
2. Disconnect ECM harness connector.
3. Check harness continuity between ECM terminal 108 and ASCD brake switch terminal 2.
   Refer to Wiring Diagram.

   Continuity should exist.

4. Also check harness for short to ground or short to power.

OK or NG

OK >> GO TO 9.
NG >> GO TO 8.

8. DETECT MALFUNCTIONING PART

Check the following.

- Harness connectors M59, F27
- Harness for open or short between ECM and ASCD brake switch

>> Repair open circuit or short to ground or short to power in harness or connectors.

9. CHECK ASCD BRAKE SWITCH

Refer to EC-1378, "Component Inspection" .

OK or NG

OK >> GO TO 18.
NG >> Replace ASCD brake switch.

10. CHECK ASCD BRAKE SWITCH INPUT SIGNAL CIRCUIT FOR OPEN AND SHORT

1. Turn ignition switch OFF.
2. Disconnect ECM harness connector.
3. Check harness continuity between ECM terminal 108 and ASCD clutch switch terminal 2.
   Refer to Wiring Diagram.

   Continuity should exist.

4. Also check harness for short to ground or short to power.

OK or NG

OK >> GO TO 12.
NG >> GO TO 11.

11. DETECT MALFUNCTIONING PART

Check the following.

- Harness connectors M59, F27
- Harness for open or short between ECM and ASCD clutch switch

>> Repair open circuit or short to ground or short to power in harness or connectors.

12. CHECK ASCD CLUTCH SWITCH

Refer to EC-1378, "Component Inspection" .

OK or NG

OK >> GO TO 18.
NG >> Replace ASCD clutch switch.

13. CHECK STOP LAMP SWITCH POWER SUPPLY CIRCUIT

1. Turn ignition switch OFF.
2. Disconnect stop lamp switch harness connector.

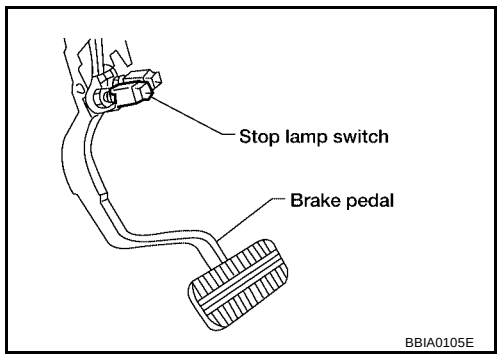

3. Check voltage between stop lamp switch terminal 1 and ground with CONSULT -II or tester.

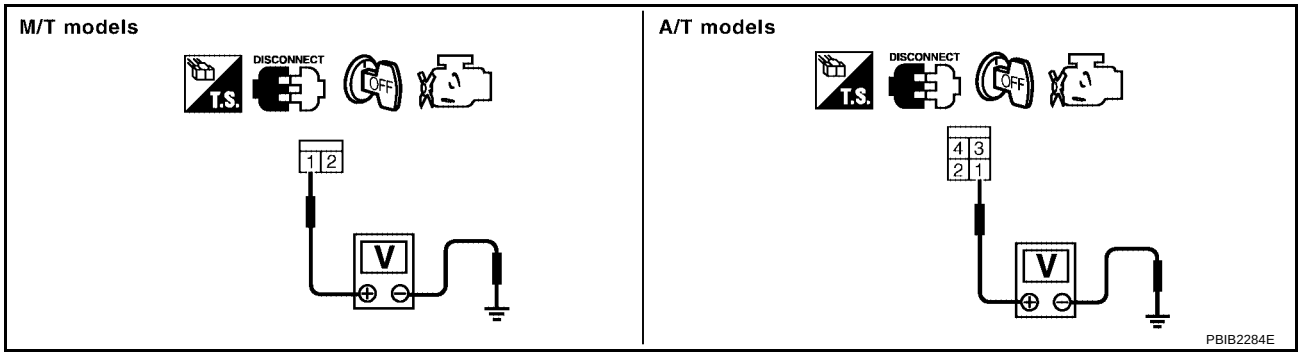

Voltage: Battery voltage

OK or NG

OK >> GO TO 15.
NG >> GO TO 14.

14. DETECT MALFUNCTIONING PART

Check the following.

- Fuse block (J/B) connector M2
- 10A fuse
- Harness for open or short between stop lamp switch and fuse

>> Repair open circuit or short to ground or short to power in harness or connectors.

15. CHECK STOP LAMP SWITCH INPUT SIGNAL CIRCUIT FOR OPEN AND SHORT

1. Disconnect ECM harness connector.
2. Check harness continuity between ECM terminal 101 and stop lamp switch terminal 2.
   Refer to Wiring Diagram.

Continuity should exist.

3. Also check harness for short to ground and short to power.

OK or NG

OK >> GO TO 17.
NG >> GO TO 16.

16. DETECT MALFUNCTIONING PART

Check the following.

- Harness connectors M59, F27
- Harness for open or short between ECM and stop lamp switch

>> Repair open circuit or short to ground or short to power in harness or connectors.

17. CHECK STOP LAMP SWITCH

Refer to EC-1378, "Component Inspection" .

OK or NG

OK >> GO TO 18.
NG >> Replace stop lamp switch.

18. CHECK INTERMITTENT INCIDENT

Refer to EC-834, "TROUBLE DIAGNOSIS FOR INTERMITTENT INCIDENT" .

>> **INSPECTION END**

Component Inspection

UBS00KQJ

ASCD BRAKE SWITCH

1. Turn ignition switch OFF.
2. Disconnect ASCD brake switch harness connector.
3. Check harness continuity between ASCD brake switch terminals 1 and 2 under the following conditions.

Condition	Continuity
Brake pedal: Fully released.	Should exist.
Brake pedal: Slightly depressed.	Should not exist.

If NG, adjust ASCD brake switch installation, refer to BR-11, "BRAKE PEDAL AND BRACKET" , and perform step 3 again.

ASCD CLUTCH SWITCH (FOR M/T MODELS)

1. Turn ignition switch OFF.
2. Disconnect ASCD clutch switch harness connector.
3. Check harness continuity between ASCD clutch switch terminals 1 and 2 under the following conditions.

Condition	Continuity
Clutch pedal: Fully released.	Should exist.
Clutch pedal: Slightly depressed.	Should not exist.

If NG, adjust ASCD clutch switch installation, refer to CL-23, "CLUTCH SYSTEM" , and perform step 3 again.

STOP LAMP SWITCH

1. Turn ignition switch OFF.
2. Disconnect stop lamp switch harness connector.
3. Check harness continuity between stop lamp switch terminals 1 and 2 under the following conditions.

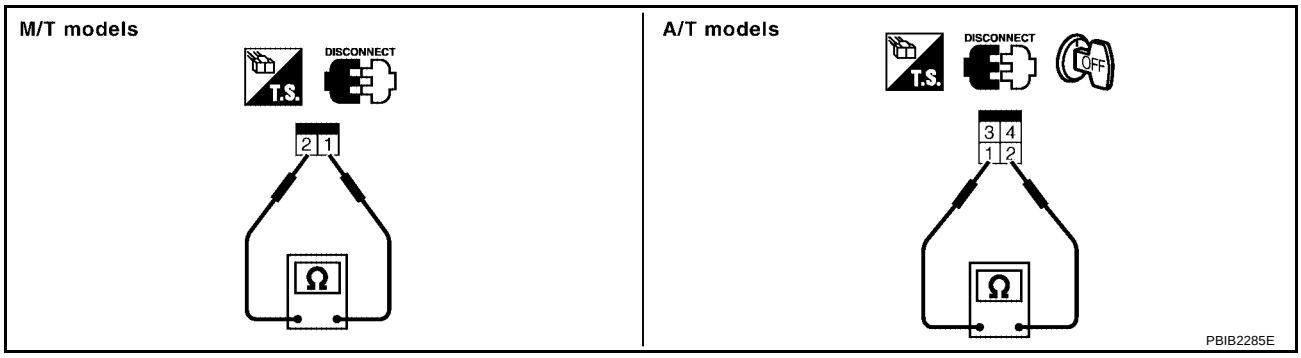

Condition	Continuity
Brake pedal: Fully released.	Should not exist.
Brake pedal: Slightly depressed.	Should exist.

If NG, adjust stop lamp switch installation, refer to BR-11, "BRAKE PEDAL AND BRACKET" , and perform step 3 again.

ASCD INDICATOR

PFP:24814

Component Description

UBS00JZL

ASCD indicator lamp illuminates to indicate ASCD operation status. Lamp has two indicators, CRUISE and SET, and is integrated in combination meter.
CRUISE indicator illuminates when MAIN switch on ASCD steering switch is turned ON to indicate that ASCD system is ready for operation.
SET indicator illuminates when following conditions are met.

- CRUISE indicator is illuminated.
- SET/COAST switch on ASCD steering switch is turned ON while vehicle speed is within the range of ASCD setting.

SET indicator remains lit during ASCD control.
Refer to EC-678, "AUTOMATIC SPEED CONTROL DEVICE (ASCD)" for the ASCD function.

CONSULT-II Reference Value in Data Monitor Mode

UBS00JZM

Specification data are reference value.

MONITOR ITEM	CONDITION		SPECIFICATION
CRUISE LAMP	● Ignition switch: ON	MAIN switch is pressed at 1st time → 2nd time	ON → OFF
SET LAMP	● MAIN switch: ON ● When vehicle is between 40 km/h (25 MPH) and 144 km/h (89 MPH)	ASCD is operating	ON
		ASCD is not operating	OFF

Wiring Diagram

UBS00JZN

EC-ASCIND-01

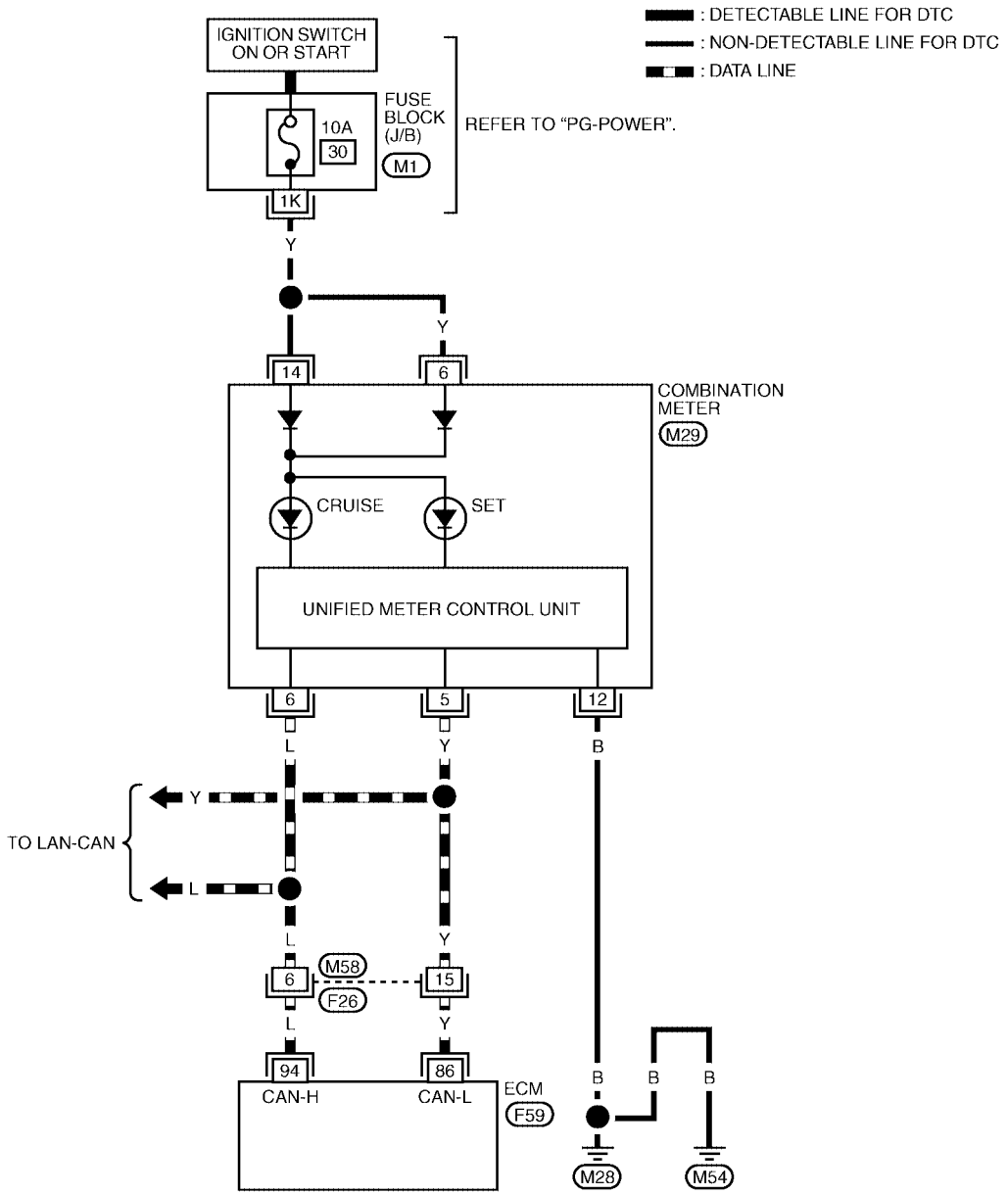

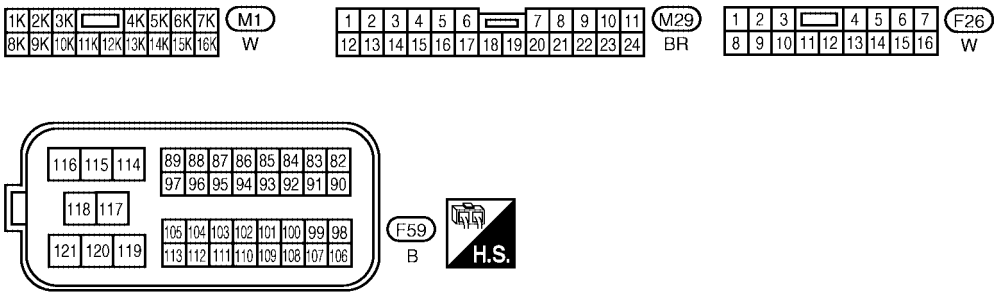

BBWA1421E

Diagnostic Procedure

UBS00JZO

1. CHECK OVERALL FUNCTION

Check ASCD indicator under the following conditions.

ASCD INDICATOR	CONDITION		SPECIFICATION
CRUISE LAMP	● Ignition switch: ON	MAIN switch is pressed at 1st time → 2nd time	ON → OFF
SET LAMP	● MAIN switch: ON ● When vehicle is between 40 km/h (25 MPH) and 144 km/h (89 MPH)	ASCD is operating	ON
		ASCD is not operating	OFF

OK or NG

OK >> **INSPECTION END**
NG >> GO TO 2.

2. CHECK DTC

Check that DTC U1000 or U1001 is not displayed.

Yes or No

Yes >> Perform trouble diagnoses for DTC U1000, U1001, refer to EC-842, "DTC U1000, U1001 CAN COMMUNICATION LINE" .
No >> GO TO 3.

3. CHECK COMBINATION METER OPERATION

Does combination meter operate normally?

Yes or No

Yes >> GO TO 4.
No >> Check combination meter circuit. Refer to DI-16, "Meter/Gauge Operation and Odo/Trip Meter Segment Check in Diagnosis Mode" .

4. CHECK INTERMITTENT INCIDENT

Refer to EC-834, "TROUBLE DIAGNOSIS FOR INTERMITTENT INCIDENT" .

>> **INSPECTION END**

MIL AND DATA LINK CONNECTOR

PFP:24814

Wiring Diagram

UBS00JOD

EC-MIL/DL-01

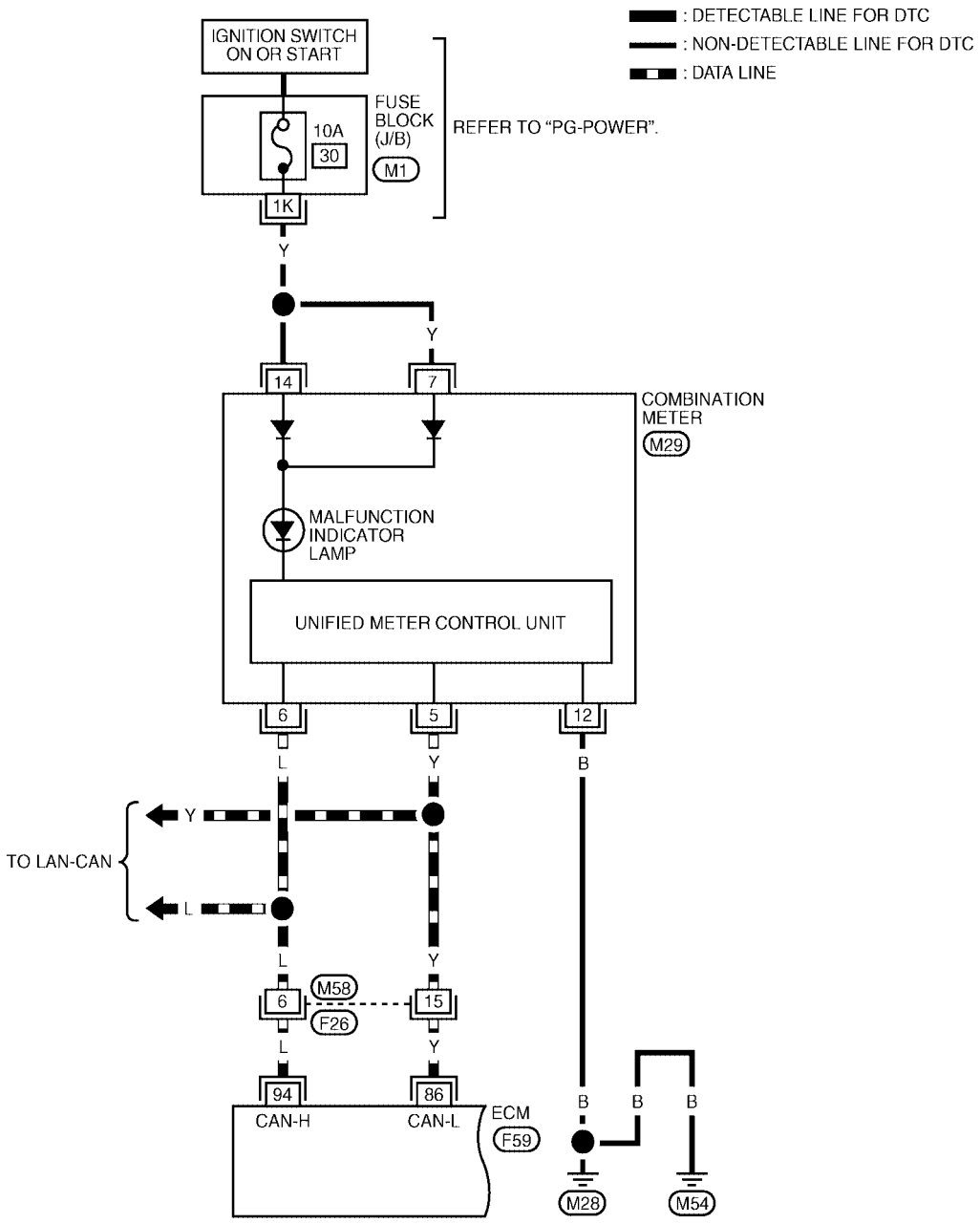

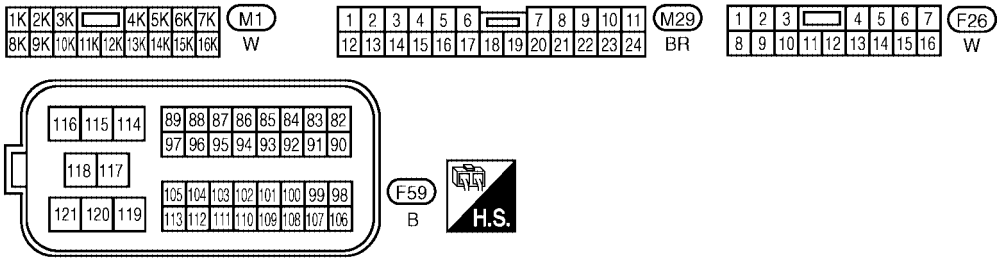

BBWA2314E

EC-MIL/DL-02

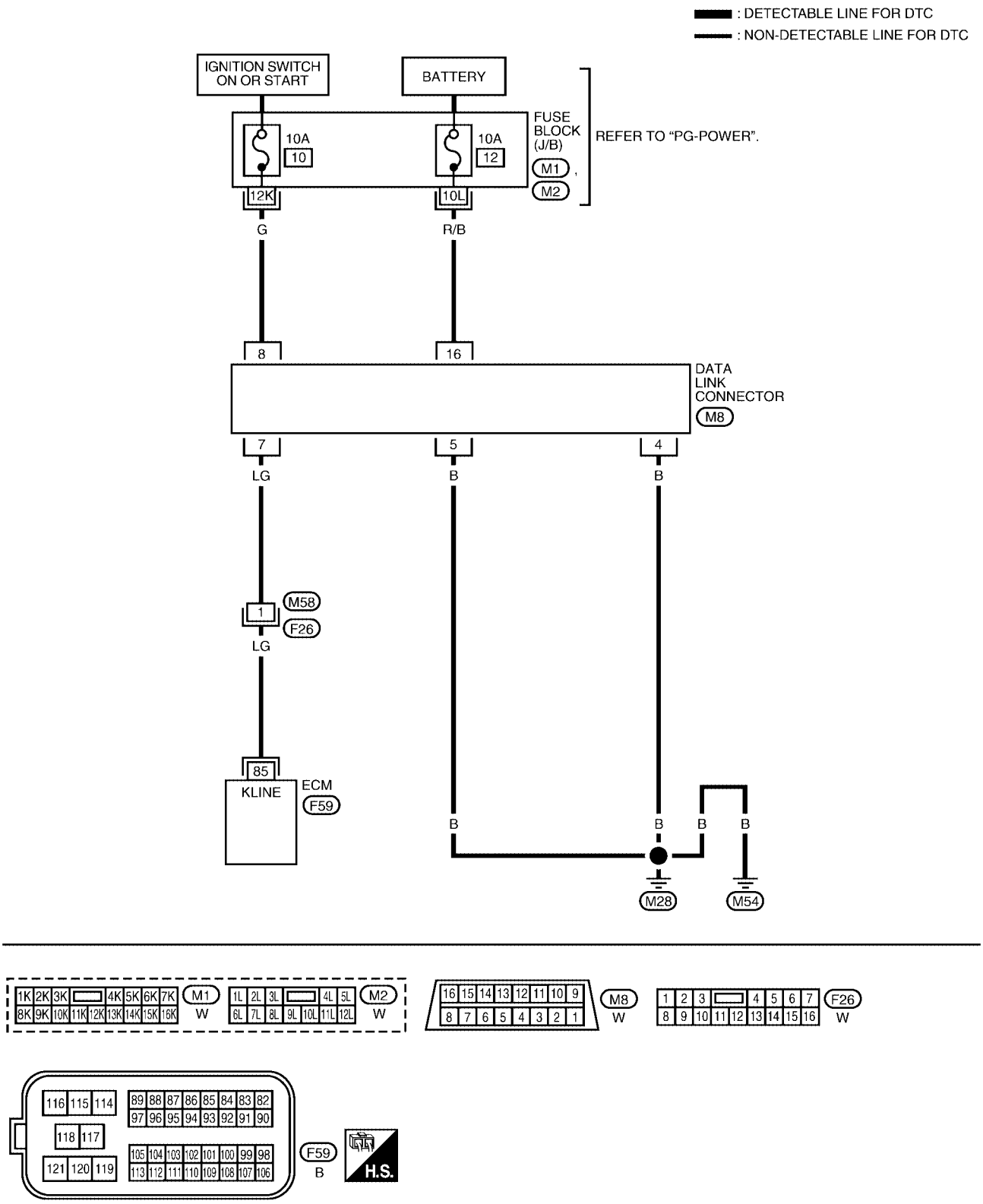
: DETECTABLE LINE FOR DTC
: NON-DETECTABLE LINE FOR DTC
IGNITION SWITCH ON OR START
BATTERY
FUSE BLOCK (J/B)
M1
M2
REFER TO "PG-POWER".
10A
10
10A
12
12K
10L
G
R/B
8
16
DATA LINK CONNECTOR
M8
7
5
4
LG
B
B
M58
1
F26
LG
85
KLINE
ECM
F59
B
B
B
B
M28
M54
M1
W
M2
W
M8
W
F26
W
F59
B
H.S.
BBWA1460E

SERVICE DATA AND SPECIFICATIONS (SDS)

PFP:00030

Fuel Pressure

UBS00JZP

Fuel pressure at idle	Approximately 350 kPa (3.57kg/cm^2 , 51psi)

Idle Speed and Ignition Timing

UBS00JZQ

Target idle speed	No-load*1 (in P or N position)	700±50 rpm
Air conditioner: ON	In P or N position	800 rpm or more
Ignition timing	In P or N position	15°±5° BTDC

*1: Under the following conditions:

- Air conditioner switch: OFF
- Electric load: OFF (Lights, heater fan & rear window defogger)
- Steering wheel: Kept in straight-ahead position

Calculated Load Value

UBS00JZR

	Calculated load value % (Using CONSULT-II or GST)
At idle	10 - 35
At 2,500 rpm	10 - 35

Mass Air Flow Sensor

UBS00JZS

Supply voltage	Battery voltage (11 - 14V)
Output voltage at idle	0.9 - 1.1*V
Mass air flow (Using CONSULT-II or GST)	1.0 - 4.0 g·m/sec at idle* 4.0 - 10.0 g·m/sec at 2,500 rpm*

*: Engine is warmed up to normal operating temperature and running under no-load.

Intake Air Temperature Sensor

UBS00JZT

Temperature °C (°F)	Resistance kΩ
25 (77)	1.94 - 2.06
80 (176)	0.295 - 0.349

Engine Coolant Temperature Sensor

UBS00JZU

Temperature °C (°F)	Resistance kΩ
20 (68)	2.1 - 2.9
50 (122)	0.68 - 1.00
90 (194)	0.236 - 0.260

Heated Oxygen Sensor 1 Heater

UBS00JZV

Resistance [at 25°C (77°F)]	3.3 - 4.0Ω

Air Fuel Ratio (A/F) Sensor 1 Heater

UBS00JZW

Resistance [at 25°C (77°F)]	2.3 - 4.3Ω

Heated Oxygen Sensor 2 Heater

UBS00JZX

Resistance [at 25°C (77°F)]	5.0 - 7.0Ω

Crankshaft Position Sensor (POS)

UBS00JZZ

Refer to EC-997, "Component Inspection" .

Camshaft Position Sensor (PHASE)

UBS00K00

Refer to EC-1004, "Component Inspection" .

Throttle Control Motor

UBS00K01

Resistance [at 25°C (77°F)]	Approximately 1 - 15Ω

Injector

UBS00K02

Resistance [at 10 - 60°C (50 - 140°F)]	11.6 - 14.9Ω

Fuel Pump

UBS00K03

Resistance [at 25°C (77°F)]	0.2 - 5.0Ω