SECTION LT
LIGHTING SYSTEM

CONTENTS

SERVICE INFORMATION

PRECAUTIONS

Precaution for Supplemental Restraint System (SRS) "AIR BAG" and "SEAT BELT PRE-TENSIONER"

INFOID:0000000001704359

The Supplemental Restraint System such as “AIR BAG” and “SEAT BELT PRE-TENSIONER”, used along with a front seat belt, helps to reduce the risk or severity of injury to the driver and front passenger for certain types of collision. This system includes seat belt switch inputs and dual stage front air bag modules. The SRS system uses the seat belt switches to determine the front air bag deployment, and may only deploy one front air bag, depending on the severity of a collision and whether the front occupants are belted or unbelted.
Information necessary to service the system safely is included in the SRS and SB section of this Service Manual.

WARNING:

- **To avoid rendering the SRS inoperative, which could increase the risk of personal injury or death in the event of a collision which would result in air bag inflation, all maintenance must be performed by an authorized NISSAN/INFINITI dealer.**
- **Improper maintenance, including incorrect removal and installation of the SRS, can lead to personal injury caused by unintentional activation of the system. For removal of Spiral Cable and Air Bag Module, see the SRS section.**
- **Do not use electrical test equipment on any circuit related to the SRS unless instructed to in this Service Manual. SRS wiring harnesses can be identified by yellow and/or orange harnesses or harness connectors.**

HEADLAMP (FOR USA)

Component Parts and Harness Connector Location

INFOID:0000000001704360

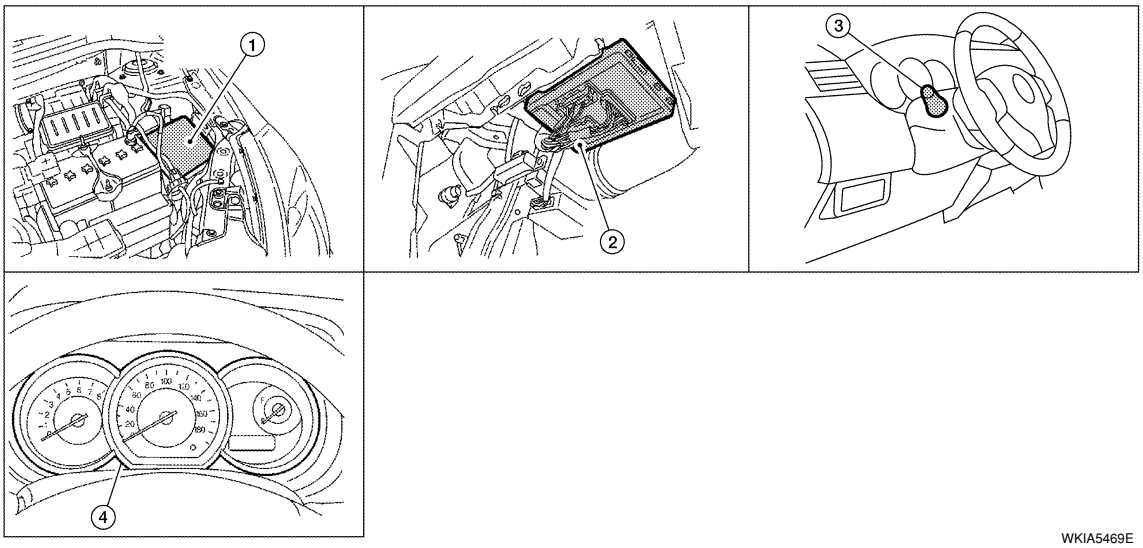

WKIA5469E

1. IPDM E/R E46, E47 and E48
2. BCM M18 and M20 (view with glove box removed)
3. Combination switch (lighting switch) M28
4. Combination meter M24

System Description

INFOID:0000000001704361

Headlamp operation is controlled by the BCM (body control module) based on inputs from the combination switch (lighting switch). When the lighting switch is placed in the 2ND position, the BCM receives an input signal requesting the headlamps (and tail lamps) illuminate. The BCM sends a signal, via the CAN communication lines, to the IPDM E/R (intelligent power distribution module engine room) requesting the headlamps be turned ON. The CPU (central processing unit) located in the IPDM E/R controls ground for the headlamp high and headlamp low relay coils. These relays direct power to the respective headlamps, which then illuminate.

OUTLINE

Power is supplied at all times
- to headlamp high relay RH and LH (located in IPDM E/R),
- to headlamp low relay (located in IPDM E/R),
- to ignition relay (located in IPDM E/R),
- through 15A fuse (No. 52, located in IPDM E/R) and
- through 20A fuse (No. 53, located in IPDM E/R)
- to CPU located in IPDM E/R,
- through 40A fusible link (letter **g** , located in fuse and fusible link block)
- to BCM terminal 70,
- through 10A fuse [No. 8, located in fuse block (J/B)]
- to BCM terminal 57, and
- through 10A fuse [No. 13, located in fuse block (J/B)]
- to combination meter terminal 27.

With the ignition switch in the ON or START position, power is supplied
- to the ignition relay (located in IPDM E/R),
- through 10A fuse [No. 6, located in fuse block (J/B)]
- to BCM terminal 38,
- through 10A fuse [No. 3, located in fuse block (J/B)]
- to combination meter terminal 28.

With the ignition switch in the ACC or ON position, power is supplied
- through 10A fuse [No. 20, located in fuse block (J/B)]
- to BCM terminal 11.

Ground is supplied

- to BCM terminal 67
- to combination meter terminals 21, 22 and 23
- through grounds M57 and M61, and
- to IPDM E/R terminals 39 and 59
- through grounds E15 and E24.

HEADLAMP OPERATION

Low Beam Operation

With the lighting switch in 2ND position, the BCM receives an input signal requesting the headlamps to illuminate. The BCM then sends a signal, via the CAN communication lines, to the IPDM E/R requesting the low beam headlamps be turned ON. The CPU located in the IPDM E/R controls ground to the headlamp low relay coil, which when energized, directs power

- through 15A fuse (No. 41, located in IPDM E/R)
- through IPDM E/R terminal 54
- to headlamp RH terminal 3, and
- through 15A fuse (No. 40, located in IPDM E/R)
- through IPDM E/R terminal 52
- to headlamp LH terminal 3.

Ground is supplied

- to headlamp RH and LH terminals 2
- through grounds E15 and E24.

With power and ground supplied, low beam headlamps illuminate.

High Beam Operation/Flash-to-Pass Operation

With the lighting switch in 2ND position and high beam switch in the HIGH position, the BCM receives an input signal requesting the headlamp high beams to illuminate. The flash to pass feature can be used any time and also sends a signal to the BCM. This input signal is then communicated to the IPDM E/R and the combination meter via the CAN communication. The CPU located in the IPDM E/R controls the headlamp high relays (LH and RH), which when energized, directs power

- through 10A fuse (No. 34, located in IPDM E/R)
- through IPDM E/R terminal 56
- to headlamp RH terminal 1, and
- through 10A fuse (No. 35, located in IPDM E/R)
- through IPDM E/R terminal 55
- to headlamp LH terminal 1.

Ground is supplied

- to headlamp RH and LH terminal 2
- through grounds E15 and E24.

With power and ground supplied, the high beam headlamps illuminate.

The BCM sends a signal, via the CAN communication lines, to the combination meter requesting the high beam indicator lamp be turned ON.

COMBINATION SWITCH READING FUNCTION

Refer to BCS-3, "System Description" .

EXTERIOR LAMP BATTERY SAVER CONTROL

Refer to LT-72, "System Description" .

CAN COMMUNICATION SYSTEM DESCRIPTION

INFOID:0000000001704362

Refer to LAN-6 .

Schematic

INFOID:0000000001704363

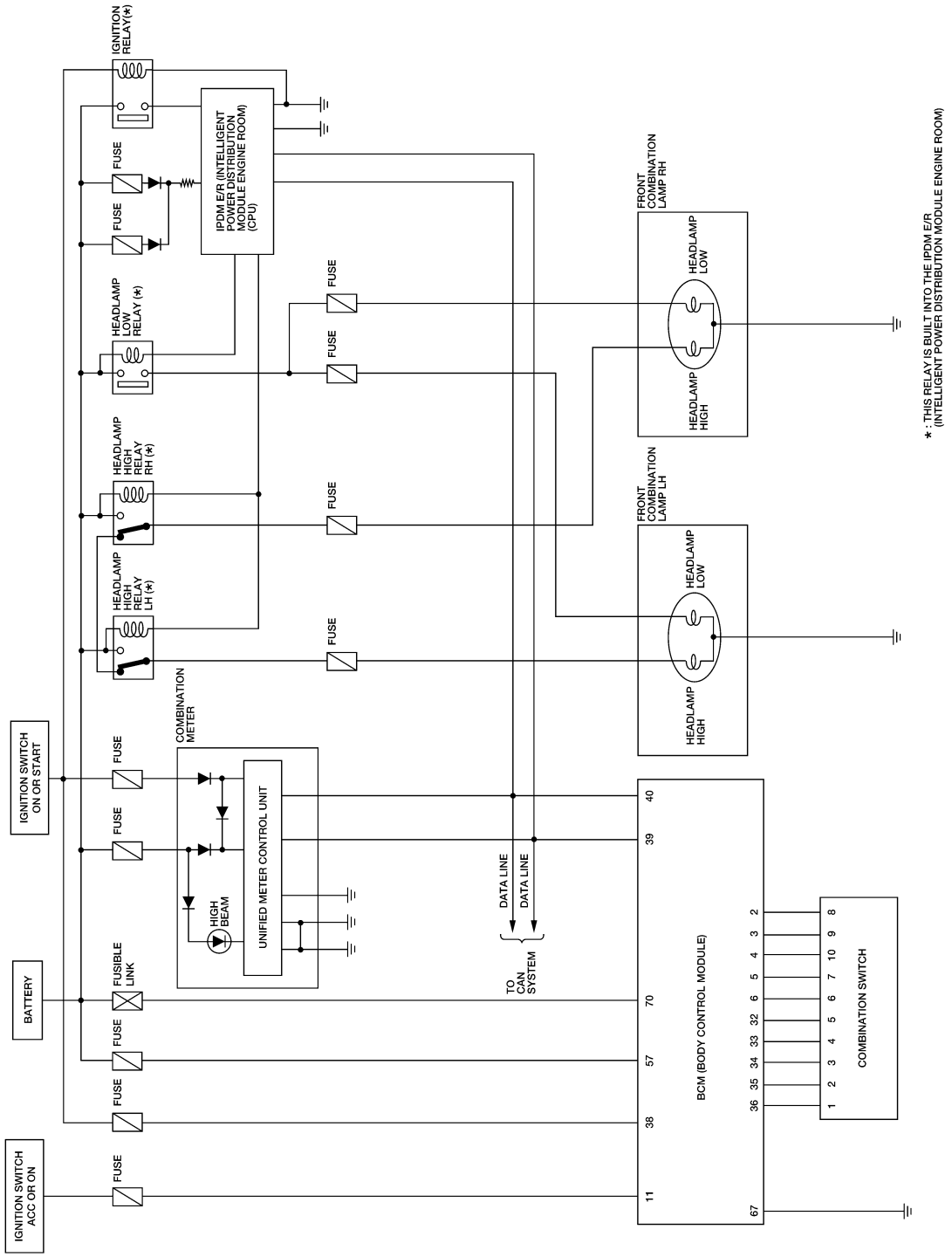

Wiring Diagram

INFOID:0000000001704364

LT-H/LAMP-01

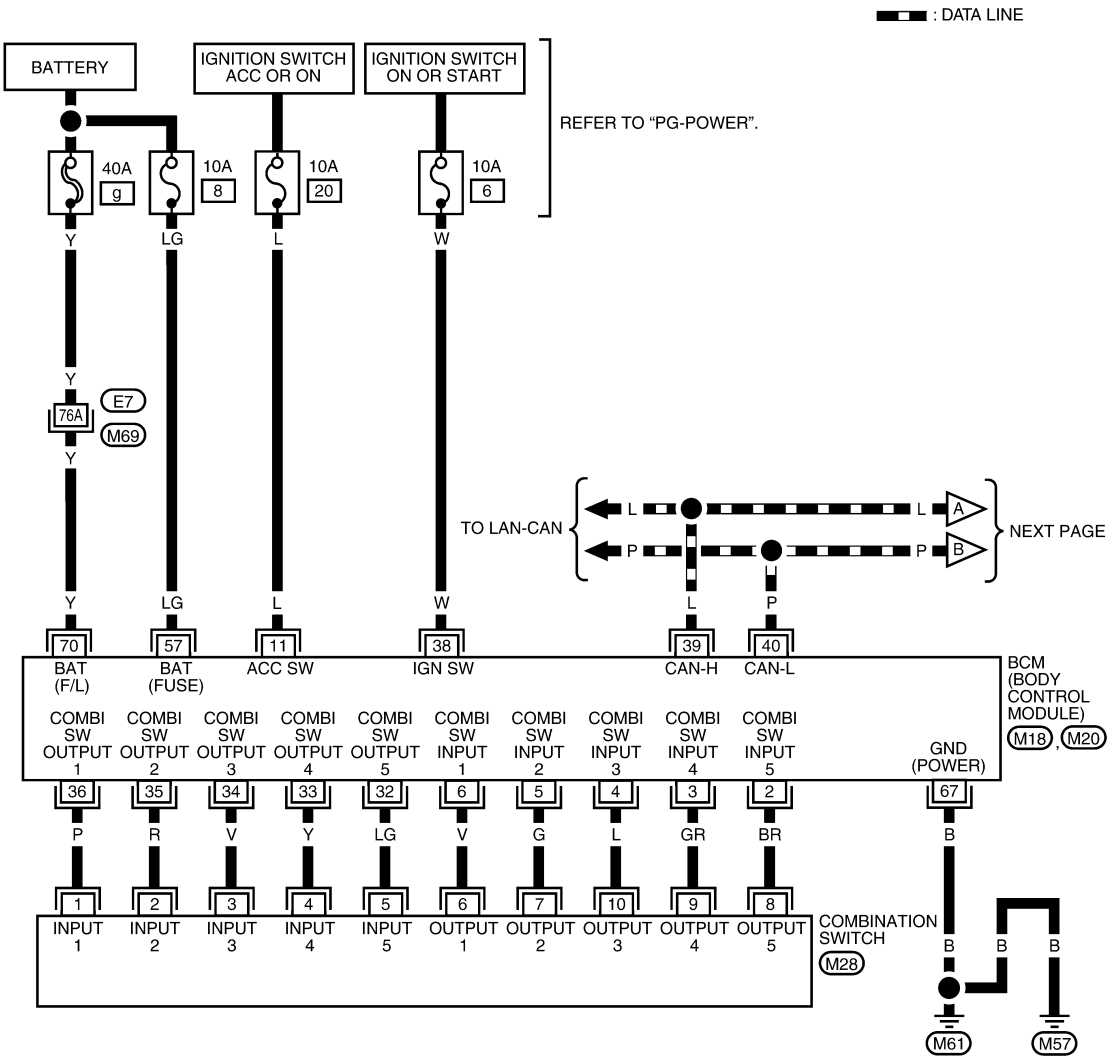

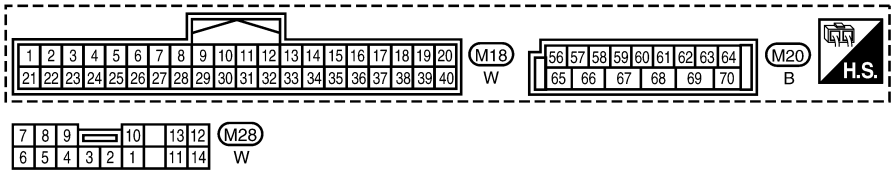

REFER TO THE FOLLOWING.
M69 - SUPER MULTIPLE JUNCTION (SMJ)

LKWA0318E

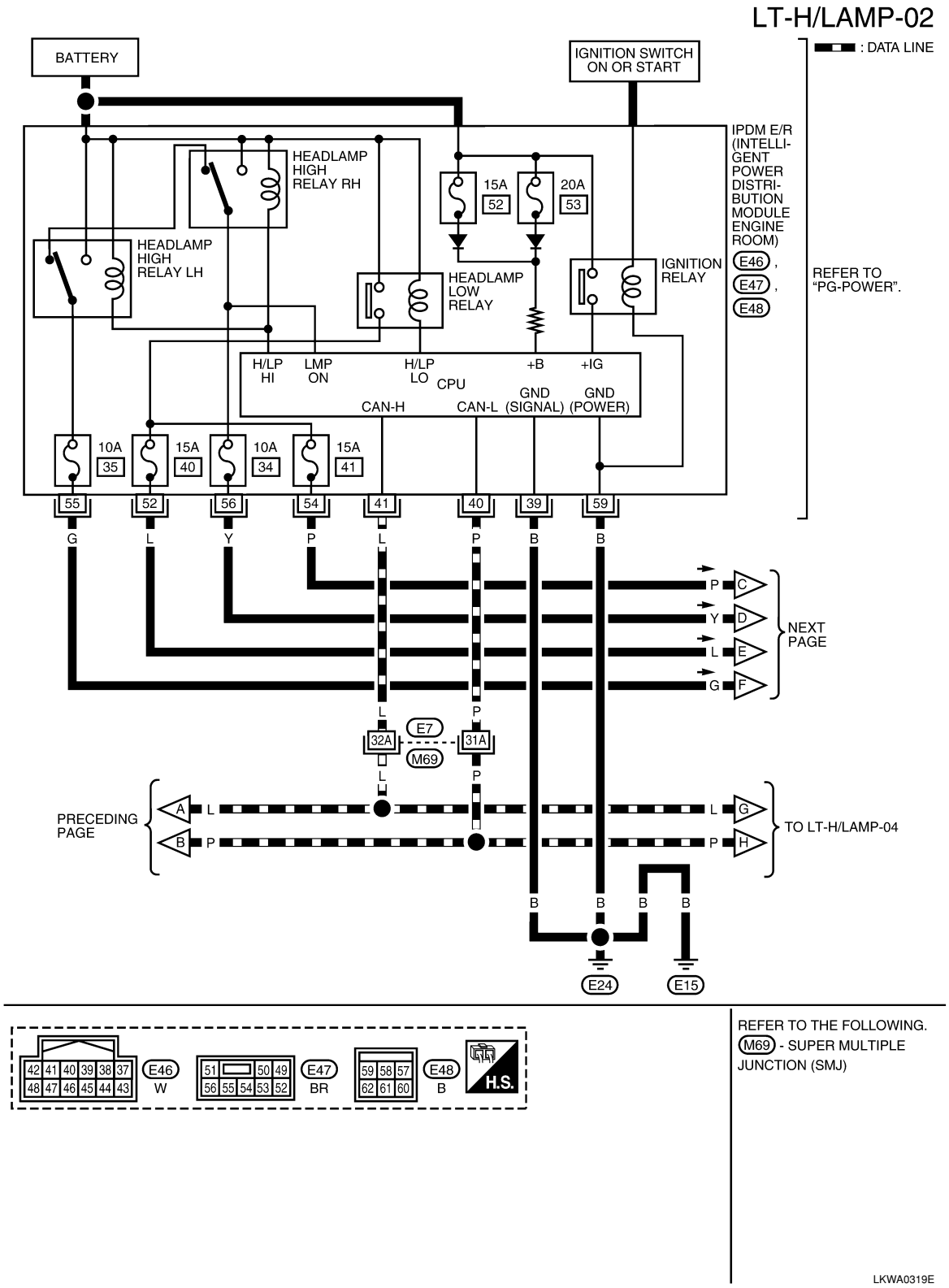
LT-H/LAMP-02
: DATA LINE
BATTERY
IGNITION SWITCH ON OR START
IPDM E/R (INTELLIGENT POWER DISTRIBUTION MODULE ENGINE ROOM)
E46, E47, E48
REFER TO "PG-POWER".
HEADLAMP HIGH RELAY RH
HEADLAMP HIGH RELAY LH
HEADLAMP LOW RELAY
IGNITION RELAY
15A 52
20A 53
H/LP HI
LMP ON
H/LP LO
CPU
+B
+IG
CAN-H
CAN-L
GND (SIGNAL)
GND (POWER)
10A 35
15A 40
10A 34
15A 41
55 52 56 54 41 40 39 59
G L Y P L P B B
NEXT PAGE
E7
M69
32A 31A
PRECEDING PAGE
TO LT-H/LAMP-04
E24
E15
E46 W
E47 BR
E48 B
H.S.
REFER TO THE FOLLOWING.
M69 - SUPER MULTIPLE JUNCTION (SMJ)
LKWA0319E

LT-H/LAMP-03

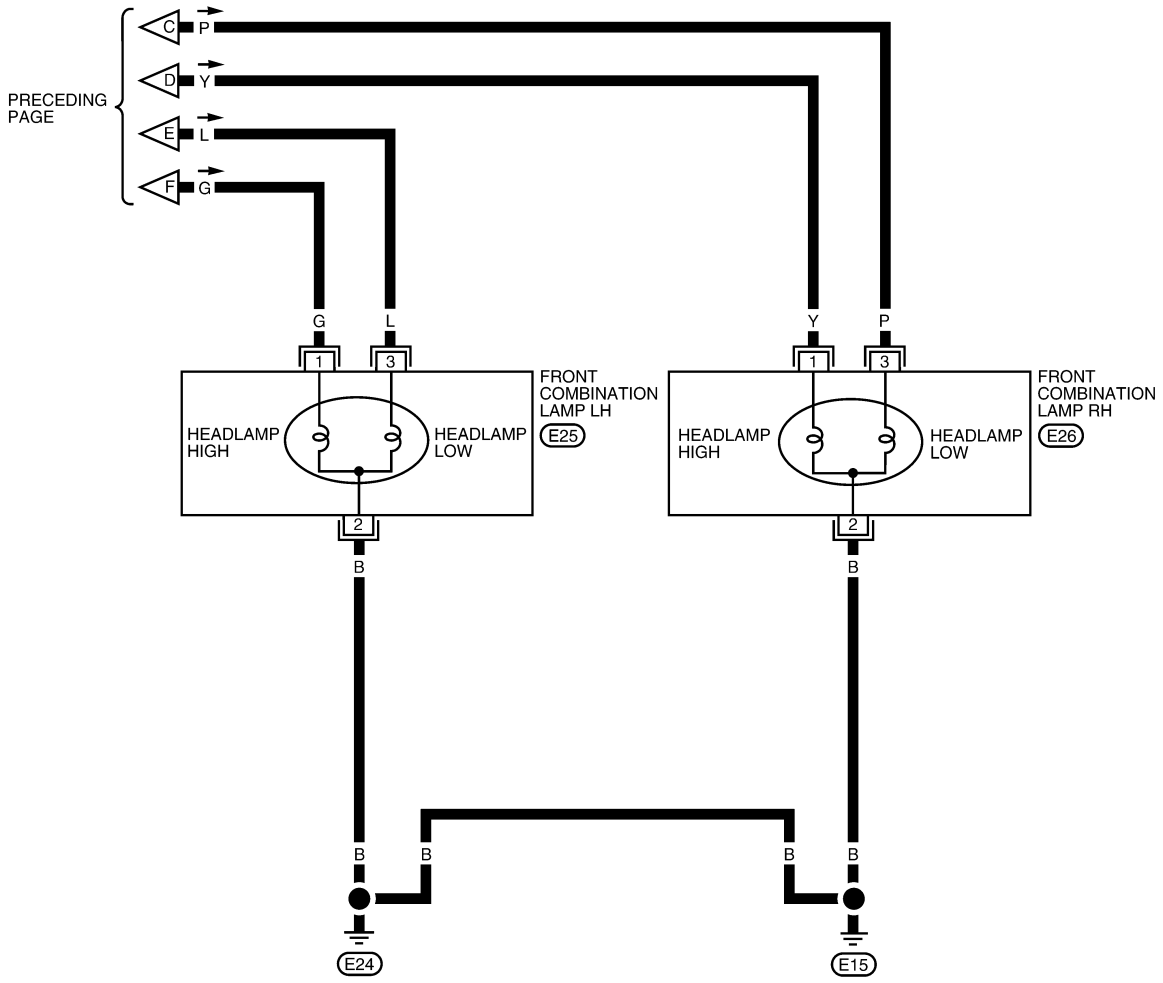

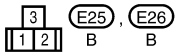

LKWA0320E

LT-H/LAMP-04

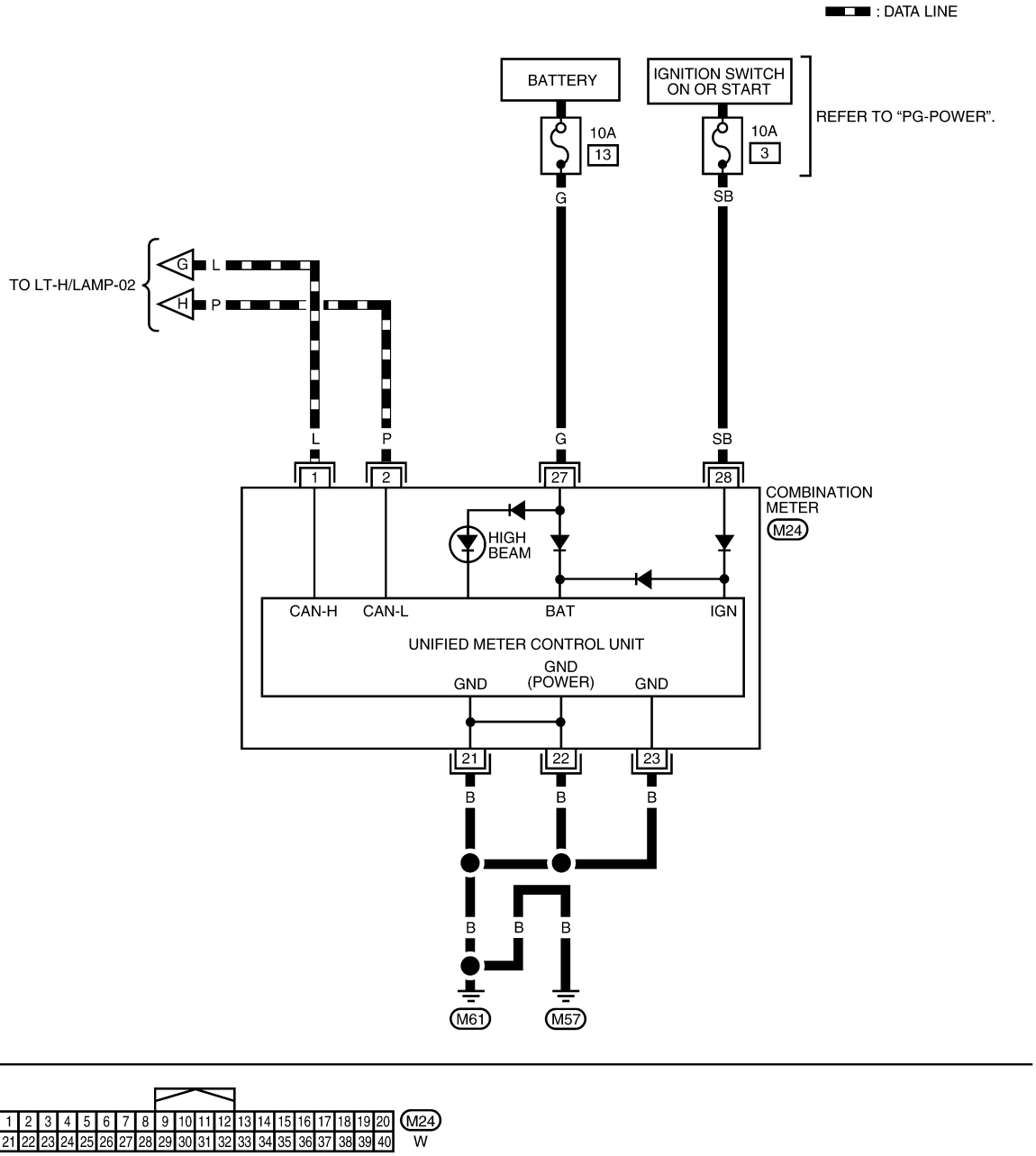

LKWA0321E

Terminal and Reference Value for BCM

INFOID:0000000001704365

Refer to BCS-11, "Terminal and Reference Value for BCM" .

Terminal and Reference Value for IPDM E/R

INFOID:0000000001704366

Refer to PG-23, "Terminal and Reference Value for IPDM E/R" .

How to Perform Trouble Diagnosis

INFOID:0000000001704367

1. Confirm the symptom or customer complaint.
2. Understand operation, description and function description. Refer to LT-4, "System Description" .
3. Perform the Preliminary Check. Refer to LT-11, "Preliminary Check" .
4. Check symptom and repair or replace the cause of the malfunction.
5. Do the headlamps operate normally? If YES, GO TO 6. If NO, GO TO 4.
6. INSPECTION END

Preliminary Check

INFOID:0000000001704368

CHECK POWER SUPPLY AND GROUND CIRCUIT FOR BCM

Refer to BCS-15, "BCM Power Supply and Ground Circuit Inspection" .

CHECK POWER SUPPLY AND GROUND CIRCUIT FOR IPDM E/R

Refer to PG-25, "IPDM E/R Power/Ground Circuit Inspection" .

CONSULT-III Function (BCM)

INFOID:0000000001704369

CONSULT-III can display each diagnostic item using the diagnostic test modes shown following.

BCM diagnostic test item	Diagnostic mode	Description
Inspection by part	WORK SUPPORT	Supports inspections and adjustments. Commands are transmitted to the BCM for setting the status suitable for required operation, input/output signals are received from the BCM and received data is displayed.
	DATA MONITOR	Displays BCM input/output data in real time.
	ACTIVE TEST	Operation of electrical loads can be checked by sending drive signal to them.
	SELF-DIAG RESULTS	Displays BCM self-diagnosis results.
	CAN DIAG SUPPORT MNTR	The result of transmit/receive diagnosis of CAN communication can be read.
	ECU PART NUMBER	BCM part number can be read.
	CONFIGURATION	Performs BCM configuration read/write functions.

WORK SUPPORT

Display Item List

Item	Description	CONSULT-III	Factory setting
BATTERY SAVER SET	Exterior lamp battery saver control mode can be changed in this mode. Selects exterior lamp battery saver control mode between ON/OFF.	ON	×
		OFF	—

DATA MONITOR

Display Item List

Monitor item		Contents
IGN ON SW	"ON/OFF"	Displays "IGN position (ON)/OFF, ACC position (OFF)" judged from the ignition switch signal.
ACC ON SW	"ON/OFF"	Displays "ACC (ON)/OFF, Ignition OFF (OFF)" status judged from ignition switch signal.
HI BEAM SW	"ON/OFF"	Displays status (high beam switch: ON/Others: OFF) of high beam switch judged from lighting switch signal.
HEAD LAMP SW 1	"ON/OFF"	Displays status (headlamp switch 1: ON/Others: OFF) of headlamp switch 2 judged from lighting switch signal.
HEAD LAMP SW 2	"ON/OFF"	Displays status (headlamp switch 2: ON/Others: OFF) of headlamp switch 2 judged from lighting switch signal.

Monitor item		Contents
LIGHT SW 1ST	"ON/OFF"	Displays status (lighting switch 1st position: ON/Others: OFF) of lighting switch judged from lighting switch signal.
PASSING SW	"ON/OFF"	Displays status (flash-to-pass switch: ON/Others: OFF) of flash-to-pass switch judged from lighting switch signal.
FR FOG SW	"ON/OFF"	Displays status (front fog lamp switch: ON/Others: OFF) of front fog lamp switch judged from lighting switch signal.
DOOR SW - DR	"ON/OFF"	Displays status of the front door LH as judged from the front door switch LH signal. (Door is open: ON/Door is closed: OFF)
DOOR SW - AS	"ON/OFF"	Displays status of the front door RH as judged from the front door switch RH signal. (Door is open: ON/Door is closed: OFF)
DOOR SW - RR	"ON/OFF"	Displays status of the rear door as judged from the rear door switch (RH) signal. (Door is open: ON/Door is closed: OFF)
DOOR SW - RL	"ON/OFF"	Displays status of the rear door as judged from the rear door switch (LH) signal. (Door is open: ON/Door is closed: OFF)
BACK DOOR SW	"ON/OFF"	Displays status of the back door as judged from the back door switch signal. (Door is open: ON/Door is closed: OFF)
TURN SIGNAL R	"ON/OFF"	Displays status (Turn right: ON/Others: OFF) as judged from lighting switch signal.
TURN SIGNAL L	"ON/OFF"	Displays status (Turn left: ON/Others: OFF) as judged from lighting switch signal.
ENGINE RUN[Note 1]	"ON/OFF"	Displays status (Engine running: ON/Others: OFF) as judged from engine status signal.
PKB SW[Note 1]	"ON/OFF"	Displays status (Parking brake switch: ON/Others: OFF) as judged from parking brake switch signal.

Note 1: Vehicles without daytime light system may display this item, but cannot monitor it.

ACTIVE TEST

Display Item List

Test item	Description
TAIL LAMP	Allows tail lamp relay to operate by switching ON-OFF.
HEAD LAMP	Allows headlamp relay (HI, LO) to operate by switching ON-OFF.
FR FOG LAMP	Allows fog lamp relay to operate by switching ON-OFF.

SELF-DIAGNOSTIC RESULTS

Display Item List

Monitored item	CONSULT-III display	Description
CAN communication	CAN communication [U1000]	Malfunction is detected in CAN communication.
CAN communication system	CAN communication system 1 to 6 [U1000]	Malfunction is detected in CAN system.

CONSULT-III Function (IPDM E/R)

INFOID:0000000001704370

CONSULT-III can display each diagnostic item using the diagnostic test modes shown following.

IPDM E/R diagnostic Mode	Description
SELF-DIAG RESULTS	Displays IPDM E/R self-diagnosis results.
DATA MONITOR	Displays IPDM E/R input/output data in real time.
CAN DIAG SUPPORT MNTR	The result of transmit/receive diagnosis of CAN communication can be read.
ACTIVE TEST	Operation of electrical loads can be checked by sending drive signal to them.

DATA MONITOR

All Items, Main Items, Select Item Menu

Item name	CONSULT-III screen display	Display or unit	Monitor item selection			Description
			ALL SIGNALS	MAIN SIGNALS	SELECTION FROM MENU	
Parking, license plate and tail lamps request	TAIL&CLR REQ	ON/OFF	×	×	×	Signal status input from BCM
Headlamp low beam request	HL LO REQ	ON/OFF	×	×	×	Signal status input from BCM
Headlamp high beam request	HL HI REQ	ON/OFF	×	×	×	Signal status input from BCM
Front fog lamps request	FR FOG REQ	ON/OFF	×	×	×	Signal status input from BCM
Daytime light request	DTRL REQ	ON/OFF	x	x	x	Signal status input from BCM

NOTE:
Perform monitoring of IPDM E/R data with the ignition switch ON. When the ignition switch is at ACC, the display may not be correct.

ACTIVE TEST

Test item	CONSULT-III screen display	Description
Tail lamp relay output	TAIL LAMP	Allows tail lamp relay to operate by switching operation ON-OFF at your option.
Headlamp relay (HI, LO) output	LAMPS	Allows headlamp relay (HI, LO) to operate by switching operation (OFF, HI, LO) at your option (Head lamp high beam repeats ON-OFF every 1 second).
Front fog lamp relay (FOG) output		Allows fog lamp relay (FOG) to operate by switching operation ON-OFF at your option.

Headlamp High Beam Does Not Illuminate (Both Sides)

INFOID:0000000001704371

1. CHECK COMBINATION SWITCH INPUT SIGNAL

With CONSULT-III
1. Select “BCM” on CONSULT-III. Select “HEAD LAMP” on “SELECT TEST ITEM” screen.
2. Select “DATA MONITOR” on “SELECT DIAG MODE” screen. Make sure that “HI BEAM SW” turns ON-OFF linked with operation of lighting switch.

When lighting switch is high position : HI BEAM SW ON

Without CONSULT-III
Refer to LT-63, "Combination Switch Inspection" .

OK or NG

OK >> GO TO 2.
NG >> Check combination switch (lighting switch). Refer to LT-63, "Combination Switch Inspection" .

2. HEADLAMP ACTIVE TEST

With CONSULT-III
1. Select “IPDM E/R” on CONSULT-III. Select “ACTIVE TEST” on “SELECT DIAG MODE” screen.
2. Select “EXTERNAL LAMPS” on “SELECT TEST ITEM” screen.
3. Touch “HI” screen.
4. Make sure headlamp high beam operates.

Headlamp high beam should operate (Headlamp high beam repeats ON–OFF every 2 seconds).

Without CONSULT-III
1. Start auto active test. Refer to PG-19, "Auto Active Test" .
2. Make sure headlamp high beam operates.

Headlamp high beam should operate.

OK or NG

OK >> GO TO 3.
NG >> GO TO 4.

3. CHECK IPDM E/R

1. Select “IPDM E/R” on CONSULT-III. Select “DATA MONITOR” on “SELECT DIAG MODE” screen.
2. Make sure “HL HI REQ” turns ON when lighting switch is in high position.

When lighting switch is high position : HL HI REQ ON

OK or NG

OK >> Replace IPDM E/R. Refer to PG-26, "Removal and Installation of IPDM E/R" .
NG >> Replace BCM. Refer to BCS-18, "Removal and Installation of BCM" .

4. HEADLAMP HIGH BEAM FUSE INSPECTION

Inspect 10A fuse No. 34 (LH) and fuse No. 35 (RH).

OK or NG

OK >> GO TO 5.
NG >> Repair harness.

5. BULB INSPECTION

Inspect inoperative headlamp bulbs.

OK or NG

OK >> GO TO 6.
NG >> Replace headlamp bulb. LT-22, "Bulb Replacement" .

6. CHECK HEADLAMP INPUT SIGNAL

With CONSULT-III

1. Turn ignition switch OFF.
2. Disconnect headlamp connector.
3. Select “IPDM E/R” on CONSULT-III. Select “ACTIVE TEST” on “SELECT DIAG MODE” screen.
4. Select “EXTERNAL LAMPS” on “SELECT TEST ITEM” screen.
5. Touch “HI” screen.
6. When headlamp high beam is operating, check voltage between headlamp harness connector and ground (Headlamp high beam repeats ON–OFF every 2 seconds).

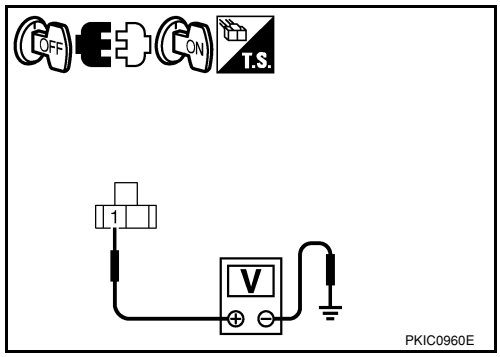

Terminal				Voltage
(+)			(–)	
Headlamp connector		Terminal		
RH	E26	1	Ground	Battery voltage
LH	E25			

Without CONSULT-III

1. Turn ignition switch OFF.
2. Disconnect headlamp connector.
3. Start auto active test. Refer to PG-19, "Auto Active Test" .
4. When headlamp high beam is operating, check voltage between headlamp harness connector and ground.

Terminal			Voltage
(+)		(–)	
Headlamp connector	Terminal		

RH	E26	1	Ground	Battery voltage
LH	E25			

OK or NG

OK >> GO TO 7.
NG >> GO TO 8.

7. CHECK HEADLAMP GROUND CIRCUIT

1. Turn ignition switch OFF.
2. Check continuity between headlamp harness connector and ground.

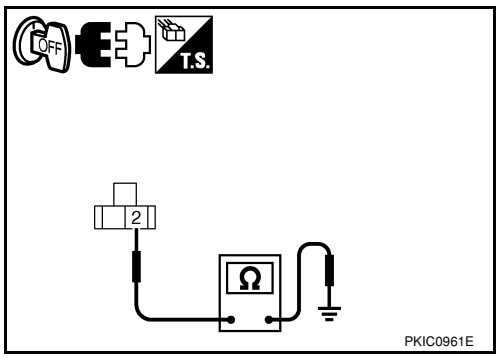

Headlamp connector		Terminal		Continuity
RH	E26	2	Ground	Yes
LH	E25			

OK or NG

OK >> Check front combination lamp connector for damage or poor connection. Repair as necessary.
NG >> Repair harness.

8. CHECK HEADLAMP CIRCUIT

1. Turn ignition switch OFF.
2. Disconnect IPDM E/R connector.
3. Check continuity between IPDM E/R harness connector (A) and headlamp harness connector (B).

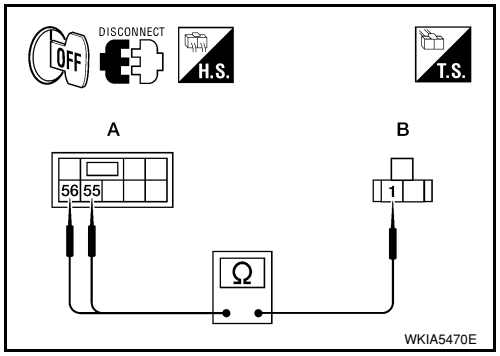

Circuit	A		B		Continuity
	Connector	Terminal	Connector	Terminal	
RH	E47	56	E26	1	Yes
LH		55	E25		

OK or NG

OK >> Replace IPDM E/R. Refer to PG-26, "Removal and Installation of IPDM E/R" .
NG >> Repair harness or connector.

Headlamp High Beam Does Not Illuminate (One Side)

INFOID:0000000001704372

1. HEADLAMP HIGH BEAM FUSE INSPECTION

Inspect 10A fuse No. 34 (LH) or fuse No. 35 (RH).

OK or NG

OK >> GO TO 2.
NG >> Repair harness.

2. CHECK BULB

Check headlamp bulb which does not illuminate.

OK or NG

OK >> GO TO 3.
NG >> Replace bulb. Refer to LT-22, "Bulb Replacement" .

3. CHECK HEADLAMP INPUT SIGNAL

1. Turn ignition switch OFF.
2. Disconnect headlamp connector.
3. Lighting switch is turned to HIGH position.

4. Check voltage between headlamp harness connector and ground.

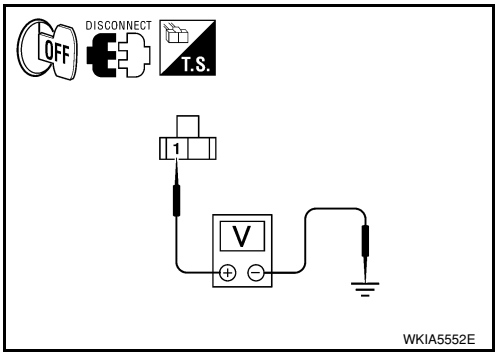

Terminal				Voltage
(+)			(–)	
Headlamp connector		Terminal		
RH	E26	1	Ground	Battery voltage
LH	E25			

OK or NG

OK >> GO TO 4.
NG >> GO TO 5.

4. CHECK HEADLAMP GROUND CIRCUIT

1. Turn ignition switch OFF.
2. Check continuity between headlamp harness connector and ground.

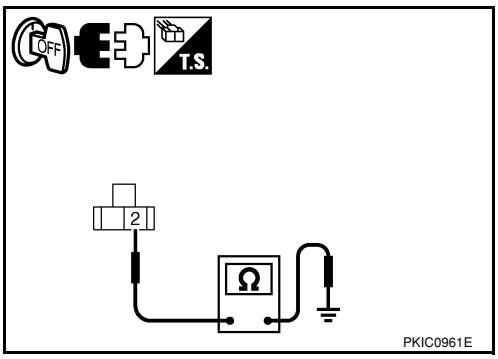

Headlamp connector		Terminal	Ground	Continuity
RH	E26	2	Ground	Yes
LH	E25			

OK or NG

OK >> Check connecting condition headlamp harness connector.
NG >> Repair harness or connector.

5. CHECK HEADLAMP CIRCUIT

1. Turn ignition switch OFF.
2. Disconnect IPDM E/R connector.
3. Check continuity between IPDM E/R harness connector (A) and headlamp harness connector (B).

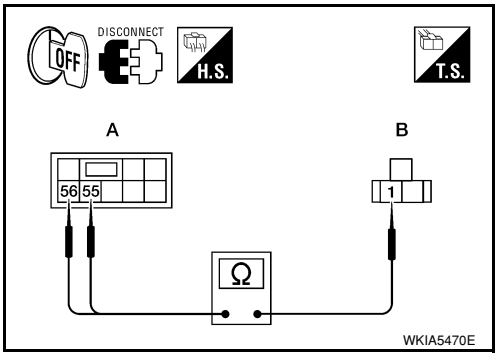

Circuit	A		B		Continuity
	Connector	Terminal	Connector	Terminal	
RH	E47	56	E26	1	Yes
LH		55	E25		

OK or NG

OK >> Replace IPDM E/R. Refer to PG-26, "Removal and Installation of IPDM E/R" .
NG >> Repair harness or connector.

High Beam Indicator Lamp Does Not Illuminate

INFOID:0000000001704373

1. BULB INSPECTION

Inspect CAN communication system. Refer to LAN-6 .

OK or NG

OK >> Replace combination meter. Refer to DI-20, "Removal and Installation" .
NG >> Repair as necessary.

Headlamp Low Beam Does Not Illuminate (Both Sides)

INFOID:0000000001704374

1. CHECK COMBINATION SWITCH INPUT SIGNAL

With CONSULT-III

1. Select “BCM” on CONSULT-III. Select “HEAD LAMP” on “SELECT TEST ITEM” screen.

2. Select “DATA MONITOR” on “SELECT DIAG MODE” screen. Make sure that “HEAD LAMP SW 1” and “HEAD LAMP SW 2” turns ON-OFF linked with operation of lighting switch.

When lighting switch is 2ND position : HEAD LAMP SW 1 ON
: HEAD LAMP SW 2 ON

Without CONSULT-III
Refer to LT-63, "Combination Switch Inspection" .

OK or NG

OK >> GO TO 2.
NG >> Check combination switch (lighting switch). Refer to LT-63, "Combination Switch Inspection" .

2. CHECK HEADLAMP ACTIVE TEST

With CONSULT-III
1. Select “IPDM E/R” on CONSULT-III. Select “ACTIVE TEST” on “SELECT DIAG MODE” screen.
2. Select “EXTERNAL LAMPS” on “SELECT TEST ITEM” screen.
3. Touch “LO” screen.
4. Make sure headlamp low beam operates.

Headlamp low beam should operate.

Without CONSULT-III
1. Start auto active test. Refer to PG-19, "Auto Active Test" .
2. Make sure headlamp low beam operates.

Headlamp low beam should operate.

OK or NG

OK >> GO TO 3.
NG >> GO TO 4.

3. CHECK IPDM E/R

1. Select “IPDM E/R” on CONSULT-III. Select “DATA MONITOR” on “SELECT DIAG MODE” screen.
2. Make sure “HL LO REQ” turns ON when lighting switch is in 2ND position.

When lighting switch is 2ND position : HL LO REQ ON

OK or NG

OK >> Replace IPDM E/R. Refer to PG-26, "Removal and Installation of IPDM E/R" .
NG >> Replace BCM. Refer toBCS-18, "Removal and Installation of BCM" .

4. HEADLAMP LOW BEAM FUSE INSPECTION

Inspect 15A fuse No. 40 (LH) and fuse No. 41 (RH).

OK or NG

OK >> GO TO 5.
NG >> Repair harness.

5. BULB INSPECTION

Inspect inoperative headlamp bulbs.

OK or NG

OK >> GO TO 6.
NG >> Replace headlamp bulb.LT-22, "Bulb Replacement" .

6. CHECK HEADLAMP INPUT SIGNAL

With CONSULT-III
1. Turn ignition switch OFF.
2. Disconnect headlamp connector.
3. Select “IPDM E/R” on CONSULT-III. Select “ACTIVE TEST” on “SELECT DIAG MODE” screen.
4. Select “EXTERNAL LAMPS” on “SELECT TEST ITEM” screen.

5. Touch “LO” screen.
6. When headlamp low beam is operating, check voltage between headlamp harness connector and ground.

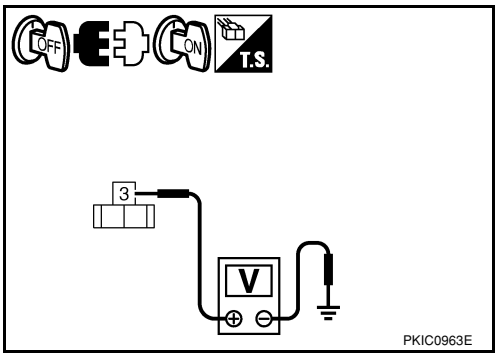

Terminal				Voltage
(+)			(–)	
Headlamp connector		Terminal		
RH	E26	3	Ground	Battery voltage
LH	E25			

Without CONSULT-III
1. Turn ignition switch OFF.
2. Disconnect headlamp connector.
3. Start auto active test. Refer to PG-19, "Auto Active Test" .
4. When headlamp low beam is operating, check voltage between headlamp harness connector and ground.

Terminal				Voltage
(+)			(–)	
Headlamp connector		Terminal		
RH	E26	3	Ground	Battery voltage
LH	E25			

OK or NG

OK >> GO TO 7.
NG >> GO TO 8.

7. CHECK HEADLAMP GROUND CIRCUIT

1. Turn ignition switch OFF.
2. Check continuity between headlamp harness connector (B) and ground.

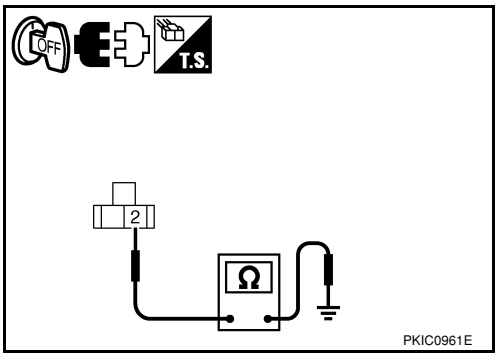

Headlamp connector		Terminal	Ground	Continuity
RH	E26	2		Yes
LH	E25			

OK or NG

OK >> Check front combination lamp connector for damage or poor connection. Repair as necessary.
NG >> Repair harness.

8. CHECK HEADLAMP CIRCUIT

1. Turn ignition switch OFF.
2. Disconnect IPDM E/R connector.
3. Check continuity between IPDM E/R harness connector (A) and headlamp harness connector (B).

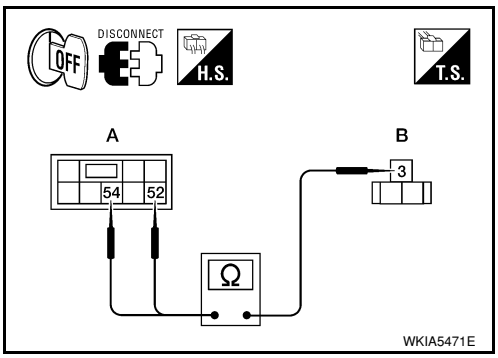

Circuit	A		B		Continuity
	Connector	Terminal	Connector	Terminal	
RH	E47	54	E26	3	Yes
LH		52	E25		

OK or NG

OK >> Replace IPDM E/R. Refer to PG-26, "Removal and Installation of IPDM E/R" .
NG >> Repair harness or connector.

Headlamp Low Beam Does Not Illuminate (One Side)

INFOID:0000000001704375

1. HEADLAMP LOW BEAM FUSE INSPECTION

Inspect 15A fuse No. 40 (LH) and fuse No. 41 (RH).

OK or NG

OK >> GO TO 2.
NG >> Repair harness.

2. CHECK BULB

Check bulb of headlamp which does not illuminate.

OK or NG

OK >> GO TO 3.
NG >> Replace bulb. Refer to LT-22, "Bulb Replacement" .

3. CHECK HEADLAMP INPUT SIGNAL

1. Turn ignition switch OFF.
2. Disconnect headlamp connector.
3. Lighting switch is turned to 2ND position.
4. Check voltage between headlamp harness connector and ground.

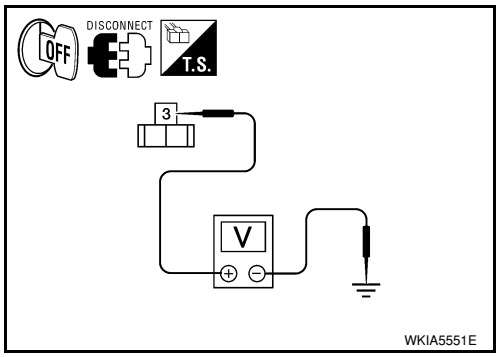

Terminal				Voltage
(+)			(–)	
Headlamp connector		Terminal		
RH	E26	3	Ground	Battery voltage
LH	E25			

OK or NG

OK >> GO TO 4.
NG >> GO TO 5.

4. CHECK HEADLAMP GROUND CIRCUIT

1. Turn ignition switch OFF.
2. Check continuity between headlamp harness connector and ground.

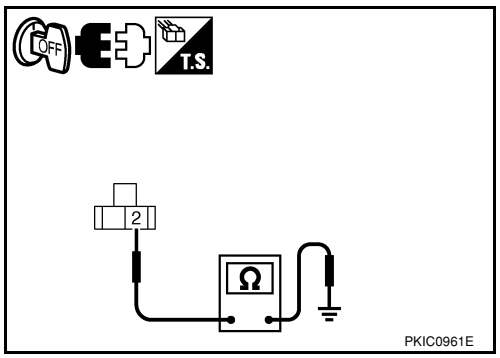

Headlamp connector		Terminal		Continuity
RH	E26	2	Ground	Yes
LH	E25			

OK or NG

OK >> Check condition of headlamp harness connector.
NG >> Repair harness or connector.

5. CHECK HEADLAMP CIRCUIT

1. Turn ignition switch OFF.
2. Disconnect IPDM E/R connector.

3. Check continuity between IPDM E/R harness connector (A) and headlamp harness connector (B).

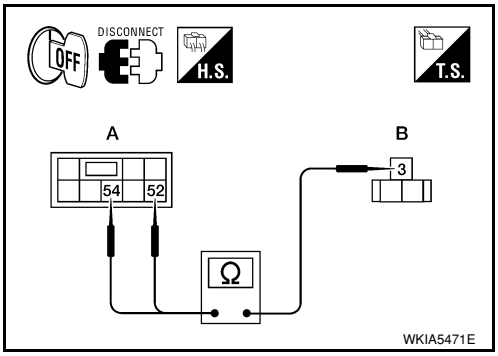

Circuit	A		B		Continuity
	Connector	Terminal	Connector	Terminal	
RH	E47	54	E26	3	Yes
LH		52	E25		

OK or NG

OK >> Replace IPDM E/R. Refer to PG-25, "IPDM E/R Power/ Ground Circuit Inspection" .

NG >> Repair harness or connector.

Headlamps Do Not Turn OFF

INFOID:0000000001704376

1. CHECK HEADLAMPS TURN OFF

Make sure that lighting switch is OFF. Make sure headlamp turns OFF when ignition switch is turned OFF.

OK or NG

OK >> GO TO 3.

NG >> GO TO 2.

2. CHECK COMBINATION SWITCH INPUT SIGNAL

1. Select “BCM” on CONSULT-III. Select “HEAD LAMP” on “SELECT TEST ITEM” screen.
2. Select “DATA MONITOR” on “SELECT DIAG MODE” screen. Make sure that “HEAD LAMP SW 1” and “HEAD LAMP SW 2” turns ON-OFF linked with operation of lighting switch.

When lighting switch is OFF position	**: HEAD LAMP SW 1 OFF**
	: HEAD LAMP SW 2 OFF

OK or NG

OK >> Replace IPDM E/R. Refer to PG-26, "Removal and Installation of IPDM E/R" .

NG >> Check combination switch (lighting switch). Refer to LT-63, "Combination Switch Inspection" .

3. CHECKING CAN COMMUNICATIONS BETWEEN BCM AND IPDM E/R

Select “BCM” on CONSULT-III, and perform self-diagnosis for “BCM”.

Display of self-diagnosis results

NO DTC>> Replace IPDM E/R. Refer to PG-26, "Removal and Installation of IPDM E/R".

CAN COMM CIRCUIT>> Refer to LAN-6, "System Description".

Aiming Adjustment

INFOID:0000000001704377

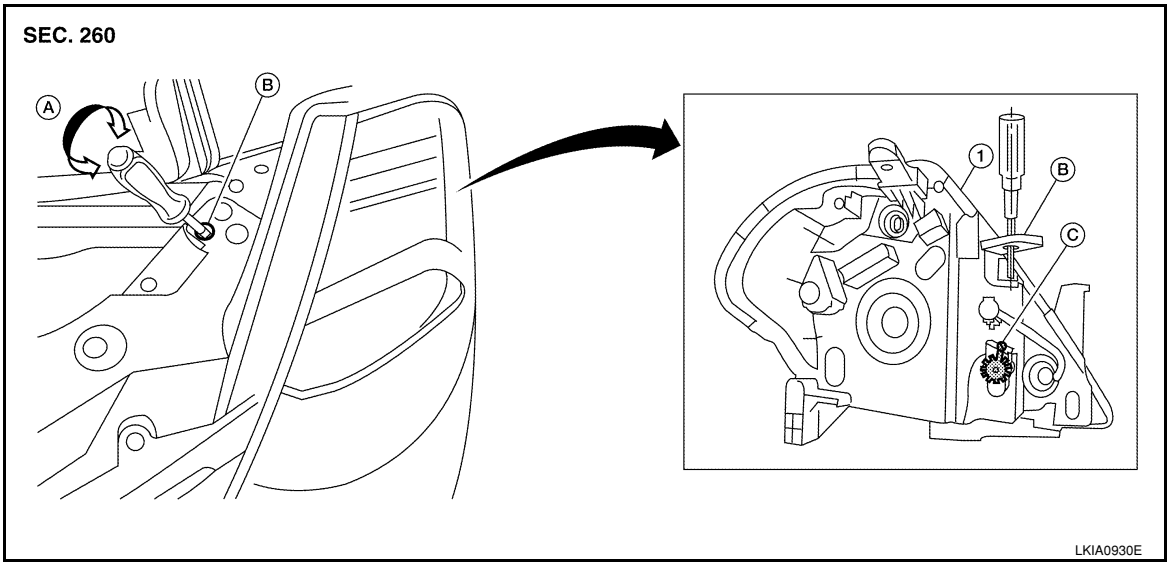

1. Headlamp
A. Inner and outer adjustment
B. Adjusting screw access hole
C. Adjusting screw

PREPARATION BEFORE ADJUSTING

Before performing aiming adjustment, check the following.

1. Keep all tires inflated to correct pressures.
2. Place vehicle on level surface.
3. See that there is no-load in vehicle other than the driver (or equivalent weight placed in driver's position). Coolant, engine oil filled up to correct level and full fuel tank, spare tire, jack and tools are properly stowed.

LOW BEAM AND HIGH BEAM

1. Turn headlamp low beam ON.
2. Use adjusting screw to perform aiming adjustment.
3. Insert the tool through the adjusting screw access hole to avoid damage to the adjusting screw.

ADJUSTMENT USING AN ADJUSTMENT SCREEN (LIGHT/DARK BORDERLINE)

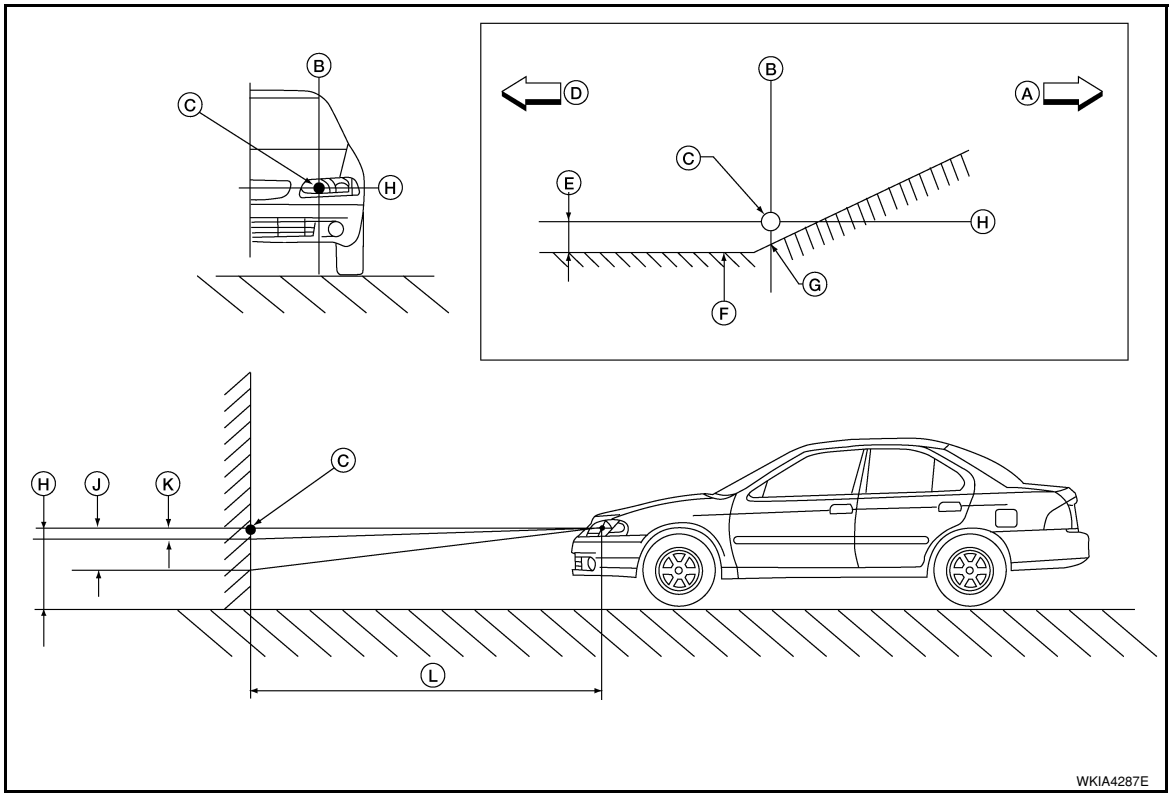

A.	Right	B.	Vertical center line of headlamp	C.	Horizontal aiming center line of headlamp
D.	Left	E.	Vertical aiming cutoff point	F.	Cutoff line for vertical aiming evaluation
G.	Acceptable vertical cutoff setting at horizontal aiming point	H.	Horizontal center line of headlamp	J.	Maximum acceptable vertical aiming point
K.	Minimum acceptable vertical aiming point	L.	Aiming distance from center of headlamp to aiming screen		

- Aim each headlamp individually and ensure other headlamp beam pattern is blocked from screen.
- For vertical headlamp aiming, adjust headlamp until beam pattern is positioned per specified dimensions.

Description	Halogen Headlamp
Vertical aiming cutoff point (E)	53.2 mm (2.094 in)
Minimum acceptable vertical aiming point (K)	13.3 mm (0.52 in)
Maximum acceptable vertical aiming point (J)	93.1 mm (3.67 in)
Aiming distance from center of headlamp to aiming screen (L)	7.62 m (25 ft)

Bulb Replacement

INFOID:0000000001704378

CAUTION:
After installing bulb, be sure to install plastic cap and bulb socket securely to ensure watertightness.

HEADLAMP (HIGH/LOW)

1. Turn lighting switch OFF.
2. Remove the headlamp. Refer to LT-23, "Removal and Installation".
3. Remove back cover.
4. Unlock retaining spring and remove bulb from headlamp.

PARKING (CLEARANCE) LAMP

1. Turn lighting switch OFF.

2. Remove the headlamp. Refer to LT-23, "Removal and Installation".
3. Turn bulb socket counterclockwise and unlock it.
4. Remove bulb from its socket.

FRONT TURN SIGNAL LAMP

1. Turn lighting switch OFF.
2. Remove the headlamp. Refer to LT-23, "Removal and Installation".
3. Turn bulb socket counterclockwise and unlock it.
4. Remove bulb from its socket.

Removal and Installation

INFOID:0000000001704379

REMOVAL

1. Disconnect the negative battery terminal.
2. Remove front bumper fascia. Refer to EI-14.
3. Remove headlamp bolts (A).
4. Pull headlamp (1) toward the vehicle front, disconnect connector, and remove headlamp.

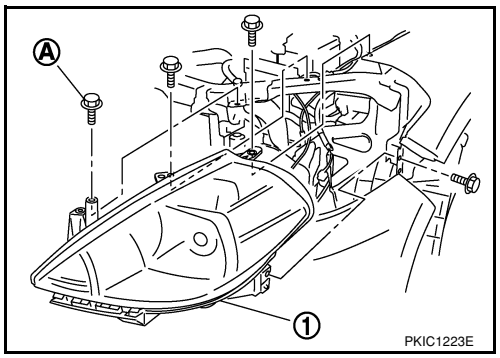

INSTALLATION

Installation is in the reverse order of removal.

- After installation, perform aiming adjustment. Refer to LT-21, "Aiming Adjustment".

Disassembly and Assembly

INFOID:0000000001704380

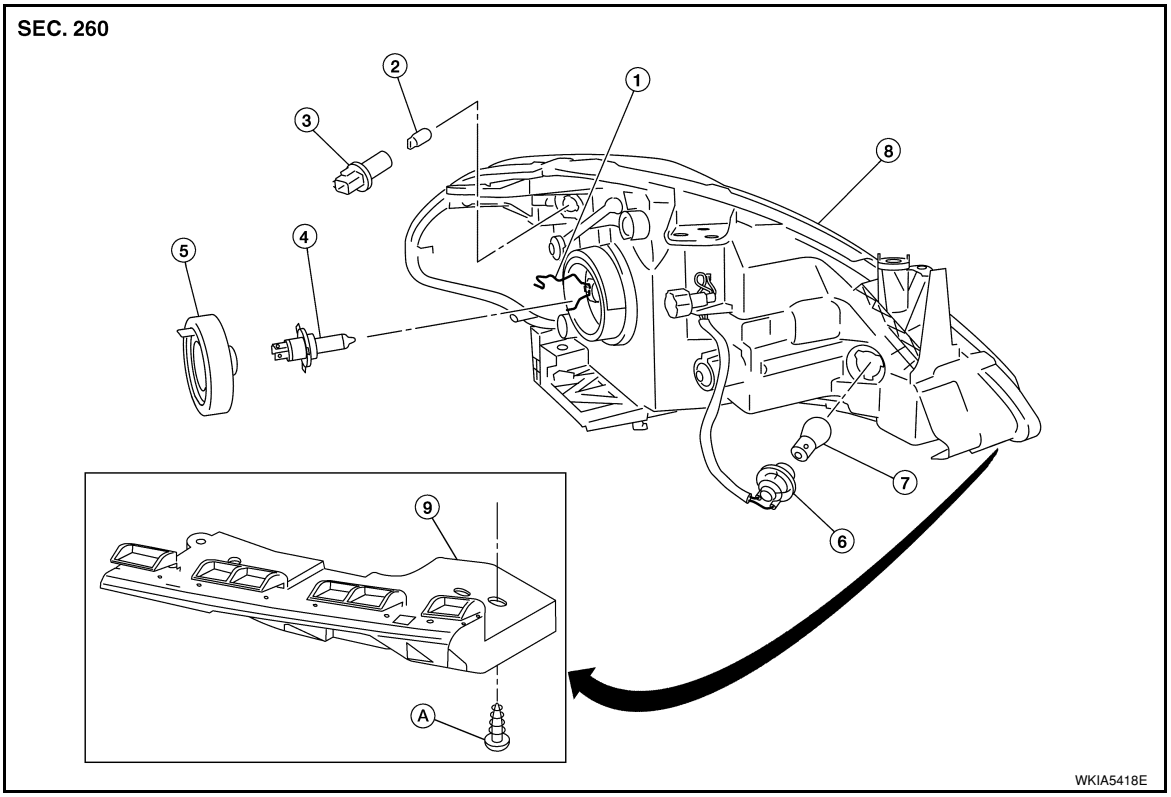

1. Retaining spring
2. Parking (clearance) lamp bulb
3. Parking (clearance) lamp bulb socket
4. Halogen bulb (High/Low)
5. Back cover
6. Front turn signal lamp bulb socket
7. Front turn signal lamp bulb
8. Headlamp housing assembly
9. Bumper stay

A. Screw

DISASSEMBLY

1. Remove back cover.
2. Unlock retaining spring and remove bulb (High/Low).
3. Turn parking (clearance) lamp bulb socket counterclockwise and unlock it.
4. Remove parking (clearance) lamp bulb from its socket.
5. Turn front turn signal lamp bulb socket counterclockwise and unlock it.
6. Remove front turn signal lamp bulb from its socket.
7. Remove the bumper stay.

ASSEMBLY

Assembly is in the reverse order of disassembly.

CAUTION:

- **After installing bulb, be sure to install plastic cap securely to insure water tight seal.**

HEADLAMP (FOR CANADA) - DAYTIME LIGHT SYSTEM -

Component Parts and Harness Connector Location

INFOID:0000000001704381

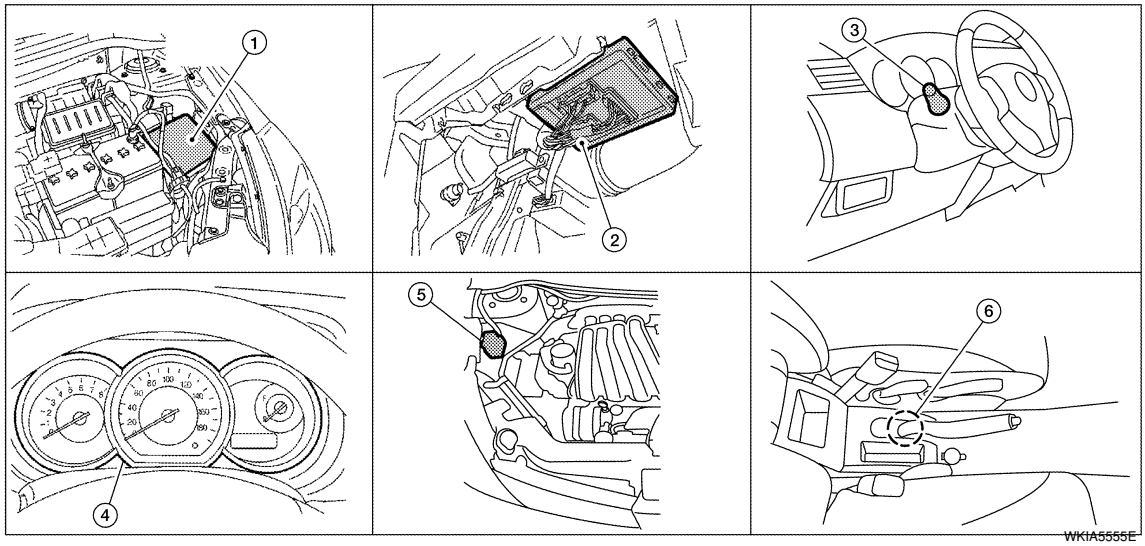

1. IPDM E/R E43, E46, E47 and E48	2. BCM M18 and M20 (view with glove box removed)	3. Combination switch (lighting switch) M28
4. Combination meter M24	5. Daytime light relay 1 E37 and daytime light relay 2 E38	6. Parking brake switch M17

System Description

INFOID:0000000001704382

Headlamp operation is controlled by the BCM (body control module) based on inputs from the combination switch (lighting switch). When the lighting switch is placed in the 2ND position, the BCM receives an input signal requesting the headlamps (and tail lamps) illuminate. The request is then communicated to the IPDM E/R (intelligent power distribution module engine room) via the CAN communication lines. The CPU (central processing unit) located in the IPDM E/R controls ground for the headlamp high and headlamp low relay coils. These relays direct power to the respective headlamps, which then illuminate. When the headlamp switch is OFF or in the 1ST position (parking lamps ON), the parking brake is released and the engine is running, the IPDM E/R de-energizes the headlamp relays and supplies ground to the daytime light relay 1 to actuate the daytime light function.

OUTLINE

Power is supplied at all times
- to headlamp high relay RH and LH (located in IPDM E/R)
- to headlamp low relay (located in IPDM E/R) and
- to ignition relay (located in IPDM E/R)
- through 15A fuse (No. 52, located in IPDM E/R) and
- through 20A fuse (No. 53, located in IPDM E/R)
- to CPU located in IPDM E/R,
- through 40A fusible link (letter **g** , located in fuse and fusible link box)
- to BCM terminal 70,
- through 10A fuse [No. 8, located in fuse block (J/B)]
- to BCM terminal 57,
- through 10A fuse [No. 13, located in fuse block (J/B)]
- to combination meter terminal 27,
- through 10A fuse (No. 26, located in fuse and fusible link box)
- to the daytime light relay 1.

With the ignition switch in the ON or START position, power is supplied
- to the ignition relay (located in IPDM E/R),
- through 10A fuse [No. 6, located in fuse block (J/B)]
- to BCM terminal 38,

• through 10A fuse [No. 3, located in fuse block (J/B)]
• to combination meter terminal 28.
With the ignition switch in the ACC or ON position, power is supplied
• through 10A fuse [No. 20, located in fuse block (J/B)]
• to BCM terminal 11.
Ground is supplied
• to BCM terminal 67 and
• to combination meter terminals 21, 22 and 23
• through grounds M57 and M61,
• to IPDM E/R terminals 39 and 59
• through grounds E15 and E24,

HEADLAMP OPERATION

Low Beam Operation

With the lighting switch in 2ND position, the BCM receives an input signal requesting the headlamps to illuminate. This input signal is communicated to the IPDM E/R via the CAN communication lines. The CPU located in the IPDM E/R controls the headlamp low relay coil, which when energized, directs power
• through 15A fuse (No. 41, located in IPDM E/R)
• through IPDM E/R terminal 54
• to daytime light relay 2 terminals 1 and 5 (energizing the relay),
• through daytime light relay 2 terminal 3
• to front combination lamp RH terminal 3, and
• through 15A fuse (No. 40, located in IPDM E/R)
• through IPDM E/R terminal 52
• to front combination lamp LH terminal 3.
Ground is supplied
• to front combination lamp LH terminal 2
• through grounds E15 and E24,
• to headlamp RH terminal 2 via
• daytime light relay 1 terminals 3 and 4
• through grounds E15 and E24.
With power and ground supplied, low beam headlamps illuminate.

High Beam/Flash-to-Pass Operation

With the lighting switch in 2ND position and high beam switch in the HIGH position, the BCM receives input signal requesting the headlamp high beams to illuminate. The flash-to-pass feature can be used any time and also sends a signal to the BCM. This input signal is communicated to the IPDM E/R and the combination meter via the CAN communication lines. The CPU located in the IPDM E/R controls the headlamp high relay coil, which when energized, directs power
• through 10A fuse (No. 34, located in IPDM E/R)
• through IPDM E/R terminal 56
• to front combination lamp RH terminal 1, and
• through 10A fuse (No. 35, located in IPDM E/R)
• through IPDM E/R terminal 55
• to front combination lamp LH terminal 1.
Ground is supplied
• to front combination lamp LH terminal 2
• through grounds E15 and E24, and
• to front combination lamp RH terminal 2 via
• daytime light relay 1 terminals 3 and 4
• through grounds E15 and E24.
With power and ground supplied, the high beam headlamps illuminate.
The BCM sends a signal to the combination meter requesting the high beam indicator lamp to turn ON.

Daytime Light System Operation

With the lighting switch in the OFF or 1ST position (parking lamps ON), the BCM receives inputs requesting the headlights off. If the parking brake is released and the engine is running, the BCM then sends a signal, via the CAN communication lines, requesting the IPDM E/R to activate the daytime light system. The CPU located in the IPDM E/R controls the daytime light relay 1 coil, which when energized, directs power
• from daytime light relay 1 terminal 3
• to front combination lamp RH terminal 2,
• through front combination lamp RH high beam terminal 1

- to IPDM E/R terminal 56,
- through 10A fuse (No. 34, located in IPDM E/R) and
- through both de-energized headlamp high relays
- to 10A fuse (No. 35, located in IPDM E/R),
- through IPDM E/R terminal 55
- to front combination lamp LH terminal high beam 1.

Ground is supplied

- to front combination lamp LH terminal 2
- through grounds E15 and E24,
- to daytime light relay 1 terminal 1
- through IPDM E/R terminal 6.

With power and ground supplied, high beam headlamps illuminate at reduced intensity.

COMBINATION SWITCH READING FUNCTION

Refer to BCS-3, "System Description" .

EXTERIOR LAMP BATTERY SAVER CONTROL

Refer to LT-72, "System Description" .

CAN Communication System Description

INFOID:0000000001704383

Refer to LAN-6, "System Description" .

Schematic

INFOID:0000000001704384

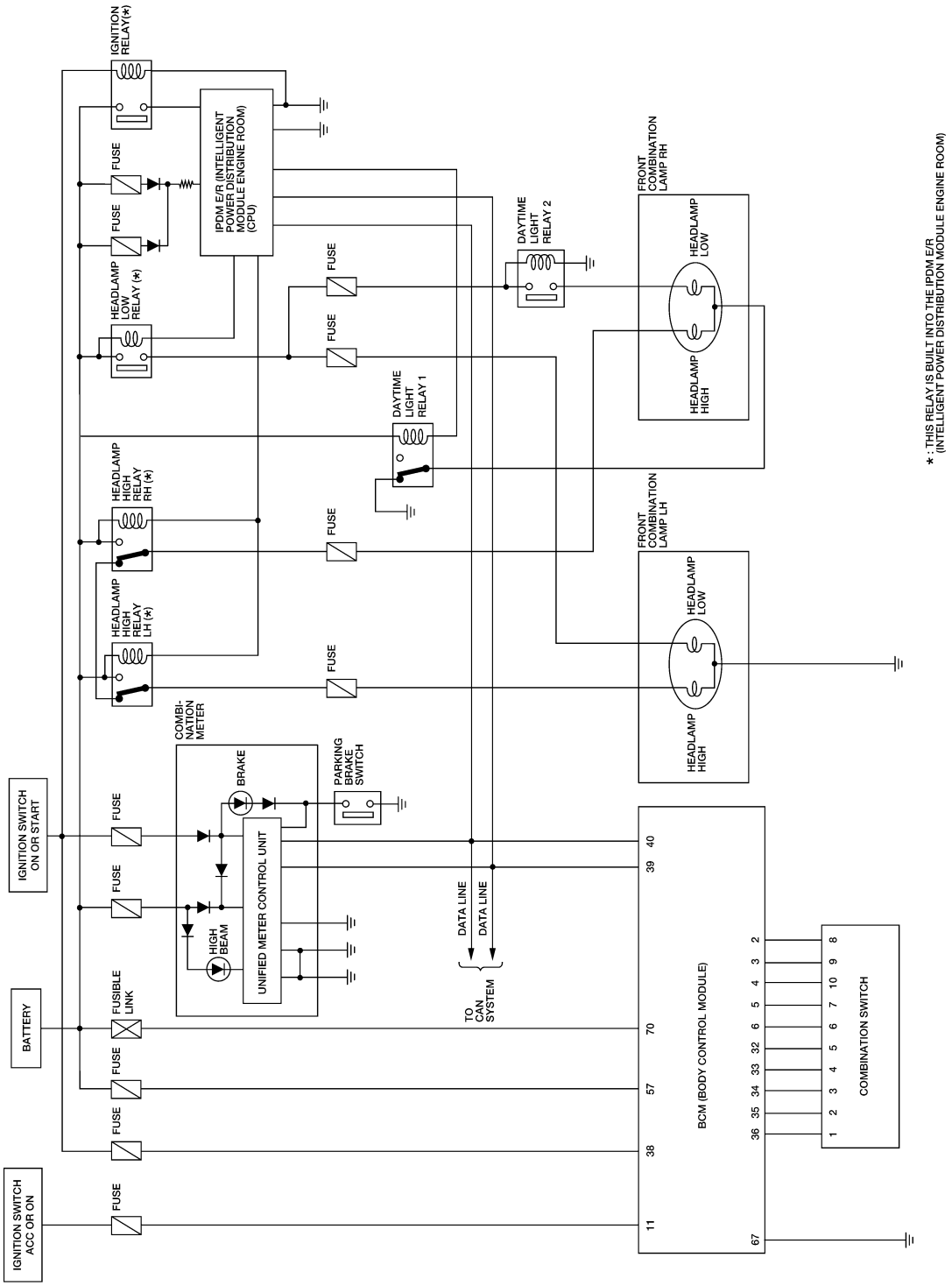

WKWA4972E

Wiring Diagram - DTRL -

INFOID:0000000001704385

LT-DTRL-01

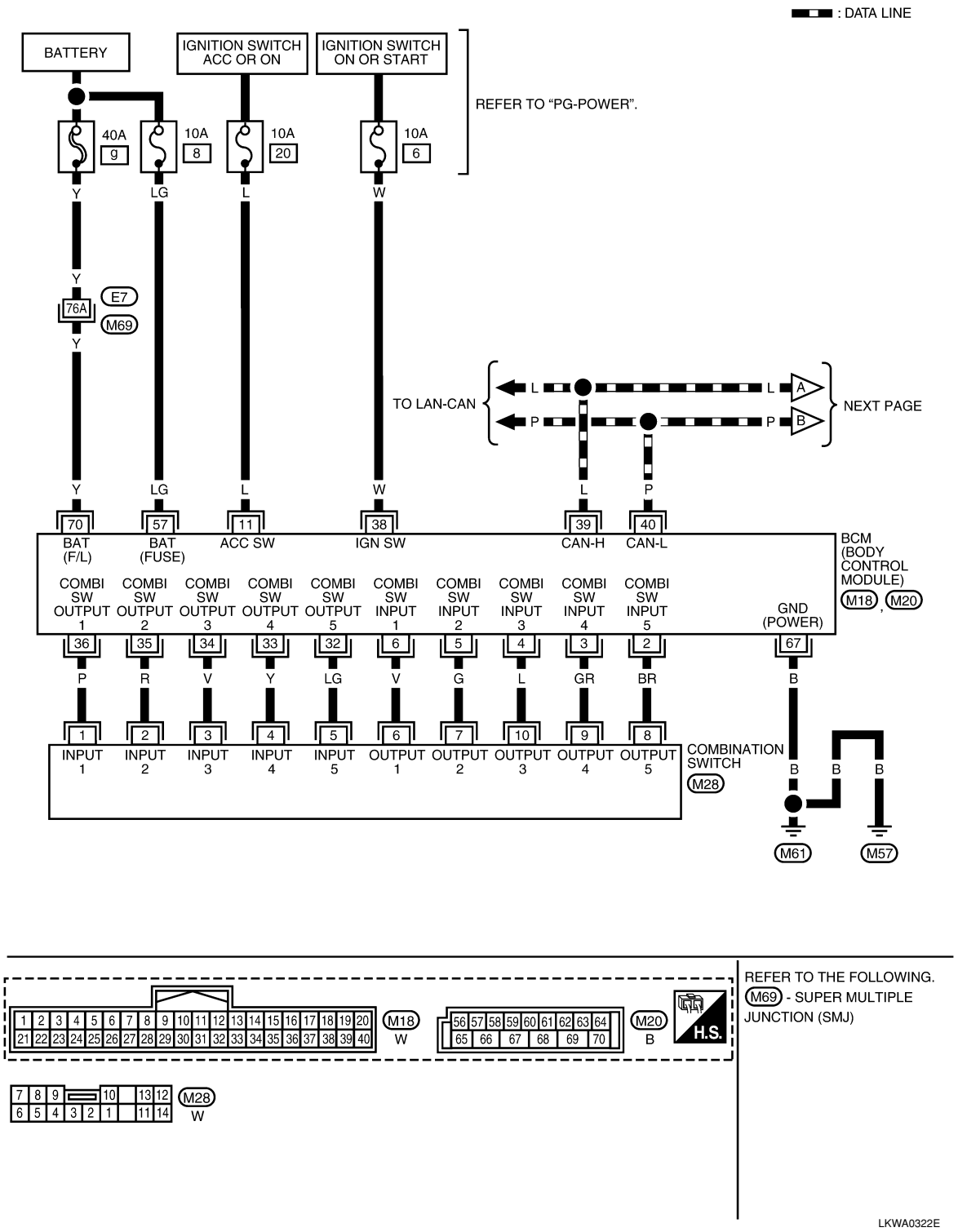

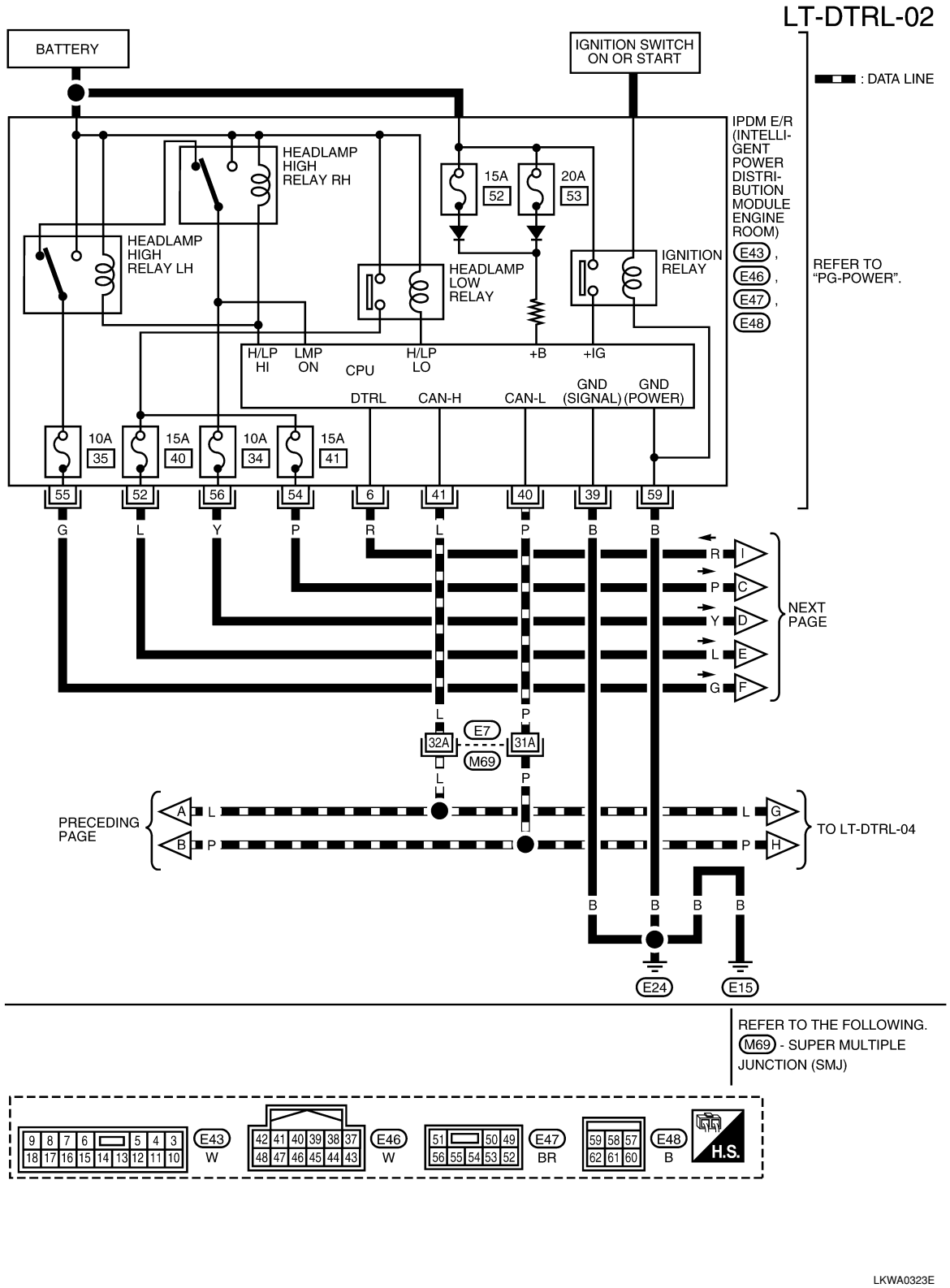
LT-DTRL-02
BATTERY
IGNITION SWITCH ON OR START
: DATA LINE
IPDM E/R (INTELLIGENT POWER DISTRIBUTION MODULE ENGINE ROOM)
E43, E46, E47, E48
REFER TO "PG-POWER".
HEADLAMP HIGH RELAY RH
HEADLAMP HIGH RELAY LH
HEADLAMP LOW RELAY
IGNITION RELAY
15A 52
20A 53
H/LP HI
LMP ON
CPU
H/LP LO
+B
+IG
DTRL
CAN-H
CAN-L
GND (SIGNAL)
GND (POWER)
10A 35
15A 40
10A 34
15A 41
55 52 56 54 6 41 40 39 59
G L Y P R L P B B
NEXT PAGE
32A E7 M69 31A
PRECEDING PAGE
TO LT-DTRL-04
E24 E15
REFER TO THE FOLLOWING.
M69 - SUPER MULTIPLE JUNCTION (SMJ)
E43 W
E46 W
E47 BR
E48 B
H.S.
LKWA0323E

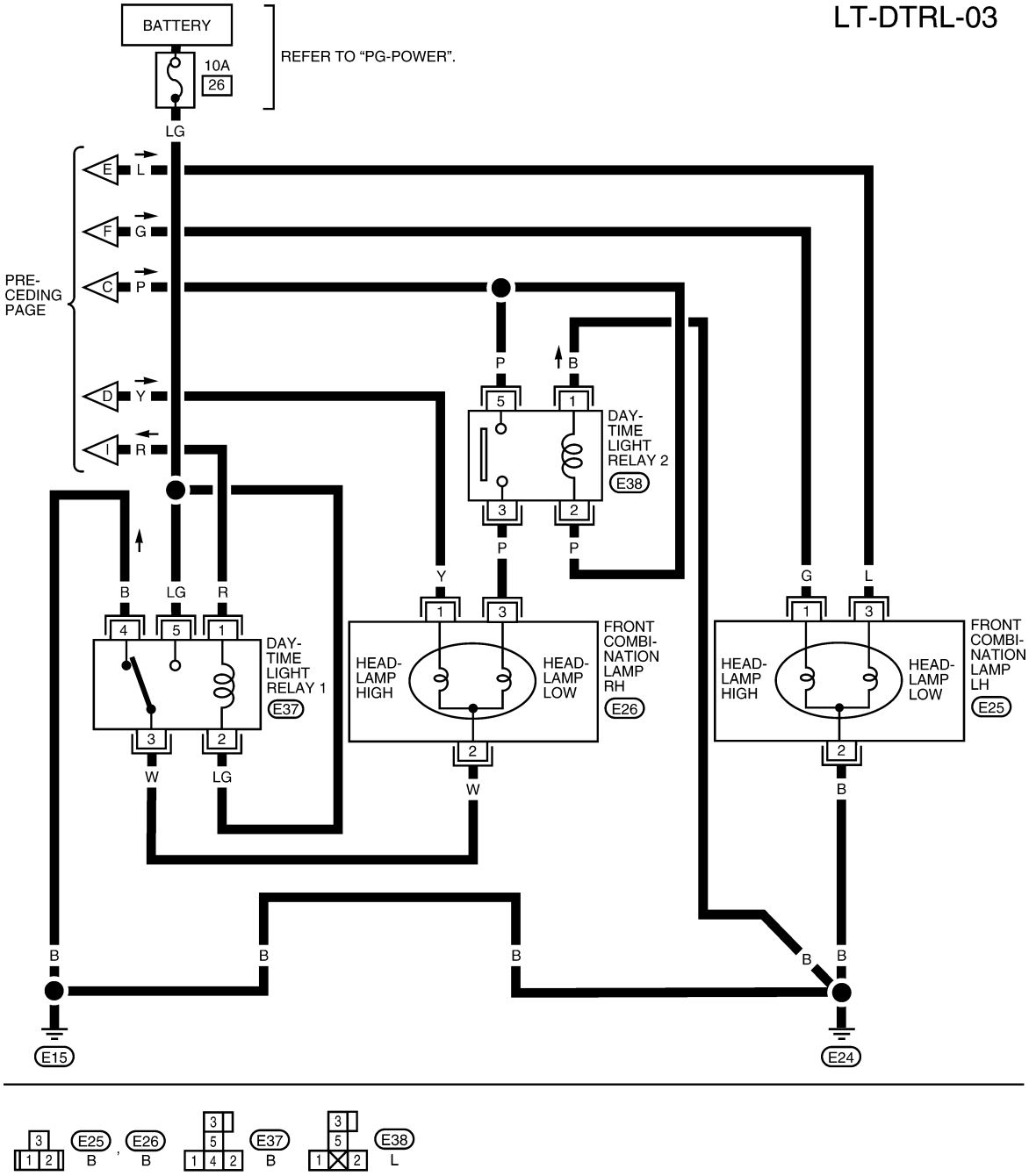
LT-DTRL-03
BATTERY
10A
26
REFER TO "PG-POWER".
LG
PRE-CEDING PAGE
E
L
F
G
C
P
D
Y
I
R
P
B
5
1
DAY-TIME LIGHT RELAY 2
E38
3
2
P
P
Y
G
L
B
LG
R
4
5
1
DAY-TIME LIGHT RELAY 1
E37
3
2
W
LG
1
3
HEAD-LAMP HIGH
HEAD-LAMP LOW
FRONT COMBI-NATION LAMP RH
E26
2
W
1
3
HEAD-LAMP HIGH
HEAD-LAMP LOW
FRONT COMBI-NATION LAMP LH
E25
2
B
B
B
B
B
B
E15
E24
E25
B
E26
B
E37
B
E38
L
LKWA0324E

LT-DTRL-04

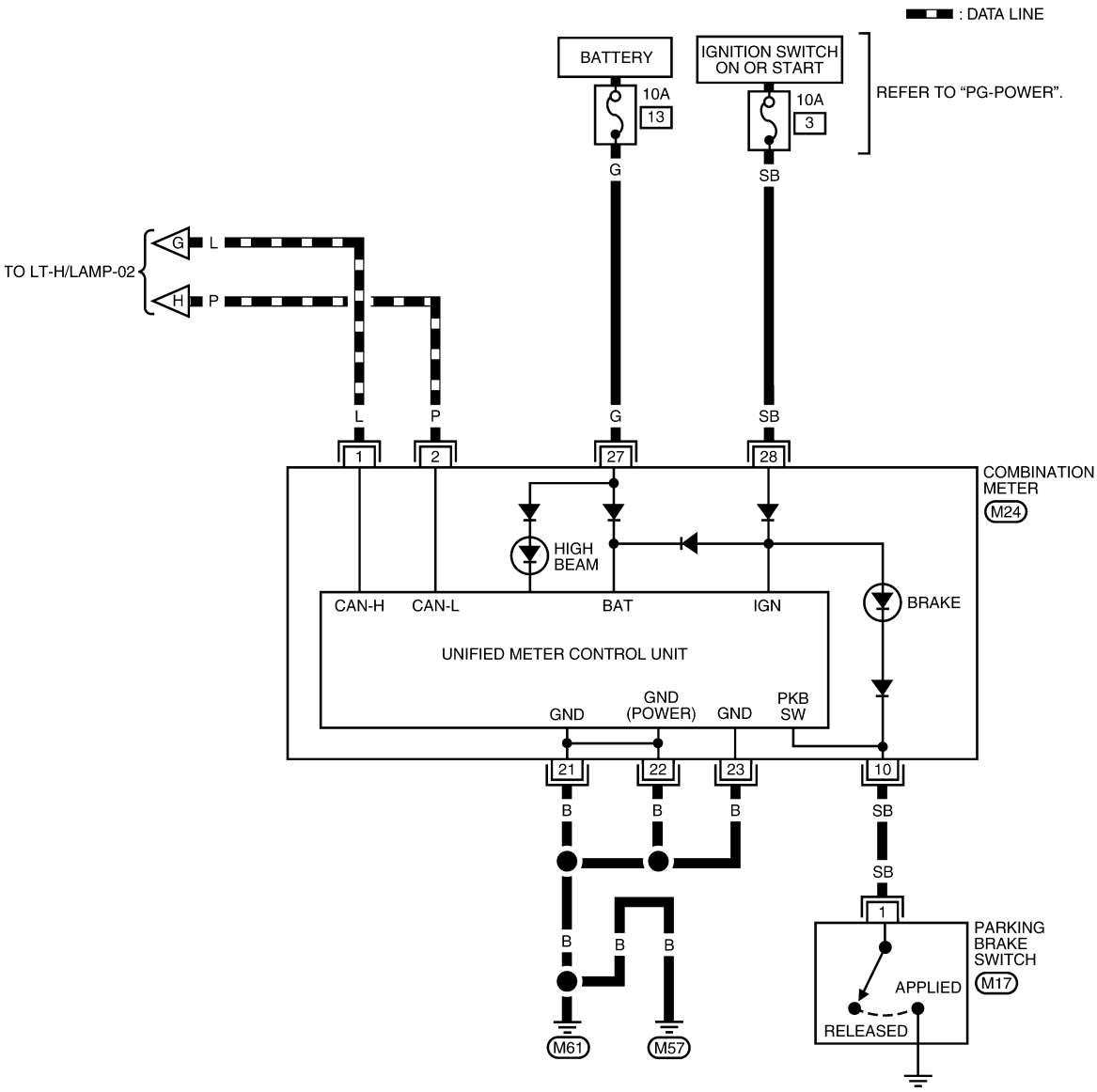

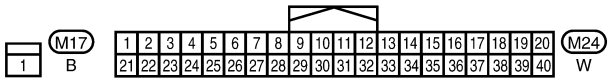

LKWA0325E

Terminal and Reference Value for BCM

INFOID:0000000001704386

Refer to BCS-11, "Terminal and Reference Value for BCM"

Terminal and Reference Value for IPDM E/R

INFOID:0000000001704387

Refer to PG-23, "Terminal and Reference Value for IPDM E/R" .

How to Perform Trouble Diagnosis

INFOID:0000000001704388

1. Confirm the symptom or customer complaint.
2. Understand operation, description and function description. Refer to LT-25, "System Description" .
3. Perform the Preliminary Check. Refer to LT-33, "Preliminary Check" .
4. Check symptom and repair or replace the cause of the malfunction.
5. Does the daytime light system operate normally? If YES, GO TO 6. If NO, GO TO 4.
6. INSPECTION END

Preliminary Check

INFOID:0000000001704389

CHECK BCM CONFIGURATION

1.CHECK BCM CONFIGURATION

Confirm BCM configuration for "DTRL" is set to "WITH". Refer to BCS-17, "Configuration" .

OK or NG

OK >> Continue preliminary check. Refer to BCS-15, "BCM Power Supply and Ground Circuit Inspection" .

NG >> Change BCM configuration for "DTRL" to "WITH". Refer to BCS-17, "Configuration" .

CHECK POWER SUPPLY AND GROUND CIRCUIT FOR BCM

Refer to BCS-15, "BCM Power Supply and Ground Circuit Inspection" .

CHECK POWER SUPPLY AND GROUND CIRCUIT FOR IPDM E/R

Refer to PG-25, "IPDM E/R Power/Ground Circuit Inspection" .

CONSULT-III Function (BCM)

INFOID:0000000001704390

Refer to LT-11, "CONSULT-III Function (BCM)" .

CONSULT-III Function (IPDM E/R)

INFOID:0000000001704391

Refer to LT-12, "CONSULT-III Function (IPDM E/R)" .

Daytime Light Control Does Not Operate Properly (High Beam Headlamps Operate Properly)

INFOID:0000000001704392

1.CHECK DAYTIME LIGHT RELAY 1 FUSE

Inspect daytime light relay fuse 10A fuse (No. 26, located in the fuse and fusible link box).

OK or NG

OK >> GO TO 2.

NG >> Repair harness.

2.CHECK DAYTIME LIGHT RELAY 1 POWER SUPPLY CIRCUIT

1. Turn ignition switch OFF.
2. Remove daytime light relay 1.
3. Check voltage between daytime light relay 1 harness connector E37 terminals 2, 5 and ground.

2, 5 - Ground : Battery voltage should exist.

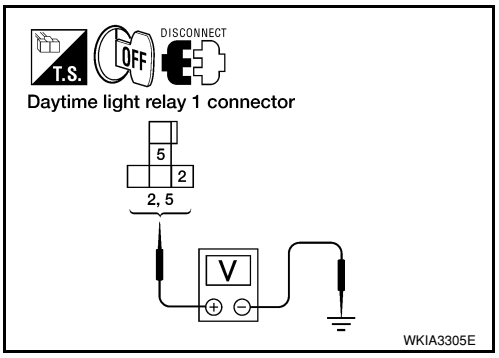

OK or NG

OK >> GO TO 3.

NG >> Repair harness or connector.

3.CHECK DAYTIME LIGHT RELAY 1

1. Apply battery voltage to daytime light relay 1 terminal 2 and supply ground to terminal 1.

2. Check continuity between terminals 3 and 5.

3 - 5 : Continuity should exist.

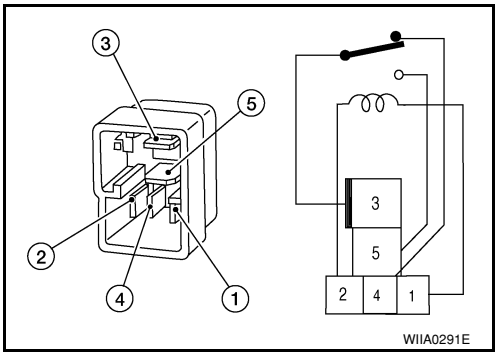

OK or NG

OK >> GO TO 4.
NG >> Replace daytime light relay 1.

4. CHECK INPUT SIGNAL

1. Connect daytime light relay 1.
2. Apply parking brake and start engine. Headlamp switch OFF.
3. Select "IPDM E/R" on CONSULT-III. With DATA MONITOR, make sure "DTRL REQ" turns OFF-ON linked with operation of parking brake switch.

Parking brake ON : DTRL REQ OFF
Parking brake OFF : DTRL REQ ON

OK or NG

OK >> GO TO 6.
NG >> GO TO 5.

5. CHECKING CAN COMMUNICATIONS

Select "BCM" on CONSULT-III and perform self-diagnosis for BCM.

Displayed self-diagnosis results

NO DTC>>Replace BCM. Refer to BCS-18, "Removal and Installation of BCM" .
CAN COMM CIRCUIT>> Check BCM CAN communication system. Refer to LAN-15, "Trouble Diagnosis Flow Chart" .

6. CHECK DAYTIME LIGHT RELAY 1 CONTROL CIRCUIT

1. Turn ignition switch OFF.
2. Disconnect daytime light relay 1 connector E37.
3. Disconnect IPDM E/R connector E43.
4. Check continuity between IPDM E/R connector E43 (A) terminal 6 and daytime light relay 1 connector E37 (B) terminal 1.

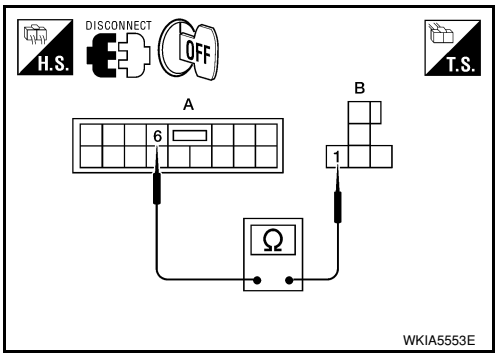

A		B		Continuity
Connector	Terminal	Connector	Terminal	Yes
E43	6	E37	1	

OK or NG

OK >> Replace the IPDM E/R. Refer to PG-26, "Removal and Installation of IPDM E/R" .
NG >> Repair harness or connector.

Aiming Adjustment

INFOID:0000000001704393

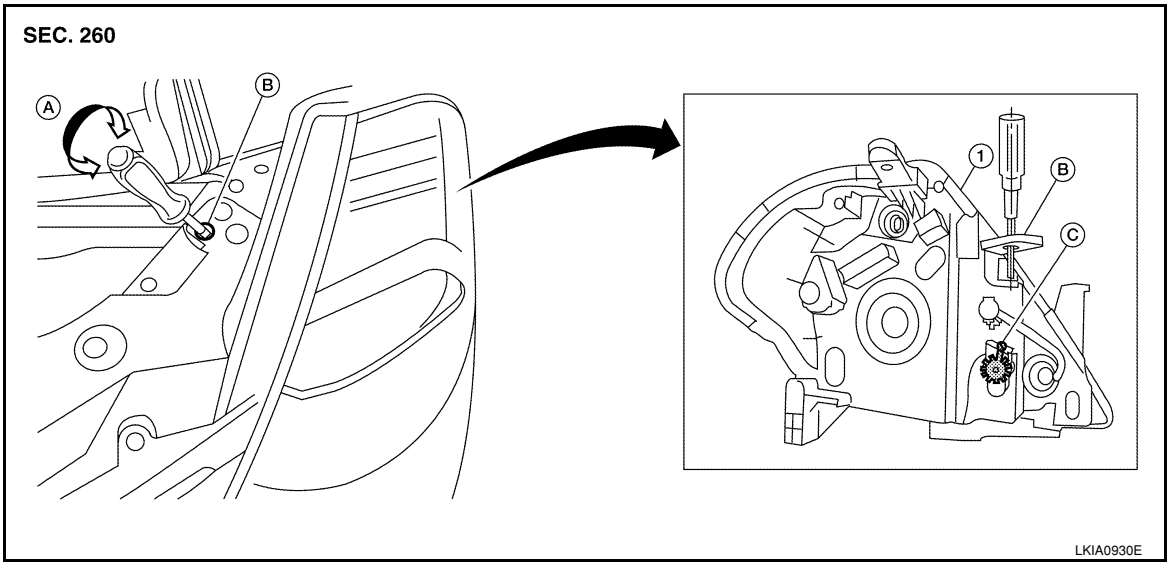

1. Headlamp
A. Inner and outer adjustment
B. Adjusting screw access hole
C. Adjusting screw

PREPARATION BEFORE ADJUSTING

Before performing aiming adjustment, check the following.

1. Keep all tires inflated to correct pressures.
2. Place vehicle on level surface.
3. Set that there is no-load in vehicle other than the driver (or equivalent weight placed in driver's position). Coolant, engine oil filled up to correct level and full fuel tank, spare tire, jack and tools are properly stowed.

LOW BEAM AND HIGH BEAM

1. Turn headlamp low beam ON.
2. Use adjusting screw to perform aiming adjustment.
3. Insert the tool through the adjusting screw access hole to avoid damage to the adjusting screw.

ADJUSTMENT USING AN ADJUSTMENT SCREEN (LIGHT/DARK BORDERLINE)

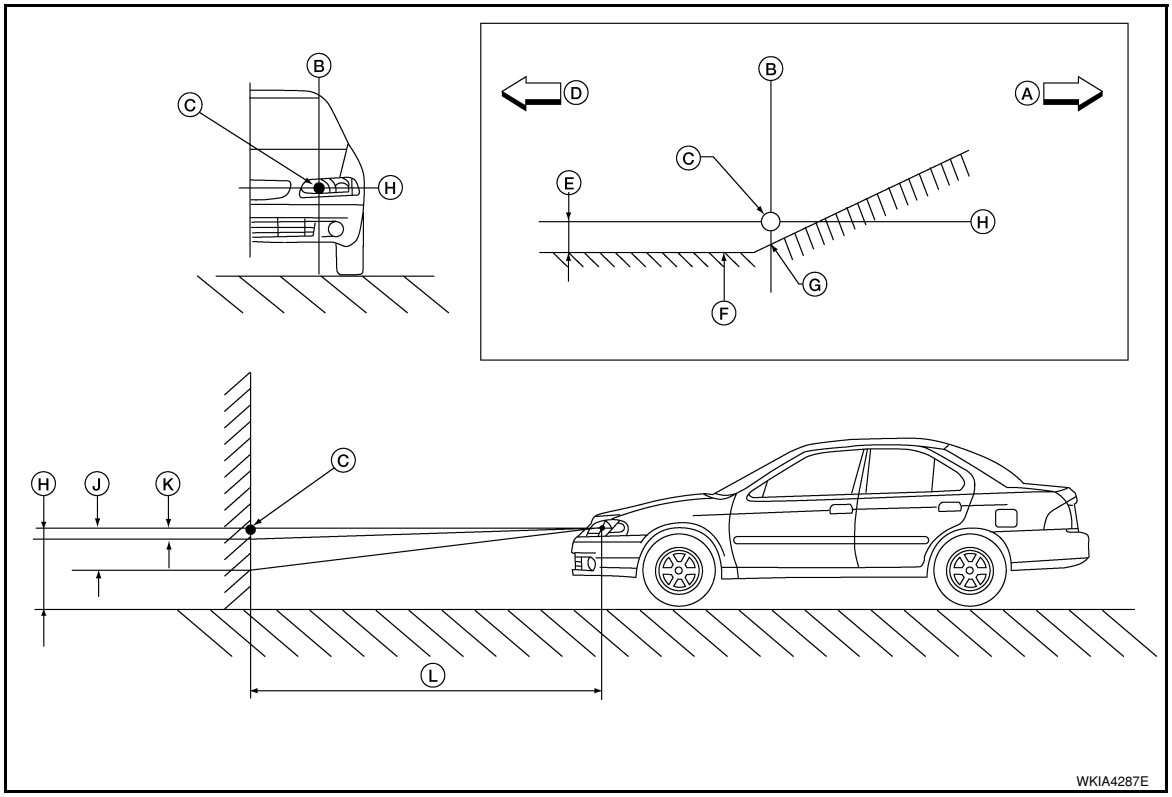

A.	Right	B.	Vertical center line of headlamp	C.	Horizontal aiming center line of headlamp
D.	Left	E.	Vertical aiming cutoff point	F.	Cutoff line for vertical aiming evaluation
G.	Acceptable vertical cutoff setting at horizontal aiming point	H.	Horizontal center line of headlamp	J.	Maximum acceptable vertical aiming point
K.	Minimum acceptable vertical aiming point	L.	Aiming distance from center of headlamp to aiming screen		

- Aim each headlamp individually and ensure other headlamp beam pattern is blocked from screen.
- For vertical headlamp aiming, adjust headlamp until beam pattern is positioned per specified dimensions.

Description	Halogen Headlamp
Vertical aiming cutoff point (E)	53.2 mm (2.094 in)
Minimum acceptable vertical aiming point (K)	13.3 mm (0.52 in)
Maximum acceptable vertical aiming point (J)	93.1 mm (3.67 in)
Aiming distance from center of headlamp to aiming screen (L)	7.62 m (25 ft)

Bulb Replacement

INFOID:0000000001704394

CAUTION:
After installing bulb, be sure to install plastic cap and bulb socket securely to ensure watertightness.

HEADLAMP (HIGH/LOW)

1. Turn lighting switch OFF.
2. Remove the headlamp. Refer to LT-23, "Removal and Installation".
3. Remove back cover.
4. Unlock retaining spring and remove bulb from headlamp.

PARKING (CLEARANCE) LAMP

1. Turn lighting switch OFF.

2. Remove the headlamp. Refer to LT-23, "Removal and Installation".
3. Turn bulb socket counterclockwise and unlock it.
4. Remove bulb from its socket.

FRONT TURN SIGNAL LAMP

1. Turn lighting switch OFF.
2. Remove the headlamp. Refer to LT-23, "Removal and Installation".
3. Turn bulb socket counterclockwise and unlock it.
4. Remove bulb from its socket.

Removal and Installation

INFOID:0000000001704395

REMOVAL

1. Disconnect the negative battery terminal.
2. Remove front bumper fascia. Refer to EI-14.
3. Remove headlamp bolts (A).
4. Pull headlamp (1) toward the vehicle front, disconnect connector, and remove headlamp.

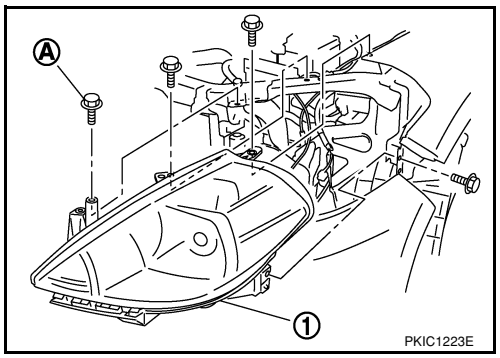

INSTALLATION

Installation is in the reverse order of removal.

- After installation, perform aiming adjustment. Refer to LT-35, "Aiming Adjustment".

Disassembly and Assembly

INFOID:0000000001704396

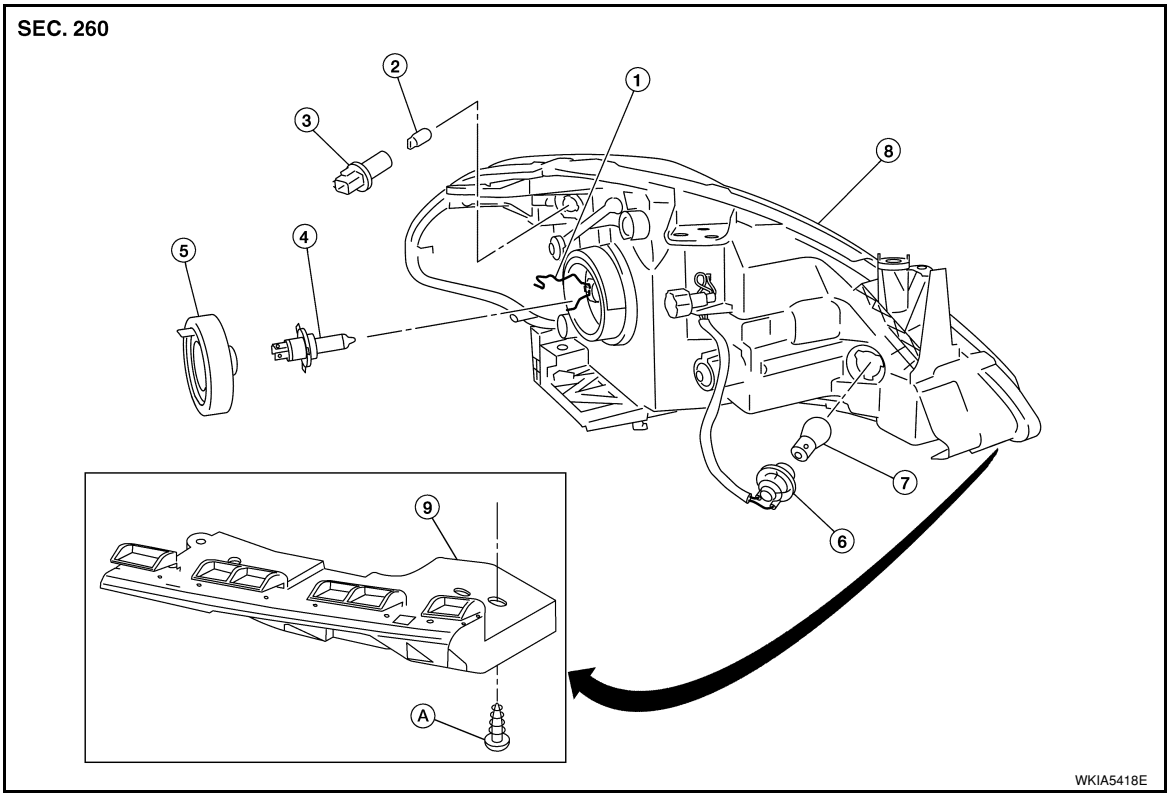

1. Retaining spring
2. Parking (clearance) lamp bulb
3. Parking (clearance) lamp bulb socket
4. Halogen bulb (High/Low)
5. Back cover
6. Front turn signal lamp bulb socket
7. Front turn signal lamp bulb
8. Headlamp housing assembly
9. Bumper stay

A. Screw

DISASSEMBLY

1. Remove back cover.
2. Unlock retaining spring and remove bulb (High/Low).
3. Turn parking (clearance) lamp bulb socket counterclockwise and unlock it.
4. Remove parking (clearance) lamp bulb from its socket.
5. Turn front turn signal lamp bulb socket counterclockwise and unlock it.
6. Remove front turn signal lamp bulb from its socket.
7. Remove the bumper stay.

ASSEMBLY

Assembly is in the reverse order of disassembly.

CAUTION:

- **After installing bulb, be sure to install plastic cap securely to insure water tight seal.**

FRONT FOG LAMP

Component Parts and Harness Connector Location

INFOID:0000000001704397

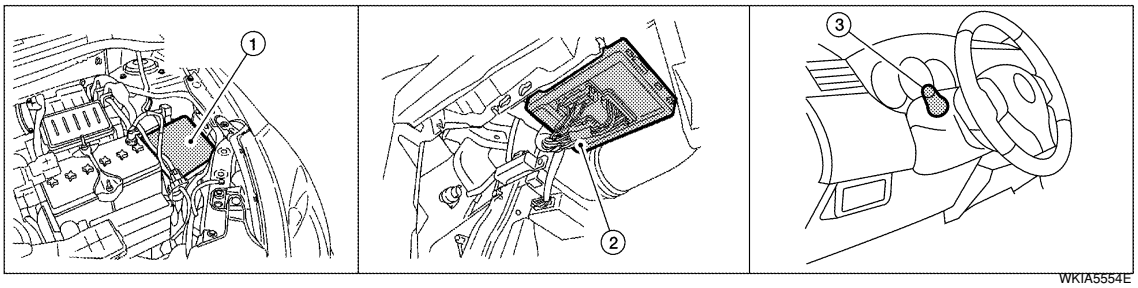

1. IPDM E/R E46, E47 and E48
2. BCM M18 and M20 (viewed with glove box removed)
3. Combination switch (lighting switch) M28

System Description

INFOID:0000000001704398

The front fog lamps are controlled by lighting switch inputs to the BCM (body control module). The lighting switch must be in the 1ST or 2ND position with the high beams OFF before the BCM will request the IPDM E/R (intelligent power distribution module engine room) to turn the front fog lamps on. The BCM requests the front fog lamps over the CAN communication lines to the IPDM E/R. The CPU (central processing unit) of the IPDM E/R controls the front fog lamp relay coil ground. When energized, the relay directs power to the front fog lamps.

OUTLINE

Power is supplied at all times:
- to front fog lamp relay (located in IPDM E/R),
- to ignition relay (located in IPDM E/R),
- through 15A fuse (No. 52, located in IPDM E/R) and
- through 20A fuse (No. 53, located in IPDM E/R)
- to CPU located in IPDM E/R,
- through 40A fusible link (letter **g** , located in the fuse and fusible link box)
- to BCM terminal 70,
- through 10A fuse [No. 8, located in fuse block (J/B)]
- to BCM terminal 57,
- through 10A fuse [No. 13, located in fuse block (J/B)]
- to combination meter terminal 27.

With the ignition switch in the ON or START position, power is supplied:
- to ignition relay (located in IPDM E/R),
- through 10A fuse [No. 6, located in fuse block (J/B)]
- to BCM terminal 38.

With the ignition switch in the ACC or ON position, power is supplied
- through 10A fuse [No. 20, located in fuse block (J/B)]
- to BCM terminal 11.

Ground is supplied
- to BCM terminal 67
- through grounds M57 and M61,
- to IPDM E/R terminals 39 and 59
- through grounds E15 and E24.

FOG LAMP OPERATION

The front fog lamp switch is built into the lighting switch. The lighting switch must be in 1ST position or 2ND position and front fog lamp switch must be ON position for front fog lamp operation. The fog lamp will not operate with the high beam headlamps ON.

When the front fog lamp switch is in the ON position, the BCM sends a request, via the CAN communication lines, to the CPU of the IPDM E/R to ground the coil side of the front fog lamp relay. The front fog lamp relay then directs power
- through 15A fuse (No. 56, located in IPDM E/R)

- through IPDM E/R terminal 50
- to front fog lamp LH terminal 1, and
- through IPDM E/R terminal 51
- to front fog lamp RH terminal 1.

Ground is supplied

- to front fog lamp terminal 2,
- through grounds E15 and E24.

With power and grounds supplied, front fog lamps illuminate.

COMBINATION SWITCH READING FUNCTION

Refer to BCS-3, "System Description" .

EXTERIOR LAMP BATTERY SAVER CONTROL

Refer to LT-72, "System Description" .

CAN Communication System Description

INFOID:0000000001704399

Refer to LAN-6, "System Description" .

Wiring Diagram - F/FOG -

INFOID:0000000001704400

LT-F/FOG-01

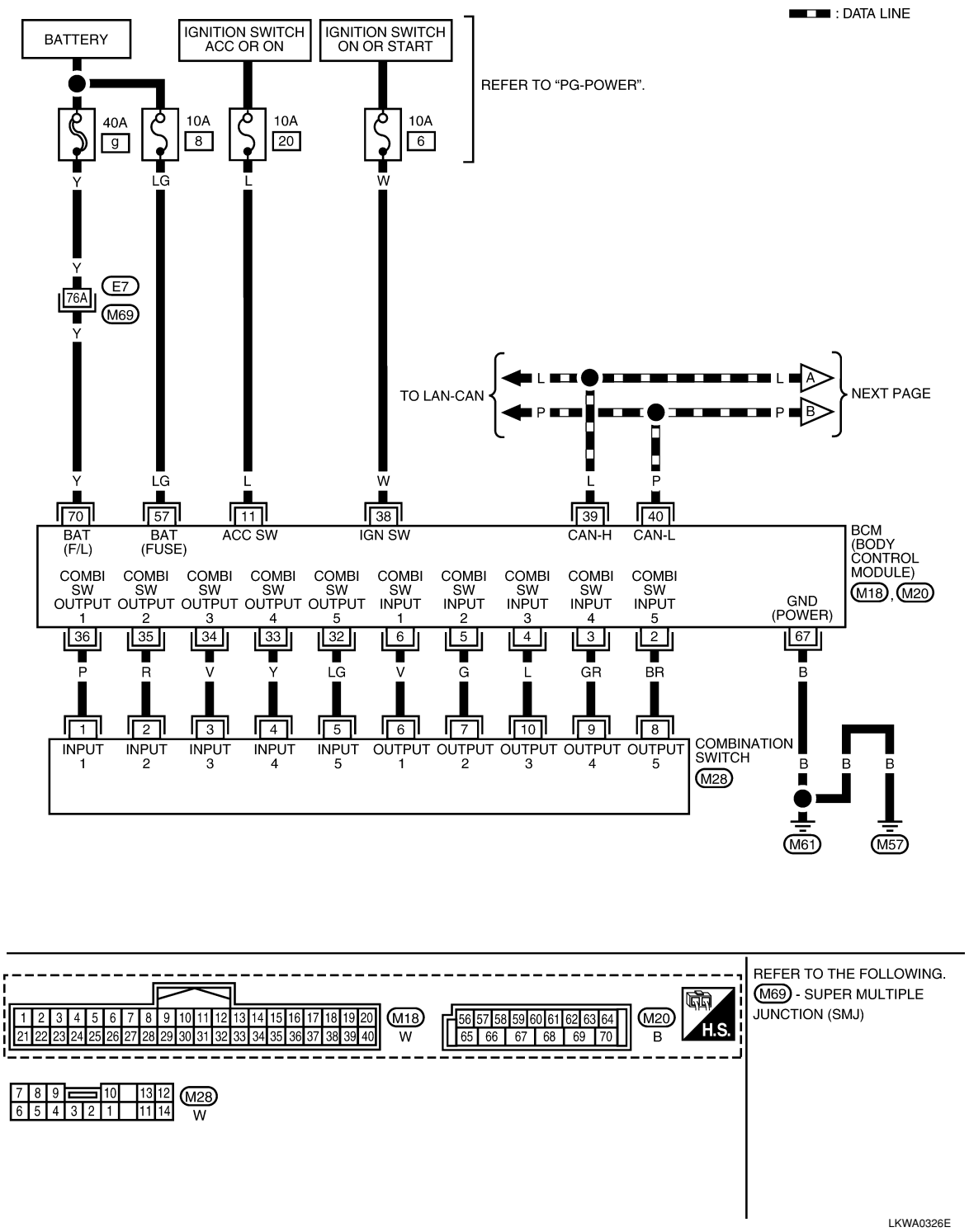

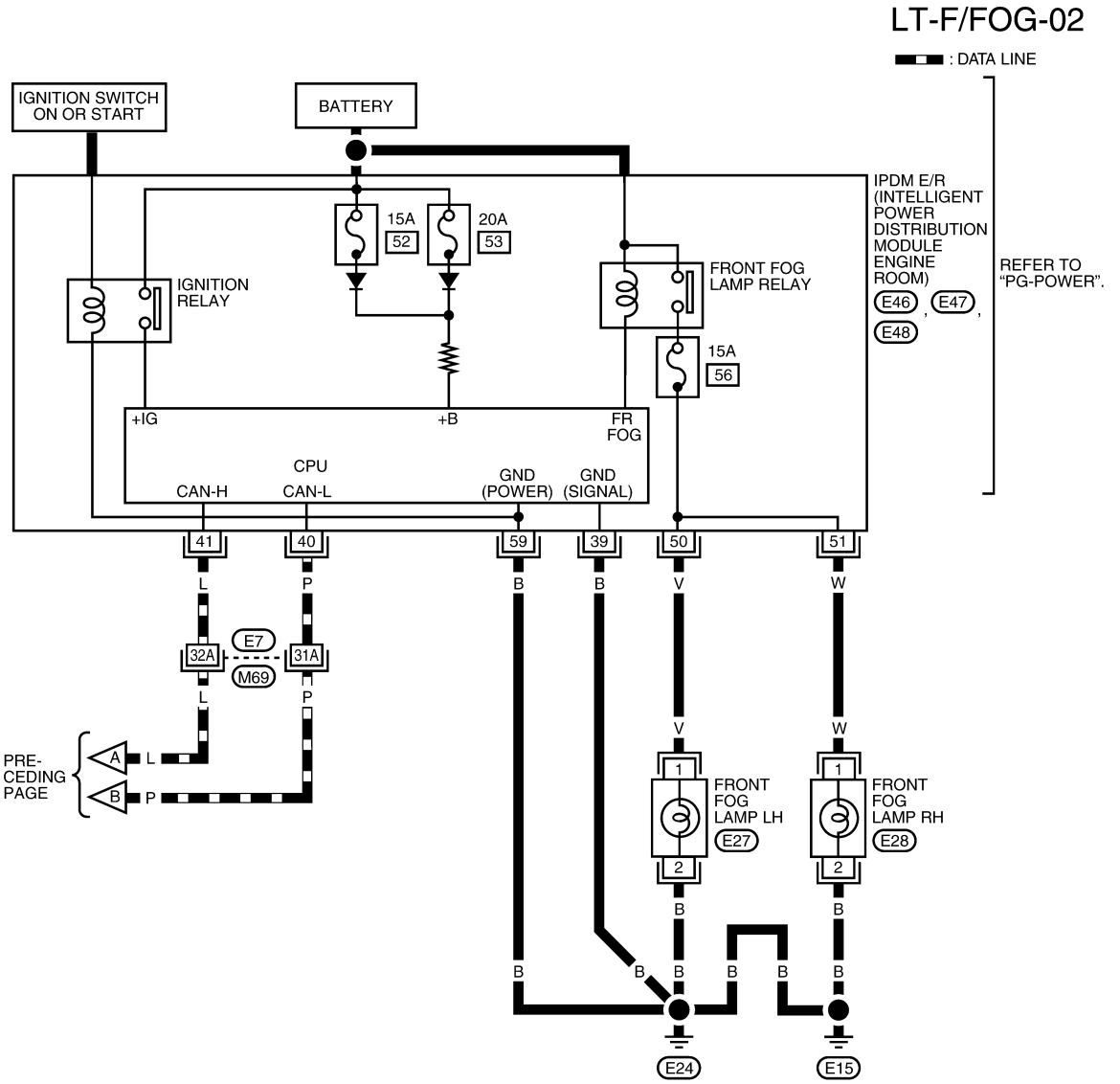

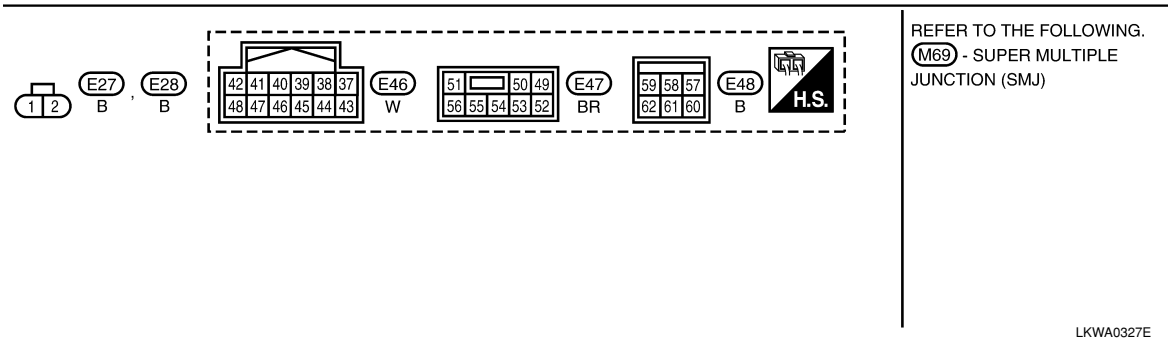

Terminal and Reference Value for BCM

INFOID:0000000001704401

Refer to BCS-11, "Terminal and Reference Value for BCM" .

Terminal and Reference Value for IPDM E/R

INFOID:0000000001704402

Refer to PG-23, "Terminal and Reference Value for IPDM E/R" .

How to Proceed with Trouble Diagnosis

INFOID:0000000001704403

1. Confirm the symptom or customer complaint.
2. Understand operation description and function description. Refer to LT-39, "System Description" .
3. Perform the Preliminary Check. Refer to LT-43, "Preliminary Check" .
4. Check symptom and repair or replace the cause of the malfunction.
5. Do the front fog lamps operate normally? If YES, GO TO 6. If NO, GO TO 4.
6. INSPECTION END.

Preliminary Check

INFOID:0000000001704404

CHECK POWER SUPPLY AND GROUND CIRCUIT FOR BCM
Refer to BCS-15, "BCM Power Supply and Ground Circuit Inspection" .

CHECK POWER SUPPLY AND GROUND CIRCUIT FOR IPDM E/R
Refer to PG-25, "IPDM E/R Power/Ground Circuit Inspection" .

CONSULT-III Function (BCM)

INFOID:0000000001704405

Refer to BCS-16, "CONSULT-III Function (BCM)" .

CONSULT-III Function (IPDM E/R)

INFOID:0000000001704406

Refer to PG-17, "CONSULT-III Function (IPDM E/R)" .

Front Fog lamps Do Not Illuminate (Both Sides)

INFOID:0000000001704407

1. INSPECT FOG LAMP FUSE

Inspect fog lamp 15A fuse No. 56 in IPDM E/R.

OK or NG

OK >> GO TO 2.
NG >> Repair harness.

2. CHECK COMBINATION SWITCH INPUT SIGNAL

1. Select “BCM” on CONSULT-III. Select “HEAD LAMP” on “SELECT TEST ITEM” screen.
2. Select “DATA MONITOR” on “SELECT DIAG MODE” screen. Make sure that “FR FOG SW” turns ON-OFF linked with operation of fog lamp switch.

When fog lamp switch is ON : FR FOG SW ON

With CONSULT-III
Select “BCM” on CONSULT-III. With “HEAD LAMP” data monitor, make sure “FR FOG SW” turns ON-OFF linked with operation of front fog lamp switch.

Without CONSULT-III
Refer to LT-63, "Combination Switch Inspection" .

OK or NG

OK >> GO TO 3.
NG >> Check combination switch (lighting switch). Refer to LT-63, "Combination Switch Inspection" .

3. FOG LAMP ACTIVE TEST

With CONSULT-III
1. Select “IPDM E/R” on CONSULT-III. Select “ACTIVE TEST” on “SELECT DIAG MODE” screen.
2. Select “EXTERNAL LAMPS” on “SELECT TEST ITEM” screen.
3. Touch “FOG” screen.
4. Make sure front fog lamp operates.

Front fog lamp should operate.

Without CONSULT-III

1. Start auto active test. Refer to PG-19, "Auto Active Test" .
2. Make sure front fog lamp operates.

Front fog lamp should operate.

OK or NG

OK >> GO TO 4.
NG >> GO TO 5.

4. CHECK IPDM E/R

1. Select “IPDM E/R” on CONSULT-III. Select “DATA MONITOR” on “SELECT DIAG MODE” screen.
2. Make sure “FR FOG REQ” turns ON when front fog lamp switch is in ON position.

When front fog lamp switch is ON position : FR FOG REQ ON

OK or NG

OK >> Replace IPDM E/R. Refer to PG-26, "Removal and Installation of IPDM E/R" .
NG >> Replace BCM. Refer toBCS-18, "Removal and Installation of BCM" .

5. CHECK FOG LAMP INPUT SIGNAL

With CONSULT-III

1. Turn ignition switch OFF.
2. Disconnect front fog lamp connector.
3. Select “IPDM E/R” on CONSULT-III, and select “ACTIVE TEST” on “SELECT DIAG MODE” screen.
4. Select “EXTERNAL LAMPS” on “SELECT TEST ITEM” screen.
5. Touch “FOG” screen.
6. When front fog lamp relay is operating, check voltage between front fog lamp harness connector and ground.

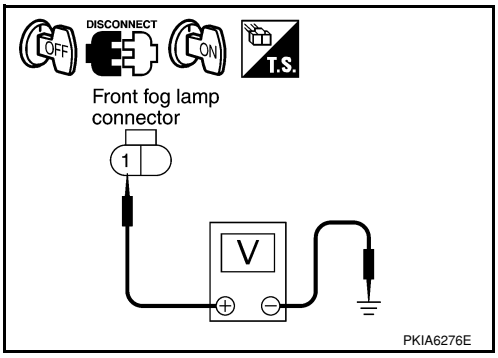

(+)		(–)	Voltage
Front fog lamp connector	Terminal		
RH	E28	1	Ground	Battery voltage
LH	E27			

Without CONSULT-III

1. Turn ignition switch OFF.
2. Disconnect front fog lamp connector.
3. Start auto active test. Refer to PG-19, "Auto Active Test" .
4. When front fog lamp relay is operating, check voltage between front fog lamp harness connector and ground.

(+)		(–)	Voltage
Front fog lamp connector	Terminal		
RH	E28	1	Ground	Battery voltage
LH	E27			

OK or NG

OK >> GO TO 7.
NG >> GO TO 6.

6. CHECK FOG LAMP CIRCUIT

1. Turn ignition switch OFF.
2. Disconnect IPDM E/R connector.

3. Check continuity between IPDM E/R harness connector (A) and front fog lamp harness connector (B).

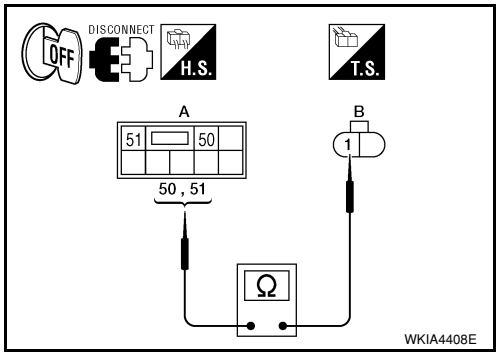

Circuit	A		B		Continuity
	Connector	Terminal	Connector	Terminal	
RH	E47	51	E28	1	Yes
LH		50	E27		

OK or NG

OK >> Replace IPDM E/R. Refer to PG-26, "Removal and Installation of IPDM E/R" .

NG >> Repair harness or connector.

7. CHECK FOG LAMP GROUND

1. Check continuity between front fog lamp harness connector and ground.

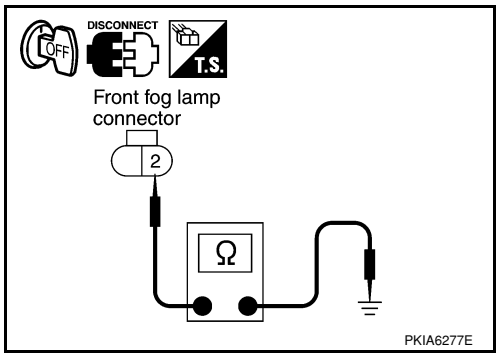

Front fog lamp connector		Terminal	Ground	Continuity
RH	E28	2		Yes
LH	E27			

OK or NG

OK >> Check front fog lamp bulbs.

NG >> Repair harness or connector.

Front Fog Lamp Does Not Illuminate (One Side)

INFOID:0000000001704408

1. CHECK BULB

Check bulb of lamp which does not illuminate.

OK or NG

OK >> GO TO 2.

NG >> Replace front fog lamp bulb.

2. CHECK FOG LAMP CIRCUIT

1. Turn ignition switch OFF.
2. Disconnect IPDM E/R connector and front fog lamp connector.
3. Check continuity between IPDM E/R harness connector (A) and front fog lamp harness connector (B).

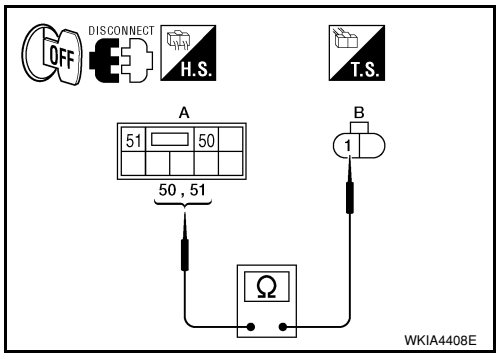

Circuit	A		B		Continuity
	Connector	Terminal	Connector	Terminal	
RH	E47	51	E28	1	Yes
LH		50	E27		

OK or NG

OK >> GO TO 3.

NG >> Repair harness or connector.

3. CHECK FOG LAMP GROUND

1. Check continuity between front fog lamp harness connector and ground.

Front fog lamp connector		Terminal		Continuity
RH	E28	2	Ground	Yes
LH	E27			

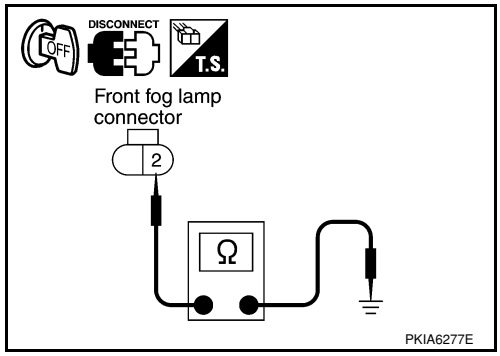

OK or NG

OK >> Replace IPDM E/R. Refer to PG-26, "Removal and Installation of IPDM E/R" .

NG >> Repair harness or connector.

Aiming Adjustment

INFOID:0000000001704409

The front fog lamp is a semi-sealed beam type which uses a replaceable halogen bulb. Before performing aiming adjustment, make sure of the following.

- Keep all tires inflated to correct pressure.
- Place vehicle on level surface.
- Set that there is no-load in vehicle other than the driver (or equivalent weight placed in driver's position). Coolant, engine oil filled up to correct level and full fuel tank, spare tire, jack and tools are properly stowed.

Adjust aiming in the vertical direction by turning the adjusting screw (A).

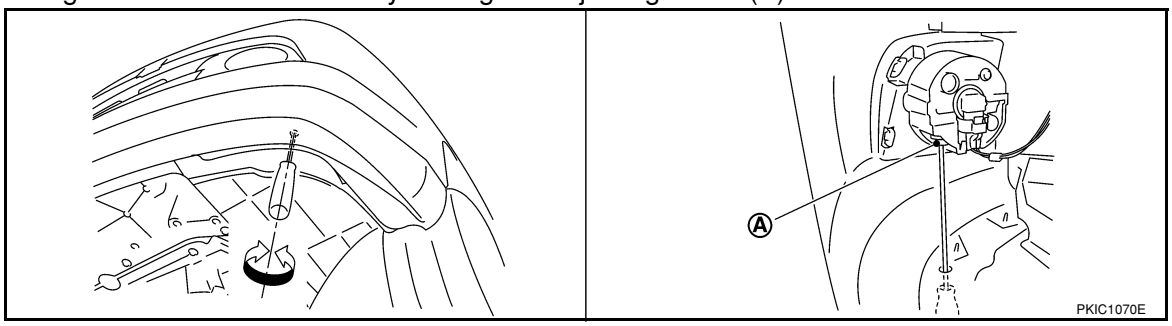

1. Set the distance (C) between the screen and the center of front fog lamp lens (E) as shown.
2. Turn front fog lamps (1) to ON.
3. Adjust front fog lamps using adjusting screw so that the top edge of the high intensity zone (A) is as shown.

Aiming distance from center of fog lamp to screen (C)	25,000 mm (984.3 in)
Foglamp beam width (D)	870 mm (34.3 in)
Horizontal distance from ground to bottom edge of high intensity zone (B)	220 mm (8.7 in)
Horizontal distance from bottom edge to top edge of high intensity zone (A)	21.75 mm (0.9 in)

NOTE:
When performing adjustment, if necessary, cover the headlamps and opposite front fog lamp.

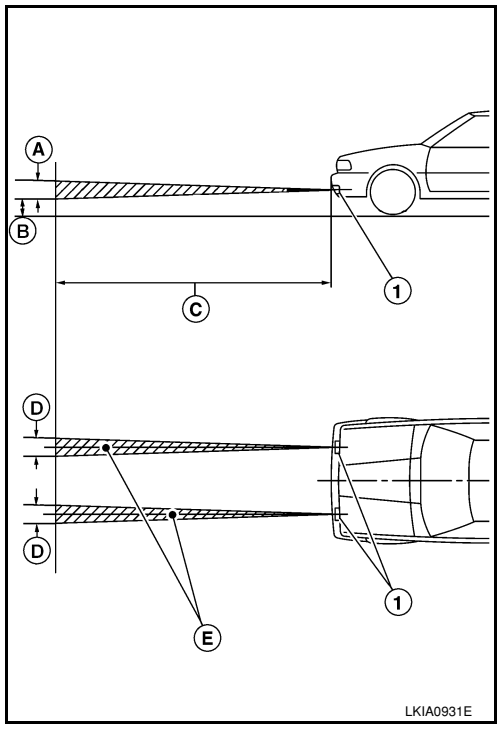

Bulb Replacement

INFOID:0000000001704410

1. Turn lighting switch OFF.
2. Turn off the fender protector (front) to obtain work space between the fender protector and fender.
3. Disconnect front fog lamp connector (1).
4. Turn bulb socket (2) counterclockwise unlock and remove it.
5. Remove bulb from its socket.

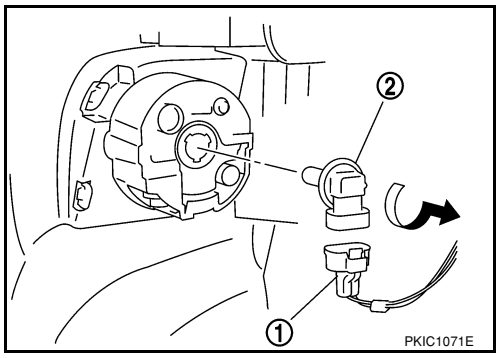

Removal and Installation

INFOID:0000000001704411

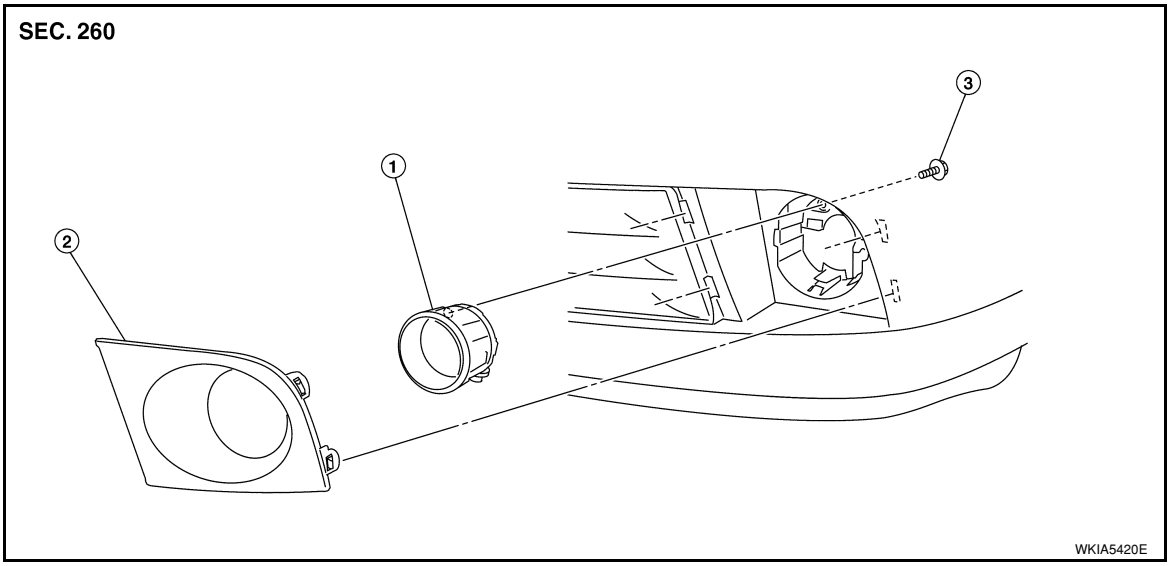

1. Front fog lamp
2. Front bumper finisher
3. Bolt

REMOVAL

1. Turn over the fender protector and undercover to obtain work space between the fender protector and fender.
2. Disconnect front fog lamp connector.
3. Remove pawl, and front bumper finisher from front bumper.
4. Remove bolt and remove front fog lamp from bracket.

INSTALLATION

Installation is in the reverse order of removal.

TURN SIGNAL AND HAZARD WARNING LAMPS

Component Parts and Harness Connector Location

INFOID:0000000001704412

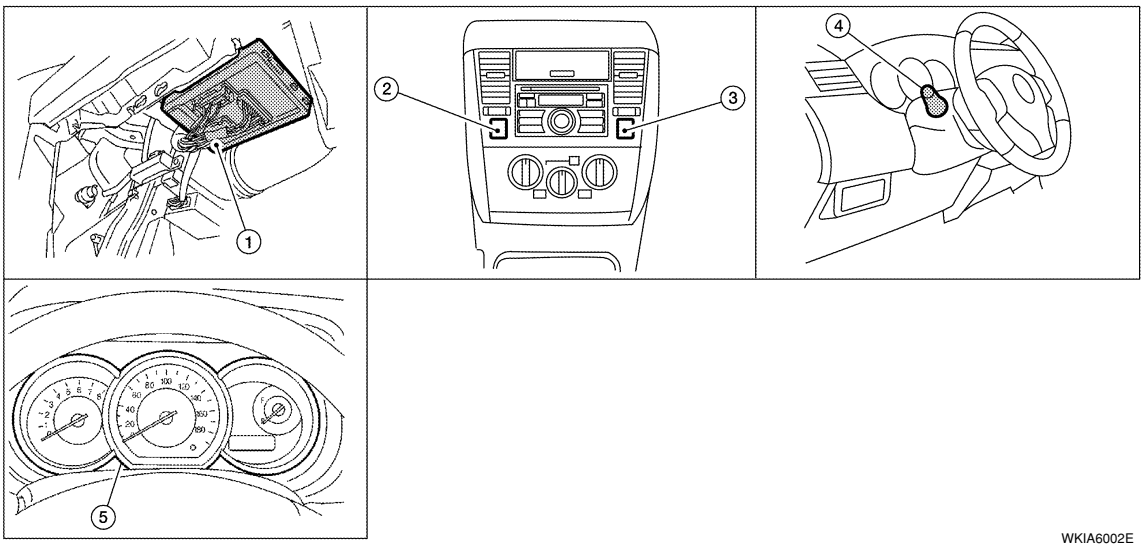

WKIA6002E

1. BCM M18 and M20 (view with glove box removed)
2. Hazard switch M55 (late production)
3. Hazard switch M55 (early production)
4. Combination switch (lighting switch) M28
5. Combination meter M24

System Description

INFOID:0000000001704413

TURN SIGNAL OPERATION

Power is supplied at all times
- through 40A fusible link (letter **g** , located in the fuse and fusible link box)
- to BCM (body control module) terminal 70,
- through 10A fuse [No. 8, located in the fuse block (J/B)]
- to BCM terminal 57,
- through 10A fuse [No. 13, located in the fuse block (J/B)]
- to combination meter terminal 27.

With the ignition switch in the ON or START position, power is supplied
- through 10A fuse [No. 6, located in fuse block (J/B)]
- to BCM terminal 38,
- through 10A fuse [No. 3, located in fuse block (J/B)]
- to combination meter terminal 28.

With the ignition switch in the ACC or ON position, power is supplied
- through 10A fuse [No. 20, located in the fuse block (J/B)]
- to BCM terminal 11.

Ground is supplied
- to BCM terminal 67 and
- to combination meter terminals 21, 22 and 23
- through grounds M57 and M61.

LH Turn Signal Lamp

When the turn signal switch is moved to the left turn position, the BCM receives an input signal requesting left turn signals to flash. The BCM then supplies power
- through BCM terminal 60
- to front combination lamp LH terminal 4 and
- to rear combination lamp LH terminal 6.

Ground is supplied
- to front combination lamp LH terminal 5
- through grounds E15 and E24,

- to rear combination lamp LH terminal 1
- through grounds B7 and B19.

The BCM also sends a request, via the CAN communication lines, to the combination meter to flash the left turn signal indicator. The unified meter control unit in the combination meter supplies ground to the left turn signal indicator lamp and activates the audible turn signal indicator.
With power, ground and input supplied, the BCM controls the flashing of the turn signal lamps.

RH Turn Signal Lamp

When turn signal switch is moved to the right turn position, the BCM receives an input signal requesting right turn signals to flash. The BCM then supplies power
- through BCM terminal 61
- to front combination lamp RH terminal 4 and
- to rear combination lamp RH terminal 6.

Ground is supplied
- to front combination lamp RH terminal 5
- through grounds E15 and E24,
- to rear combination lamp RH terminal 1
- through grounds B117, B132 (all models) and D402 (with hatchback).

The BCM also sends a request, via the CAN communication lines, to the combination meter to flash the right turn signal indicator. The unified meter control unit in the combination meter supplies ground to the right turn signal indicator lamp and activates the audible turn signal indicator.
With power, ground and input supplied, the BCM controls the flashing of the turn signal lamps.

HAZARD LAMP OPERATION

Power is supplied at all times
- through 40A fusible link (letter **g** , located in fuse, fusible link and relay box)
- to BCM terminal 70,
- through 10A fuse [No. 8, located in fuse block (J/B)]
- to BCM terminal 57,
- through 10A fuse [No. 13, located in fuse block (J/B)]
- to combination meter terminal 27.

Ground is supplied
- to hazard switch terminal 1,
- to BCM terminal 67, and
- to combination meter terminals 21, 22 and 23
- through grounds M57 and M61.

When hazard switch is depressed, ground is supplied
- through hazard switch terminal 2
- to BCM terminal 29.

BCM then supplies power
- to front combination lamp LH terminal 4 and
- to rear combination lamp LH terminal 6
- through BCM terminal 60,
- to front combination lamp RH terminal 4 and
- to rear combination lamp RH terminal 6
- through BCM terminal 61.

Ground is supplied
- to front combination lamp LH and RH terminal 5
- through grounds E15 and E24,
- to rear combination lamp LH terminal 1
- through grounds B7 and B19,
- to rear combination lamp RH terminal 1
- through grounds B117, B132 and D402 (hatchback).

The BCM also supplies input to combination meter across the CAN communication lines. This input is processed by unified meter control unit in combination meter, which in turn supplies ground to the left and right turn signal indicator lamps.
With power and input supplied, BCM controls flashing of hazard warning lamps.

REMOTE KEYLESS ENTRY SYSTEM OPERATION

Power is supplied at all times
- through 40A fusible link (letter **g** , located in fuse, fusible link and relay box)
- to BCM terminal 70,

- through 10A fuse [No. 13, located in fuse block (J/B)]
- to combination meter terminal 27.

Ground is supplied

- to BCM terminal 67 and
- to combination meter terminals 21, 22 and 23
- through grounds M57 and M61.

When the remote keyless entry system is triggered by input from the keyfob, the BCM supplies power

- through BCM terminal 60
- to front combination lamp LH terminal 4 and
- to rear combination lamp LH terminal 6,
- through BCM terminal 61
- to front turn signal lamp RH terminal 4 and
- to rear combination lamp RH terminal 6.

Ground is supplied

- to front combination lamp LH and RH terminals 5
- through grounds E15 and E24,
- to rear combination lamp LH terminal 1
- through grounds B7 and B19,
- to rear combination lamp RH terminal 1
- through grounds B117, B132 (all models) and D402 (with hatchback).

The BCM also supplies input to combination meter via the CAN communication lines. This input is processed by the unified meter control unit in combination meter, which in turn supplies ground to the left and right turn signal indicator lamps.

With power and ground supplied, BCM controls flashing of hazard warning lamps when keyfob is used to activate remote keyless entry system.

COMBINATION SWITCH READING FUNCTION

Refer to BCS-3, "System Description" .

CAN Communication System Description

INFOID:0000000001704414

Refer to LAN-6, "System Description" .

Schematic

INFOID:0000000001704415

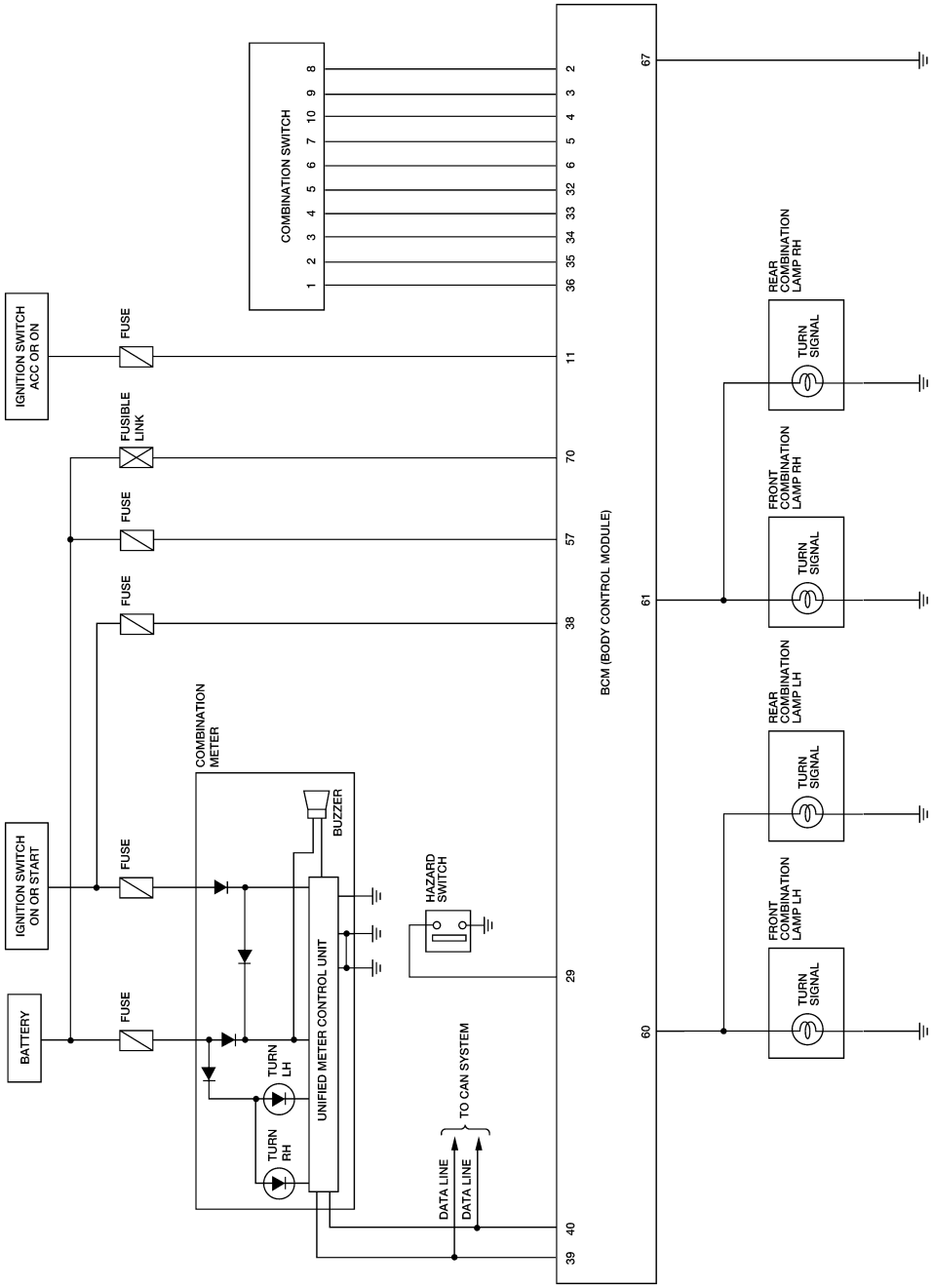

WKWA4974E

Wiring Diagram - TURN -

INFOID:0000000001704416

LT-TURN-01

: DATA LINE

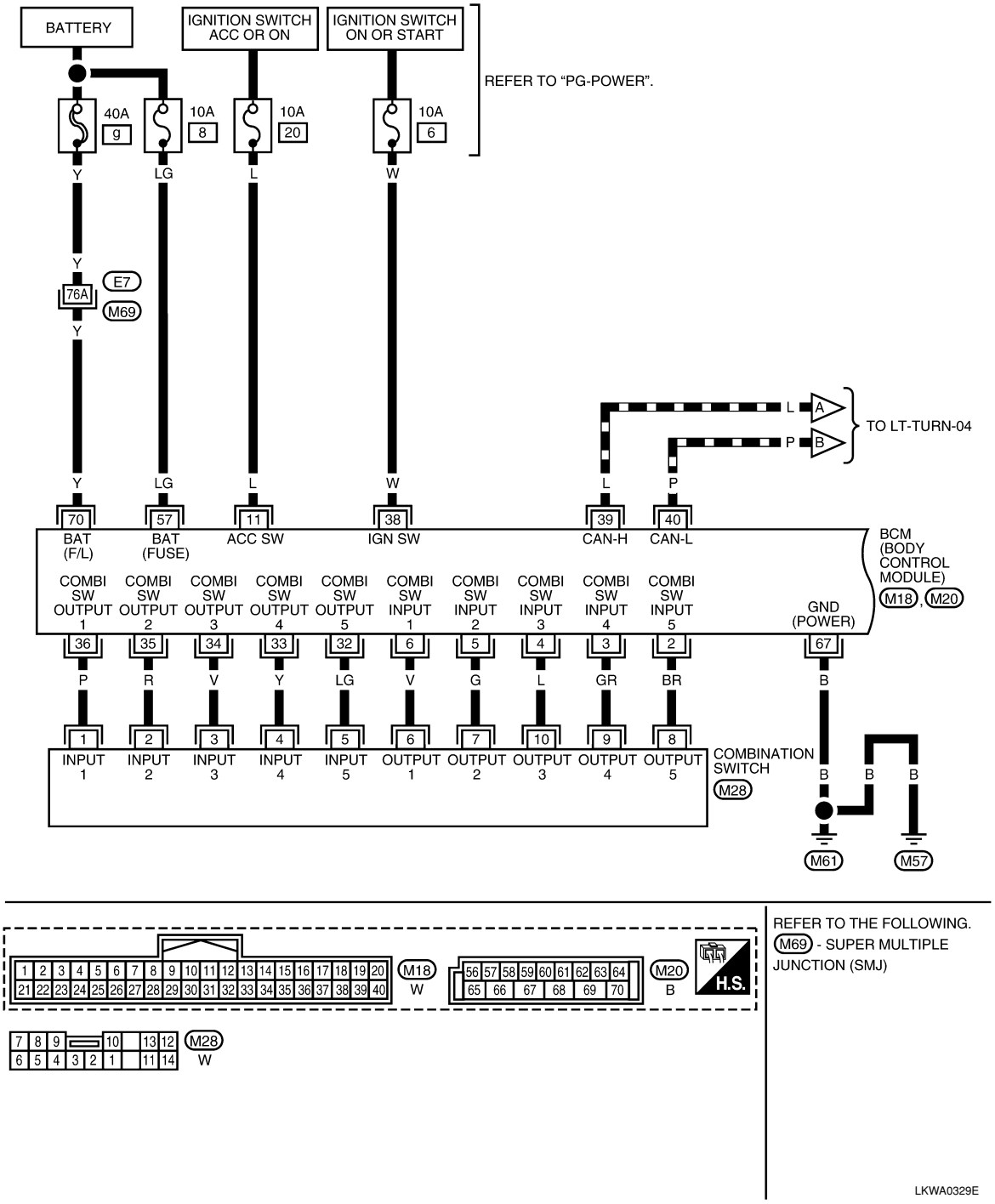

LT-TURN-02

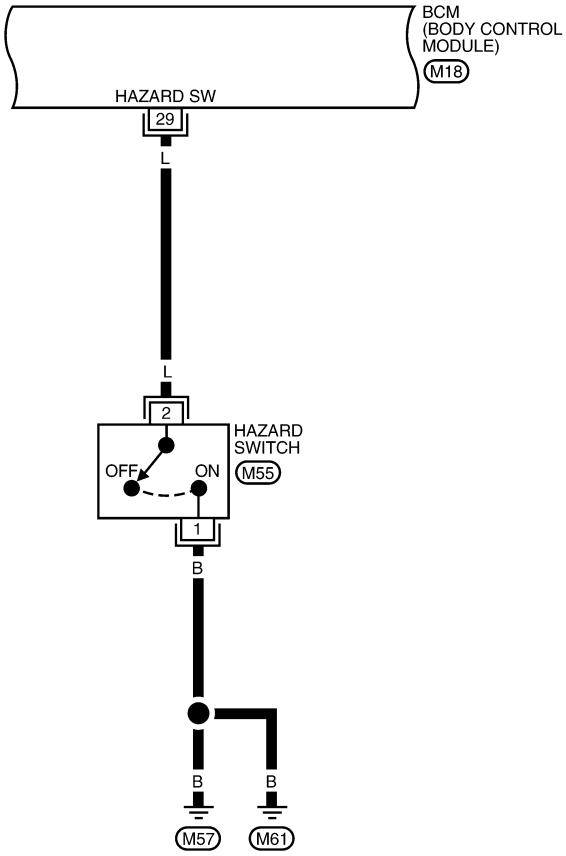

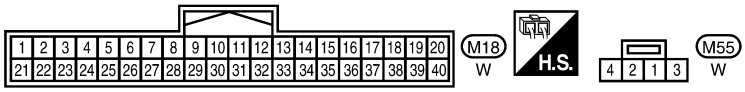

LKWA0330E

LT-TURN-03

HB : WITH HATCHBACK

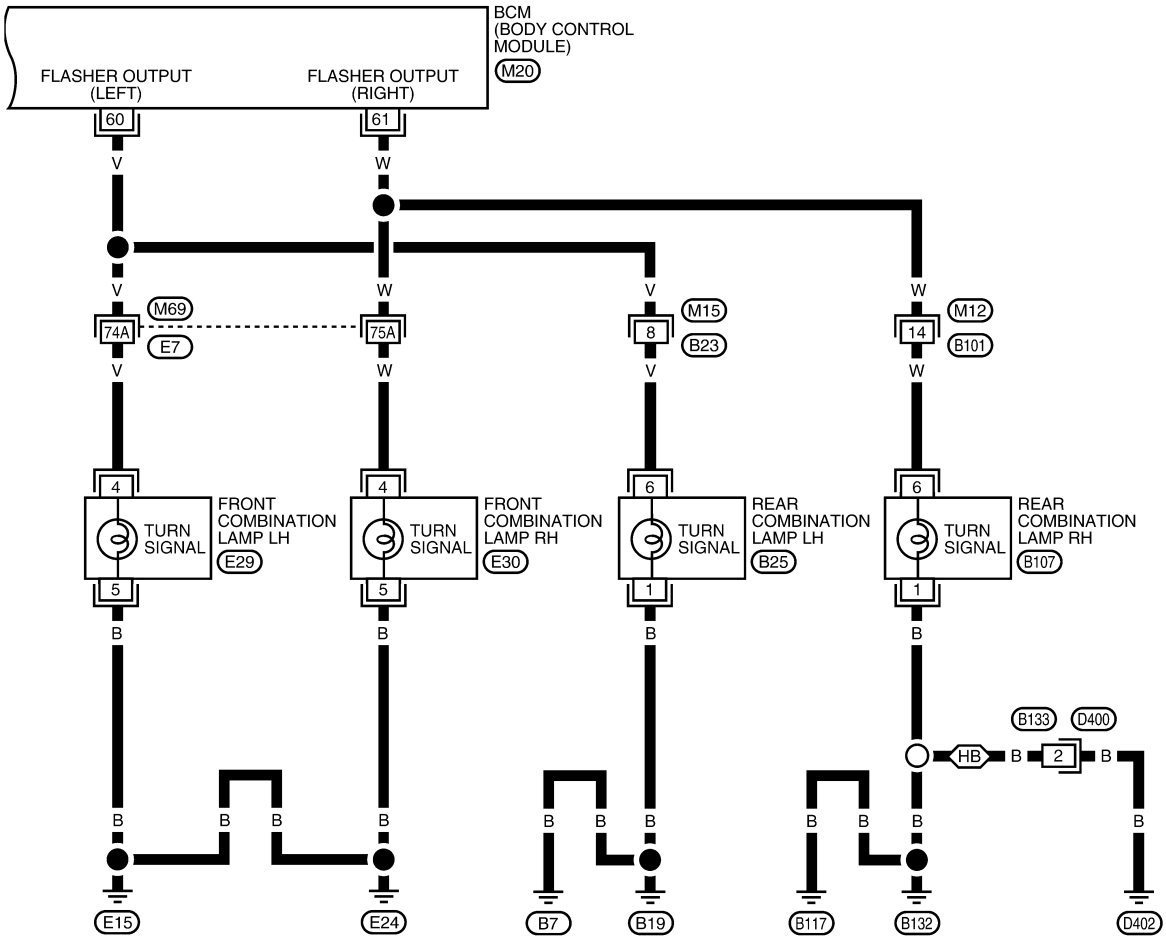

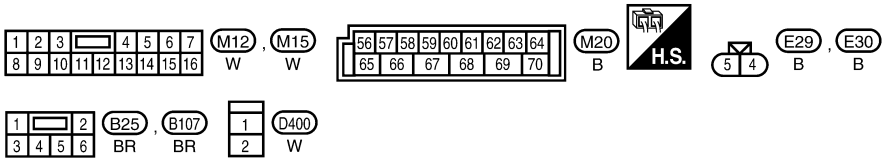

REFER TO THE FOLLOWING.
M69 - SUPER MULTIPLE JUNCTION (SMJ)

WKWA5808E

LT-TURN-04

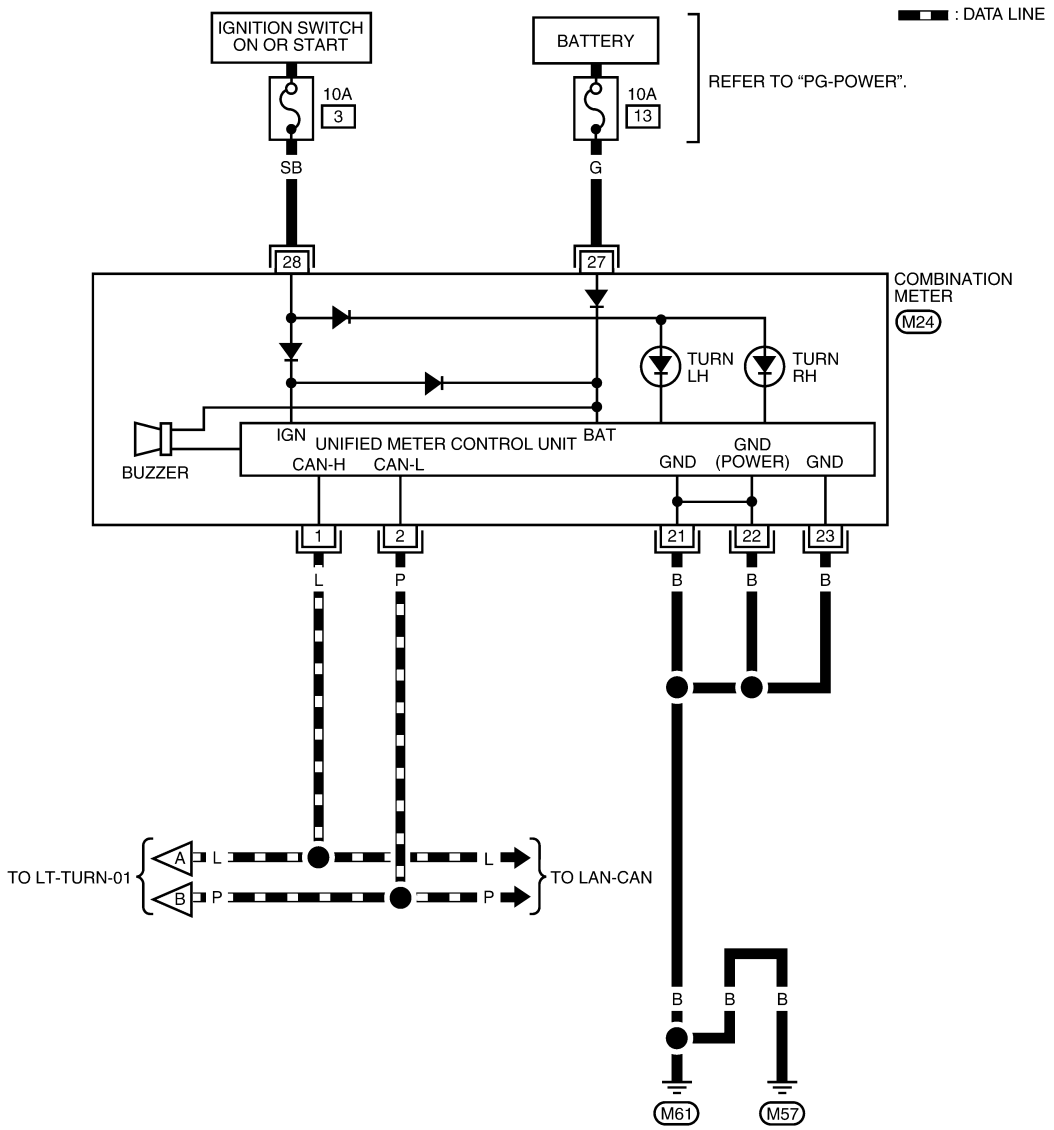

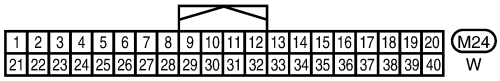

LKWA0332E

Terminal and Reference Value for BCM

INFOID:0000000001704417

Refer to BCS-11, "Terminal and Reference Value for BCM" .

How to Proceed with Trouble Diagnosis

INFOID:0000000001704418

1. Confirm the symptom or customer complaint.
2. Understand operation description and function description. Refer to LT-48, "System Description" .

3. Perform the preliminary check. Refer to LT-56, "Preliminary Check" .
4. Check symptom and repair or replace the cause of the malfunction.
5. Do turn signal and hazard warning lamps operate normally? If YES, GO TO 6. If NO, GO TO 4.
6. INSPECTION END

Preliminary Check

INFOID:0000000001704419

CHECK POWER SUPPLY AND GROUND CIRCUIT FOR BCM

Refer to BCS-15, "BCM Power Supply and Ground Circuit Inspection" .

CONSULT-III Function (BCM)

INFOID:0000000001704420

Refer to LT-11, "CONSULT-III Function (BCM)" .

Turn Signals Do Not Operate

INFOID:0000000001704421

1. CHECK COMBINATION SWITCH INPUT SIGNAL

With CONSULT-III

1. Select “BCM” on CONSULT-III. Select “FLASHER” on “SELECT TEST ITEM” screen.
2. Select “DATA MONITOR” on “SELECT DIAG MODE” screen. Make sure that “TURN SIGNAL R” and “TURN SIGNAL L” turns ON-OFF linked with operation of lighting switch.

When turn signal switch is right position	**: TURN SIGNAL R ON**
When turn signal switch is left position	**: TURN SIGNAL L ON**

Without CONSULT-III

Refer to LT-63, "Combination Switch Inspection" .

OK or NG

OK >> Replace the BCM. BCS-18, "Removal and Installation of BCM"
NG >> Check combination switch (lighting switch). Refer to LT-63, "Combination Switch Inspection" .

Front Turn Signal Lamp Does Not Operate

INFOID:0000000001704422

1. CHECK BULB

Verify the bulb standard of each turn signal lamp is correct. Refer to LT-113, "Exterior Lamp" .

OK or NG

OK >> GO TO 2.
NG >> Replace turn signal lamp bulb. Refer to LT-59, "Bulb Replacement for Front Turn Signal Lamp" .

2. CHECK FRONT TURN SIGNAL LAMP CIRCUIT

1. Turn ignition switch OFF.
2. Disconnect BCM connector and front combination lamp LH or RH connector.
3. Check continuity between BCM harness connector M20 (A) terminal 60 and front combination lamp LH harness connector E29 (B) terminal 4.

60 - 4 : Continuity should exist.

4. Check continuity between BCM harness connector M20 terminal 61 (A) and front combination lamp RH harness connector E30 (B) terminal 4.

61 - 4 : Continuity should exist.

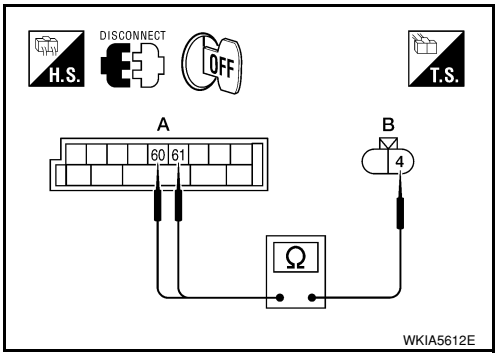

OK or NG

OK >> GO TO 3.

NG >> Repair harness or connector.

3. CHECK GROUND CIRCUIT

1. Check continuity between front combination lamp LH harness connector E29 terminal 5 and ground.

5 - Ground : Continuity should exist.

2. Check continuity between front combination lamp RH harness connector E30 terminal 5 and ground.

5 - Ground : Continuity should exist.

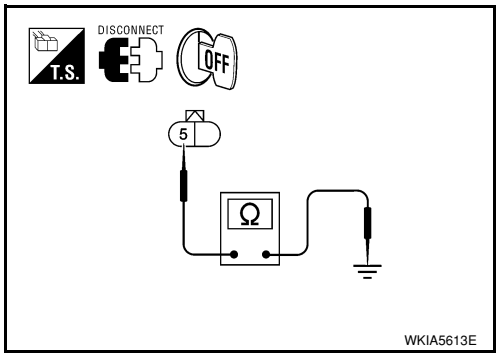

OK or NG

OK >> Inspect connection at front combination lamp.
NG >> Repair harness.

Rear Turn Signal Lamp Does Not Operate

INFOID:0000000001704423

1. CHECK BULB

Verify the bulb standard of each turn signal lamp is correct. Refer to LT-113, "Exterior Lamp" .

OK or NG

OK >> GO TO 2.
NG >> Replace turn signal lamp bulb. Refer to LT-59, "Bulb Replacement for Rear Turn Signal Lamp" .

2. CHECK REAR TURN SIGNAL LAMP CIRCUIT

1. Turn ignition switch OFF.
2. Disconnect BCM connector and rear combination lamp LH or RH connector.
3. Check continuity between BCM harness connector M20 (A) terminal 60 and rear combination lamp LH harness connector B25 (B) terminal 6.

60 - 6 : Continuity should exist.

4. Check continuity between BCM harness connector M20 (A) terminal 61 and rear combination lamp RH harness connector B107 (B) terminal 6.

61 - 6 : Continuity should exist.

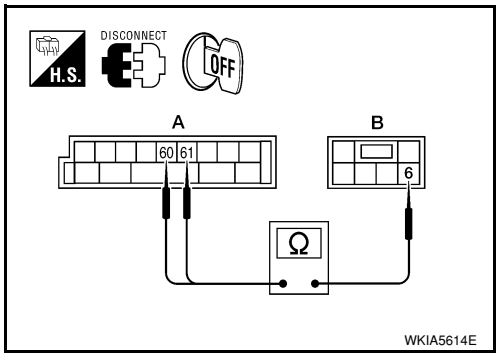

OK or NG

OK >> GO TO 3.
NG >> Repair harness or connector.

3. CHECK GROUND CIRCUIT

1. Check continuity between rear combination lamp LH harness connector B25 terminal 1 and ground.

1 - Ground : Continuity should exist.

2. Check continuity between rear combination lamp RH harness connector B107 terminal 1 and ground.

1 - Ground : Continuity should exist.

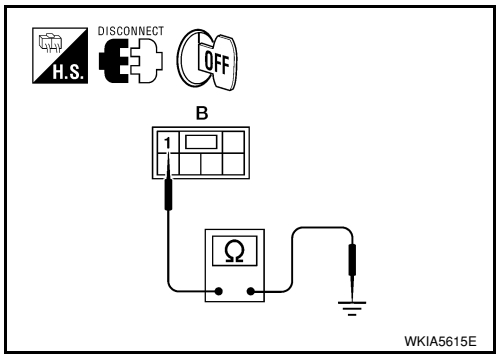

OK or NG

OK >> Check rear combination lamp connector for proper connection. Repair as necessary.
NG >> Repair harness or connector.

Hazard Warning Lamp Does Not Operate But Turn Signal Lamp Operates

INFOID:0000000001704424

1. CHECK HAZARD SWITCH INPUT SIGNAL

With CONSULT-III

1. Select “BCM” on CONSULT-III. Select “FLASHER” on “SELECT TEST ITEM” screen.
2. Select “DATA MONITOR” on “SELECT DIAG MODE” screen. Make sure that “HAZARD SW” turns ON-OFF linked with operation of hazard switch.

When hazard switch is in ON position : HAZARD SW ON

Without CONSULT-III

Check voltage between BCM harness connector and ground.

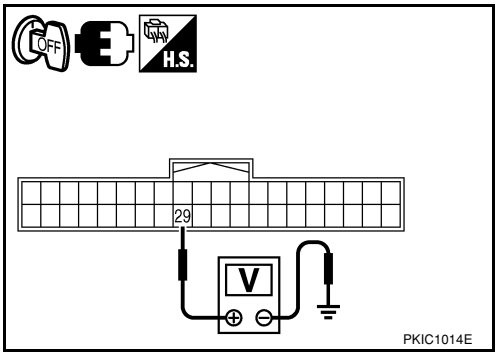

Terminal			Condition	Voltage
(+)		(–)		
BCM connector	Terminal			
M18	29	Ground	Hazard switch is ON	0V
			Hazard switch is OFF	Battery voltage

OK or NG

OK >> Replace BCM. Refer to BCS-18, "Removal and Installation of BCM" .

NG >> GO TO 2.

2. CHECK HAZARD SWITCH CIRCUIT

1. Turn ignition switch OFF.
2. Disconnect BCM connector and hazard switch connector.
3. Check continuity BCM harness connector M18 (A) and hazard switch harness connector M55 (B).

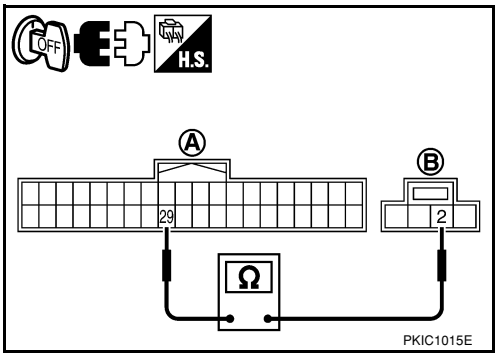

A		B		Continuity
Connector	Terminal	Connector	Terminal	
M18	29	M55	2	Yes

OK or NG

OK >> GO TO 3.

NG >> Repair harness or connector.

3. CHECK GROUND CIRCUIT

Check continuity between hazard switch harness connector M55 terminal 1 and ground.

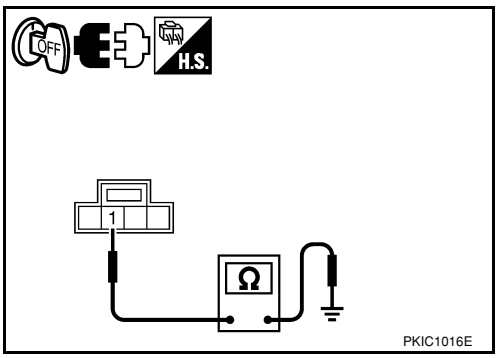

1 – Ground : Continuity should exist.

OK or NG

OK >> GO TO 4.

NG >> Repair harness or connector.

4. CHECK HAZARD SWITCH

1. Disconnect hazard switch connector.
2. Check continuity hazard switch terminals.

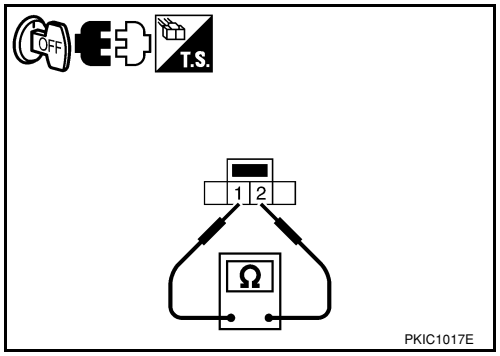

Terminal		Condition	Continuity
Hazard switch			
1	2	Hazard switch is ON	Yes
		Hazard switch is OFF	No

OK or NG

OK >> Replace BCM if hazard warning lamps do not operate after setting the connector again. Refer to BCS-18, "Removal and Installation of BCM" .

NG >> Replace hazard switch.

Turn Signal Indicator Lamp Does Not Operate

INFOID:0000000001704425

1. CHECK CAN COMMUNICATION SYSTEM

Check CAN communication. Refer to LAN-6 .

OK or NG

OK >> Replace combination meter. Refer to DI-20, "Removal and Installation" .

NG >> Repair as necessary.

Bulb Replacement for Front Turn Signal Lamp

INFOID:0000000001704426

Refer to LT-22, "Bulb Replacement" .

Bulb Replacement for Rear Turn Signal Lamp

INFOID:0000000001704427

Refer to LT-85, "Bulb Replacement" .

Removal and Installation of Front Turn Signal Lamp

INFOID:0000000001704428

Refer to LT-23, "Removal and Installation" .

Removal and Installation of Rear Turn Signal Lamp

INFOID:0000000001704429

Refer to LT-86, "Removal and Installation" .

LIGHTING AND TURN SIGNAL SWITCH

Removal and Installation

INFOID:0000000001704430

REMOVAL

1. Remove steering column cover. Refer to IP-10 .
2. While pressing pawls (A) in direction as shown, pull lighting and turn signal switch (1) toward LH door and disconnect from the base.

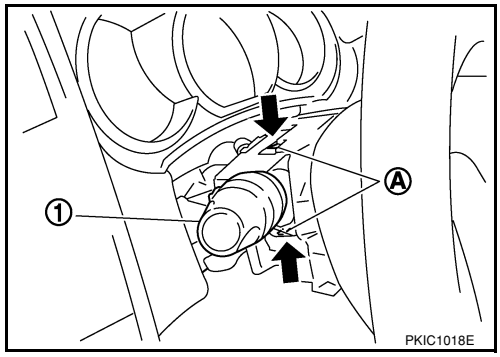

INSTALLATION

Installation is in the reverse order of removal.

HAZARD SWITCH

Removal and Installation

INFOID:0000000001704431

REMOVAL

1. Remove cluster lid C. Refer to IP-10 .
2. Disconnect hazard switch connector.
3. Press pawl (A) on reverse side and remove the hazard switch (1).

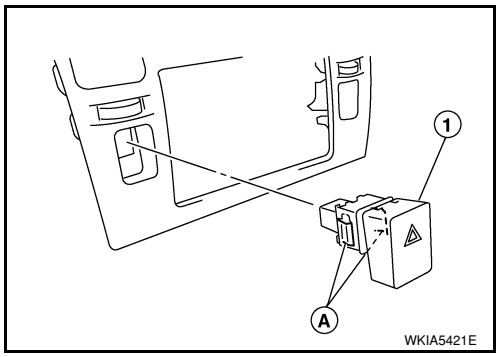

INSTALLATION

Installation is in the reverse order of removal.

COMBINATION SWITCH

Wiring Diagram - COMBSW -

INFOID:0000000001704432

LT-COMBSW-01

: DATA LINE

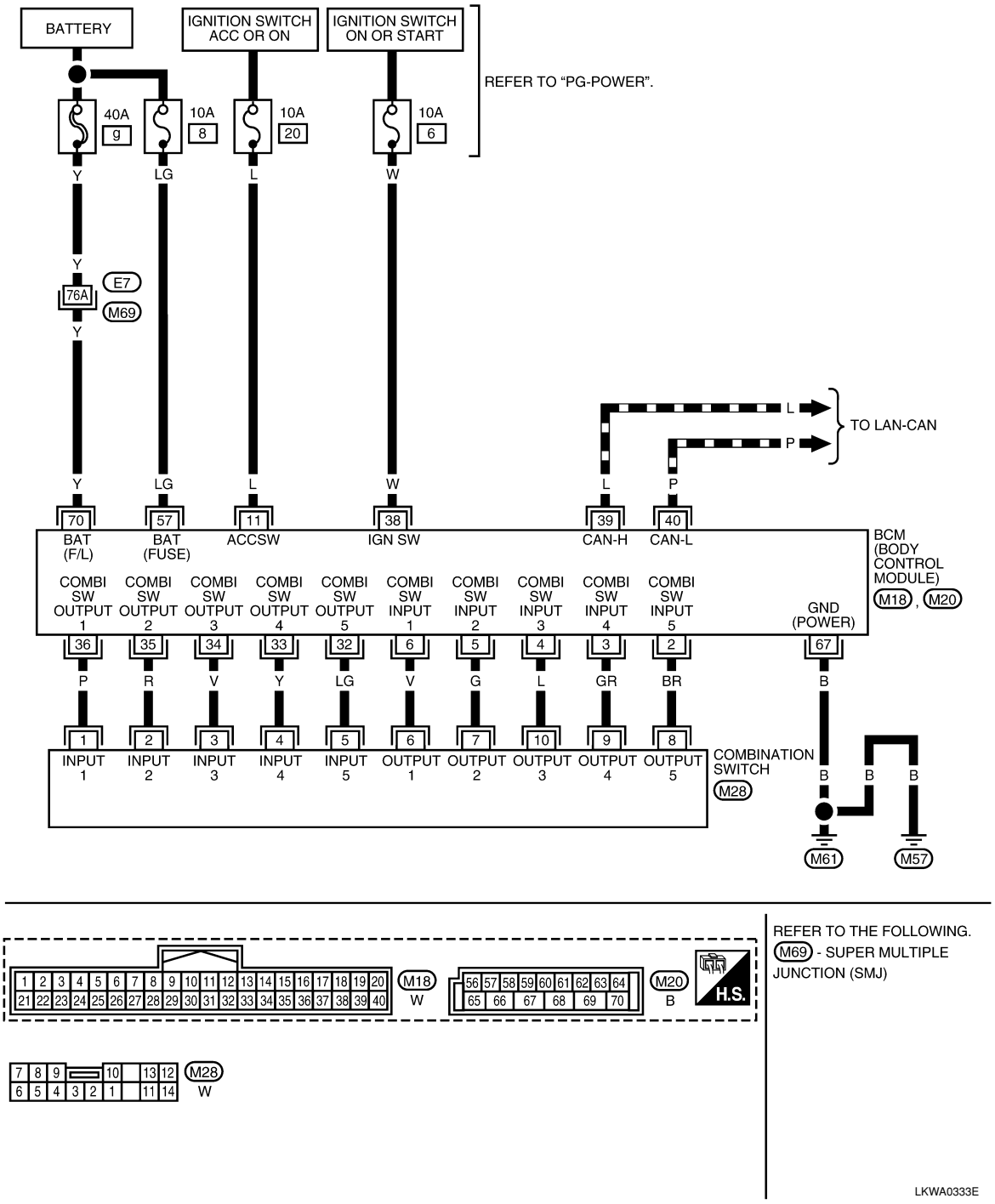

Combination Switch Reading Function

INFOID:0000000001704433

For details, refer to BCS-3, "System Description" .

Terminal and Reference Value for BCM

INFOID:0000000001704434

Refer to BCS-11, "Terminal and Reference Value for BCM" .

CONSULT-III Function (BCM)

INFOID:0000000001704435

Refer to LT-11, "CONSULT-III Function (BCM)" .

Combination Switch Inspection

INFOID:0000000001704436

1.SYSTEM CHECK

Referring to table below, check which system malfunctioning switch belongs to.

System 1	System 2	System 3	System 4	System 5
—	FRONT WASHER	FRONT WIPER LO	TURN LH	TURN RH
FRONT WIPER HI	—	FRONT WIPER INT	PASSING	HEAD LAMP 1
INT VOLUME 1	—	—	HEAD LAMP 2	HI BEAM
—	INT VOLUME 3	—	—	LIGHT SW 1ST
INT VOLUME 2	—	—	FRONT FOG	—

>> Check the system to which the switch belongs, and GO TO 2.

2.SYSTEM CHECK

With CONSULT-III

CAUTION:

If CONSULT-III is used with no connection of CONSULT-III CONVERTER, malfunctions might be detected in self-diagnosis depending on control unit which carry out CAN communication.

1. Connect CONSULT-III, and select “COMB SW” on “SELECT TEST ITEM” screen.
2. Select “DATA MONITOR”.
3. Select “START”, and confirm that other switches in the system operate normally.
   Example: When turn signal LH is inoperative, confirm that PASSING, HEAD LAMP 2 or FRONT FOG (if equipped) turn ON-OFF normally.

Without CONSULT-III

Operating combination switch, and confirm that other switches in the system operate normally.
Example: When a turn signal switch is inoperative, confirm that FRONT WIPER LO or FRONT WIPER INT turn ON-OFF normally.

Check results

Other switches in the system operate normally.>>Replace lighting switch or wiper switch.
Other switches in the system do not operate normally.>>GO TO 3.

3.HARNESS INSPECTION

1. Turn ignition switch OFF.
2. Disconnect BCM connector and combination switch connector.
3. Check for continuity between BCM harness connector of the suspect system and the corresponding combination switch harness connector.

Suspect system	A			B		Continuity
	Connector	Terminal		Connector	Terminal	
1	M18	Input 1	6	M28	6	Yes
		Output 1	36		1	
2		Input 2	5		7	
		Output 2	35		2	
3		Input 3	4		10	
		Output 3	34		3	
4		Input 4	3		9	
		Output 4	33		4	
5		Input 5	2		8	
		Output 5	32		5	

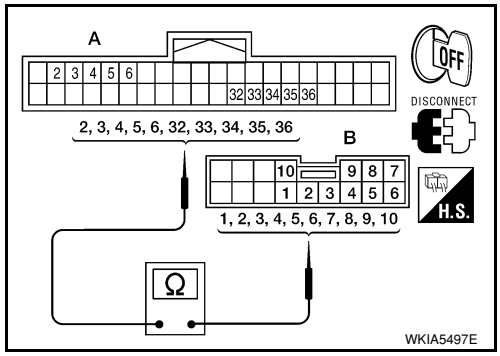

4. Check for continuity between of BCM harness connector in suspect system and ground.

Suspect system	BCM				Continuity
	Connector	Terminal			
1	M18	Input 1	6	Ground	No
		Output 1	36		
2		Input 2	5		
		Output 2	35		
3		Input 3	4		
		Output 3	34		
4		Input 4	3		
		Output 4	33		
5		Input 5	2		
		Output 5	32		

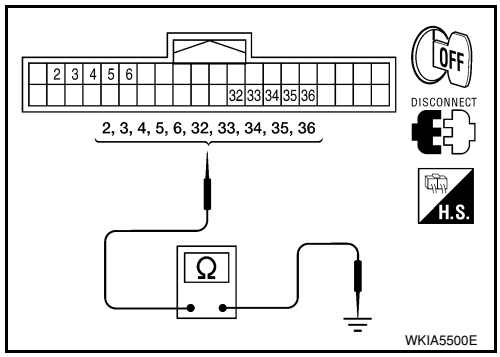

OK or NG

OK >> GO TO 4.
NG >> Check harness between BCM and combination switch for open or short circuit.

4. CHECK BCM OUTPUT TERMINAL

1. Connect BCM and combination switch connectors.
2. Turn ignition switch ON.
3. Turn lighting switch and wiper switch to OFF position.
4. Set wiper dial position 4.
5. Check BCM output terminal voltage waveform of suspect system.

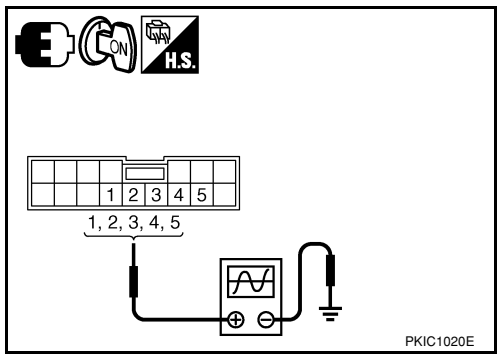

Suspect system	Terminal (+) Combination switch connector	Terminal (+) Terminal	Terminal (–)	Reference value
1	M28	1	Ground	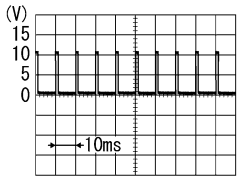 PKIB4958J 1.2V
2		2		
3		3		
4		4		
5		5		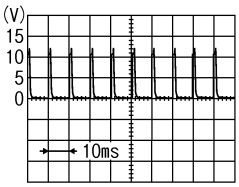 PKIB8643J 1.2V

OK or NG

OK >> Open circuit in combination switch, GO TO 5.
NG >> Replace BCM. Refer to BCS-18, "Removal and Installation of BCM" .

5. COMBINATION SWITCH INSPECTION

Referring to table below, perform combination switch inspection.

Procedure													
1	2		3	4		5	6		7
Re-place lighting switch	Confirm check results	OK	INSPECTION END	Confirm check results	OK	INSPECTION END	Confirm check results	OK	INSPECTION END
		NG	Replace wiper switch		NG	Replace switch base		NG	Confirm symptom again

>> INSPECTION END

Removal and Installation

INFOID:0000000001704437

Refer to LT-60 .

STOP LAMP

Wiring Diagram - STOP/L

INFOID:0000000001704438

HATCHBACK

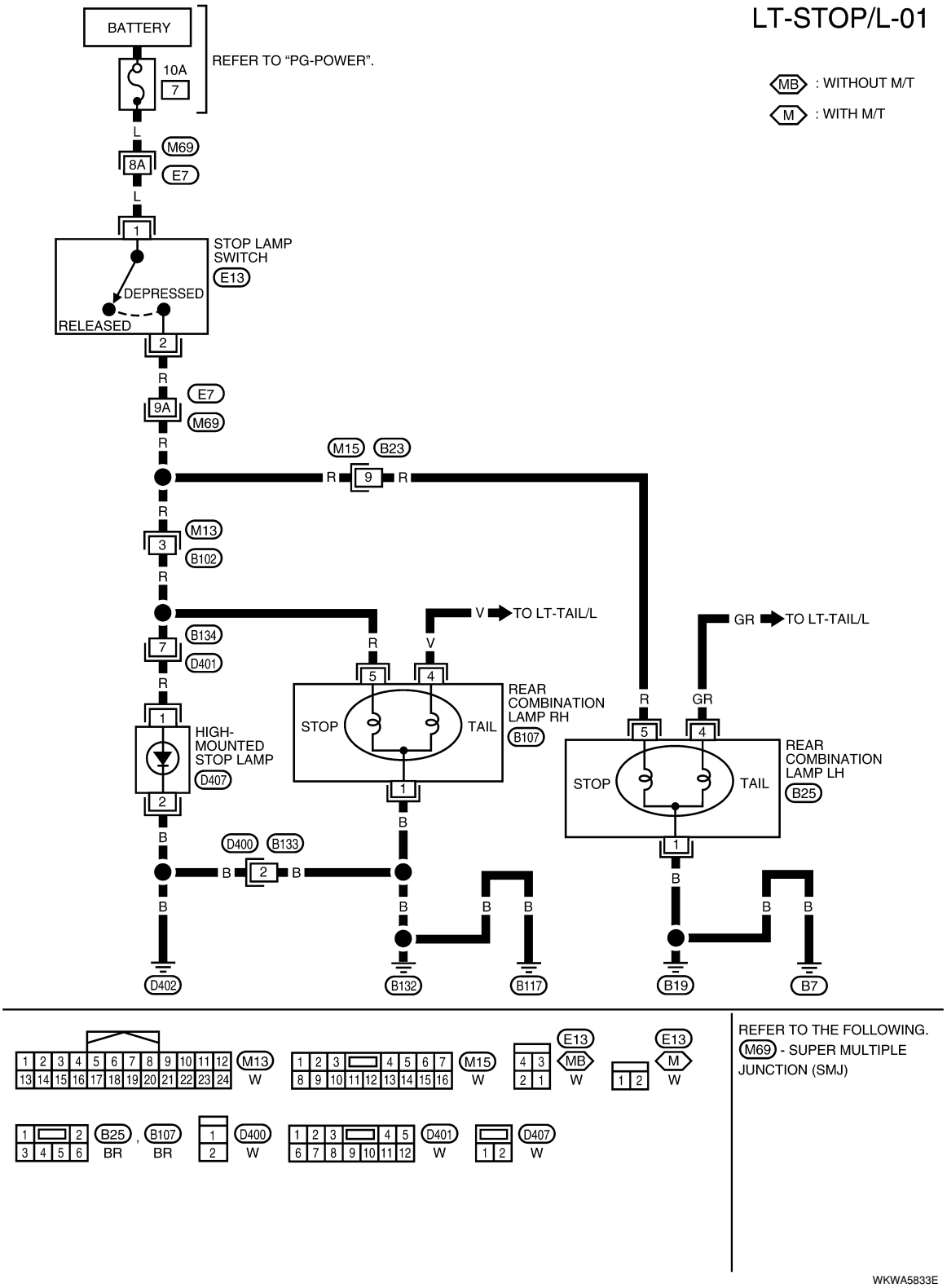

Wiring Diagram - STOP/L

INFOID:0000000001704439

SEDAN

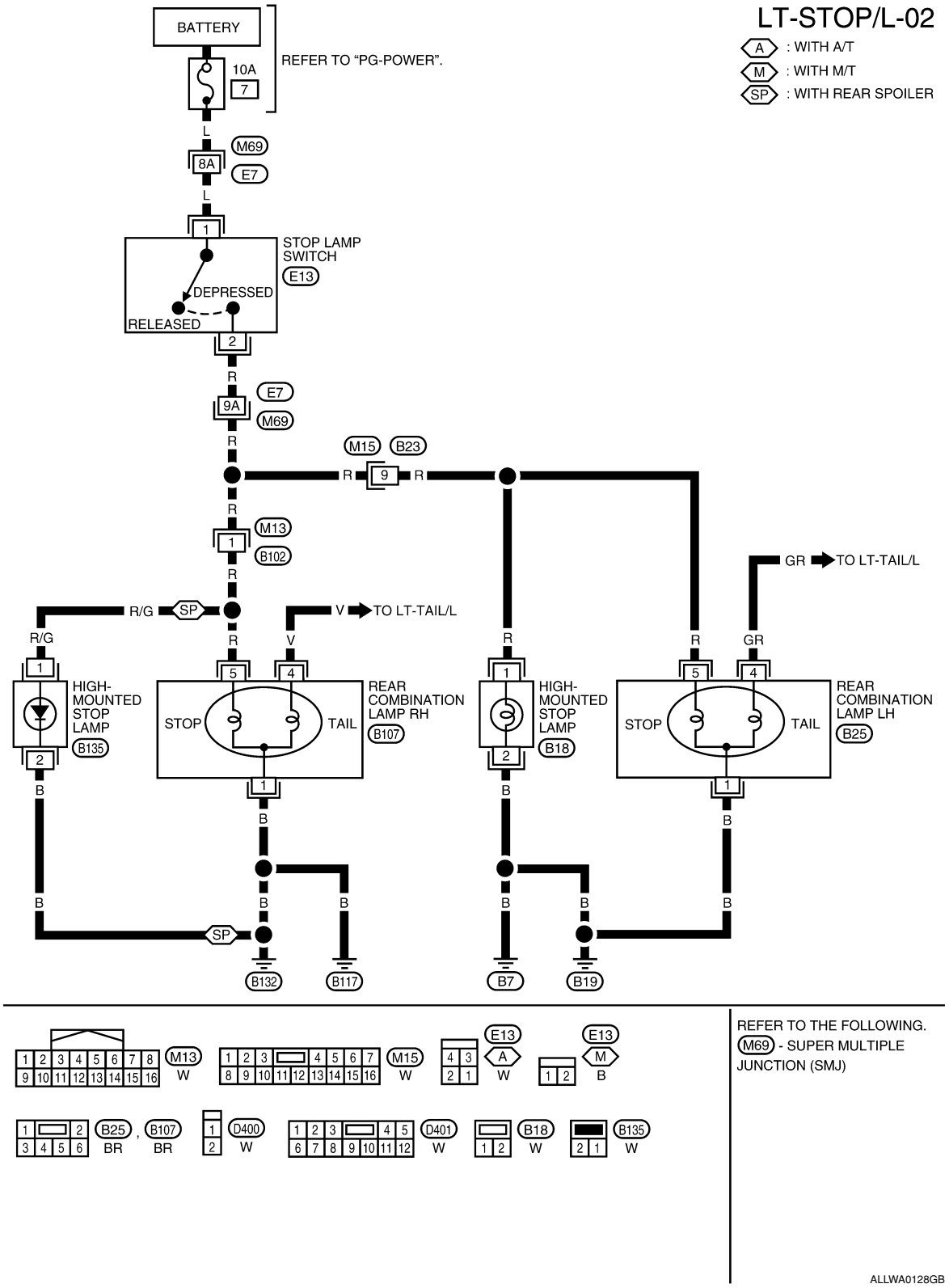

Bulb Replacement for High-Mounted Stop Lamp

INFOID:0000000001704440

HATCHBACK

The LED element is not serviced separately, the high-mounted stop lamp must be replaced as an assembly. Refer to LT-68, "Removal and Installation of High-Mounted Stop Lamp".

SEDAN

1. Remove the high-mounted stop lamp bulb socket (1) and remove the high-mounted stop lamp (2).

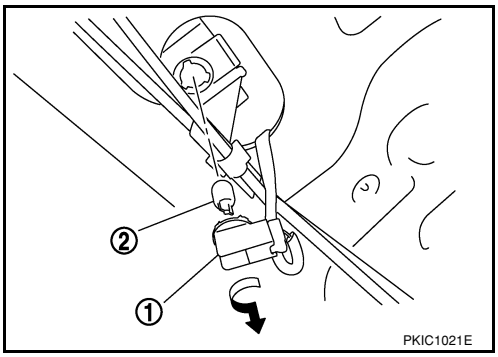

2. Installation is in the reverse order of removal.

Bulb Replacement for Rear Combination Lamp for Stop Lamp

INFOID:0000000001704441

Refer to LT-85, "Bulb Replacement".

Removal and Installation of High-Mounted Stop Lamp

INFOID:0000000001704442

HATCHBACK

Removal

1. Remove the rear hatch finish panel. Refer to EI-51.
2. Disconnect the high-mounted stop lamp connector.
3. Remove the nuts and remove the high-mounted stop lamp from rear hatch.

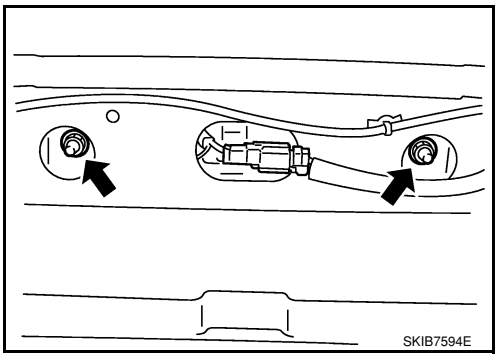

Installation

Installation is in the reverse order of removal.

CAUTION:

Properly seal the high-mounted stop lamp base to the rear hatch to prevent water leaks.

SEDAN

Removal

1. Remove the rear parcel shelf. Refer to EI-42, "Removal and Installation".

2. Remove the high-mounted stop lamp screws (A) and remove the high-mounted stop lamp (1).

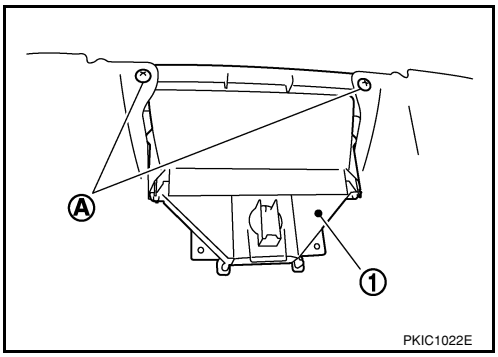

3. Remove the high-mounted stop lamp finisher screws (A) and remove the high-mounted stop lamp finisher (1).

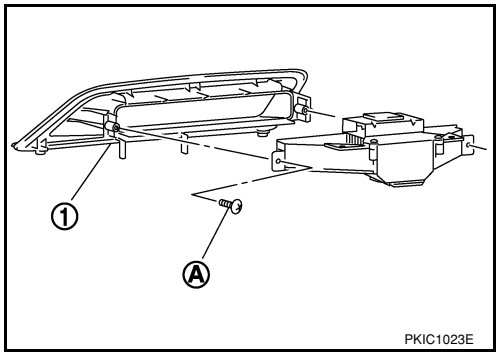

Installation

Installation is in the reverse order of removal.

Removal and Installation of Rear Combination Lamp for Stop Lamp

INFOID:0000000001704443

Refer to LT-86, "Removal and Installation".

BACK-UP LAMP

Wiring Diagram - BACK/L -

INFOID:0000000001704444

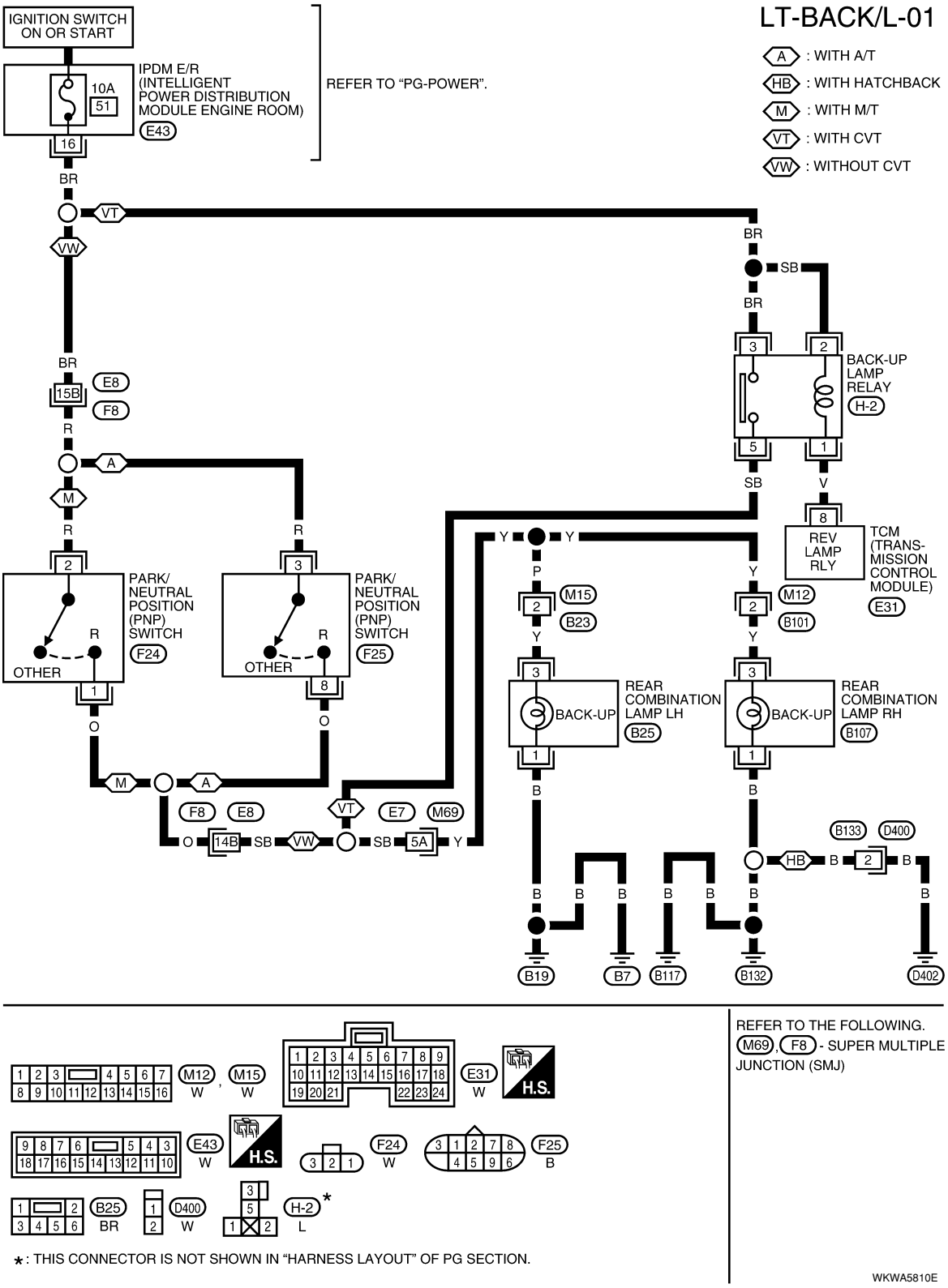

Bulb Replacement

INFOID:0000000001704445

Refer to LT-85, "Bulb Replacement" .

Removal and Installation

INFOID:0000000001704446

Refer to LT-86, "Removal and Installation" .

PARKING, LICENSE PLATE AND TAIL LAMPS

Component Parts and Harness Connector Location

INFOID:0000000001704447

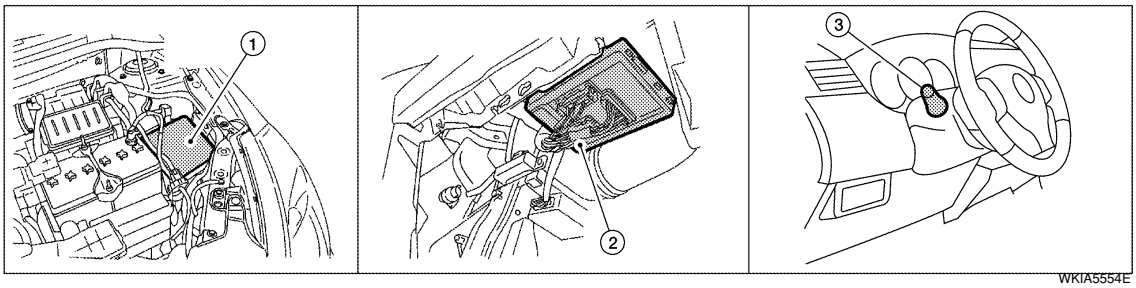

1. IPDM E/R E45, E46 and E48
2. BCM M18 and M20 (view with glove box removed)
3. Combination switch (lighting switch) M28

System Description

INFOID:0000000001704448

The control of the parking, license plate and tail lamp operation is dependent upon the position of lighting switch. When the lighting switch is placed in the 1ST position, the BCM (body control module) receives input signal requesting the parking, license plate and tail lamps to illuminate. This input signal is communicated to the IPDM E/R (intelligent power distribution module engine room) via the CAN communication lines. The CPU (central processing unit) located in the IPDM E/R controls the tail lamp relay coil. This relay, when energized, directs power to parking, license plate and tail lamps, which then illuminate.

Power is supplied at all times

- to ignition relay located in IPDM E/R,
- to tail lamp relay located in IPDM E/R,
- through 15A fuse (No. 52, located in IPDM E/R) and
- through 20A fuse (No. 53, located in IPDM E/R)
- to the CPU located in the IPDM E/R,
- through 40A fusible link (letter **g** , located in fuse and fusible link block)
- to BCM terminal 70,
- through 10A fuse [No. 8, located in fuse block (J/B)],
- to BCM terminal 57.

With the ignition switch in the ON or START position, power is supplied

- through 10A fuse [No. 6, located in fuse block (J/B)]
- to BCM terminal 38,
- to ignition relay located in IPDM E/R and
- through the ignition relay
- to the CPU of the IPDM E/R.

With the ignition switch in the ACC or ON position, power is supplied

- through 10A fuse [No. 20, located in fuse block (J/B)]
- to BCM terminal 11.

Ground is supplied

- to BCM terminal 67
- through grounds M20 and M61,
- to IPDM E/R terminals 59 and 39
- through grounds E15 and E24.

OPERATION BY LIGHTING SWITCH

With the lighting switch in the 1ST or 2ND position, the BCM receives an input signal requesting parking, license plate and tail lamps to illuminate. This input signal is communicated to the IPDM E/R via the CAN communication lines. The CPU, located in the IPDM E/R, controls the tail lamp relay coil. When energized, the tail lamp relay directs power

- through 10A fuse (No. 37, located in IPDM E/R),
- through IPDM E/R terminal 26
- to front combination lamp LH terminal 6, and
- through IPDM E/R terminal 27

- to front combination lamp RH terminal 6,
- through IPDM E/R terminal 28
- to rear combination lamp LH terminal 4 and
- to license plate lamp LH and RH terminal 1,
- through IPDM E/R terminal 29
- to rear combination lamp RH terminal 4.

Ground is supplied

- to front combination lamp LH and RH terminal 7
- through grounds E15 and E24,
- to rear combination lamp LH terminal 1 and
- to license plate lamp LH and RH terminal 2
- through grounds B7 and B19, and
- to rear combination lamp RH terminal 1
- through grounds B117, B132 (all models) and D402 (with hatchback).

With power and ground supplied, parking, license plate and tail lamps illuminate.

COMBINATION SWITCH READING FUNCTION

Refer to BCS-3, "System Description" .

EXTERIOR LAMP BATTERY SAVER CONTROL

When the combination switch (lighting switch) is in the 1ST (or 2ND) position and the ignition switch is turned from ON or ACC to OFF, the battery saver control feature is activated.

Under this condition, the parking, license and tail lamps remain illuminated for 5 minutes, then the parking, license plate and tail lamps are turned off.

Exterior lamp battery saver control mode can be changed by the function setting of CONSULT-III.

CAN Communication System Description

INFOID:0000000001704449

Refer to LAN-6, "System Description" .

Schematic

INFOID:0000000001704450

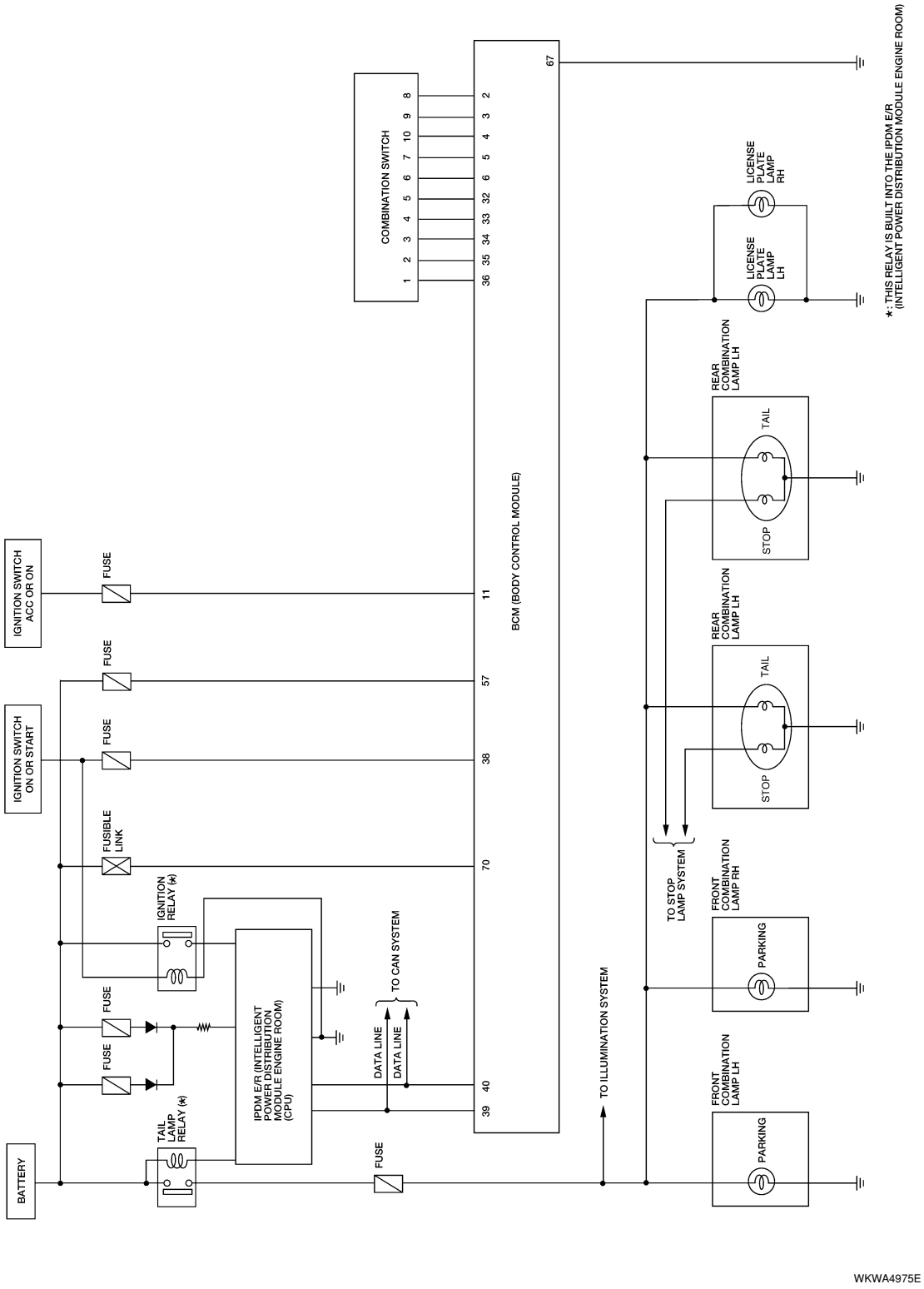

Wiring Diagram - TAIL/L -

INFOID:0000000001704451

LT-TAIL/L-01

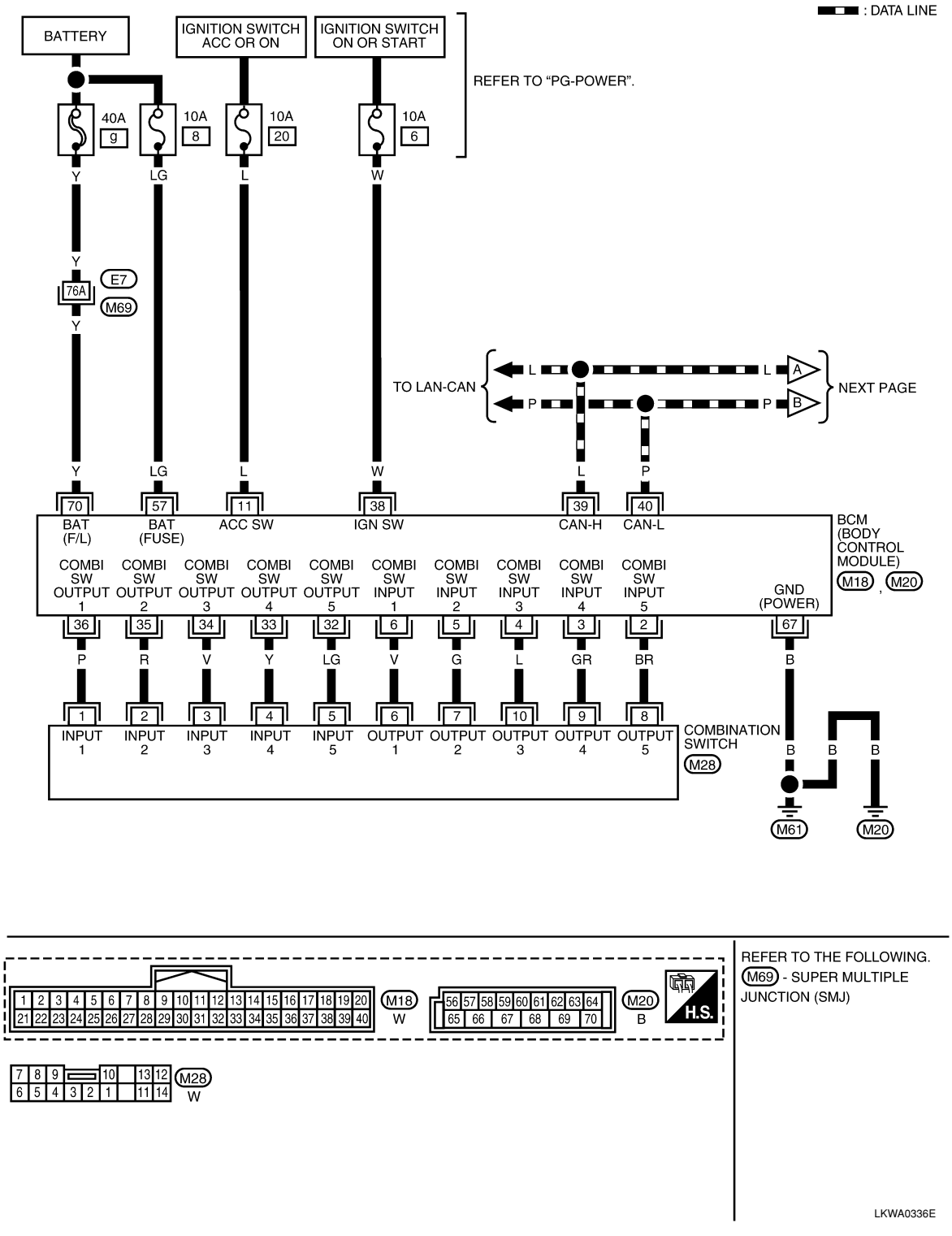

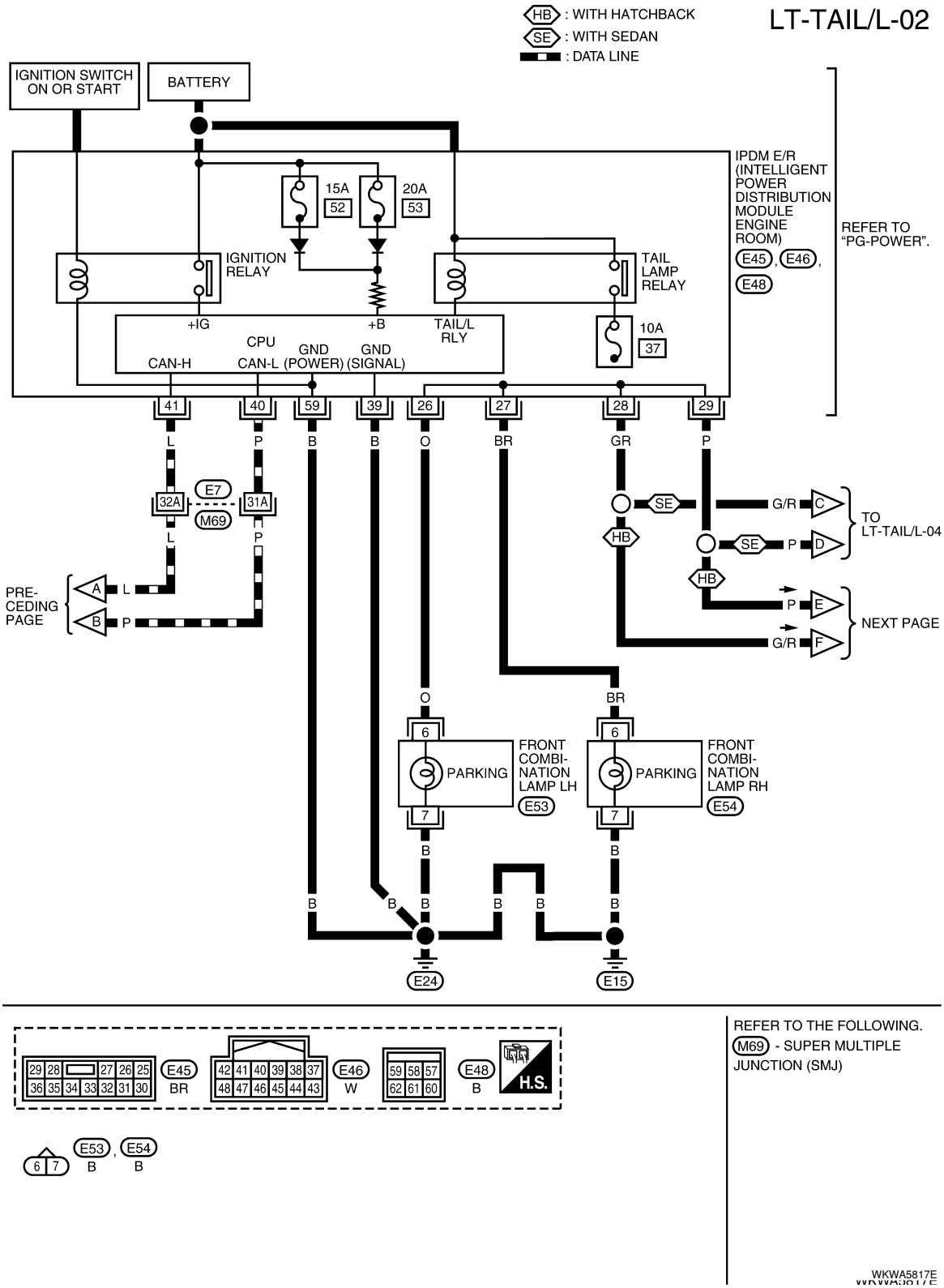
HB : WITH HATCHBACK
SE : WITH SEDAN
: DATA LINE
LT-TAIL/L-02
IGNITION SWITCH ON OR START
BATTERY
IPDM E/R (INTELLIGENT POWER DISTRIBUTION MODULE ENGINE ROOM)
E45, E46, E48
REFER TO "PG-POWER".
15A 52
20A 53
IGNITION RELAY
TAIL LAMP RELAY
+IG
+B
TAIL/L RLY
10A 37
CPU
CAN-H
CAN-L
GND (POWER)
GND (SIGNAL)
41 40 59 39 26 27 28 29
L P B B O BR GR P
32A E7 31A
M69
PRE-CEDING PAGE
A B
SE HB
G/R C
P D
TO LT-TAIL/L-04
P E
G/R F
NEXT PAGE
6 7
PARKING
FRONT COMBI-NATION LAMP LH
E53
FRONT COMBI-NATION LAMP RH
E54
E24
E15
E45 BR
E46 W
E48 B
H.S.
E53 B, E54 B
REFER TO THE FOLLOWING.
M69 - SUPER MULTIPLE JUNCTION (SMJ)
WKWA5817E

Hatchback

LT-TAIL/L-03

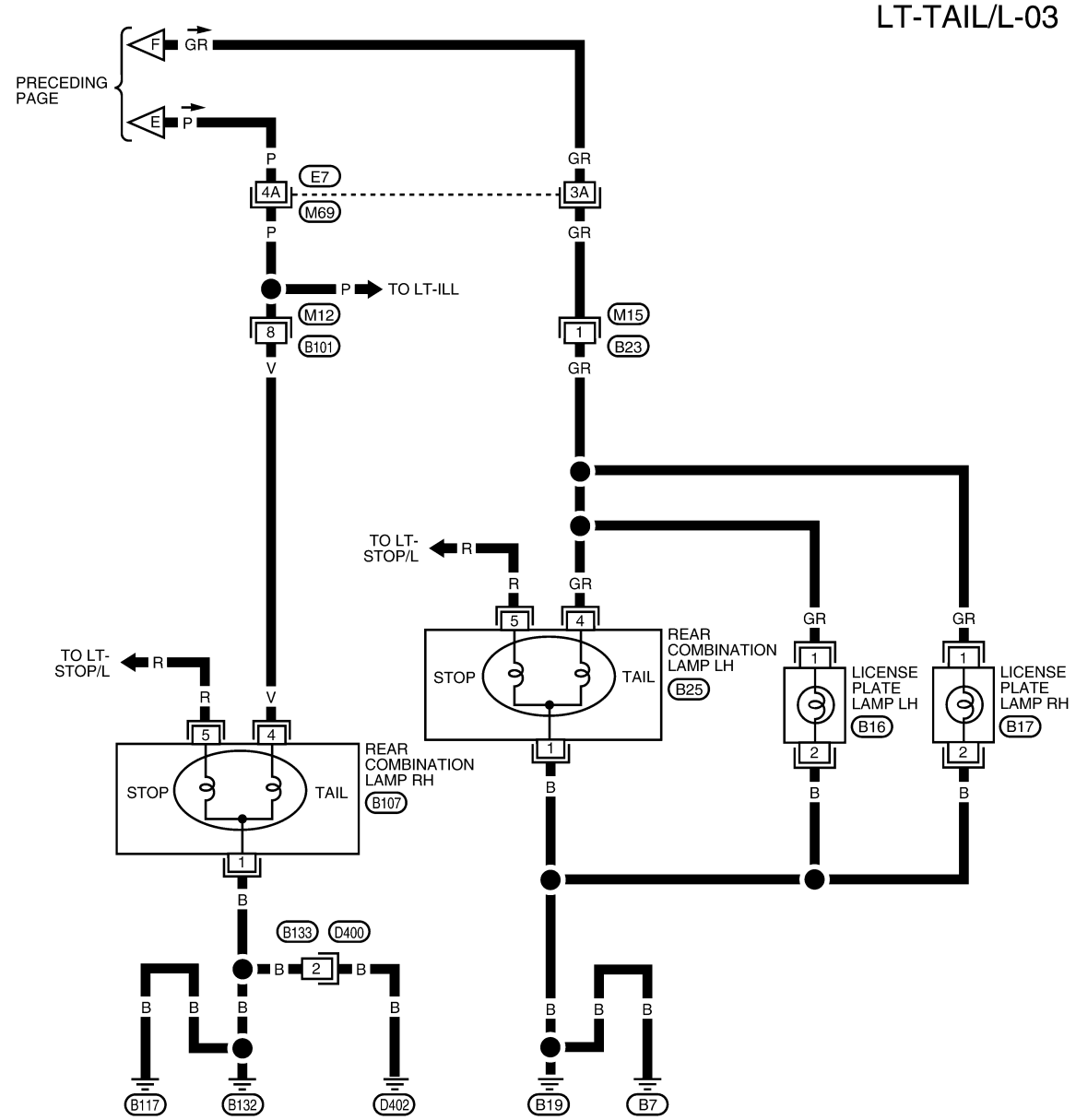

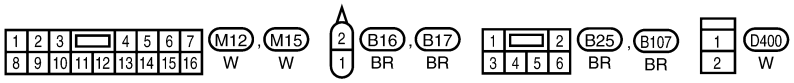

REFER TO THE FOLLOWING.
M69 - SUPER MULTIPLE JUNCTION (SMJ)

WKWA5818E

Sedan

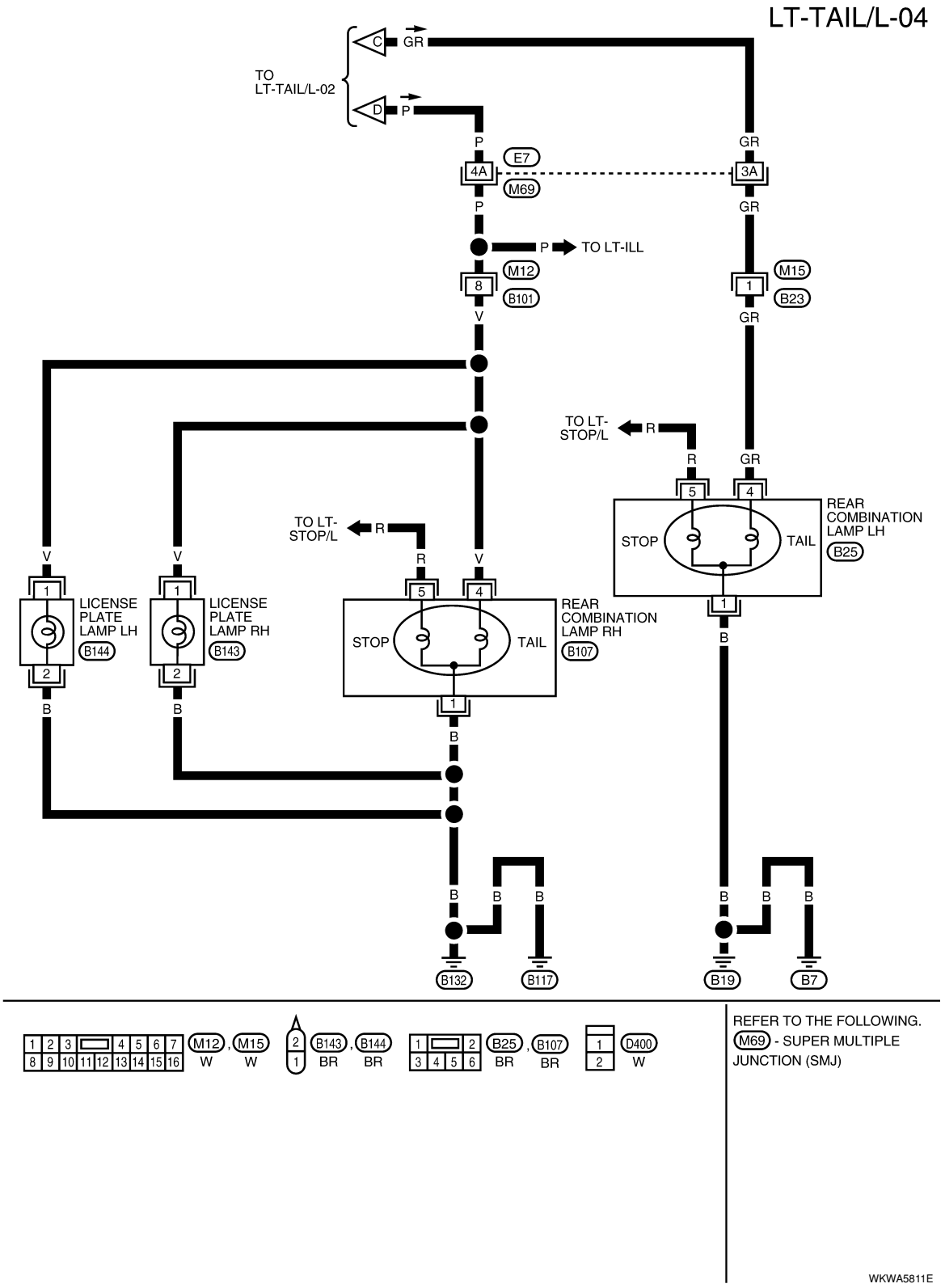

Terminal and Reference Value for BCM

INFOID:0000000001704452

Refer to BCS-11, "Terminal and Reference Value for BCM" .

Terminal and Reference Value for IPDM E/R

INFOID:0000000001704453

Refer to PG-23, "Terminal and Reference Value for IPDM E/R" .

How to Proceed with Trouble Diagnosis

INFOID:0000000001704454

1. Confirm the symptom or customer complaint.
2. Understand operation description and function description. Refer to LT-72, "System Description" .
3. Perform the preliminary check. Refer to LT-79, "Preliminary Check" .
4. Check symptom and repair or replace the cause of the malfunction.
5. Do the parking, license plate and tail lamps operate normally? If YES, GO TO 6. If NO, GO TO 4.
6. Inspection End.

Preliminary Check

INFOID:0000000001704455

CHECK POWER SUPPLY AND GROUND CIRCUIT FOR BCM

Refer to BCS-15, "BCM Power Supply and Ground Circuit Inspection" .

CHECK POWER SUPPLY AND GROUND CIRCUIT FOR IPDM E/R

Refer to PG-25, "IPDM E/R Power/Ground Circuit Inspection" .

CONSULT-III Function (BCM)

INFOID:0000000001704456

Refer to LT-11, "CONSULT-III Function (BCM)" .

CONSULT-III Function (IPDM E/R)

INFOID:0000000001704457

Refer to LT-12, "CONSULT-III Function (IPDM E/R)" .

Parking, License Plate and Tail Lamps Do Not Illuminate

INFOID:0000000001704458

1. CHECK TAIL LAMP FUSE

Inspect tail lamp 10A fuse (No. 37, located in IPDM E/R).

OK or NG

OK >> GO TO 2.
NG >> Repair harness.

2. CHECK COMBINATION SWITCH INPUT SIGNAL

With CONSULT-III

1. Select “BCM” on CONSULT-III. Select “HEAD LAMP” on “SELECT TEST ITEM” screen.
2. Select “DATA MONITOR” on “SELECT DIAG MODE” screen. Make sure “LIGHT SW 1ST” turns ON-OFF linked with operation of lighting switch.

When lighting switch is 1ST position	**: LIGHT SW 1ST ON**

Without CONSULT-III

Refer to LT-63, "Combination Switch Inspection" .

OK or NG

OK >> GO TO 3.
NG >> Check combination switch (lighting switch). Refer to LT-63, "Combination Switch Inspection" .

3. ACTIVE TEST

With CONSULT-III

1. Select “IPDM E/R” on CONSULT-III, and select “ACTIVE TEST” on “SELECT DIAG MODE” screen.
2. Select “EXTERNAL LAMPS” on “SELECT TEST ITEM” screen.
3. Touch “TAIL” on "ACTIVE TEST" screen.
4. Make sure parking, license plate and tail lamps operate.

Parking, license plate and tail lamps should operate.

Without CONSULT-III

1. Start auto active test. Refer to PG-19, "Auto Active Test" .
2. Make sure parking, license plate and tail lamps operate.

Parking, license plate and tail lamps should operate.

OK or NG

OK >> GO TO 4.
NG >> GO TO 5.

4. CHECK IPDM E/R

1. Select “IPDM E/R” on CONSULT-III, and select “DATA MONITOR” on “SELECT DIAG MODE” screen.
2. Make sure “TAIL&CLR REQ” turns ON when lighting switch is in 1ST position.

When lighting switch is 1ST position : TAIL&CLR REQ ON

OK or NG

OK >> Replace IPDM E/R. Refer to PG-26, "Removal and Installation of IPDM E/R" .
NG >> Replace BCM. Refer to BCS-18, "Removal and Installation of BCM" .

5. CHECK INPUT SIGNAL

With CONSULT-III

1. Turn ignition switch OFF.
2. Disconnect front combination lamp, license plate lamp and rear combination lamp connectors.
3. Select “IPDM E/R” on CONSULT-III, and select “ACTIVE TEST” on “SELECT DIAG MODE” screen.
4. Select “EXTERNAL LAMPS” on “SELECT TEST ITEM” screen.
5. Touch “TAIL” on "ACTIVE TEST" screen.
6. When tail lamp relay is operating, check voltage between front combination lamp, license plate lamp and rear combination lamp harness connector and ground.

Without CONSULT-III

1. Turn ignition switch OFF.
2. Disconnect front combination lamp, license plate lamp and rear combination lamp connectors.
3. Start auto active test. Refer to PG-19, "Auto Active Test" .
4. When tail lamp relay is operating, check voltage between front combination lamp, license plate lamp and rear combination lamp harness connector and ground.

Terminal				Voltage
(+)			(–)	
Front combination lamp connector		Terminal		
RH	E54	6	Ground	Battery voltage
LH	E53			

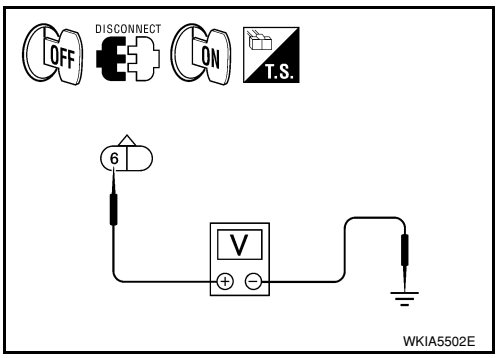

Terminal				Voltage
(+)			(–)	
License plate lamp connector		Terminal		
RH	B17 (Hatchback) B144 (Sedan)	1	Ground	Battery voltage
LH	B16 (Hatchback) B143 (Sedan)			

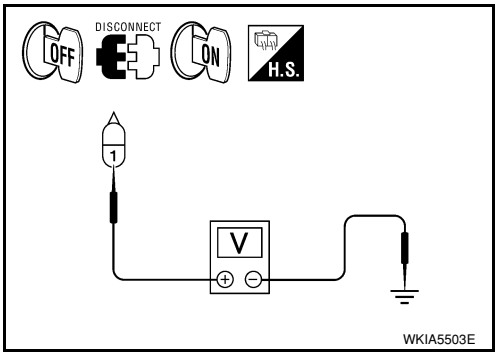

Terminal				Voltage
(+)			(–)	
Rear combination lamp connector (Tail lamp)		Terminal		
RH	B107	4	Ground	Battery voltage
LH	B25			

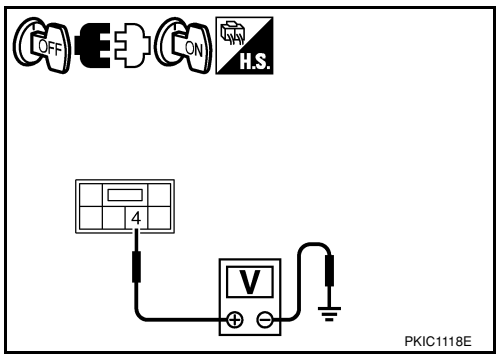

OK or NG

OK >> GO TO 7.
NG >> GO TO 6.

6. CHECK PARKING, LICENSE PLATE AND TAIL LAMP CIRCUIT

1. Turn ignition switch OFF.
2. Disconnect IPDM E/R connector.
3. Check continuity between IPDM E/R harness connector (A) and front combination lamp harness connector (B).

A		B			Continuity
Connector	Terminal	Connector		Terminal	
E45	27	RH	E54	6	Yes
	26	LH	E53		

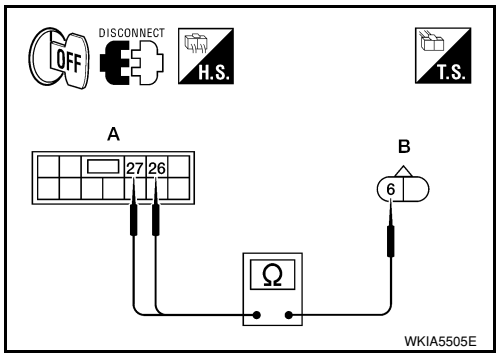

4. Check continuity between IPDM E/R harness connector (A) and license plate lamp harness connector (B).

A		B			Continuity
Connector	Terminal	Connector		Terminal	
E45	28	RH	B17 (Hatchback) B144 (Sedan)	1	Yes
		LH	B16 (Hatchback) B143 (Sedan)		

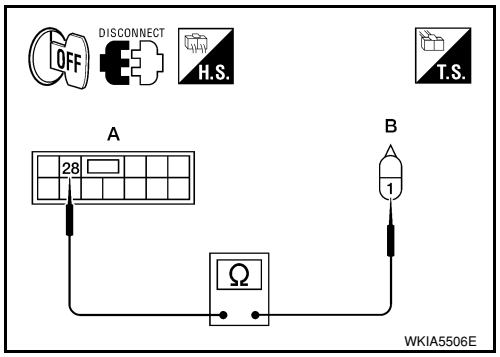

5. Check continuity between IPDM E/R harness connector (A) and rear combination lamp harness connector (B).

A		B			Continuity
Connector	Terminal	Connector		Terminal	
E45	29	RH	B107	4	Yes
	28	LH	B25		

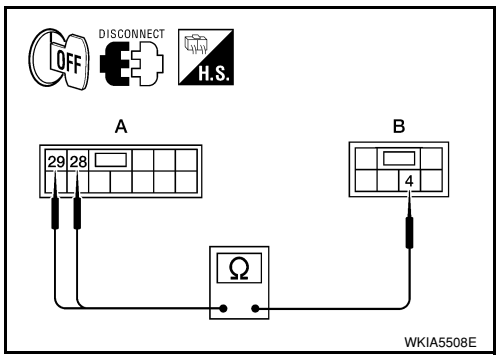

OK or NG

OK >> Replace IPDM E/R. Refer to PG-26, "Removal and Installation of IPDM E/R" .
NG >> Repair harness or connector.

7. CHECK PARKING, LICENSE PLATE AND TAIL LAMPS GROUND CIRCUIT

1. Check continuity between front combination lamp harness connector and ground.

Front combination lamp connector		Terminal		Continuity
RH	E54	7	Ground	Yes
LH	E53			

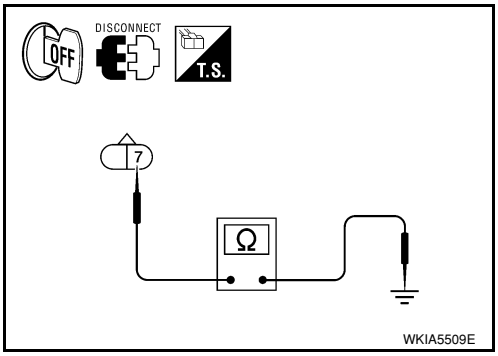

2. Check continuity between license plate lamp harness connector and ground.

License plate lamp connector		Terminal		Continuity
RH	B17 (Hatchback) B144 (Sedan)	2	Ground	Yes
LH	B16 (Hatchback) B143 (Sedan)			

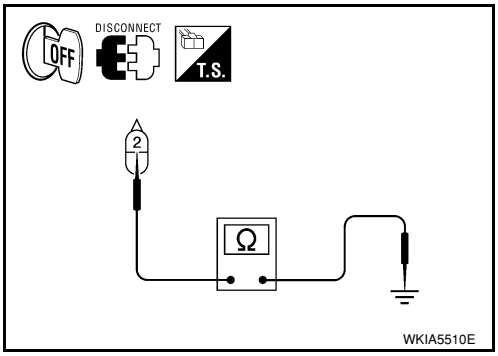

3. Check continuity between rear combination lamp harness connector and ground.

Rear combination lamp connector		Terminal		Continuity
RH	B107	1	Ground	Yes
LH	B25			

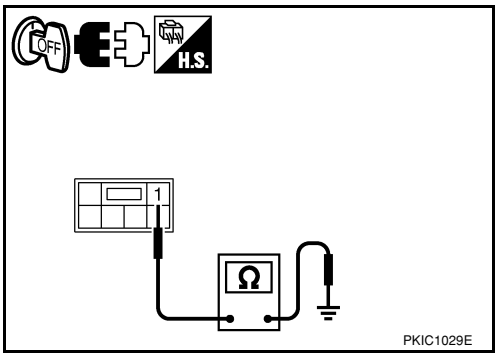

OK or NG

OK >> Check bulbs.
NG >> Repair harness or connector.

Parking, License Plate and Tail Lamps Do Not Turn OFF (After Approx. 10 Minutes)

INFOID:0000000001704459

- This symptom is related to the ignition relay in IPDM E/R. Refer to PG-17, "Function of Detecting Ignition Relay Malfunction" .
- Select “BCM” on CONSULT-III. Select “HEADLAMP” on “SELECT TEST ITEM” screen and select “DATA MONITOR” on “SELECT DIAG MODE” screen. If “LIGHT SW 1ST” is OFF when lighting switch is OFF, replace IPDM E/R.

Bulb Replacement

INFOID:0000000001704460

PARKING LAMP

Refer to LT-85, "Bulb Replacement".

LICENSE PLATE LAMP

Hatchback

1. Remove the license plate lamp. Refer to LT-83, "Removal and Installation".
2. Turn bulb socket counterclockwise and unlock it.
3. Remove bulb from the socket.
4. Installation is in the reverse order of removal.

Sedan

1. Remove the trunk lid finisher. Refer to EI-30, "Removal and Installation".

2. Remove the license plate lamp bulb socket (1) and remove the license plate lamp bulb (2).
3. Installation is in the reverse order of removal.

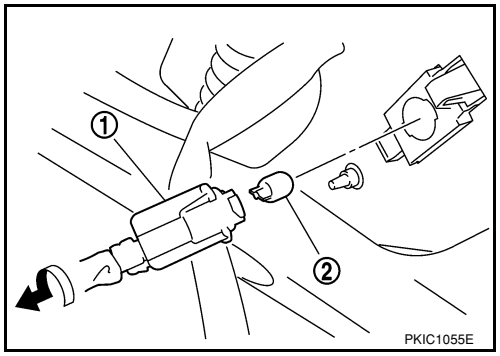

TAIL LAMP

Refer to LT-85, "Bulb Replacement".

Removal and Installation

INFOID:0000000001704461

PARKING LAMP

Refer to LT-86, "Removal and Installation".

LICENSE PLATE LAMP-HATCHBACK

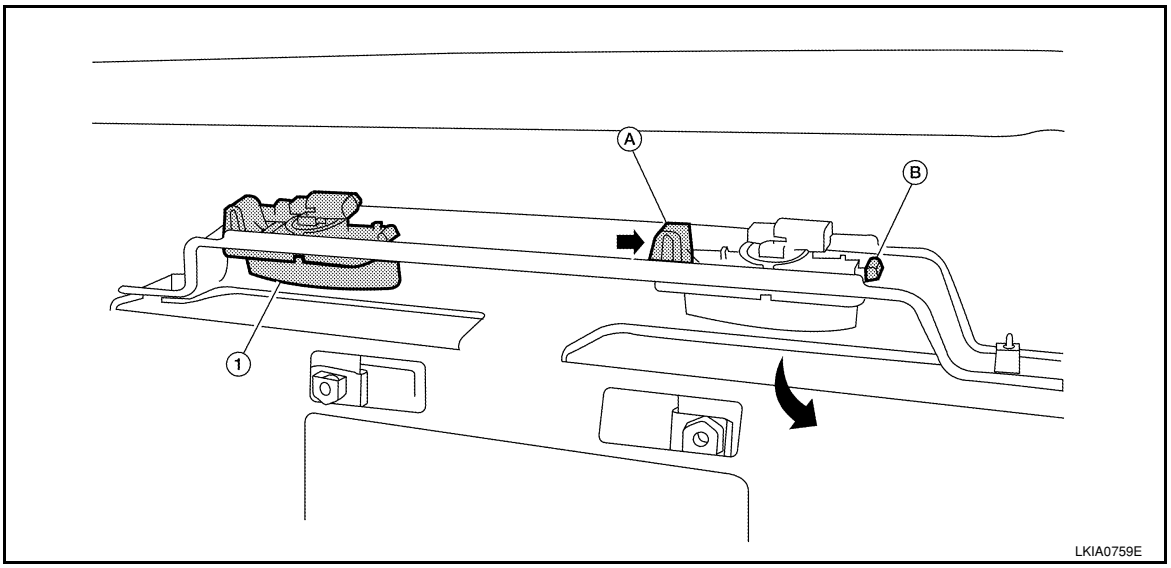

1. License plate lamp
A. Pawl
B. Hook

Removal

1. Press the license plate lamp pawl on the side of the rear bumper fascia, then swing the license plate lamp down to release the license plate lamp hook from the rear bumper fascia.
2. Disconnect the license plate lamp connector and remove the licence plate lamp.

Installation

Installation is in the reverse order of removal.

LICENSE PLATE LAMP-SEDAN

Removal

1. Remove the license plate lamp finisher. Refer to EI-53, "Removal and Installation".

2. Remove the license plate lamp assembly (1).

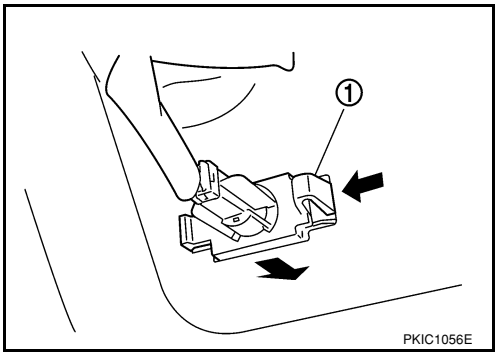

Installation
Installation is in the reverse order of removal.

TAIL LAMP

Refer to LT-86, "Removal and Installation".

REAR COMBINATION LAMP

Component

INFOID:0000000001704462

Hatchback

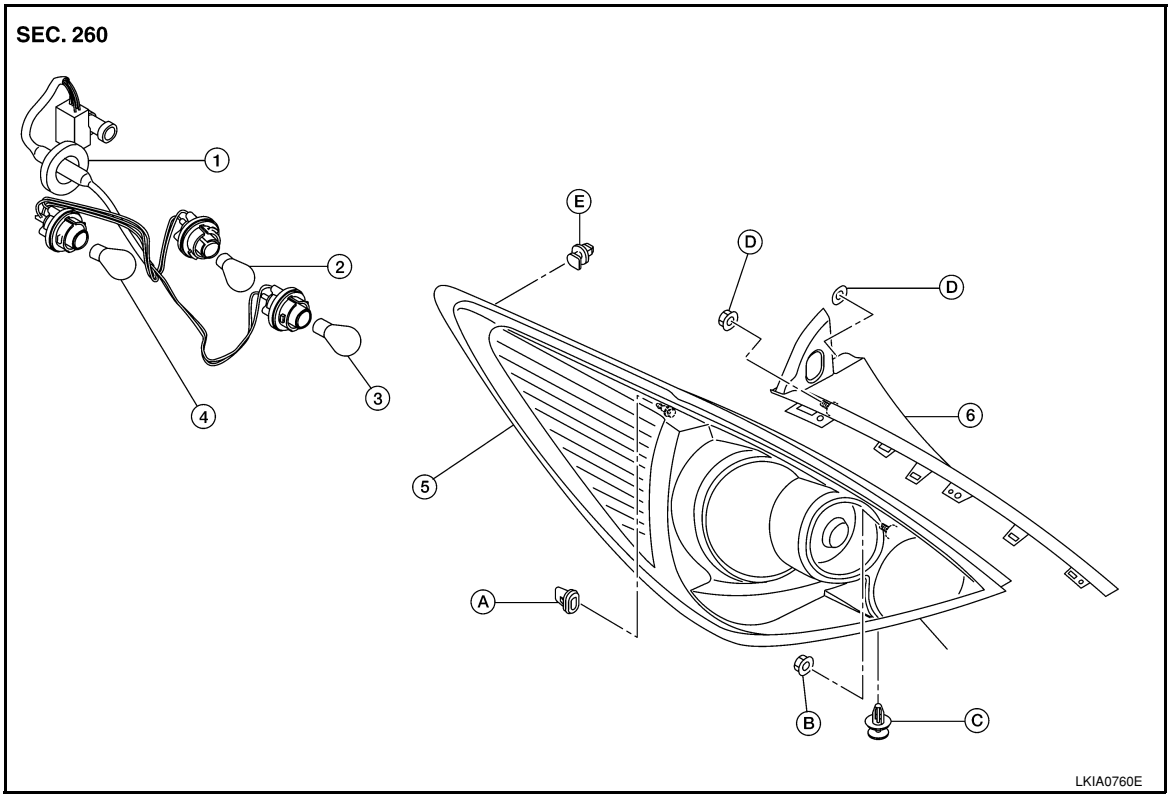

1.	Rear combination lamp harness	2.	Turn signal lamp bulb	3.	Back-up lamp bulb
4.	Stop/tail lamp bulb	5.	Rear combination lamp housing assembly	6.	Bumper stay
A.	Grommet	B.	Nut	C.	Clip
D.	Nuts	E.	Clip		

Bulb Replacement

INFOID:0000000001704463

HATCHBACK

1. Remove the rear combination lamp. Refer to LT-86, "Removal and Installation".
2. Turn bulb socket counterclockwise and unlock it.
3. Remove bulb.
4. Installation is in the reverse order of removal.

SEDAN

1. Remove trunk side finisher. Refer to EI-53, "Removal and Installation".
2. Turn bulb socket counterclockwise and unlock it.
3. Remove the stop/tail lamp bulb (1), turn signal lamp bulb (2), and the back-up lamp bulb (3).
4. Installation is in the reverse order of removal.

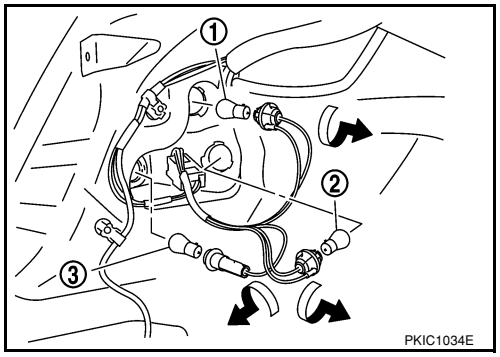

Removal and Installation

INFOID:0000000001704464

HATCHBACK

Removal

1. Remove rear combination lamp nuts.
2. Pull the rear combination lamp toward rear of the vehicle and remove from the vehicle.
3. Disconnect rear combination lamp connector, and remove rear combination lamp.

Installation
Installation is in the reverse order of removal.

SEDAN

Removal

1. Remove trunk side finisher. Refer to EI-51, "Removal and Installation".
2. Remove the rear combination lamp nuts (1).
3. Remove the rear combination lamp (2).
4. Remove the rear combination lamp seal (3).

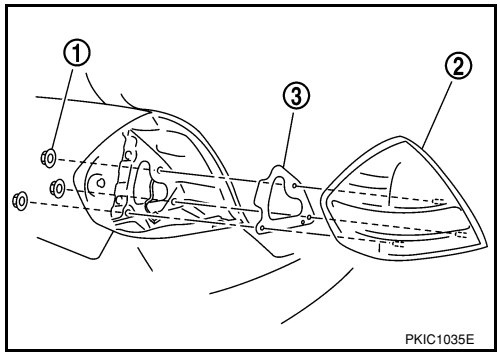

Installation
Installation is in the reverse order of removal.

Disassembly and Assembly

INFOID:0000000001704465

DISSASEMBLY

1. Remove the rear combination lamp harness.
2. Remove the bulbs from the rear combination lamp harness, as necessary.
3. Remove the bumper stay (hatchback only).
4. Remove the rear combination lamp seal (sedan only).

ASSEMBLY

Assembly is in the reverse order of disassembly.

INTERIOR LAMP

Map Lamp

INFOID:0000000001704466

BULB REPLACEMENT

1. Remove the map lamp lens (1).
2. Remove the bulb from lamp.
   NOTE:
   Pull bulb end from Y-shaped connector first to remove.
3. Installation is in the reverse order of removal.
   - Install the map lamp lens (1) so the round lens is positioned to the front of the vehicle as shown. There is a tab on the lens to prevent incorrect installation of the lens.

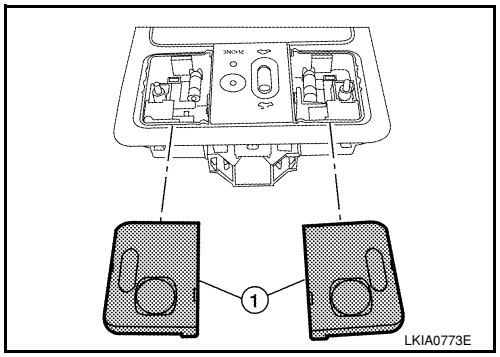

REMOVAL AND INSTALLATION

Removal

1. Insert a suitable tool and disengage the pawl (A) fittings the map lamp (1).
2. Disconnect map lamp connector and remove map lamp (1).

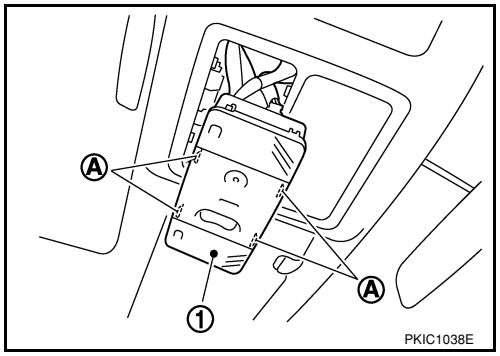

Installation

Installation is in the reverse order of removal.

DISASSEMBLY AND ASSEMBLY

Disassembly

1. Remove screw (A).
2. Remove sunroof switch (1).

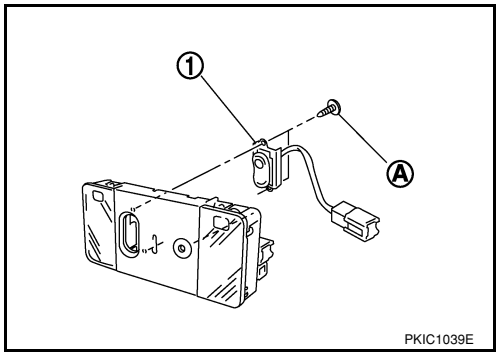

Assembly

Assembly is in the reverse order of disassembly.

Luggage Compartment Lamp

INFOID:0000000001704467

BULB REPLACEMENT

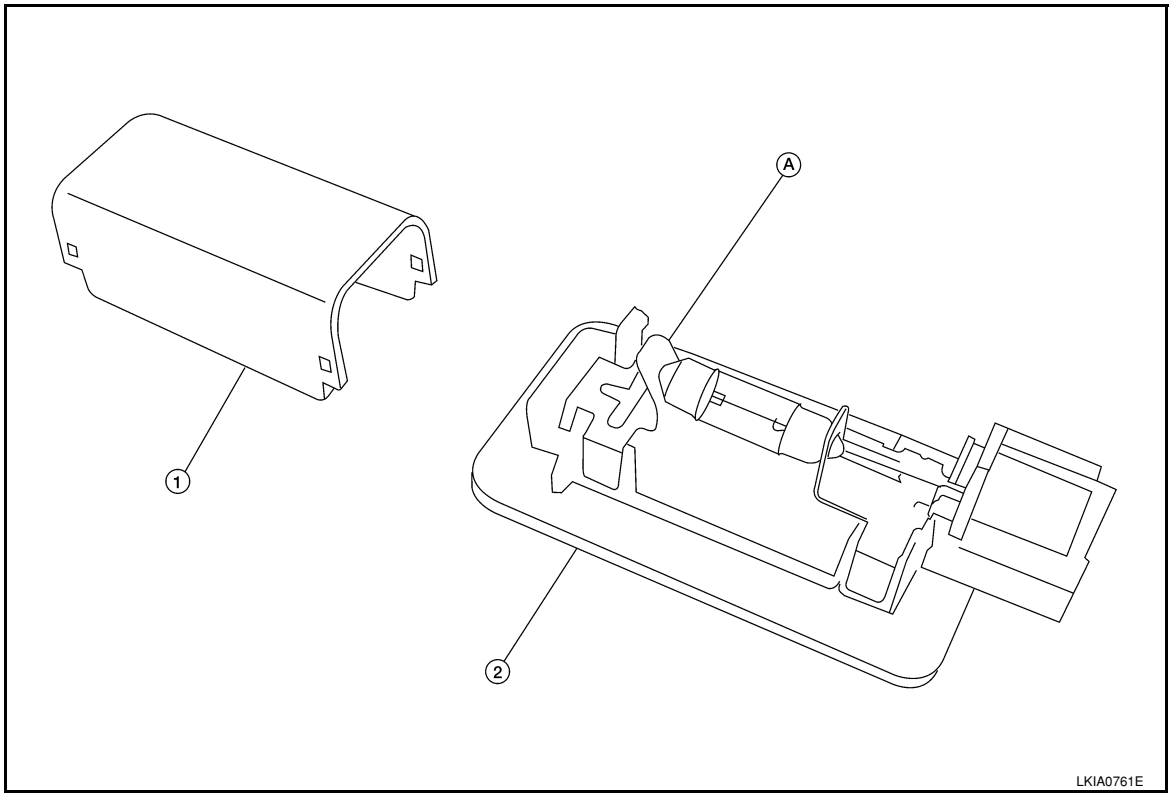

1. Luggage compartment lamp bulb cover 2. Luggage compartment lamp A. Tab A

1. Remove luggage compartment lamp cover.
2. Press tab A and remove the bulb.
3. Installation is in the reverse order of removal.

REMOVAL AND INSTALLATION

Removal

1. Remove luggage compartment lamp from the luggage side finisher LH.
2. Disconnect luggage compartment lamp connector.

Installation

Installation is in the reverse order of removal.

INTERIOR ROOM LAMP

Component Parts and Harness Connector Location

INFOID:0000000001704468

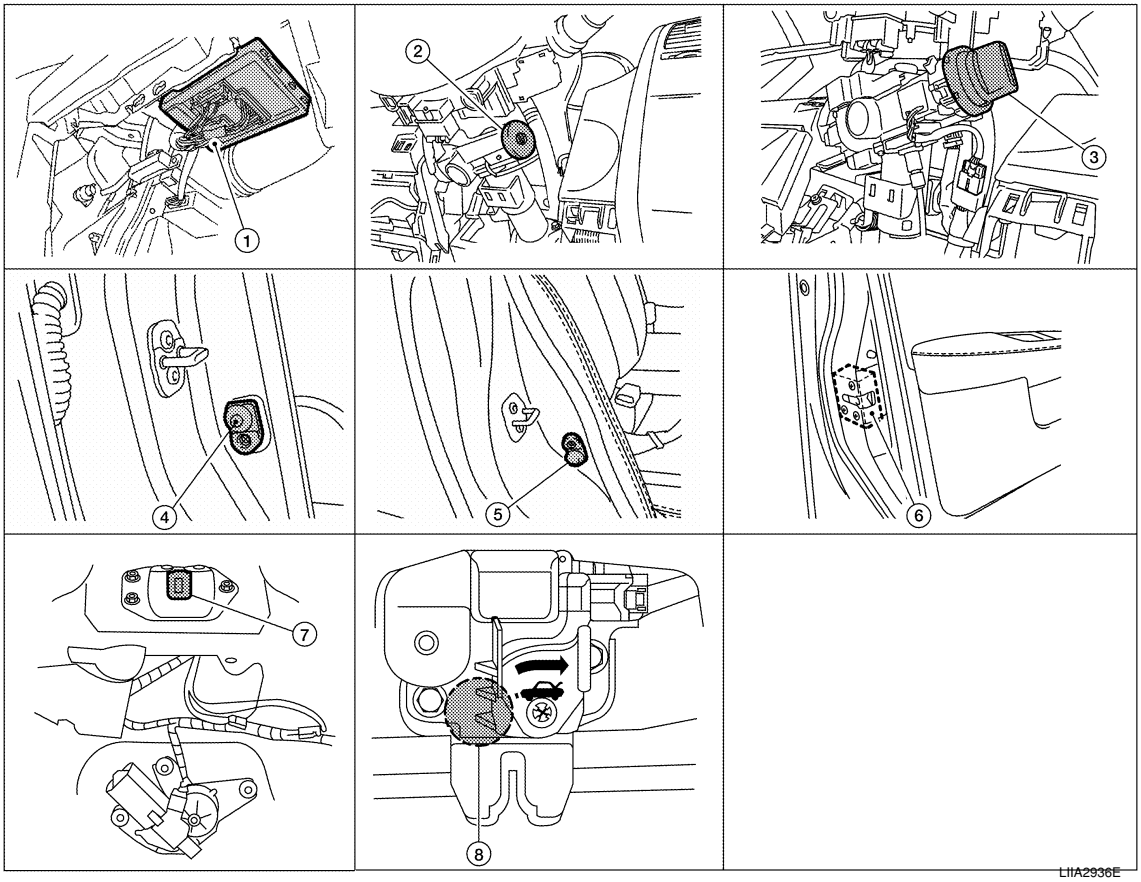

1. BCM M18, M19 and M20 (view with glove box removed)
2. Key switch and key lock solenoid (without Intelligent Key) M27
3. Key switch and ignition knob switch (with Intelligent Key) M73
4. Front door switch LH B8 and RH B108
5. Rear door switch LH B6 and RH B116
6. Front door key cylinder switch LH D14
7. Back door lock assembly D405 (hatchback)
8. Trunk lamp switch and trunk release solenoid B127 (sedan)

System Description

INFOID:0000000001704469

When room lamp switch is in DOOR position, room lamp ON/OFF is controlled by timer according to signals from switches including key switch, front door switch LH, unlock signal from keyfob, door lock and unlock switch, key cylinder lock and unlock switch, ignition switch.
When room lamp turns ON, there is a gradual brightening over 1 second.
When room lamp turns OFF, there is a gradual dimming over 1 second.
Interior room lamp timer is controlled by BCM (body control module).
Interior room lamp timer control settings can be changed with CONSULT-III.

POWER SUPPLY AND GROUND

Power is supplied at all times (without Intelligent Key system)
- through 10A fuse [No. 14, located in fuse block (J/B)]
- to key switch and key lock solenoid terminal 2,
- through 10A fuse [No. 8, located in fuse block (J/B)]
- to BCM terminal 57,
- through 40A fusible link (letter **g** , located in fuse and fusible link box)
- to BCM terminal 70.

Power is supplied at all times (with Intelligent Key system)

- through 10A fuse (No. 31, located in fuse and fusible link box)
- to key switch and ignition knob switch terminals 2 and 4,
- through 10A fuse [No. 8, located in fuse block (J/B)]
- to BCM terminal 57,
- through 40A fusible link (letter **g** , located in fuse and fusible link box)
- to BCM terminal 70.

When key is inserted in the key switch and key lock solenoid, power is supplied (without Intelligent Key system)

- through key switch and key lock solenoid terminal 1
- to BCM terminal 37.

When key is inserted in the key switch and ignition knob switch, power is supplied (with Intelligent Key system)

- through key switch and ignition knob switch terminal 1
- to BCM terminal 37.

When ignition knob switch is pushed, power is supplied (with Intelligent Key system)

- through key switch and ignition knob switch terminal 3
- to Intelligent Key unit terminal 27.

With the ignition switch in the ON or START position, power is supplied

- through 10A fuse [No. 6, located in fuse block (J/B)]
- to BCM terminal 38.

Ground is supplied

- to BCM terminal 67
- through grounds M57 and M61.

When front door LH is opened, ground is supplied

- to BCM terminal 47
- through front door switch LH terminal 2
- through case ground of front door switch LH.

When front door RH is opened, ground is supplied

- to BCM terminal 12
- through front door switch RH terminal 2
- through case ground of front door switch RH.

When rear door LH is opened, ground is supplied

- to BCM terminal 48
- through rear door switch LH terminal 1
- through case ground of rear door switch LH.

When rear door RH is opened, ground is supplied

- to BCM terminal 13
- through rear door switch RH terminal 1
- through case ground of rear door switch RH.

When back door (hatchback) is opened, ground is supplied

- to BCM terminal 43
- through back door lock assembly (back door switch) terminal 3
- through back door lock assembly (back door switch) terminal 4
- through grounds B117, B132 and D402.

When trunk lid (sedan) is opened, ground is supplied

- to BCM terminal 42
- through trunk lamp switch and trunk release solenoid terminal 3
- through trunk lamp switch and trunk release solenoid terminal 1
- through grounds B117 and B132.

When front door LH is unlocked by front door key cylinder switch LH, the BCM receives a ground signal

- to BCM terminal 7
- through front door key cylinder switch LH terminal 3
- through front door key cylinder switch LH terminal 2
- through grounds M57 and M61.

When a signal, or combination of signals is received by BCM, ground is supplied

- to room lamp terminal 2
- through map lamp terminals 5 and 2 (with map lamp)
- through BCM terminal 63.

With power and ground supplied, the interior room lamp illuminates.

SWITCH OPERATION

When map lamp switch is ON (with map lamp), ground is supplied

- through grounds M57 and M61.

• to map lamp terminal 1
Power is supplied
• through BCM terminal 56
• to map lamp terminal 4.
When interior room lamp switch is ON, ground is supplied
• to interior room lamp terminal 1
• through map lamp (with map lamp) terminal 7
• through map lamp (with map lamp) terminal 1
• through grounds M57 and M61.
Power is supplied
• through BCM terminal 56
• through map lamp (with map lamp) terminal 4
• through map lamp (with map lamp) terminal 6
• to room lamp terminal 3.

INTERIOR ROOM LAMP TIMER OPERATION

Without Intelligent Key System

When room lamp switch is in DOOR position, and when all conditions below are met, BCM performs timer control (maximum 30 seconds) for room lamp ON/OFF.
In addition, when the interior room lamp turns ON or OFF there is gradual brightening or dimming over 1 second.
Power is supplied
• through 10A fuse [No. 14, located in fuse block (J/B)]
• to key switch and key lock solenoid terminal 2.
When the key is removed from ignition key cylinder (key switch OFF), power will not be supplied to BCM terminal 37.
When front door key cylinder switch LH is unlocked, ground is supplied
• to BCM terminal 7
• through front door key cylinder switch LH terminal 3
• through front door key cylinder switch LH terminal 2
• through grounds M57 and M61.
At the time that front door LH is opened, BCM detects that front door LH is unlocked. It determines that interior room lamp timer operation condition is met, and turns the room lamp ON for 30 seconds.
When key is in ignition key cylinder (key switch ON),
Power is supplied
• through key switch and key lock solenoid terminal 1
• to BCM terminal 37.
When key is removed from key switch and key lock solenoid (key switch OFF), the power supply to BCM terminal 37 is terminated. BCM detects that key has been removed, determines that interior room lamp timer conditions are met, and turns the room lamp ON for 30 seconds.
When front door LH opens → closes, and the key is not inserted in the key switch and key lock solenoid (key switch OFF), voltage at BCM terminal 47 changes between 0V (door open) → 12V (door closed). The BCM determines that conditions for room lamp operation are met and turns the room lamp ON for 30 seconds.
Interior room lamp timer control is canceled under the following conditions:
• Front door LH is locked (locked front door key cylinder switch LH).
• Front door LH is opened (front door switch LH).
• Ignition switch ON.

With Intelligent Key System

When the room lamp switch is in DOOR position, and when all conditions below are met, BCM performs timer control (maximum 30 second) for room lamp ON/OFF.
In addition, when interior room lamp turns ON or OFF there is gradual brightening or dimming over 1 second.
Power is supplied
• through 10A fuse (No. 31, located in fuse and fusible link box)
• to key switch and ignition knob switch terminals 2 and 4.
When key is removed from ignition key cylinder (key switch OFF), power will not be supplied to BCM terminal 37.
When the ignition knob switch is released, power will not be supplied to Intelligent Key unit terminal 27.
When front door key cylinder switch LH is unlocked, ground is supplied
• to BCM terminal 7
• through front door key cylinder switch LH terminal 3

- through front door key cylinder switch LH terminal 2
- through grounds M57 and M61.

At the time the front door LH is opened, the BCM detects the front door LH is unlocked. It determines that the interior room lamp timer operation conditions are met, and interior room lamp ON for 30 seconds.
When the key is in ignition key cylinder (key switch ON), or ignition knob switch is pushed, power is supplied

- through key switch and ignition knob switch terminal 1
- to BCM terminal 37, or
- through key switch and ignition knob switch terminal 3
- to Intelligent Key unit terminal 27.

When the key is removed from key switch (key switch OFF), power supply to BCM terminal 37 is terminated. When the ignition knob switch is released, power supply to intelligent key unit is terminated. The BCM detects that the key has been removed, determines that interior room lamp timer conditions are met, and turns room lamp ON for 30 seconds.
When the front door LH opens → closes, and key is not inserted in key switch (or ignition knob switch is released), BCM terminal 47 changes between 0V (door open) → 12V (door closed). BCM determines that conditions for room lamp operation are met, and turns room lamp ON for 30 seconds.
Interior room lamp timer control is canceled under the following conditions:

- Front door LH is locked (with keyfob or front door key cylinder switch LH).
- Front door LH is opened (front door switch LH).
- Ignition switch ON.

INTERIOR LAMP BATTERY SAVER CONTROL

If an interior room lamp is left ON, it will not be turned OFF even when door is closed.
BCM turns off interior lamp automatically to save battery 30 minutes after ignition switch is turned off.
After lamps are turned OFF by the battery saver system, the lamps illuminate again when

- front door key cylinder switch LH is locked or unlocked
- door is opened or closed
- key is removed from ignition key cylinder or inserted in ignition key cylinder, or the ignition knob switch is pushed or released.

Interior lamp battery saver control time period can be changed by the function setting of CONSULT-III.

Schematic

INFOID:0000000001704470

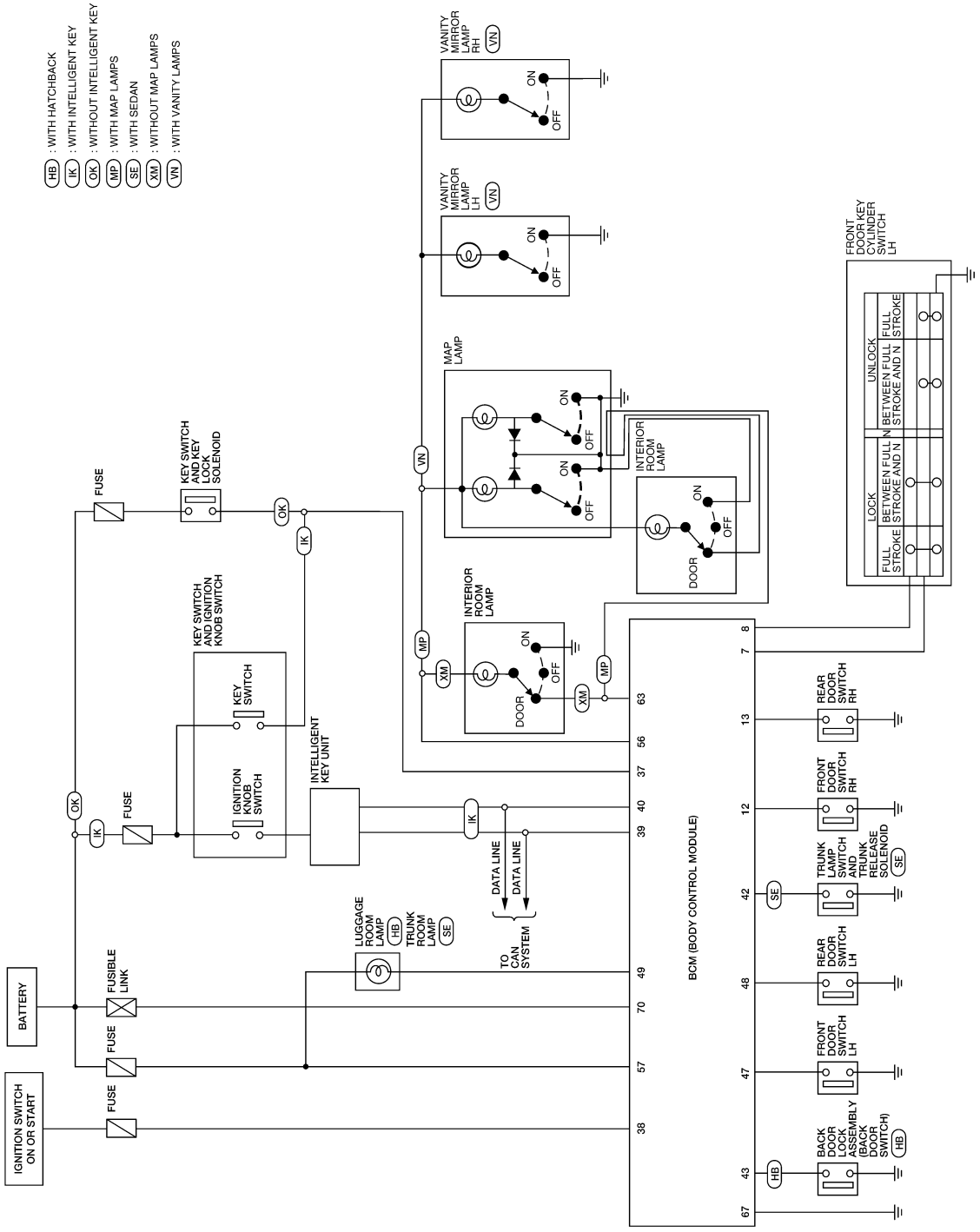

Wiring Diagram - INT/L -

INFOID:0000000001704471

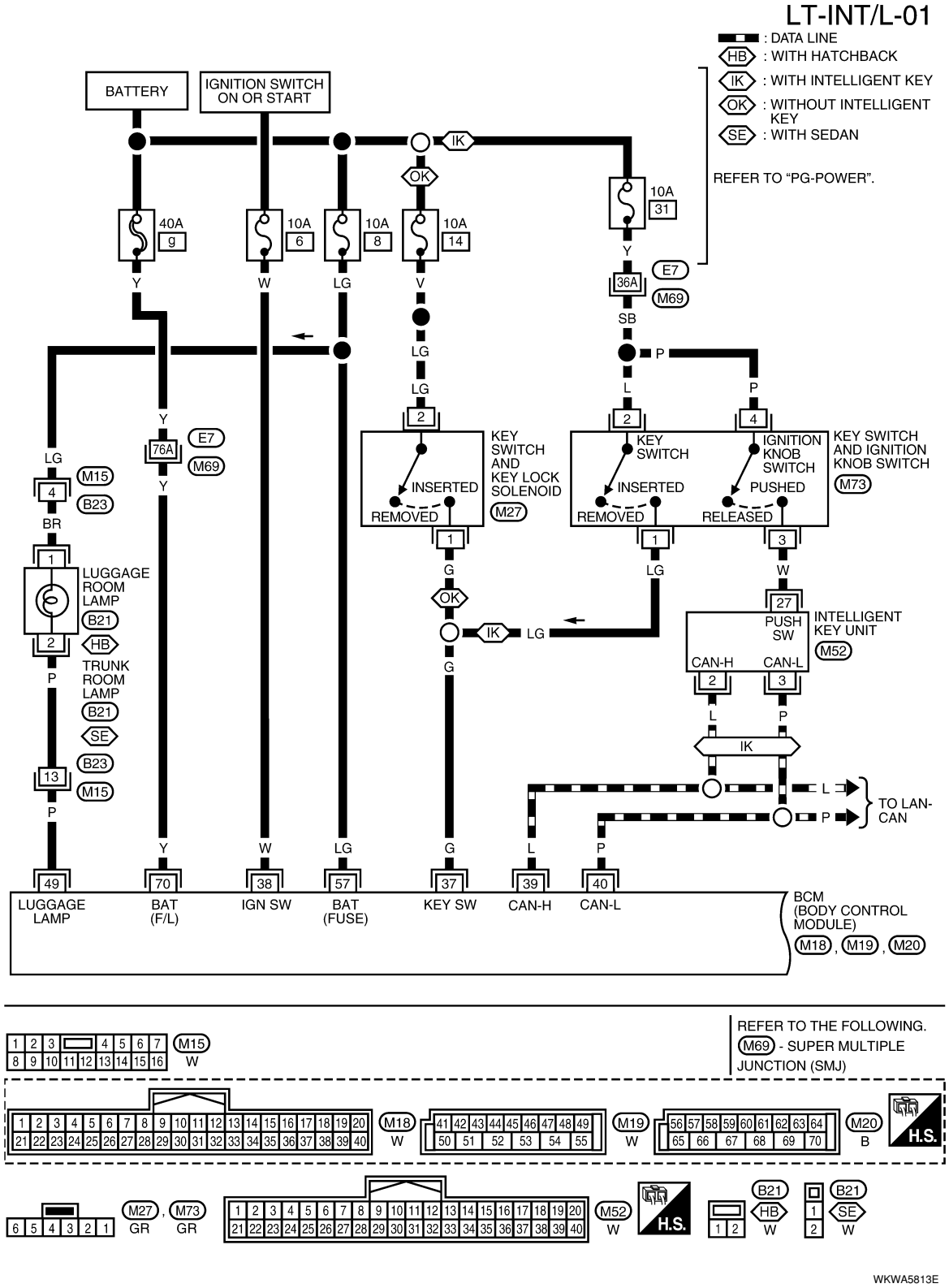

LT-INTL/L-02

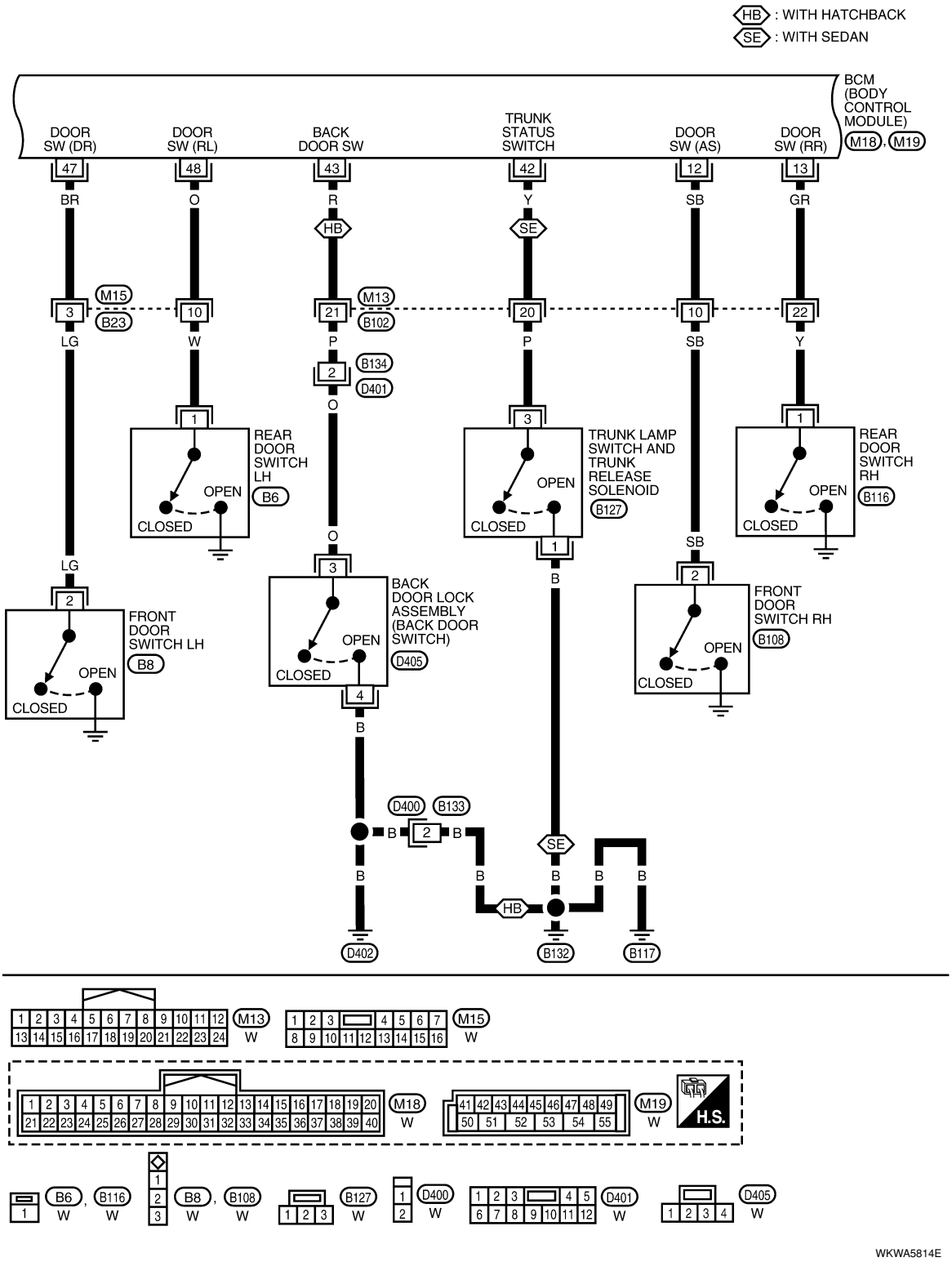
HB : WITH HATCHBACK
SE : WITH SEDAN
BCM (BODY CONTROL MODULE)
M18, M19
DOOR SW (DR)
DOOR SW (RL)
BACK DOOR SW
TRUNK STATUS SWITCH
DOOR SW (AS)
DOOR SW (RR)
47
48
43
42
12
13
BR
O
R
Y
SB
GR
HB
SE
M15
B23
M13
B102
3
10
21
20
10
22
LG
W
P
P
SB
Y
B134
D401
2
O
REAR DOOR SWITCH LH
B6
OPEN
CLOSED
TRUNK LAMP SWITCH AND TRUNK RELEASE SOLENOID
B127
REAR DOOR SWITCH RH
B116
LG
FRONT DOOR SWITCH LH
B8
BACK DOOR LOCK ASSEMBLY (BACK DOOR SWITCH)
D405
B
FRONT DOOR SWITCH RH
B108
D400
B133
D402
B132
B117
M13
W
M15
W
M18
W
M19
W
H.S.
B6
B116
B8
B108
B127
D400
D401
D405
WKWA5814E

LT-INT/L-03

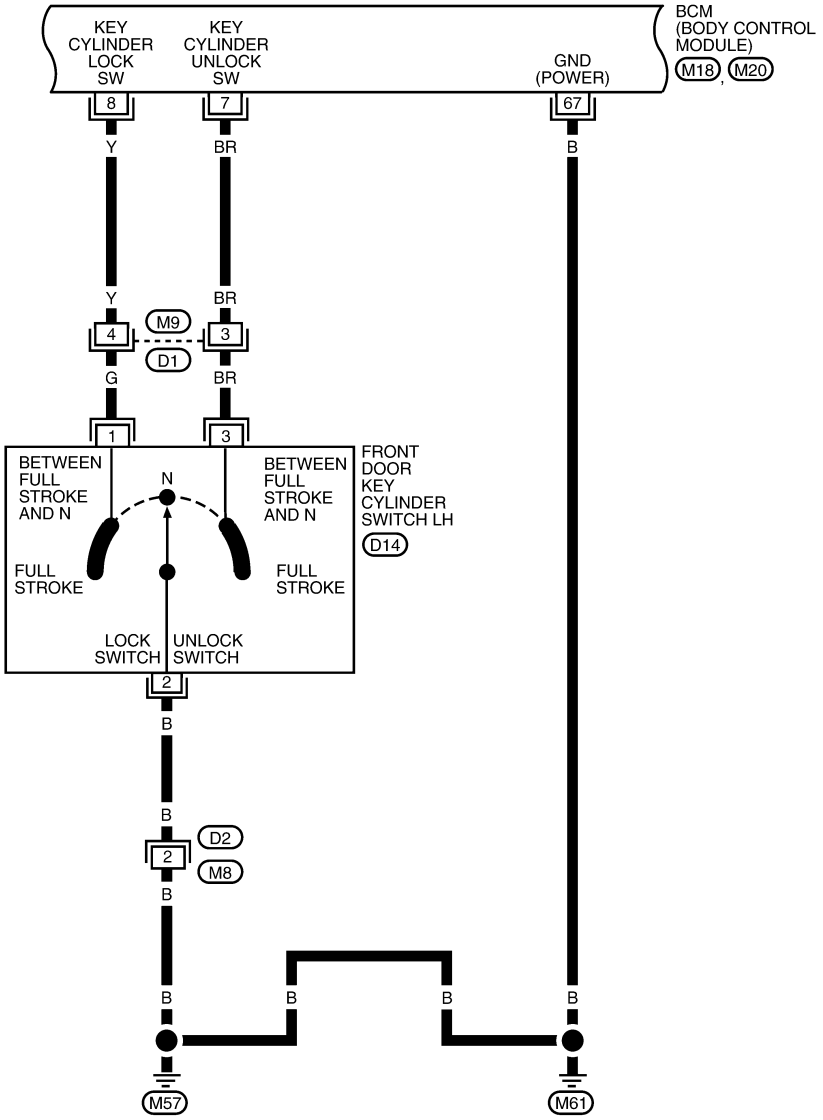

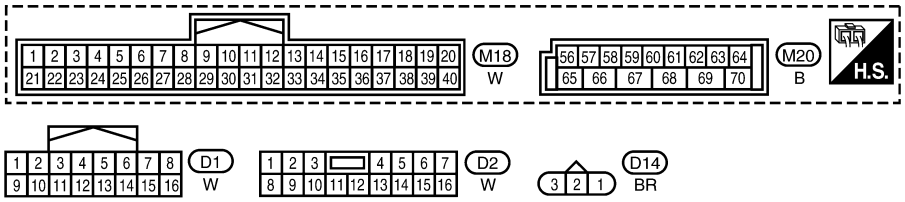

LKWA0341E

LT-INT/L-04

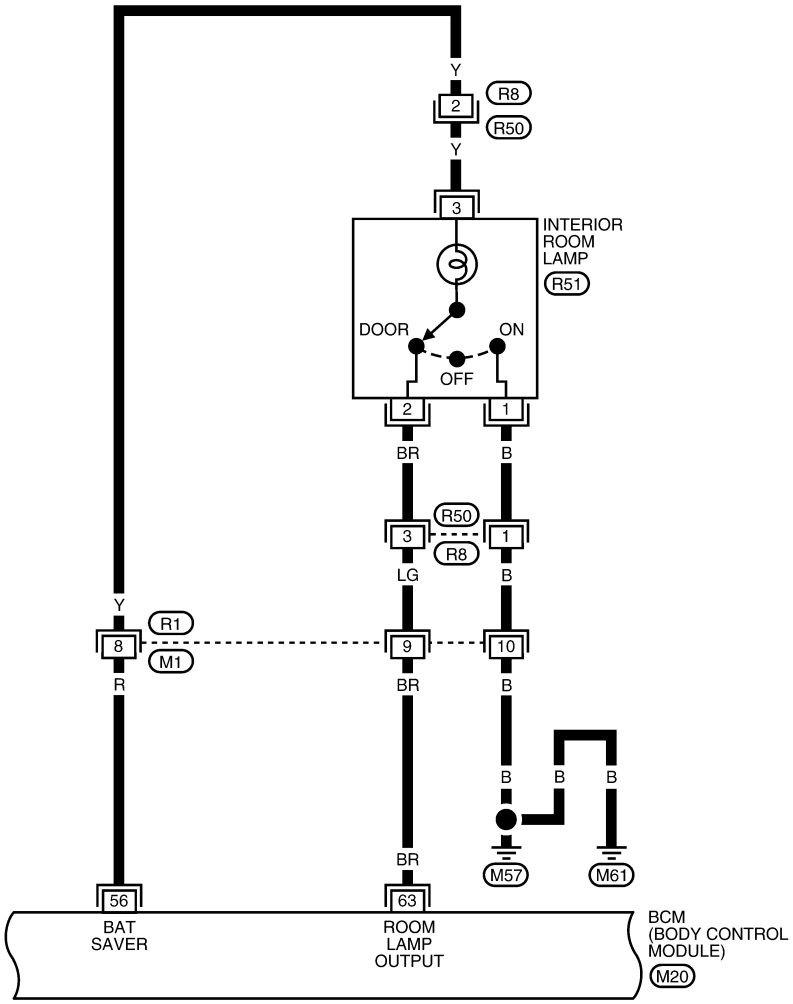

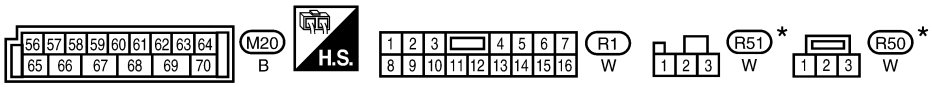

*: THIS CONNECTOR IS NOT SHOWN IN “HARNESS LAYOUT” OF PG SECTION.

LKWA0342E

LT-INT/L-05

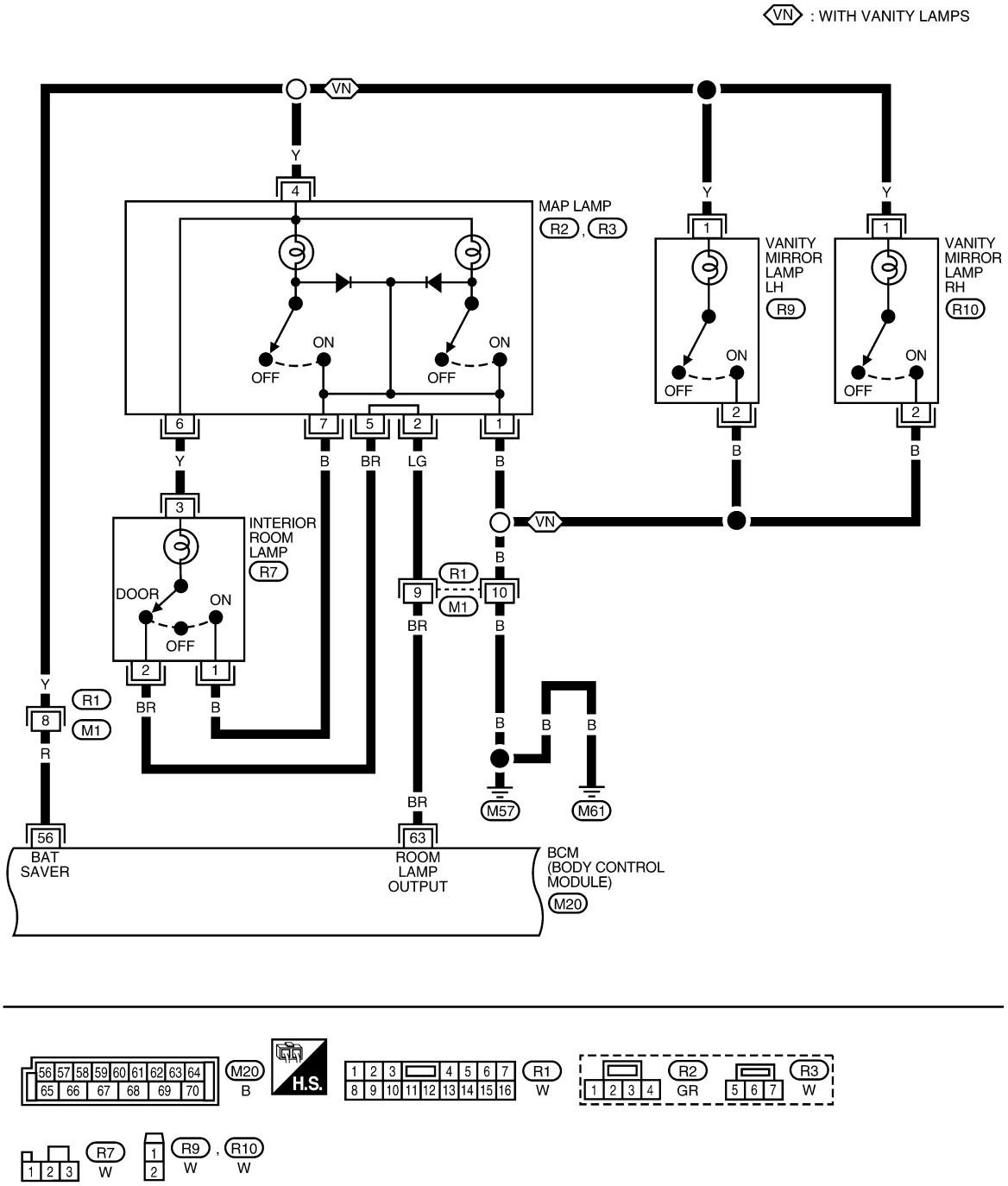

Terminal and Reference Value for BCM

INFOID:0000000001704472

Refer to BCS-11, "Terminal and Reference Value for BCM" .

How to Proceed with Trouble Diagnosis

INFOID:0000000001704473

1. Confirm the symptom or customer complaint.
2. Understand operation description and function description. Refer to LT-89, "System Description" .

3. Perform the preliminary check. Refer to LT-99, "Preliminary Check" .
4. Check symptom and repair or replace the cause of the malfunction.
5. Does the interior room lamp operate normally? If YES, GO TO 6. If NO, GO TO 4.
6. Inspection End

Preliminary Check

INFOID:0000000001704474

CHECK POWER SUPPLY AND GROUND CIRCUIT FOR BCM

Refer to BCS-15, "BCM Power Supply and Ground Circuit Inspection" .

CHECK POWER SUPPLY AND GROUND CIRCUIT FOR IPDM E/R

Refer to LT-11, "Preliminary Check" .

CONSULT-III Function (BCM)

INFOID:0000000001704475

Refer to LT-11, "CONSULT-III Function (BCM)".

WORK SUPPORT

Display Item List

Item	Description	CONSULT-III
SET I/L D–UNLCK INTCON	The 30 second operating function of the interior room lamps can be selected when the front door LH is released (unlocked).	ON/OFF
ROOM LAMP ON TIME SET	The time in order to escalate illumination can be adjusted when interior room lamps are turned on.	MODE 1 – 7
ROOM LAMP OFF TIME SET	The time in order to diminish illumination can be adjusted when interior room lamps are turned off.	MODE 1 – 7

Reference between “MODE” and “TIME” for “TURN ON/OFF”

MODE	1	2	3	4	5	6	7
Time (sec.)	0.5	1	2	3	4	5	0

DATA MONITOR

Display Item List

Monitor item		Contents
IGN ON SW	“ON/OFF”	Displays “IGN position (ON)/OFF, ACC position (OFF)” judged from ignition switch signal.
KEY ON SW	“ON/OFF”	Displays “Key inserted (ON)/key removed (OFF)” status judged from key switch signal.
DOOR SW - DR	“ON/OFF”	Displays status of front door LH as judged from front door switch LH signal. (Door is open: ON/Door is closed: OFF)
DOOR SW - AS	“ON/OFF”	Displays “Door open (ON)/Door closed (OFF)” status, determined from front door switch RH signal.
DOOR SW - RR	“ON/OFF”	Displays “Door open (ON)/Door closed (OFF)” status, determined from rear door switch RH signal.
DOOR SW - RL	“ON/OFF”	Displays “Door open (ON)/Door closed (OFF) ” status, determined from rear door switch LH signal.
TRUNK	“ON/OFF”	Displays "Back door/Trunk open (ON)/closed (OFF)" status, determined from the back door switch (hatchback) or the trunk lamp switch (sedan).
LOCK STATUS	“ON/OFF”	Display status (door is locked: ON/door is unlocked: OFF) of front door lock actuator LH (unlock sensor) judged from the front door lock actuator LH (unlock sensor) signal.
CDL LOCK SW	“ON/OFF”	Displays “Door locked (ON)/Door unlocked (OFF) status, determined from locking detection switch in the front door LH.
CDL UNLOCK SW	“ON/OFF”	Displays “Door unlocked (OFF)” status, determined from locking detection switch in front door RH.

Monitor item		Contents
I– KEY LOCK[NOTE]	“ON/OFF”	Displays “Locked (ON)/Other (OFF)” status, determined from lock signal.
I– KEY UNLOCK[NOTE]	“ON/OFF”	Displays “Unlocked (ON)/Other (OFF)” status, determined from unlock signal.

NOTE:
Vehicles without intelligent key system display this item, but cannot be monitored.

ACTIVE TEST

Display Item List

Test item	Description
INT LAMP	Interior room lamp can be operated by any ON-OFF operations.

WORK SUPPORT

Display Item List

Item	Description	CONSULT-III
ROOM LAMP TIMER SET	Interior room lamp battery saver timer setting can be changed.	MODE 1: 30 min. MODE 2: 60 min.
ROOM LAMP BAT SAV SET	Interior room lamp battery saver control mode can be changed in this mode. Select interior room lamp battery saver control mode between ON and OFF.	ON/OFF

Interior Room Lamp Control Does Not Operate (With Map Lamp)

INFOID:0000000001704476

1.CHECK EACH SWITCH

Select "BCM" on CONSULT-III. With "INT LAMP" data monitor, make sure switches listed in display item list turn ON-OFF linked with switch operation. Refer to LT-99, "CONSULT-III Function (BCM)" for switches and their functions.

OK or NG

OK >> GO TO 2.
NG >> Inspect malfunctioning switch system.

2.ACTIVE TEST

1. Select “BCM” on CONSULT-III. Select “INT LAMP" active test.
2. When room lamp switch is in DOOR position, make sure room lamp operates.

Room lamp should operate.

OK or NG

OK >> Replace BCM. Refer to BCS-18, "Removal and Installation of BCM" .
NG >> GO TO 3.

3.CHECK ROOM LAMP INPUT VOLTAGE

1. Turn ignition switch OFF.
2. Check voltage between interior room lamp harness connector R7 terminal 3 and ground.

3 - Ground : Battery voltage.

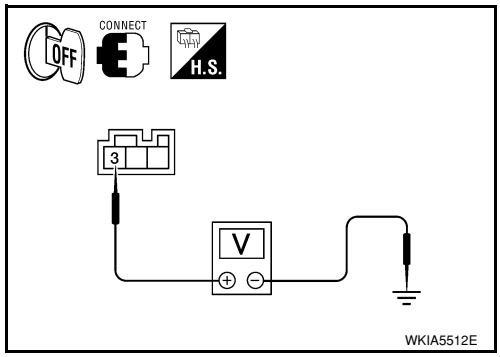

OK or NG

OK >> GO TO 6.
NG >> GO TO 4.

4.CHECK MAP LAMP INPUT CIRCUIT

1. Map lamp switch is in OFF position.
2. Check voltage between map lamp harness connector R2 terminal 4 and ground.

4 - Ground : Battery voltage.

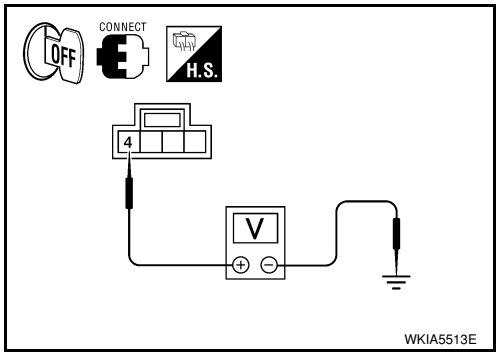

OK or NG

OK >> GO TO 5.
NG >> Repair harness or connector.

5. CHECK ROOM LAMP INPUT CIRCUIT

1. Disconnect map lamp connector and interior room lamp connector.
2. Check continuity between map lamp harness connector R3 (A) terminal 6 and interior room lamp harness connector R7 (B) terminal 3.

6 - 3 : Continuity should exist.

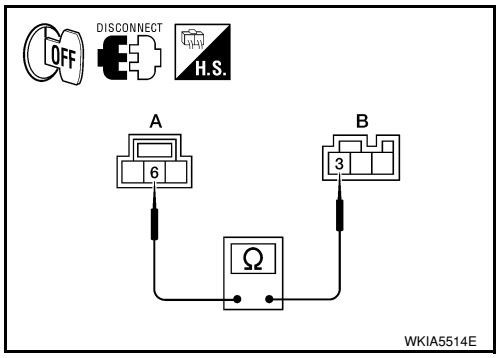

OK or NG

OK >> Replace map lamp.
NG >> Repair harness or connector.

6. CHECK ROOM LAMP

1. Disconnect interior room lamp connector.
2. Check continuity between interior room lamp terminals.

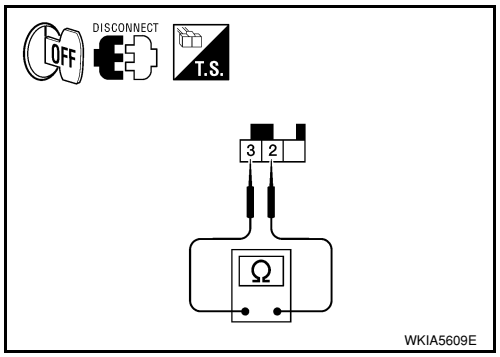

Terminal		Condition	Continuity
Interior room lamp			
2	3	Room lamp switch is in DOOR position	Yes
		Room lamp switch is in OFF position	No

OK or NG

OK >> GO TO 7.
NG >> Check bulb. If OK, replace interior room lamp.

7. CHECK MAP LAMP

1. Disconnect map lamp connectors.
2. Check continuity between map lamp terminals.

2 - 5 : Continuity should exist.

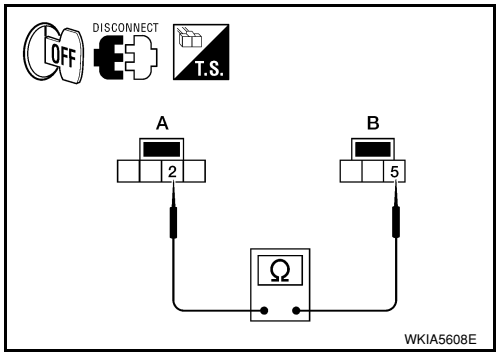

OK or NG

OK >> GO TO 8.
NG >> Replace map lamp.

8. CHECK CIRCUIT BETWEEN ROOM LAMP AND MAP LAMP

Check continuity between interior room lamp harness connector R7 (A) terminal 2 and map lamp harness connector R3 (B) terminal 5.

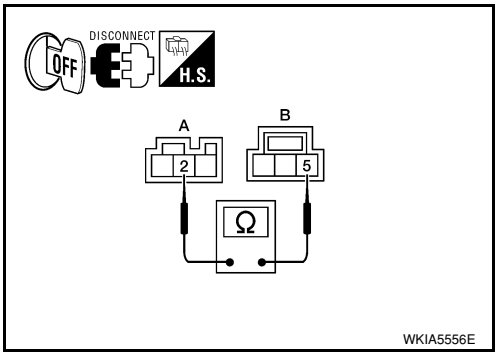

2 - 5 : Continuity should exist.

OK or NG

OK >> GO TO 9.
NG >> Repair harness or connector.

9. CHECK CIRCUIT BETWEEN MAP LAMP AND BCM

1. Disconnect BCM connector.
2. Check continuity between BCM harness connector M20 (A) terminal 63 and map lamp harness connector R2 (B) terminal 2.

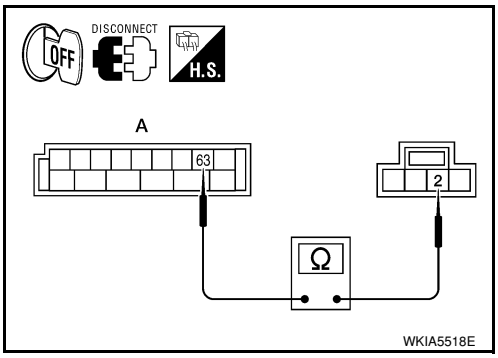

63 - 2 : Continuity should exist.

OK or NG

OK >> Replace BCM if room lamp does not work after setting the connector again. Refer to BCS-18, "Removal and Installation of BCM" .
NG >> Repair harness or connector.

Interior Room Lamp Control Does Not Operate (Without Map Lamp)

INFOID:000000001704477

1. CHECK EACH SWITCH

Select "BCM" on CONSULT-III. With "INT LAMP" data monitor, make sure switches listed in display item list turn ON-OFF linked with switch operation. Refer to LT-99, "CONSULT-III Function (BCM)" for switches and their functions.

OK or NG

OK >> GO TO 2.
NG >> Inspect malfunctioning switch system.

2. ACTIVE TEST

1. Select "BCM" on CONSULT-III. Select "INT LAMP" active test.
2. When room lamp switch is in DOOR position, make sure room lamp operates.

Room lamp should operate.

OK or NG

OK >> Replace BCM. Refer to BCS-18, "Removal and Installation of BCM" .
NG >> GO TO 3.

3. CHECK ROOM LAMP INPUT VOLTAGE

1. Turn ignition switch OFF.
2. Check voltage between interior room lamp harness connector R7 terminal 3 and ground.

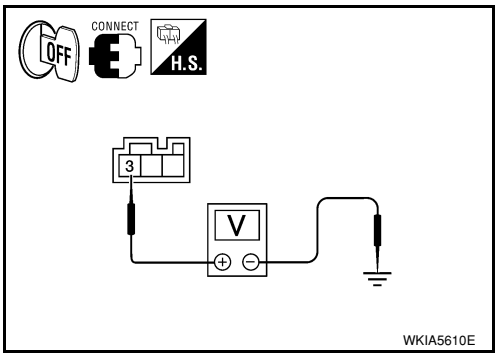

3 - Ground : Battery voltage should exist.

OK or NG

OK >> GO TO 4.
NG >> GO TO 6.

4. CHECK ROOM LAMP

1. Disconnect room lamp connector.
2. Check continuity between room lamp terminals.

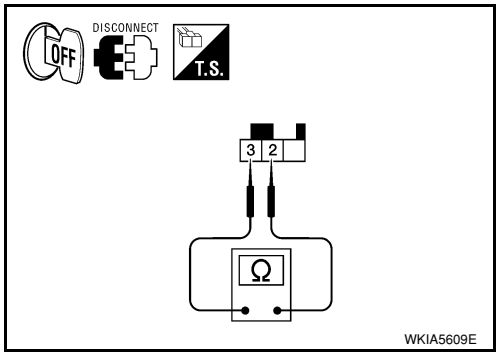

Room lamp Terminal		Condition	Continuity
2	3	Room lamp switch is in DOOR position	Yes
		Room lamp switch is in OFF position	No

OK or NG

OK >> GO TO 5.
NG >> Check bulb. If OK, replace room lamp. Refer to LT-103, "Bulb Replacement" .

5. CHECK ROOM LAMP CIRCUIT

1. Disconnect BCM connector.
2. Check continuity between BCM harness connector M20 (A) terminal 56 and room lamp harness connector R7 (B) terminal 3.

56 - 3 : Continuity should exist.

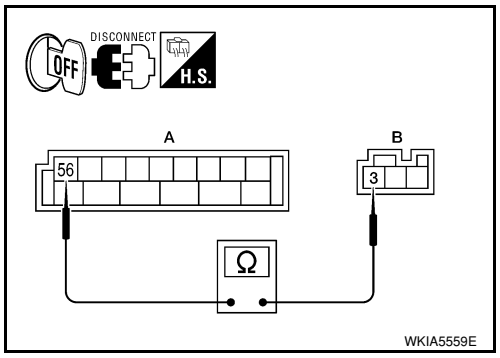

OK or NG

OK >> GO TO 6.
NG >> Repair harness or connector.

6. CHECK ROOM LAMP CIRCUIT

1. Disconnect BCM connector and room lamp connector.
2. Check continuity between BCM harness connector M20 (A) terminal 63 and room lamp harness connector R7 (B) terminal 2.

63 - 2 : Continuity should exist.

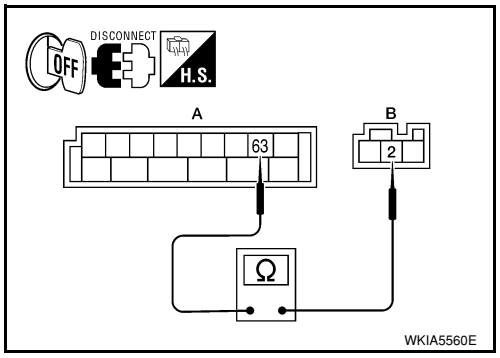

OK or NG

OK >> Replace BCM if interior lamp does not work after setting the connector again. Refer to BCS-18, "Removal and Installation of BCM" .
NG >> Repair harness or connector.

Bulb Replacement

INFOID:0000000001704478

ROOM LAMP

1. Remove lens (1) by inserting suitable tool and releasing LH (switch side first).
2. Remove bulb (2).
3. Installation is in the reverse order of removal.
   NOTE:
   Insert the lens hook end RH side first to install lens.

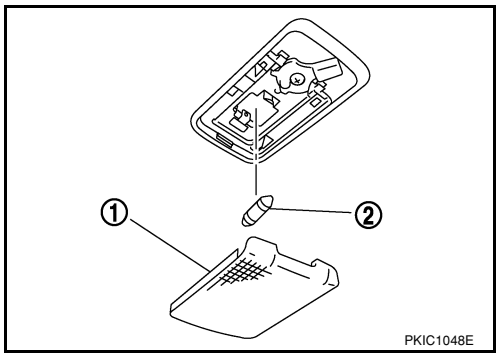

Removal and Installation

INFOID:0000000001704479

ROOM LAMP

Removal

1. Remove lens (1) and remove the room lamp by pulling down to release the room lamp metal clips (A).
2. Disconnect connector and remove room lamp.

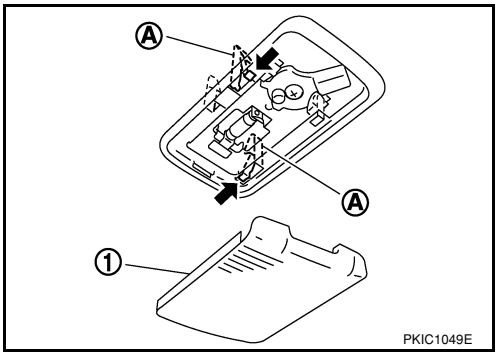

Installation

Installation is in the reverse order of removal.

ILLUMINATION

System Description

INFOID:0000000001704480

The control of the illumination lamps operation is dependent upon the position of the lighting switch. When the lighting switch is placed in the 1ST or 2ND position, the BCM (body control module) receives input signal requesting the illumination lamps to illuminate. This input signal is communicated to IPDM E/R (intelligent power distribution module engine room) across CAN communication lines. CPU (central processing unit) located in the IPDM E/R controls the tail lamp relay coil. This relay, when energized, directs power to the illumination lamps, which then illuminate.

Power is supplied at all times
- to ignition relay, located in IPDM E/R,
- to tail lamp relay, located in IPDM E/R,
- through 15A fuse (No. 52, located in IPDM E/R) and
- through 20A fuse (No. 53, located in IPDM E/R)
- to CPU located in IPDM E/R,
- through 40A fusible link (letter **g** , located in fuse and fusible link box)
- to BCM terminal 70, and
- through 10A fuse [No. 8, located in fuse block (J/B)]
- to BCM terminal 57.

With the ignition switch in the ON or START position, power is supplied
- to ignition relay, located in IPDM E/R, and
- through 10A fuse [No. 6, located in fuse block (J/B)]
- to BCM terminal 38.

With the ignition switch in the ACC or ON position, power is supplied
- through 10A fuse [No. 20, located in fuse block (J/B)]
- to BCM terminal 11.

Ground is supplied
- to BCM terminal 67
- through grounds M57 and M61, and
- to IPDM E/R terminals 39 and 59
- through grounds E15 and E24.

ILLUMINATION OPERATION BY LIGHTING SWITCH

With the lighting switch in the 1ST or 2ND position, BCM receives input signal requesting the illumination lamps to illuminate. This input signal is communicated to IPDM E/R across CAN communication lines. CPU located in the IPDM E/R controls the tail lamp relay coil, which, when energized, directs power
- through 10A fuse (No. 37, located in IPDM E/R)
- through IPDM E/R terminal 29
- to microphone terminal 3 (with Bluetooth)
- to illumination control switch terminal 1
- to glove box lamp terminal 1 (with glovebox lamp)
- to audio unit terminal 9
- to front air control terminal 5
- to A/T device terminal 3 (with 4-speed A/T)
- to CVT device terminal 3 (with CVT)
- to hazard switch terminal 3
- to combination meter terminal 12
- to door mirror remote control switch terminal 16, and

Ground is supplied
- to microphone terminal 2 (with Bluetooth)
- to glove box lamp terminal 2 (with glove box lamp), and
- to illumination control switch terminal 3
- through grounds M57 and M61.

The illumination control switch controls illumination intensity by varying the ground to the following
- through illumination control switch terminal 2
- to audio unit terminal 8
- to front air control terminal 6
- to A/T device terminal 4 (with 4-speed A/T)
- to CVT device terminal 3 (with CVT)
- to hazard switch terminal 4

- to combination meter terminal 13,
- to door mirror remote control switch terminal 15,

With power and ground supplied, illumination lamps illuminate.

EXTERIOR LAMP BATTERY SAVER CONTROL

Refer to LT-72, "System Description" .

CAN Communication System Description

INFOID:0000000001704481

Refer to LAN-6, "System Description" .

Schematic

INFOID:0000000001704482

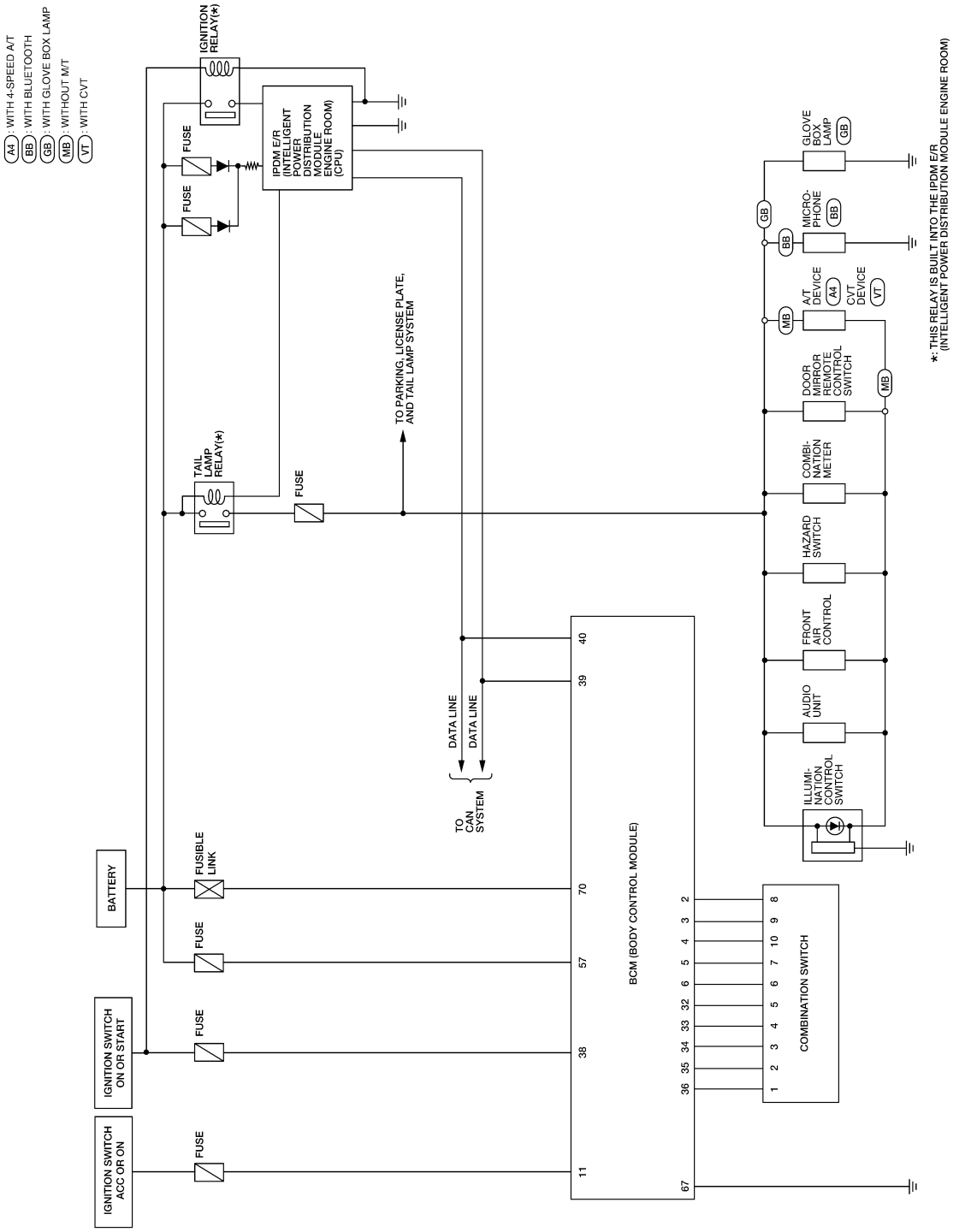

Wiring Diagram - ILL -

INFOID:0000000001704483

LT-ILL-01

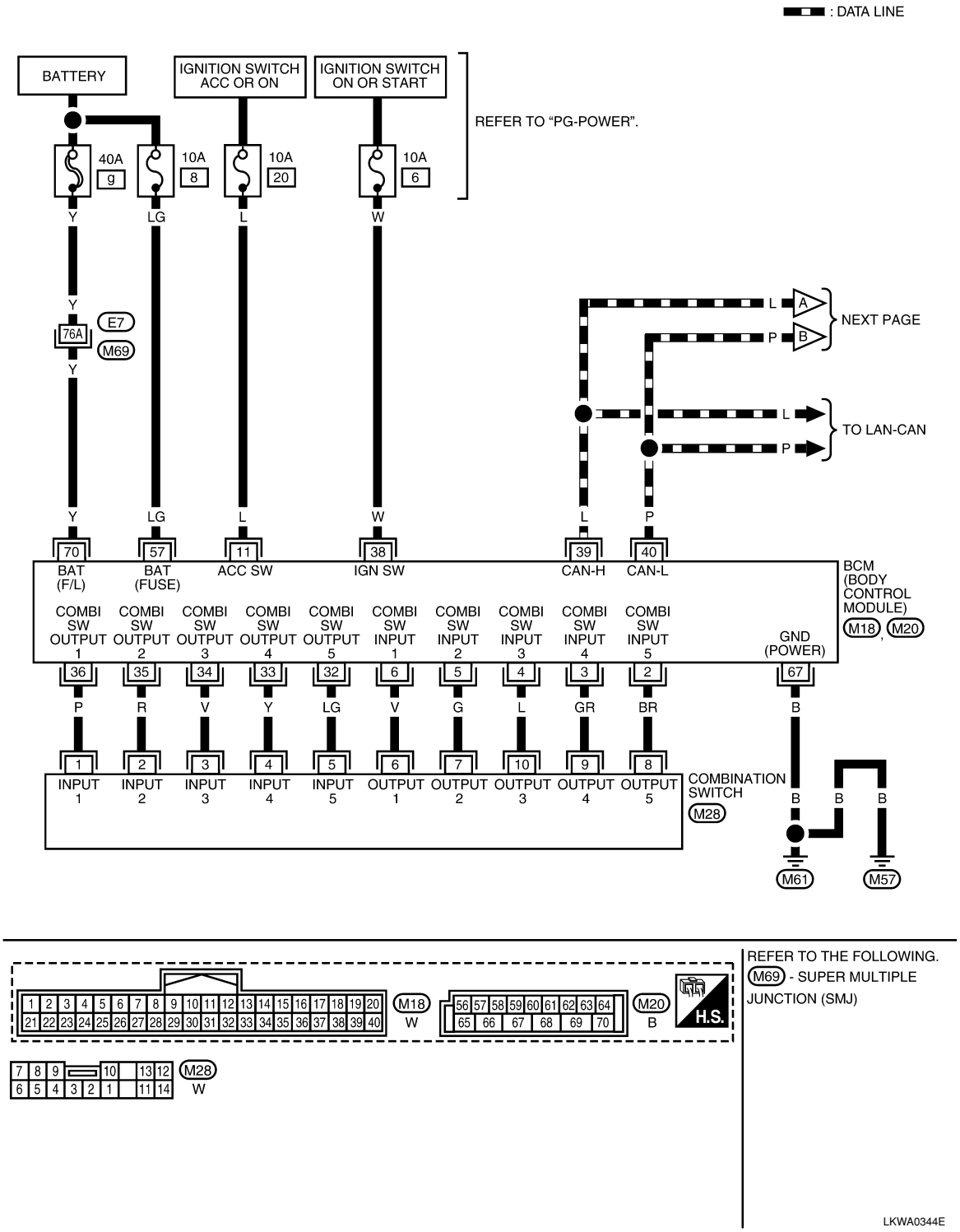

LT-ILL-02

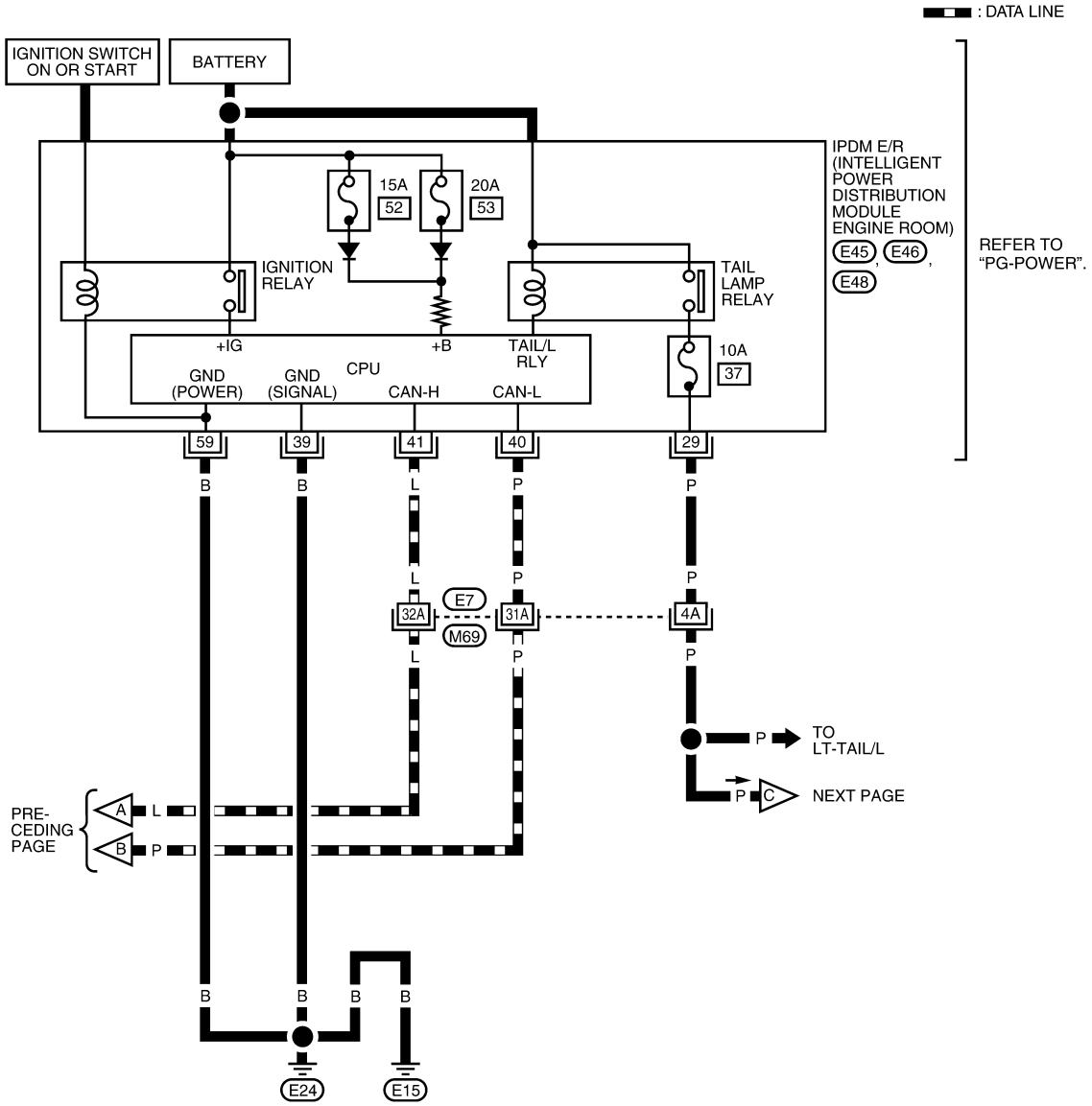

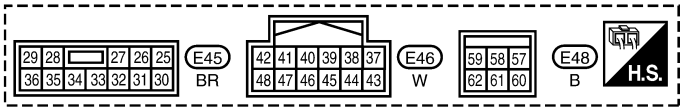

REFER TO THE FOLLOWING.
M69 - SUPER MULTIPLE JUNCTION (SMJ)

LKWA0345E

LT-ILL-03

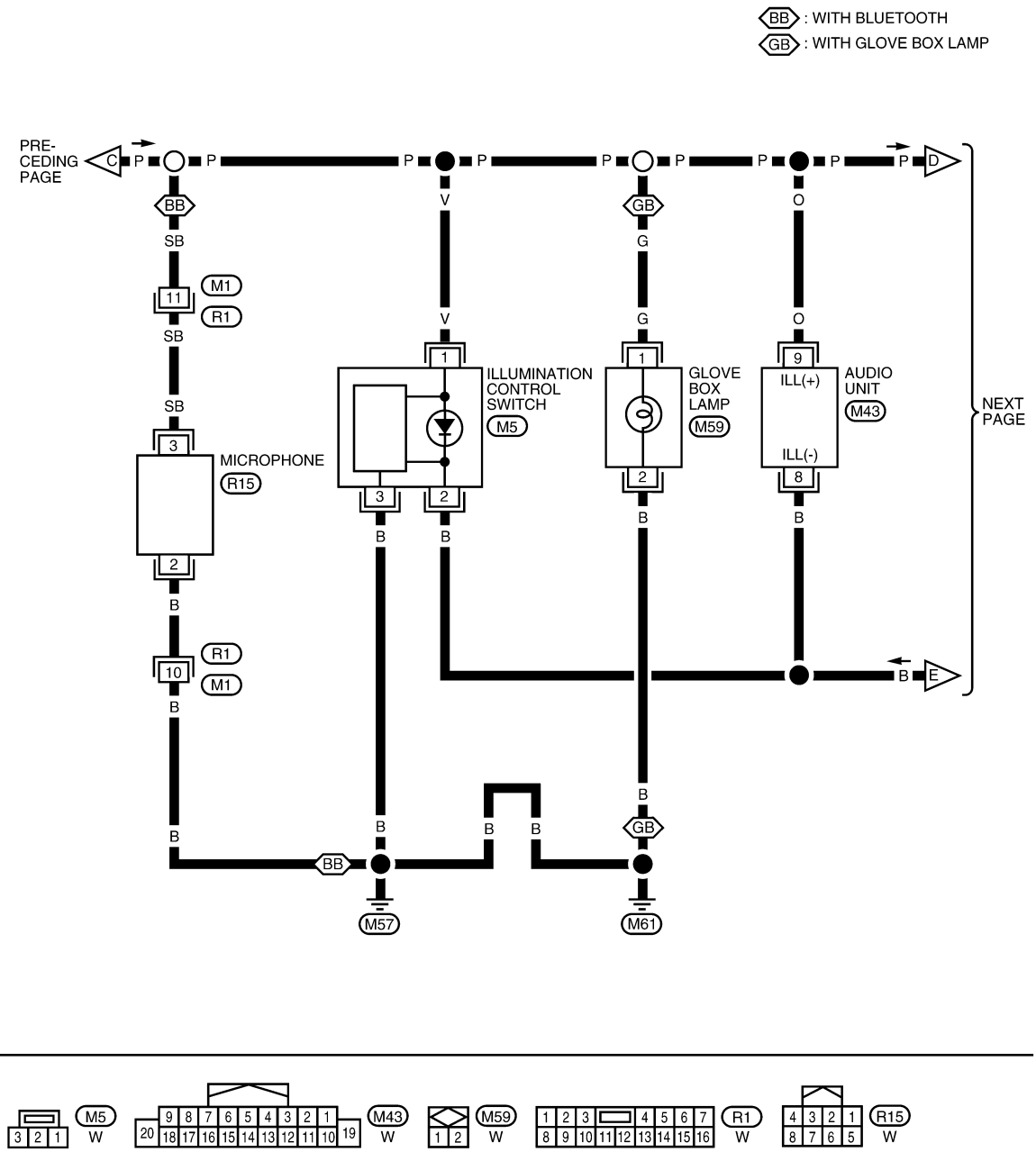

LKWA0346E

LT-ILL-04

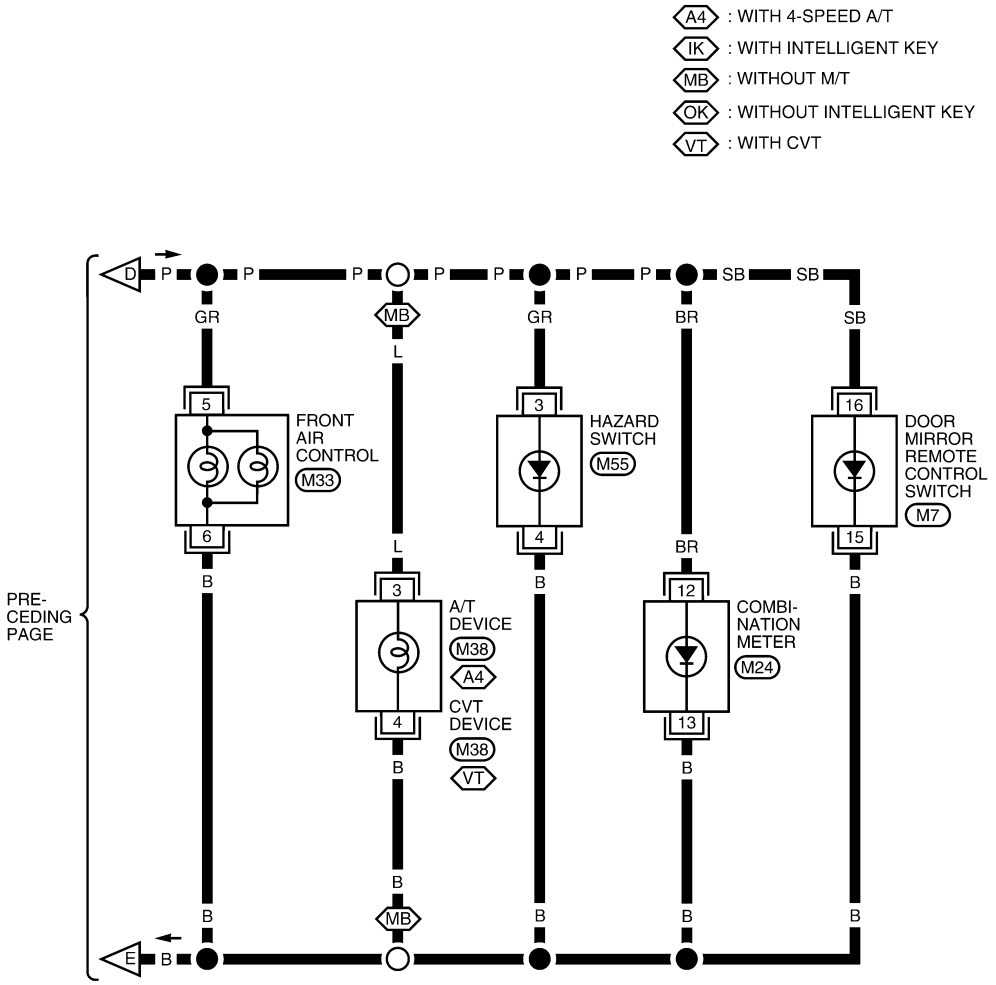

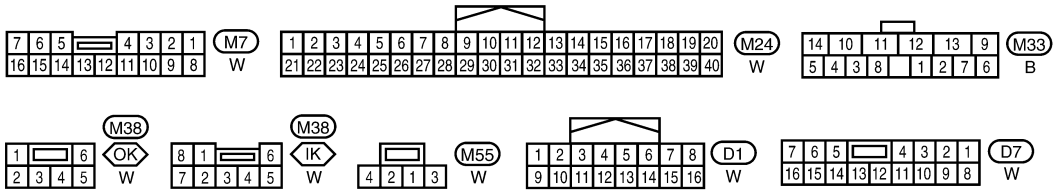

ALLWA0130GB

Bulb Replacement

INFOID:0000000001704484

GLOVE BOX LAMP

1. Remove glove box assembly. Refer to IP-10 .

2. Turn bulb socket (1) counterclockwise and remove it.
3. Remove bulb (2).

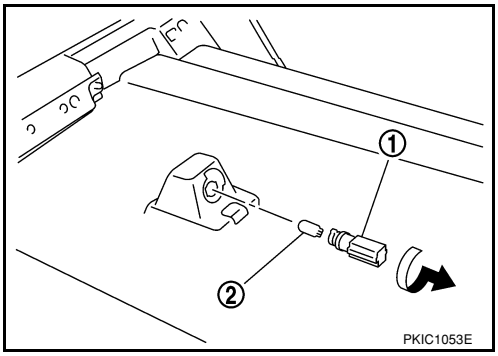

BULB SPECIFICATIONS

Headlamp

INFOID:0000000001704485

Item	Wattage (W)
High/Low (Halogen type)	60/55 (HB2)

Exterior Lamp

INFOID:0000000001704486

Item		Wattage (W)
Front combination lamp	Turn signal lamp	21 (amber)
	Parking (clearance) lamp	5
Rear combination lamp	Stop/Tail lamp	21/5
	Turn signal lamp	21 (amber)
	Back-up lamp	21
Front fog lamp		35 (H8)
License plate lamp		5
High-mounted stop lamp	Hatchback	LED
	Sedan	18

Interior Lamp/Illumination

INFOID:0000000001704487

Item	Wattage (W)
Glove box lamp	1.4
Map lamp	8
Room lamp	8
Luggage compartment lamp	5