SECTION CO
ENGINE COOLING SYSTEM

CONTENTS

HR16DE

MR18DE

PRECAUTION

PRECAUTIONS

Precaution for Supplemental Restraint System (SRS) "AIR BAG" and "SEAT BELT PRE-TENSIONER"

INFOID:0000000004784387

The Supplemental Restraint System such as “AIR BAG” and “SEAT BELT PRE-TENSIONER”, used along with a front seat belt, helps to reduce the risk or severity of injury to the driver and front passenger for certain types of collision. This system includes seat belt switch inputs and dual stage front air bag modules. The SRS system uses the seat belt switches to determine the front air bag deployment, and may only deploy one front air bag, depending on the severity of a collision and whether the front occupants are belted or unbelted.
Information necessary to service the system safely is included in the SRS and SB section of this Service Manual.

WARNING:

- **To avoid rendering the SRS inoperative, which could increase the risk of personal injury or death in the event of a collision which would result in air bag inflation, all maintenance must be performed by an authorized NISSAN/INFINITI dealer.**
- **Improper maintenance, including incorrect removal and installation of the SRS can lead to personal injury caused by unintentional activation of the system. For removal of Spiral Cable and Air Bag Module, see the SRS section.**
- **Do not use electrical test equipment on any circuit related to the SRS unless instructed to in this Service Manual. SRS wiring harnesses can be identified by yellow and/or orange harnesses or harness connectors.**
- **When working near the Airbag Diagnosis Sensor Unit or other Airbag System sensors with the Ignition ON or engine running, DO NOT use air or electric power tools or strike near the sensor(s) with a hammer. Heavy vibration could activate the sensor(s) and deploy the air bag(s), possibly causing serious injury.**
- **When using air or electric power tools or hammers, always switch the Ignition OFF, disconnect the battery, and wait at least 3 minutes before performing any service.**

Precaution Necessary for Steering Wheel Rotation After Battery Disconnect

INFOID:0000000004784348

NOTE:

- This Procedure is applied only to models with Intelligent Key system and NATS (NISSAN ANTI-THEFT SYSTEM).
- Remove and install all control units after disconnecting both battery cables with the ignition knob in the ″LOCK″ position.
- Always use CONSULT-III to perform self-diagnosis as a part of each function inspection after finishing work. If DTC is detected, perform trouble diagnosis according to self-diagnostic results.

For models equipped with the Intelligent Key system and NATS, an electrically controlled steering lock mechanism is adopted on the key cylinder.
For this reason, if the battery is disconnected or if the battery is discharged, the steering wheel will lock and steering wheel rotation will become impossible.
If steering wheel rotation is required when battery power is interrupted, follow the procedure below before starting the repair operation.

OPERATION PROCEDURE

1. Connect both battery cables.
   NOTE:
   Supply power using jumper cables if battery is discharged.
2. Use the Intelligent Key or mechanical key to turn the ignition switch to the ″ACC″ position. At this time, the steering lock will be released.
3. Disconnect both battery cables. The steering lock will remain released and the steering wheel can be rotated.
4. Perform the necessary repair operation.
5. When the repair work is completed, return the ignition switch to the ″LOCK″ position before connecting the battery cables. (At this time, the steering lock mechanism will engage.)
6. Perform a self-diagnosis check of all control units using CONSULT-III.

Precaution for Liquid Gasket

INFOID:0000000004784349

REMOVAL OF LIQUID GASKET SEALING

- After removing nuts and bolts, separate the mating surface, using Tool and remove old liquid gasket sealing.

Tool number : KV10111100 (J-37228)

CAUTION:
Be careful not to damage the mating surfaces.

- Tap Tool to insert it (1), and then slide it by tapping on the side (2) as shown.
- In areas where Tool is difficult to use, use plastic hammer to lightly tap the parts, to remove it.

CAUTION:
If for some unavoidable reason suitable tool such as screwdriver is used, be careful not to damage the mating surfaces.

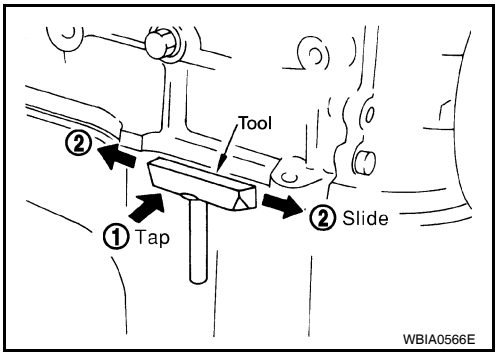

LIQUID GASKET APPLICATION PROCEDURE

1. Remove old liquid gasket adhering to the liquid gasket application surface and the mating surface, using scraper.
   - Remove liquid gasket completely from the groove of the liquid gasket application surface, bolts, and bolt holes.
2. Thoroughly clean the mating surfaces and remove adhering moisture, grease and foreign materials.
3. Attach liquid gasket tube to Tool.

Tool number : WS39930000 (—)

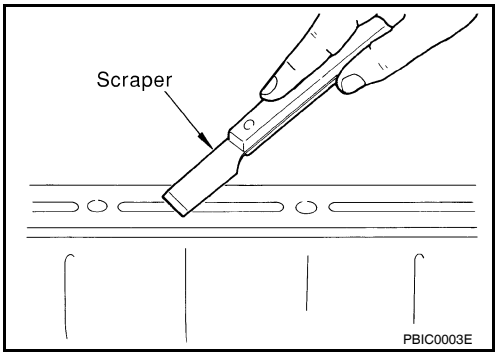

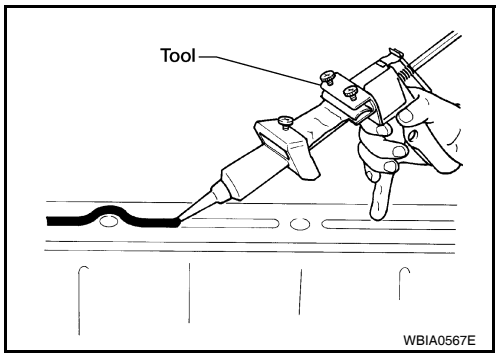

Use Genuine RTV Silicone Sealant or equivalent. Refer to GI-42, "Recommended Chemical Product and Sealant".

4. Apply liquid gasket without breaks to the specified location with the specified dimensions.
   - If there is a groove for the liquid gasket application, apply liquid gasket to the groove.

- As for the bolt holes, normally apply liquid gasket inside the holes. Occasionally, it should be applied outside the holes. Make sure to read the text of service manual.
- Within five minutes of liquid gasket application, install the mating component.
- If liquid gasket protrudes, wipe it off immediately.
- Do not retighten nuts or bolts after the installation.
- After 30 minutes or more have passed from the installation, fill engine oil and engine coolant.

CAUTION:
If there are specific instructions in this manual, observe them.

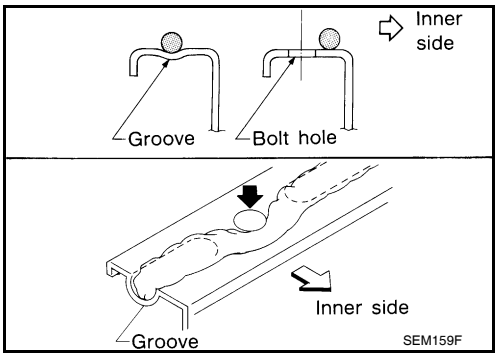

PREPARATION

PREPARATION

Special Service Tool

INFOID:0000000004784395

The actual shapes of Kent-Moore tools may from those of special service tools illustrated here.

Tool number (Kent-Moore No.) Tool name	Description
WS39930000 (—) Tube pressure 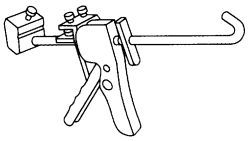 S-NT052	Pressing the tube of liquid gasket
KV991J0070 (J-45695) Coolant Refill Tool 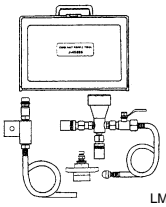 LMA053	Refilling engine cooling system
EG17650301 (J-33984-A) Radiator cap tester adapter 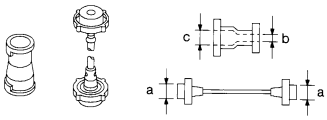 S-NT564	Adapting radiator cap tester to radiator cap and radiator filler neck **a: 28 (1.10) dia.** **b: 31.4 (1.236) dia.** **c: 41.3 (1.626) dia.** Unit: mm (in)
KV10111100 (J-37228) Seal cutter 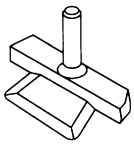 NT046	Removing chain tensioner cover and water pump cover
— (J-23688) Engine coolant refractometer 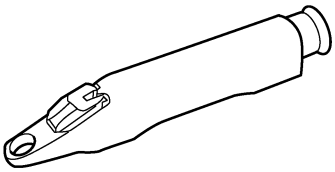 WBIA0539E	Checking concentration of ethylene glycol in engine coolant

Commercial Service Tool

INFOID:0000000004784396

Tool name	Description
Power tool 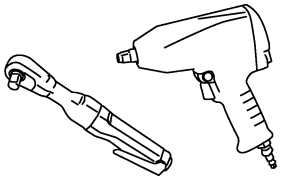 PBIC0190E	Loosening bolts and nuts
Radiator cap tester 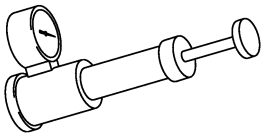 PBIC1982E	Checking radiator and radiator cap

SYMPTOM DIAGNOSIS

OVERHEATING CAUSE ANALYSIS

Troubleshooting Chart

INFOID:0000000004784346

	Symptom		Check items	
Cooling system parts malfunction	Poor heat transfer	Water pump malfunction	Worn or loose drive belt	—
		Thermostat stuck closed	—	
		Damaged fins	Dust contamination or paper clogging	
			Physical damage	
		Clogged radiator cooling tube	Excess foreign material (rust, dirt, sand, etc.)	
	Reduced air flow	Cooling fan does not operate	Fan assembly	—
		High resistance to fan rotation		
		Damaged fan blades		
	Damaged radiator shroud	—	—	—
	Improper engine coolant mixture ratio	—	—	—
	Poor engine coolant quality	—	Engine coolant viscosity	—
	Insufficient engine coolant	Engine coolant leaks	Cooling hose	Loose clamp
				Cracked hose
			Water pump	Poor sealing
			Reservoir tank cap	Loose
				Poor sealing
			Radiator	O-ring for damage, deterioration or improper fitting
				Cracked radiator tank
				Cracked radiator core
			Reservoir tank	Cracked reservoir tank
		Overflowing reservoir tank	Exhaust gas leaks into cooling system	Cylinder head deterioration
				Cylinder head gasket deterioration

	Symptom		Check items	
Except cooling system parts malfunction	—	Overload on engine	Abusive driving	High engine rpm under no load
				Driving in low gear for extended time
				Driving at extremely high speed
			Power train system malfunction	—
			Installed improper size wheels and tires	
			Dragging brakes	
			Improper ignition timing	
	Blocked or restricted air flow	Blocked bumper	—	—
		Blocked radiator grille	Installed car brassiere	
			Mud contamination or paper clogging	
		Blocked radiator	—	
		Blocked condenser	Blocked air flow	
		Installed large fog lamp		

FUNCTION DIAGNOSIS

DESCRIPTION

Engine Cooling System

INFOID:0000000004784344

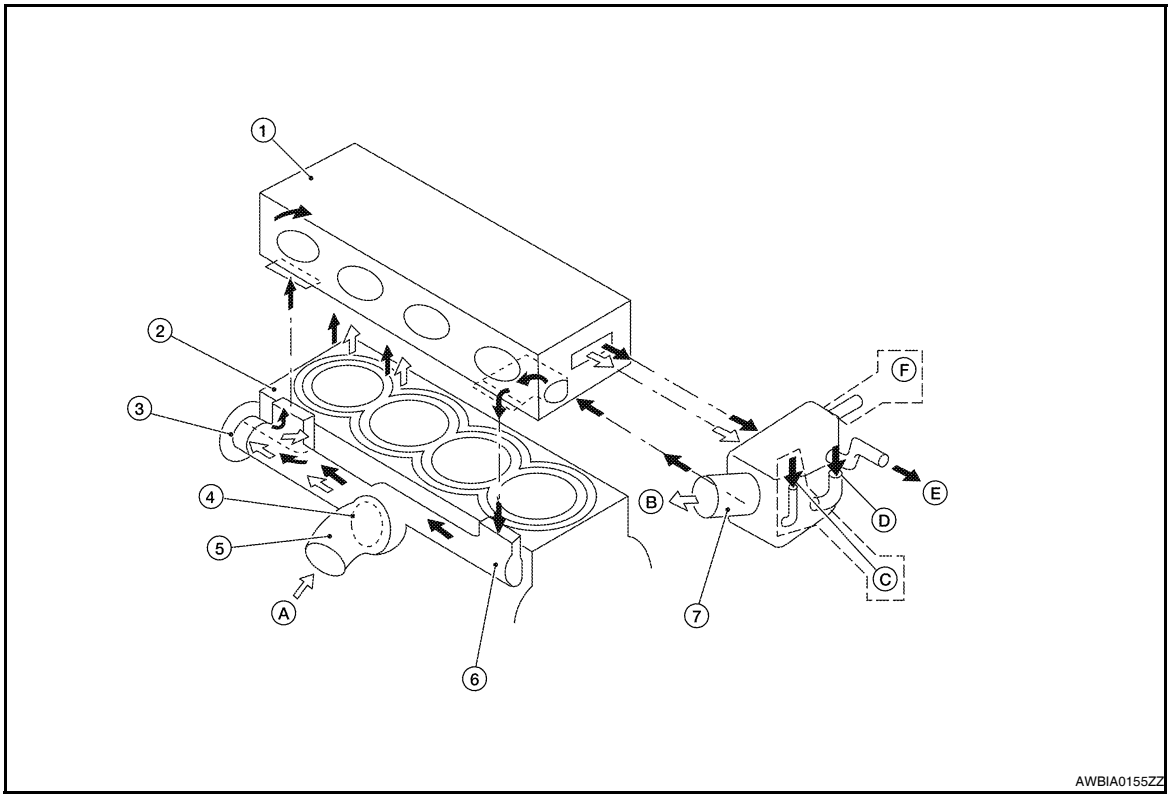

1.	Cylinder head	2.	Cylinder block	3.	Water pump
4.	Thermostat	5.	Water inlet	6.	Water bypass
7.	Water outlet	A.	From radiator	B.	To radiator
C.	From electric throttle control actuator	D.	From heater	E.	To heater
F.	To electric throttle control actuator		Thermostat open		Thermostat closed

Engine Cooling System Schematic

INFOID:0000000004784345

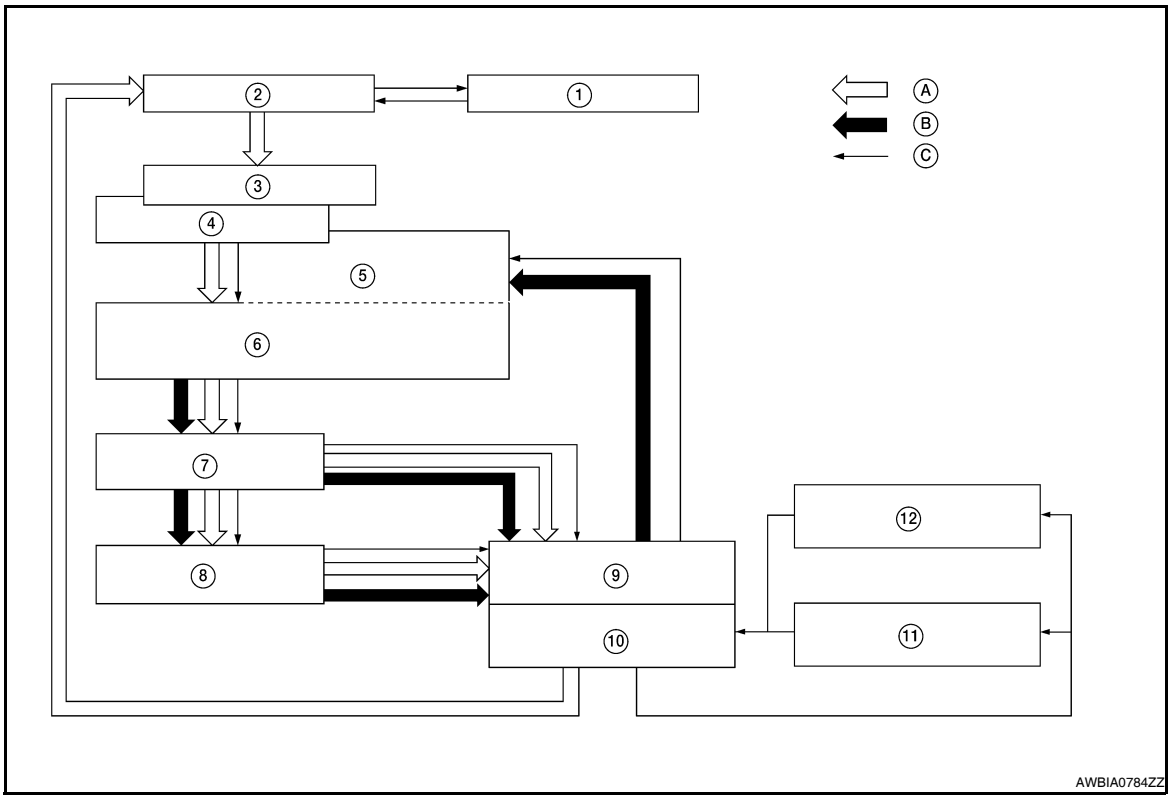

1.	Reservoir tank	2.	Radiator	3.	Water inlet
4.	Thermostat	5.	Water bypass	6.	Water jacket
7.	Water pump	8.	Cylinder block	9.	Cylinder head
10.	Water outlet	11.	Electric throttle control actuator	12.	Heater
A.	Thermostat open	B.	Thermostat closed	C.	Constant

ON-VEHICLE MAINTENANCE

ENGINE COOLANT

Inspection

INFOID:0000000004784397

LEVEL CHECK

- Check if the reservoir tank engine coolant level is within the “MIN” to “MAX” range when engine is cool.
- Adjust the engine coolant level as necessary.

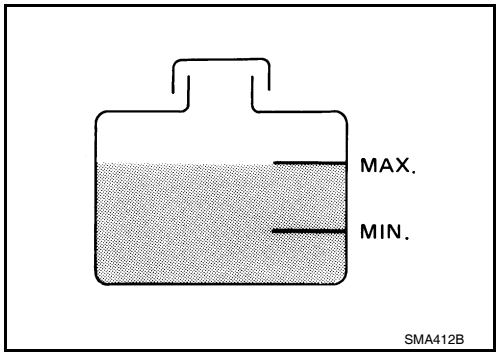

CHECKING COOLING SYSTEM FOR LEAKS

To check for leaks, apply pressure to the cooling system using suitable tool and Tool.

Tool number : EG17650301 (J-33984-A)

Testing pressure : 157 kPa (1.6 kg/cm^2, 23 psi)

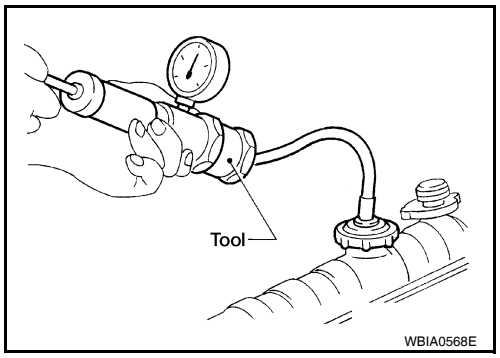

WARNING:
Never remove the radiator cap when the engine is hot. Serious burns could occur from high pressure coolant escaping from the radiator.
CAUTION:
Higher pressure than specified may cause radiator damage.

Changing Engine Coolant

INFOID:0000000004784398

WARNING:
- **To avoid being scalded, do not change engine coolant when engine is hot.**
- **Wrap a thick cloth around radiator cap and carefully remove the cap. First, turn the cap a quarter of a turn to release built-up pressure. Then turn the cap all the way.**

CAUTION:
- **Do not spill engine coolant on drive belt.**

DRAINING ENGINE COOLANT

1. Open radiator drain plug (1) at the bottom of radiator, and then remove radiator cap.
   - Front

   When draining all of engine coolant in the system, open water drain plug on cylinder block. Refer to EM-96.
   CAUTION:
   - **Perform this step when engine is cold.**
   - **Do not spill engine coolant on drive belt.**

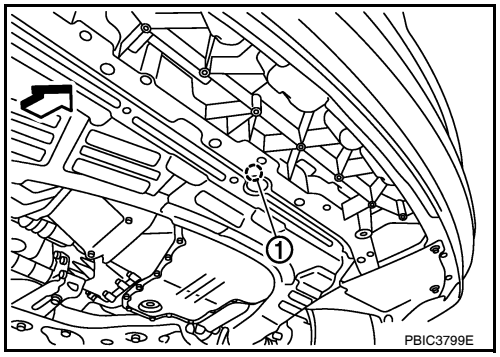

2. Remove reservoir tank as necessary, and drain engine coolant and clean reservoir tank before installing. Refer to CO-16, "Component".
3. Check drained engine coolant for contaminants such as rust, corrosion or discoloration.

If contaminated, flush the engine cooling system.

REFILLING ENGINE COOLANT

1. Install the radiator drain plug. Install the reservoir tank and cylinder block drain plug, if removed for a total system drain or for engine removal or repair.
   - **The radiator must be completely empty of coolant and water.**
   - **Apply sealant to the threads of the cylinder block drain plugs. Use Genuine High Performance Thread Sealant or equivalent. Refer to GI-42, "Recommended Chemical Product and Sealant".**

Radiator drain plug	**: Refer to CO-16, "Component".**
Cylinder block drain plug	**: Refer to EM-96, "Disassembly and Assembly".**

2. If disconnected, reattach the upper radiator hose at the engine side.
3. Set the vehicle heater controls to the full HOT and heater ON position. Turn the vehicle ignition ON with the engine OFF as necessary to activate the heater mode.
4. Install the Tool by installing the radiator cap adapter onto the radiator neck opening. Then attach the gauge body assembly with the refill tube and the venturi assembly to the radiator cap adapter.

Tool number	**: KV991J0070 (J-45695)**

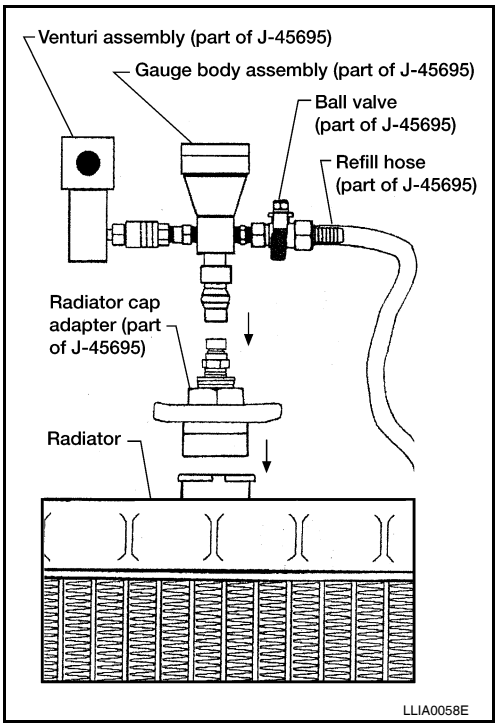

5. Insert the refill hose into the coolant mixture container that is placed at floor level. Make sure the ball valve is in the closed position.
   - **Use Genuine NISSAN Long Life Anti-freeze coolant or equivalent, mixed with distilled water or demineralized water.**
     Refer to MA-15, "Anti-freeze Coolant Mixture Ratio".

Engine coolant capacity (with reservoir tank)	**: Refer to MA-14, "Fluids and Lubricants".**

6. Install an air hose to the venturi assembly, the air pressure must be within specification.

Compressed air supply pressure	**: 5.7 - 8.5 kPa (5.6 - 8.4 kg/cm^2, 80 - 120 psi)**

CAUTION:
The compressed air supply must be equipped with an air dryer.

7. The vacuum gauge will begin to rise and there will be an audible hissing noise. During this process open the ball valve on the refill hose slightly. Coolant will be visible rising in the refill hose. Once the refill hose is full of coolant, close the ball valve. This will purge any air trapped in the refill hose.
8. Continue to draw the vacuum until the gauge reaches 28 inches of vacuum. The gauge may not reach 28 inches in high altitude locations, use the vacuum specifications based on the altitude above sea level.

Altitude above sea level	Vacuum gauge reading
0 - 100 m (328 ft)	**: 28 inches of vacuum**
300 m (984 ft)	**: 27 inches of vacuum**
500 m (1,641 ft)	**: 26 inches of vacuum**
1,000 m (3,281 ft)	**: 24 - 25 inches of vacuum**

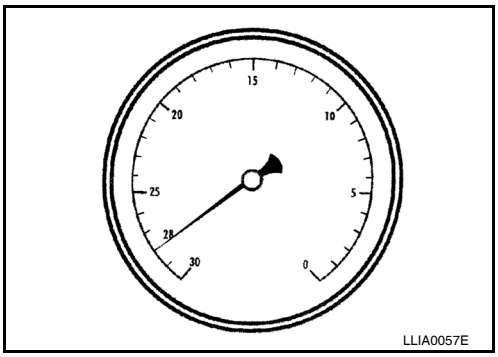

9. When the vacuum gauge has reached the specified amount, disconnect the air hose and wait 20 seconds to see if the system loses any vacuum. If the vacuum level drops, perform any necessary repairs to the system and repeat steps 6 - 8 to bring the vacuum to the specified amount. Recheck for any leaks.

10. Place the coolant container (with the refill hose inserted) at the same level as the top of the radiator. Then open the ball valve on the refill hose so the coolant will be drawn up to fill the cooling system. The cooling system is full when the vacuum gauge reads zero.
    CAUTION:
    Do not allow the coolant container to get too low when filling, to avoid air from being drawn into the cooling system.
11. Remove the Tool from the radiator neck opening.
12. Fill the cooling system reservoir tank to the specified level and install the radiator cap. Run the engine to warm up the cooling system and top up the system as necessary.

FLUSHING COOLING SYSTEM

1. Install reservoir tank if removed. Refer to CO-16, "Component".
2. Install radiator drain plug.
   - **If water drain plug on cylinder block is removed, close and tighten it. Refer to EM-96, "Disassembly and Assembly".**
   CAUTION:
   Be sure to clean radiator drain plug and install with new O-ring. Refer to CO-16, "Component".
3. Fill radiator and reservoir tank with water and reinstall radiator cap.
4. Run engine and warm it up to normal operating temperature.
5. Rev engine two or three times under no-load.
6. Stop engine and wait until it cools down.
7. Drain water from the cooling system.
8. Repeat steps 1 through 7 until clear water begins to drain from radiator.

RADIATOR

Checking Radiator Cap

INFOID:0000000004784354

- Check valve seat of radiator cap.
- Check if valve seat is swollen to the extent that the edge of the plunger cannot be seen when watching it vertically from the top.
- Check if valve seat has no soil and damage.

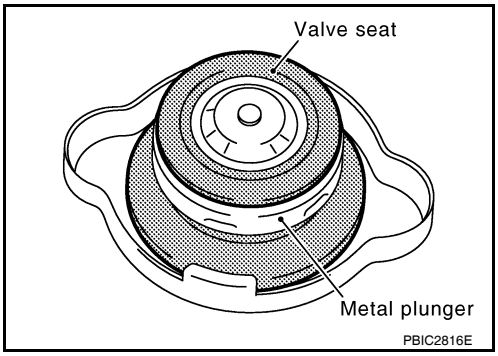

- Pull negative-pressure valve to open it, and make sure that it is completely closed when released.
- Make sure that there is no dirt or damage on the valve seat of radiator cap negative-pressure valve.
- Make sure that the valve operates properly in the opening and closing conditions.

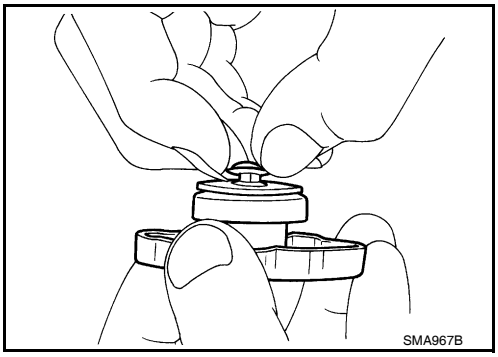

- Check radiator cap relief pressure using suitable tool and Tool.

Tool number : EG17650301 (J-33984-A)

Standard: 78 – 98 kPa (0.78 - 0.98 bar, 0.8 – 1.0 kg/cm^2, 11 – 14 psi)

Limit: 59 kPa (0.59 bar, 0.6 kg/cm^2, 9 psi)

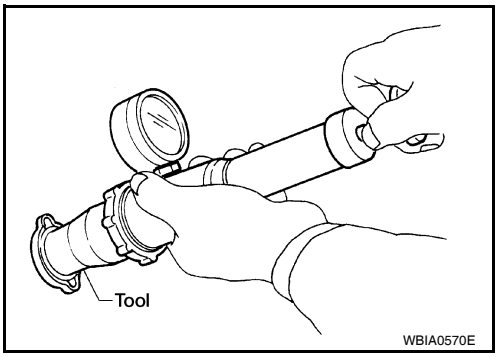

- When connecting the radiator cap to the tester, apply water or coolant to the cap seal surface.
- Replace the radiator cap if there is an abnormality in the negative-pressure valve, or if the open-valve pressure is outside of the standard values.

- Replace radiator cap if there it does not comply to specifications to the above three checks.

CAUTION:

When installing radiator cap, thoroughly wipe out the radiator filler neck to remove any waxy residue or foreign material.

Checking Radiator

INFOID:0000000004784355

Check radiator for mud or clogging. If necessary, clean radiator as follows.

- Be careful not to bend or damage radiator fins.
- When radiator is cleaned without removal, remove all surrounding parts such as cooling fan, radiator shroud and horns. Then tape harness and connectors to prevent water from entering.

1. Apply water by hose to the back side of the radiator core vertically downward.
2. Apply water again to all radiator core surface once per minute.
3. Stop washing if any stains no longer flow out from radiator.
4. Blow air into the back side of radiator core vertically downward.

- Use compressed air lower than 490 kPa (4.9 bar, 5 kg/cm^2, 71 psi) and keep distance more than 30 cm (11.8 in).

5. Blow air again into all the radiator core surfaces once per minute until no water sprays out.

ON-VEHICLE REPAIR

RADIATOR

Component

INFOID:0000000004784356

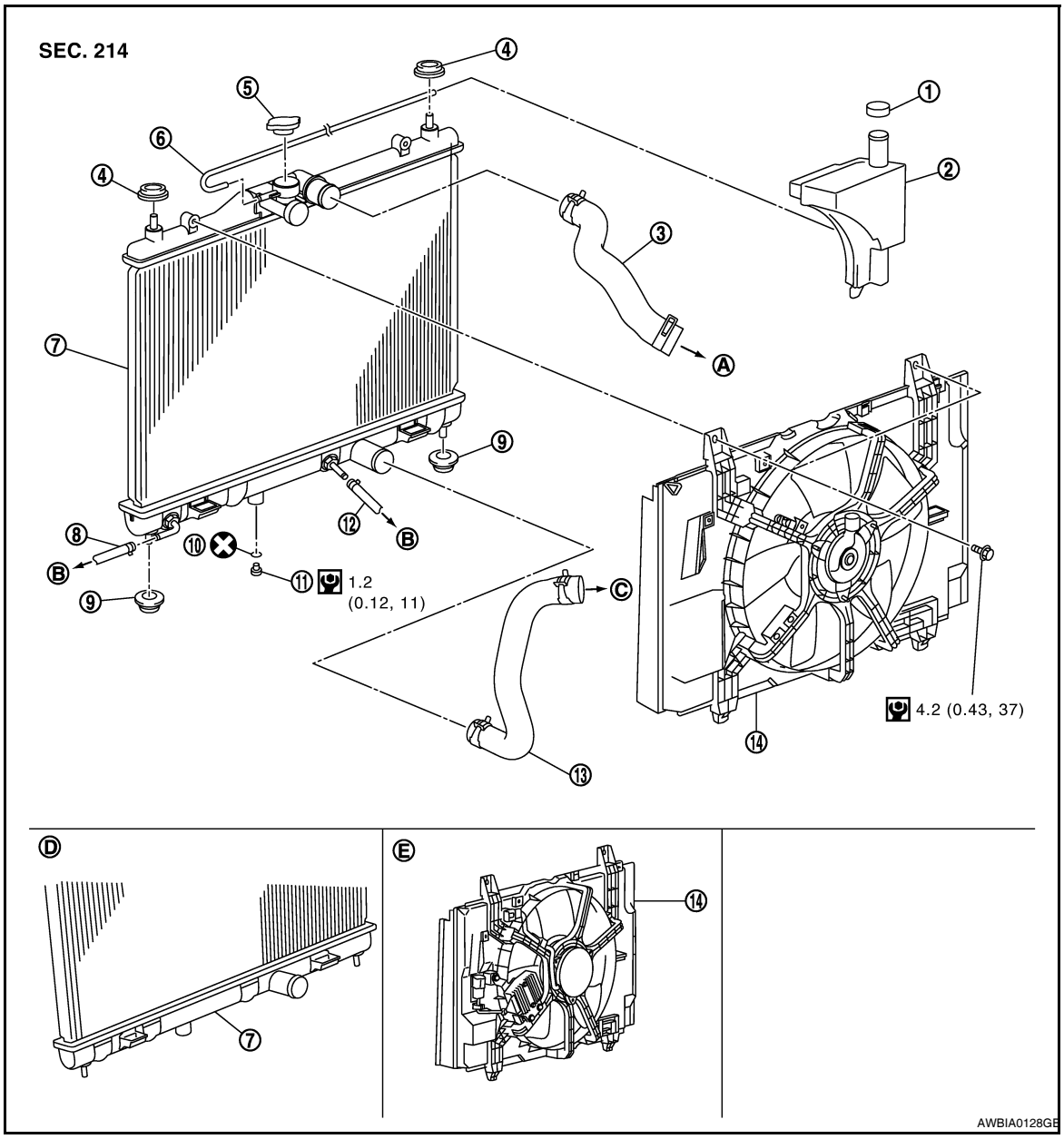

1.	Reservoir tank cap	2.	Reservoir tank	3.	Radiator hose (upper)
4.	Mounting rubber (upper)	5.	Radiator cap	6.	Reservoir tank hose
7.	Radiator	8.	A/T fluid cooler hose	9.	Mounting rubber (lower)
10.	O-ring	11.	Radiator drain plug	12.	A/T fluid cooler hose
13.	Radiator hose (lower)	14.	Cooling fan assembly		
A.	To water outlet	B.	To A/T	C.	To water inlet
D.	M/T models	E.	Models with A/C		

Removal and Installation

INFOID:0000000004784357

WARNING:

Do not remove radiator cap when the engine is hot. Serious burns could occur from high-pressure engine coolant escaping from radiator. Wrap a thick cloth around the cap. Slowly turn it a quarter of a turn to release built-up pressure. Carefully remove radiator cap by turning it all the way.

REMOVAL

1. Drain engine coolant from radiator. Refer to CO-11, "Changing Engine Coolant".
   CAUTION:
   - **Perform this step when engine is cold.**
   - **Do not spill engine coolant on drive belt.**
2. Remove air duct (inlet). Refer to EM-26, "Exploded View".
3. Remove reservoir tank as follows:

a. Disconnect reservoir tank hose.

b. Release the tab (A) in the direction shown by the arrow ( ).

c. Lift up while removing the reservoir tank hose, and remove it.

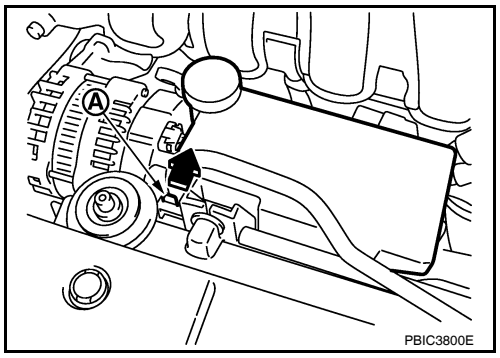

4. Disconnect harness connector from fan motor, and move harness aside.
5. Disconnect A/T fluid cooler hoses if equipped.
   - Install plug to avoid leakage of A/T fluid if equipped.
6. Remove radiator hoses (upper and lower).
7. Remove radiator core support cover.
8. Remove radiator core support (upper) bolts, bolts of stationary part on the radiator core support side and clip. Lift radiator assembly (1) from radiator (upper) mount part of radiator core support (upper) (2).
9. Move radiator assembly (1) to the rearward direction of vehicle, and then lift it upward to remove.
   CAUTION:
   Do not damage or scratch A/C condenser if equipped and radiator core when removing.

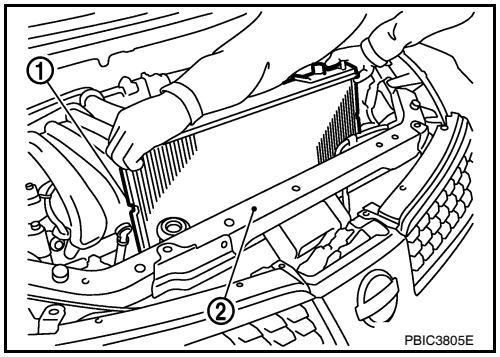

INSTALLATION

Installation is the reverse order of removal.

CAUTION:

Do not damage or scratch A/C condenser if equipped and radiator core when removing.

INSPECTION AFTER INSTALLATION

- Check for leaks of engine coolant. Refer to CO-11, "Inspection".
- Start and warm up engine. Visually check if there is no leaks of engine coolant and A/T fluid if equipped. Refer to CO-11, "Inspection" and AT-17, "Checking A/T Fluid".

COOLING FAN

Component (Models with A/C)

INFOID:0000000004784358

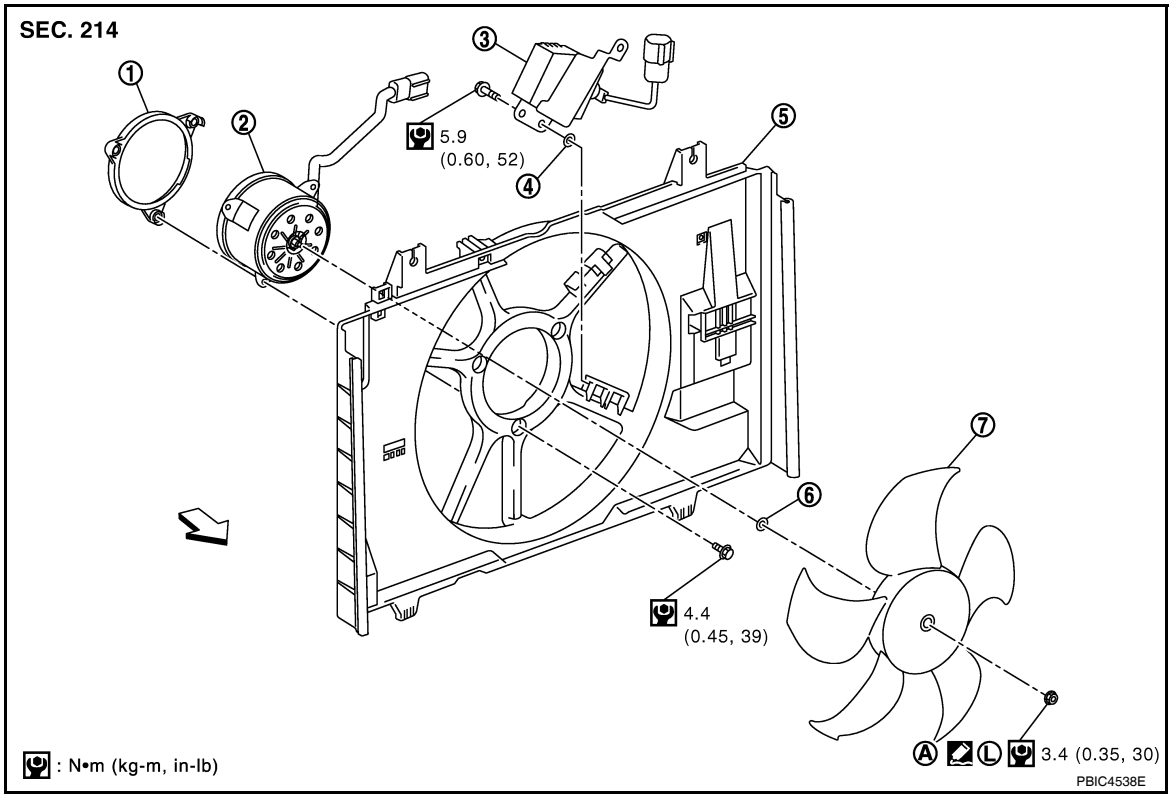

1. Fan motor cover	2. Fan motor	3. Cooling fan control module
4. Washer	5. Fan shroud	6. Washer
7. Cooling fan	A. Apply on fan motor shaft	Front

Component (Models without A/C)

INFOID:0000000004784359

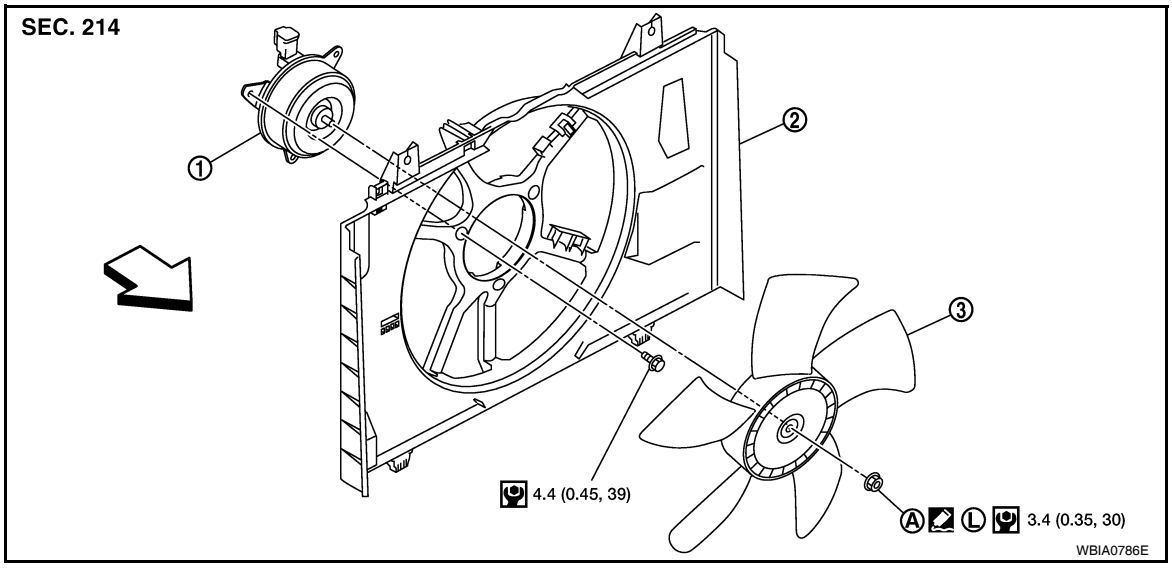

1. Fan motor	2. Fan shroud	3. Cooling fan
A. Apply on fan motor shaft	Front	

Removal and Installation

INFOID:0000000004784360

REMOVAL

1. Drain engine coolant from radiator. Refer to CO-11, "Changing Engine Coolant".
   CAUTION:
   - **Perform this step when engine is cold.**
   - **Do not spill engine coolant on drive belt.**
2. Remove air duct (inlet). Refer to EM-26, "Exploded View".
3. Remove reservoir tank.
4. Disconnect radiator hose (upper) at radiator side. Refer to CO-16, "Component".
5. Disconnect harness connectors from fan motor, and move harness to aside.
6. Remove cooling fan assembly.
   CAUTION:
   Be careful not to damage or scratch the radiator core.

INSTALLATION

Installation is the reverse order of removal.

- Cooling fans are controlled by ECM. For details, refer to EC-422, "Description".

CAUTION:

Be careful not to damage or scratch the radiator core.

WATER PUMP

Exploded View

INFOID:0000000004784361

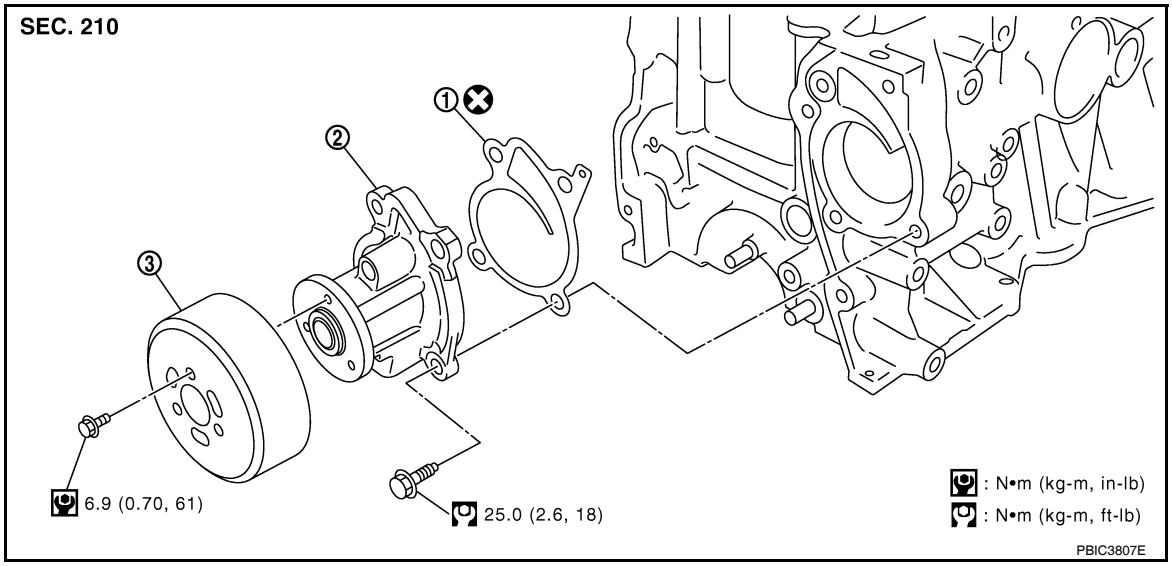

1. Gasket
2. Water pump
3. Water pump pulley

Removal and Installation

INFOID:0000000004784362

REMOVAL

1. Drain engine coolant from radiator. Refer to CO-11, "Changing Engine Coolant".
   CAUTION:
   - **Perform this step when the engine is cold.**
   - **Never spill engine coolant on drive belts.**
2. Steer front wheel to the right.
3. Remove front fender protector (RH). Refer to EI-24, "Removal and Installation".
4. Loosen mounting bolts of water pump pulley before loosening belt tension of drive belt.
5. Remove drive belt. Refer to EM-15, "Removal and Installation".
6. Remove water pump pulley.
7. Remove water pump.
   - Loosen mounting bolts in reverse order as shown.
   - Engine coolant will leak from cylinder block, so have a receptacle ready below.

   CAUTION:
   - **Handle water pump vane so that it does not contact any other parts.**
   - **Water pump cannot be disassembled and should be replaced as a unit.**

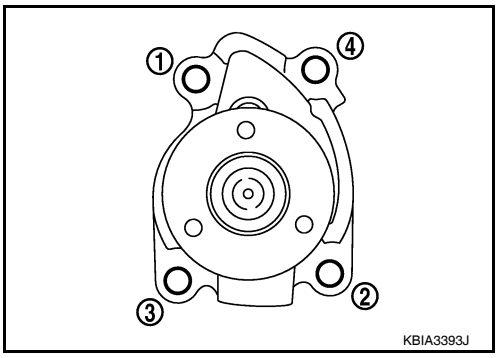

INSTALLATION

Installation is in the reverse order of removal.

Water pump.

- Tighten bolts in numerical order as shown.

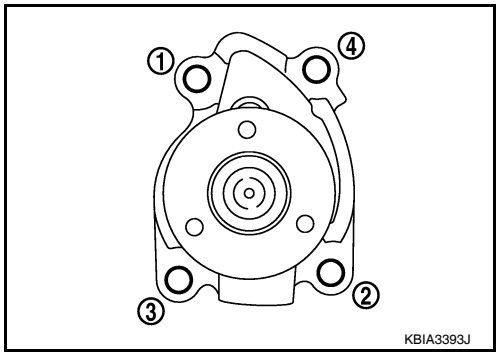

Water pump pulley.

CAUTION:

Never install mounting bolts (A) to oblong holes (B).

- Water pump pulley (1)

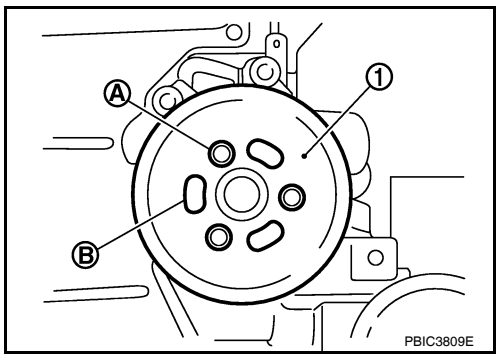

Inspection

INFOID:0000000004784363

INSPECTION AFTER REMOVAL

- Visually check if there is no significant dirt or rusting on water pump body and vane (A).
- Make sure that there is no looseness in vane shaft, and that it turns smoothly when rotated by hand.
- Replace water pump, if necessary.

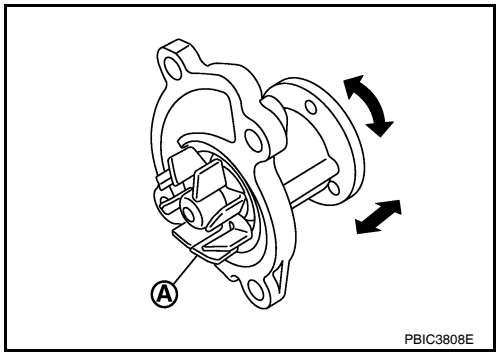

INSPECTION AFTER INSTALLATION

- Check that the reservoir tank cap is tightened.
- Check for leaks of engine coolant. Refer to CO-11, "Inspection".
- Start and warm up the engine. Visually check for leaks of engine coolant.

THERMOSTAT

Exploded View

INFOID:0000000004784364

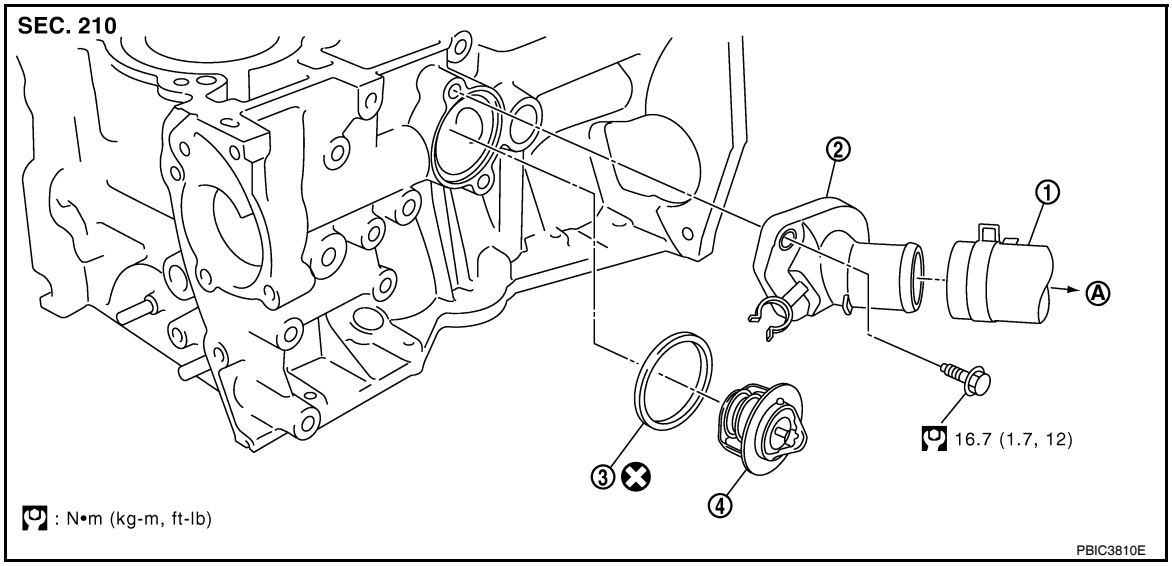

1. Radiator hose (lower)
2. Water inlet
3. Rubber ring
4. Thermostat

A. To radiator

Removal and Installation

INFOID:0000000004784365

REMOVAL

1. Drain engine coolant from radiator. Refer to CO-11, "Changing Engine Coolant".
   CAUTION:
   - **Perform this step when engine is cold.**
   - **Never spill engine coolant on drive belt.**
2. Add paint mark, then disconnect radiator hose (lower) from water inlet. Refer to CO-16, "Component".
3. Remove water inlet and thermostat.
   - Engine coolant will leak from cylinder block, so have a receptacle ready below.

INSTALLATION

Installation is in the reverse order of removal.

Thermostat

- Install thermostat with making rubber ring (1) groove fit to thermostat flange (A) with the whole circumference.

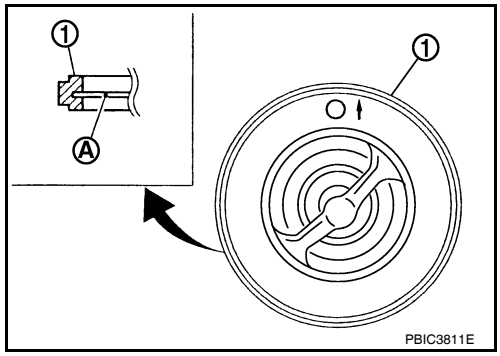

- Install thermostat (2) into the cylinder block (1) with jiggle valve (A) facing upwards.

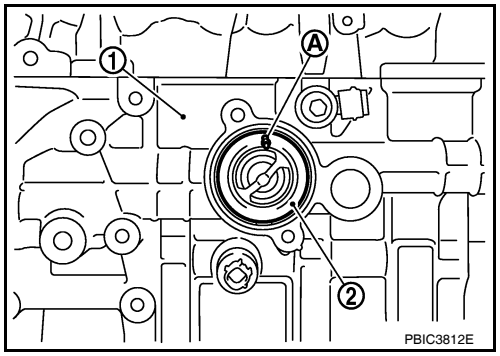

Water Inlet.
After installation, fix water inlet clip (A) on the oil level gauge guide (1) positioned (B) as shown.

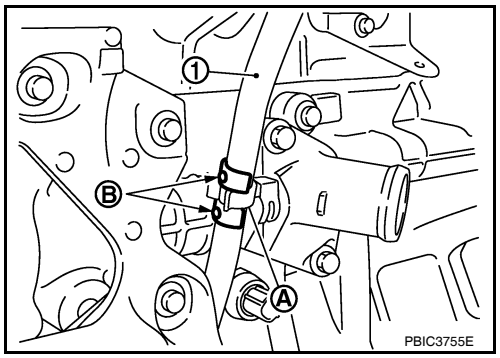

Inspection

INFOID:0000000004784366

INSPECTION AFTER REMOVAL

WARNING:
Use a protector to prevent a burn during the work.

Thermostat

- Place a thread (A) so that it is caught in the valves of thermostat (1). Immerse fully in a container (B) filled with water. Heat while stirring.
- The valve opening temperature is the temperature at which the valve opens and falls from the thread.
- Continue heating. Check the full-open valve lift amount.
- After checking the full-open valve lift amount, lower the water temperature and check the valve closing temperature.

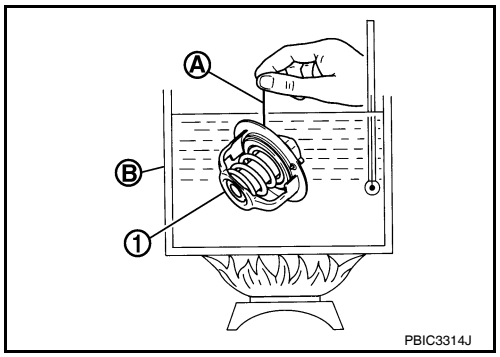

Standard : **Refer to CO-27, "Thermostat".**

- If out of the standard, replace thermostat.

INSPECTION AFTER INSTALLATION

- Check that the reservoir tank cap is tightened.
- Check for leaks of engine coolant using suitable tools. Refer to CO-11, "Inspection".
- Start and warm up the engine. Visually make sure that there is no leaks of engine coolant.

WATER OUTLET

Exploded View

INFOID:0000000004784367

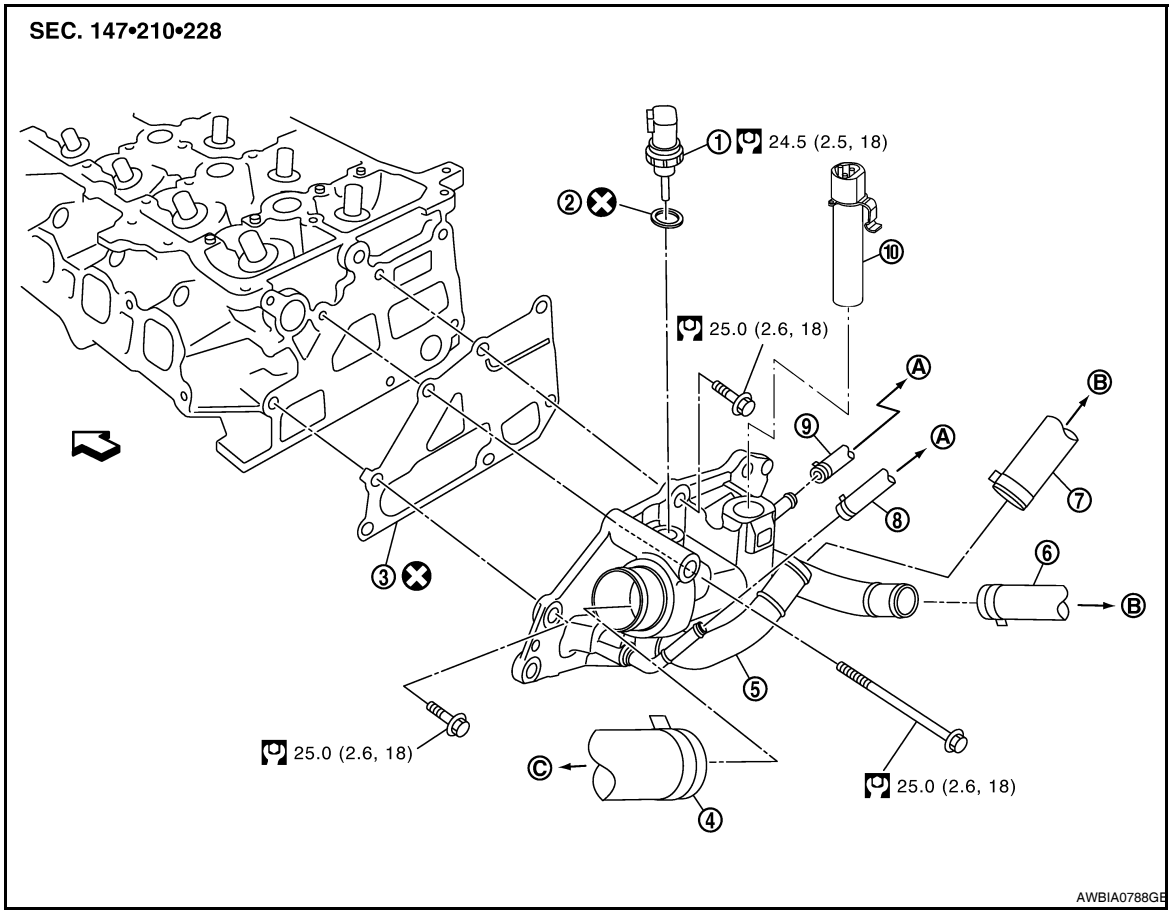

1.	Engine coolant temperature sensor	2.	Washer	3.	Gasket
4.	Radiator hose (upper)	5.	Water outlet	6.	Heater hose
7.	Heater hose	8.	Water hose	9.	Water hose
10.	Block heater (Canada only)				
A.	To electric throttle control actuator	B.	To heater core	C.	To radiator

: Engine front

Removal and Installation

INFOID:0000000004784368

REMOVAL

1. Drain engine coolant from radiator. Refer to CO-11, "Changing Engine Coolant".
   CAUTION:
   - **Perform this step when engine is cold.**
   - **Never spill engine coolant on drive belt.**
2. Disconnect radiator hose (upper). Refer to CO-16, "Component".
3. Disconnect harness connector from engine coolant temperature sensor and block heater, if equipped.
4. Remove electric throttle control actuator water hoses.
5. Remove heater hoses.
6. Remove water outlet.
7. Remove engine coolant temperature sensor from water outlet, if necessary.
8. Remove block heater from water outlet, if necessary (Canada only).

INSTALLATION

Installation is in the reverse order of removal.

NOTE:

Insert the block heater into the water outlet until the clip is fully locked (Canada only).

Inspection

INFOID:0000000004784369

INSPECTION AFTER INSTALLATION

- Check that the reservoir tank cap is tightened.
- Check for leaks of engine coolant using suitable tool. Refer to CO-11, "Inspection".
- Start and warm up the engine. Visually make sure that there is no leaks of engine coolant.

DISASSEMBLY AND ASSEMBLY

COOLING FAN

Disassembly and Assembly

INFOID:0000000004786247

DISASSEMBLY

1. Remove cooling fan from fan motor.
2. Remove fan motor from fan shroud.

INSPECTION AFTER DISASSEMBLY

Inspect cooling fan for crack or unusual bend.
- If anything is found, replace cooling fan.

ASSEMBLY

Assembly is in the reverse order of disassembly.

SERVICE DATA AND SPECIFICATIONS (SDS)

SERVICE DATA AND SPECIFICATIONS (SDS)

Periodical Maintenance Specification

INFOID:0000000004784371

ENGINE COOLANT CAPACITY (APPROXIMATE)

Unit: (US qt, Imp qt)

Engine coolant capacity [With reservoir tank (“MAX” level)]	6.3 (6 5/8, 5 1/2)

Radiator

INFOID:0000000004784372

RESERVOIR TANK CAP

Unit: kPa (bar, kg/cm^2, psi)

Cap relief pressure	Standard	78 - 98 (0.78 - 0.98, 0.8 - 1.0, 11 - 14)
	Limit	59 (0.59, 0.6, 9)

RADIATOR

Unit: kPa (bar, kg/cm^2, psi)

Leakage testing pressure	157 (1.57, 1.6, 23)

Thermostat

INFOID:0000000004784373

Thermostat	Standard
Valve opening temperature	80.5 - 83.5°C (177 - 182°F)
Full-open valve lift amount	8.0 mm/95°C (0.315 in/203°F)
Valve closing temperature	77°C (171°F)

SERVICE INFORMATION

PRECAUTIONS

Precaution for Supplemental Restraint System (SRS) "AIR BAG" and "SEAT BELT PRE-TENSIONER"

INFOID:0000000004784388

The Supplemental Restraint System such as “AIR BAG” and “SEAT BELT PRE-TENSIONER”, used along with a front seat belt, helps to reduce the risk or severity of injury to the driver and front passenger for certain types of collision. This system includes seat belt switch inputs and dual stage front air bag modules. The SRS system uses the seat belt switches to determine the front air bag deployment, and may only deploy one front air bag, depending on the severity of a collision and whether the front occupants are belted or unbelted.
Information necessary to service the system safely is included in the SRS and SB section of this Service Manual.

WARNING:

- **To avoid rendering the SRS inoperative, which could increase the risk of personal injury or death in the event of a collision which would result in air bag inflation, all maintenance must be performed by an authorized NISSAN/INFINITI dealer.**
- **Improper maintenance, including incorrect removal and installation of the SRS can lead to personal injury caused by unintentional activation of the system. For removal of Spiral Cable and Air Bag Module, see the SRS section.**
- **Do not use electrical test equipment on any circuit related to the SRS unless instructed to in this Service Manual. SRS wiring harnesses can be identified by yellow and/or orange harnesses or harness connectors.**
- **When working near the Airbag Diagnosis Sensor Unit or other Airbag System sensors with the Ignition ON or engine running, DO NOT use air or electric power tools or strike near the sensor(s) with a hammer. Heavy vibration could activate the sensor(s) and deploy the air bag(s), possibly causing serious injury.**
- **When using air or electric power tools or hammers, always switch the Ignition OFF, disconnect the battery, and wait at least 3 minutes before performing any service.**

Precaution Necessary for Steering Wheel Rotation After Battery Disconnect

INFOID:0000000004305228

NOTE:

- This Procedure is applied only to models with Intelligent Key system and NATS (NISSAN ANTI-THEFT SYSTEM).
- Remove and install all control units after disconnecting both battery cables with the ignition knob in the ″LOCK″ position.
- Always use CONSULT-III to perform self-diagnosis as a part of each function inspection after finishing work. If DTC is detected, perform trouble diagnosis according to self-diagnostic results.

For models equipped with the Intelligent Key system and NATS, an electrically controlled steering lock mechanism is adopted on the key cylinder.
For this reason, if the battery is disconnected or if the battery is discharged, the steering wheel will lock and steering wheel rotation will become impossible.
If steering wheel rotation is required when battery power is interrupted, follow the procedure below before starting the repair operation.

OPERATION PROCEDURE

1. Connect both battery cables.
   NOTE:
   Supply power using jumper cables if battery is discharged.
2. Use the Intelligent Key or mechanical key to turn the ignition switch to the ″ACC″ position. At this time, the steering lock will be released.
3. Disconnect both battery cables. The steering lock will remain released and the steering wheel can be rotated.
4. Perform the necessary repair operation.
5. When the repair work is completed, return the ignition switch to the ″LOCK″ position before connecting the battery cables. (At this time, the steering lock mechanism will engage.)
6. Perform a self-diagnosis check of all control units using CONSULT-III.

Precaution for Liquid Gasket

INFOID:0000000004305229

REMOVAL OF LIQUID GASKET SEALING

- After removing nuts and bolts, separate the mating surface, using Tool and remove old liquid gasket sealing.

Tool number : KV10111100 (J-37228)

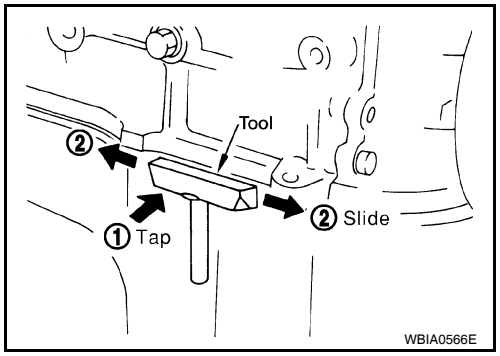

CAUTION:
Be careful not to damage the mating surfaces.

- Tap Tool to insert it (1), and then slide it by tapping on the side (2) as shown.
- In areas where Tool is difficult to use, use plastic hammer to lightly tap the parts, to remove it.

CAUTION:
If for some unavoidable reason suitable tool such as screwdriver is used, be careful not to damage the mating surfaces.

LIQUID GASKET APPLICATION PROCEDURE

1. Remove old liquid gasket adhering to the liquid gasket application surface and the mating surface, using scraper.
   - Remove liquid gasket completely from the groove of the liquid gasket application surface, bolts, and bolt holes.
2. Thoroughly clean the mating surfaces and remove adhering moisture, grease and foreign materials.
3. Attach liquid gasket tube to Tool.

Tool number : WS39930000 (—)

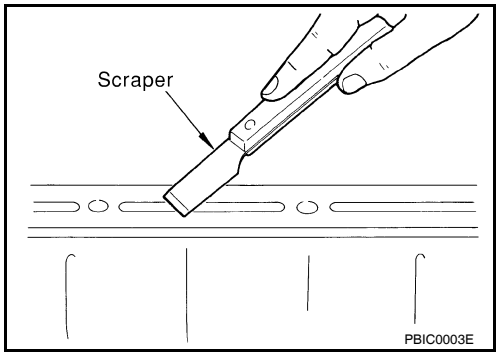

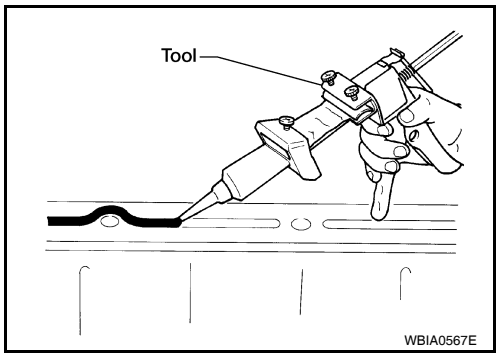

Use Genuine RTV Silicone Sealant or equivalent. Refer to GI-42, "Recommended Chemical Product and Sealant".

4. Apply liquid gasket without breaks to the specified location with the specified dimensions.
   - If there is a groove for the liquid gasket application, apply liquid gasket to the groove.
   - As for the bolt holes, normally apply liquid gasket inside the holes. Occasionally, it should be applied outside the holes. Make sure to read the text of service manual.
   - Within five minutes of liquid gasket application, install the mating component.
   - If liquid gasket protrudes, wipe it off immediately.
   - Do not retighten nuts or bolts after the installation.
   - After 30 minutes or more have passed from the installation, fill engine oil and engine coolant.

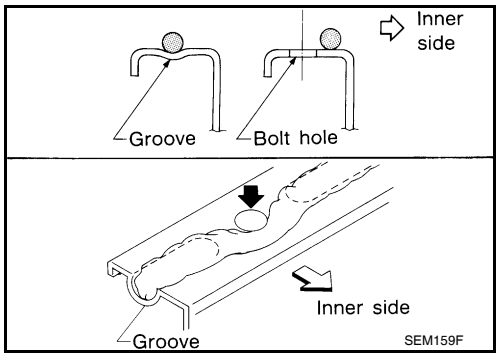

CAUTION:
If there are specific instructions in this manual, observe them.

PREPARATION

Special Service Tool

INFOID:0000000004673018

The actual shapes of Kent-Moore tools may from those of special service tools illustrated here.

Tool number (Kent-Moore No.) Tool name	Description
WS39930000 (—) Tube pressure 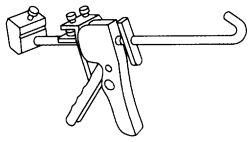 S-NT052	Pressing the tube of liquid gasket
KV991J0070 (J-45695) Coolant Refill Tool 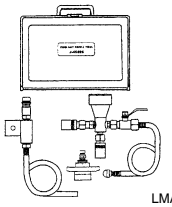 LMA053	Refilling engine cooling system
EG17650301 (J-33984-A) Radiator cap tester adapter 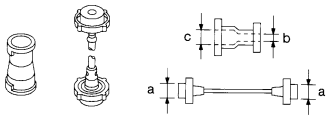 S-NT564	Adapting radiator cap tester to radiator cap and radiator filler neck **a: 28 (1.10) dia.** **b: 31.4 (1.236) dia.** **c: 41.3 (1.626) dia.** Unit: mm (in)
KV10111100 (J-37228) Seal cutter 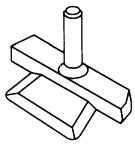 NT046	Removing chain tensioner cover and water pump cover
— (J-23688) Engine coolant refractometer 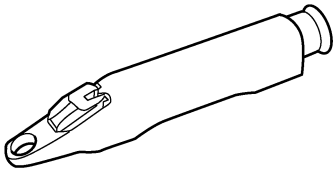 WBIA0539E	Checking concentration of ethylene glycol in engine coolant

Commercial Service Tool

INFOID:0000000004673019

Tool name	Description
Power tool 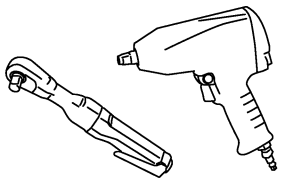 PBIC0190E	Loosening bolts and nuts
Radiator cap tester 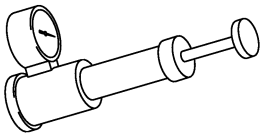 PBIC1982E	Checking radiator and radiator cap

OVERHEATING CAUSE ANALYSIS

Troubleshooting Chart

INFOID:0000000004305232

	Symptom		Check items	
Cooling system parts malfunction	Poor heat transfer	Water pump malfunction	Worn or loose drive belt	—
		Thermostat stuck closed	Thermostat	
		Damaged fins	Dust contamination or paper clogging	
			Physical damage	
		Clogged radiator cooling tube	Excess foreign material (rust, dirt, sand, etc.)	
	Reduced air flow	Cooling fan does not operate	Fan assembly	—
		High resistance to fan rotation		
		Damaged fan blades		
	Damaged radiator shroud	—		—
	Improper engine coolant mixture ratio	—	Engine coolant viscosity	—
	Poor engine coolant quality	—		—
	Insufficient engine coolant	Engine coolant leaks	Cooling hose	Loose clamp
				Cracked hose
			Water pump	Poor sealing
			Radiator cap	Loose
				Poor sealing
			Radiator	O-ring for damage, deterioration or improper fitting
				Cracked radiator tank
				Cracked radiator core
			Reservoir tank	Cracked reservoir tank
		Overflowing reservoir tank	Exhaust gas leaks into cooling system	Cylinder head deterioration
				Cylinder head gasket deterioration

	Symptom		Check items	
Except cooling system parts malfunction	—	Overload on engine	Abusive driving	High engine rpm under no load
				Driving in low gear for extended time
				Driving at extremely high speed
			Power train system malfunction	—
			Installed improper size wheels and tires	
			Dragging brakes	
			Improper ignition timing	
	Blocked or restricted air flow	Blocked bumper	Installed front bumper fascia cover	—
		Blocked radiator grille	Mud contamination or paper clogging	
		Blocked radiator	Blocked air flow	
		Blocked condenser		
		Installed large fog lamp		

COOLING SYSTEM

Cooling Circuit

INFOID:0000000004305233

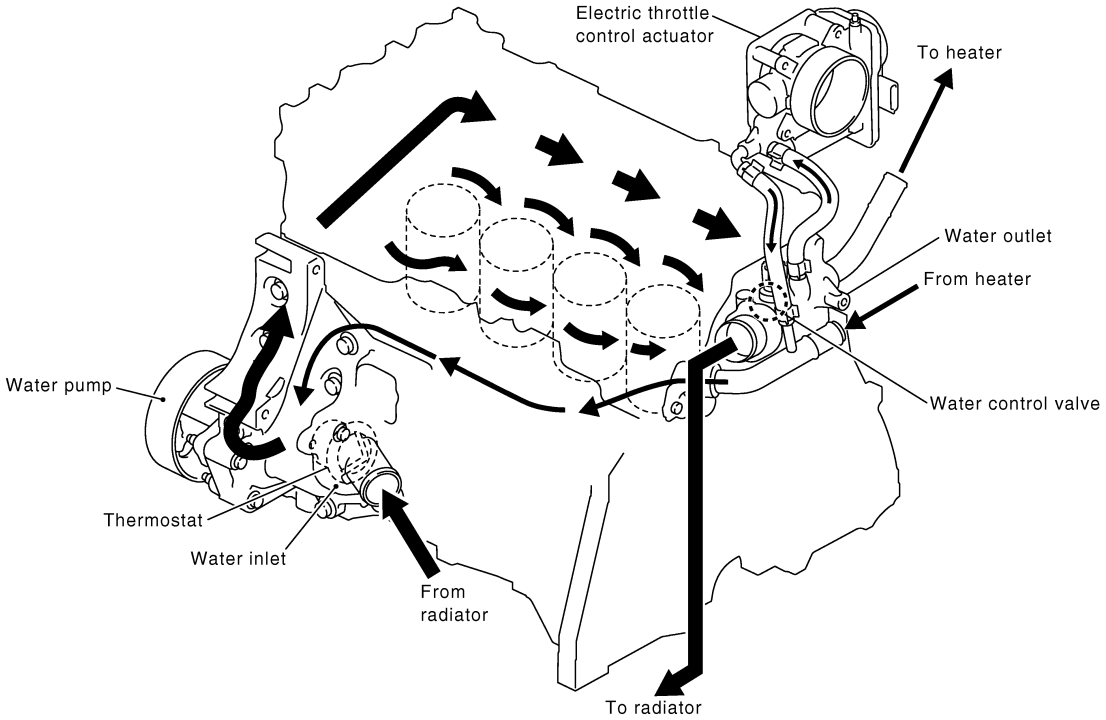

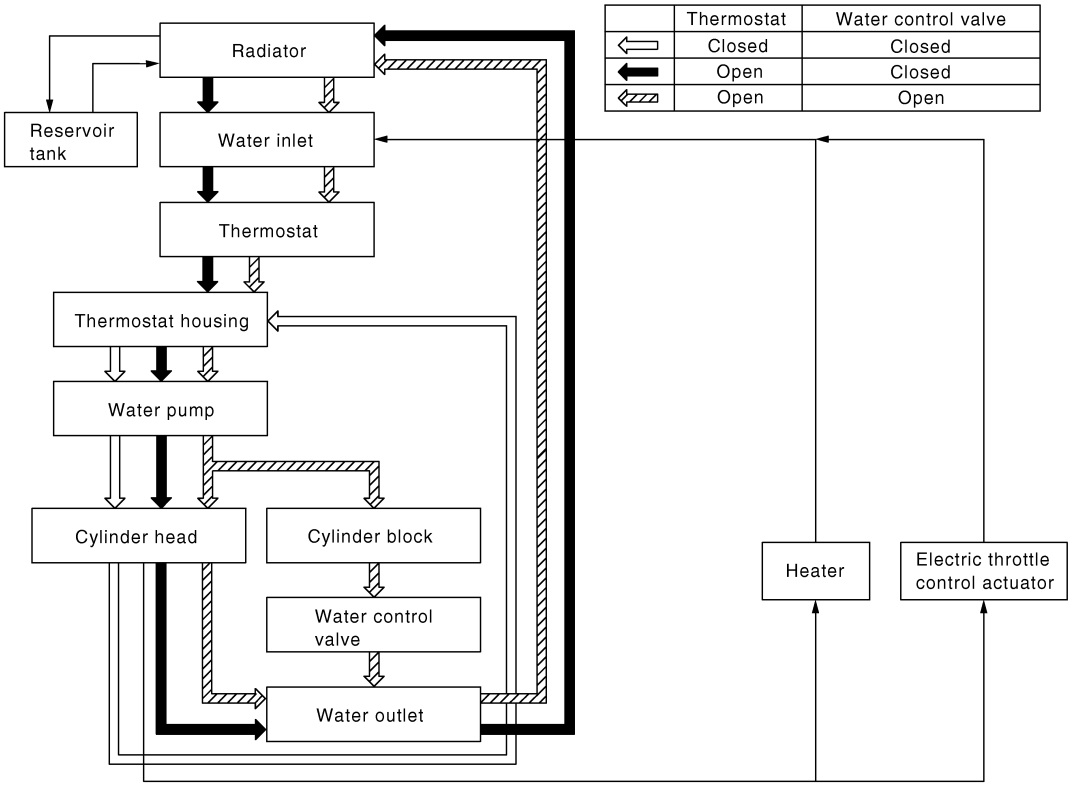

	Thermostat	Water control valve
⇦	Closed	Closed
⬅	Open	Closed
⇦	Open	Open

ENGINE COOLANT

Inspection

INFOID:0000000004305234

LEVEL CHECK

- Check if the reservoir tank engine coolant level is within the “MIN” to “MAX” range when engine is cool.
- Adjust the engine coolant level as necessary.

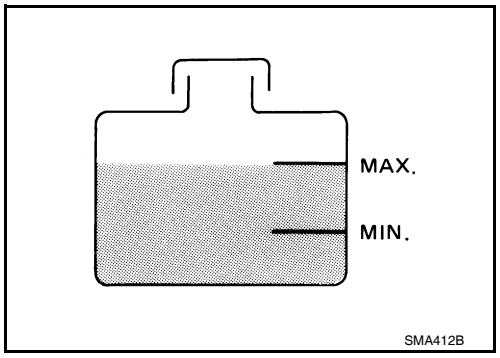

CHECKING COOLING SYSTEM FOR LEAKS

To check for leaks, apply pressure to the cooling system using suitable tool and Tool.

Tool number : EG17650301 (J-33984-A)

Testing pressure : 157 kPa (1.6 kg/cm^2, 23 psi)

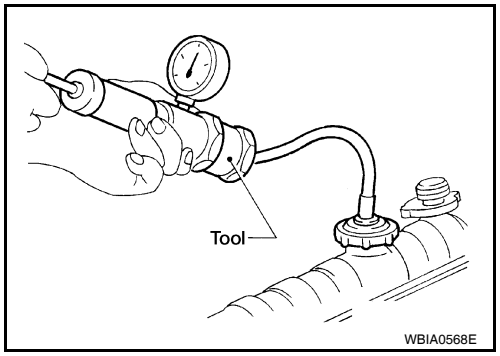

WARNING:
Never remove the radiator cap when the engine is hot. Serious burns could occur from high pressure coolant escaping from the radiator.
CAUTION:
Higher pressure than specified may cause radiator damage.

Changing Engine Coolant

INFOID:0000000004673021

WARNING:
- **To avoid being scalded, do not change engine coolant when engine is hot.**
- **Wrap a thick cloth around radiator cap and carefully remove the cap. First, turn the cap a quarter of a turn to release built-up pressure. Then turn the cap all the way.**

CAUTION:
- **Do not spill engine coolant on drive belt.**

DRAINING ENGINE COOLANT

1. Open radiator drain plug (1) at the bottom of radiator, and then remove radiator cap.
   - Front

   When draining all of engine coolant in the system, open water drain plug on cylinder block. Refer to EM-200.
   CAUTION:
   - **Perform this step when engine is cold.**
   - **Do not spill engine coolant on drive belt.**

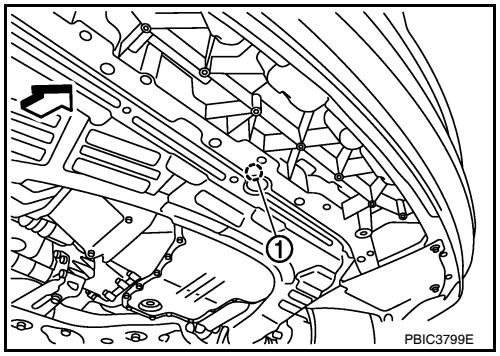

2. Remove reservoir tank as necessary, and drain engine coolant and clean reservoir tank before installing. Refer to CO-38, "Component".
3. Check drained engine coolant for contaminants such as rust, corrosion or discoloration.
   If contaminated, flush the engine cooling system.

REFILLING ENGINE COOLANT

1. Install the radiator drain plug. Install the reservoir tank and cylinder block drain plug, if removed for a total system drain or for engine removal or repair.
   - **The radiator must be completely empty of coolant and water.**
   - **Apply sealant to the threads of the cylinder block drain plugs. Use Genuine High Performance Thread Sealant or equivalent. Refer to GI-42, "Recommended Chemical Product and Sealant".**

Radiator drain plug	**: Refer to CO-38, "Component".**
Cylinder block drain plug	**: Refer to EM-200, "Disassembly and Assembly".**

2. If disconnected, reattach the upper radiator hose at the engine side.
3. Set the vehicle heater controls to the full HOT and heater ON position. Turn the vehicle ignition ON with the engine OFF as necessary to activate the heater mode.
4. Install the Tool by installing the radiator cap adapter onto the radiator neck opening. Then attach the gauge body assembly with the refill tube and the venturi assembly to the radiator cap adapter.

Tool number	**: KV991J0070 (J-45695)**

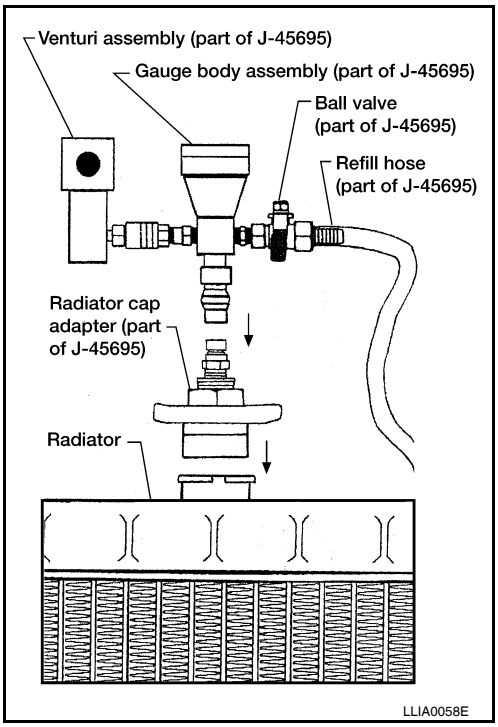

5. Insert the refill hose into the coolant mixture container that is placed at floor level. Make sure the ball valve is in the closed position.
   - **Use Genuine NISSAN Long Life Anti-freeze coolant or equivalent, mixed with distilled water or demineralized water.**
     Refer to MA-15, "Anti-freeze Coolant Mixture Ratio".

Engine coolant capacity (with reservoir tank)	**: Refer to MA-14, "Fluids and Lubricants".**

6. Install an air hose to the venturi assembly, the air pressure must be within specification.

Compressed air supply pressure	**: 5.7 - 8.5 kPa (5.6 - 8.4 kg/cm^2, 80 - 120 psi)**

CAUTION:
The compressed air supply must be equipped with an air dryer.

7. The vacuum gauge will begin to rise and there will be an audible hissing noise. During this process open the ball valve on the refill hose slightly. Coolant will be visible rising in the refill hose. Once the refill hose is full of coolant, close the ball valve. This will purge any air trapped in the refill hose.
8. Continue to draw the vacuum until the gauge reaches 28 inches of vacuum. The gauge may not reach 28 inches in high altitude locations, use the vacuum specifications based on the altitude above sea level.

Altitude above sea level	**Vacuum gauge reading**
0 - 100 m (328 ft)	**: 28 inches of vacuum**
300 m (984 ft)	**: 27 inches of vacuum**
500 m (1,641 ft)	**: 26 inches of vacuum**
1,000 m (3,281 ft)	**: 24 - 25 inches of vacuum**

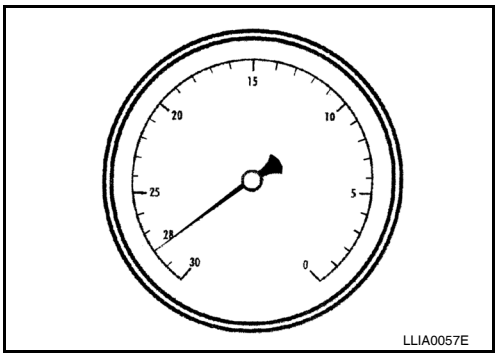

9. When the vacuum gauge has reached the specified amount, disconnect the air hose and wait 20 seconds to see if the system loses any vacuum. If the vacuum level drops, perform any necessary repairs to the system and repeat steps 6 - 8 to bring the vacuum to the specified amount. Recheck for any leaks.

10. Place the coolant container (with the refill hose inserted) at the same level as the top of the radiator. Then open the ball valve on the refill hose so the coolant will be drawn up to fill the cooling system. The cooling system is full when the vacuum gauge reads zero.
    CAUTION:
    Do not allow the coolant container to get too low when filling, to avoid air from being drawn into the cooling system.
11. Remove the Tool from the radiator neck opening.
12. Fill the cooling system reservoir tank to the specified level and install the radiator cap. Run the engine to warm up the cooling system and top up the system as necessary.

FLUSHING COOLING SYSTEM

1. Install reservoir tank if removed. Refer to CO-38, "Component".
2. Install radiator drain plug.
   - **If water drain plug on cylinder block is removed, close and tighten it. Refer to EM-200, "Disassembly and Assembly".**
   CAUTION:
   Be sure to clean radiator drain plug and install with new O-ring. Refer to CO-38, "Component".
3. Fill radiator and reservoir tank with water and reinstall radiator cap.
4. Run engine and warm it up to normal operating temperature.
5. Rev engine two or three times under no-load.
6. Stop engine and wait until it cools down.
7. Drain water from the cooling system.
8. Repeat steps 1 through 7 until clear water begins to drain from radiator.

RADIATOR

Component

INFOID:0000000004305236

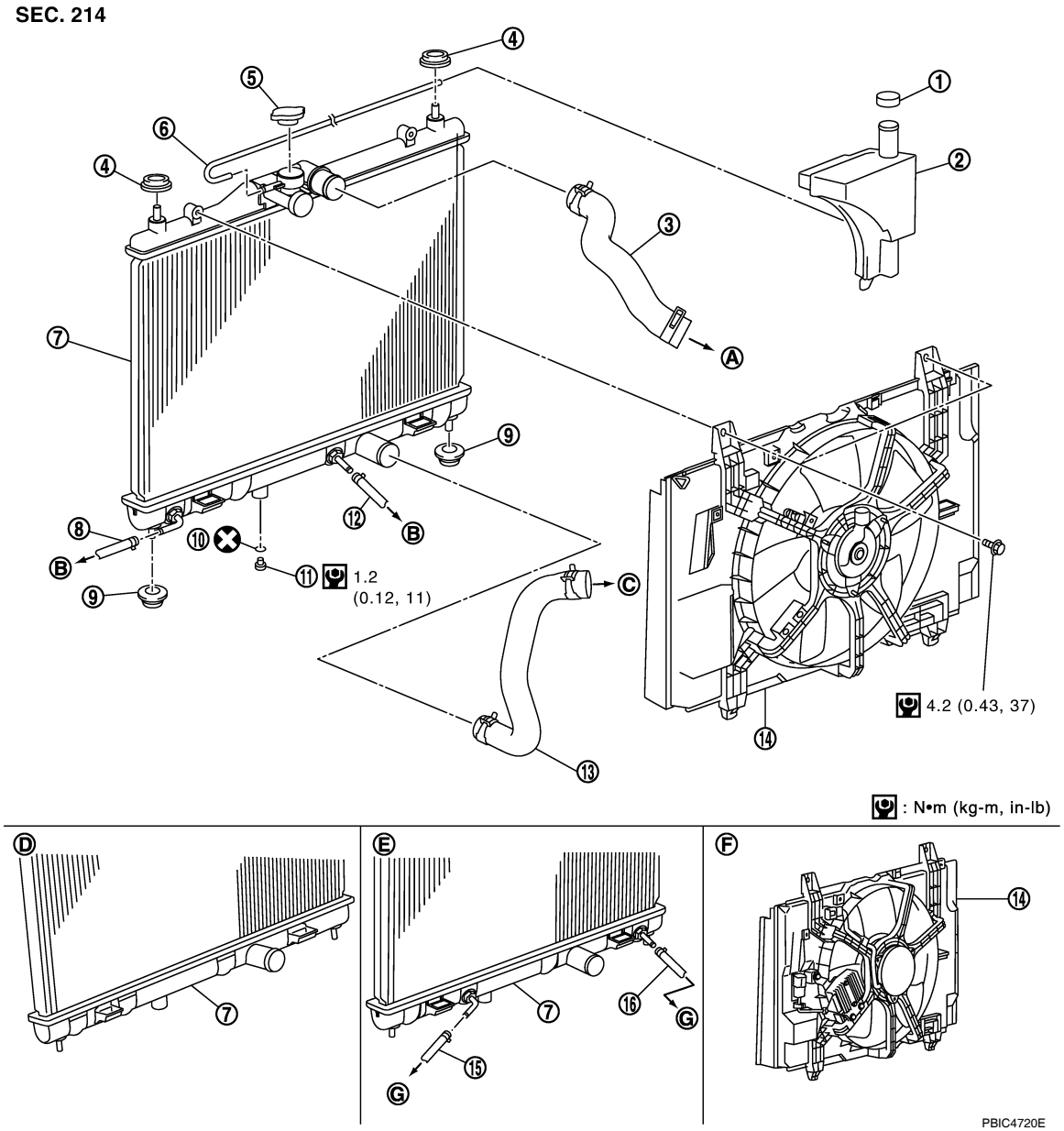

1. Reservoir tank cap	2. Reservoir tank	3. Radiator hose (upper)
4. Mounting rubber (upper)	5. Radiator cap	6. Reservoir tank hose
7. Radiator	8. A/T fluid cooler hose	9. Mounting rubber (lower)
10. O-ring	11. Radiator drain plug	12. A/T fluid cooler hose
13. Radiator hose (lower)	14. Cooling fan assembly	15. CVT fluid cooler hose
16. CVT fluid cooler hose	A. To water outlet	B. To A/T
C. To water inlet	D. M/T models	E. CVT models
F. Models with A/C	G. To CVT	

Removal and Installation

INFOID:0000000004305237

WARNING:

Do not remove radiator cap when the engine is hot. Serious burns could occur from high-pressure engine coolant escaping from radiator. Wrap a thick cloth around the cap. Slowly turn it a quarter of a turn to release built-up pressure. Carefully remove radiator cap by turning it all the way.

REMOVAL

1. Drain engine coolant from radiator. Refer to CO-35, "Changing Engine Coolant".
   CAUTION:
   - **Perform this step when engine is cold.**
   - **Do not spill engine coolant on drive belt.**
2. Remove engine undercover.
3. Remove air duct (inlet). Refer to EM-139.
4. Remove reservoir tank as follows:

a. Disconnect reservoir tank hose.

b. Release the tab (A) in the direction shown by the arrow ( ).

c. Lift up while removing the reservoir tank hose, and remove it.

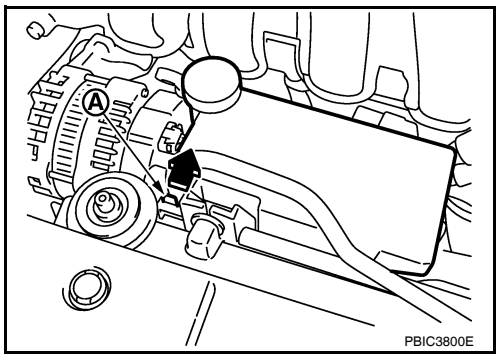

5. Disconnect harness connector from fan motor, and move harness aside.
6. Disconnect CVT or A/T fluid cooler hoses if equipped.
   - Install plug to avoid leakage of CVT or A/T fluid if equipped.
7. Remove radiator hoses (upper and lower).
8. Remove radiator core support cover. Refer to BL-19.
9. Remove radiator core support (upper) bolts, bolts of stationary part on the radiator core support side and clip. Lift radiator from radiator (upper) mount part of radiator core support (upper) (2).
10. Move radiator assembly (1) to the rearward direction of vehicle, and then lift it upward to remove.
    CAUTION:
    Do not damage or scratch A/C condenser if equipped and radiator core when removing.

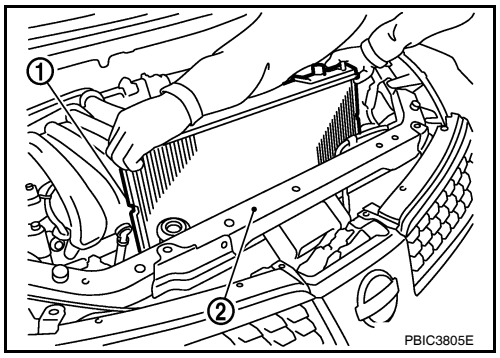

INSTALLATION

Installation is in the reverse order of removal.

CAUTION:

Do not damage or scratch A/C condenser if equipped and radiator core when installing.

INSPECTION AFTER INSTALLATION

- Check for leaks of engine coolant. Refer to CO-35, "Inspection".
- Start and warm up engine. Visually check for leaks of engine coolant and CVT or A/T fluid if equipped. Refer to CVT-196 or AT-17.

Checking Radiator Cap

INFOID:0000000004305238

- Check valve seat of radiator cap.
- Check if valve seat is swollen to the extent that the edge of the plunger cannot be seen when watching it vertically from the top.
- Check if valve seat has no soil and damage.

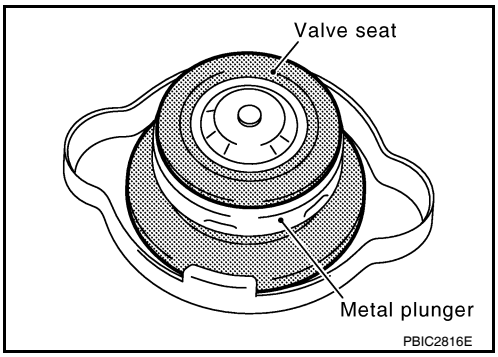

- Pull negative-pressure valve to open it, and make sure that it is completely closed when released.
- Make sure that there is no dirt or damage on the valve seat of radiator cap negative-pressure valve.
- Make sure that the valve operates properly in the opening and closing conditions.

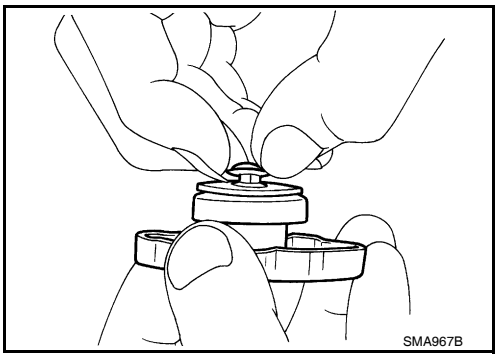

- Check radiator cap relief pressure using Tool.

Tool number : EG17650301 (J-33984-A)

Standard: 78 – 98 kPa (0.78 - 0.98 bar, 0.8 – 1.0 kg/cm^2, 11 – 14 psi)

Limit: 59 kPa (0.59 bar, 0.6 kg/cm^2, 9 psi)

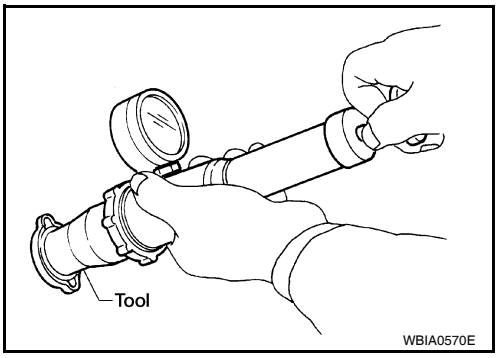

- When connecting the radiator cap to the tester, apply water or coolant to the cap seal surface.
- Replace the radiator cap if there is an abnormality in the negative-pressure valve, or if the open-valve pressure is outside of the standard values.

- Replace radiator cap if there it does not comply to specifications to the above three checks.

CAUTION:

When installing radiator cap, thoroughly wipe out the radiator filler neck to remove any waxy residue or foreign material.

Checking Radiator

INFOID:0000000004305239

Check radiator for mud or clogging. If necessary, clean radiator as follows.

- Be careful not to bend or damage radiator fins.
- When radiator is cleaned without removal, remove all surrounding parts such as cooling fan, radiator shroud and horns. Then tape harness and connectors to prevent water from entering.

1. Apply water by hose to the back side of the radiator core vertically downward.
2. Apply water again to all radiator core surface once per minute.
3. Stop washing if any stains no longer flow out from radiator.
4. Blow air into the back side of radiator core vertically downward.
   - Use compressed air lower than 490 kPa (4.9 bar, 5 kg/cm^2, 71 psi) and keep distance more than 30 cm (11.8 in).
5. Blow air again into all the radiator core surfaces once per minute until no water sprays out.

COOLING FAN

Component (Models with A/C)

INFOID:0000000004305240

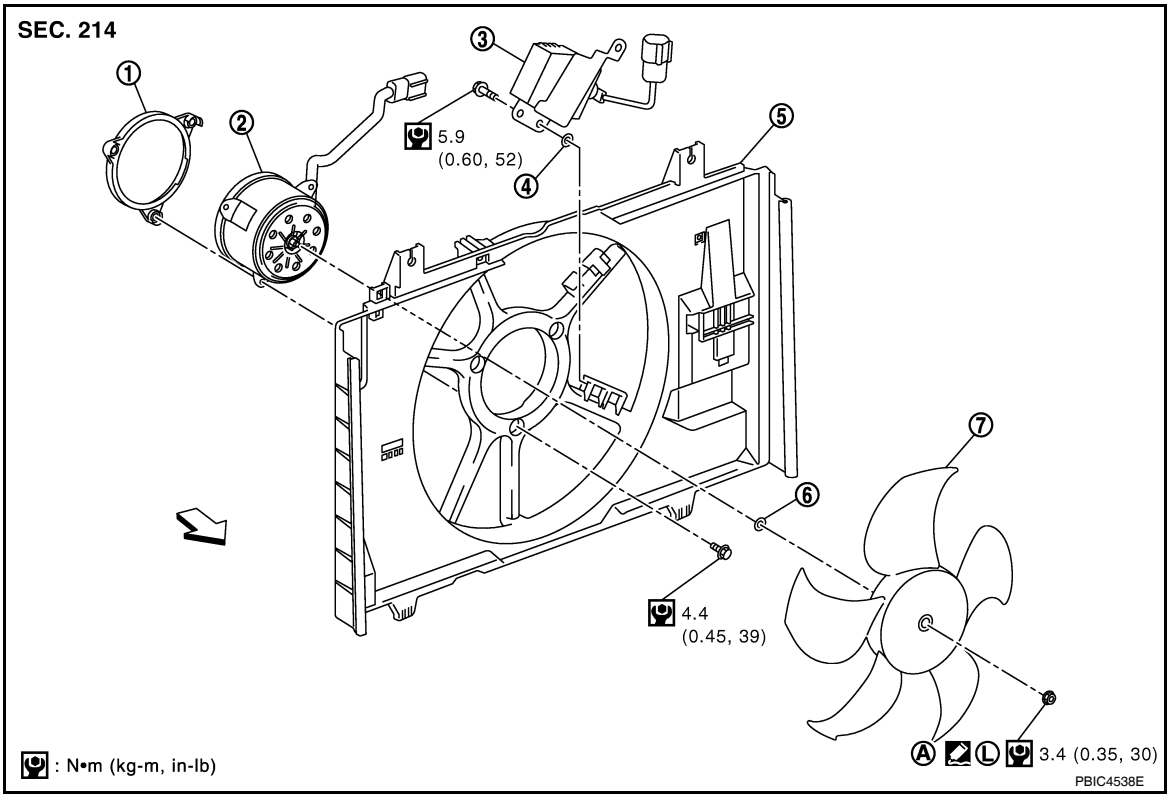

1. Fan motor cover	2. Fan motor	3. Cooling fan control module
4. Washer	5. Fan shroud	6. Washer
7. Cooling fan	A. Apply on fan motor shaft	Front

Component (Models without A/C)

INFOID:0000000004305241

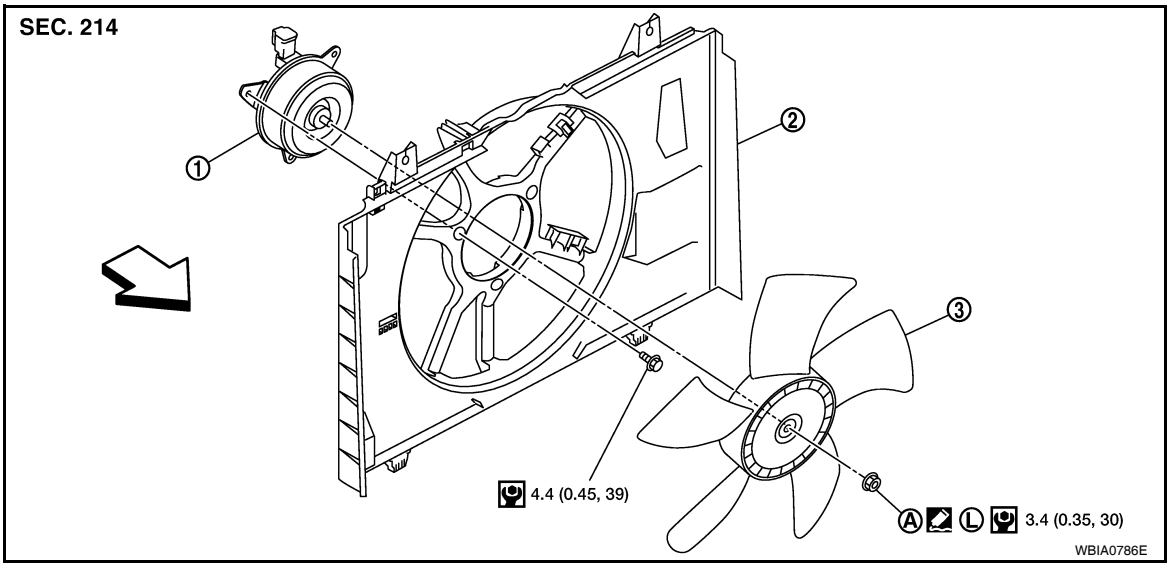

1. Fan motor	2. Fan shroud	3. Cooling fan
A. Apply on fan motor shaft	Front	

Removal and Installation

INFOID:0000000004305242

REMOVAL

1. Drain engine coolant from radiator. Refer to CO-35, "Changing Engine Coolant".
   CAUTION:
   - **Perform this step when engine is cold.**
   - **Do not spill engine coolant on drive belt.**
2. Remove air duct (inlet). Refer to EM-139, "Component".
3. Remove reservoir tank. Refer to CO-38, "Component".
4. Disconnect radiator hose (upper) at radiator side. Refer to CO-38, "Component".
5. Disconnect harness connectors from fan motor, and move harness aside.
6. Remove cooling fan assembly.
   CAUTION:
   Be careful not to damage or scratch the radiator core.

INSTALLATION

Installation is in the reverse order of removal.
- Cooling fans are controlled by ECM. For details, refer to EC-886, "System Description".

CAUTION:
Be careful not to damage or scratch the radiator core.

Disassembly and Assembly

INFOID:0000000004305243

DISASSEMBLY

1. Remove cooling fan from fan motor.
2. Remove fan motor from fan shroud.

INSPECTION AFTER DISASSEMBLY

Inspect cooling fan for crack or unusual bend.
- If anything is found, replace cooling fan.

ASSEMBLY

Assembly is in the reverse order of disassembly.

WATER PUMP

Component

INFOID:0000000004305244

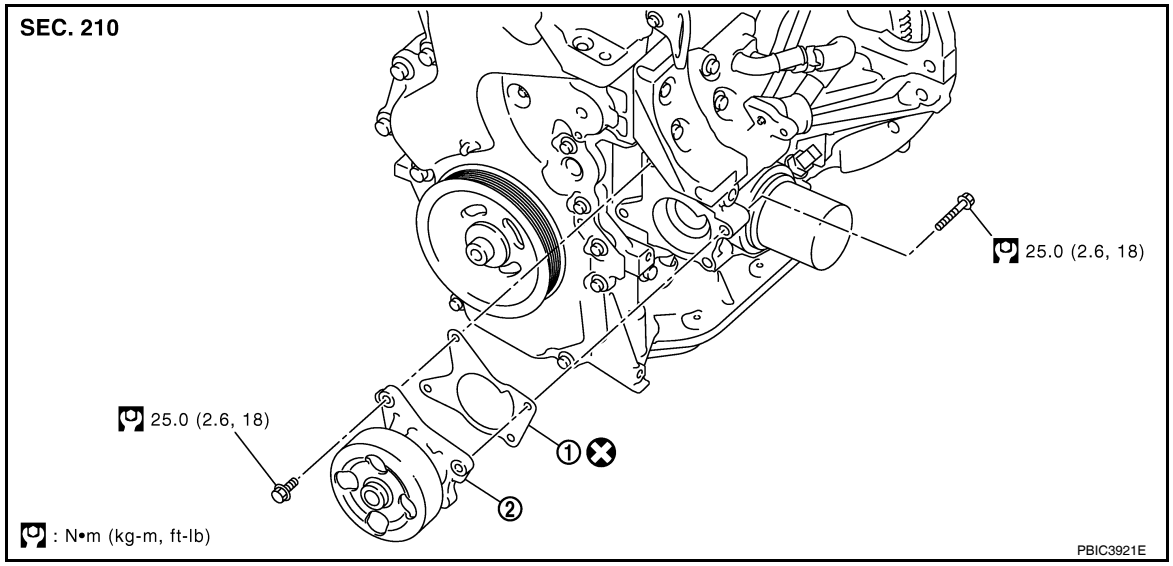

1. Gasket
2. Water pump

Removal and Installation

INFOID:0000000004305245

REMOVAL

1. Drain engine coolant from radiator. Refer to CO-35, "Changing Engine Coolant".
   CAUTION:
   Perform this step when the engine is cold.
2. Remove fender protector (RH). Refer to EI-24, "Removal and Installation".
3. Remove drive belt. Refer to EM-136, "Removal and Installation".
4. Remove generator. Refer to SC-25, "Removal and Installation".
5. Remove radiator hose (lower). Refer to CO-38, "Component".
6. Remove water pump.
   CAUTION:
   - **Handle water pump vane so that it does not contact any other parts.**
   - **Water pump cannot be disassembled and should be replaced as a unit.**

INSPECTION AFTER REMOVAL

- Visually check that there is no significant dirt or rusting on water pump body and vane (A).
- Make sure that there is no looseness in vane shaft, and that it turns smoothly when rotated by hand.
- Replace water pump, if necessary.

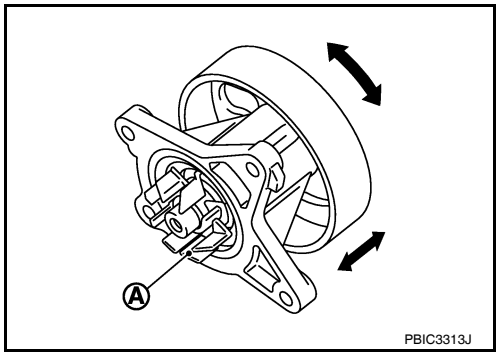

INSTALLATION

Installation is in the reverse order of removal.

INSPECTION AFTER INSTALLATION

- Check that the reservoir tank cap is tightened.

- Check for leaks of engine coolant. Refer to CO-35, "Inspection".
- Start and warm up the engine. Visually check for leaks of engine coolant.

THERMOSTAT

Component

INFOID:0000000004305246

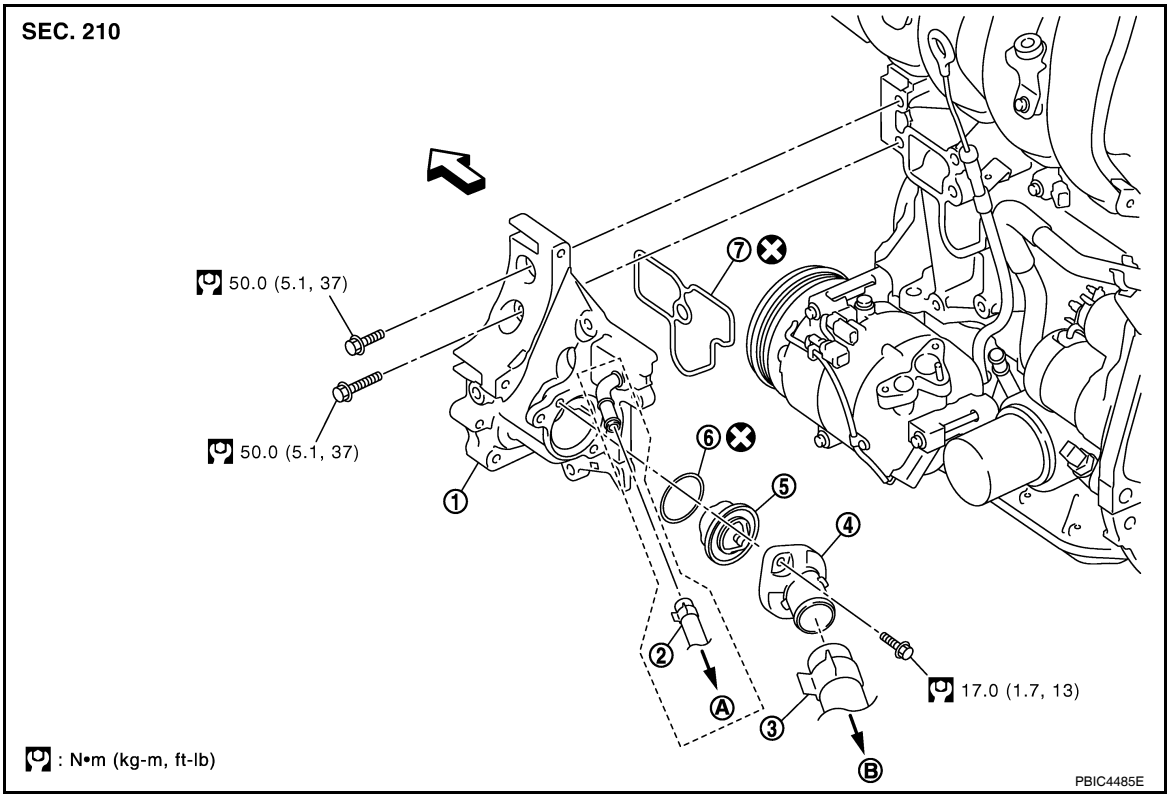

1.	Thermostat housing	2.	Water hose (models with oil cooler)	3.	Radiator hose (lower)
4.	Water inlet	5.	Thermostat	6.	Rubber ring
7.	Gasket	A.	To oil cooler	B.	To radiator

Engine front

Removal and Installation

INFOID:0000000004305247

REMOVAL

1. Drain engine coolant from radiator. Refer to CO-35, "Changing Engine Coolant".
   CAUTION:
   - **Perform this step when engine is cold.**
   - **Never spill engine coolant on drive belt.**
2. Remove the air duct (inlet). Refer to EM-139, "Component".
3. Remove the radiator hose (lower) from the engine. Refer to CO-38, "Component".
4. Remove water inlet.
5. Remove thermostat.
6. Remove water pump, if necessary. Refer to CO-43.
7. Remove thermostat housing, if necessary.

INSPECTION AFTER REMOVAL

- Place a thread (A) so that it is caught in the valves of thermostat (1). Immerse fully in a container (B) filled with water. Heat while stirring.
- The valve opening temperature is the temperature at which the valve opens and falls from the thread.
- Continue heating. Check the full-open valve lift amount.
  NOTE:
  The full-open valve lift amount standard temperature for the thermostat is the reference value.
- After checking the full-open valve lift amount, lower the water temperature and check the valve closing temperature.

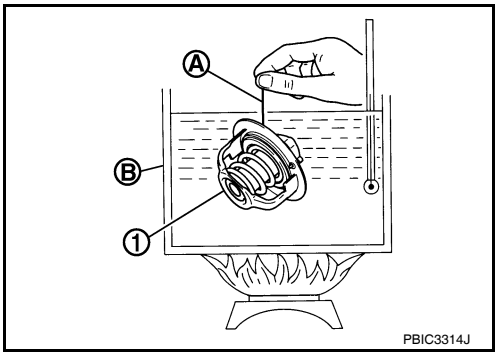

Items	Thermostat
Valve opening temperature	80.5 - 83.5°C (177 - 182°F)
Full-open valve lift amount	8 mm/ 95°C (0.315 in/ 203°F)
Valve closing temperature	77°C (171°F)

- If out of the specification, replace thermostat.

INSTALLATION

Installation is in the reverse order of removal.

- Use the following procedure to install the thermostat.
- Install thermostat while making rubber ring (1) groove fit to thermostat flange (A) around the whole circumference.
  CAUTION:
  Replace the rubber ring with a new one.

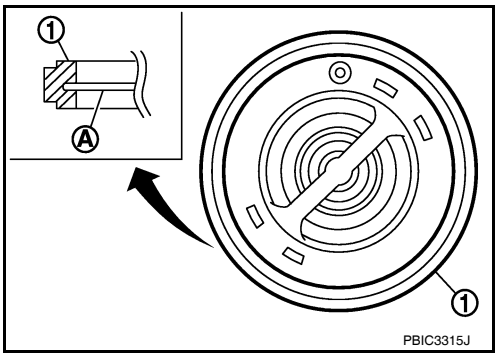

- Install thermostat (1) into the thermostat housing (2) with jiggle valve (A) facing upwards.

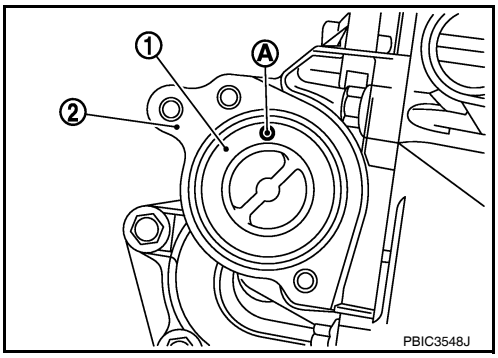

- Use the following procedure to install the thermostat housing.
- Securely insert the rubber ring into the mating groove of thermostat housing and install it.
  CAUTION:
  Replace the rubber ring with a new one.
- Install the thermostat housing to the cylinder block without displacing the gasket from the gasket position.

INSPECTION AFTER INSTALLATION

- Check that the reservoir tank cap is tightened.
- Check for leaks of engine coolant. Refer to CO-35, "Inspection".
- Start and warm up the engine. Visually check for leaks of engine coolant.

WATER OUTLET AND WATER CONTROL VALVE

Component

INFOID:0000000004305248

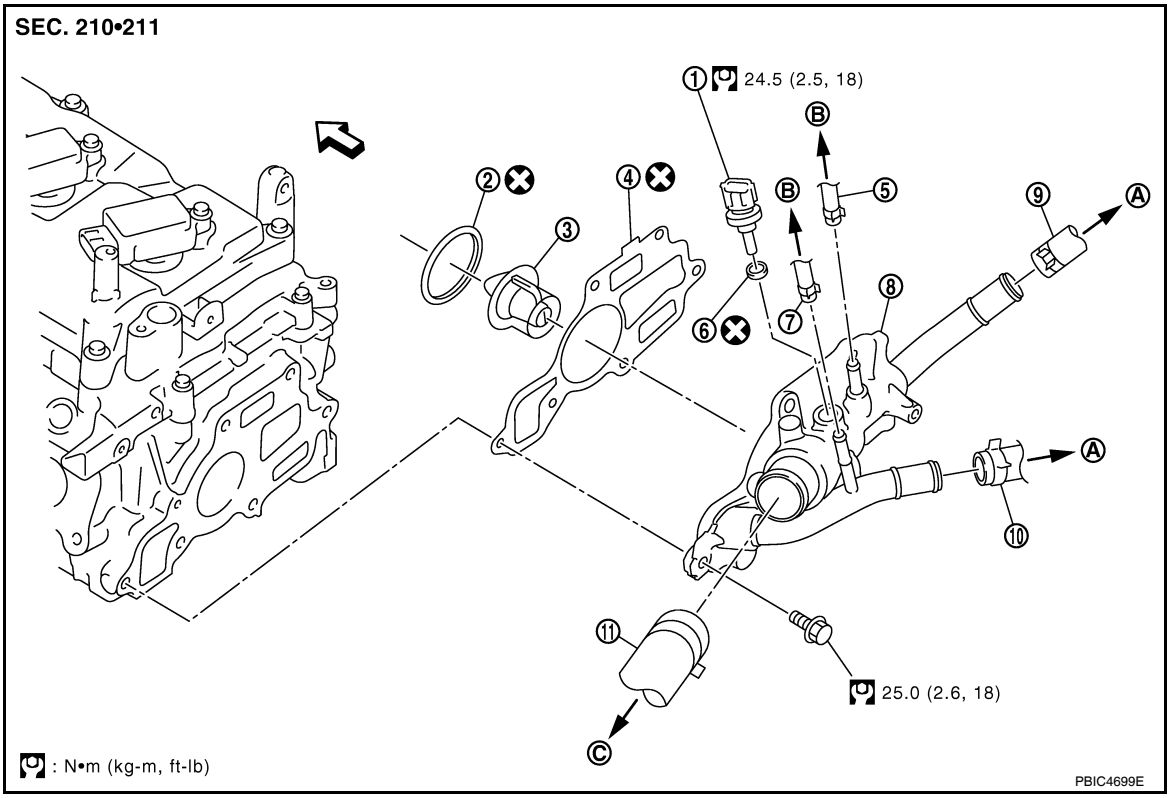

1.	Engine coolant temperature sensor	2.	Rubber ring	3.	Water control valve
4.	Gasket	5.	Water hose	6.	Gasket
7.	Water hose	8.	Water outlet	9.	Heater hose
10.	Heater hose	11.	Radiator hose (upper)		Front
A.	To heater	B.	To electric throttle control actuator	C.	To radiator

Removal and Installation

INFOID:0000000004305249

REMOVAL

1. Drain engine coolant from radiator. Refer to CO-35, "Changing Engine Coolant".
   CAUTION:
   - **Perform this step when engine is cold.**
   - **Never spill engine coolant on drive belt.**
2. Remove air cleaner and air duct. Refer to EM-139, "Component".
3. Remove radiator hose (lower) from engine. Refer to CO-38, "Component".
4. Remove heater hoses and water hoses.
5. Remove water outlet.
6. Remove water control valve.
7. Remove engine coolant temperature sensor from the water outlet, if necessary.
   CAUTION:
   - **Handle carefully to avoid any shock to engine coolant temperature sensor.**
   - **Replace the gasket with a new one.**

INSPECTION AFTER REMOVAL

- Place a thread (A) so that it is caught in the valves of water control valve (1). Immerse fully in a container (B) filled with water. Heat while stirring.
- The valve opening temperature is the temperature at which the valve opens and falls from the thread.
- Continue heating. Check the full-open valve lift amount.
  NOTE:
  The full-open valve lift amount standard temperature for water control valve is the reference value.
- After checking the full-open valve lift amount, lower the water temperature and check the valve closing temperature.

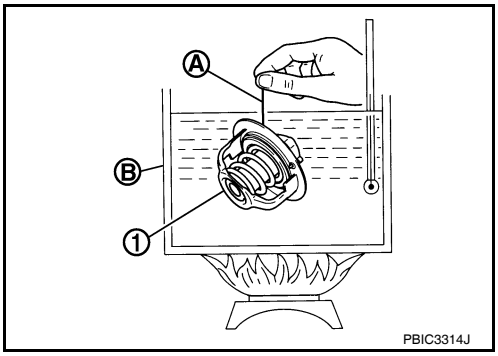

Valve opening temperature	93.5 - 96.5°C (200 - 206°F)
Full-open valve lift amount	8 mm/ 108°C (0.315 in/ 226°F)
Valve closing temperature	90°C (194°F)

- If out of the specification, replace water control valve.

INSTALLATION

Installation is in the reverse order of removal.

- Use the following procedure to install the water control valve.
- Install water control valve while making rubber ring (1) groove fit to water control valve flange (A) around the whole circumference.
  CAUTION:
  Replace the rubber ring with a new one.

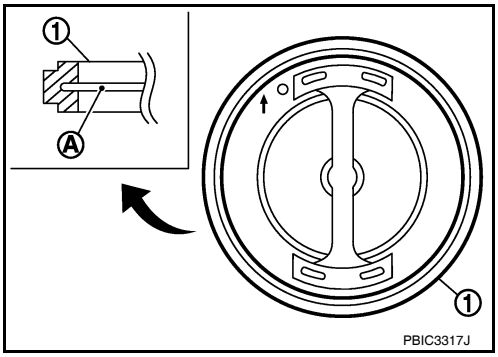

- While the mark (A) points to up, install water control valve (2) with frame center (B) facing straight upward into water outlet (1).

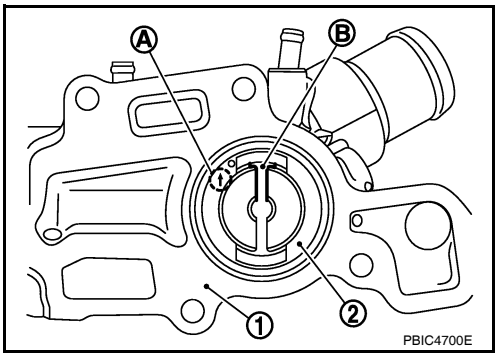

- Use the following procedure to install the water outlet.
- Install the water outlet to the cylinder head without displacing the water control valve from the valve position.
- Use the following procedure to install the water hoses.

- Install water hoses (3),(5) as shown.
• Electric throttle control actuator (1)
• Clamp (2)
• Water outlet (4)
• Paint mark (A)
• Clamp shall not interfere with the bulged area (B)
• ▒: Engine front

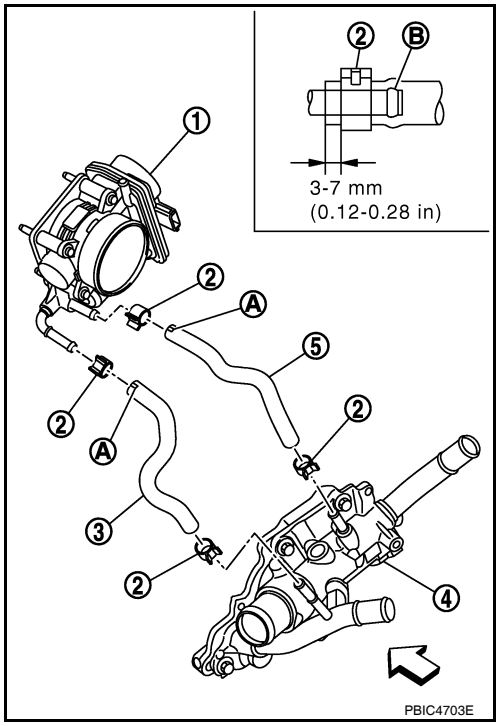

INSPECTION AFTER INSTALLATION

• Check for leaks of engine coolant. Refer to CO-35, "Inspection".
• Start and warm up the engine. Visually check for leaks of engine coolant.

SERVICE DATA AND SPECIFICATIONS (SDS)

Standard and Limit

INFOID:0000000004305250

CAPACITY

Unit: (US qt, Imp qt)

Engine coolant capacity (with reservoir tank at “MAX” level)	Approx. 6.8 (7 1/4, 6)

THERMOSTAT

Valve opening temperature	80.5 - 83.5°C (177 - 182°F)
Full-open valve lift amount	8 mm/ 95°C (0.315 in/ 203°F)
Valve closing temperature	77°C (171°F)

WATER CONTROL VALVE

Valve opening temperature	93.5 - 96.5°C (200 - 206°F)
Full-open valve lift amount	8 mm/ 108°C (0.315 in/ 226°F)
Valve closing temperature	90°C (194°F)

RADIATOR

Unit: kPa (bar, kg/cm^2, psi)

Cap relief pressure	Standard	78 - 98 (0.78 - 0.98, 0.8 - 1.0, 11- 14)
	Limit	59 (0.59, 0.6, 9)
Leakage test pressure		157 (1.57, 1.6, 23)