ELECTRICAL SYSTEM

SECTION EL

CONTENTS

CONTENTS (Cont'd.)

When you read wiring diagrams:
- **Read GI section, "HOW TO READ WIRING DIAGRAMS".**

When you perform trouble diagnoses, read GI section, "HOW TO FOLLOW FLOW CHART IN TROUBLE DIAGNOSES" and "HOW TO PERFORM EFFICIENT DIAGNOSIS FOR AN ELECTRICAL INCIDENT".

WIRING DIAGRAM REFERENCE CHART

Supplemental Restraint System (SRS) "AIR BAG"

The Supplemental Restraint System "Air Bag", used along with a seat belt, helps to reduce the risk or severity of injury to the driver in a frontal collision. The Supplemental Restraint System consists of an air bag module (located in the center of the steering wheel), a diagnosis sensor unit, a crash zone sensor (4WD models), warning lamp, wiring harness and spiral cable. Information necessary to service the system safely is included in the **RS section** of this Service Manual.

WARNING:

- **To avoid rendering the SRS inoperative, which could increase the risk of personal injury or death in the event of a collision which would result in air bag inflation, all maintenance must be performed by an authorized NISSAN dealer.**
- **Improper maintenance, including incorrect removal and installation of the SRS, can lead to personal injury caused by unintentional activation of the system.**
- **Do not use electrical test equipment on any circuit related to the SRS unless instructed to in this Service Manual. SRS wiring harnesses are covered with yellow insulation either just before the harness connectors or for the complete harness, for easy identification.**

Description

HARNESS CONNECTOR

- All harness connectors have been modified to prevent accidental looseness or disconnection.
- The connector can be disconnected by pushing or lifting the locking section.

CAUTION:
Do not pull the harness when disconnecting the connector.

[Example]

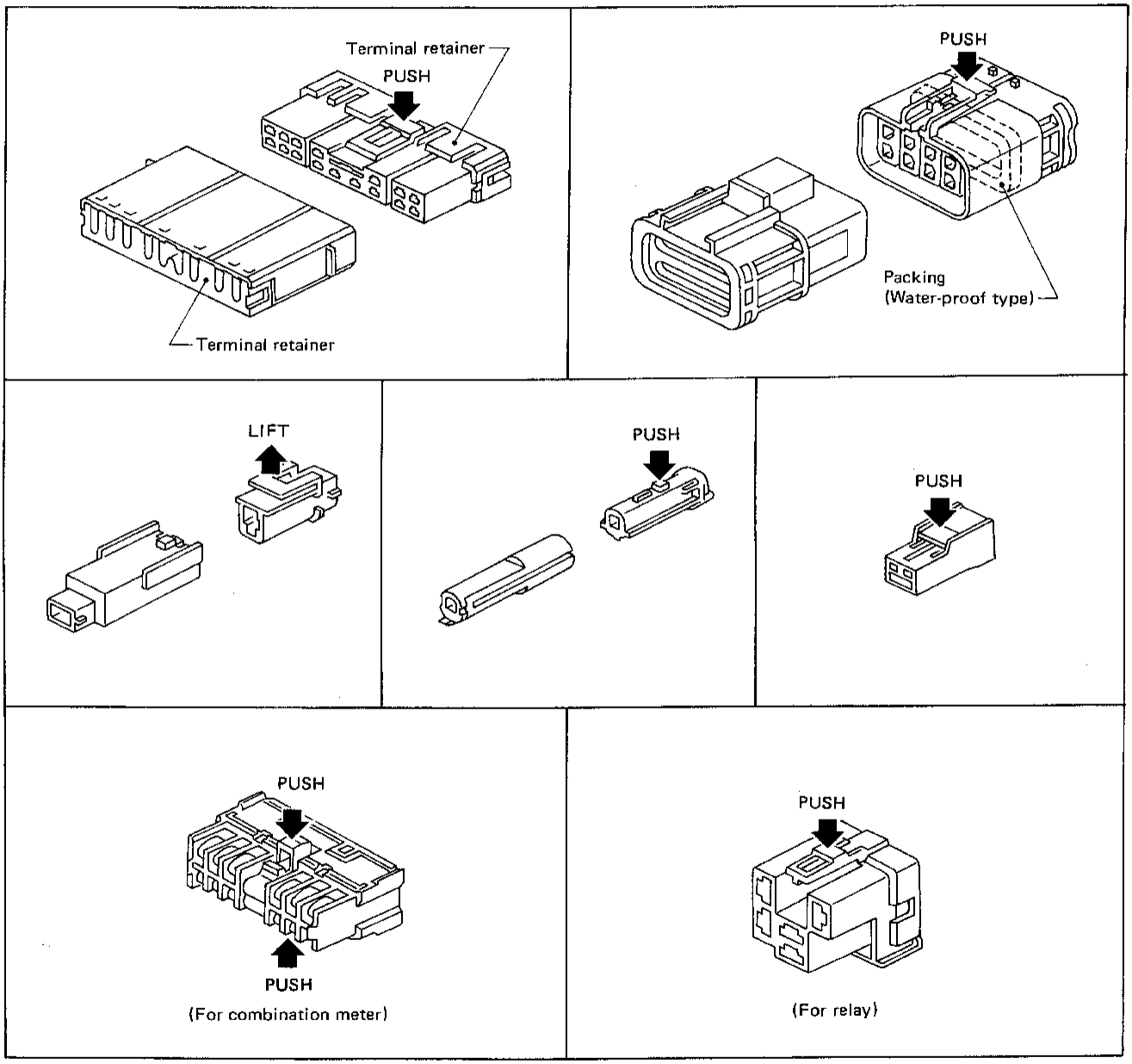

SEL769D

Description

NORMAL OPEN, NORMAL CLOSED AND MIXED TYPE RELAYS

Relays can be divided into three main types: normal open, normal closed and mixed type relays.

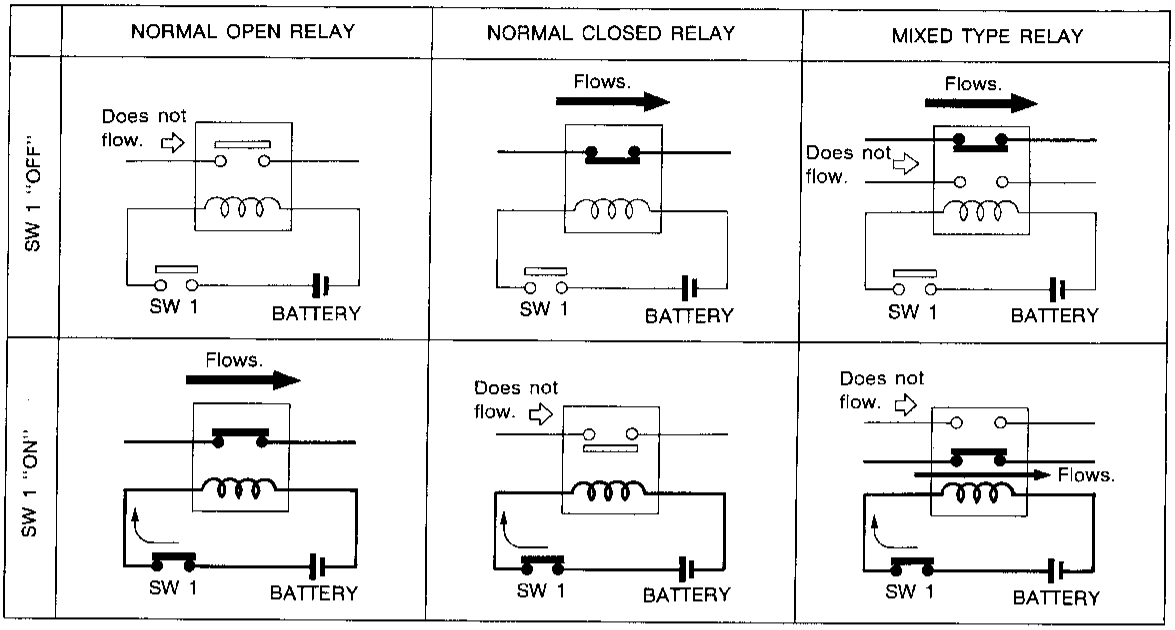

SEL881H

TYPE OF STANDARDIZED RELAYS

1M ..... 1 Make

2M ..... 2 Make

1M·1B ..... 1 Make 1 Break

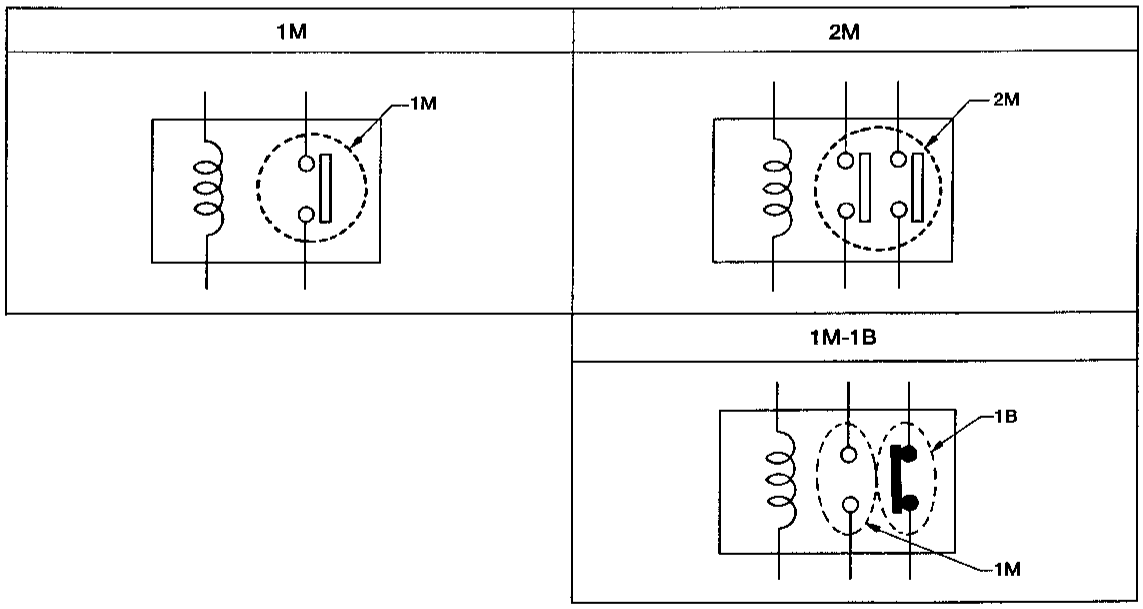

AEL309A

Description (Cont'd)

Type	Outer view	Circuit	Connector symbol and connection	Case color
1M	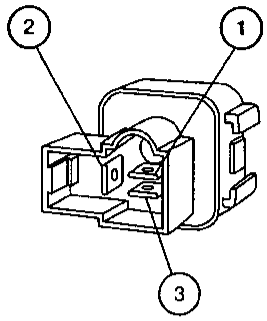	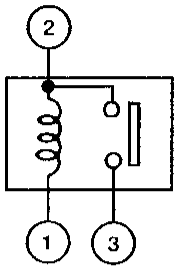	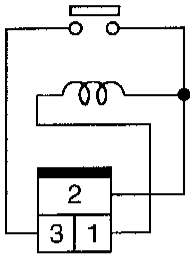	GRAY
1M	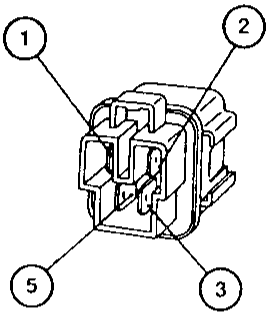	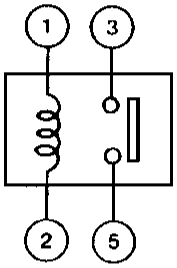	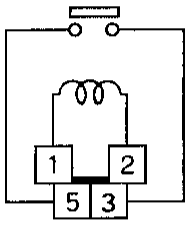	BLUE
1M	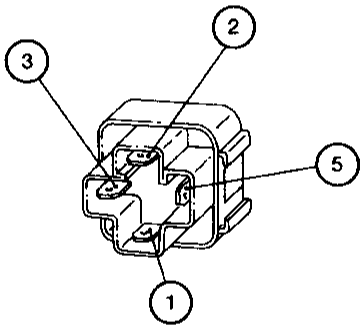	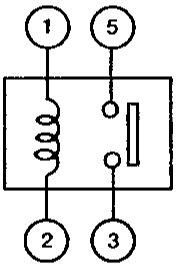	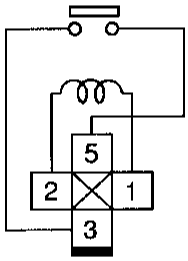	BLUE
2M	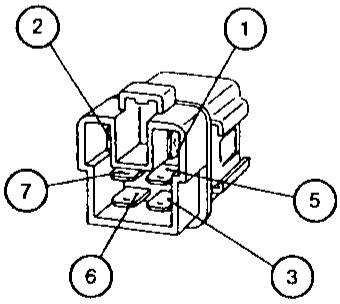	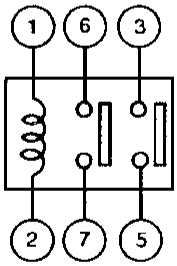	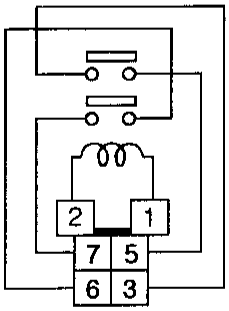	BROWN
1M-1B	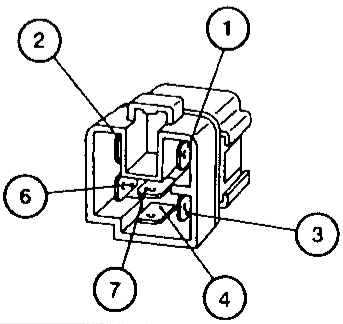	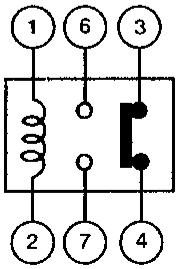	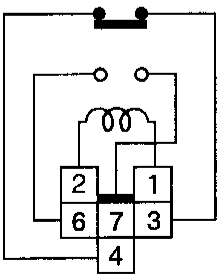	GRAY

AEL308A

Schematic

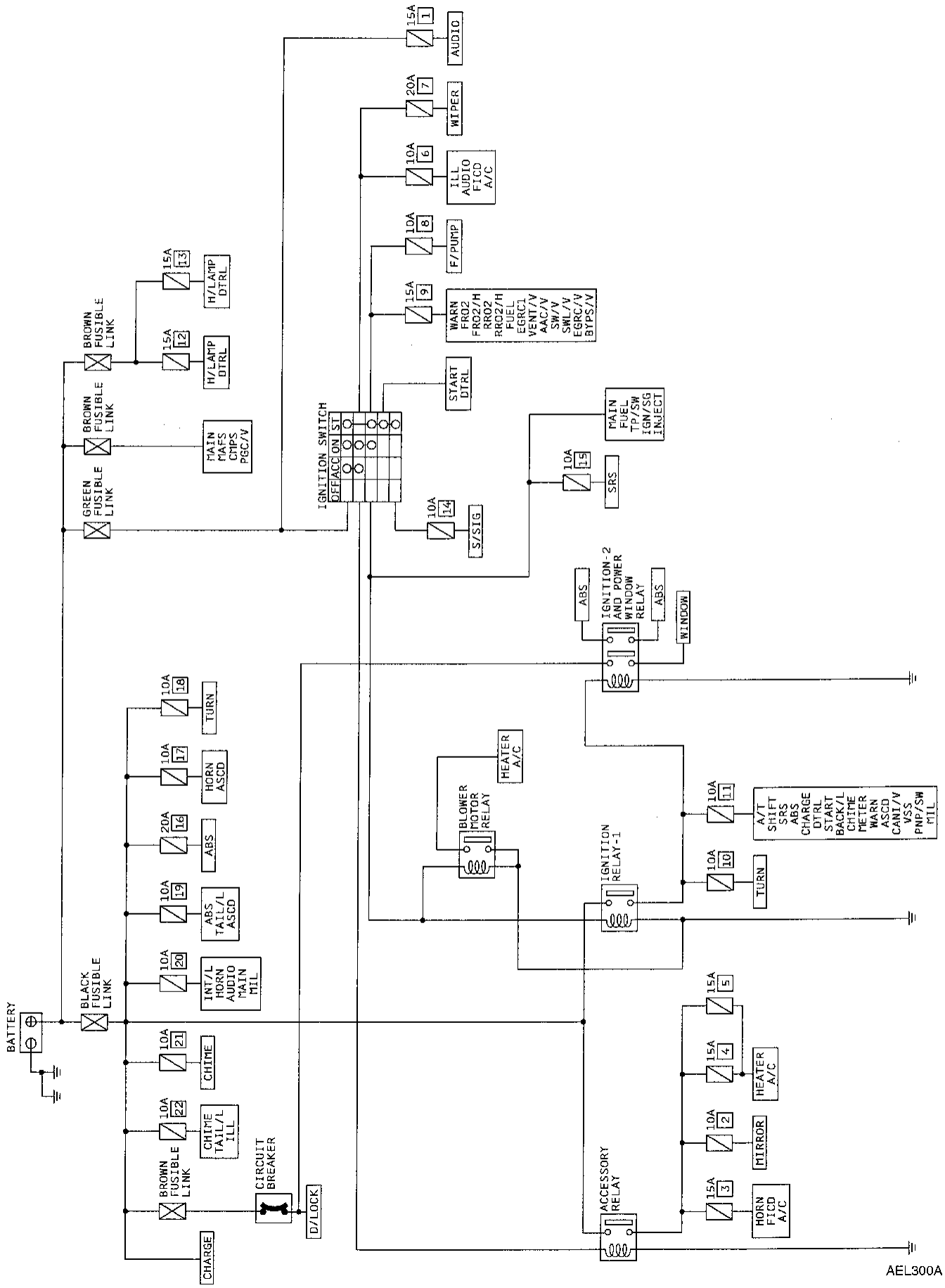
BATTERY
BLACK FUSIBLE LINK
GREEN FUSIBLE LINK
BROWN FUSIBLE LINK
BROWN FUSIBLE LINK
BROWN FUSIBLE LINK
MAIN MAFS CMPS PGC/V
H/LAMP DTRL
H/LAMP DTRL
15A 13
15A 12
IGNITION SWITCH
OFF ACC ON ST
10A 14
S/SIG
START DTRL
15A 9
WARN FRO2 FRO2/H RRO2 RRO2/H FUEL EGRC1 VENT/V AAC/V SW/V SWL/V EGRC/V BYPS/V
10A 8
F/PUMP
10A 6
ILL AUDIO FICD A/C
20A 7
WIPER
15A 1
AUDIO
MAIN FUEL TP/SW IGN/SG INJECT
10A 15
SRS
ABS
IGNITION-2 AND POWER WINDOW RELAY
ABS
WINDOW
HEATER A/C
BLOWER MOTOR RELAY
IGNITION RELAY-1
10A 11
A/T SHIFT SRS ABS CHARGE DTRL START BACK/L CHIME METER WARN ASCD CANI/V VSS PNP/SW MIL
10A 10
TURN
10A 18
TURN
10A 17
HORN ASCD
20A 16
ABS
10A 19
ABS TAIL/L ASCD
10A 20
INT/L HORN AUDIO MAIN MIL
10A 21
CHIME
10A 22
CHIME TAIL/L ILL
CIRCUIT BREAKER
D/LOCK
CHARGE
ACCESSORY RELAY
15A 5
15A 4
HEATER A/C
10A 2
MIRROR
15A 3
HORN FICD A/C
AEL300A

Wiring Diagram –POWER–

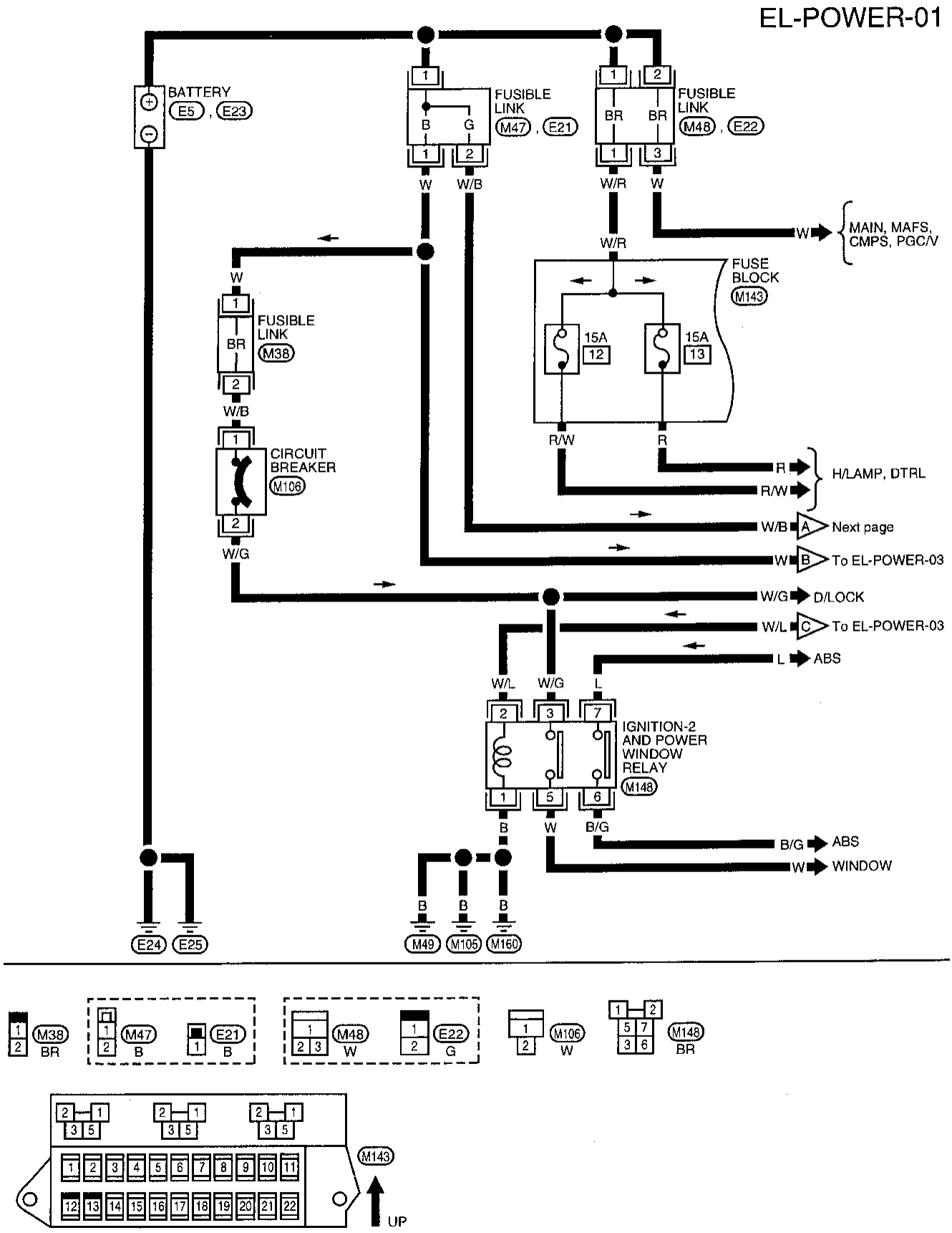

AEL299A-A

Wiring Diagram –POWER– (Cont'd)

EL-POWER-02

Preceding page A W/B

W/B 1

IGNITION SWITCH M130

OFF ST ACC ON | OFF ST ACC ON | OFF ST ACC ON

4 B/Y | 5 B/Y | 3 B/W | 2 B/L

B/W D To EL-POWER-04

B/W 3 | B/L 2 M147 | B/Y | W/B

FUSE BLOCK M143

E F Next page

10A 14 | 10A 8 | 15A 9 | 10A 6 | 20A 7 | 15A 1

OR | B/W | B/W | G/W | L/Y | G/W

G/W AUDIO

L/Y WIPER

G/W ILL, AUDIO, FICD, A/C

B/W WARN, FRO2, FRO2/H, RRO2, RRO2/H, FUEL, EGRC1, VENT/V, AAC/V, SW/V, SWL/V, EGRC/V, BYPS/V

B/W F/PUMP

OR S/SIG

B/Y START, DTRL

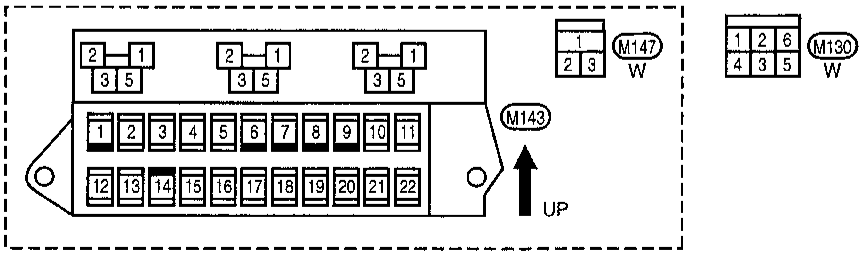

AEL299A-B

Wiring Diagram –POWER– (Cont'd)

EL-POWER-03

To EL-POWER-01 B W

B HEATER, A/C

W G Next page

Preceding page F E

FUSE BLOCK (M143)

ACCESSORY RELAY (M149)

BLOWER MOTOR RELAY (M150)

IGNITION RELAY-1 (M151)

15A 3 15A 4 15A 5 10A 2 10A 10 10A 11

B (M147) G/R L L (M144) B/L G/R OR W/B (M145) W/L

To EL-POWER-01 C W/L

W/B A/T, SHIFT, SRS, ABS, CHARGE, DTRL, START, BACK/L, CHIME, METER, WARN, ASCD, CANI/V, VSS, PNP/SW, MIL

OR TURN

G/R MIRROR

L HEATER, A/C

G/R HORN, FICD, A/C

JOINT CONNECTOR-2 (M142)

B B B (M49) (M105) (M160)

Refer to last page (Foldout page). (M142)

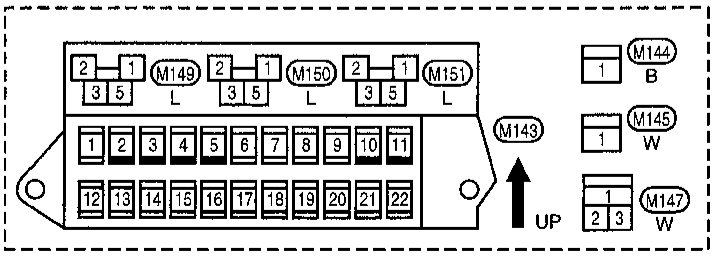

AEL299A-C

Wiring Diagram –POWER– (Cont'd)

EL-POWER-04

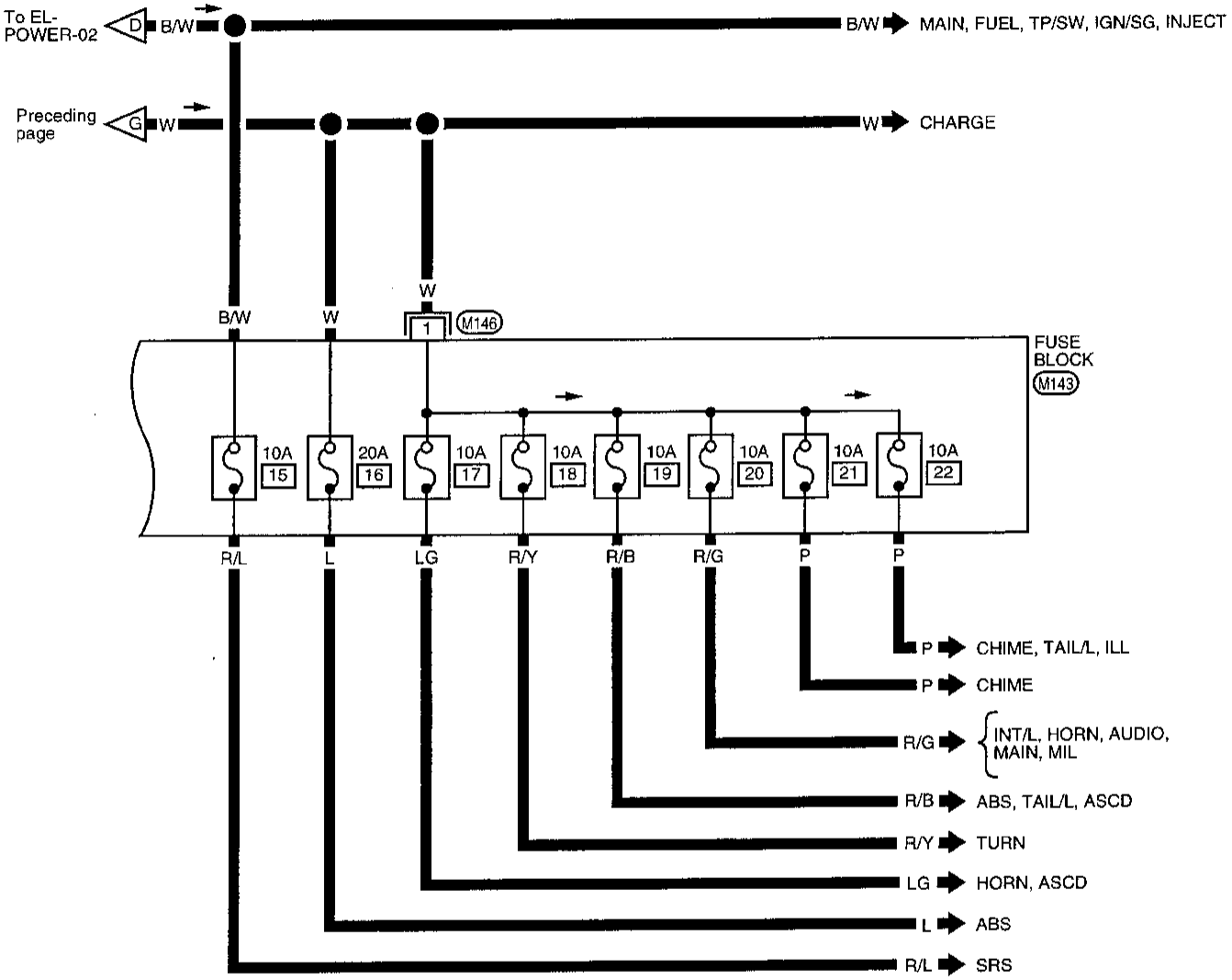

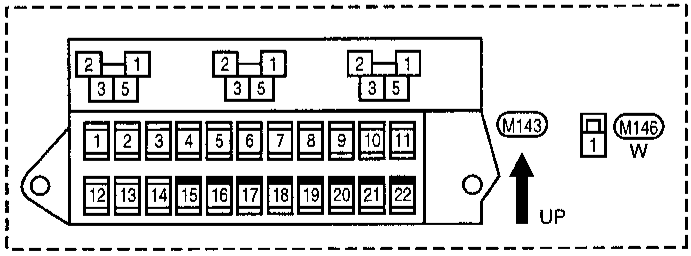

AEL299A-D

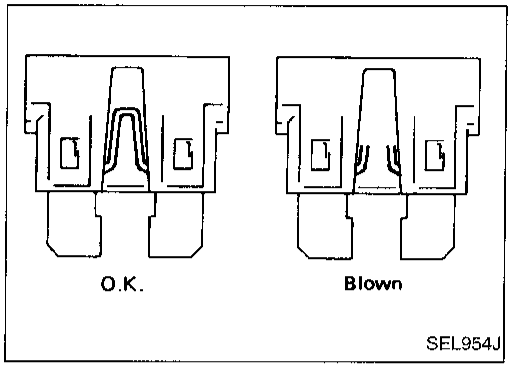

Fuse

- **If fuse is blown, be sure to eliminate cause of problem before installing new fuse.**
- **Use fuse of specified rating. Never use fuse of more than specified rating.**
- **Do not partially install fuse; always insert it into fuse holder properly.**
- **Remove fuse for clock if vehicle is not used for a long period of time.**

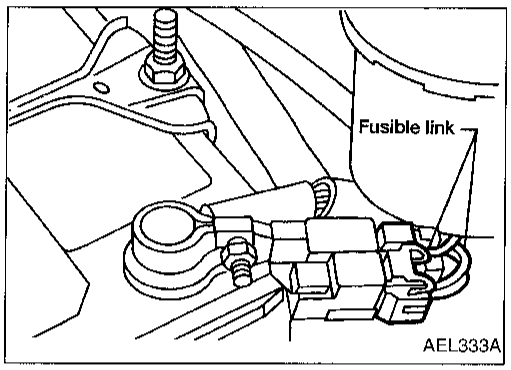

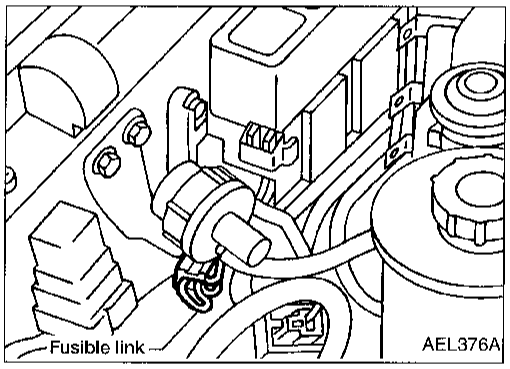

Fusible Link

A melted fusible link can be detected either by visual inspection or by feeling with fingertip. If its condition is questionable, use circuit tester or test lamp.

CAUTION:

- **If fusible link should melt, it is possible that a critical circuit (power supply or large current carrying circuit) is shorted. In such a case, carefully check these circuits and eliminate cause of problem.**
- **Never wrap outside of fusible link with vinyl tape.**

Important: Never let fusible link touch any other wiring harness, vinyl or rubber parts.

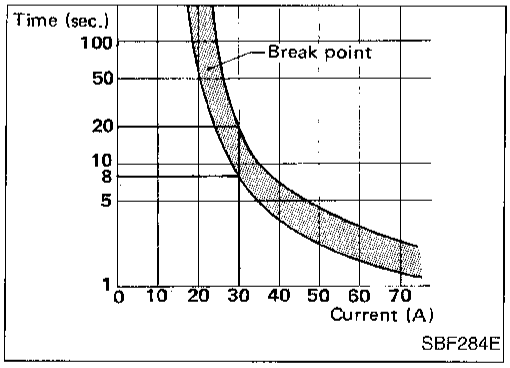

Circuit Breaker Inspection

For example, when current is 30A, the circuit is broken within 8 to 20 seconds.

Circuit breakers are used in the following systems:

- Power door lock
- Power window

GROUND	CONNECT TO	CONN. NO.	CELL CODE
E6	GENERATOR	E8	EL-CHARGE
	NEUTRAL POSITION SWITCH	E18	EC-PNP/SW
	POWER STEERING OIL PRESSURE SWITCH	E10	EC-PST/SW
E24/E25	BATTERY	E23	EL-POWER
M15/M16	ABS CHECK CONNECTOR	M154	BR-ABS
	DATA LINK CONNECTOR FOR CONSULT	M153	EC-MIL
	DATA LINK CONNECTOR FOR GST	M152	EC-MIL
	DISTRIBUTOR (CAMSHAFT POSITION SENSOR)	M12	EC-CMPS
	DISTRIBUTOR (POWER TRANSISTOR)	M12	EC-IGN/SG
	ECM (ECCS CONTROL MODULE)	M112	EC-MAIN EC-AP/SEN EC-FR02 EC-FR02/H EC-FUEL
	REAR HEATED OXYGEN SENSOR	M402	EC-RR02 EC-RR02/H
	SHIELD WIRE (ABSOLUTE PRESSURE SENSOR)	M24	EC-AP/SEN
	SHIELD WIRE (CAMSHAFT POSITION SENSOR)	M12	EC-CMPS
	SHIELD WIRE (CRANKSHAFT POSITION SENSOR)	E15	EC-CKPS
	SHIELD WIRE (EVAP CONTROL SYSTEM PRESSURE SENSOR)	C6	EC-PRE/SE
	SHIELD WIRE (FRONT HEATED OXYGEN SENSOR)	M62	EC-FR02 EC-FRO2/H EC-FUEL
	SHIELD WIRE (MASS AIR FLOW SENSOR)	M20	EC-MAFS
	SHIELD WIRE (REAR HEATED OXYGEN SENSOR)	M402	EC-RR02 EC-RR02/H
	SHIELD WIRE (THROTTLE POSITION SENSOR)	M23	EC-TPS AT-A/T
M49/M105/M160	ABS ACTUATOR	C3	BR-ABS
	ACCESSORY RELAY	M149	EL-POWER
	AIR BAG DIAGNOSIS SENSOR UNIT	M175	RS-SRS
	ASCD CONTROL UNIT	M126	EL-ASCD
	ASCD MAIN SWITCH	N2	EL-ASCD
	ASCD HOLD RELAY (With A/T)	M65	EL-ASCD
	ASCD HOLD RELAY (With M/T)	M64	EL-ASCD
	BLOWER MOTOR RELAY	M150	HA-A/C HA-HEATER EL-POWER
	BRAKE FLUID LEVEL SWITCH	M59	EL-WARN BR-ABS
	BULB CHECK RELAY	M63	EL-WARN
	CIGARETTE LIGHTER SOCKET	M119	EL-HORN
	CLUTCH PEDAL POSITION SWITCH (With M/T)	M136	EL-START
	COMBINATION FLASHER UNIT	M139	EL-TURN
	COMBINATION METER (AIR BAG WARNING LAMP)	N6	RS-SRS EL-WARN
	COMBINATION METER (CLOCK)	N6	EL-HORN
	COMBINATION METER [CLOCK (Without tachometer)]	N4	EL-HORN
	COMBINATION METER [CRUISE INDICATOR (With ASCD)]	N6	EL-ASCD
	COMBINATION METER (GAUGES)	N4	EL-METER
	COMBINATION METER (HIGH BEAM INDICATOR)	N5	EL-DTRL EL-H/LAMP
	COMBINATION METER (SPEEDOMETER)	N4	EC-VSS EL-ASCD
	COMBINATION METER [TACHOMETER (With tachometer)]	N6	EL-METER
	COMBINATION METER (TURN SIGNAL LAMP)	N6	EL-TURN
	COMBINATION METER [4WD INDICATOR (With 4WD)]	N6	EL-WARN
	DATA LINK CONNECTOR FOR GST	M152	EC-MIL

GROUND	CONNECT TO	CONN. NO.	CELL CODE
M49/M105/M160	DAYTIME LIGHT CONTROL UNIT (With DTRL)	M41	EL-DTRL
	DOOR MIRROR SWITCH	N3	EL-MIRROR
	FRONT CLEARANCE LAMP LH	M53	EL-TAIL/L
	FRONT CLEARANCE LAMP RH	M50	EL-TAIL/L
	FRONT TURN SIGNAL LAMP LH	M70	EL-TURN
	FRONT TURN SIGNAL LAMP RH	M54	EL-TURN
	FUEL TANK GAUGE UNIT (FUEL LEVEL)	C4	EL-METER
	FUEL TANK GAUGE UNIT (FUEL PUMP)	C4	EC-F/PUMP
	FUEL TANK GAUGE UNIT (LOW FUEL WARNING)	C4	EL-WARN
	GLOVE BOX LAMP SWITCH	M203	EL-ILL
	HEADLAMP LH	M66	EL-H/LAMP
	HEADLAMP RH	M51	EL-H/LAMP EL-DTRL
	HIGH-MOUNTED STOP LAMP	R4	EL-TAIL/L
	IACV-FICD SOLENOID VALVE	M7	EC-FICD HA-A/C
	IGNITION RELAY-1	M151	EL-POWER
	IGNITION-2 AND POWER WINDOW RELAY	M148	BR-ABS EL-POWER EL-WINDOW
	ILLUMINATION CONTROL SWITCH	M123	EL-ILL
	CLUTCH INTERLOCK RELAY (With M/T)	M36	EL-START
	INHIBITOR RELAY (With ASCD)	M35	EL-START EL-ASCD
	INHIBITOR RELAY (Without ASCD)	M34	EL-START
	LICENSE LAMP LH	T5	EL-TAIL/L
	LICENSE LAMP RH	T4	EL-TAIL/L
	LICENSE LAMP LH (With step bumper)	T6	EL-TAIL/L
	LICENSE LAMP RH (With step bumper)	T2	EL-TAIL/L
	LOCK/UNLOCK KNOB SWITCH	D9	EL-D/LOCK
	MAP LAMP	R2	EL-INT/L
	MAIN POWER WINDOW AND DOOR LOCK/UNLOCK SWITCH	D8	EL-DLOCK EL-WINDOW
	PARK AND NEUTRAL POSITION RELAY (with A/T)	M42	EC-PNP/SW AT-A/T
	POWER WINDOW AMPLIFIER	M102	EL-WINDOW
	REAR COMBINATION LAMP LH (BACK-UP)	T7	EL-BACK/L
	REAR COMBINATION LAMP RH (BACK-UP)	T3	EL-BACK/L
	REAR COMBINATION LAMP LH (TAIL)	T7	EL-TAIL/L
	REAR COMBINATION LAMP RH (TAIL)	T3	EL-TAIL/L
	REAR COMBINATION LAMP LH (TURN)	T7	EL-TURN
	REAR COMBINATION LAMP RH (TURN)	T3	EL-TURN
	ROOM LAMP	R5	EL-INT/L
	SWIRL CONTROL VALVE CONTROL VACUUM CHECK SWITCH	M39	EC-S/VCSW
	WARNING CHIME UNIT	M170	EL-CHIME
	WASHER FLUID LEVEL SWITCH (Canada only)	M58	EL-WARN
	WIPER AMPLIFIER	M4	EL-WIPER
	WIPER MOTOR	M3	EL-WIPER
	WIPER SWITCH	M132	EL-WIPER
M111	ECM (ECCS CONTROL MODULE)	M112	EC-MAIN
	SHIELD WIRE (ABS CONTROL UNIT)	M176	BR-ABS

GROUND	CONNECT TO	CONN. NO.	CELL CODE
M177	ABS CONTROL UNIT	M176	BR-ABS
	A/T DEVICE	M174	AT-SHIFT
	A/T DEVICE (OVERDRIVE SWITCH)	M174	AT-A/T
	DOOR LOCK CONTROL UNIT	M178	EL-D/LOCK
	DOOR SWITCH LH	M171	RS-SRS EL-CHIME
	REAR SPEAKER AMPLIFIER	M179	EL-AUDIO
	SEAT BELT BUCKLE SWITCH	M173	EL-CHIME EL-WARN

CAUTION:

- **If it becomes necessary to start the engine with a booster battery and jumper cables, use a 12-volt booster battery.**
- **After connecting battery cables, ensure that they are tightly clamped to battery terminals for good contact.**

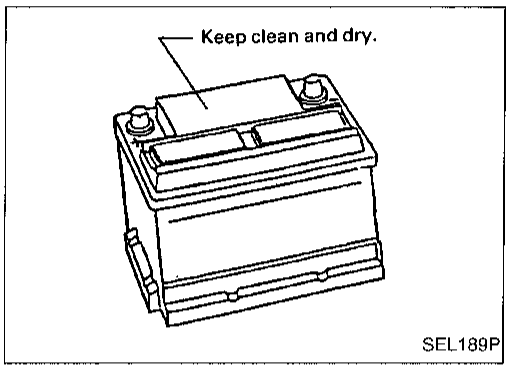

How to Handle Battery

METHODS OF PREVENTING DISCHARGE

The following precautions must be taken to prevent over-discharging a battery.

- The battery surface (particularly its top) should always be kept clean and dry.
- The terminal connections should be clean and tight.
- **During every routine maintenance, check the electrolyte level.** This also applies to batteries designated as "low maintenance" and "maintenance-free".

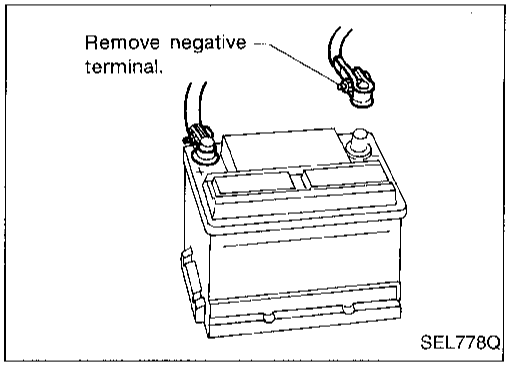

- When the vehicle is not going to be used over a long period of time, disconnect the negative battery terminal.

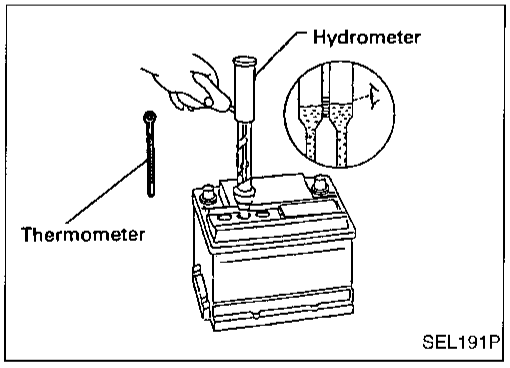

- Check the condition of the battery. Periodically check the specific gravity of the electrolyte. Keep a close check on charge condition to prevent over-discharge.

CHECKING ELECTROLYTE LEVEL

WARNING:

Do not allow battery fluid to come in contact with skin, eyes, fabrics, or painted surfaces. After touching a battery, do not touch or rub your eyes until you have thoroughly washed your hands. If acid contacts eyes, skin or clothing, immediately flush with water for 15 minutes and seek medical attention.

Normally the battery does not require additional water. However, when the battery is used under severe conditions, adding distilled water may be necessary during the battery life.

How to Handle Battery (Cont'd)

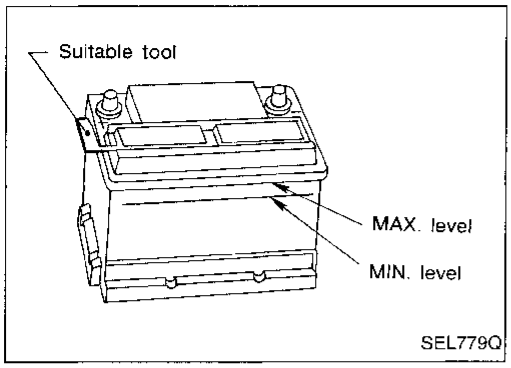

- Remove the cell plug using a suitable tool.
- Add distilled water up to the MAX level.

SULPHATION

A battery (with specific gravity less than 1.100) will completely discharge when left unattended for a long period of time. This will result in sulphation on the cell plates.

A sulphated battery may sometimes be brought back into service by means of a slow charge, 12 hours or more. A capacity test should be run after the battery is charged to ensure the battery is not damaged.

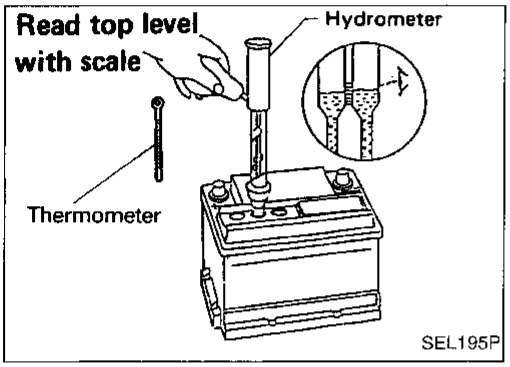

SPECIFIC GRAVITY CHECK

- Check hydrometer and thermometer readings at eye level.

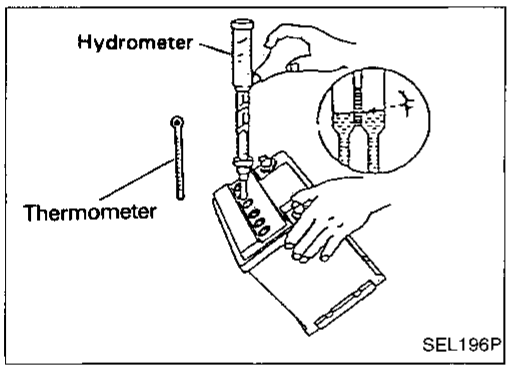

- When electrolyte level is too low, tilt battery case for easy measurement.

- Use the chart below to correct your hydrometer reading according to electrolyte temperature.

Hydrometer temperature correction

Battery electrolyte temperature °C (°F)	Add to specific gravity reading	Battery electrolyte temperature °C (°F)	Add to specific gravity reading
71 (160)	0.032	21 (70)	−0.004
66 (150)	0.028	16 (60)	−0.008
60 (140)	0.024	10 (50)	−0.012
54 (129)	0.020	4 (39)	−0.016
49 (120)	0.016	−1 (30)	−0.020
43 (110)	0.012	−7 (20)	−0.024
38 (100)	0.008	−12 (10)	−0.028
32 (90)	0.004	−18 (0)	−0.032
27 (80)	0		

Corrected specific gravity	Approximate charge condition	Corrected specific gravity	Approximate charge condition
1.260 - 1.280	Fully charged	1.170 - 1.190	1/4 charged
1.230 - 1.250	3/4 charged	1.140 - 1.160	Almost discharged
1.200 - 1.220	1/2 charged	1.110 - 1.130	Completely discharged

How to Handle Battery (Cont'd)

CHARGING THE BATTERY

CAUTION:

- **Do not "quick charge" a fully discharged battery.**
- **Keep the battery away from open flame while it is being charged.**
- **When connecting the charger, connect the leads first, then turn on the charger. Do not turn on the charger first, as this may cause a spark.**
- **If battery electrolyte temperature rises above 60°C (140°F), stop charging. Always charge battery at a temperature below 60°C (140°F).**

Charging rates:

Amps	Time
50	1 hour
25	2 hours
10	5 hours
5	10 hours

Do not charge at more than 50 ampere rate.

Note: The ammeter reading on your battery charger will automatically decrease as the battery charges. This indicates that the voltage of the battery is increasing normally as the state of charge improves. The charging amps indicated above are referred to as the initial charge rate.

- If, after charging, the specific gravity of any two cells varies more than .050, the battery should be replaced.
- After the battery is charged, always perform a "capacity test" as follows, to assure that the battery is serviceable.

MEMORY RESET

If the battery is disconnected or goes dead the following items must be reset:

- Radio AM and FM preset
- Clock

How to Handle Battery (Cont'd)

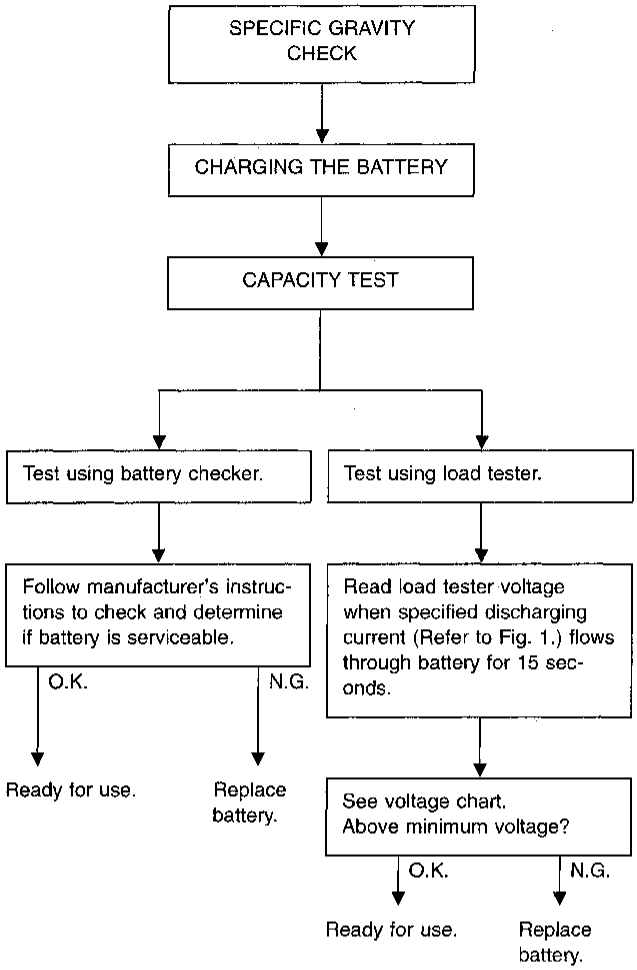

- Check battery type and determine the specified current using the following table.

Fig. 1 DISCHARGING CURRENT (Load tester)

Group size	Current (A)
21R (USA)	245
24R (Canada)	275

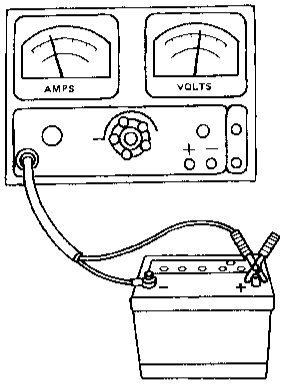

SEL008Z

Voltage chart

Estimated electrolyte temperature °C (°F)	Minimum voltage under 15 second load
21 (70)	9.6
16 (60)	9.5
10 (50)	9.4
4 (40)	9.3
–1 (30)	9.1
–7 (20)	8.9
–12 (10)	8.7
–18 (0)	8.5

Service Data and Specifications (SDS)

Applied area		USA	Canada
Group size		21R	24R
Capacity	V-AH	12-60	12-65
Cold cranking current	A	490	550
Reserve capacity	minutes	88	113

System Description

M/T models

Power is supplied at all times:
- to ignition switch terminal ①
- through green fusible link (located at the battery positive terminal).

With the ignition switch in the START position, power is supplied:
- through terminal ④ of the ignition switch
- to clutch interlock relay terminals ① and ③.

Ground is supplied to clutch interlock relay terminal ② when the clutch pedal is depressed through the clutch pedal position switch and body grounds (M49), (M105) and (M160).

The clutch interlock relay is energized and power is supplied:
- from terminal ⑤ of the clutch interlock relay
- to terminal ① of the starter motor windings.

The starter motor plunger closes and provides a closed circuit between the battery and the starter motor. The starter motor is grounded to the engine block. With power and ground supplied, cranking occurs and the engine starts.

A/T models

Power is supplied at all times:
- to ignition switch terminal ①
- through green fusible link (located at the battery positive terminal).

With the ignition switch in the ON or START position, power is supplied:
- to inhibitor switch terminal ①
- through 10A fuse (No. 11, located in the fuse block).

With the ignition switch in the START position, power is supplied:
- from ignition switch terminal ④
- to inhibitor relay terminal ③ (without ASCD) or
- to inhibitor relay terminal ⑦ (with ASCD).

Power is supplied:
- from inhibitor switch terminal ② (with selector lever in the P or N position)
- to inhibitor relay terminal ①.

Ground is supplied:
- to inhibitor relay terminal ②
- through body grounds (M49), (M105), and (M160).

With power and ground supplied, the inhibitor relay is energized and power is supplied:
- from inhibitor relay terminal ⑤ (without ASCD) or
- from inhibitor relay terminal ⑥ (with ASCD)
- to terminal ① of the starter motor windings.

The starter motor plunger closes and provides a closed circuit between the battery and the starter motor. The starter motor is grounded to the engine block. With power and ground supplied, cranking occurs and the engine starts.

Wiring Diagram –START–

M/T MODELS

EL-START-01

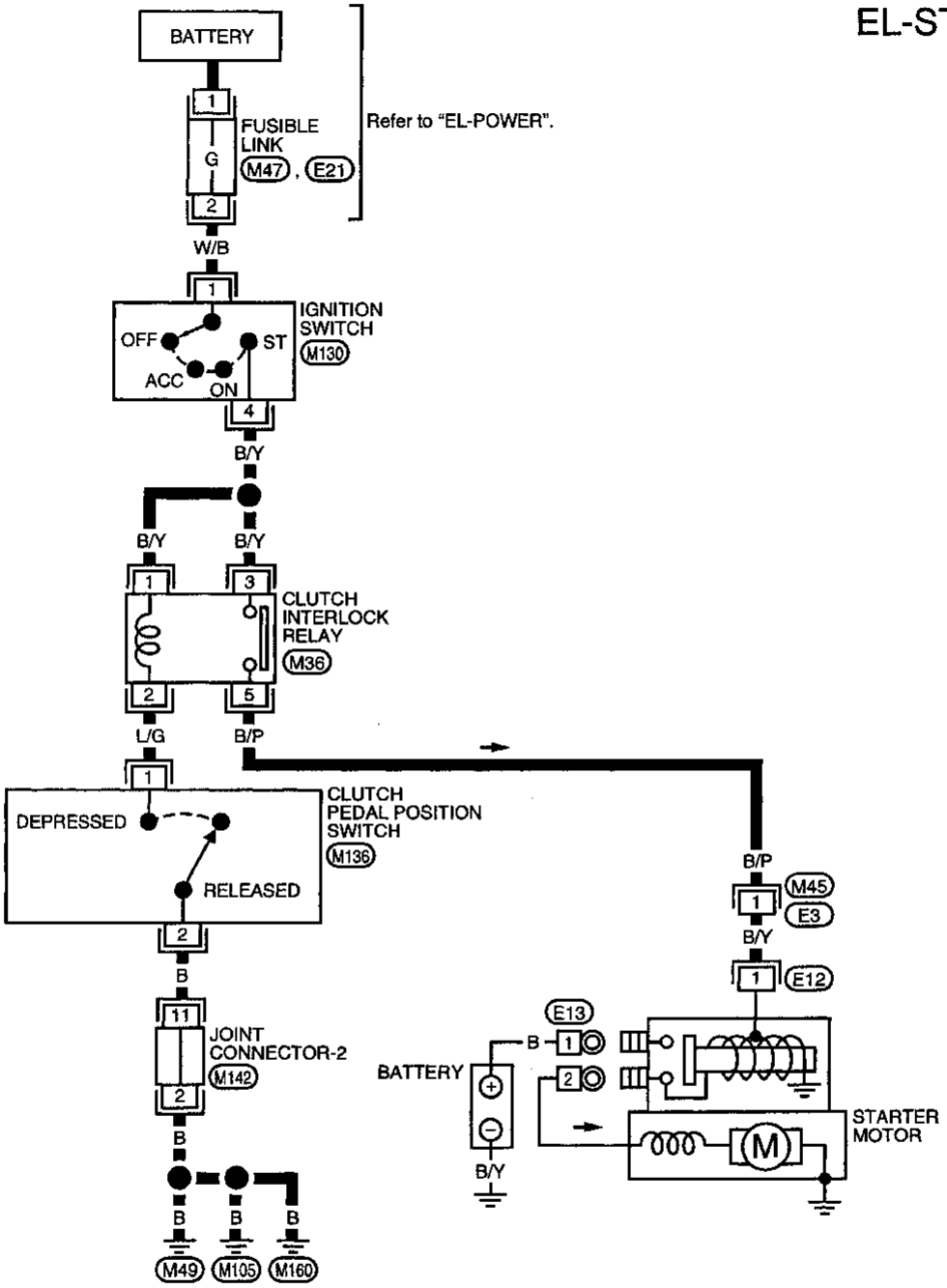

Refer to last page (Foldout page).
M142

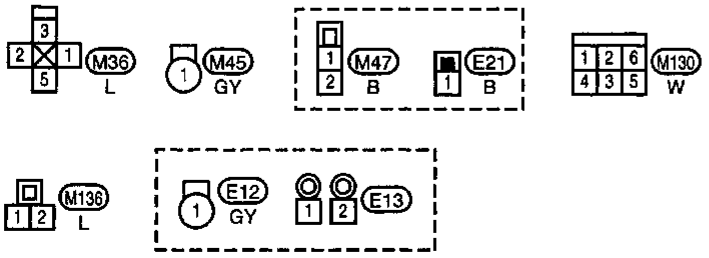

AEL275A-A

Wiring Diagram –START– (Cont'd)

A/T MODELS

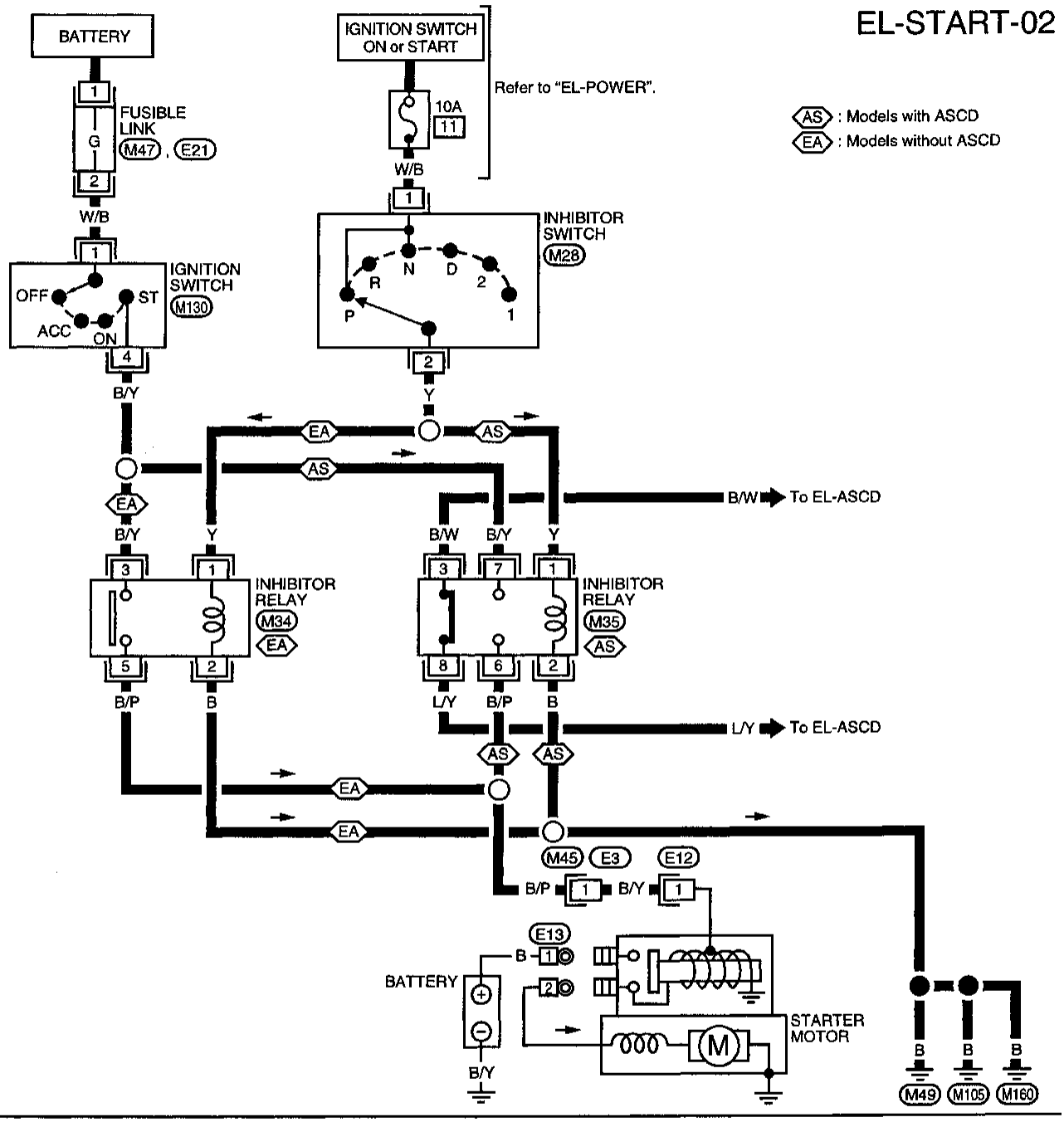

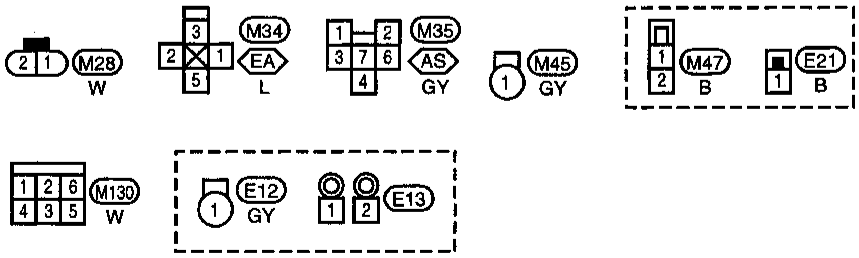

Starter

CALIFORNIA, USA

SEC. 233
M003T70381

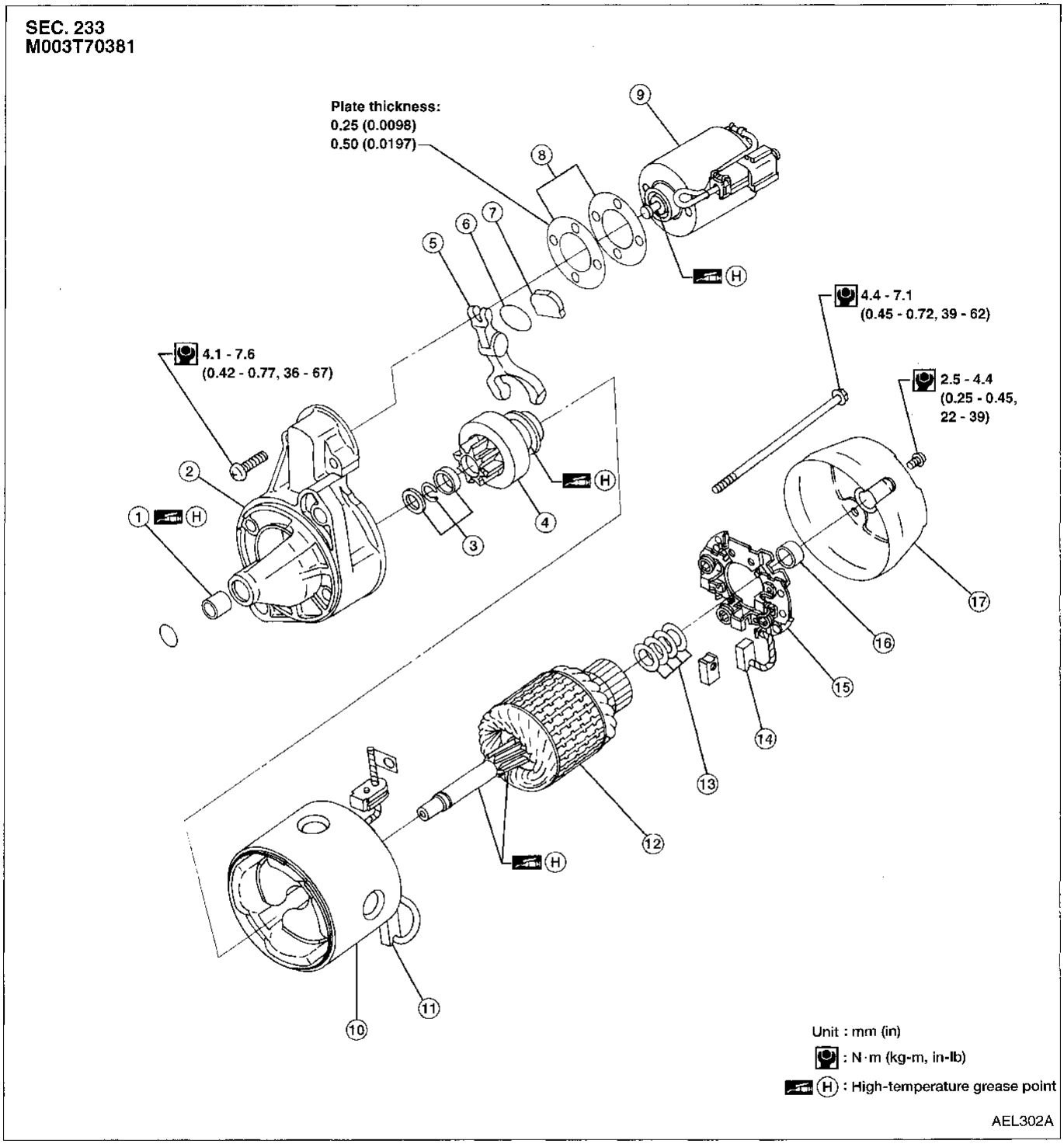

1. Sleeve bearing
2. Gear case
3. Pinion stopper set
4. Pinion assembly
5. Shift lever
6. Plate
7. Packing
8. Adjusting plate
9. Magnetic switch assembly
10. Yoke
11. Brush (+)
12. Armature
13. Washer
14. Brush (–)
15. Brush holder
16. Sleeve bearing
17. Rear cover

Starter (Cont'd)

NON-CALIFORNIA, USA AND CANADA

SEC. 233
M000T60081ZC

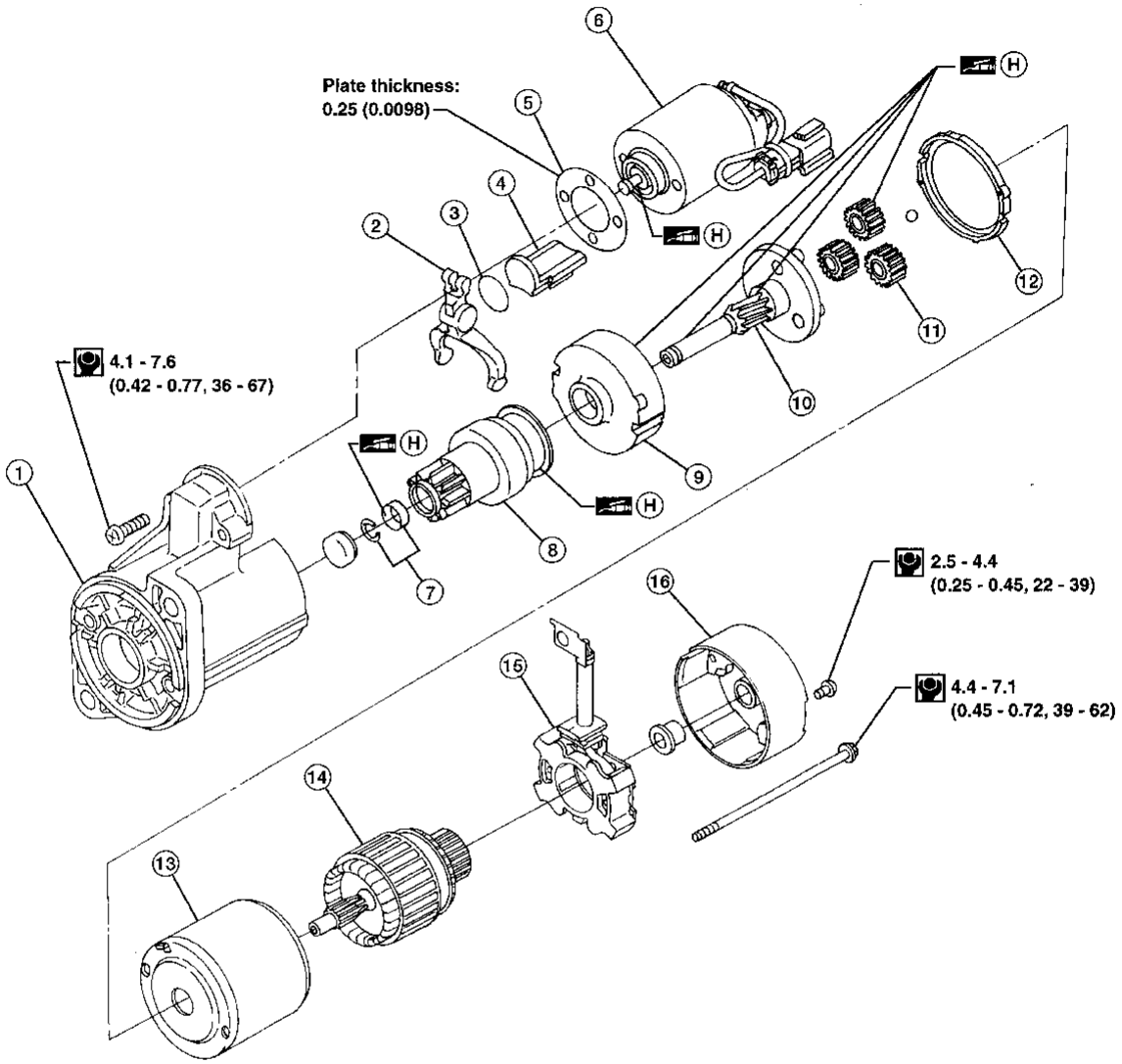

1. Gear case
2. Shift lever
3. Plate
4. Packing
5. Adjusing plate
6. Magnetic switch assembly
7. Pinion stopper set
8. Pinion assembly
9. Internal gear
10. Pinion shaft
11. Planetary gear
12. Packing
13. Yoke
14. Armature
15. Brush holder assembly
16. Rear cover

Pinion/Clutch Check

1. Inspect pinion teeth.
- Replace pinion if teeth are worn or damaged. (Also check condition of ring gear teeth.)
2. Inspect reduction gear teeth.
- Replace reduction gear if teeth are worn or damaged. (Also check condition of armature shaft gear teeth.)
3. Check to see if pinion locks in one direction and rotates smoothly in the opposite direction.
- If it locks or rotates in both directions, or unusual resistance is evident, replace.

Service Data and Specifications (SDS)

STARTER

Type		M003T70381	M000T60081ZC
		MITSUBISHI	
		Non-reduction	Reduction
Applied model		California, USA	Non-California, USA and Canada
System voltage	V	12	
No-load			
Terminal voltage	V	11.5	11.0
Current	A	60 Max.	90 Max.
Motor revolution	rpm	6,500 Min.	2,500 Min.
Minimum diameter of commutator	mm (in)	31.4 (1.236)	28.8 (1.134)
Minimum length of brush	mm (in)	11.5 (0.453)	7.0 (0.276)
Brush spring tension	N (kg, lb)	13.7 - 25.5 (1.4 - 2.6, 3.1 - 5.7)	11.8 - 23.5 (1.20 - 2.40, 2.65 - 5.28)
Clearance of bearing metal and armature shaft	mm (in)	0.2 (0.008)	0.2 (0.008)
Clearance between pinion front edge and pinion stopper	mm (in)	0.5 - 2.0 (0.020 - 0.079)	0.5 - 2.0 (0.020 - 0.079)

System Description

The generator provides DC voltage to operate the vehicle's electrical system and to keep the battery charged. The voltage output is controlled by the IC regulator.

Power is supplied at all times to generator terminal ④ through:
- Black fusible link (located at the battery positive terminal).

Voltage output through generator terminal ①, to charge the battery and operate the vehicle's electrical system, is controlled by the amount of voltage detected by the IC regulator at terminal ④.

Terminal ② of the generator supplies ground through body ground (E6).

With the ignition switch in the ON or START position, power is supplied:
- through 10A fuse (No. 11, located in the fuse block)
- to combination meter terminal ⑰ for the charge warning lamp.

Ground is supplied to terminal ㉓ of the combination meter through terminal ③ of the generator. With power and ground supplied, the charge warning lamp will illuminate. When the generator is providing sufficient voltage with the engine running, the ground is opened and the charge warning lamp will go off.

If the charge warning lamp illuminates with the engine running, a fault is indicated. Refer to "Trouble Diagnoses", "CHARGING SYSTEM", EL-27.

Wiring Diagram –CHARGE–

EL-CHARGE-01

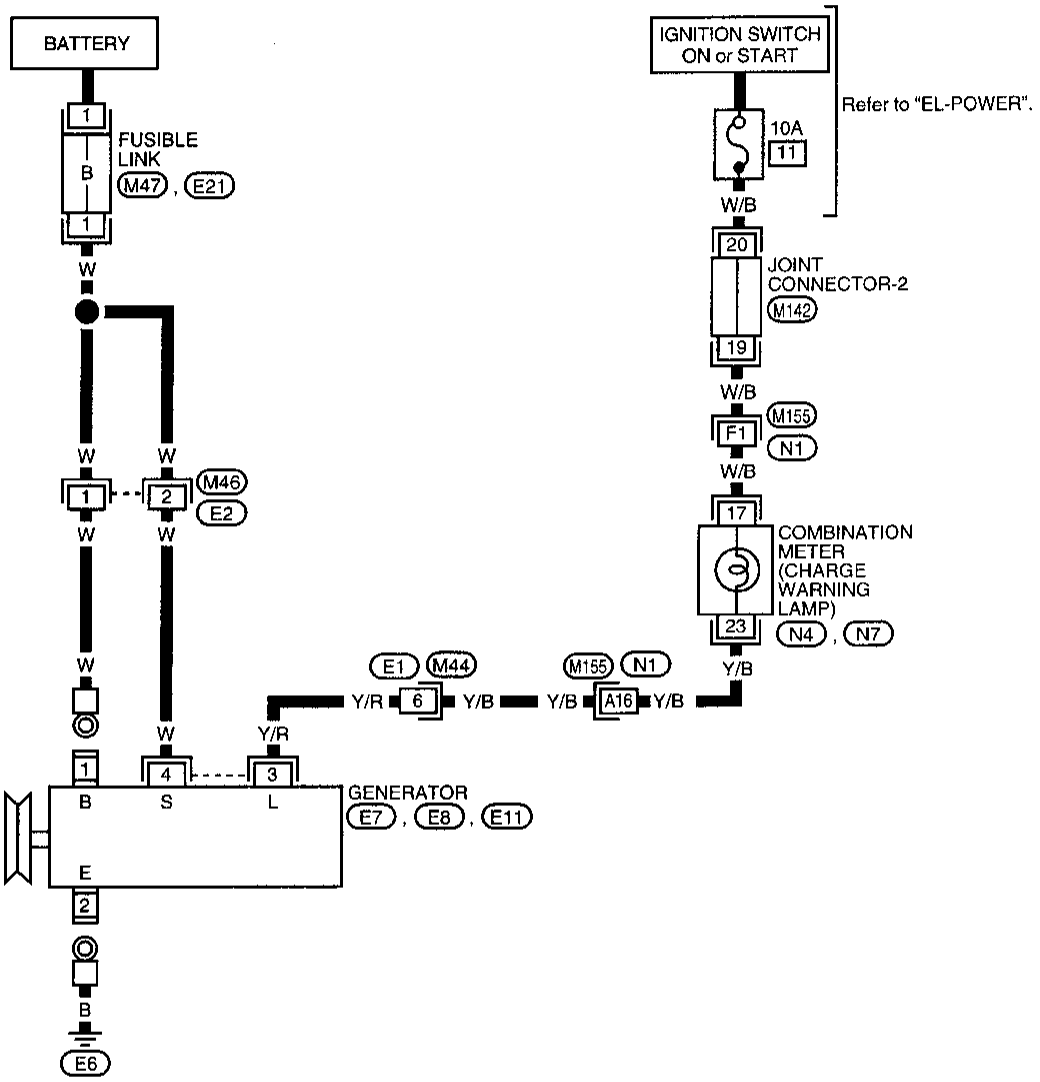

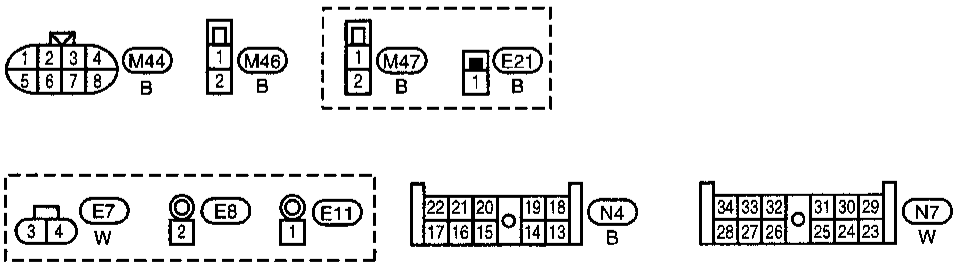

Refer to last page (Foldout page).
M142
M155 , N1

AEL272A

Trouble Diagnoses

Before conducting a generator test, make sure that the battery is fully charged. A 30-volt voltmeter and suitable test probes are necessary for the test. The generator can be checked easily by referring to the Inspection Table.

Before starting diagnosis, inspect the fusible link.

WITH IC REGULATOR

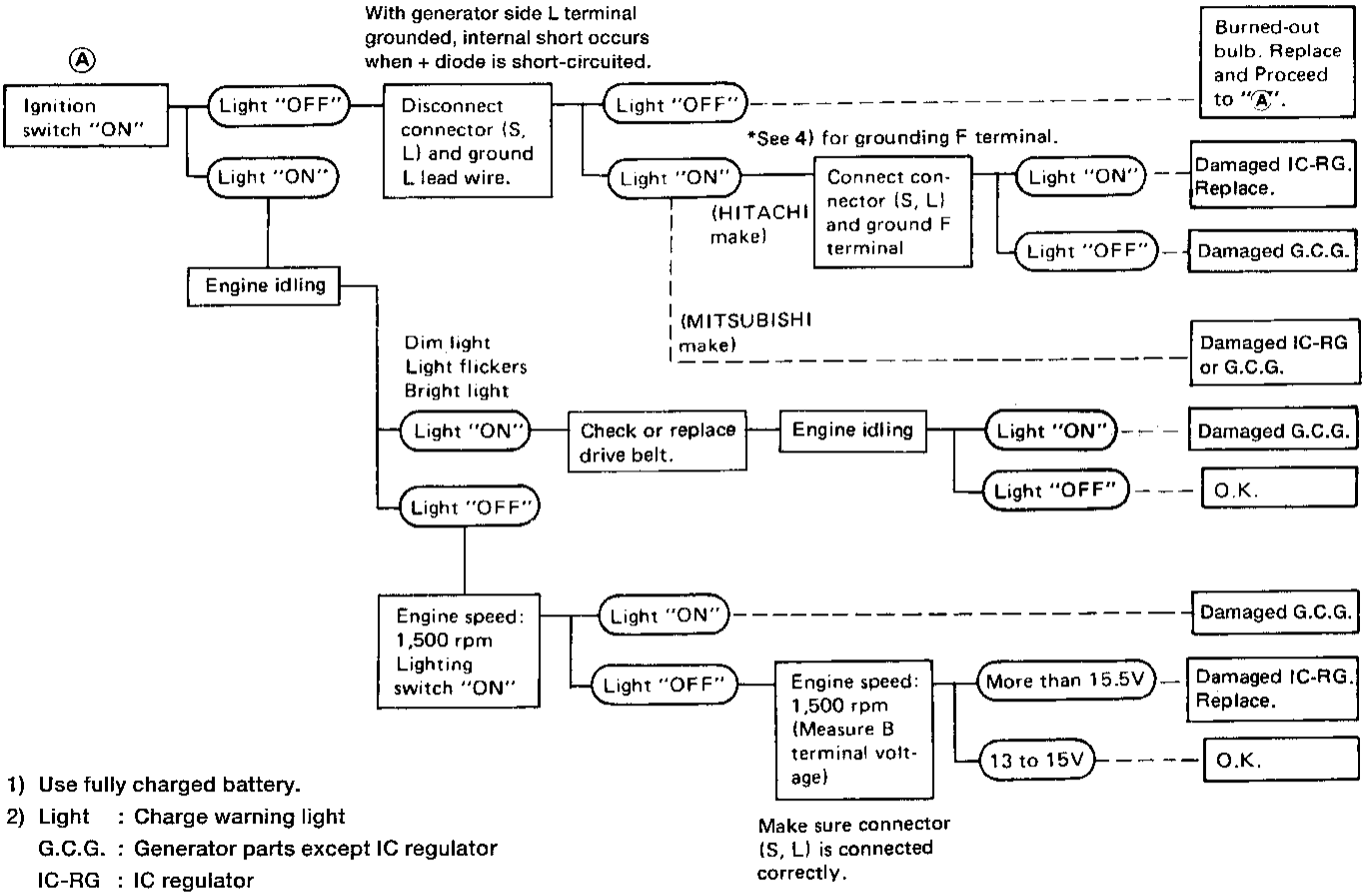

1) Use fully charged battery.
2) Light : Charge warning light
   G.C.G. : Generator parts except IC regulator
   IC-RG : IC regulator
   O.K. : IC-generator is in good condition.
3) When reaching "Damaged G.C.G.", remove generator from vehicle and disassemble, inspect and correct or replace faulty parts.
4) *Method of grounding F terminal (HITACHI make only)

Gasoline engine model

Contact tip of wire with brush and attach wire to generator body.

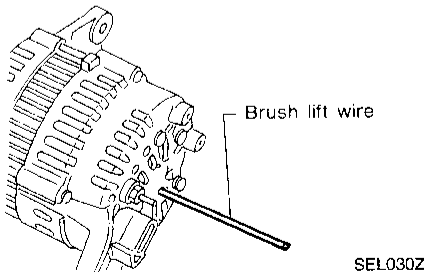

5) Terminals "S", "L", "B" and "E" are marked on rear cover of generator.

AEL215

Generator

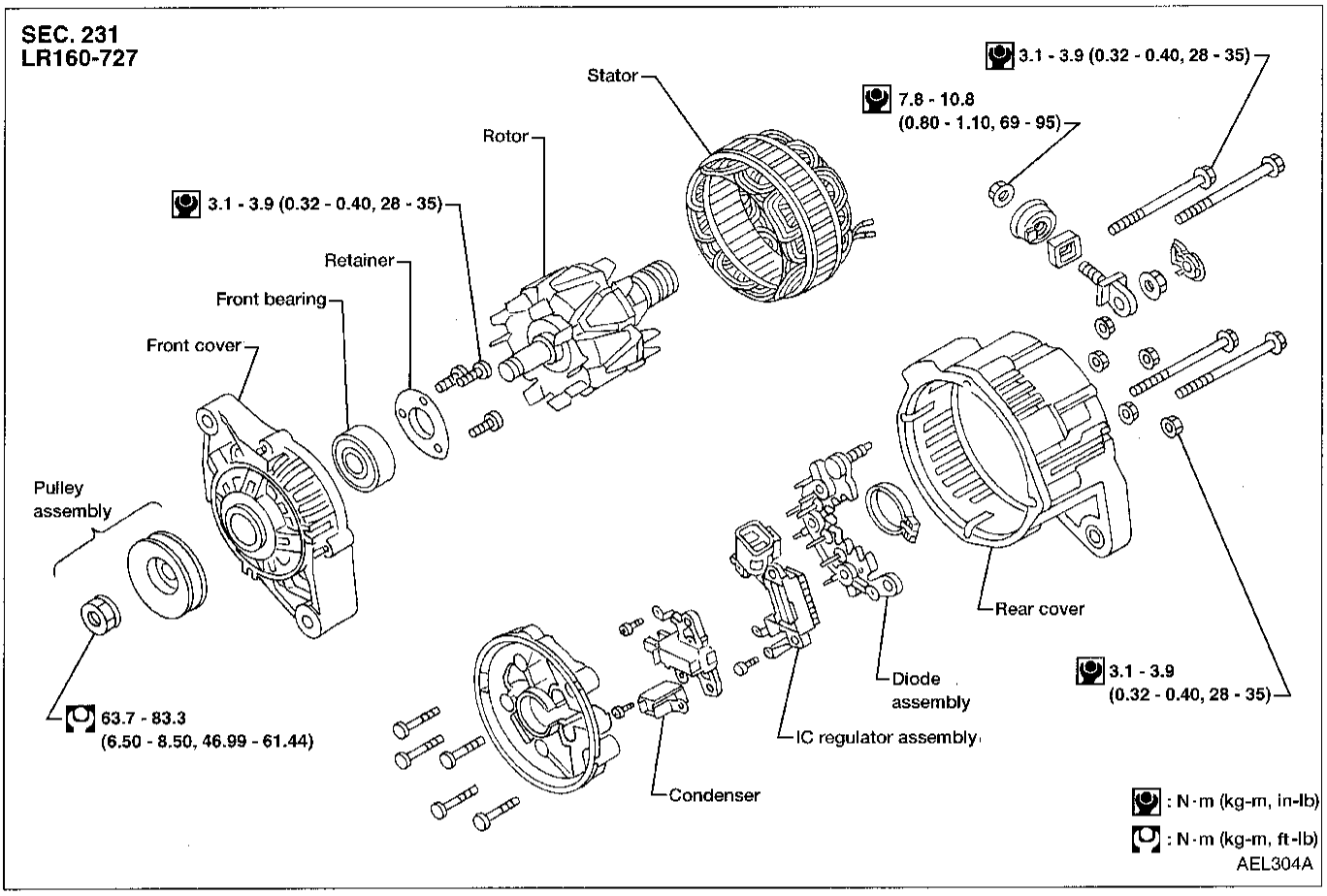
SEC. 231
LR160-727
Stator
Rotor
3.1 - 3.9 (0.32 - 0.40, 28 - 35)
7.8 - 10.8
(0.80 - 1.10, 69 - 95)
3.1 - 3.9 (0.32 - 0.40, 28 - 35)
Retainer
Front bearing
Front cover
Pulley
assembly
63.7 - 83.3
(6.50 - 8.50, 46.99 - 61.44)
Rear cover
Diode
assembly
IC regulator assembly
3.1 - 3.9
(0.32 - 0.40, 28 - 35)
Condenser
: N·m (kg-m, in-lb)
: N·m (kg-m, ft-lb)
AEL304A

Diode Check

MAIN DIODES

- In order to check diodes, they must be unsoldered from the stator.
- Use an ohmmeter to check condition of diodes as indicated in chart below.
- If any of the test results are not satisfactory, replace diode assembly.

	Ohmmeter probes		Judgement
	Positive ⊕	Negative ⊖	
Diodes check (Positive side)	Positive diode plate	Diode terminals	Diode conducts in only one direction.
	Diode terminals	Positive diode plate	
Diodes check (Negative side)	Negative diode plate	Diode terminals	Diode conducts in only one direction.
	Diode terminals	Negative diode plate	

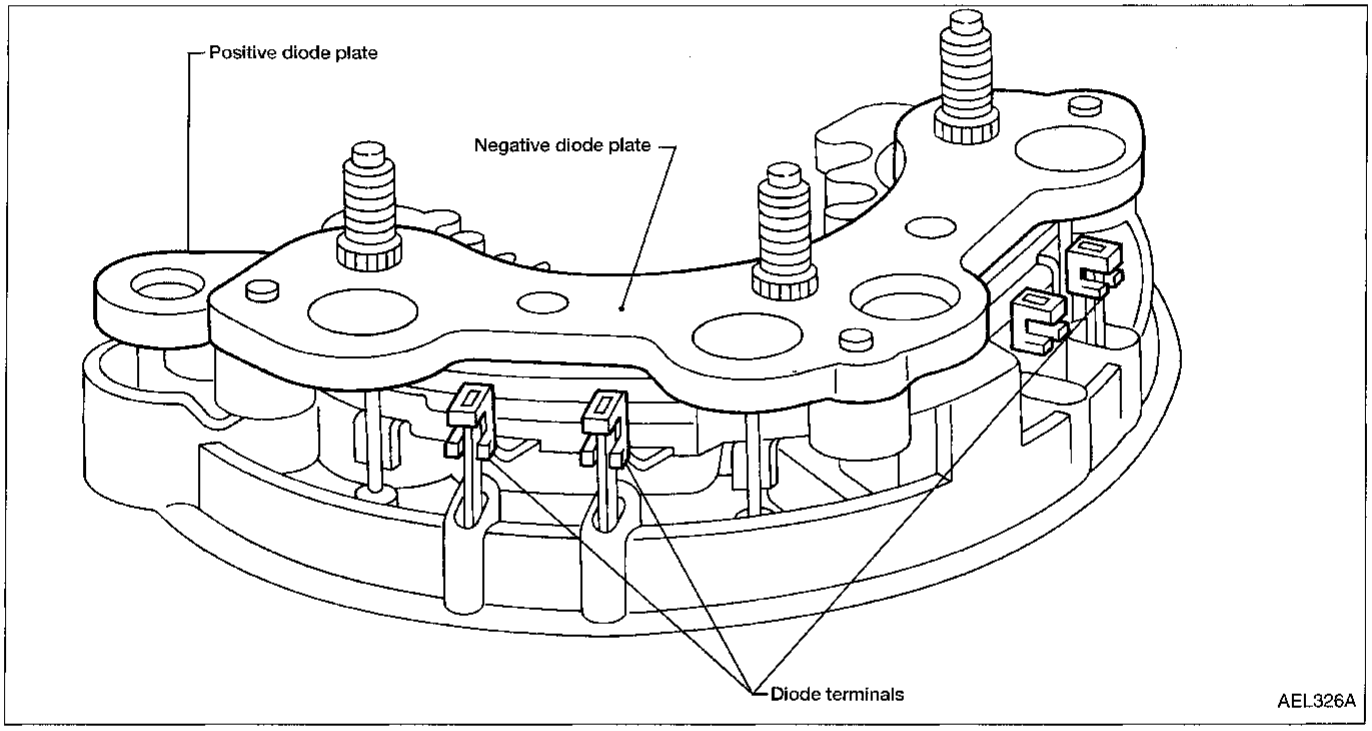

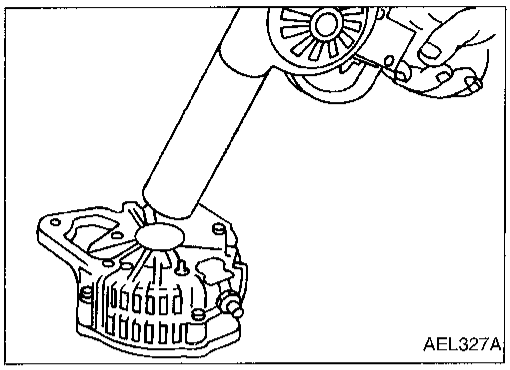

Disassembly and Assembly

1. Remove rear cover.
- Heat rear cover, using heat gun, to 50°C (90°F) above room temperature to prevent bearing damage.

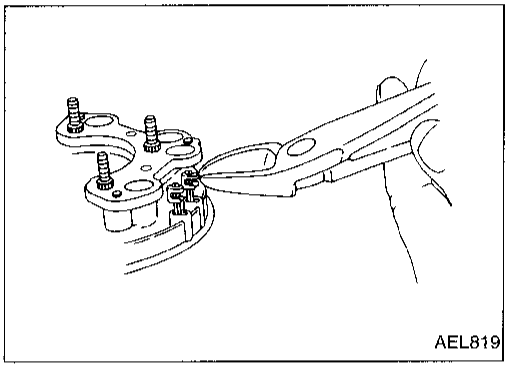

2. Disconnect stator/diode.
- Cut diode terminals.
- Unsolder stator coil leads.

CAUTION:
Unsolder stator coil leads as fast as possible to avoid damaging diodes.

3. Remove stator and rotor.
4. Remove bearing retainer and bearing.
5. Assemble in reverse of disassembly.

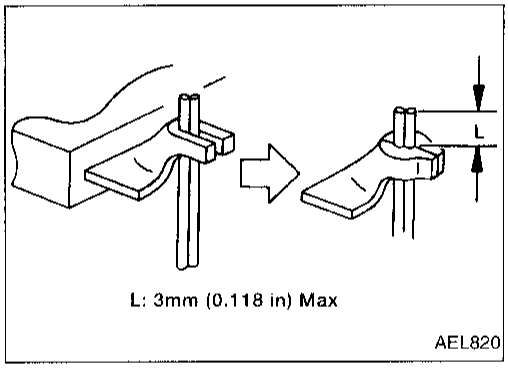

- Insert stator coil lead into lower portion of diode terminal.
- Using pliers, crimp diode terminal around stator coil lead.
- Be sure stator coil leads do not protrude more than 3 mm (0.118 in) past diode terminal.

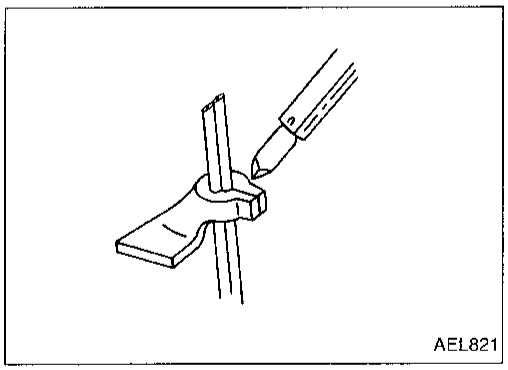

- Solder stator coil lead and diode terminals.

CAUTION:
Solder stator coil leads and diode terminals as fast as possible to avoid damaging diodes. Use 9/1 Pb/Sn solder in assembly.

Disassembly and Assembly (Cont'd)

REAR COVER INSTALLATION

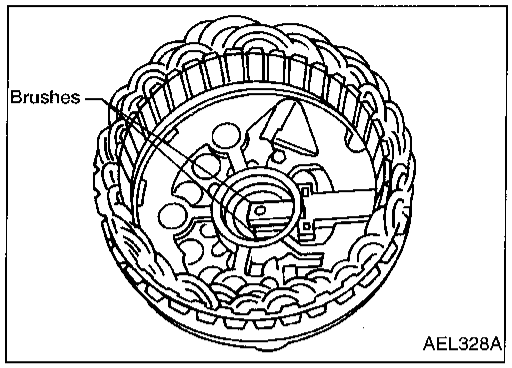

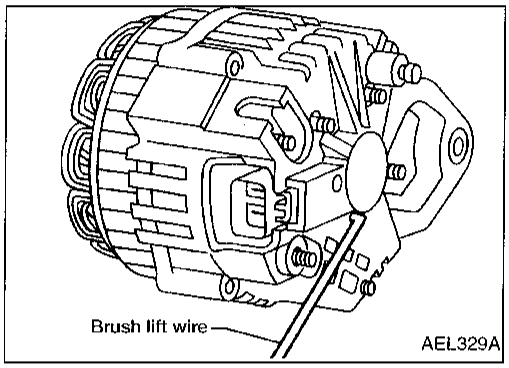

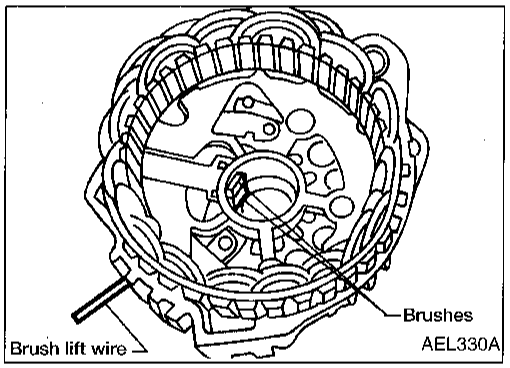

1. Before installing front cover with pulley and rotor with rear cover, push brush up with fingers and retain brush by inserting brush lift wire into brush lift hole from outside.
2. After installing front and rear sides of generator, pull out brush lift wire.

Service Data and Specifications (SDS)

GENERATOR

Type		LR160-727
Nominal rating	V-A	12-60
Ground polarity		Negative
Minimum revolution under no-load (When 13.5 volts is applied)	rpm	Less than 1,000
Hot output current (When 13.5 volts is applied)	A/rpm	More than 17/1,300 More than 48/2,500 More than 57/5,000
Regulated output voltage	V	14.1 - 14.7
Minimum length of brush	mm (in)	6.0 (0.24)
Slip ring minimum outer diameter	mm (in)	More than 26.0 (1.024)
Rotor (Field coil) resistance	Ω	2.58

Combination Switch/Check

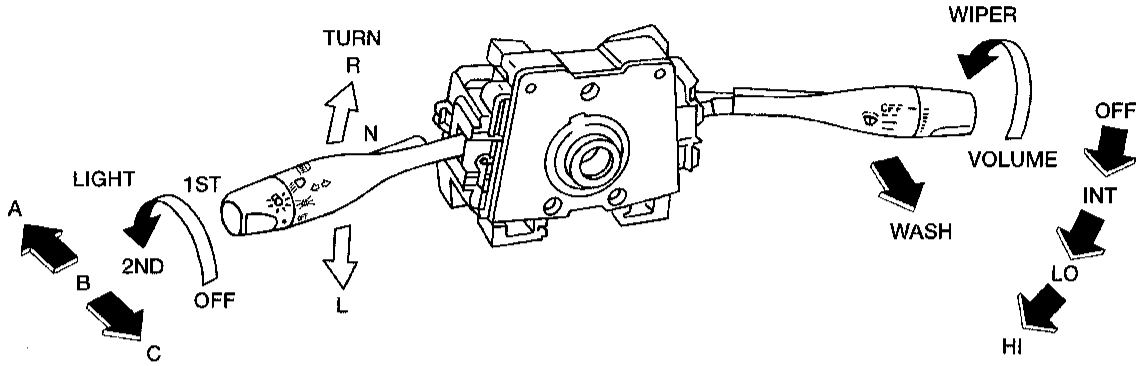

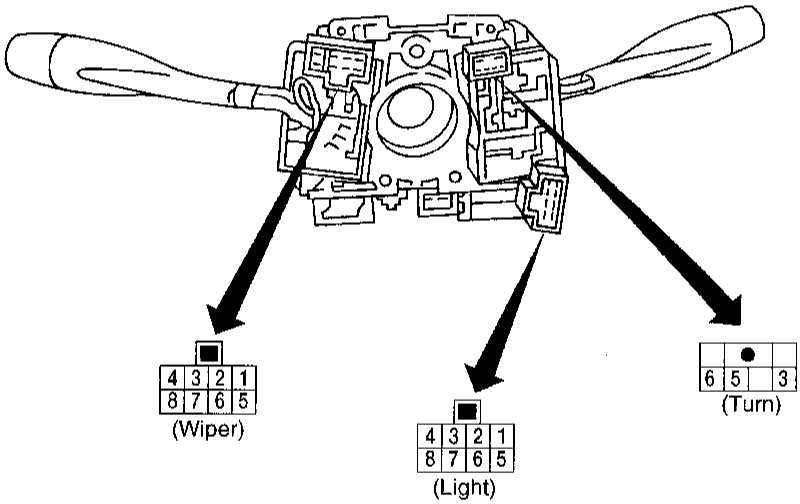

LIGHTING SWITCH

	OFF			1ST			2ND		
	A	B	C	A	B	C	A	B	C
2			○			○	○	○	○
3			○			○	○		○
4								○	
6			○			○	○	○	○
7			○			○	○		○
8								○	
1				○	○	○	○	○	○
5				○	○	○	○	○	○

WIPER SWITCH

	OFF	INT	LO	HI	WASH
8	○	○			
4	○	○	○		
7		○			
3				○	
6		○	○	○	○
5					○

INTERMITTENT WIPER VOLUME

TURN SIGNAL SWITCH

	R	N	L
5	○		○
6	○		
3			○

AEL305A

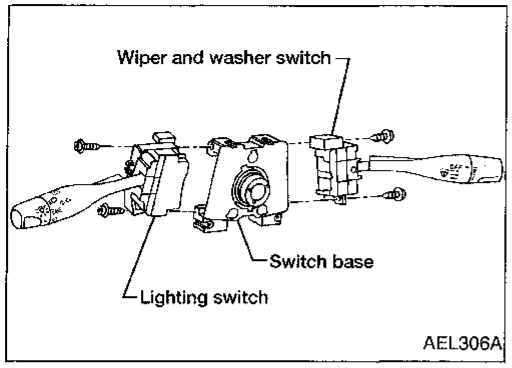

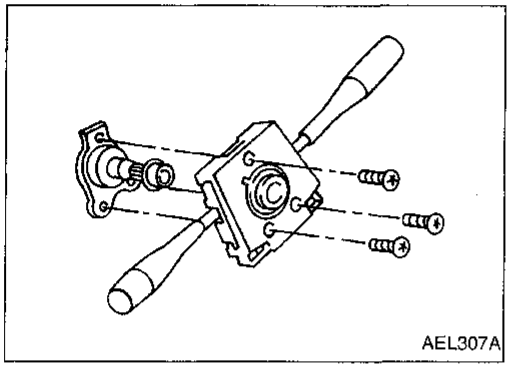

Combination Switch/Replacement

- Each switch can be replaced without removing combination switch base.

- To remove combination switch base, remove base attaching screws.

Steering Switch/Check

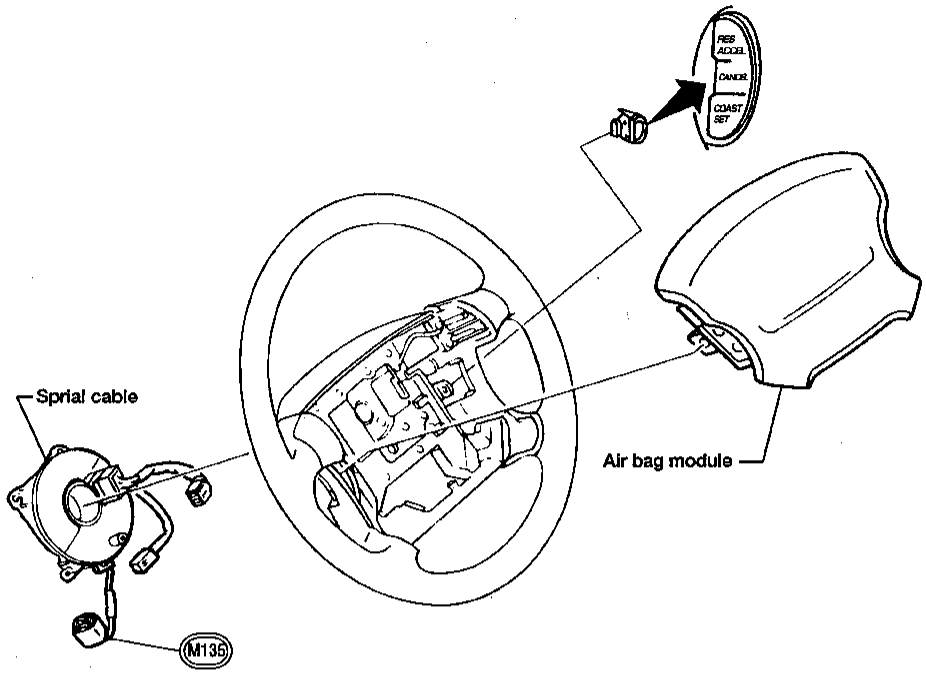

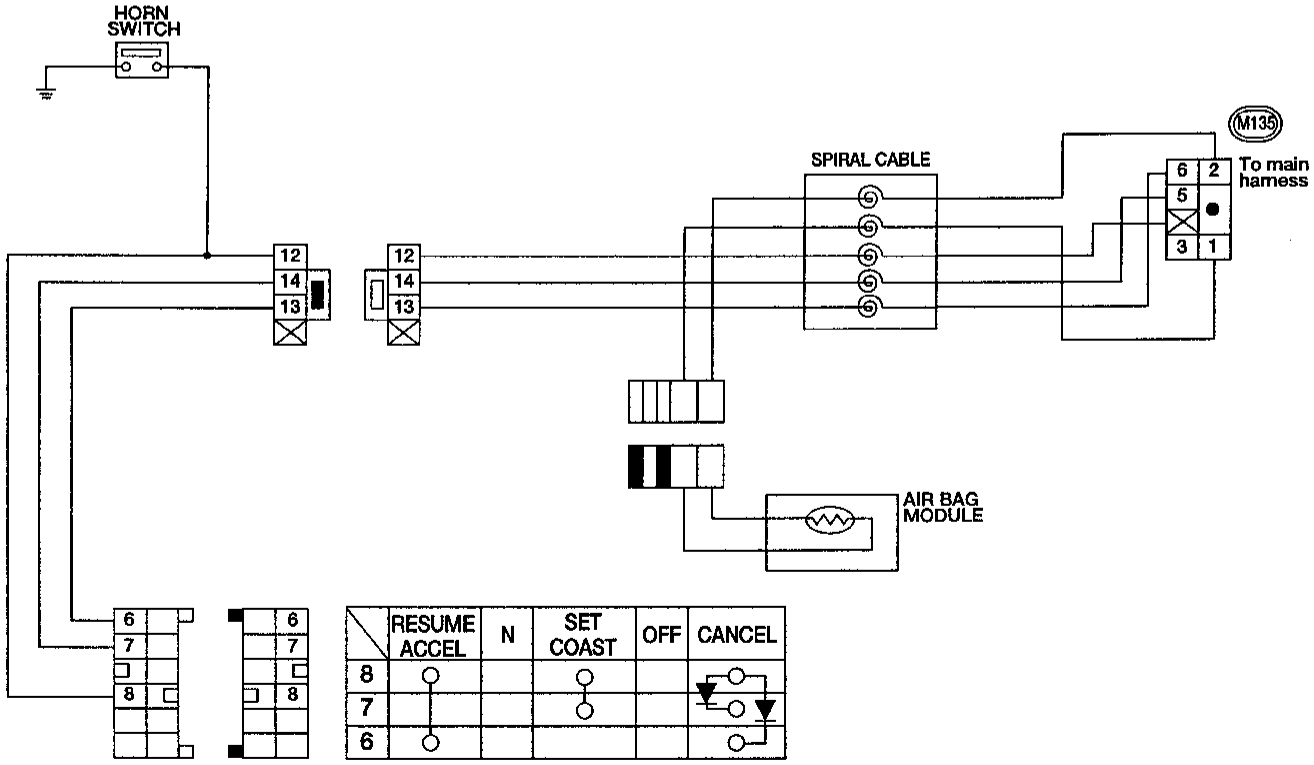

AEL401A

System Description (For USA)

The headlamps are controlled by the lighting switch which is built into the combination switch.
Power is supplied at all times:

- through 15A fuse (No. 12 , located in the fuse block)
- to lighting switch terminal ⑥, and
- through 15A fuse (No. 13 , located in the fuse block)
- to lighting switch terminal ②.

Low beam operation

When the lighting switch is turned to the 2ND position and placed in LOW ("B") position, power is supplied:

- from lighting switch terminal ⑧
- to terminal ① of the LH headlamp, and
- from lighting switch terminal ④
- to terminal ① of the RH headlamp.

Terminal ③ of each headlamp supplies ground through body grounds M49 , M105 and M160 .
With power and ground supplied, the headlamp(s) will illuminate.

High beam operation/flash-to-pass operation

When the lighting switch is turned to the 2ND position and placed in HIGH ("A") position or the lighting switch is placed in the PASS ("C") position, power is supplied:

- from lighting switch terminal ⑦
- to terminal ② of the LH headlamp, and
- from lighting switch terminal ③
- to terminal ② of the RH headlamp, and
- to combination meter terminal ⑩ for the hi beam indicator.

Ground is supplied to terminal ⑪ of the combination meter and terminal ③ of each headlamp through body grounds M49 , M105 , and M160 .
With power and ground supplied, the high beams and the hi beam indicator illuminate.

Wiring Diagram (For USA) –H/LAMP–

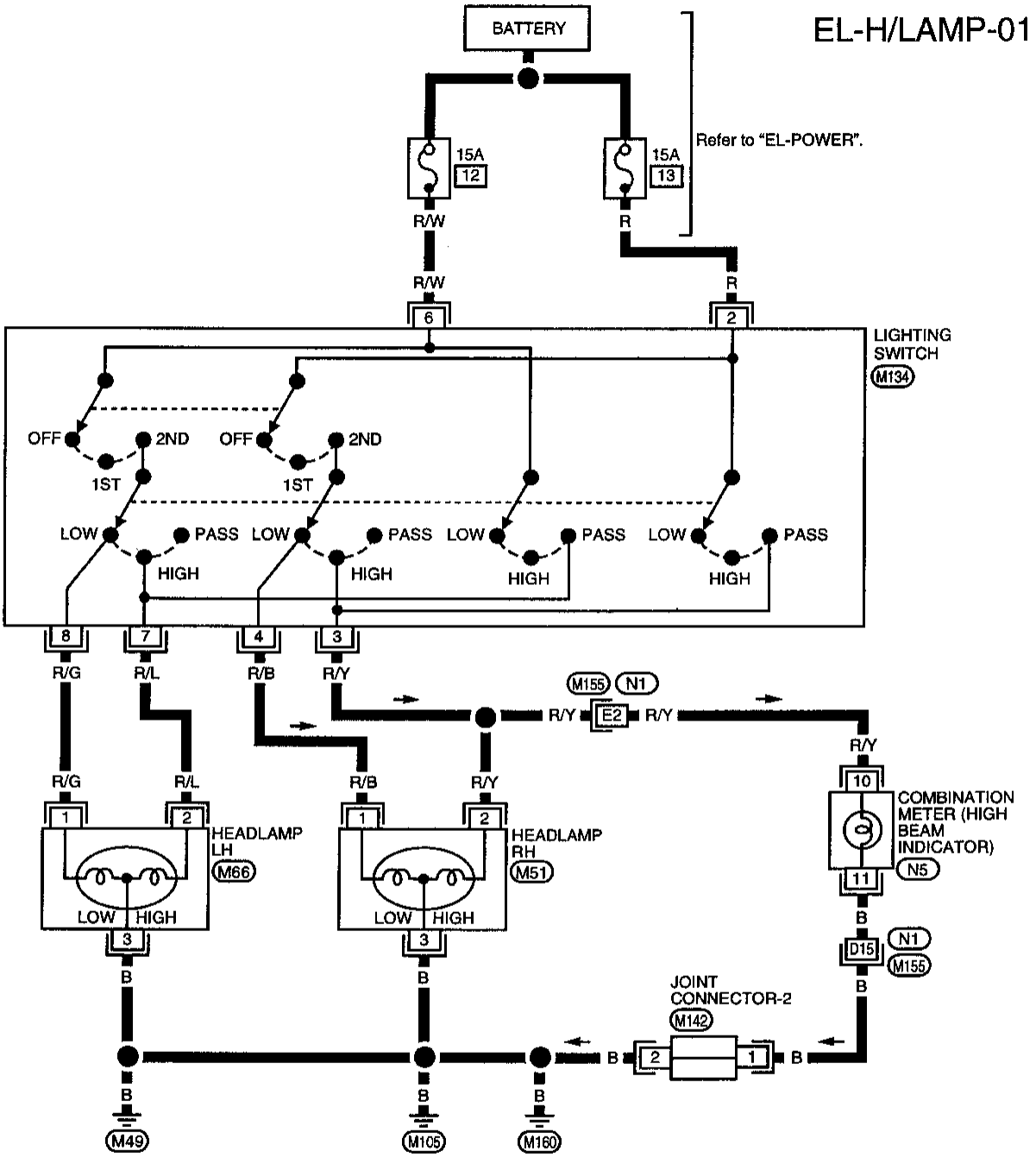

Refer to last page (Foldout page).
M142
M155 , N1

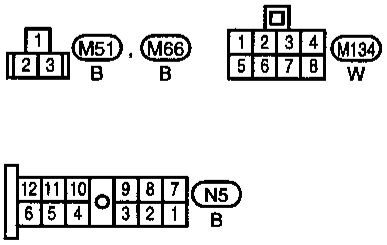

AEL271A

Trouble Diagnoses (For USA)

Symptom	Possible cause	Repair order
LH headlamps do not operate.	1. Bulb 2. Grounds (M49), (M105) and (M160) 3. 15A fuse 4. Lighting switch	1. Check bulb. 2. Check grounds (M49), (M105) and (M160). 3. Check 15A fuse (No. 12, located in fuse block). Verify battery positive voltage is present at terminal (6) of lighting switch. 4. Check lighting switch.
RH headlamps do not operate.	1. Bulb 2. Grounds (M49), (M105) and (M160) 3. 15A fuse 4. Lighting switch	1. Check bulb. 2. Check grounds (M49), (M105) and (M160). 3. Check 15A fuse (No. 13, located in fuse block). Verify battery positive voltage is present at terminal (2) of lighting switch. 4. Check lighting switch.
LH high beam does not operate, but LH low beam operates.	1. Bulb 2. Open in LH high beam circuit 3. Lighting switch	1. Check bulb. 2. Check R/L wire between lighting switch and LH headlamp for an open circuit. 3. Check lighting switch.
LH low beam does not operate, but LH high beam operates.	1. Bulb 2. Open in LH low beam circuit 3. Lighting switch	1. Check bulb. 2. Check R/G wire between lighting switch and LH headlamp for an open circuit. 3. Check lighting switch.
RH high beam does not operate, but RH low beam operates.	1. Bulb. 2. Open in RH high beam circuit 3. Lighting switch	1. Check bulb. 2. Check R/Y wire between lighting switch and RH headlamp for an open circuit. 3. Check lighting switch.
RH low beam does not operate, but RH high beam operates.	1. Bulb 2. Open in RH low beam circuit 3. Lighting switch	1. Check bulb. 2. Check R/B wire between lighting switch and RH headlamp for an open circuit. 3. Check lighting switch.
High beam indicator does not work.	1. Bulb 2. Grounds (M49), (M105) and (M160) 3. Open in high beam circuit	1. Check bulb in combination meter. 2. Check grounds (M49), (M105) and (M160). 3. Check R/Y wire between lighting switch and combination meter for an open circuit.

System Description (For Canada)

The headlamp system for Canada vehicles contains a daytime light control unit that activates the high beam headlamps at approximately half illumination whenever the engine is running. If the parking brake is applied before the engine is started the daytime lights will not be illuminated. The daytime lights will illuminate once the parking brake is released. Thereafter, the daytime lights will continue to operate even when the parking brake is applied.

Power is supplied at all times:
- through 15A fuse (No. 12 , located in the fuse block)
- to daytime light control unit terminal ③ and
- to lighting switch terminal ⑥.

Power is also supplied at all times:
- through 15A fuse (No. 13 , located in the fuse block)
- to daytime light control unit terminal ② and
- to lighting switch terminal ②.

With the ignition switch in the ON or START position, power is supplied:
- through 10A fuse (No. 11 , located in the fuse block)
- to daytime light control unit terminal ⑫.

With the ignition switch in the START position, power is supplied:
- through ignition switch terminal ④
- to daytime light control unit terminal ①.

Ground is supplied to daytime light control unit terminal ⑨ through body grounds M49 , M105 and M160 .

HEADLAMP OPERATION

Low beam operation

When the lighting switch is moved to the 2ND position and placed in LOW ("B") position, power is supplied:
- from lighting switch terminal ④
- to RH headlamp terminal ①.

Ground is supplied to RH headlamp terminal ③ through body grounds M49 , M105 and M160 .

Also, when the lighting switch is turned to the 2ND position and placed in LOW ("B") position, power is supplied:
- from lighting switch terminal ⑧
- to LH headlamp terminal ①.

Ground is supplied:
- to LH headlamp terminal ③
- from daytime light control unit terminal ⑦
- through daytime light control unit terminal ⑨
- through body grounds M49 , M105 and M160 .

With power and ground supplied, the low beam headlamps illuminate.

High beam operation

When the lighting switch is turned to the 2ND position and placed in HIGH ("A") position, or the lighting switch is placed in the PASS ("C") position, power is supplied:
- from lighting switch terminal ③
- to RH headlamp terminal ②.

Also, when the lighting switch is moved to the 2ND position and placed in HIGH ("A") position, or the lighting switch is placed in the PASS ("C") position, power is supplied:
- from lighting switch terminal ⑦
- to daytime light control unit terminal ⑤
- through daytime light control unit terminal ⑥
- to LH headlamp terminal ②.

Ground is supplied in the same manner as low beam operation.

With power and ground supplied, the high beam headlamps illuminate.

System Description (For Canada) (Cont'd)

DAYTIME LIGHT OPERATION

With the engine running and the lighting switch in the OFF or "1st" position, power is supplied:

- to daytime light control unit terminal ③
- through daytime light control unit terminal ⑥
- to LH headlamp terminal ②
- through LH headlamp terminal ③
- to daytime light control unit terminal ⑦
- through daytime light control unit terminal ⑧
- to RH headlamp terminal ②.

Ground is supplied to RH headlamp terminal ③ through body grounds (M49), (M105) and (M160).
Because the high beam headlamps are now wired in series, they operate at half illumination.

Operation (Daytime light system for Canada)

The headlamps' high beams automatically turn on after starting the engine with the lighting switch in "OFF" or "1st" position. Lighting switch operations other than the above are the same as conventional light systems.

Engine		With engine stopped									With engine running								
Lighting switch		OFF			1ST			2ND			OFF			1ST			2ND		
		A	B	C	A	B	C	A	B	C	A	B	C	A	B	C	A	B	C
Headlamp	High beam	X	X	○	X	X	○	○	X	○	△*	△*	○	△*	△*	○	○	X	○
	Low beam	X	X	X	X	X	X	X	○	X	X	X	X	X	X	X	X	○	X
Clearance and tail lamp		X	X	X	○	○	○	○	○	○	X	X	X	○	○	○	○	○	○
License and instrument illumination lamp		X	X	X	○	○	○	○	○	○	X	X	X	○	○	○	○	○	○

○ : Lamp "ON"
X : Lamp "OFF"
△ : Lamp dims
□: Added functions
* : When starting the engine with the parking brake released, the daytime light will come ON.
When starting the engine with the parking brake applied, the daytime light won't come ON.

Schematic (For Canada)

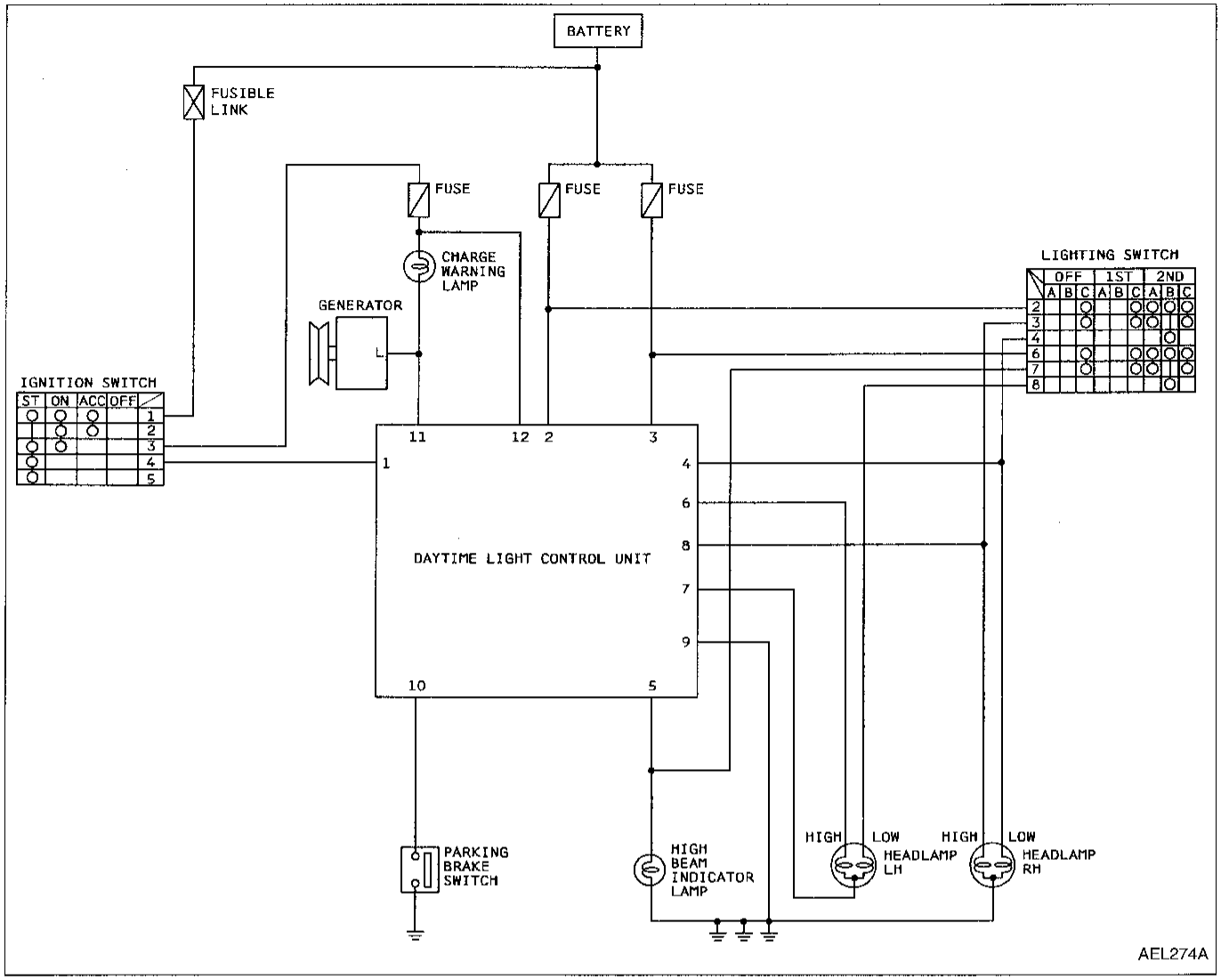

Wiring Diagram (For Canada) –DTRL–

EL-DTRL-01

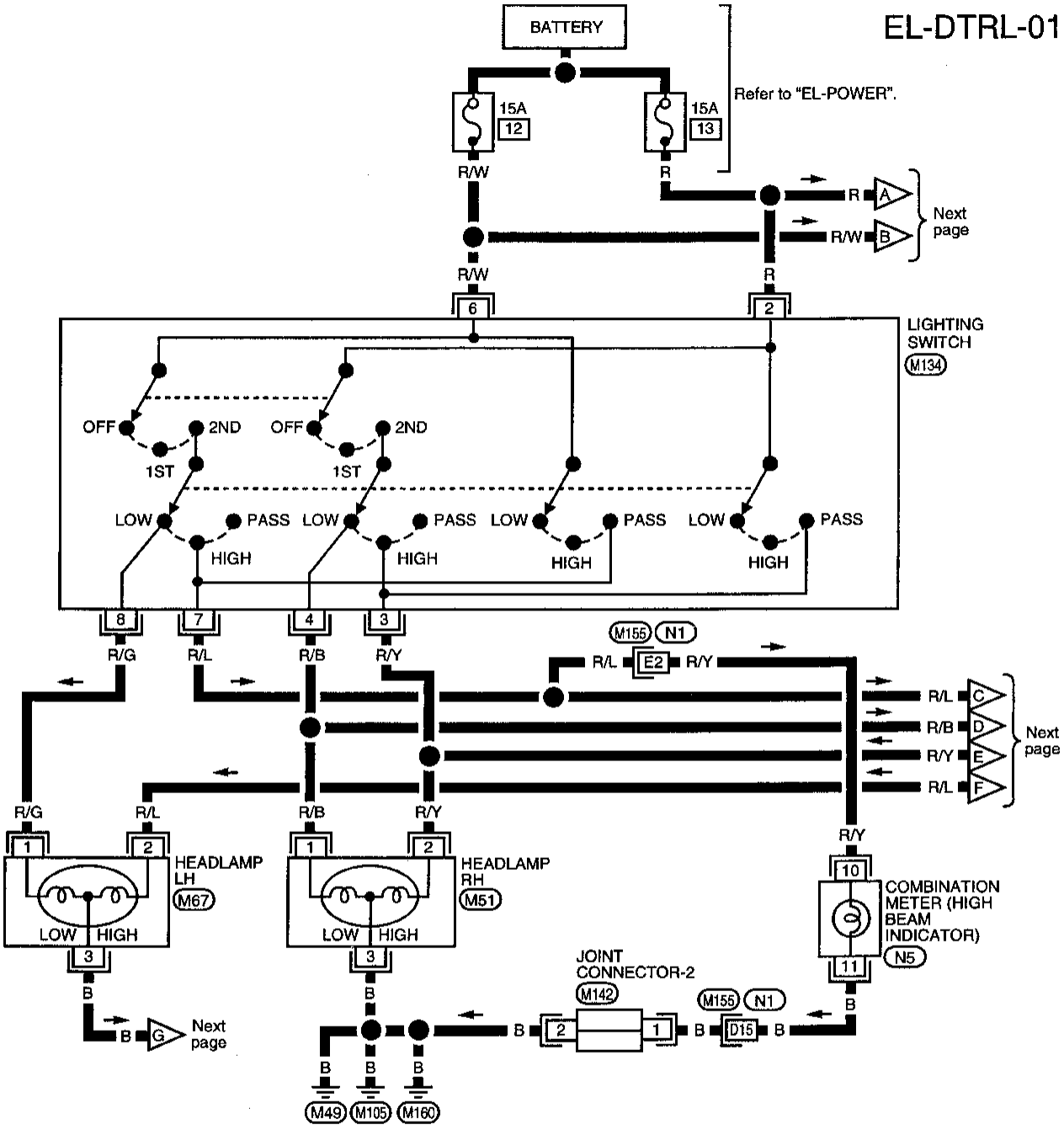

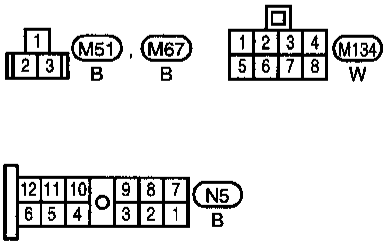

Refer to last page (Foldout page).
M142
M155 , N1

AEL273A-A

Wiring Diagram (For Canada) –DTRL– (Cont'd)

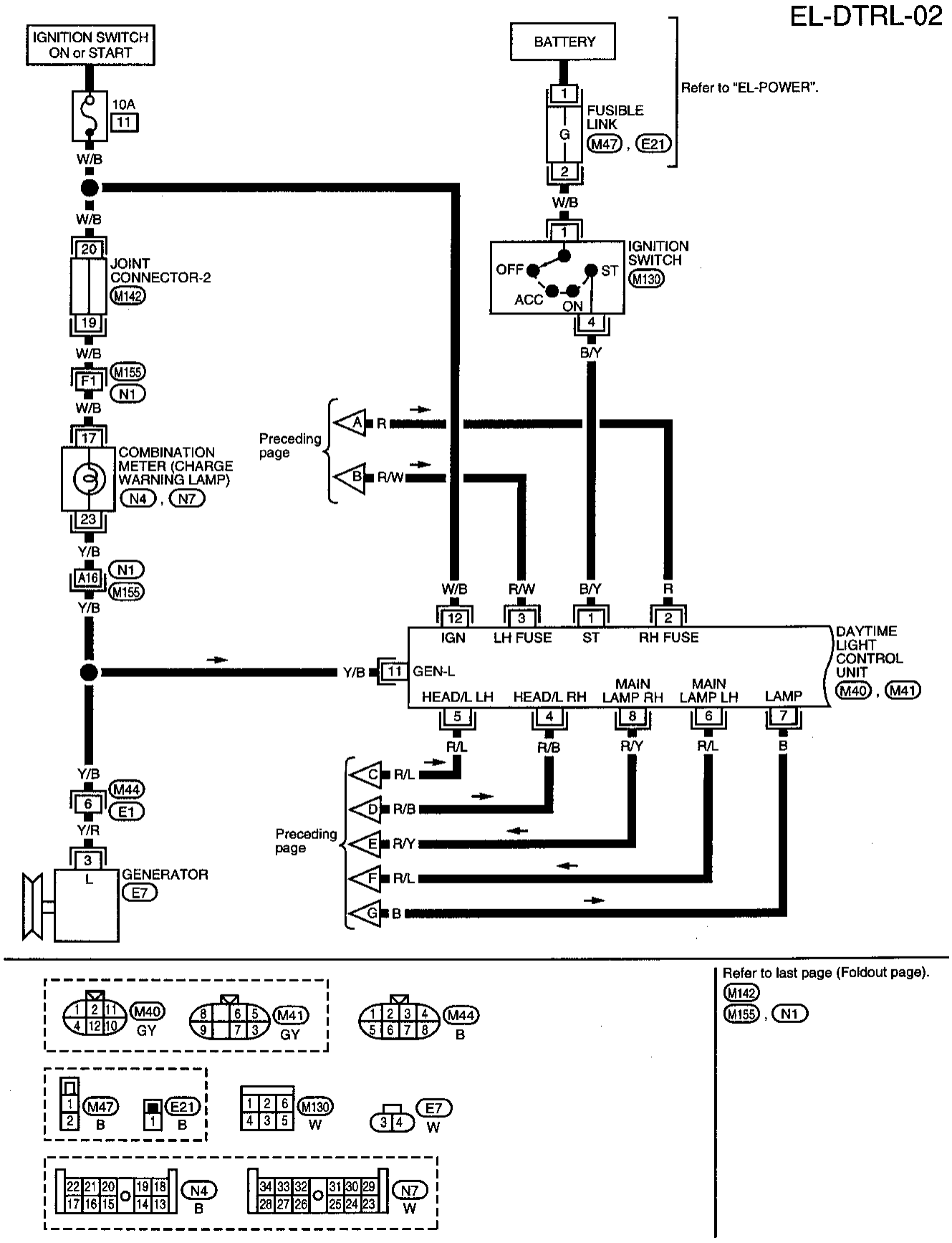

Refer to last page (Foldout page).
M142
M155 , N1

AEL273A-B

Wiring Diagram (For Canada) –DTRL– (Cont'd)

EL-DTRL-03

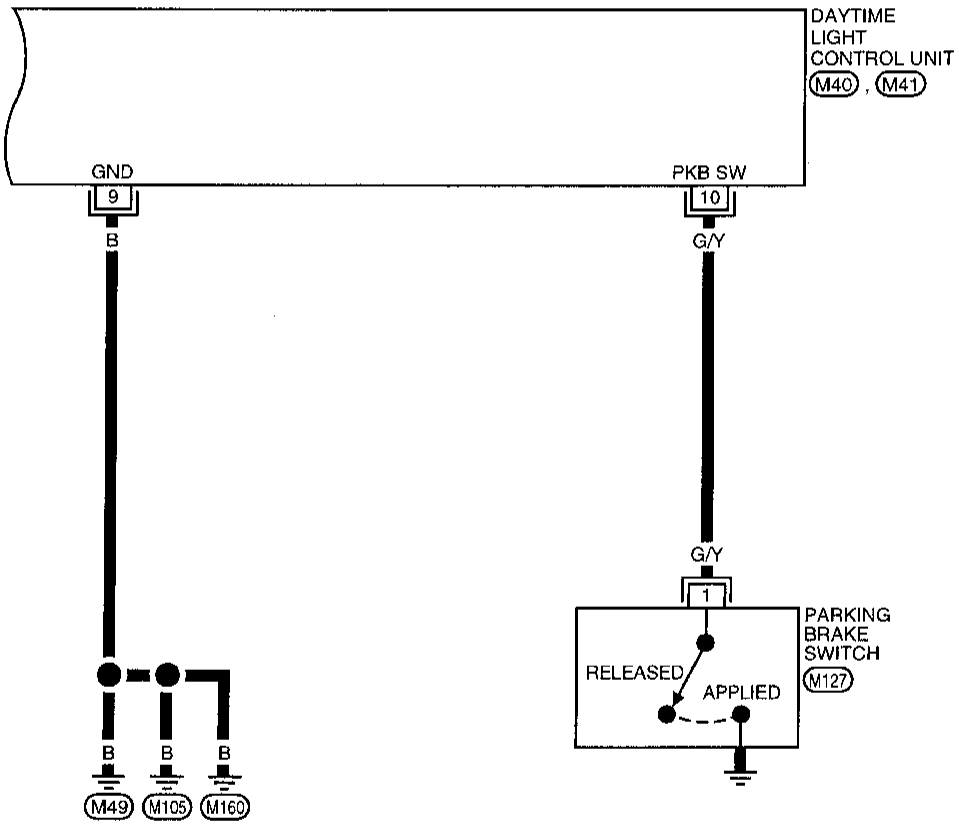

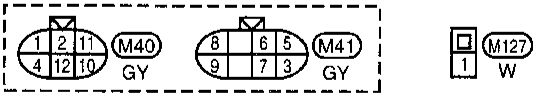

AEL273A-C

Trouble Diagnoses (For Canada)

DAYTIME LIGHT CONTROL UNIT INSPECTION TABLE

(Data are reference values.)

Terminal No.	Item	Condition		Judgement standard
1	Start signal	ST	When turning ignition switch to ST	Battery positive voltage
		ON	When turning ignition switch to ON from ST	1V or less
		OFF	When turning ignition switch to OFF	1V or less
2	Power source	ON	When turning ignition switch to ON	Battery positive voltage
		OFF	When turning ignition switch to OFF	Battery positive voltage
3	Power source	ON	When turning ignition switch to ON	Battery positive voltage
		OFF	When turning ignition switch to OFF	Battery positive voltage
4	Lighting switch (Lo beam)		When turning lighting switch to HEAD (2nd position)	Battery positive voltage
5	Lighting switch (Hi beam)		When turning lighting switch to HI BEAM	Battery positive voltage
			When turning lighting switch to FLASH TO PASS	Battery positive voltage
6	LH hi beam		When turning lighting switch to HI BEAM	Battery positive voltage
			When releasing parking brake with engine running and turning lighting switch to OFF (daytime light operation) **CAUTION: Block wheels and ensure selector lever is in "N" or "P" position.**	Battery positive voltage
7	LH headlamp control (ground)		When lighting switch is turned to HEAD	1V or less
			When releasing parking brake with engine running and turning lighting switch to OFF (daytime light operation) **CAUTION: Block wheels and ensure selector lever is in "N" or "P" position.**	Approx. half battery voltage
8	RH hi beam		When turning lighting switch to HI BEAM	Battery positive voltage
			When releasing parking brake with engine running and turning lighting switch to OFF (daytime light operation) **CAUTION: Block wheels and ensure selector lever is in "N" or "P" position.**	Approx. half battery voltage

Trouble Diagnoses (For Canada) (Cont'd)

Terminal No.	Item	Condition		Judgement standard
9	Ground		—	—
10	Parking brake switch	ON	When parking brake is released	Battery positive voltage
			When parking brake is applied	1.5V or less
11	Generator	ON	When turning ignition switch to ON	1V or less
			When engine is running	Battery positive voltage
		OFF	When turning ignition switch to OFF	1V or less
12	Power source	ON	When turning ignition switch to ON	Battery positive voltage
		ST	When turning ignition switch to ST	Battery positive voltage
		OFF	When turning ignition switch to OFF	1V or less

Aiming Adjustment

When performing headlamp aiming adjustment, use an aiming machine, aiming wall screen or headlamp tester. Aimers should be in good repair, calibrated and operated according to their operation manuals.

Before performing aiming adjustment, make sure of the following:

CAUTION:

- **Keep all tires inflated to correct pressures.**
- **Place vehicle on level ground.**
- **See that vehicle is unloaded (except for full levels of coolant, engine oil and fuel, and spare tire, jack, and tools). Have the driver or equivalent weight placed in driver's seat.**

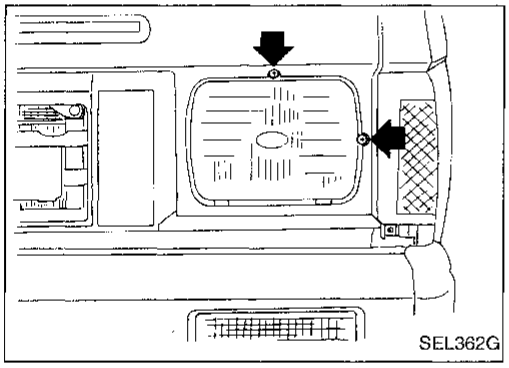

LOW BEAM

1. Turn headlamp low beam ON.
2. Use adjusting screws to perform aiming adjustment.

- **First tighten the adjusting screw all the way and then make adjustment by loosening the screw.**

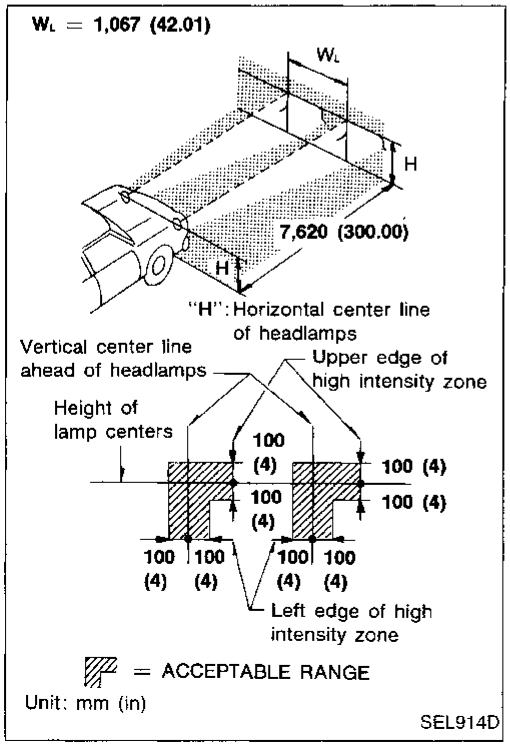

- **Adjust headlamps so that upper edge and left edge of high intensity zone are within the acceptable range as shown at left.**
- **Dotted lines in illustration shown center of headlamp.**

"H": Horizontal center line of headlamps.

"W_L": Distance between each headlamp center.

Aiming Adjustment (Cont'd)

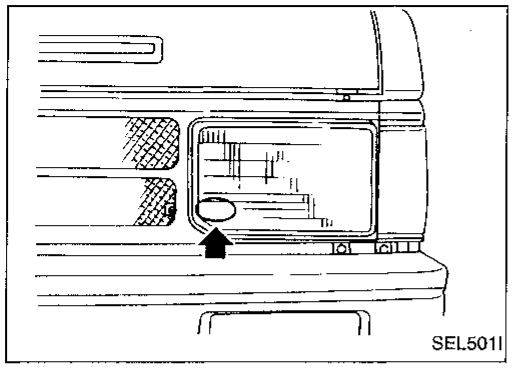

AIMER ADJUSTMENT MARK

When using a mechanical aimer, adjust adapter legs to the data marked on the headlamps.

Example:

4H 2V

Vertical side: 2

Horizontal side 4

Back-up Lamp/Wiring Diagram –BACK/L–

EL-BACK/L-01

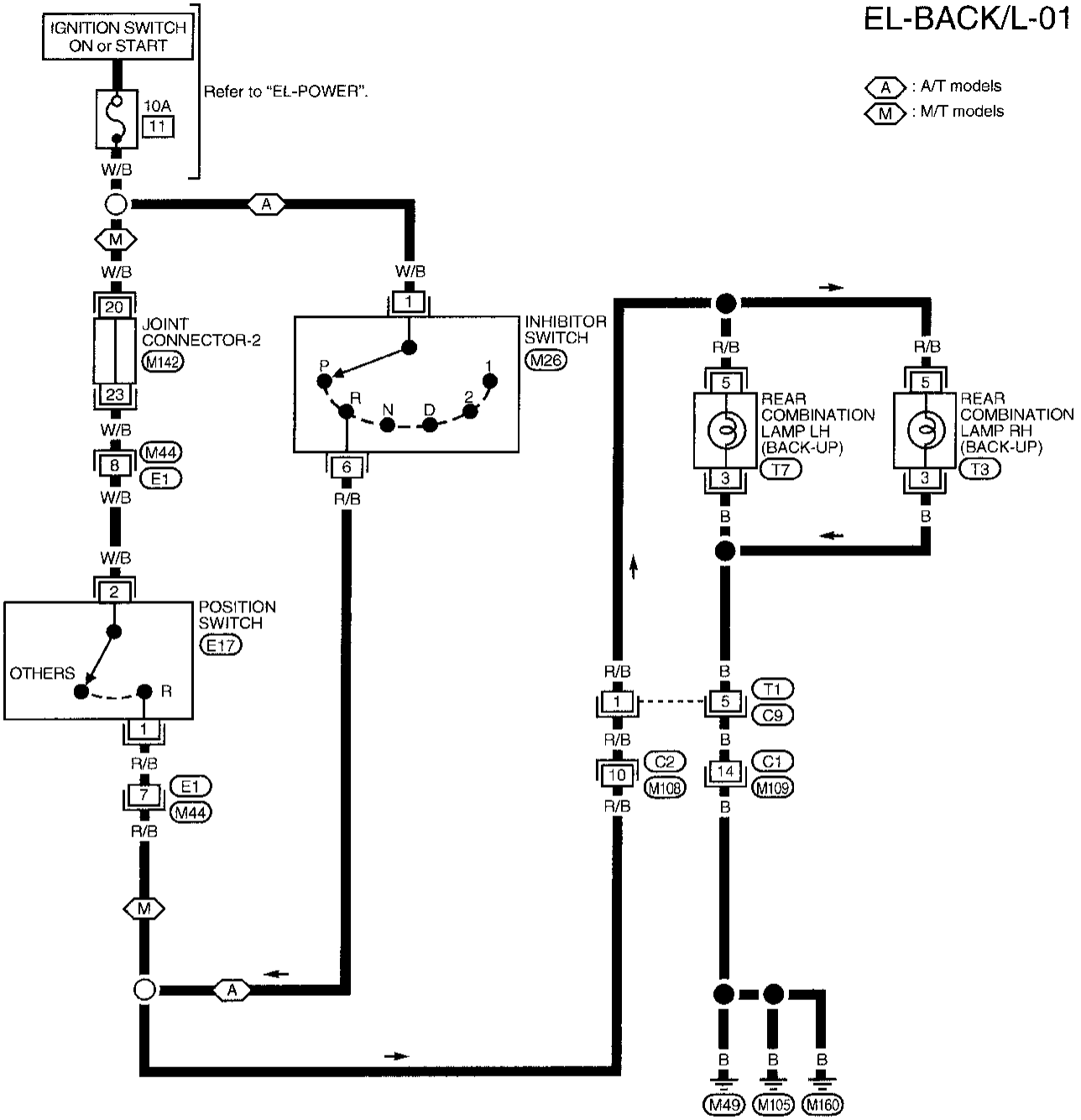

Refer to last page (Foldout page).
M142

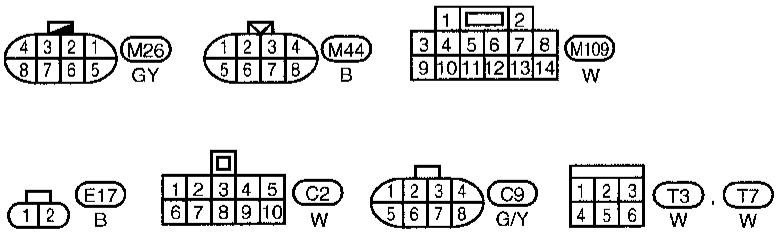

AEL276A

NOTES

Clearance, License, Tail and Stop Lamps/Wiring Diagram –TAIL/L–

EL-TAIL/L-01

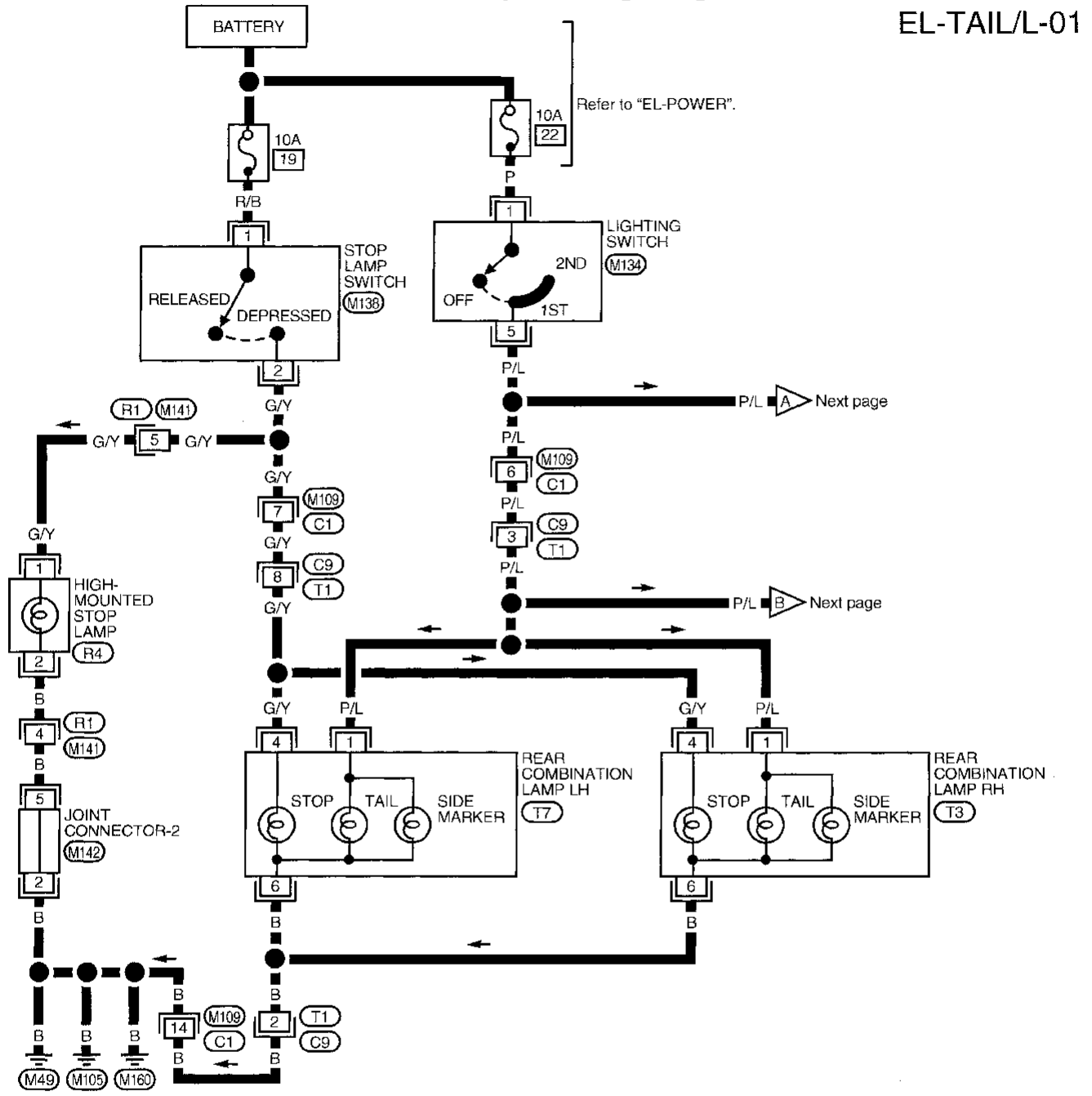

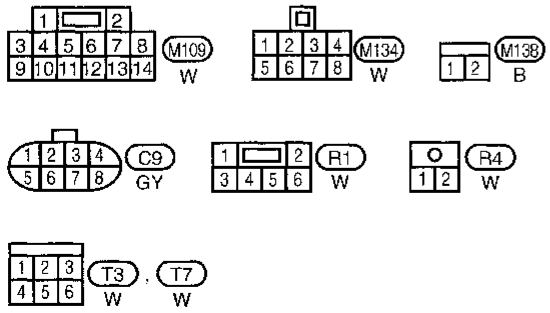

Refer to last page (Foldout page).
M142

AEL283A-A

Clearance, License, Tail and Stop Lamps/Wiring Diagram –TAIL/L– (Cont'd)

EL-TAIL/L-02

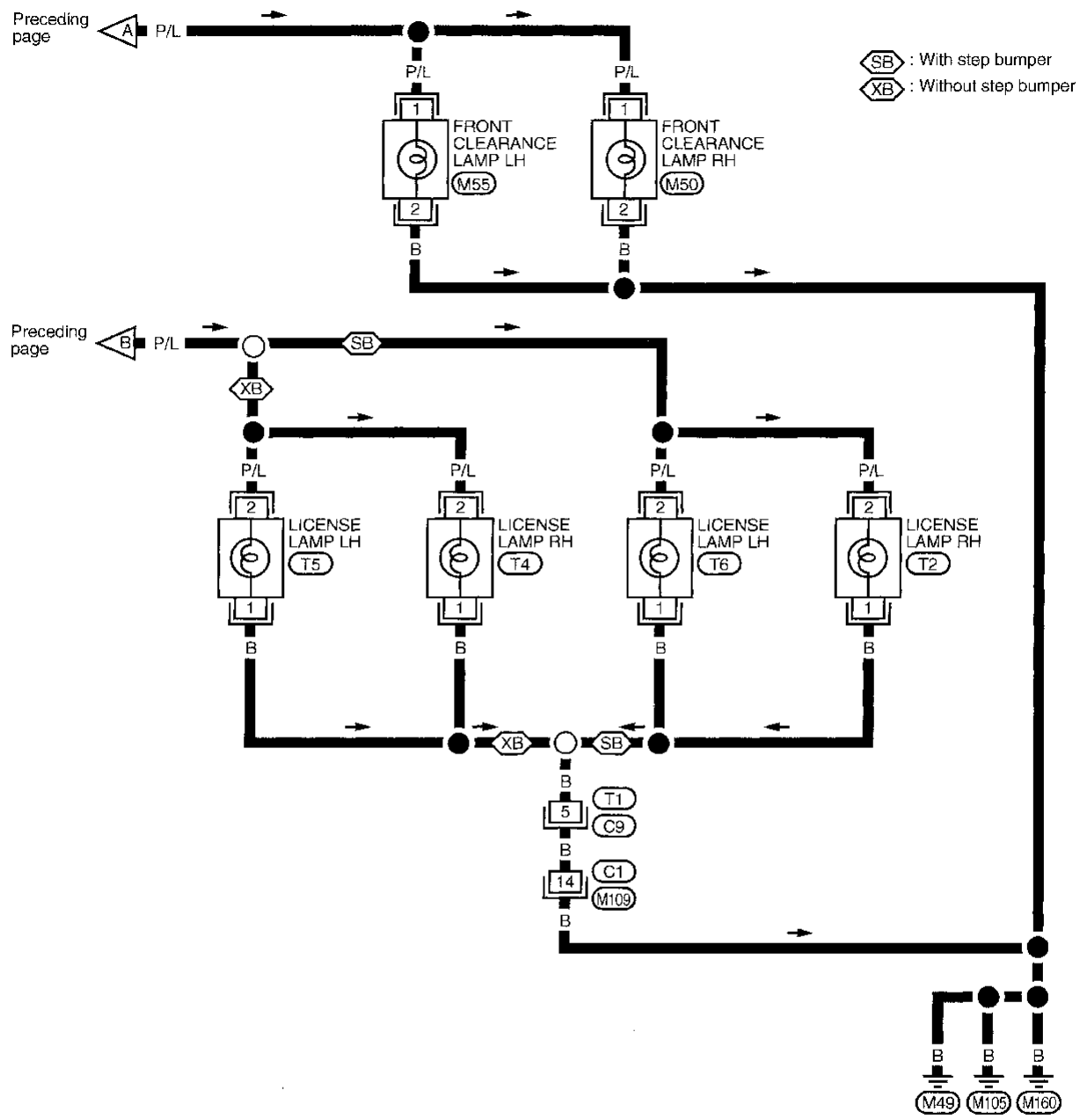

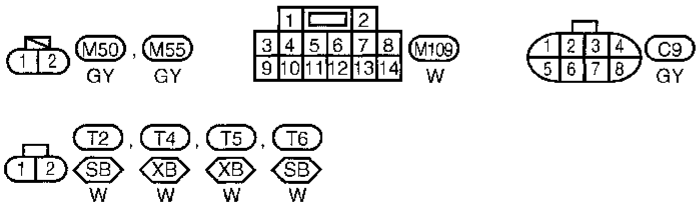

AEL283A-B

Turn Signal and Hazard Warning Lamps/System Description

TURN SIGNAL OPERATION

With the hazard switch in the OFF position and the ignition switch in the ON or START position, power is supplied:

- through 10A fuse (No. 10 , located in the fuse block)
- to hazard switch terminal ⑧
- through terminal ⑦ of the hazard switch
- to combination flasher unit terminal ①
- through terminal ③ of the combination flasher unit
- to turn signal switch terminal ⑤.

Ground is supplied to combination flasher unit terminal ② through body grounds M49 , M105 and M160 .

LH turn

With the turn signal switch in the LH position, power is supplied from turn signal switch terminal ③ to:

- front turn signal lamp LH terminal ②
- rear combination lamp LH terminal ②, and
- combination meter terminal ⑨.

Ground is supplied:

- to front turn signal lamp LH terminal ①
- to rear combination lamp LH terminal ⑥, and
- to combination meter terminal ㊷
- through body grounds M49 , M105 and M160 .

With power and ground supplied, the combination flasher unit controls the flashing of the LH turn signal lamps.

RH turn

With the turn signal switch in the RH position, power is supplied from turn signal switch terminal ⑥ to:

- front turn signal lamp RH terminal ②
- rear combination lamp RH terminal ②, and
- combination meter terminal ㉟.

Ground is supplied:

- to front turn signal lamp RH terminal ①
- to rear combination lamp RH terminal ⑥, and
- to combination meter terminal ㊷
- through body grounds M49 , M105 and M160 .

With power and ground supplied, the combination flasher unit controls the flashing of the RH turn signal lamps.

HAZARD LAMP OPERATION

Power is supplied at all times to hazard switch terminal ② through:

- 10A fuse (No. 18 , located in the fuse block).

With the hazard switch in the ON position, power is supplied:

- through terminal ⑦ of the hazard switch
- to combination flasher unit terminal ①
- through terminal ③ of the combination flasher unit
- to hazard switch terminal ①.

Ground is supplied to combination flasher unit terminal ② through body grounds M49 , M105 and M160 .

Power is supplied through terminal ③ of the hazard switch to

- front turn signal lamp LH terminal ②
- rear combination lamp LH terminal ②, and
- combination meter terminal ⑨.

Power is supplied through terminal ④ of the hazard switch to

- front turn signal lamp RH terminal ②
- rear combination lamp RH terminal ②, and
- combination meter terminal ㉟.

Ground is supplied:

- to terminal ① of the front turn signal lamps
- to terminal ⑥ of the rear combination lamps, and
- to combination meter terminal ㊷
- through body grounds M49 , M105 and M160 .

With power and ground supplied, the combination flasher unit controls the flashing of the hazard warning lamps.

NOTES

Turn Signal and Hazard Warning Lamps/Wiring Diagram –TURN–

EL-TURN-01

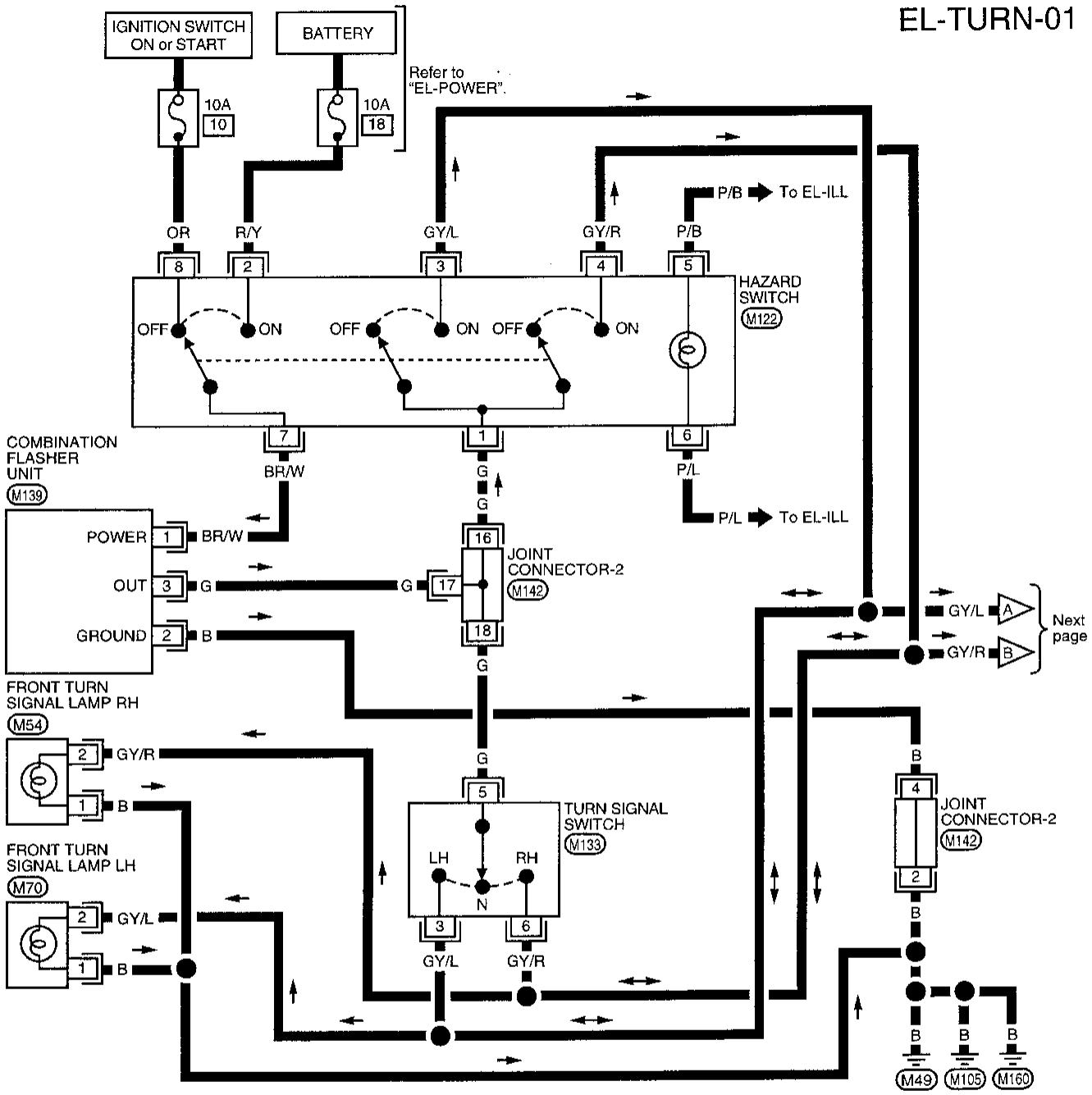

Refer to last page (Foldout page).
M142

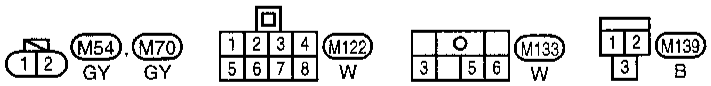

AEL282A-A

Turn Signal and Hazard Warning Lamps/Wiring Diagram –TURN– (Cont'd)

EL-TURN-02

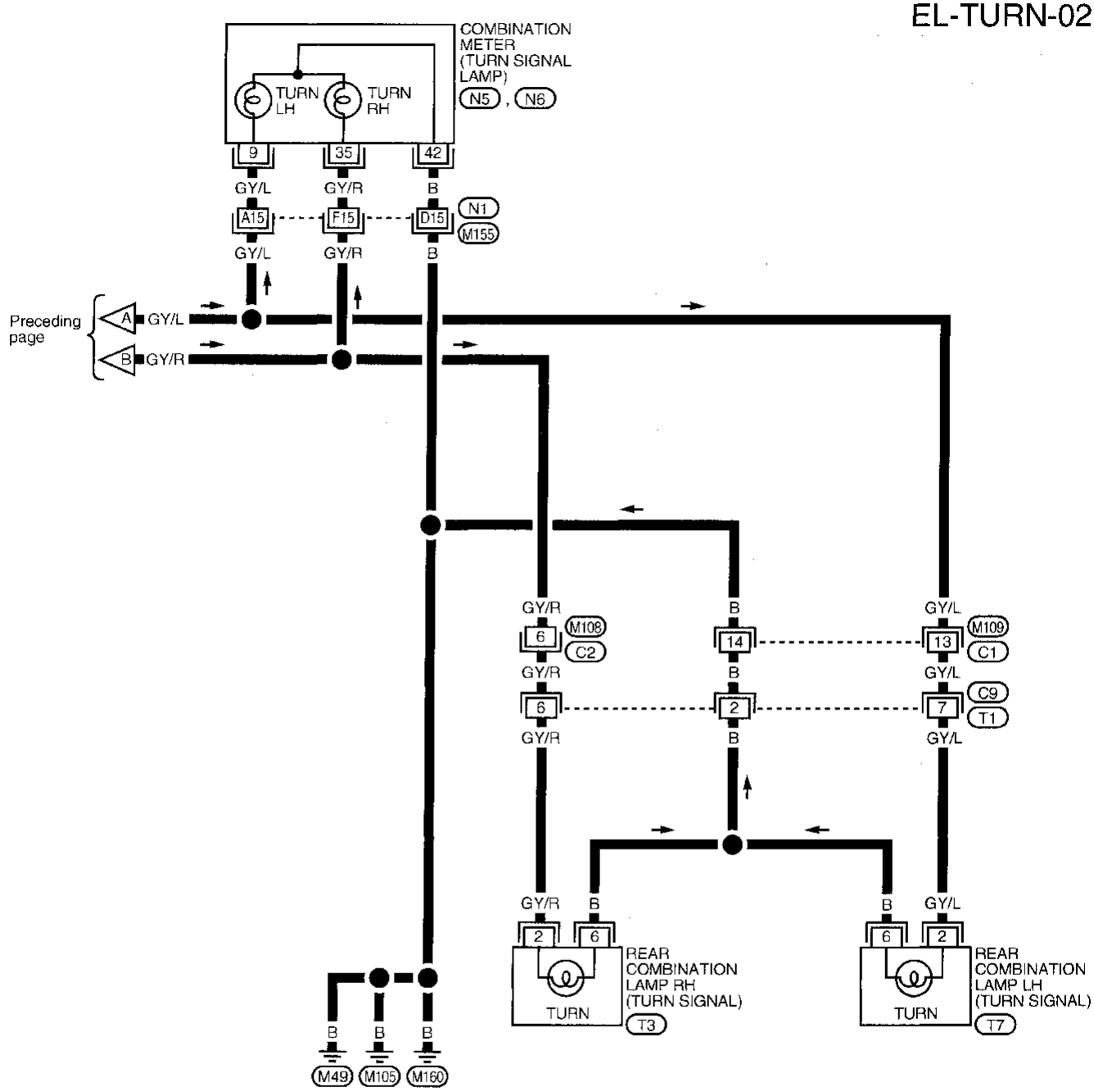

Refer to last page (Foldout page).
M155, N1

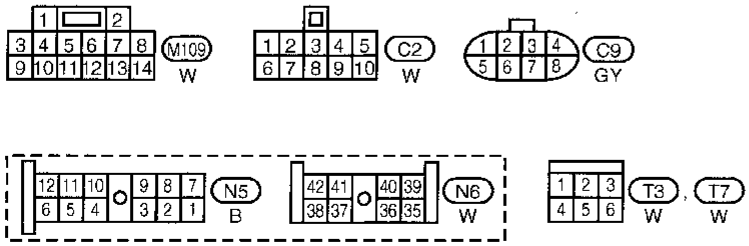

AEL282A-B

Turn Signal and Hazard Warning Lamps/Trouble Diagnoses

Symptom	Possible cause	Repair order
Turn signal and hazard warning lamps do not operate.	1. Hazard switch 2. Combination flasher unit 3. Open in combination flasher unit circuit	1. Check hazard switch. 2. Refer to combination flasher unit check. 3. Check wiring to combination flasher unit for open circuit.
Turn signal lamps do not operate but hazard warning lamps operate.	1. 10A fuse 2. Hazard switch 3. Turn signal switch 4. Open in turn signal switch circuit	1. Check 10A fuse (No. 10 , located in fuse block). Turn ignition switch ON and verify battery positive voltage is present at terminal 8 of hazard switch. 2. Check hazard switch. 3. Check turn signal switch. 4. Check G wire between combination flasher unit and turn signal switch for open circuit.
Hazard warning lamps do not operate but turn signal lamps operate.	1. 10A fuse 2. Hazard switch 3. Open in hazard switch circuit	1. Check 10A fuse (No. 18 , located in fuse block). Verify battery positive voltage is present at terminal 2 of hazard switch. 2. Check hazard switch. 3. Check G wire between combination flasher unit and hazard switch for open circuit.
Front turn signal lamp LH or RH does not operate.	1. Bulb 2. Grounds M49 , M105 and M160	1. Check bulb. 2. Check grounds M49 , M105 and M160 .
Rear turn signal lamp LH or RH does not operate.	1. Bulb 2. Grounds M49 , M105 and M160	1. Check bulb. 2. Check grounds M49 , M105 and M160 .
LH and RH turn indicators do not operate.	1. Grounds M49 , M105 and M160	1. Check grounds M49 , M105 and M160 .
LH or RH turn indicator does not operate.	1. Bulb	1. Check bulb in combination meter.

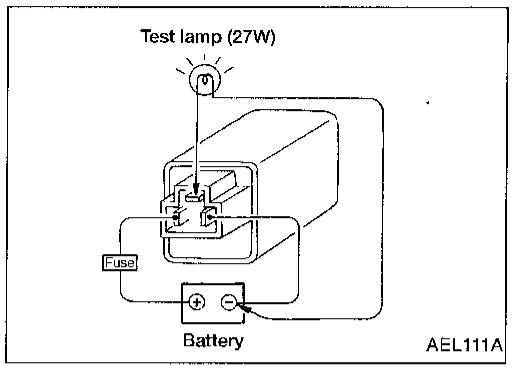

Combination Flasher Unit Check

- Before checking, ensure that bulbs meet specifications.
- Connect a battery and test lamp to the combination flasher unit, as shown. Combination flasher unit is properly functioning if it blinks when power is supplied to the circuit.

Bulb Specifications

HEADLAMPS

Item	Wattage (W)	Bulb No.
Conventional bulb	65/55	6052
Halogen bulb	65/35	H6059

OTHER LAMPS

Item	Wattage (W)	Bulb No.
Front turn signal lamp	27	1156
Front clearance lamp	3.8	194
Rear combination lamp		
Turn signal	27	1156
Stop/Tail	27/8	1157
Back-up	27	1156
Rear side marker	3.4	194
License plate lamp	3.8 or 5	168 (For 3.8W lamp)
High-mounted stop lamp	2.3	2723

Illumination/System Description

Power is supplied at all times:

- through 10A fuse (No. 22 , located in the fuse block)
- to lighting switch terminal ①.

The lighting switch must be in the 1ST or 2ND position for illumination.
The illumination control switch is a thumbwheel that controls the amount of current to the illumination system. As the amount of current increases, the illumination becomes brighter.
The glove box lamp is not controlled by the illumination control switch. The intensity of this lamp does not change.
The clock display (if equipped) will dim when the lighting switch is turned to the 1ST or 2ND position.
The following chart shows the power and ground connector terminals for the components included in the illumination system.

Component	Power terminal	Ground terminal
Illumination control switch	⑤	②
Glove box lamp	①	②
Clock*	㉚	⑤
Combination meter	㊵	⑤
ASCD main switch*	④	⑤
Hazard switch	⑥	⑤
A/T device indicator*	③	④
Heater	②	①
Radio	⑧	⑦

* If equipped.

With the exception of the glove box lamp, the ground for all of the components is controlled through terminals ③ and ⑥ of the illumination control switch and body grounds M49 , M105 and M160 .
When the glove box is open, glove box lamp terminal ② is grounded through glove box lamp switch and body grounds M49 , M105 and M160 .

Illumination/Schematic

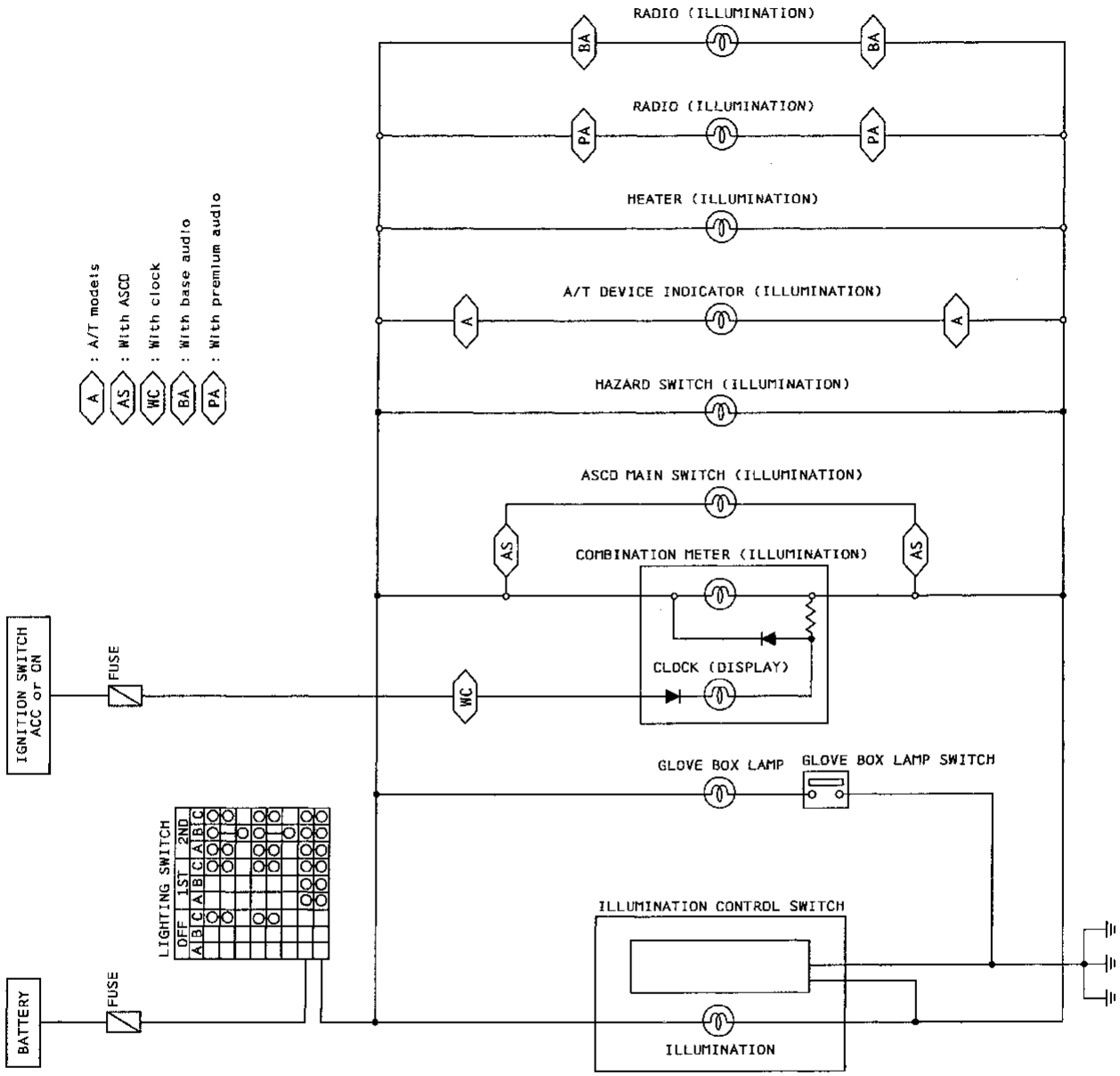

AEL297A

Illumination/Wiring Diagram –ILL–

EL-ILL-01

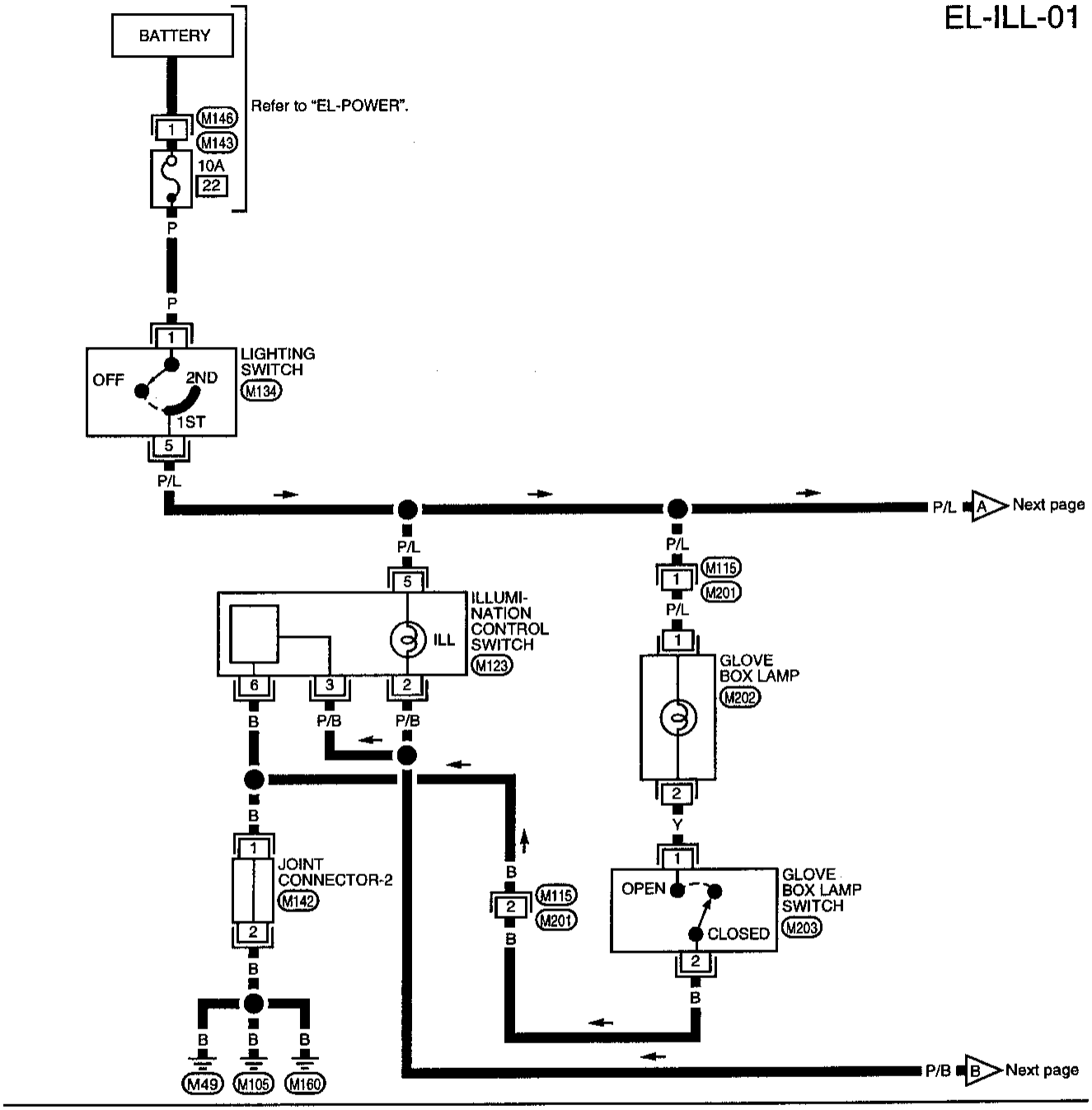

Refer to last page (Foldout page).
M142

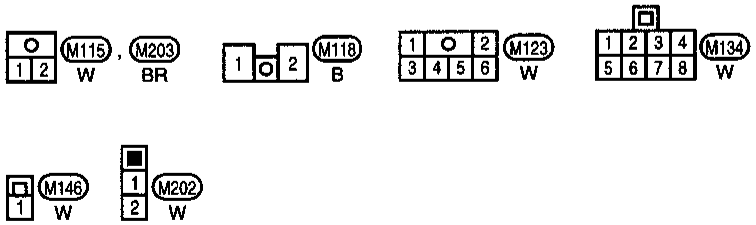

AEL298A-A

Illumination/Wiring Diagram –ILL– (Cont'd)

EL-ILL-02

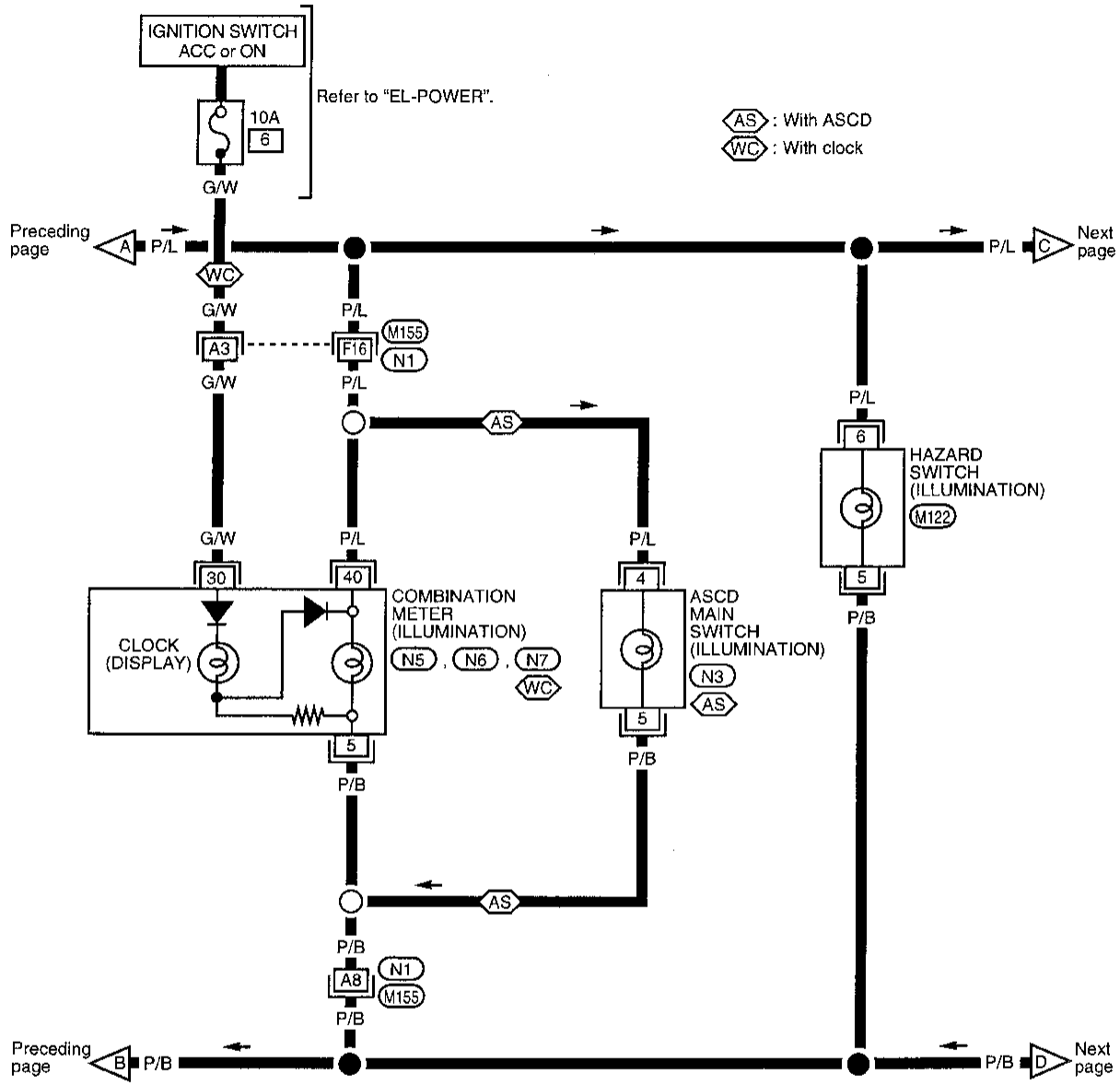

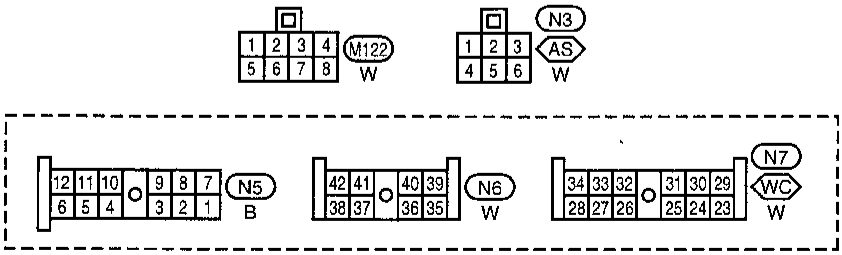

Refer to last page (Foldout page).
M155 , N1

AEL298A-B

EL-ILL-03

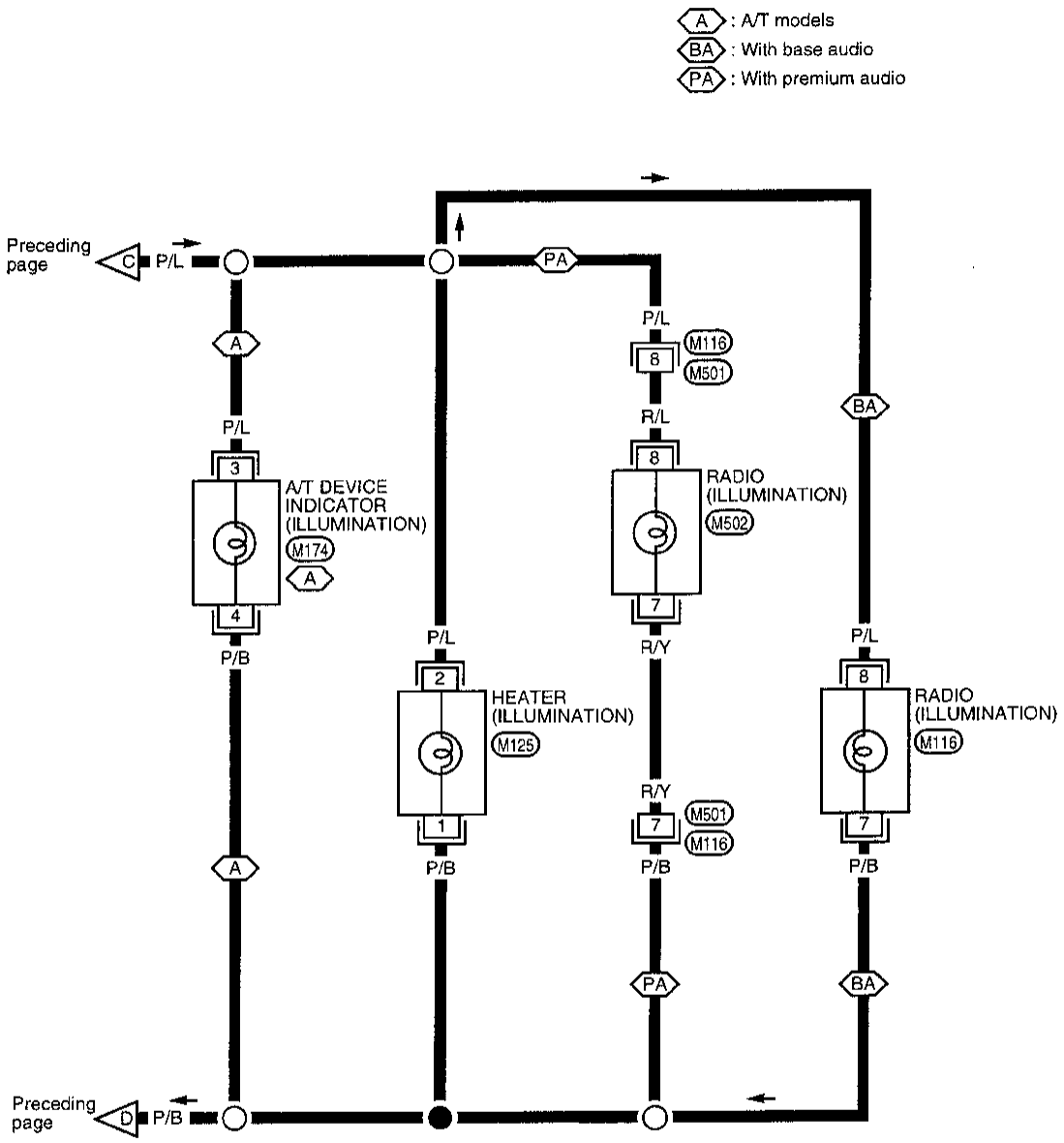

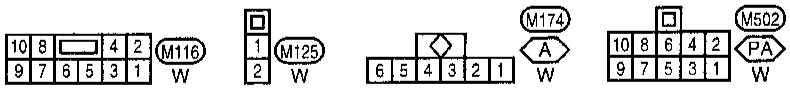

AEL298A-C

Interior and Map Lamps/ Wiring Diagram –INT/L–

EL-INT/L-01

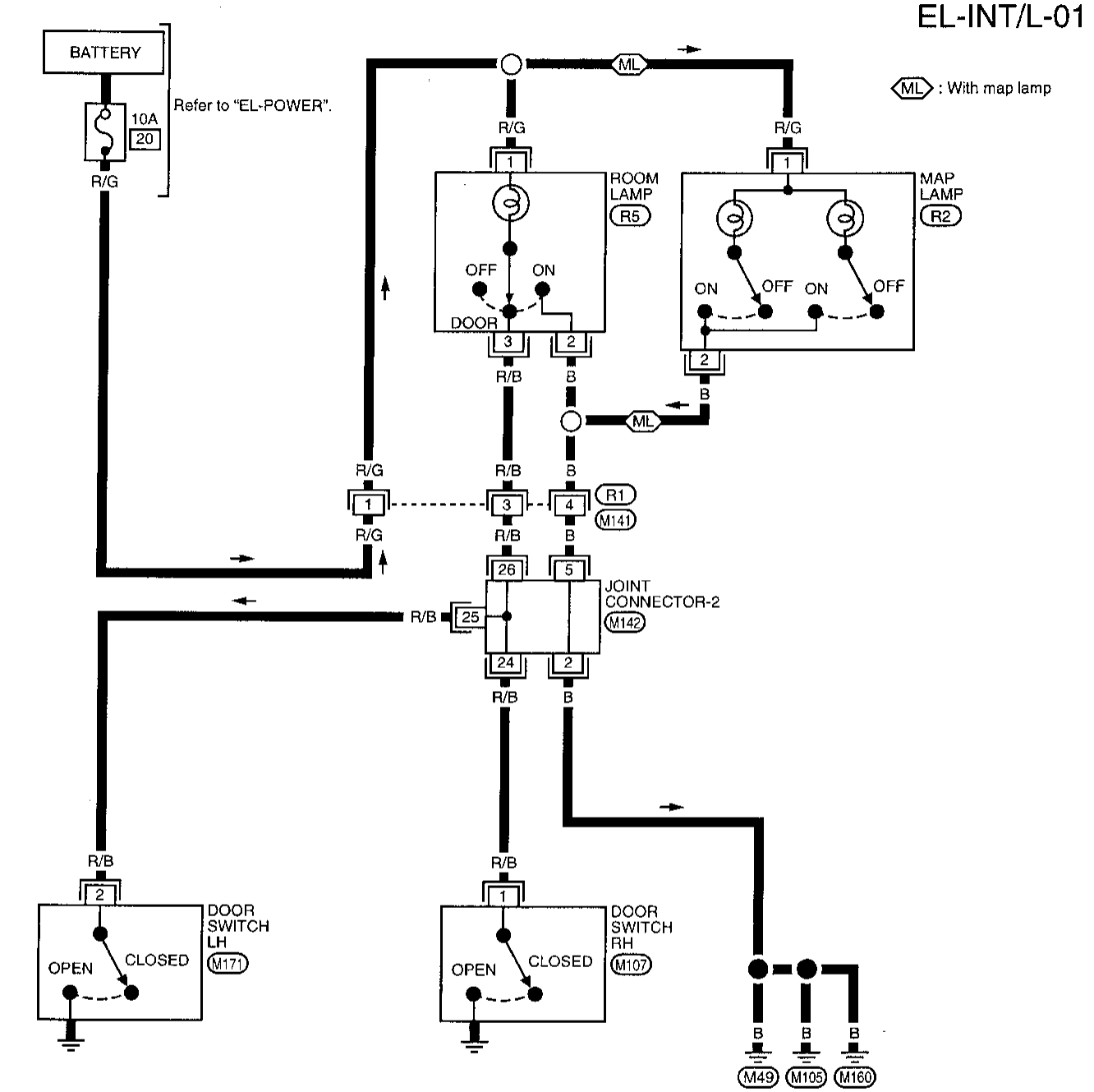

Refer to last page (Foldout page).
M142

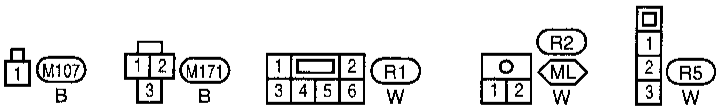

AEL279A

Bulb Specifications

Item	Wattage (W)	Bulb No.
Interior lamp	10	—
Map lamp	8	—

System Description

With the ignition switch in the ON or START position, power is supplied:
- through 10A fuse (No. 11 , located in the fuse block)
- to combination meter terminal ⑰ for the water temperature gauge, fuel gauge, speedometer and tachometer (if equipped).

Ground is supplied:
- to combination meter terminal ㉑ [and terminal ㊷ (with tachometer)]
- through body grounds (M49) , (M105) and (M160) .

WATER TEMPERATURE GAUGE

The water temperature gauge indicates the engine coolant temperature. The reading on the gauge is based on the resistance of the the thermal transmitter.
As the temperature of the coolant increases, the resistance of the thermal transmitter decreases. A variable ground is supplied to terminal ㉛ (without tachometer) or ③ (with tachometer) of the combination meter for the water temperature gauge. The needle on the gauge moves from "C" to "H".

TACHOMETER

The tachometer indicates engine speed in revolutions per minute (rpm).
The tachometer is regulated by a signal:
- from terminal ③ of the ECM (ECCS control module)
- to combination meter terminal ㉝ for the tachometer.

FUEL GAUGE

The fuel gauge indicates the approximate fuel level in the fuel tank.
The fuel gauge is regulated by a variable ground signal supplied:
- to combination meter terminal ⑧ for the fuel gauge
- from terminal ① of the fuel tank gauge unit
- through terminal ④ of the fuel tank gauge unit and
- through ECM (ECCS control module) terminal ㊿.

SPEEDOMETER

The vehicle speed sensor provides a voltage signal to the combination meter for the speedometer.
The voltage is supplied:
- to combination meter terminals ㉒ and ㉘ for the speedometer
- from terminals ① and ② of the vehicle speed sensor.

The speedometer converts the voltage into the vehicle speed displayed.

Combination Meter

WITH TACHOMETER

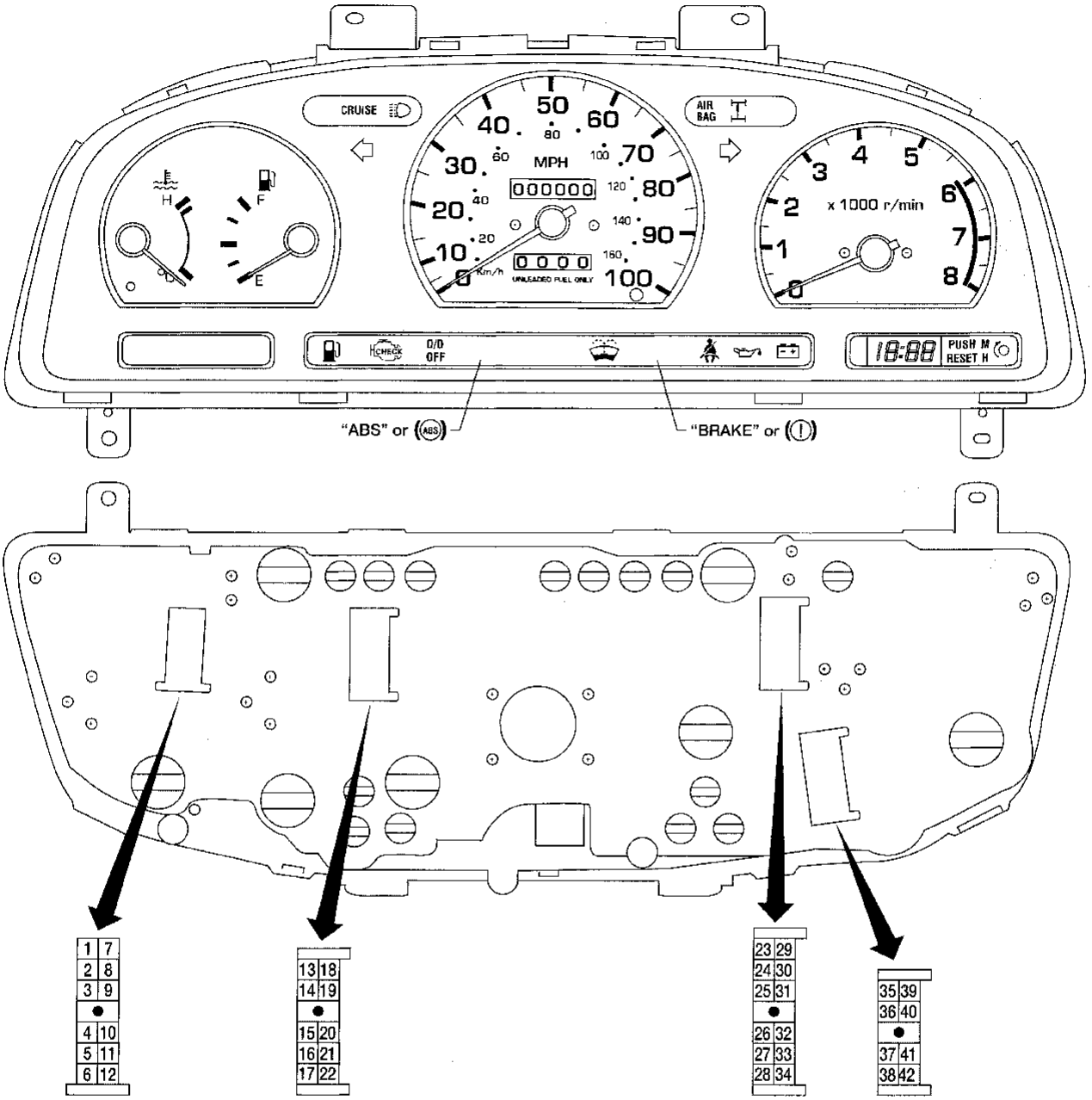

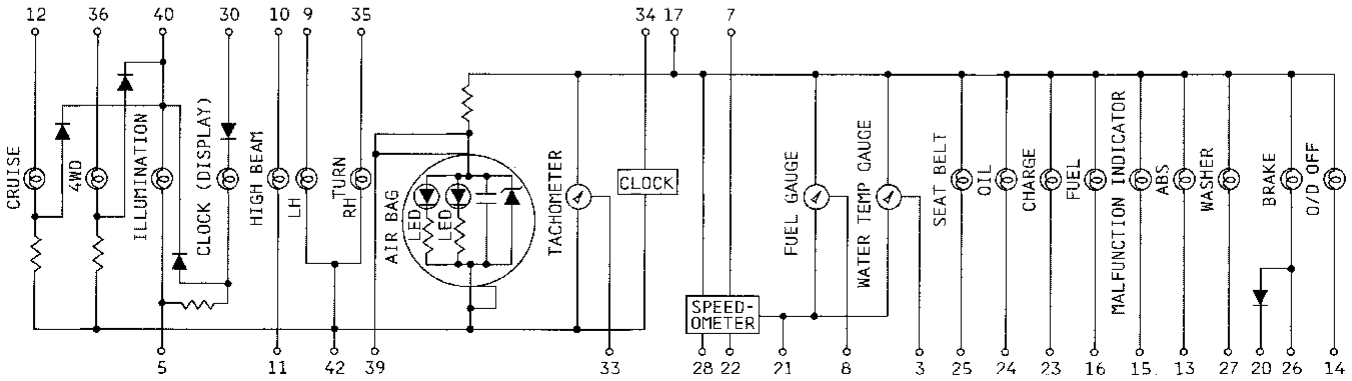

AEL310A

Combination Meter (Cont'd)

WITHOUT TACHOMETER

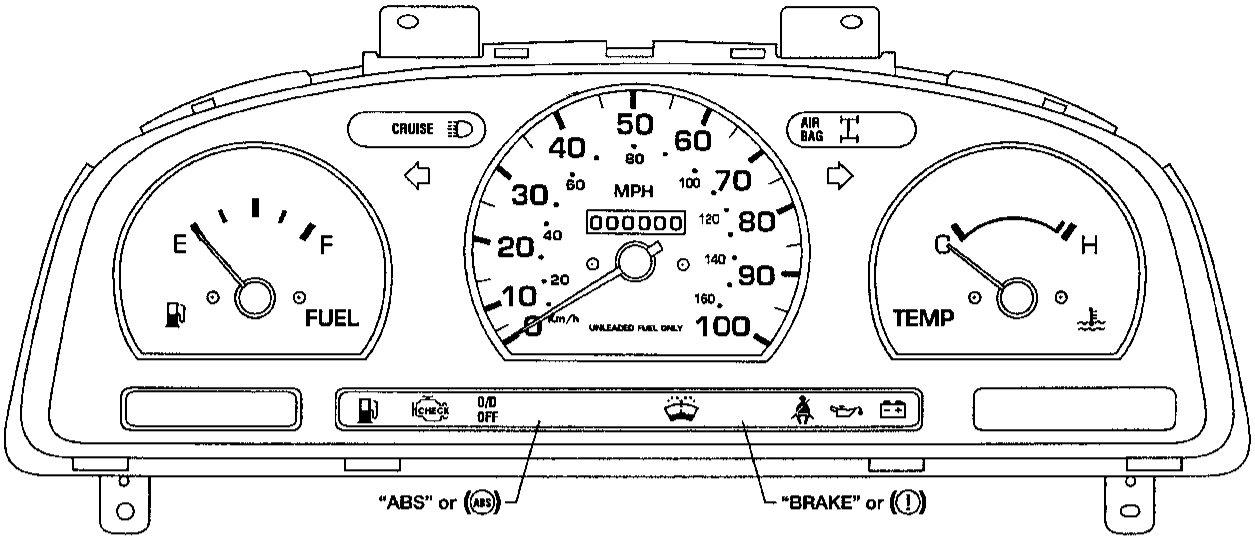

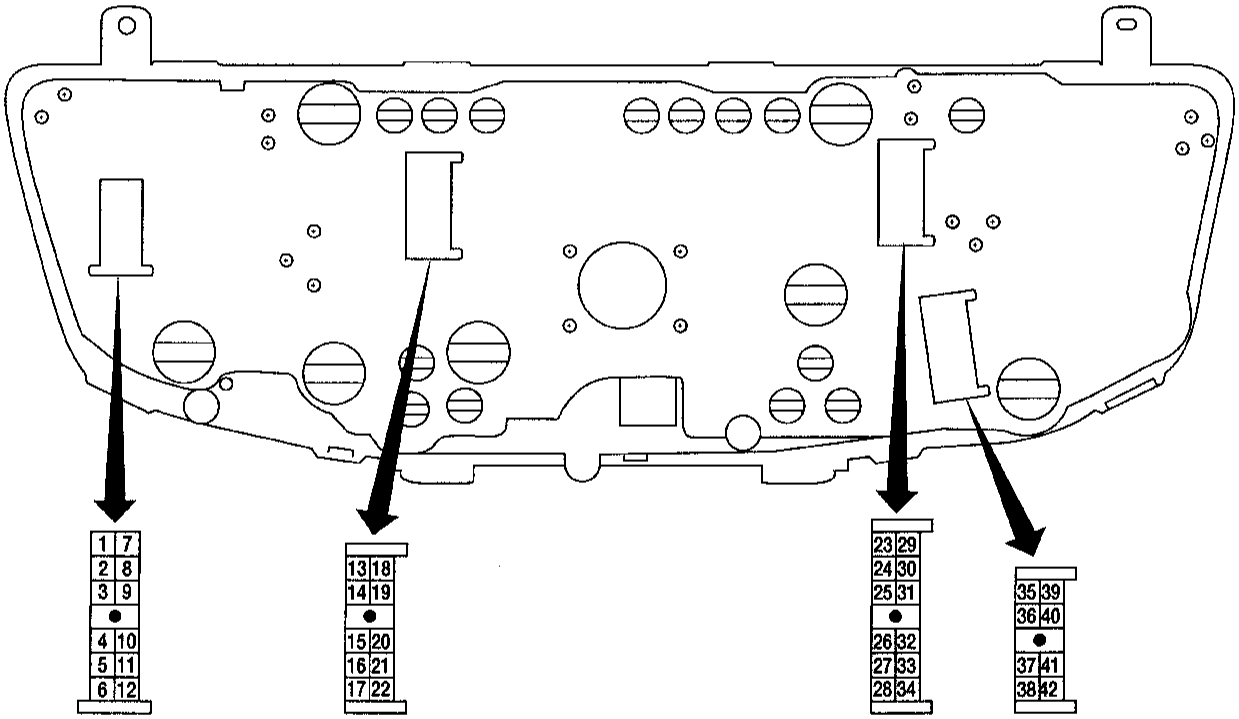

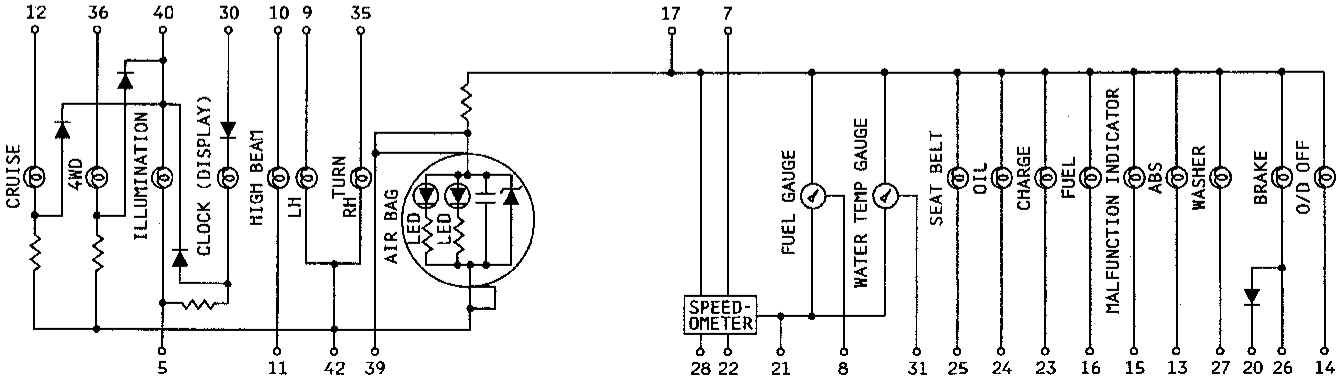

AEL311A

Speedometer, Tachometer, Temp. and Fuel Gauges/Wiring Diagram –METER–

EL-METER-01

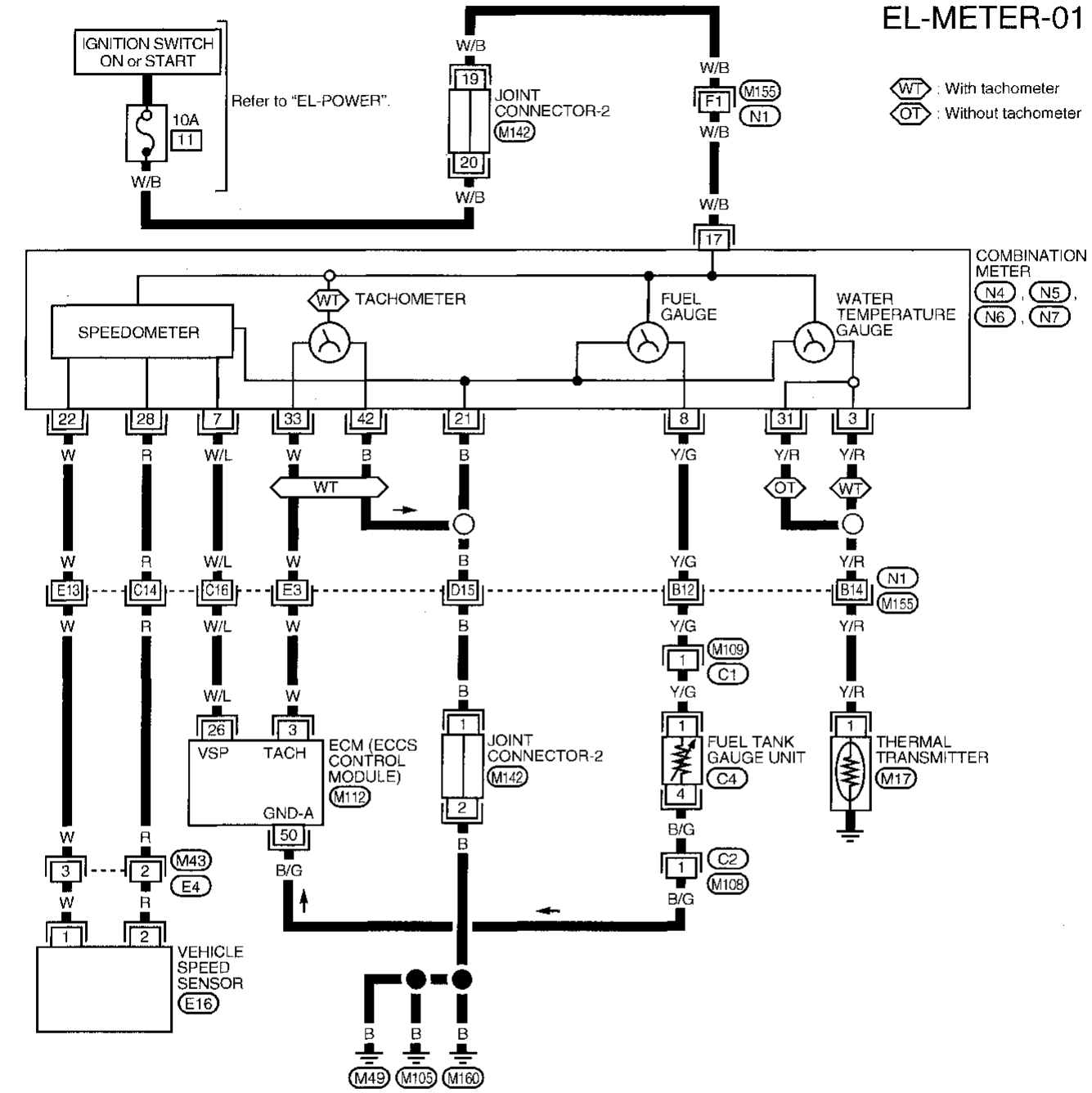

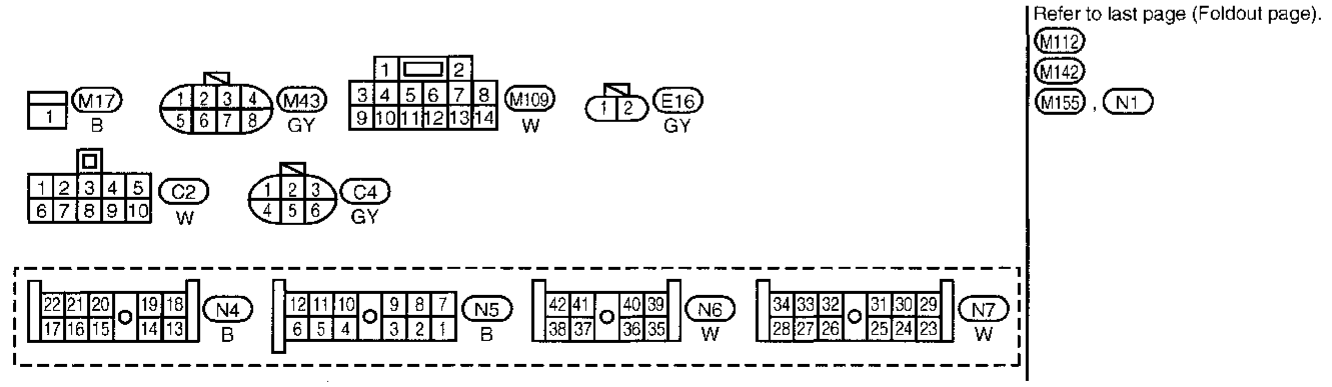

Refer to last page (Foldout page).
M112
M142
M155, N1

AEL290A

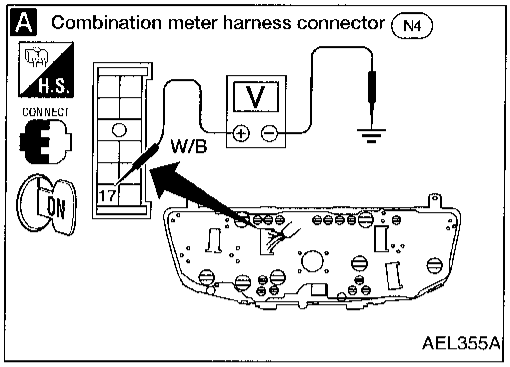

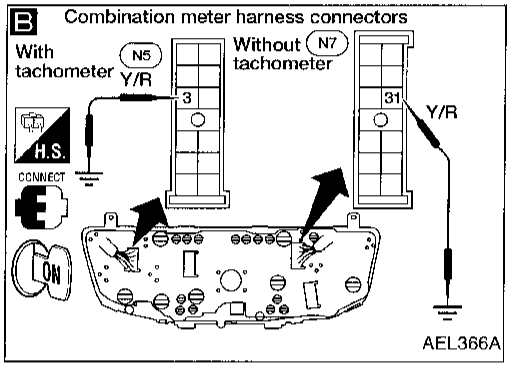

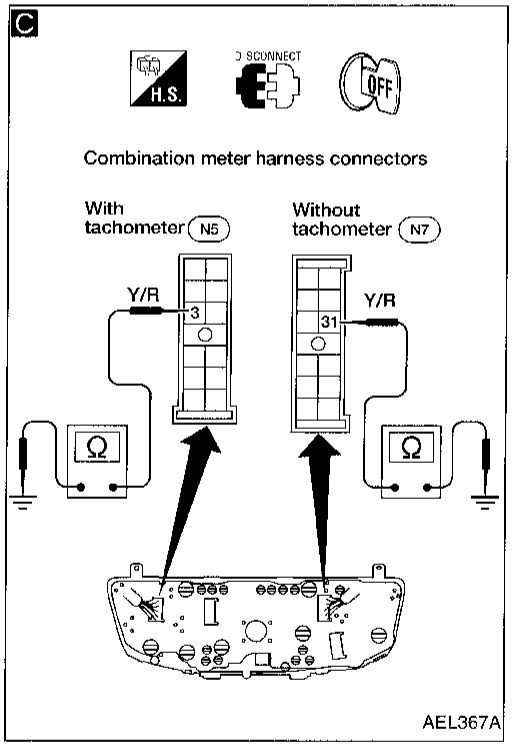

Inspection/Water Temperature Gauge

INSPECTION START

A

CHECK POWER SOURCE.
1. Turn ignition switch ON.
2. Check voltage between terminal ⑰ and ground.
Battery positive voltage should exist.

NG → Check the following items:
- Harness continuity between battery terminal and combination meter
- Ignition relay-1
- Fusible link and fuse
- Ignition switch

OK ↓

B

CHECK GAUGE OPERATION.
1. Turn ignition switch ON.
2. Connect terminal ③ (with tachometer) or ㉛ (without tachometer) to ground with wire for **less than 1 second.**
3. Check operation of gauge.
Gauge should move smoothly to full scale.

NG → Repair or replace gauge.

OK ↓

CHECK THERMAL TRANSMITTER.
Perform "Thermal Transmitter Check".
Refer to EL-74.

NG → Repair or replace.

OK ↓

C

CHECK HARNESS CONTINUITY.
Check harness continuity between terminal ③ (with tachometer) or ㉛ (without tachometer) and ground.
Continuity should exist.
If OK, check harness for short.

NG → Repair or replace.

OK ↓

Reinstall any part removed.

↓

INSPECTION END

Inspection/Fuel Gauge

	INCIDENT	Flow chart No.
1	Fuel gauge always reads empty	1
2	Fuel gauge reads inaccurately	2
3	Fuel gauge always reads full	3

INSPECTION START

A 1

CHECK POWER SOURCE.
1. Turn ignition switch ON.
2. Check voltage between terminal ⑰ and ground.
Battery positive voltage should exist.

NG → Check the following items:
- Harness continuity between battery terminal and combination meter
- Ignition relay-1
- Fusible link and fuse
- Ignition switch

OK

B 2 3

CHECK GAUGE OPERATION.
1. Turn ignition switch ON.
2. Connect terminal ⑧ to ground with wire for **approx. 90 seconds.**
3. Check operation of gauge.
Gauge should move smoothly to full scale.

NG → Repair or replace gauge.

OK

CHECK FUEL TANK GAUGE UNIT.
Perform "Fuel Tank Gauge Unit Check".
Refer to EL-74.

NG → Repair or replace.
Refer to FE section ("Fuel Pump and Gauge", "FUEL SYSTEM").

OK

C

CHECK HARNESS CONTINUITY.
Check harness continuity between terminal ⑧ and ground.
Continuity should exist.
If OK, check harness for short.

NG → Repair or replace.

OK

Reinstall any part removed.

INSPECTION END

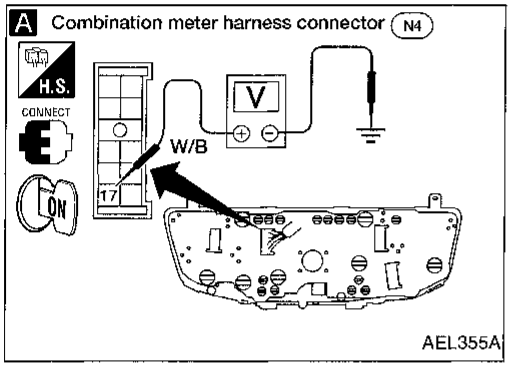

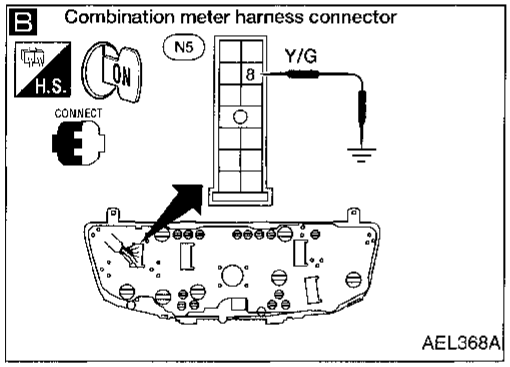

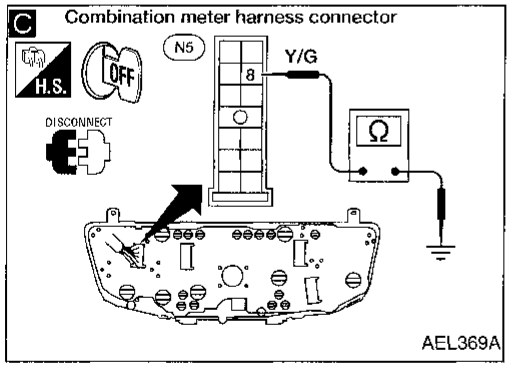

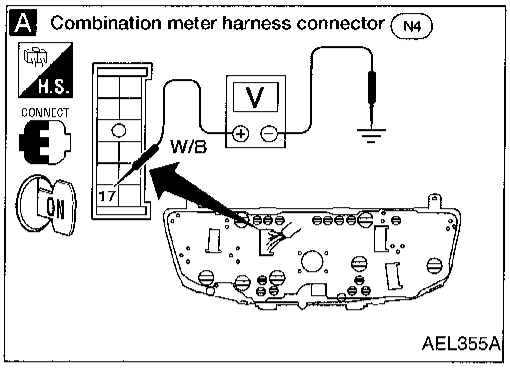

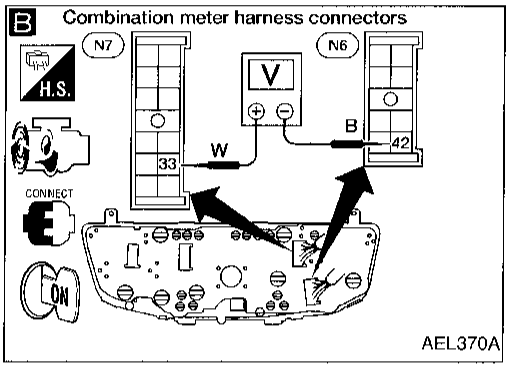

Inspection/Tachometer

INSPECTION START

A

CHECK POWER SOURCE.
1. Turn ignition switch ON.
2. Check voltage between terminal (17) and ground.
   Battery voltage should exist.

NG → Check the following items:
- Harness continuity between battery terminal and combination meter
- Ignition relay-1
- Fusible link and fuse
- Ignition switch

OK ↓

B

CHECK ECM OUTPUT.
1. Start engine.
2. Check voltage between terminals (33) and (42) at idle and 2,000 rpm.
   Higher rpm = Higher voltage
   Lower rpm = Lower voltage
   Voltage should change with rpm.

NG → Check harness and connector between ECM and combination meter, or check ground.

OK ↓

Replace tachometer.

↓

INSPECTION END

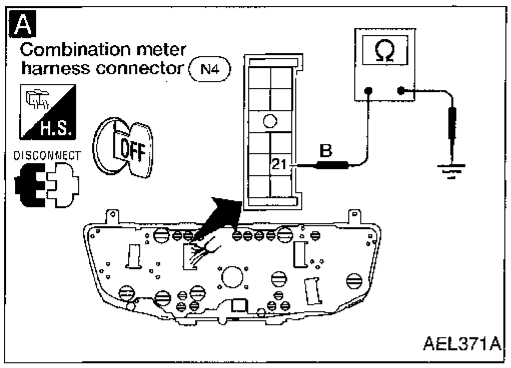

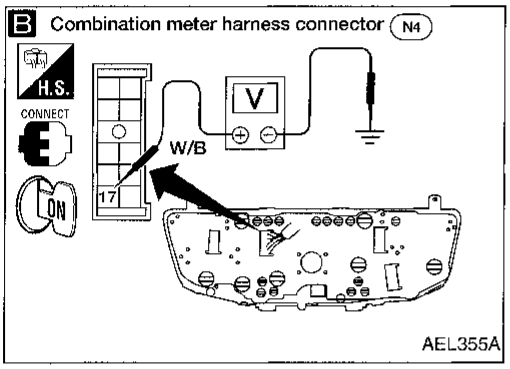

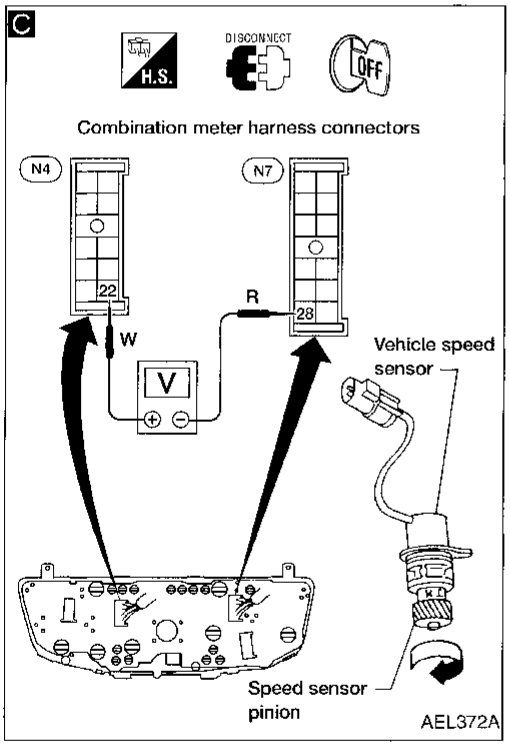

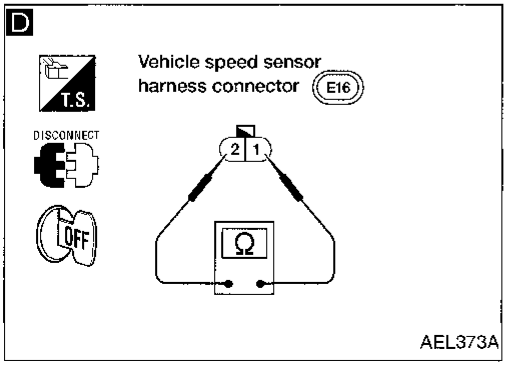

Inspection/Speedometer and Vehicle Speed Sensor

SYMPTOM: Speedometer stays at 0 km/h (0 MPH).

INSPECTION START

A

CHECK GROUND CIRCUIT OF SPEEDOMETER.
Check continuity between terminal 21 and body ground.
Continuity should exist.

NG → Repair harness or connector.

OK ↓

B

CHECK POWER SOURCE
1. Turn ignition switch ON.
2. Check voltage between terminal 17 and body ground.
Battery voltage should exist.

NG → Check the following items:
- Harness continuity between battery terminal and combination meter
- Ignition relay-1
- Fusible link and fuse
- Ignition switch

OK ↓

C

CHECK VEHICLE SPEED SENSOR OUTPUT.
1. Remove vehicle speed sensor from transmission. Leave harness connector connected.
2. Check voltage between terminal 22 and 28 while quickly turning vehicle speed sensor pinion.
Voltage: Approx. 0.5V (AC)

OK → Replace speedometer.

NG ↓

D

CHECK VEHICLE SPEED SENSOR.
Check resistance between terminals 1 and 2.
Resistance: Approx. 250Ω.

NG → Replace vehicle speed sensor.

OK ↓

Repair harness or connector between speedometer and vehicle speed sensor.

INSPECTION END

Inspection/Speedometer and Vehicle Speed Sensor (Cont'd)

SYMPTOM: Speedometer indication flutters.

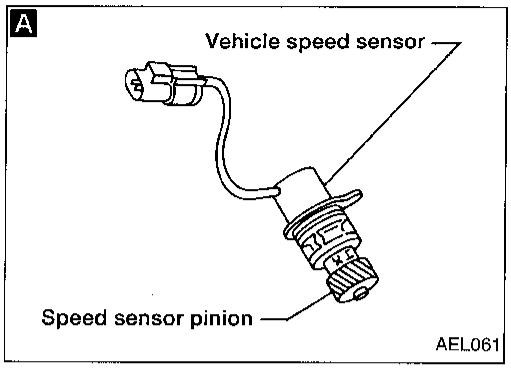

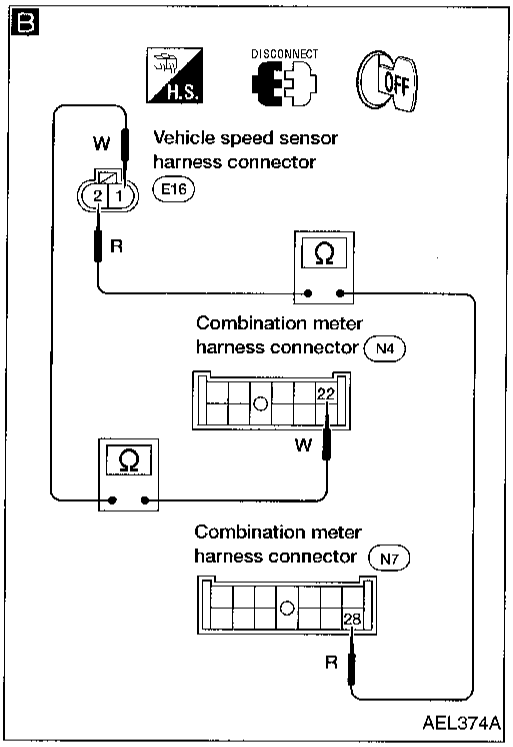

INSPECTION START

↓

Is vehicle speed sensor installed properly? Check for looseness. — NG → Install vehicle speed sensor properly.

OK ↓

A

CHECK VEHICLE SPEED SENSOR. Do you feel resistance when turning vehicle speed sensor pinion? — No → Replace vehicle speed sensor.

Yes ↓

B

CHECK HARNESS CONTINUITY. Check continuity between speedometer terminal (28) and vehicle speed sensor terminal (2), and between (22) and (1). **Continuity should exist.** — NG → Repair harness and connector.

OK ↓

Replace speedometer.

Inspection/Speedometer and Fuse

SYMPTOM: Speedometer does not go back to 0 km/h (0 MPH).

INSPECTION START

↓

Check fuse related to speedometer. — NG → Replace fuse.

OK ↓

Drive at over 80 km/h (50 MPH).

NG ↓

Replace speedometer.

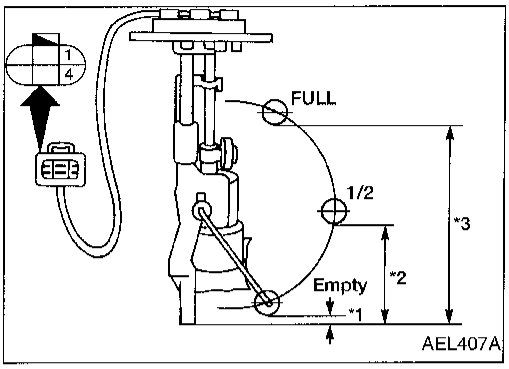

Fuel Tank Gauge Unit Check

- For removal, refer to FE section ("Fuel Pump and Gauge", "FUEL SYSTEM").

Check the resistance between terminals ① and ④.

Ohmmeter (+)	Ohmmeter (−)	Float position mm (in)			Resistance value (Ω)
①	④	*3	Full	245.0 (9.646)	Approx. 4 - 7
		*2	1/2	119.0 (4.685)	Approx. 31 - 34
		*1	Empty	12.0 (0.472)	Approx. 79 - 84

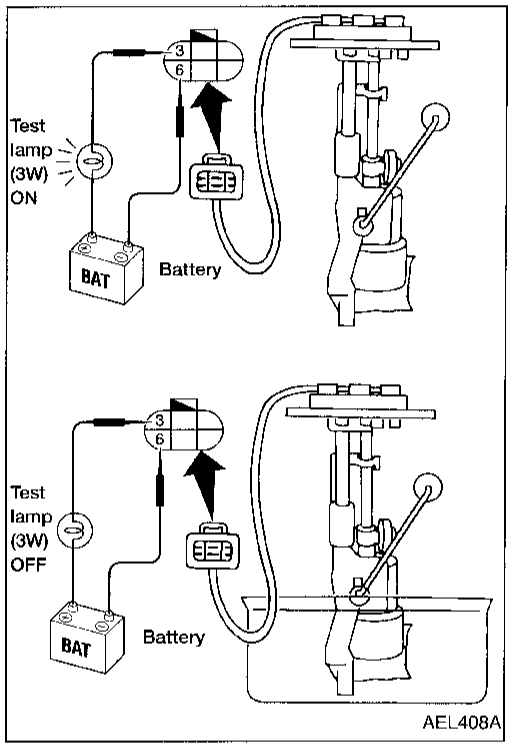

Fuel Warning Lamp Sensor Check

- It will take a short time for the bulb to light.

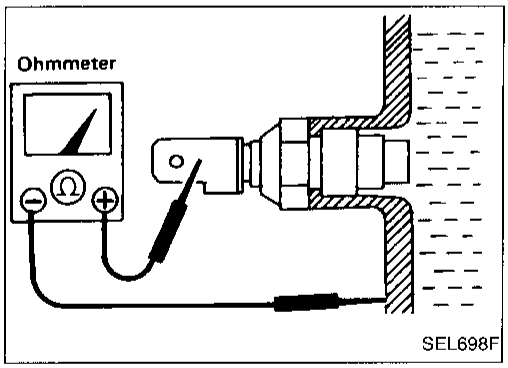

Thermal Transmitter Check

Check the resistance between the terminals of thermal transmitter and body ground.

Water temperature	Resistance
60°C (140°F)	Approx. 70 - 90Ω
100°C (212°F)	Approx. 21 - 24Ω

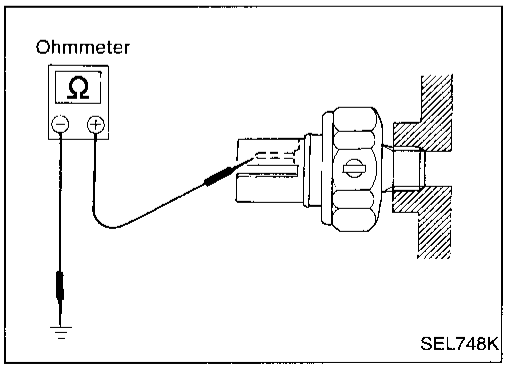

Oil Pressure Switch Check

	Oil pressure kPa (kg/cm², psi)	Continuity
Engine start	More than 10 - 20 (0.1 - 0.2, 1.4 - 2.8)	No
Engine stop	Less than 10 - 20 (0.1 - 0.2, 1.4 - 2.8)	Yes

Check the continuity between the terminals of oil pressure switch and body ground.

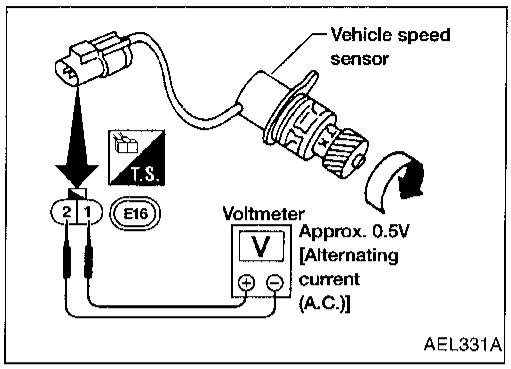

Vehicle Speed Sensor Signal Check

1. Remove vehicle speed sensor from transmission.
2. Turn vehicle speed sensor pinion quickly and measure voltage across ① and ②.

Warning Lamps/System Description

With the ignition switch in the ON or START position, power is supplied:
- through 10A fuse (No. 11, located in the fuse block)
- to combination meter terminal ⑰, and
- to 4WD switch terminal ①.

With the ignition switch in the ON or START position, power is supplied:
- through 15A fuse (No. 9 , located in the fuse block)
- to bulb check relay terminal ②.

Ground is supplied:
- to combination meter terminal ㊷,
- fuel tank gauge unit terminal ⑥,
- bulb check relay terminal ⑤,
- brake fluid level switch terminal ②, and
- washer fluid level switch terminal ② (For Canada models only)
- through body grounds M49 , M105 and M160 .

Ground is supplied to seat belt buckle switch terminal ② through body ground M177 .

AIR BAG WARNING LAMP

During prove out or when an air bag malfunction occurs, the ground path is interrupted:
- from the air bag diagnosis sensor unit terminal ⑮
- to combination meter terminal ㊴.

Ground is then supplied:
- through combination meter terminal ㊷.

With power and ground supplied, the air bag warning lamp (LEDs) illuminate.
For further information, refer to RS section ("TROUBLE DIAGNOSES").

LOW FUEL LEVEL WARNING LAMP

The amount of fuel in the fuel tank is determined by the fuel level sensor in the fuel tank. A signal is sent from fuel tank gauge unit terminal ③ to combination meter terminal ⑯. The fuel level sensor will illuminate the low fuel level warning lamp when the fuel level is low.
With power and ground supplied, the low fuel level warning lamp illuminates.

LOW OIL PRESSURE WARNING LAMP

Low oil pressure causes oil pressure switch terminal ① to provide ground to combination meter terminal ㉔.
With power and ground supplied, the low oil pressure warning lamp illuminates.

LOW WASHER FLUID LEVEL WARNING LAMP (For Canada models only)

When the washer fluid level is low, ground is supplied:
- to combination meter terminal ㉗
- from washer fluid level switch terminal ①.

With power and ground supplied, the low washer fluid level warning lamp illuminates.

SEAT BELT WARNING LAMP

When the driver's seat belt is unfastened, ground is supplied:
- to combination meter terminal ㉕
- from seat belt buckle switch terminal ①.

With power and ground supplied, the seat belt warning lamp illuminates.

MALFUNCTION INDICATOR LAMP

During prove out or when an engine control malfunction occurs, ground is supplied:
- to combination meter terminal ⑮
- from ECM terminal ⑱.

With power and ground supplied, the malfunction indicator lamp illuminates.
For further information, refer to EC section ["Malfunction Indicator Lamp (MIL)", "ON-BOARD DIAGNOSTIC SYSTEM DESCRIPTION"].

ABS WARNING LAMP

During prove out or when an ABS malfunction occurs, ground is supplied:
- to combination meter terminal ⑬
- from ABS control unit terminal ②.

With power and ground supplied, the ABS warning lamp illuminates.
For further information, refer to BR section ("Self-diagnosis", "TROUBLE DIAGNOSES").

BRAKE WARNING LAMP

When the parking brake is applied, or the brake fluid level is low, ground is supplied:
- to combination meter terminal ㉖
- from parking brake switch terminal ①, or
- brake fluid level switch terminal ①.

With power and ground supplied, the brake warning lamp illuminates.

BULB CHECK RELAY (brake warning lamp prove out)

When the ignition switch is in the ON or START position, and the generator grounds terminal ③, ground is supplied to the bulb check relay terminal ①.
With power and ground supplied, the bulb check relay is energized, providing a ground path for the brake warning lamp:
- through combination meter terminal ⑳
- to bulb check relay terminal ③.

With power and ground supplied, the brake warning lamp illuminates.

CHARGE WARNING LAMP

During prove out or when a generator malfunction occurs, ground is supplied:
- to combination meter terminal ㉓
- from generator terminal ③.

With power and ground supplied, the charge warning lamp illuminates.

4WD INDICATOR LAMP (with 4-wheel drive)

When the 4WD switch is activated, power is supplied:
- from 4WD switch terminal ①
- to combination meter terminal ㊱.

With power and ground supplied, the 4WD indicator lamp illuminates.

Warning Lamps/Schematic

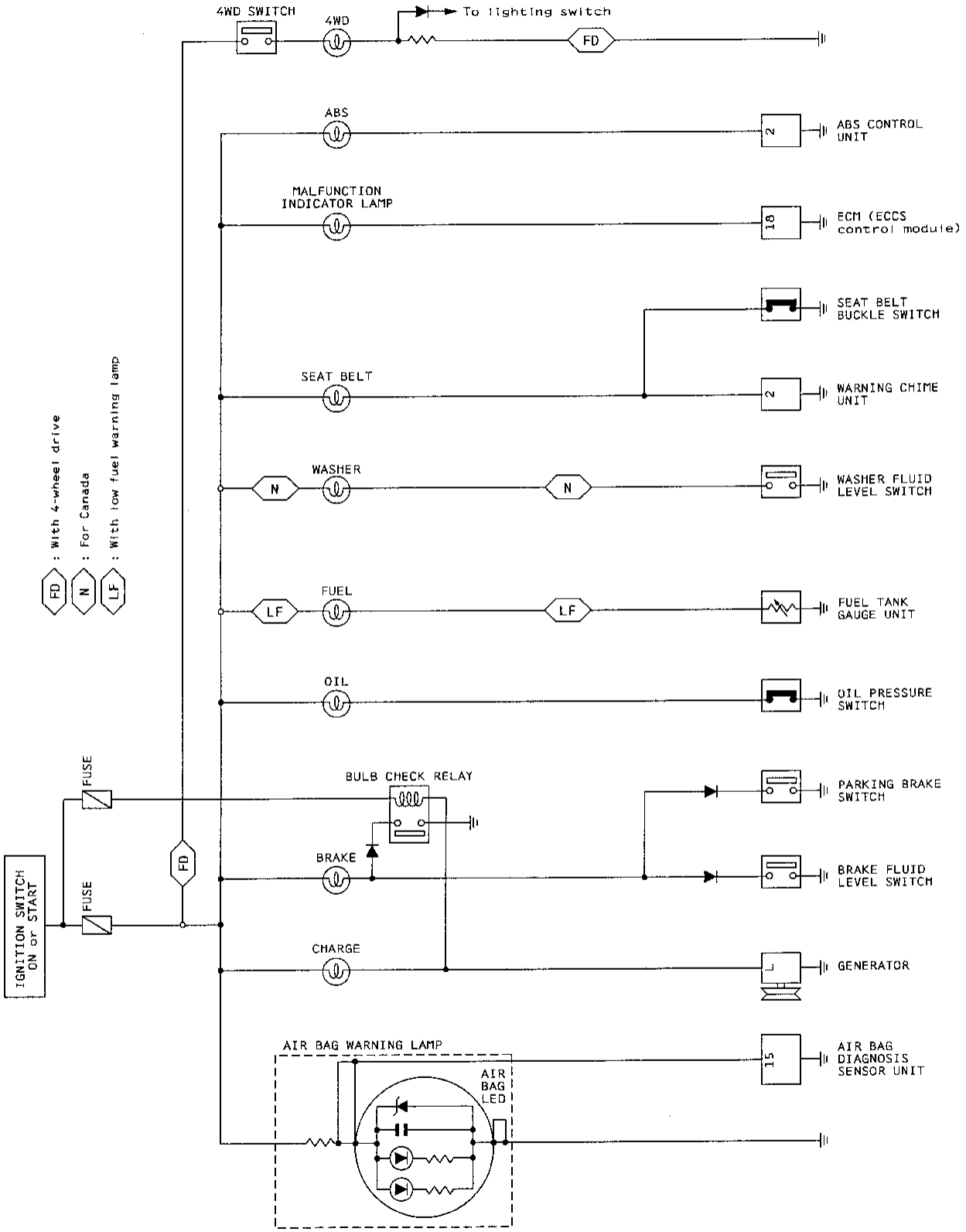

AEL295A

Warning Lamps/Wiring Diagram –WARN–

EL-WARN-01

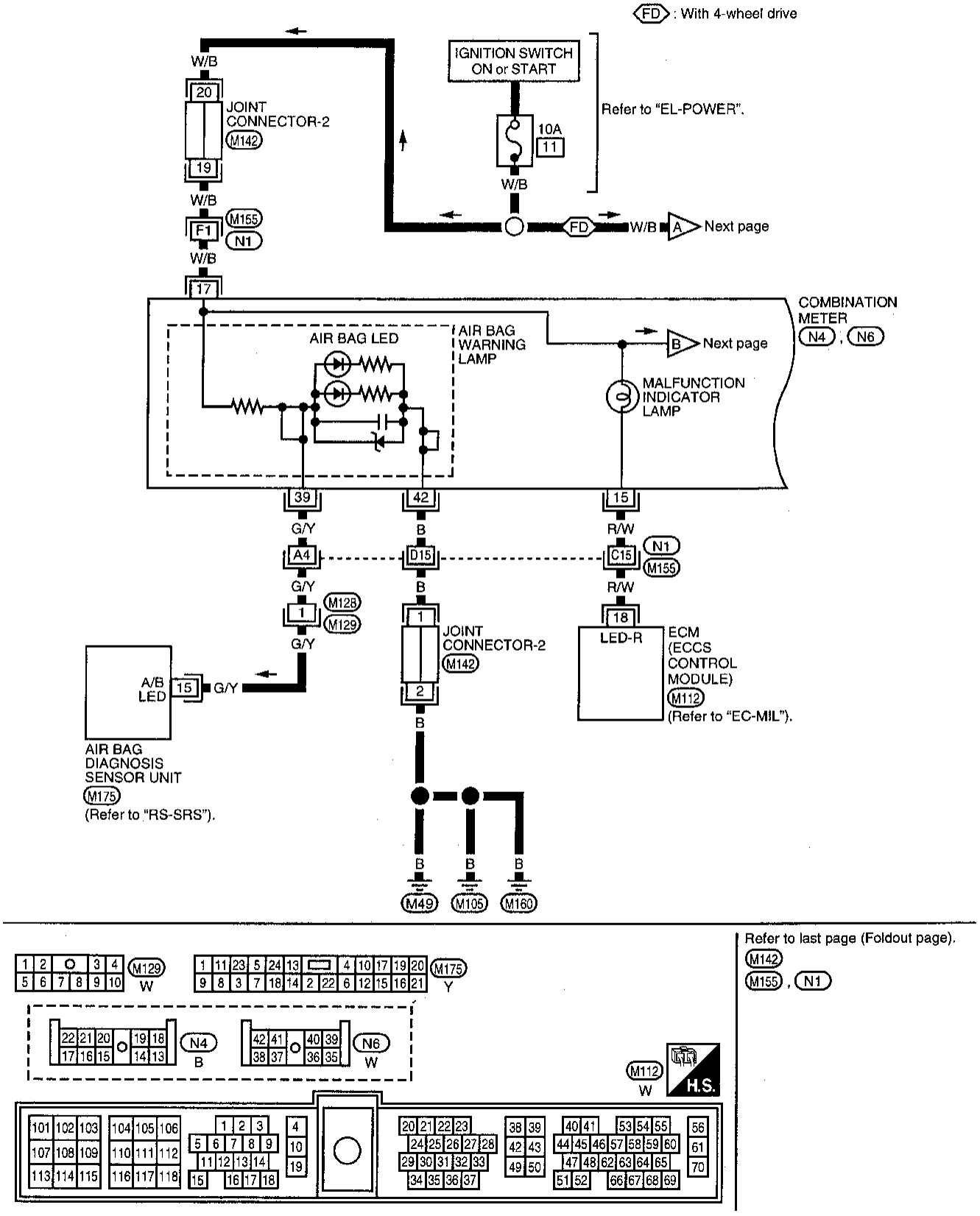

AEL296A-A

Warning Lamps/Wiring Diagram –WARN– (Cont'd)

EL-WARN-02

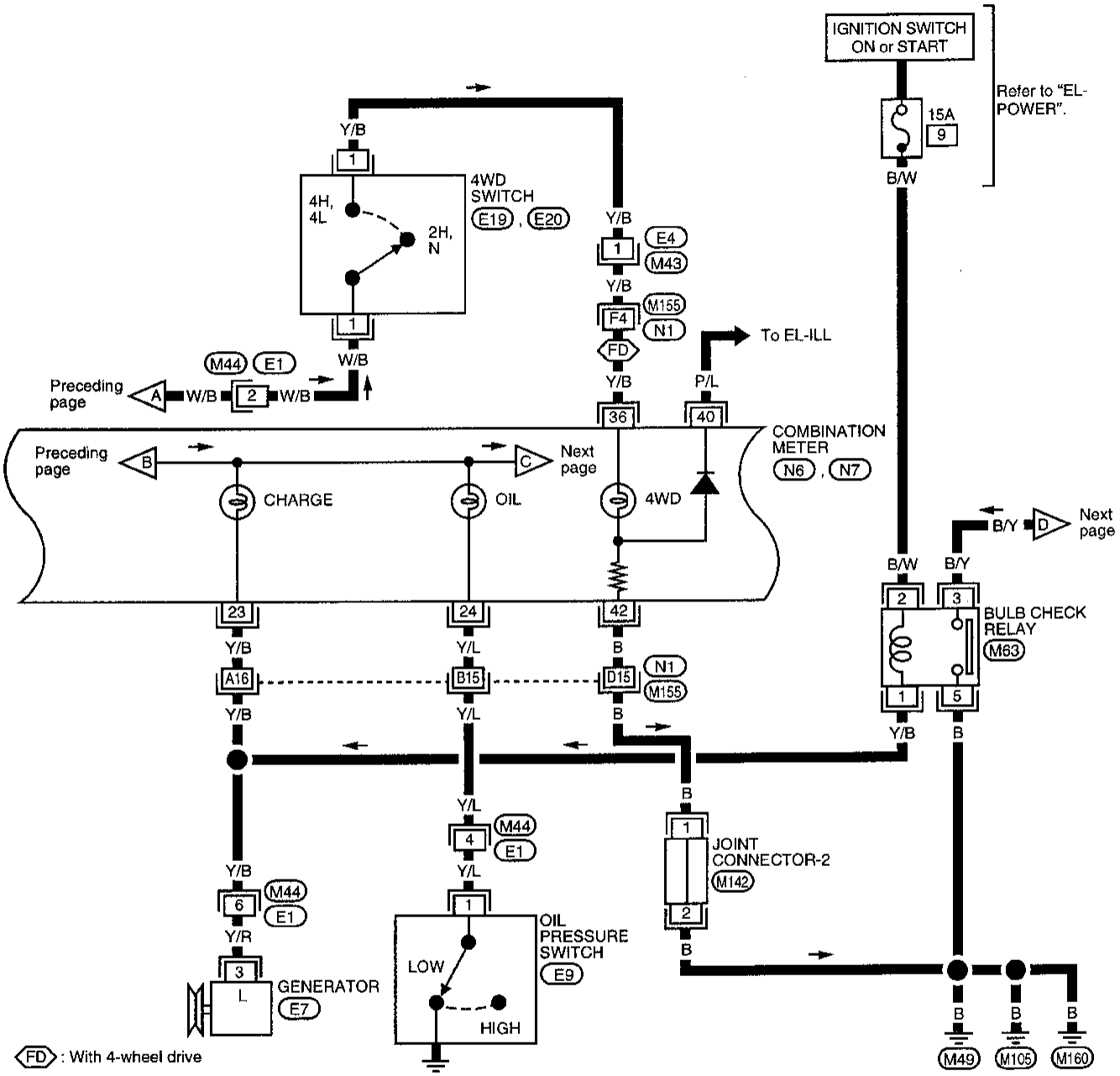

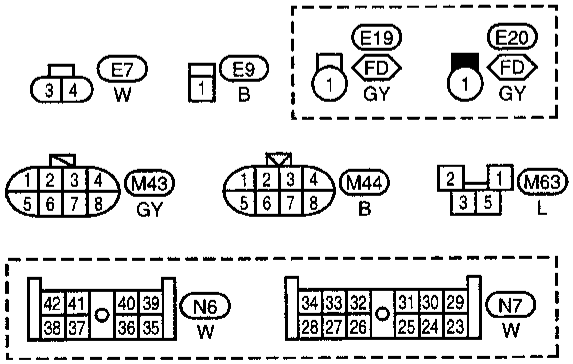

Refer to last page (Foldout page).
M142
M155, N1

AEL296A-B

Warning Lamps/Wiring Diagram –WARN– (Cont'd)

EL-WARN-03

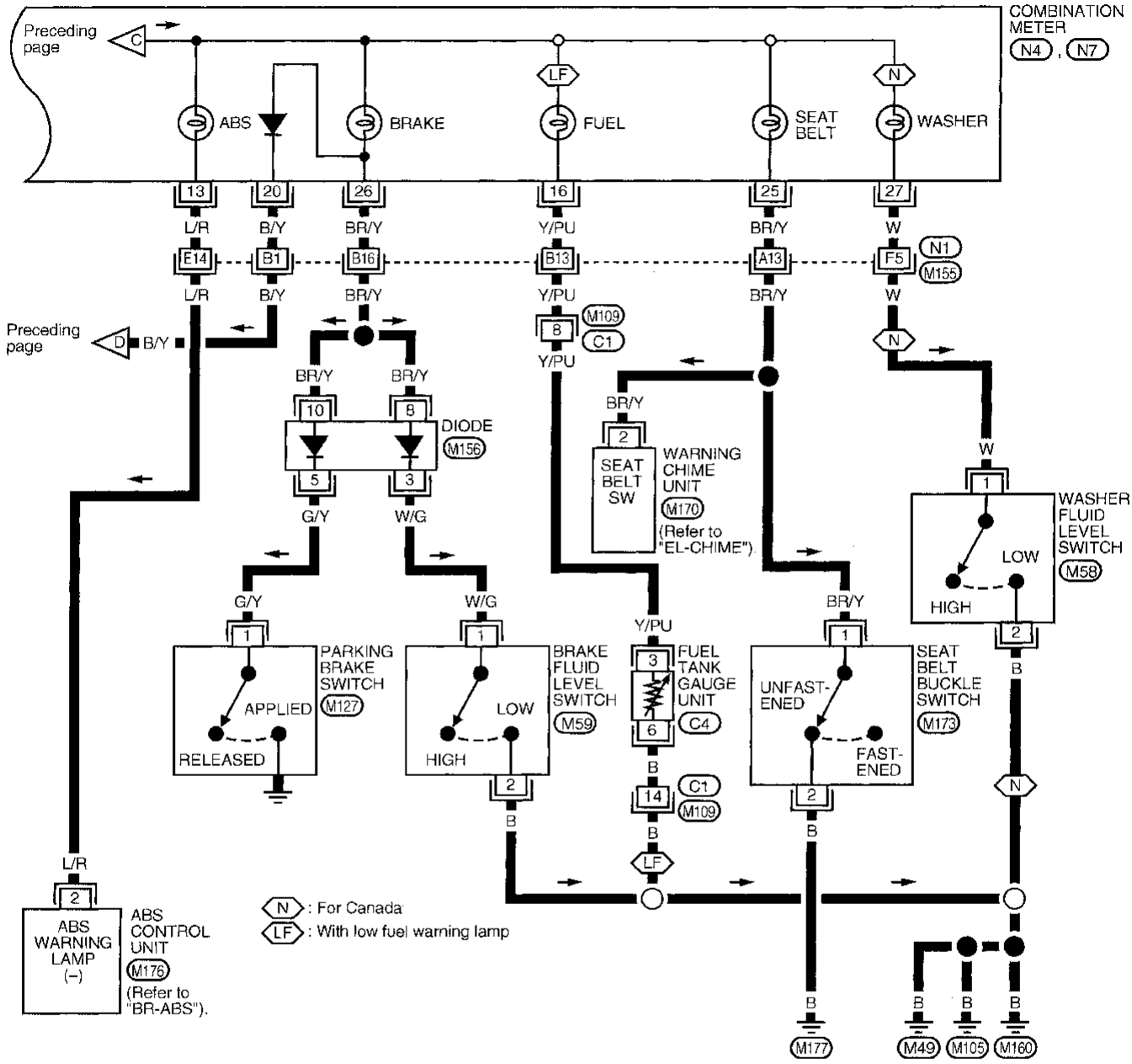

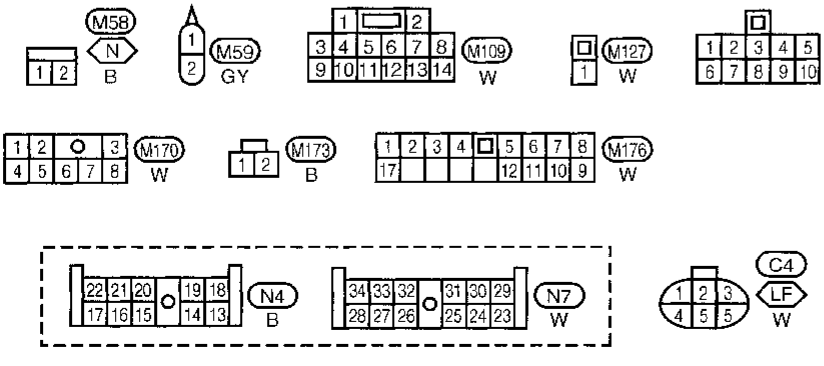

Refer to last page (Foldout page).
M155, N1

AEL296A-C

Warning Chime/System Description

The warning chime is combined with the warning chime unit.
Power is supplied at all times:
- through 10A fuse (No. 21 , located in the fuse block)
- to key switch terminal ①.

Power is supplied at all times:
- through 10A fuse (No. 22 , located in the fuse block)
- to lighting switch terminal ①.

With the ignition switch in the ON or START position, power is supplied:
- through 10A fuse (No. 11 located in the fuse block)
- to warning chime unit terminal ③.

Ground is supplied to warning chime unit terminal ④ through body grounds M49 , M105 and M160 .

Ignition key warning chime

With the key inserted in the ignition switch in the OFF or ACC position, and the driver's door open, the warning chime will sound. A battery positive voltage signal is sent:
- from key switch terminal ②
- to warning chime unit terminal ⑦.

Ground is supplied:
- from door switch LH terminal ③
- to warning chime unit terminal ⑤.

Door switch LH terminal ① is grounded through body ground M177 .

Light warning chime

With the ignition switch in the OFF or ACC position, the driver's door open, and the lighting switch in the 1ST or 2ND position, the warning chime will sound. A battery positive voltage signal is sent:
- from lighting switch terminal ⑤
- to warning chime unit terminal ⑧.

Ground is supplied:
- from door switch LH terminal ③
- to warning chime unit terminal ⑤.

Door switch LH terminal ① is grounded through body ground M177 .

Seat belt warning chime

With the ignition switch turned from the OFF or ACC position to the ON position, and the seat belt unfastened (seat belt buckle switch ON), the warning chime will sound for approximately 7 seconds.
Ground is supplied:
- from seat belt buckle switch terminal ①
- to warning chime unit terminal ②.

Seat belt buckle switch terminal ② is grounded through body ground M177 .

Warning Chime/Wiring Diagram –CHIME–

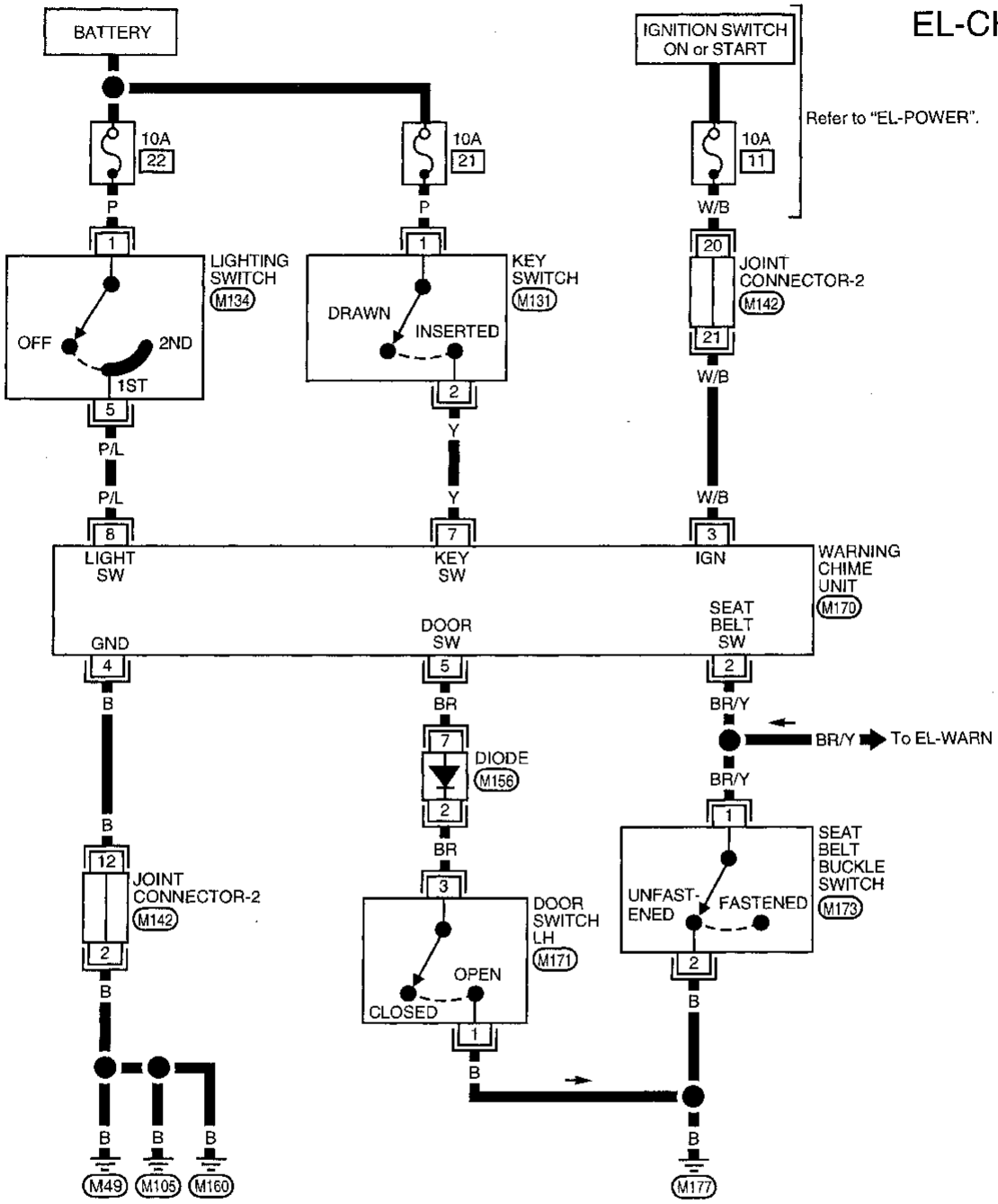

Refer to last page (Foldout page).
M142

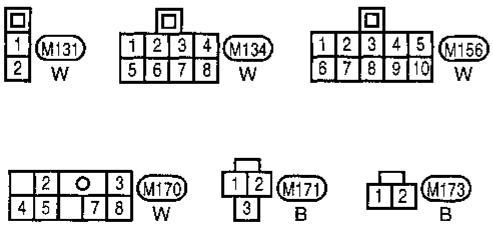

AEL278A

Trouble Diagnoses

SYMPTOM CHART

PROCEDURE	Preliminary Check			Main Power Supply and Ground Circuit Check	Diagnostic Procedure		
REFERENCE PAGE	EL-85	EL-85	EL-85	EL-86	EL-87	EL-88	EL-89
SYMPTOM	Preliminary check 1	Preliminary check 2	Preliminary check 3	Main power supply and Ground circuit check	Diagnostic Procedure 1	Diagnostic Procedure 2	Diagnostic Procedure 3
Light warning chime does not activate.	○			○	○		
Ignition key warning chime does not activate.		○		○		○	
Seat belt warning chime does not activate.			○	○			○

Trouble Diagnoses (Cont'd)

PRELIMINARY CHECK

Preliminary check 1

- **Light warning chime does not activate.**

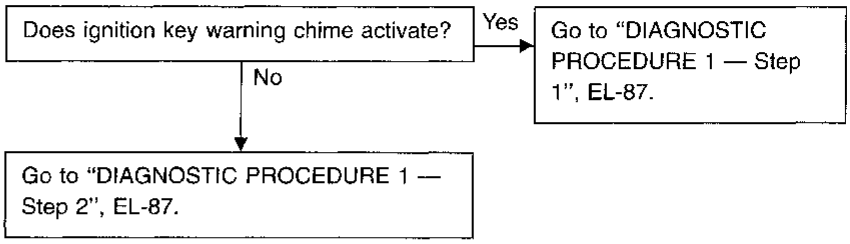

Preliminary check 2

- **Ignition key warning chime does not activate.**

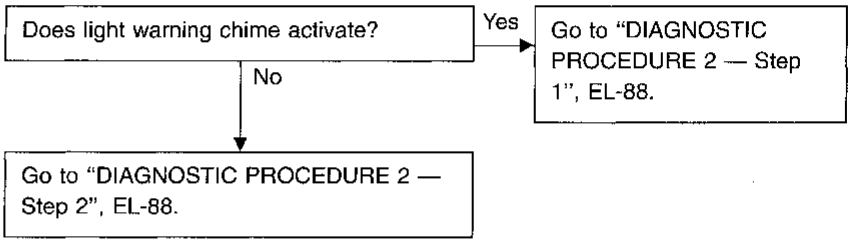

Preliminary check 3

- **Seat belt warning chime does not activate.**

Go to "DIAGNOSTIC PROCEDURE 3", EL-89.

Trouble Diagnoses (Cont'd)

MAIN POWER SUPPLY AND GROUND CIRCUIT CHECK

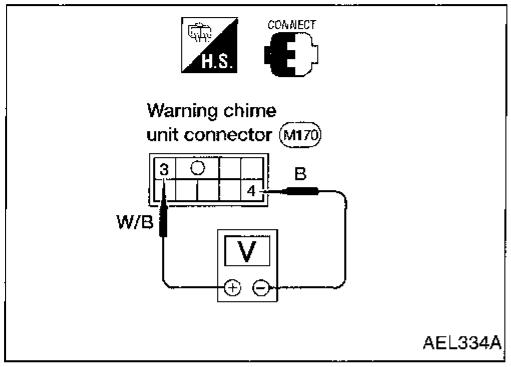

Main power supply

Terminals	Battery positive voltage existence condition		
	Ignition switch position		
	OFF	ACC	ON
③ - ④	No	No	Yes

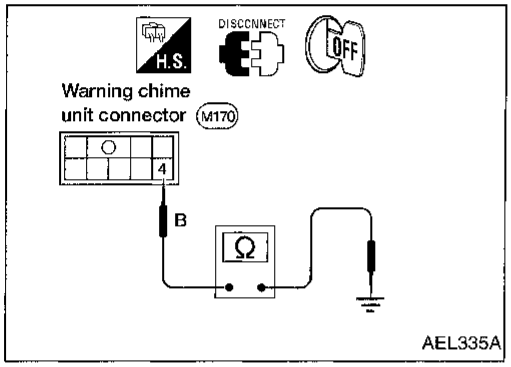

Ground circuit

Terminals	Continuity
④ - Ground	Yes

Trouble Diagnoses (Cont'd)

DIAGNOSTIC PROCEDURE 1

SYMPTOM: Light warning chime does not activate.

- Perform "PRELIMINARY CHECK — Procedure 1" before referring to the following flow chart.

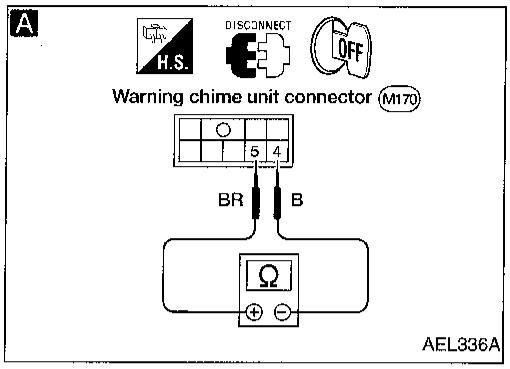

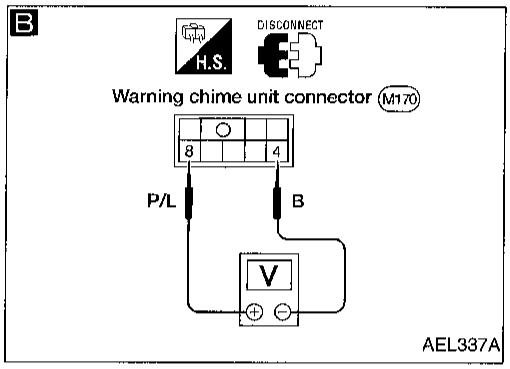

A

Step 2

DOOR SWITCH INPUT SIGNAL CHECK.
Check continuity between warning chime unit harness terminals ⑤ and ④.

Condition of driver's door	Continuity
LH door is closed.	No
LH door is open.	Yes

NG →
- Check door switch. (Refer to EL-90.)
- Check harness continuity between warning chime unit harness terminal ⑤ and LH door switch harness terminal ③. **Continuity should exist.**
- Check harness continuity between LH door switch harness terminal ① and body ground. **Continuity should exist.**

OK ↓

B

Step 1

LIGHTING SWITCH INPUT SIGNAL CHECK.
Measure voltage between warning chime unit harness terminals ⑧ and ④.

Condition	Voltage [V]
Lighting switch is ON.	Approx. 12
Lighting switch is OFF.	0

NG →
- Check lighting switch. (Refer to EL-90.)
- Check harness continuity between warning chime unit harness terminal ⑧ and lighting switch harness terminal ⑤. **Continuity should exist.**
- Measure voltage between lighting switch harness terminal ① and body ground. **Battery voltage should exist.**

OK ↓

Replace warning chime unit.

Trouble Diagnoses (Cont'd)

DIAGNOSTIC PROCEDURE 2

SYMPTOM: Ignition key warning chime does not activate.

- Perform "PRELIMINARY CHECK — Procedure 2" before referring to the following flow chart.

A

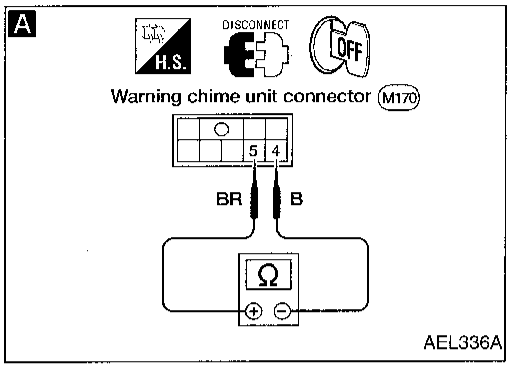

B

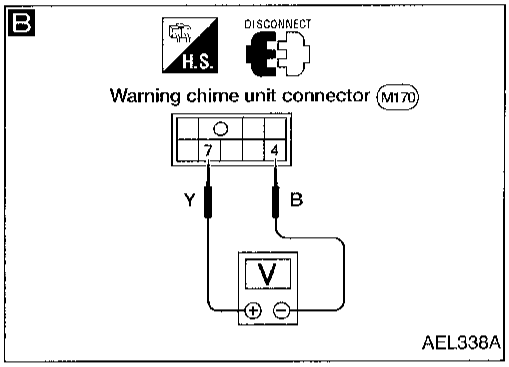

A — Step 2

DOOR SWITCH INPUT SIGNAL CHECK.
Check continuity between warning chime unit harness terminals ⑤ and ④.

Condition of driver's door	Continuity
LH door is closed.	No
LH door is open.	Yes

NG →
- Check door switch. (Refer to EL-90.)
- Check harness continuity between warning chime unit harness terminal ⑤ and LH door switch harness terminal ③. **Continuity should exist.**
- Check harness continuity between LH door switch harness terminal ① and body ground. **Continuity should exist.**

OK ↓

B — Step 1

IGNITION KEY SWITCH INPUT SIGNAL CHECK.
Measure voltage between warning chime unit harness terminals ⑦ and ④.

Condition	Voltage [V]
Key is inserted.	Approx. 12
Key is drawn.	0

NG →
- Check ignition key switch. (Refer to EL-90.)
- Check harness continuity between warning chime unit harness terminal ⑦ and key switch harness terminal ②. **Continuity should exist.**
- Measure voltage between key switch harness terminal ① and body ground. **Battery voltage should exist.**

OK ↓

Replace warning chime unit.

Trouble Diagnoses (Cont'd)

DIAGNOSTIC PROCEDURE 3

SYMPTOM: Seat belt warning chime does not activate.

- Perform "PRELIMINARY CHECK — Procedure 3" before referring to the following flow chart.

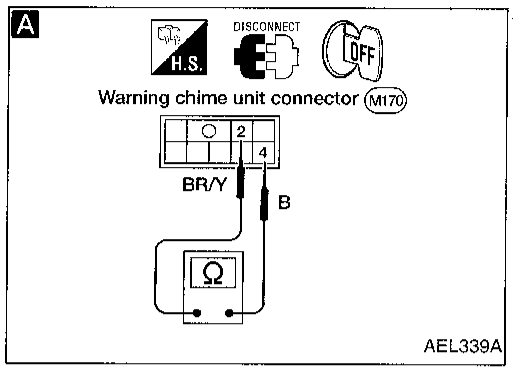

A

SEAT BELT SWITCH INPUT SIGNAL CHECK

Check continuity between warning chime unit harness terminals ② and ④.

Condition	Continuity
Unfastened	Yes
Fastened	No

NG →

- Check seat belt buckle switch. (Refer to EL-90.)
- Check harness continuity between warning chime unit harness terminal ② and seat belt buckle switch harness terminal ①. **Continuity should exist.**
- Check harness continuity between seat belt buckle switch harness terminal ② and body ground. **Continuity should exist.**

OK ↓

Replace warning chime unit.

Trouble Diagnoses (Cont'd)

ELECTRICAL COMPONENTS INSPECTION

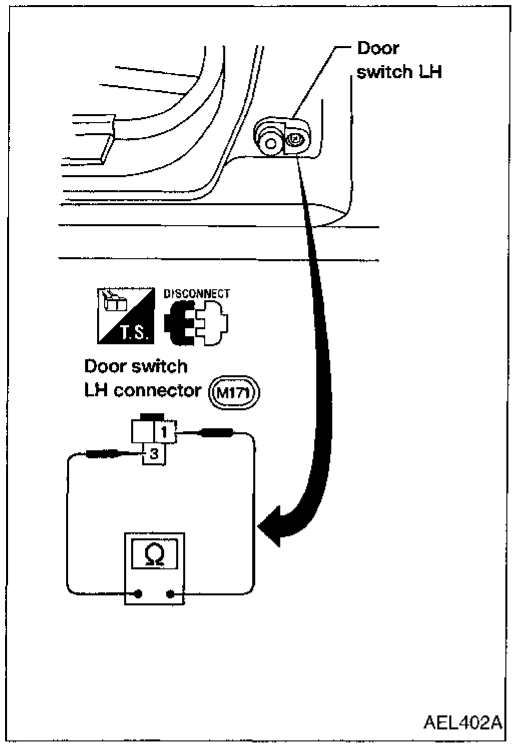

AEL402A

Door switch

Check continuity between terminals ① and ③ when door switch is pushed and released.

Terminal No.	Condition	Continuity
① - ③	Door switch is pushed.	No
	Door switch is released.	Yes

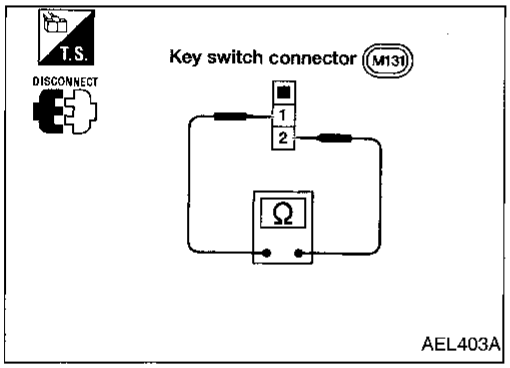

AEL403A

Key switch

Check continuity between terminals ① and ② when ignition key is drawn and inserted.

Terminal No.	Condition	Continuity
① - ②	Ignition key is drawn.	No
	Ignition key is inserted.	Yes

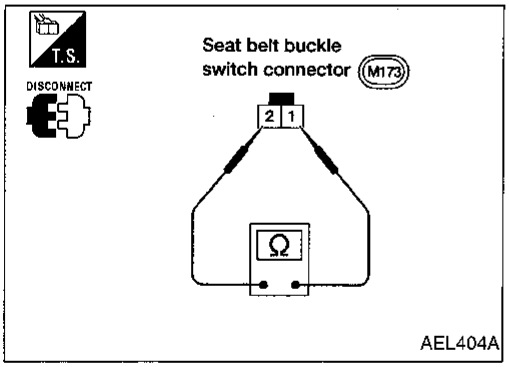

AEL404A

Seat belt buckle switch

Check continuity between terminals ① and ② when seat belt LH is fastened and unfastened.

Terminal No.	Condition	Continuity
① - ②	Seat belt LH is fastened.	No
	Seat belt LH is unfastened.	Yes

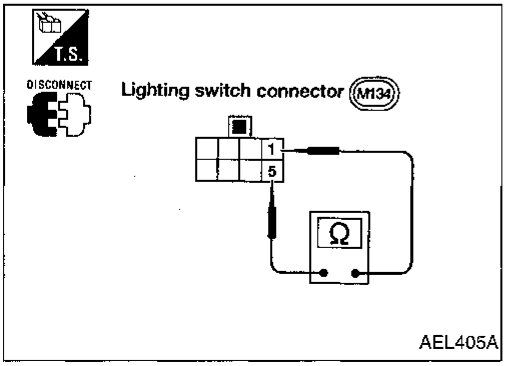

AEL405A

Lighting switch

Check continuity between terminals ① and ⑤ when lighting switch is turned to OFF and 1st or 2nd position.

Terminal No.	Condition	Continuity
① - ⑤	Lighting switch is turned to OFF position.	No
	Lighting switch is turned to 1st or 2nd position.	Yes

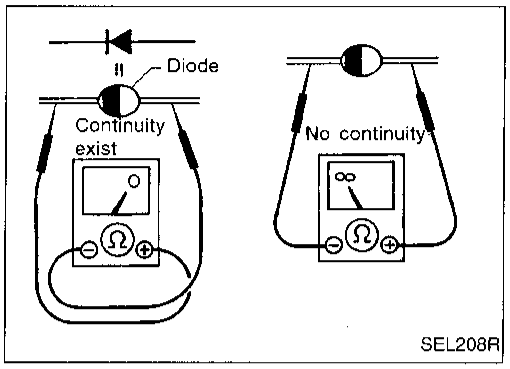

Diode Check

- Check continuity using an ohmmeter.
- Diode is functioning properly if test results are as shown in the figure at left.

NOTE: Specifications may vary depending on the type of tester. Before performing this inspection, be sure to refer to the instruction manual for the tester to be used.

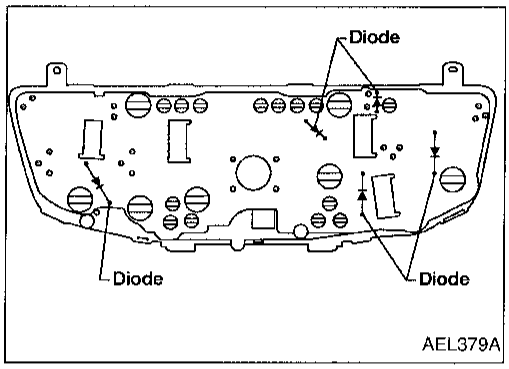

- Diodes for warning lamps are built into the combination meter printed circuit.

Refer to EL-66.

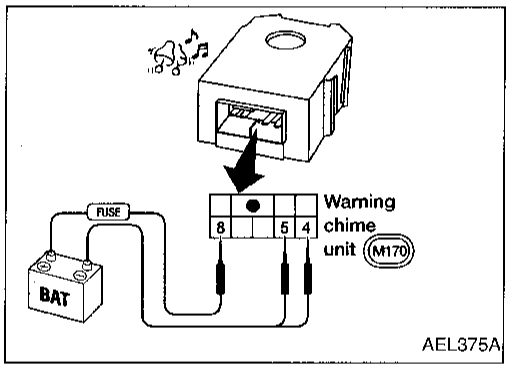

Warning Chime Check

Supply battery voltage to warning chime unit as shown in the illustration.

Warning chime should operate.

System Description

WIPER OPERATION

The wiper switch is controlled by a lever built into the combination switch.
There are three wiper switch positions:

- LO speed
- HI speed
- INT (Intermittent) (if equipped).

With the ignition switch in the ACC or ON position, power is supplied:

- through 20A fuse (No. 7 , located in the fuse block)
- to wiper motor terminal ④.

Low and high speed wiper operation

Ground is supplied to wiper switch terminal ⑥ through body grounds M49 , M105 and M160 .
When the wiper switch is placed in the LO position, ground is supplied:

- through terminal ④ of the wiper switch
- to wiper motor terminal ②.

With power and ground supplied, the wiper motor operates at low speed.
When the wiper switch is placed in the HI position, ground is supplied:

- through terminal ③ of the wiper switch
- to wiper motor terminal ③.

With power and ground supplied, the wiper motor operates at high speed.

Auto stop operation

When the wiper switch is placed in the OFF position, the wiper motor will continue to operate until the wiper arms reach the base of the windshield.
When the wiper switch is placed in the OFF position, ground is supplied:

- from terminal ④ of the wiper switch
- to wiper motor terminal ②, in order to continue wiper motor operation at low speed.

The ground path to terminal ④ of the wiper switch is supplied:

- through terminal ⑧ of the wiper switch
- to wiper amplifier shorting connector terminal ③ (without intermittent wipers), or
- to wiper amplifier terminal ③ (with intermittent wipers)
- through wiper amplifier shorting connector terminal ⑥ (without intermittent wipers), or
- through wiper amplifier terminal ⑥ (with intermittent wipers)
- to wiper motor terminal ⑤
- through terminal ⑥ of the wiper motor, and
- through body grounds M49 , M105 and M160 .

The ground path is interrupted and the wiper motor stops when the wiper arms reach the base of the windshield.

Intermittent operation

The wiper motor operates the wiper arms one time at low speed at a set interval of approximately 4 to 12 seconds. This feature is controlled by the wiper amplifier.
When the wiper switch is placed in the INT position, ground is supplied:

- to wiper amplifier terminal ④
- from wiper switch terminal ⑦
- through wiper switch terminal ⑥, and
- through body grounds M49 , M105 and M160 .

The desired interval time is input:

- to wiper amplifier terminal ⑤
- from wiper switch terminal ①.

Based on these two inputs, an intermittent ground is supplied:

- to wiper motor terminal ②
- through the wiper switch terminal ④
- to wiper switch terminal ⑧
- from wiper amplifier terminal ③.

With power and ground supplied, the wiper motor is activated.
The wiper motor operates at low speed at the desired time interval.

WASHER OPERATION

With the ignition switch in the ACC or ON position, power is supplied:

- through 20A fuse (No. 7 , located in the fuse block)
- to washer motor terminal ①.

When the lever is pulled to the WASH position, ground is supplied:

- to washer motor terminal ②, and
- to wiper amplifier terminal ⑦ (with intermittent wipers)
- from terminal ⑤ of the wiper switch
- through terminal ⑥ of the wiper switch, and
- through body grounds M49 , M105 and M160 .

With power and ground supplied, the washer motor operates.
The wiper motor operates twice at low speed for approximately 3 seconds to clean the windshield. This feature is controlled by the wiper amplifier in the same manner as the intermittent operation.

Wiring Diagram –WIPER–

MODELS WITH INTERMITTENT WIPERS

EL-WIPER-01

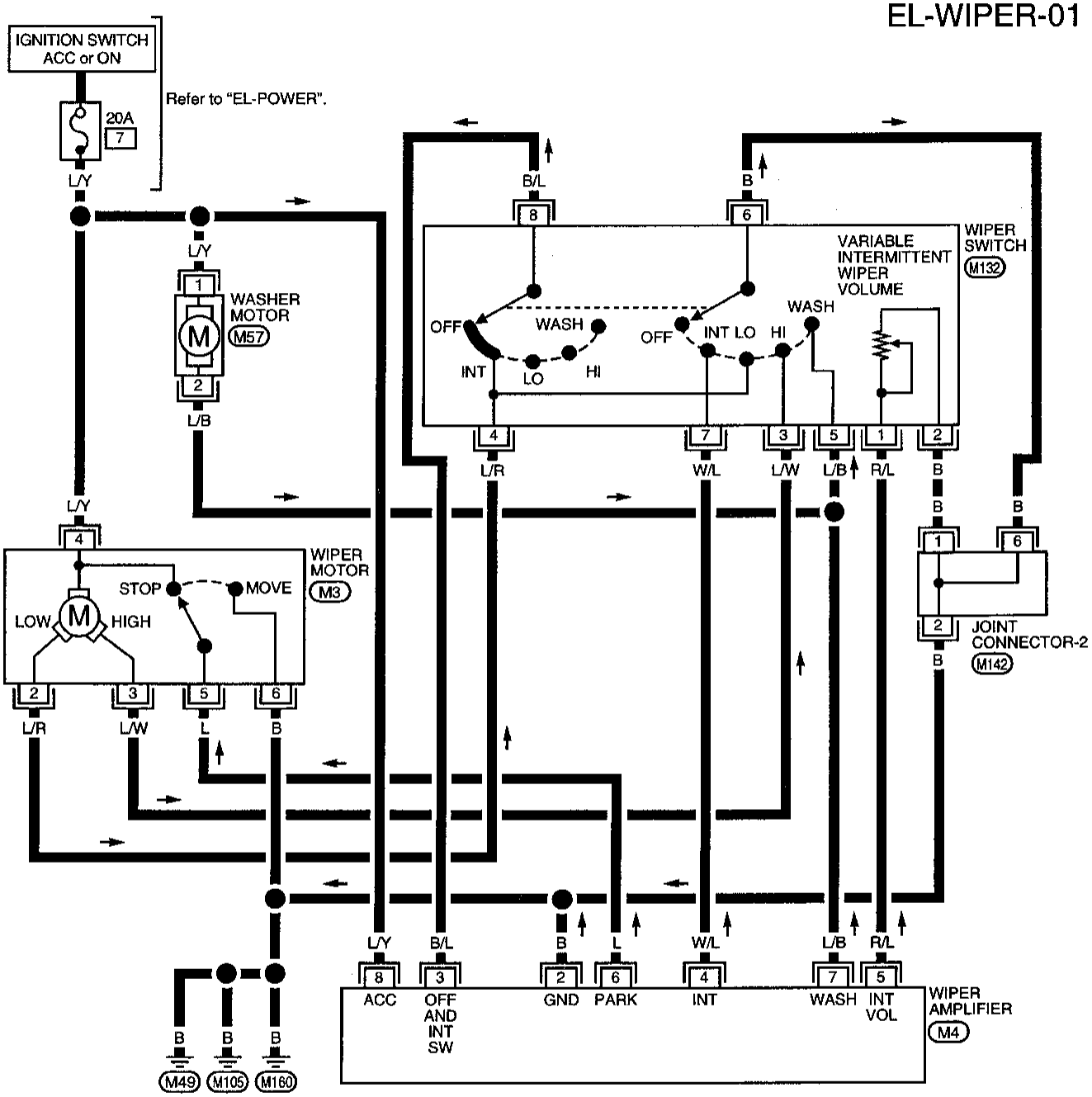

Refer to last page (Foldout page).
M142

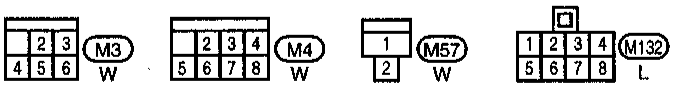

AEL277A-A

Wiring Diagram –WIPER– (Cont'd)

MODELS WITHOUT INTERMITTENT WIPERS

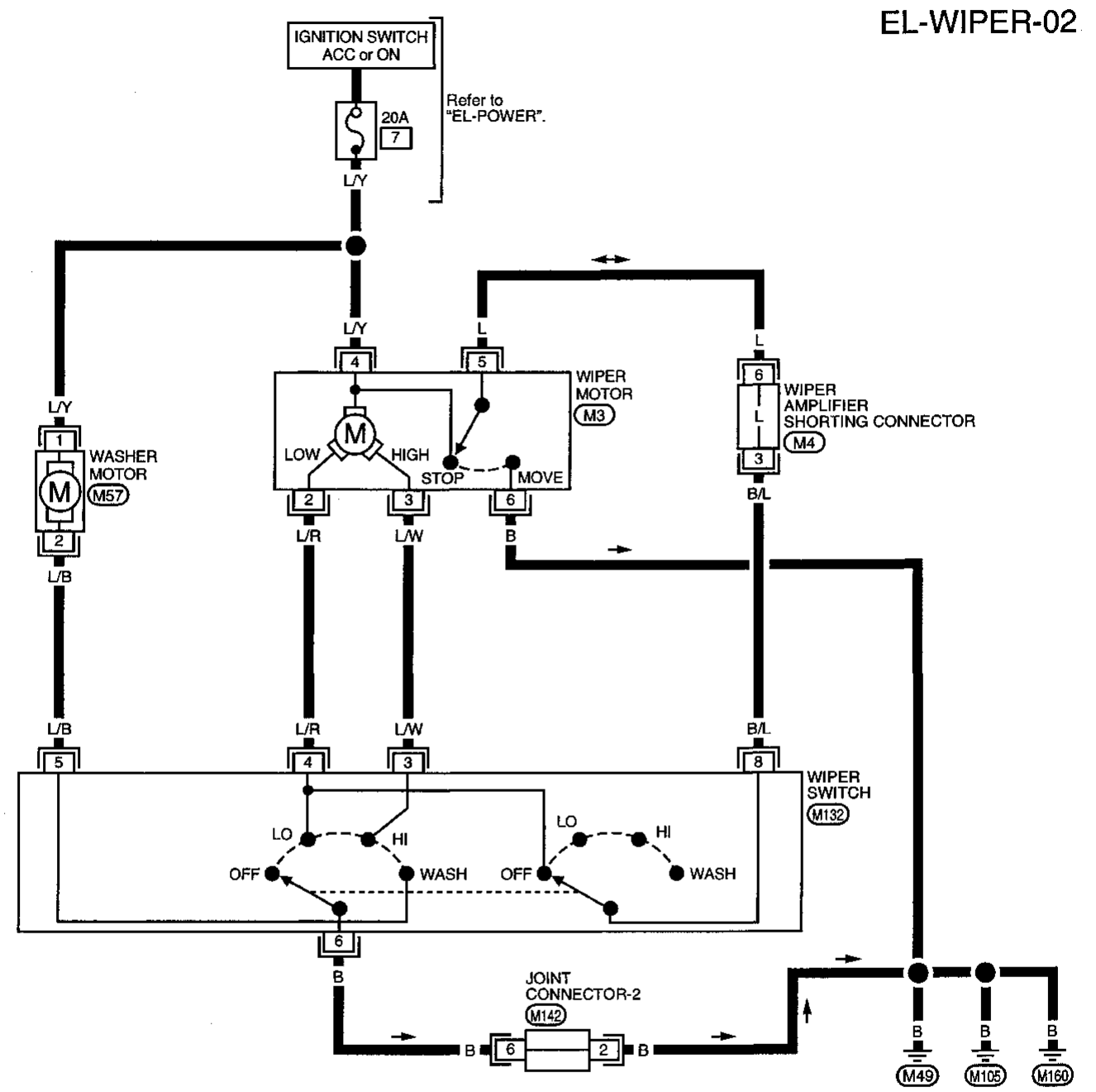

Refer to last page (Foldout page).
M142

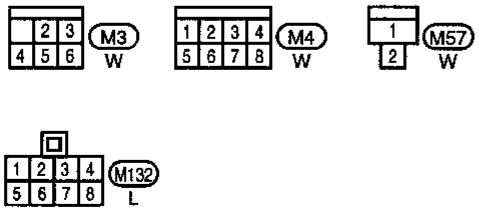

AEL277A-B

Trouble Diagnoses

DIAGNOSTIC PROCEDURE 1

(Models with intermittent wipers)
SYMPTOM: Intermittent wiper does not operate.

A

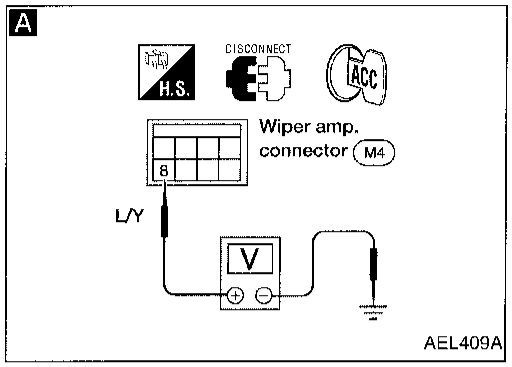

CHECK POWER SUPPLY FOR WIPER AMPLIFIER.
1. Turn ignition switch to ACC.
2. Measure voltage between wiper amplifier terminal ⑧ and body ground.

Battery voltage should exist.

NG → Check 20A fuse (No. 7, located in the fuse block), harness and connector.

OK ↓

B

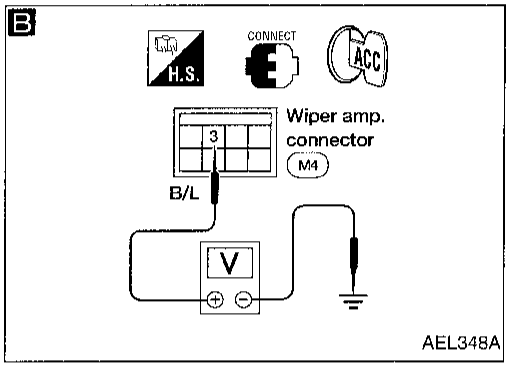

WIPER AMP. OUTPUT SIGNAL CHECK.
1. Turn ignition switch to ACC.
2. Move wiper switch to INT or OFF.
3. Measure voltage between wiper amp. harness terminal ③ and body ground.

Condition of wiper switch	Voltage [V]
OFF	Approx. 12
INT	Pointer swings from 0 to 12 every 7 seconds

OK → Check wiper motor and circuit.

NG ↓

C

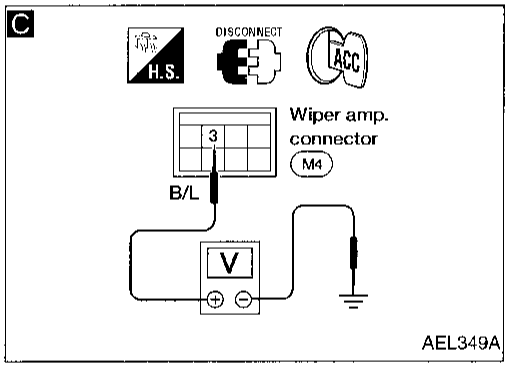

VOLTAGE CHECK.
1. Disconnect wiper amp. connector.
2. Turn ignition switch to ACC.
3. Measure voltage between wiper amp. harness terminal ③ and body ground.

Battery voltage should exist.

NG →
- Check wiper switch.
- Check wiper motor.
- Check harness continuity between wiper amp. harness terminal ③ and wiper switch harness terminal ⑧.
  Continuity should exist.
- Check harness continuity between wiper switch harness terminal ④ and wiper motor harness terminal ②.
  Continuity should exist.

OK ↓

D

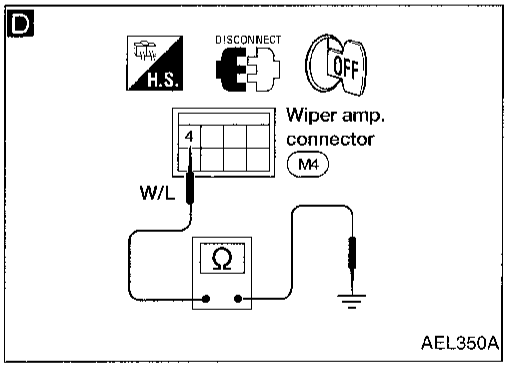

INTERMITTENT SWITCH INPUT SIGNAL CHECK.
Check harness continuity between wiper amp. harness terminal ④ and body ground.

Condition of wiper switch	Continuity
OFF	No
INT	Yes

NG →
- Check wiper switch.
- Check harness continuity between wiper amp. harness terminal ④ and wiper switch harness terminal ⑦.
  Continuity should exist.
- Check harness continuity between wiper switch harness terminal ⑥ and body ground.
  Continuity should exist.

OK ↓

E

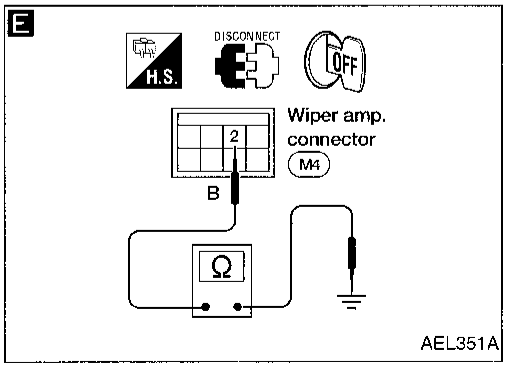

WIPER AMP. GROUND CIRCUIT CHECK.
Check harness continuity between wiper amp. harness terminal ② and body ground.

Continuity should exist.

NG → Repair harness or connector.

OK ↓

Replace wiper amp.

Trouble Diagnoses (Cont'd)

DIAGNOSTIC PROCEDURE 2

(Models with intermittent wipers)

SYMPTOM: Intermittent time of wiper cannot be adjusted.

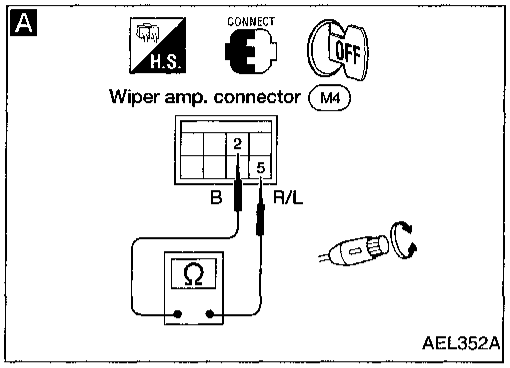

A

INTERMITTENT WIPER VOLUME INPUT SIGNAL CHECK

Measure resistance between wiper amp. harness terminals ⑤ and ② while turning intermittent wiper volume.

Position of wiper knob	Resistance [KΩ]
S	0
L	Approx. 1

OK → Replace wiper amp.

NG ↓

- Check intermittent wiper volume.
- Check harness continuity between wiper amp. harness terminal ⑤ and wiper switch harness terminal ①.
  Continuity should exist.
- Check harness continuity between wiper switch harness terminal ② and body ground.
  Continuity should exist.

Trouble Diagnoses (Cont'd)

DIAGNOSTIC PROCEDURE 3

(Models with intermittent wipers)

SYMPTOM: Wiper and washer activate individually but not in combination.

A

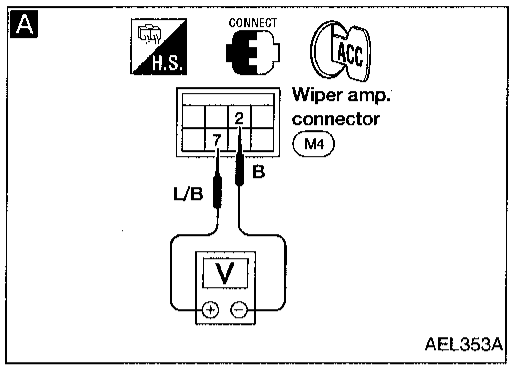

B

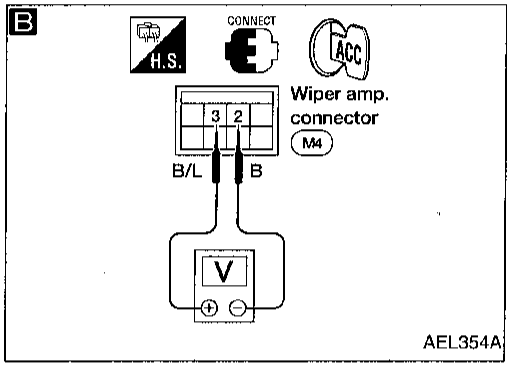

A

WASHER SWITCH INPUT SIGNAL CHECK

1. Turn ignition switch to ACC.
2. Measure voltage between wiper amp. harness terminals ⑦ and ②.

Condition of washer switch	Voltage [V]
OFF	Approx. 12
ON	0

NG →
- Check wiper switch.
- Check harness continuity between wiper amp. harness terminal ⑦ and wiper switch harness terminal ⑤. **Continuity should exist.**
- Check harness continuity between wiper switch harness terminal ⑥ and body ground. **Continuity should exist.**

OK ↓

B

WIPER AMP. OUTPUT SIGNAL CHECK

Measure voltage between wiper amp. harness terminals ③ and ② after operating washer switch.

0V for approx. 3 seconds after washer has operated.

NG → Check wiper switch.

OK ↓ Replace wiper amp.

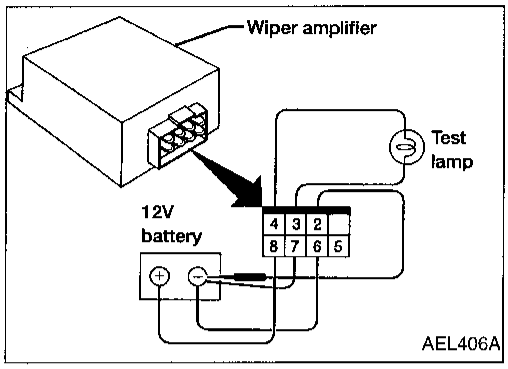

Wiper Amplifier Check

1. Connect as shown in the figure at left.
2. If test lamp comes on when connected to terminal ② and battery ground, wiper amplifier is normal.

Installation

1. Turn ignition ON.
2. Prior to wiper arm installation, turn on wiper switch and then turn it "OFF". Allow wiper to operate until its Auto Stop position is reached before turning ignition off.
3. Lift the blade up and then set it down onto glass surface. Set the blade center to clearance "C" just before tightening nut.
4. Eject washer fluid. Turn on wiper switch to operate wiper motor and then turn it "OFF".
5. Ensure that wiper blades stop within clearance "L".
   Clearance "C": 20 - 30 mm (0.79 - 1.18 in)

- Tighten windshield wiper arm nuts to specified torque.
  Windshield wiper:
  : 13 - 18 N·m (1.3 - 1.8 kg-m, 9 - 13 ft-lb)

Windshield wiper and washer

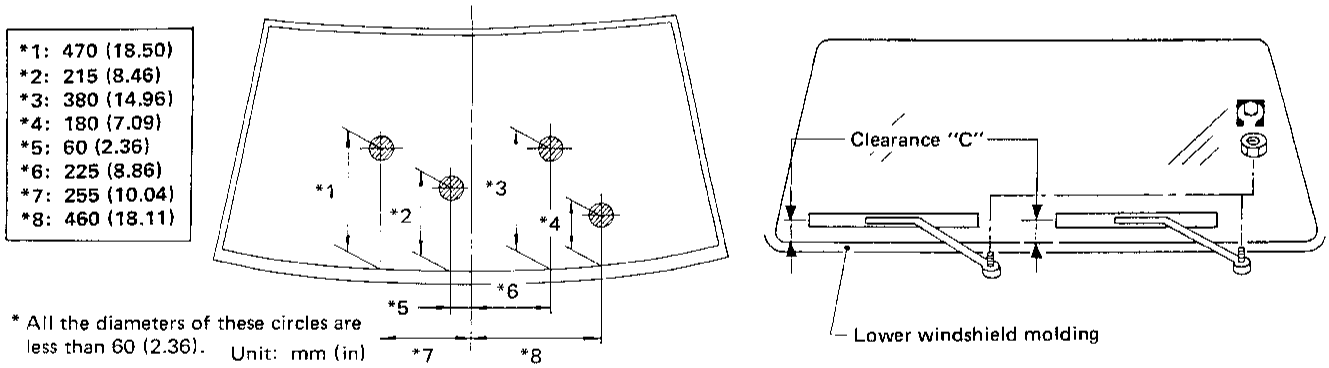

AEL400A

Installation (Cont'd)

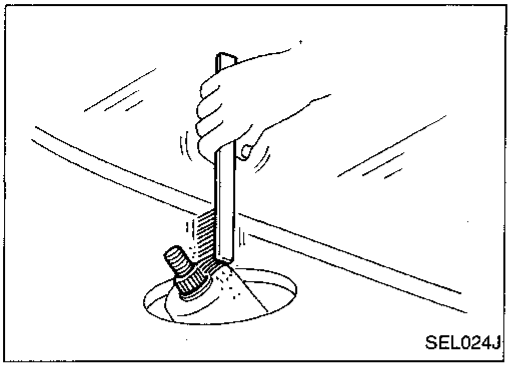

- **Before reinstalling wiper arm, clean the pivot area as illustrated. This will reduce possibility of wiper arm looseness.**

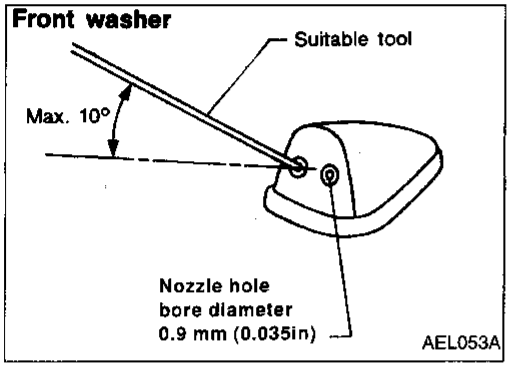

Washer Nozzle Adjustment

- Adjust washer nozzle with suitable tool as shown in the figure at left.
  Adjustable range: ±10°

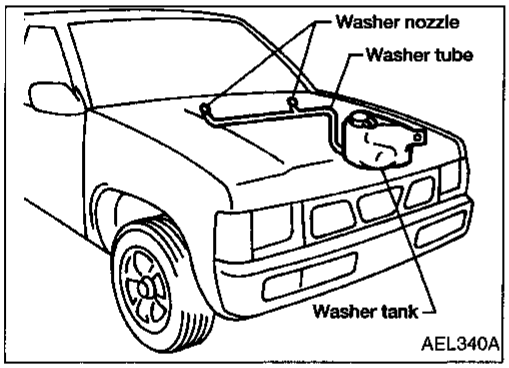

System Description

Power is supplied at all times:
- from brown fusible link (located under relay box)
- to circuit breaker terminal ①
- through circuit breaker terminal ②
- to ignition-2 and power window relay terminal ③.

With the ignition switch in the ON or START position, power is supplied:
- to ignition-2 and power window relay terminal ②.

Ground is supplied to ignition-2 and power window relay terminal ① through body grounds (M49), (M105) and (M160).

The ignition-2 and power window relay is energized and power is supplied:
- through ignition-2 and power window relay terminal ⑤
- to main power window and door lock/unlock switch terminal ⑤,
- to power window switch RH terminal ⑤, and
- to power window amplifier terminals ② and ⑥.

Ground is supplied:
- to main power window and door lock/unlock switch terminal ④, and
- to power window amplifier terminal ①
- through body grounds (M49), (M105) and (M160).

MANUAL OPERATION

Door LH

WINDOW UP

When the main power window and door lock/unlock switch is pressed in the UP position, ground signal is supplied:
- to power window amplifier terminal ③
- through main power window and door lock/unlock switch terminal ③.

Then power is supplied:
- through power window amplifier terminal ④
- to power window motor LH terminal ②.

Ground is supplied:
- to power window motor LH terminal ①
- from power window amplifier terminal ⑧.

With power and ground supplied, the motor raises the window until the switch is released.

WINDOW DOWN

When the main power window and door lock/unlock switch is pressed in the DOWN position, ground signal is supplied:
- to power window amplifier terminal ⑦
- through main power window and door lock/unlock switch terminal ②.

Then power is supplied:
- through power window amplifier terminal ⑧
- to power window motor LH terminal ①.

Ground is supplied:
- to power window motor LH terminal ②
- from power window amplifier terminal ④.

With power and ground supplied, the motor lowers the window until the switch is released.

Door RH

NOTE:

Figures in parentheses ( ) refer to terminal Nos. arranged in order when the DOWN or UP section of power window switch RH is pressed.

Operation by main switch

Power is supplied:

- through main power window and door lock/unlock switch terminal ⑦, ⑥)
- to power window switch RH terminal (⑥, ①).

The subsequent operations are the same as those outlined under "Operation by sub-switches".

Operation by sub-switches

Power is supplied:

- through power window switch RH terminal (③, ④)
- to power window motor RH terminal (①, ②).

When the power window switch RH is pressed in the DOWN or UP position, ground is supplied:

- to power window motor RH terminal (②, ①)
- through power window switch RH terminal (④, ③)
- to power window switch RH terminal (①, ⑥)
- through main power window and door lock/unlock switch terminal (⑥, ⑦)
- to main power window and door lock/unlock switch terminal (④)
- through body grounds (M49), (M105), and (M160).

Then, the motor raises or lowers the window until the switch is released.

AUTO FEATURE

The power window AUTO feature enables the driver to lower the driver's window without holding the window switch in the down position.

The AUTO feature only operates on the driver's window downward movement.

When the main power window and door lock/unlock switch is pressed and released in the AUTO position, ground signal is supplied:

- to power window amplifier terminal ⑤
- through main power window and door lock/unlock switch terminal ①.

Power is supplied:

- to power window motor LH terminal ①
- through power window amplifier terminal ⑧

Ground is supplied:

- to power window motor LH terminal ②
- through power window amplifier terminal ④

Then, the door LH window will travel to the fully open position

LOCK FEATURE

The power window lock is designed to lock-out passenger window operation.

When the lock switch is pressed to the LOCK position, ground of the main power window and door lock/unlock switch is disconnected. This prevents the passenger power window motor from operating.

Component Layout

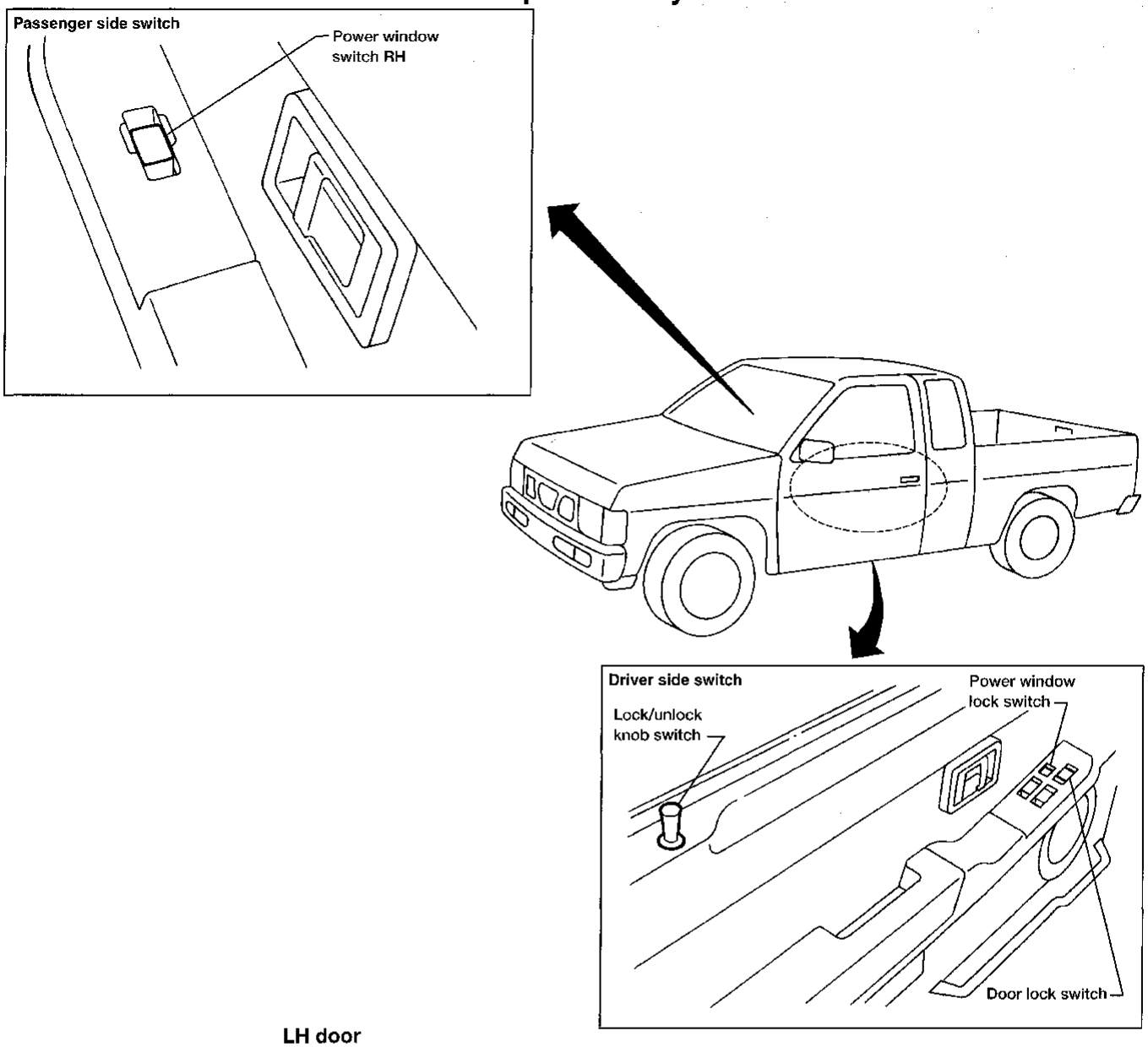

LH door

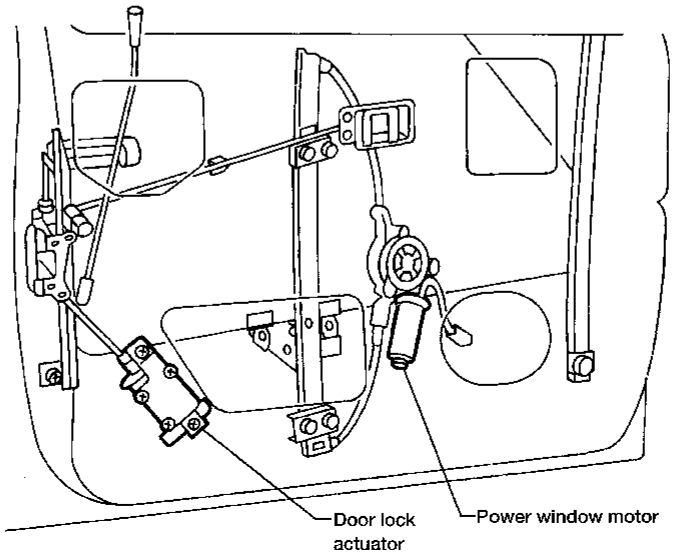

AEL377A

Wiring Diagram –WINDOW–

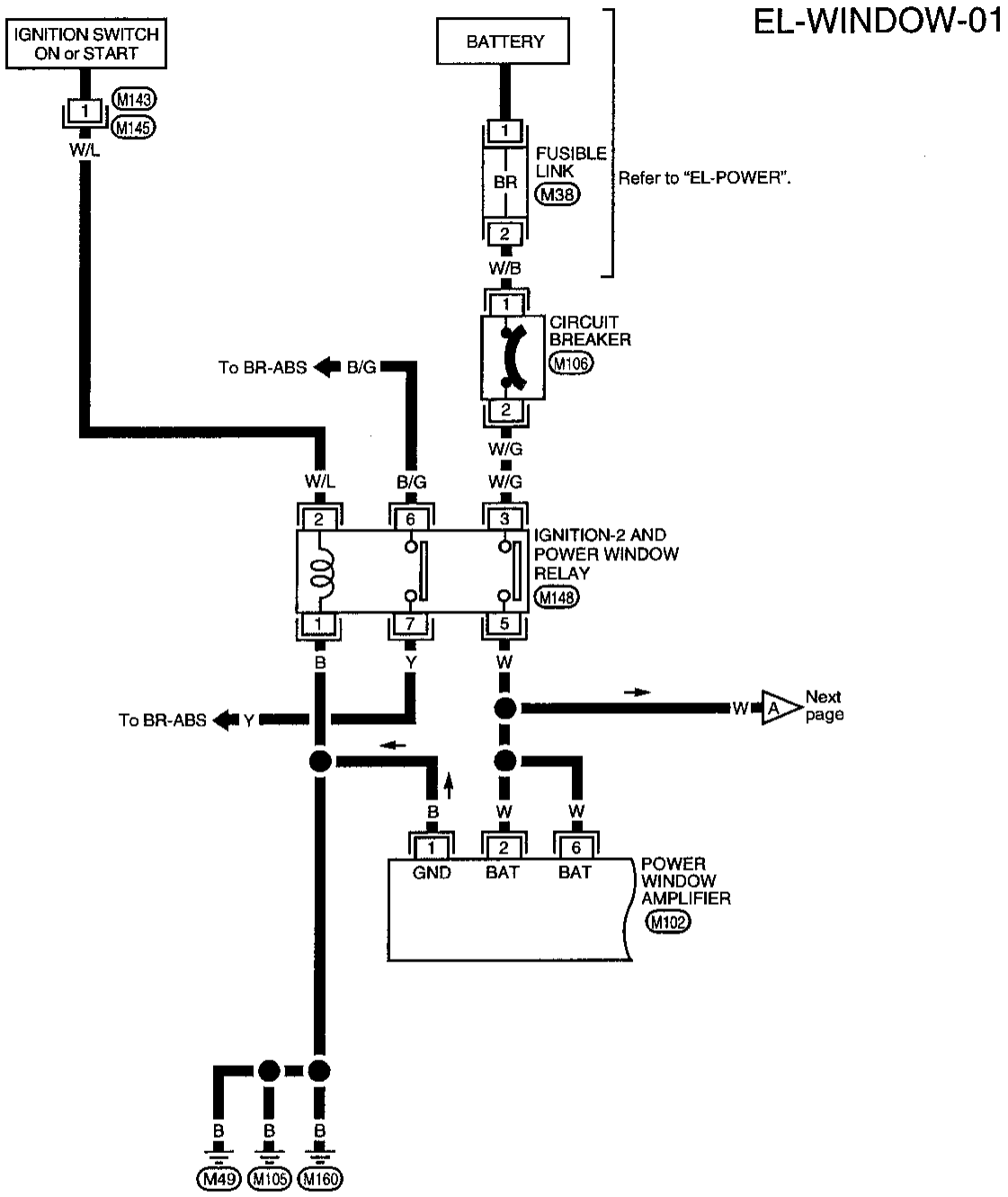

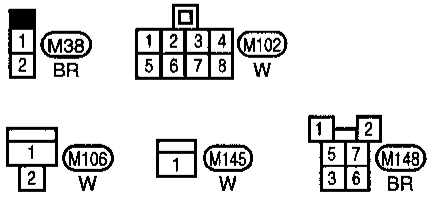

AEL281A-A

Wiring Diagram –WINDOW– (Cont'd)

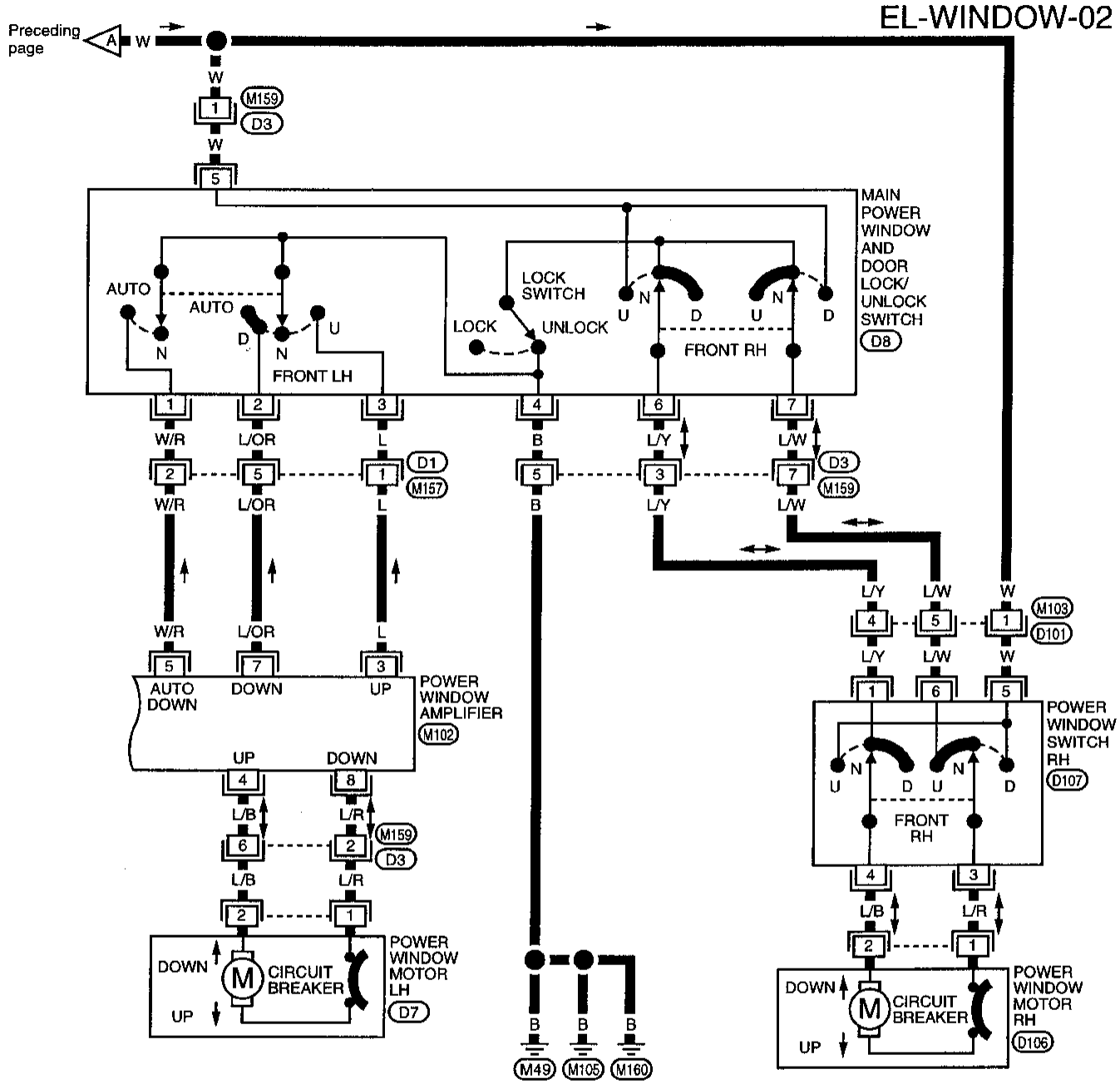

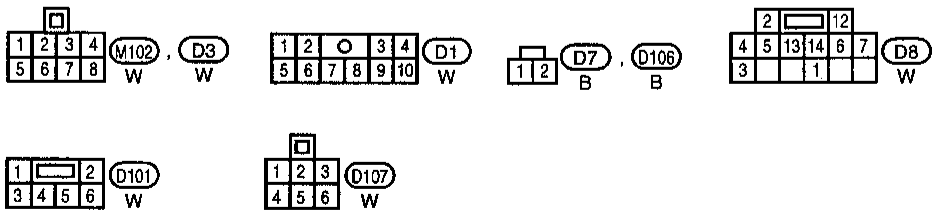

AEL281A-B

Trouble Diagnoses

Symptom	Possible causes	Repair order
None of the power windows can be operated from any switch.	1. Brown fusible link and circuit breaker.	1. Check brown fusible link (located under the relay box) and the circuit breaker. Turn ignition switch ON and verify battery positive voltage is present at terminal ⑤ of both power window switches.
	2. Grounds to ignition-2 and power window relay.	2. Check grounds M49 , M105 and M160 .
	3. Ignition-2 and power window relay	3. Check ignition-2 and power window relay.
	4. Grounds to main power window and door lock/unlock switch.	4. Check grounds M49 , M105 , and M160 .
Driver side power window cannot be operated but passenger window can be operated.	1. Driver side power window motor LH circuit.	1. Check driver side power window motor LH circuit.
	2. Driver side power window motor LH.	2. Check driver side power window motor LH.
	3. Power to power window amplifier.	3. Turn ignition switch ON and verify battery positive voltage is present at terminals ② and ⑥ of power window amplifier.
	4. Ground to power window amplifier.	4. Check grounds M49 , M105 , and M160 .
	5. Driver side power window switch.	5. Check main power window and door lock/unlock switch.
	6. Power window switch circuit.	6. Check wires between main power window and door lock/unlock switch and power window amplifier for open/short circuits.
	7. Power window amplifier.	7. Replace power window amplifier.
Passenger power window cannot be operated.	1. Power window switch RH.	1. Check power window switch RH.
	2. Power window motor RH.	2. Check power window motor RH.
	3. Main power window and door lock/unlock switch.	3. Check main power window and door lock/unlock switch.
	4. Power window circuit.	4. Check wires between main power window and door lock/unlock switch and passenger power window switch and motor for open/short circuits.
Passenger power window cannot be operated by main switch but can be operated by passenger's switch.	1. Main power window and door lock/unlock switch.	1. Check main power window and door lock/unlock switch (lock must be in unlock position).
	2. Power to main power window and door lock/unlock switch.	2. Turn ignition switch ON and verify battery positive voltage is present at terminal ⑤ of main power window and door lock/unlock switch.
Passenger power window cannot be operated by passenger switch but can be operated by main switch.	1. Power window switch RH.	1. Check power window switch RH.
	2. Power to power window switch RH.	2. Turn ignition switch ON and verify battery positive voltage is present at terminal ⑤ of power window switch RH.

System Description

Power is supplied at all times:
- through brown fusible link (located under the relay box)
- to circuit breaker terminal ①
- through circuit breaker terminal ②
- to door lock control unit terminal ②.

Ground is supplied:
- to door lock control unit terminal ⑥
- through body ground (M177) .

INPUT

When the lock/unlock knob switch is moved to the UNLOCK or LOCK position, ground is supplied:
- to door lock control unit terminal ① or ⑤
- from lock/unlock knob switch terminal ③ or ①
- through lock/unlock knob switch terminal ②
- through body grounds (M49) , (M105) and (M160) .

When the main power window and door lock/unlock switch is moved to the UNLOCK or LOCK position, ground is supplied:
- to door lock control unit terminal ① or ⑤
- from main power window and door lock/unlock switch terminal ⑬ or ⑫
- through main power window and door lock/unlock switch terminal ⑭ or ④
- through body grounds (M49) , (M105) and (M160) .

OUTPUT

Unlock

Power is supplied:
- from door lock control unit terminal ④
- to door lock actuator LH terminal ③, and
- to door lock actuator RH terminal ①.

Ground is supplied:
- from door lock control unit terminal ③
- to door lock actuator LH terminal ①, and
- to door lock actuator RH terminal ③.

With power and ground supplied, the door actuators move to the unlocked position.

Lock

Power is supplied:
- from door lock control unit terminal ③
- to door lock actuator LH terminal ①, and
- to door lock actuator RH terminal ③.

Ground is supplied:
- from door lock control unit terminal ④
- to door lock actuator LH terminal ③, and
- to door lock actuator RH terminal ①.

With power and ground supplied, the door actuators move to the locked position.

Schematic

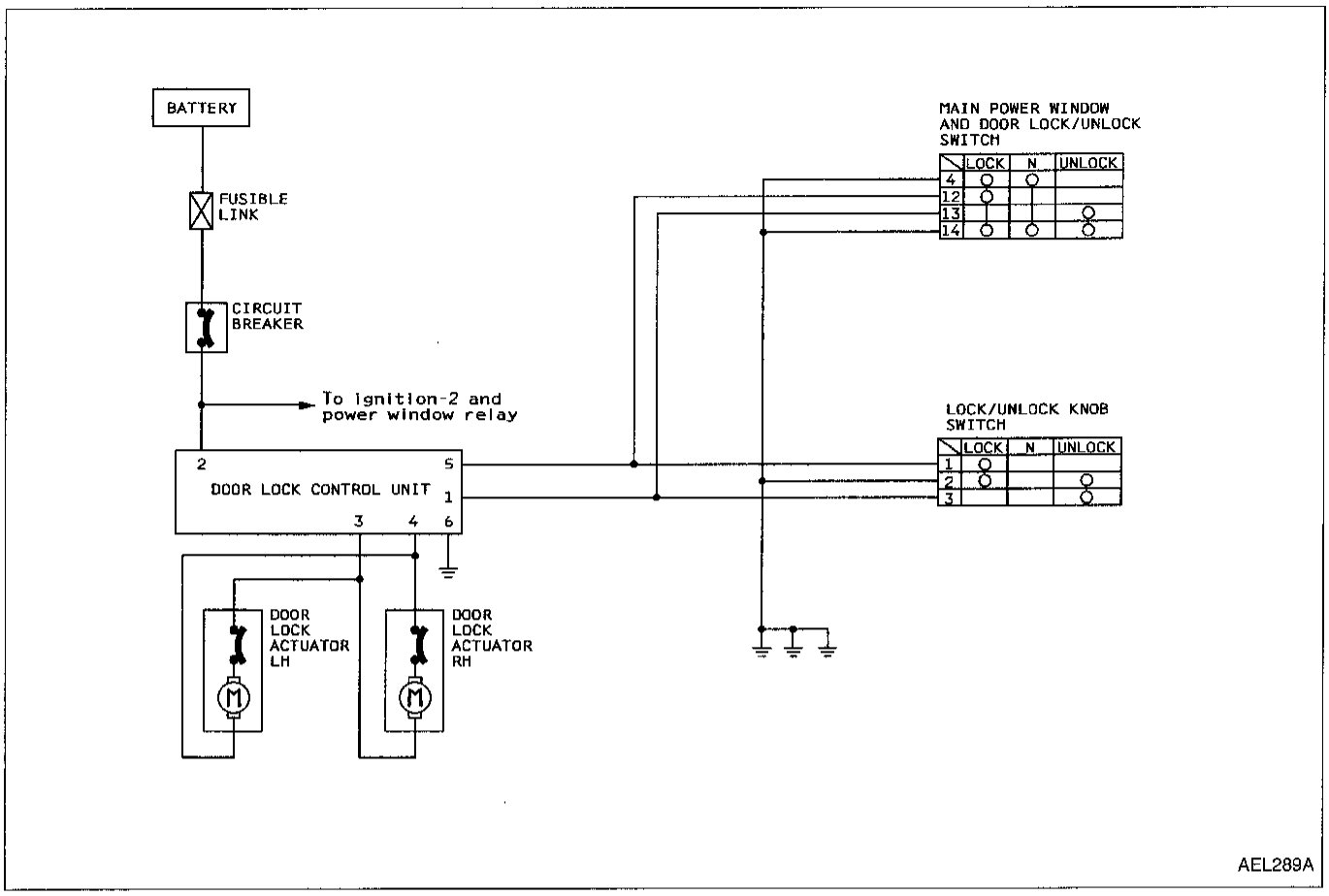
BATTERY
FUSIBLE LINK
CIRCUIT BREAKER
To ignition-2 and power window relay
2
5
DOOR LOCK CONTROL UNIT
1
3
4
6
DOOR LOCK ACTUATOR LH
DOOR LOCK ACTUATOR RH
M
M
MAIN POWER WINDOW AND DOOR LOCK/UNLOCK SWITCH
LOCK
N
UNLOCK
4
12
13
14
LOCK/UNLOCK KNOB SWITCH
LOCK
N
UNLOCK
1
2
3
AEL289A

NOTES

Wiring Diagram –D/LOCK–

EL-D/LOCK-01

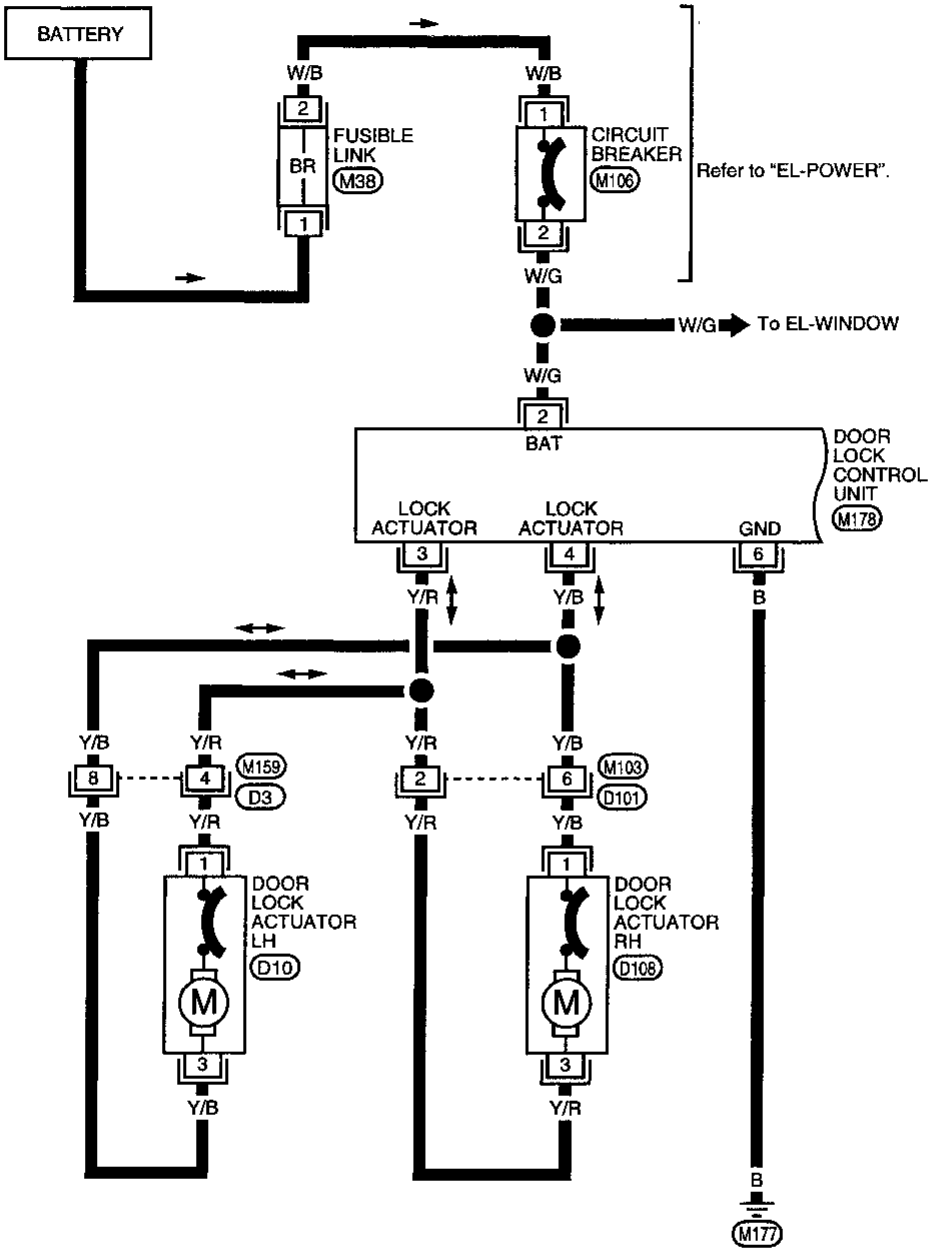

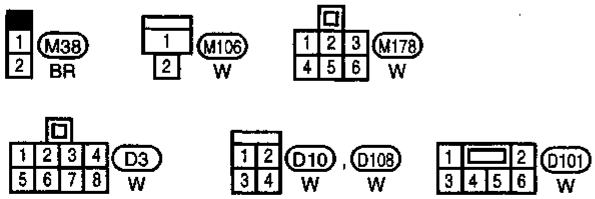

AEL288A-A

Wiring Diagram –D/LOCK– (Cont'd)

EL-D/LOCK-02

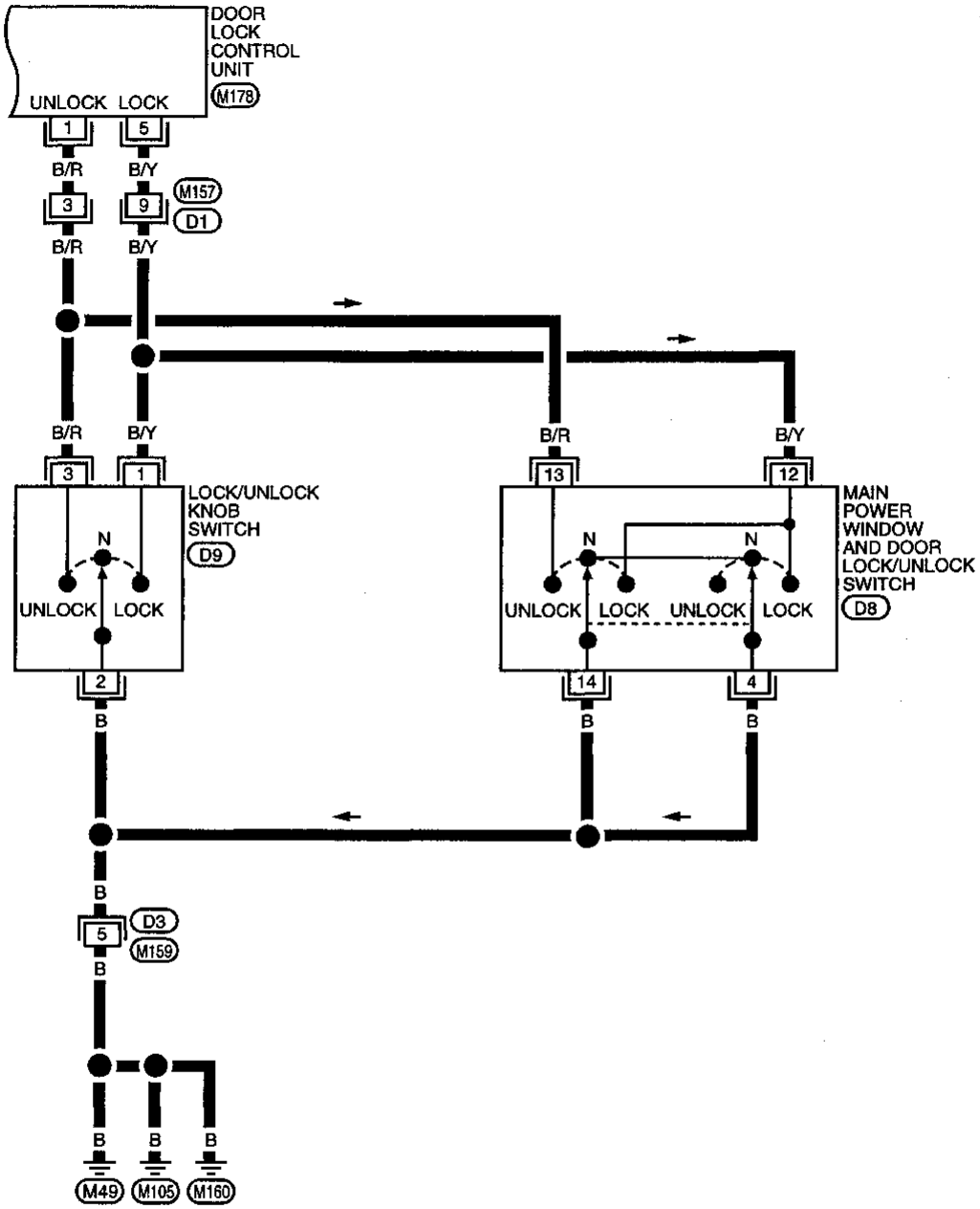

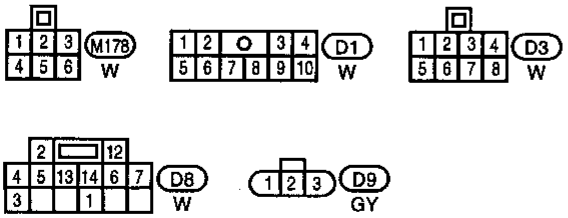

AEL288A-B

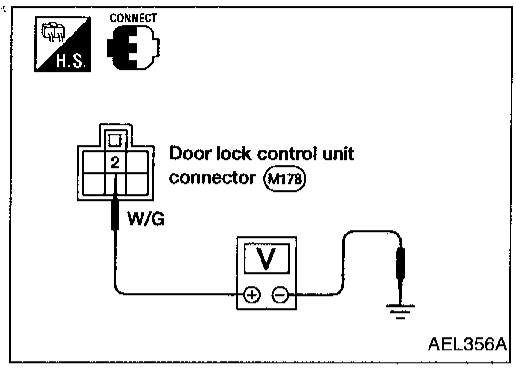

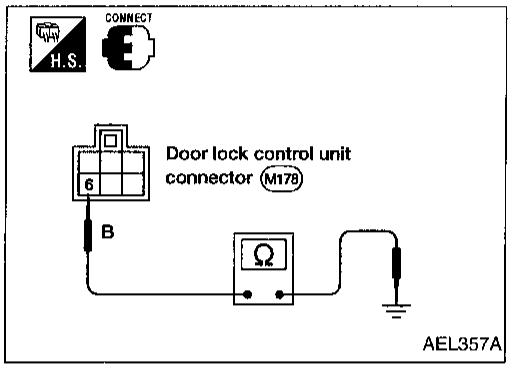

Trouble Diagnoses

MAIN POWER SUPPLY AND GROUND CIRCUIT CHECK

Main power supply for door lock control unit

Terminals	Battery voltage existence
② - Ground (GND)	Yes

Ground circuit for door lock control unit

Terminals	Continuity
⑥ - Ground	Yes

Trouble Diagnoses (Cont'd)

DIAGNOSTIC PROCEDURE

SYMPTOM: Power door locks cannot be operated by door lock/unlock switches.

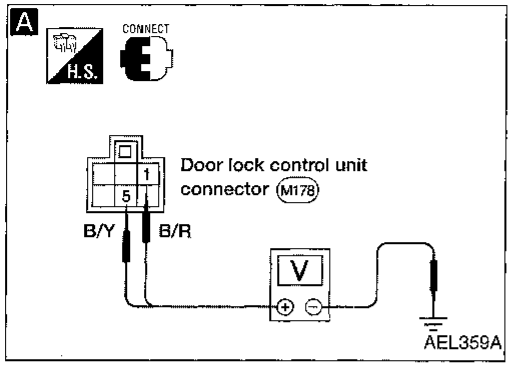

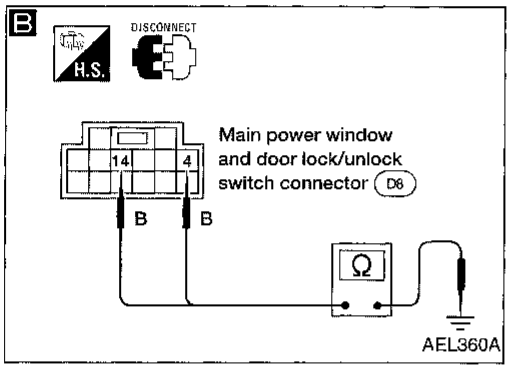

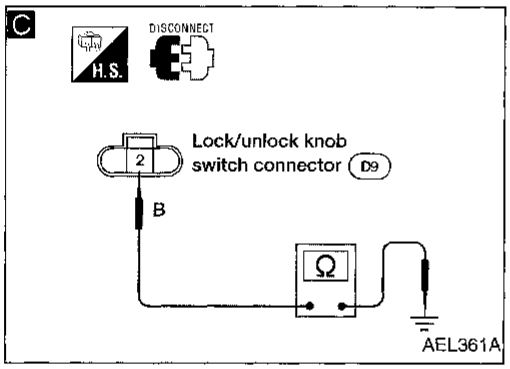

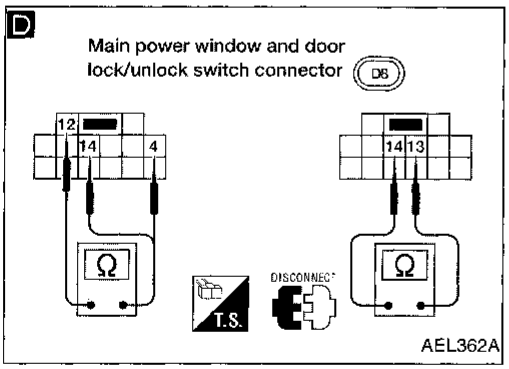

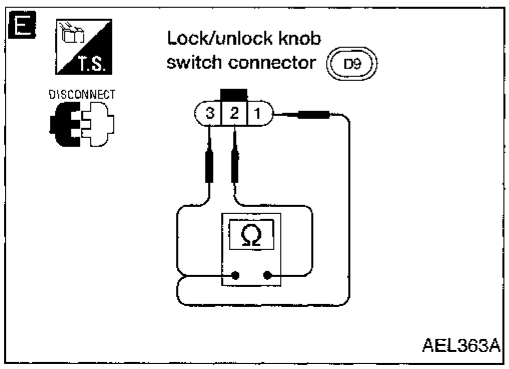

A

CHECK SIGNAL OF DOOR LOCK/ UNLOCK SWITCH.

Check voltage between control unit terminal ① or ⑤ and ground.

Terminals	Door lock/ unlock switch operation	Voltage (V)
⑤ - GND	Lock	0
	N and Unlock	12
① - GND	Unlock	0
	N and Lock	12

OK → Ⓐ (Go to next page.)

NG ↓

B C

CHECK GROUND CIRCUIT FOR LOCK/ UNLOCK SWITCHES.

1. Disconnect door lock/unlock switch.
2. Check continuity between door lock/ unlock switch terminal(s) and ground.

B Main power window and door lock/ unlock switch
Between terminals ⑭, ④ and ground.

C Lock/unlock knob switch
Between terminal ② and ground.
Continuity should exist.

OK → Repair ground harness of door lock/unlock switch.

NG ↓

D E

CHECK DOOR LOCK/UNLOCK SWITCHES.

1. Disconnect door lock/unlock switch.
2. Check continuity.

D Main power window and door lock/ unlock switch

Operation	Terminals	Continuity
Lock	⑫ - ④, ⑭	Yes
Unlock	⑬ - ⑭	

E Lock/unlock knob switch

Operation	Terminals	Continuity
Lock	① - ②	Yes
Unlock	③ - ②	

OK → Repair harness between door lock/unlock switch and control unit connector.

NG ↓

Replace door lock/unlock switch.

Trouble Diagnoses (Cont'd)

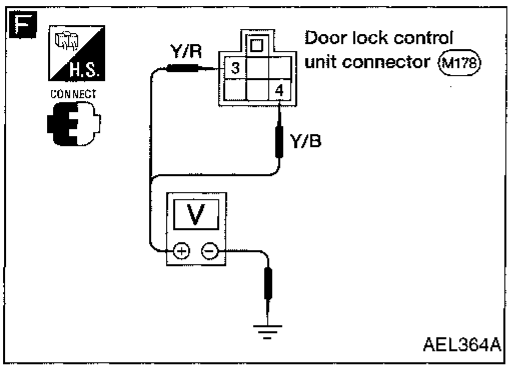

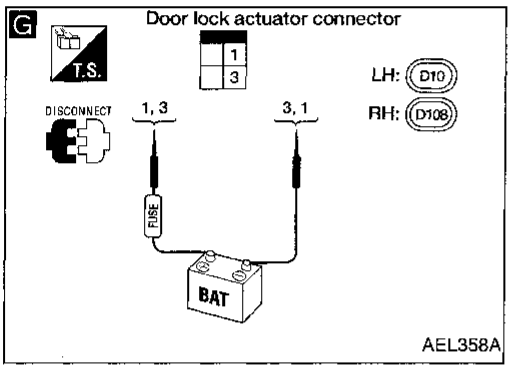

Ⓐ

F

CHECK DOOR LOCK ACTUATOR CIRCUIT.

Check voltage for door lock actuator.
Door lock actuator LH and RH

Door lock/unlock switch operation	Terminals ⊕	Terminals ⊖	Voltage (V)
Lock	③	GND	Battery voltage
Unlock	④	GND	

NG → Replace door lock control unit.

OK ↓

G

CHECK DOOR LOCK ACTUATOR.

1. Disconnect door lock actuator.
2. Apply 12V direct current to door lock actuator and check operation.

Door lock/unlock switch operation		Terminals ⊕	Terminals ⊖
LH	Lock	①	③
	Unlock	③	①
RH	Lock	③	①
	Unlock	①	③

NG → Repair harness between control unit connector and door lock actuator.

OK ↓

Replace malfunctioning power door lock actuator.

NOTES

Wiring Diagram –MIRROR–

EL-MIRROR-01

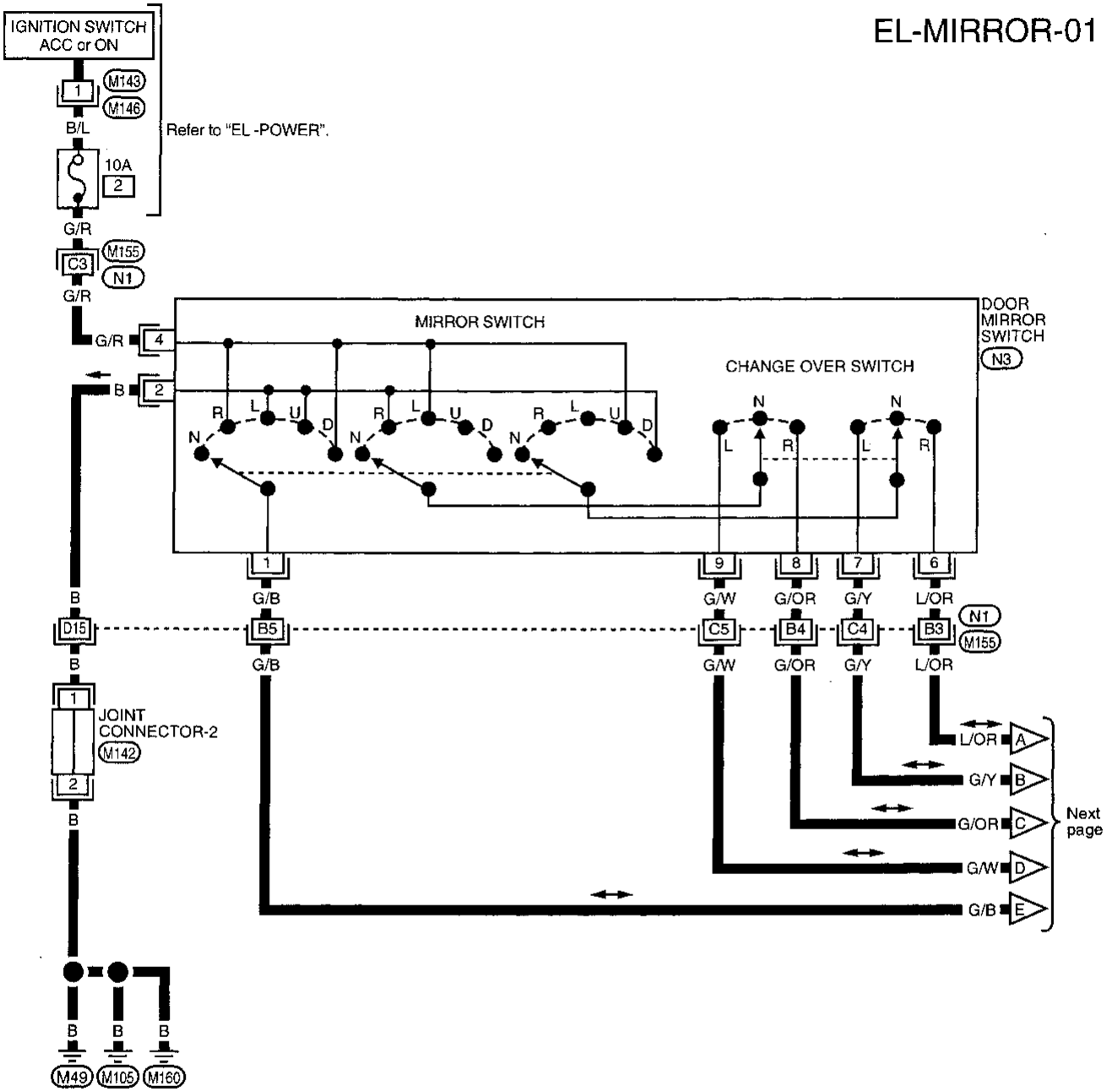

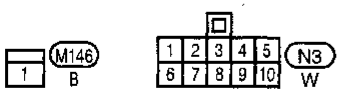

Refer to last page (Foldout page).
M142
M155 , N1

AEL280A-A

Wiring Diagram –MIRROR– (Cont'd)

EL-MIRROR-02

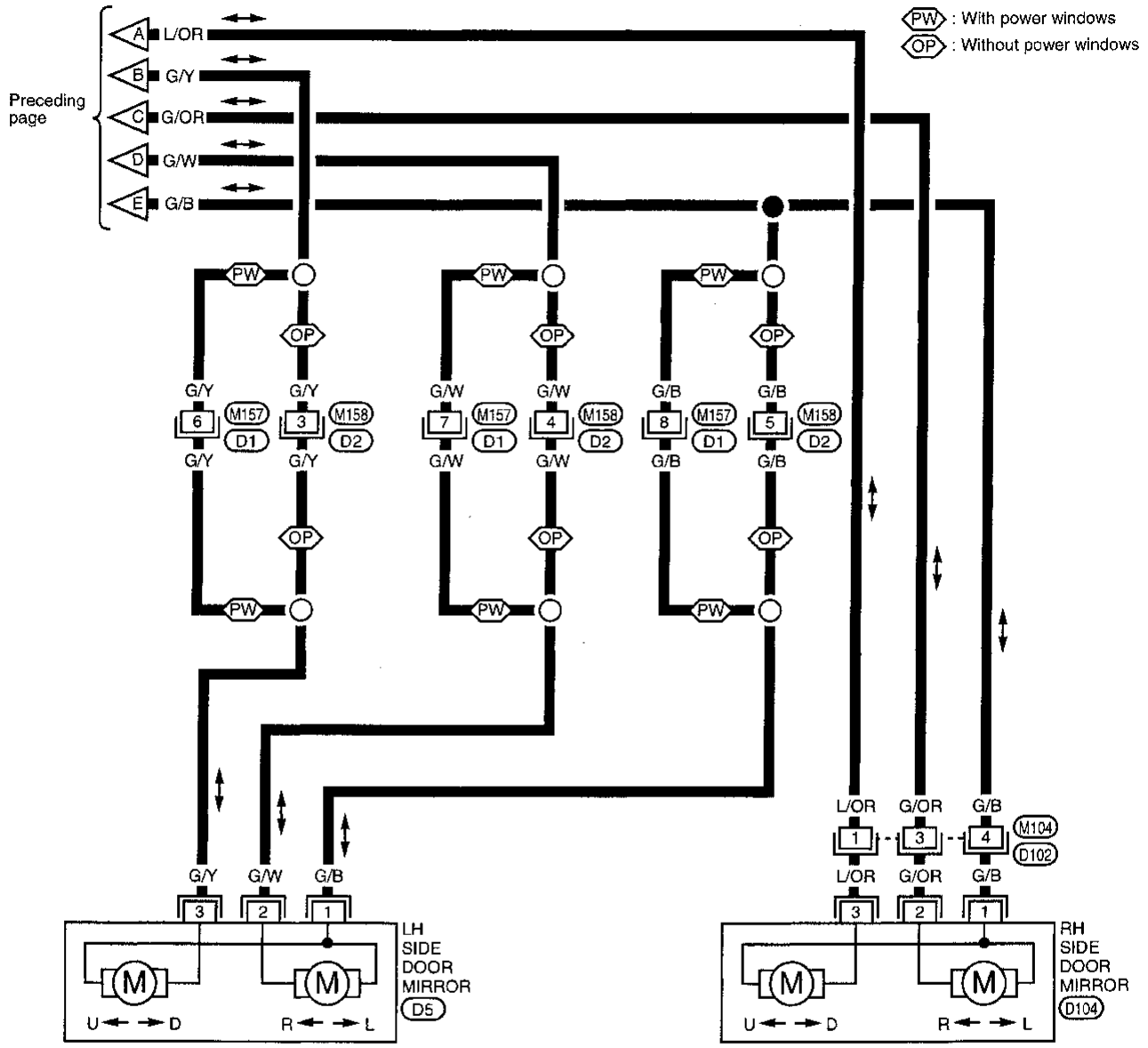

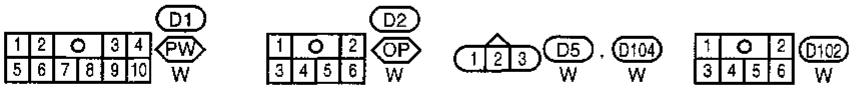

AEL280A-B

Wiring Diagram –HORN–

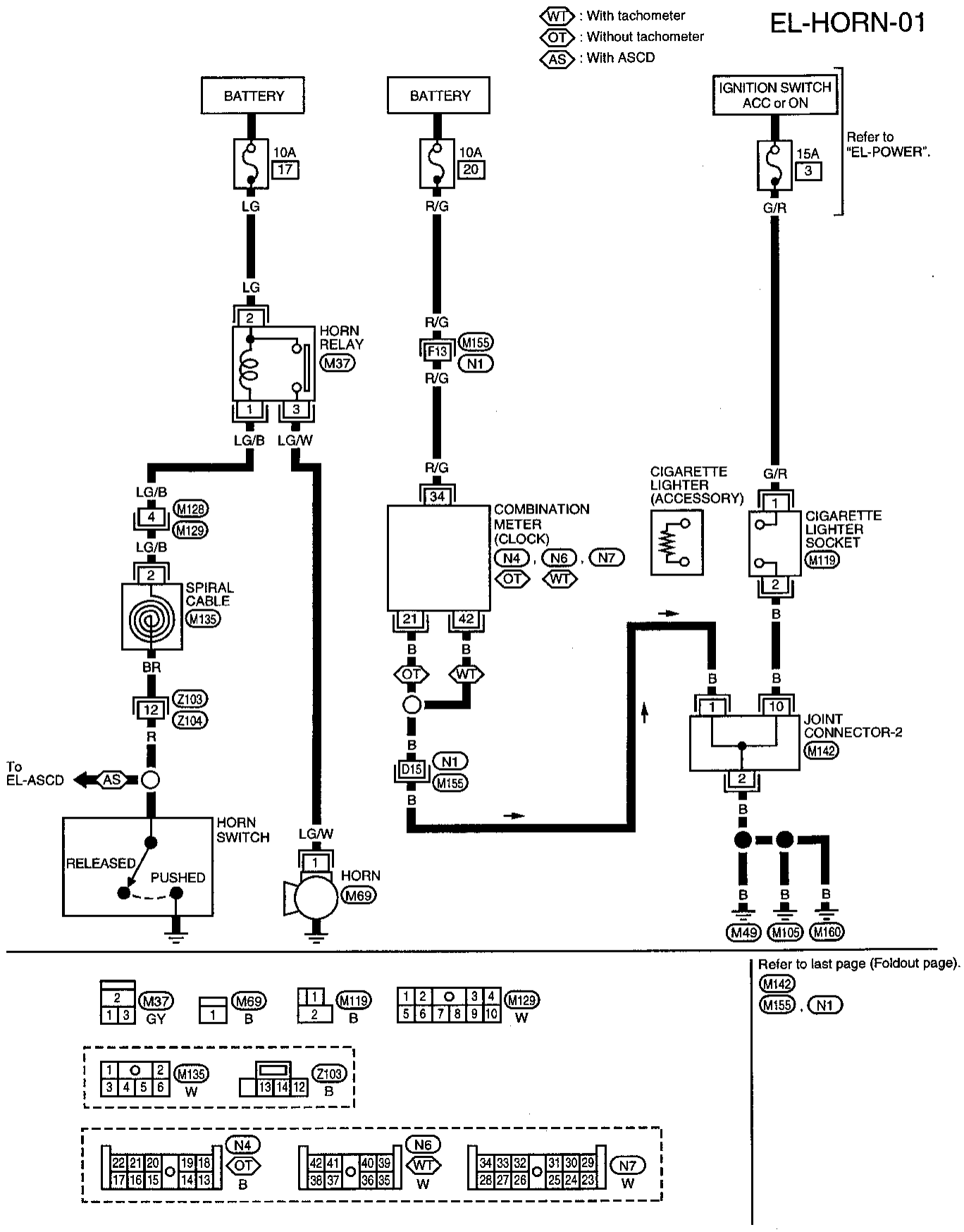

AEL284A

System Description

Refer to Owner's Manual for audio system operating instructions.

WITH PREMIUM AUDIO SYSTEM

Power is supplied at all times:
- through 10A fuse (No. 20 , located in the fuse block)
- to radio and cassette player terminal ⑥.

Power is supplied at all times:
- through 15A fuse (No. 1 , located in the fuse block)
- to rear speaker amplifier terminal ②.

With the ignition switch in the ACC or ON position, power is supplied:
- through 10A fuse (No. 6 , located in the fuse block)
- to radio and cassette player terminal ⑩.

Ground is supplied through the case of the radio and cassette player.
Ground is also supplied:
- to rear speaker amplifier terminal ⑦
- through body ground (M177) .

When the system is on, remote on signal is supplied:
- from the radio and cassette player terminal ⑫
- to the rear speaker amplifier terminal ①.

And audio signals are supplied:
- through radio and cassette player terminals ①, ②, ③, ④, ⑬, ⑭, ⑮ and ⑯
- to terminals ⑤, ⑫, ④ and ⑪ of the rear speaker amplifier and the door speakers, and
- through rear speaker amplifier terminals ③, ⑩, ⑧ and ⑨
- to the rear speakers.

WITH BASE AUDIO SYSTEM

Power is supplied at all times:
- through 10A fuse (No. 20 , located in the fuse block)
- to radio and cassette player terminal ⑥.

With the ignition switch in the ACC or ON position, power is supplied:
- through 10A fuse (No. 6 , located in the fuse block)
- to radio and cassette player terminal ⑩.

Ground is supplied through the case of the radio and cassette player.
When the system is on, audio signals are supplied:
- through radio and cassette player terminals ①, ②, ③, and ④
- to the door speakers, and
- through radio and cassette player terminals ⑬, ⑭, ⑮ and ⑯ (with rear speakers)
- to the rear speakers (with rear speakers).

Schematic

PREMIUM AUDIO SYSTEM

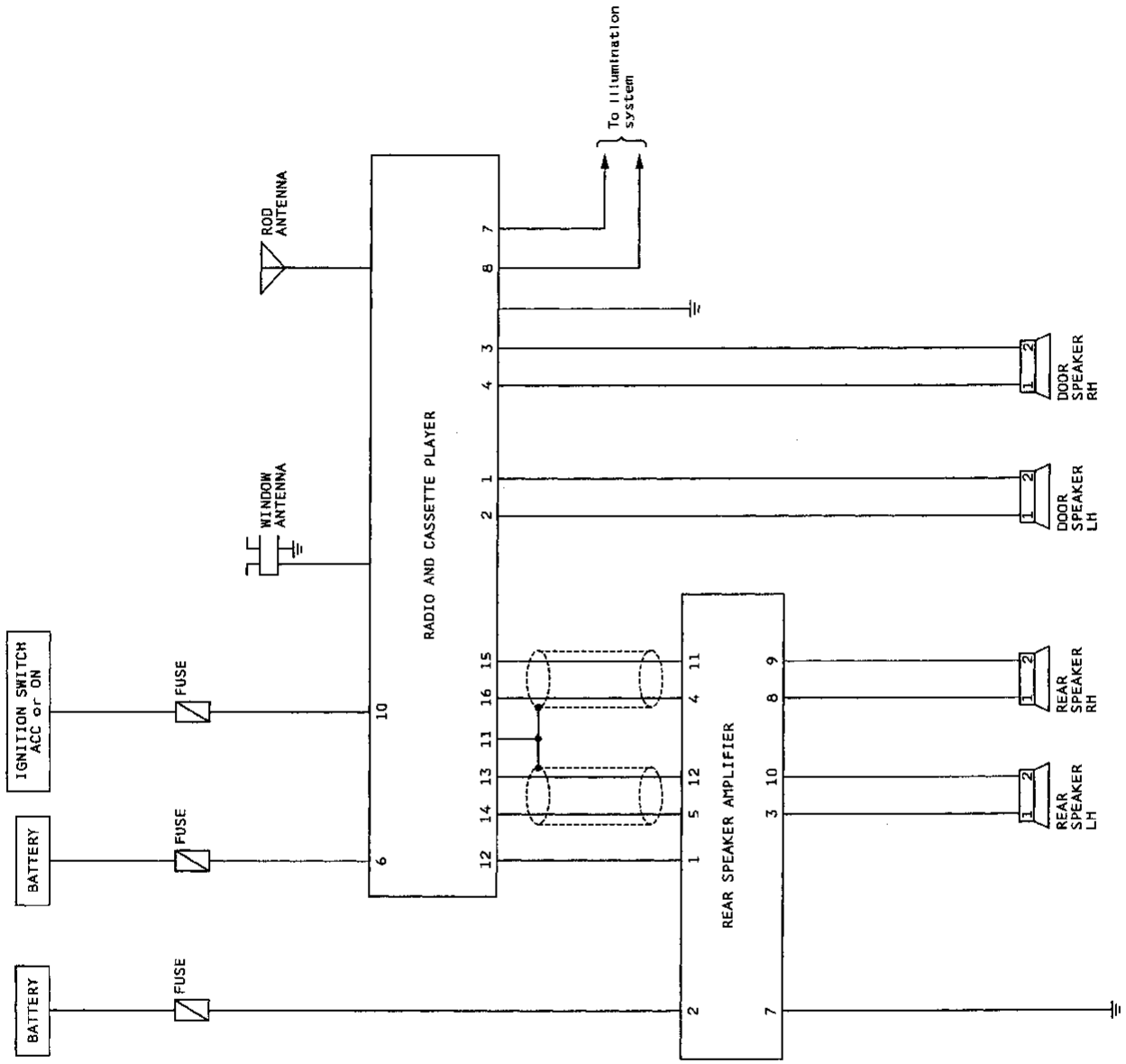

AEL294A

Wiring Diagram –AUDIO–

PREMIUM AUDIO SYSTEM

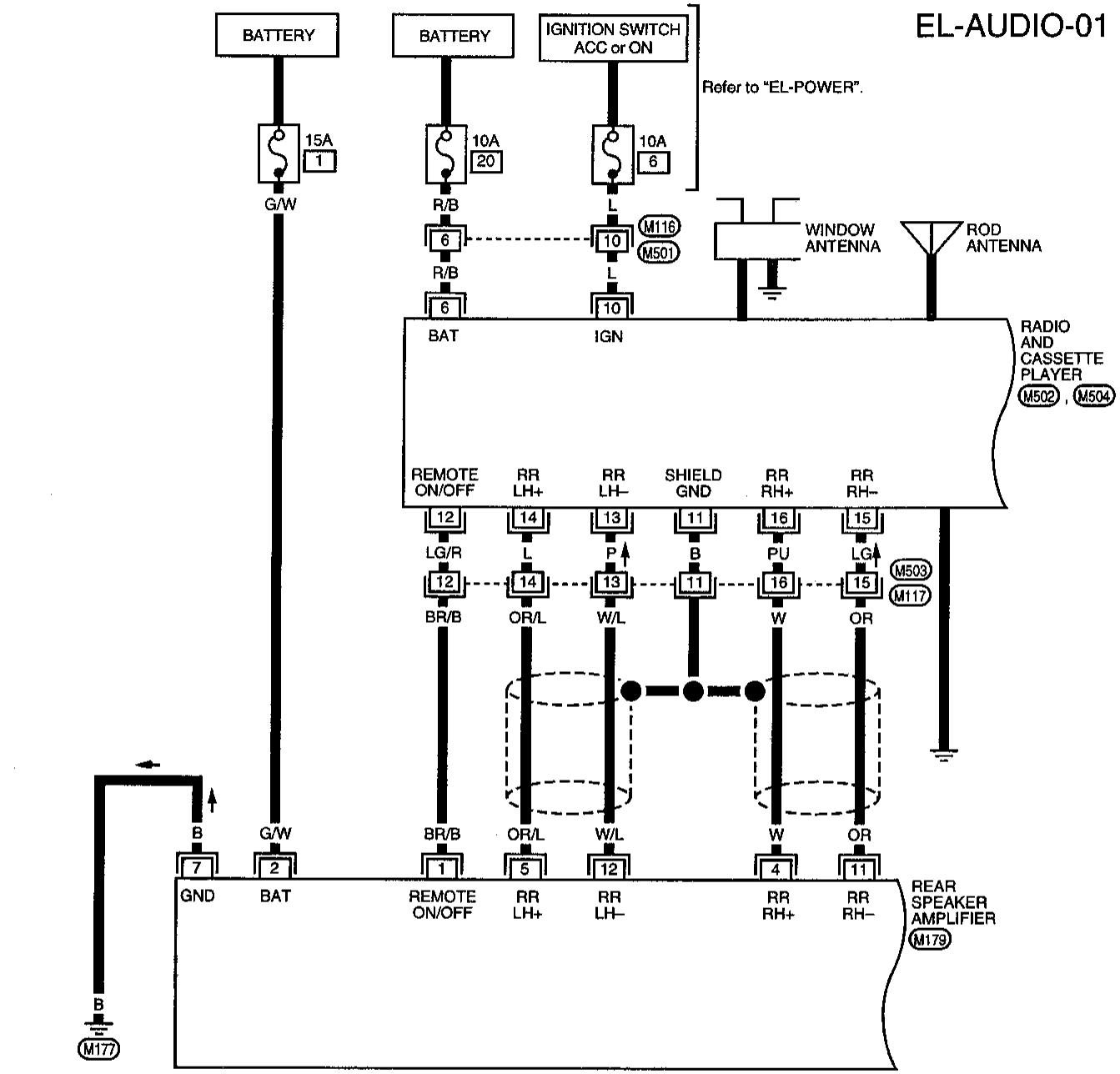

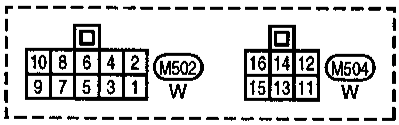

AEL293A-A

Wiring Diagram –AUDIO– (Cont'd)

EL-AUDIO-02

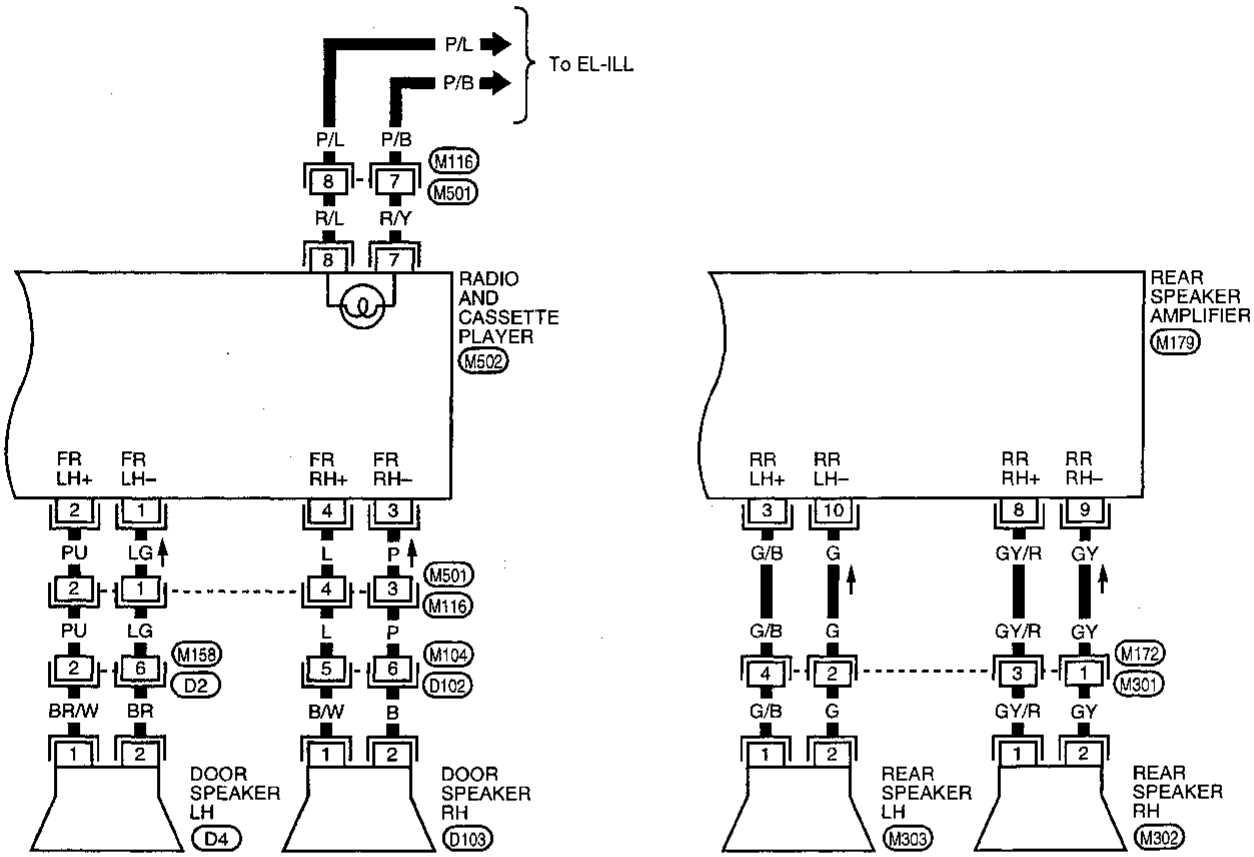

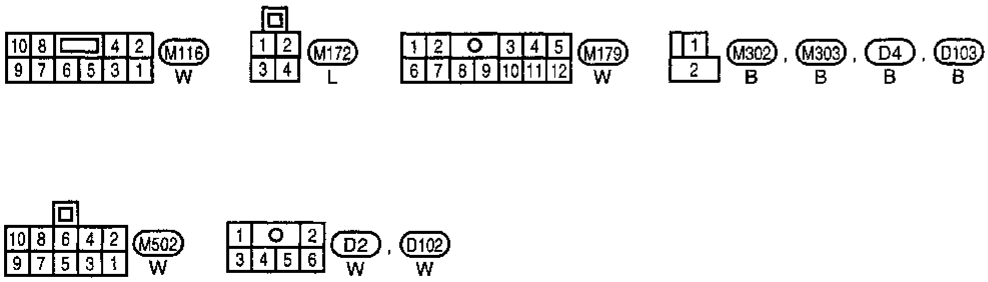

AEL293A-B

Wiring Diagram –AUDIO– (Cont'd)

BASE AUDIO SYSTEM

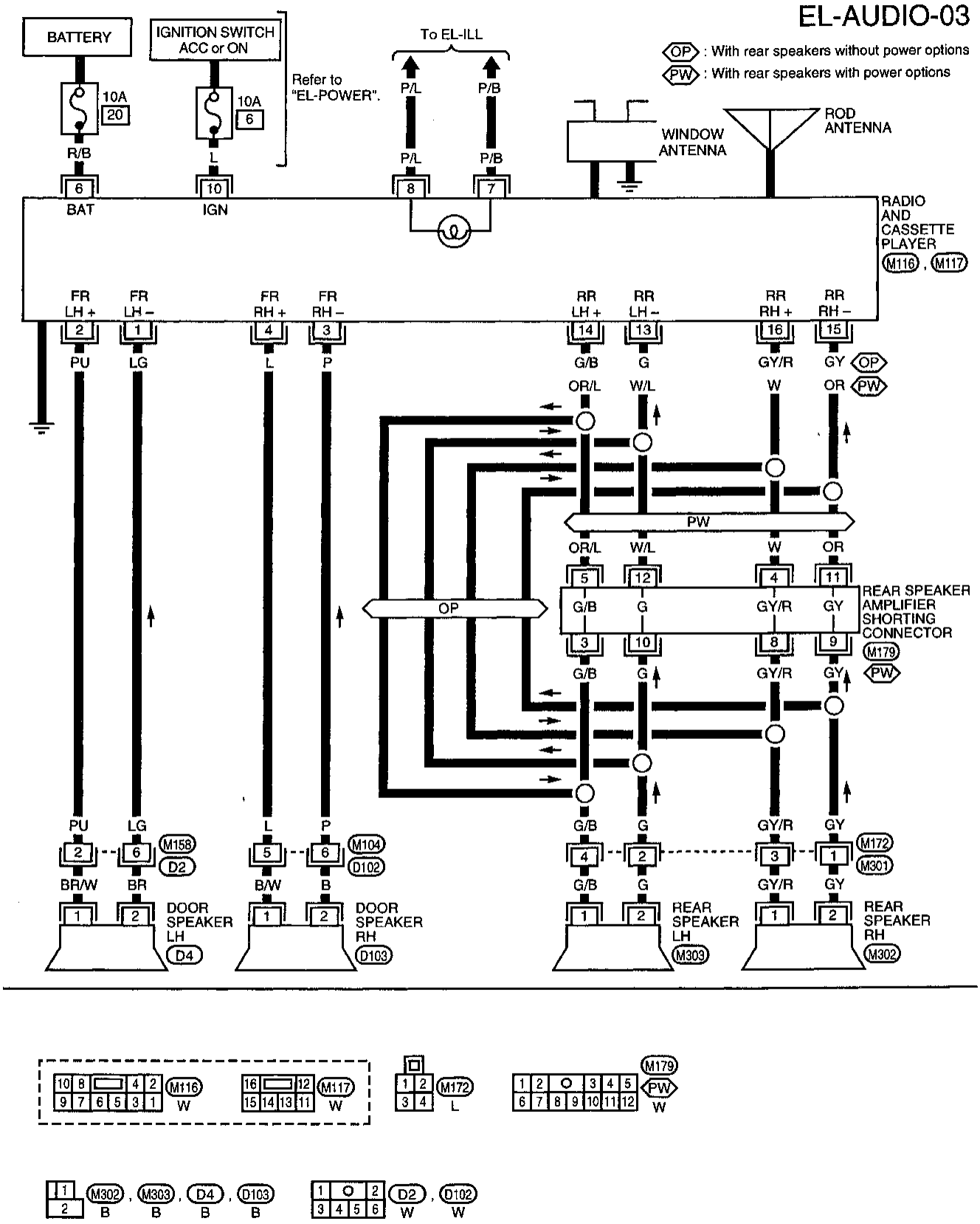

Trouble Diagnoses

Symptom	Possible causes	Repair order
Radio inoperative (no digital display and no sound from speakers).	1. 10A fuse 2. Poor radio case ground 3. Radio	1. Check 10A fuse (No. 6 , located in fuse block). Turn ignition switch ON and verify battery positive voltage is present at terminal ⑩ of radio. 2. Check radio case ground. 3. Remove radio for repair.
Radio controls are operational, but no sound is heard from any speaker.	1. Radio output 2. Radio	1. Check radio output voltages. 2. Remove radio for repair.
Radio presets are lost when ignition switch is turned OFF.	1. 10A fuse 2. Radio	1. Check 10A fuse (No. 20 , located in fuse block) and verify battery positive voltage is present at terminal ⑥ of radio. 2. Remove radio for repair.
Rear speakers are inoperative.	WITH REAR SPEAKER AMPLIFIER 1. Rear speaker amplifier 15A fuse 2. Poor rear amplifier ground 3. Rear speaker amplifier 4. Rear speaker amplifier circuit 5. Radio WITHOUT REAR SPEAKER AMPLIFIER 1. Radio output 2. Radio	WITH REAR SPEAKER AMPLIFIER 1. Check 15A fuse (No. 1 , located in the fuse block) and verify battery positive voltage is present at terminal ② of rear speaker amplifier. 2. Check rear amplifier ground (M177) . 3. Check rear speaker amplifier voltages. 4. Check wires for open or short between radio, rear speaker amplifier and rear speakers. 5. Remove radio for repair. WITHOUT REAR SPEAKER AMPLIFIER 1. Check radio output voltages. 2. Remove radio for repair.
Front speakers are inoperative.	1. Radio output 2. Radio	1. Check radio ouput voltages. 2. Remove radio for repair.
Individual speaker is noisy or inoperative.	1. Speaker 2. Radio/amplifier output 3. Speaker circuit 4. Radio	1. Check speaker. 2. Check radio/amplifier output voltages. 3. Check wires for open or short between radio/amplifier and speaker. 4. Remove radio for repair.
AM stations are weak or noisy (FM stations OK).	1. Antenna 2. Poor radio ground 3. Radio	1. Check antenna. 2. Check radio ground. 3. Remove radio for repair.
FM stations are weak or noisy (AM stations OK).	1. Window antenna 2. Radio	1. Check window antenna. 2. Remove radio for repair.
Radio generates noise in AM and FM modes with engine running.	1. Poor radio ground 2. Loose or missing ground bonding straps 3. Ignition condenser 4. Generator 5. Ignition coil or secondary wiring 6. Radio	1. Check radio ground. 2. Check ground bonding straps. 3. Replace ignition condenser. 4. Check generator. 5. Check ignition coil and secondary wiring. 6. Remove radio for repair.
Radio generates noise in AM and FM modes with accessories on (switch pops and motor noise).	1. Poor radio ground 2. Antenna 3. Accessory ground 4. Faulty accessory	1. Check radio ground. 2. Check antenna. 3. Check accessory ground. 4. Replace accessory.

Trouble Diagnoses (Cont'd)

SPEAKER INSPECTION

1. Disconnect speaker harness connector.
2. Measure the resistance between speaker terminals ① and ②.
- The resistance should be 2-4 Ω
3. Using jumper wires, momentarily connect a 9V battery between speaker terminals ① and ②.
- A momentary hum or pop should be heard

ANTENNA INSPECTION

Using a jumper wire, clip an auxiliary ground between antenna and body.
- If reception improves, check antenna ground (at body surface)
- If reception does not improve, check main feeder cable for short circuit or open circuit.

RADIO AND AMPLIFIER INSPECTION

All voltage inspections are made with:
- Ignition switch ON or ACC
- Radio ON
- Radio and amplifier connected (If either is removed for inspection, supply a ground to the case using a jumper wire.)

RADIO VOLTAGES

Terminal	Voltage (V)	
	Base Audio System	Premium Audio System
1	5 - 7.5	2.5 - 6.5
2	5 - 7.5	2.5 - 6.5
3	5 - 7.5	2.5 - 6.5
4	5 - 7.5	2.5 - 6.5
5	—	—
6	10.8 - 15.6	10.8 - 15.6
7	—	—
8	—	—
9	—	—
10	10.8 - 15.6	10.8 - 15.6
11	—	0
12	—	10.8 - 15.6
13	5 - 7.5	2.5 - 6.5
14	5 - 7.5	2.5 - 6.5
15	5 - 7.5	2.5 - 6.5
16	5 - 7.5	2.5 - 6.5

AMPLIFIER VOLTAGES

Terminal	Voltage (V)
1	10.8 - 15.6
2	10.8 - 15.6
3	4.5 - 8.5
4	2.5 - 6.5
5	2.5 - 6.5
6	—
7	0
8	4.5 - 8.5
9	4.5 - 8.5
10	4.5 - 8.5
11	2.5 - 6.5
12	2.5 - 6.5

Location of Antenna

Fender antenna replacement
• Removal

1. Remove one screw securing fender antenna assembly.
2. Disconnect fender antenna cable connector.
3. Remove the fender antenna assembly.

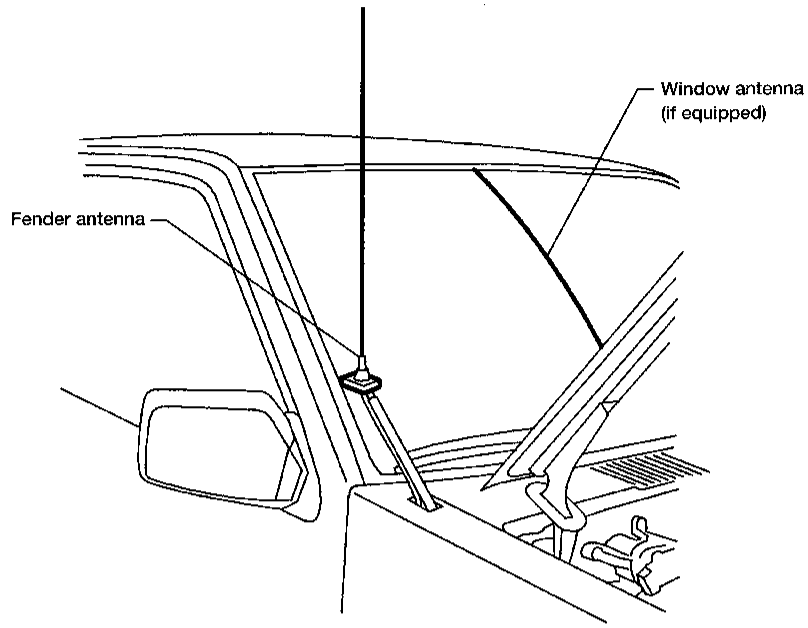

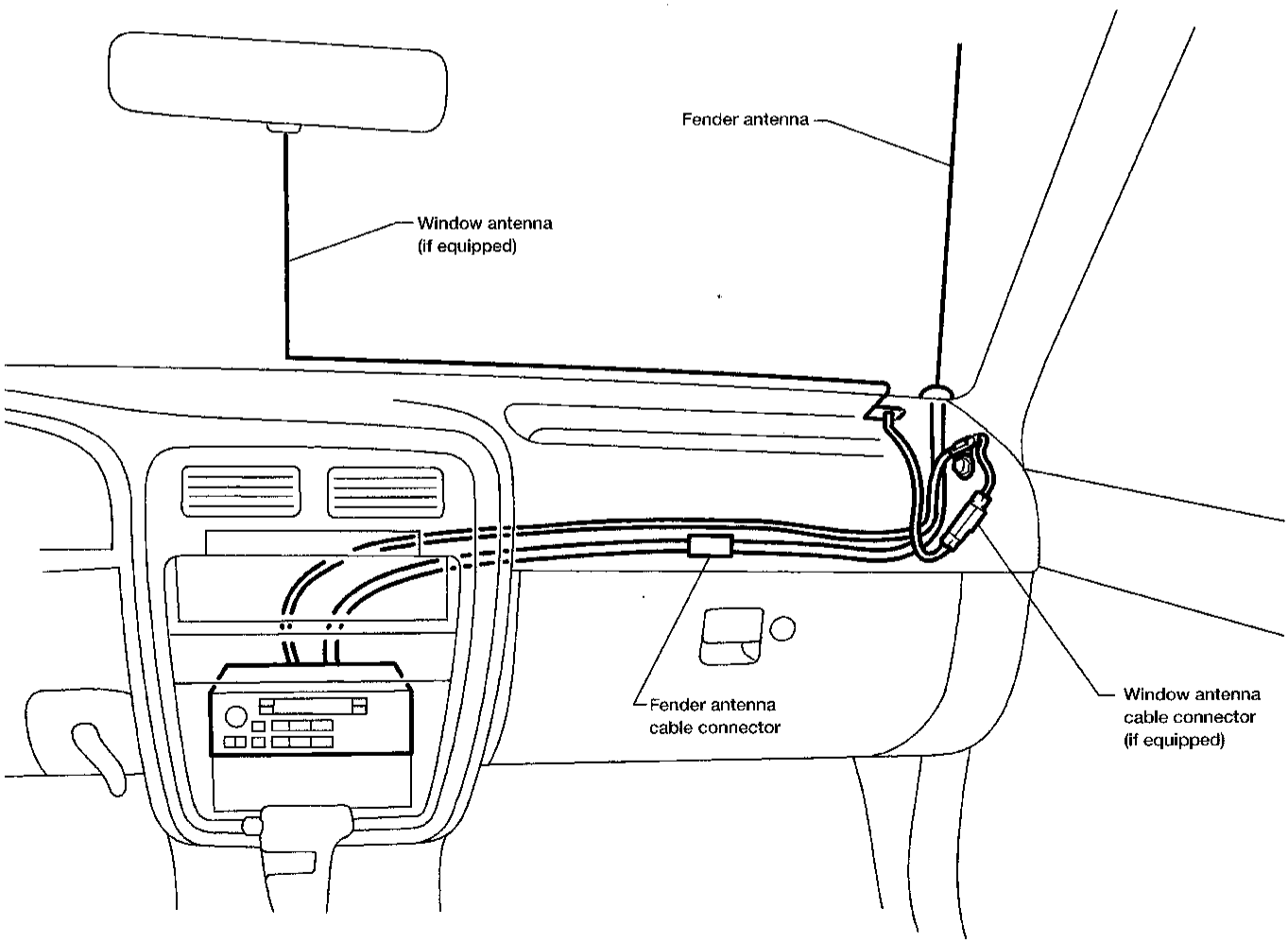

AEL378A

Window Antenna Repair

ELEMENT CHECK

1. Attach probe circuit tester (in ohm range) to each side of antenna terminal.

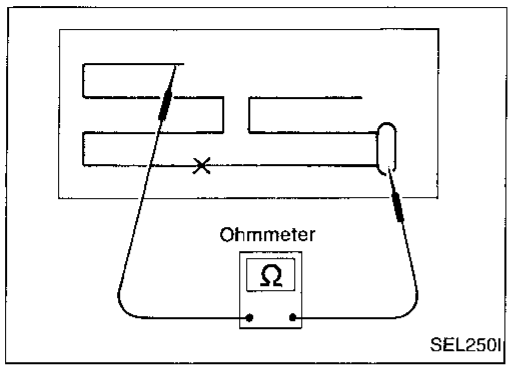

2. If an element is broken, no continuity will exist.

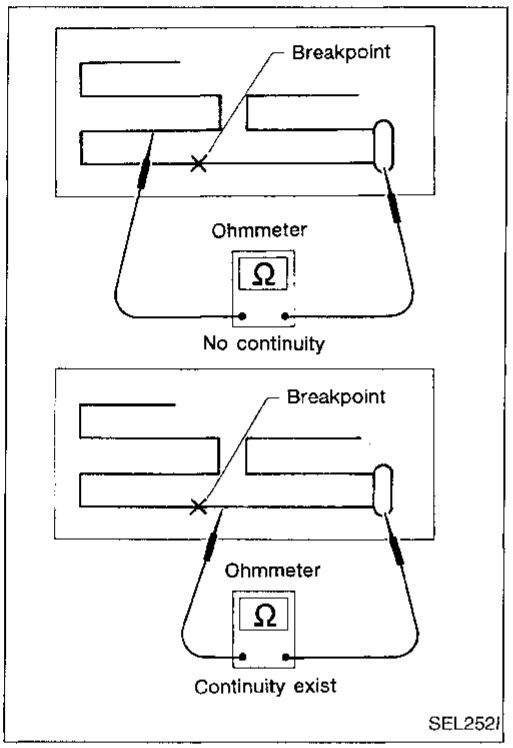

3. To locate a burned out point, move probe along filament. Tester needle swings abruptly at the burned point.

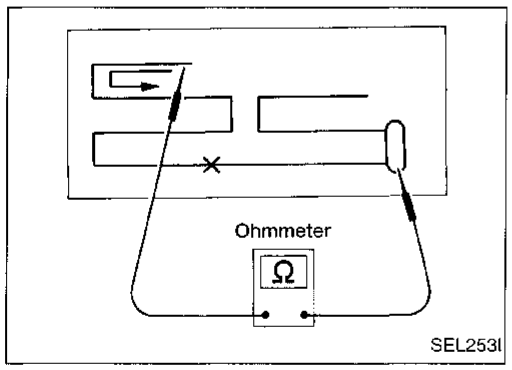

Window Antenna Repair (Cont'd)

ELEMENT REPAIR

Repair equipment

1. Conductive silver composition (Dupont No. 4817 or equivalent)
2. Ruler 30 cm (11.8 in) long
3. Drawing pen
4. Heat gun
5. Alcohol
6. Cloth

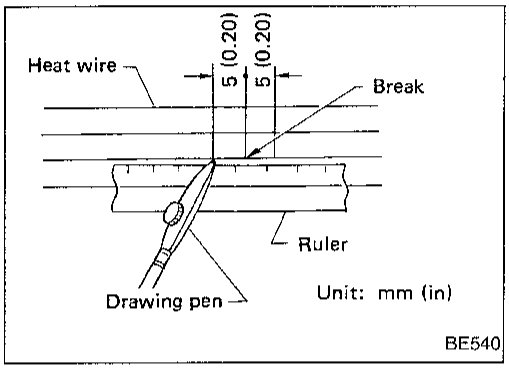

Repairing procedure

1. Wipe broken heat wire and its surrounding area clean with a cloth dampened in alcohol.
2. Apply a small amount of conductive silver composition to tip of drawing pen.

Shake silver composition container before use.

3. Place ruler on glass along broken line. Deposit conductive silver composition on break with drawing pen. Slightly overlap existing heat wire on both sides [preferably 5 mm (0.20 in)] of the break.
4. After repair has been completed, check repaired wire for continuity. This check should be conducted 10 minutes after silver composition is deposited.

Do not touch repaired area while test is being conducted.

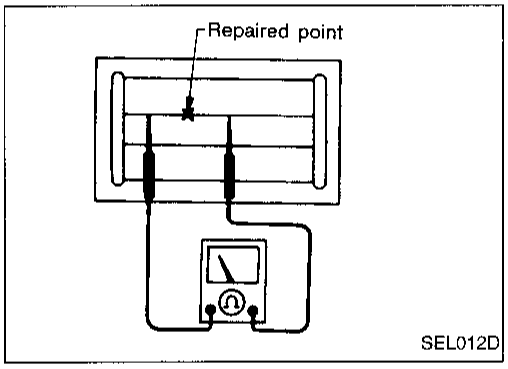

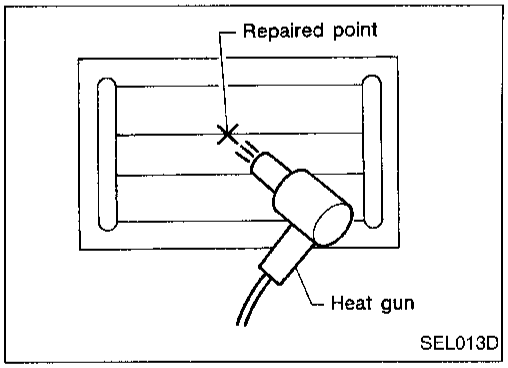

5. Apply a constant stream of hot air directly to the repaired area for approximately 20 minutes with a heat gun. A minimum distance of 3 cm (1.2 in) should be kept between repaired area and hot air outlet. If a heat gun is not available, let the repaired area dry for 24 hours.

System Description

Refer to Owner's Manual for ASCD operating instructions.
When the ignition switch is in the ON or START position, power is supplied:
- through 10A fuse (No. 11 , located in the fuse block)
- to ASCD cancel switch terminal ② (A/T models)
- to ASCD main switch terminal ⑥ and
- to ASCD hold relay terminal ⑤ (M/T models) or
- to ASCD hold relay terminal ③ (A/T models).

With brake pedal released, power remains supplied:
- through ASCD cancel switch terminal ① (A/T models) and
- to ASCD hold relay terminal ⑥ (A/T models).

When ASCD main switch is in the ON position, power is supplied:
- from terminal ② of the ASCD main switch
- to ASCD control unit terminal ④ and
- from terminal ① of the ASCD main switch
- to ASCD hold relay terminal ② (M/T models) or
- to ASCD hold relay terminal ① (A/T models).

Ground is supplied:
- to ASCD hold relay terminal ① (M/T models) or
- to ASCD hold relay terminal ② (A/T models)
- through body grounds M49 , M105 and M160 .

With power and ground supplied, the ASCD hold relay is activated, and power is supplied:
- from terminal ③ of the ASCD hold relay (M/T models) or
- from terminal ⑤ of the ASCD hold relay (A/T models)
- to ASCD main switch terminal ②,
- to ASCD control unit terminal ④ and
- to ASCD clutch pedal position switch terminal ① (M/T models) or
- from terminal ⑦ of the ASCD hold relay (A/T models)
- to inhibitor relay terminal ③ (A/T models).

When the ASCD main switch is released to the N (neutral) position, power remains supplied to:
- to ASCD hold relay terminal ② (M/T models) or
- to ASCD hold relay terminal ① (A/T models)
- from ASCD main switch terminal ①.
- Ground is supplied:
- to ASCD control unit terminal ③
- through body grounds M49 , M105 and M160 .

Inputs

At this point, the system is ready to activate or deactivate, based on inputs from the following:
- speedometer in the combination meter
- stop lamp switch
- ASCD steering switch
- inhibitor relay (A/T models)
- ASCD clutch pedal position switch (M/T models) and
- ASCD cancel switch.

A vehicle speed input is supplied:
- to ASCD control unit terminal ⑦
- from terminal ⑦ of the combination meter.

Power is supplied at all times:
- to stop lamp switch terminal ①
- through 10A fuse (No. 19 , located in the fuse block).

When the brake pedal is depressed, power is supplied:
- from terminal ② of the stop lamp switch
- to ASCD control unit terminal ⑪.

Power is supplied at all times:
- through 10A fuse (No. 17 , located in the fuse block)
- to horn relay terminal ②
- through terminal ① of the horn relay
- to ASCD steering switch terminal ⑧.

System Description (Cont'd)

When the SET/COAST button is depressed, power is supplied:
- from terminal ⑦ of the ASCD steering switch
- to ASCD control unit terminal ②.

When the RESUME/ACCEL button is depressed, power is supplied:
- from terminal ⑥ of the ASCD steering switch
- to ASCD control unit terminal ①.

When the CANCEL button is depressed, power is supplied:
- to ASCD control unit terminals ① and ②.

When the system is activated, power is supplied:
- to ASCD control unit terminal ⑤.

Power is interrupted when:
- the shift lever is placed in P or N (A/T models)
- the clutch pedal is depressed (M/T models) or
- the brake pedal is depressed.

Outputs

The ASCD actuator controls the throttle drum via the ASCD wire based on inputs from the ASCD control unit.
The ASCD actuator consists of a vacuum motor, an air valve, and a release valve.
Power is supplied:
- from terminal ⑧ of the ASCD control unit
- to ASCD actuator terminal ②.

Ground is supplied to the vacuum motor:
- from terminal ⑨ of the ASCD control unit
- to ASCD actuator terminal ③.

Ground is supplied to the air valve:
- from terminal ⑩ of the ASCD control unit
- to ASCD actuator terminal ①.

Ground is supplied to the release valve:
- from terminal ⑭ of the ASCD control unit
- to ASCD actuator terminal ④.

When the system is activated, power is supplied:
- from terminal ⑬ of the ASCD control unit
- to combination meter terminal ⑫.

Ground is supplied:
- to combination meter terminal ㊷
- through body grounds (M49), (M105) and (M160).

With power and ground supplied, the CRUISE indicator illuminates.
When vehicle speed is approximately 8 km/h (5 MPH) below set speed on A/T models, ground is supplied:
- to terminal ② of the solenoid valve unit
- from ASCD control unit terminal ⑫.

When this occurs, the overdrive is canceled.
When vehicle speed reaches approximately 3 km/h (2 MPH) above set speed, overdrive is reactivated.

Component Parts and Harness Connector Location

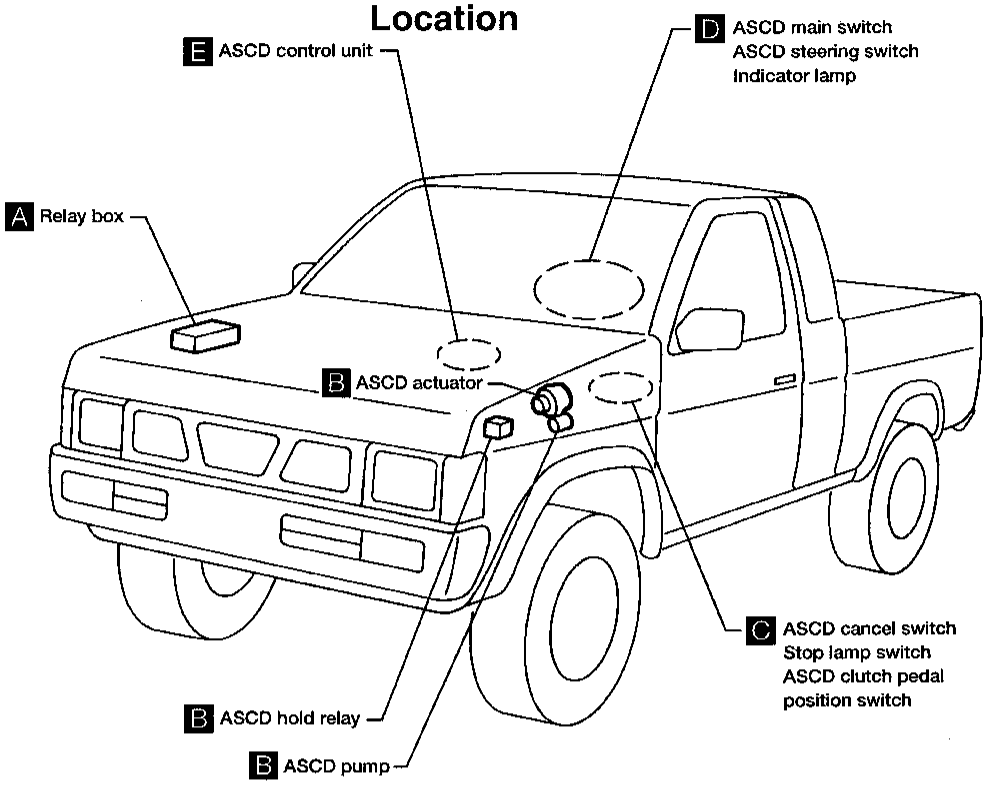

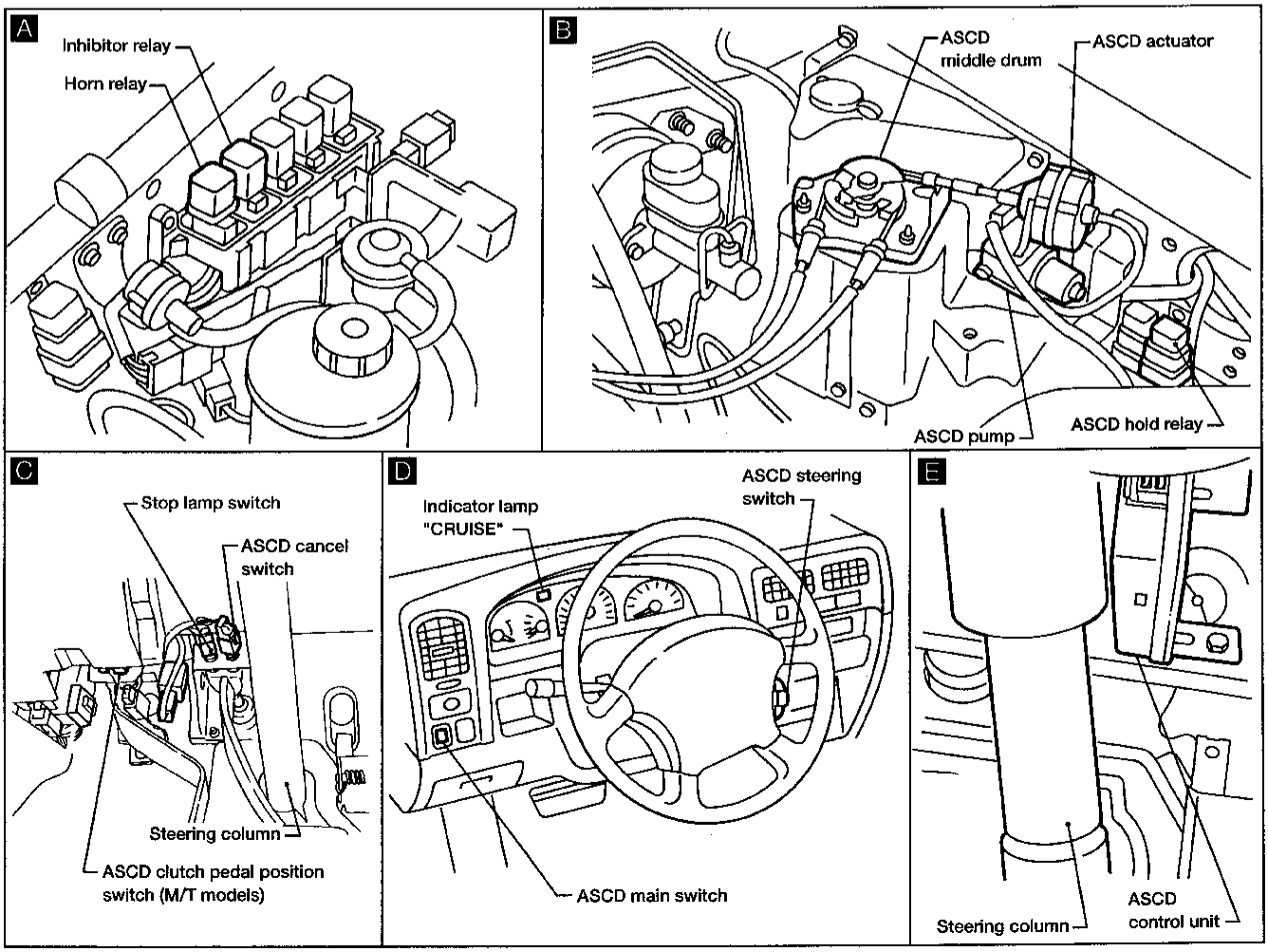

AEL312A

Schematic

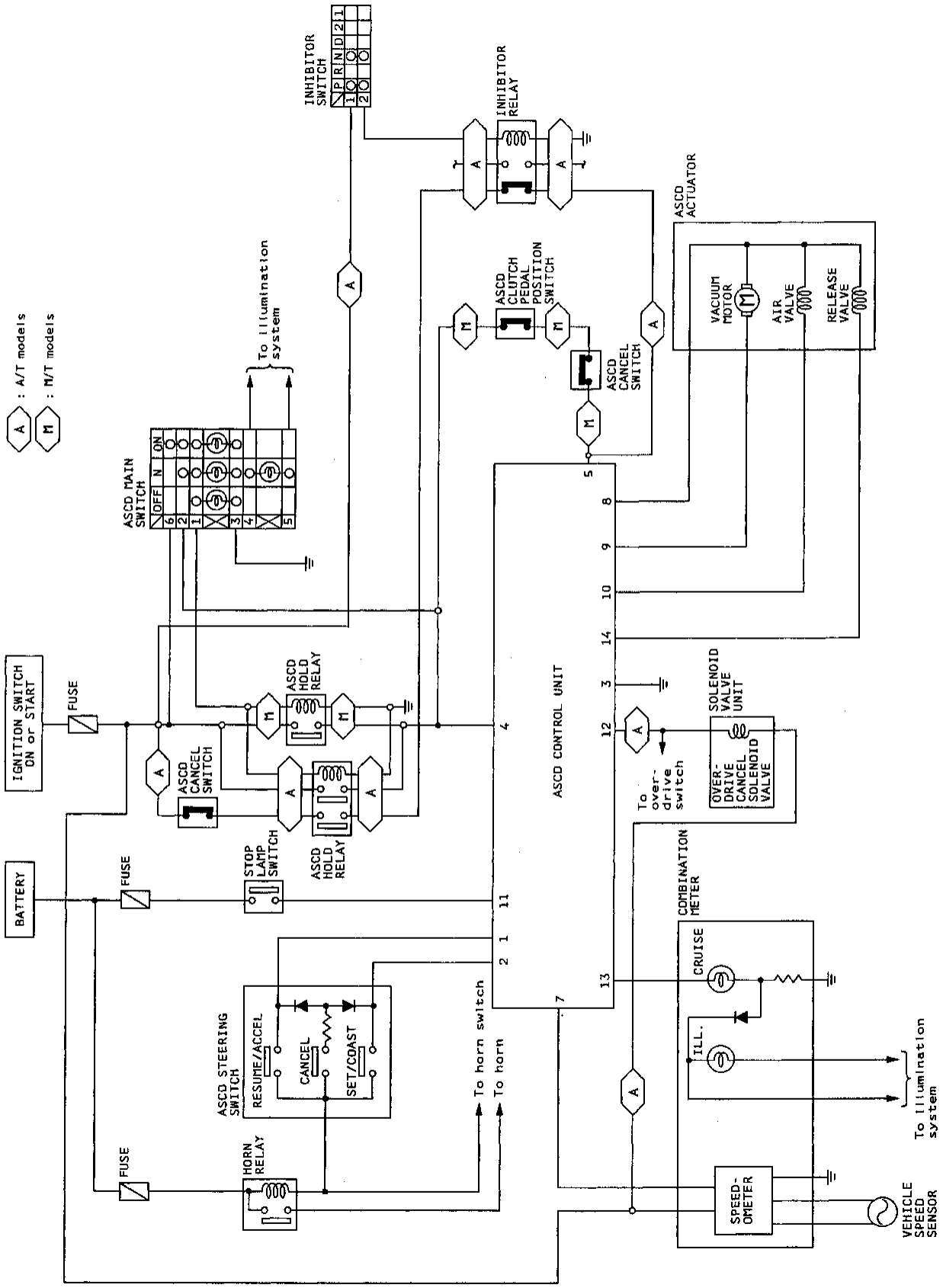

AEL292A

Wiring Diagram –ASCD–

EL-ASCD-01

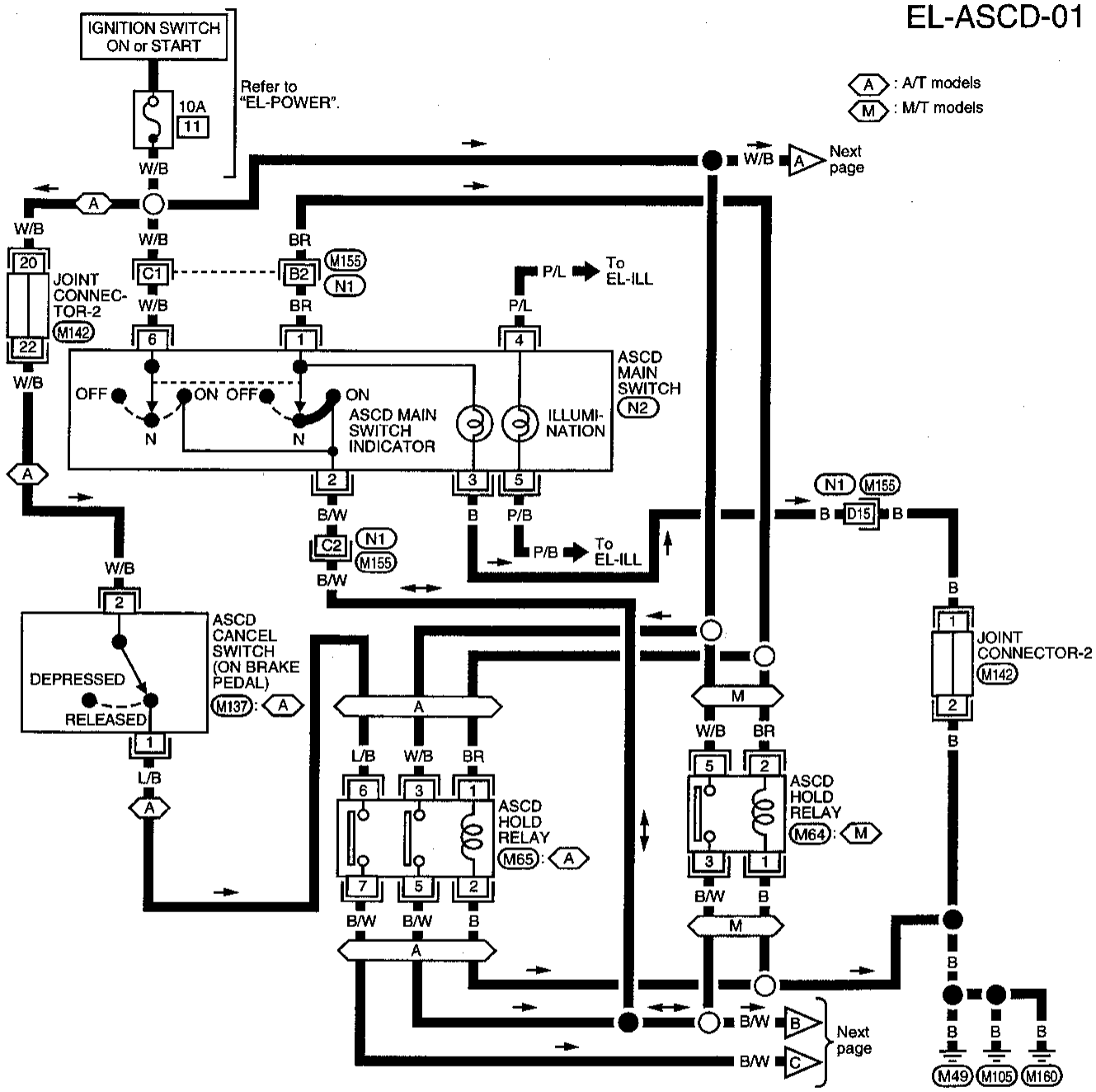

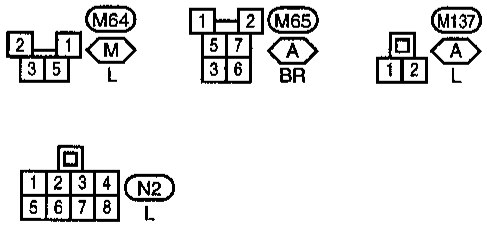

Refer to last page (Foldout page).
M142
M155 , N1

AEL291A-A

Wiring Diagram –ASCD– (Cont'd)

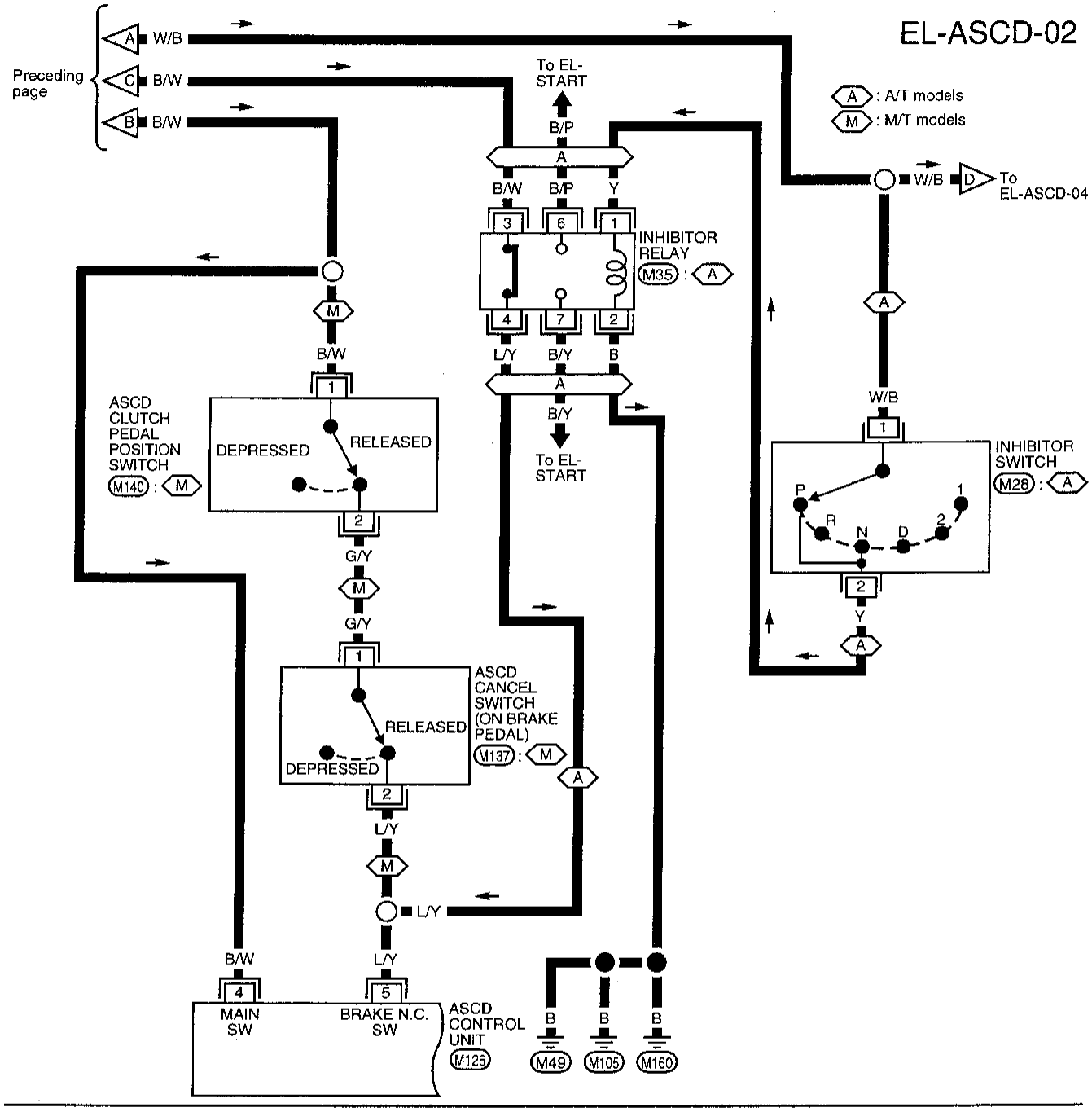

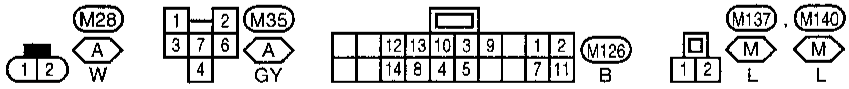

AEL291A-B

Wiring Diagram –ASCD– (Cont'd)

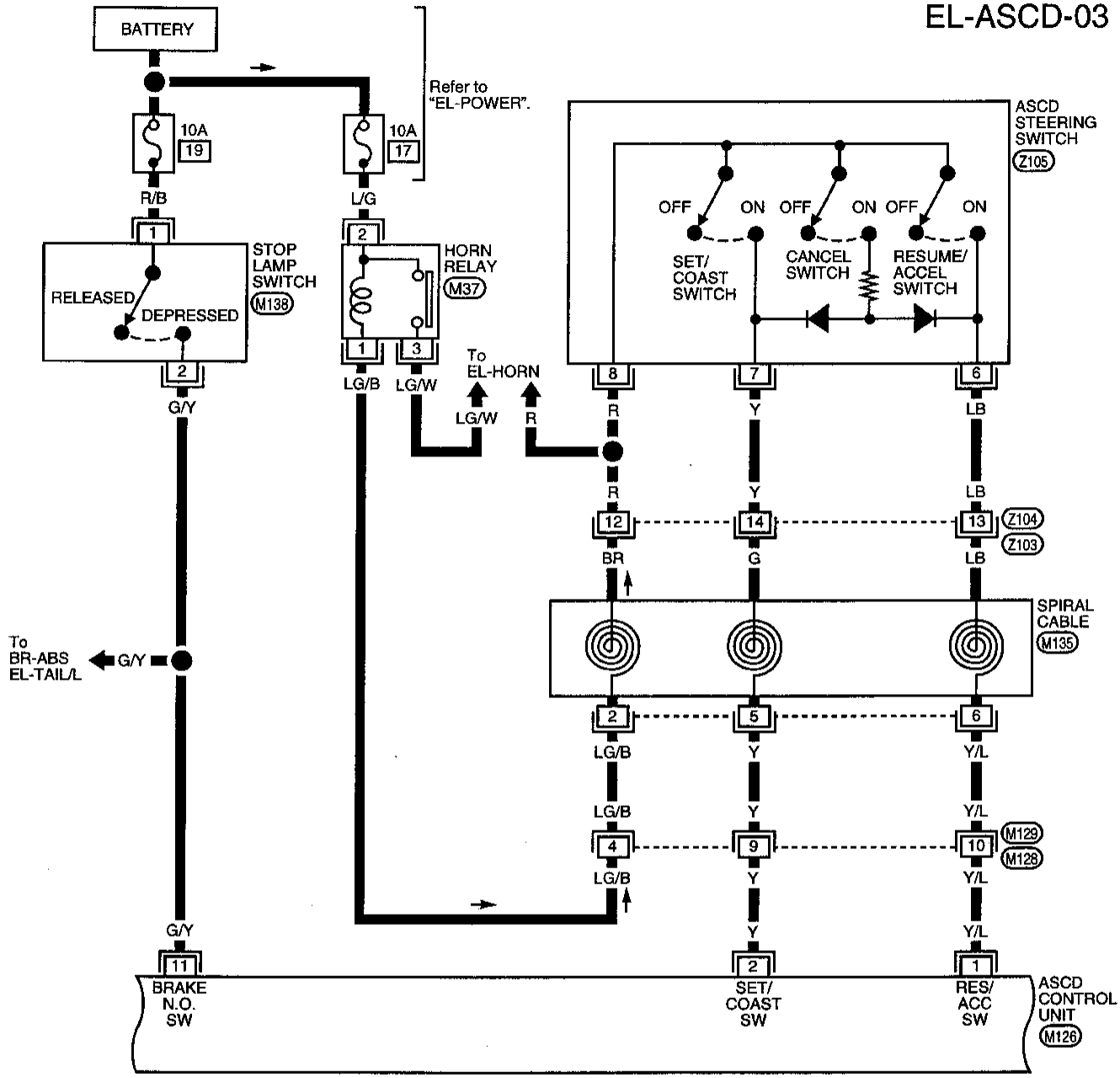

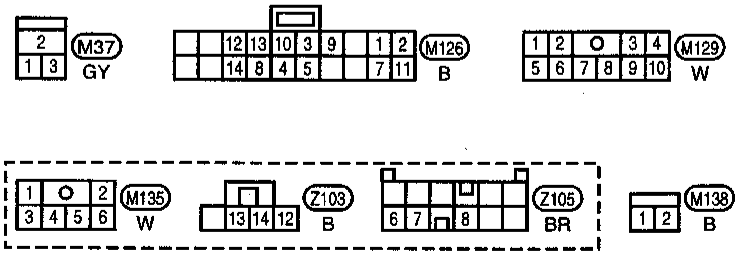

AEL291A-C

Wiring Diagram –ASCD– (Cont'd)

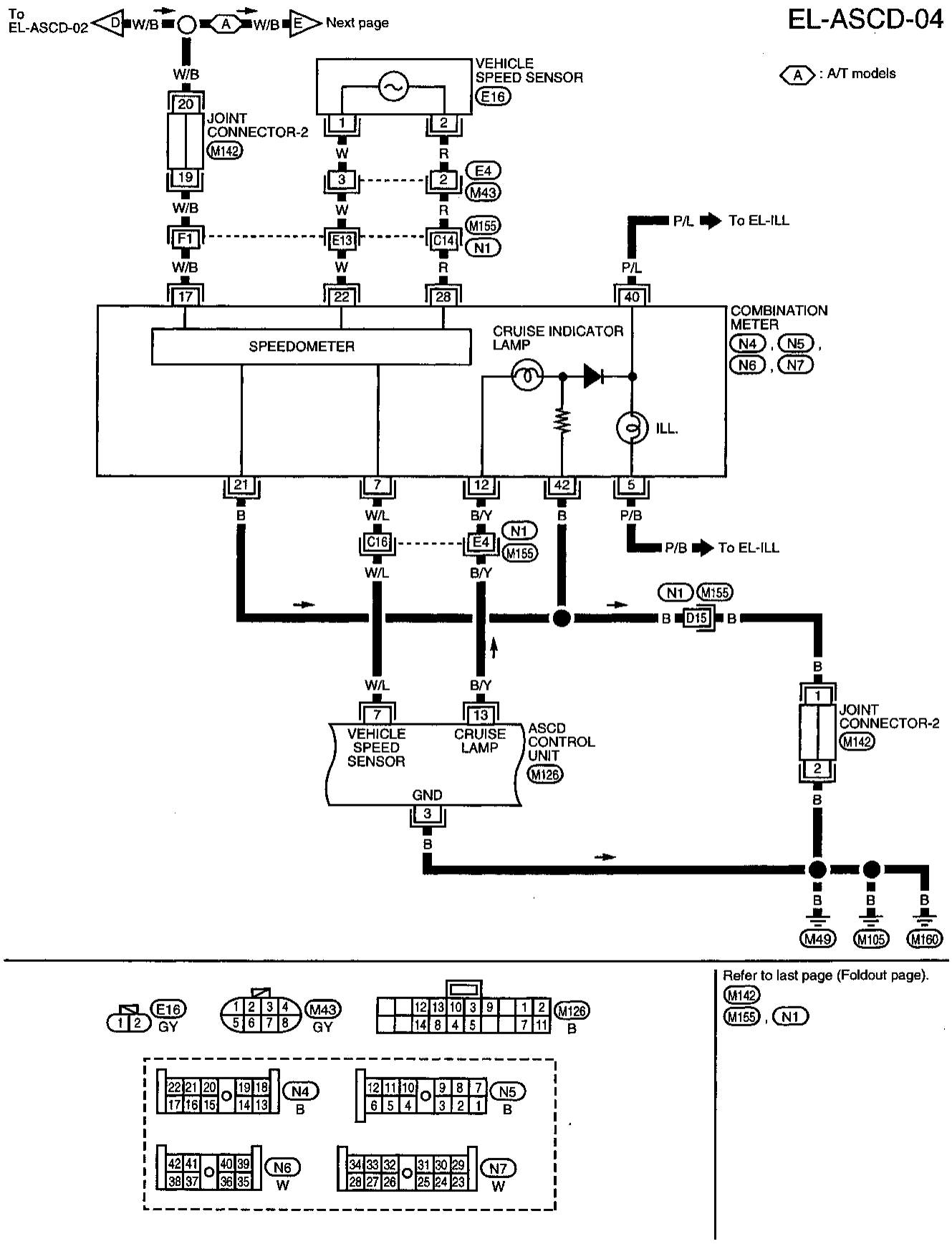

AEL291A-D

Wiring Diagram –ASCD– (Cont'd)

EL-ASCD-05

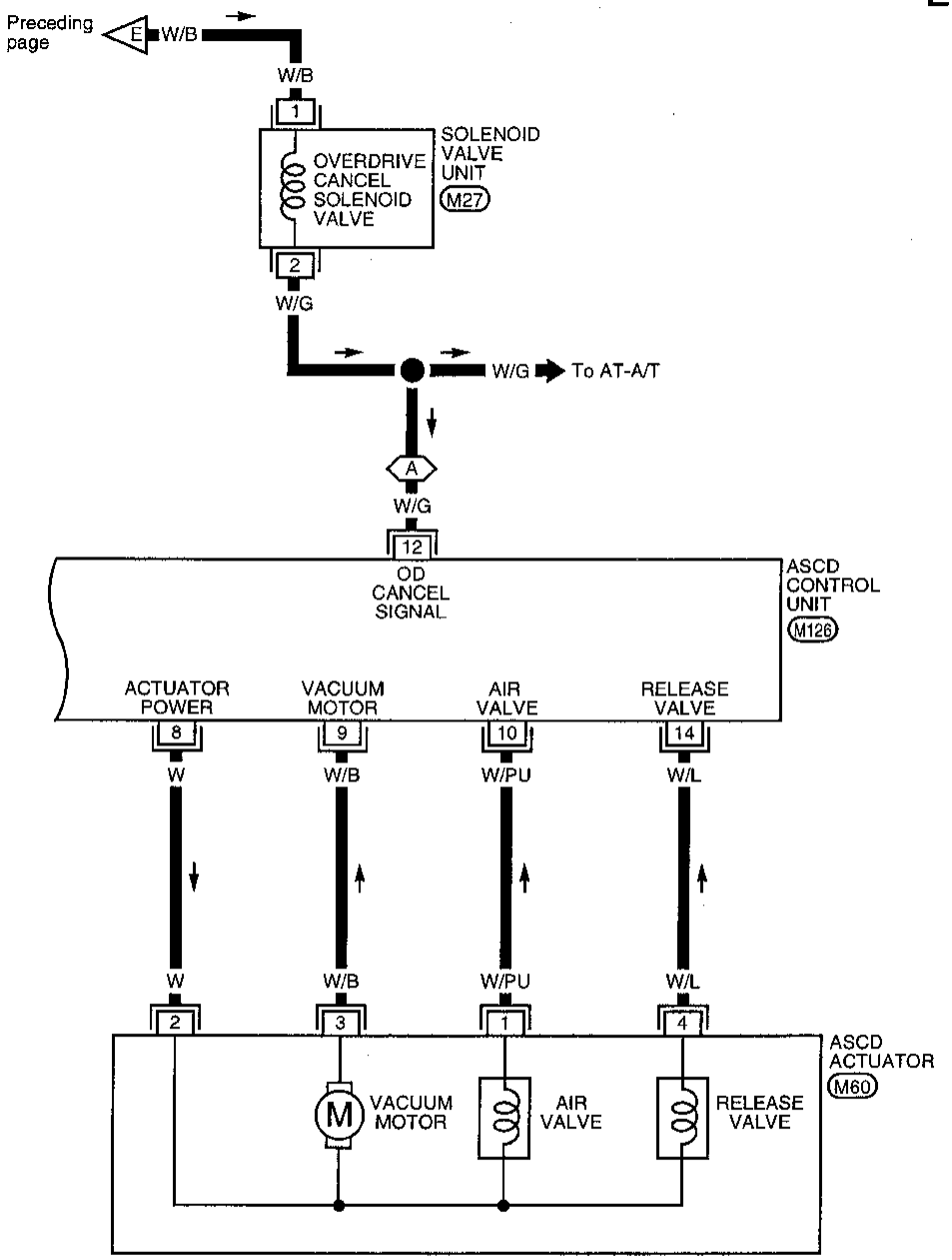

A : A/T models

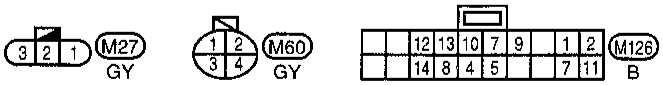

AEL291A-E

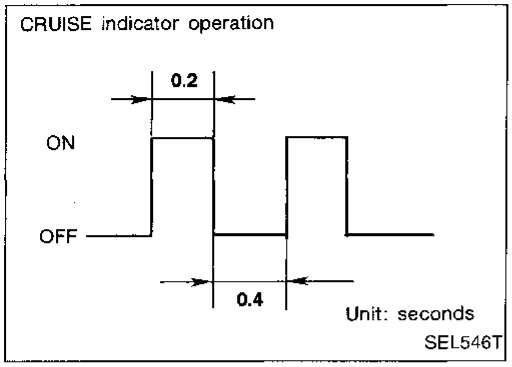

Trouble Diagnoses

FAIL-SAFE SYSTEM

When the fail-safe system senses a malfunction, it deactivates ASCD operation. The CRUISE indicator in the combination meter will then flash.

Malfunction detection conditions

Detection conditions	ASCD operation during malfunction detection
● ASCD steering (RESUME/ACCEL, CANCEL, SET/COAST) switch is stuck. ● Vacuum motor ground circuit or power circuit is open or shorted. ● Air valve ground circuit or power circuit is open or shorted. ● Release valve ground circuit or power circuit is open or shorted. ● Vehicle speed sensor is faulty. ● ASCD control unit internal circuit is malfunctioning.	● ASCD is deactivated. ● Vehicle speed memory is canceled.
● ASCD cancel switch or stop lamp switch is faulty.	● ASCD is deactivated. ● Vehicle speed memory is not canceled.

Trouble Diagnoses (Cont'd)

Fail-safe system check

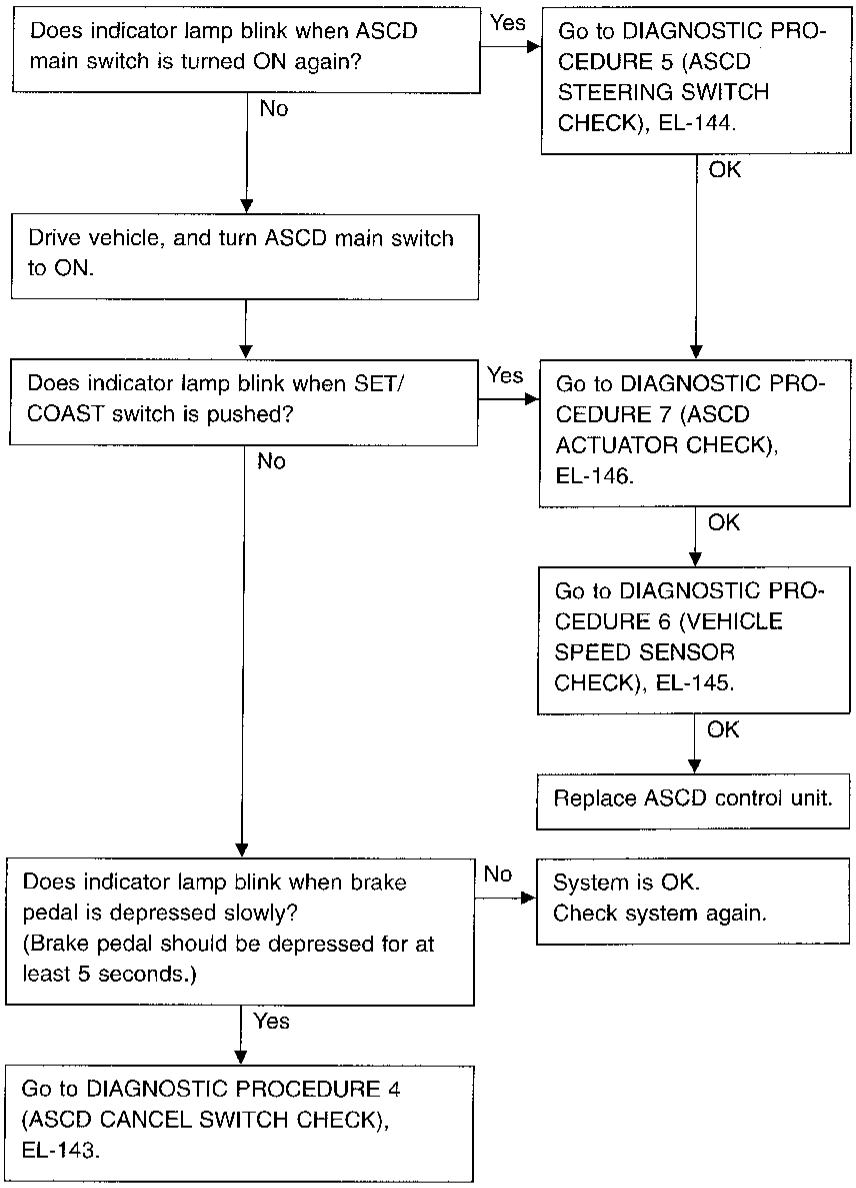

Trouble Diagnoses (Cont'd)

SYMPTOM CHART

PROCEDURE	—	Diagnostic procedure							
REFERENCE PAGE	EL-139	EL-141	EL-141	EL-142	EL-143	EL-144	EL-145	EL-146	EL-147
SYMPTOM	Fail-safe system check	DIAGNOSTIC PROCEDURE 1 (POWER SUPPLY AND GROUND CIRCUIT CHECK)	DIAGNOSTIC PROCEDURE 2 (ASCD MAIN SWITCH CHECK)	DIAGNOSTIC PROCEDURE 3 (ASCD HOLD RELAY CIRCUIT CHECK)	DIAGNOSTIC PROCEDURE 4 (ASCD CANCEL SWITCH CHECK)	DIAGNOSTIC PROCEDURE 5 (ASCD STEERING SWITCH CHECK)	DIAGNOSTIC PROCEDURE 6 (VEHICLE SPEED SENSOR CHECK)	DIAGNOSTIC PROCEDURE 7 (ASCD ACTUATOR CHECK)	DIAGNOSTIC PROCEDURE 8 (VACUUM HOSE AND ACCEL WIRE CHECK)
ASCD cannot be set.	X	X	X	X	X	X	X	X	X
Steering CANCEL switch will not operate.						X			
Steering ACCEL switch will not operate.						X			
Steering RESUME switch will not operate.						X			
Large difference between set speed and actual vehicle speed.	X	X			X	X	X	X	X
Deceleration is greatest immediately after ASCD has been set.	X	X			X	X	X	X	X
CRUISE indicator lamp blinks. (It indicates that system is in fail-safe.)	X	X			X	X	X	X	
Engine hunts.	X	X			X	X	X	X	X

Trouble Diagnoses (Cont'd)

DIAGNOSTIC PROCEDURE 1

(POWER SUPPLY AND GROUND CIRCUIT CHECK)

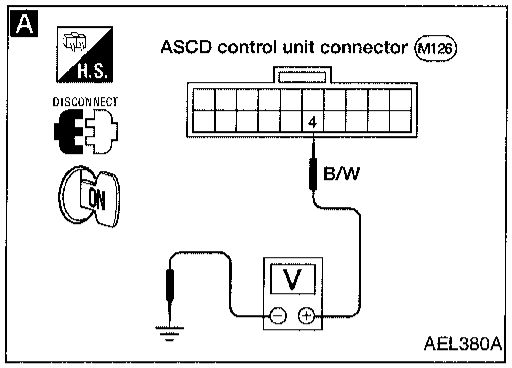

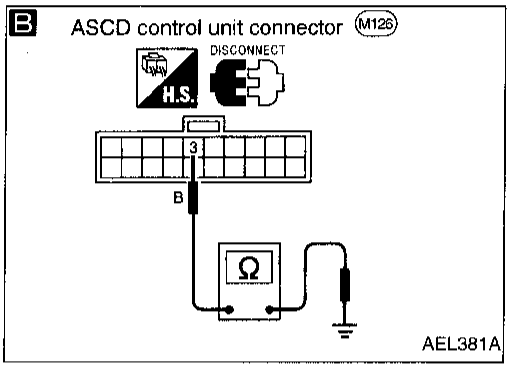

1. Turn ignition switch ON.
2. Turn ASCD main switch ON to make sure indicators illuminate.

NG → Go to DIAGNOSTIC PROCEDURE 2 (ASCD MAIN SWITCH CHECK).

OK ↓

A

CHECK POWER SUPPLY CIRCUIT FOR ASCD CONTROL UNIT.

1. Disconnect ASCD control unit connector.
2. Turn ignition switch ON.
3. Turn ASCD main switch ON.
4. Check voltage between ASCD control unit connector terminal ④ and body ground.
   Battery voltage should exist.

NG → Go to DIAGNOSTIC PROCEDURE 3 (ASCD HOLD RELAY CIRCUIT CHECK), EL-142.

OK ↓

B

CHECK GROUND CIRCUIT FOR ASCD CONTROL UNIT.

Check continuity between ASCD control unit harness terminal ③ and body ground.

NG → Repair harness.

OK ↓

Go to next procedure.

DIAGNOSTIC PROCEDURE 2

(ASCD MAIN SWITCH CHECK)

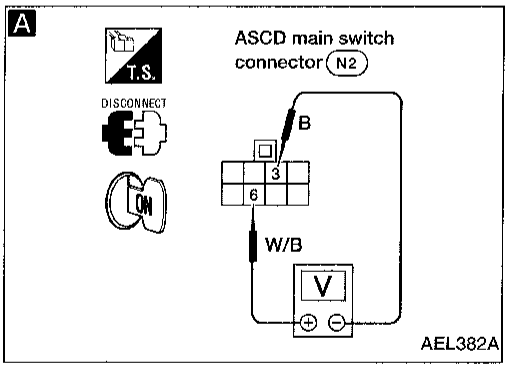

A

CHECK POWER SUPPLY FOR ASCD MAIN SWITCH.

1. Disconnect main switch connector.
2. Measure voltage between main switch harness terminals ⑥ and ③.
   Battery voltage should exist.

NG → Check the following.
- 10A fuse (No. 11, located in the fuse block)
- Harness for open or short between fuse and ASCD main switch
- Ground circuit for ASCD main switch

OK ↓

Check ASCD main switch. Refer to EL-149.

NG → Replace ASCD main switch.

OK ↓

Go to next procedure.

Trouble Diagnoses (Cont'd)

DIAGNOSTIC PROCEDURE 3

(ASCD HOLD RELAY CIRCUIT CHECK)

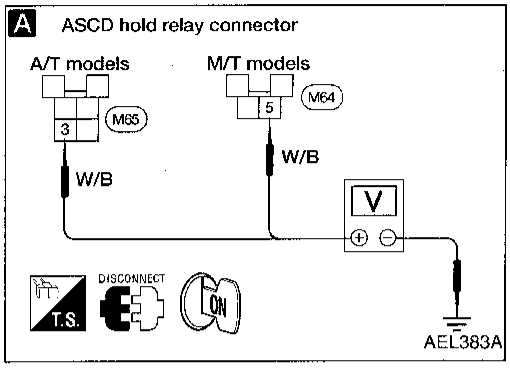

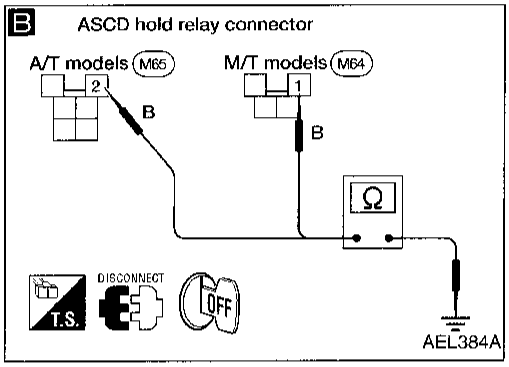

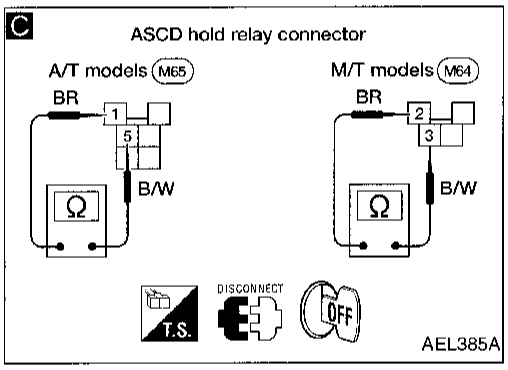

A

CHECK POWER SUPPLY CIRCUIT FOR ASCD HOLD RELAY.
1. Disconnect ASCD hold relay.
2. Do approx. 12 volts exist between ASCD hold relay harness terminal ⑤ (M/T models) or ③ (A/T models) and body ground?

No → Check harness for open or short between fuse and ASCD hold relay.

Yes ↓

B

CHECK GROUND CIRCUIT FOR ASCD HOLD RELAY.
Does continuity exist between ASCD hold relay harness terminal ① (M/T models) or ② (A/T models) and body ground?

No → Repair harness.

Yes ↓

C

CHECK ASCD HOLD RELAY CIRCUIT.
Does continuity exist between ASCD hold relay harness terminals ② and ③ (M/T models) or ① and ⑤ (A/T models)?

Yes → Check ASCD hold relay.

No ↓

CHECK ASCD MAIN SWITCH.
Refer to EL-149.

NG → Replace ASCD main switch.

OK ↓

Go to next procedure.

Trouble Diagnoses (Cont'd)

DIAGNOSTIC PROCEDURE 4

(ASCD CANCEL SWITCH CHECK)

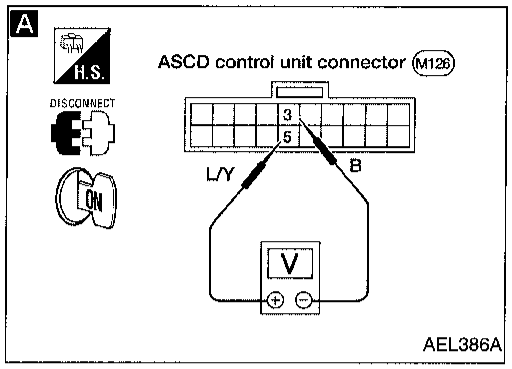

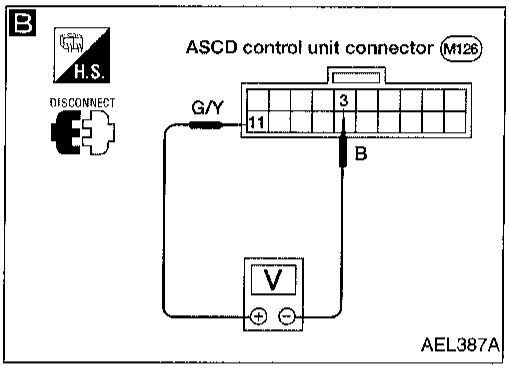

A

CHECK CUT-OFF CIRCUIT FOR ASCD CONTROL UNIT.

1. Disconnect ASCD control unit connector.
2. Turn ignition switch ON.
3. Turn ASCD main switch ON.
4. Measure voltage between ASCD control unit connector terminals ⑤ and ③.

When brake pedal or clutch pedal (M/T) is depressed or A/T selector lever is in ("N") or ("P") position:
Approx. 0V
When both brake pedal and clutch pedal (M/T) are released or A/T selector lever is in any position other than ("N") or ("P"):
Battery voltage should exist.

NG → CHECK THE FOLLOWING.
- ASCD cancel switch Refer to EL-150.
- ASCD clutch pedal position switch (M/T models) Refer to EL-150.
- Inhibitor switch (A/T models) Refer to EL-150.
- ASCD hold relay Refer to EL-5.
- Inhibitor relay (A/T models) Refer to EL-5.
- Harness for open or short

OK ↓

B

CHECK STOP LAMP SWITCH CIRCUIT.

1. Disconnect ASCD control unit connector.
2. Check voltage between ASCD control unit harness terminals ⑪ and ③.

Condition		Voltage [V]
Stop lamp switch	Depressed	Approx. 12
	Released	0

NG → CHECK THE FOLLOWING.
- Harness for open or short between ASCD control unit and stop lamp switch
- 10A fuse (No. 19, located in the fuse block)
- Stop lamp switch Refer to EL-150.

OK ↓

ASCD cancel switch is OK.

Trouble Diagnoses (Cont'd)

DIAGNOSTIC PROCEDURE 5

(ASCD STEERING SWITCH CHECK)

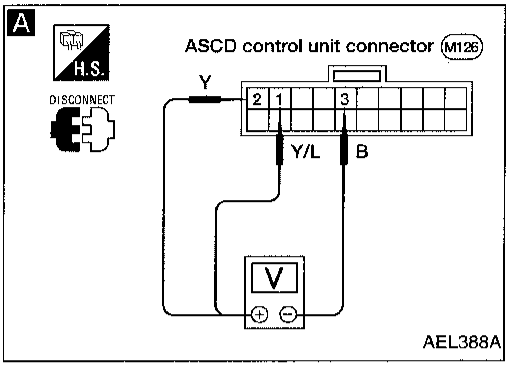

A

CHECK ASCD STEERING SWITCH CIRCUIT FOR ASCD CONTROL UNIT.

1. Disconnect ASCD control unit connector.
2. Check voltage between ASCD control unit harness terminals.

	Terminal No.		Switch condition	
	⊕	⊖	Pressed	Released
SET/ COAST SW	②	③	12V	0V
RESUME/ ACC SW	①	③	12V	0V
CANCEL SW	②	③	12V	0V
	①	③	12V	0V

OK → ASCD steering switch is OK.

NG ↓

CHECK POWER SUPPLY FOR ASCD STEERING SWITCH.
Does horn work?

NG → Check the following.
- 10A fuse (No. 17, located in the fuse block)
- Horn relay
- Harness for open or short

OK ↓

CHECK ASCD STEERING SWITCH.
Refer to "ELECTRICAL COMPONENTS INSPECTION", EL-150.

NG → Replace ASCD steering switch.

OK ↓

Check harness for open or short between ASCD steering switch and ASCD control unit.

Trouble Diagnoses (Cont'd)

DIAGNOSTIC PROCEDURE 6

(VEHICLE SPEED SENSOR CHECK)

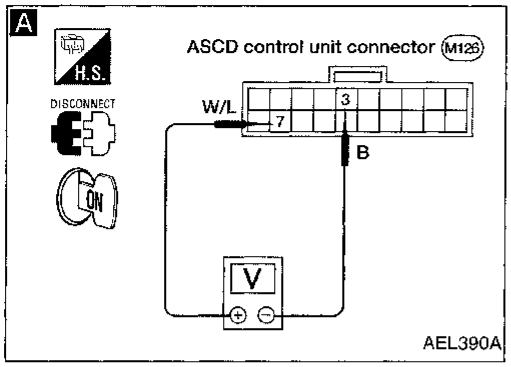

A

CHECK VEHICLE SPEED SENSOR CIRCUIT.

1. Insert wheel chocks and jack up rear of vehicle.
2. Disconnect ASCD control unit connector.
3. Connect voltmeter between ASCD control unit harness terminals ⑦ and ③.
4. Slowly turn rear wheel.
5. Check deflection of voltmeter pointer.

Note:
Before performing this procedure, set transfer shift lever to 2WD position. (4WD models)

OK → Vehicle speed sensor is OK.

NG ↓

Does speedometer operate normally?

No → Check speedometer and vehicle speed sensor circuit. Refer to EL-72.

Yes ↓

Check harness for open or short between ASCD control unit terminal ⑦ and combination meter terminal ⑦.

Trouble Diagnoses (Cont'd)

DIAGNOSTIC PROCEDURE 7

(ASCD ACTUATOR CHECK)

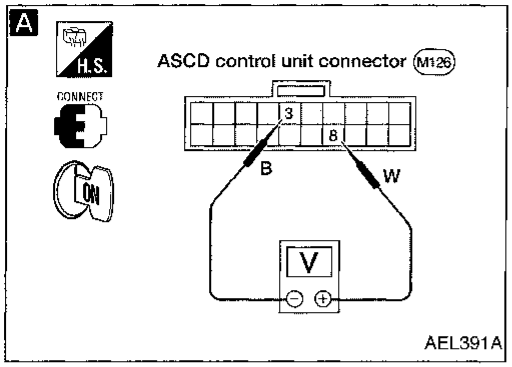

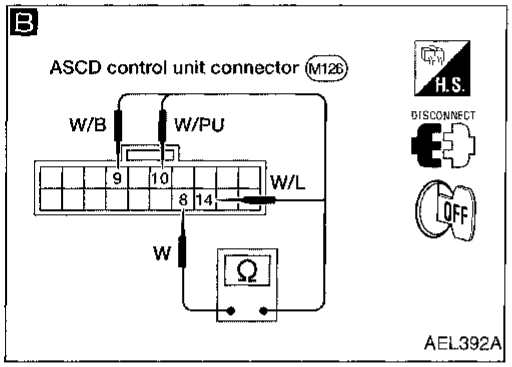

A

CHECK OUTPUT FOR ASCD ACTUATOR/ASCD PUMP.
1. Turn ignition switch ON.
2. Check voltage between ASCD control unit harness terminals ⑧ and ③.
Voltage is 0V.

NG → Replace ASCD control unit.

OK ↓

B

1. Disconnect ASCD control unit connector.
2. Measure resistance between ASCD control unit harness terminals ⑧ and ⑨, ⑩, ⑭.

Terminals		Resistance [Ω]
⑧	⑨	Approx. 8 - 45
	⑩	Approx. 65
	⑭	Approx. 65

OK → ASCD actuator is OK.

NG ↓

Check ASCD actuator.
Refer to EL-149.

OK → Check harness for open or short between ASCD actuator and ASCD control unit.

NG ↓

Replace ASCD actuator.

Trouble Diagnoses (Cont'd)

DIAGNOSTIC PROCEDURE 8

(VACUUM HOSE AND ACCEL WIRE CHECK)

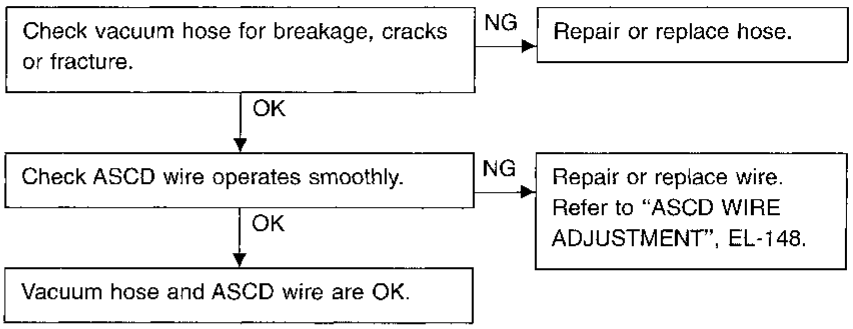

Trouble Diagnoses (Cont'd)

ASCD WIRE ADJUSTMENT

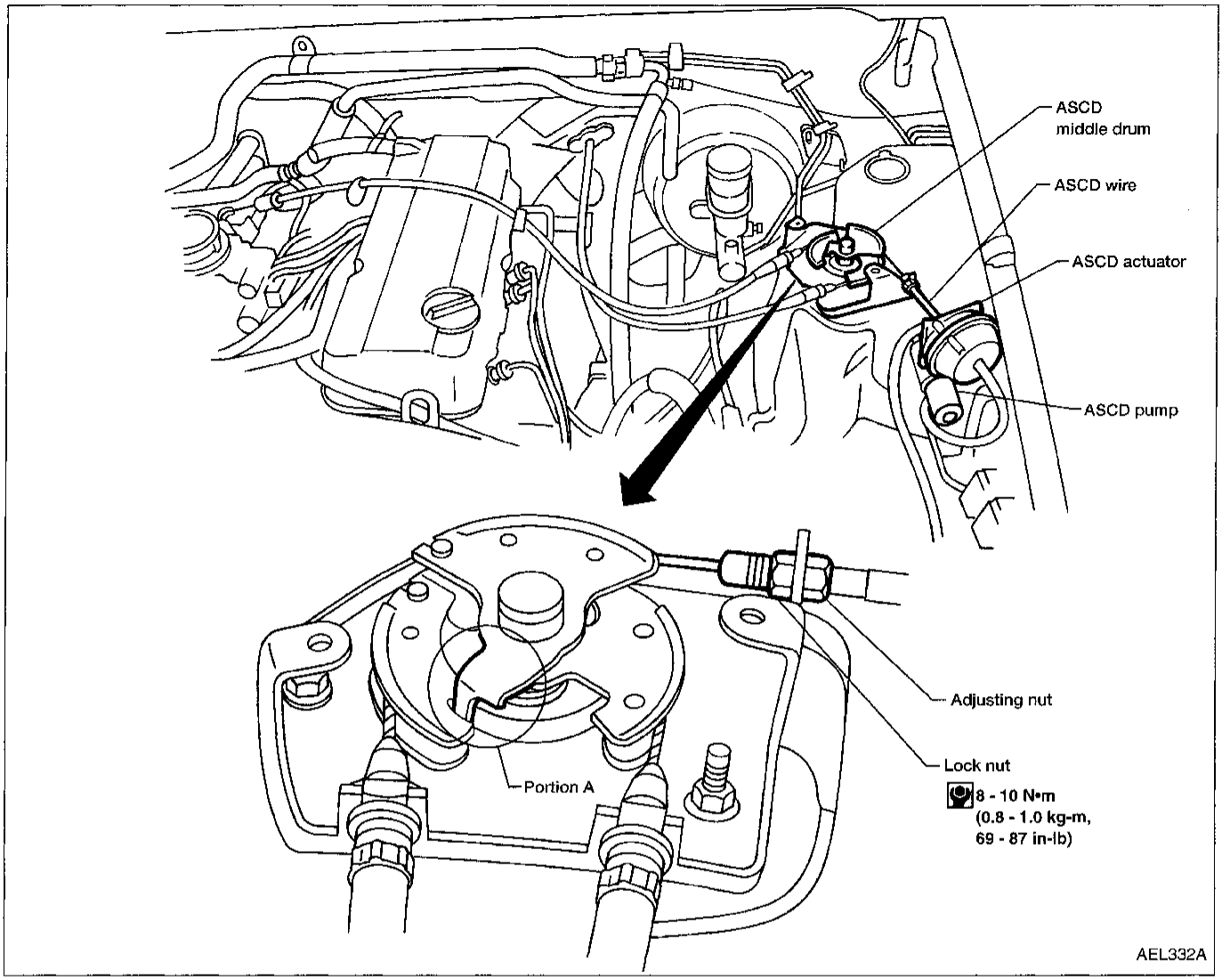

CAUTION:

- **Be careful not to twist ASCD wire when removing it.**
- **Do not overly tighten ASCD wire during adjustment.**

Confirm that accelerator wire is properly adjusted.

- **For accelerator cable adjustment, refer to FE section ("Adjusting Accelerator Wire", "ACCELERATOR CONTROL SYSTEM").**

Adjust the ASCD wire as follows:

1. Loosen lock nut and tighten adjusting nut until portion A of upper throttle lever comes into contact with lower throttle lever.
2. From that position turn back adjusting nut 0.5 to 1 turn, and secure lock nut.
   (This prevents a delay in the operation of the ASCD.)

- For ASCD cancel switch adjustment, refer to BR section ("Adjustment", "BRAKE PEDAL AND BRACKET").

Trouble Diagnoses (Cont'd)

ELECTRICAL COMPONENTS INSPECTION

ASCD actuator/ASCD pump

1. Disconnect ASCD pump connector.
2. Check ASCD actuator/ASCD pump operations as shown.

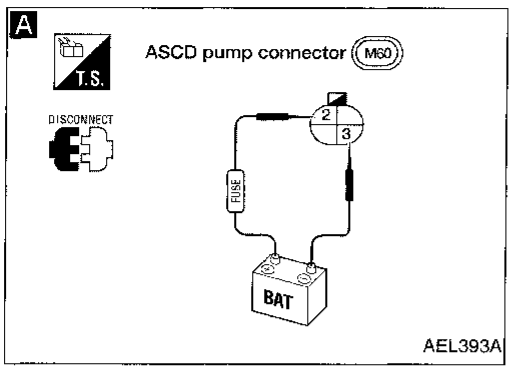

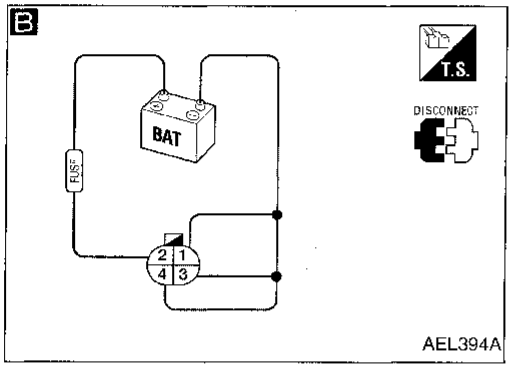

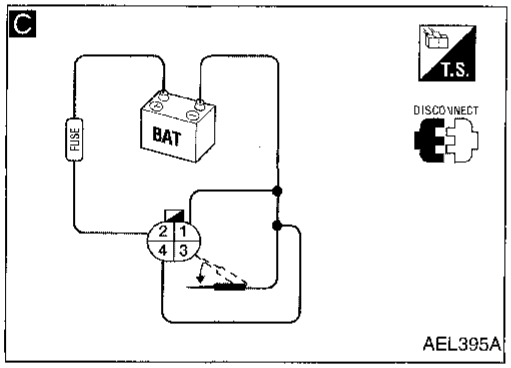

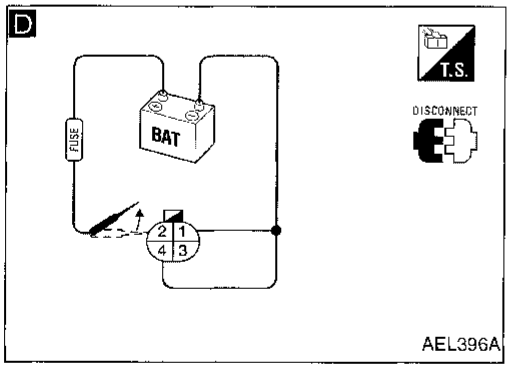

A

Does motor start when 12V DC is applied across ② and ③?
- No → Replace ASCD pump.
- Yes ↓

B

Is ASCD wire pulled when 12V DC is applied across ①, ②, ③ and ④?
- No → Disconnect vacuum hose from ASCD actuator and check for presence of vacuum pressure at ASCD pump.
  - OK ↓
  - NG → Replace ASCD pump.
- Yes (Wire is pulled) ↓

C

Does ASCD wire return to original position 50 to 60 seconds after disconnecting lead from ③?
- Yes → Replace ASCD actuator.
- No (Wire does not return) ↓

D

Disconnect lead from ②. Does ASCD wire return immediately?
- No → Replace ASCD actuator.
- Yes (Wire returns) ↓

ASCD actuator/ASCD pump are OK.

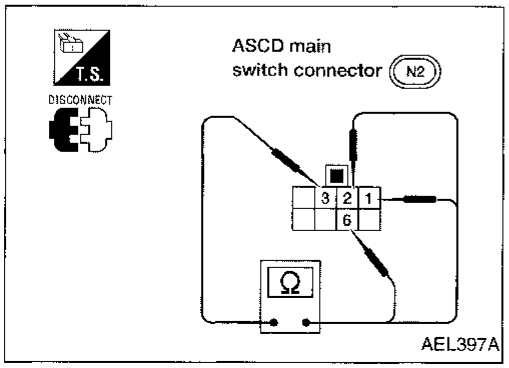

ASCD main switch

Check continuity between terminals by pushing switch to each position.

Switch position	Terminals					
	6	1	2	3	4	5
ON	○	○	○	ⓜ ○		
N		○	○	ⓜ ○	ILL. ○ ⓜ	○
OFF						

Trouble Diagnoses (Cont'd)

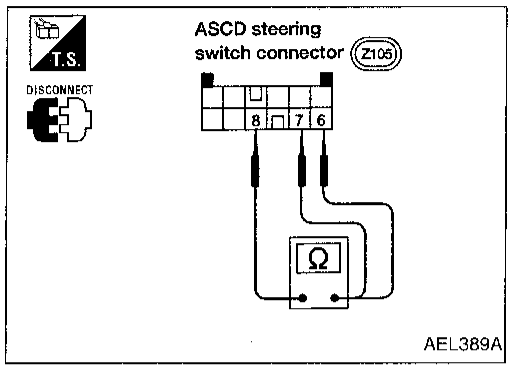

ASCD steering switch

Check continuity between terminals by pushing each button.

Button	Terminal		
	8	6	7
SET/COAST	○		○
RESUME/ACCEL	○	○	
CANCEL	○	▶|○	
	○	▶|	○

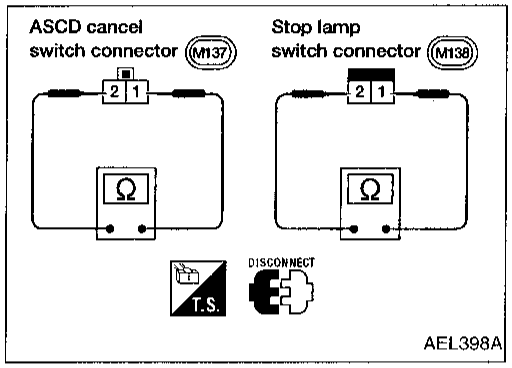

ASCD cancel switch and stop lamp switch

Condition	Continuity	
	ASCD cancel switch	Stop lamp switch
When brake pedal is depressed	No	Yes
When brake pedal is released	Yes	No

Check each switch after adjusting brake pedal — refer to BR section ("Adjustment", "BRAKE PEDAL AND BRACKET").

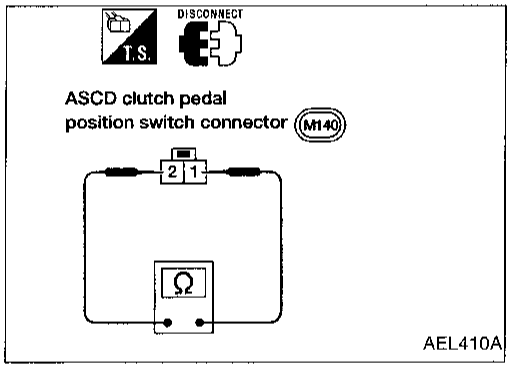

ASCD clutch pedal position switch (For M/T models)

Condition	Continuity
When clutch pedal is depressed	No
When clutch pedal is released	Yes

Check switch after adjusting clutch pedal — refer to CL section ("Adjusting Clutch Pedal", "INSPECTION AND ADJUSTMENT").

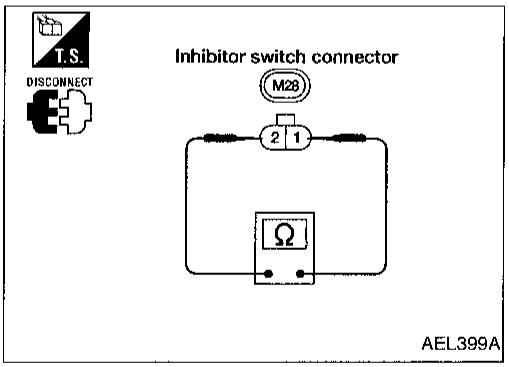

Inhibitor switch (For A/T models)

Condition	Continuity
When shift lever position is "N" or "P"	Yes
When shift lever position is not "N" or "P"	No

Engine Compartment

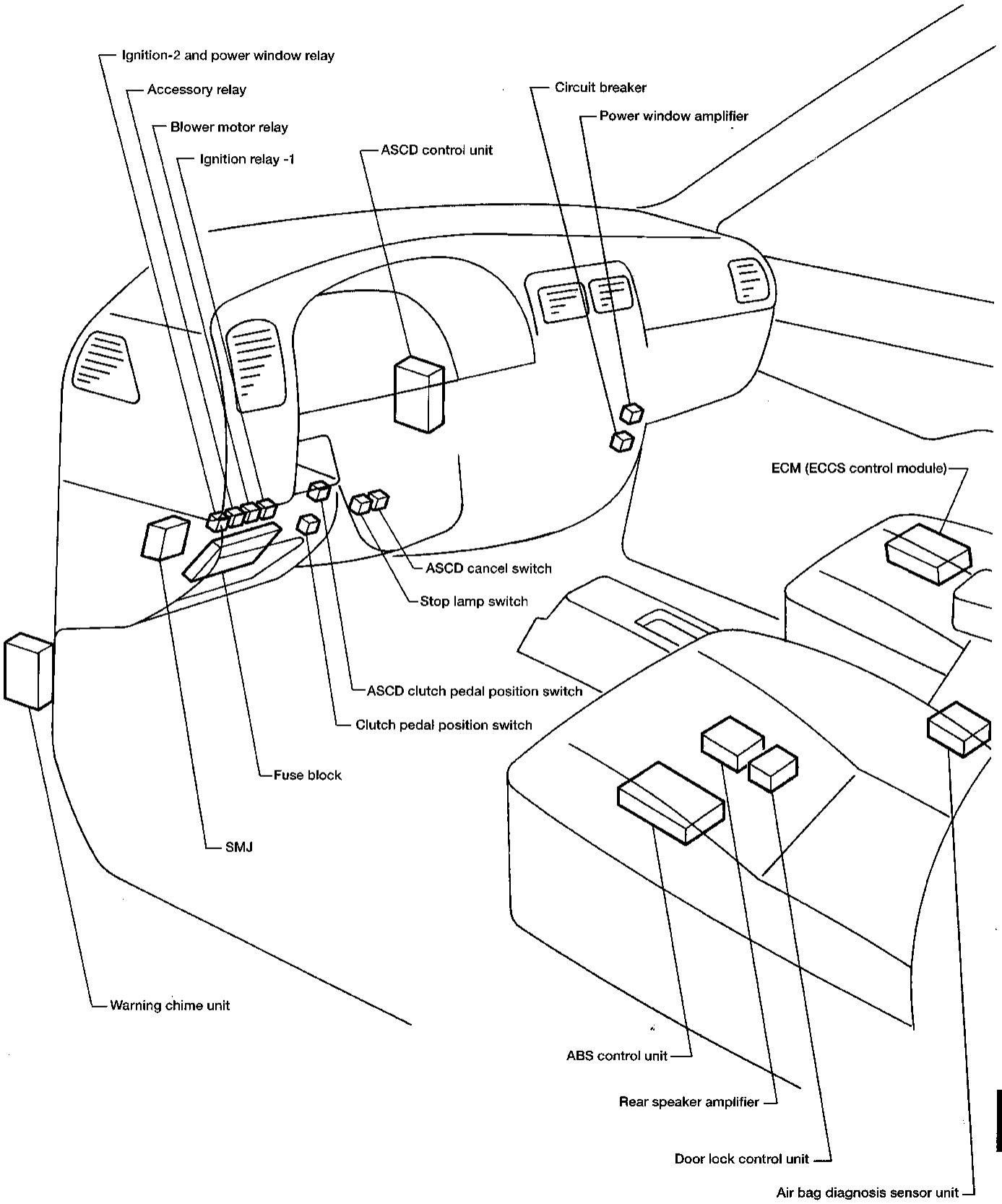

AEL313A

Passenger Compartment

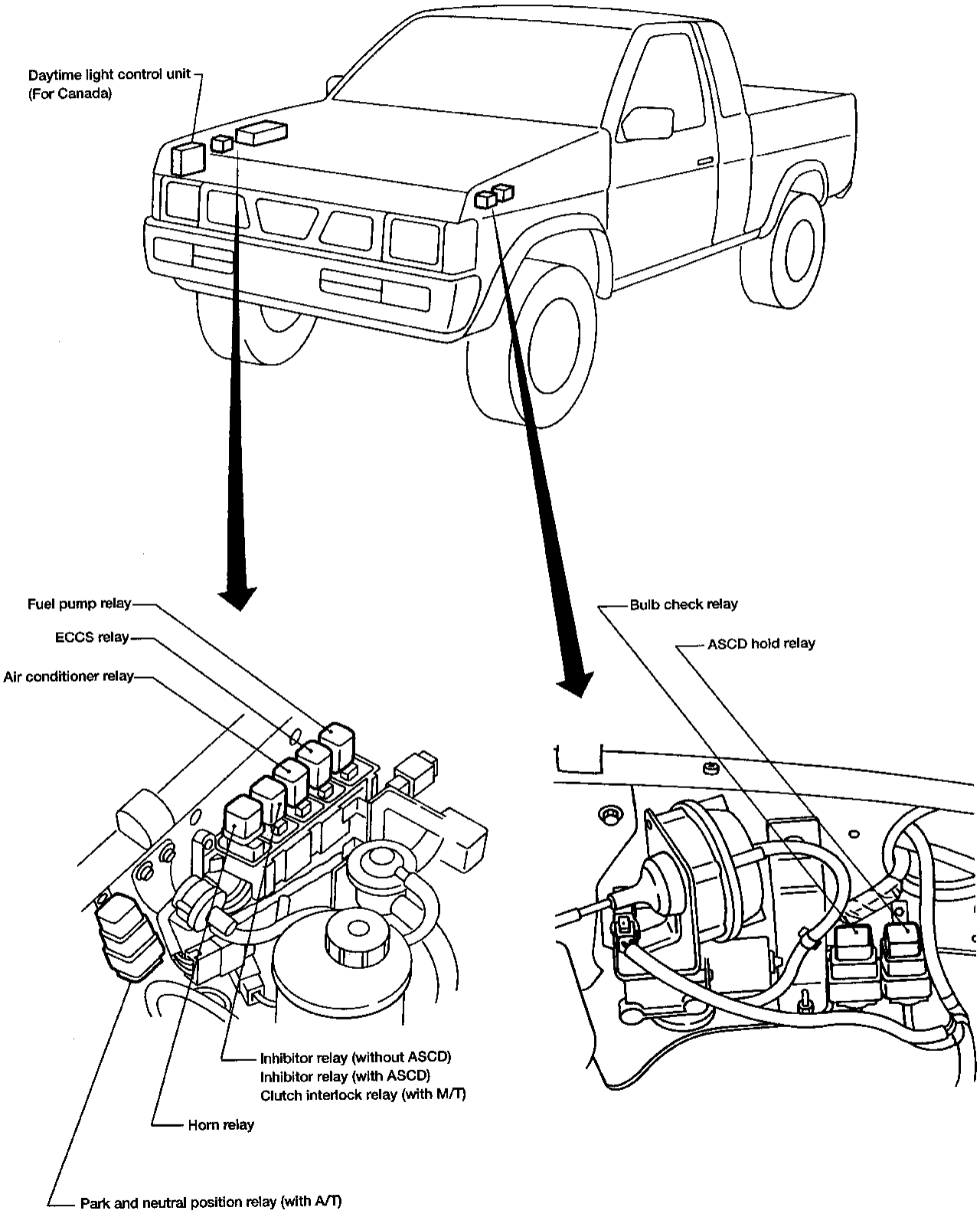

AEL314A

How To Read Harness Layout

Example:

E2 (E1) GY/2: Brake fluid level switch

- GY/2: Connector color/Cavity
- (E1): Connector number
- E2: Grid reference

The following Harness Layouts use a map style grid to help locate connectors on the drawings:

- Main Harness and Air Bag Harness

To use the grid reference

1) Find the desired connector number on the connector list.
2) Find the grid reference.
3) On the drawing, find the crossing of the grid reference letter column and number row.
4) Find the connector number in the crossing zone.
5) Follow the line (if used) to the connector.

CONNECTOR SYMBOL

Main symbols of connectors (In Harness Layout) are indicated below.

Connector type	Water proof type		Standard type	
	Male	Female	Male	Female
• Cavity: Less than 4 • Relay connector				
• Cavity: From 5 to 8				
• Cavity: More than 9				
• Ground: terminal etc.	—			

Outline

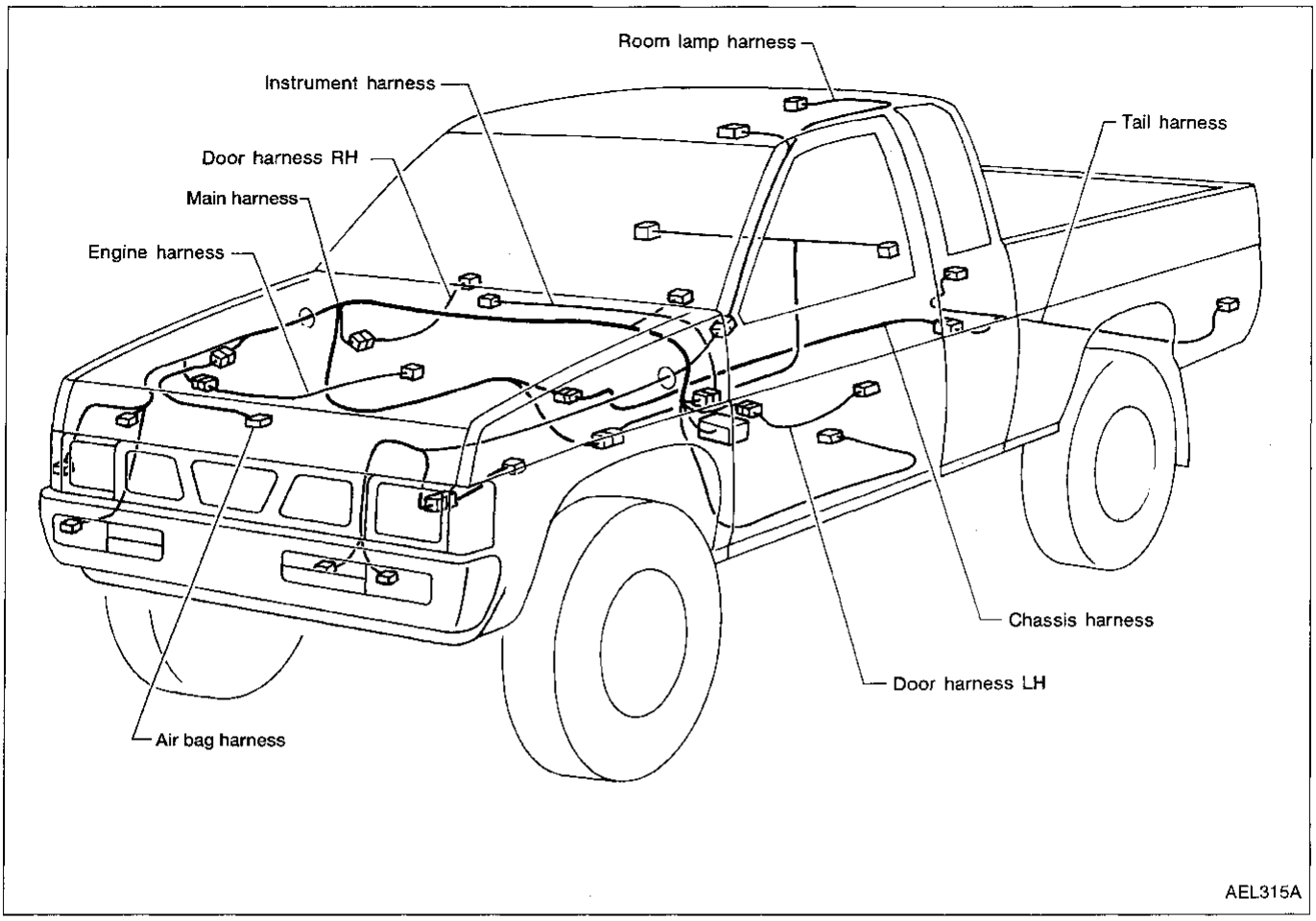
Room lamp harness
Instrument harness
Tail harness
Door harness RH
Main harness
Engine harness
Chassis harness
Door harness LH
Air bag harness
AEL315A

NOTES

Main Harness and Air Bag Harness

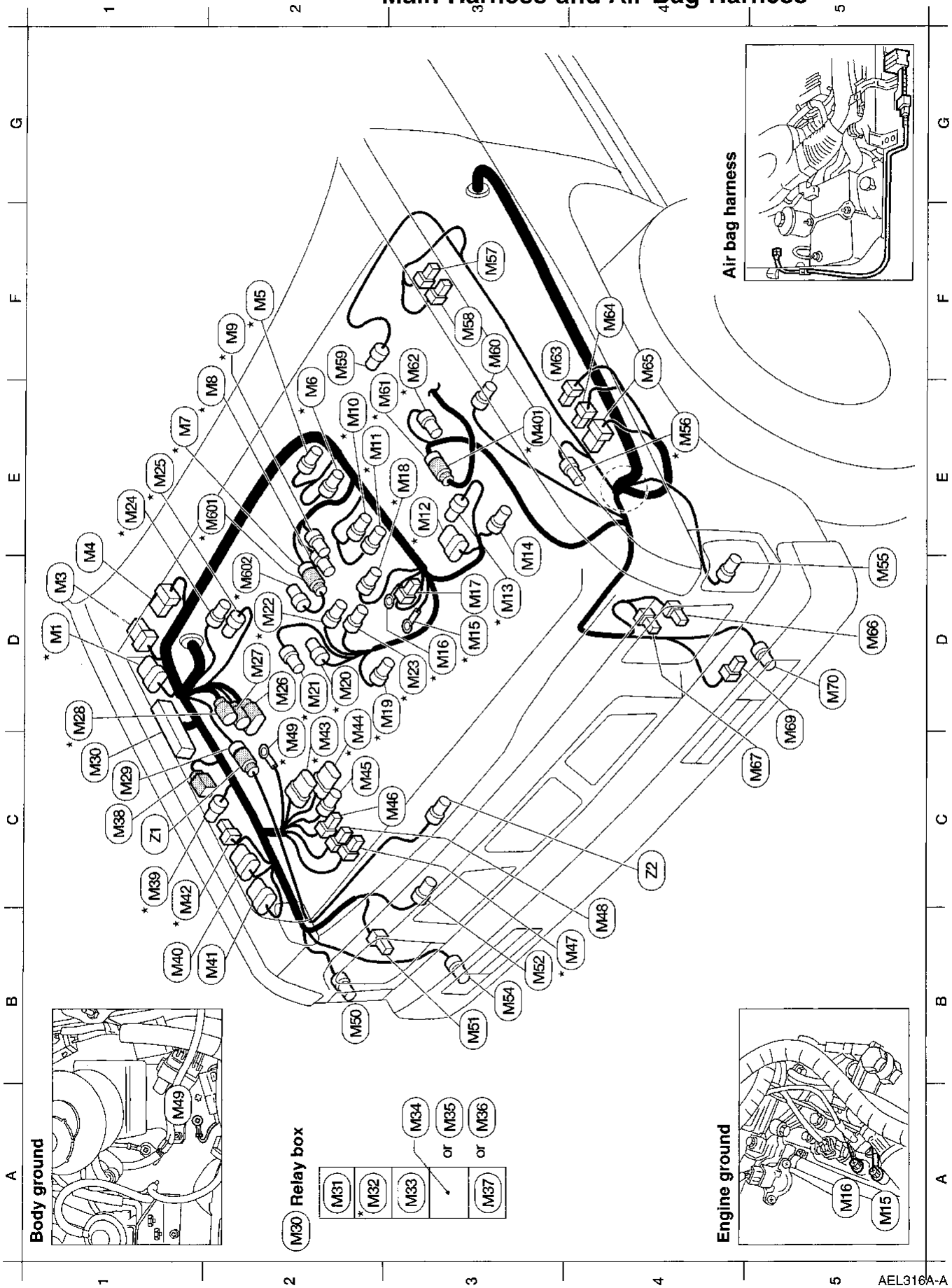

D1 *M1 GY/6 : EVAP canister purge volume control valve
D1 M3 W/6 : Wiper motor
E1 M4 W/8 : Wiper amplifier
F2 *M5 B/2 : Injector No. 4
E2 *M6 B/2 : Injector No. 3
E1 *M7 GY/4 : IACV-AAC solenoid valve and to M601
E2 *M8 GY/2 : EGR temperature sensor
F2 *M9 B/2 : EGRC-solenoid valve
E2 *M10 B/2 : Injector No. 2
E2 *M11 B/2 : Injector No. 1
E3 *M12 GY/6 : Distributor (camshaft position sensor)
E3 *M13 GY/2 : Distributor (ignition coil)
E3 M14 GY/1 : A/C compressor
D3 *M15 — : Engine ground
D3 *M16 — : Engine ground
D3 M17 B/1 : Thermal transmitter
E3 *M18 GY/2 : Engine coolant temperature sensor
D3 *M19 G/2 : EVAP canister purge control solenoid valve
D2 *M20 BR/4 : Mass air flow sensor
D2 *M21 GY/2 : Intake air temperature sensor
D2 *M22 GY/3 : Throttle position switch
D3 *M23 BR/3 : Throttle position sensor
E1 *M24 GY/3 : Absolute pressure sensor
E1 *M25 B/2 : MAP/BARO switch solenoid valve

D2 M26 GY/8 : Inhibitor switch
D2 M27 GY/3 : Solenoid valve unit
D1 *M28 GY/2 : Inhibitor switch
C1 M29 GY/4 : To Z1 (with 4-wheel drive)
C1 M30 — : Relay box
A2 M31 L/4 : Fuel pump relay
A2 *M32 L/4 : ECCS relay
A3 M33 L/4 : Air conditioner relay
A3 M34 L/4 : Inhibitor relay (without ASCD)
A3 M35 GY/6 : Inhibitor relay (with ASCD)
A3 M36 L/4 : Clutch interlock relay (with M/T)
A3 M37 GY/3 : Horn relay
(Relay box)
C1 M38 BR/2 : Fusible link
C1 *M39 B/2 : Swirl control valve control vacuum check switch
B1 M40 GY/6 : Daytime light control unit (with DTRL)
B2 M41 GY/8 : Daytime light control unit (with DTRL)
C1 *M42 L/4 : Park and neutral position relay
C2 *M43 GY/8 : To E4
D2 *M44 B/8 : To E1
C2 M45 GY/1 : To E3
C3 M46 B/2 : To E2
B4 *M47 B/2 : Fusible link
B4 M48 W/3 : Fusible link
C2 *M49 — : Body ground

B2 M50 GY/2 : Front clearance lamp RH
B3 M51 B/3 : Headlamp RH
B3 M52 GY/2 : Dual-pressure switch
B3 M54 GY/2 : Front turn signal lamp RH
D5 M55 GY/2 : Front clearance lamp LH
E4 *M56 GY/2 : Resistor
F3 M57 W/2 : Washer motor
F3 M58 B/2 : Washer fluid level switch (for Canada)
F2 M59 GY/2 : Brake fluid level switch
F3 M60 GY/4 : ASCD actuator (with ASCD)
E2 *M61 GY/4 : To M401
F3 *M62 GY/3 : Front heated oxygen sensor
F3 M63 L/4 : Bulb check relay
F4 M64 L/4 : ASCD hold relay (with M/T)
F4 M65 BR/6 : ASCD hold relay (with A/T)
D5 M66 B/3 : Headlamp LH
C5 M67 B/3 : Headlamp LH (with DTRL)
D5 M69 B/1 : Horn
D5 M70 GY/2 : Front turn signal lamp LH
E3 *M401 GY/4 : To M61
E2 *M601 GY/4 : To M7
D2 *M602 PU/2 : IACV-FICD solenoid valve

Air Bag Harness

C1 Z1 GY/4 : To M29 (with 4-wheel drive)
C4 Z2 GY/2 : Crash zone sensor (with 4-wheel drive)

* : Be sure to connect and lock the connectors securely after repair work. Failure to do so may cause the on-board diagnostic system to light up the MIL as an open circuit detection. (Refer to EC Section.)

Main Harness and Air Bag Harness (Cont'd)

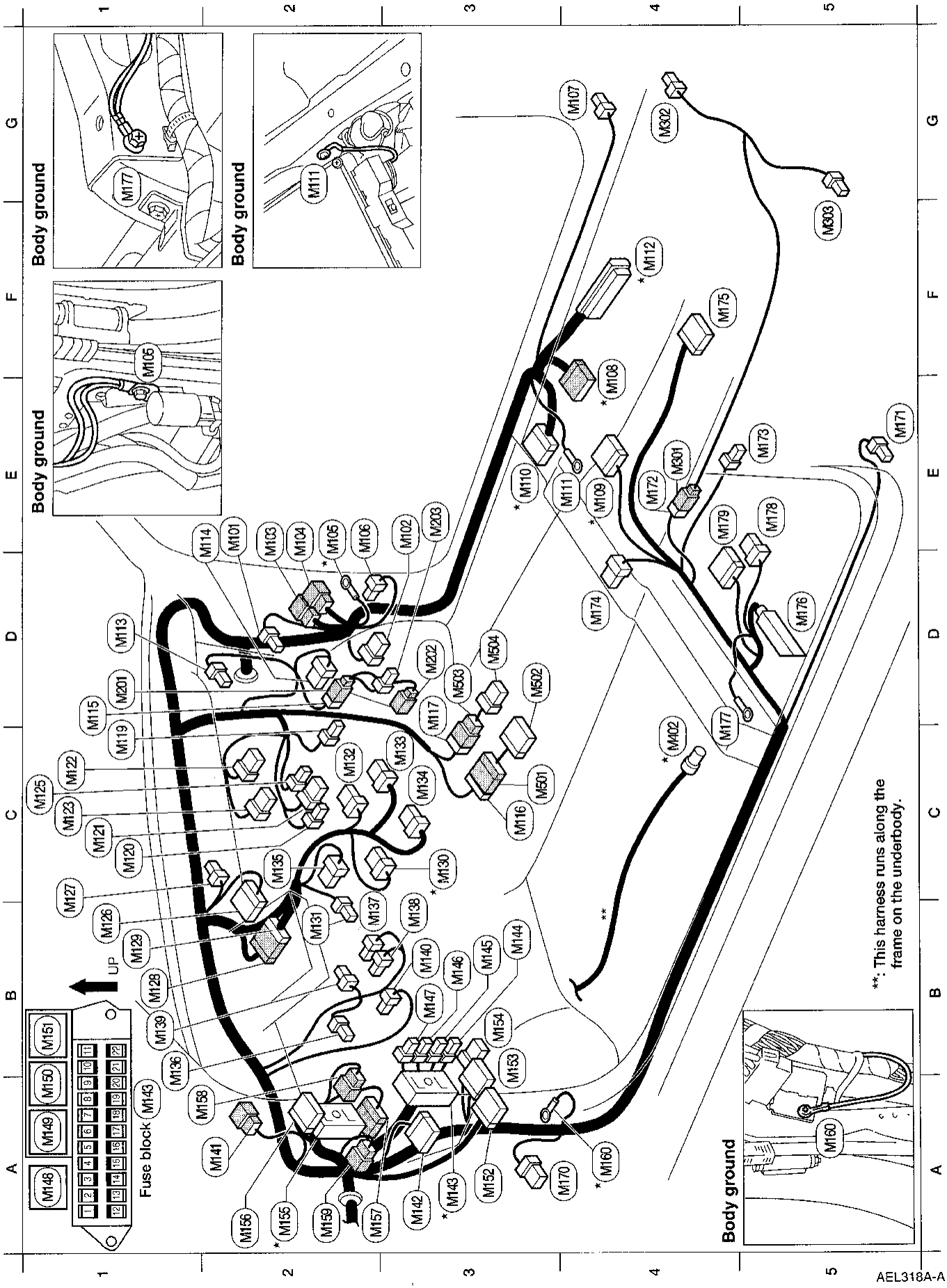

E2 (M101) W/2 : Blower motor
E3 (M102) W/8 : Power window amplifier
E2 (M103) W/6 : To (D101)
E2 (M104) W/6 : To (D102)
E2 *(M105) — : Body ground
E2 (M106) W/2 : Circuit breaker
G4 (M107) B/1 : Door switch RH
E4 *(M108) W/10 : To (C2)
E4 *(M109) W/14 : To (C1)
E3 *(M110) B/27 : Joint connector-1
E4 (M111) — : Body ground
F4 *(M112) SMJ : ECM (ECCS control module)
D1 (M113) W/4 : Thermo control amplifier
E2 (M114) W/6 : Fan resistor
D1 (M115) W/2 : To (M201)
C3 (M116) W/10 : To (M501) (with premium audio)
Radio and cassette player (with base audio)
D3 (M117) W/6 : To (M503) (with premium audio)
Radio and cassette player (with base audio)
C1 (M119) B/2 : Cigarette lighter socket
C1 (M120) W/3 : Air conditioner switch (with A/C)
C1 (M121) B/6 : Fan switch
C1 (M122) W/8 : Hazard switch
C1 (M123) W/6 : Illumination control switch
C1 (M125) W/2 : Heater (illumination)
B1 (M126) B/20 : ASCD control unit
C1 (M127) W/1 : Parking brake switch
B1 (M128) W/10 : To (M129)
B1 (M129) W/10 : To (M128)
C2 *(M130) W/6 : Ignition switch
B2 (M131) W/2 : Key switch

C2 (M132) L/8 : Wiper switch
C3 (M133) W/6 : Turn signal switch
C3 (M134) W/8 : Lighting switch
C3 (M135) W/6 : To spiral cable
B1 (M136) L/2 : Clutch pedal position switch
B2 (M137) L/2 : ASCD cancel switch (with ASCD)
B3 (M138) B/2 : Stop lamp switch
B1 (M139) B/3 : Combination flasher unit
B3 (M140) L/2 : ASCD clutch pedal position switch (with M/T)
A2 (M141) W/6 : To (R1)
A3 (M142) B/27 : Joint connector-2
A3 *(M143) SMJ : Fuse block
B3 (M144) B/1 : To (M143)
B3 (M145) W/1 : To (M143)
B3 (M146) W/1 : To (M143)
B3 (M147) W/3 : To (M143)
A1 (M148) BR/6 : Ignition-2 and power window relay
A1 (M149) L/4 : Accessory relay
A1 (M150) L/4 : Blower motor relay
B1 (M151) L/4 : Ignition-1 relay
(Fuse block)
A3 (M152) W/16 : Data link connector for GST
B3 (M153) GY/14 : Data link connector for CONSULT
B3 (M154) L/6 : ABS check connector
A2 *(M155) SMJ : To (N1)
A2 (M156) L/10 : Diode
A2 (M157) W/10 : To (D1) (with power windows and power door locks)
A1 (M158) W/6 : To (D2) (without power windows and power door locks)
A2 (M159) W/8 : To (D3)
A4 *(M160) — : Body ground
A4 (M170) W/8 : Warning chime unit

E5 (M171) B/3 : Door switch LH
E4 (M172) L/4 : To (M301)
E5 (M173) B/2 : Seat belt buckle switch
D4 (M174) W/6 : A/T device
F4 (M175) Y/24 : Air bag diagnosis sensor unit
D5 (M176) W/17 : ABS control unit
D4 (M177) — : Body ground
E5 (M178) W/6 : Door lock control unit
E4 (M179) W/12 : Rear speaker amplifier
D1 (M201) W/2 : To (M115)
D3 (M202) W/2 : Glove box lamp
E3 (M203) BR/2 : Glove box lamp switch
E4 (M301) L/4 : To (M172)
G4 (M302) B/2 : Rear speaker RH
F5 (M303) B/2 : Rear speaker LH
C4 *(M402) GY/4 : Rear heated oxygen sensor
C3 (M501) W/10 : To (M116) (with premium audio)
D3 (M502) W/10 : Radio and cassette player (with premium audio)
D3 (M503) W/6 : To (M117)
D3 (M504) W/6 : Radio and cassette player (premium audio)

Diode (M156)

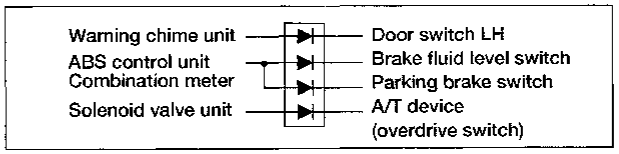

*: Be sure to connect and lock the connectors securely after repair work. Failure to do so may cause the on-board diagnostic system to light up the MIL as an open circuit detection. (Refer to EC Section.)

Instrument Harness

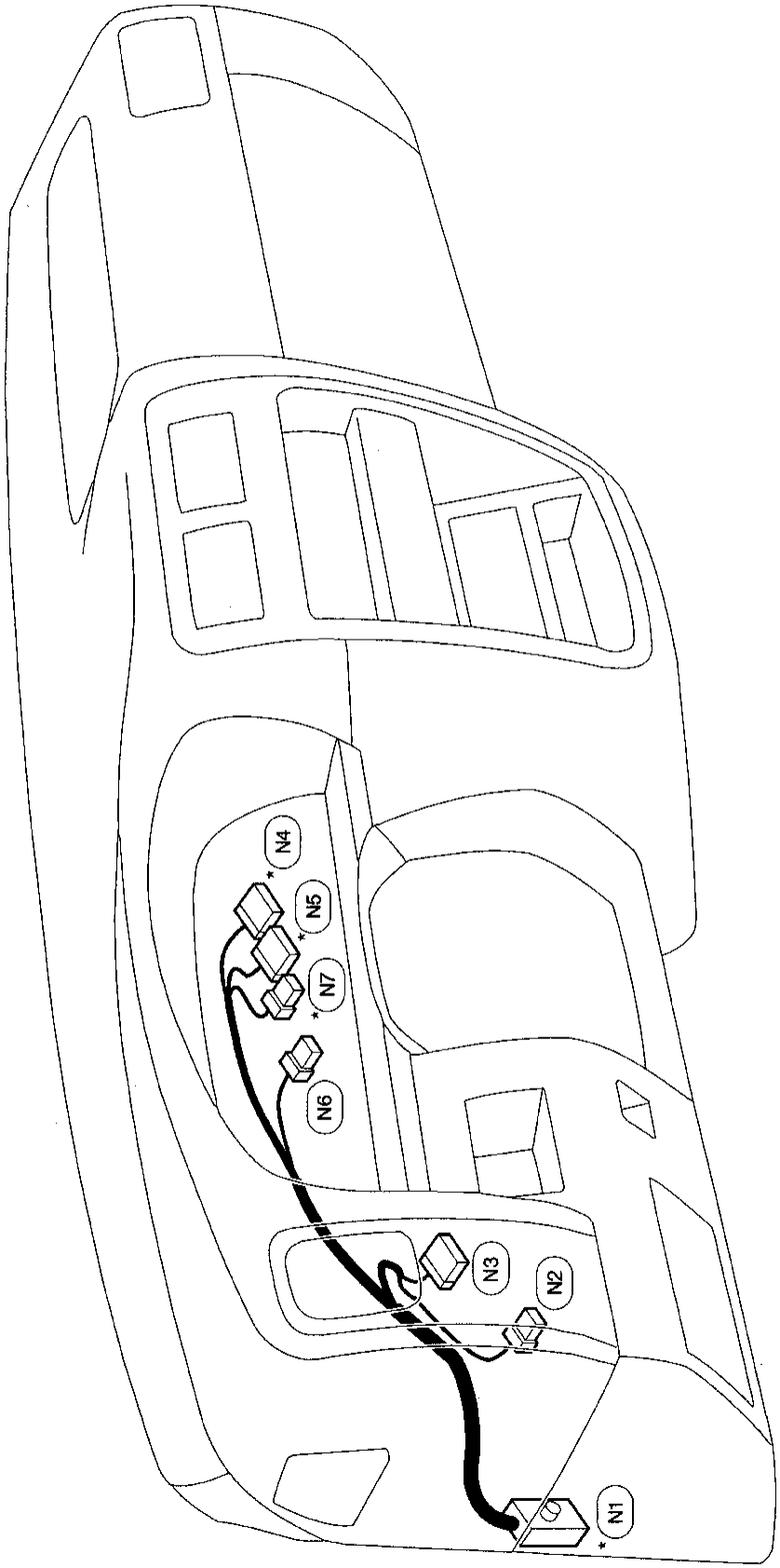

* (N1) SMJ : To (M55) (SMJ)
(N2) W/6 : ASCD main switch
(N3) W/10 : Door mirror switch
* (N4) B/10 : Combination meter
* (N5) B/12 : Combination meter
(N6) W/8 : Combination meter
* (N7) W/12 : Combination meter

* : Be sure to connect and lock the connectors securely after repair work. Failure to do so may cause the on-board diagnostic system to light up the MIL as an open circuit detection. (Refer to EC section.)

AEL320A

Engine Harness

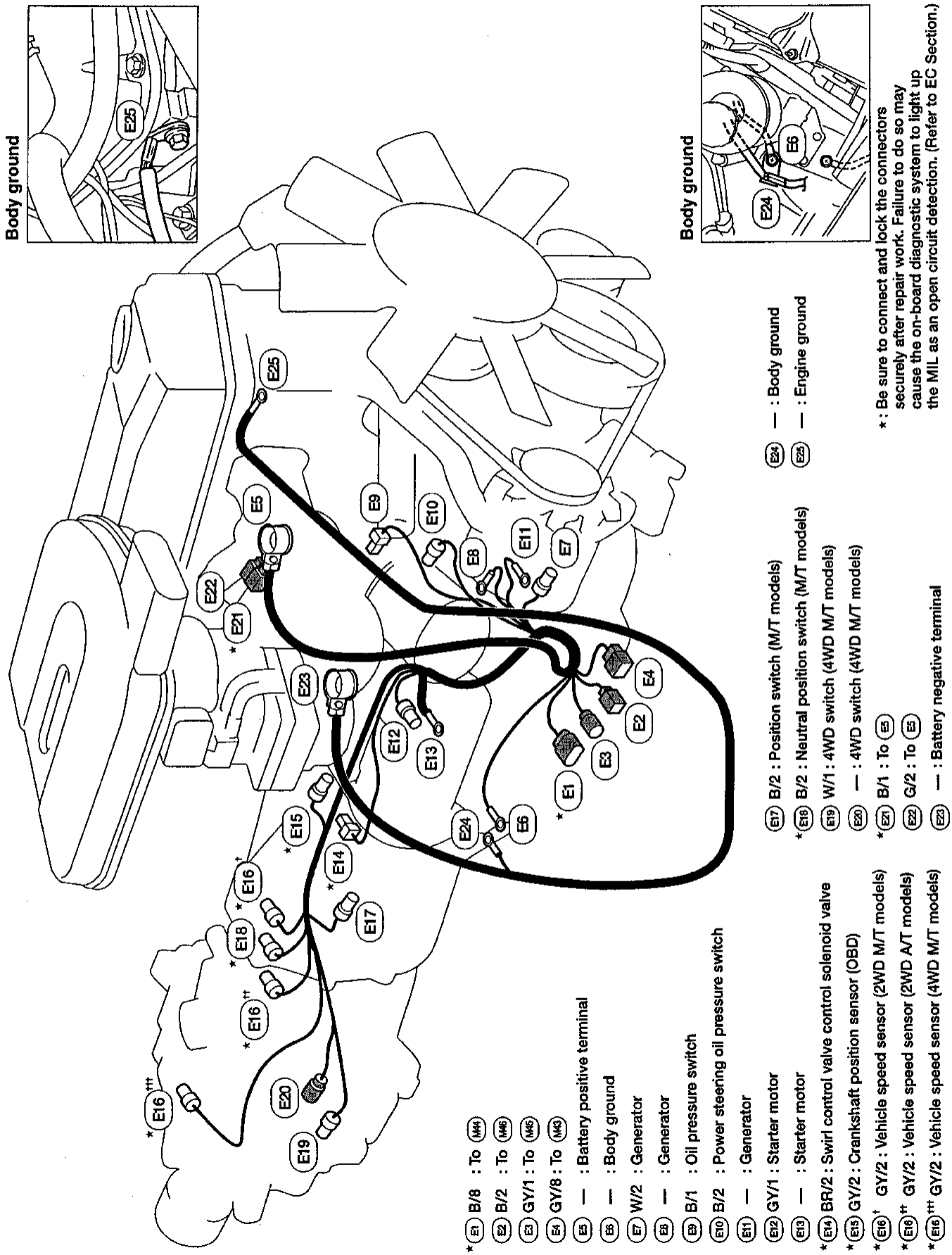

AEL321A

Chassis and Tail Harness

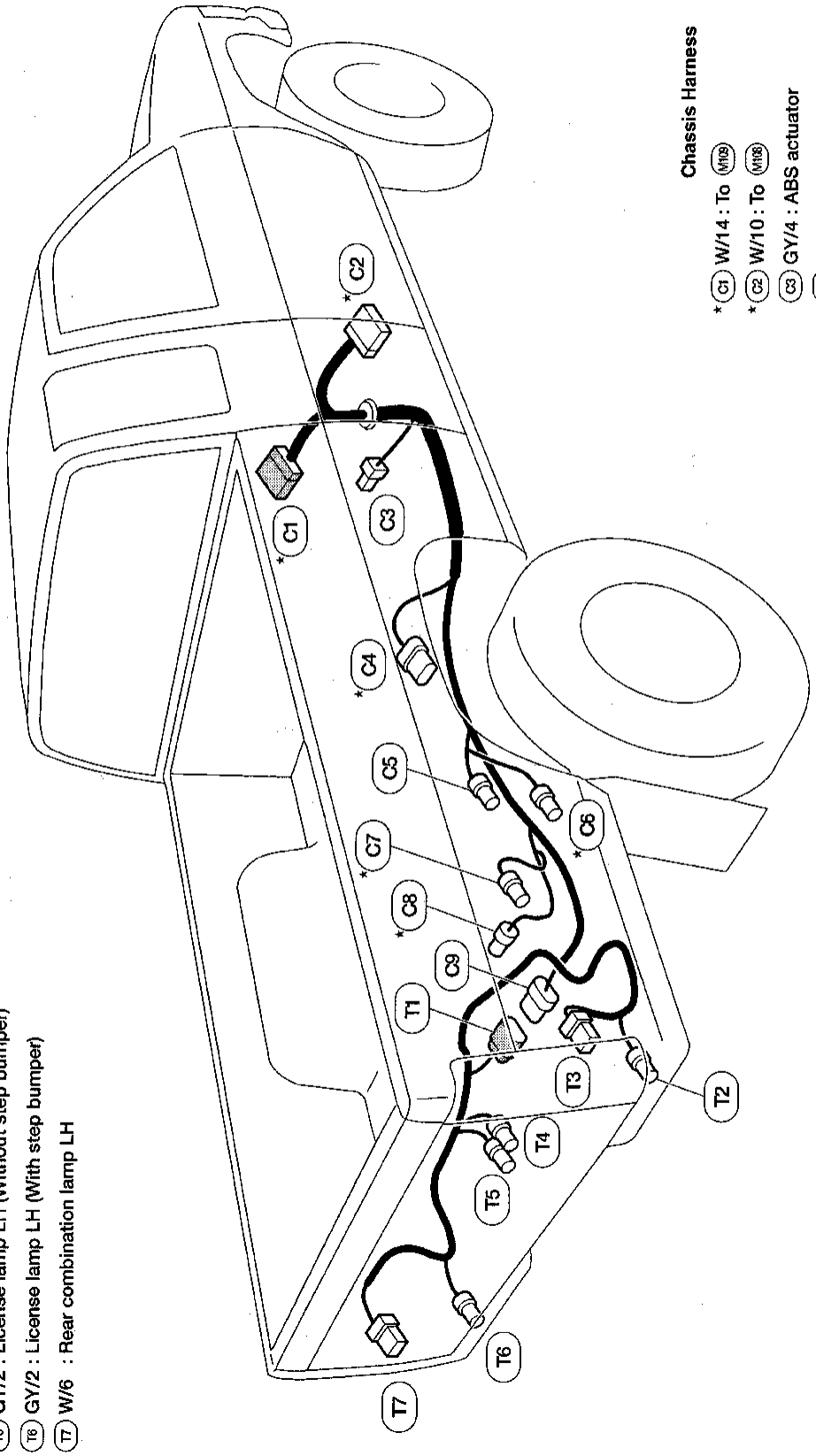

Chassis Harness

- ★ C1 W/14 : To M108
- ★ C2 W/10 : To M108
- C3 GY/4 : ABS actuator
- ★ C4 GY/6 : Fuel tank gauge unit
- C5 GY/2 : Rear sensor
- ★ C6 GY/3 : EVAP control system pressure sensor
- ★ C7 G/2 : Vacuum cut valve bypass valve
- ★ C8 B/2 : EVAP canister vent control valve
- C9 GY/8 : To T1

★ : Be sure to connect and lock the connectors securely after repair work. Failure to do so may cause the on-board diagnostic system to light up the MIL as an open circuit detection. (Refer to EC section.)

Tail Harness

- T1 GY /8: To C9
- T2 GY/2 : License lamp RH (With step bumper)
- T3 W/6 : Rear combination lamp RH
- T4 GY/2 : License lamp RH (Without step bumper)
- T5 GY/2 : License lamp LH (Without step bumper)
- T6 GY/2 : License lamp LH (With step bumper)
- T7 W/6 : Rear combination lamp LH

AEL322A

Front Door Harness

Door harness LH

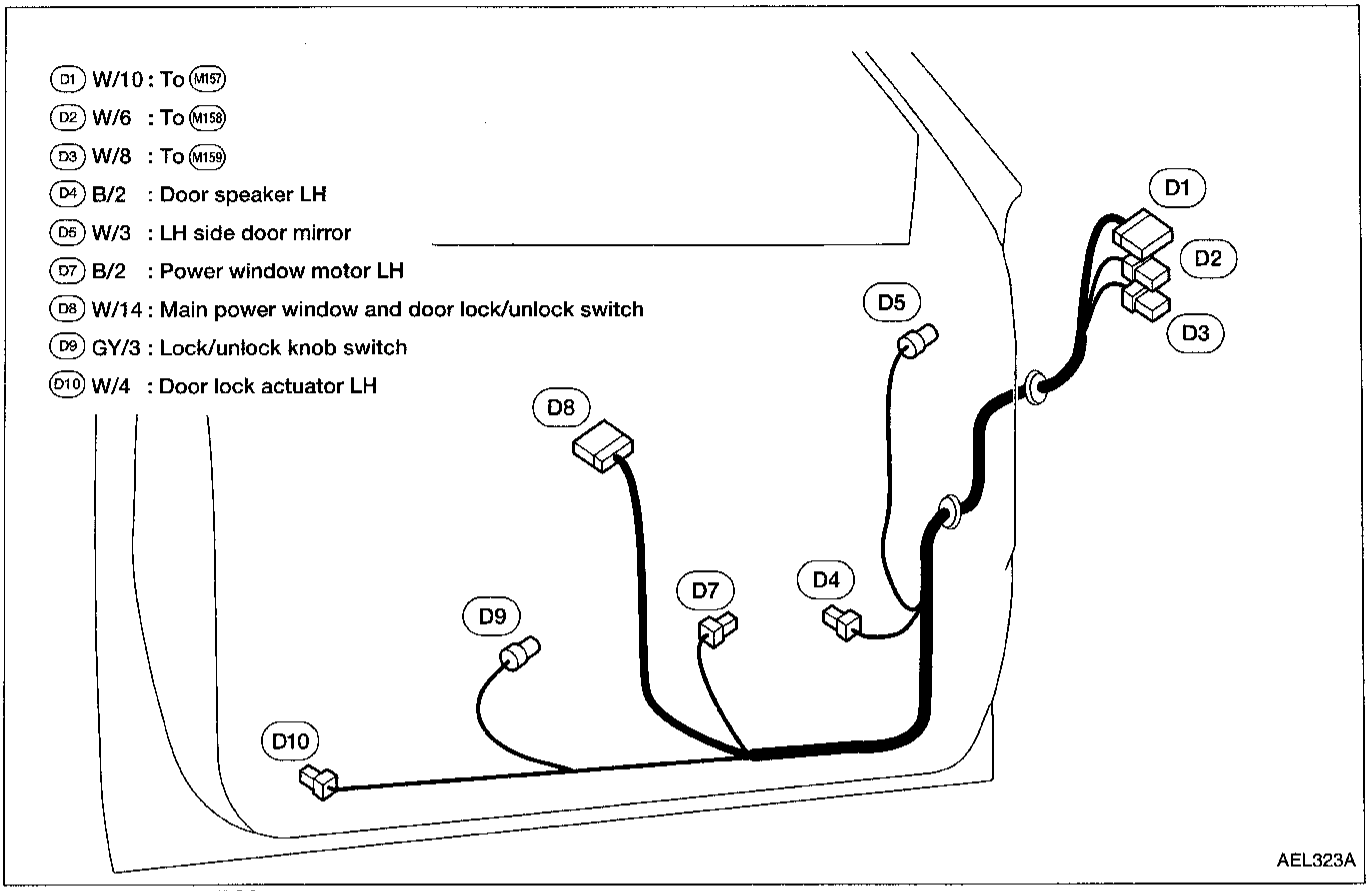

Door harness RH

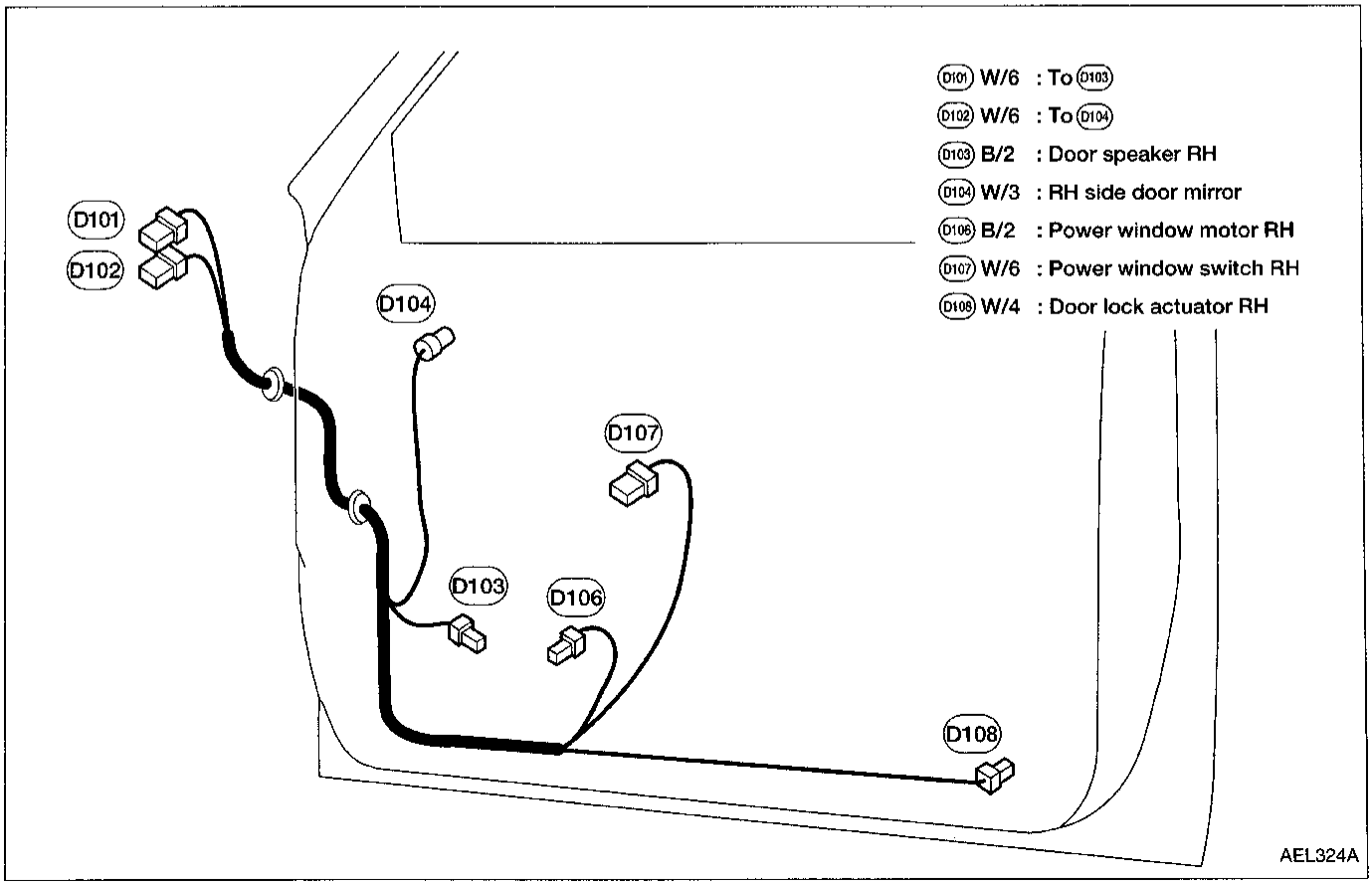

Room Lamp Harness