ENGINE MECHANICAL

SECTION EM

CONTENTS

Supplemental Restraint System (SRS) "AIR BAG"

The Supplemental Restraint System "AIR BAG", used along with a seat belt, helps to reduce the risk or severity of injury to the driver and front passenger in a frontal collision. The Supplemental Restraint System consists of air bag modules (located in the center of the steering wheel and in the instrument panel on the passenger side), a diagnosis sensor unit, a crash zone sensor (4WD models), warning lamp, wiring harness and spiral cable.

The vehicle is equipped with a passenger air bag deactivation switch. Because no rear seat exists where a rear-facing child restraint can be placed, the switch is designed to turn off the passenger air bag so that a rear-facing child restraint can be used in the front passenger seat. The switch is located in the center of the instrument panel, near the ashtray. When the switch is turned to the ON position, the passenger air bag is enabled and could inflate in a frontal collision. When the switch is turned to the OFF position, the passenger air bag is disabled and will not inflate in a frontal collision. A passenger air bag OFF indicator on the instrument panel lights up when the passenger air bag is switched OFF. The driver air bag always remains enabled and is not affected by the passenger air bag deactivation switch.

Information necessary to service the system safely is included in the **RS section** of this Service Manual.

WARNING:

- **To avoid rendering the SRS inoperative, which could increase the risk of personal injury or death in the event of a collision which would result in air bag inflation, all maintenance should be performed by an authorized NISSAN dealer.**
- **Improper maintenance, including incorrect removal and installation of the SRS, can lead to personal injury caused by unintentional activation of the system.**
- **Do not use electrical test equipment on any circuit related to the SRS unless instructed to in this Service Manual. SRS wiring harnesses are covered with yellow insulation either just before the harness connectors or on the complete harness, for easy identification.**
- **The vehicle is equipped with a passenger air bag deactivation switch which can be operated by the customer. When the passenger air bag is switched OFF, the passenger air bag is disabled and will not inflate in a frontal collision. When the passenger air bag is switched ON, the passenger air bag is enabled and could inflate in a frontal collision. After SRS maintenance or repair, make sure the passenger air bag deactivation switch is in the same position (ON or OFF) as when the vehicle arrived for service.**

Parts Requiring Angular Tightening

- Use an angle wrench for the final tightening of the following engine parts:
  (1) Cylinder head bolts
  (2) Connecting rod cap nuts
- Do not use a torque value for final tightening.
- The torque values for these parts are for a preliminary step.
- Ensure thread and seat surfaces are clean and coated with engine oil.

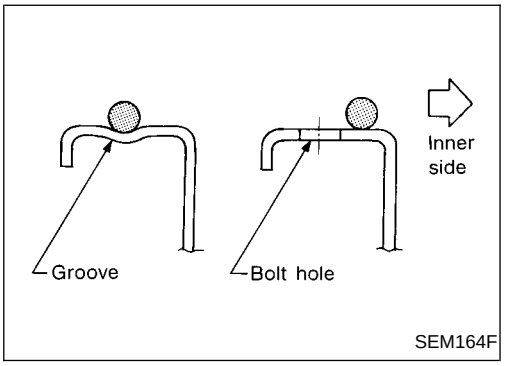

Liquid Gasket Application Procedure

a. Use a scraper to remove all traces of old liquid gasket from mating surfaces and grooves. Also, completely clean any oil from these areas.

b. Apply a continuous bead of liquid gasket to mating surfaces. (Use Genuine RTV Silicone Sealant, Part No. 999 MP-A7007 or equivalent.)

- **For oil pan, be sure liquid gasket diameter is 3.5 to 4.5 mm (0.138 to 0.177 in).**
- **For areas except oil pan, be sure liquid gasket diameter is 2.0 to 3.0 mm (0.079 to 0.118 in).**

Liquid Gasket Application Procedure (Cont'd)

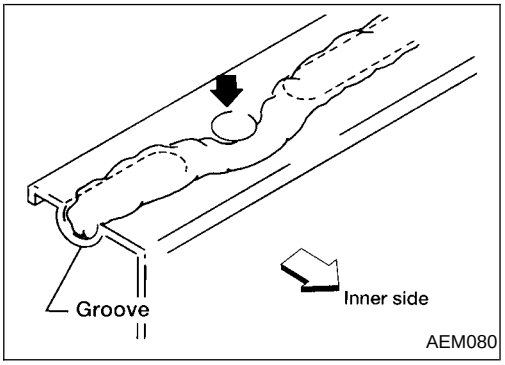

c. **Apply liquid gasket around the inner side of bolt holes (unless otherwise specified).**
d. **Assembly should be done within 5 minutes after coating.**
e. **Wait at least 30 minutes before refilling engine oil and engine coolant.**

Special Service Tools

The actual shapes of Kent-Moore tools may differ from those of special service tools illustrated here.

Tool number (Kent-Moore No.) Tool name	Description	
ST0501S000 (—) Engine stand assembly ① ST05011000 (—) Engine stand ② ST05012000 (—) Base	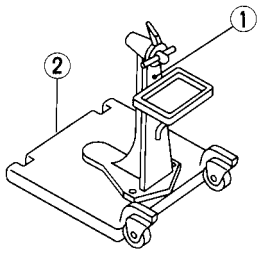 NT042	Disassembling and assembling
KV10105001 (—) Engine attachment	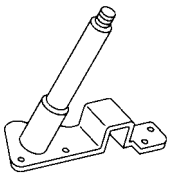 NT031	
KV101092S0 (J26336-B) Valve spring compressor ① KV10109210 (—) Compressor ② KV10109220 (—) Adapter	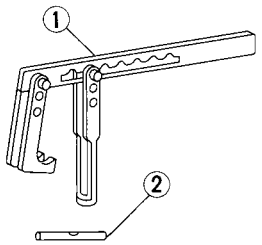 NT021	Disassembling and assembling valve components)
KV10110300 (—) Piston pin press stand assembly ① KV10110310 (—) Cap ② KV10110330 (—) Spacer ③ ST13030020 (—) Press stand ④ ST13030030 (—) Spring ⑤ KV10110340 (—) Drift ⑥ KV10110320 (—) Center shaft	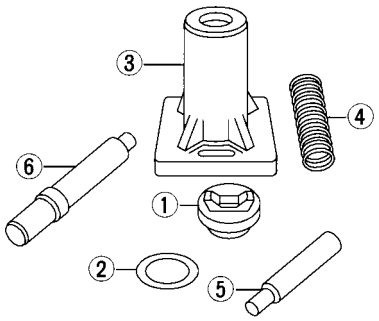 NT036	Disassembling and assembling piston with connecting rod

Special Service Tools (Cont'd)

Tool number (Kent-Moore No.) Tool name	Description	
EM03470000 (J8037) Piston ring compressor	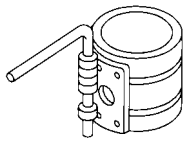 NT044	Installing piston assembly into cylinder bore
(J36467) Valve oil seal remover	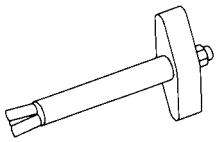 NT034	Removing valve oil seal
ST16610001 (J23907) Pilot bushing puller	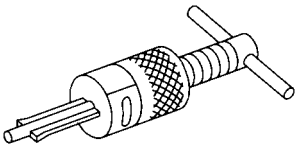 NT045	Removing crankshaft pilot bushing
KV10111100 (J37228) Seal cutter	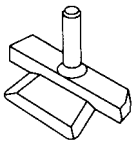 NT046	Removing oil pan
WS39930000 (—) Tube presser	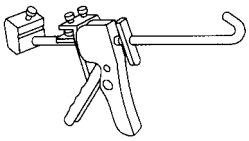 NT052	Pressing the tube of liquid gasket
KV10112100 (BT8653-A) Angle wrench	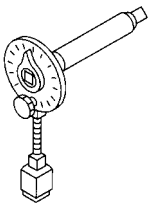 NT014	Tightening bolts for bearing cap, cylinder head, etc.
KV10116300 (J-38955) Valve oil seal drift	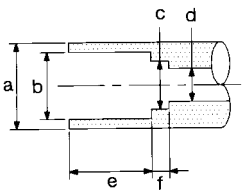

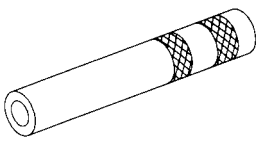
NT602 | Installing valve oil seal

a: 25 (0.98) dia.
b: 14.4 (0.567) dia.
c: 11.8 (0.465) dia.
d: 10 (0.39) dia.
e: 11 (0.43)
f : 9 (0.35) Unit: mm (in) |

Special Service Tools (Cont'd)

Tool number (Kent-Moore No.) Tool name	Description	
ST10120000 (J24239-01) Cylinder head bolt wrench	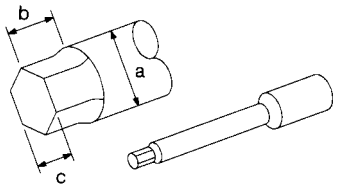 NT583	Loosening and tightening cylinder head bolt **a: 13 (0.51) dia.** **b: 12 (0.47)** **c: 10 (0.39)** Unit: mm (in)
KV101151S0 (J38972) Lifter stopper set ① KV10115110 (J38972-1) Camshaft pliers ② KV10115120 (J38972-2) Lifter stopper	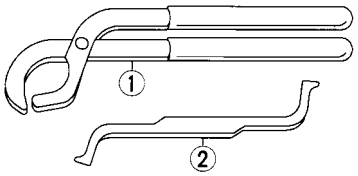 NT041	Changing valve lifter shims
KV10117100 (J36471-A) Front heated oxygen sensor wrench	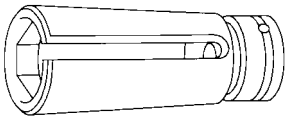 NT630	Removing and installing front heated oxygen sensor [22 mm (0.87 in) type]

Commercial Service Tools

Tool name	Description	
Spark plug wrench	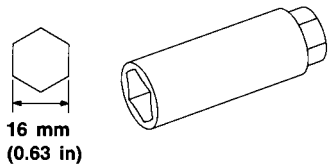 NT047	Removing and installing spark plug
Pulley holder	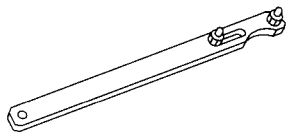 NT035	Holding camshaft pulley while tightening or loosening camshaft bolt
Valve seat cutter set	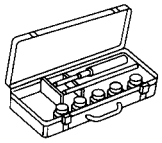 NT048	Finishing valve seat dimensions
Piston ring expander	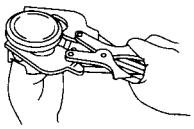 NT030	Removing and installing piston ring
Valve guide drift	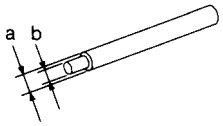 NT015	Removing and installing valve guide Diameter mm (in) | | Intake & Exhaust | | a | 10.5 (0.413) | | b | 6.6 (0.260) |
Valve guide reamer	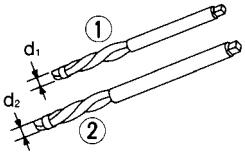 NT016	Reaming valve guide (1) or hole for oversize valve guide (2) Diameter: mm (in) | | Intake & Exhaust | | d_1 | 7 (0.28) | | d_2 | 11.175 (0.4400) |
(J-43897-18) (J-43897-12) Oxygen sensor thread cleaner	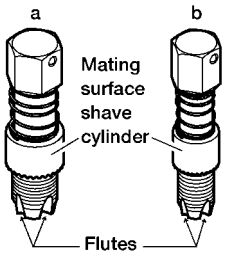 AEM488	Reconditioning the exhaust system threads before installing a new oxygen sensor. Use with anti-seize lubricant shown in "Commercial Service Tools". a: J-43897-18-18mm diameter, for Zirconia Oxygen Sensor b: J-43897-12-12mm diameter, for Titania Oxygen Sensor

Commercial Service Tools

Tool name	Description	
Anti-seize lubricant (Permatex™ 133 AR or equivalent meeting MIL specification MIL-A-907)	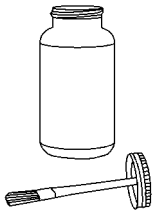 AEM489	Lubricating oxygen sensor thread cleaning tool when reconditioning exhaust sytem threads.

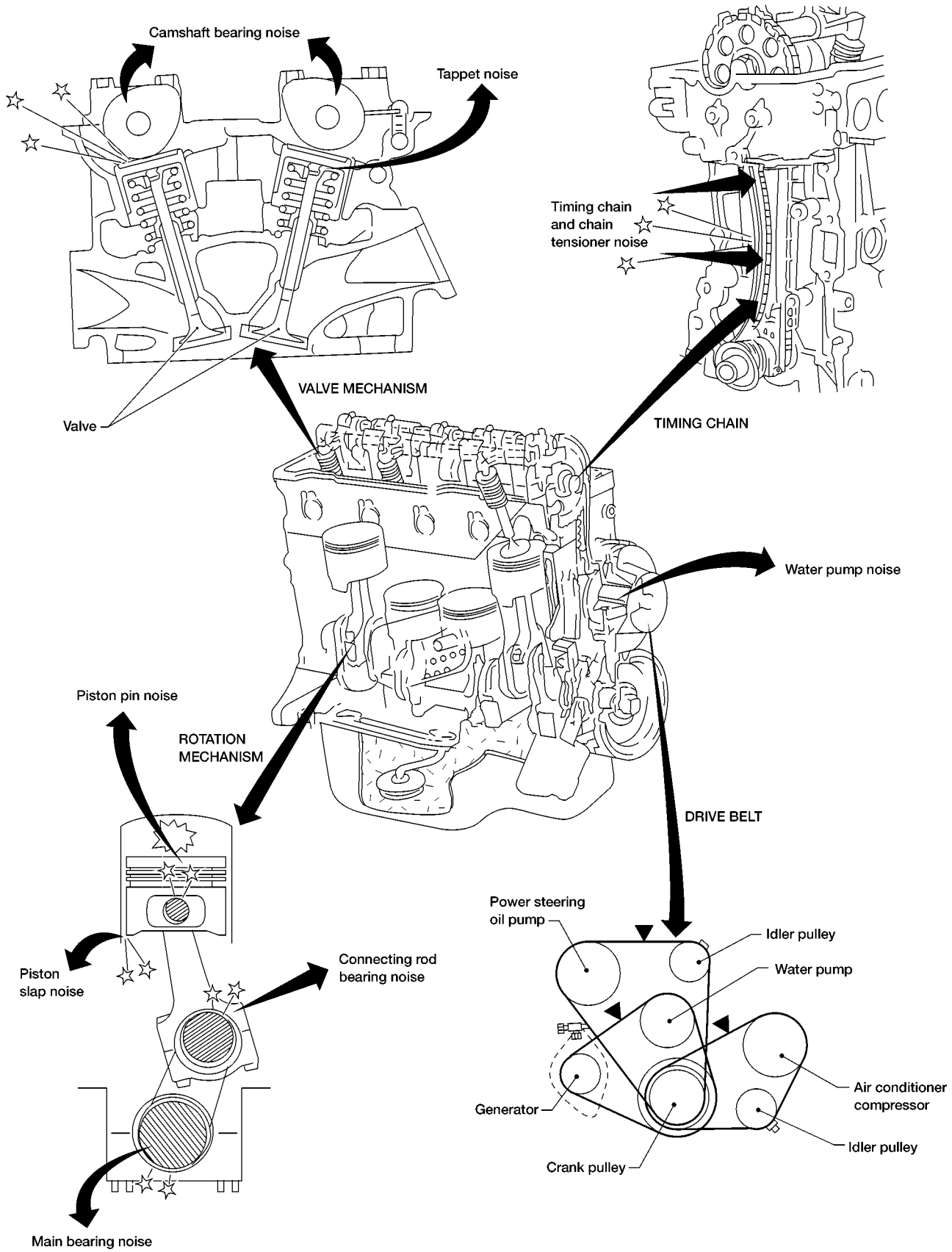
Camshaft bearing noise
Tappet noise
Valve
VALVE MECHANISM
Timing chain
and chain
tensioner noise
TIMING CHAIN
Water pump noise
Piston pin noise
ROTATION
MECHANISM
DRIVE BELT
Piston
slap noise
Connecting rod
bearing noise
Main bearing noise
Power steering
oil pump
Idler pulley
Water pump
Generator
Air conditioner
compressor
Idler pulley
Crank pulley

AEM399

NVH Troubleshooting Chart—Engine Noise

Use the chart below to help you find the cause of the symptom.
1. Locate the area where noise occurs.
2. Confirm the type of noise.
3. Specify the operating condition of the engine.
4. Check the specified noise source.

If necessary, repair or replace these parts.

Location of noise	Type of noise	Operating condition of engine						Source of noise	Check item	Reference page
		Before warm-up	After warm-up	When starting	When idling	When revving	While driving			
Top of engine Rocker cover Cylinder head	Ticking or clicking	C	A	—	A	B	—	Tappet noise	Valve clearance	EM-36
	Rattle	C	A	—	A	B	C	Camshaft bearing noise	Camshaft journal clearance Camshaft runout	EM-31
Crankshaft pulley Cylinder block (upper side of engine) Oil pan	Slap or knock	—	A	—	B	B	—	Piston pin noise	Pistion and piston pin clearance Connecting rod bushing clearance	EM-43, 49
	Slap or rap	A	—	—	B	B	A	Piston slap noise	Piston ring side clearance Piston ring end gap Connecting rod bend and torsion Piston-to-bore clearance	EM-44, 45
	Knock	A	B	C	B	B	B	Connecting rod-bearing noise	Connecting rod bearing clearance (Big end) Connecting rod bushing clearance (Small end)	EM-48, 49
	Knock	A	B	—	A	B	C	Main bearing noise	Crankshaft runout Main bearing oil clearance	EM-46
Front of engine Timing chain cover	Tapping or ticking	A	A	—	B	B	B	Timing chain and chain tensioner noise	Timing chain cracks and wear	EM-22
Front of engine	Squeaking or fizzing	A	B	—	B	—	C	Other drive belts (Sticking or slipping)	Drive belt deflection	MA Section (“Checking Drive Belts”, “ENGINE MAINTENANCE”)
	Creaking	A	B	A	B	A	B	Other drive belts (Slipping)	Idler pulley bearing operation	
	Squall creak	A	B	—	B	A	B	Water pump noise	Water pump operation	LC Section (“Water Pump Inspection”, “ENGINE COOLING SYSTEM”)

A: Closely related B: Related C: Sometimes related —: Not related

SEC. 120 • 140 • 147 • 150 • 163 • 164 • 210 • 220 • 221 • 230 • 231

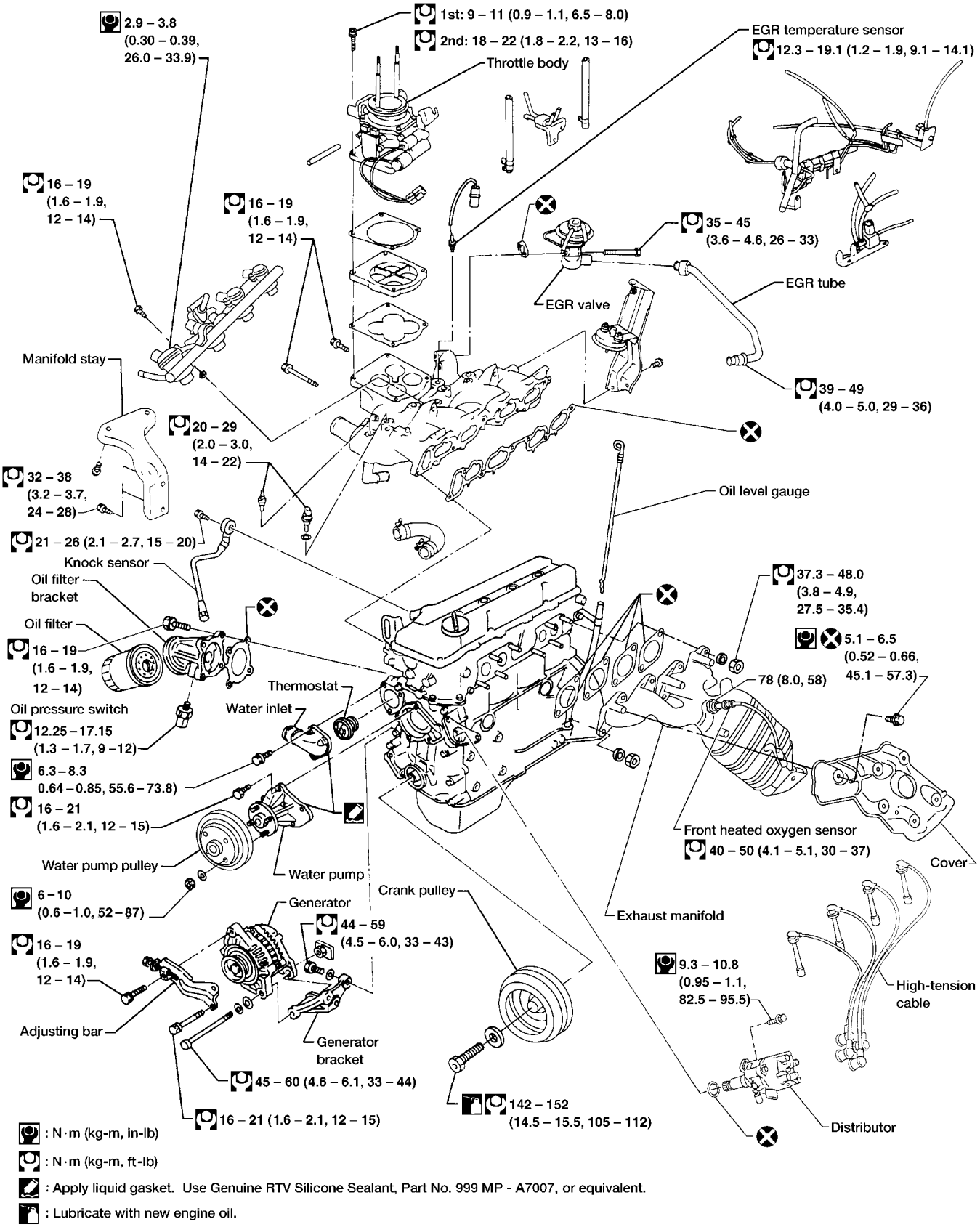

: N·m (kg-m, in-lb)

: N·m (kg-m, ft-lb)

: Apply liquid gasket. Use Genuine RTV Silicone Sealant, Part No. 999 MP - A7007, or equivalent.

: Lubricate with new engine oil.

AEM465

CAUTION:

- **Before installing new oxygen sensor, clean exhaust system threads using Oxygen Sensor Thread Cleaner tool J-43897-18 or J-43897-12 and approved anti-seize lubricant.**

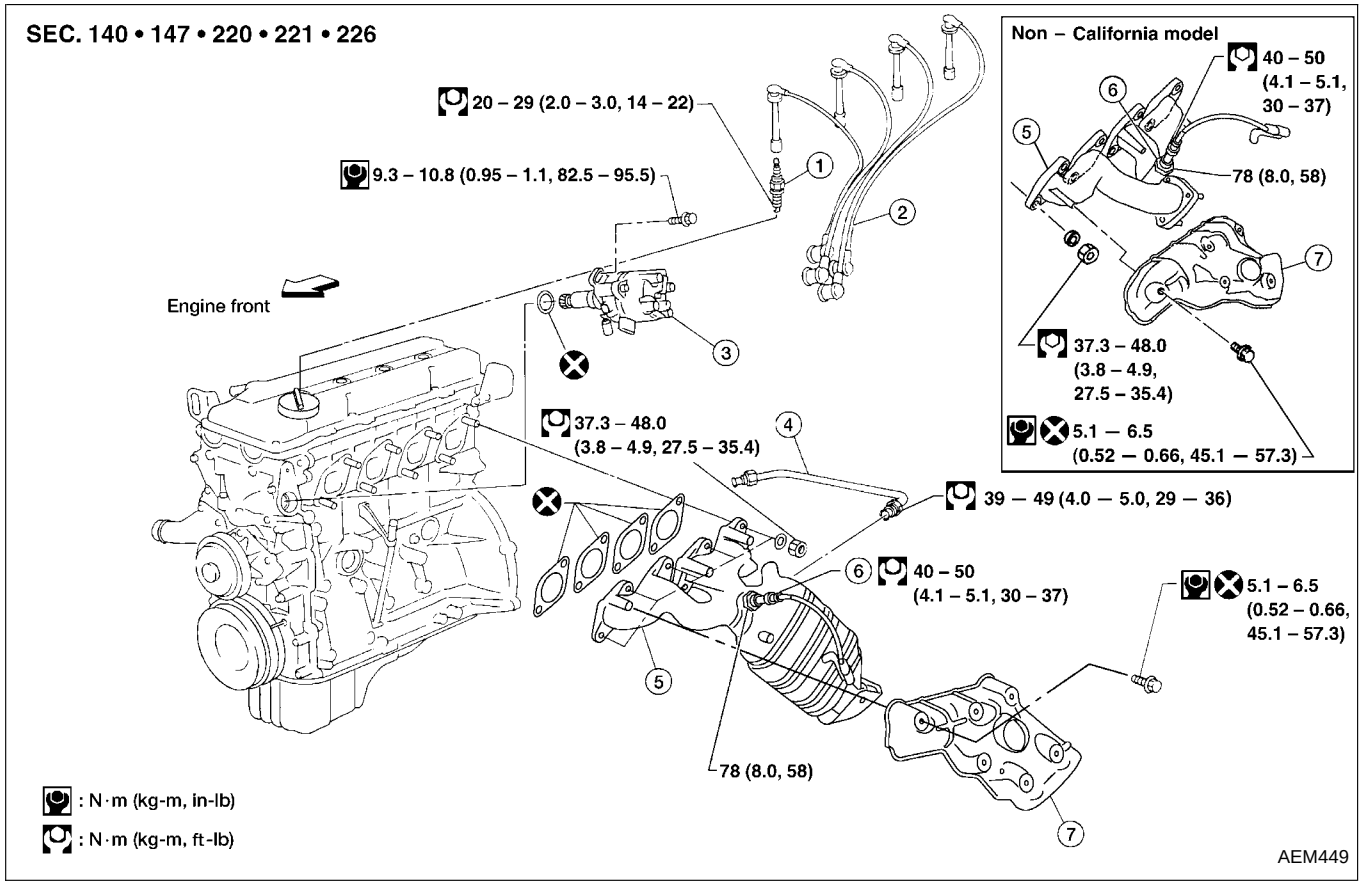

① Spark plug
② Ignition wire
③ Camshaft position sensor built into distributor
④ EGR tube
⑤ Exhaust manifold
⑥ Front heated oxygen sensor
⑦ Exhaust manifold cover

Intake manifold

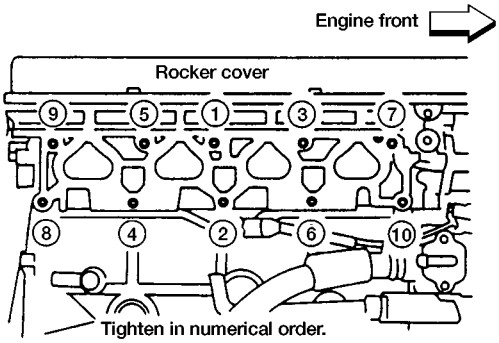

Tighten in numerical order.
Loosen in reverse order.
15.7 – 18.6 (1.6 – 1.9, 11.6 – 13.7)

Exhaust manifold

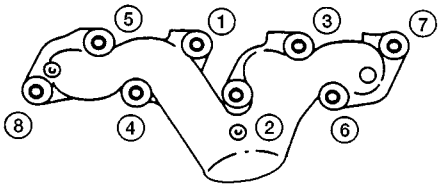

Tighten in numerical order.
Loosen in reverse order.
37.3 – 48.0 (3.8 – 4.9, 27.5 – 35.4)

Throttle body

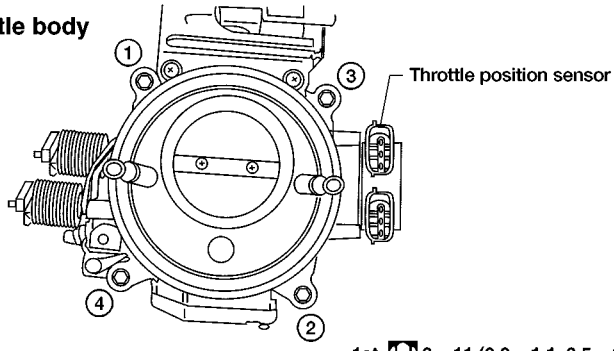

Tighten in numerical order.
Loosen in reverse order.

1st: 9 – 11 (0.9 – 1.1, 6.5 – 8.0)
2nd: 18 – 22 (1.8 – 2.2, 13 – 16)

: N·m (kg-m, ft-lb)

AEM368

Measurement of Compression Pressure

1. Warm up engine.
2. Turn ignition switch off.
3. Release fuel pressure.
   Refer to “Releasing Fuel Pressure” in EC section.
4. Remove all spark plugs.

- **Clean area around plug with compressed air before removing the spark plug.**

5. Disconnect camshaft position sensor harness connector at the distributor.
6. Remove fuel injector fuse ③ on FUSE BLOCK (J/B) behind the instrument lower panel driver side.
   Refer to “Terminal Arrangement” “FUSE BLOCK - Junction Box (J/B)” on the Foldout page.

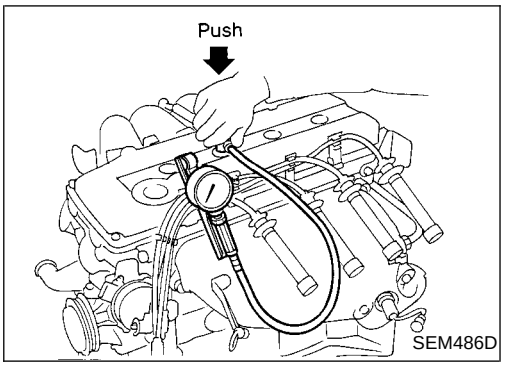

7. Attach a compression tester to No. 1 cylinder.
8. Depress accelerator pedal fully to keep throttle valve wide open.
9. Crank engine and record highest gauge indication.
10. Repeat the measurement on each cylinder as shown above.

- **Always use a fully-charged battery to obtain specified engine speed.**

Compression pressure: kPa (kg/cm^2, psi)/300 rpm
Standard
1,226 (12.5, 178)
Minimum
1,030 (10.5, 149)
Maximum allowable difference between cylinders
98 (1.0, 14)

11. If cylinder compression in one or more cylinders is low, pour a small amount of engine oil into the cylinder through the spark plug hole and retest compression.

- **If adding oil improves cylinder compression, piston rings may be worn or damaged. If so, replace piston rings after checking piston.**
- **If pressure stays low, a valve may be sticking or seating improperly. Inspect and repair valve and valve seat. (Refer to SDS, EM-53 and EM-55.) If valve or valve seat is damaged excessively, replace them.**
- **If compression in any two adjacent cylinders is low and if adding oil does not improve compression, there is leakage past the gasket surface. If so, replace cylinder head gasket.**

12. Reinstall spark plugs fuel injector fuse, fuel pump fuse, and reconnect camshaft position sensor harness connector at the distributor.
13. Erase the DTC stored in ECM.

CAUTION:
Always erase the DTC after checking compression.
Refer to “HOW TO ERASE EMISSION-RELATED DIAGNOSTIC INFORMATION” in EC section.

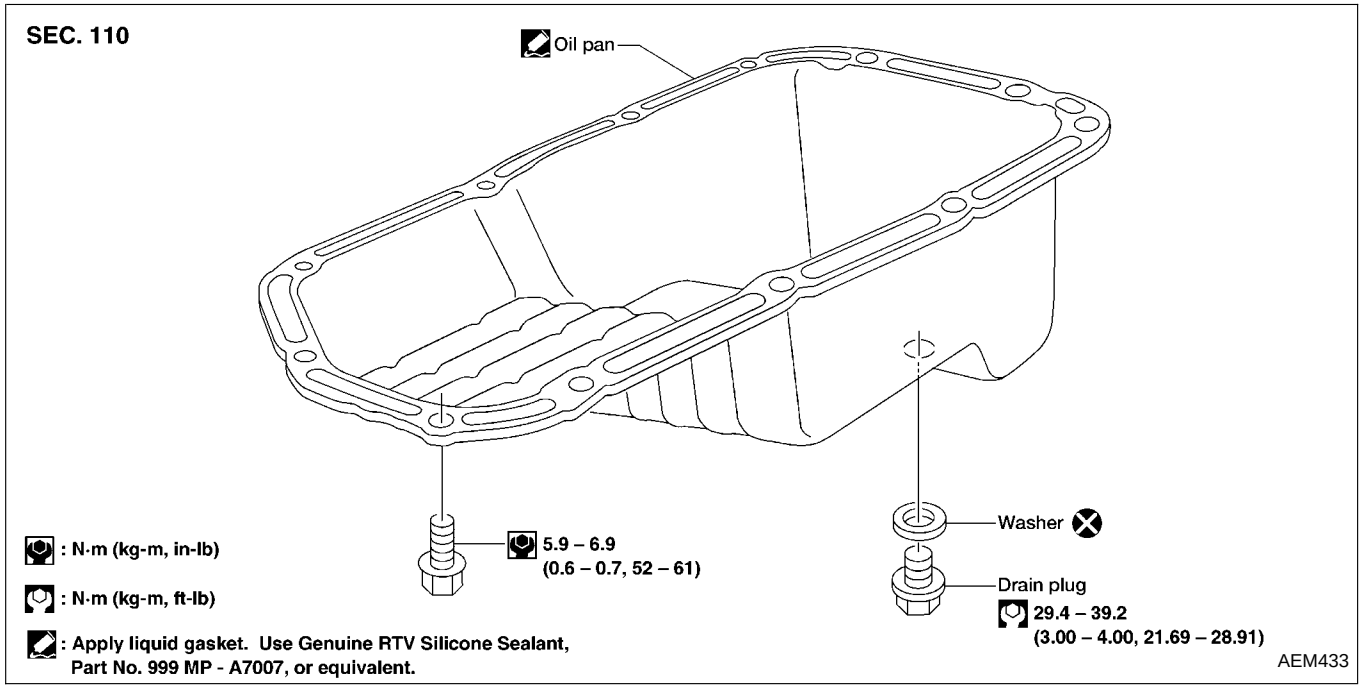

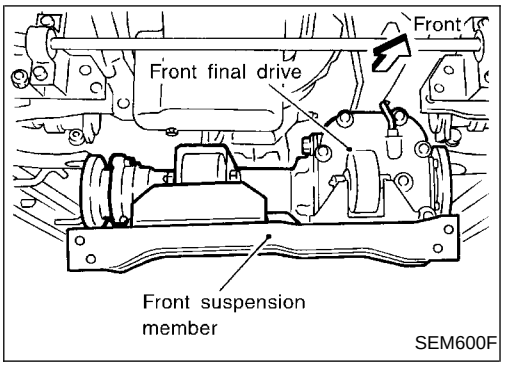

Removal

1. Raise vehicle and support it with safety stands.
2. Remove engine under cover.
3. Drain engine oil.
4. Remove front final drive together with differential mounting member. Refer to PD section (“Removal and Installation”, “Front final drive”) — 4WD models only.
5. Remove front suspension member.

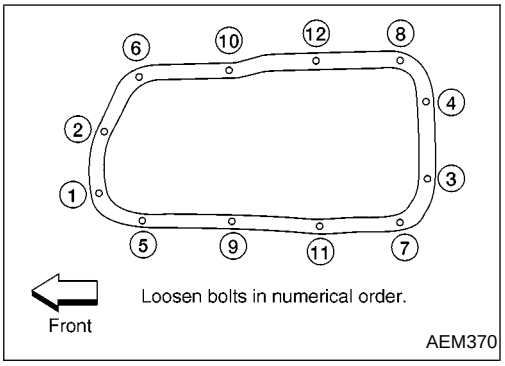

6. Remove oil pan bolts.

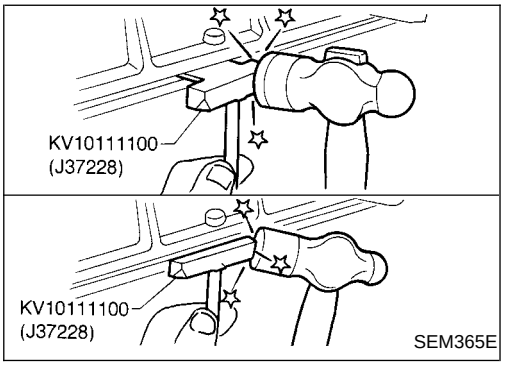

7. Remove oil pan.
a. Insert Tool between cylinder block and oil pan.
- **Be careful not to damage aluminum mating surface.**
- **Do not insert screwdriver, or oil pan flange will be damaged.**

b. Slide Tool by tapping on the side of the Tool with a hammer.
8. Pull out oil pan from front side.

Installation

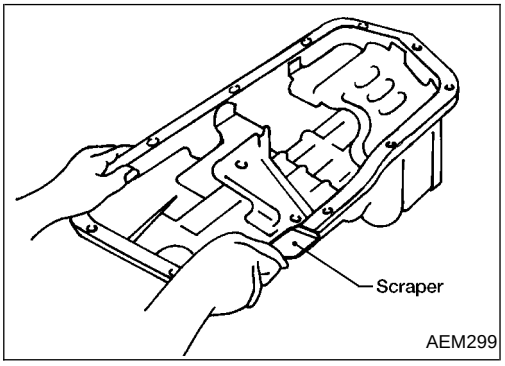

1. Use a scraper to remove old liquid gasket from mating surface of oil pan.

- **Also remove traces of liquid gasket from mating surface of cylinder block.**

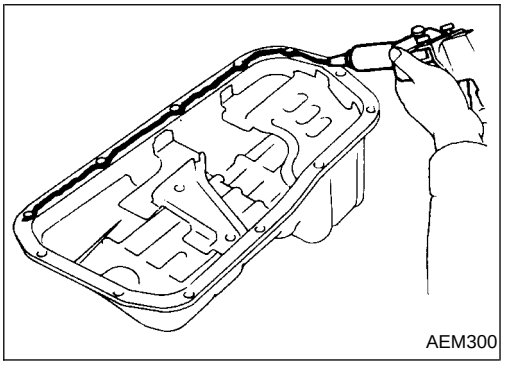

2. Apply a continuous bead of liquid gasket to mating surface of oil pan.

- **Use Genuine RTV Silicone Sealant, Part No. 999 MP-A7007 or equivalent.**
- **Apply to groove on mating surface.**
- **Allow 7 mm (0.28 in) clearance around bolt hole.**

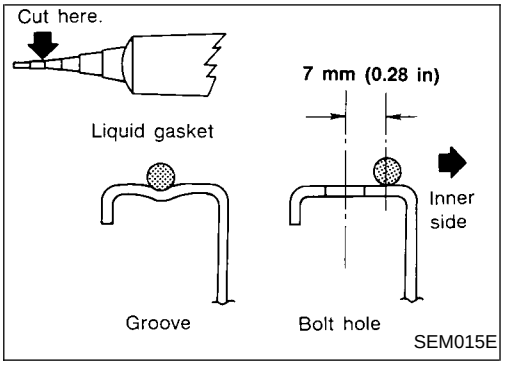

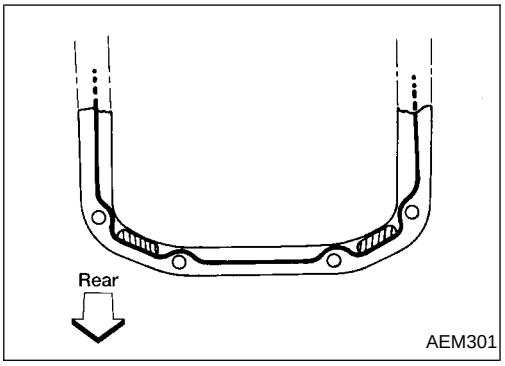

- **Be sure liquid gasket diameter is 3.5 to 4.5 mm (0.138 to 0.177 in).**
- **Attaching should be done within 5 minutes after coating.**

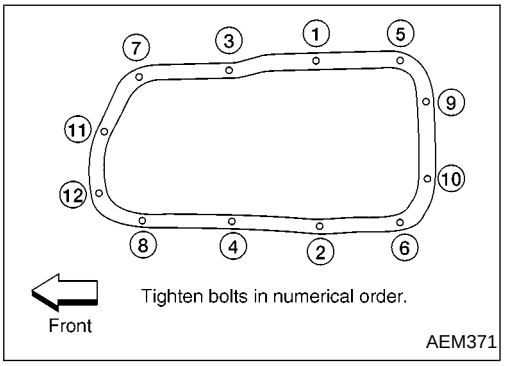

3. Install oil pan.

- **Tighten oil pan bolts in numerical order.**
  : 5.9 - 6.9 N·m (0.6 - 0.7 kg-m, 52 - 61 in-lb)
- **Wait at least 30 minutes before refilling engine oil.**

4. Install parts in reverse order of removal.

SEC. 120 • 130 • 135 • 210

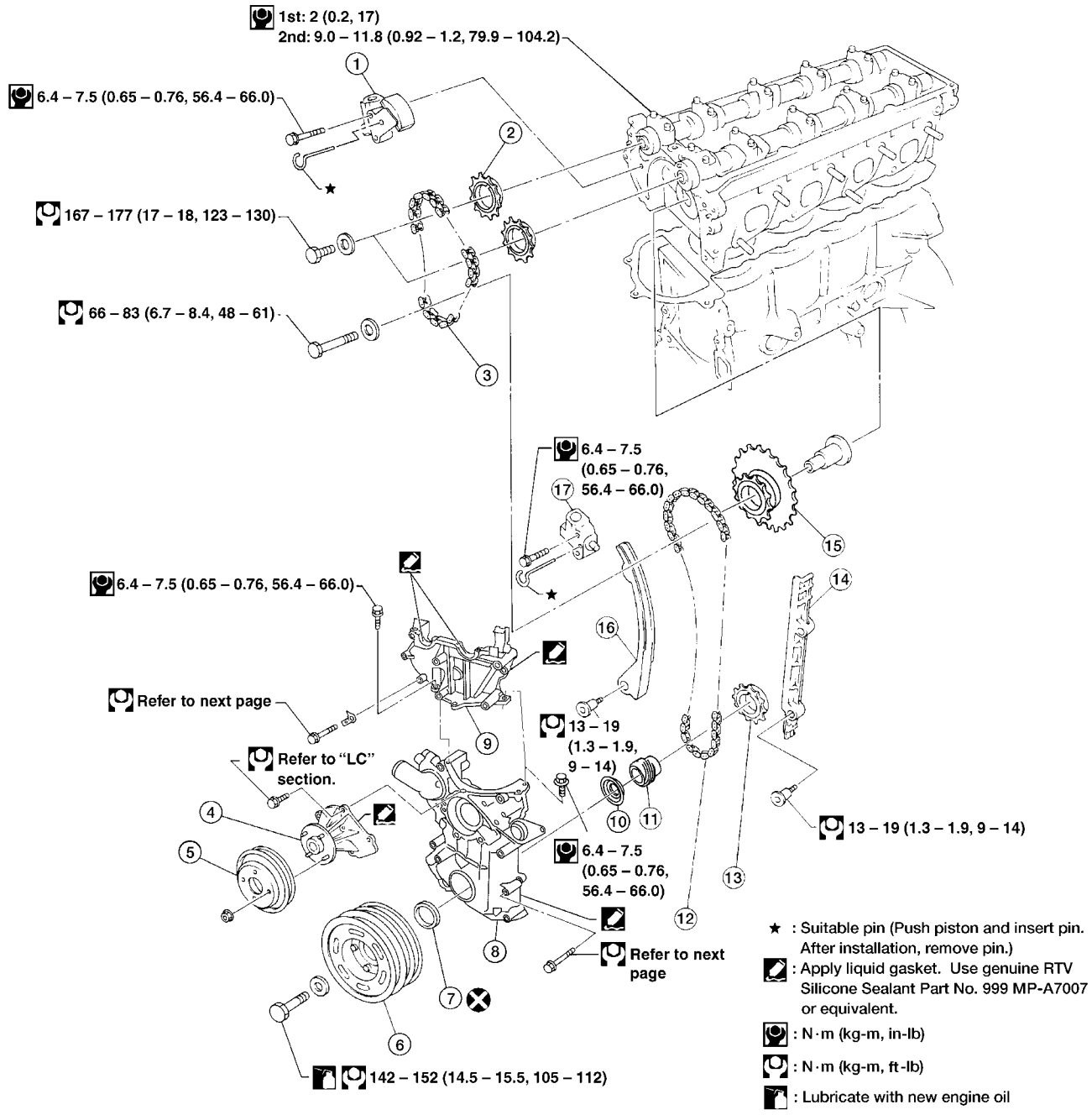

① Upper timing chain tensioner
② Cam sprocket
③ Upper timing chain
④ Water pump
⑤ Water pump pulley
⑥ Crankshaft pulley
⑦ Front oil seal
⑧ Front cover
⑨ Camshaft sprocket cover
⑩ Oil slinger
⑪ Oil pump drive gear
⑫ Lower timing chain
⑬ Crankshaft sprocket
⑭ Chain guide
⑮ Idler sprocket
⑯ Chain tension arm
⑰ Lower timing chain tensioner

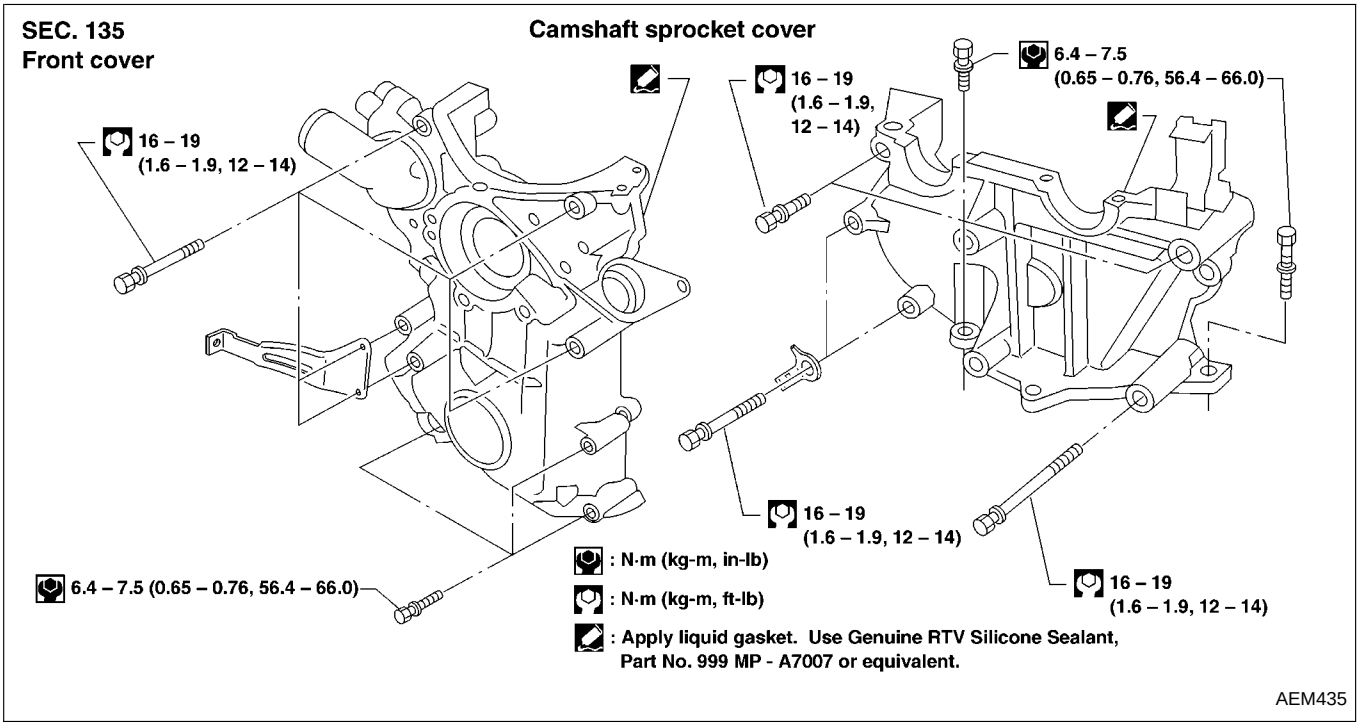

Liquid gasket application places

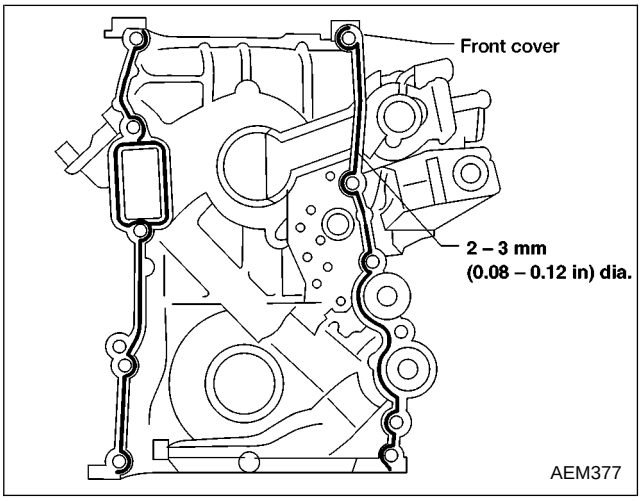

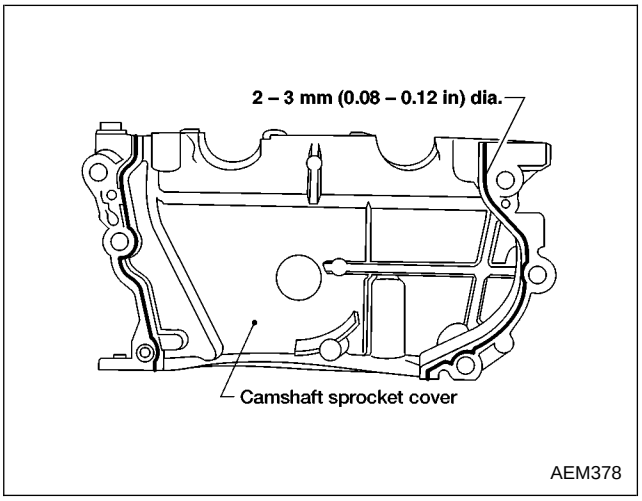

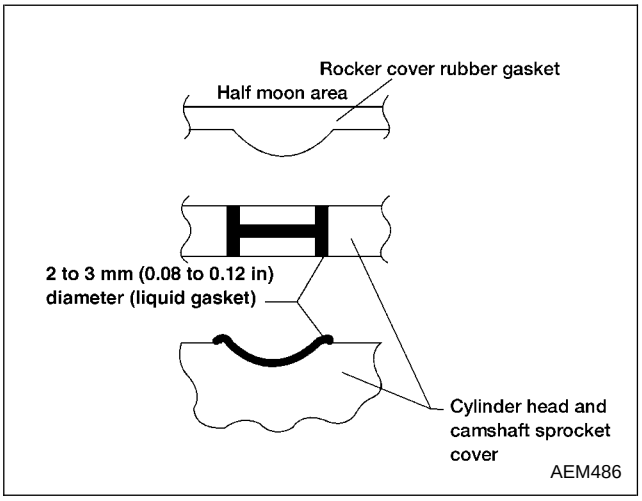

Removal

CAUTION:

- **After removing timing chain, do not turn crankshaft and camshaft separately, or valves will strike piston heads.**
- **When installing chain tensioners or other sliding parts, lubricate contacting surfaces with new engine oil.**
- **Apply new engine oil to bolt threads and seat surfaces when installing camshaft sprockets and crankshaft pulley.**
- **Do not spill engine coolant on drive belts.**

UPPER TIMING CHAIN

1. Remove the air cleaner assembly.
2. Remove the spark plug wires.

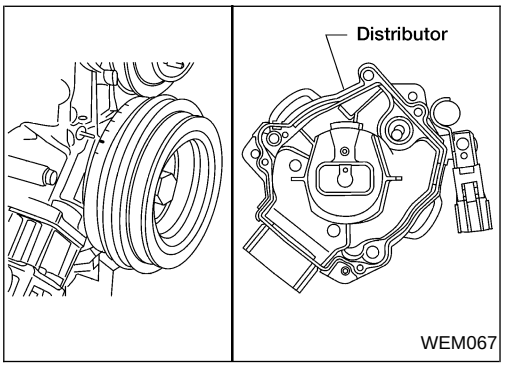

3. Set No.1 piston at TDC on its compression stroke.
4. Remove vacuum hoses, electrical harness connectors, and harness clamps.
5. Remove the power steering belt.
6. Remove the power steering pump and position it to one side. Remove the idler pulley and bracket as well.

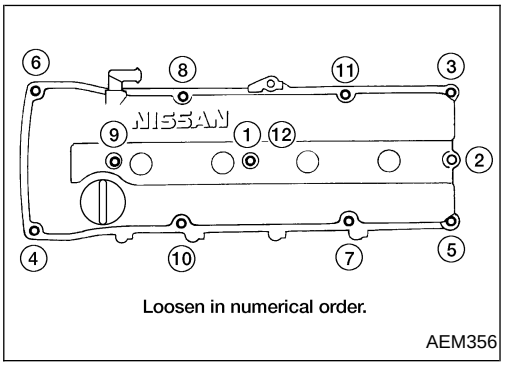

7. Remove the rocker cover.

- **Remove in numerical order as shown.**

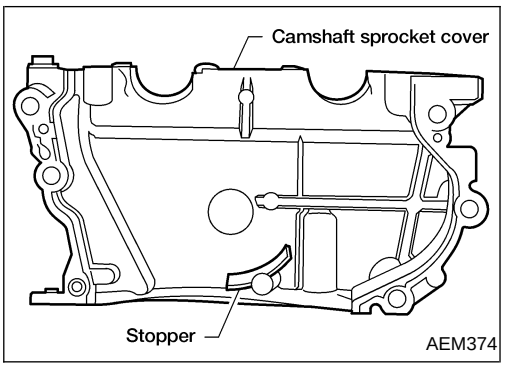

8. Remove the camshaft sprocket cover.

Removal (Cont'd)

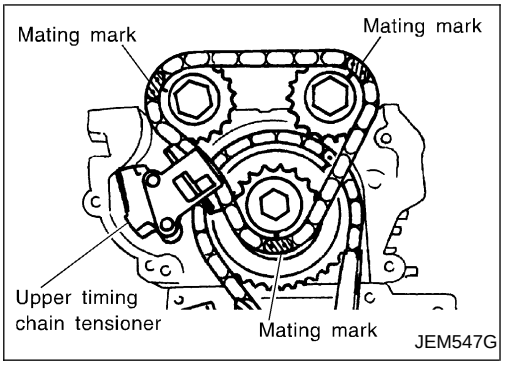

9. Wipe off the links of timing chain next to the timing marks on the sprockets. Put paint marks on the timing chain, matching them with the timing marks on the cam sprockets and idler sprocket.
10. Remove cam sprocket bolts, cam sprockets and upper timing chain.

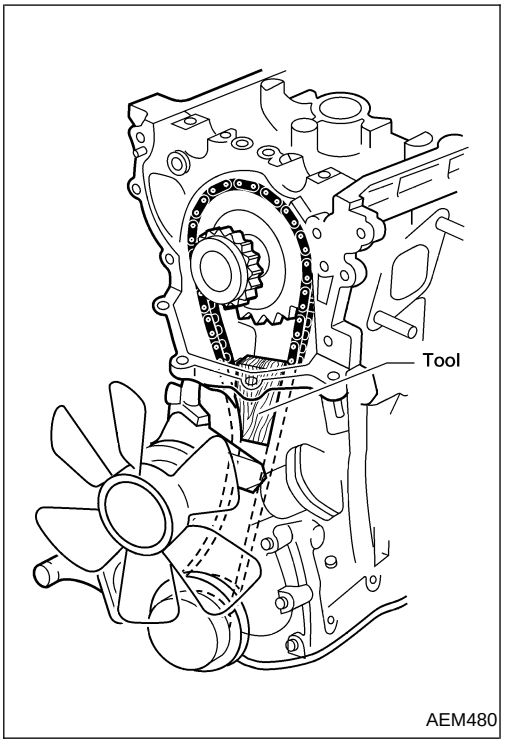

IDLER SPROCKET

1. Remove upper timing chain.
   Refer to "Removal", "Upper Timing Chain" EM-19.
2. Support lower timing chain by using a suitable tool to avoid chain tensioner spring from coming out.

NOTE:
This step is only to be applied when the lower cover is not being removed.

3. Remove the idler sprocket.

LOWER TIMING CHAIN

1. Drain coolant by removing the cylinder block drain plug and opening the radiator drain cock. Refer to MA section of the Service Manual.
2. Drain engine oil from drain plug of oil pan.
3. Remove the following parts.
- Alternator drive belt.
- A/C compressor drive belt.
- Cooling fan with coupling.
- Radiator shroud.
4. Remove A/C compressor and postion it to the side. Remove the idler pulley and bracket as well.

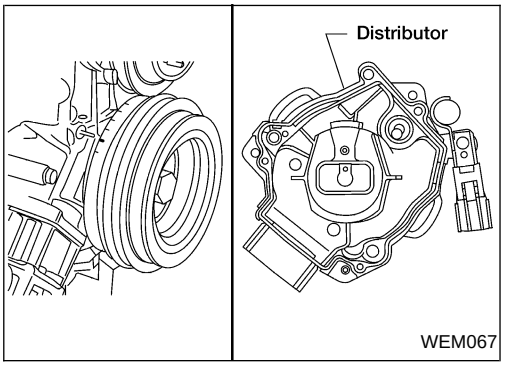

5. Set No. 1 piston to TDC on its compression stroke.
6. Remove the distributor.
7. Remove the crankshaft pulley.

Removal (Cont'd)

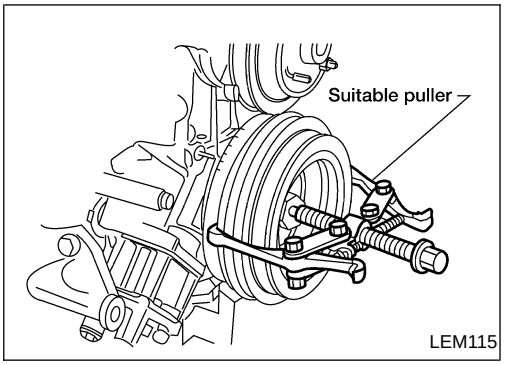

8. Remove oil pan.
   Refer to "Removal" in "OIL PAN" (EM-15).
9. Remove the oil pump and distributor drive shaft, the the oil pickup strainer.
10. Remove the front cover.

CAUTION:
Be careful not to tear or damage the cylinder head gasket.

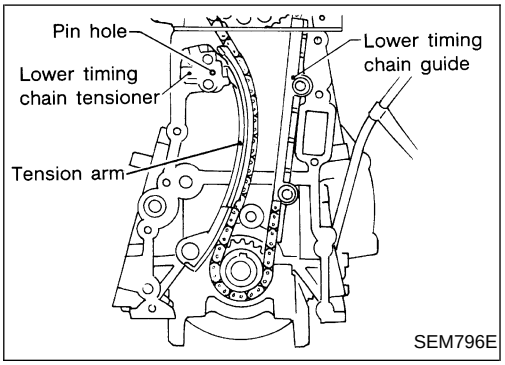

11. Remove the following parts.
- Lower timing chain tensioner (Push piston and insert a suitable pin into pin hole.)
- Chain tension arm
- Lower timing chain guide

12. Remove the upper timing chain and idler sprocket. **Refer to "Removal" "UPPER TIMING CHAIN" (EM-19) and "IDLER SPROCKET" (EM-20).**

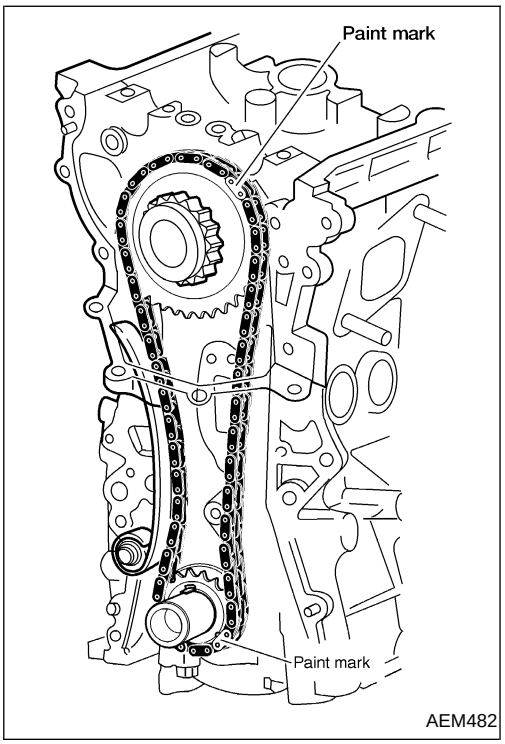

13. Wipe off the links of the timing chain next to the timing marks on the sprockets. Put paint marks on the timing chain, matching them with the timing marks on the crankshaft sprocket and idler sprocket.
14. Remove the lower timing chain and sprocket.

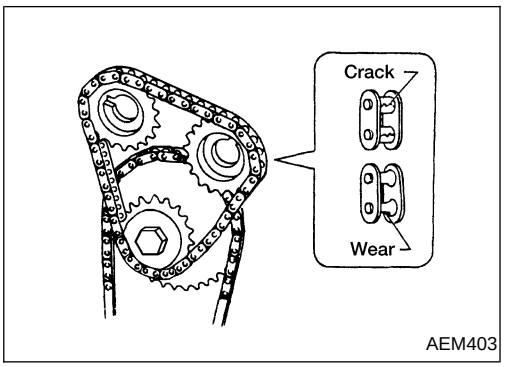

Inspection

Check for cracks and excessive wear at roller links. Replace chain if necesary.

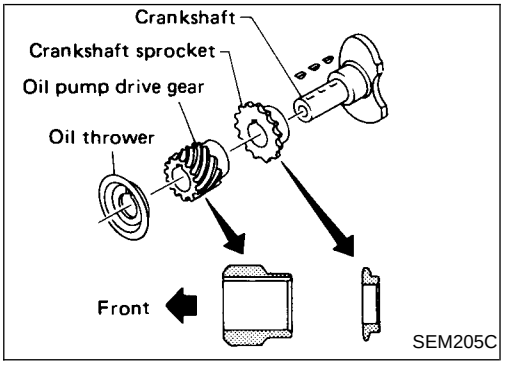

Installation

LOWER TIMING CHAIN

1. Install crankshaft sprocket.
- **Make sure that mating marks of crankshaft sprocket face front of engine.**
2. Install the idler sprocket and lower timing chain using the mating marks and the paint marks made during the removal process.

CAUTION:
Be careful not to tear or damage the cylinder head gasket.

3. Install chain guide and chain tension arm.
4. Install lower chain tensioner and remove the pin securing the piston into the tensioner body.

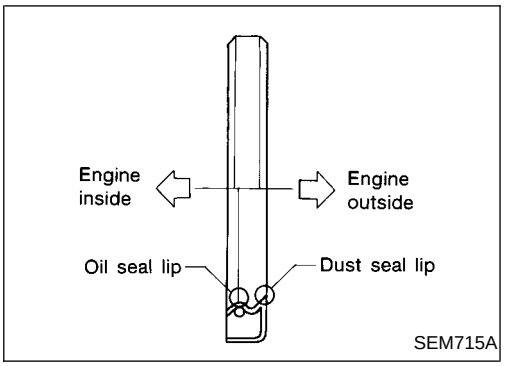

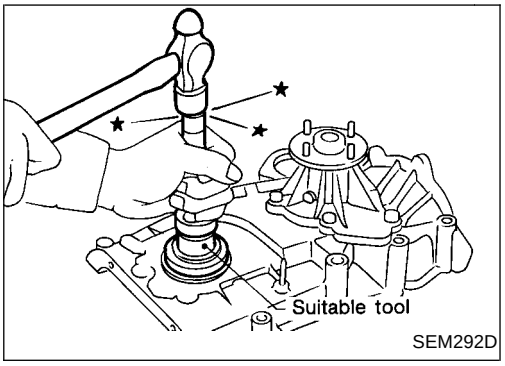

5. Front cover installation:
- Using a scraper or other suitable tool remove all traces of liquid gasket from the cylinder block and front cover mating surfaces.
- Install new crankshaft seal in front cover.
- **Apply a continuous bead of liquid gasket to front cover (Refer to EM-25).**

NOTE:
Use Genuine Nissan RTV Silicone Sealant P/N 999MP-A7007 or equivalent.

- **Be sure to install new front oil seal. Refer to (EM-25).**
- Also place RTV sealant on the head gasket surface.
- Install the front cover to the engine.
6. Install oil strainer and oil pan. Refer to ‘‘Installation’’, ‘‘OIL PAN’’ (EM-16).

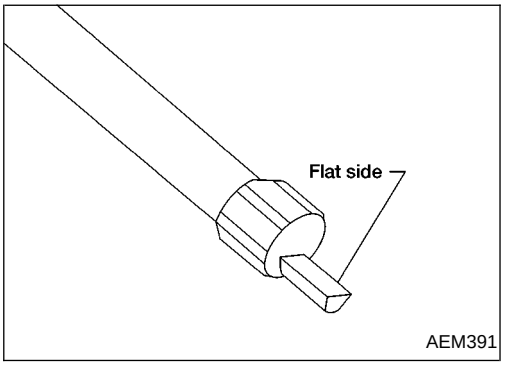

7. Install the oil pump and distributor drive shaft.

NOTE:
Make sure the flat side of the distributor drive shaft is facing the engine. Failure to do so will result in the distributor being out of time.

8. Install the following parts:
- Crankshaft pulley.
- A/C compressor and idler pulley bracket.
- Radiator shroud and cooling fan with coupling.
- A/C compressor, alternator and power steering pump drive belts.

Installation (Cont'd)

- Air duct

IDLER SPROCKET

1. Install lower timing chain.
   Refer to "Installation", "Lower Timing Chain".
2. Install idler sprocket and bolt.

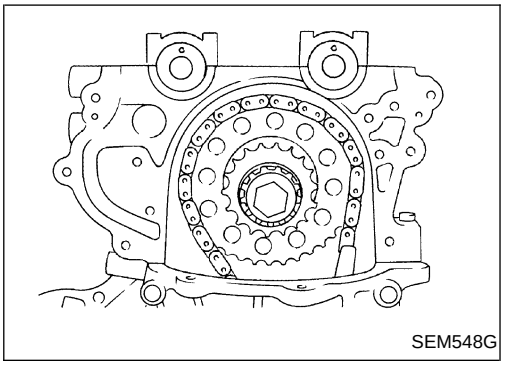
SEM548G

UPPER TIMING CHAIN

1. Install lower timing chain and idler sprocket.
   Refer to "Installation" "LOWER TIMING CHAIN" (EM-22) and"IDLER SPROCKET" (EM-23).

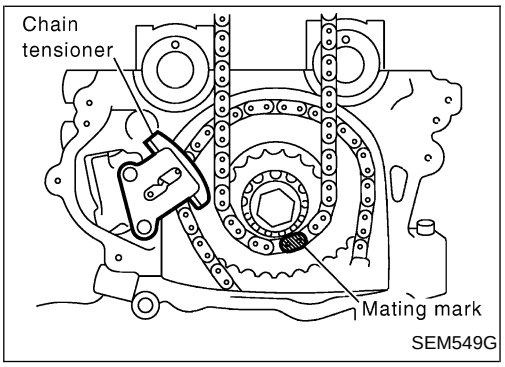

SEM549G

2. Install upper timing chain and sprockets, the painted reference marks made during removal.
3. Install chain tensioner. Remove the pin holding the tensioner piston in the bore of the tensioner.
4. Install camshaft sprocket cover:
- Use a scraper to remove all traces of liquid gasket from mating surfaces of the engine block and camshaft sprocket cover.
- Apply a continuous bead of RTV sealant to the cover. Refer to EM-18.
- Also place RTV sealant on the head gasket surface.

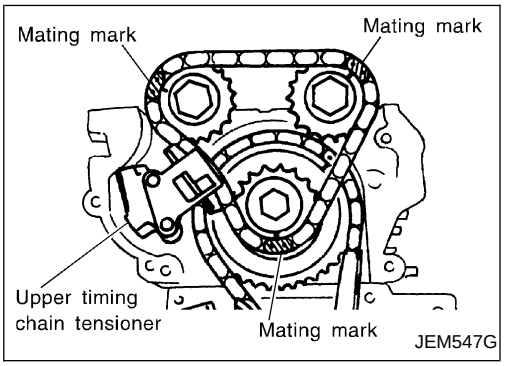

JEM547G

NOTE:
Use Nissan Genuine RTV Silicone Sealant, Part No. 999 MP-A7007 or equivalent.

CAUTION:
- **Be careful not to tear or damage the cylinder head gasket.**
- **Be careful upper timing chain does not slip or jump when installing camshaft sprocket cover.**

5. Install rocker cover gasket.
- **Apply liquid gasket to cylinder head and camshaft sprocket cover. Refer to EM-18.**

Installation (Cont'd)

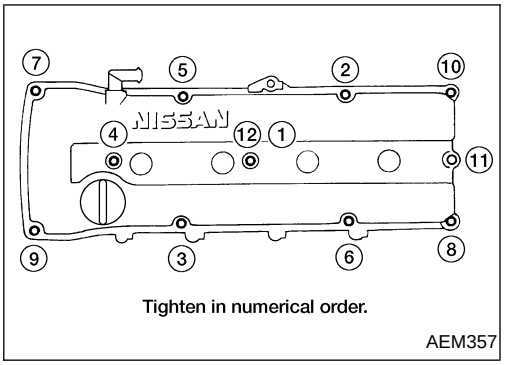

6. Install rocker cover. Tighten bolts in numerical order.
   : 8 - 11 N·m (0.8 - 1.1 kg-m, 69 - 95 in-lb).

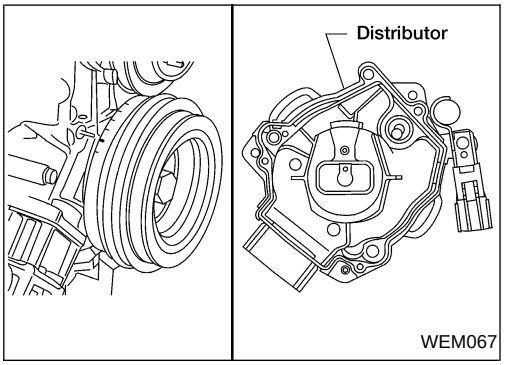

7. Install distributor, aligning as shown.
8. Install vacuum hoses, electrical harnesses, connectors and harness clamps.

VALVE OIL SEAL

1. Remove rocker cover.
2. Remove camshaft. Refer to "TIMING CHAIN" (EM-17).
3. Remove valve spring and valve oil seal with Tool or a suitable tool.

Piston concerned should be set at TDC to prevent valve from falling.

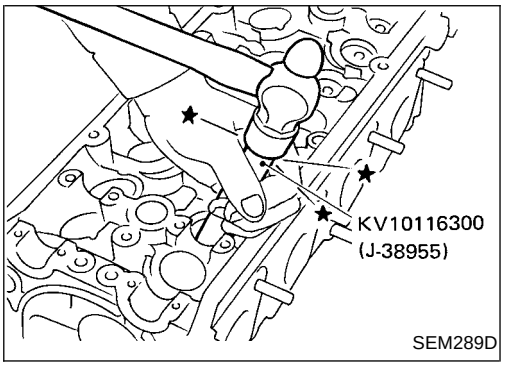

SEM289D

4. Apply engine oil to new valve oil seal and install it with Tool.

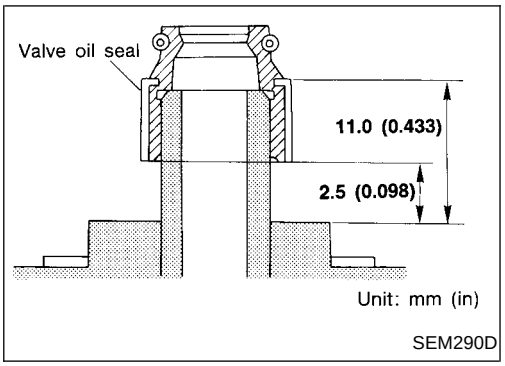

SEM290D

OIL SEAL INSTALLING DIRECTION

- Install new oil seal in the direction shown.

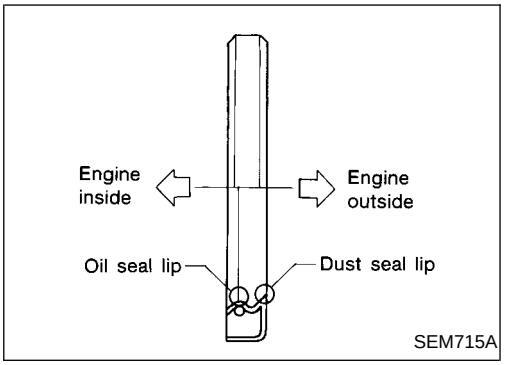

SEM715A

FRONT OIL SEAL

1. Remove radiator shroud and crankshaft pulley.
2. Remove front oil seal

- **Be careful not to scratch front cover.**

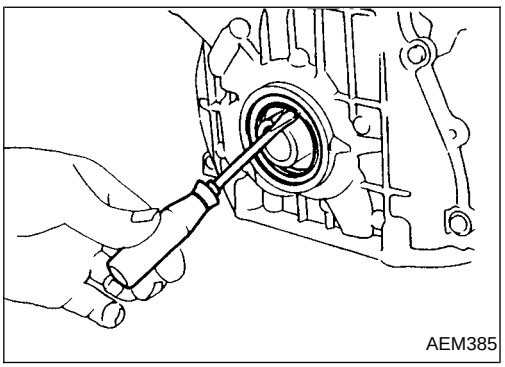
AEM385

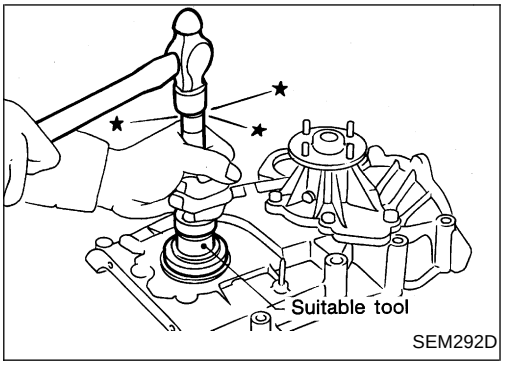

3. Apply engine oil to new oil seal and install it using a suitable tool.

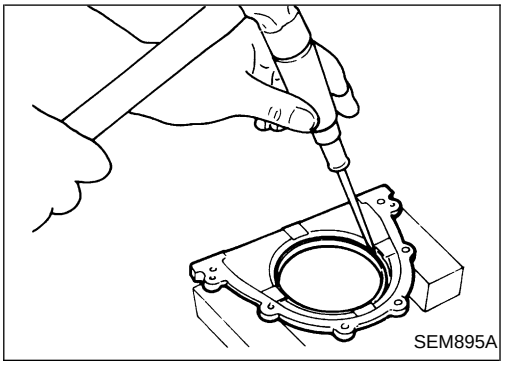

REAR OIL SEAL

1. Remove flywheel or drive plate.
2. Remove rear oil seal retainer.
3. Remove rear oil seal from retainer.

- **Be careful not to scratch rear oil seal retainer.**

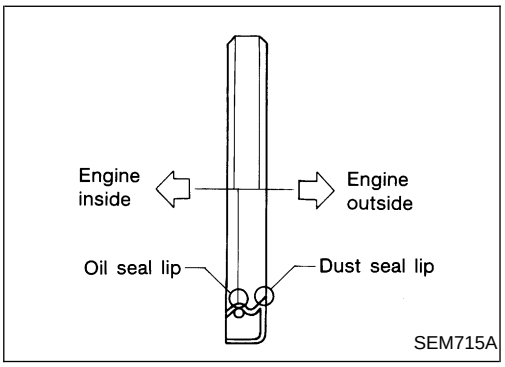

4. Apply engine oil to new oil seal and install it using suitable tool.

- **Install new oil seal in the direction shown.**

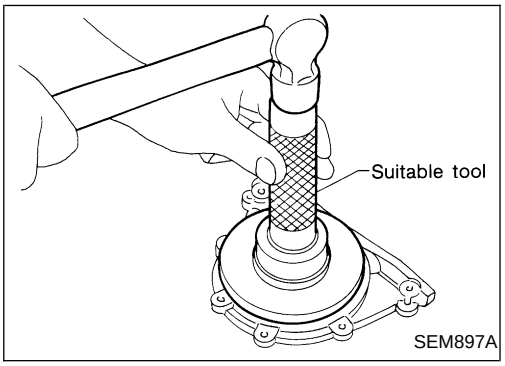

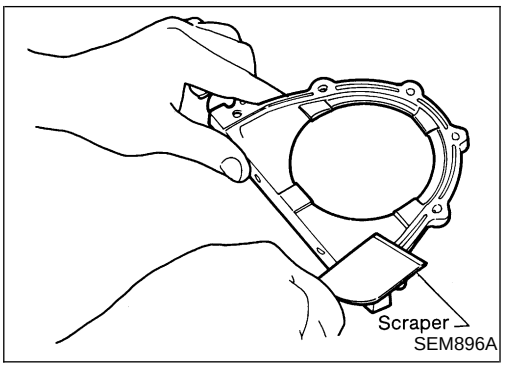

5. Install rear oil seal retainer.

a. Before installing rear oil seal retainer, remove all traces of liquid gasket from mating surface using a scraper.

- **Also remove traces of liquid gasket from mating surface of cylinder block.**

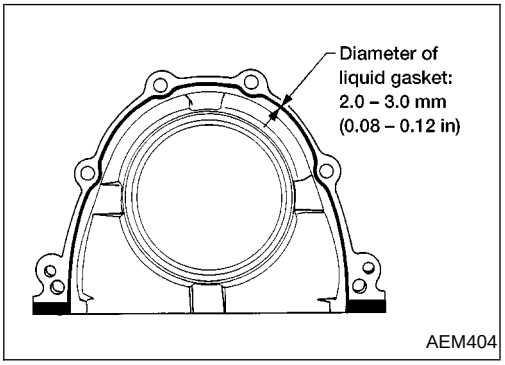

b. Apply a continuous bead of liquid gasket to mating surface of rear oil seal retainer.

- **Use Genuine RTV Silicone Sealant, Part No. 999 MP-A7007 or equivalent.**
- **Apply around inner side of bolt holes.**

SEC. 111 • 130

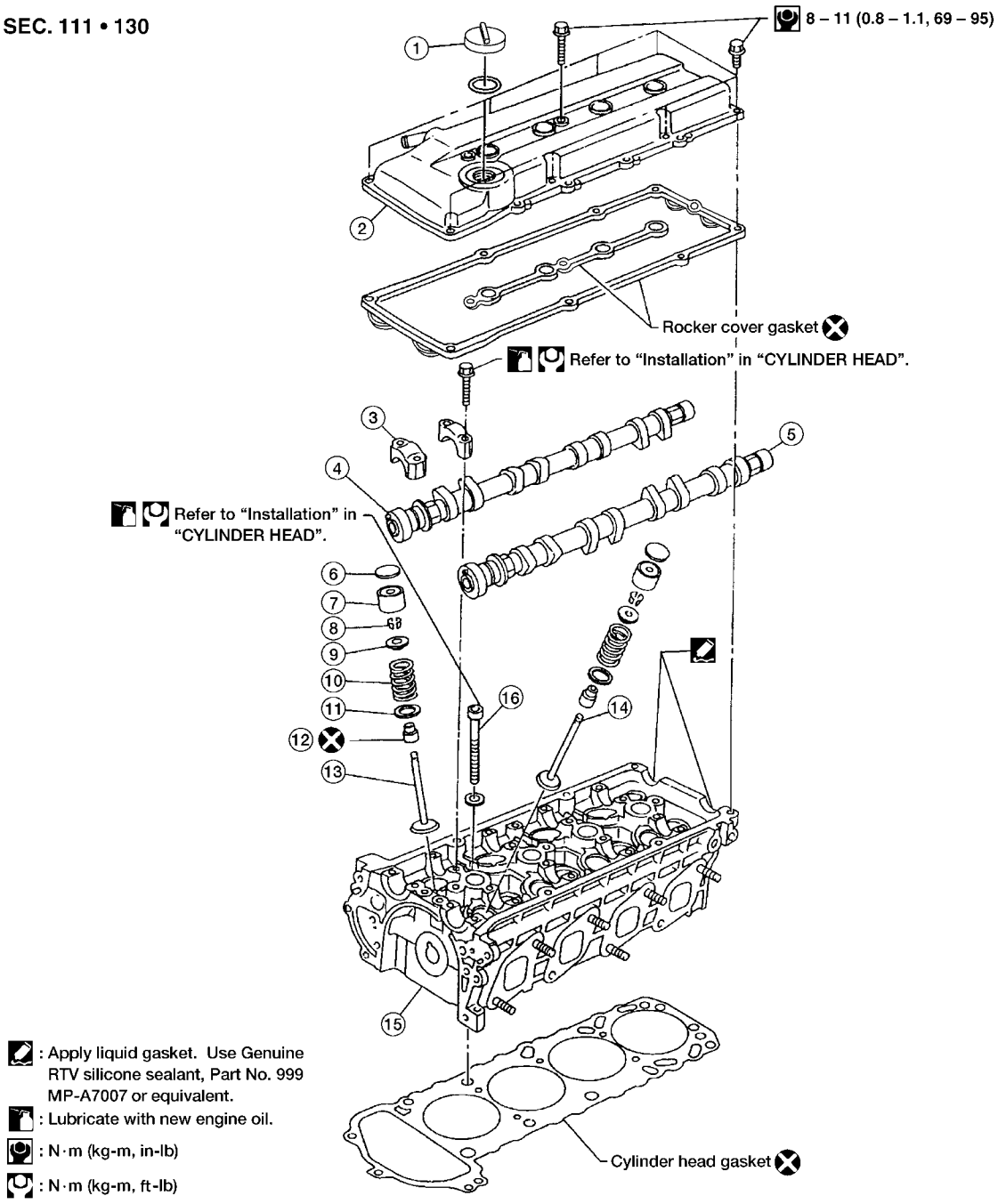

AEM485

1. Oil filler cap
2. Rocker cover
3. Camshaft bracket
4. Intake camshaft
5. Exhaust camshaft
6. Shim
7. Valve lifter
8. Valve cotter
9. Spring retainer
10. Valve spring
11. Spring seat
12. Valve oil seal
13. Intake valve
14. Exhaust valve
15. Cylinder head
16. Cylinder head bolt

CAUTION:

- **When installing camshafts, chain tensioners, oil seals, or other sliding parts, lubricate contacting surfaces with new engine oil.**
- **Apply new engine oil to threads and seat surfaces when installing cylinder head, camshaft sprocket, crankshaft pulley, and camshaft bracket.**
- **Attach tags to valve lifters so as not to mix them up.**
- **Before removing camshaft and idler sprockets, apply paint marks to them for retiming.**

Removal

1. Remove upper timing chain and idler sprocket.

Refer to "TIMING CHAIN", "Removal", "UPPER TIMING CHAIN" (EM-19) and "IDLER SPROCKET" (EM-20).

- **For retiming during cylinder head removal/installation, apply paint marks to camshaft sprockets, upper timing chain, lower timing chain and idler sprocket.**

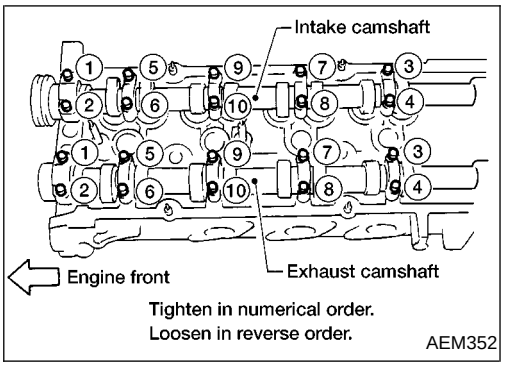

2. Remove camshaft brackets and camshafts.
- **Mark these parts original positions for reassembly.**
3. Remove cylinder head bolts in numerical order.
- **Removing bolts in incorrect order could result in a warped or cracked cylinder head.**

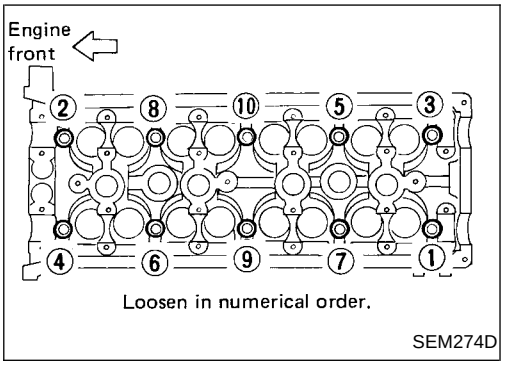

- **Loosen cylinder head bolts in two or three steps.**
4. Remove cylinder head and cylinder head gasket.

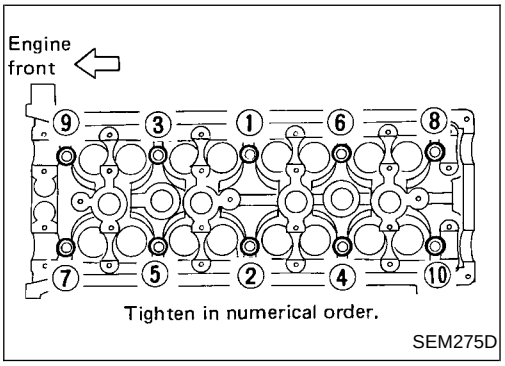

Installation

1. Tighten cylinder head bolts in numerical order using the following procedure:

a. Tighten all bolts to 29 N·m (3.0 kg-m, 22 ft-lb).
b. Tighten all bolts to 79 N·m (8.1 kg-m, 59 ft-lb).

Installation (Cont'd)

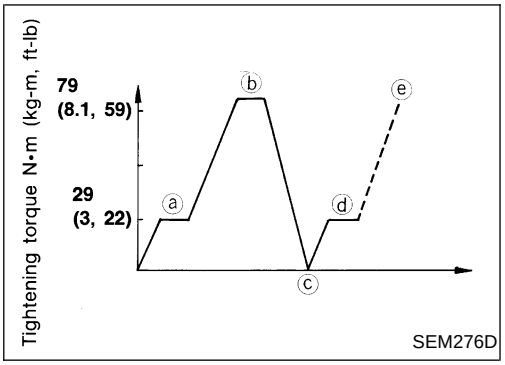

c. Loosen all bolts completely.
d. Tighten all bolts to 25 to 34 N•m (2.5 to 3.5 kg-m, 18 to 25 ft-lb).
e. Turn all bolts 86 to 91 degrees clockwise. If angle wrench is not available, mark all cylinder head bolts on the side facing engine front. Then, turn each cylinder head bolt 86 to 91 degrees clockwise.

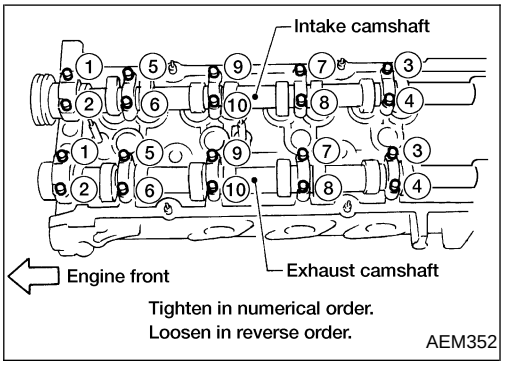

2. Install camshafts and camshaft brackets in the order shown using the following procedure.
a. Set camshafts and camshaft brackets.
- Dowel pins of both intake and exhaust camshafts should be at 12 o'clock positions when installing the camshafts.

b. Tighten all bolts to 2 N•m (0.2 kg-m, 17 in-lb).
c. Tighten all bolts to 9.0 to 11.8 N•m (0.92 to 1.2 kg-m, 79.9 to 104.2 in-lb).
- **Apply new engine oil to bolt threads and seat surfaces.**

3. Install upper timing chain and idler sprocket.
Refer to "TIMING CHAIN", "Installation", "UPPER TIMING CHAIN" (EM-23) and "IDLER SPROCKET" (EM-23).

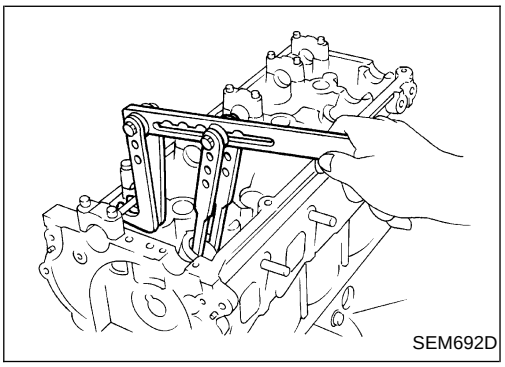

Disassembly

1. Remove intake manifold and exhaust manifold. Refer to "OUTER COMPONENT PARTS" (EM-11).
2. Remove valve components.
3. Remove valve oil seal with a suitable tool.

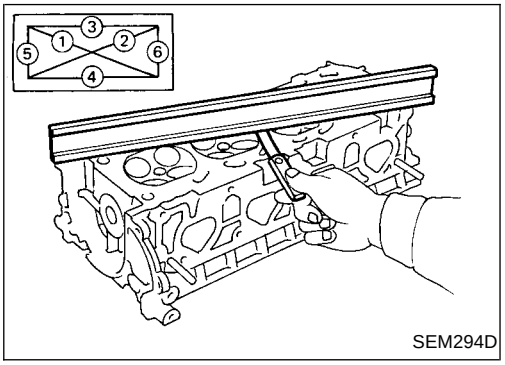

SEM294D

Inspection

CYLINDER HEAD DISTORTION

Clean surface of cylinder head.
Use a reliable straightedge and feeler gauge to check the flatness of cylinder head surface.
Check along six positions shown in the figure.

Head surface flatness:
Standard Less than 0.03 mm (0.0012 in)
Limit 0.1 mm (0.004 in)

If beyond the specified limit, replace it or resurface it.

Resurfacing limit:
The limit of cylinder head resurfacing is determined by the cylinder block resurfacing.
Amount of cylinder head resurfacing is "A".
Amount of cylinder block resurfacing is "B".

The maximum limit:
A + B = 0.2 mm (0.008 in)

After resurfacing cylinder head, check that camshaft rotates freely by hand. If resistance is felt, cylinder head must be replaced.

Nominal cylinder head height:
126.3 - 126.5 mm (4.972 - 4.980 in)

CAMSHAFT VISUAL CHECK

Check camshaft for scratches, seizure and wear.

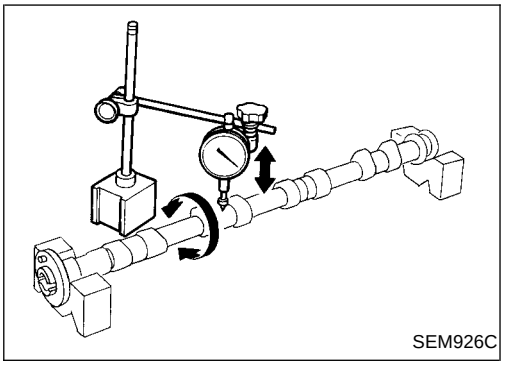
SEM926C

CAMSHAFT RUNOUT

1. Measure camshaft runout at the center journal.
   Runout (Total indicator reading):
   Standard:
   Less than 0.02 mm (0.0008 in)
   Limit:
   0.04 mm (0.0016 in)
2. If it exceeds the limit, replace camshaft.

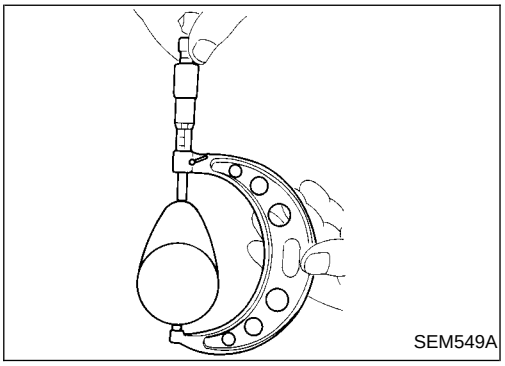
SEM549A

CAMSHAFT CAM HEIGHT

1. Measure camshaft cam height.
   Standard cam height:
   Intake 42.505 - 42.695 mm (1.673 - 1.681 in)
   Exhaust 40.905 - 41.095 mm (1.610 - 1.618 in)
   Cam height wear limit:
   Intake & Exhaust
   0.2 mm (0.008 in)
2. If wear is beyond the limit, replace camshaft.

Inspection (Cont'd)

CAMSHAFT JOURNAL CLEARANCE

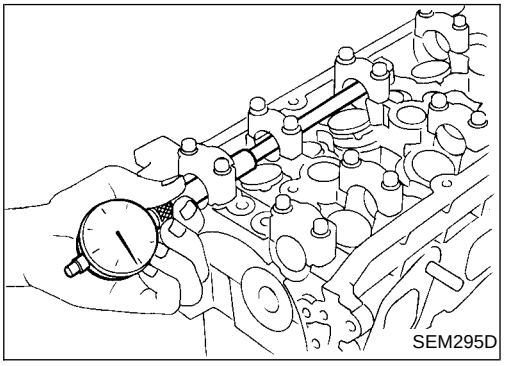
SEM295D

1. Install camshaft bracket and tighten bolts to the specified torque.
2. Measure inner diameter of camshaft bearing.
   Standard inner diameter:
   #1 to #5 journals
   28.000 - 28.025 mm (1.1024 - 1.1033 in)

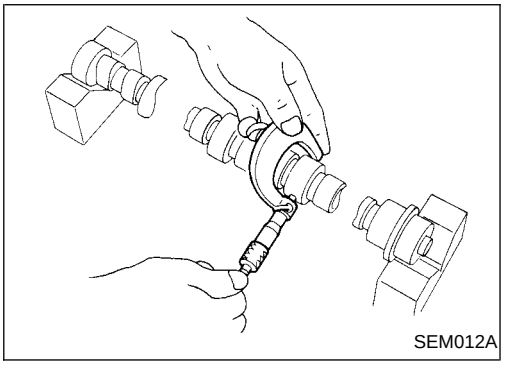
SEM012A

3. Measure outer diameter of camshaft journal.
   Standard outer diameter:
   #1 to #5 journals
   27.935 - 27.955 mm (1.0998 - 1.1006 in)
4. If clearance exceeds the limit, replace camshaft and/or cylinder head.
   Camshaft journal clearance:
   Standard 0.045 - 0.090 mm (0.0018 - 0.0035 in)
   Limit 0.12 mm (0.0047 in)

CAMSHAFT END PLAY

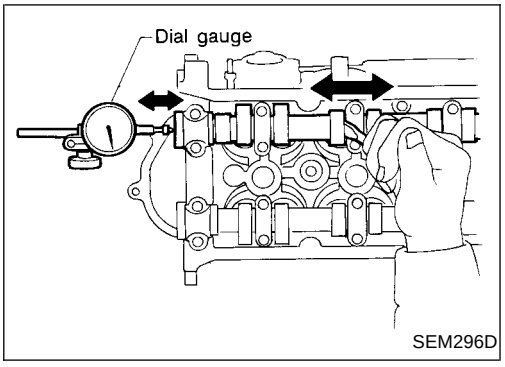

SEM296D

1. Install camshaft in cylinder head.
2. Measure camshaft end play.
   Camshaft end play:
   Standard
   0.070 - 0.148 mm (0.0028 - 0.0058 in)
   Limit
   0.2 mm (0.008 in)
3. If end play exceeds the limit, replace camshaft and remeasure camshaft end play.
4. If end play still exceeds the limit after replacing camshaft, replace cylinder head.

CAMSHAFT SPROCKET RUNOUT

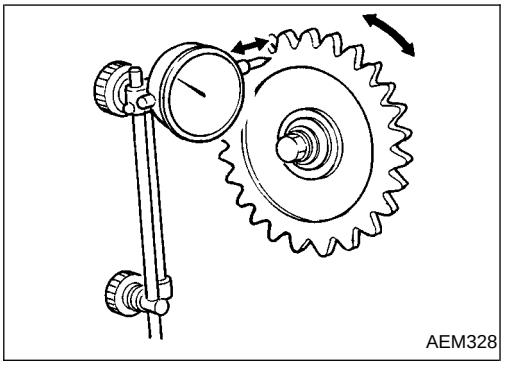
AEM328

1. Install sprocket on camshaft.
2. Measure camshaft sprocket runout.
   Runout (Total indicator reading):
   Limit 0.15 mm (0.0059 in)
3. If it exceeds the limit, replace camshaft sprocket.

VALVE GUIDE CLEARANCE

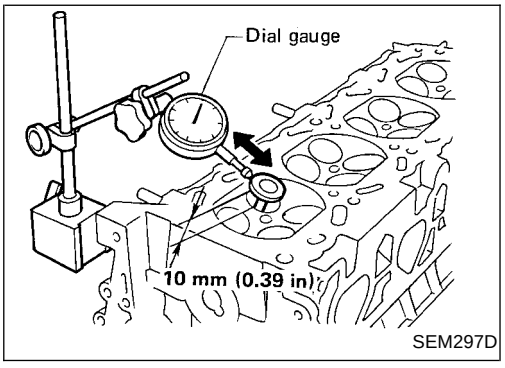

SEM297D

1. Measure valve deflection as shown in figure. (Valve and valve guide mostly wear in this direction.)
   Valve deflection limit (Dial gauge reading):
   Intake & Exhaust
   0.2 mm (0.008 in)

Inspection (Cont'd)

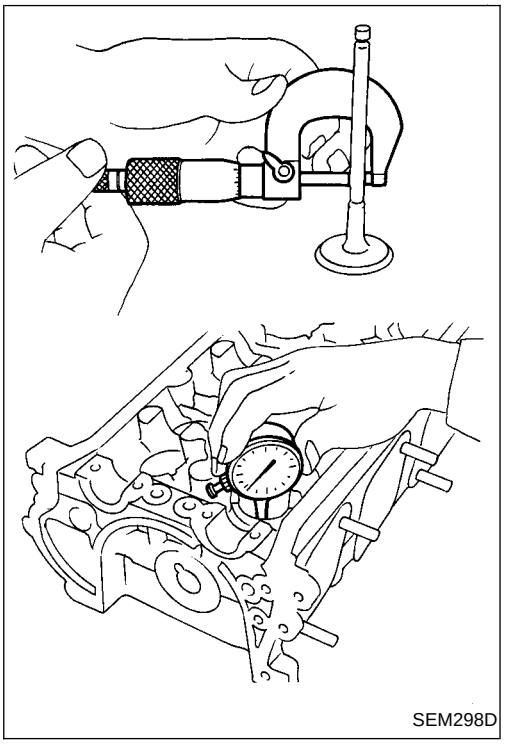
SEM298D

2. If it exceeds the limit, check valve to valve guide clearance.
a. Measure valve stem diameter and valve guide inner diameter.
b. Check that clearance is within specification.

Valve to valve guide clearance = Valve guide inner diameter - Valve stem diameter:

Unit: mm (in)

	Standard	Limit
Intake	0.020 - 0.053 (0.0008 - 0.0021)	0.08 (0.0031)
Exhaust	0.040 - 0.073 (0.0016 - 0.0029)	0.1 (0.004)

c. If it exceeds the limit, replace valve and remeasure clearance.
- If clearance still exceeds the limit after replacing valve, replace the valve guide.

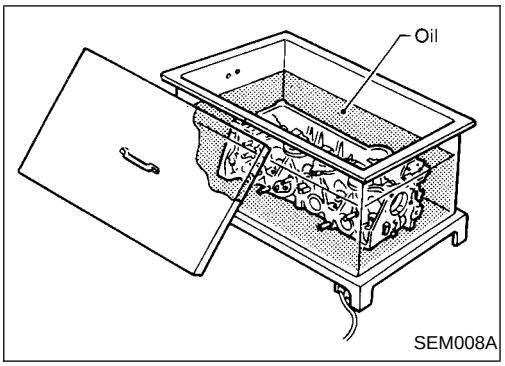

SEM008A

VALVE GUIDE REPLACEMENT

1. To remove valve guide, heat cylinder head to 120 to 140°C (248 to 284°F) by soaking in heated oil.

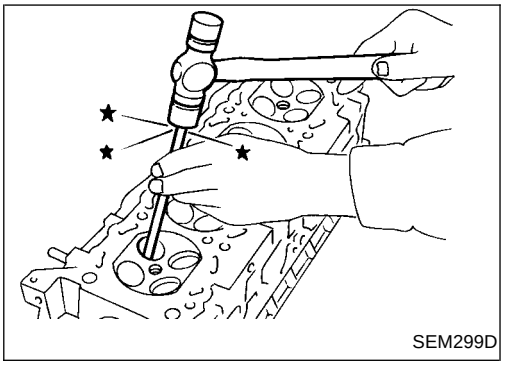
SEM299D

2. Drive out valve guide with a press [under a 20 kN (2 ton, 2.2 US ton, 2.0 Imp ton) pressure] or hammer and suitable tool.

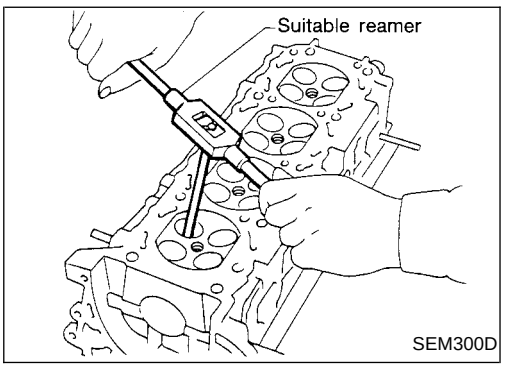

SEM300D

3. Ream cylinder head valve guide hole.
   Valve guide hole diameter
   (for service parts):
   Intake & Exhaust
   11.175 - 11.196 mm (0.4400 - 0.4408 in)

Inspection (Cont'd)

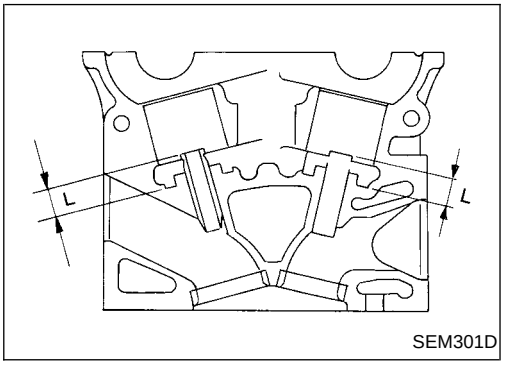

SEM301D

4. Heat cylinder head to 120 to 140°C (248 to 284°F) and press service valve guide onto cylinder head.
   Projection "L":
   13.3 - 13.9 mm (0.524 - 0.547 in)

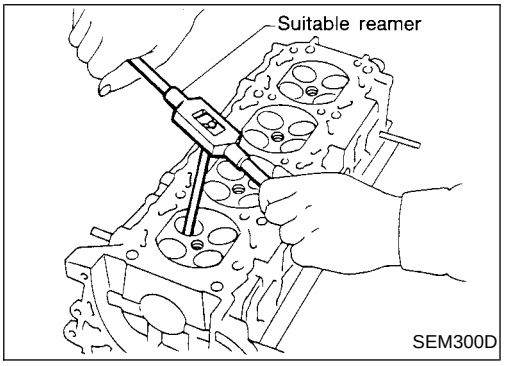

SEM300D

5. Ream valve guide.
   Finished size:
   Intake & Exhaust
   7.000 - 7.018 mm (0.2756 - 0.2763 in)

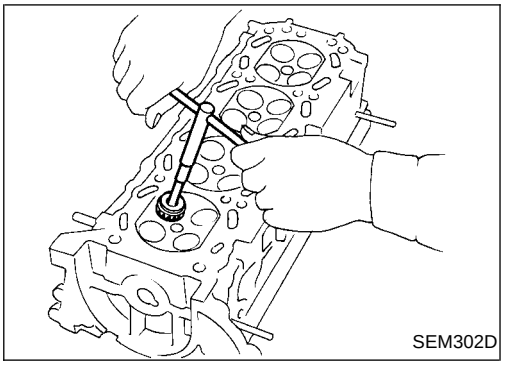
SEM302D

VALVE SEATS

Check valve seats for pitting at contact surface. Resurface or replace if excessively worn.

- **Before repairing valve seats, check valve and valve guide for wear. If they have worn, replace them. Then correct valve seat.**
- **Use both hands to cut uniformly.**

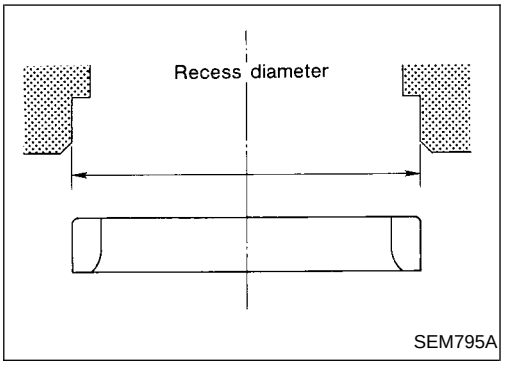

SEM795A

REPLACING VALVE SEAT FOR SERVICE PARTS

1. Bore out old seat until it collapses. Boring should not continue beyond the bottom face of the seat recess in cylinder head. Set the machine depth stop to ensure this.
2. Ream cylinder head recess.
   Reaming bore for service valve seat
   Oversize [0.5 mm (0.020 in)]:
   Intake 38.000 - 38.016 mm (1.4961 - 1.4967 in)
   Exhaust 32.700 - 32.716 mm (1.2874 - 1.2880 in)

Use the valve guide center for reaming to ensure valve seat will have the correct fit.

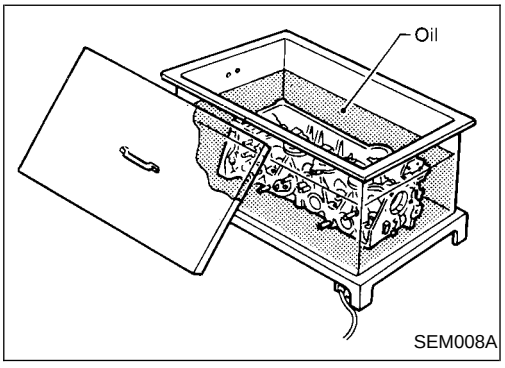

SEM008A

3. Heat cylinder head to 120 to 140°C (248 to 284°F).
4. Press fit valve seat until it seats on the bottom.

Inspection (Cont'd)

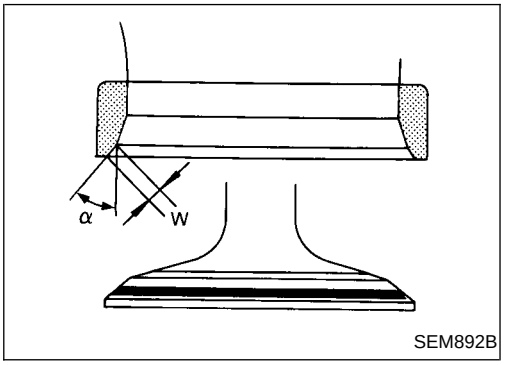

SEM892B

5. Cut or grind valve seat using suitable tool to the specified dimensions as shown in SDS.
6. After cutting, lap valve seat with abrasive compound.
7. Check valve seating condition.
   Seat face angle "α":
   45°15′ - 45°45′ deg.
   Contacting width "W":
   Intake
   1.48 - 1.63 mm (0.0583 - 0.0642 in)
   Exhaust
   1.8 - 2.0 mm (0.071 - 0.079 in)

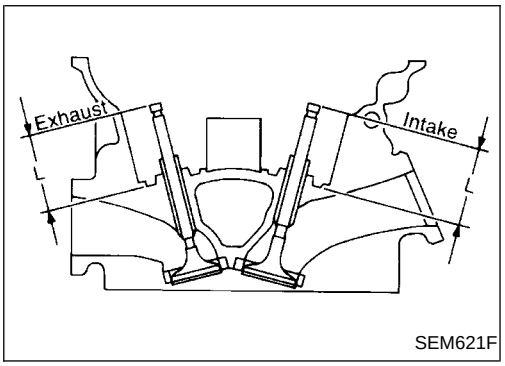

SEM621F

8. Use a depth gauge to measure the distance between the mounting surface of the cylinder head spring seat and the valve stem end. If the distance is shorter than specified, repeat step 5 above to adjust it. If it is longer, replace the valve seat with a new one.
   Valve seat resurface limit "L":
   Intake 42.02 - 42.52 mm (1.6543 - 1.6740 in)
   Exhaust 42.03 - 42.53 mm (1.6547 - 1.6744 in)

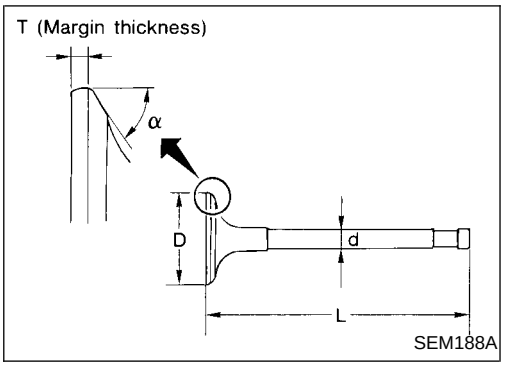

SEM188A

VALVE DIMENSIONS

Check dimensions of each valve. For dimensions, refer to SDS (EM-53).
When valve head has been worn down to 0.5 mm (0.020 in) in margin thickness, replace valve.

Grinding allowance for valve stem tip is 0.2 mm (0.008 in) or less.

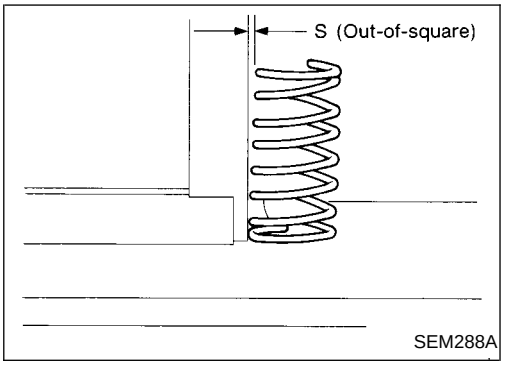

SEM288A

VALVE SPRING

Squareness

1. Measure dimension "S".
   Out-of-square "S":
   Less than 2.2 mm (0.087 in)
2. If it exceeds the limit, replace spring.

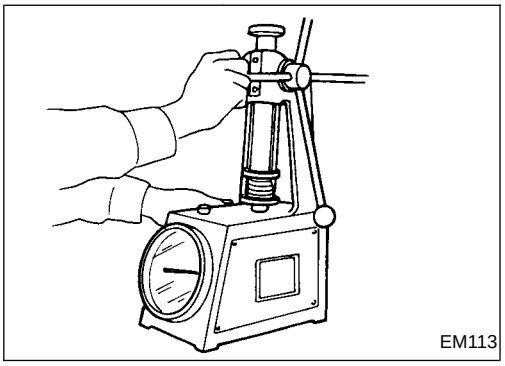
EM113

Pressure

Check valve spring pressure at specified spring height.
Pressure: N (kg, lb) at height mm (in)
Standard
418.0 (42.6, 93.9) at 29.17 (1.1484)
Limit
393.0 (40.1, 88.4) at 29.17 (1.1484)
If it exceeds the limit, replace spring.

Inspection (Cont'd)

VALVE LIFTER AND VALVE SHIM

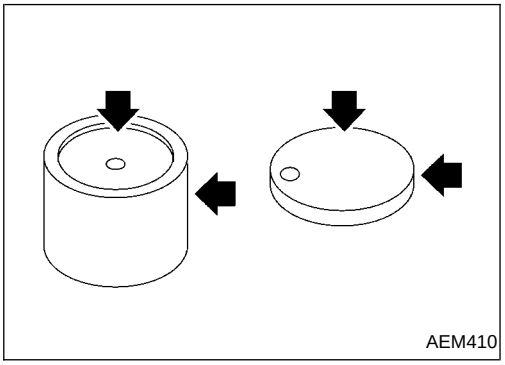
AEM410

1. Visually check contact and sliding surfaces for wear and scratches.

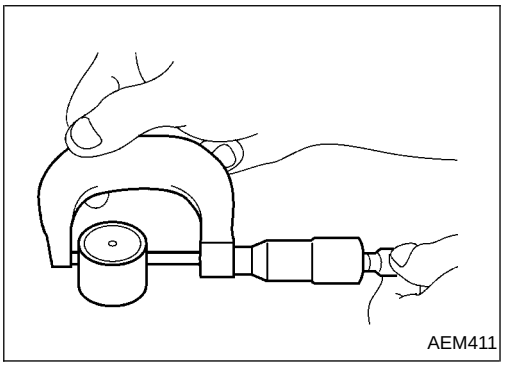
AEM411

2. Check diameter of valve lifter and valve lifter guide bore.
   Valve lifter outer diameter:
   33.960 - 33.975 mm (1.3370 - 1.3376 in)

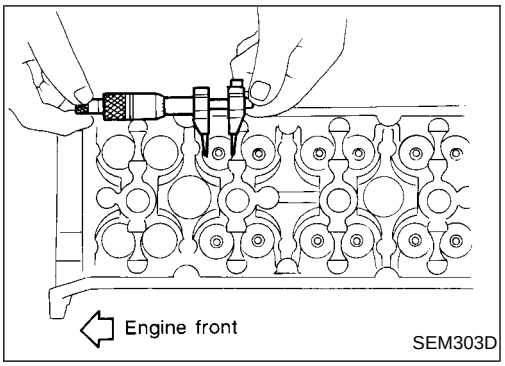

SEM303D

   Lifter guide bore diameter:
   34.000 - 34.021 mm (1.3386 - 1.3394 in)
   Valve lifter to valve lifter guide clearance:
   0.025 - 0.061 mm (0.0010 - 0.0024 in)
   If it exceeds the standard diameter or clearance, replace valve lifter or cylinder head.

Assembly

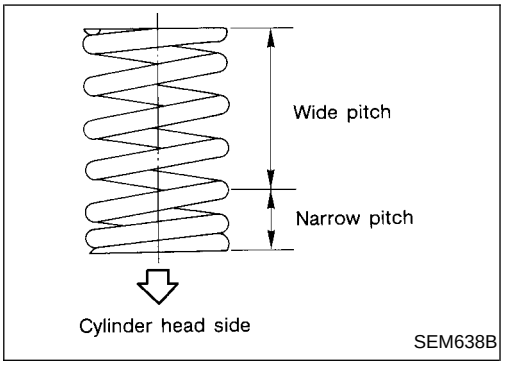

SEM638B

1. Install valve component parts.

- **Always use new valve oil seal. Refer to "OIL SEAL REPLACEMENT" (EM-25).**
- **Before installing valve oil seal, install valve spring seat.**
- **Install outer valve spring (uneven pitch type) with its narrow pitch side toward cylinder head side.**
- **After installing valve component parts, tap valve stem tip with plastic hammer to assure a proper fit.**

Valve Clearance

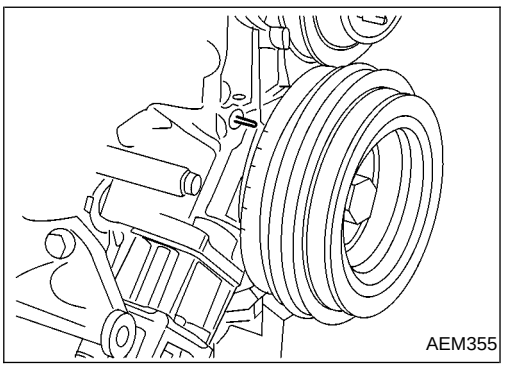
AEM355

CHECKING

Check valve clearance while engine is warm but not running.

1. Remove rocker cover and all spark plugs.
2. Set No. 1 cylinder at TDC on its compression stroke.

- Align pointer with TDC mark on crankshaft pulley.
- Check that valve lifters on No. 1 cylinder are loose and valve lifters on No. 4 are tight.
  If not, turn crankshaft one revolution (360°) and align as above.

Valve Clearance (Cont'd)

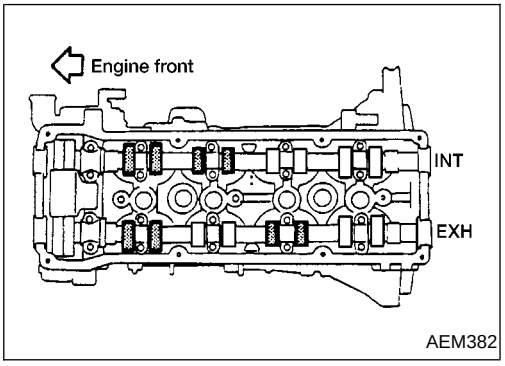

AEM382

3. Check only those valves shown in the figure.

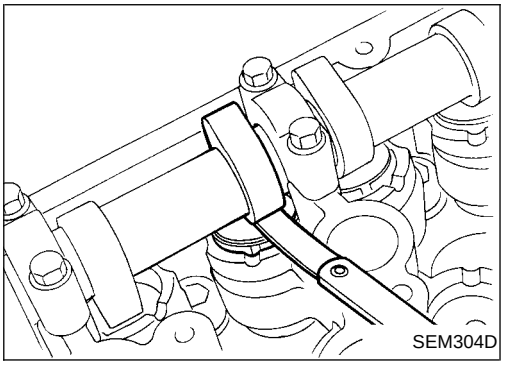
SEM304D

4. Using a feeler gauge, measure clearance between valve lifter and camshaft.
- Record any valve clearance measurements which are out of specification. They will be used later to determine the required replacement adjusting shim.

Valve clearance (Hot):

Intake

0.31 - 0.39 mm (0.012 - 0.015 in)

Exhaust

0.33 - 0.41 mm (0.013 - 0.016 in)

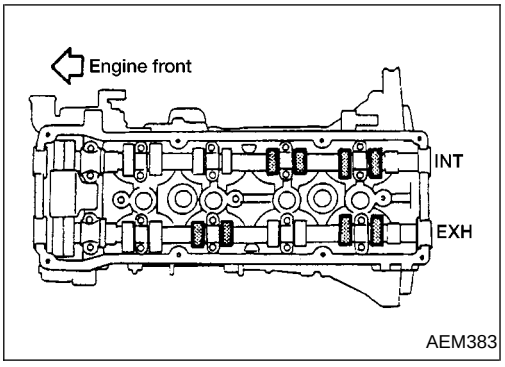

AEM383

5. Turn crankshaft one revolution (360°) and align mark on crankshaft pulley with pointer.
6. Check those valves shown in the figure.
- Use the same procedure as mentioned in step 4.
7. If all valve clearances are within specification, install the following parts.
- Rocker cover
- All spark plugs

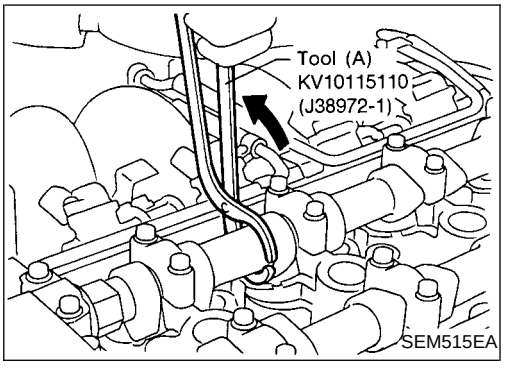

SEM515EA

ADJUSTING

Adjust valve clearance while engine is cold.

1. Turn crankshaft to position cam lobe on camshaft of valve that must be adjusted upward.
2. Place Tool (A) around camshaft as shown in figure.
3. Rotate Tool (A) so that lifter is pushed down.

Before placing Tool (A), rotate notch toward center of cylinder head (See figure.), to simplify shim removal later.

CAUTION:

Be careful not to damage cam surface with Tool (A).

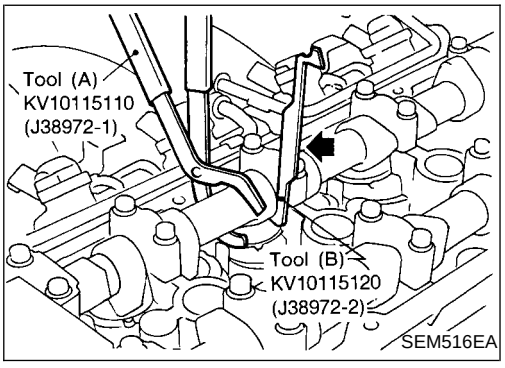

SEM516EA

4. Place Tool (B) between camshaft and the edge of the valve lifter to retain valve lifter.

CAUTION:
- **Tool (B) must be placed as close to camshaft bracket as possible.**
- **Be careful not to damage cam surface with Tool (B).**

5. Remove Tool (A).

Valve Clearance (Cont'd)

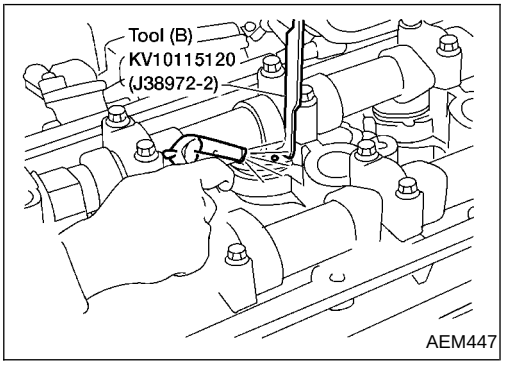

6. Rotate adjusting shim until hole is visible. Blow air into the hole to separate adjusting shim from valve lifter.

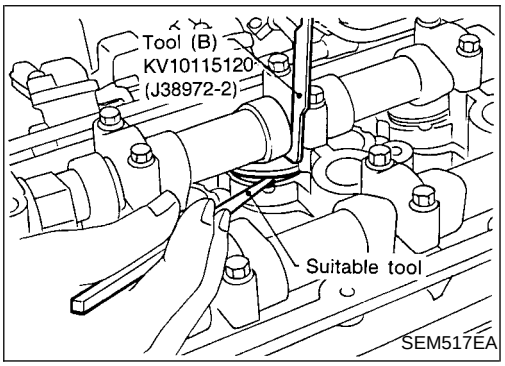

7. Remove adjusting shim using a small screwdriver and a magnetic finger.

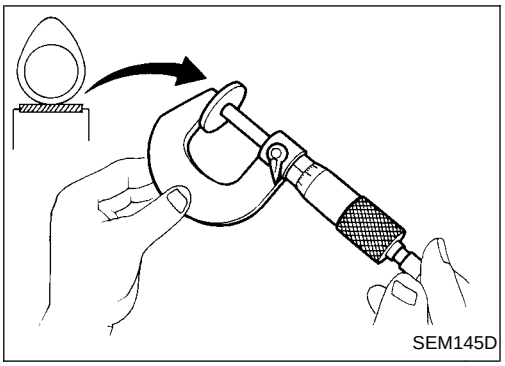

8. Determine replacement adjusting shim size as follows.
a. Using a micrometer determine thickness of removed shim.
b. Calculate thickness of new adjusting shim so valve clearance comes within specified values.
   R = Thickness of removed shim
   N = Thickness of new shim
   M = Measured valve clearance
   Intake & Exhaust:
   N = R + [M − 0.37 mm (0.0146 in)]

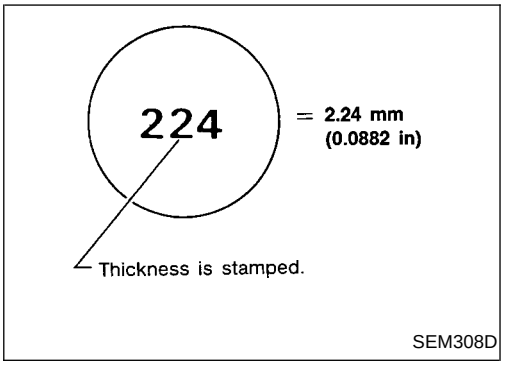

Shims are available in thicknesses from 1.96 mm (0.0772 in) to 2.68 mm (0.1055 in), in steps of 0.02 mm (0.0008 in).

c. Select new shim with thickness as close as possible to calculated value.
   Refer to SDS, EM-54.

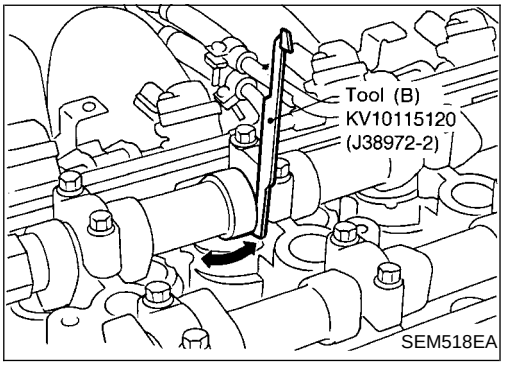

9. Install new shim using a suitable tool.
- **Install with the surface on which the thickness is stamped facing down.**

10. Place Tool (A) as mentioned in steps 2 and 3.
11. Remove Tool (B).
12. Remove Tool (A).
13. Recheck valve clearance.
    Refer to "CHECKING" (EM-36).

SEC. 112

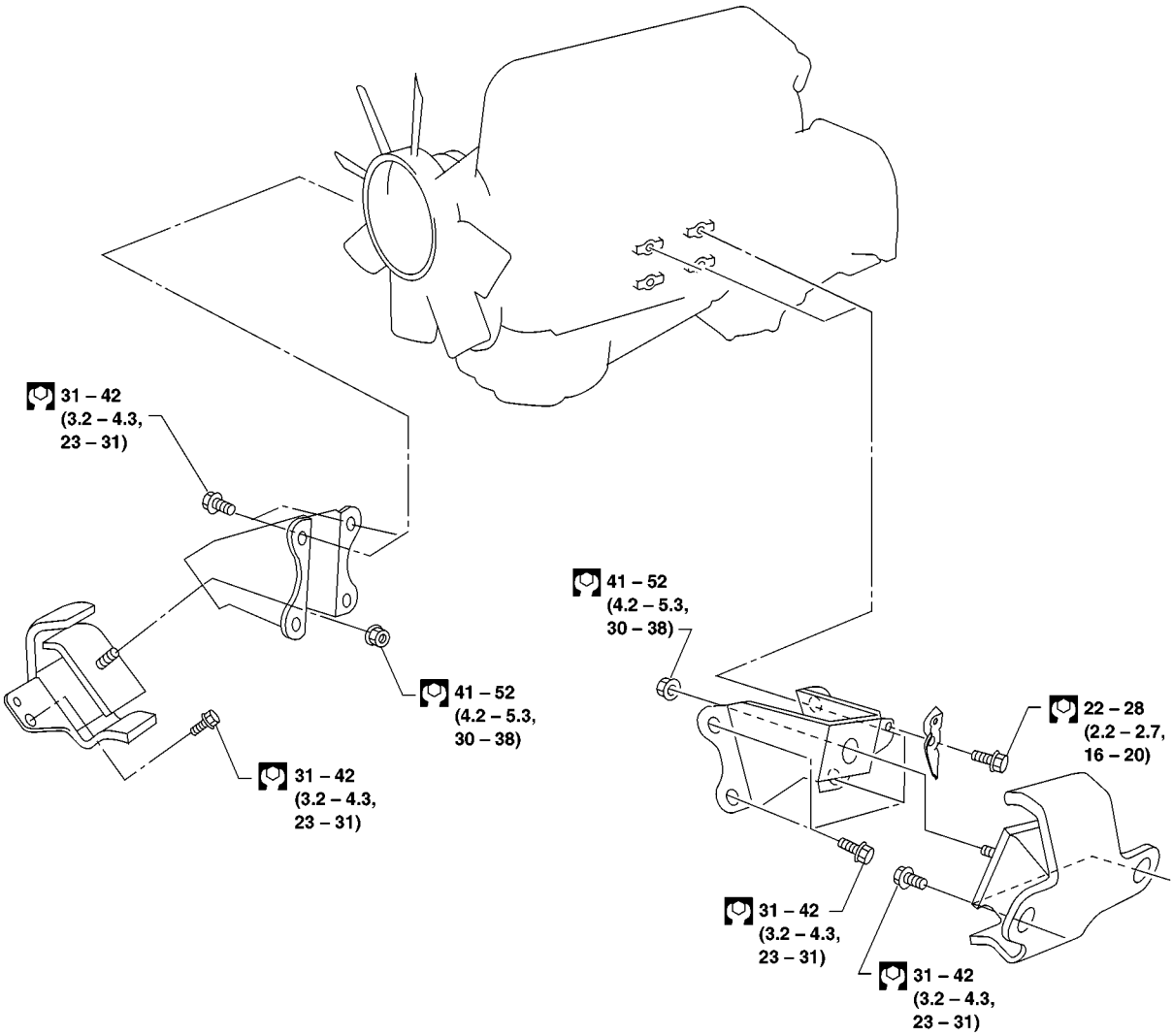

: N·m (kg-m, ft-lb)

AEM398

WARNING:

- **Position vehicle on a flat and solid surface.**
- **Place chocks at front and back of rear wheels.**
- **Do not remove engine until exhaust system has completely cooled off.**
  Otherwise, you may burn yourself and/or fire may break out in fuel line.
- **Before disconnecting fuel hose, release fuel pressure. Refer to EC section (“Fuel Pressure Release’’, “BASIC SERVICE PROCEDURE’’).**
- **Be sure to hoist engine and transmission in a safe manner.**
- **For engines not equipped with engine slingers, attach proper slingers and bolts described in PARTS CATALOG.**

CAUTION:

- **When lifting engine, be sure to clear surrounding parts. Take special care near accelerator wire casing, brake lines and brake master cylinder.**
- **In hoisting the engine, always use engine slingers in a safe manner.**
- **Before separating engine and transmission, remove the crankshaft position sensor (OBD) from the assembly.**
- **Always take extra care not to damage edge of crankshaft position sensor (OBD) or ring gear teeth.**

Removal

1. Drain coolant from engine block and radiator. Refer to MA section (“Changing Engine Coolant’’, “ENGINE MAINTENANCE’’).
2. Release fuel pressure. Refer to EC section (“Fuel Pressure Release’’, “BASIC SERVICE PROCEDURE’’).
3. Remove negative battery cable.
4. Remove hood. Refer to BT section.
5. Remove air cleaner.
6. Remove power steering drive belt, generator drive belt and A/C compressor drive belt.
7. Remove radiator. Refer to LC section (“Radiator’’, “ENGINE COOLING SYSTEM’’).
8. Remove exhaust manifold heat shield.
9. Disconnect exhaust system from #1 catalytic converter.
10. Remove A/C compressor from bracket. Refer to HA section (“Compressor Mounting’’, “SERVICE PROCEDURES’’).
11. Disconnect accelerator wire, vacuum hoses, electrical connectors, heater hoses and vacuum booster hose.

Removal (Cont'd)

12. Remove four power steering pump bolts.
13. Remove transmission Refer to MT or AT section ("Removal", "REMOVAL AND INSTALLATION").
14. Remove LH and RH engine mounts.
15. Remove engine.

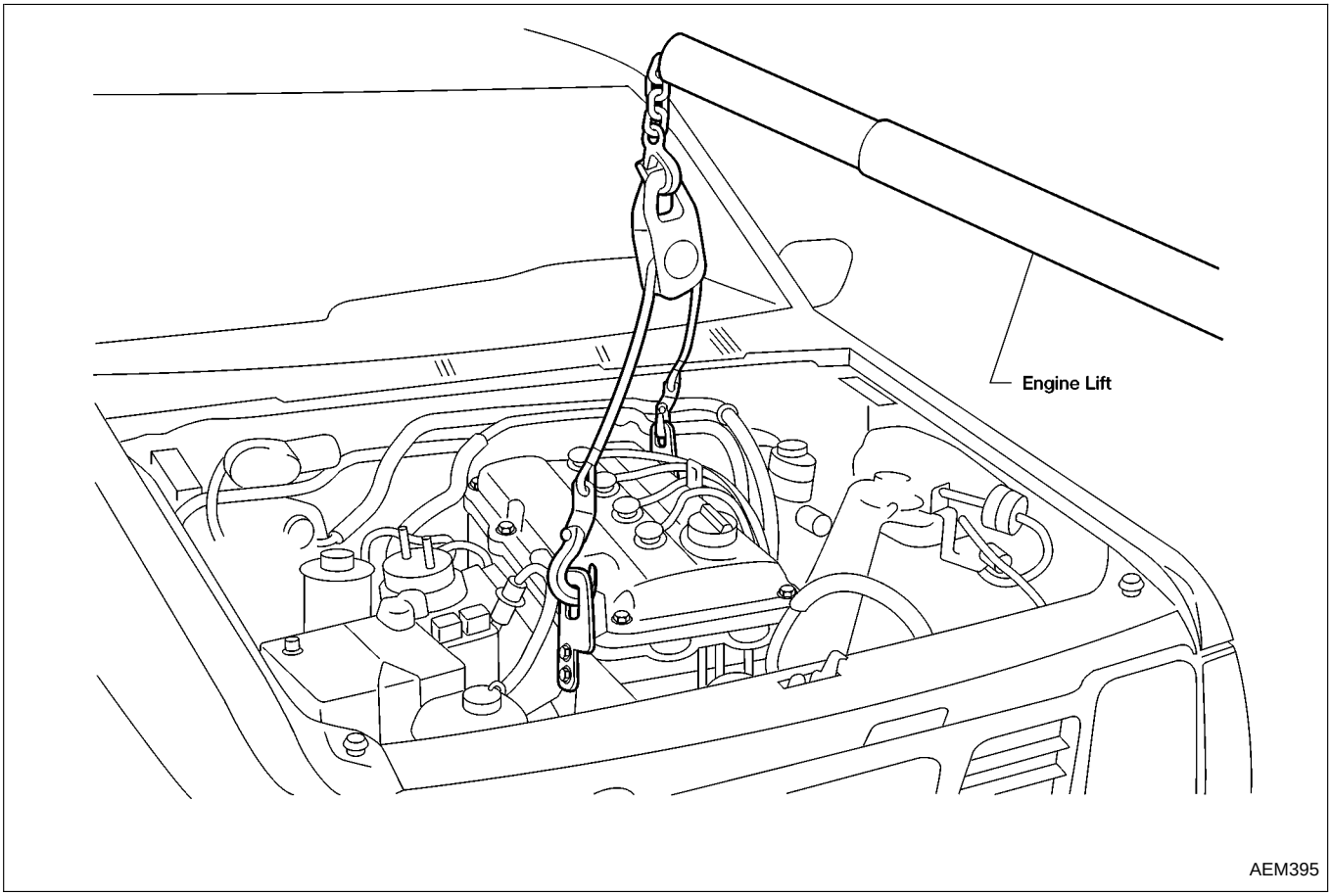

Installation

- Install in reverse order of removal.

SEC. 110 • 120 • 135 • 150 • 210

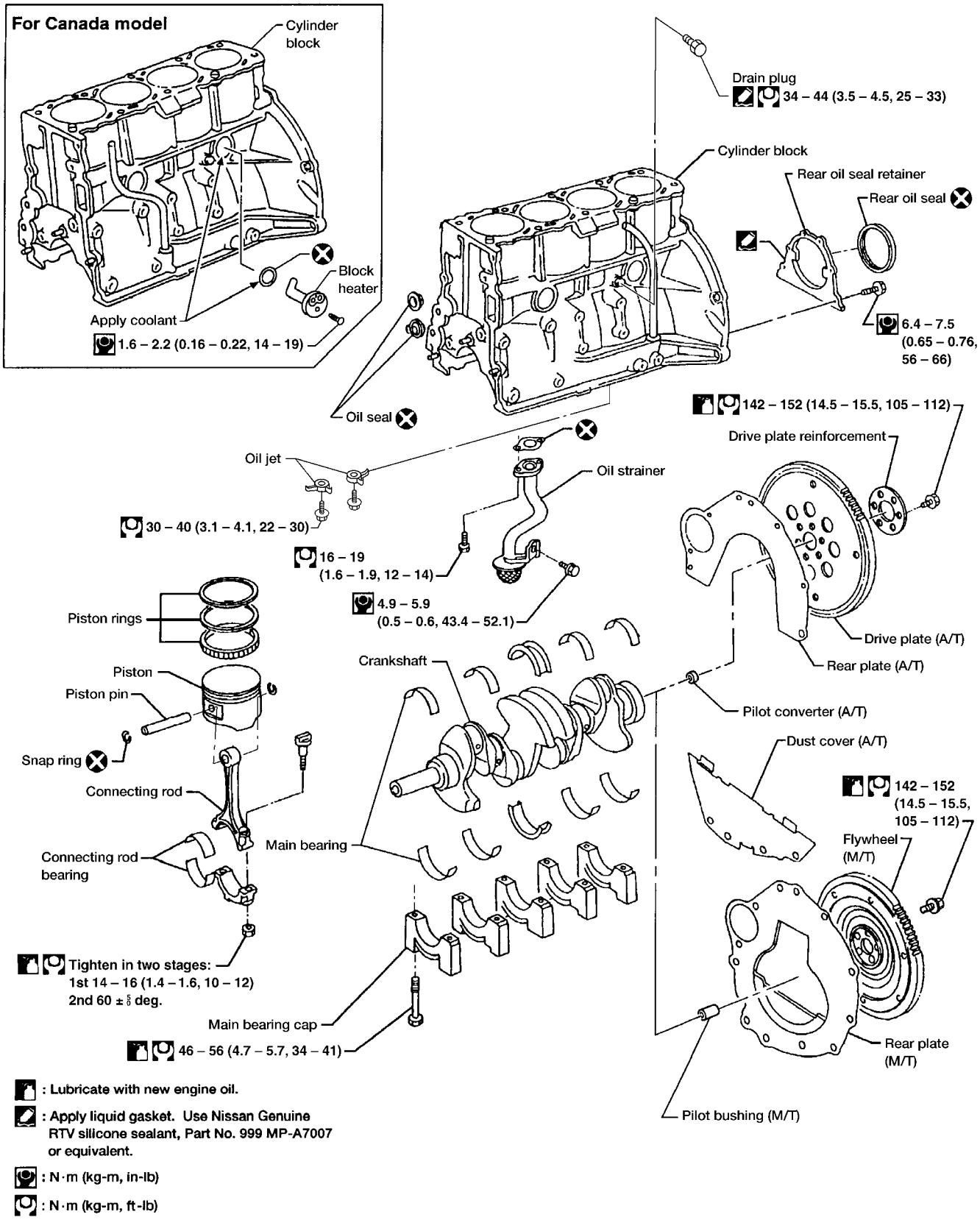

: Lubricate with new engine oil.

: Apply liquid gasket. Use Nissan Genuine RTV silicone sealant, Part No. 999 MP-A7007 or equivalent.

: N·m (kg-m, in-lb)

: N·m (kg-m, ft-lb)

AEM437

CAUTION:

- **When installing sliding parts (bearings, pistons, etc.), lubricate contacting surfaces with new engine oil.**
- **Place removed parts such as bearings and bearing caps in their proper order and direction.**
- **When installing connecting rod nuts and main bearing cap bolts, apply new engine oil to threads and seating surfaces.**
- **Do not allow any magnetic materials to contact the ring gear teeth of flywheel or drive plate.**

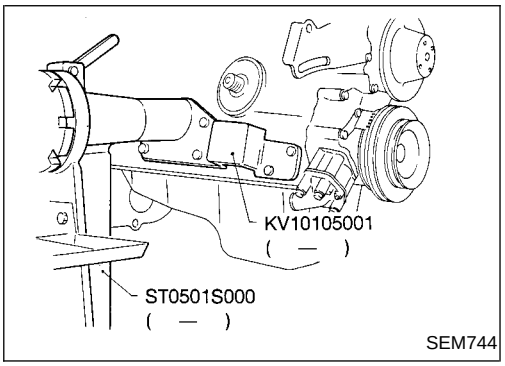

SEM744

Disassembly

PISTON AND CRANKSHAFT

1. Place engine on a work stand.
2. Drain coolant and oil.
3. Remove oil pan.
4. Remove timing chain. Refer to “Removal” in “TIMING CHAIN” (EM-19).
5. Remove water pump.
6. Remove cylinder head.
7. Remove pistons with connecting rods.

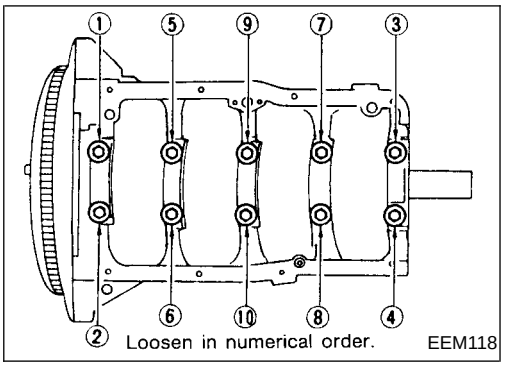

EEM118

8. Remove bearing caps and crankshaft.

- **Before removing bearing caps, measure crankshaft end play. Refer to EM-50.**
- **Bolts should be loosened in two or three steps.**

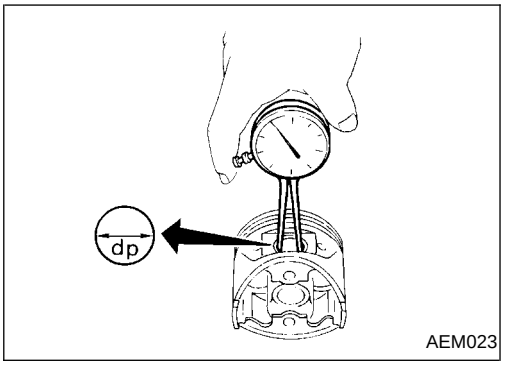

AEM023

Inspection

PISTON AND PISTON PIN CLEARANCE

1. Measure inner diameter of piston pin hole “dp”.
   Standard diameter “dp”:
   20.993 - 21.005 mm (0.8265 - 0.8270 in)

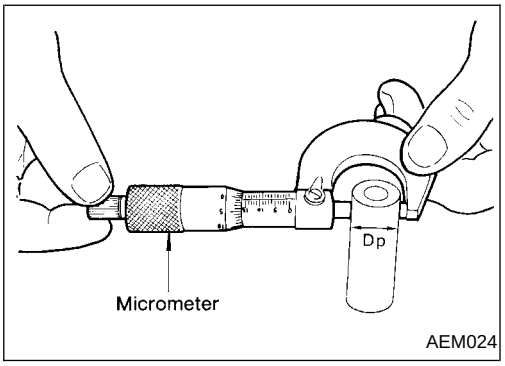

AEM024

2. Measure outer diameter of piston pin “Dp”.
   Standard diameter “Dp”:
   20.989 - 21.001 mm (0.8263 - 0.8268 in)
3. Calculate piston pin clearance.
   dp − Dp = −0.002 - 0.01 mm (−0.0001 - 0.0004 in)
   If it exceeds the above value, replace piston assembly with pin.

Inspection (Cont'd)

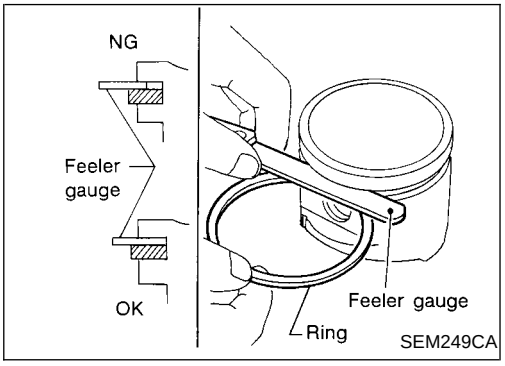

PISTON RING SIDE CLEARANCE

Side clearance:

Top ring 0.04 - 0.08 mm (0.0016 - 0.0031 in)
2nd ring 0.03 - 0.07 mm (0.0012 - 0.0028 in)

Max. limit of side clearance:

0.1 mm (0.004 in)

If out of specification, replace piston ring.
If clearance exceeds maximum limit with new ring, replace piston.

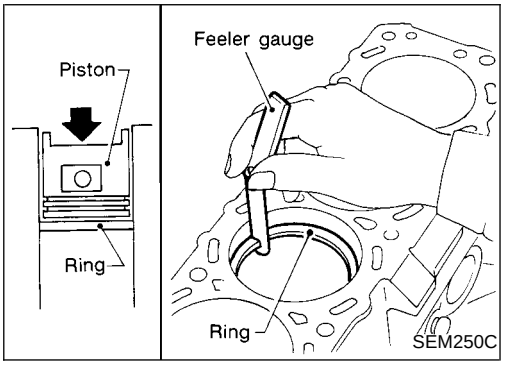

PISTON RING END GAP

End gap:

Top ring
0.28 - 0.52 mm (0.0110 - 0.0205 in)
2nd ring
0.45 - 0.69 mm (0.0177 - 0.0272 in)
(R or T is punched on the ring.)
0.55 - 0.70 mm (0.0217 - 0.0276 in)
(N is punched on the ring.)
Oil ring
0.20 - 0.69 mm (0.0079 - 0.0272 in)

Max. limit of ring gap:

Refer to SDS, EM-58.

If out of specification, replace piston ring. If gap exceeds maximum limit with a new ring, rebore cylinder and use oversized piston and piston rings. Refer to SDS, EM-58.

- When replacing the piston, check cylinder block surface for scratches or seizure. If scratches or seizure are found, hone or replace the cylinder block.

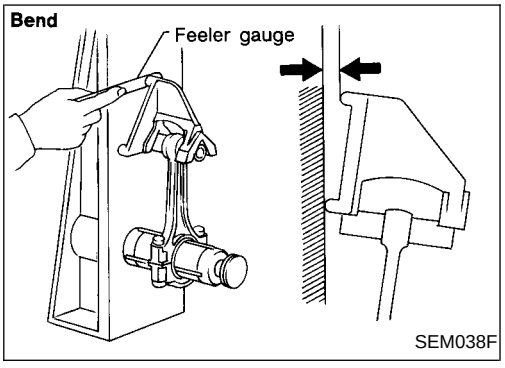

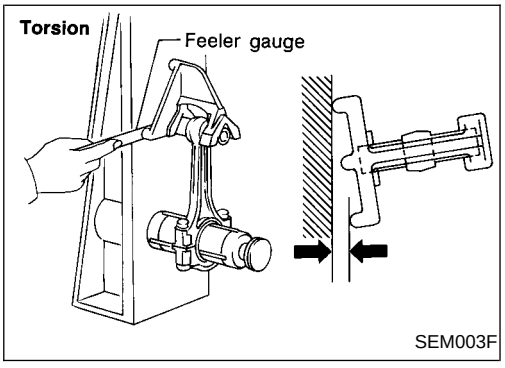

CONNECTING ROD BEND AND TORSION

Bend:

Limit 0.15 mm (0.0059 in)
per 100 mm (3.94 in) length

Torsion:

Limit 0.30 mm (0.0118 in)
per 100 mm (3.94 in) length

If it exceeds the limit, replace connecting rod assembly.

Inspection (Cont'd)

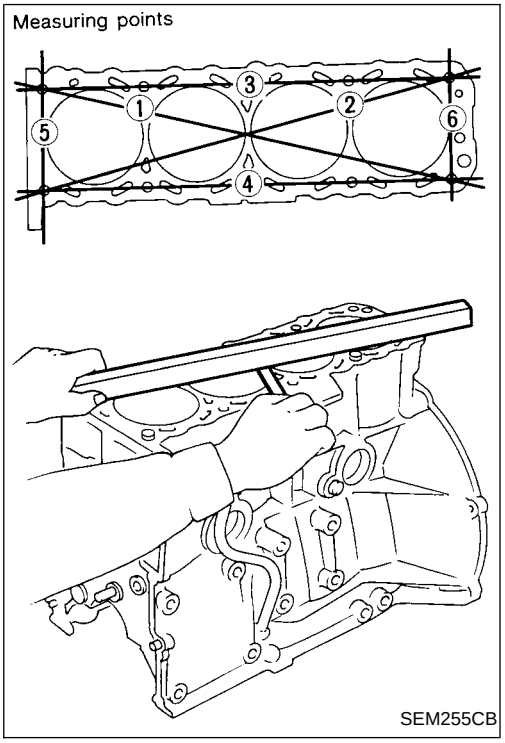

CYLINDER BLOCK DISTORTION AND WEAR

1. Clean upper face of cylinder block.
   Use a reliable straightedge and feeler gauge to check the flatness of cylinder block surface. Check along six positions shown in figure.
   Limit:
   0.1 mm (0.004 in)
2. If out of specification, resurface it.
   The limit for cylinder block resurfacing is determined by cylinder head resurfacing.

Amount of cylinder head resurfacing is "A"
Amount of cylinder block resurfacing is "B"
The maximum limit is as follows:
A + B = 0.2 mm (0.008 in)
Nominal cylinder block height from crankshaft center:
246.95 - 247.05 mm (9.7224 - 9.7264 in)

3. If necessary, replace cylinder block.

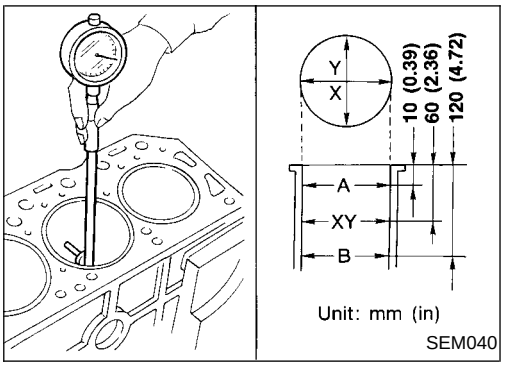

PISTON-TO-BORE CLEARANCE

1. Using a bore gauge, measure cylinder bore for wear, out-of-round and taper.
   Standard inner diameter:
   Refer to SDS, EM-56.
   Wear limit: 0.2 mm (0.008 in)
   Out-of-round (X − Y) standard: 0.015 mm (0.0006 in)
   Taper (A − B) standard: 0.010 mm (0.0004 in)
   If it exceeds the limit, rebore all cylinders. Replace cylinder block if necessary.
2. Check for scratches and seizure. If seizure is found, hone it.

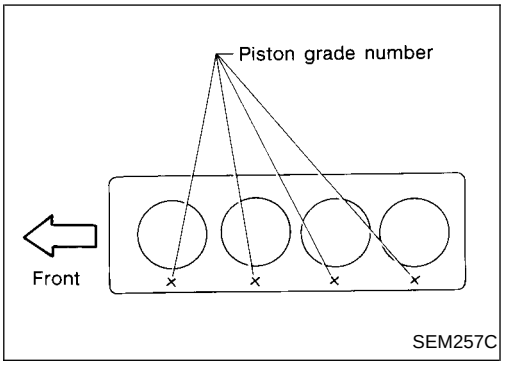

- **If cylinder block and piston are replaced, match piston grade with grade number on cylinder block upper surface.**

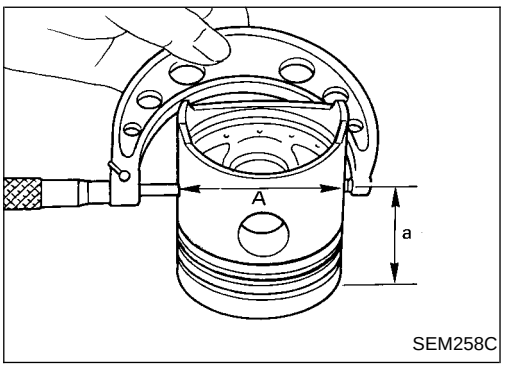

3. Measure piston skirt diameter.
   Piston diameter "A":
   Refer to SDS, EM-58.
   Measuring point "a" (Distance from the top):
   Approximately 48 mm (1.89 in)
4. Check that piston-to-bore clearance is within specification.
   Piston-to-bore clearance "B":
   0.020 - 0.040 mm (0.0008 - 0.0016 in)
5. Determine piston oversize according to amount of cylinder wear.

Inspection (Cont'd)

Oversize pistons are available for service. Refer to SDS, EM-58.

6. Cylinder bore size is determined by adding piston-to-bore clearance to piston diameter "A".
   Rebored size calculation:
   D = A + B − C
   where,
   D: Bored diameter
   A: Piston diameter as measured
   B: Piston-to-bore clearance
   C: Honing allowance 0.02 mm (0.0008 in)
7. Install main bearing caps and tighten bolts to the specified torque. This will prevent distortion of cylinder bores.
8. Cut cylinder bores.

- **When any cylinder needs boring, all other cylinders must also be bored.**
- **Do not cut too much out of cylinder bore at a time. Cut only 0.05 mm (0.0020 in) or so at a time.**

9. Hone cylinders to obtain specified piston-to-bore clearance.
10. Measure finished cylinder bore for out-of-round and taper.

- **Measurement should be done after cylinder bore cools down.**

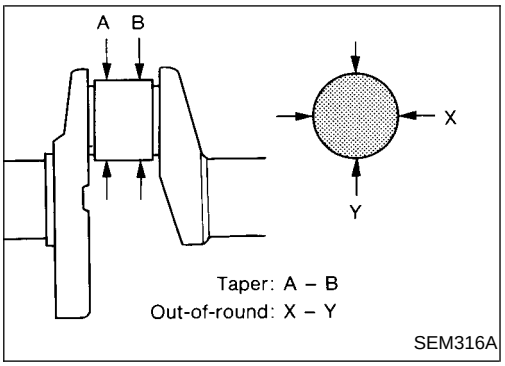

CRANKSHAFT

1. Check crankshaft main and pin journals for score, wear or cracks.
2. With a micrometer, measure journals for taper and out-of-round.
   Out-of-round (X − Y):
   Main journal Less than 0.01 mm (0.0004 in)
   Crank pin Less than 0.005 mm (0.0002 in)
   Taper (A − B):
   Main journal Less than 0.01 mm (0.0004 in)
   Crank pin Less than 0.005 mm (0.0002 in)

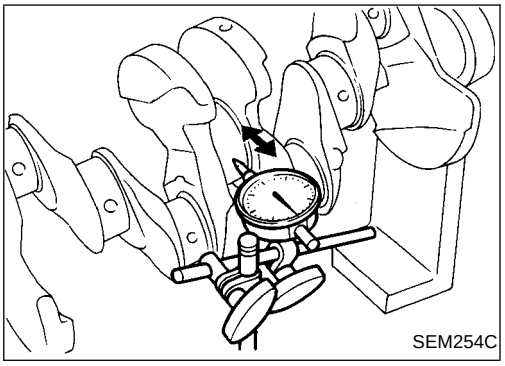

3. Measure crankshaft runout.
   Runout (Total indicator reading):
   Less than 0.10 mm (0.0039 in)

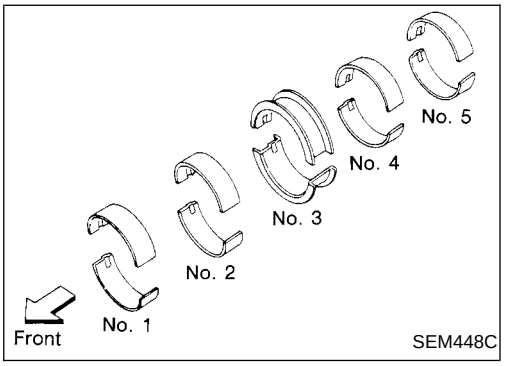

BEARING CLEARANCE

- Use Method A or Method B. Method A is preferred because it is more accurate.

Method A (Using bore gauge and micrometer)

Main bearing

1. Set main bearings in their proper positions on cylinder block and main bearing cap.

Inspection (Cont'd)

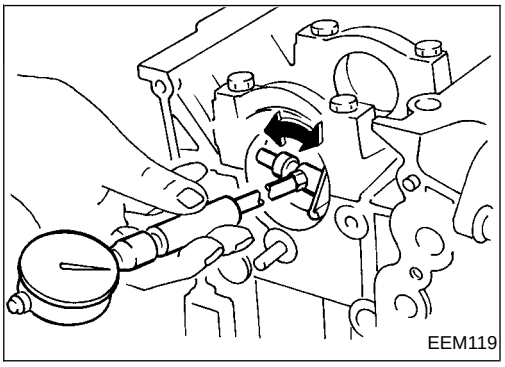

2. Install main bearing cap to cylinder block.
- **Tighten all bolts in correct order in two or three stages. Refer to EM-42 and EM-50.**
3. Measure inner diameter "A" of each main bearing.

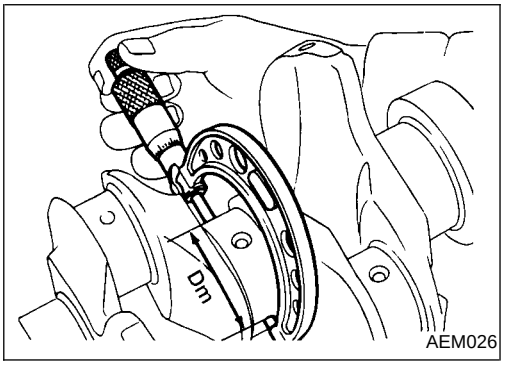

4. Measure outer diameter "Dm" of each crankshaft main journal.
5. Calculate main bearing clearance.
   Main bearing clearance = A − Dm
   Standard:
   0.020 - 0.047 mm (0.0008 - 0.0019 in)
   Limit:
   0.1 mm (0.004 in)
6. If it exceeds the limit, replace bearing.
7. If clearance cannot be adjusted within the standard of any bearing, grind crankshaft journal and use undersized bearing.

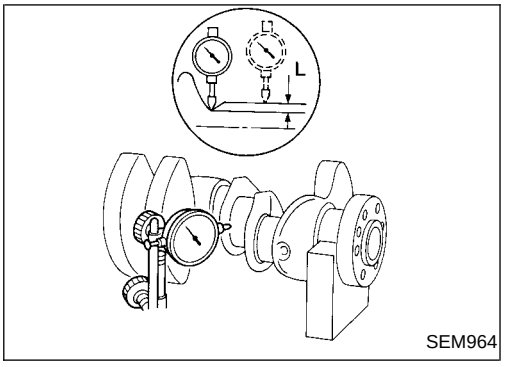

a. When grinding crankshaft journal, confirm that "L" dimension in fillet roll is more than the specified limit.
   "L": 0.1 mm (0.004 in)
b. Refer to SDS EM-59 & EM-60 for grinding crankshaftandavailable service parts.

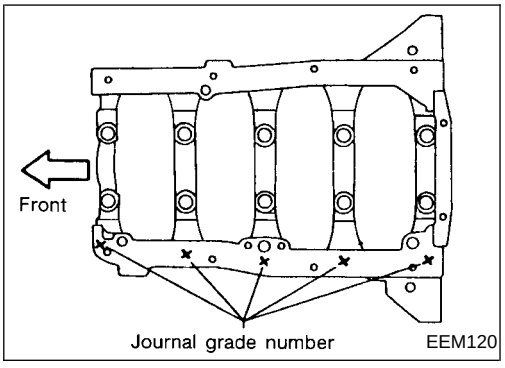

8. If crankshaft is reused, measure main bearing clearance and select thickness of main bearing.
   If crankshaft or cylinder block is replaced, select thickness of main bearings as follows:
a. Grade number of each cylinder block main journal is punched on the respective cylinder block. These numbers are punched in either Arabic or Roman numerals.

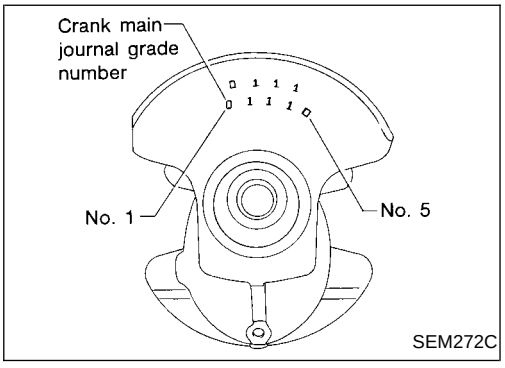

b. Grade number of each crankshaft main journal is punched on crankshaft. These numbers are punched in either Arabic or Roman numerals.
c. Select main bearing with suitable thickness according to the following example or table.

   For example:
   Main journal grade number: 1
   Crankshaft journal grade number: 2
   Main bearing grade number = 1 + 2
   = 3 (Yellow)

Inspection (Cont'd)

Main bearing grade number and identification color:

		Main journal grade number		
		0	1	2
Crankshaft journal grade number	0	0 (Black)	1 (Brown)	2 (Green)
	1 or I	1 (Brown)	2 (Green)	3 (Yellow)
	2 or II	2 (Green)	3 (Yellow)	4 (Blue)

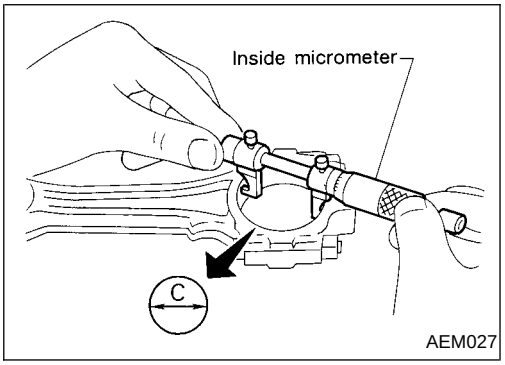

AEM027

Connecting rod bearing (Big end)

1. Install connecting rod bearing to connecting rod and cap.
2. Install connecting rod cap to connecting rod.
- **Tighten bolts to the specified torque.**
3. Measure inner diameter "C" of each bearing.

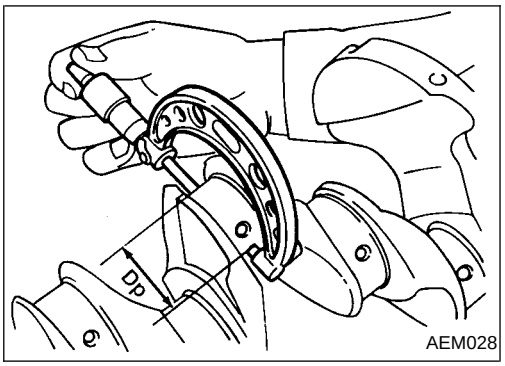

AEM028

4. Measure outer diameter "Dp" of each crankshaft pin journal.
5. Calculate connecting rod bearing clearance.

   Connecting rod bearing clearance = C − Dp:

   Standard

   0.010 - 0.035 mm (0.0004 - 0.0014 in)

   Limit

   0.09 mm (0.0035 in)
6. If it exceeds the limit, replace bearing.
7. If clearance cannot be adjusted within the standard of any bearing, grind crankshaft journal and use undersized bearing. Refer to step 5 of "BEARING CLEARANCE" EM-46.

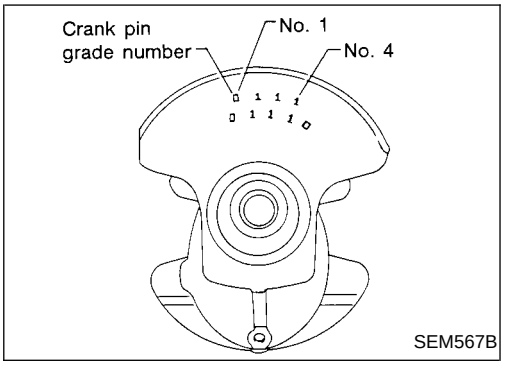

SEM567B

8. If crankshaft is replaced, select connecting rod bearing according to the following table.

Connecting rod bearing grade number:

These numbers are punched in either Arabic or Roman numerals.

Crank pin grade number	Connecting rod bearing grade number
0	0
1 or I	1
2 or II	2

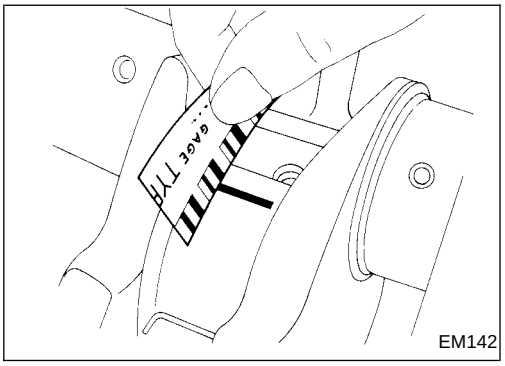

EM142

Method B (Using plastigage)

CAUTION:

- **Do not turn crankshaft or connecting rod while plastigage is being inserted.**
- **When bearing clearance exceeds the specified limit, ensure that the proper bearing has been installed. Then if excessive bearing clearance exists, use a thicker main bearing or undersized bearing so that the specified bearing clearance is obtained.**

Inspection (Cont'd)

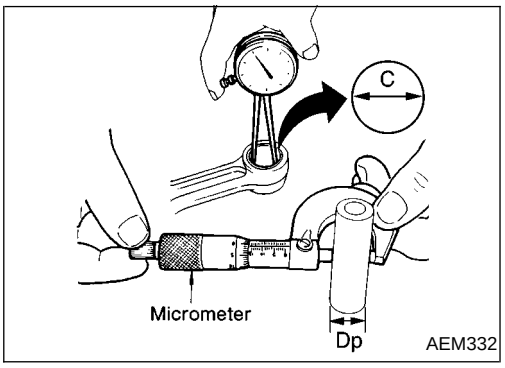

CONNECTING ROD BUSHING CLEARANCE (Small end)

1. Measure inner diameter "C" of bushing.
2. Measure outer diameter "Dp" of piston pin.
3. Calculate connecting rod bushing clearance.

   C − Dp =
   0.005 - 0.017 mm (0.0002 - 0.0007 in) (Standard)
   0.023 mm (0.0009 in) (Limit)

   If out of specification, replace connecting rod assembly and/or piston set with pin.

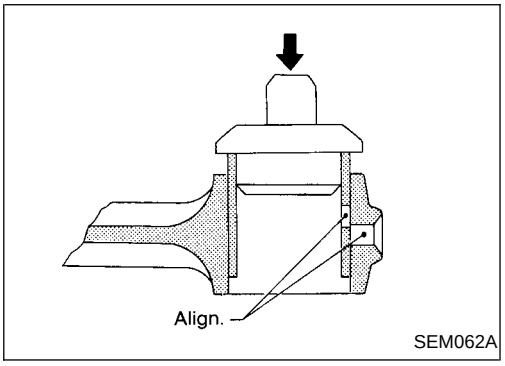

REPLACEMENT OF CONNECTING ROD BUSHING (Small end)

1. Drive in small end bushing until it is flush with end surface of rod.

Be sure to align the oil holes.

2. Ream the bushing until clearance with piston pin is within specification.

   Clearance between connecting rod bushing and piston pin:
   0.005 - 0.017 mm (0.0002 - 0.0007 in)

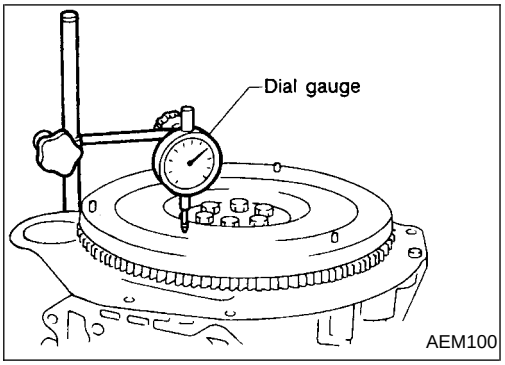

FLYWHEEL/DRIVE PLATE RUNOUT

Runout (Total indicator reading):
Flywheel (M/T model)
Less than 0.15 mm (0.006 in)
Drive plate (A/T model)
Less than 0.15 mm (0.006 in)

CAUTION:

- **Be careful not to damage the ring gear teeth.**
- **Check the drive plate for deformation and cracks.**
- **Do not allow any magnetic materials to contact the ring gear teeth.**
- **Do not resurface the flywheel. Replace as necessary.**

Assembly

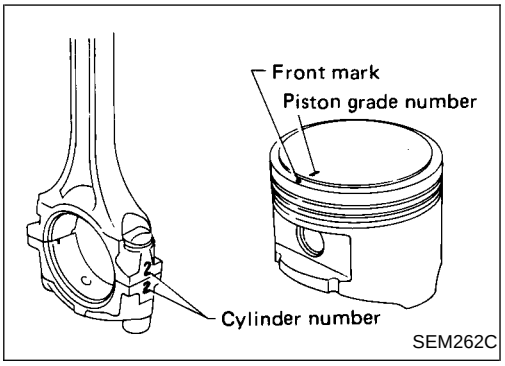

PISTON

1. Heat piston to 60 to 70°C (140 to 158°F) and assemble piston, piston pin and connecting rod.

- **Align the direction of piston and connecting rod.**
- **Numbers stamped on connecting rod and cap correspond to each cylinder.**
- **After assembly, make sure connecting rod swings smoothly.**

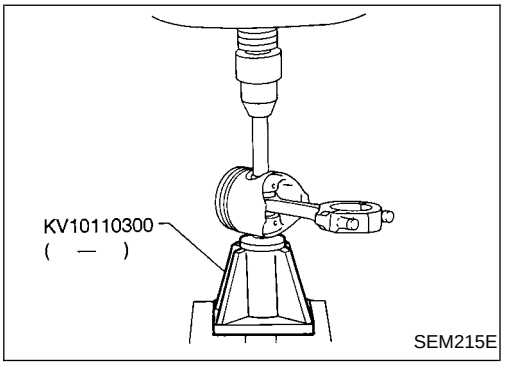

Assembly (Cont'd)

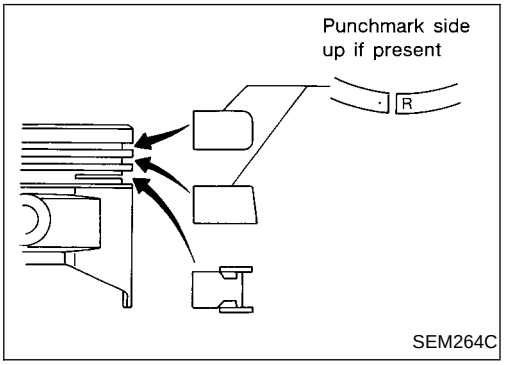

2. Set piston rings as shown.

CAUTION:

- **When piston rings are not replaced, make sure that piston rings are mounted in their original positions.**
- **When piston rings are being replaced and no punchmark is present, piston rings can be mounted with either side up.**

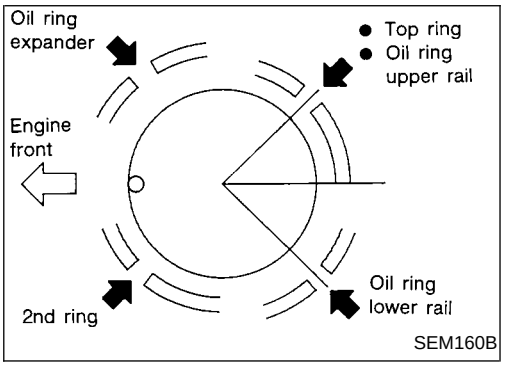

3. Align piston rings so that end gaps are positioned as shown.

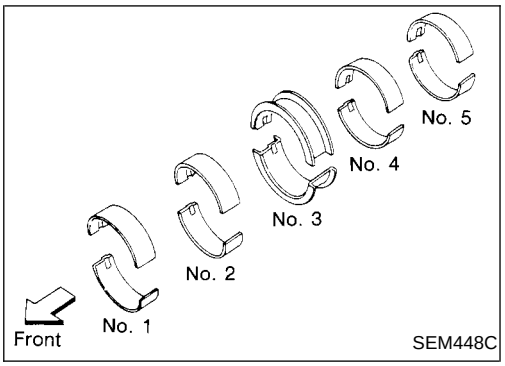

CRANKSHAFT

1. Set main bearings in their proper positions on cylinder block and main bearing caps.

- **Confirm that correct main bearings are used. Refer to EM-46.**
- **Apply new engine oil to bearing surfaces.**

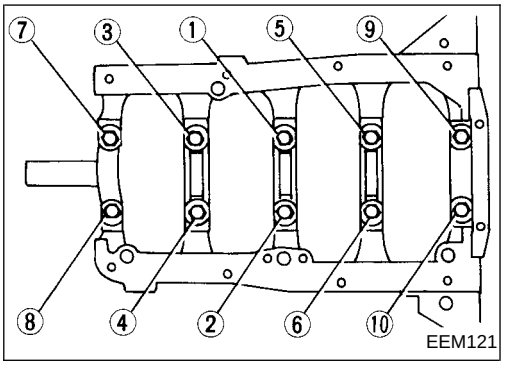

2. Install crankshaft and main bearing caps and tighten bolts to the specified torque. Refer to EM-42.

- **Apply new engine oil to the bolt threads and seat surface.**
- **Prior to tightening bearing cap bolts, place bearing cap in its proper position by shifting crankshaft in the axial direction.**
- **Tighten bearing cap bolts gradually in two or three stages. Start with center bearing and move outward as shown in figure.**
- **After securing bearing cap bolts, make sure crankshaft turns smoothly by hand.**

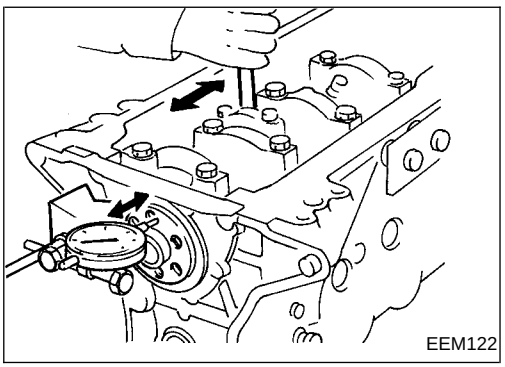

3. Measure crankshaft end play.

Crankshaft end play:

Standard

0.05 - 0.18 mm (0.0020 - 0.0071 in)

Limit

0.3 mm (0.012 in)

If beyond the limit, replace No. 3 bearing with a new one.

Assembly (Cont'd)

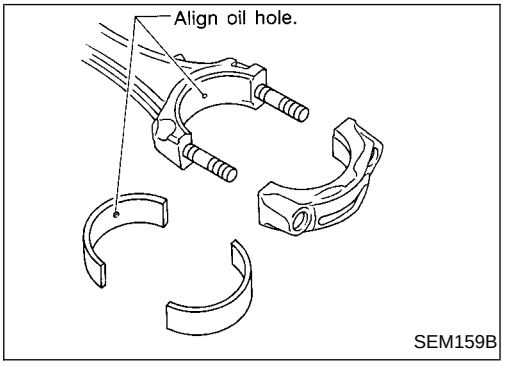

4. Install connecting rod bearings in connecting rods and connecting rod caps.

- **Confirm that correct bearings are used.**
  Refer to EM-48.
- **Install bearings so that oil hole in connecting rod aligns with oil hole of bearing.**
- **Apply new engine oil to bearing surfaces, bolt threads and seating surfaces.**

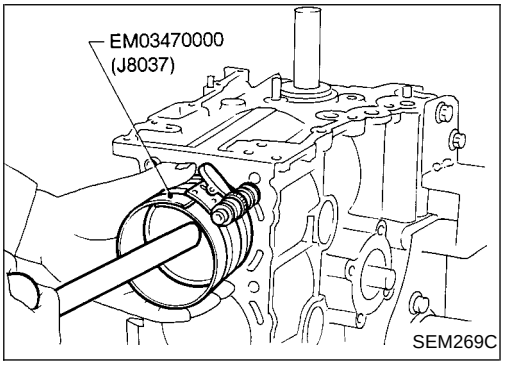

5. Install pistons with connecting rods.

a. Install them into corresponding cylinders with Tool.

- **Arrange so that front mark on piston head faces toward front of engine.**
- **Make sure connecting rod does not scratch cylinder wall.**
- **Make sure connecting rod bolts do not scratch crankshaft journals.**
- **Apply new engine oil to piston rings and sliding surface of piston.**

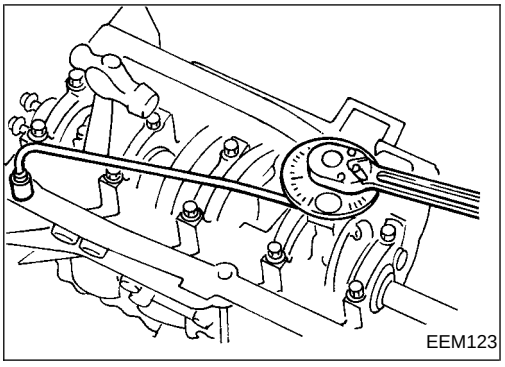

b. Install connecting rod bearing caps.
Tighten connecting rod bearing cap nuts using the following procedure.

Connecting rod bearing nut:

(1) Tighten to 14 - 16 N·m
(1.4 - 1.6 kg-m, 10 - 12 ft-lb).

(2) Tighten bolts 60^{+5}_{-0} degrees clockwise with an angle wrench.
If an angle wrench is not available, tighten them to 38 - 44 N·m (3.9 - 4.5 kg-m, 28 - 33 ft-lb).

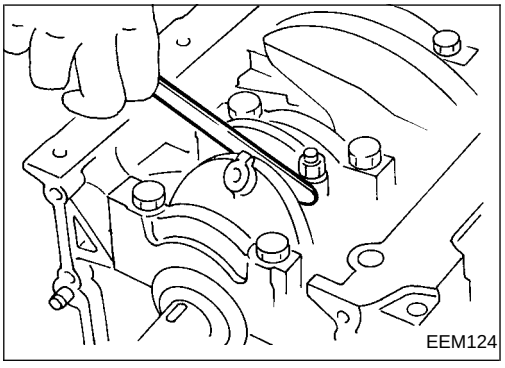

6. Measure connecting rod side clearance.

Connecting rod side clearance:

Standard
0.2 - 0.4 mm (0.008 - 0.016 in)

Limit
0.6 mm (0.024 in)

If beyond the limit, replace connecting rod and/or crankshaft.

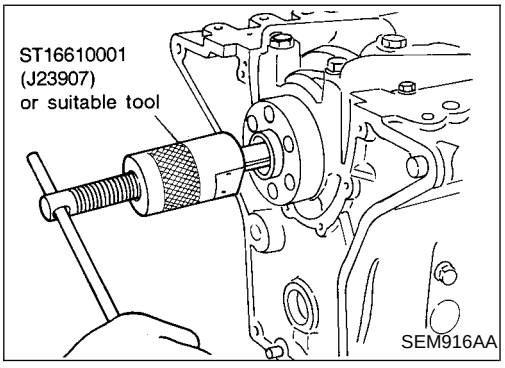

REPLACING PILOT BUSHING

1. Remove pilot bushing (M/T) or pilot convertor (A/T).

Assembly (Cont'd)

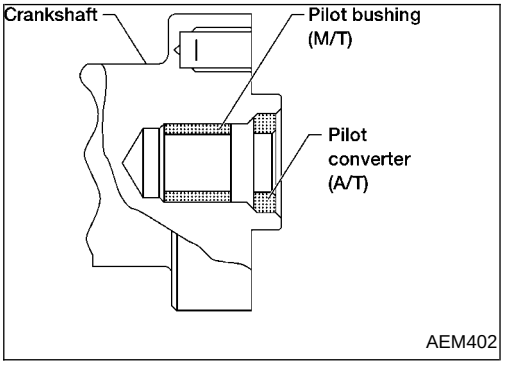

2. Install pilot bushing (M/T) or pilot convertor (A/T).

General Specifications

Cylinder arrangement		In-line 4
Displacement	cm^3 (cu in)	2,389 (145.78)
Bore and stroke	mm (in)	89 x 96 (3.50 x 3.78)
Valve arrangement		DOHC
Firing order		1-3-4-2
Number of piston rings		
Compression		2
Oil		1
Number of main bearings		5
Compression ratio		9.2

COMPRESSION PRESSURE

Unit: kPa (kg/cm^2, psi)/300 rpm

Compression pressure	
Standard	1,226 (12.5, 178)
Minimum	1,030 (10.5, 149)
Differential limit between cylinders	98 (1.0, 14)

Inspection and Adjustment

CYLINDER HEAD

Unit: mm (in)

	Standard	Limit
Head surface distortion	Less than 0.03 (0.0012)	0.1 (0.004)

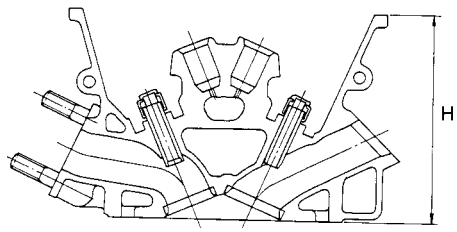

Nominal cylinder head height:
H = 126.3 - 126.5 (4.972 - 4.980)

SEM519E

VALVE

Unit: mm (in)

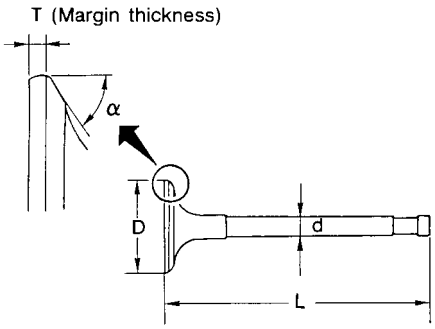

SEM188

Valve head diameter "D"	
Intake	36.5 - 36.7 (1.437 - 1.445)
Exhaust	31.2 - 31.4 (1.228 - 1.236)
Valve length "L"	
Intake	101.17 - 101.47 (3.9831 - 3.9949)
Exhaust	98.67 - 98.97 (3.8846 - 3.8964)
Valve stem diameter "d"	
Intake	6.965 - 6.980 (0.2742 - 0.2748)
Exhaust	6.945 - 6.960 (0.2734 - 0.2740)
Valve seat angle "α"	
Intake & Exhaust	45°15′ - 45°45′
Valve margin "T"	
Intake	0.95 - 1.25 (0.0374 - 0.0492)
Exhaust	1.15 - 1.45 (0.0453 - 0.0571)
Valve margin "T" limit	More than 0.5 (0.020)
Valve stem end surface grinding limit	Less than 0.2 (0.008)

Valve spring

Free height mm (in)	50.3 (1.9831)
Pressure N (kg, lb) at height mm (in)	
Standard	418.0 (42.6, 93.9) at 29.17 (1.1484)
Limit	393.0 (40.1, 88.4) at 29.17 (1.1484)
Out-of-square mm (in)	Less than 2.2 (0.087)

Valve guide

Unit: mm (in)

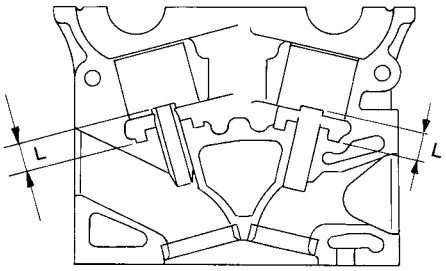

SEM301D

		Standard	Service
Valve guide Outer diameter	Intake	11.023 - 11.034 (0.4340 - 0.4344)	11.223 - 11.234 (0.4418 - 0.4423)
	Exhaust	11.023 - 11.034 (0.4340 - 0.4344)	11.223 - 11.234 (0.4418 - 0.4423)
Valve guide Inner diameter (Finished size)	Intake	7.000 - 7.018 (0.2756 - 0.2763)	
	Exhaust	7.000 - 7.018 (0.2756 - 0.2763)	
Cylinder head valve guide hole diameter	Intake	10.975 - 10.996 (0.4321 - 0.4329)	11.175 - 11.196 (0.4400 - 0.4408)
	Exhaust	10.975 - 10.996 (0.4321 - 0.4329)	11.175 - 11.196 (0.4400 - 0.4408)
Interference fit of valve guide		0.027 - 0.059 (0.0011 - 0.0023)	
		Standard	Limit
Stem to guide clearance	Intake	0.020 - 0.053 (0.0008 - 0.0021)	0.08 (0.0031)
	Exhaust	0.040 - 0.073 (0.0016 - 0.0029)	0.1 (0.004)
Valve deflection limit		0.2 (0.008)	
Projection length "L"		13.3 - 13.9 (0.524 - 0.547)	

Valve lifter

Unit: mm (in)

Valve lifter outer diameter	33.960 - 33.975 (1.3370 - 1.3376)
Lifter guide inner diameter	34.000 - 34.021 (1.3386 - 1.3394)
Clearance between lifter and filter guide	0.025 - 0.061 (0.0010 - 0.0024)

Valve clearance adjustment

Unit: mm (in)

Valve clearance (Hot)	
Intake	0.31 - 0.39 (0.012 - 0.015)
Exhaust	0.33 - 0.41 (0.013 - 0.016)

Available shims

Thickness mm (in)	Identification mark
1.96 (0.0772)	196
1.98 (0.0780)	198
2.00 (0.0787)	200
2.02 (0.0795)	202
2.04 (0.0803)	204
2.06 (0.0811)	206
2.08 (0.0819)	208
2.10 (0.0827)	210
2.12 (0.0835)	212
2.14 (0.0843)	214
2.16 (0.0850)	216
2.18 (0.0858)	218
2.20 (0.0866)	220
2.22 (0.0874)	222
2.24 (0.0882)	224
2.26 (0.0890)	226
2.28 (0.0898)	228
2.30 (0.0906)	230
2.32 (0.0913)	232
2.34 (0.0921)	234
2.36 (0.0929)	236
2.38 (0.0937)	238
2.40 (0.0945)	240
2.42 (0.0953)	242
2.44 (0.0961)	244
2.46 (0.0969)	246
2.48 (0.0976)	248
2.50 (0.0984)	250
2.52 (0.0992)	252
2.54 (0.1000)	254
2.56 (0.1008)	256
2.58 (0.1016)	258
2.60 (0.1024)	260
2.62 (0.1031)	262
2.64 (0.1039)	264
2.66 (0.1047)	266
2.68 (0.1055)	268

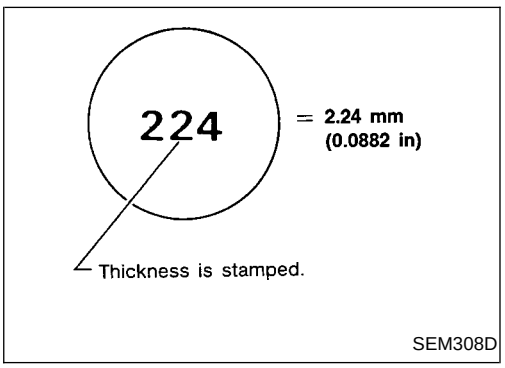

SEM308D

Valve seat

Unit: mm (in)

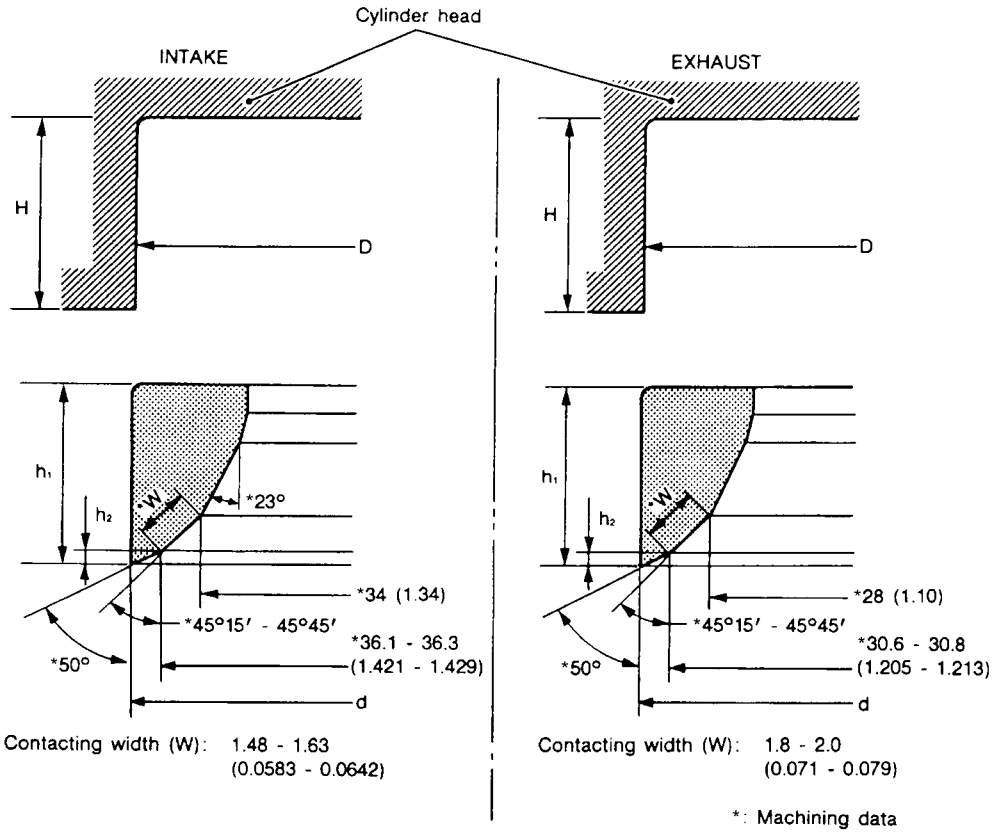

AEM456

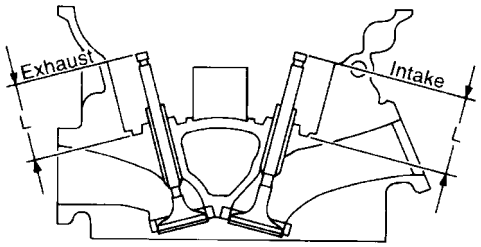

SEM621F

		Standard	Service
Cylinder head seat recess diameter (D)	In.	37.500 - 37.516 (1.4764 - 1.4770)	38.000 - 38.016 (1.4961 - 1.4967)
	Ex.	32.200 - 32.216 (1.2677 - 1.2683)	32.700 - 32.716 (1.2874 - 1.2880)
Valve seat interference fit	In.	0.064 - 0.096 (0.0025 - 0.0038)	
	Ex.	0.064 - 0.096 (0.0025 - 0.0038)	
Valve seat outer diameter (d)	In.	37.580 - 37.596 (1.4795 - 1.4802)	38.080 - 38.096 (1.4992 - 1.4998)
	Ex.	32.280 - 32.296 (1.2709 - 1.2715)	32.780 - 32.796 (1.2905 - 1.2912)
Depth (H)	In.	6.1 - 6.3 (0.240 - 0.248)	
	Ex.	6.1 - 6.3 (0.240 - 0.248)	
Height (h_1)	In.	5.8 - 6.0 (0.228 - 0.236) 5.9 - 6.0 (0.232 - 0.236)	5.3 - 5.5 (0.209 - 0.217)
	Ex.	5.9 - 6.0 (0.232 - 0.236)	5.32 - 5.42 (0.209 - 0.213)
Height (h_2)	In.	0.24 - 0.64 (0.0094 - 0.0252) 0.34 - 0.64 (0.0134 - 0.0252)	
	Ex.	0.43 - 0.73 (0.0169 - 0.0287)	
Depth (L)	In.	42.02 - 42.52	
	Ex.	42.03 - 42.53	

CYLINDER BLOCK

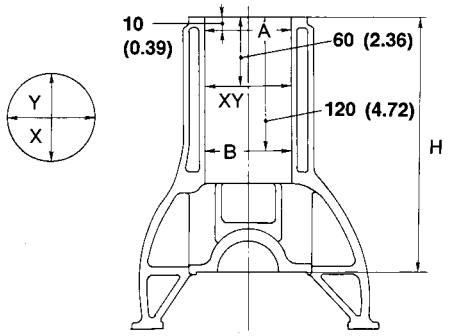

SEM400E

Unit: mm (in)

			Standard	Limit
Distortion			—	0.1 (0.004)
Cylinder bore	Inner diameter	Grade 1	89.000 - 89.010 (3.5039 - 3.5043)	0.2 (0.008)*
		Grade 2	89.010 - 89.020 (3.5043 - 3.5047)	
		Grade 3	89.020 - 89.030 (3.5047 - 3.5051)	
	Out-of-round (X − Y)		Less than 0.015 (0.0006)	—
	Taper (A − B)		Less than 0.010 (0.0004)	—
Difference in inner diameter between cylinders			Less than 0.03 (0.0012)	0.2 (0.008)
Piston-to-cylinder clearance			0.020 - 0.040 (0.0008 - 0.0016)	—
Cylinder block height (From crankshaft center)			246.95 - 247.05 (9.7224 - 9.7264)	0.2 (0.008)**

* Wear limit
** Total amount of cylinder head resurfacing and cylinder block resurfacing

CAMSHAFT AND CAMSHAFT BEARING

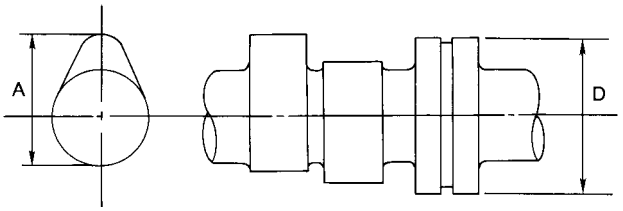

SEM568A

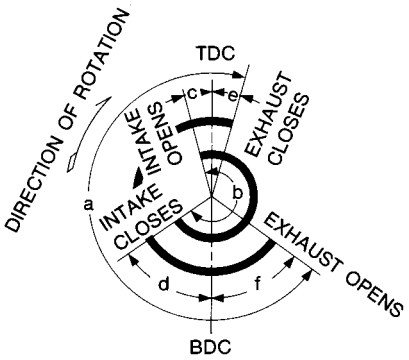

EM120

Unit: mm (in)

		Standard	Limit
Cam height (A)	Intake	42.505 - 42.695 (1.673 - 1.681)	—
	Exhaust	40.905 - 41.095 (1.610 - 1.618)	—
Wear limit of cam height		—	0.2 (0.008)
Camshaft journal to bearing clearance		0.045 - 0.090 (0.0018 - 0.0035)	0.12 (0.0047)
Inner diameter of camshaft bearing	#1 to #5 journals	28.000 - 28.025 (1.1024 - 1.1033)	—
Outer diameter of camshaft journal (D)	#1 to #5 journals	27.935 - 27.955 (1.0998 - 1.1006)	—
Camshaft runout*		Less than 0.02 (0.0008)	0.04 (0.0016)
Camshaft end play		0.070 - 0.148 (0.0028 - 0.0058)	0.2 (0.008)
Valve timing (Degree on crankshaft)	a	216	—
	b	232	—
	c	−1	—
	d	53	—
	e	4	—
	f	32	—

* Total indicator reading

PISTON, PISTON RING AND PISTON PIN

Piston

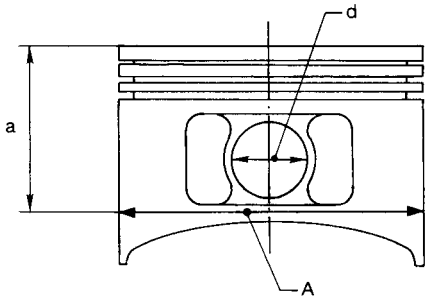

SEM804E

Unit: mm (in)

Piston skirt diameter (A)	Standard	Grade No. 1	88.970 - 88.980 (3.5027 - 3.5031)
		Grade No. 2	88.980 - 88.990 (3.5031 - 3.5035)
		Grade No. 3	88.990 - 89.000 (3.5035 - 3.5039)
	Service (Oversize)	0.5 (0.020)	89.470 - 89.500 (3.5224 - 3.5236)
		1.0 (0.039)	89.970 - 90.000 (3.5421 - 3.5433)
Dimension (a)		Approximately 48 (1.89)	
Piston pin hole diameter (d)		20.993 - 21.005 (0.8265 - 0.8270)	
Piston-to-cylinder bore clearance		0.020 - 0.040 (0.0008 - 0.0016)	

Piston pin

Unit: mm (in)

	Standard	Limit
Piston pin outer diameter	20.989 - 21.001 (0.8263 - 0.8268)	—
Interference fit of piston pin to piston pin hole	−0.002 to 0.01 (−0.0001 to 0.0004)	—
Piston pin to connecting rod bearing clearance	0.005 - 0.017 (0.0002 - 0.0007)	0.023 (0.0009)

Piston ring

Unit: mm (in)

		Standard	Limit
Side clearance	Top	0.040 - 0.080 (0.0016 - 0.0031)	0.1 (0.004)
	2nd	0.030 - 0.070 (0.0012 - 0.0028)	0.1 (0.004)
Ring gap	Top	0.28 - 0.52 (0.0110 - 0.0205)	1.0 (0.039)
	2nd	0.45 - 0.69 (0.0177 - 0.0272)	1.0 (0.039)
	Oil (rail ring)	0.20 - 0.69 (0.0079 - 0.0272)	1.0 (0.039)

CONNECTING ROD

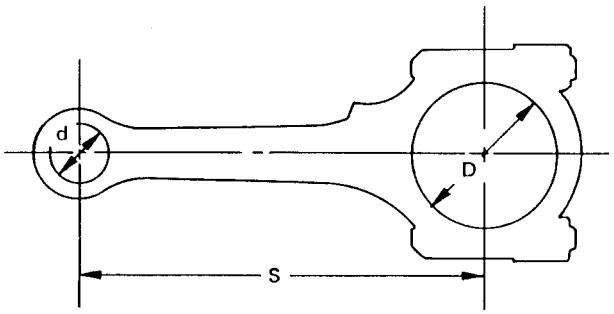

SEM570A

Unit: mm (in)

	Standard	Limit
Center distance (S)	164.95 - 165.05 (6.4941 - 6.4980)	—
Bend [per 100 mm (3.94 in)]	—	0.15 (0.0059)
Torsion [per 100 mm (3.94 in)]	—	0.30 (0.0118)
Connecting rod small end inner diameter (d)*	23.970 - 24.000 (0.9437 - 0.9449)	—
Piston pin bushing inner diameter	21.000 - 21.012 (0.8268 - 0.8272)	—
Connecting rod big end inner diameter (D)*	53.000 - 53.013 (2.0866 - 2.0871)	—
Side clearance	0.2 - 0.4 (0.008 - 0.016)	0.6 (0.024)

* Without bearing

CRANKSHAFT

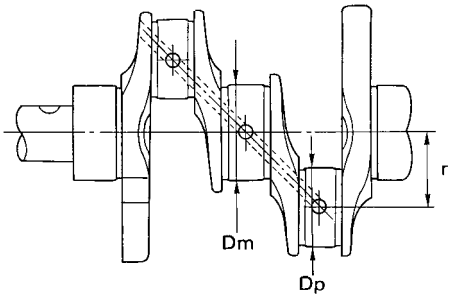

SEM394

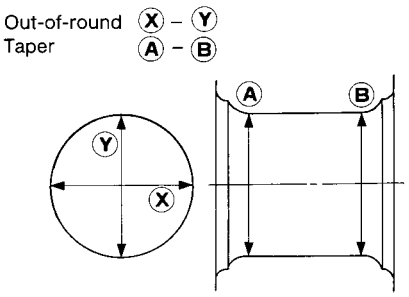

EM715

Unit: mm (in)

Main journal diameter (Dm)	Grade	No. 0	59.967 - 59.975 (2.3609 - 2.3612)	
		No. 1	59.959 - 59.967 (2.3606 - 2.3609)	
		No. 2	59.951 - 59.959 (2.3603 - 2.3606)	
Pin journal diameter (Dp)	Grade	No. 0	49.968 - 49.974 (1.9672 - 1.9675)	
		No. 1	49.962 - 49.968 (1.9670 - 1.9672)	
		No. 2	49.956 - 49.962 (1.9668 - 1.9670)	
Center distance (r)			47.95 - 48.05 (1.8878 - 1.8917)	
			Standard	Limit
Taper of journal and pin [Ⓐ – Ⓑ]	Journal		—	0.01 (0.0004)
	Pin		—	0.005 (0.0002)
Out-of-round of journal and pin [Ⓧ – Ⓨ]	Journal		—	0.01 (0.0004)
	Pin		—	0.005 (0.0002)
Runout [TIR]*			—	0.10 (0.0039)
Free end play			0.05 - 0.18 (0.0020 - 0.0071)	0.3 (0.012)
Fillet roil			More than 0.1 (0.004)	

* Total indicator reading

BEARING CLEARANCE

Unit: mm (in)

	Standard	Limit
Main bearing clearance	0.020 - 0.047 (0.0008 - 0.0019)	0.1 (0.004)
Connecting rod bearing clearance	0.010 - 0.035 (0.0004 - 0.0014)	0.09 (0.0035)

AVAILABLE MAIN BEARING

Standard

Grade number	Thickness mm (in)	Identification color
0	1.821 - 1.825 (0.0717 - 0.0719)	Black
1	1.825 - 1.829 (0.0719 - 0.0720)	Brown
2	1.829 - 1.833 (0.0720 - 0.0722)	Green
3	1.833 - 1.837 (0.0722 - 0.0723)	Yellow
4	1.837 - 1.841 (0.0723 - 0.0725)	Blue

Undersize (service)

Unit: mm (in)

	Thickness	Main journal diameter "Dm"
0.25 (0.0098)	1.952 - 1.960 (0.0769 - 0.0772)	Grind so that bearing clearance is the specified value.

AVAILABLE CONNECTING ROD BEARING

Standard

Grade number	Thickness mm (in)	Identification color
0	1.505 - 1.508 (0.0593 - 0.0594)	—
1	1.508 - 1.511 (0.0594 - 0.0595)	Brown
2	1.511 - 1.514 (0.0595 - 0.0596)	Green

Undersize (service)

Unit: mm (in)

	Thickness	Crank pin journal diameter "Dp"
0.08 (0.0031)	1.540 - 1.548 (0.0606 - 0.0609)	Grind so that bearing clearance is the specified value.
0.12 (0.0047)	1.560 - 1.568 (0.0614 - 0.0617)	
0.25 (0.0098)	1.625 - 1.633 (0.0640 - 0.0643)	

MISCELLANEOUS COMPONENTS

Unit: mm (in)

Camshaft sprocket runout	[TIR]*	Less than 0.15 (0.0059)
Flywheel runout	[TIR]*	Less than 0.15 (0.006)
Drive plate runout	[TIR]*	Less than 0.15 (0.006)

* Total indicator reading