ELECTRICAL SYSTEM

SECTION EL

CONTENTS

CONTENTS (Cont'd)

CONTENTS (Cont'd)

Supplemental Restraint System (SRS) "AIR BAG" and "SEAT BELT PRE-TENSIONER"

NEEL0001

The Supplemental Restraint System such as "AIR BAG" and "SEAT BELT PRE-TENSIONER" used along with a seat belt, help to reduce the risk or severity of injury to the driver and front passenger in a frontal collision. The Supplemental Restraint System consists of air bag modules (located in the center of the steering wheel and in the instrument panel on the passenger side), seat belt pre-tensioners, a diagnosis sensor unit, warning lamp, wiring harness, and spiral cable.

The vehicle (except Crew Cab model) is equipped with a passenger air bag deactivation switch. Because no rear seat exists where a rear-facing child restraint can be placed, the switch is designed to turn off the passenger air bag so that a rear-facing child restraint can be used in the front passenger seat. The switch is located in the center of the instrument panel, near the ashtray. When the switch is turned to the ON position, the passenger air bag is enabled and could inflate in a frontal collision. When the switch is turned to the OFF position, the passenger air bag is disabled and will not inflate in a frontal collision. A passenger air bag OFF indicator on the instrument panel lights up when the passenger air bag is switched OFF. The driver air bag always remains enabled and is not affected by the passenger air bag deactivation switch.

Information necessary to service the system safely is included in the **RS section** of this Service Manual.

WARNING:

- **To avoid rendering the SRS inoperative, which could increase the risk of personal injury or death in the event of a collision which would result in air bag inflation, all maintenance should be performed by an authorized NISSAN dealer.**
- **Improper maintenance, including incorrect removal and installation of the SRS, can lead to personal injury caused by unintentional activation of the system. For removal of Spiral Cable and Air Bag Module, see the RS section.**
- **Do not use electrical test equipment on any circuit related to the SRS unless instructed to in this Service Manual. Spiral cable and wiring harnesses (except "SEAT BELT PRE-TENSIONER") covered with yellow insulation either just before the harness connectors or for the complete harness are related to the SRS.**
- **The vehicle (except Crew Cab model) is equipped with a passenger air bag deactivation switch which can be operated by the customer. When the passenger air bag is switched OFF, the passenger air bag is disabled and will not inflate in a frontal collision. When the passenger air bag is switched ON, the passenger air bag is enabled and could inflate in a frontal collision. After SRS maintenance or repair, make sure the passenger air bag deactivation switch is in the same position (ON or OFF) as when the vehicle arrived for service.**

Wiring Diagrams and Trouble Diagnosis

NEEL0002

When you read wiring diagrams, refer to the following:

- ***GI-11***, "HOW TO READ WIRING DIAGRAMS"
- "POWER SUPPLY ROUTING" for power distribution circuit, EL-9

When you perform trouble diagnosis, refer to the following:

- ***GI-34***, "How to Follow Test Groups in Trouble Diagnoses"
- ***GI-23***, "HOW TO PERFORM EFFICIENT DIAGNOSIS FOR AN ELECTRICAL INCIDENT"

Check for any Service bulletins before servicing the vehicle.

Description

NEEL0003

HARNESS CONNECTOR (TAB-LOCKING TYPE)

NEEL0003S01

- The tab-locking type connectors help prevent accidental looseness or disconnection.
- The tab-locking type connectors are disconnected by pushing or lifting the locking tab(s). Refer to the illustration below.
  Refer to EL-6 for description of the slide-locking type connector.

CAUTION:

Do not pull the harness when disconnecting the connector.

[Example]

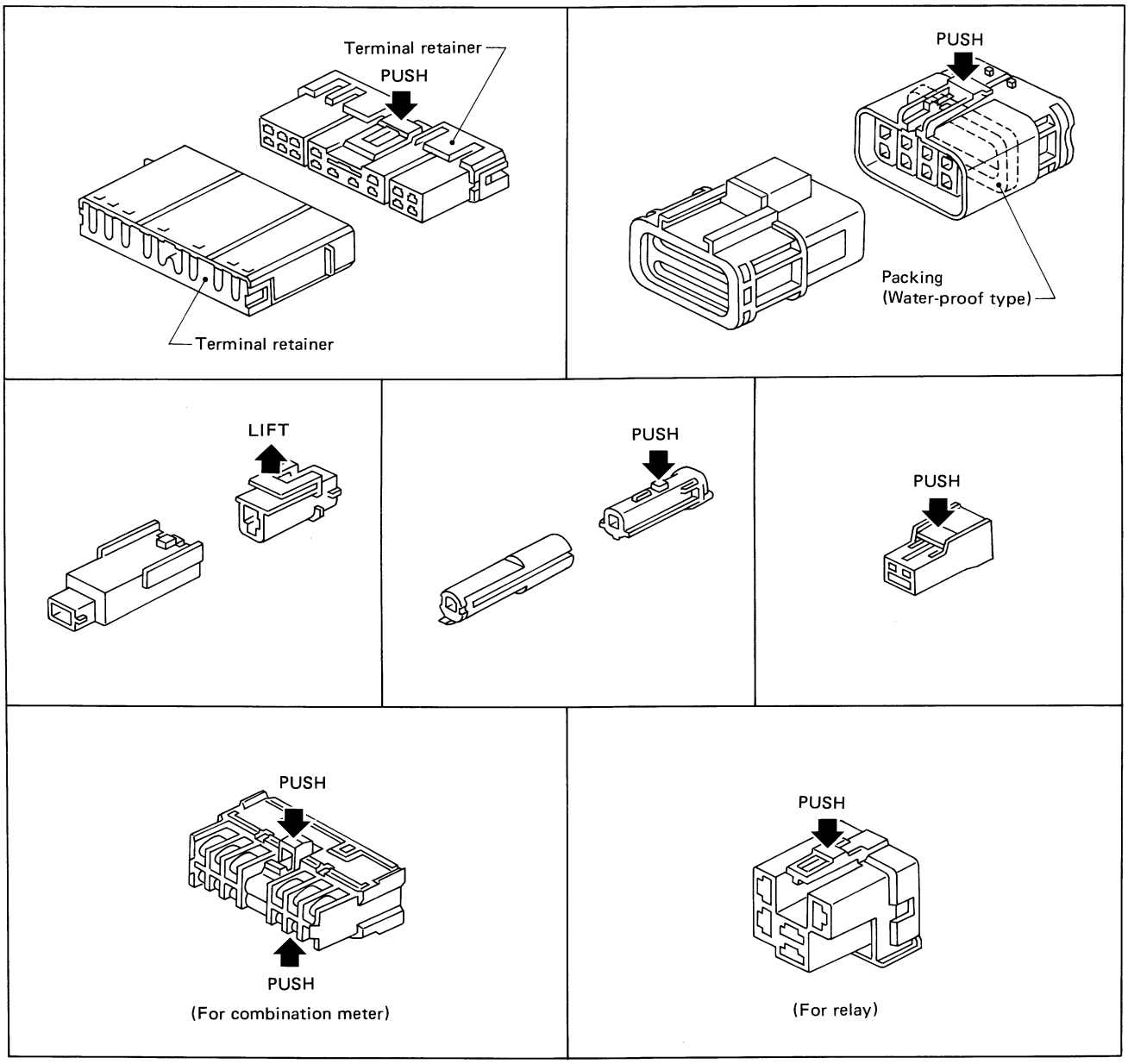

SEL769D

HARNESS CONNECTOR (SLIDE-LOCKING TYPE)

=NEEL0003S02

- A new style slide-locking connector is used on certain systems and components, especially those related to OBD.
- The slide-locking type connectors help prevent incomplete locking and accidental looseness or disconnection.
- The slide-locking type connectors are disconnected by pushing or pulling the slider. Refer to the illustration below.

CAUTION:

Do not pull the harness or wires when disconnecting the connector.
Be careful not to damage the connector support bracket when disconnecting the connector.

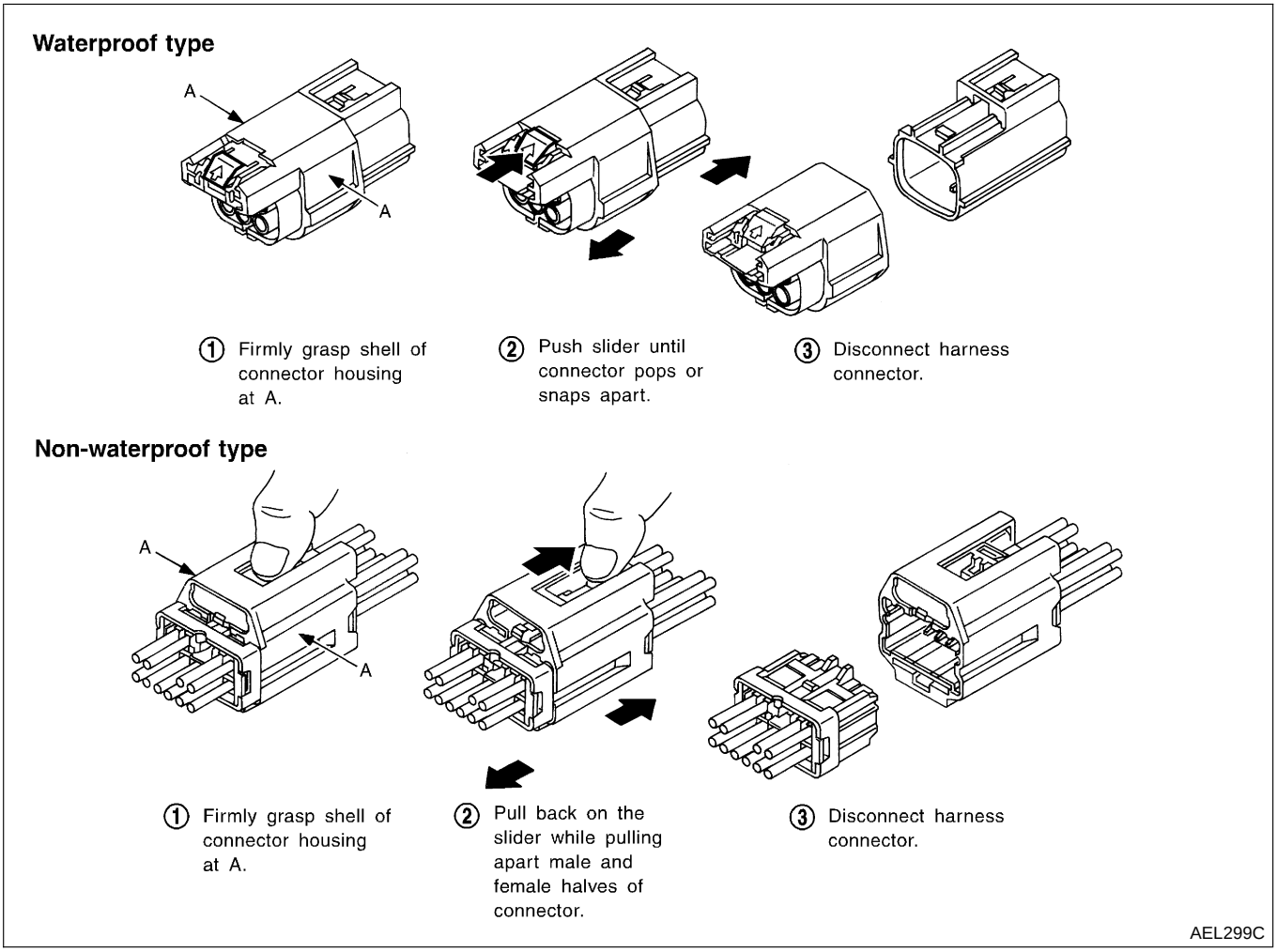

Description

NEEL0004

NORMAL OPEN, NORMAL CLOSED AND MIXED TYPE RELAYS

NEEL0004S01

Relays can mainly be divided into three types: normal open, normal closed and mixed type relays.

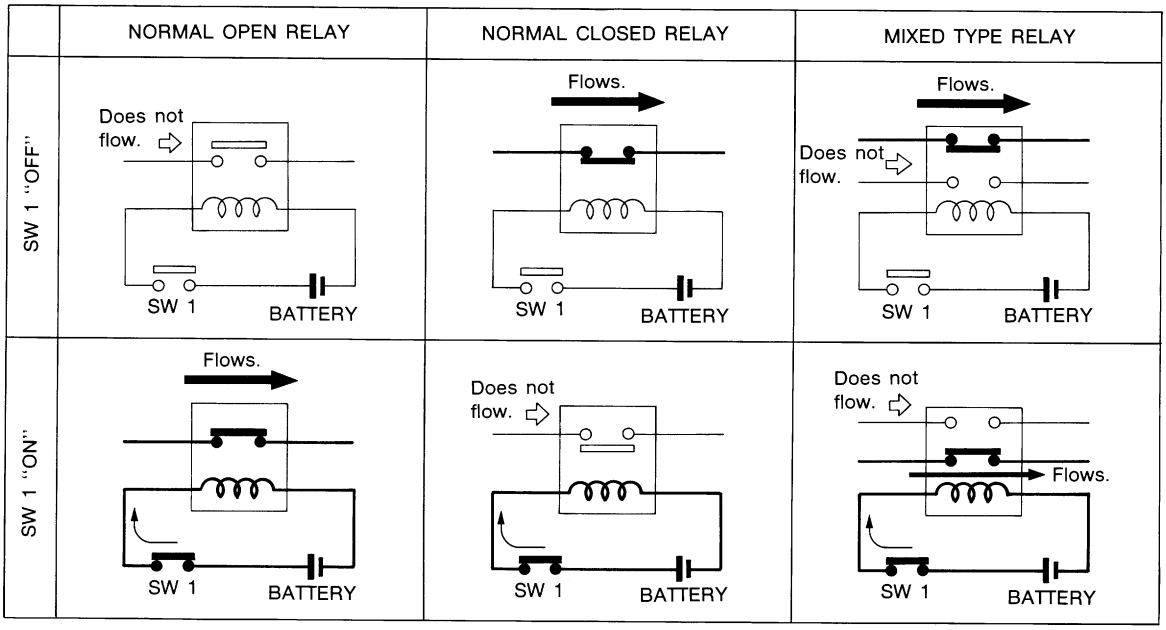

SEL881H

TYPE OF STANDARDIZED RELAYS

NEEL0004S02

1M	1 Make	2M	2 Make
1T	1 Transfer	1M·1B	1 Make 1 Break

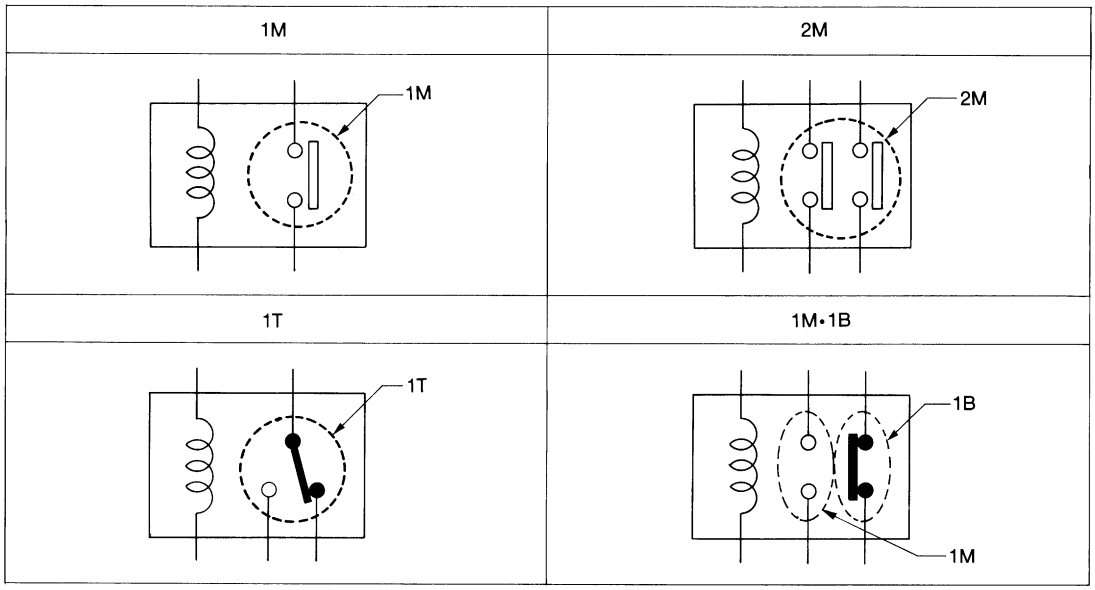

SEL882H

Type	Outer view	Circuit	Connector symbol and connector	Case color
1T	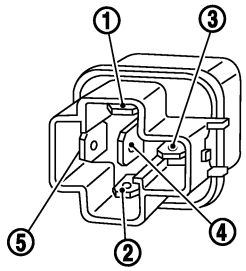	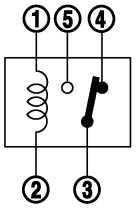	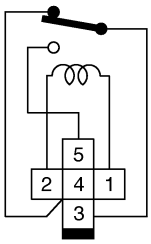	BLACK
	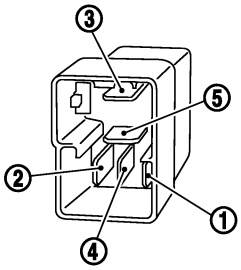		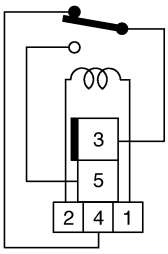	
2M	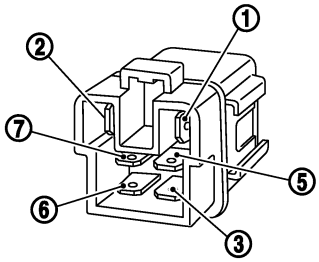	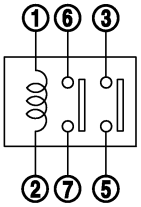	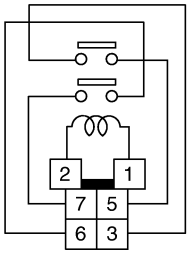	BROWN
1M•1B	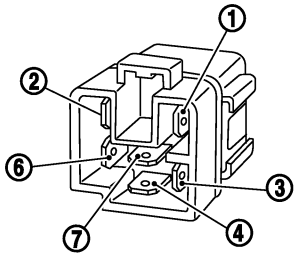	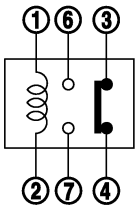	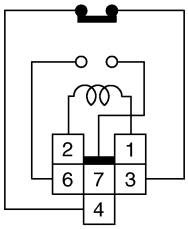	GRAY
1M	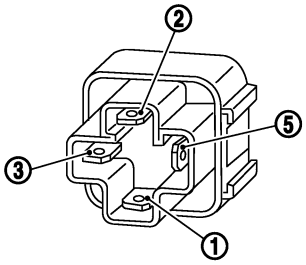	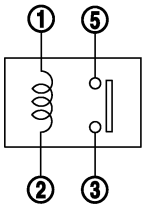	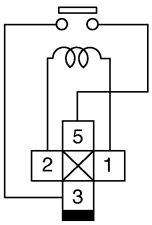	BLUE
	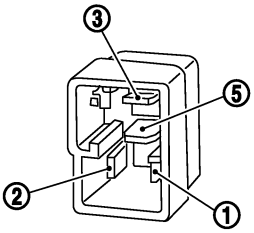		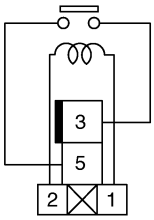	

The arrangement of terminal numbers on the actual relays may differ from those shown above.

GEL264

Circuit Diagram

NEEL0005

NOTE: For detailed ground distribution information, refer to “GROUND DISTRIBUTION”, EL-17.

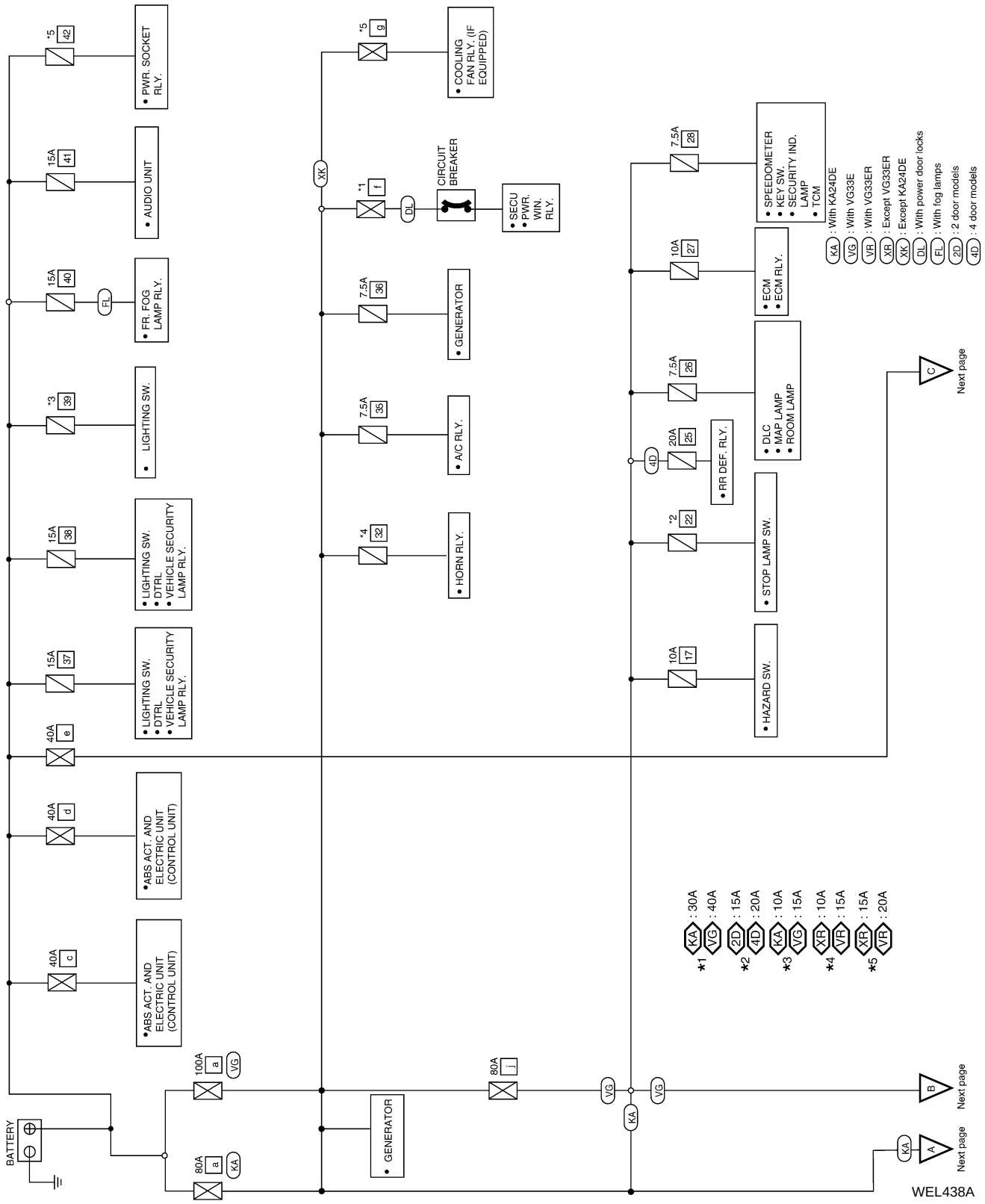

Circuit Diagram (Cont'd)

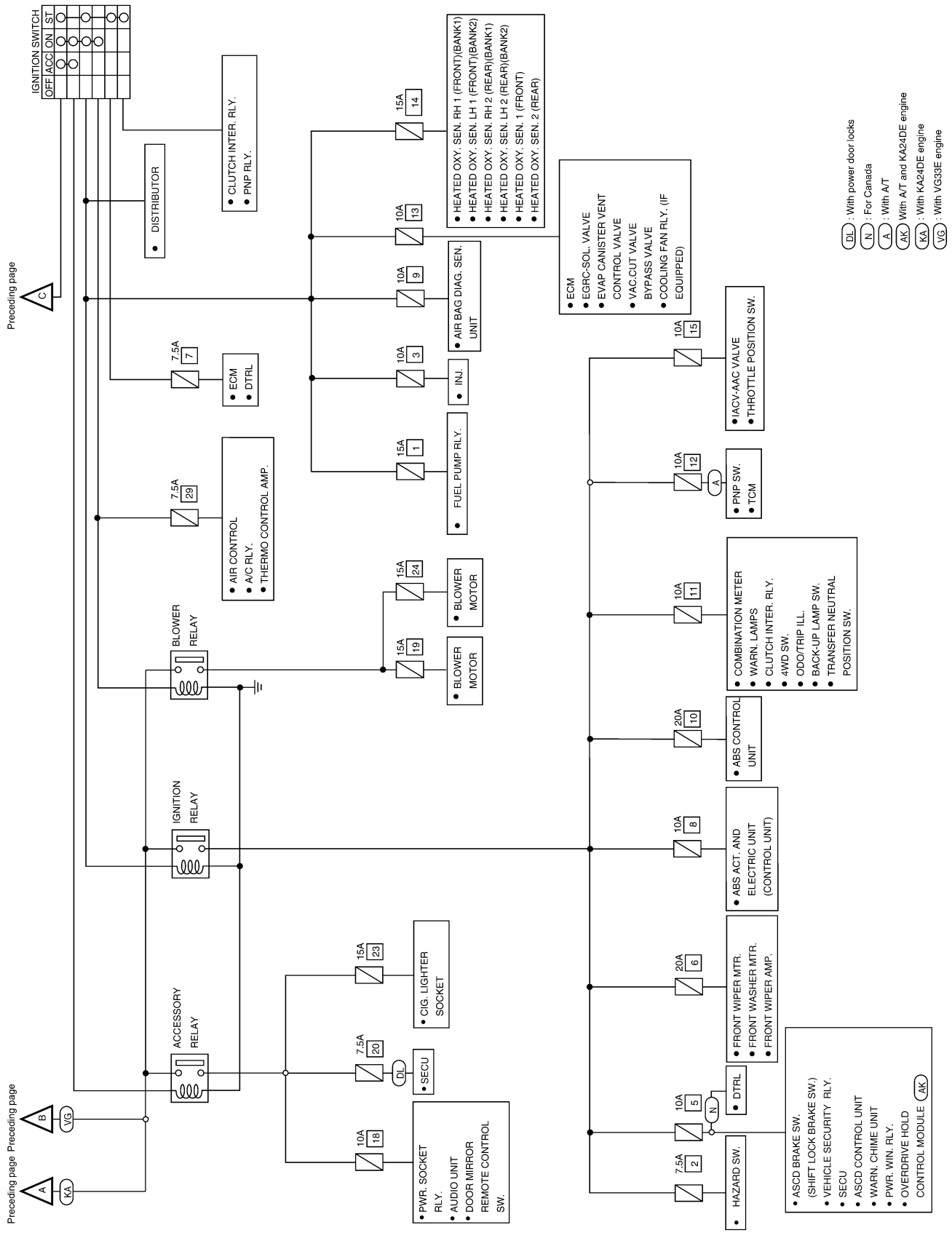

WEL503A

Wiring Diagram — POWER —

NEEL0006

BATTERY POWER SUPPLY — IGNITION SW. IN ANY POSITION

NEEL0006S01

NOTE:

For detailed ground distribution information, refer to “GROUND DISTRIBUTION”, EL-17.

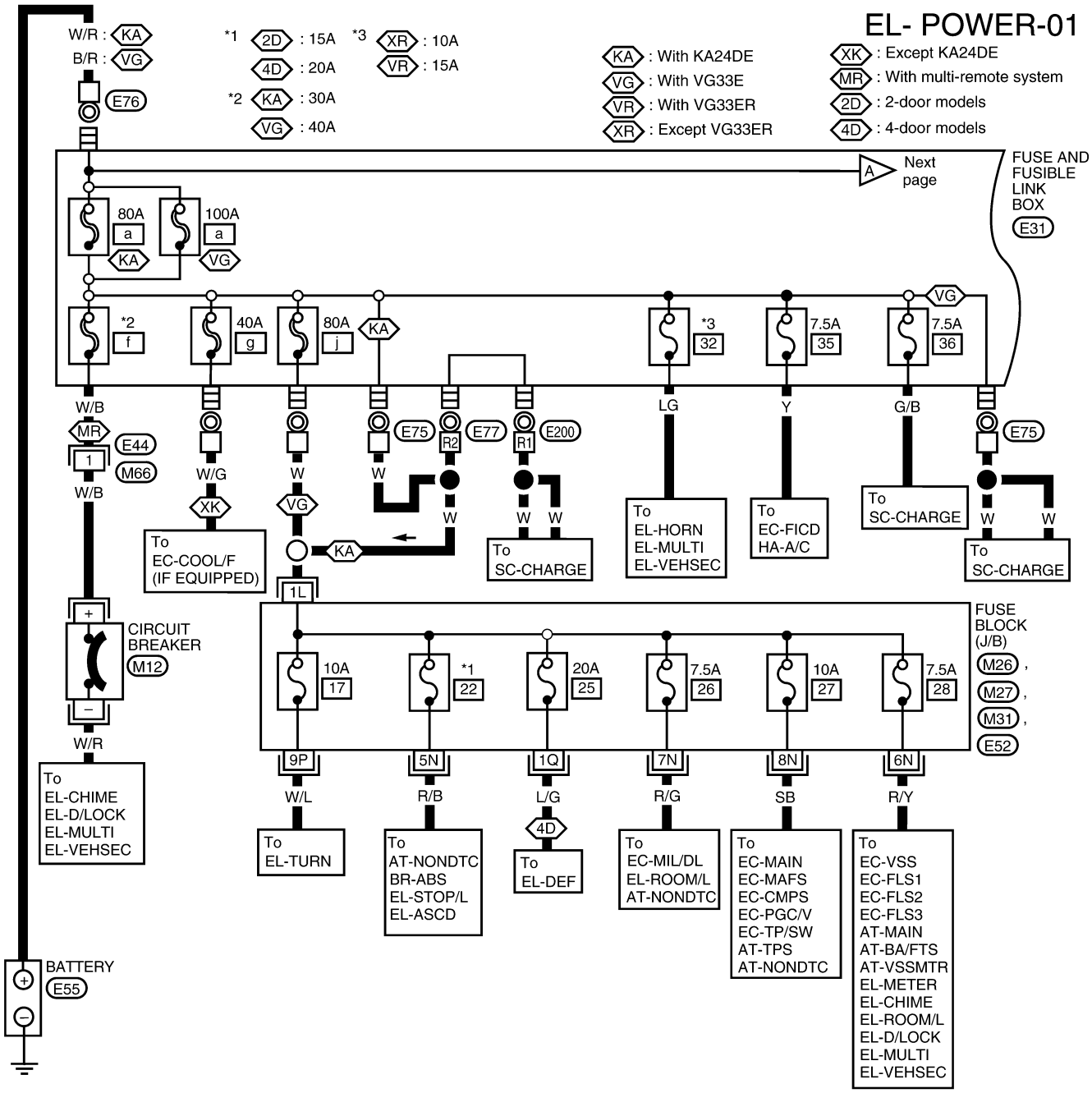

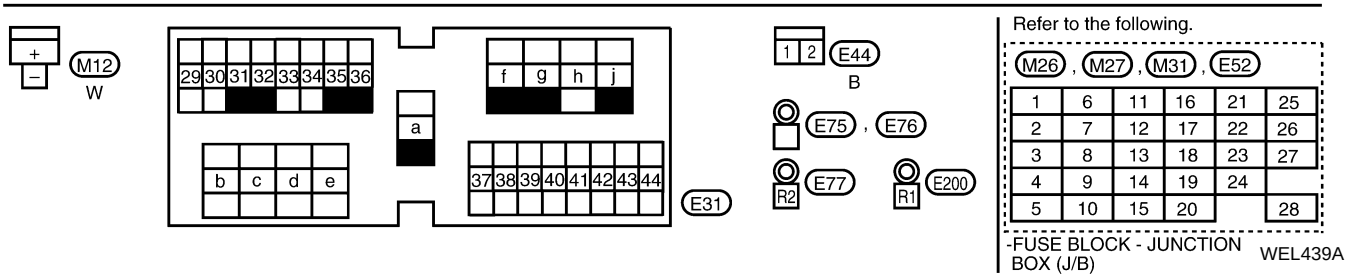

1	6	11	16	21	25
2	7	12	17	22	26
3	8	13	18	23	27
4	9	14	19	24	
5	10	15	20		28

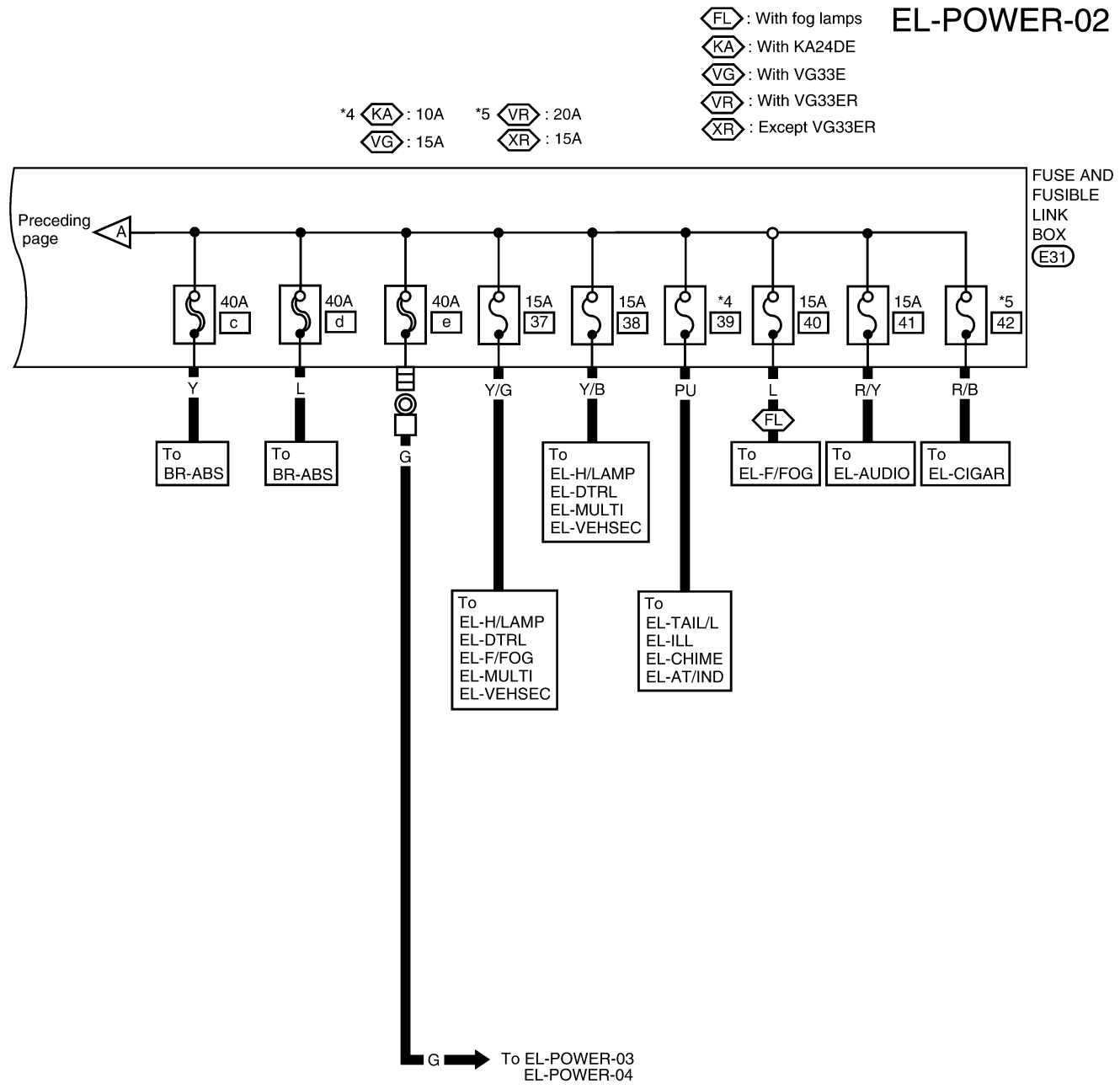
EL-POWER-02
FL : With fog lamps
KA : With KA24DE
VG : With VG33E
VR : With VG33ER
XR : Except VG33ER
*4 KA : 10A
VG : 15A
*5 VR : 20A
XR : 15A
FUSE AND FUSIBLE LINK BOX
E31
Preceding page
A
40A c
40A d
40A e
15A 37
15A 38
*4 39
15A 40
15A 41
*5 42
Y
L
Y/G
Y/B
PU
L
R/Y
R/B
FL
G
To BR-ABS
To BR-ABS
To EL-H/LAMP EL-DTRL EL-MULTI EL-VEHSEC
To EL-F/FOG
To EL-AUDIO
To EL-CIGAR
To EL-H/LAMP EL-DTRL EL-F/FOG EL-MULTI EL-VEHSEC
To EL-TAIL/L EL-ILL EL-CHIME EL-AT/IND
G
To EL-POWER-03 EL-POWER-04

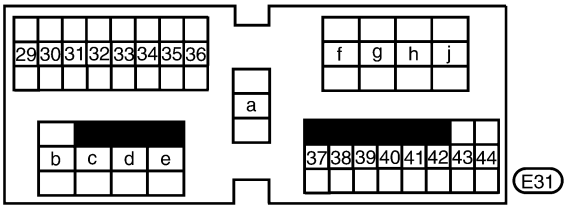
29 30 31 32 33 34 35 36
f g h j
a
b c d e
37 38 39 40 41 42 43 44
E31

WEL440A

ACCESSORY POWER SUPPLY — IGNITION SW. IN ACC OR ON

=NEEL0006S02

NOTE:

For detailed ground distribution information, refer to "GROUND DISTRIBUTION", EL-17.

EL-POWER-03

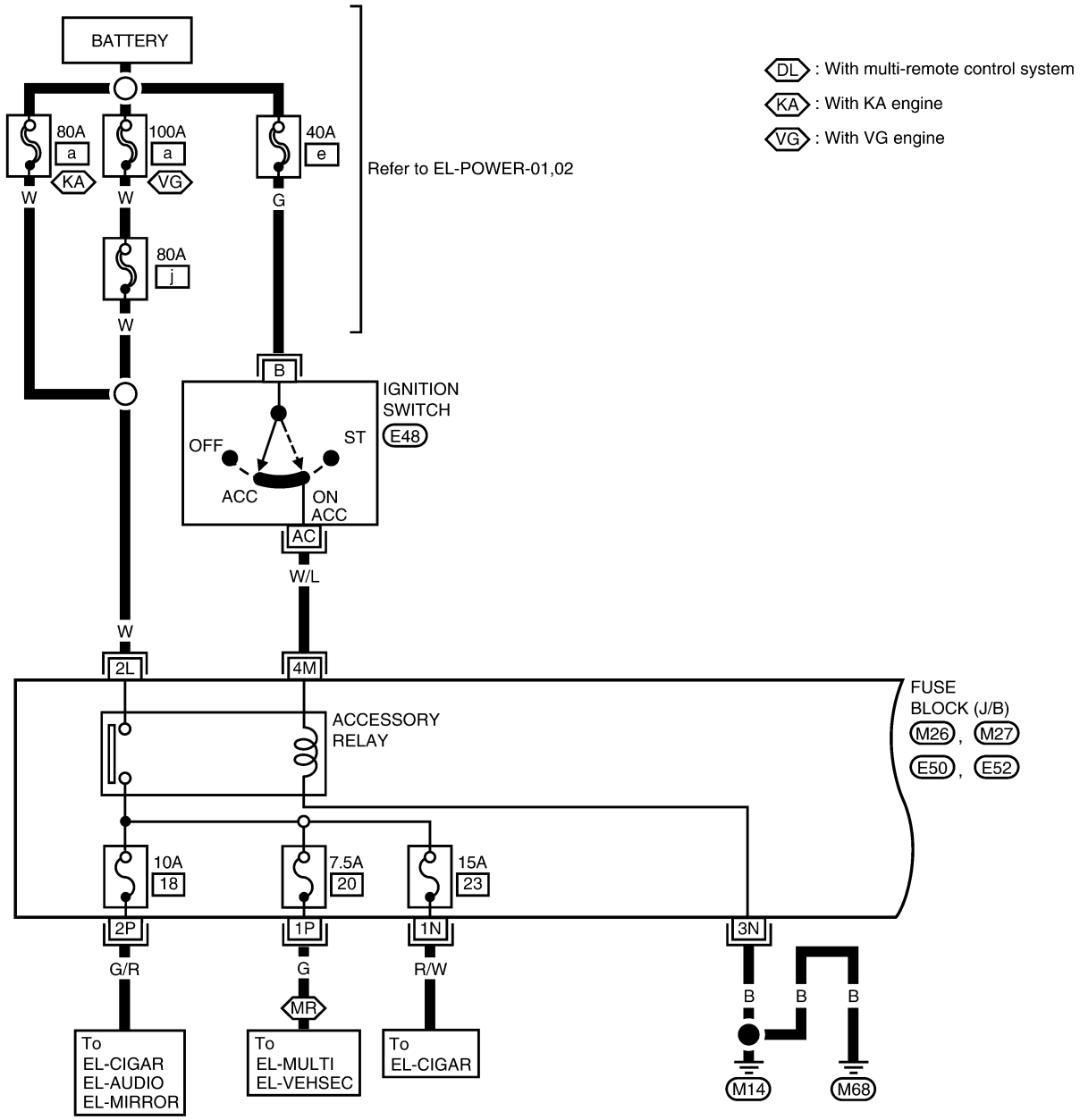

Refer to the following.

M26, M27, E50, E52

1	6	11	16	21	25
2	7	12	17	22	26
3	8	13	18	23	27
4	9	14	19	24	
5	10	15	20		28

-FUSE BLOCK - JUNCTION BOX (J/B)

LEL791

IGNITION POWER SUPPLY — IGNITION SW. IN ON AND/OR START

=NEEL0006S03

NOTE:

For detailed ground distribution information, refer to "GROUND DISTRIBUTION", EL-17.

EL-POWER-04

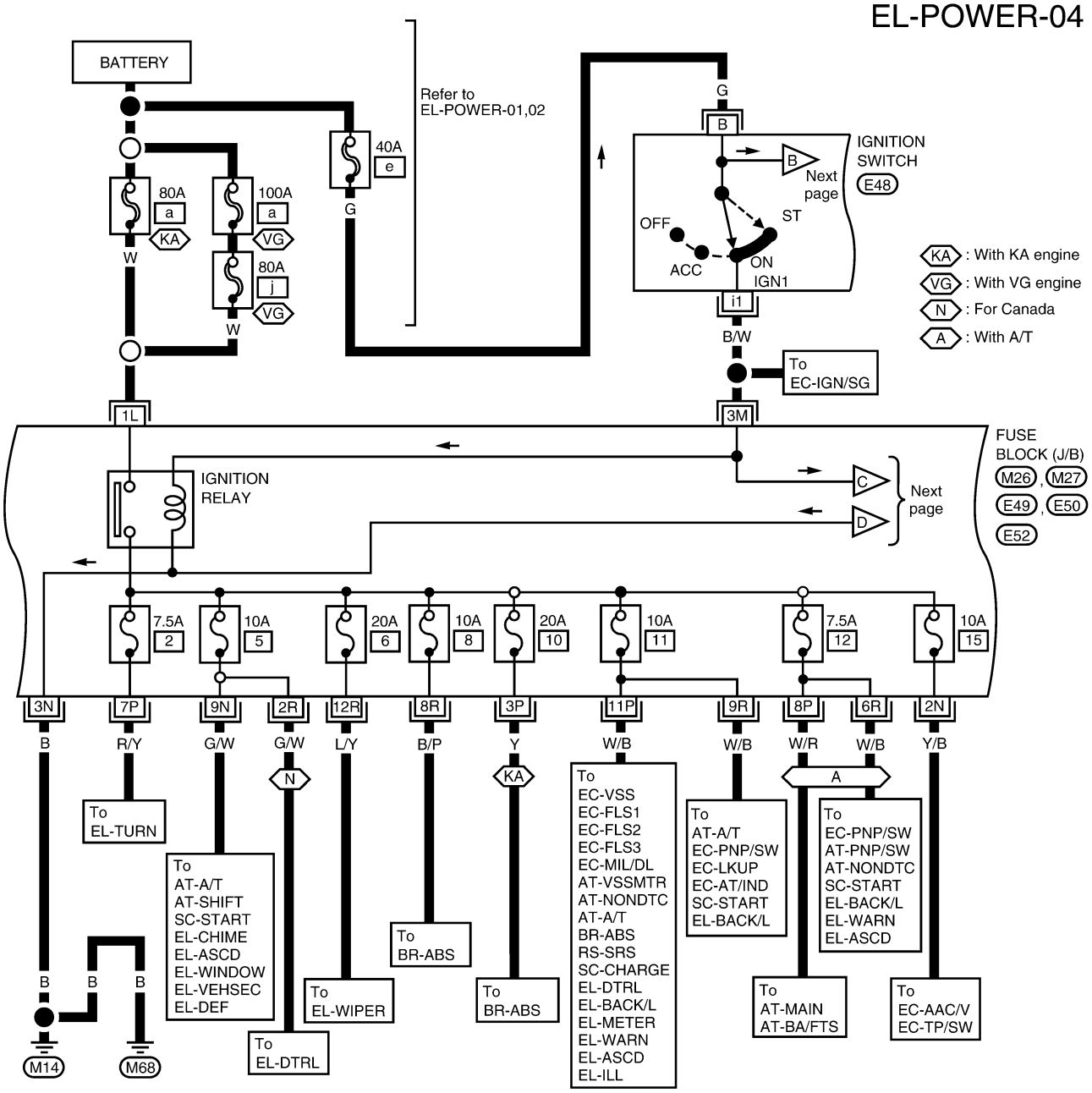

Refer to the following.

M26 , M27 , E49 , E50 , E52

1	6	11	16	21	25
2	7	12	17	22	26
3	8	13	18	23	27
4	9	14	19	24	
5	10	15	20		28

-FUSE BLOCK - JUNCTION BOX (J/B)

WEL042B

EL-POWER-05

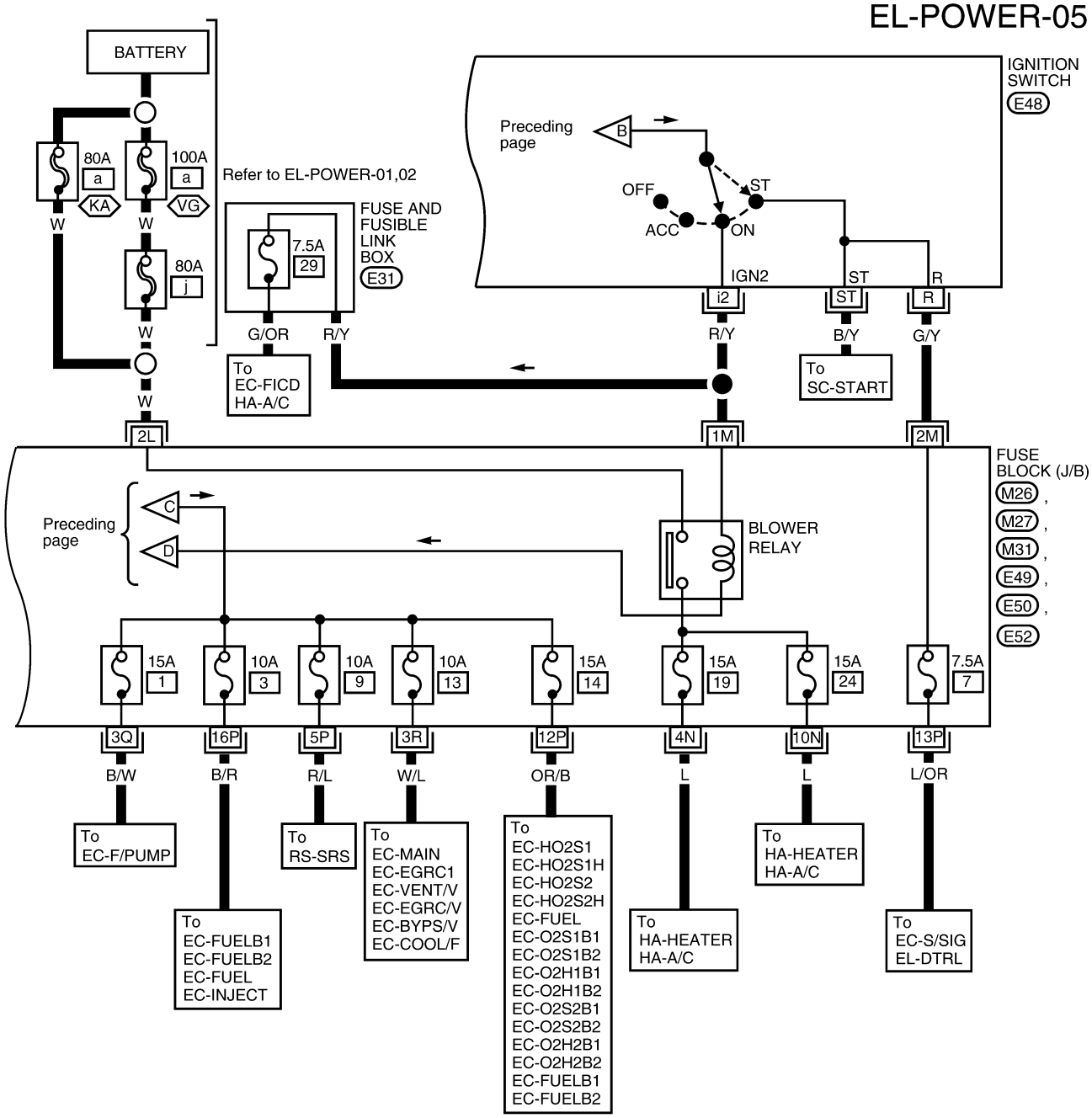

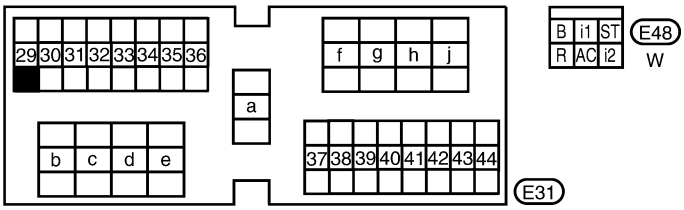

Refer to the following.

M26 , M27 , M31 , E49 , E50 , E52

1	6	11	16	21	25
2	7	12	17	22	26
3	8	13	18	23	27
4	9	14	19	24	
5	10	15	20		28

-FUSE BLOCK - JUNCTION BOX (J/B)

LEL793

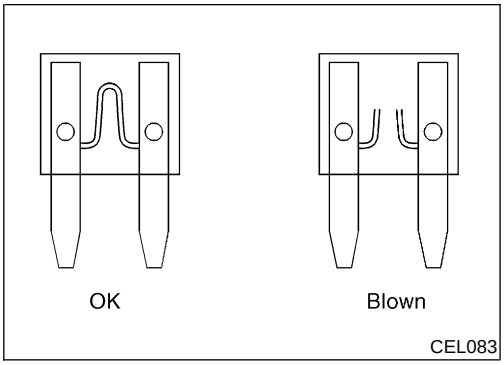

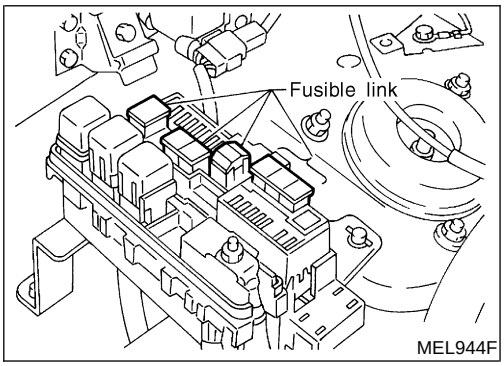

Inspection

NEEL0007

FUSE

NEEL0007S01

- **If fuse is blown, be sure to eliminate cause of problem before installing new fuse.**
- **Use fuse of specified rating. Never use fuse of more than specified rating.**
- **Do not partially install fuse; always insert it into fuse holder properly.**
- **Remove fuse for "ELECTRICAL PARTS (BAT)" if vehicle is not used for a long period of time.**

FUSIBLE LINK

NEEL0007S02

A melted fusible link can be detected either by visual inspection or by feeling with fingertip. If its condition is questionable, use circuit tester or test lamp.

CAUTION:

- **If fusible link should melt, it is possible that critical circuit (power supply or large current carrying circuit) is shorted. In such a case, carefully check and eliminate cause of problem.**
- **Never wrap outside of fusible link with vinyl tape. Important: Never let fusible link touch any other wiring harness, vinyl or rubber parts.**

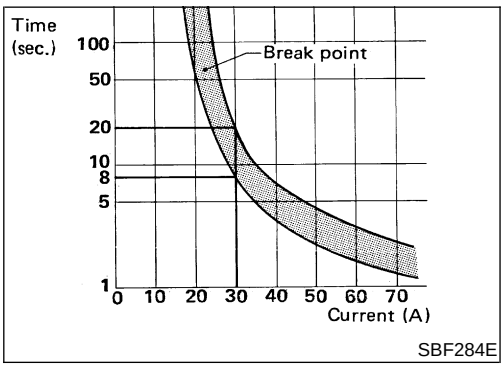

CIRCUIT BREAKER

NEEL0007S03

For example, when current is 30A, the circuit is broken within 8 to 20 seconds.

Circuit breakers are used in the following systems.

Ground Distribution

MAIN HARNESS

NEEL0171

NEEL0171S01

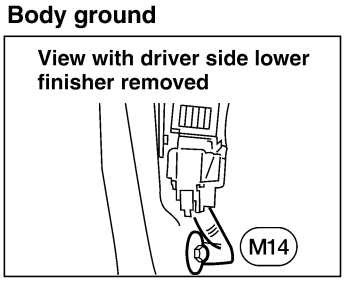

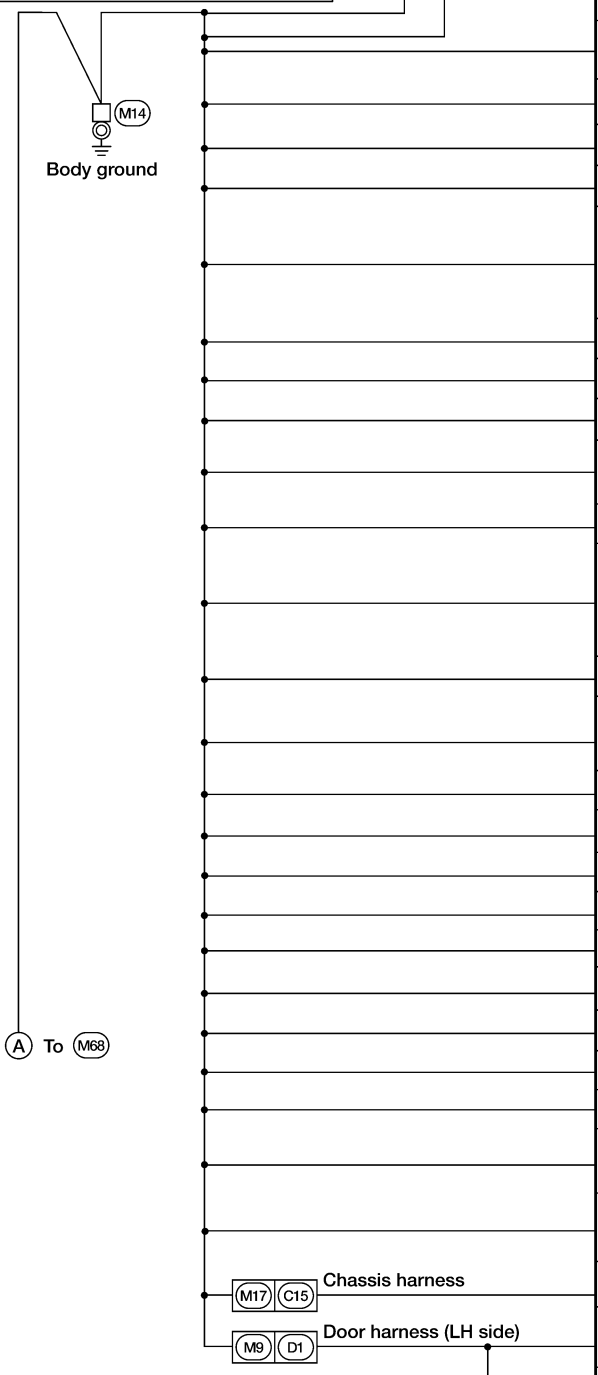

CONNECTOR NUMBER	CONNECT TO
M5	Clutch interlock switch (with M/T)
M6	Vehicle security relay (Terminal No. 3) (with vehicle security system) (with VG engine)
M11	Warning chime unit (Terminal No. 8) (without power door locks)
M19	Seat belt buckle switch
M20	Front door switch LH
M25	ABS check connector (with 2-wheel ABS)
M27	Fuse block (J/B) (Terminal No. 3N) • Accessory relay • Blower relay • Ignition relay
M28	Illumination control switch
M32	Data link connector (Terminal No. 4)
M35	A/T device (shift lock) (Terminal No. 1) (with A/T)
M35	A/T device (overdrive control switch) (Terminal No. 5) (with VG engine and A/T)
M36	Overdrive control switch (with KA engine and A/T)
M39	Combination meter (Terminal No. 36) • ABS warning lamp • Four wheel drive indicator • Turn signal indicators
M72	Door mirror remote control switch (Terminal No. 3)
M75	Subwoofer amplifier (with premium audio system) (except crew cab)
M76	ATP relay (Terminal No. 2) (with A/T) (2-door models)
M76	ATP relay (Terminal No. 4) (with A/T)
M112	Smart entrance control unit (Terminal No. 64)
M114	Air bag diagnosis sensor unit
M119	ASCD control unit (Terminal No. 17) (with ASCD)
M122	Rear window defogger timer (without power door locks)
M124	Passenger air bag deactivation switch (except Crew Cab)
M125	Rear window defogger switch (indicator) (Terminal No. 4)
M125	Rear window defogger switch (Terminal No. 2)
M126	Passenger air bag deactivation switch indicator (except Crew Cab)
M130	Overdrive hold control module (Terminal No. 4) (with KA engine and A/T) (if equipped)
C4	ABS actuator (with 2-wheel ABS)
D7	Main power window and door lock/unlock switch (with power door locks)
D9	Front door key cylinder switch LH (with power door locks)

WEL488A

Body ground

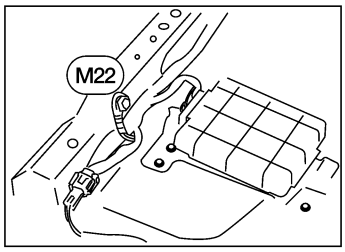

CONNECTOR NUMBER	CONNECT TO
M23	ABS control unit (Terminal No. 11) (With 2-wheel ABS)

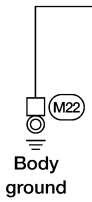

LEL795

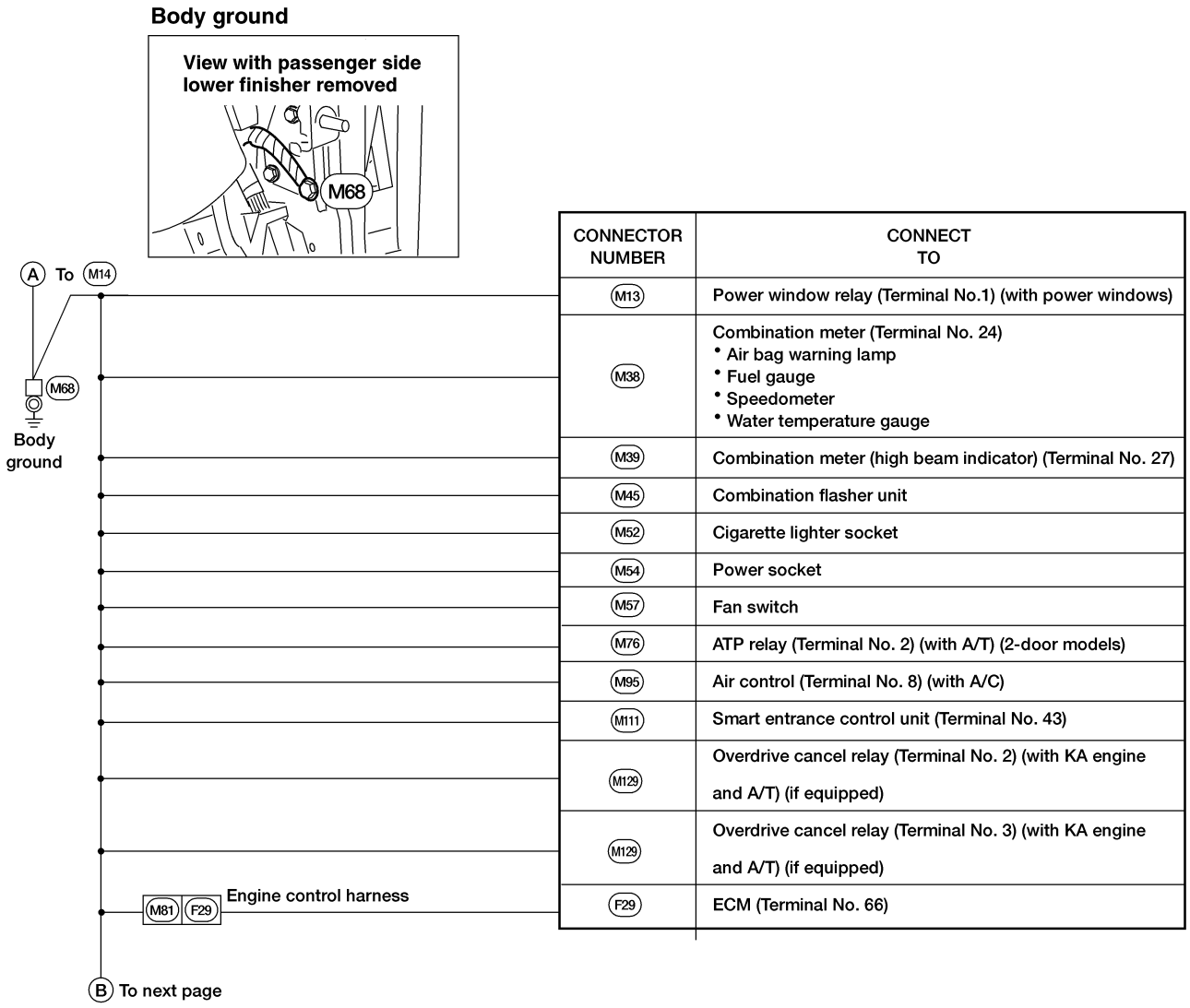

CONNECTOR NUMBER	CONNECT TO
M13	Power window relay (Terminal No.1) (with power windows)
M38	Combination meter (Terminal No. 24) • Air bag warning lamp • Fuel gauge • Speedometer • Water temperature gauge
M39	Combination meter (high beam indicator) (Terminal No. 27)
M45	Combination flasher unit
M52	Cigarette lighter socket
M54	Power socket
M57	Fan switch
M76	ATP relay (Terminal No. 2) (with A/T) (2-door models)
M95	Air control (Terminal No. 8) (with A/C)
M111	Smart entrance control unit (Terminal No. 43)
M129	Overdrive cancel relay (Terminal No. 2) (with KA engine and A/T) (if equipped)
M129	Overdrive cancel relay (Terminal No. 3) (with KA engine and A/T) (if equipped)
F29	ECM (Terminal No. 66)

WEL489A

Body ground

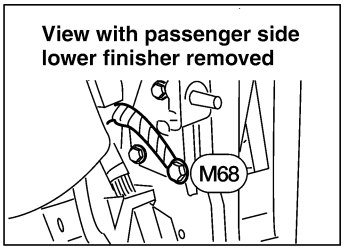

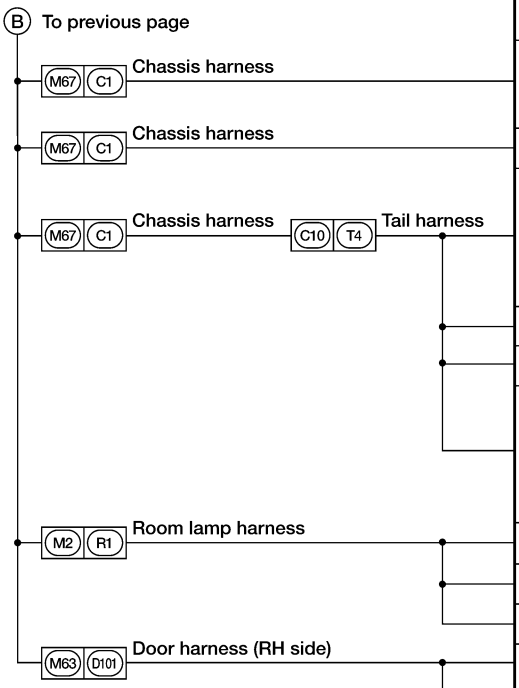

CONNECTOR NUMBER	CONNECT TO
C13	Fuel tank gauge unit (Terminal No. E) • Fuel level sensor unit • Tank fuel temperature sensor
C14	Fuel pump
T1	Rear combination lamp LH (Terminal No. 2) • Back-up lamp • Stop lamp • Tail lamp • Turn signal lamp
T2	License plate lamp LH
T3	License plate lamp RH
T5	Rear combination lamp RH (Terminal No. 2) • Back-up lamp • Stop lamp • Tail lamp • Turn signal lamp
R2	Map lamp
R3	High-mounted stop lamp
R4	Room lamp
D107	Front door lock and unlock switch RH (with power door locks)
D108	Front door lock actuator RH (door unlock sensor) (with power door locks)

LEL443A

ENGINE ROOM HARNESS
KA24DE

NEEL0171S02

NEEL0171S0203

Body ground

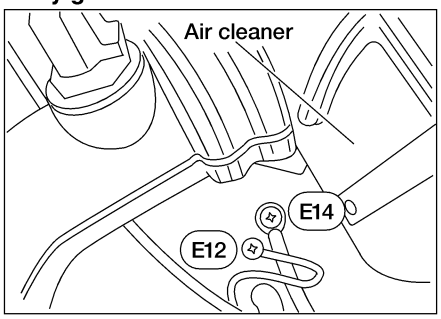

Body ground

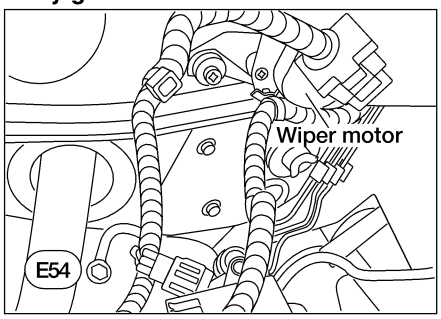

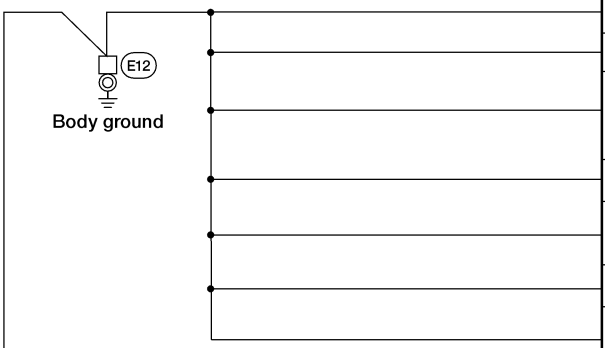

CONNECTOR NUMBER	CONNECT TO
E5	Washer fluid level switch (for Canada)
E7	Headlamp LH
E13	Front combination lamp LH (Terminal No.2) • Parking lamp • Turn signal lamp
E37	Brake fluid level switch
E39	ABS actuator and electric unit (control unit) (Terminal No.8)
E46	Front wiper switch (Terminal No. 17)
E46	Front wiper switch (Terminal No. 20) (with intermittent wipers)

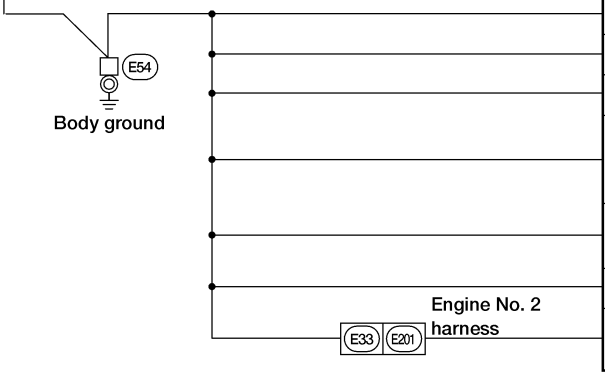

CONNECTOR NUMBER	CONNECT TO
E1	Headlamp RH
E3	Dual-pressure switch
E17	Daytime light control unit (Terminal No. 9) (for Canada)
E19	Front combination lamp RH (Terminal No.2) • Parking lamp • Turn signal lamp
E40	Front wiper amplifier (Terminal No. 7) (with intermittent wipers)
E42	Front wiper motor (Terminal No. E)
E218	Park neutral position (PNP) switch (Terminal No. 2)

LEL730

VG33E and VG33ER

NEEL0171S0204

Body ground

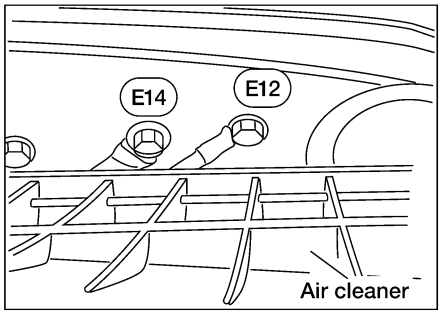

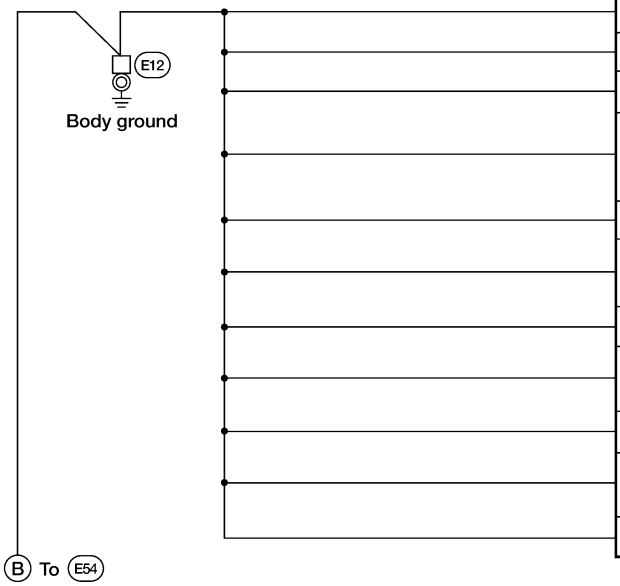

CONNECTOR NUMBER	CONNECT TO
E5	Washer fluid level switch (for Canada)
E7	Headlamp LH
E9	Hood switch (with vehicle security system)
E13	Front combination lamp LH (Terminal No.2) • Parking lamp • Turn signal lamp
E37	Brake fluid level switch
E39	ABS actuator and electric unit (control unit) [Terminal No.8 (4WD models)] [Terminal No. 16 (2WD models)]
E46	Front wiper switch (Terminal No. 17)
E46	Front wiper switch (Terminal No. 20) (with intermittent wipers)
E56	Front fog lamp relay (Terminal No. 1) (with fog lamps)
E58	Front fog lamp LH (Terminal No. 2) (with fog lamps)
E68	Ambient air temperature switch

LEL487A

Body ground

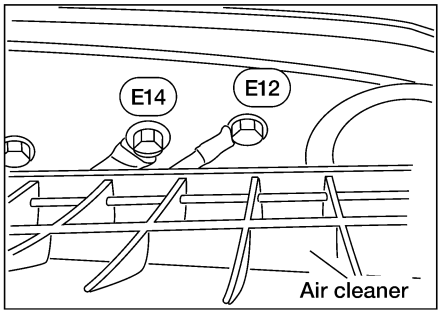

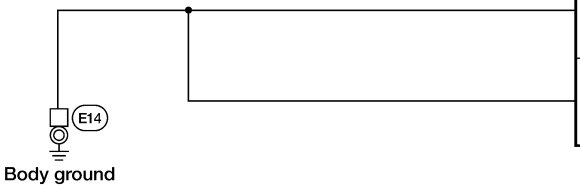

CONNECTOR NUMBER	CONNECT TO
E39	ABS actuator and electric unit (control unit) (Terminal No. 19)(2-wheel drive with VG engine)
E39	ABS actuator and electric unit (control unit) (Terminal No. 24)(4-wheel drive with VG engine)

LEL799

Body ground

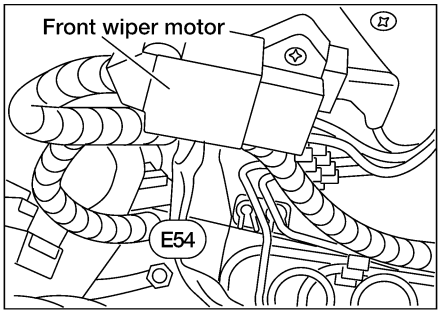

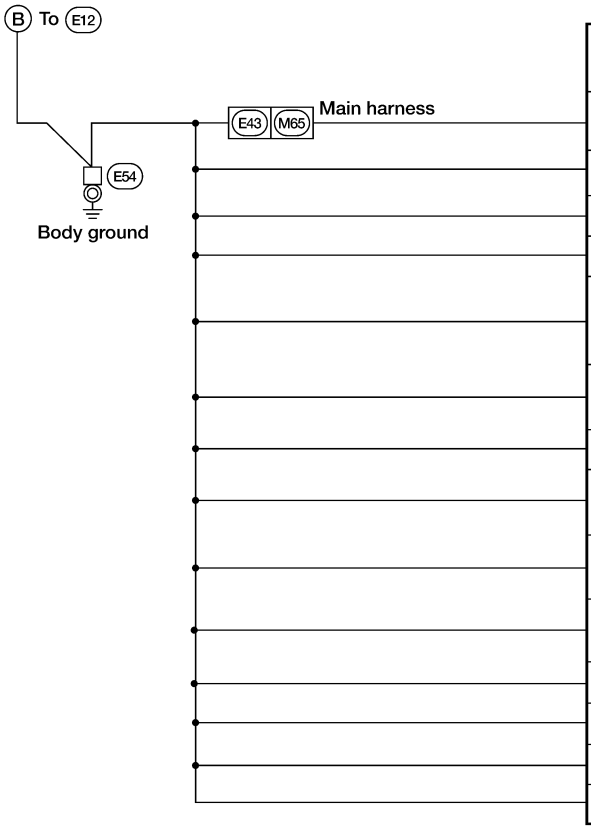

CONNECTOR NUMBER	CONNECT TO
M6	Vehicle security relay (Terminal No. 4) (with power door locks)
E1	Headlamp RH
E3	Triple-pressure switch
E17	Daytime light control unit (Terminal No. 9) (for Canada)
E19	Front combination lamp RH (Terminal No. 2) • Parking lamp • Turn signal lamp
E20	Vehicle security horn relay (Terminal No. 3) (with power door locks)
E21	ASCD relay (Terminal No. 2) (with A/T and ASCD)
E27	Park/neutral position (PNP) relay (Terminal No. 1) (with A/T)
E27	Park/neutral position (PNP) relay (Terminal No. 6) (with A/T)
E40	Front wiper amplifier (Terminal No. 7) (with intermittent wipers)
E42	Front wiper motor (Terminal No. E)
E57	Front fog lamp RH (Terminal No. 2) (with fog lamps)
E69	Cooling fan motor (Terminal No. 3) (if equipped)
E69	Cooling fan motor (Terminal No. 4) (if equipped)

WEL510A

ENGINE CONTROL HARNESS
KA24DE

NEEL0171S09

NEEL0171S0901

Engine ground

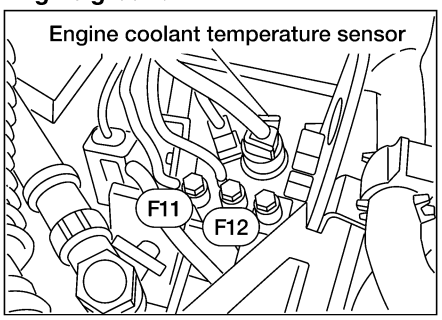

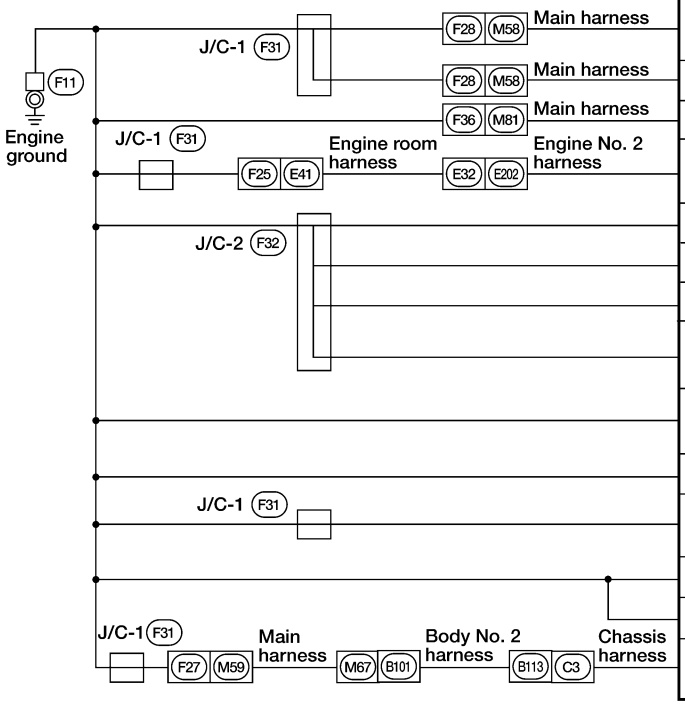

CONNECTOR NUMBER	CONNECT TO
M21	Heated oxygen sensor 2 (rear) (Terminal No. 4)
M21	Heated oxygen sensor 2 (rear)(shield wire)
M32	Data link connector (Terminal No. 5)
E211	Crankshaft position sensor (OBD) (shield wire)
F1	Mass air flow sensor (shield wire)
F2	Knock sensor (shield wire)
F3	Throttle position sensor (shield wire)
F13	Distributor (camshaft position sensor) (shield wire)
F13	Distributor (camshaft position sensor) (Terminal No. 6)
F14	Resistor (ignition coil) (shield wire)
F16	Heated oxygen sensor 1 (front) (shield wire)
F29	ECM (Terminal No. 25)
F29	ECM (Terminal No. 32)
C4	Evap control system pressure sensor (shield wire)

CONNECTOR NUMBER	CONNECT TO
F7	IACV-FICD solenoid valve
F13	Distributor (power transistor) (Terminal No. 2)
F29	ECM (Terminal No. 10)
F29	ECM (Terminal No. 19)
F29	ECM (Terminal No. 116)
F29	ECM (Terminal No. 124)

WEL490A

VG33E and VG33ER

NEEL0171S0902

Engine ground (VG33E)

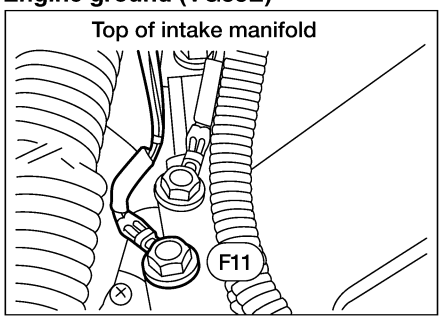

Engine ground (VG33ER)

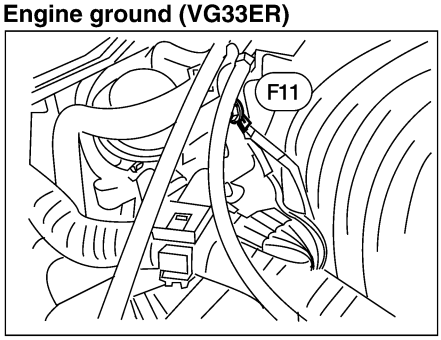

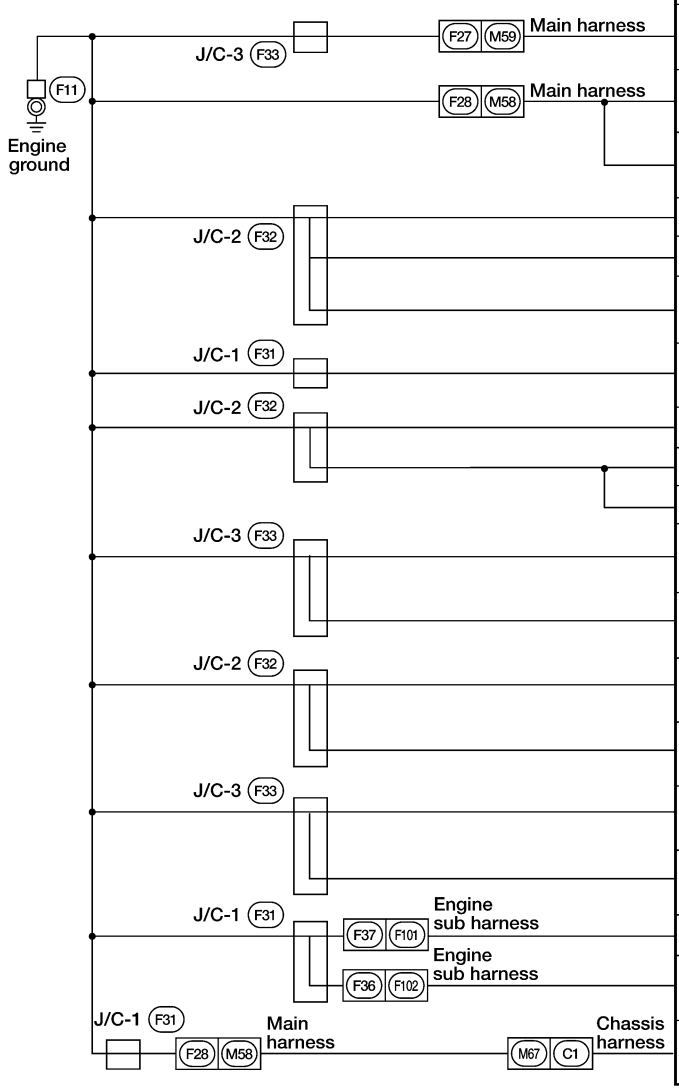

CONNECTOR NUMBER	CONNECT TO
M32	Data link connector (Terminal No. 5)
M78	TCM (transmission control module) (Terminal No. 25) (with A/T)
M78	TCM (transmission control module) (Terminal No. 48) (with A/T)
F1	Mass air flow sensor (shield wire)
F3	Throttle position sensor (shield wire)
F13	Distributor (camshaft position sensor) (Terminal No. 6)
F13	Distributor (camshaft position sensor) (shield wire)
F14	Resistor (ignition coil) (shield wire)
F29	ECM (Terminal No. 25)
F29	ECM (Terminal No. 32)
F39	Heated oxygen sensor 2 (rear) (bank2) (shield wire)
F39	Heated oxygen sensor 2 (rear) (bank2) (Terminal No. 4)
F40	Heated oxygen sensor 1 (front) (bank2) (shield wire)
F41	Heated oxygen sensor 1 (front) (bank1) (shield wire)
F42	Heated oxygen sensor 2 (rear) (bank1) (shield wire)
F42	Heated oxygen sensor 2 (rear) (bank1) (Terminal No. 4)
F109	Knock sensor (shield wire)
F110	Crankshaft position sensor (OBD) (shield wire)
C4	Evap control system pressure sensor (shield wire)

WEL442A

Engine ground (VG33E)

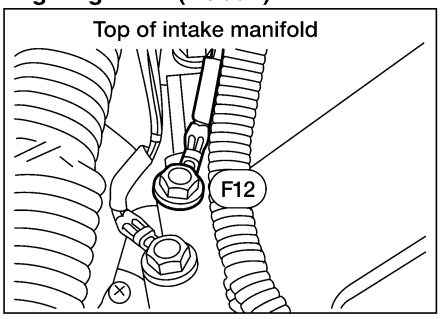

Engine ground (VG33ER)

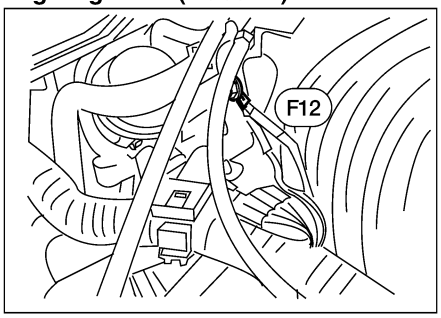

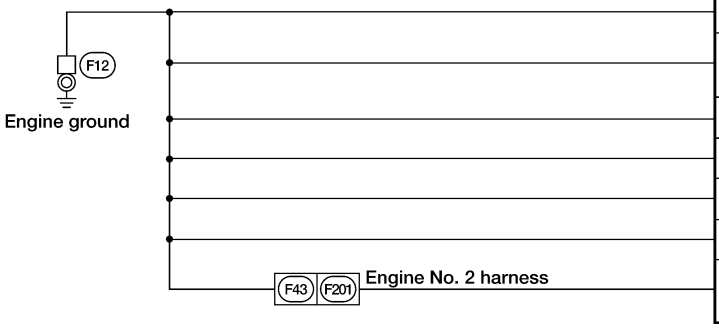

CONNECTOR NUMBER	CONNECT TO
F8	Power steering oil pressure switch
F13	Distributor (power transistor) (Terminal No. 2)
F29	ECM (Terminal No. 10)
F29	ECM (Terminal No. 19)
F29	ECM (Terminal No. 116)
F29	ECM (Terminal No. 124)
F218	Park/neutral position (PNP) switch (with M/T)

LEL441A

ENGINE NO. 2 HARNESS
KA24DE

NEEL0171S10

NEEL0171S1001

Body ground

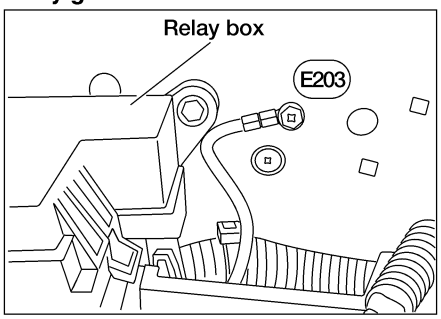

CONNECTOR NUMBER	CONNECT TO
E206	Generator

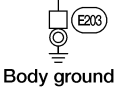

AEL710C

GENERATOR HARNESS
VG33E and VG33ER

NEEL0171S03

NEEL0171S0302

Body ground

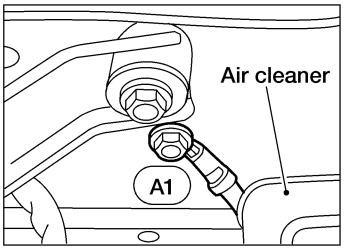

CONNECTOR NUMBER	CONNECT TO
A7	Generator

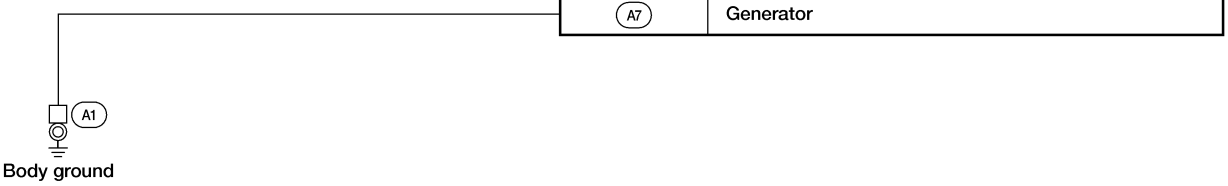

AEL697C

ROOM LAMP HARNESS
Crew Cab models

NEEL0171S08

NEEL0171S0801

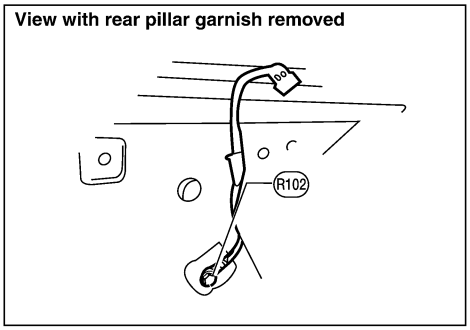

CONNECTOR NUMBER	CONNECT TO
R101	Rear window defogger (Crew Cab models)

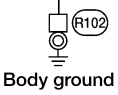

WEL453A

Check

NEEL0009

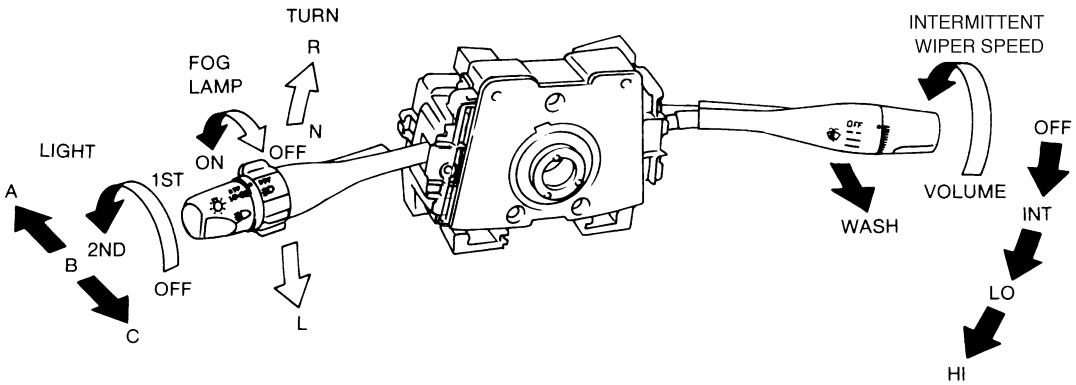

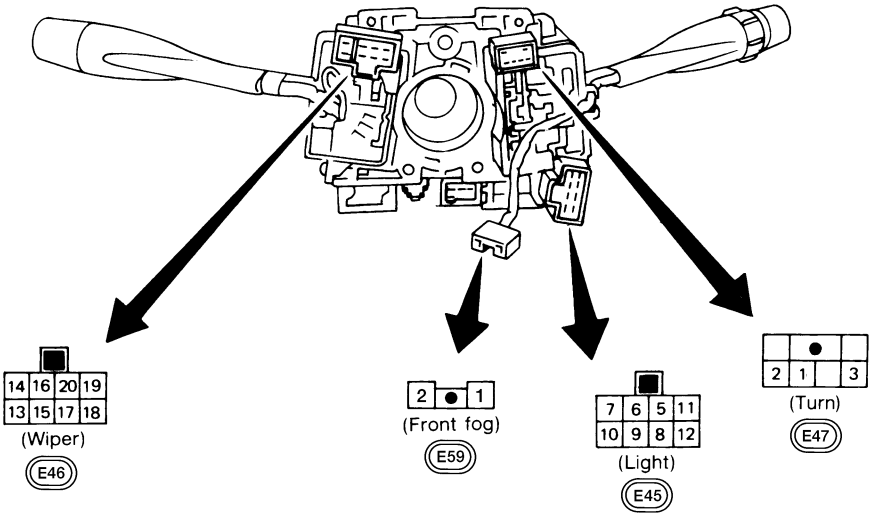

LIGHTING SWITCH

	OFF			1ST			2ND		
	A	B	C	A	B	C	A	B	C
5			○			○	○	○	○
6			○			○	○		○
7								○	
8			○			○	○	○	○
9			○			○	○		○
10								○	
11				○	○	○	○	○	○
12				○	○	○	○	○	○

WIPER SWITCH

	OFF	INT	LO	HI	WASH
13	○	○			
14	○	○	○		
15		○			
16				○	
17		○	○	○	○
18					○

INTERMITTENT WIPER VOLUME

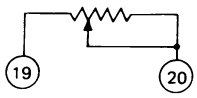

TURN SIGNAL SWITCH

	R	N	L
1	○		○
2	○		
3			○

FRONT FOG LAMP SWITCH

	OFF	ON
1		○
2		○

AEL122C

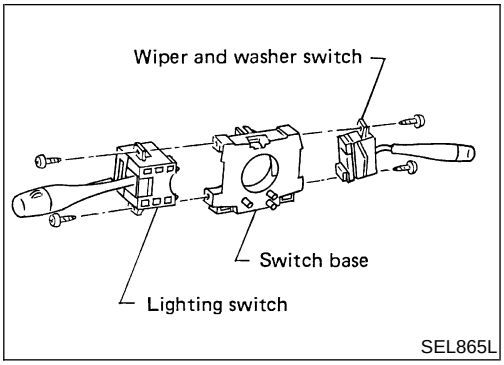

Replacement

NEEL0010

For removal and installation of spiral cable, refer to *RS-20*, "Driver Air Bag Module and Spiral Cable".

- Each switch can be replaced without removing combination switch base.

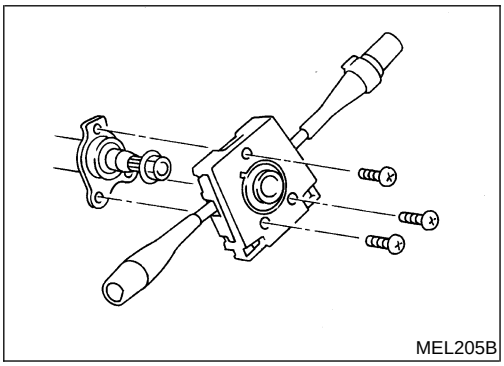

- To remove combination switch base, remove base attaching screws.

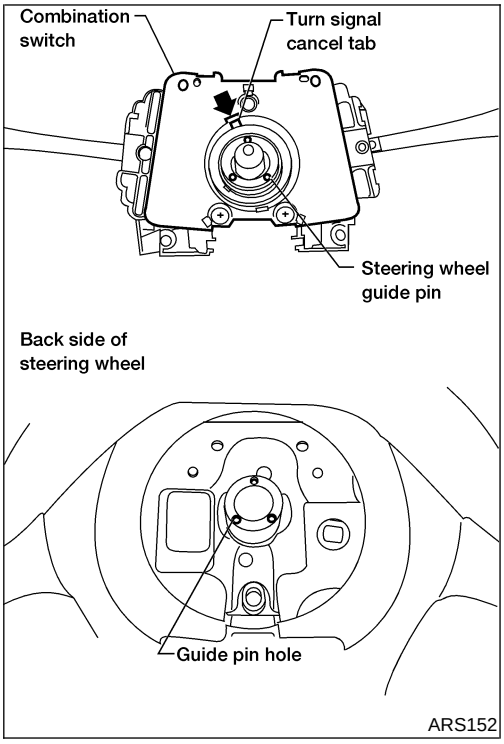

- Before installing the steering wheel, align the turn signal cancel tab with the notch of the combination switch. Refer to ***RS-20***, "Driver Air Bag Module and Spiral Cable".

Check

NEEL0011

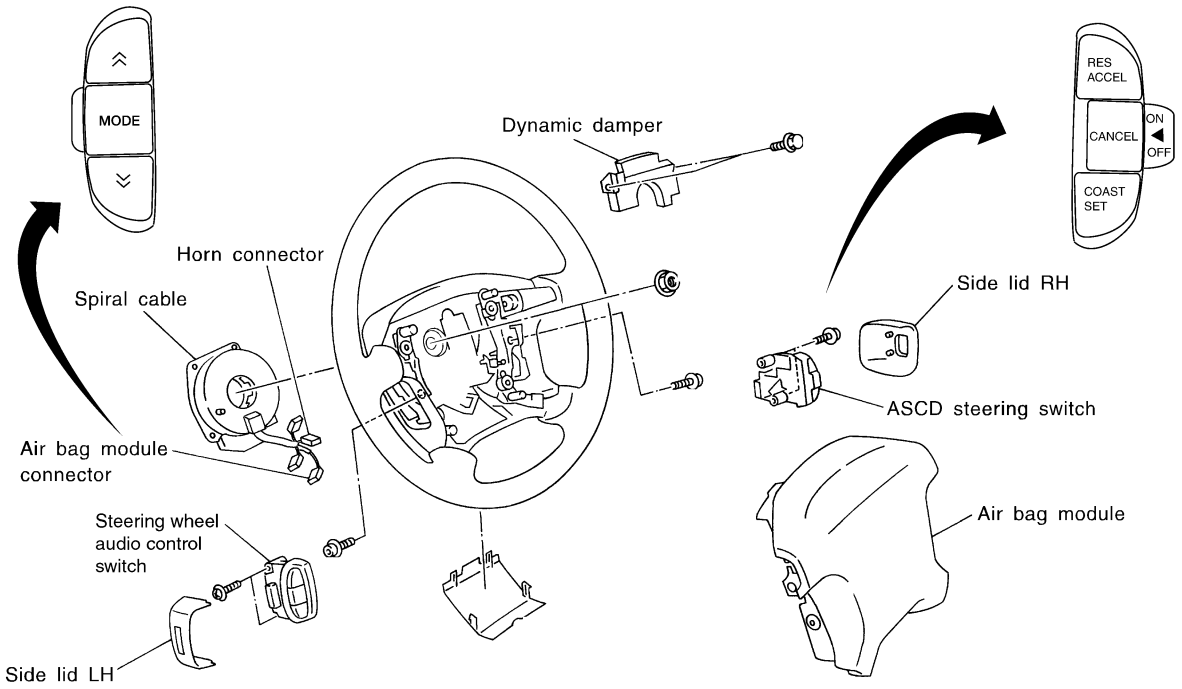

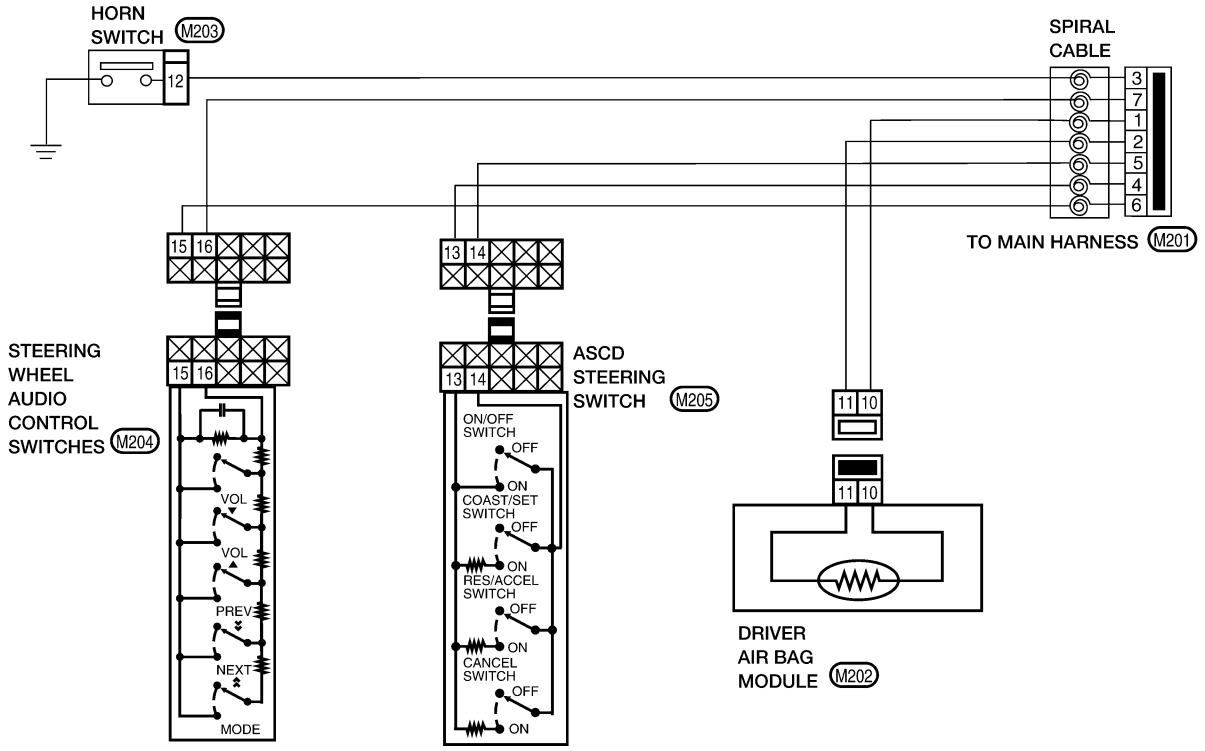

LEL179A

GI
MA
EM
LC
EC
FE
CL
MT
AT
TF
PD
AX
SU
BR
ST
RS
BT
HA
SC
EL
IDX

System Description

NEEL0012

The headlamps are controlled by the lighting switch which is built into the combination switch.
Power is supplied at all times

- through 15A fuse (No. 37, located in the fuse and fusible link box)
- to lighting switch terminal 5 and
- through 15A fuse (No. 38, located in the fuse and fusible link box)
- to lighting switch terminal 8.

LOW BEAM OPERATION

NEEL0012S01

With the lighting switch in the headlamp ON (2ND) position and LOW BEAM (B) position, power is supplied

- from lighting switch terminal 10
- to headlamp LH terminal D and
- from lighting switch terminal 7
- to headlamp RH terminal D.

Ground is supplied to headlamp LH/RH terminal E through body grounds E12 and E54.
With power and ground supplied, the low beams illuminate.

HIGH BEAM OPERATION/FLASH-TO-PASS OPERATION

NEEL0012S02

With the lighting switch in the FLASH TO PASS (C) position or the headlamp ON (2ND) position and HIGH BEAM (A) position, power is supplied

- from lighting switch terminal 6
- to headlamp RH terminal M and
- from lighting switch terminal 9
- to headlamp LH terminal M and
- to combination meter terminal 26 for the high beam indicator.

Ground is supplied to terminal 27 of the combination meter through body grounds M14 and M68.
Ground is supplied to headlamp LH/RH terminal E through body grounds E12 and E54.
With power and ground supplied, the high beams and the high beam indicator illuminate.

VEHICLE SECURITY SYSTEM

NEEL0012S03

The vehicle security system will flash the high beams if the system is triggered. Refer to “VEHICLE SECURITY (THEFT WARNING) SYSTEM”, EL-210.

Wiring Diagram — H/LAMP —

NEEL0013

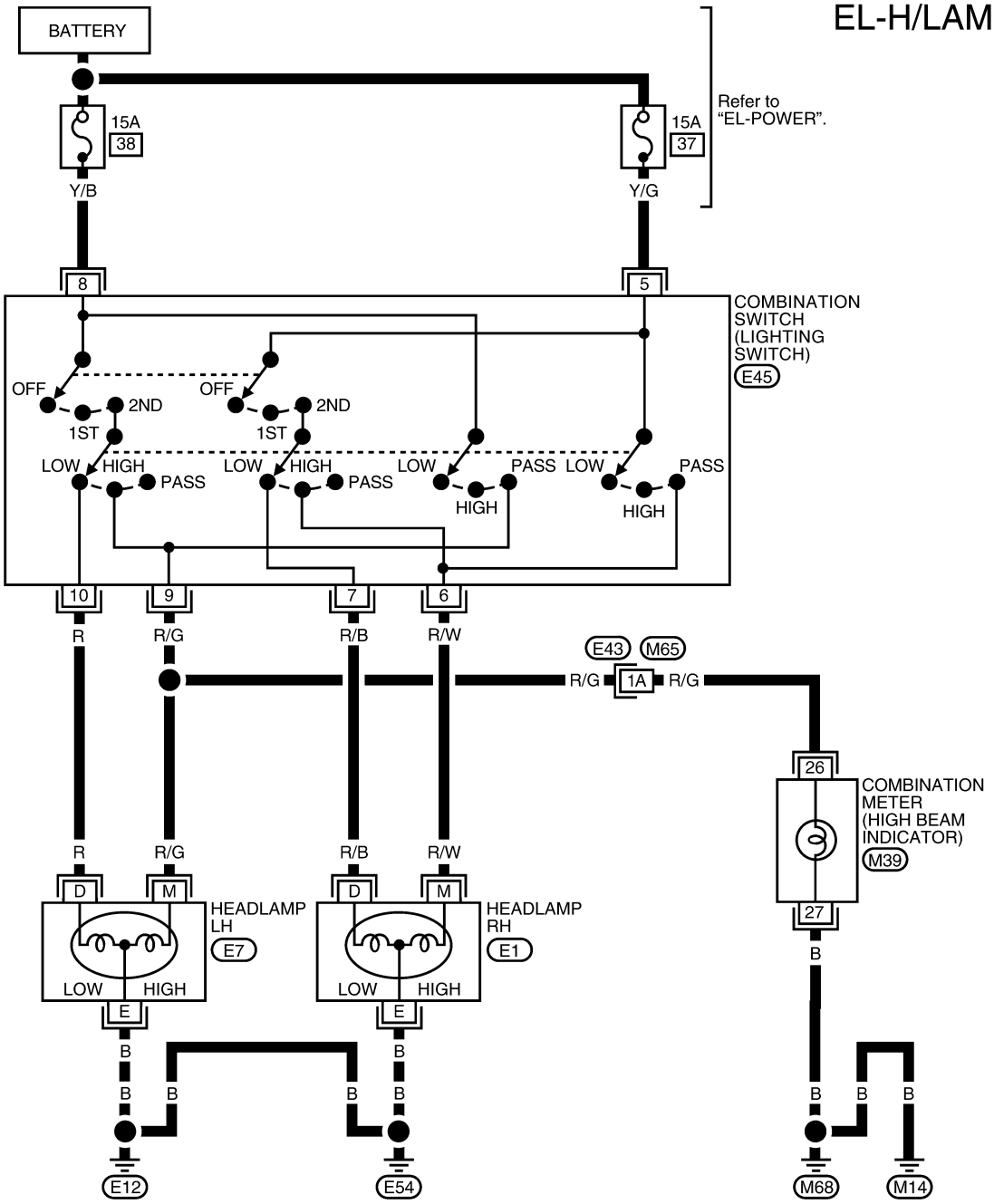

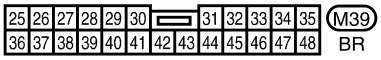

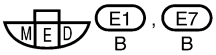

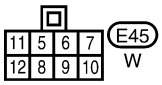

Refer to the following.
M65 , E43 - SUPER MULTIPLE JUNCTION (SMJ)

LEL738

Trouble Diagnoses

NEEL0014

Symptom	Possible cause	Repair order
Neither headlamp LH nor headlamp RH operate.	1. Lighting switch	1. Check lighting switch.
Headlamp LH does not operate, but headlamp RH operates properly.	1. Bulb 2. Headlamp LH ground circuit 3. 15A fuse 4. Lighting switch	1. Check bulb. 2. Check grounds E12 and E54 and continuity between headlamp LH terminal E and grounds E12 and E54. 3. Check 15A fuse (No. 38, located in fuse and fusible link box). Verify battery positive voltage is present at terminal 8 of lighting switch. 4. Check lighting switch.
Headlamp RH does not operate, but headlamp LH operates properly.	1. Bulb 2. Headlamp RH ground circuit 3. 15A fuse 4. Lighting switch	1. Check bulb. 2. Check grounds E12 and E54 and continuity between headlamp RH terminal E and grounds E12 and E54. 3. Check 15A fuse (No. 37, located in fuse and fusible link box). Verify battery positive voltage is present at terminal 5 of lighting switch. 4. Check lighting switch.
High beam LH does not operate, but low beam LH operates.	1. Bulb 2. Open in high beam LH circuit 3. Lighting switch	1. Check bulb. 2. Check R/G wire between lighting switch and headlamp LH for an open circuit. 3. Check lighting switch.
Low beam LH does not operate, but high beam LH operates.	1. Bulb 2. Open in low beam LH circuit 3. Lighting switch	1. Check bulb. 2. Check R wire between lighting switch and headlamp LH for an open circuit. 3. Check lighting switch.
High beam RH does not operate, but low beam RH operates.	1. Bulb 2. Open in high beam RH circuit 3. Lighting switch	1. Check bulb. 2. Check R/W wire between lighting switch and headlamp RH for an open circuit. 3. Check lighting switch.
Low beam RH does not operate, but high beam RH operates.	1. Bulb 2. Open in low beam RH circuit 3. Lighting switch	1. Check bulb. 2. Check R/B wire between lighting switch and headlamp RH for an open circuit. 3. Check lighting switch.
High beam indicator does not work.	1. Bulb 2. High beam indicator ground circuit 3. Open in high beam circuit	1. Check bulb in combination meter. 2. Check grounds M14 and M68 and continuity between combination meter terminal 27 and grounds M14 and M68. 3. Check R/G wire between lighting switch and combination meter for an open circuit.

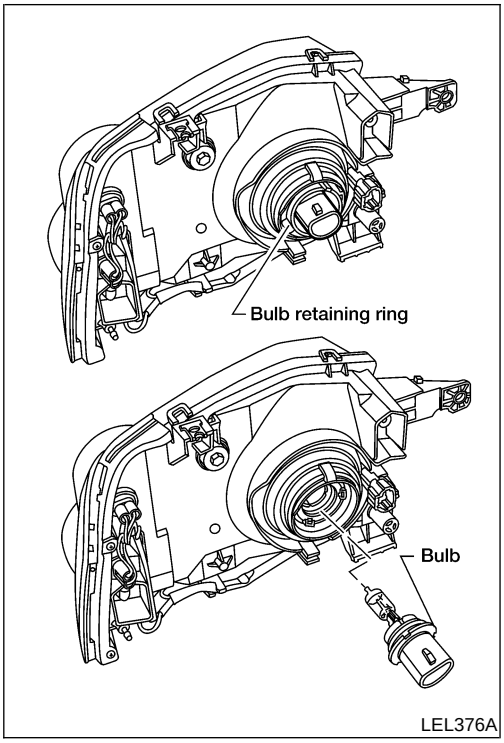

Bulb Replacement

NEEL0015

The headlamp is a semi-sealed beam type which uses a replaceable halogen bulb. The bulb can be replaced from the engine compartment side without removing the headlamp body.

- **Grasp only the plastic base when handling the bulb. Never touch the glass envelope.**

1. Disconnect the battery cable.
2. Disconnect the harness connector from the back side of the bulb.
3. Remove bulb retaining ring.
4. Remove the headlamp bulb carefully. Do not shake or rotate the bulb when removing it.
5. Install in the reverse order of removal.

CAUTION:

Do not leave headlamp reflector without bulb for a long period of time. Dust, moisture, smoke, etc. entering headlamp body may affect the performance of the headlamp. Remove headlamp bulb from the headlamp reflector just before a replacement bulb is installed.

Aiming Adjustment

NEEL0016

When performing headlamp aiming adjustment, use an aiming wall screen.

For details, refer to the regulations in your own country.

Before performing aiming adjustment, check the following.

1) **Keep all tires inflated to correct pressures.**
2) **Place vehicle on flat surface.**
3) **See that the vehicle is unloaded (except for full levels of coolant, engine oil and fuel, and spare tire, jack, and tools). Have the driver or equivalent weight placed in the driver's seat.**

LOW BEAM

NEEL0016S02

NOTE:

The horizontal headlamp aim cannot be adjusted. Only vertical aim is adjustable.

1. Turn headlamp low beam on.

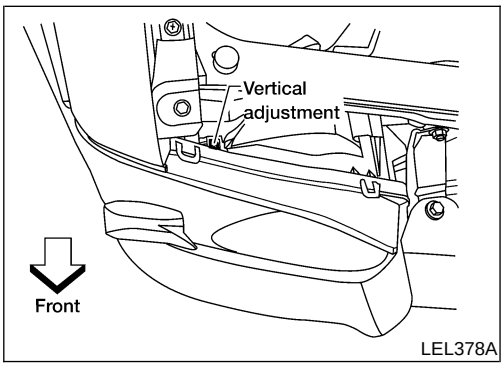

2. Use adjusting screw to adjust the vertical aim of the lamp.

- **Cover the opposite lamp and ensure fog lamps, if equipped, are turned off.**
- **Adjust beam pattern until cut-off line (top edge of illumination area) is positioned at same height off ground as bulb center (on H-line). Measure cut-off line within distance A on H-line. See aiming chart following.**

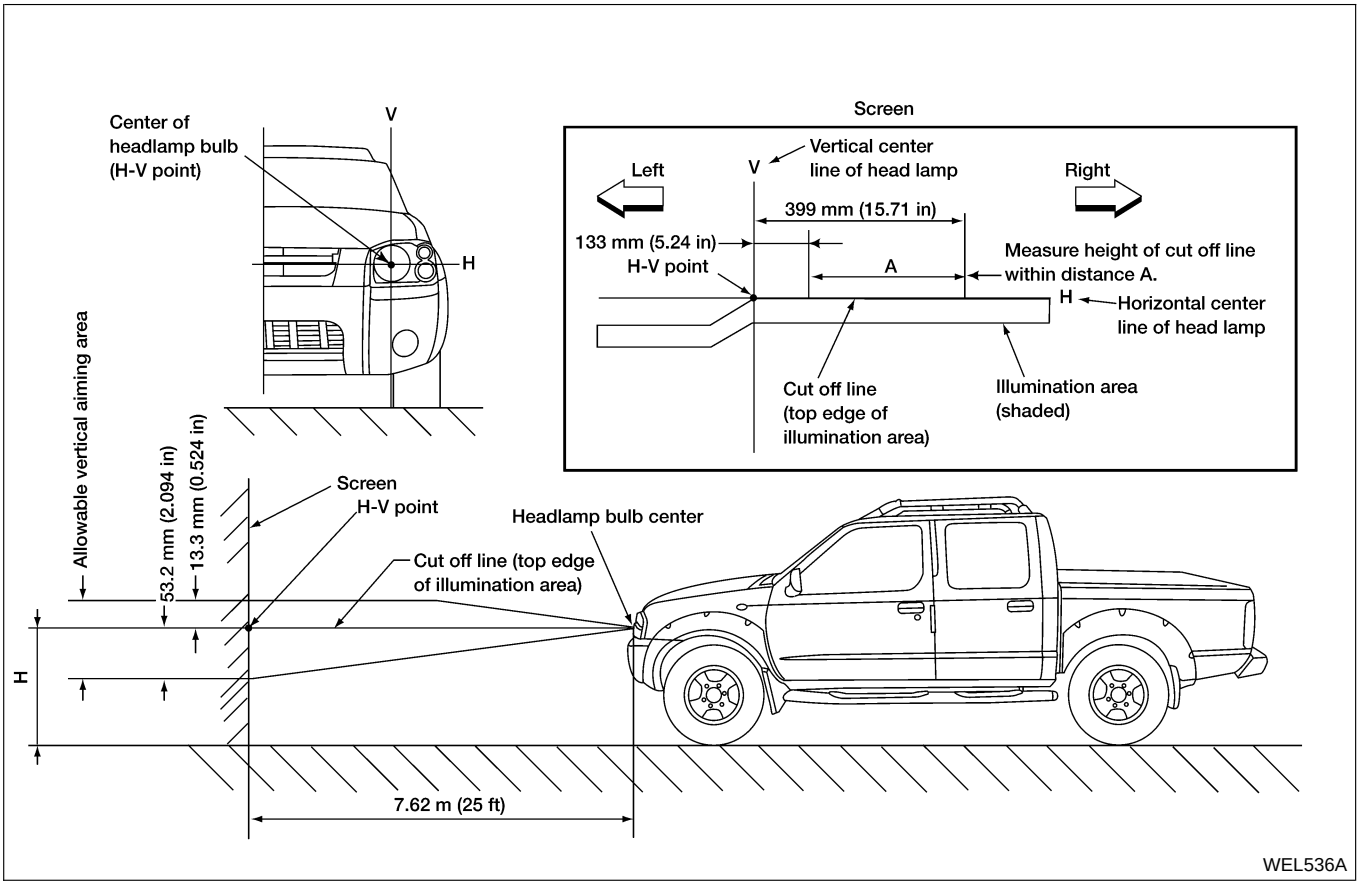

If the vehicle front body has been repaired and/or the headlamp assembly has been replaced, check aiming. Use the aiming chart shown in the figure.

- **Basic illuminating area (shaded) for adjustment should be within the range shown on the aiming chart. Adjust headlamps accordingly.**

System Description (For Canada)

NEEL0017

The headlamp system for Canada vehicles contains a daytime light control unit that activates the high beam headlamps at approximately half illumination whenever the engine is running. If the parking brake is applied before the engine is started, the daytime lights will not be illuminated. The daytime lights will illuminate once the parking brake is released. Thereafter, the daytime lights will continue to operate when the parking brake is applied. If the daytime light control unit receives a ground signal from the generator, the daytime lights will not be illuminated. The daytime lights will illuminate once a battery positive voltage signal is sent to the daytime light control unit from the generator.

Power is supplied at all times

- through 15A fuse (No. 38, located in the fuse and fusible link box)
- to daytime light control unit terminal 3 and
- to lighting switch terminal 8.

Power is also supplied at all times

- through 15A fuse (No. 37, located in the fuse and fusible link box)
- to daytime light control unit terminal 2 and
- to lighting switch terminal 5.

With the ignition switch in the ON or START position, power is supplied

- through 10A fuse [No. 5, located in the fuse block (J/B)]
- to daytime light control unit terminal 12.

With the ignition switch in the START position, power is supplied

- through 7.5A fuse [No. 7, located in the fuse block (J/B)]
- to daytime light control unit terminal 1.

Ground is supplied to daytime light control unit terminal 9 through body grounds E12 and E54.

HEADLAMP OPERATION

NEEL0017S01

Low Beam Operation

NEEL0017S0101

When the lighting switch is turned to the headlamp ON (2ND) position, LOW BEAM (B), power is supplied

- from lighting switch terminal 7
- to headlamp RH terminal D and
- to daytime light control unit terminal 4.

Ground is supplied to headlamp RH terminal E through body grounds E12 and E54.

Also, when the lighting switch is turned to the headlamp ON (2ND) position, LOW BEAM (B), power is supplied

- from lighting switch terminal 10
- to headlamp LH terminal D.

Ground is supplied

- to headlamp LH terminal E
- from daytime light control unit terminal 7
- through daytime light control unit terminal 9
- through body grounds E12 and E54.

With power and ground supplied, the low beam headlamps illuminate.

High Beam Operation/Flash-to-pass Operation

NEEL0017S0102

When the lighting switch is turned to the headlamp ON (2ND) position, HIGH BEAM (A) or FLASH TO PASS (C) position, power is supplied

- from lighting switch terminal 6
- to headlamp RH terminal M and
- to daytime light control unit terminal 8.

Also, when the lighting switch is turned to the headlamp ON (2ND) position, HIGH BEAM (A) or FLASH TO PASS (C) position, power is supplied

- from lighting switch terminal 9
- to combination meter terminal 26 for the high beam indicator and
- to daytime light control unit terminal 5
- through daytime light control unit terminal 6

- to headlamp LH terminal M.

Ground is supplied in the same manner as low beam operation.
Ground is supplied to combination meter terminal 27 through body grounds M14 and M68.
With power and ground supplied, the high beam headlamps and HI BEAM indicator illuminate.

DAYTIME LIGHT OPERATION

NEEL0017S02

With the engine running, the lighting switch in the OFF or 1ST position and parking brake released, power is supplied

- to daytime light control unit terminal 3
- through daytime light control unit terminal 6
- to headlamp LH terminal M
- through headlamp LH terminal E
- to daytime light control unit terminal 7
- through daytime light control unit terminal 8
- to headlamp RH terminal M.

Ground is supplied to headlamp RH terminal E through body grounds E12 and E54.
Because the high beam headlamps are now wired in series, they operate at half illumination.

OPERATION (FOR CANADA)

NEEL0017S03

After starting the engine with the lighting switch in the OFF or parking lamp (1ST) position, the headlamp high beams automatically turn on. Lighting switch operations other than the above are the same as conventional light systems.

Engine		With engine stopped									With engine running								
Lighting switch		OFF			1ST			2ND			OFF			1ST			2ND		
		A	B	C	A	B	C	A	B	C	A	B	C	A	B	C	A	B	C
Headlamp	High beam	X	X	O	X	X	O	O	X	O	△*	△*	O	△*	△*	O	O	X	O
	Low beam	X	X	X	X	X	X	X	O	X	X	X	X	X	X	X	X	O	X
Clearance and tail lamp		X	X	X	O	O	O	O	O	O	X	X	X	O	O	O	O	O	O
License and instrument illumination lamp		X	X	X	O	O	O	O	O	O	X	X	X	O	O	O	O	O	O

A: HIGH BEAM position
B: LOW BEAM position
C: FLASH TO PASS position
O : Lamp ON
X : Lamp OFF
△ : Lamp dims. (Added functions)
*: When starting the engine with the parking brake released, the daytime lights will come ON.
When starting the engine with the parking brake pulled, the daytime lights won't come ON.

Circuit Diagram

NEEL0019

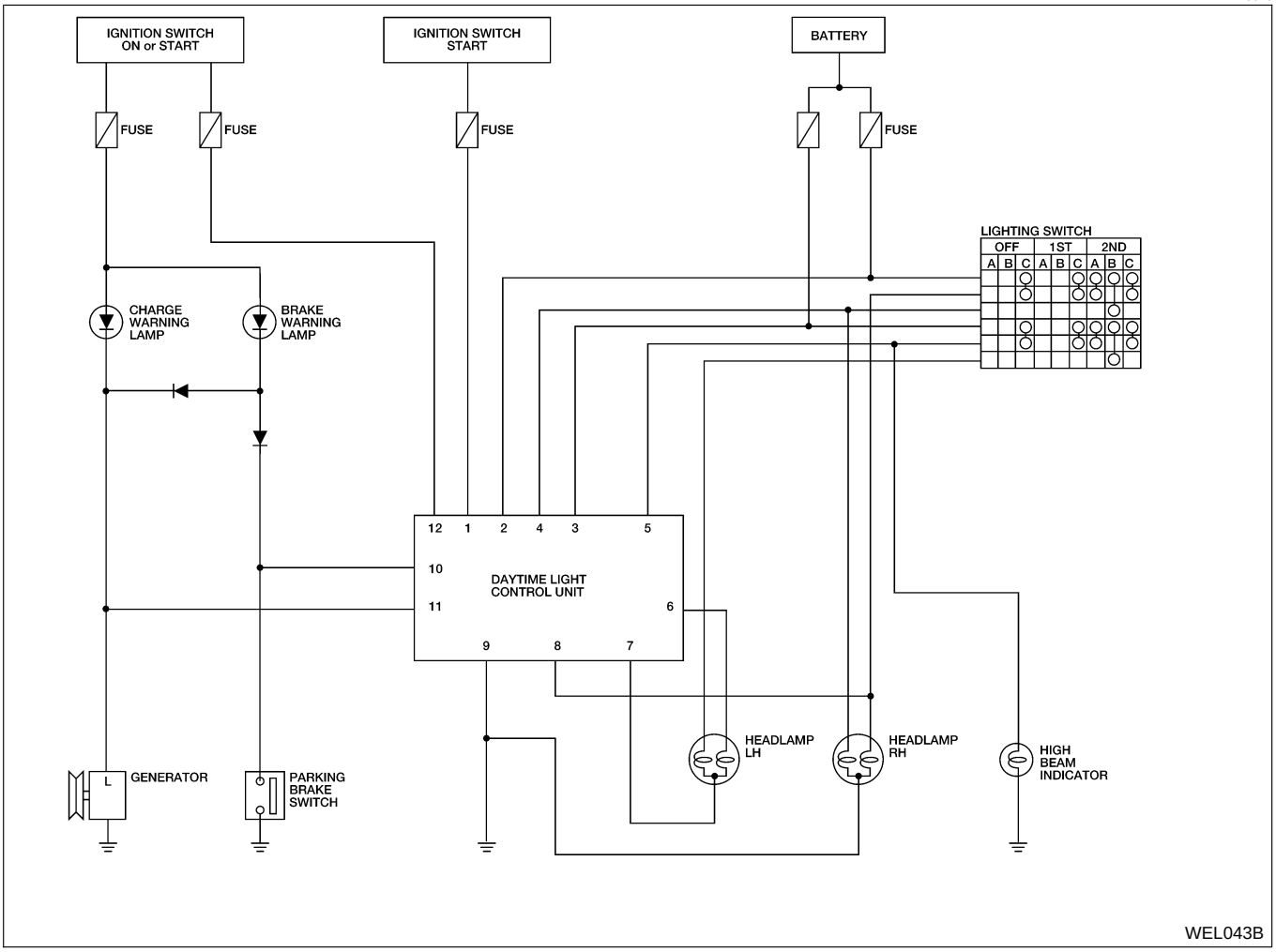

Wiring Diagram — DTRL —

NEEL0020

EL-DTRL-01

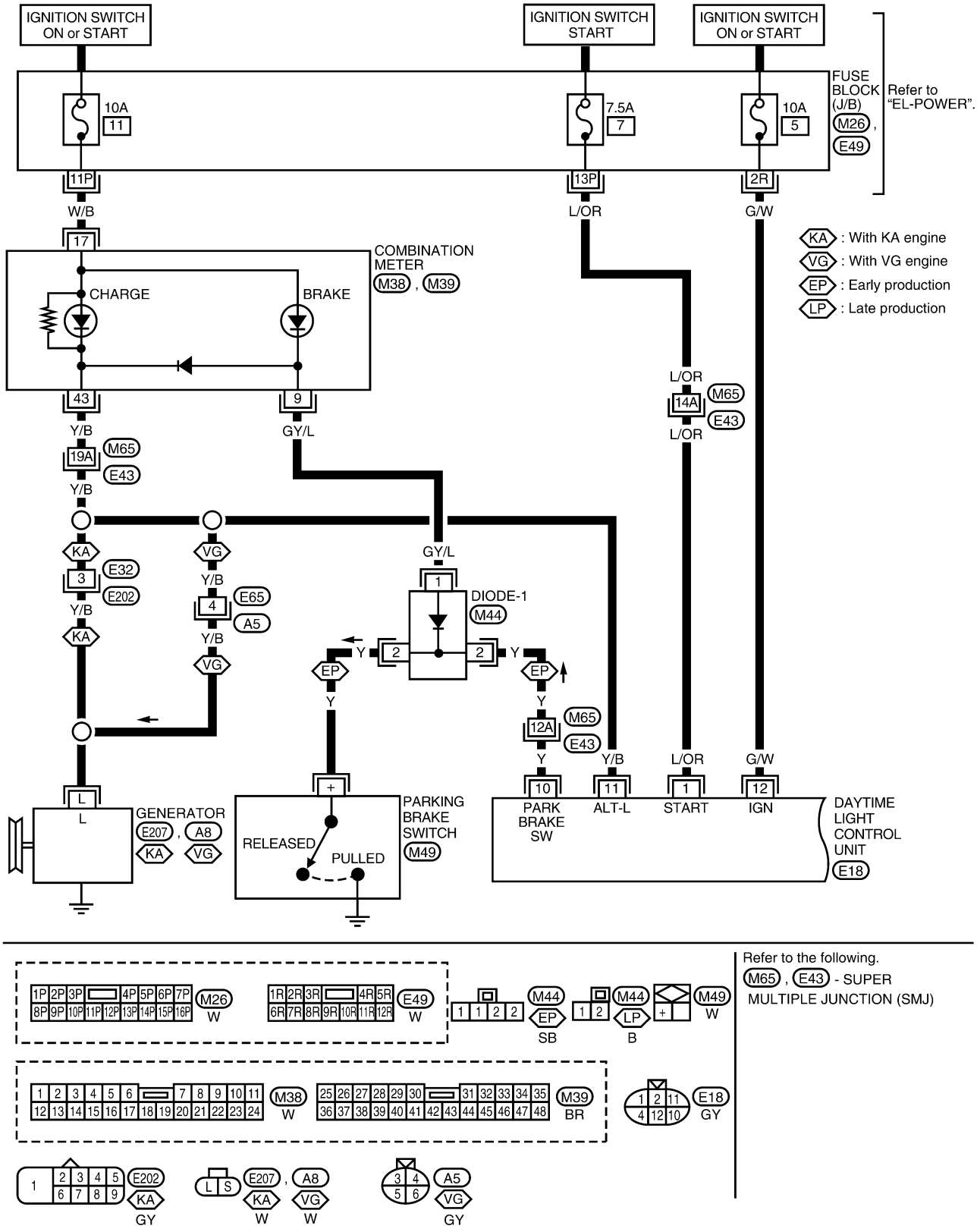

WEL044B

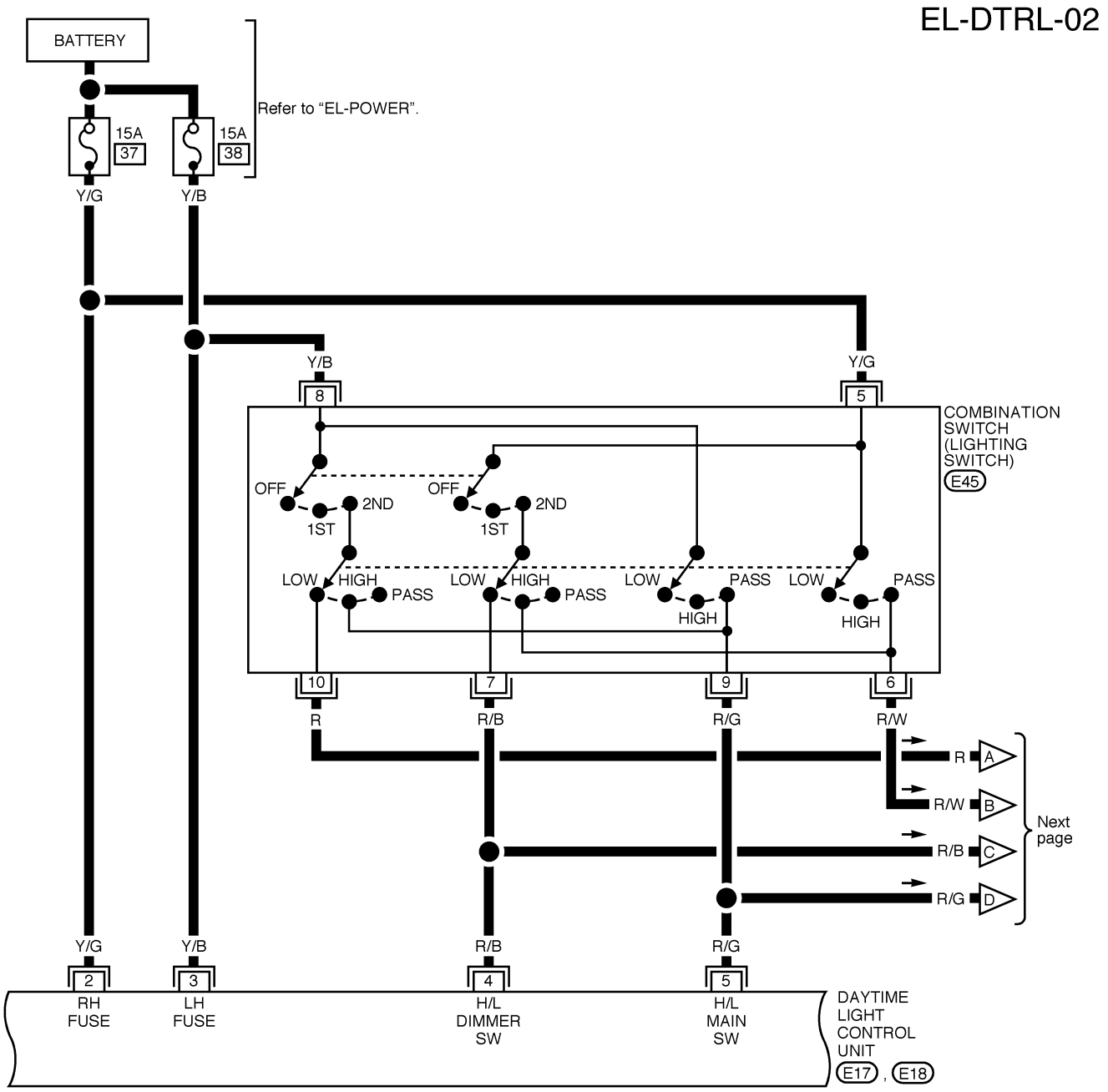
EL-DTRL-02
BATTERY
Refer to "EL-POWER".
15A
37
15A
38
Y/G
Y/B
Y/B
8
Y/G
5
COMBINATION SWITCH (LIGHTING SWITCH)
E45
OFF
2ND
1ST
OFF
2ND
1ST
LOW
HIGH
PASS
LOW
HIGH
PASS
LOW
PASS
HIGH
LOW
PASS
HIGH
10
7
9
6
R
R/B
R/G
R/W
R
A
R/W
B
R/B
C
R/G
D
Next page
Y/G
Y/B
R/B
R/G
2
3
4
5
RH FUSE
LH FUSE
H/L DIMMER SW
H/L MAIN SW
DAYTIME LIGHT CONTROL UNIT
E17
E18

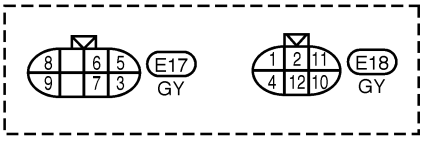
8
6
5
9
7
3
E17
GY
1
2
11
4
12
10
E18
GY

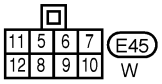
11
5
6
7
12
8
9
10
E45
W

AEL350C

EL-DTRL-03

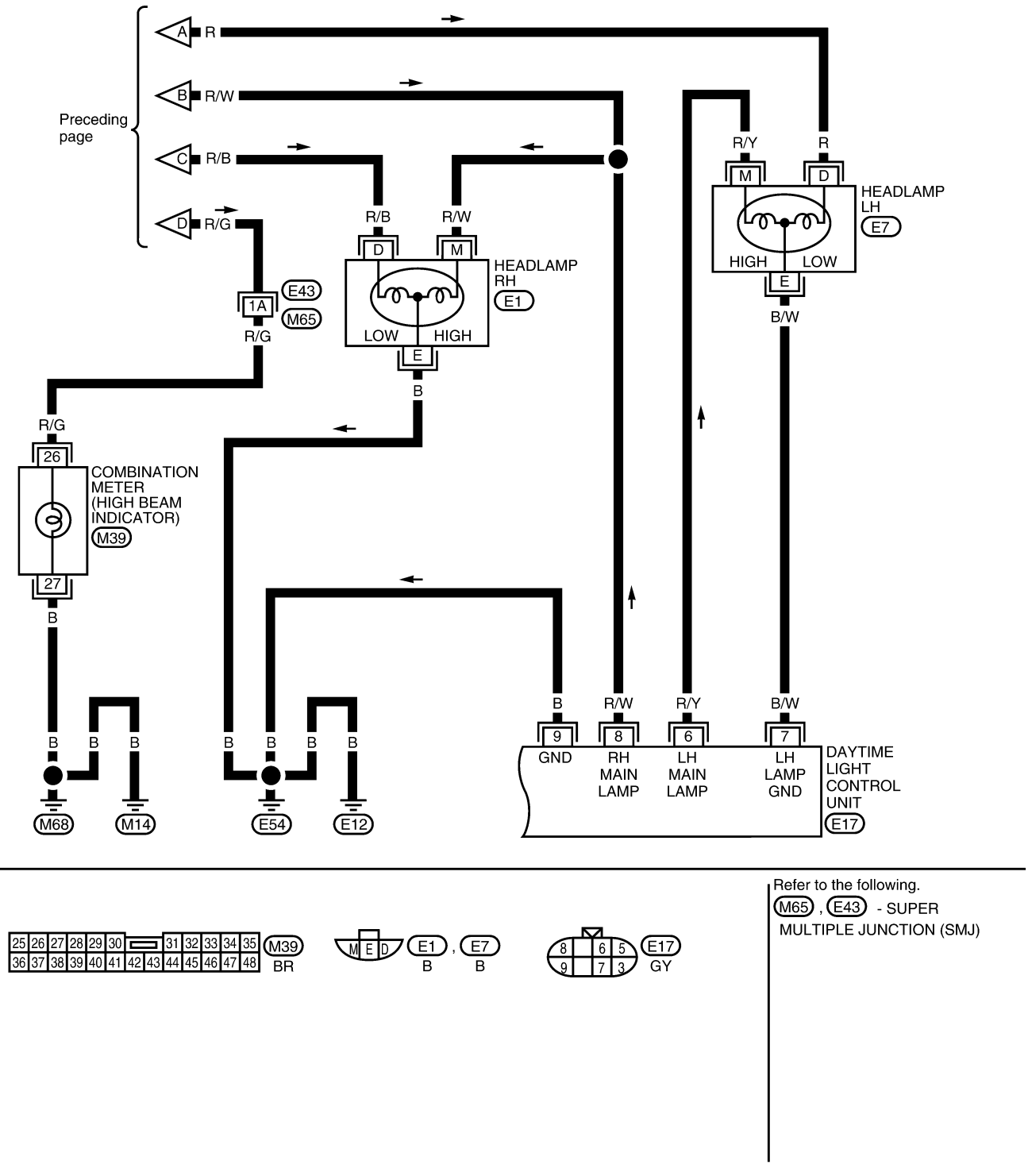

Refer to the following.
M65 , E43 - SUPER MULTIPLE JUNCTION (SMJ)

LEL740

Trouble Diagnoses

NEEL0021

DAYTIME LIGHT CONTROL UNIT INSPECTION TABLE

NEEL0021S01

Terminal No.	Wire color	Item	Condition	Voltage (Approx.)
1	L/OR	Ignition switch start signal	Ignition switch in START position	12
			All other conditions	0
2	Y/G	Power source for head-lamp RH	—	12
3	Y/B	Power source for head-lamp LH	—	12
4	R/B	Lighting switch headlamp RH low beam output	Lighting switch in the headlamp ON (2ND) position and LOW BEAM (B) position	12
			All other conditions	0
5	R/G	Lighting switch headlamp LH high beam output	Lighting switch in the FLASH TO PASS (C) position or headlamp ON (2ND) position and HIGH BEAM (A) position	12
			All other conditions	0
6	R/Y	Headlamp LH high beam	Lighting switch in the FLASH TO PASS (C) position or headlamp ON (2ND) position and HIGH BEAM (A) position	12
			With parking brake released, engine running and lighting switch in OFF or parking and tail lamp ON (1ST) positions **CAUTION:** **Block wheels and ensure selector lever is in P or N position.**	12
			All other conditions	0
7	B/W	Headlamp LH control (ground)	Lighting switch in the FLASH TO PASS (C) position or headlamp ON (2ND) position	0
			All other conditions	6
8	R/W	Lighting switch headlamp RH high beam output	Lighting switch in the FLASH TO PASS (C) position or headlamp ON (2ND) position and HIGH BEAM (A) position	12
			With parking brake released, engine running and lighting switch in OFF or parking and tail lamp ON (1ST) positions **CAUTION:** **Block wheels and ensure selector lever is in P or N position.**	6
			All other conditions	0
9	B	Ground	—	—
10	Y	Parking brake switch	Parking brake released	12
			Parking brake set	0
11	Y/B	Generator (L terminal)	When engine is running	12
			All other conditions	0

Terminal No.	Wire color	Item	Condition	Voltage (Approx.)
12	G/W	Ignition switch on signal	Ignition switch OFF, ACC positions	0
			Ignition switch ON, START positions	12

Bulb Replacement

NEEL0022

Refer to "Bulb Replacement", EL-37.

Aiming Adjustment

NEEL0023

Refer to "Aiming Adjustment", EL-37.

Wiring Diagram — TAIL/L —

NEEL0024

EL-TAIL/L-01

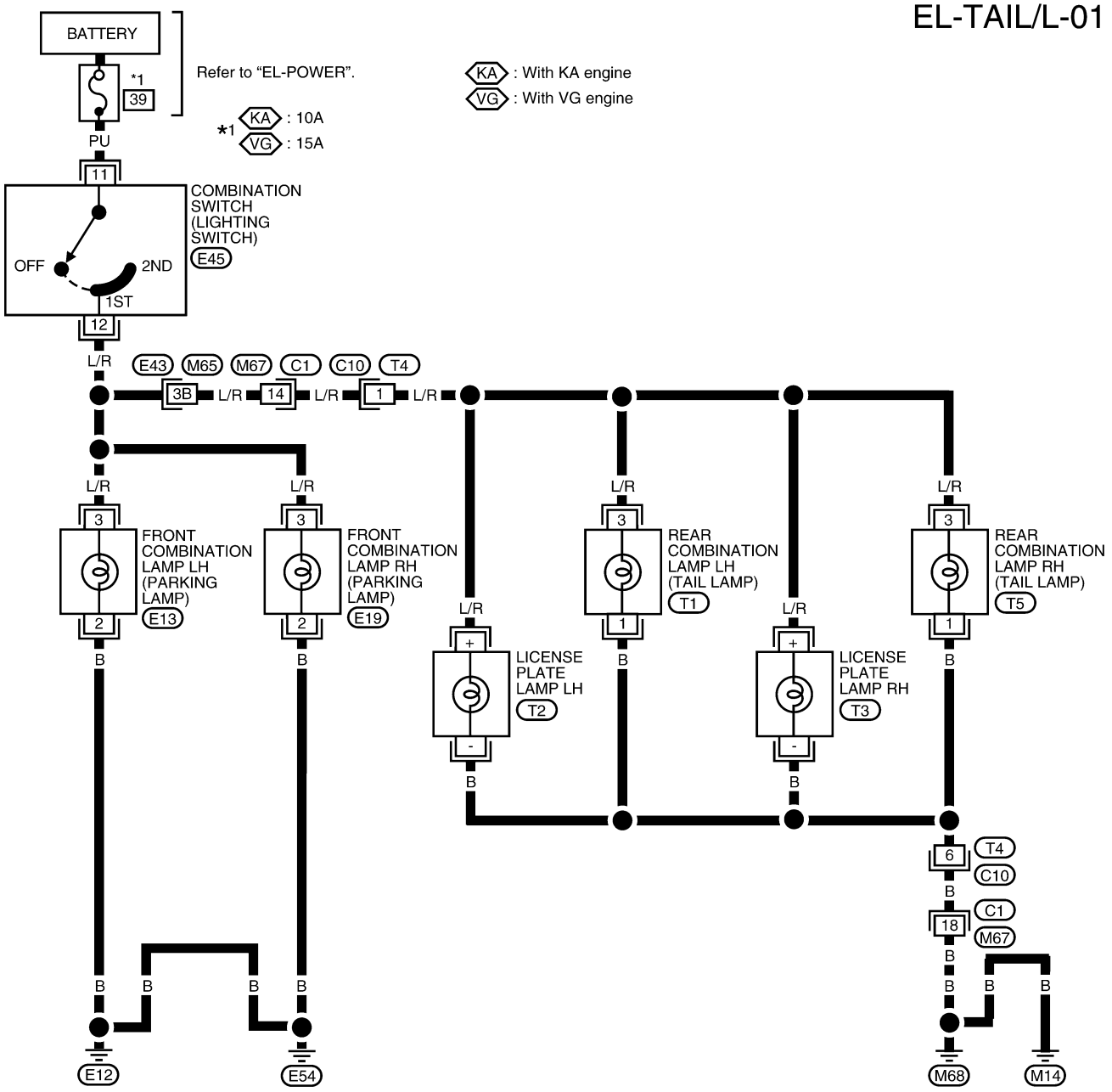

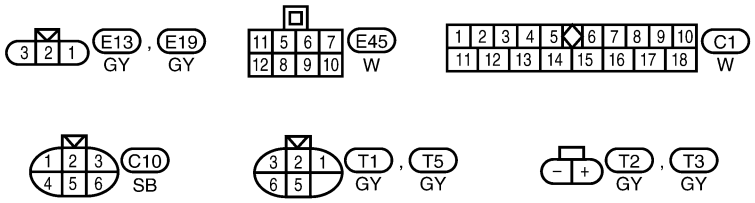

Refer to the following.
M65 , E43 - SUPER MULTIPLE JUNCTION (SMJ)

WEL532A

Wiring Diagram — STOP/L —

NEEL0025

EL-STOP/L-01

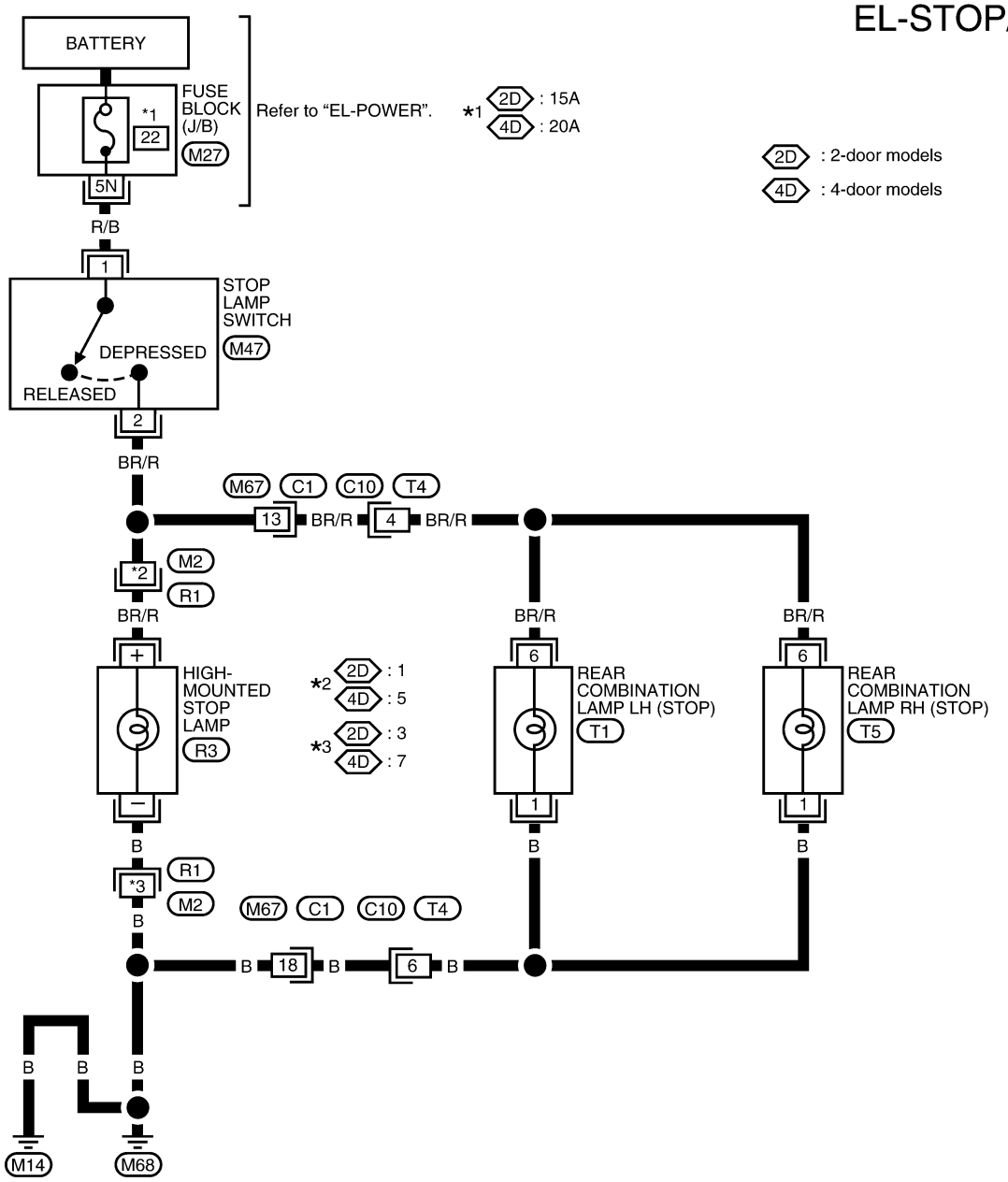

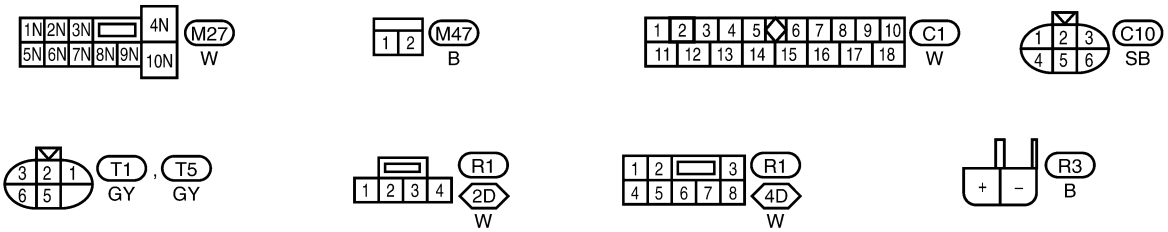

WEL194A

Wiring Diagram — BACK/L —

NEEL0026

EL-BACK/L-01

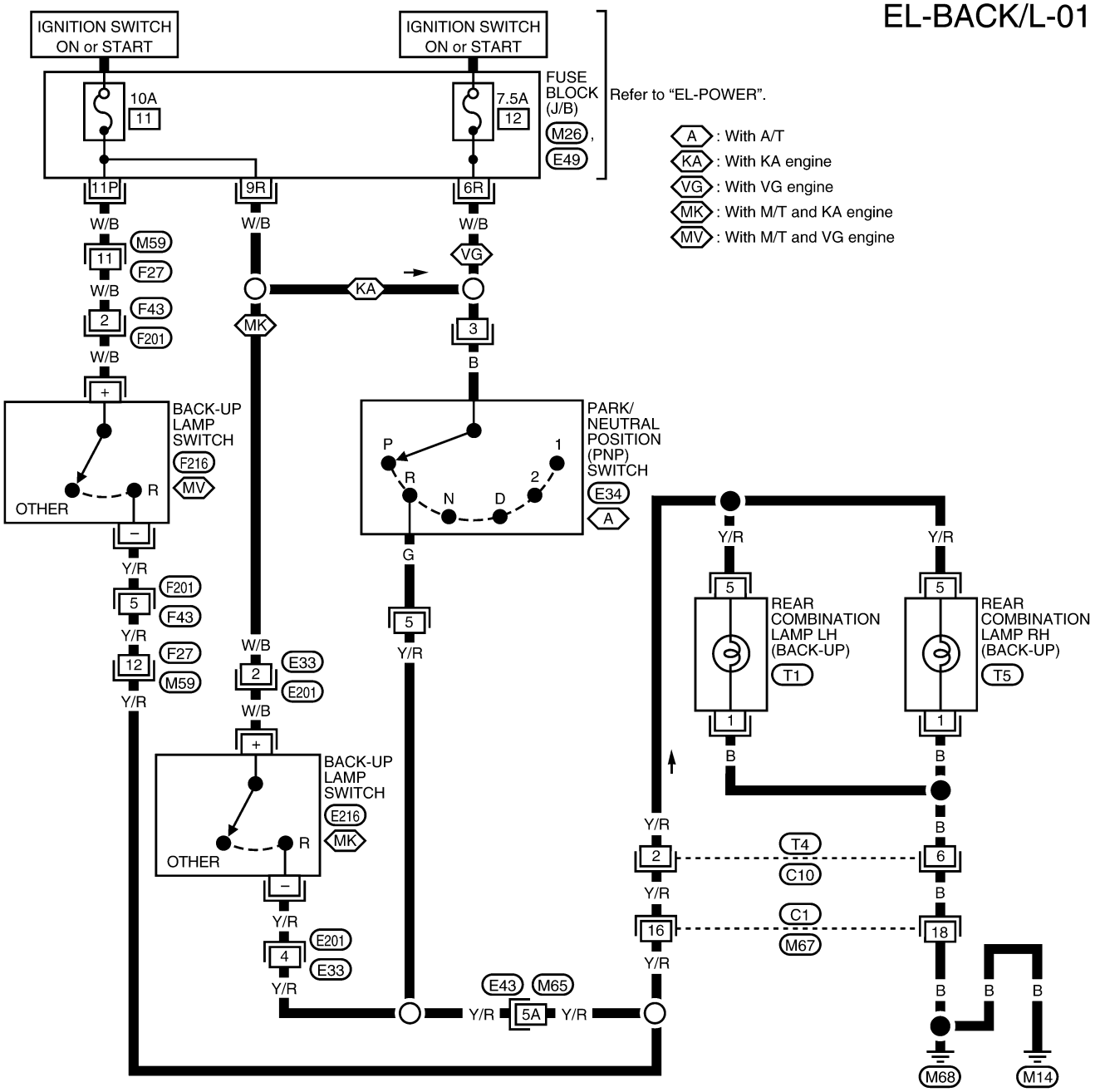

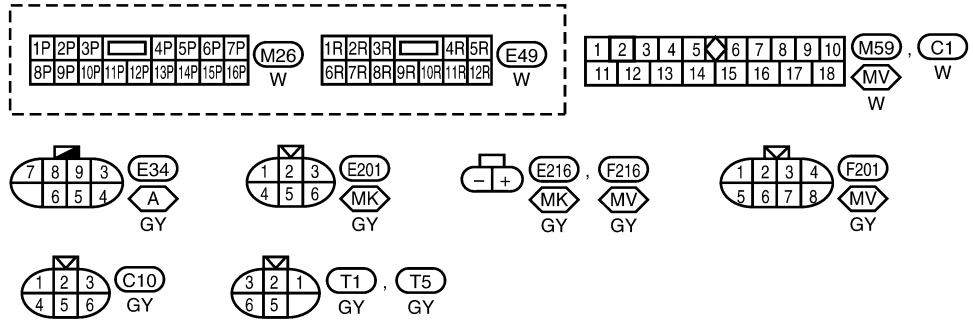

Refer to the following.
M65, E43 - SUPER MULTIPLE JUNCTION (SMJ)

LEL743

System Description

NEEL0027

Power is supplied at all times

- through 15A fuse (No. 40, located in the fuse and fusible link box)
- to front fog lamp relay terminal 5 and
- through 15A fuse (No. 37, located in the fuse and fusible link box)
- to lighting switch terminal 5.

With the lighting switch in the headlamp ON (2ND) position and LOW BEAM (B) position, power is supplied

- through lighting switch terminal 7
- to front fog lamp switch terminal 1.

FRONT FOG LAMP OPERATION

NEEL0027S01

The front fog lamp switch is built into the combination switch. The lighting switch must be in the headlamp ON (2ND) position and LOW BEAM (B) position for front fog lamp operation.
With the front fog lamp switch in the ON position, power is supplied

- to front fog lamp relay terminal 2
- from front fog lamp switch terminal 2.

Ground is supplied

- to front fog lamp relay terminal 1
- through body grounds E12 and E54.

The front fog lamp relay is energized and power is supplied

- from front fog lamp relay terminal 3
- to front fog lamp LH/RH terminal 1.

Ground is supplied to front fog lamp LH/RH terminal 2 through body grounds E12 and E54.
With power and ground supplied, the front fog lamps illuminate.

Wiring Diagram — F/FOG —

NEEL0028

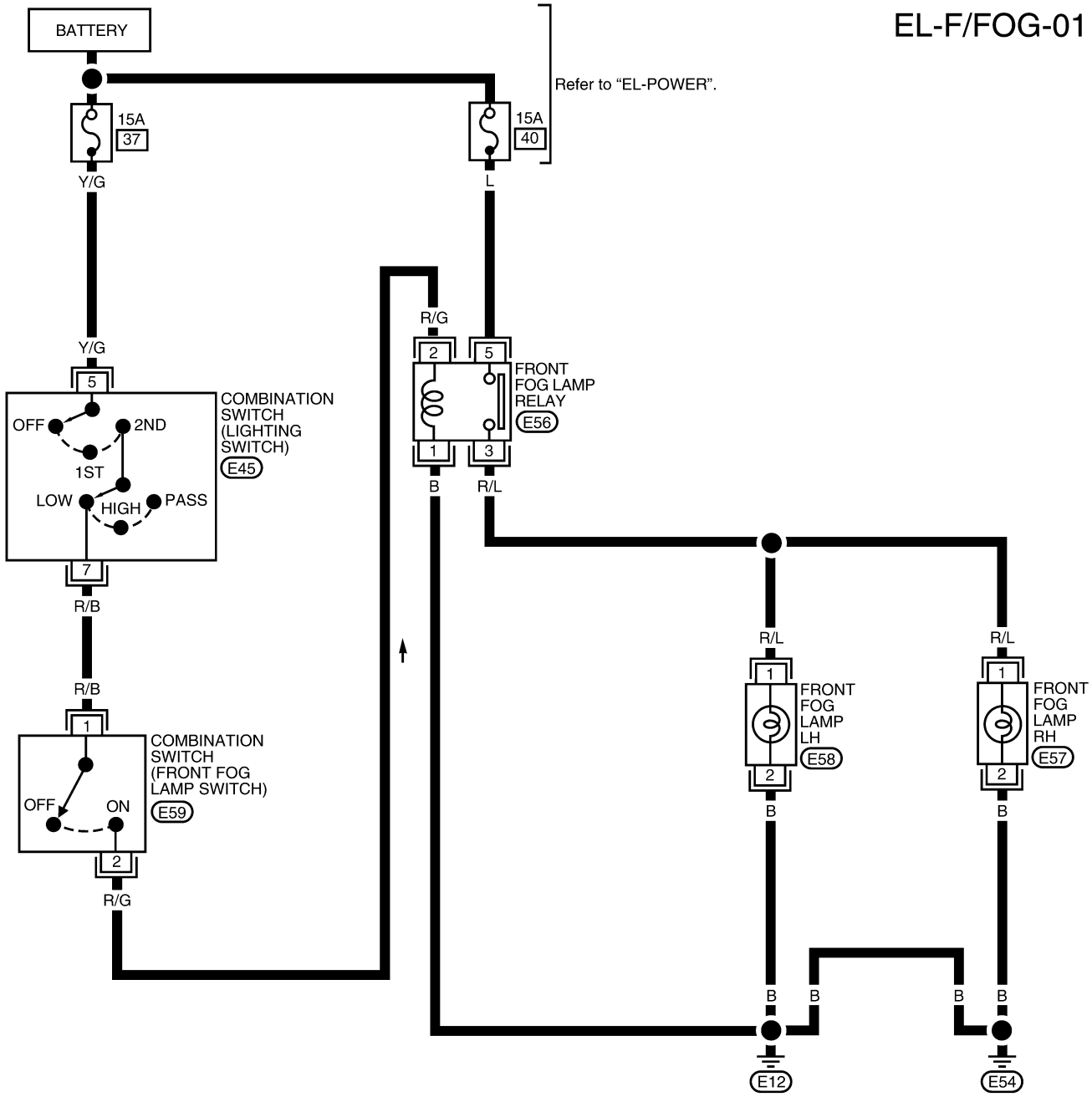

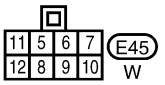

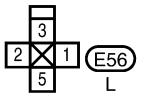

WEL486A

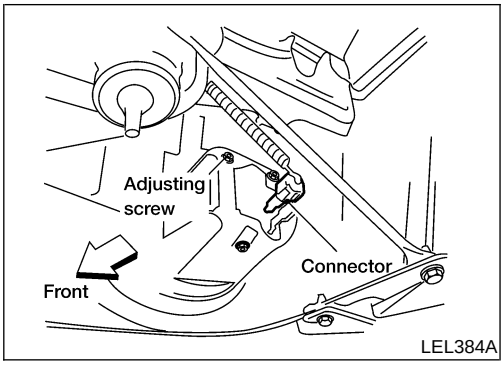

Aiming Adjustment

NEEL0029

Before performing aiming adjustment, make sure of the following.

1) Keep all tires inflated to correct pressure.
2) Place vehicle on level ground.
3) See that vehicle is unloaded (except for full levels of coolant, engine oil and fuel, and spare tire, jack, and tools). Have the driver or equivalent weight placed in driver seat.

Loosen front fog lamp adjusting nuts and adjust aiming by moving front fog lamps.

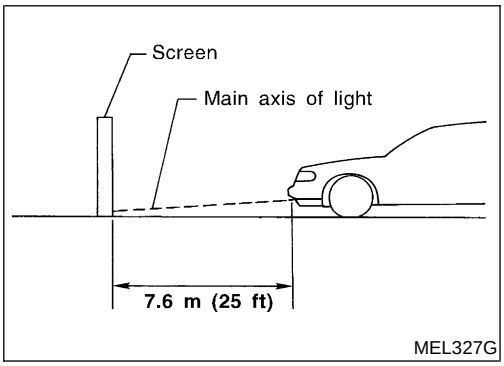

1. Set the distance between the screen and the center of the front fog lamp lens as shown at left.
2. Turn front fog lamps ON.

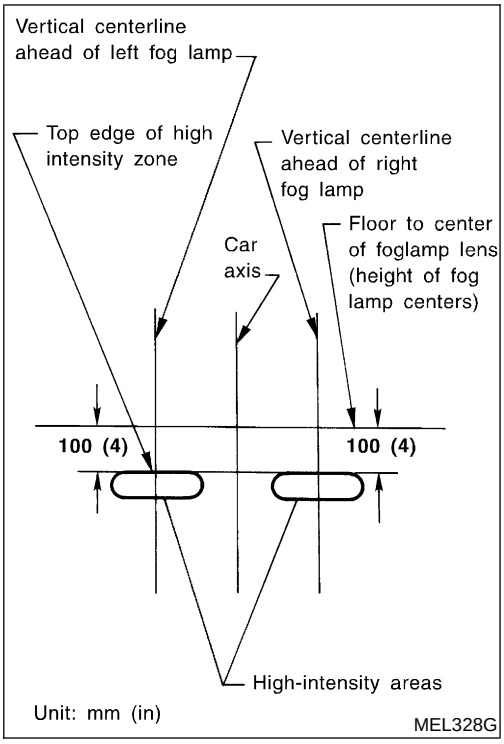

3. Adjust front fog lamps so that the top edge of the high intensity zone is 100 mm (4 in) below the height of the fog lamp centers as shown at left.

- **When performing adjustment, if necessary, cover the headlamps and opposite fog lamp.**

4. Tighten the front fog lamp adjusting nuts.

Removal and Installation

=NEEL0184

1. Disconnect front fog lamp harness connector.
2. Remove mounting bolt and remove lens and housing assembly from front bumper cover..
3. Install in reverse order of removal. Ensure top of lens faces up.
4. Tighten mounting bolt.

   : 5 – 6 N·m (0.51 – 0.61 kg-m, 44.3 – 53.1 in-lb)

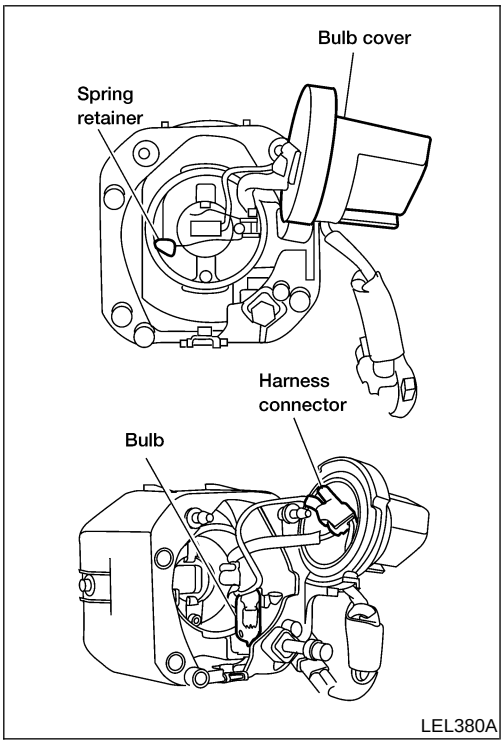

Bulb and Lens Replacement

NEEL0185

1. Remove front fog lamp. Refer to “Removal and Installation”, EL-53.
2. Remove bulb cover.
3. Release the spring retainer.
4. Disconnect fog lamp bulb connector.
5. Remove fog lamp bulb.
6. Install in reverse order of removal. Ensure top of lens faces up. **DO NOT TOUCH BULB.**

System Description

NEEL0030

TURN SIGNAL OPERATION

NEEL0030S01

With the hazard switch in the OFF position and the ignition switch in the ON or START position, power is supplied

- through 7.5A fuse [No. 2, located in the fuse block (J/B)]
- to hazard switch terminal 2
- through hazard switch terminal 1
- to combination flasher unit terminal B
- through combination flasher unit terminal L
- to turn signal switch terminal 1.

Ground is supplied to combination flasher unit terminal E through body grounds M14 and M68.

LH Turn

NEEL0030S0101

With the turn signal switch in the LH position, power is supplied from turn signal switch terminal 3 to

- front combination lamp LH terminal 1
- combination meter terminal 11 and
- rear combination lamp LH terminal 2.

Ground is supplied to front combination lamp LH terminal 2 through body grounds E12 and E54.
Ground is supplied

- to rear combination lamp LH terminal 1 and
- to combination meter terminal 36
- through body grounds M14 and M68.

With power and ground supplied, the combination flasher unit controls the flashing of the LH turn signal lamps.

RH Turn

NEEL0030S0102

With the turn signal switch in the RH position, power is supplied from turn signal switch terminal 2 to

- front combination lamp RH terminal 1
- combination meter terminal 28 and
- rear combination lamp RH terminal 2.

Ground is supplied to the front combination lamp RH terminal 2 through body grounds E12 and E54.
Ground is supplied

- to the rear combination lamp RH terminal 1 and
- to combination meter terminal 36
- through body grounds M14 and M68.

With power and ground supplied, the combination flasher unit controls the flashing of the RH turn signal lamps.

HAZARD LAMP OPERATION

NEEL0030S02

Power is supplied at all times to hazard switch terminal 3 through:

- 10A fuse [No. 17, located in the fuse block (J/B)].

With the hazard switch in the ON position, power is supplied

- through hazard switch terminal 1
- to combination flasher unit terminal B
- through combination flasher unit terminal L
- to hazard switch terminal 4.

Ground is supplied to combination flasher unit terminal E through body grounds M14 and M68.
Power is supplied through hazard switch terminal 5 to

- front combination lamp LH terminal 1
- combination meter terminal 11 and
- rear combination lamp LH terminal 2.

Power is supplied through hazard switch terminal 6 to

- front combination lamp RH terminal 1
- combination meter terminal 28 and
- rear combination lamp RH terminal 2.

Ground is supplied to front combination lamp LH/RH terminal 2 through body grounds E12 and E54.
Ground is supplied to combination meter terminal 36 and rear combination lamp LH/RH terminal 1 through body grounds M14 and M68.
With power and ground supplied, the combination flasher unit controls the flashing of the hazard warning lamps.

Wiring Diagram — TURN —

NEEL0032

EL-TURN-01

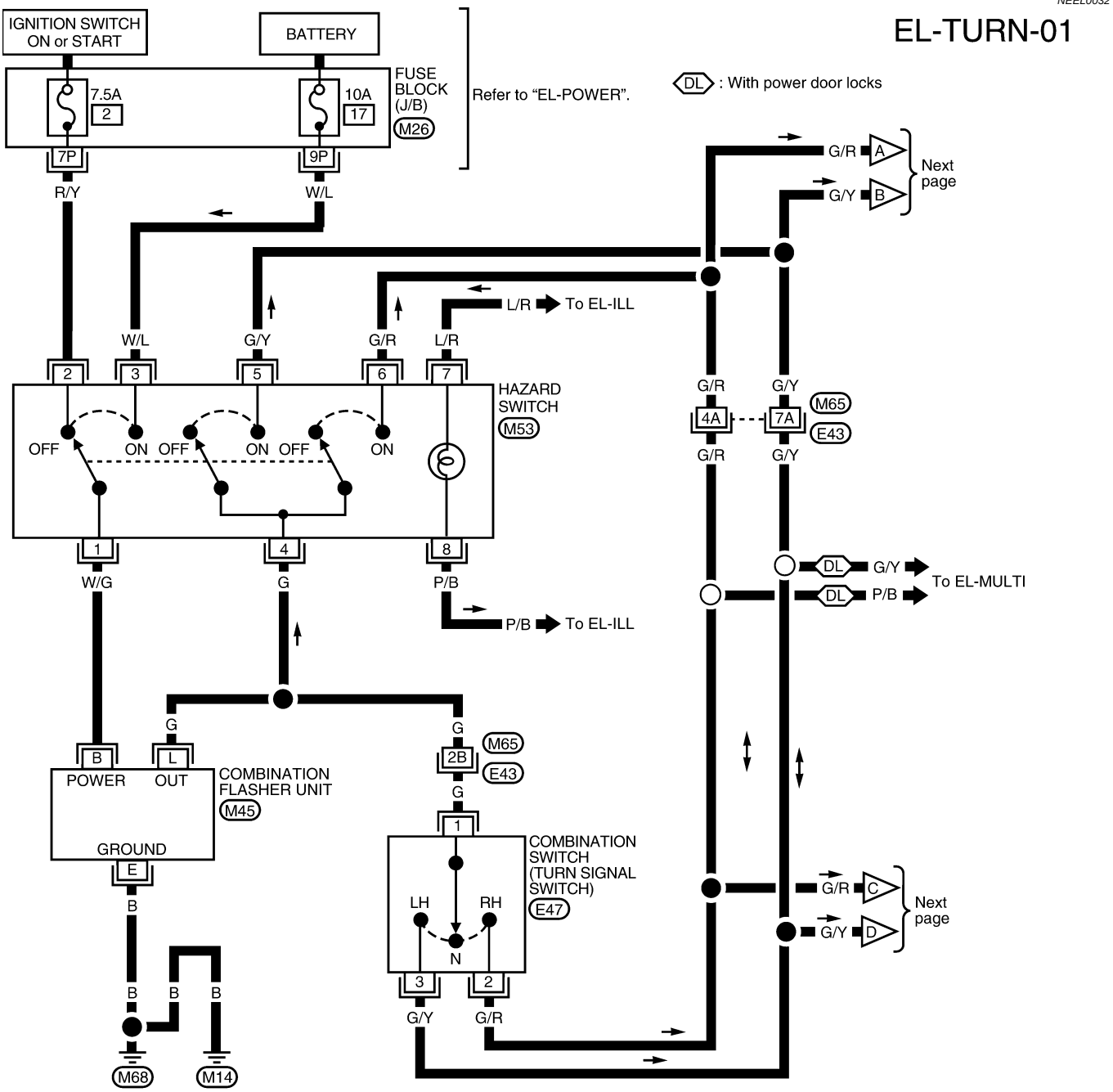

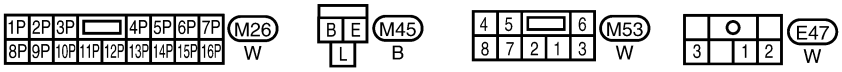

Refer to the following.
M65 , E43 - SUPER MULTIPLE JUNCTION (SMJ)

LEL745

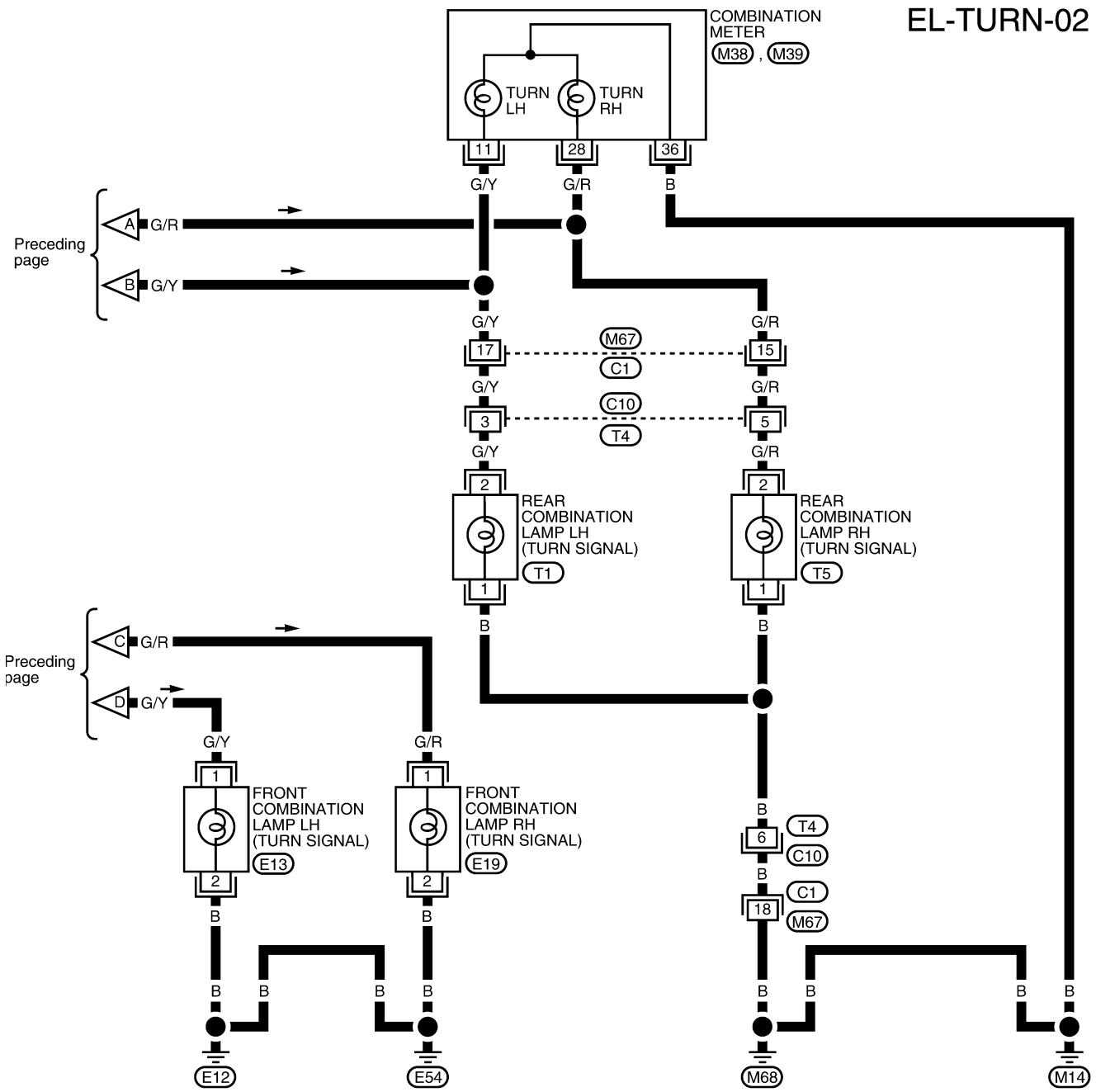
EL-TURN-02
COMBINATION METER
M38 , M39
TURN LH
TURN RH
11
28
36
G/Y
G/R
B
Preceding page
A G/R
B G/Y
17
15
M67
C1
3
5
C10
T4
2
1
REAR COMBINATION LAMP LH (TURN SIGNAL)
T1
REAR COMBINATION LAMP RH (TURN SIGNAL)
T5
C G/R
D G/Y
FRONT COMBINATION LAMP LH (TURN SIGNAL)
E13
FRONT COMBINATION LAMP RH (TURN SIGNAL)
E19
6
18
E12
E54
M68
M14

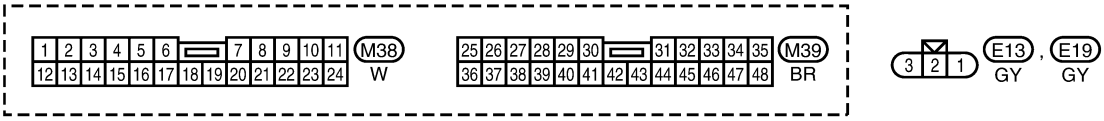
M38
W
M39
BR
E13 , E19
GY
GY

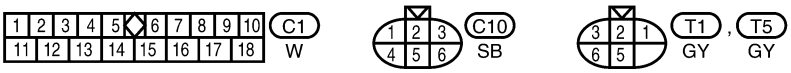
C1
W
C10
SB
T1 , T5
GY
GY

LEL197A

Trouble Diagnoses

NEEL0033

Symptom	Possible cause	Repair order
Turn signal and hazard warning lamps do not operate.	1. 7.5A fuse 2. 10A fuse 3. Hazard switch 4. Combination flasher unit 5. Open in combination flasher unit circuit	1. Check 7.5A fuse [No. 2, located in fuse block (J/B)]. Turn ignition switch ON and verify battery positive voltage is present at terminal 2 of hazard switch. 2. Check 10A fuse [No. 17, located in fuse block (J/B)]. Verify battery positive voltage is present at terminal 3 of hazard switch. 3. Check hazard switch. 4. Refer to combination flasher unit check. 5. Check wiring to combination flasher unit for open circuit.
Turn signal lamps do not operate but hazard warning lamps operate.	1. 7.5A fuse 2. Hazard switch 3. Turn signal switch 4. Open in turn signal switch circuit	1. Check 7.5A fuse [No. 2, located in fuse block (J/B)]. Turn ignition switch ON and verify battery positive voltage is present at terminal 2 of hazard switch. 2. Check hazard switch. 3. Check turn signal switch. 4. Check G wire between combination flasher unit and turn signal switch for open circuit. Check the harness between turn signal switch and front combination lamp for open circuit.
Hazard warning lamps do not operate but turn signal lamps operate.	1. 10A fuse 2. Hazard switch 3. Open in hazard switch circuit	1. Check 10A fuse [No. 17, located in fuse block (J/B)]. Verify battery positive voltage is present at terminal 3 of hazard switch. 2. Check hazard switch. 3. Check G wire between combination flasher unit and hazard switch for open circuit.
Front turn signal lamp LH or RH does not operate.	1. Bulb 2. Front turn signal lamp ground circuit	1. Check bulb. 2. Check grounds E12 and E54 and continuity between front turn signal lamp and grounds E12 and E54.
Rear turn signal lamp LH does not operate.	1. Bulb 2. Rear turn signal lamp LH ground circuit	1. Check bulb. 2. Check grounds M14 and M68 and continuity between rear turn signal lamp LH and grounds M14 and M68.
Rear turn signal lamp RH does not operate.	1. Bulb 2. Rear turn signal lamp RH ground circuit	1. Check bulb. 2. Check grounds M14 and M68 and continuity between rear turn signal lamp RH and grounds M14 and M68.
LH and RH turn indicators do not operate.	1. Ground circuit	1. Check grounds M14 and M68 and continuity between combination meter terminal 36 and grounds M14 and M68.
LH or RH turn indicator does not operate.	1. Bulb 2. Turn indicator circuit	1. Check bulb in combination meter. 2. Check the wire between hazard switch and combination meter.

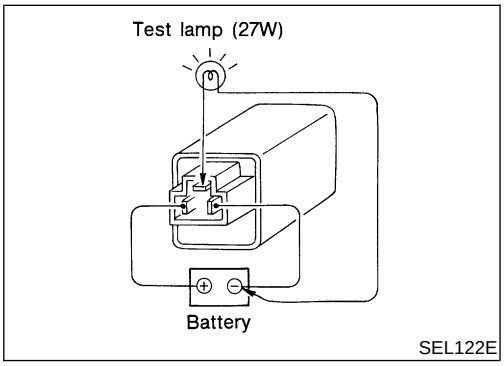

Electrical Components Inspection

NEEL0034

COMBINATION FLASHER UNIT CHECK

NEEL0034S01

- Before checking, ensure that bulbs meet specifications.
- Connect a battery and test lamp to the combination flasher unit, as shown. Combination flasher unit is properly functioning if it blinks when power is supplied to the circuit.

System Description

NEEL0035

Power is supplied at all times

- through 10A fuse (with KA24DE) (No. 39, located in the fuse and fusible link box) or
- through 15A fuse (with VG33E and VG33ER) (No. 39, located in the fuse and fusible link box)
- to lighting switch terminal 11.

The lighting switch must be in the parking and tail lamps ON (1ST) or headlamps ON (2ND) position for illumination.
The illumination control switch controls the amount of current to the illumination system. As the amount of current increases, the illumination becomes brighter.
The following chart shows the power and ground connector terminals for the components included in the illumination system.

Component	Connector No.	Power terminal	Ground terminal
A/T device (With A/T and VG engine)	M35	4	3
Hazard switch	M53	7	8
Air control	M95	1	3
Audio unit	M51	8	7
Combination meter	M38, M39	17, 40	41
Main power window and door lock/unlock switch	D7	3	8
A/T (With A/T and KA engine)	M127	1	2
Illumination control switch	M28	1	5

The ground for all of the components are controlled through terminals 4 and 5 of the illumination control switch and body grounds M14 and M68.

Wiring Diagram — ILL —

NEEL0037

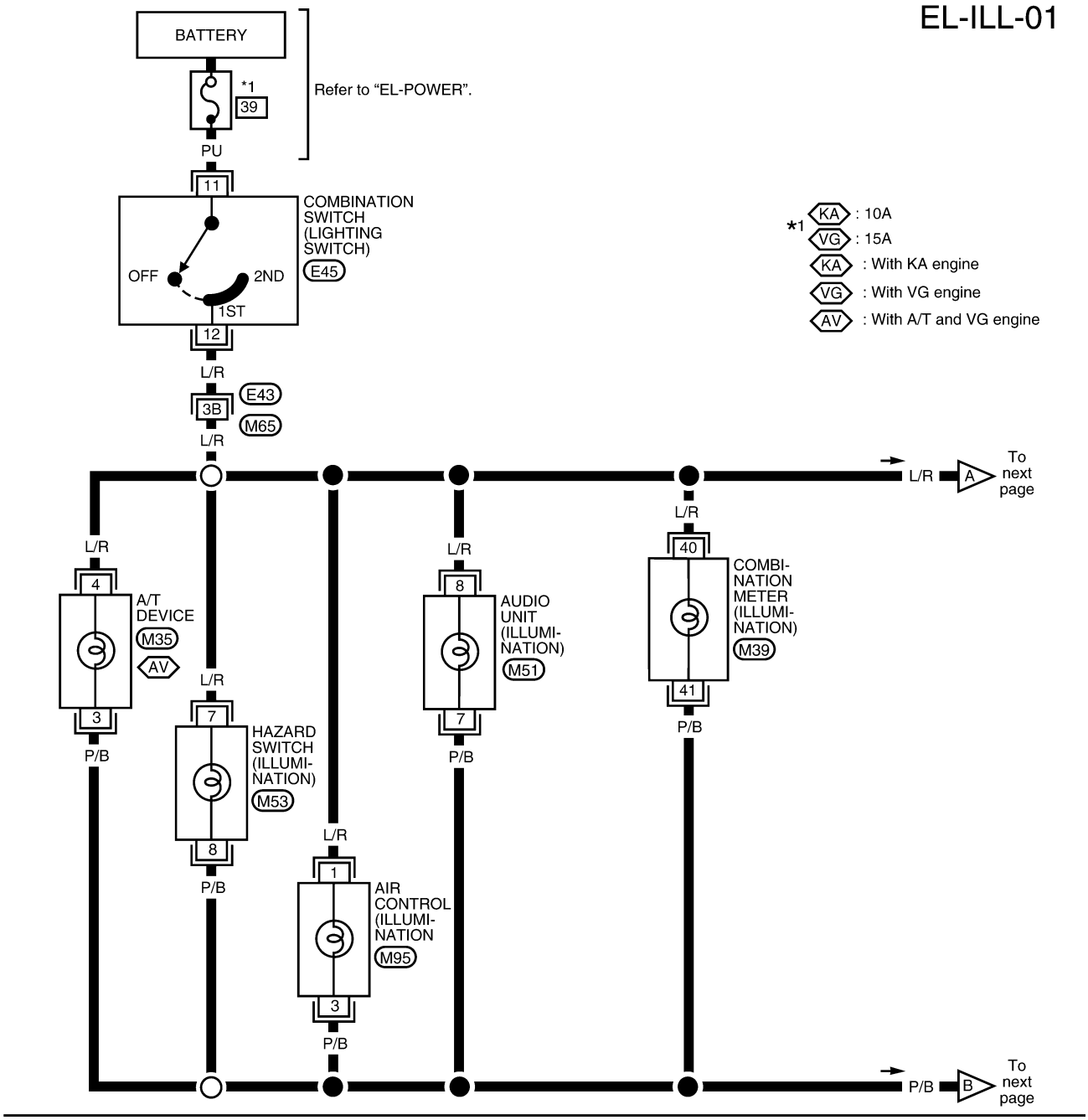

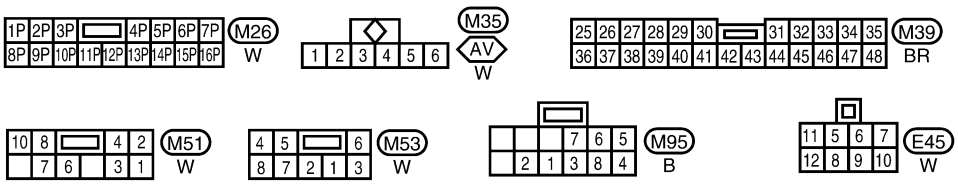

Refer to the following.
M65 , E43 - SUPER MULTIPLE JUNCTION (SMJ)

WEL061B

EL-ILL-02

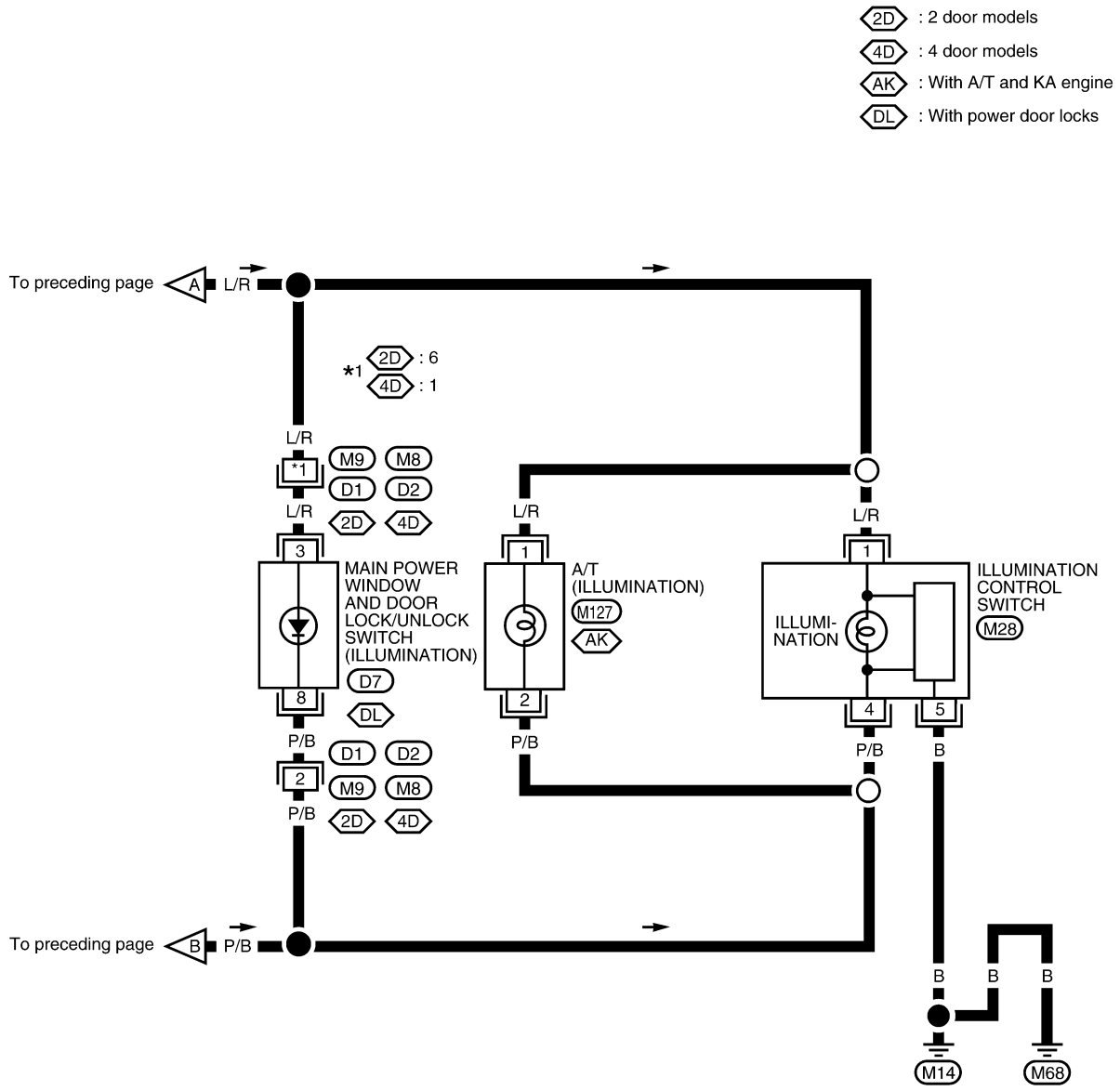

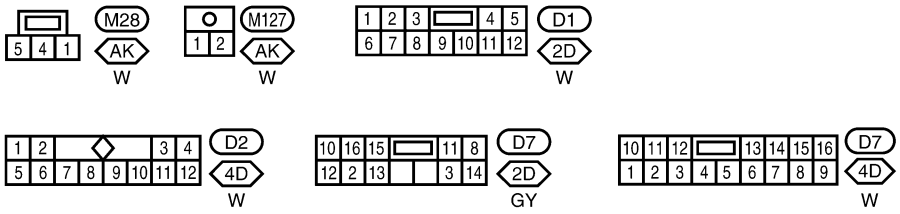

LEL747

Component Parts and Harness Connector Location

NEEL0194

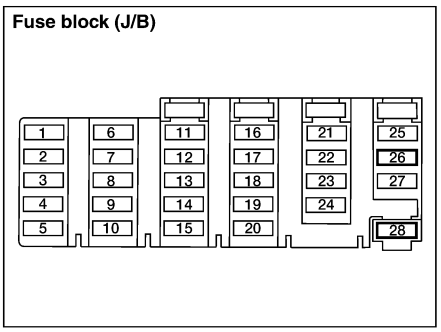

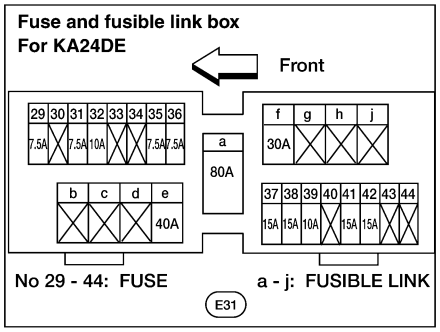

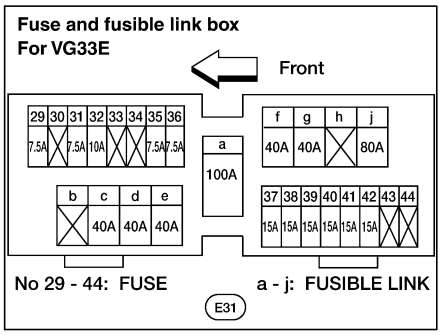

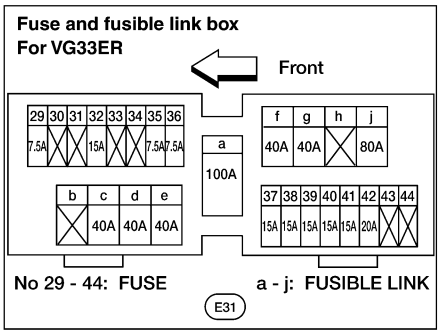

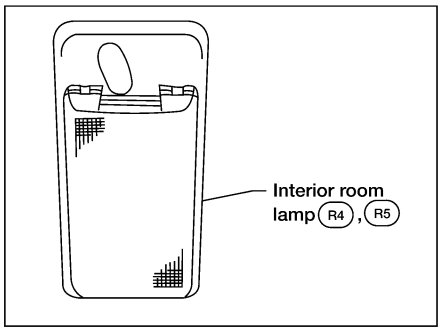

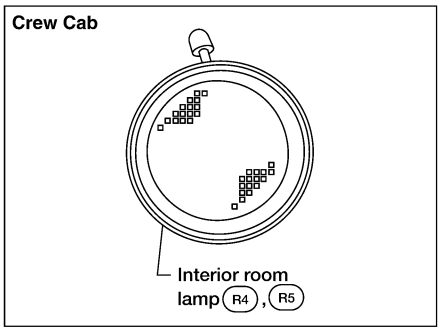

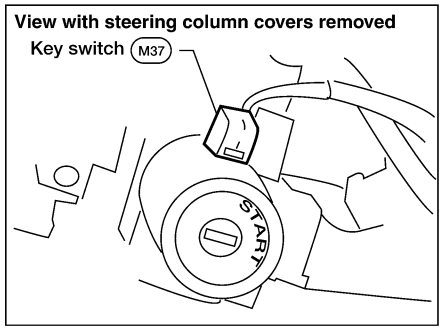

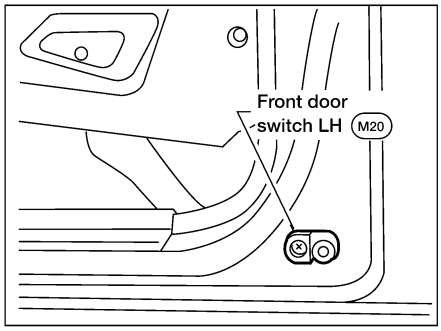

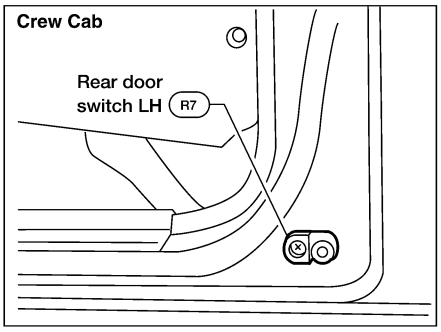

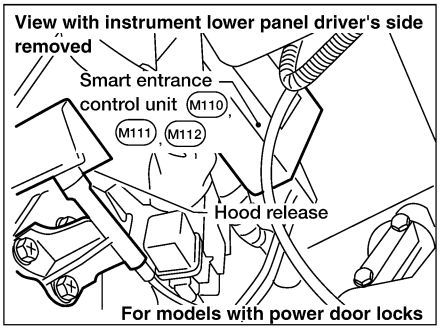

WEL447A

System Description

NEEL0038

MODELS WITHOUT POWER DOOR LOCKS

NEEL0038S09

Room Lamp

NEEL0038S0901

Power is supplied at all times

- through 7.5A fuse [No. 26, located in the fuse block (J/B)]
- to room lamp terminal +.

On 2 door models, with the room lamp switch in the ON position, ground is supplied

- to room lamp terminal –
- through body grounds M14 and M68.

On 4 door models, with the room lamp switch in the ON position, ground is supplied through the case of the room lamp.

With one or more doors open, with the room lamp switch in the DOOR position, ground is supplied

- to room lamp terminal SW
- through front door switch LH terminal 1 and/or
- through front door switch RH and/or rear door switch LH/RH terminal +.

MODELS WITH POWER DOOR LOCKS

NEEL0038S07

Room Lamp

NEEL0038S0701

Power is supplied at all times

- through 7.5A fuse [No. 28, located in the fuse block (J/B)]
- to smart entrance control unit terminal 49.

Ground is supplied at all times to smart entrance control unit terminals 43 and 64 through body grounds M14 and M68.

On 2 door models, with the room lamp switch in the ON position, ground is supplied

- to room lamp terminal –
- through body grounds M14 and M68.

On 4 door models, with the room lamp switch in the ON position, ground is supplied through the case of the room lamp.

With the front door LH open and the room lamp switch in the DOOR position, ground is supplied

- to smart entrance control unit terminal 1
- through front door switch LH terminal 2
- through front door switch LH terminal 3
- through body grounds M14 and M68 and
- to room lamp terminal SW
- through smart entrance control unit terminal 31.

With the front door RH open and the room lamp switch in the DOOR position, ground is supplied

- to smart entrance control unit terminal 2
- through front door switch RH terminal + and
- to room lamp terminal SW
- through smart entrance control unit terminal 31.

On 4 door models, with rear door LH/RH open and the room lamp switch in the DOOR position, ground is supplied

- to smart entrance control unit terminal 3 (with vehicle security system) or terminal 2 (without vehicle security system)
- through rear door switch LH/RH terminal + and
- to room lamp terminal SW
- through smart entrance control unit terminal 31.

Room Lamp Timer Operation

NEEL0038S0702

When the room lamp switch is in the DOOR position, the smart entrance control unit keeps the room lamp illuminated for about 30 seconds when

- unlock signal is supplied from door lock/unlock switch while all doors are closed and key is out of ignition key cylinder
- unlock signal is supplied from multi-remote controller or door key cylinder while all doors are closed

- key is removed from ignition key cylinder while driver door is closed
- driver door is opened and then closed while key is out of the ignition key cylinder. (However, if the driver door is closed with the key inserted in the ignition key cylinder after the front door LH is opened with the key removed, the timer operates.)

The timer is canceled and room lamp turns off when

- front door LH is locked with multi-remote controller, or
- front door LH is opened, or
- ignition switch is turned ON.

The smart entrance control unit turns off the room lamp if it is left on for 30 minutes.

MAP LAMP

NEEL0038S08

On models without power door locks, power is supplied at all times

- through 7.5A fuse [No. 26, located in the fuse block (J/B)]
- To map lamp terminal +.

On models with power door locks, power is supplied at all times

- through 7.5A fuse [No. 28, located in the fuse block (J/B)]
- to smart entrance control unit terminal 49
- through smart entrance control unit terminal 50
- to map lamp terminal +.

With the map lamp switch in the ON position, ground is supplied to map lamp terminal – through body grounds M14 and M68.

ON-OFF CONTROL

NEEL0038S10

When the front door LH, front door RH, rear LH or rear RH door is opened, the interior room lamp turns on while the room lamp switch is in the "DOOR" position.

BATTERY SAVER

NEEL0038S11

The lamp turns off automatically when room lamp, map lamp and/or spot lamp is illuminated with the ignition key in OFF position, if the lamp remains lit by the door switch open signal or if the lamp switch in ON position for more than 30 minutes.

Wiring Diagram — ROOM/L —

MODELS WITHOUT POWER DOOR LOCKS

NEEL0040

NEEL0040S01

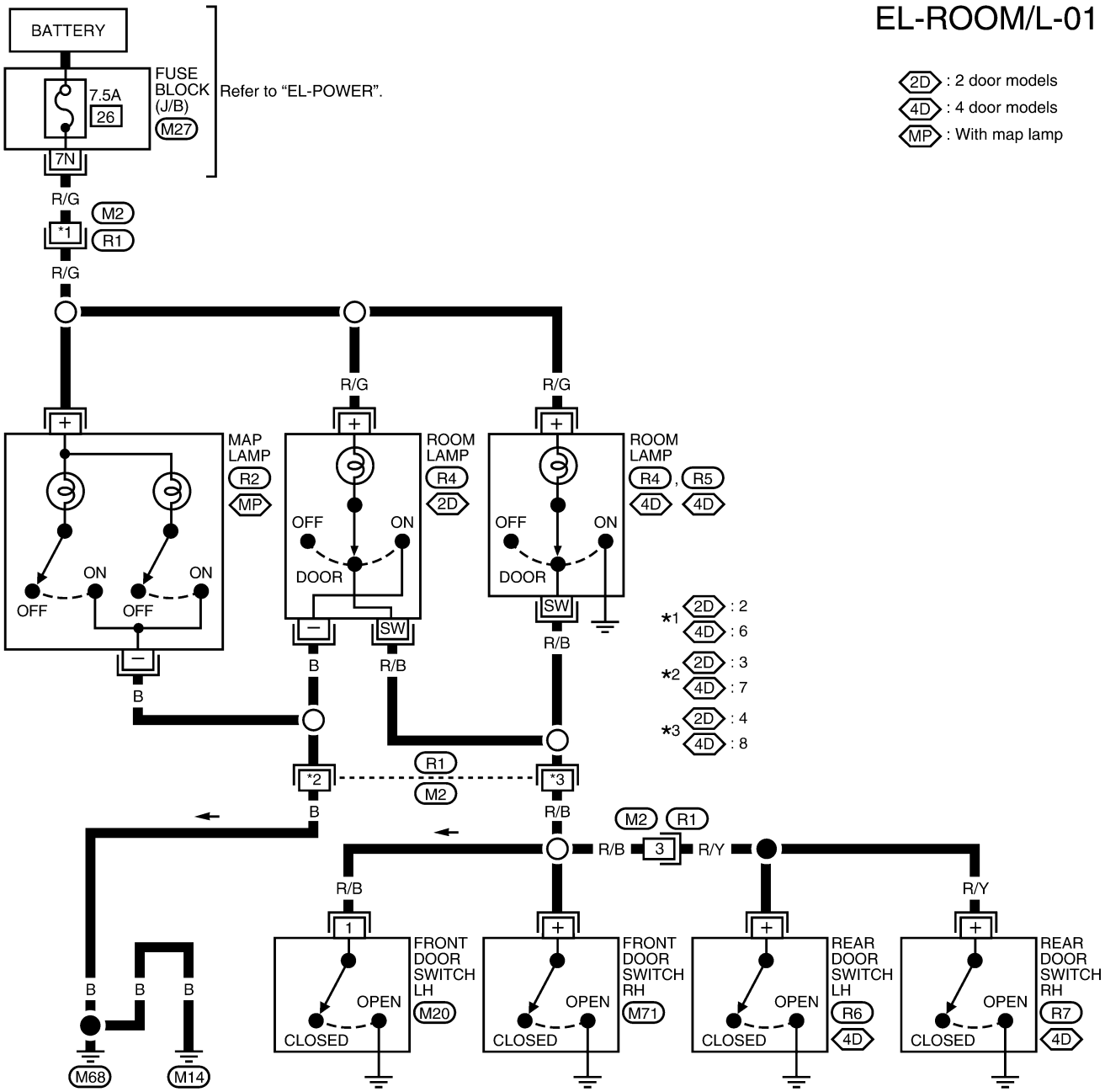

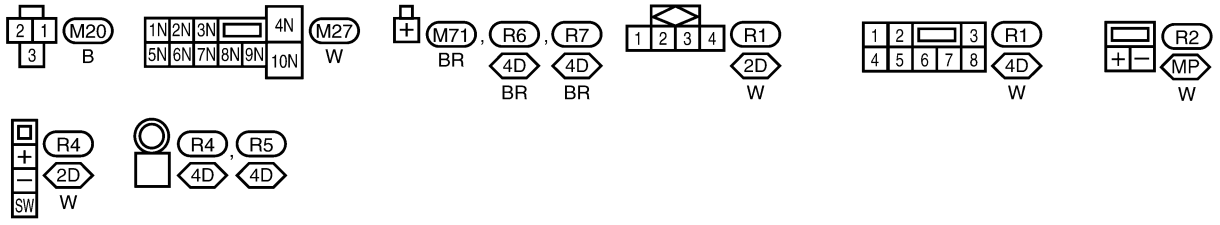

LEL748

Wiring Diagram — ROOM/L — (Cont'd)

MODELS WITH POWER DOOR LOCKS

NEEL0040S02

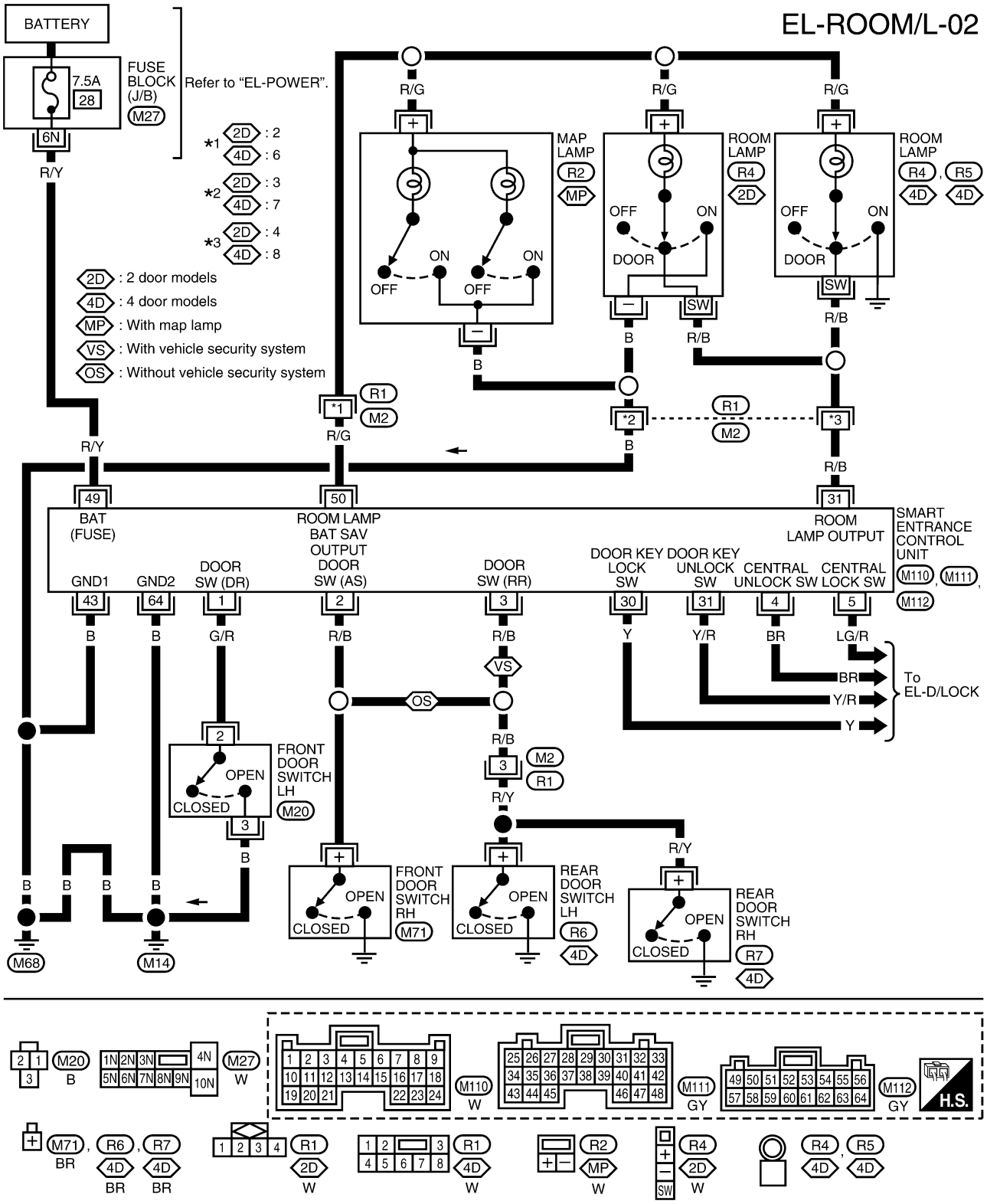

WEL081B

Trouble Diagnosis

NEEL0225

SYMPTOM: Room lamp does not turn on or off properly.

1	CHECK ROOM LAMP FUSE	
Check 7.5 A fuses [No. 26 (without power door locks), 28 (with power door locks), located in fuse block].		
OK or NG		
OK	▶	GO TO 2.
NG	▶	Replace fuse and check harness for short between fuse and room lamp.

2	CHECK ROOM LAMP SWITCH SIGNALS	
1. Close all doors, turn ON room lamp switch. **Do room lamps turn on?** 2. Turn off room lamp switch. **Do room lamps turn off?**		
OK or NG		
OK	▶	GO TO 3.
NG	▶	**Check the following.** ● Room lamp switch ● Room lamp switch ground circuit ● Harness for open or short between room lamp switch and smart entrance control unit (models with power door locks)

3	CHECK ROOM LAMP POWER SUPPLY	
Check voltage between room lamp connector R4 or R5 terminal + (R/G) and ground.		

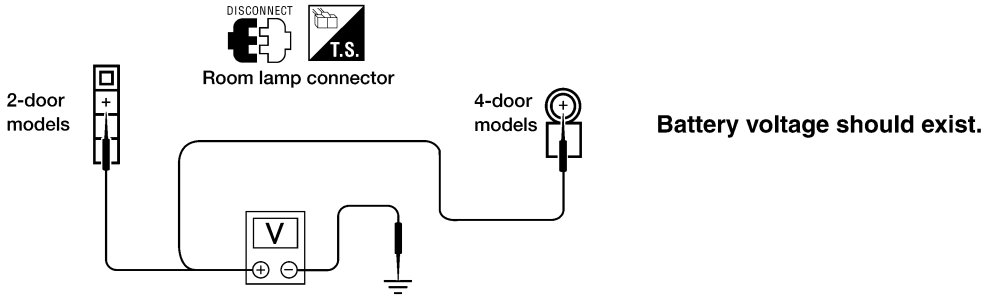

WEL457A

OK or NG		
OK	▶	GO TO 4.
NG	▶	Check harness for open between fuse and room lamp.

4	CHECK INTERIOR ROOM LAMP BULB	
Check interior room lamp bulb.		
OK or NG		
OK	▶	● For models without power door locks, inspection end. ● For models with power door locks, GO TO 5.
NG	▶	Replace bulb.

5	CHECK KEY SWITCH (INSERTED) AND IGNITION ON SIGNAL	
1. Insert key into ignition key cylinder. 2. Open front door LH. **Does warning chime sound?** 3. Turn ignition key to ON position. **Does warning chime stop sounding?** **OK or NG**		
OK	▶	GO TO 6.
NG	▶	Check warning chime system. Refer to "WARNING CHIME", EL-95.

6	CHECK DOOR SWITCH INPUT SIGNAL	
Unlock doors using LH door key cylinder. **Do the doors unlock?** **OK or NG**		
OK	▶	Replace smart entrance control unit.
NG	▶	Refer to "DOOR KEY CYLINDER SWITCH CHECK", EL-188.

Component Parts and Harness Connector Location

NEEL0041

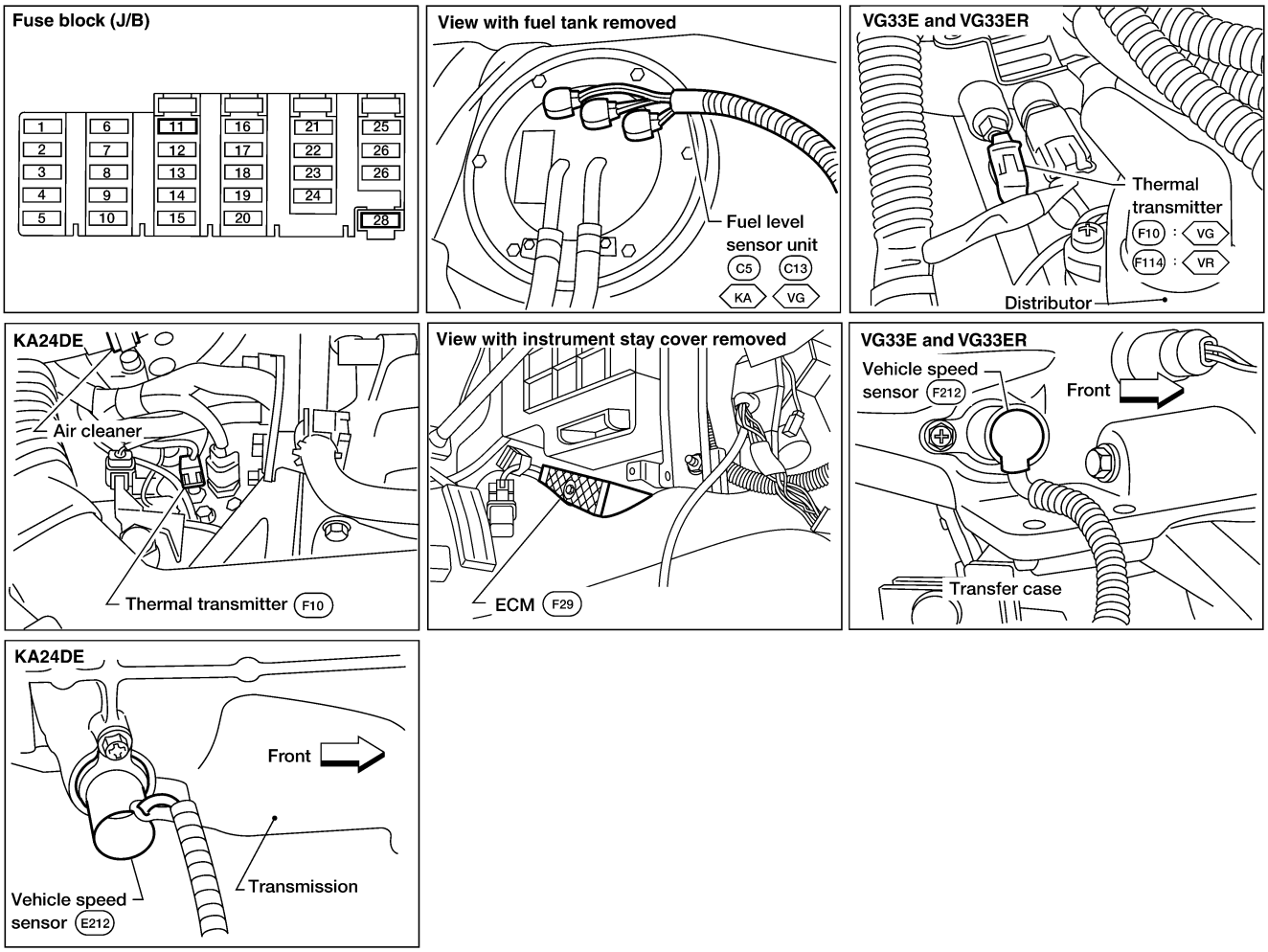

KA : With KA24DE
VG : With VG33E
VR : With VG33ER

WEL458A

System Description

NEEL0042

UNIFIED CONTROL METER

NEEL0042S06

- Speedometer, odo/trip meter, tachometer, fuel gauge and water temperature gauge are controlled totally by unified meter control unit.
- Digital meter is adopted for odo/trip meter.*
  *The record of the odometer is kept even if the battery cable is disconnected. The record of the trip meter is erased when the battery cable is disconnected.
- Odo/trip meter segment can be checked in diagnosis mode.
- Meter/gauge can be checked in diagnosis mode.

HOW TO CHANGE THE DISPLAY FOR ODO/TRIP METER

NEEL0042S07

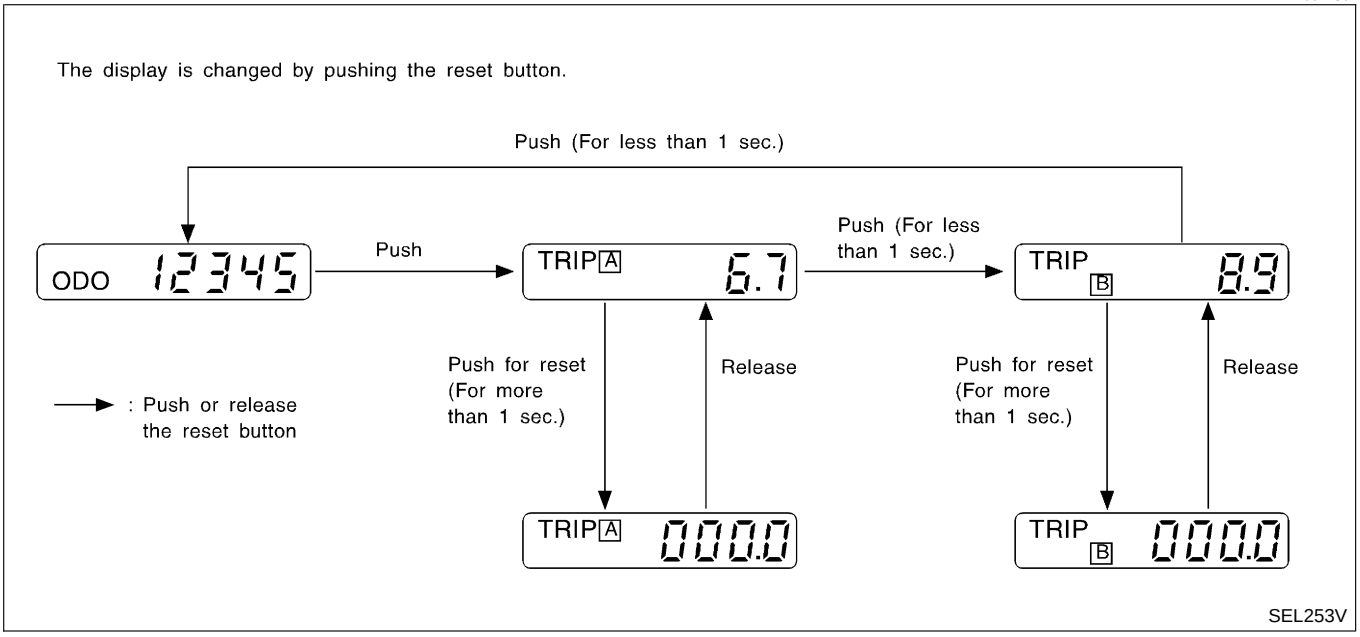

NOTE:
Turn ignition switch ON to operate odo/trip meter.

POWER SUPPLY AND GROUND CIRCUIT

NEEL0042S08

Power is supplied at all times

- through 7.5A fuse [No. 28, located in the fuse block (J/B)]
- to combination meter terminal 18.

With the ignition switch in the ON or START position, power is supplied

- through 10A fuse [No. 11, located in the fuse block (J/B)]
- to combination meter terminal 17.

Ground is supplied

- to combination meter terminal 24
- through body grounds M14 and M68.

FUEL GAUGE

NEEL0042S03

The fuel gauge indicates the approximate fuel level in the fuel tank. The reading on the gauge is based on the resistance of the fuel level sensor unit.
The fuel gauge is regulated by a variable ground signal supplied

- to combination meter terminal 20 for the fuel gauge
- through fuel level sensor unit terminal G (with VG33E and VG33ER) or 1 (with KA24DE)
- through fuel level sensor unit terminal E (with VG33E and VG33ER) or 4 (with KA24DE)
- through body grounds M14 and M68.

WATER TEMPERATURE GAUGE

NEEL0042S01

The water temperature gauge indicates the engine coolant temperature. The reading on the gauge is based on the resistance of the thermal transmitter.
The water temperature gauge is regulated by a variable ground signal supplied

- to combination meter terminal 19
- through thermal transmitter terminal 1.

As the temperature of the coolant increases, the resistance of the thermal transmitter decreases and the needle on the gauge moves from C to H.

TACHOMETER

NEEL0042S02

The tachometer indicates engine speed in revolutions per minute (rpm).
The tachometer is regulated by a signal

- to combination meter terminal 21 for the tachometer
- from ECM terminal 3.

SPEEDOMETER

NEEL0042S04

The vehicle speed sensor provides a voltage signal to the combination meter for the speedometer.
The voltage is supplied

- to combination meter terminals 22 and 23 for the speedometer
- from vehicle speed sensor terminals 1 and 2.

The unified meter control unit converts the voltage to the vehicle speed and displays it on the speedometer.

Combination Meter

NEEL0043

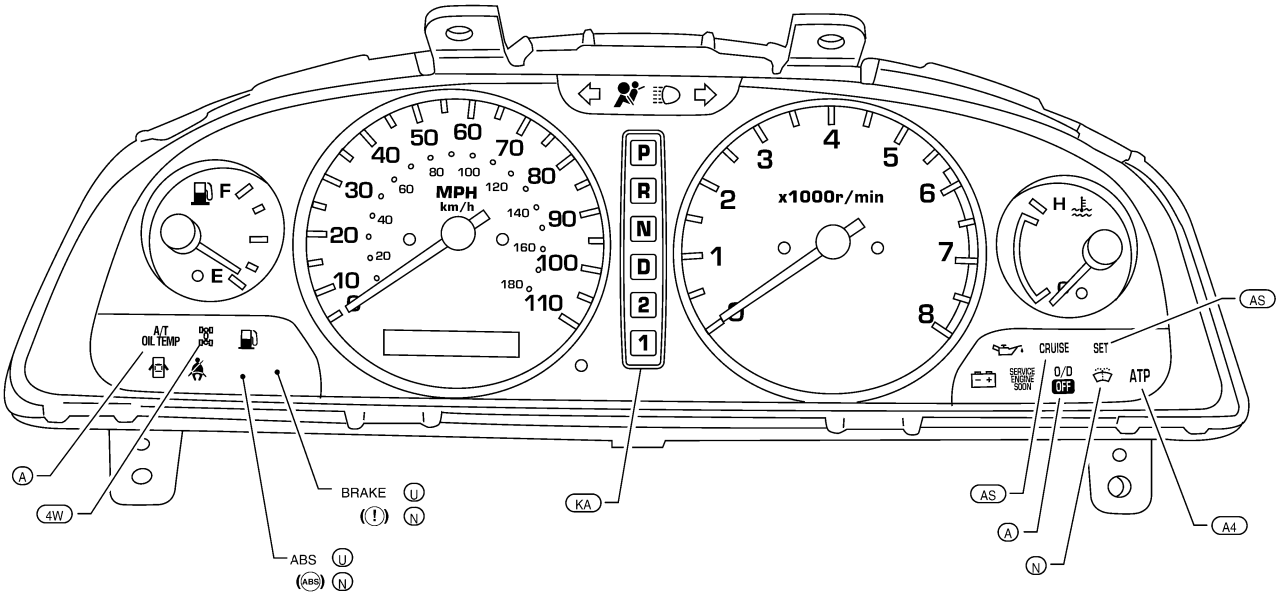

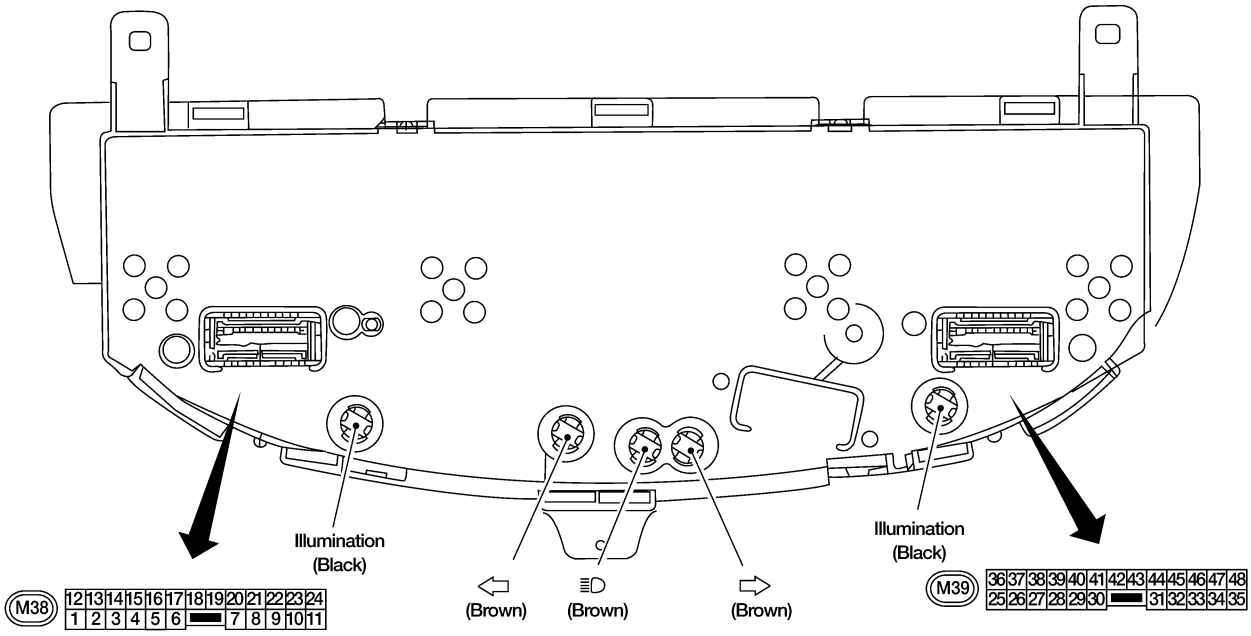

Bulb socket color	Bulb wattage
Brown	1.4 W
Black	3.0 W

( ) : Bulb socket color

(A4) : With A/T and 4-wheel drive
(A) : With A/T
(N) : For Canada
(U) : For USA
(AS) : With ASCD
(4W) : With 4-wheel drive
(KA) : With KA24DE

WEL045B

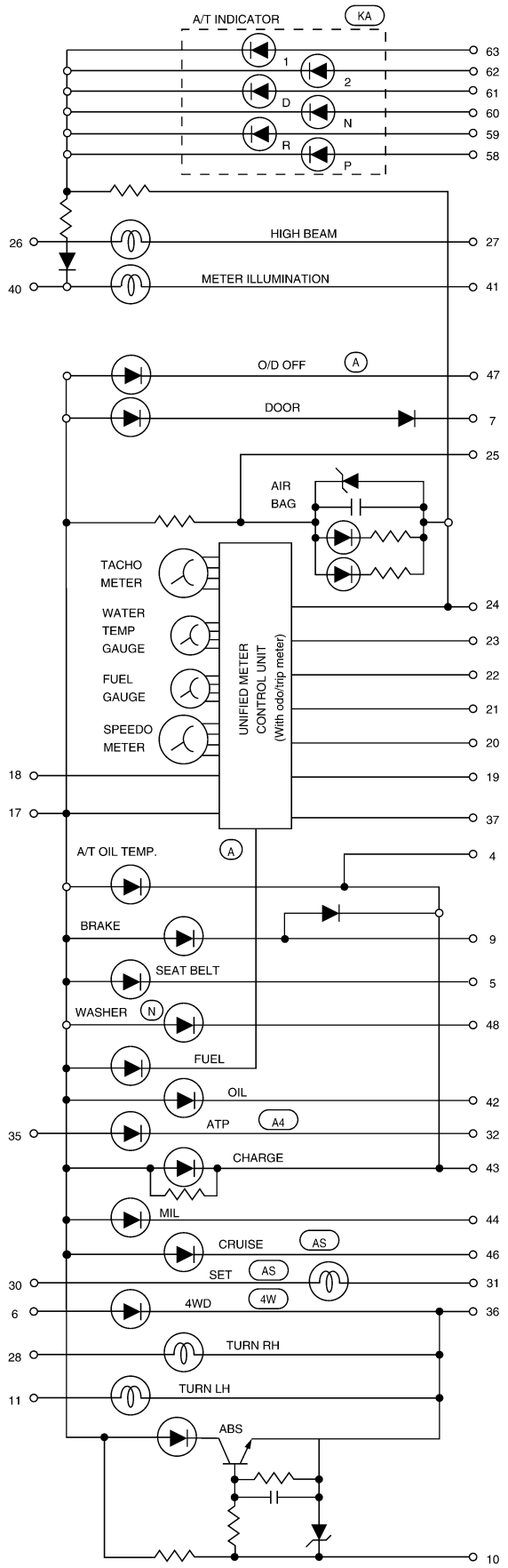

KA : With KA24DE engine and A/T
A4 : With A/T and 4-wheel drive
A : With A/T
N : For Canada
AS : With ASCD
4W : With 4-wheel drive

WEL046B

Wiring Diagram — METER —

NEEL0045

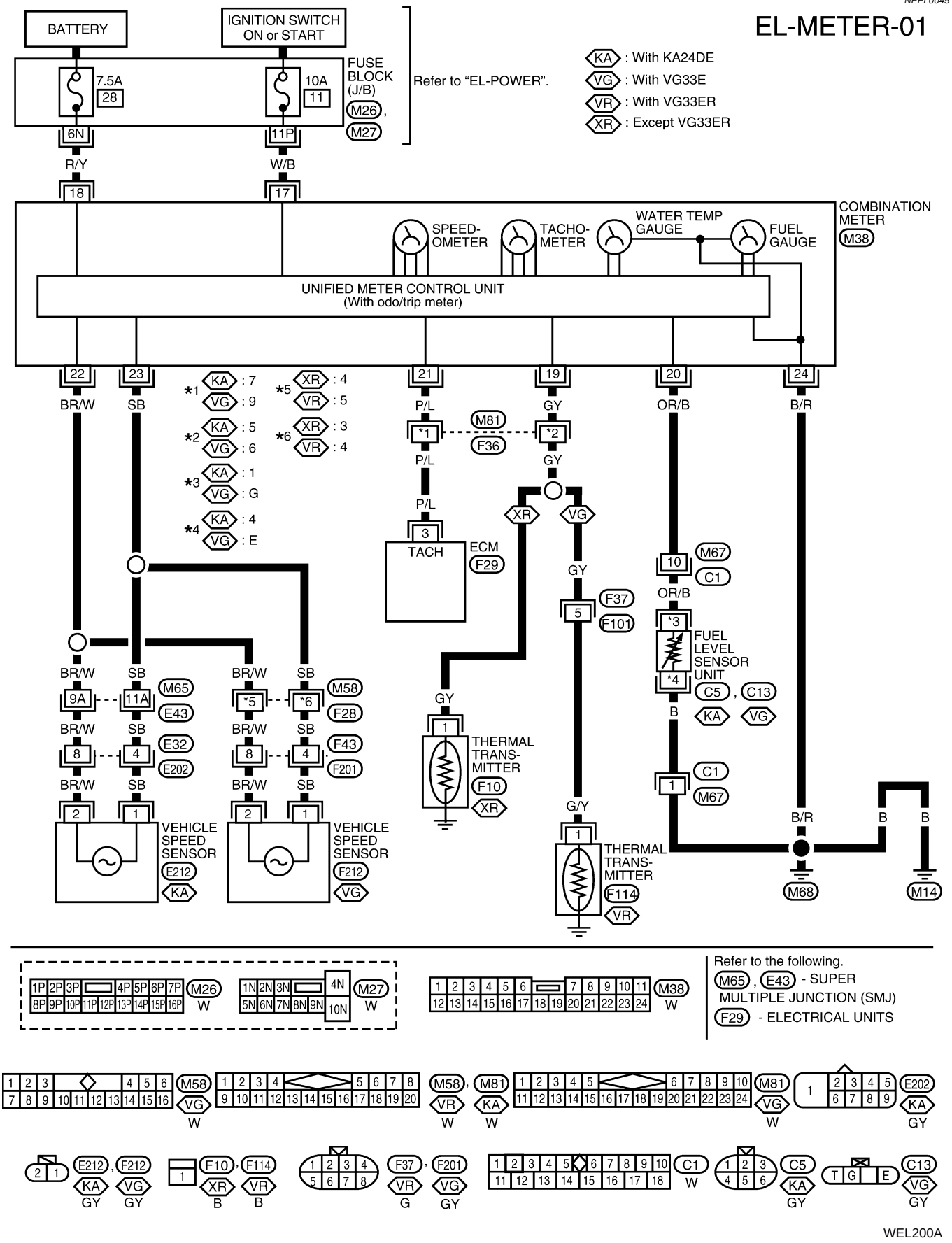

Meter/Gauge Operation and Odo/Trip Meter Segment Check in Diagnosis Mode

NEEL0151

DIAGNOSIS FUNCTION

NEEL0151S01

- Odo/trip meter segment can be checked in diagnosis mode.
- Meters/gauges can be checked in diagnosis mode.

HOW TO ALTERNATE DIAGNOSIS MODE

NEEL0151S02

1. Turn ignition switch ON and change odo/trip meter to TRIP A or TRIP B.
2. Turn ignition switch OFF.
3. Turn ignition switch ON while pressing and holding odo/trip meter switch.
4. Confirm that trip meter indicates “000.0”.
5. Push odo/trip meter switch more than 3 times within 7 seconds.

SEL110V

6. All odo/trip meter segments should be turned on.

NOTE:
If some segments are not turned on, unified meter control unit should be replaced.

At this point, the unified meter control unit is in diagnosis mode.

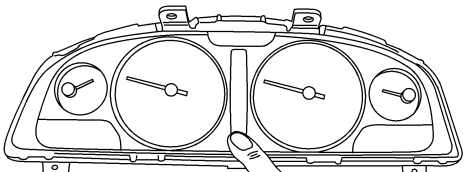
AEL742C

7. Push odo/trip meter switch. Indication of each meter/gauge should be as shown in figure at left while pushing odo/trip meter switch if it is not malfunctioning.

NOTE:
It takes about 1 minute for indication of fuel gauge to become stable.

Trouble Diagnoses

PRELIMINARY CHECK

NEEL0046

NEEL0046S04

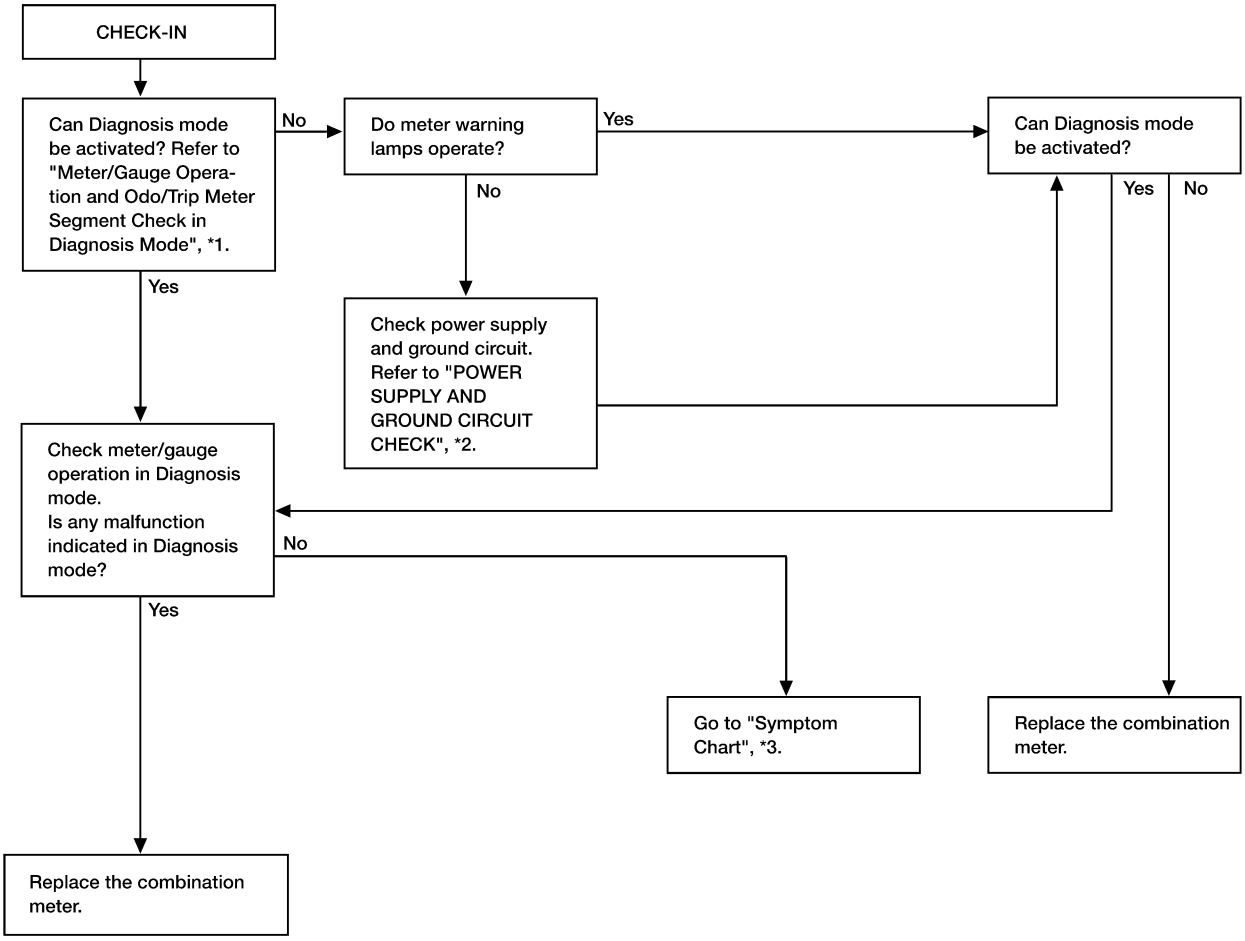

WEL835A

*1: EL-75 *2: EL-78 *3: EL-77

SYMPTOM CHART

NEEL0046S05

Symptom Chart 1 (Malfunction is Indicated in Diagnosis Mode)

NEEL0046S0501

Symptom	Possible causes	Repair order
Odo/trip meter indicates malfunction in Diagnosis mode.	● Unified meter control unit	● Replace combination meter.
Multiple meters/gauges indicate malfunction in Diagnosis mode.		
Speedometer, tachometer, fuel gauge or water temp. gauge indicates malfunction in Diagnosis mode.	1. Meter/Gauge 2. Unified meter control unit	

Symptom Chart 2 (No Malfunction is Indicated in Diagnosis Mode)

NEEL0046S0502

Symptom	Possible causes	Repair order
One or more gauges (speedometer, tachometer, fuel gauge, water temp. gauge) are malfunctioning.	1. Sensor – Vehicle speed signal – Engine revolution signal – Fuel gauge – Water temp. gauge 2. Unified meter control unit	1. Check the sensor for malfunctioning meter/gauge. Refer to "INSPECTION/VEHICLE SPEED SENSOR", EL-79. Refer to "INSPECTION/ENGINE REVOLUTION SIGNAL", EL-80. Refer to "INSPECTION/FUEL LEVEL SENSOR UNIT", EL-81. Refer to "INSPECTION/THERMAL TRANSMITTER", EL-82. 2. Replace combination meter.

Before starting trouble diagnoses above, perform "PRELIMINARY CHECK", EL-76.

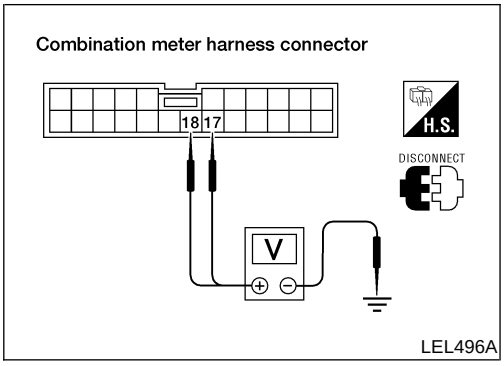

POWER SUPPLY AND GROUND CIRCUIT CHECK

=NEEL0046S07

Power Supply Circuit Check

NEEL0046S0701

Terminals			Ignition switch position		
(+)		(−)			
Connector	Terminal (Wire color)		OFF	ACC	ON
M38	18 (R/Y)	Ground	Battery voltage	Battery voltage	Battery voltage
M38	17 (W/B)		0V	0V	Battery voltage

If NG, check the following.

- 7.5A fuse [No. 28, located in fuse block (J/B)]
- 10A fuse [No. 11, located in fuse block (J/B)]
- Harness for open or short between fuse and combination meter

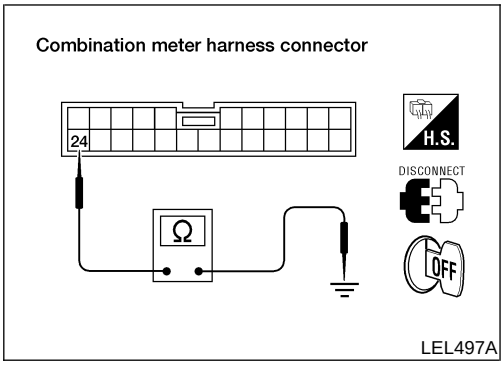

Ground Circuit Check

NEEL0046S0702

Terminals			Continuity
(+)		(−)	
Connector	Terminal (Wire color)		
M38	24 (B/R)	Ground	Yes

INSPECTION/VEHICLE SPEED SENSOR

=NEEL0046S03

1	CHECK VEHICLE SPEED SENSOR OUTPUT

1. Remove vehicle speed sensor from transmission.
2. Check voltage between combination meter harness connector M38 terminals 22 (BR/W) and 23 (SB) while quickly turning vehicle speed sensor pinion.

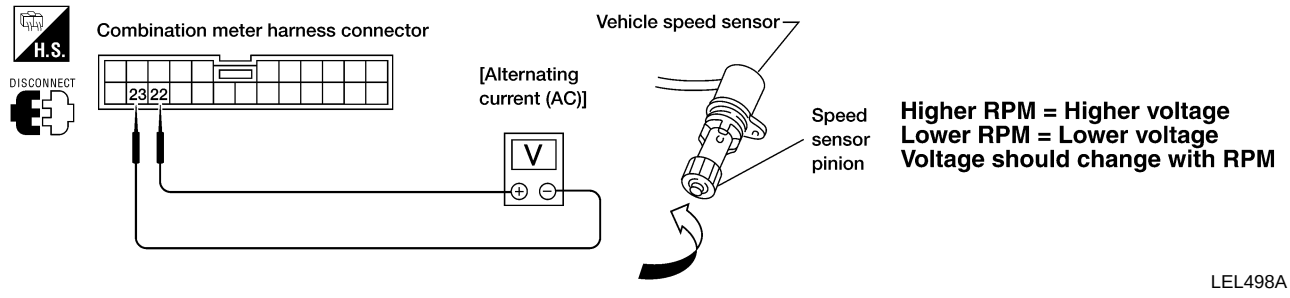

OK or NG

OK	▶	Vehicle speed sensor is OK.
NG	▶	GO TO 2.

2	CHECK VEHICLE SPEED SENSOR

Check resistance between vehicle speed sensor terminals 1 and 2.

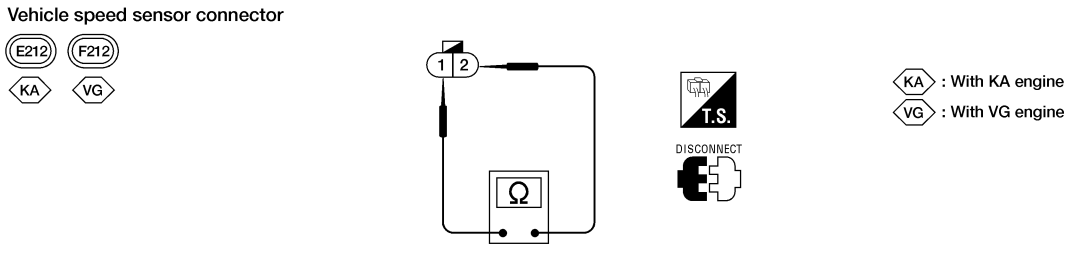

Resistance: Approx. 285Ω

OK or NG

OK	▶	Check harness and connector between speedometer and vehicle speed sensor.
NG	▶	Replace vehicle speed sensor.

INSPECTION/ENGINE REVOLUTION SIGNAL

NEEL0046S02

1	CHECK ECM OUTPUT

1. Start engine.
2. Check voltage between combination meter harness connector M38 terminals 21 (P/L) and 24 (B/R) at idle and 2,000 rpm.

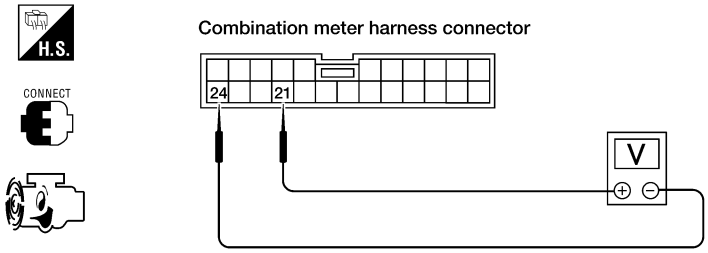

Voltage: Approx. 0.5V

LEL499A

OK or NG

OK	▶	Engine revolution signal is OK.
NG	▶	Harness for open or short between ECM and combination meter

INSPECTION/FUEL LEVEL SENSOR UNIT

=NEEL0046S08

1	CHECK GROUND CIRCUIT FOR FUEL LEVEL SENSOR UNIT

With VG33E and VG33ER: Check harness continuity between fuel level sensor unit harness connector C13 terminal E (B) and ground.
With KA24DE: Check harness continuity between fuel level sensor unit harness connector C5 terminal 4 (B) and ground.

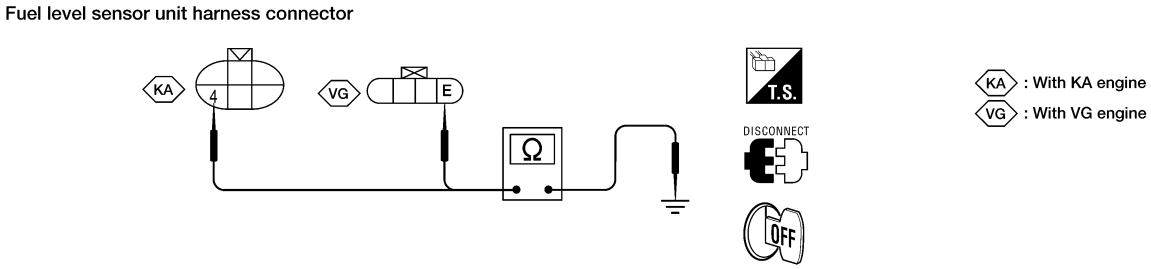

LEL364A

Does continuity exist?

Yes	▶	GO TO 2.
No	▶	Repair harness or connector.

2	CHECK GAUGE UNITS

Refer to "FUEL LEVEL SENSOR UNIT CHECK", EL-82.

OK or NG

OK	▶	GO TO 3.
NG	▶	Replace fuel level sensor unit.

3	CHECK HARNESS FOR OPEN OR SHORT

1. Disconnect combination meter harness connector M38, fuel level sensor unit harness connector and ECM harness connector F29.
2. With VG33E and VG33ER: Check continuity between combination meter harness connector M38, terminal 20 (OR/B) and fuel level sensor unit harness connector C13 terminal G (OR/B).
   With KA24DE: Check continuity between combination meter harness connector M38, terminal 20 (OR/B) and fuel level sensor unit harness connector C5 terminal 1 (OR/B).
   Continuity should exist.
3. Check continuity between combination meter harness connector M38 terminal 20 (OR/B) and ground.
   Continuity should not exist.

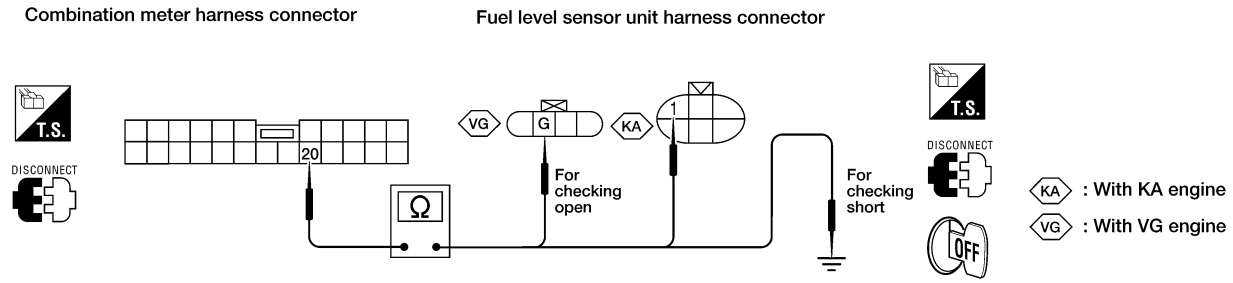

WEL534A

OK or NG

OK	▶	Fuel level sensor unit is OK.
NG	▶	Repair harness or connector.

INSPECTION/THERMAL TRANSMITTER

NEEL0046S09

1	CHECK THERMAL TRANSMITTER	
Refer to "THERMAL TRANSMITTER CHECK", EL-83.		
OK or NG		
OK	▶	GO TO 2.
NG	▶	Replace thermal transmitter.

2	CHECK HARNESS FOR OPEN OR SHORT	
1. Disconnect combination meter harness connector and thermal transmitter harness connector. 2. Check continuity between combination meter harness connector M38 terminal 19 (GY) and thermal transmitter harness connector F10 (except VG33ER) terminal 1 (GY) or F114 (with VG33ER) terminal 1 (G/Y). **Continuity should exist.** 3. Check continuity between combination meter harness connector terminal 19 and ground. **Continuity should not exist.**		
OK or NG		
OK	▶	Thermal transmitter is OK.
NG	▶	Repair harness or connector.

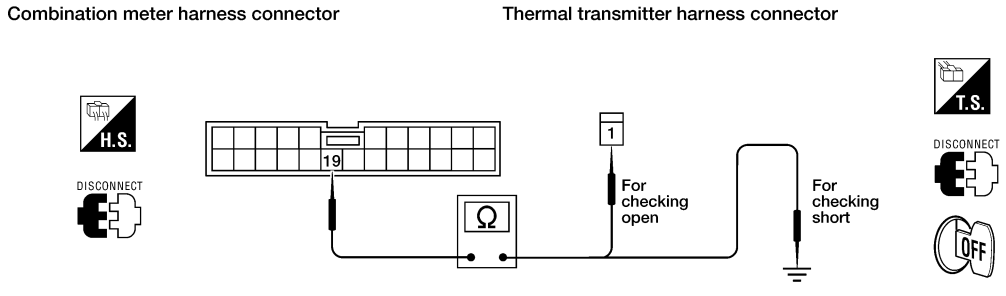

LEL193A

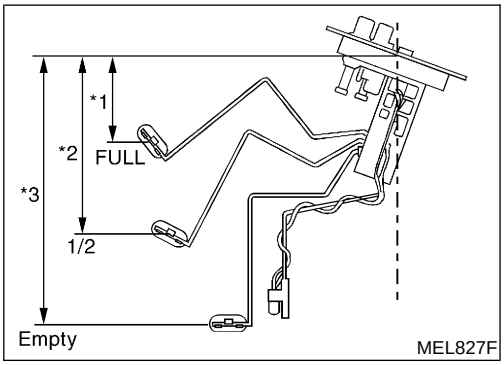

MEL827F

Electrical Components Inspection

NEEL0047

FUEL LEVEL SENSOR UNIT CHECK

NEEL0047S01

- Refer to ***FE-7***, "Removal".

With KA24DE

NEEL0047S0101

Check the resistance between fuel level sensor unit terminals 1 and 4.

Ohmmeter (+)	Ohmmeter (−)	Float position mm (in)			Resistance value (Ω) (Approx.)
1	4	*1	Full	96 (3.78)	4 - 6
		*2	1/2	188 (7.40)	30 - 34
		*3	Empty	257 (10.12)	80 - 83

*1 and *3: When float rod is in contact with stopper.

With VG33E and VG33ER

NEEL0047S0102

Check the resistance between fuel level sensor unit terminals G and E.

Ohmmeter (+)	Ohmmeter (−)	Float position mm (in)			Resistance value (Ω) (Approx.)
G	E	*1	Full	96 (3.78)	4 - 6
		*2	1/2	188 (7.40)	30 - 34
		*3	Empty	257 (10.12)	80 - 83

*1 and *3: When float rod is in contact with stopper.

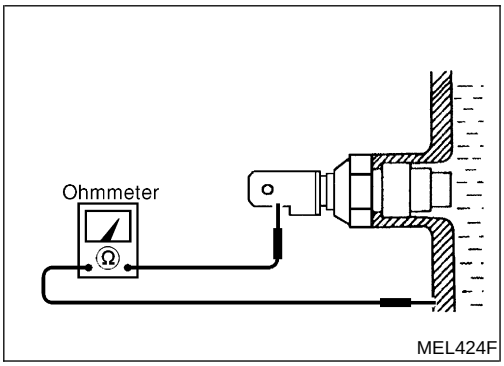

THERMAL TRANSMITTER CHECK

NEEL0047S02

Check the resistance between thermal transmitter terminal 1 and body ground.

Water temperature	Resistance (Approx.)
60°C (140°F)	170 - 210Ω
100°C (212°F)	47 - 53Ω

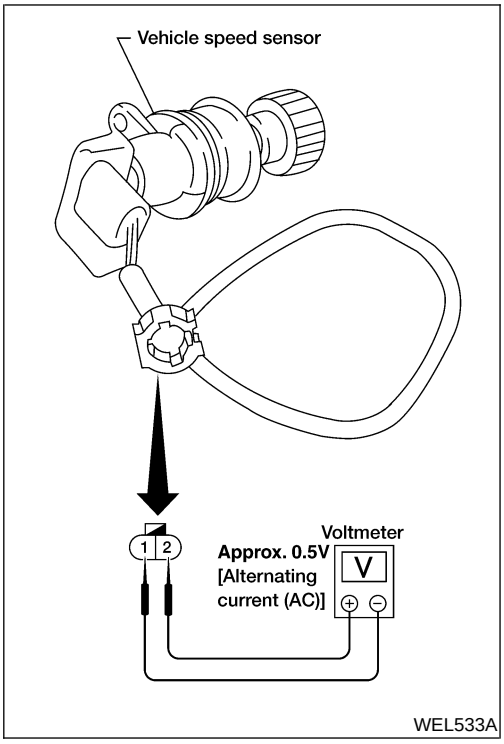

VEHICLE SPEED SENSOR SIGNAL CHECK

NEEL0047S03

1. Remove vehicle speed sensor from transmission.
2. Turn vehicle speed sensor pinion quickly and measure voltage across 1 and 2.

Circuit Diagram

NEEL0049

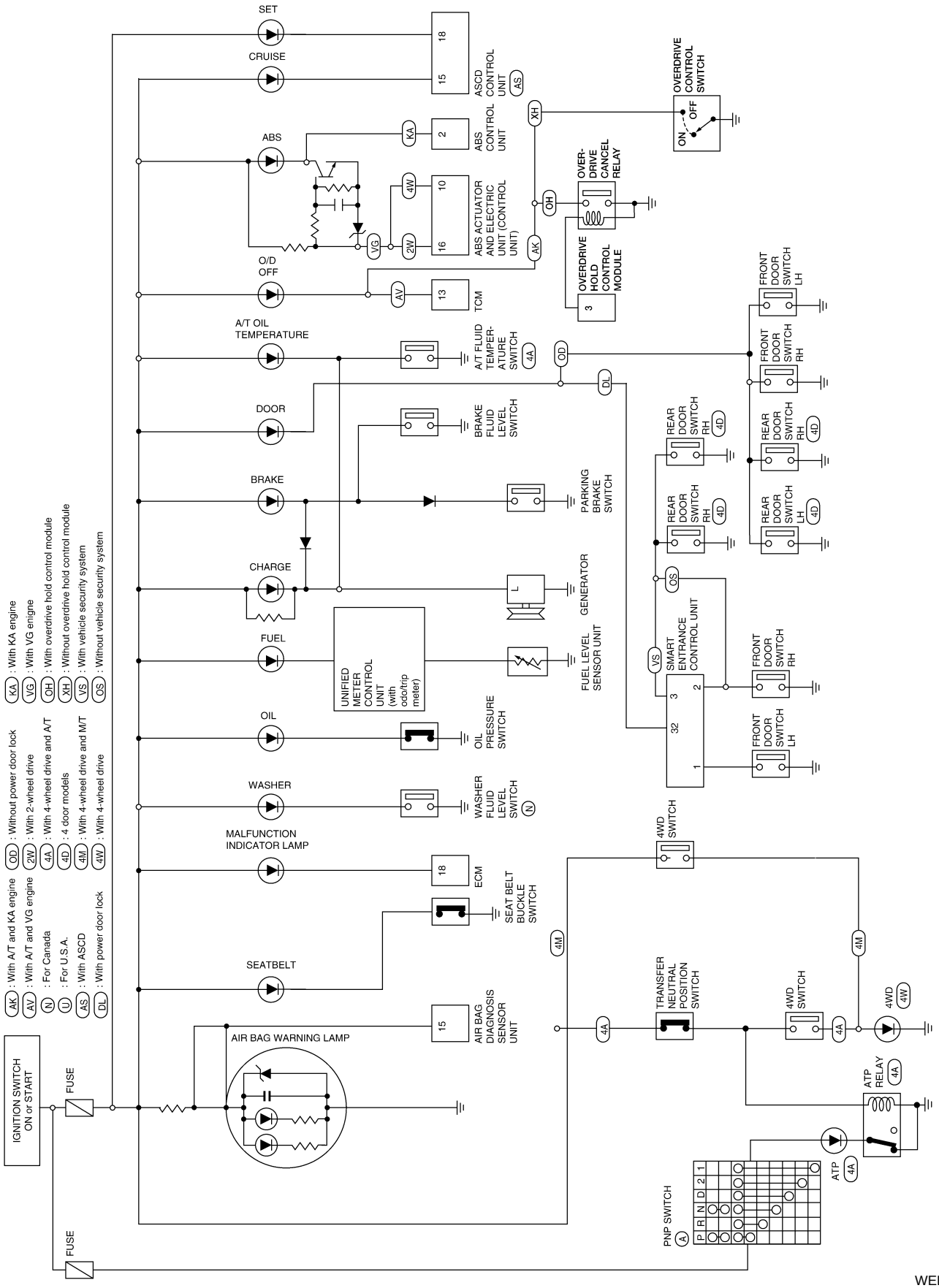

WEL048B

Wiring Diagram — WARN —

NEEL0050

EL-WARN-01

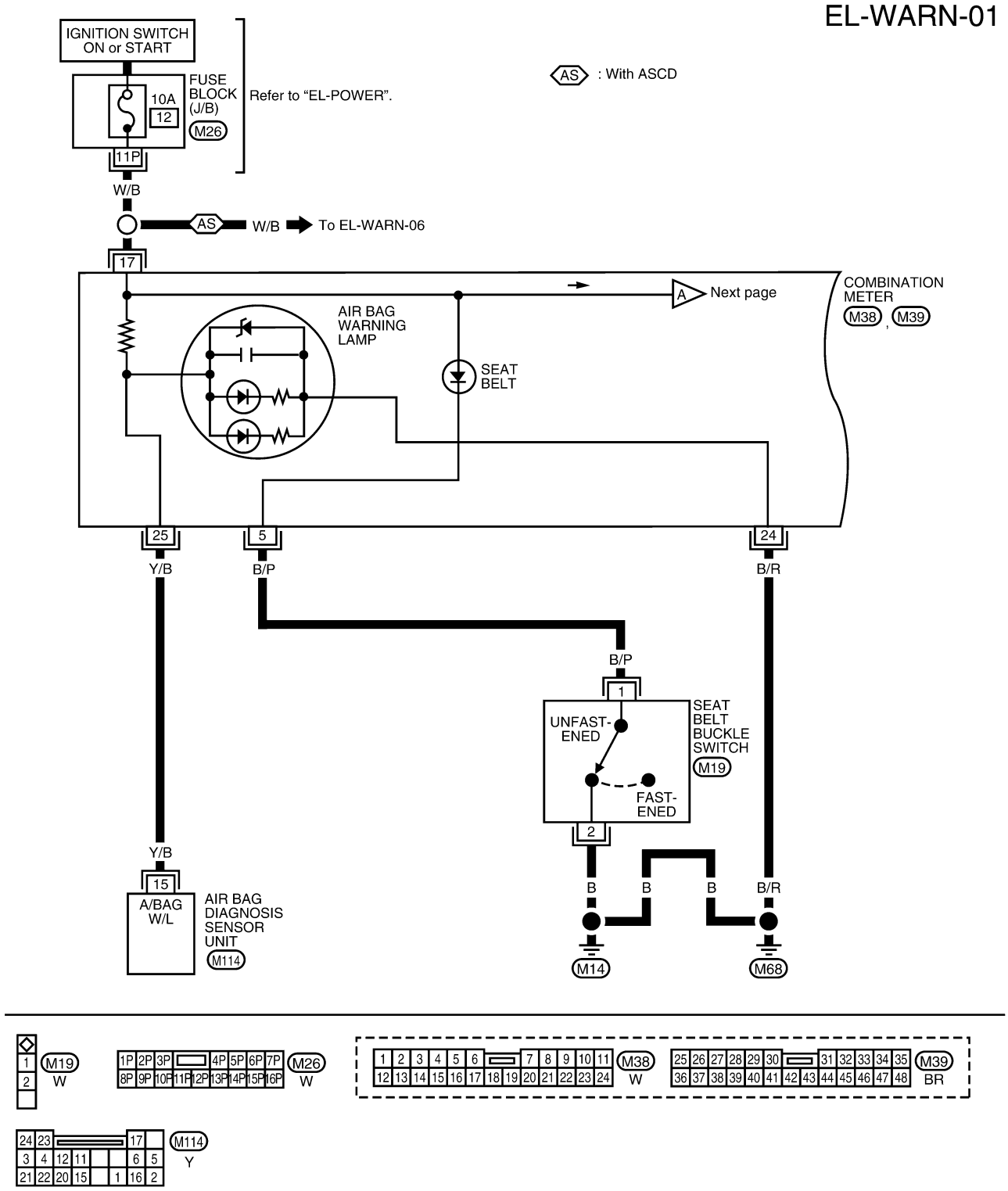

WEL049B

EL-WARN-02

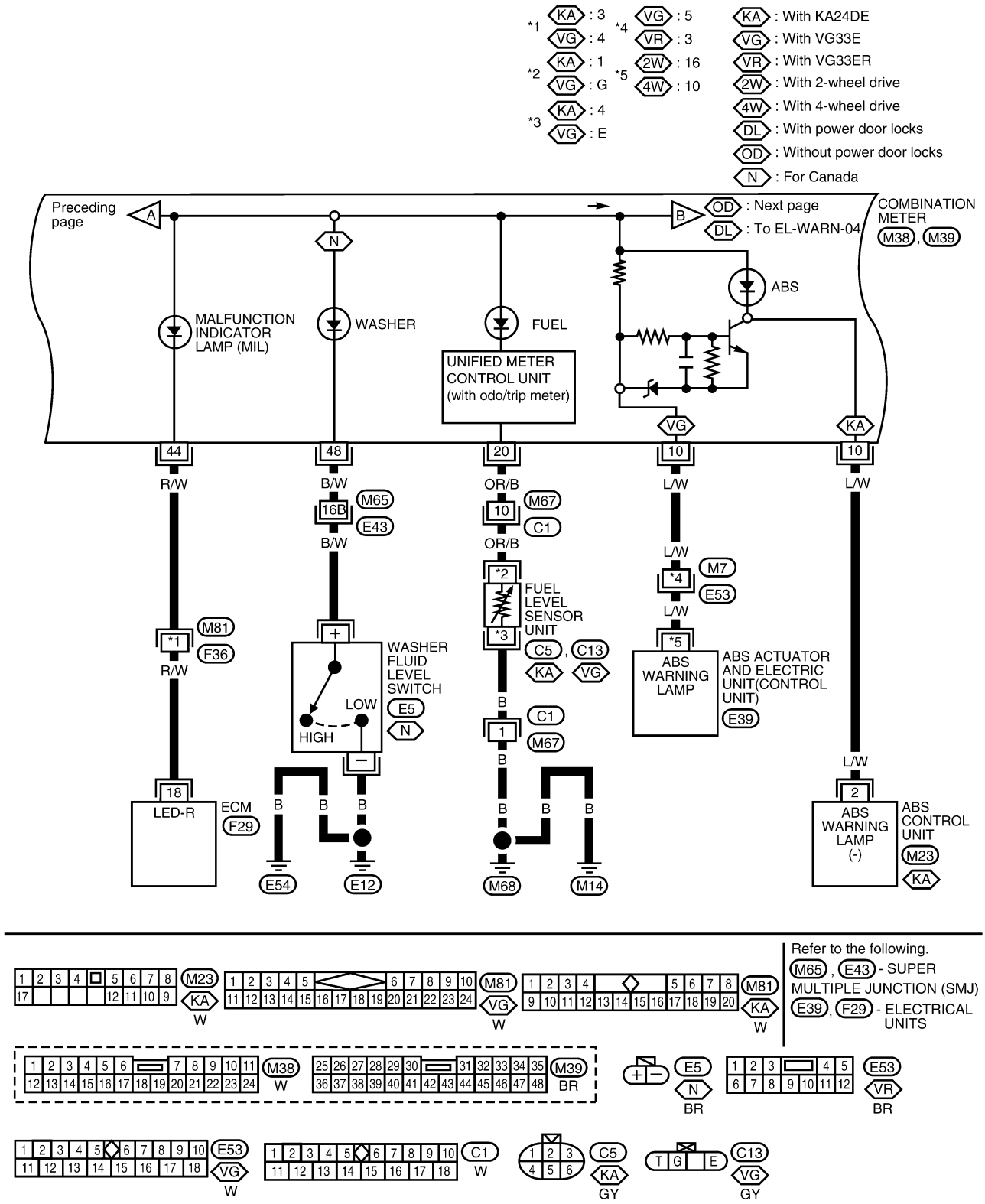

WEL050B

MODELS WITHOUT POWER DOOR LOCKS

NEEL0050S01

EL-WARN-03

2D : 2 door models
4D : 4 door models

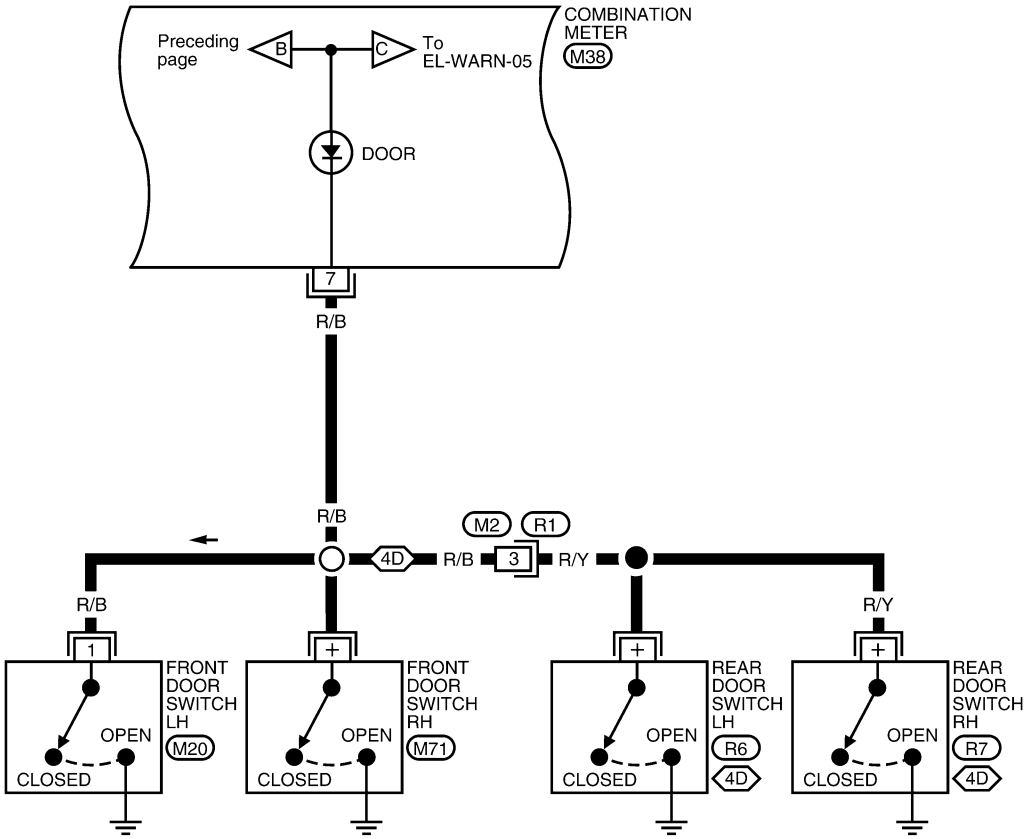

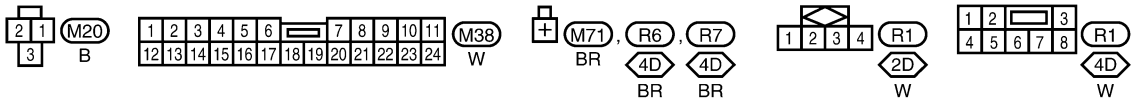

WEL051B

MODELS WITH POWER DOOR LOCKS

NEEL0050S02

EL-WARN-04

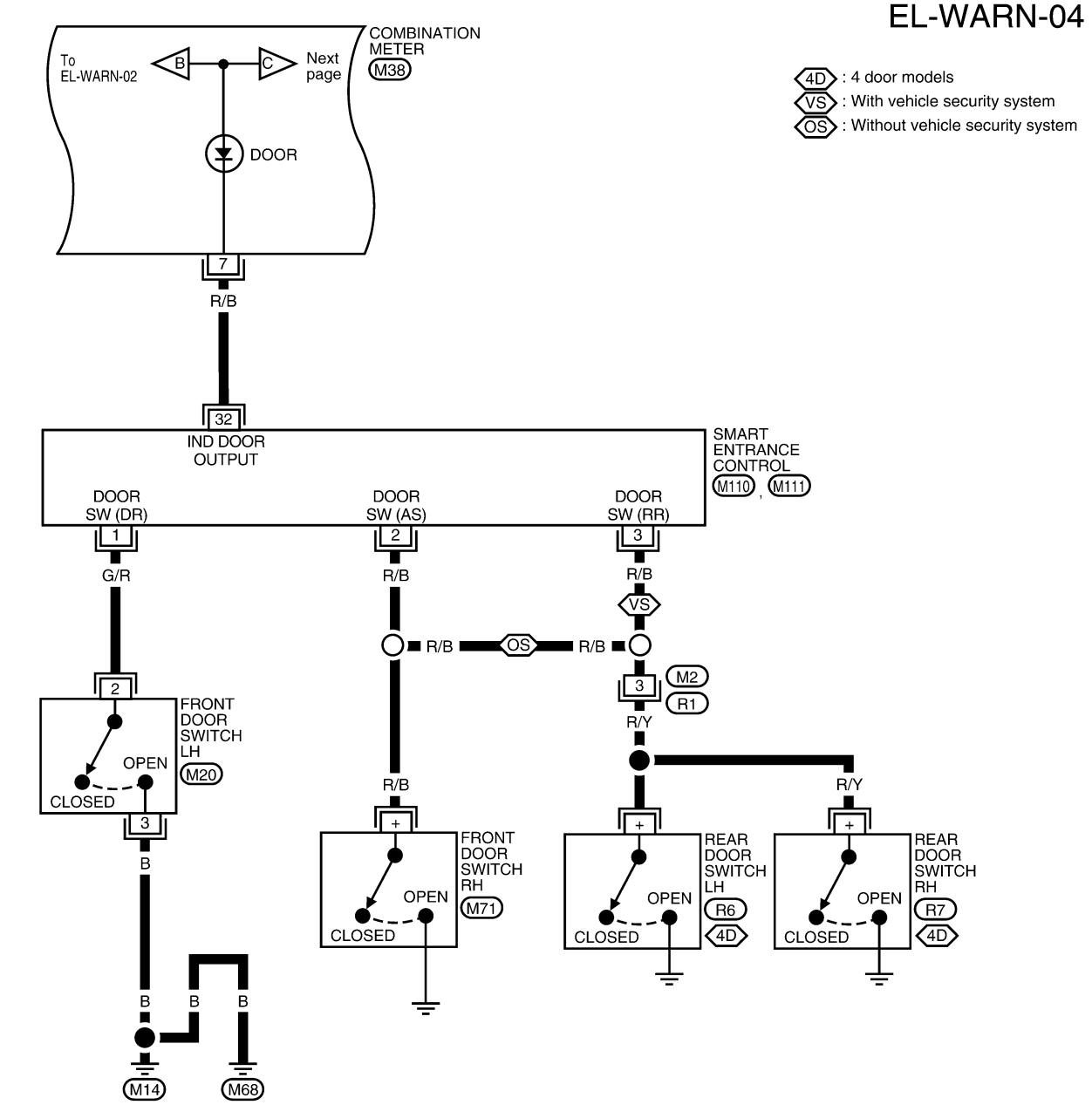

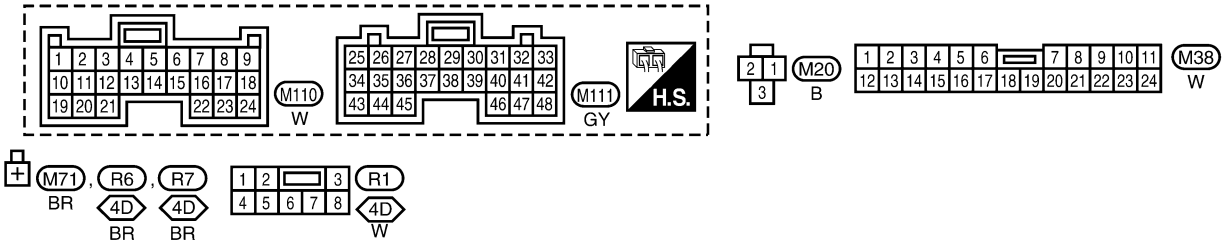

WEL052B

EL-WARN-05

4A : With 4-wheel drive and A/T
KA : With KA engine
VG : With VG engine
2X : With 2-wheel drive except 4 door models
4W : With 4-wheel drive and 4 door models and models with VG33ER engine

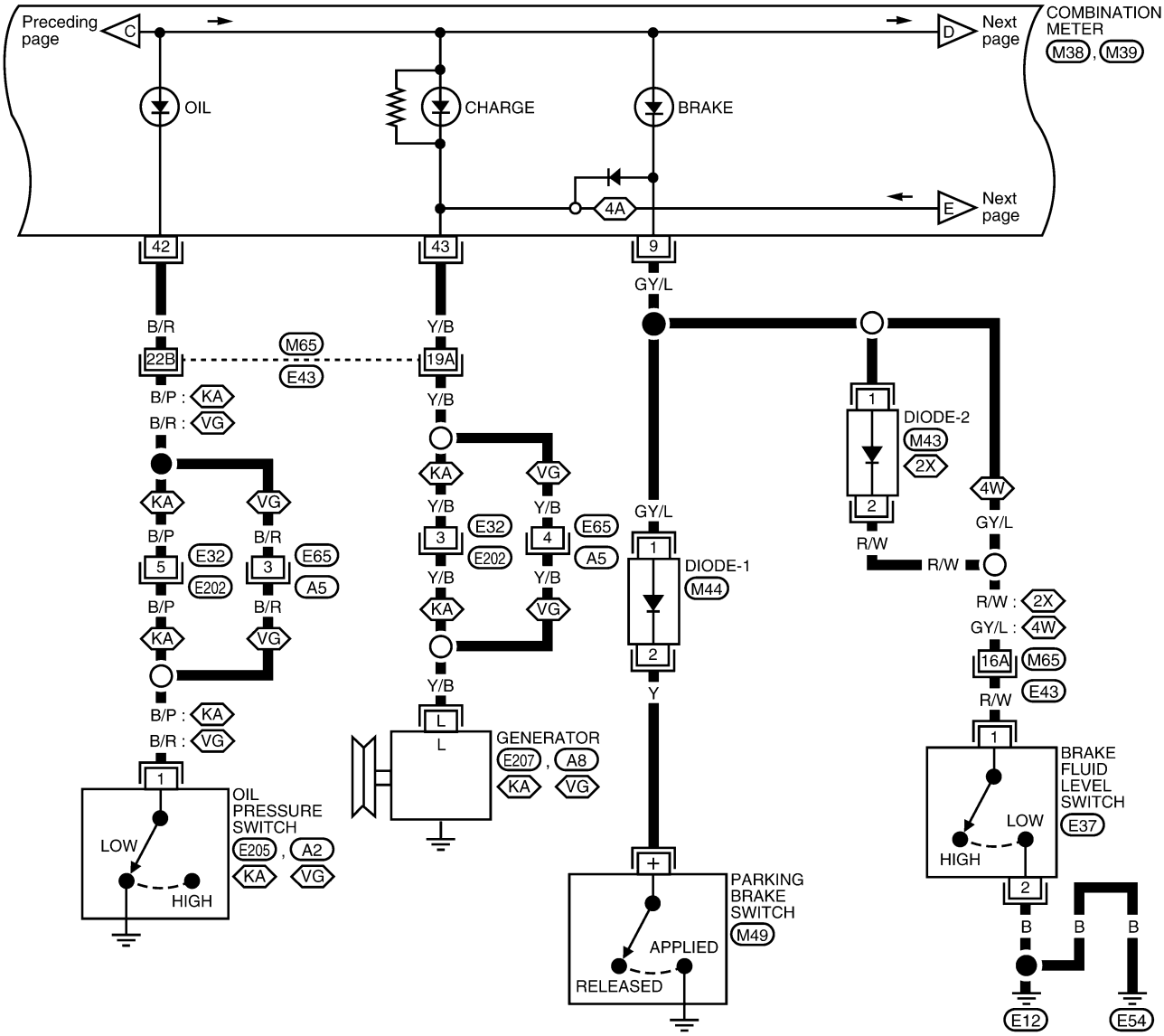

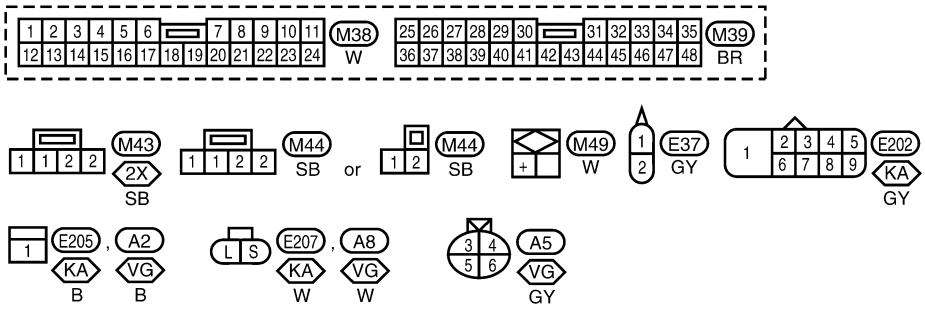

Refer to the following.
M65, E43 - SUPER MULTIPLE JUNCTION (SMJ)

WEL053B

EL-WARN-06

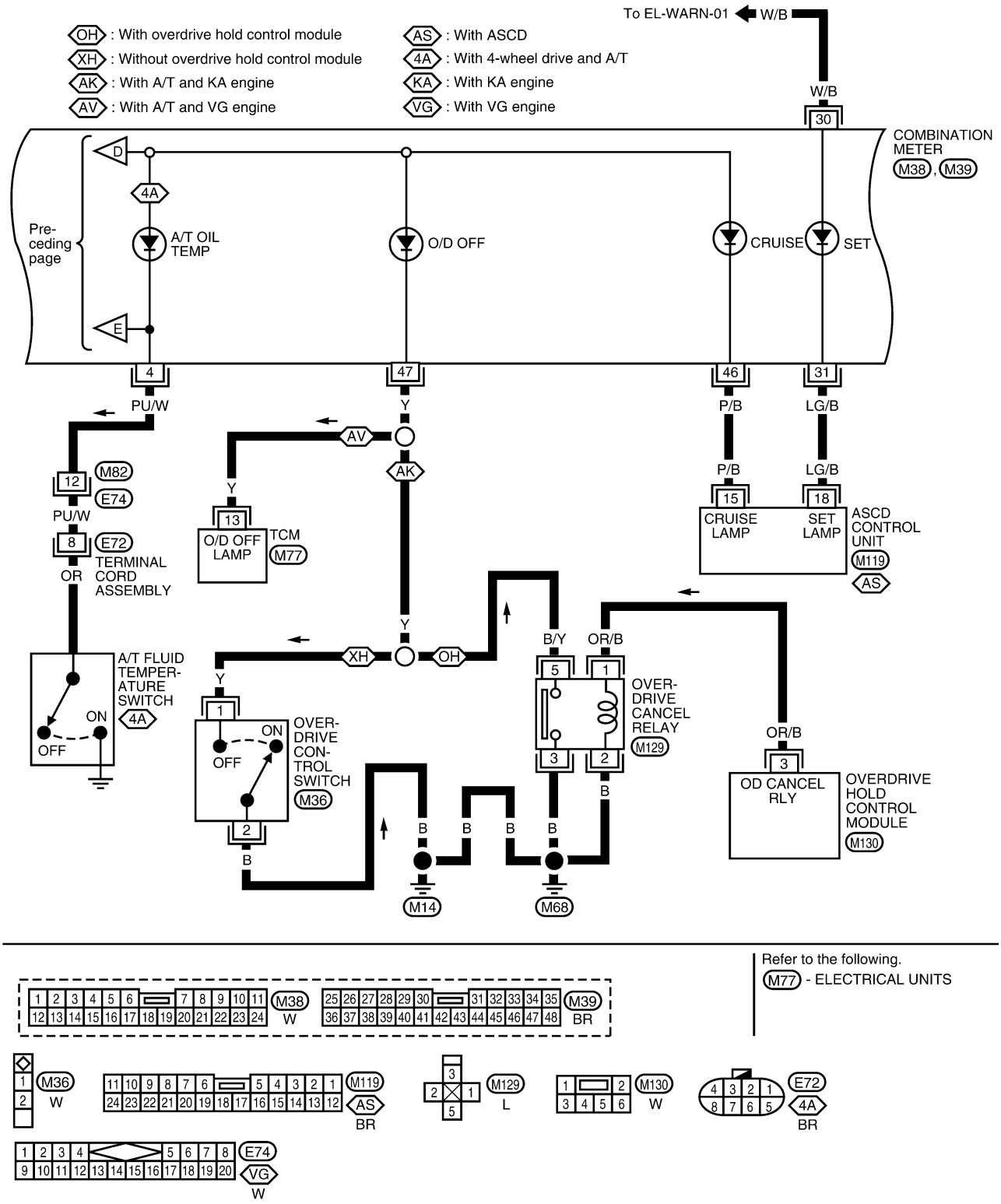

WEL054B

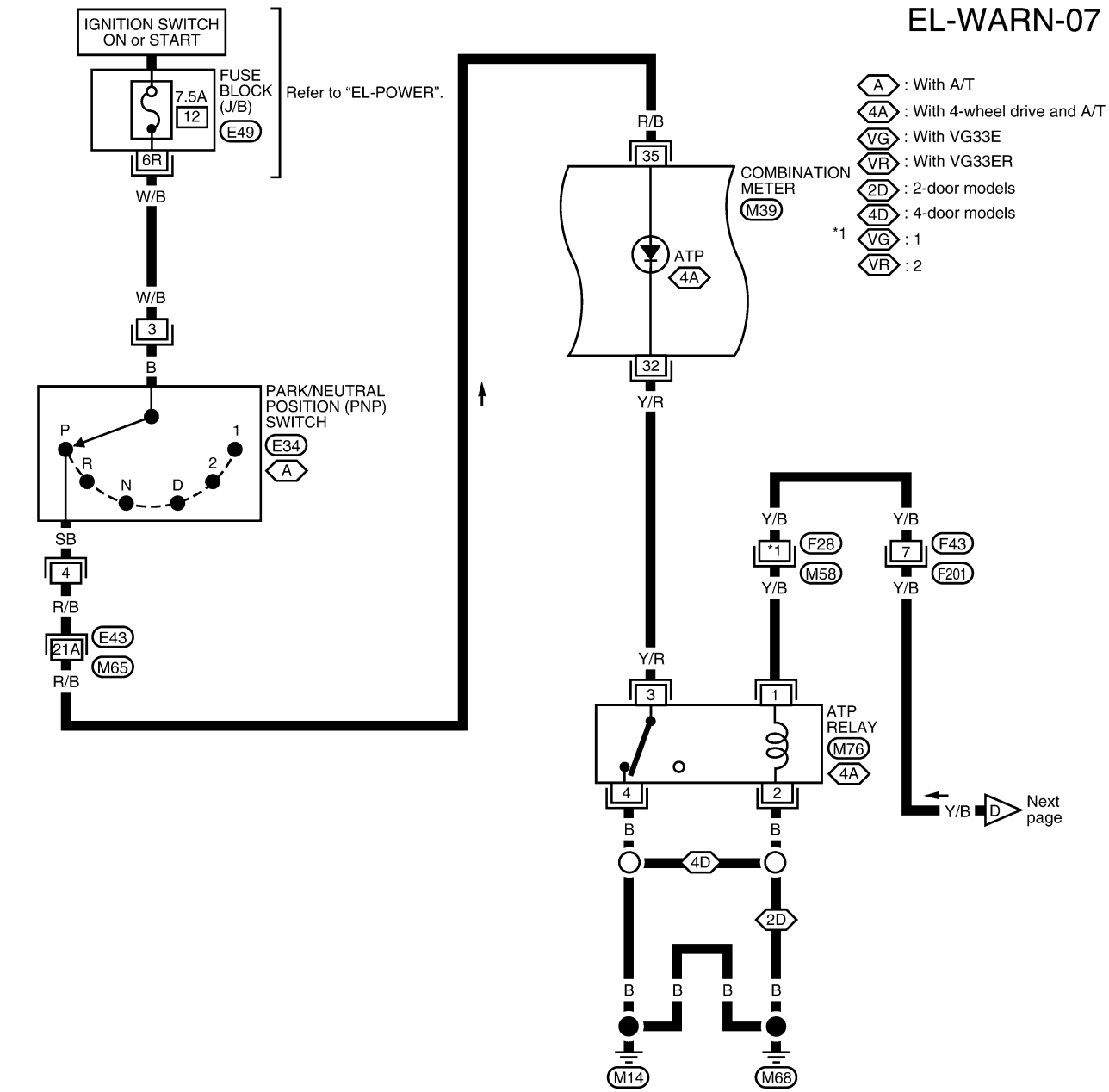

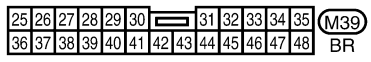

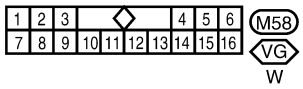

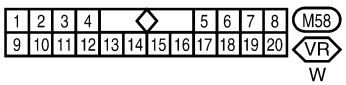

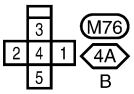

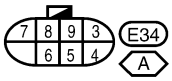

Refer to the following.
M65, E43 - SUPER MULTIPLE JUNCTION (SMJ)

WEL055B

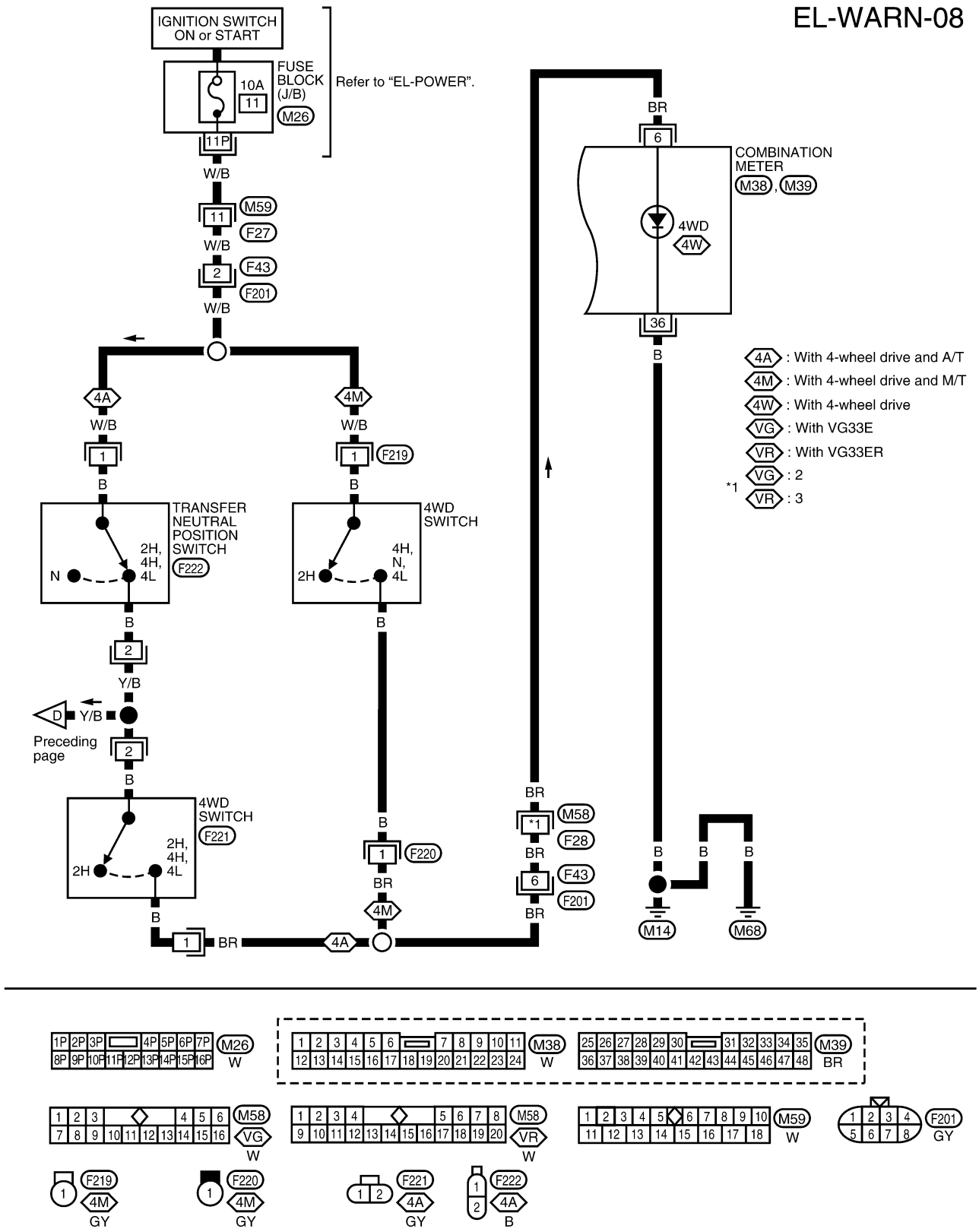
EL-WARN-08
IGNITION SWITCH ON or START
FUSE BLOCK (J/B)
10A
11
M26
Refer to "EL-POWER".
11P
W/B
M59
F27
F43
F201
4A
4M
1
F219
B
TRANSFER NEUTRAL POSITION SWITCH
F222
2H, 4H, 4L
N
4WD SWITCH
4H, N, 4L
2H
Y/B
D
Preceding page
F221
F220
BR
6
COMBINATION METER
M38, M39
4WD
4W
36
M58
*1
F28
M14
M68
4A : With 4-wheel drive and A/T
4M : With 4-wheel drive and M/T
4W : With 4-wheel drive
VG : With VG33E
VR : With VG33ER
VG : 2
VR : 3
*1
M26
W
M38
W
M39
BR
M58
VG
W
M58
VR
W
M59
W
F201
GY
F219
4M
GY
F220
4M
GY
F221
4A
GY
F222
4A
B
WEL056B

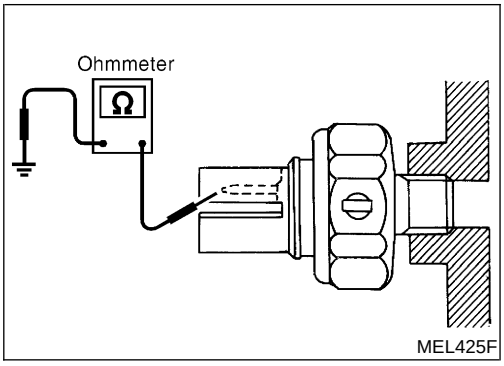

Electrical Components Inspection

NEEL0051

OIL PRESSURE SWITCH CHECK

NEEL0051S02

	Oil pressure kPa (kg/cm^2, psi)	Continuity
Engine start	More than 10 - 20 (0.1 - 0.2, 1 - 3)	No
Engine stop	Less than 10 - 20 (0.1 - 0.2, 1 - 3)	Yes

Check the continuity between oil pressure switch terminal 1 and body ground.

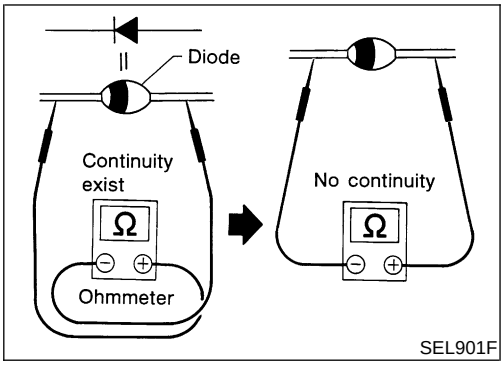

DIODE CHECK

NEEL0051S03

- Check continuity using an ohmmeter.
- Diode is functioning properly if test results are as shown in the figure at left.

NOTE:
Specification may vary depending on the type of tester. Before performing this inspection, be sure to refer to the instruction manual of the tester to be used.

- Diodes for warning lamps are built into the combination meter printed circuit.
- For diode location, refer to “Combination Meter”, EL-72.

Wiring Diagram — AT/IND —

NEEL0214

EL-AT/IND-01

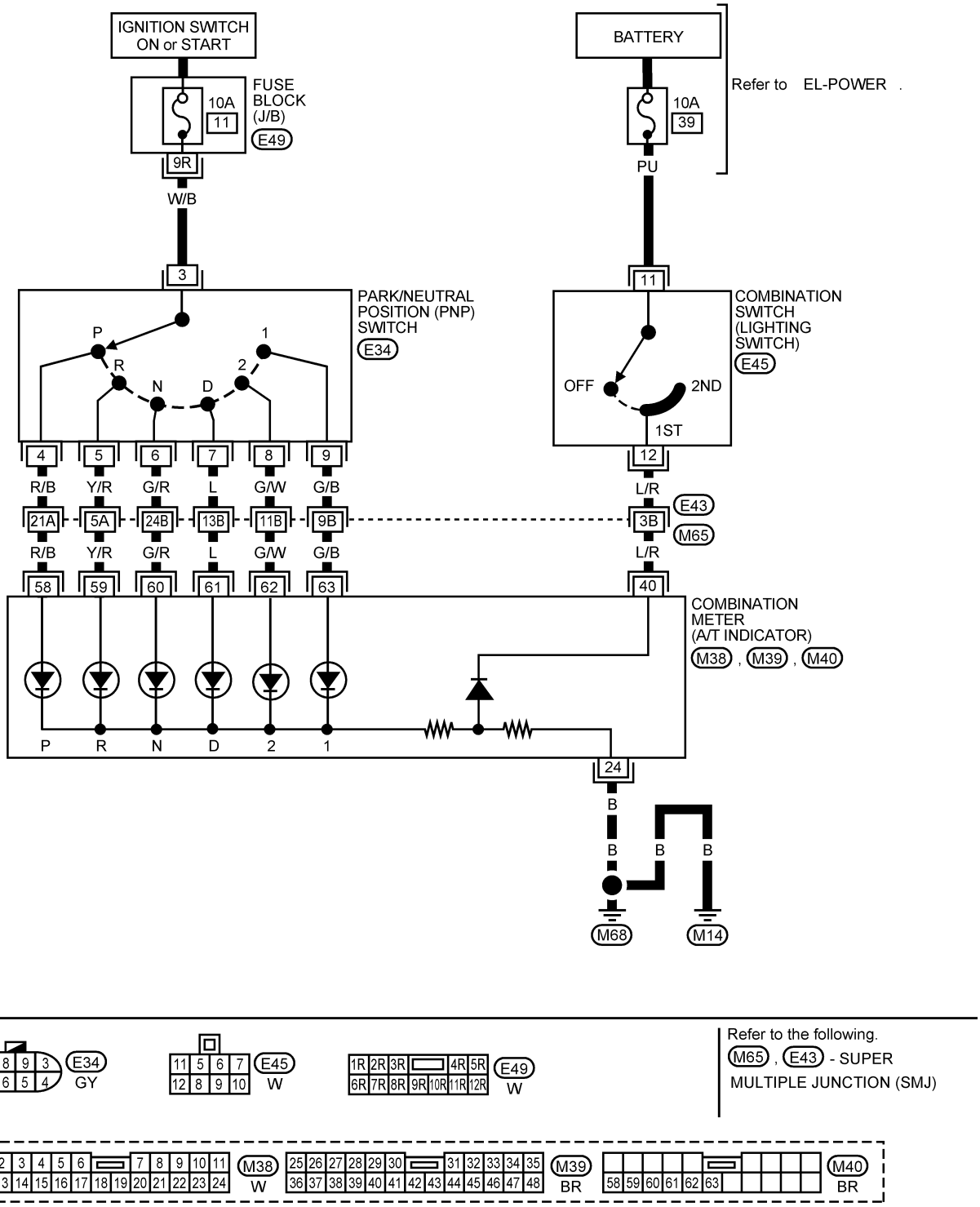

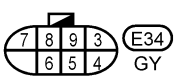

Refer to the following.
M65 , E43 - SUPER MULTIPLE JUNCTION (SMJ)

AEL769C

Component Parts and Harness Connector Location

NEEL0052

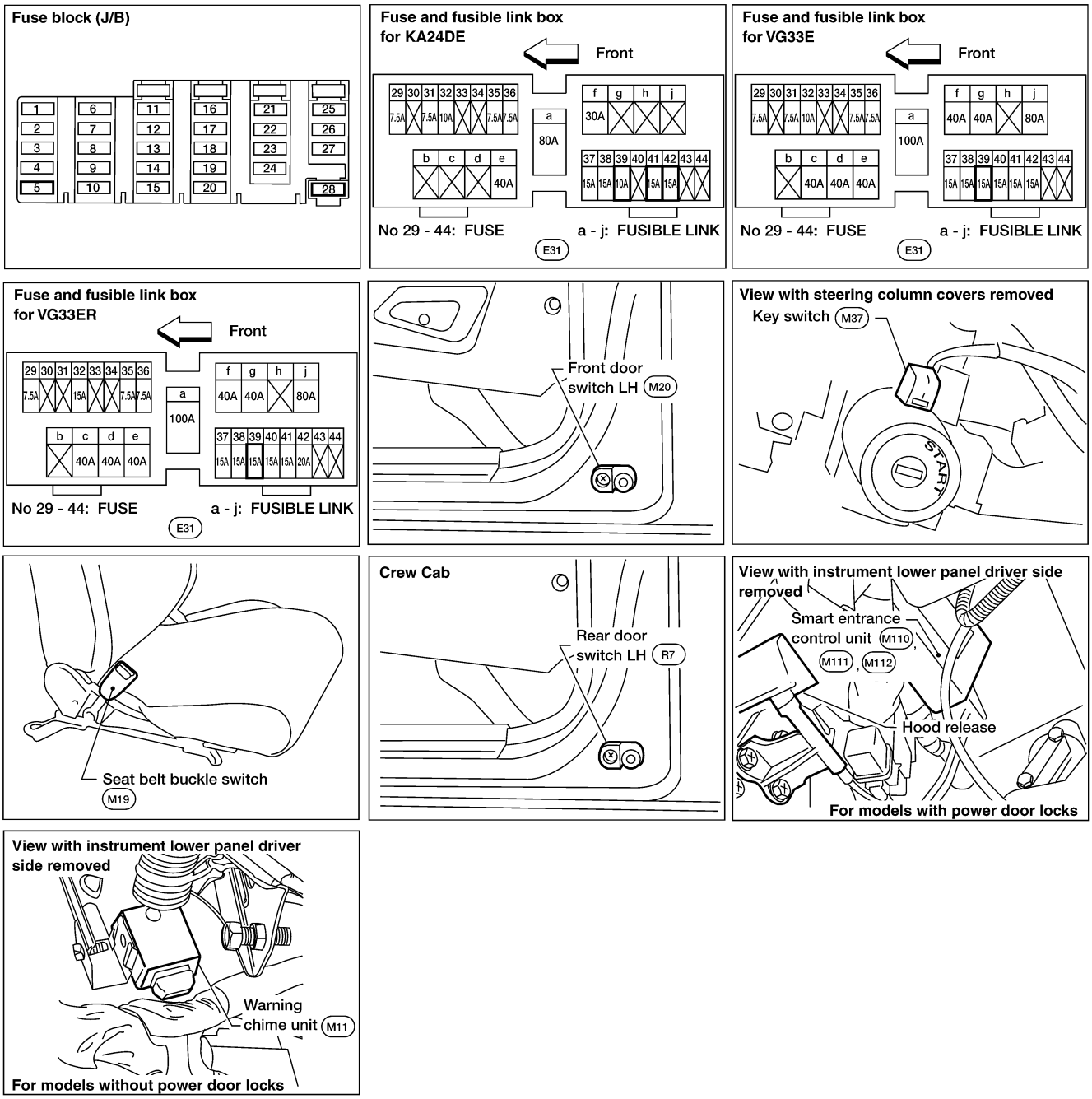

WEL464A

System Description

NEEL0053

MODELS WITHOUT POWER DOOR LOCKS

NEEL0053S04

The warning chime is integral with the warning chime unit, which controls its operation.
Power is supplied at all times

- through 7.5A fuse [No. 28, located in the fuse block (J/B)]
- to key switch terminal 1.

Power is supplied at all times

- through 10A fuse (with KA24DE) (No. 39, located in the fuse and fusible link box) or
- through 15A fuse (with VG33E and VG33ER) (No. 39, located in the fuse and fusible link box)
- to lighting switch terminal 11.

With the ignition switch in the ON or START position, power is supplied

- through 10A fuse [No. 5, located in the fuse block (J/B)]
- to warning chime unit terminal 1.

Ground is supplied to warning chime unit terminal 8 through body grounds M14 and M68.
When a signal, or combination of signals, is received by the warning chime unit, the warning chime will sound.

Ignition Key Warning Chime

NEEL0053S0401

With the key switch in the INSERTED (key is in the ignition key cylinder) position, the ignition switch in the OFF or ACC position and the front door LH open, the warning chime will sound. A battery positive voltage is supplied

- from key switch terminal 2
- to warning chime unit terminal 5.

Ground is supplied

- to warning chime unit terminal 7
- through front door switch LH terminal 2.

Front door switch LH terminal 3 is grounded through body grounds M14 and M68.

Light Warning Chime

NEEL0053S0402

With the ignition switch in the OFF or ACC position, front door LH open and lighting switch in the parking and tail lamps ON (1ST) or headlamps ON (2ND) position, the warning chime will sound. A battery positive voltage is supplied

- from lighting switch terminal 12
- to warning chime unit terminal 4.

Ground is supplied

- to warning chime unit terminal 7
- through front door switch LH terminal 2.

Front door switch LH terminal 3 is grounded through body grounds M14 and M68.

Seat Belt Warning Chime

NEEL0053S0403

The warning chime will sound for approximately 6 seconds when the ignition switch is turned from OFF to ON with the driver seat belt unfastened (seat belt buckle switch ON).
Ground is supplied

- to warning chime unit terminal 2
- through seat belt buckle switch terminal 1.

Seat belt buckle switch terminal 2 is grounded through body grounds M14 and M68.

MODELS WITH POWER DOOR LOCKS

NEEL0053S05

The warning chime is controlled by the smart entrance control unit.
Power is supplied at all times

- through 7.5A fuse [No. 28, located in the fuse block (J/B)]
- to key switch terminal 1 and
- to smart entrance control unit terminal 49.

Power is supplied at all times

- through 10A fuse (with KA24DE) (No. 39, located in the fuse and fusible link box) or
- through 15A fuse (with VG33E and VG33ER) (No. 39, located in the fuse and fusible link box)

- to lighting switch terminal 11.

With the ignition switch in the ON or START position, power is supplied

- through 10A fuse [No. 5, located in the fuse block (J/B)]
- to smart entrance control unit terminal 27.

Ground is supplied to smart entrance control unit terminals 43 and 64 through body grounds M14 and M68.
When a signal, or combination of signals, is received by the smart entrance control unit, the warning chime will sound.

Ignition Key Warning Chime

NEEL0053S0501

With the key switch in the INSERTED (key is in the ignition key cylinder) position, the ignition switch in the OFF or ACC position and the front door LH open, the warning chime will sound. Power is supplied

- from key switch terminal 2
- to smart entrance control unit terminal 25.

Ground is supplied

- to smart entrance control unit terminal 1
- through front door switch LH terminal 2.

Front door switch LH terminal 3 is grounded through body grounds M14 and M68.

Light Warning Chime

NEEL0053S0502

With the ignition switch the OFF or ACC position, front door LH open and lighting switch in parking and tail lamps ON (1ST) or headlamps ON (2ND) position, the warning chime will sound. A battery positive voltage is supplied

- from lighting switch terminal 12
- to smart entrance control unit terminal 58.

Ground is supplied

- to smart entrance control unit terminal 1
- through front door switch LH terminal 2.

Front door switch LH terminal 3 is grounded through body grounds M14 and M68.

Seat Belt Warning Chime

NEEL0053S0503

The warning chime will sound for approximately 6 seconds when the ignition switch is turned from OFF to ON with the driver seat belt unfastened (seat belt buckle switch ON).
Ground is supplied

- to smart entrance control unit terminal 28
- through seat belt buckle switch terminal 1.

Seat belt buckle switch terminal 2 is grounded through body grounds M14 and M68.

Wiring Diagram — CHIME —

NEEL0054

MODELS WITHOUT POWER DOOR LOCKS

NEEL0054S01

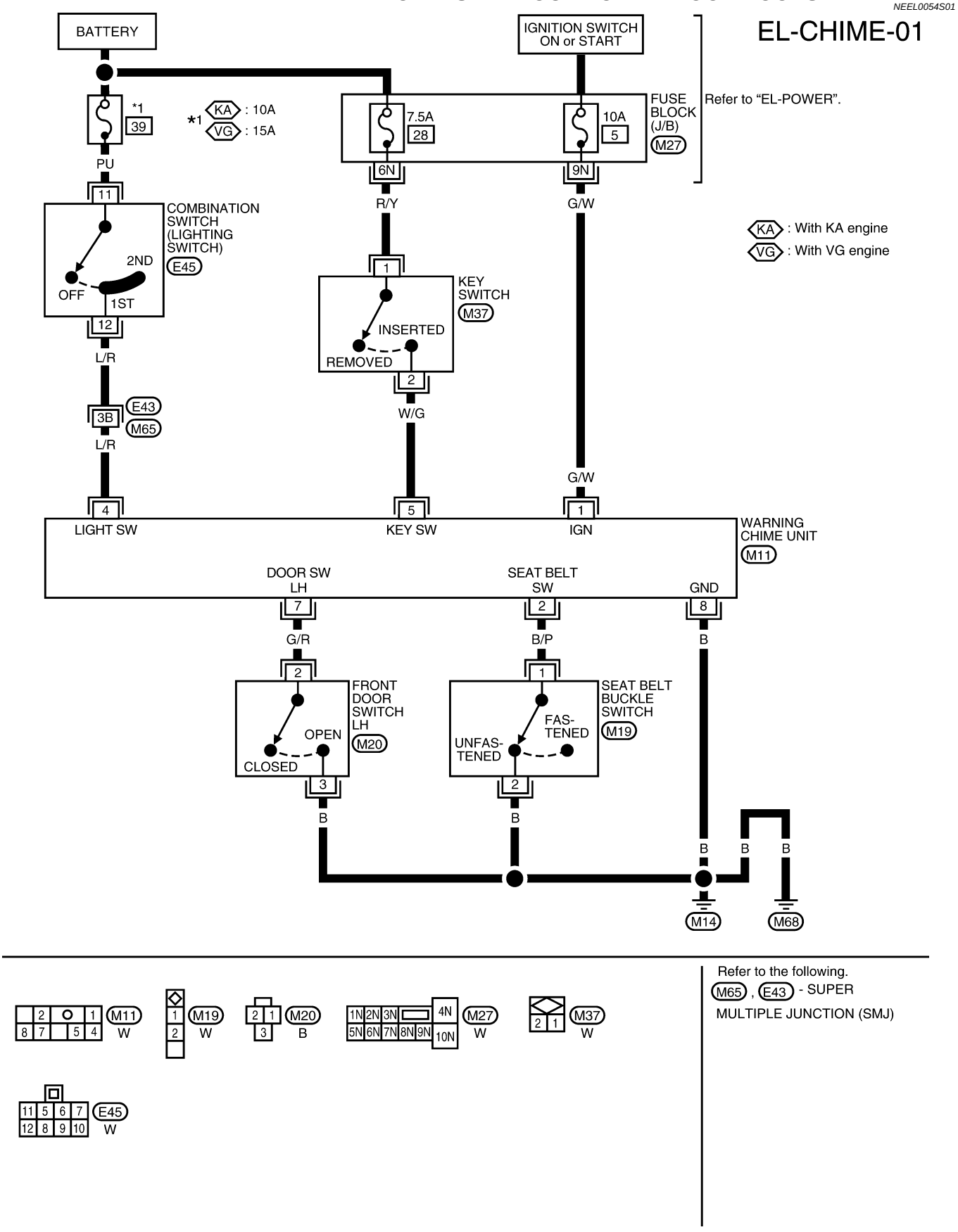

WEL538A

MODELS WITH POWER DOOR LOCKS

NEEL0054S02

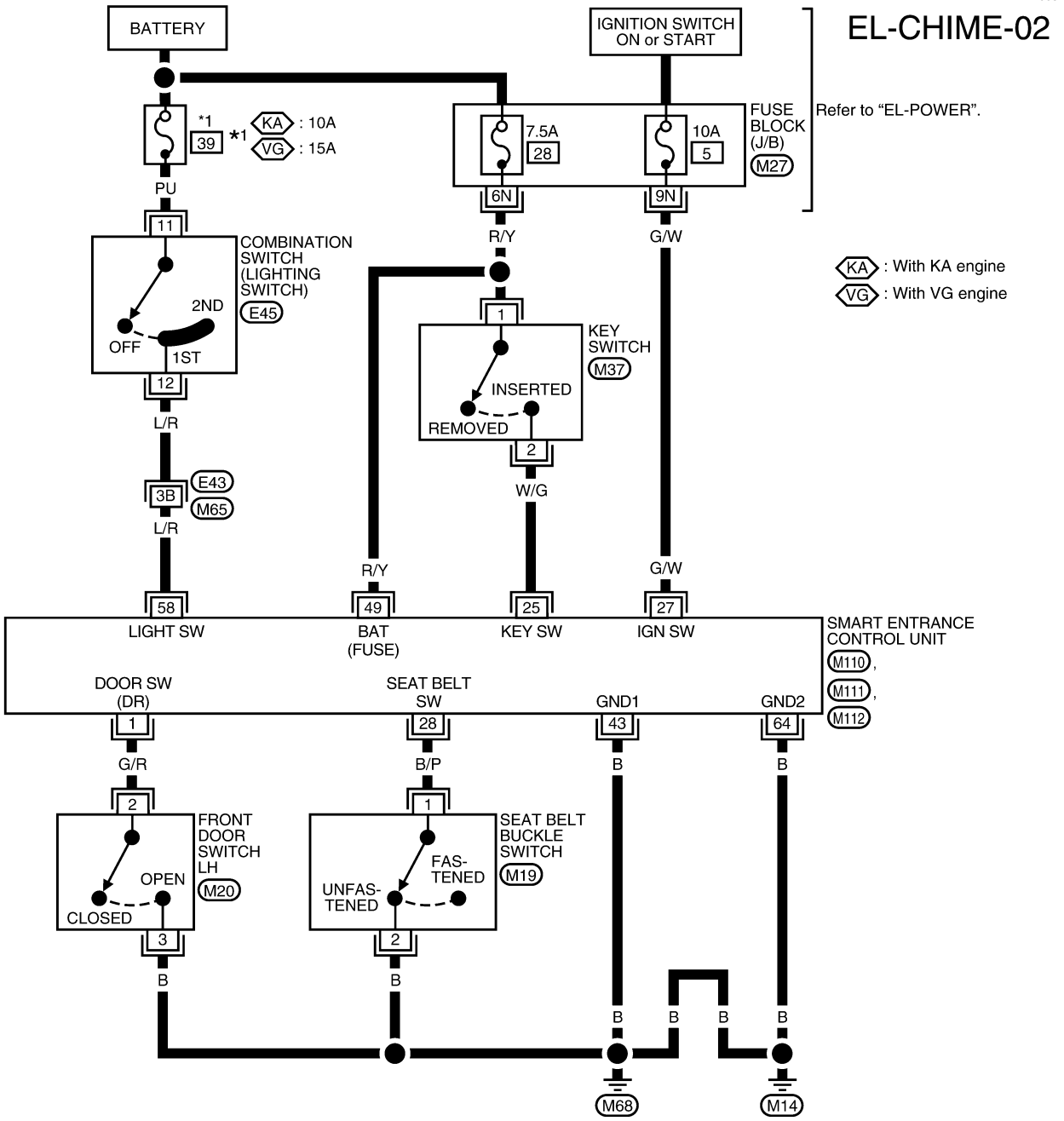

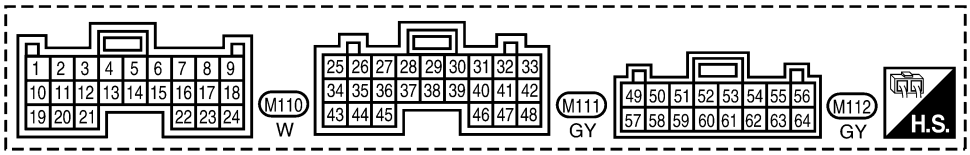

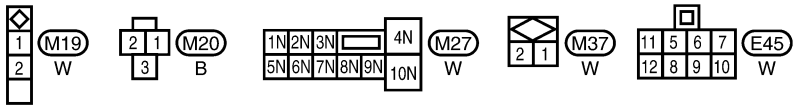

Refer to the following.
M65, E43 - SUPER MULTIPLE JUNCTION (SMJ)

WEL539A

Trouble Diagnoses

SYMPTOM CHART

NEEL0055

NEEL0055S01

REFERENCE PAGE (EL-)	Without power door locks	100	102	103	105	107
	With power door locks	100	102	104	106	108
SYMPTOM		POWER SUPPLY AND GROUND CIRCUIT CHECK	LIGHTING SWITCH INPUT SIGNAL CHECK	KEY SWITCH (INSERTED) CHECK	SEAT BELT BUCKLE SWITCH CHECK	FRONT DOOR SWITCH LH CHECK
Light warning chime does not activate.		X	X			X
Ignition key warning chime does not activate.		X		X		X
Seat belt warning chime does not activate.		X			X	
All warning chimes do not activate.		X				

X: Applicable

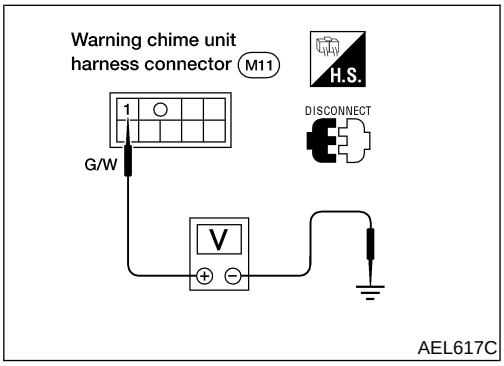

POWER SUPPLY AND GROUND CIRCUIT CHECK

NEEL0055S02

Main Power Supply Circuit Check

NEEL0055S0201

- **Models without power door locks**

Terminals		Ignition switch position		
(+)	(–)	OFF	ACC	ON
1	Ground	0V	0V	Battery voltage

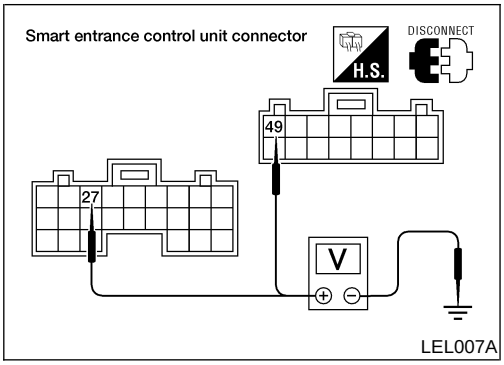

- **Models with power door locks**

Terminals		Ignition switch position		
(+)	(−)	OFF	ACC	ON
M112 - 49 (R/Y)	Ground	Battery voltage	Battery voltage	Battery voltage
M111 - 27 (G/W)	Ground	0V	0V	Battery voltage

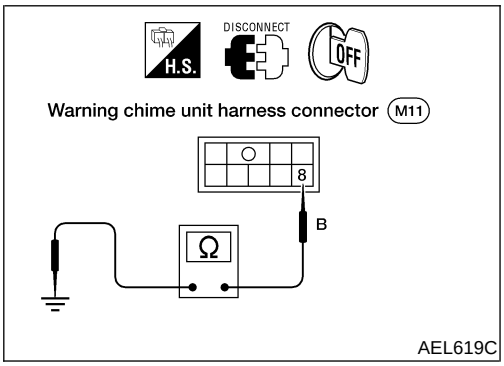

Ground Circuit Check

NEEL0055S0202

- **Models without power door locks**

Terminals	Continuity
8 - Ground	Yes

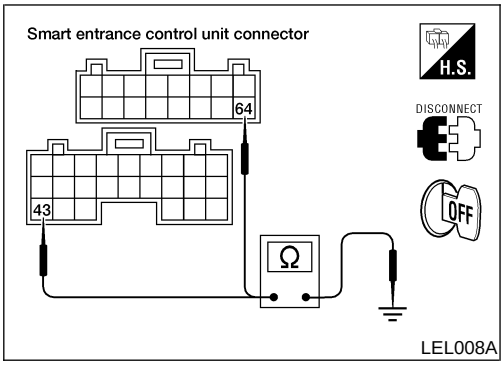

- **Models with power door locks**

Terminals	Continuity
M111 - 43 (B) - Ground	Yes
M112 - 64 (B) - Ground	Yes

LIGHTING SWITCH INPUT SIGNAL CHECK

=NEEL0055S03

Models without Power Door Locks

NEEL0055S0301

1	CHECK LIGHTING SWITCH INPUT SIGNAL

Check voltage between warning chime unit terminal 4 and ground.

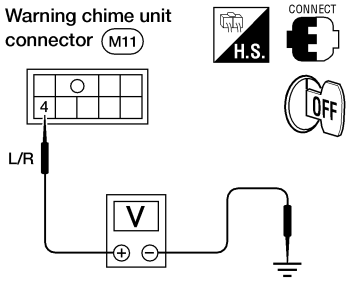

AEL372B

Voltage [V]:
Condition of lighting switch: 1ST or 2ND
Approx. 12
Condition of lighting switch: OFF
0

OK or NG

OK	▶	Lighting switch is OK.
NG	▶	**Check the following.** ● 10A fuse (with KA24DE), 15A fuse (with VG33E and VG33ER) (No. 39, located in the fuse and fusible link box) ● Harness for open or short between warning chime unit and lighting switch

Models with Power Door Locks

NEEL0055S0302

1	CHECK LIGHTING SWITCH INPUT SIGNAL

Check voltage between smart entrance control unit connector M112 terminal 58 (L/R) and ground.

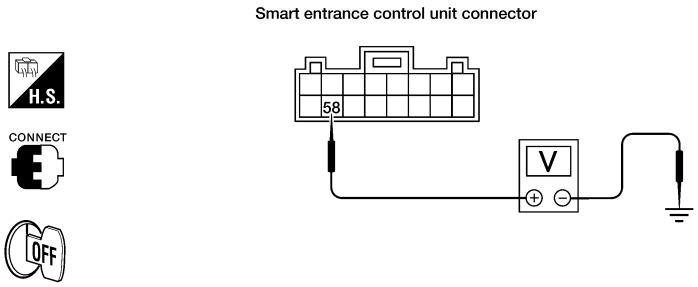

Voltage [V]:
Condition of lighting switch: 1ST or 2ND
Approx. 12
Condition of lighting switch: OFF
Approx. 0

WEL492A

OK or NG

OK	▶	Lighting switch is OK.
NG	▶	**Check the following.** ● 10A fuse (with KA24DE), 15A fuse (with VG33E and VG33ER) (No. 39, located in the fuse and fusible link box) ● Harness for open or short between smart entrance control unit and lighting switch

KEY SWITCH (INSERTED) CHECK
Models without Power Door Locks

NEEL0055S04

NEEL0055S0401

1	CHECK KEY SWITCH INPUT SIGNAL

Check voltage between warning chime unit terminal 5 and ground.

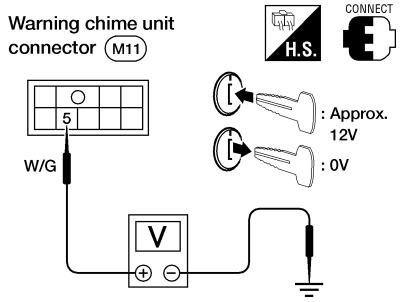

AEL374B

Voltage [V]:
- **Condition of key switch: Key is INSERTED.**
  - **Approx. 12**
- **Condition of key switch: Key is REMOVED.**
  - **0**

OK or NG

OK	▶	Key switch is OK.
NG	▶	GO TO 2.

2	CHECK KEY SWITCH (INSERTED)

Check continuity between terminals 1 and 2.

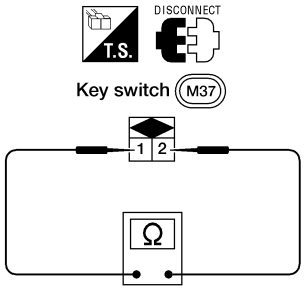

AEL416B

Continuity:
- **Condition of key switch: Key is INSERTED.**
  - **Yes**
- **Condition of key switch: Key is REMOVED.**
  - **No**

OK or NG

OK	▶	**Check the following.** ● 7.5A fuse [No. 28, located in fuse block (J/B)] ● Harness for open or short between key switch and fuse ● Harness for open or short between warning chime unit and key switch
NG	▶	Replace key switch.

Models with Power Door Locks

NEEL0055S0402

1	CHECK KEY SWITCH INPUT SIGNAL

Check voltage between smart entrance control unit connector M111 terminal 25 (W/G) and ground.

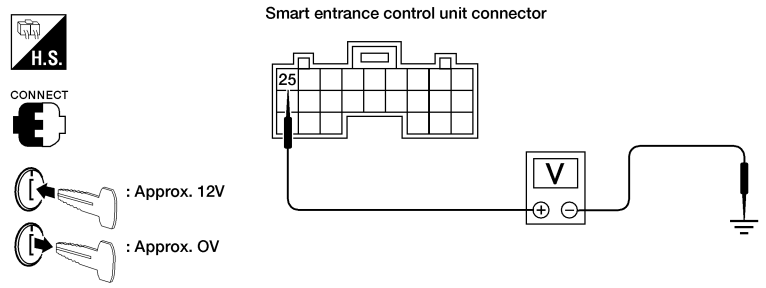

Voltage [V]:
Condition of key switch: Key is INSERTED.
Approx. 12
Condition of key switch: Key is REMOVED.
Approx. 0

LEL010A

OK or NG

OK	▶	Key switch is OK.
NG	▶	GO TO 2.

2	CHECK KEY SWITCH (INSERTED)

Check continuity between terminals 1 and 2.

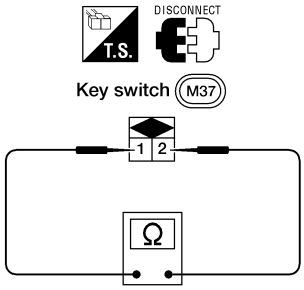

AEL416B

Continuity:
Condition of key switch: Key is INSERTED.
Yes
Condition of key switch: Key is REMOVED.
No

OK or NG

OK	▶	**Check the following.** ● 7.5A fuse [No. 28, located in fuse block (J/B)] ● Harness for open or short between key switch and fuse ● Harness for open or short between smart entrance control unit and key switch
NG	▶	Replace key switch.

SEAT BELT BUCKLE SWITCH CHECK
Models without Power Door Locks

=NEEL0055S05

NEEL0055S0501

1	CHECK SEAT BELT BUCKLE SWITCH INPUT SIGNAL

1. Turn ignition switch ON.
2. Check voltage between warning chime unit terminal 2 and ground.

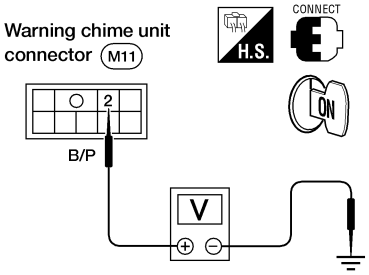

AEL376B

Voltage [V]:
Condition of seat belt buckle switch: FASTENED
Approx. 12
Condition of seat belt buckle switch: UNFASTENED
0

OK or NG

OK	▶	Seat belt buckle switch is OK.
NG	▶	GO TO 2.

2	CHECK SEAT BELT BUCKLE SWITCH

Check continuity between terminals 1 and 2 when seat belt is fastened and unfastened.

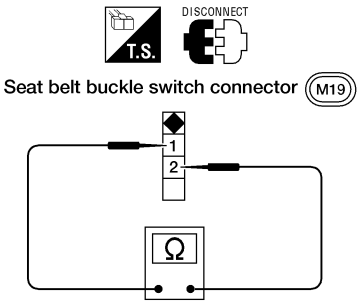

AEL381B

Continuity:
Seat belt is fastened.
No
Seat belt is unfastened.
Yes

OK or NG

OK	▶	**Check the following.** ● Seat belt buckle switch ground circuit ● Harness for open or short between warning chime unit and seat belt buckle switch
NG	▶	Replace seat belt buckle switch.

Models with Power Door Locks

NEEL0055S0502

1	CHECK SEAT BELT BUCKLE SWITCH INPUT SIGNAL

1. Turn ignition switch ON.
2. Check voltage between smart entrance control unit connector M111 terminal 28 (B/P) and ground.

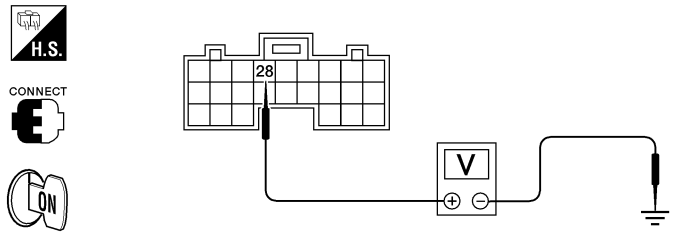

Voltage [V]:
Condition of seat belt buckle switch: FASTENED
Approx.12
Condition of seat belt buckle switch: UNFASTENED
Approx. 0

LEL011A

OK or NG

OK	▶	Seat belt buckle switch is OK.
NG	▶	GO TO 2.

2	CHECK SEAT BELT BUCKLE SWITCH

Check continuity between terminals 1 and 2 when seat belt is fastened and unfastened.

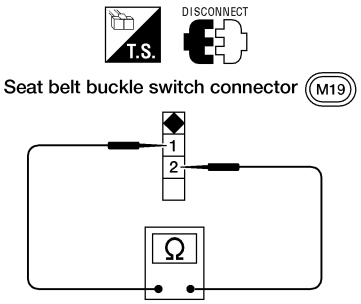

AEL381B

Continuity:
Seat belt is fastened.
No
Seat belt is unfastened.
Yes

OK or NG

OK	▶	**Check the following.** ● Seat belt buckle switch ground circuit ● Harness for open or short between smart entrance control unit and seat belt buckle switch
NG	▶	Replace seat belt buckle switch.

FRONT DOOR SWITCH LH CHECK
Models without Power Door Locks

NEEL0055S06

NEEL0055S0601

1	CHECK FRONT DOOR SWITCH LH INPUT SIGNAL

Check voltage between warning chime unit terminal 7 and ground.

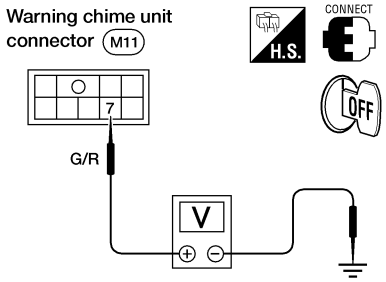

AEL378B

Voltage [V]:
Condition of front door LH: CLOSED
Approx. 12
Condition of front door LH: OPEN
0

OK or NG

OK	▶	Front door switch LH is OK.
NG	▶	GO TO 2.

2	CHECK FRONT DOOR SWITCH LH

Check continuity between front door switch LH terminals 2 and 3.

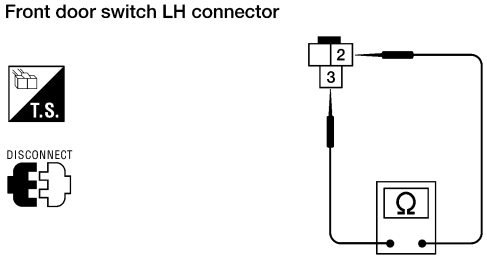

Contiuity:
Front door switch LH is pressed.
No
Front door switch LH is released.
Yes

LEL366A

Continuity:
Front door switch LH is pressed.
No
Front door switch LH is released.
Yes

OK or NG

OK	▶	**Check the following.** ● Front door switch LH ground circuit ● Harness for open or short between warning chime unit and front door switch LH
NG	▶	Replace front door switch LH.

Models with Power Door Locks

NEEL0055S0602

1	CHECK FRONT DOOR SWITCH LH INPUT SIGNAL

Check voltage between smart entrance control unit connector M110 terminal 1 (G/R) and ground.

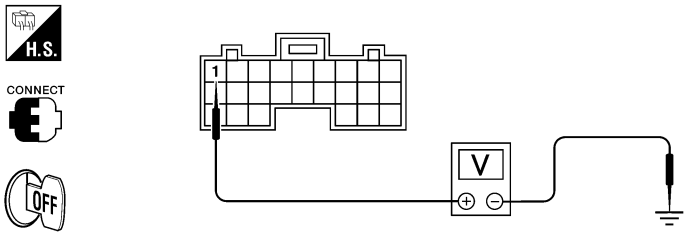

Voltage [V]:
Condition of front door LH: CLOSED
Approx. 5
Condition of front door LH: OPEN
Approx. 0

WEL515A

OK or NG

OK	▶	Front door switch LH is OK.
NG	▶	GO TO 2.

2	CHECK FRONT DOOR SWITCH LH

Check continuity between front door switch LH connector M20 terminals 2 and 3.

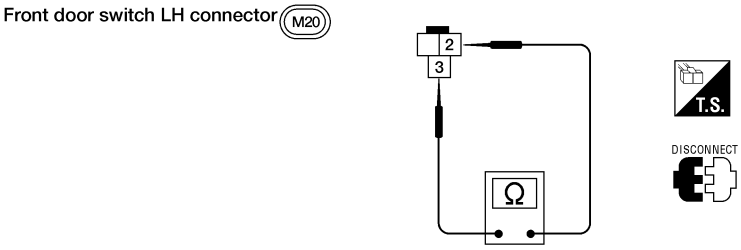

AEL543C

OK or NG

OK	▶	**Check the following.** ● Front door switch LH ground circuit ● Harness for open or short between smart entrance control unit and front door switch LH
NG	▶	Replace front door switch LH.

System Description

NEEL0057

WIPER OPERATION

NEEL0057S01

Models without Intermittent Wipers

NEEL0057S0104

The front wiper switch is controlled by a lever built into the combination switch.
There are two front wiper switch positions:

- LO speed
- HI speed

With the ignition switch in the ON or START position, power is supplied

- through 20A fuse [No. 6, located in the fuse block (J/B)]
- to front wiper motor terminal B.

Low and High Speed Wiper Operation

Ground is supplied to front wiper switch terminal 17 through body grounds E12 and E54.
With the front wiper switch in the LO position, ground is supplied

- to front wiper motor terminal L
- through front wiper switch terminal 14.

With power and ground supplied, the front wiper motor operates at low speed.
With the front wiper switch in the HI position, ground is supplied

- to front wiper motor terminal H
- through front wiper switch terminal 16.

With power and ground supplied, the front wiper motor operates at high speed.

Auto Stop Operation

When the front wiper switch is turned OFF, the front wiper motor will continue to operate at low speed until wiper blades reach windshield base.
When wiper blades are not located at base of windshield with front wiper switch OFF, ground is supplied

- to front wiper motor terminal L
- through front wiper switch terminal 14
- through front wiper switch terminal 13
- through front wiper motor terminal P.

Ground is supplied to front wiper motor terminal E through body grounds E12 and E54.

Models with Intermittent Wipers

NEEL0057S0105

The front wiper switch is controlled by a lever built into the combination switch.
There are three front wiper switch positions:

- LO speed
- HI speed
- INT (Intermittent).

With the ignition switch in the ON or START position, power is supplied

- through 20A fuse [No. 6, located in the fuse block (J/B)]
- to front wiper motor terminal B and
- to front wiper amplifier terminal 6.

Low and High Speed Wiper Operation

Ground is supplied to front wiper switch terminal 17 through body grounds E12 and E54
With the front wiper switch in the LO position, ground is supplied

- to front wiper motor terminal L
- through front wiper switch terminal 14.

With power and ground supplied, the front wiper motor operates at low speed.
With the front wiper switch in the HI position, ground is supplied

- to front wiper motor terminal H
- through front wiper switch terminal 16.

With power and ground supplied, the front wiper motor operates at high speed.

Auto Stop Operation

When the front wiper switch is turned OFF, the front wiper motor will continue to operate at low speed until wiper blades reach windshield base.
When wiper blades are not located at base of windshield with front wiper switch OFF, ground is supplied

- to front wiper motor terminal L
- through front wiper switch terminal 14
- through front wiper switch terminal 13
- through front wiper amplifier terminal 4
- through front wiper amplifier terminal 7
- through body grounds E12 and E54.

Ground is also supplied

- to front wiper amplifier terminal 8
- through front wiper motor terminal P
- through front wiper motor terminal E
- through body grounds E12 and E54.

When wiper blades reach base of windshield, front wiper motor terminals B and P are connected instead of terminals P and E.
Battery power is then supplied

- through front wiper motor terminal P
- to front wiper amplifier terminal 8.

With battery voltage supplied to front wiper amplifier terminal 8, the front wiper amplifier will stop the front wiper motor with the wiper blades at the PARK position.

Intermittent Operation

The wiper blades perform a single wiping operation, followed by a delay interval which is adjustable from approximately 3 to 13 seconds, after which the cycle repeats. This feature is controlled by the front wiper amplifier.
When the front wiper switch is placed in the INT position, ground is supplied

- to front wiper amplifier terminal 1
- through front wiper switch terminal 15
- through front wiper switch terminal 17
- through body grounds E12 and E54.

Ground is supplied intermittently

- to front wiper motor terminal L
- through front wiper switch terminal 14
- through front wiper switch terminal 13
- through front wiper amplifier terminal 4
- through front wiper amplifier terminal 7
- through body grounds E12 and E54.

The delay interval time is input

- to front wiper amplifier terminal 2
- from front wiper switch terminal 19.

Ground is supplied to front wiper switch terminal 20 through body grounds E12 and E54.
The wiper motor operates at low speed at the desired delay interval.

WASHER OPERATION

NEEL0057S02

With the ignition switch in the ON or START position, power is supplied

- through 20A fuse [No. 6, located in the fuse block (J/B)]
- to front washer motor terminal +.

When the lever is pulled to the WASH position, ground is supplied

- to front washer motor terminal – and
- to front wiper amplifier terminal 5 (models with intermittent wipers)
- through front wiper switch terminal 18
- through front wiper switch terminal 17
- through body grounds E12 and E54.

With power and ground supplied, the front washer motor operates.

Models with Intermittent Wipers

NEEL0057S0201

When the lever is pulled to the WASH position for one second or more, the wiper motor operates at low speed for approximately 3 seconds to clean windshield. This feature is controlled by the wiper amplifier in the same manner as the intermittent operation.

Wiring Diagram — WIPER —

NEEL0058

MODELS WITHOUT INTERMITTENT WIPERS

NEEL0058S01

EL-WIPER-01

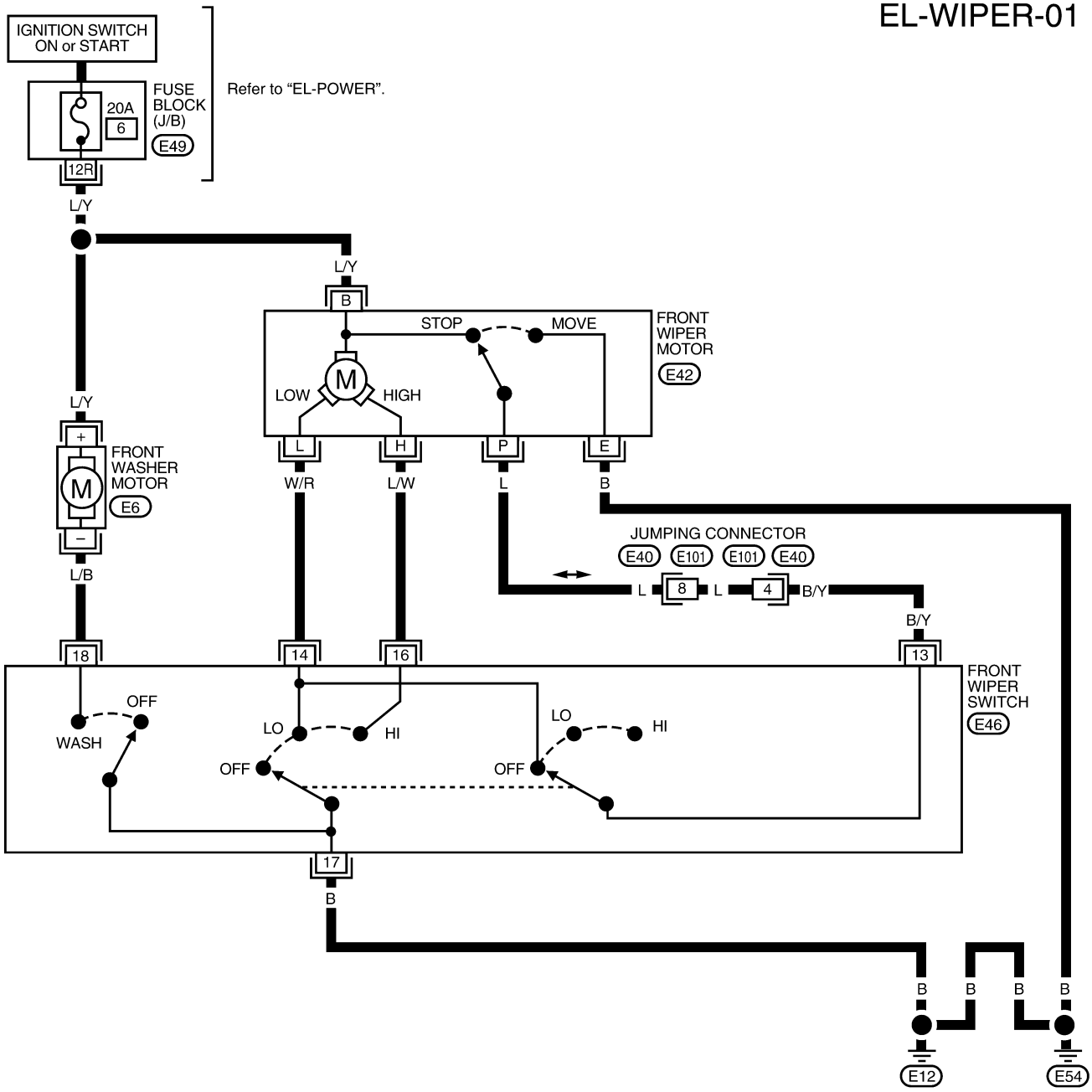

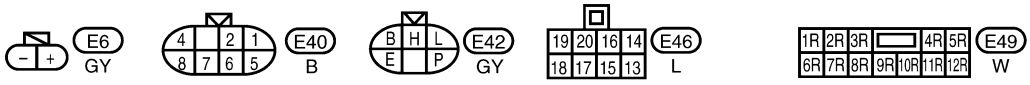

LEL759

MODELS WITH INTERMITTENT WIPERS

NEEL0058S02

EL-WIPER-02

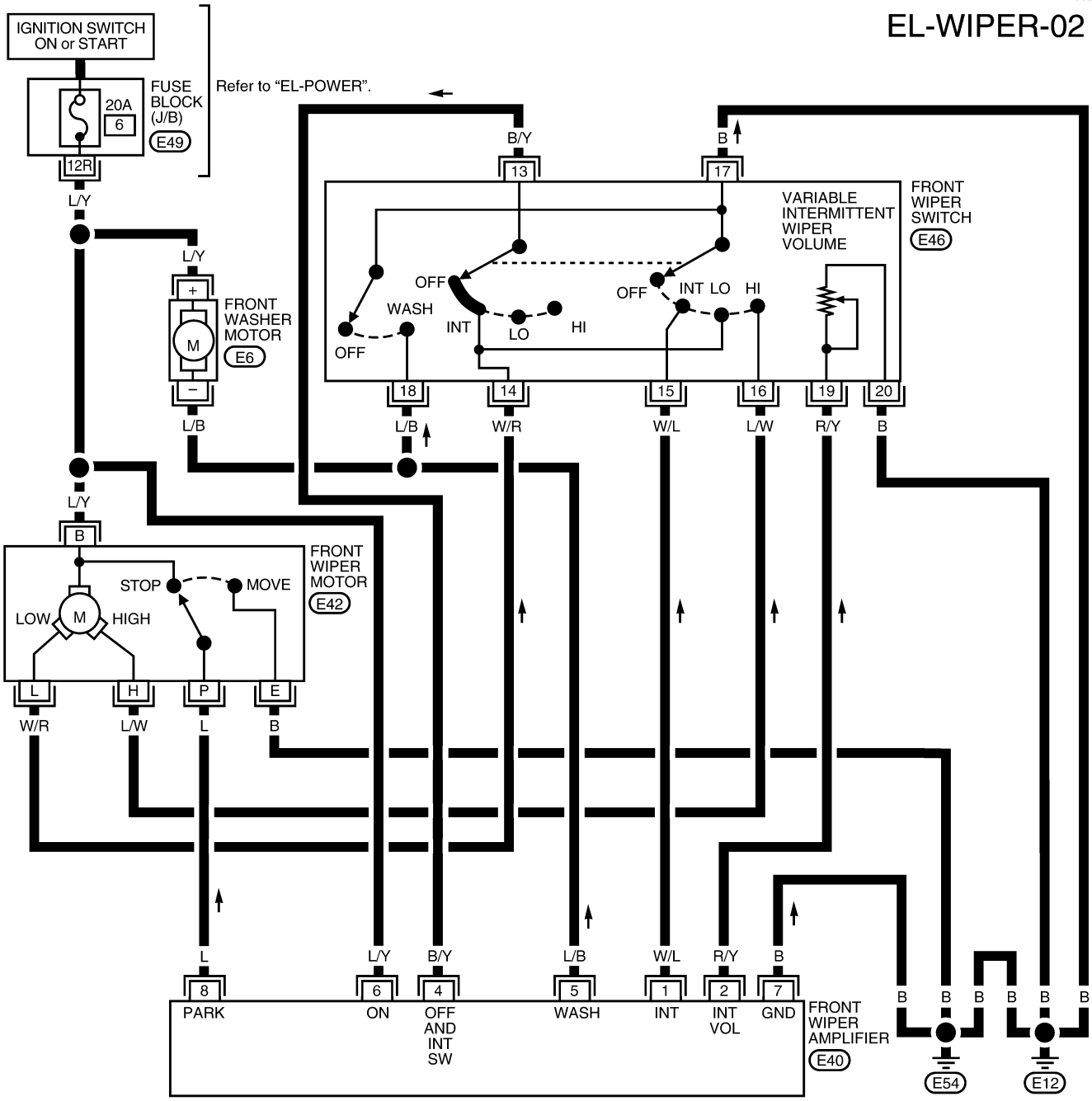

Trouble Diagnoses (With intermittent wipers)

NEEL0059

DIAGNOSTIC PROCEDURE 1

NEEL0059S01

SYMPTOM: Intermittent wipers do not operate.

1	CHECK WIPER OPERATION	
Check whether wipers operate with the front wiper switch at LO position. **Do wipers operate at LO speed?**		
Yes	▶	GO TO 2.
No	▶	**Check the following.** ● 20A fuse [No. 6, located in fuse block (J/B)] ● Front wiper motor ● Front wiper switch ● Harness for open or short

2	CHECK FRONT WIPER AMPLIFIER OUTPUT	
1. Turn front wiper switch OFF. 2. Disconnect front wiper amplifier connector. 3. Check voltage between front wiper amplifier terminal 4 and ground. 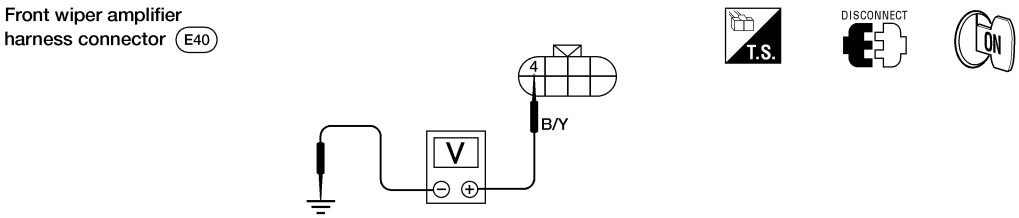 AEL544C **Does battery voltage exist?**		
Yes	▶	GO TO 3.
No	▶	**Check the following.** ● Wiper switch ● Harness for open or short between front wiper amplifier terminal 4 and front wiper switch terminal 13

3	CHECK INTERMITTENT SWITCH INPUT SIGNAL

Check harness continuity between front wiper amplifier terminal 1 and ground.

Continuity:

Condition of front wiper switch: OFF

No

Condition of front wiper switch: INT

Yes

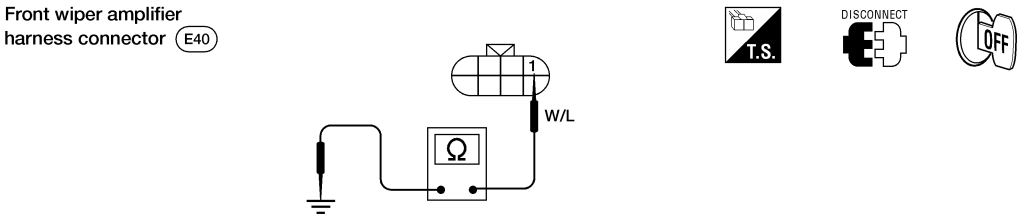

AEL545C

OK or NG

OK	▶	GO TO 4.
NG	▶	**Check the following.** ● Front wiper switch ● Harness for open or short between front wiper amplifier terminal 1 and front wiper switch terminal 15 ● Ground circuit for front wiper switch terminal 17

4	CHECK FRONT WIPER AMPLIFIER POWER SUPPLY CIRCUIT

Check voltage between front wiper amplifier terminal 6 and ground with ignition switch in the ON position.

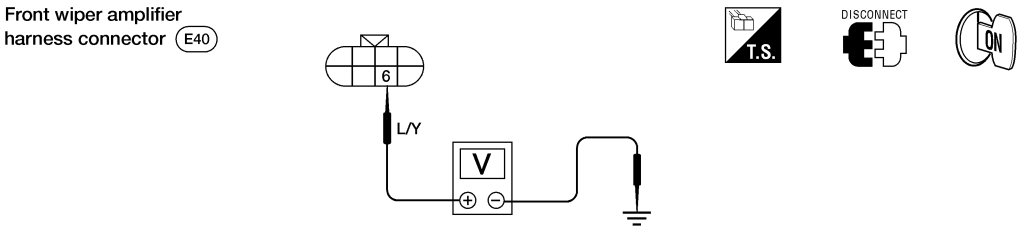

AEL546C

Does battery voltage exist?

Yes	▶	GO TO 5.
No	▶	**Check the following.** ● 20A fuse [No. 6, located in fuse block (J/B)] ● Harness for open or short between front wiper amplifier and fuse

5	CHECK FRONT WIPER AMPLIFIER GROUND CIRCUIT

Check harness continuity between front wiper amplifier terminal 7 and body ground.

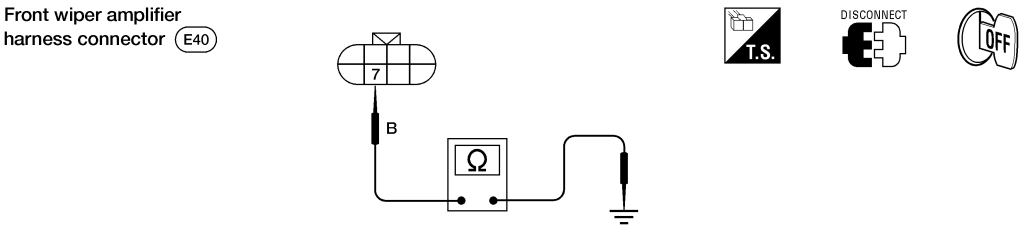

AEL547C

Does continuity exist?

Yes	▶	Replace front wiper amplifier.
No	▶	Repair harness or connector.

DIAGNOSTIC PROCEDURE 2

NEEL0059S02

SYMPTOM: Intermittent time of wiper cannot be adjusted.

1	CHECK INTERMITTENT WIPER VOLUME INPUT SIGNAL

1. Disconnect front wiper amplifier connector.
2. Measure resistance between front wiper amplifier terminals 2 and 7 while turning intermittent wiper volume knob.

Resistance [Ω]:

Position of intermittent wiper volume knob: S

0

Position of intermittent wiper volume knob: L

Approx. 1 k

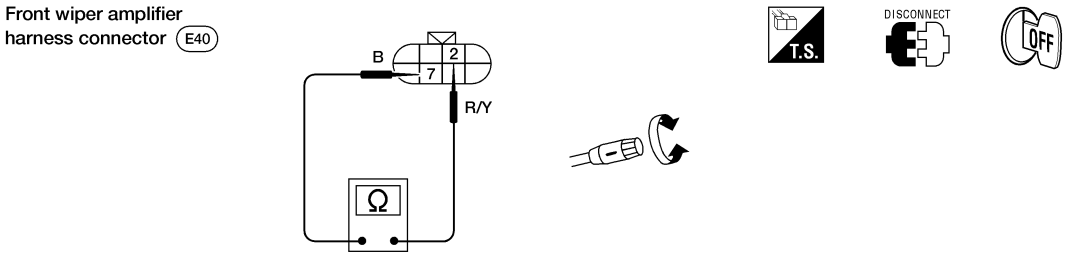

AEL548C

OK or NG

OK	▶	Replace front wiper amplifier.
NG	▶	**Check the following.** ● Intermittent wiper volume ● Harness for open or short between front wiper amplifier terminal 2 and front wiper switch terminal 19 ● Ground circuit for front wiper switch terminal 20

DIAGNOSTIC PROCEDURE 3

=NEEL0059S03

SYMPTOM: Wiper and washer activate individually but not in combination.

1	CHECK FRONT WASHER SWITCH INPUT SIGNAL

1. Turn ignition switch OFF.
2. Disconnect front wiper amplifier connector.
3. Check harness continuity between front wiper amplifier terminal 5 and ground.

Continuity:
Condition of front washer switch: OFF
No
Condition of front washer switch: ON
Yes

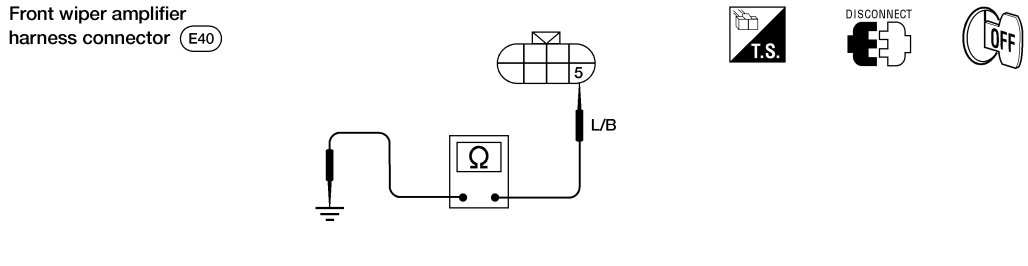

OK or NG

OK	▶	Go to DIAGNOSTIC PROCEDURE 1.
NG	▶	Check harness for open or short between front wiper amplifier terminal 5 and front wiper switch terminal 18.

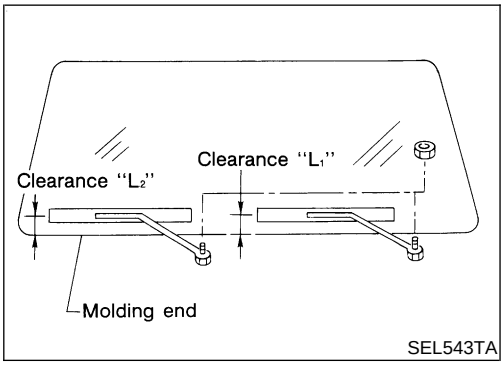

Removal and Installation

NEEL0060

WIPER ARMS

NEEL0060S01

1. Prior to wiper arm installation, turn on wiper switch to operate wiper motor and then turn it "OFF" (Auto Stop).
2. Lift the blade up and then set it down onto glass surface to set the blade center to clearance "L_1" & "L_2" immediately before tightening nut.
3. Eject washer fluid. Turn on wiper switch to operate wiper motor and then turn it "OFF".
4. Ensure that wiper blades stop within clearance "L_1" & "L_2".
   Clearance "L_1": 25 mm (.98 in)
   Clearance "L_2": 25 mm (.98 in)

- Tighten wiper arm nuts to specified torque.
  Front wiper: 13 - 18 N·m (1.3 - 1.8 kg-m, 9 - 13 ft-lb)

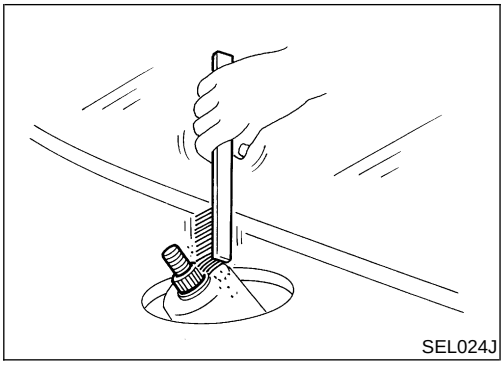
SEL024J

- **Before reinstalling wiper arm, clean the pivot area as illustrated. This will reduce possibility of wiper arm looseness.**

WIPER LINKAGE

NEEL0060S02

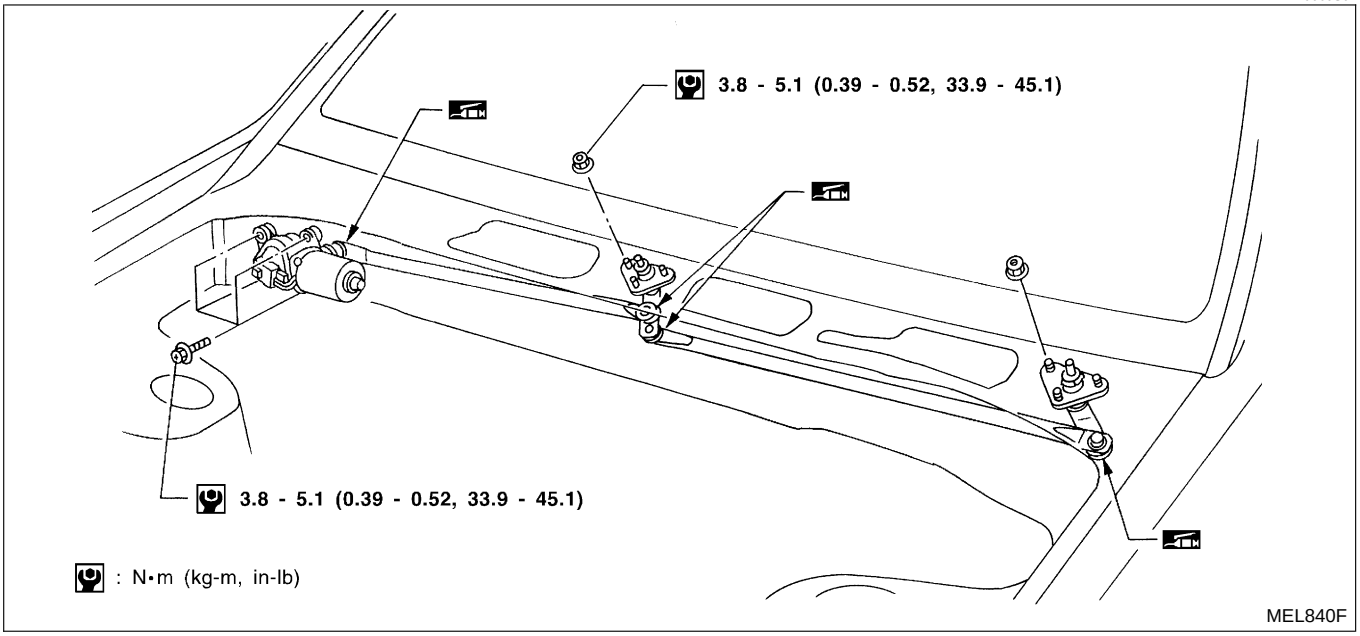

MEL840F

Removal

NEEL0060S0201

1. Remove 4 bolts that secure wiper motor.
2. Detach wiper motor from wiper linkage at ball joint.
3. Remove wiper linkage.

Be careful not to break ball joint rubber boot.

Installation

NEEL0060S0202

- Grease ball joint portion before installation.

1. Installation is the reverse order of removal.

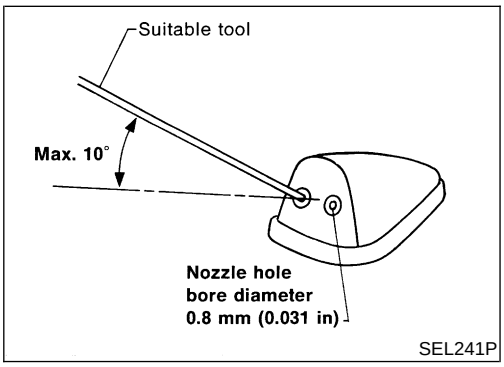

SEL241P

Washer Nozzle Adjustment

NEEL0061

- Adjust washer nozzle with suitable tool as shown in the figure at left.

Adjustable range: ±10°

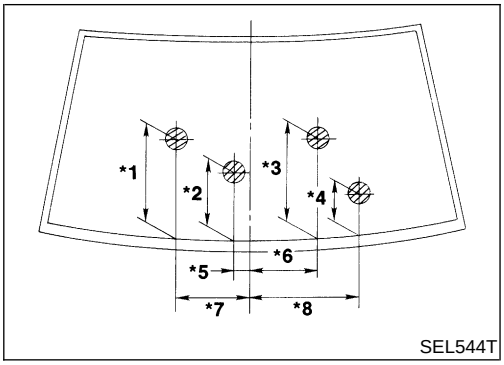

SEL544T

Unit: mm (in)

*1	390 (15.35)	*5	145 (5.71)
*2	160 (6.30)	*6	143 (5.63)
*3	379 (14.92)	*7	225 (8.86)
*4	140 (5.51)	*8	535 (21.06)

*: The diameters of these circles are less than 80 mm (3.15 in).

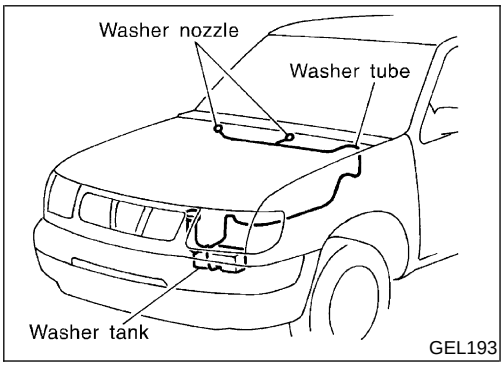

GEL193

Washer Tube Layout

NEEL0062

Wiring Diagram — HORN —

NEEL0071

EL-HORN-01

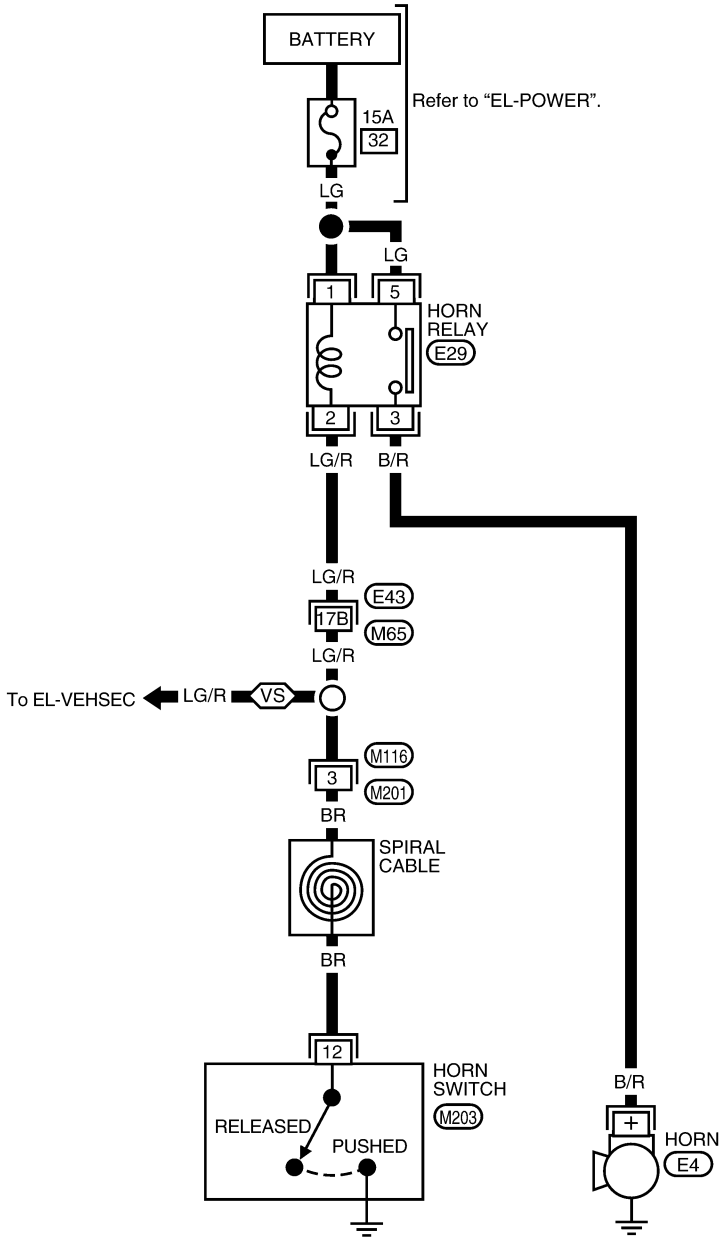

VS : With vehicle security system

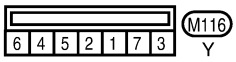

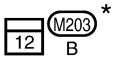

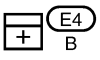

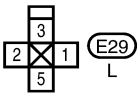

* : This connector is not shown in “HARNESS LAYOUT” of EL section.

Refer to the following.
M65 , E43 - SUPER MULTIPLE JUNCTION (SMJ)

WEL079B

Wiring Diagram — CIGAR —

NEEL0156

EL-CIGAR-01

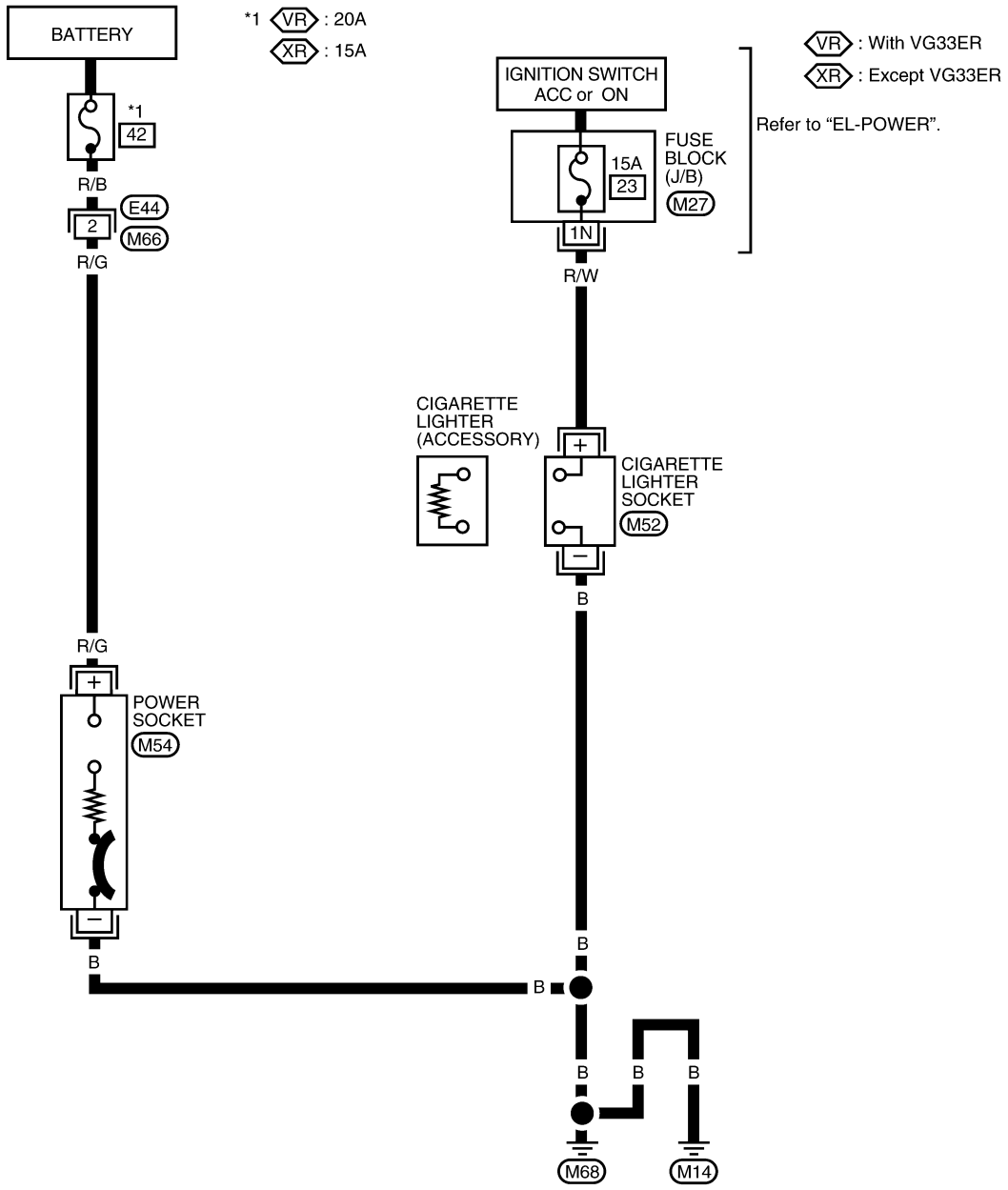

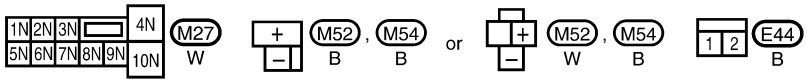

WEL520A

Component Parts and Harness Connector Location

NEEL0215

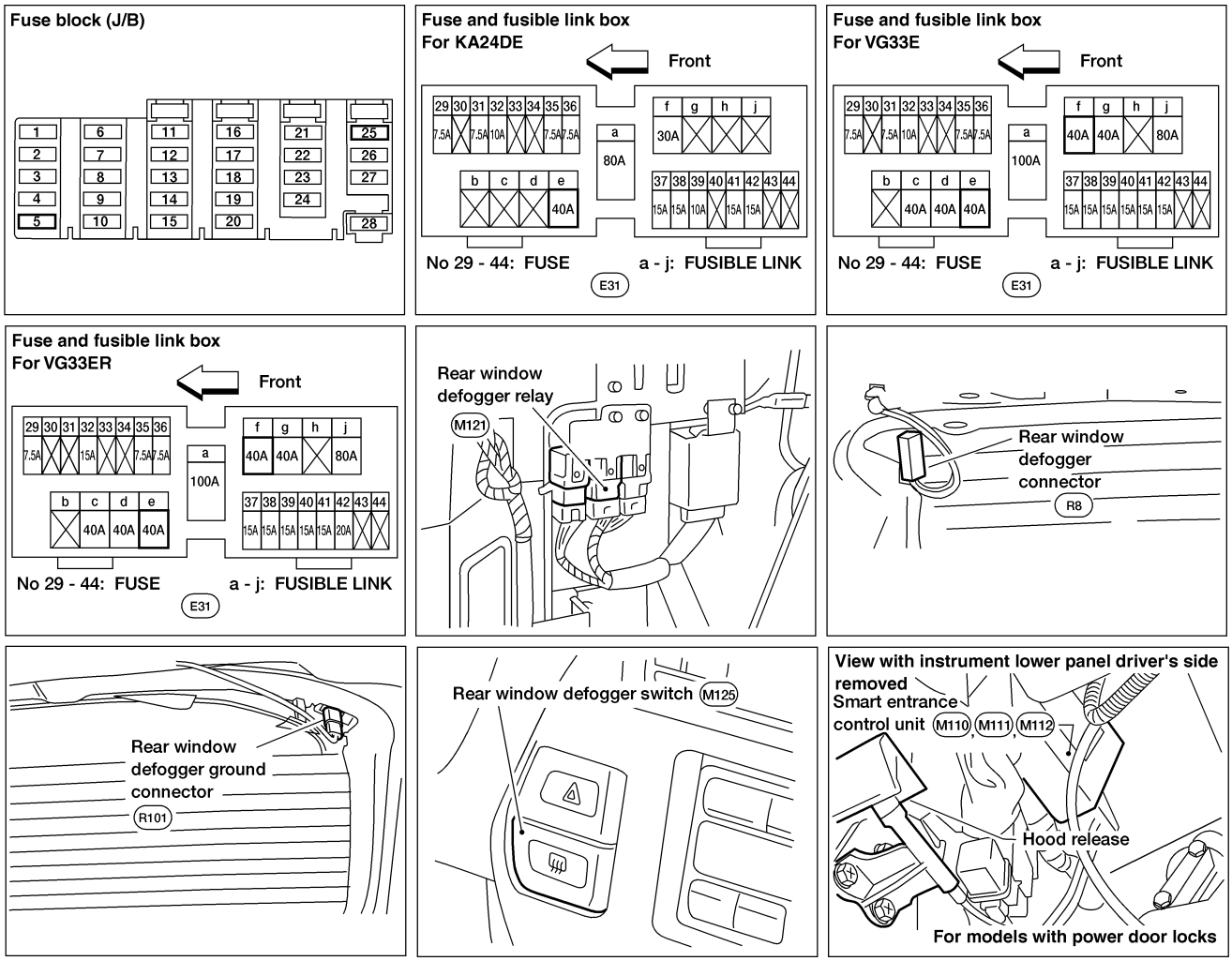

WEL465A

System Description

NEEL0216

MODELS WITHOUT POWER DOOR LOCKS

NEEL0216S01

The rear window defogger system is controlled by the rear window defogger timer. The rear window defogger operates only for approximately 15 minutes.
Power is supplied at all times

- to rear window defogger relay terminal 5
- through 20A fuse [No. 25, located in the fuse block (J/B)].

With the ignition switch in the ON or START position, power is supplied

- through 10A fuse [No. 5, located in the fuse block (J/B)]
- to rear window defogger relay terminal 2 and
- to rear window defogger timer terminal 1.

Ground is supplied to rear window defogger switch terminal 2 and warning chime unit terminal 4 through body grounds M14 and M68.
With the rear window defogger switch ON, ground is supplied

- to rear window defogger timer terminal 3
- through rear window defogger switch terminal 1.

Rear window defogger timer terminal 2 then supplies ground to the rear window defogger relay terminal 1.
With power and ground supplied, the rear window defogger relay is energized.
Power is supplied

- through terminal 3 of the rear window defogger relay
- to rear window defogger terminal +.

Rear window defogger terminal – is grounded through body ground R102.
With power and ground supplied, the rear window defogger filaments heat and defog the rear window.
When the system is activated, the rear window defogger indicator illuminates in the rear window defogger switch.
Power is supplied

- from rear window defogger relay terminal 3
- to rear window defogger switch terminal 3.

Rear window defogger switch terminal 4 is grounded through body grounds M14 and M68.

MODELS WITH POWER DOOR LOCKS

NEEL0216S02

The rear window defogger system is controlled by the smart entrance control unit. The rear window defogger operates only for approximately 15 minutes.
Power is supplied at all times

- to rear window defogger relay terminal 5
- through 20A fuse [No. 25, located in the fuse block (J/B)] and
- to smart entrance control unit terminal 49
- through 7.5A fuse [No. 28, located in the fuse block (J/B)].

With the ignition switch in the ON or START position, power is supplied

- through 10A fuse [No. 5, located in the fuse block (J/B)]
- to rear window defogger relay terminal 2 and
- to smart entrance control unit terminal 27.

Ground is supplied to rear window defogger switch terminal 2 and smart entrance control unit terminals 43 and 64 through body grounds M14 and M68.
With the rear window defogger switch ON, ground is supplied

- to smart entrance control unit terminal 14
- through rear window defogger switch terminal 1.

Smart entrance control unit terminal 37 then supplies ground to the rear window defogger relay terminal 1.
With power and ground supplied, the rear window defogger relay is energized.
Power is supplied

- through terminal 3 of the rear window defogger relay
- to rear window defogger terminal +.

Rear window defogger terminal – is grounded through body ground R102.
With power and ground supplied, the rear window defogger filaments heat and defog the rear window.
When the system is activated, the rear window defogger indicator illuminates in the rear window defogger switch.
Power is supplied

- from rear window defogger relay terminal 3
- to rear window defogger switch terminal 3.

Rear window defogger switch terminal 4 is grounded through body grounds M14 and M68.

Wiring Diagram — DEF —

WITHOUT POWER DOOR LOCKS

NEEL0217

NEEL0217S01

EL-DEF-01

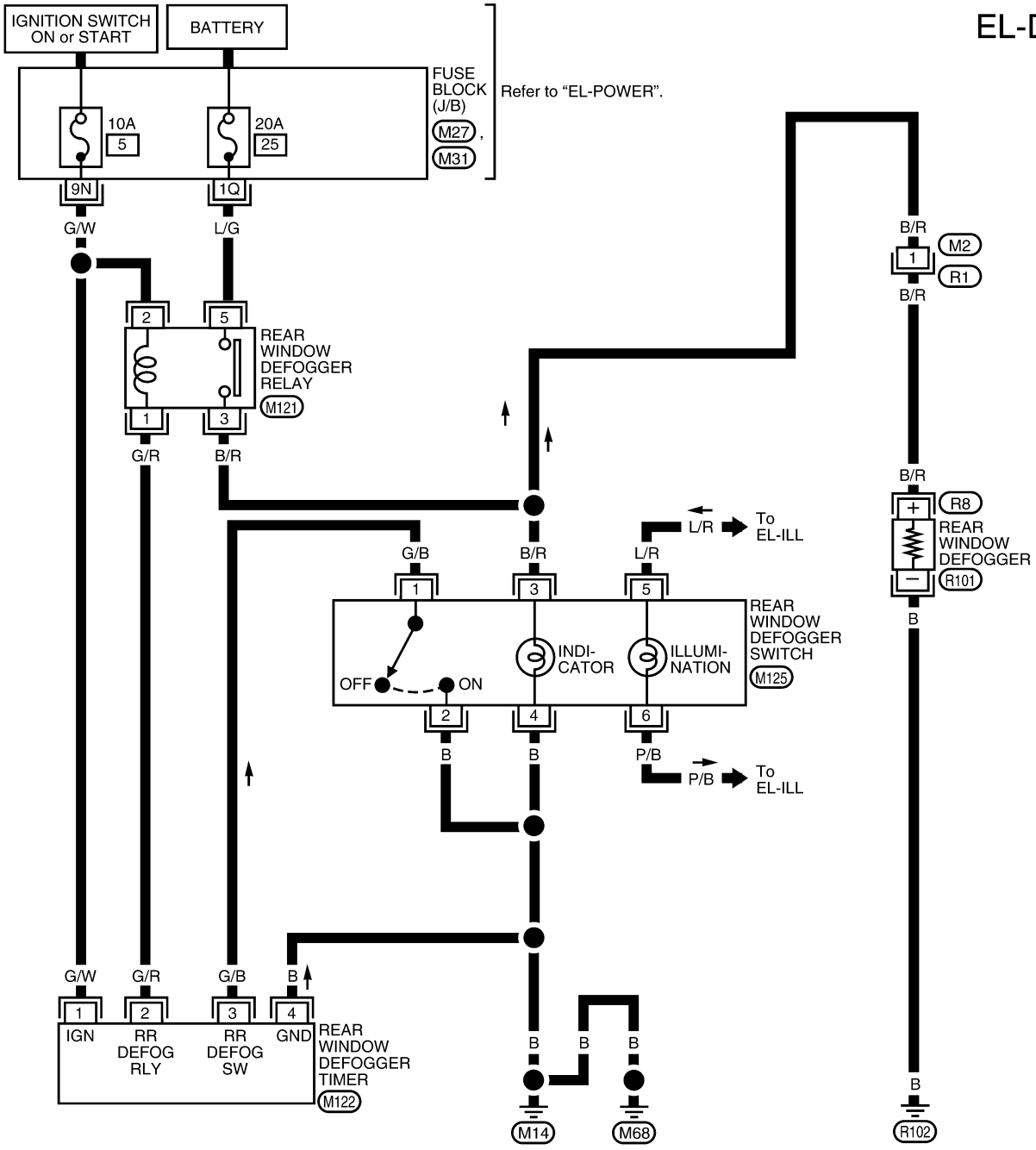

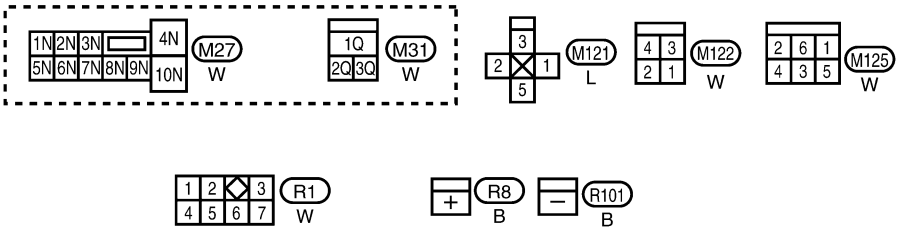

WEL540A

WITH POWER DOOR LOCKS

NEEL0217S02

EL-DEF-02

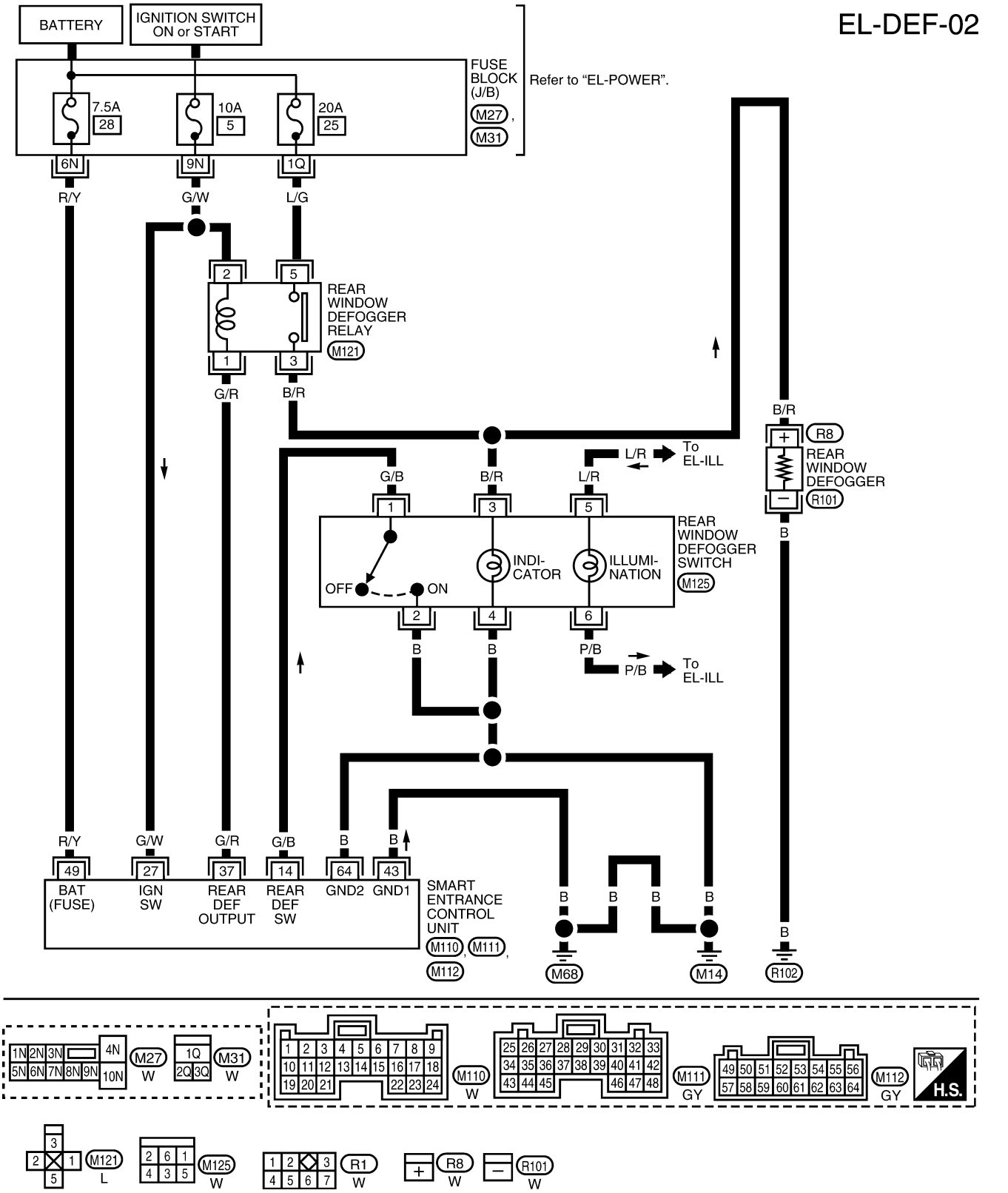

LEL221A

Trouble Diagnoses

NEEL0218

DIAGNOSTIC PROCEDURE

NEEL0218S01

SYMPTOM: Rear window defogger does not activate, or does not turn off after activating.

Models without Power Door Locks

NEEL0218S0101

1	CHECK REAR WINDOW DEFOGGER OUTPUT SIGNAL

1. Turn ignition switch ON.
2. Check voltage between rear window defogger timer harness connector M122 terminal 2 (G/R) and ground.

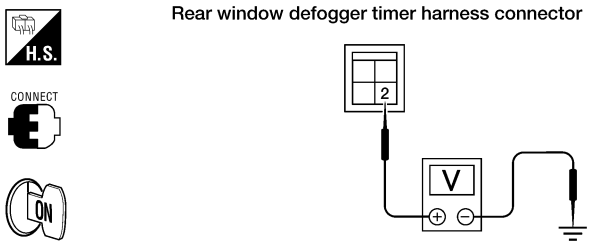

Voltage [V]:
Rear window defogger switch is OFF.
Approx. 12
Rear window defogger switch is ON
0

LEL257A

OK or NG

OK	▶	**Check the following.** ● Rear window defogger relay (Refer to “REAR WINDOW DEFOGGER RELAY”, EL-131) ● Rear window defogger circuit ● Rear window defogger filament (Refer to “Filament Check”, EL-132)
NG	▶	GO TO 2.

2	CHECK DEFOGGER RELAY COIL SIDE CIRCUIT

1. Disconnect rear window defogger timer harness connector.
2. Turn ignition switch ON.
3. Check voltage between rear window defogger timer harness connector M122 terminal 2 (G/R) and ground.

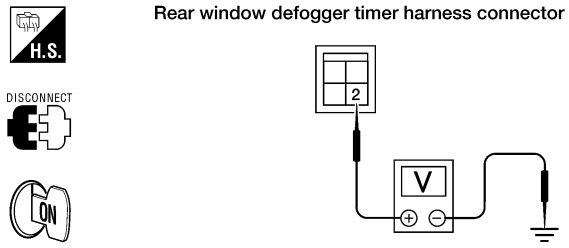

Battery voltage should exist.

LEL256A

OK or NG

OK	▶	GO TO 3.
NG	▶	**Check the following.** ● 10A fuse [No. 5, located in the fuse block (J/B)] ● Rear window defogger relay ● Harness for open or short between rear window defogger relay and rear window defogger timer ● Harness for open or short between rear window defogger relay and fuse

3	CHECK REAR WINDOW DEFOGGER SWITCH INPUT SIGNAL

Check continuity between rear window defogger timer harness connector M122 terminal 3 (G/B) and ground.

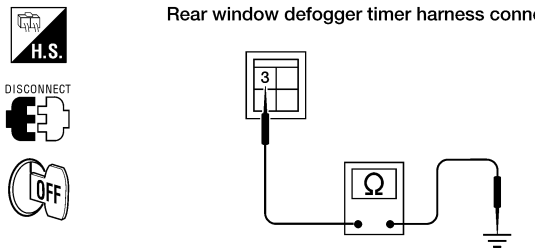

Continuity:
Rear window defogger switch is pressed.
Yes
Rear window defogger switch is released.
No

LEL260A

OK or NG

OK	▶	GO TO 4.
NG	▶	**Check the following.** ● Rear window defogger switch (Refer to "REAR WINDOW DEFOGGER SWITCH", EL-132) ● Harness for open or short between rear window defogger timer and rear window defogger switch ● Rear window defogger switch ground circuit

4	CHECK IGNITION INPUT SIGNAL

Check voltage between rear window defogger timer harness connector M122 terminal 1 (G/W) and ground.

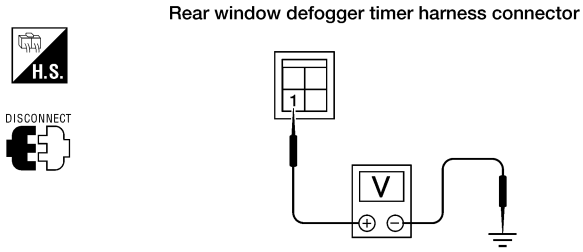

Voltage [V]:
Ignition switch is ON.
Approx. 12
Ignition switch is OFF.
0

LEL259A

OK or NG

OK	▶	GO TO 5.
NG	▶	**Check the following.** ● 10A fuse [No. 5, located in the fuse block (J/B)] ● Harness for open or short between rear window defogger timer and fuse

5	CHECK CONTROL UNIT GROUND CIRCUIT

Check continuity between rear window defogger timer harness connector M122 terminal 4 (B) and ground.

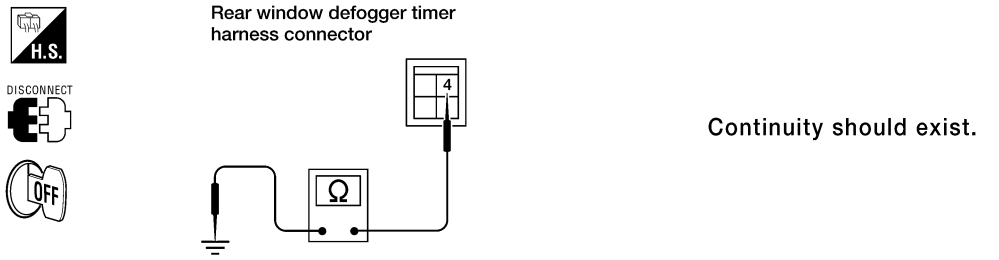

LEL258A

OK or NG

OK	▶	Replace rear window defogger timer.
NG	▶	Repair harness or connectors.

Models with Power Door Locks

NEEL0218S0102

1	CHECK REAR WINDOW DEFOGGER OUTPUT SIGNAL

1. Turn ignition switch ON.
2. Check voltage between smart entrance control unit harness connector M111 terminal 37 (G/R) and ground.

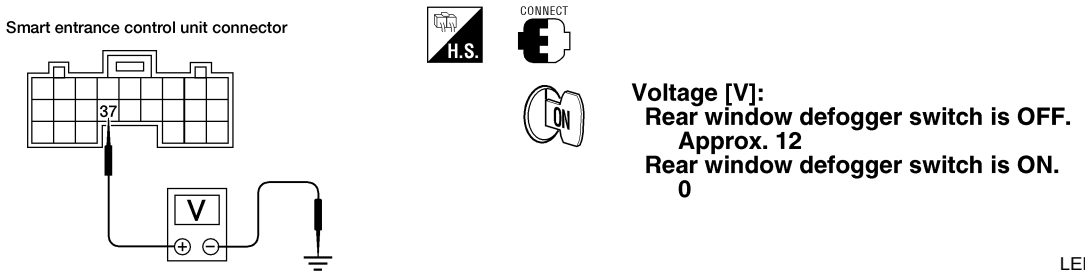

LEL013A

OK or NG

OK	▶	**Check the following.** ● Rear window defogger relay (Refer to "REAR WINDOW DEFOGGER RELAY", EL-131) ● Rear window defogger circuit ● Rear window defogger filament (Refer to "Filament Check", EL-132)
NG	▶	GO TO 2.

2	CHECK DEFOGGER RELAY COIL SIDE CIRCUIT

1. Disconnect smart entrance control unit harness connector.
2. Turn ignition switch ON.
3. Check voltage between smart entrance control unit harness connector M111 terminal 37 (G/R) and ground.

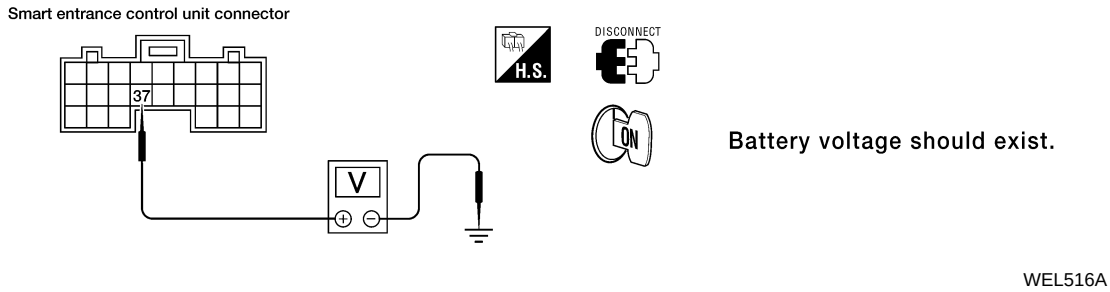

OK or NG

OK	▶	GO TO 3.
NG	▶	**Check the following.** ● 10A fuse [No. 5, located in the fuse block (J/B)] ● Rear window defogger relay ● Harness for open or short between rear window defogger relay and smart entrance control unit ● Harness for open or short between rear window defogger relay and fuse

3	CHECK REAR WINDOW DEFOGGER SWITCH INPUT SIGNAL

Check continuity between smart entrance control unit harness connector M110 terminal 14 (G/B) and ground.

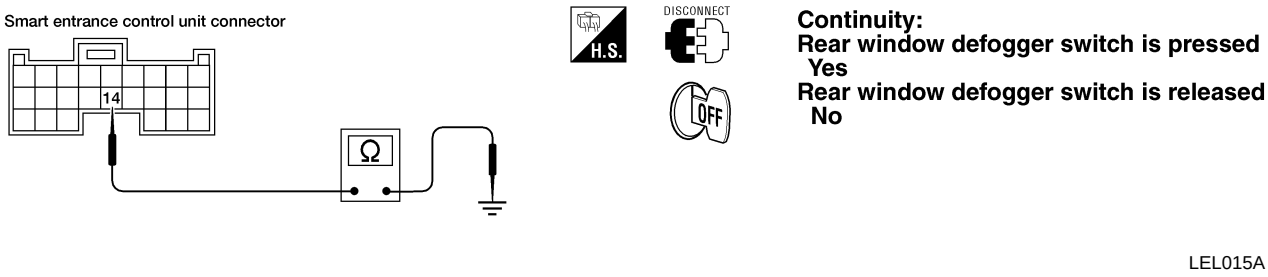

OK or NG

OK	▶	GO TO 4.
NG	▶	**Check the following.** ● Rear window defogger switch (Refer to "REAR WINDOW DEFOGGER SWITCH", EL-132) ● Harness for open or short between smart entrance control unit and rear window defogger switch ● Rear window defogger switch ground circuit

4	CHECK IGNITION INPUT SIGNAL

Check voltage between smart entrance control unit harness connector M111 terminal 27 (G/W) and ground.

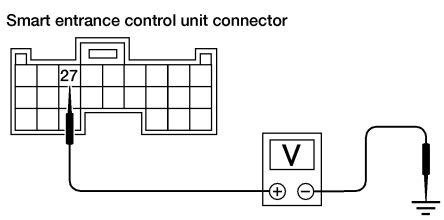

Voltage [V]:
Ignition switch is ON.
Approx. 12
Ignition switch is OFF.
0

LEL016A

OK or NG

OK	▶	GO TO 5.
NG	▶	**Check the following.** ● 10A fuse [No. 5, located in the fuse block (J/B)] ● Harness for open or short between smart entrance control unit and fuse

5	CHECK CONTROL UNIT GROUND CIRCUIT

Check continuity between smart entrance control unit harness connector M111 terminals 43 (B), 64 (B) and ground.

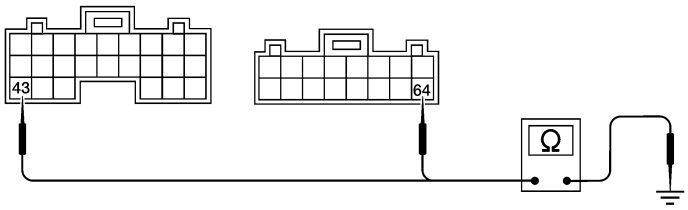

Continuity should exist.

WEL484A

OK or NG

OK	▶	Replace smart entrance control unit.
NG	▶	Repair harness or connectors.

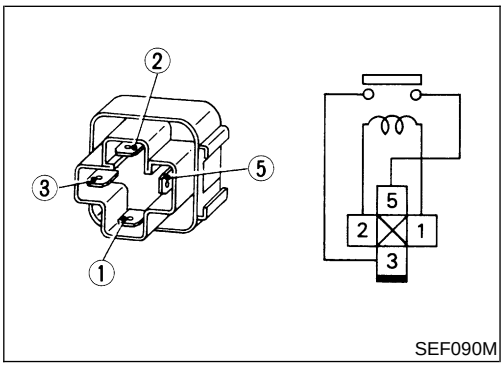

Electrical Components Inspection

NEEL0219

REAR WINDOW DEFOGGER RELAY

NEEL0219S01

Check continuity between terminals 3 and 5.

Condition	Continuity
12V direct current supply between terminals 1 and 2	Yes
No current supply	No

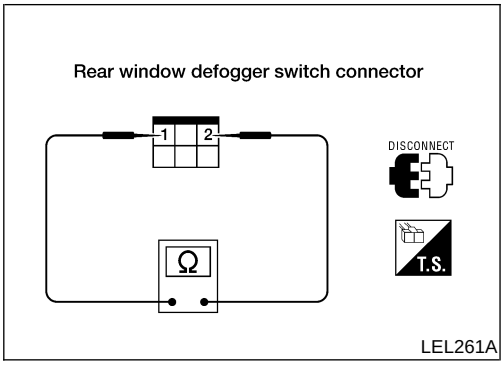

REAR WINDOW DEFOGGER SWITCH

NEEL0219S02

Check continuity between terminals when rear window defogger switch is pushed and released.

Terminals	Condition	Continuity
M121 1 - 2	Rear window defogger switch is pushed	Yes
	Rear window defogger switch is released	No

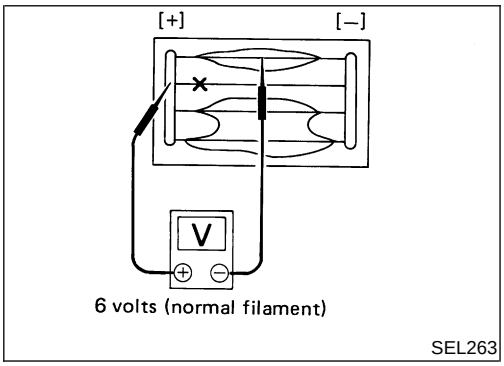

Filament Check

NEEL0220

1. Attach probe circuit tester (in volt range) to middle portion of each filament.

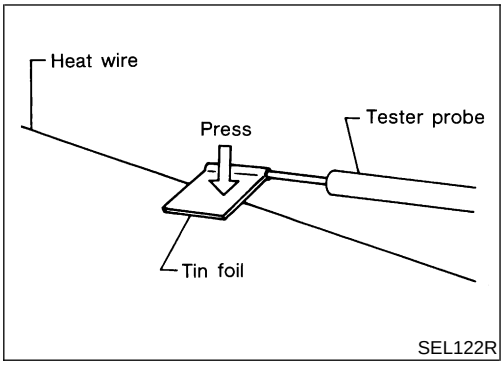

- **When measuring voltage, wrap tin foil around the top of the negative probe. Then press the foil against the wire with your finger.**

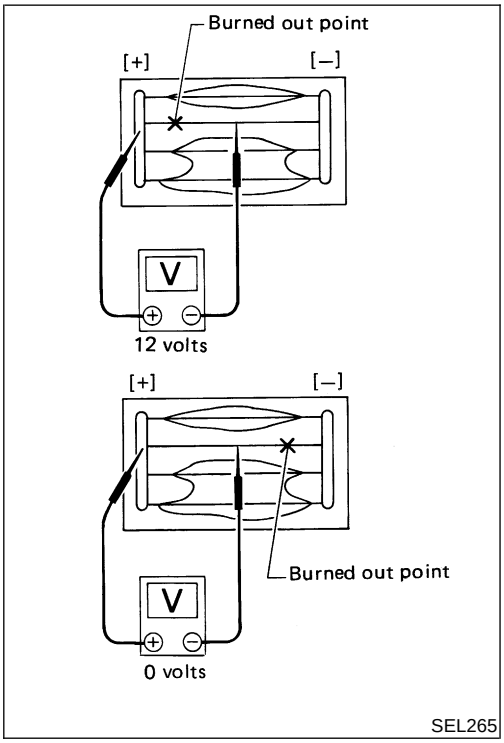

2. If a filament is burned out, circuit tester registers 0 or 12 volts.

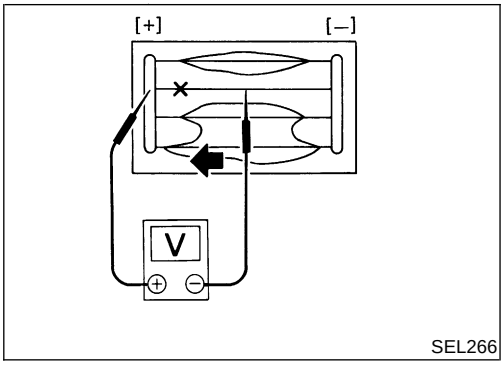

SEL266

3. To locate burned out point, move probe to left and right along filament. Test needle will swing abruptly when probe passes the point.

Filament Repair

NEEL0221

REPAIR EQUIPMENT

NEEL0221S01

1) Conductive silver composition (Dupont No. 4817 or equivalent)
2) Ruler 30 cm (11.8 in) long
3) Drawing pen
4) Heat gun
5) Alcohol
6) Cloth

REPAIRING PROCEDURE

NEEL0221S02

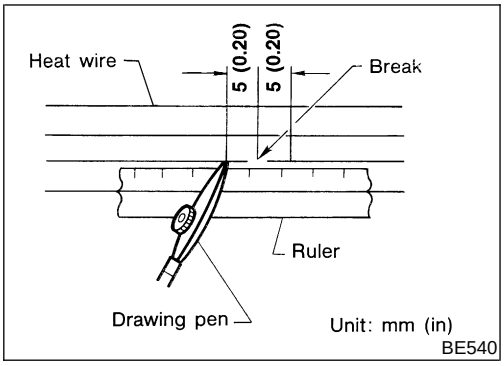

BE540

1. Wipe broken heat wire and its surrounding area clean with a cloth dampened in alcohol.
2. Apply a small amount of conductive silver composition to tip of drawing pen.

Shake silver composition container before use.

3. Place ruler on glass along broken line. Deposit conductive silver composition on break with drawing pen. Slightly overlap existing heat wire on both sides [preferably 5 mm (0.20 in)] of the break.

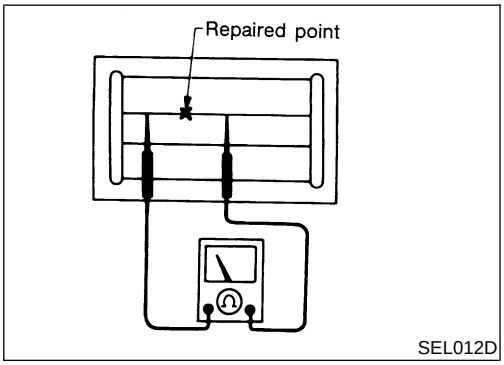

SEL012D

4. After repair has been completed, check repaired wire for continuity. This check should be conducted 10 minutes after silver composition is deposited.

Do not touch repaired area while test is being conducted.

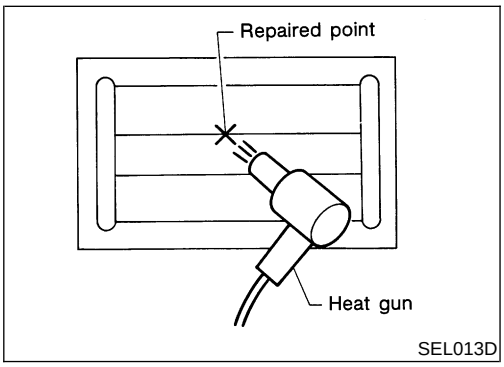

SEL013D

5. Apply a constant stream of hot air directly to the repaired area for approximately 20 minutes with a heat gun. A minimum distance of 3 cm (1.2 in) should be kept between repaired area and hot air outlet. If a heat gun is not available, let the repaired area dry for 24 hours.

System Description

NEEL0079

Refer to Owner's Manual for audio system operating instructions.

REGULAR AND KING CAB WITH BASE AUDIO SYSTEM

NEEL0079S03

Power is supplied at all times

- through 15A fuse (No. 41, located in the fuse and fusible link box)
- to audio unit terminal 6.

With the ignition switch in the ACC or ON position, power is supplied

- through 10A fuse [No. 18, located in the fuse block (J/B)]
- to audio unit terminal 10.

Ground is supplied through the case of the audio unit.
With the audio unit ON, audio signals are supplied

- through audio unit terminals 2, 4, 14 and 16
- to front door speakers and front door tweeters.

REGULAR AND KING CAB WITH PREMIUM AUDIO SYSTEM

NEEL0079S04

Power is supplied at all times

- through 15A fuse (No. 41, located in the fuse and fusible link box)
- to audio unit terminal 6 and
- to subwoofer amplifier terminal 8.

With the ignition switch in the ACC or ON position, power is supplied

- through 10A fuse [No. 18, located in the fuse block (J/B)]
- to audio unit terminal 10.

Ground is supplied through the case of the audio unit.
Ground is supplied to subwoofer amplifier terminal 7 through body grounds M14 and M68.
With the audio unit ON, audio signals are supplied

- through audio unit terminals 2, 4, 14 and 16
- to front door speakers and front door tweeters and
- to subwoofer amplifier terminals 2 and 4.

With the audio unit ON, an "amplifier ON" signal is supplied

- from audio unit terminal 12
- to subwoofer amplifier terminal 6.

When the steering wheel audio control switches are pushed, audio signals are supplied

- through audio unit terminal 5
- to steering wheel audio control switch terminal 15 and
- through steering audio control switch terminal 16
- to audio unit terminal 9.

CREW CAB

NEEL0079S05

Power is supplied at all times

- through 15A fuse (No. 41, located in the fuse and fusible link box)
- to audio unit terminal 6.

With the ignition switch in the ACC or ON position, power is supplied

- through 10A fuse [No. 18, located in the fuse block (J/B)]
- to audio unit terminal 10.

Ground is supplied through the case of the audio unit.
With the audio unit ON, audio signals are supplied

- through audio unit terminals 2, 4, 14 and 16
- to front door speakers, front door tweeters and rear door speakers.

When the steering wheel audio control switches are pushed, audio signals are supplied

- through audio unit terminal 5
- to steering wheel audio control switch terminal 15 and
- through steering audio control switch terminal 16
- to audio unit terminal 9.

Wiring Diagram — AUDIO —

NEEL0157

REGULAR AND KING CAB WITH BASE AUDIO SYSTEM

NEEL0157S01

EL-AUDIO-01

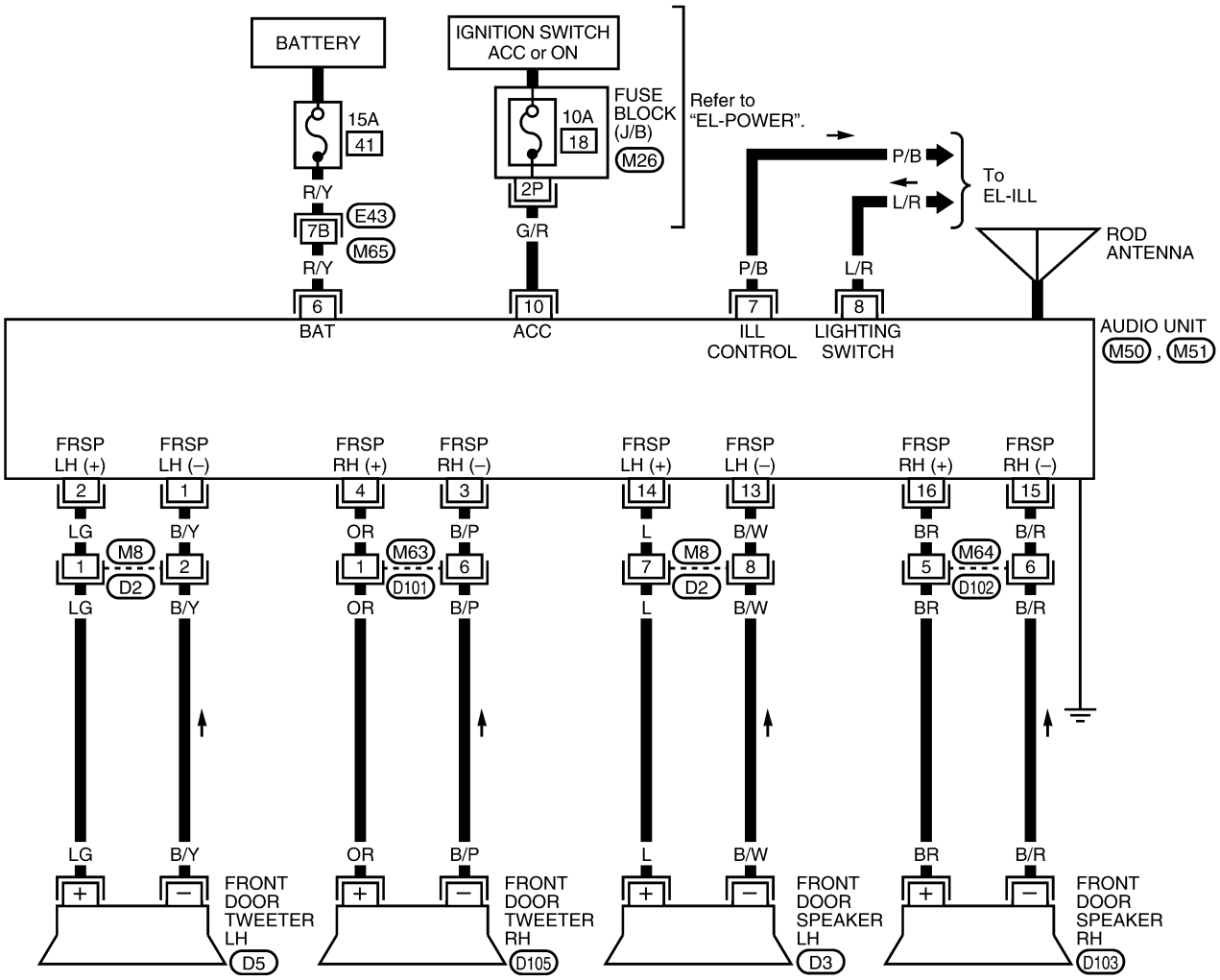

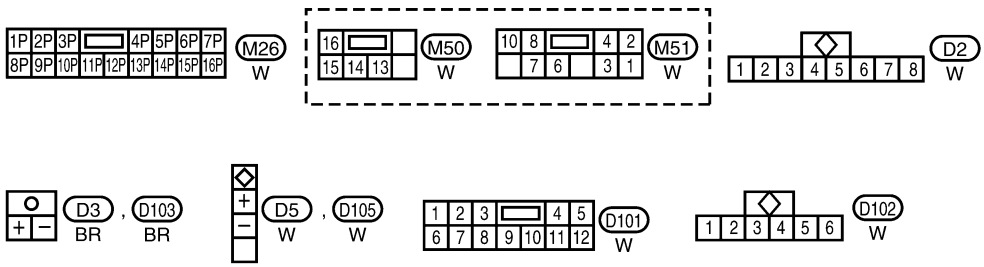

Refer to the following.
M65 , E43 - SUPER MULTIPLE JUNCTION (SMJ)

LEL214A

Wiring Diagram — AUDIO — (Cont'd)

REGULAR AND KING CAB WITH PREMIUM AUDIO SYSTEM

NEEL0157S02

EL-AUDIO-02

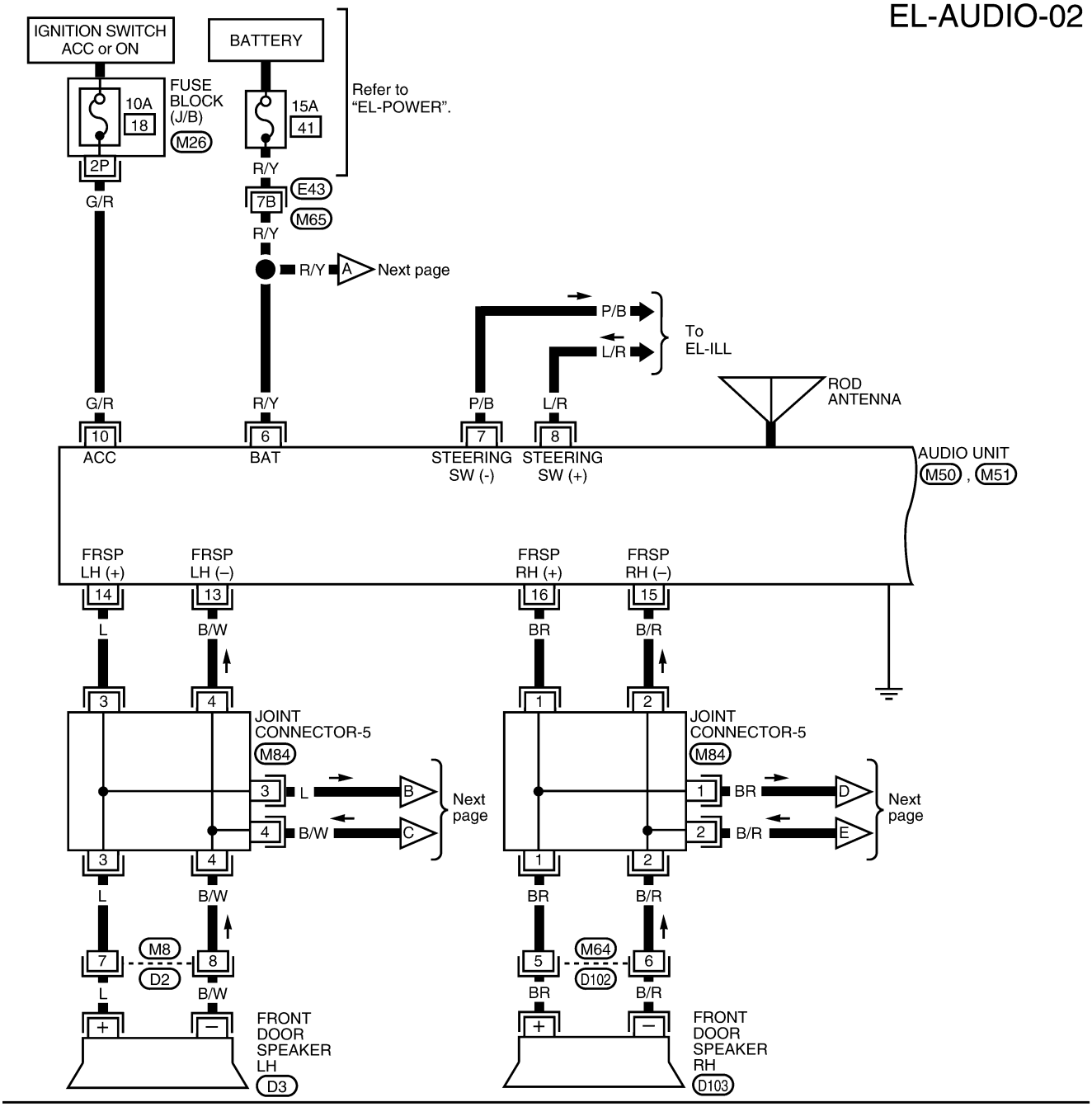

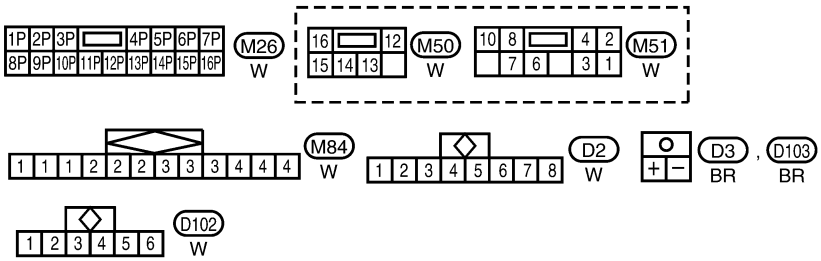

Refer to the following.
M65 , E43 - SUPER MULTIPLE JUNCTION (SMJ)

LEL763

EL-AUDIO-03

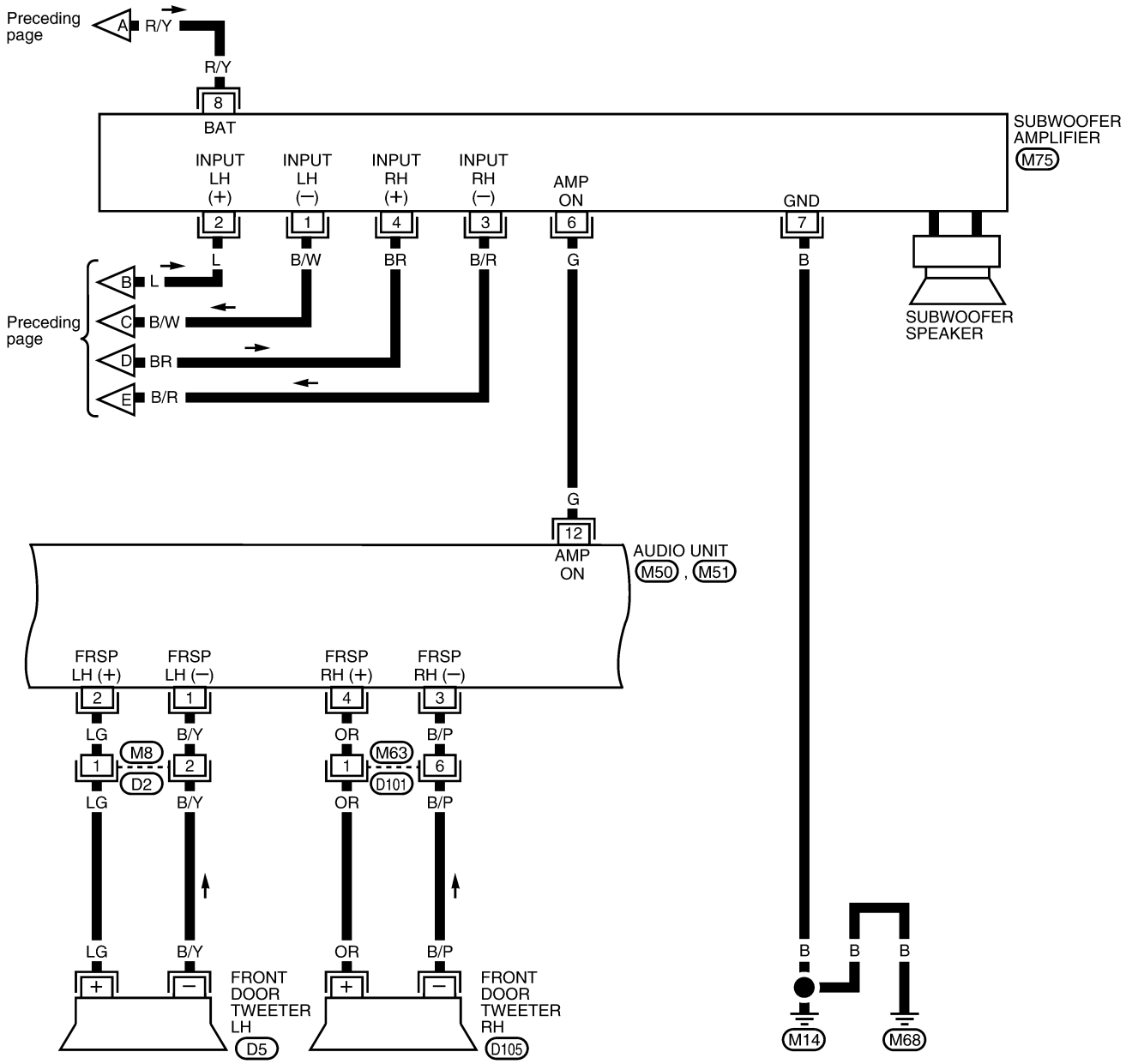

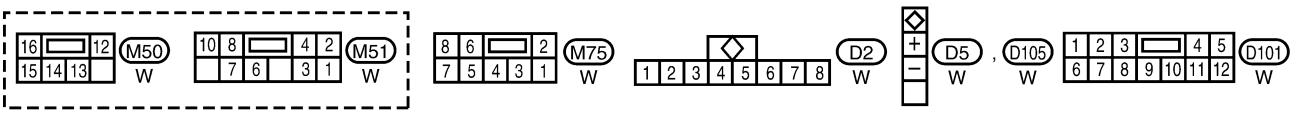

LEL462A

EL-AUDIO-04

PR: With premium audio system

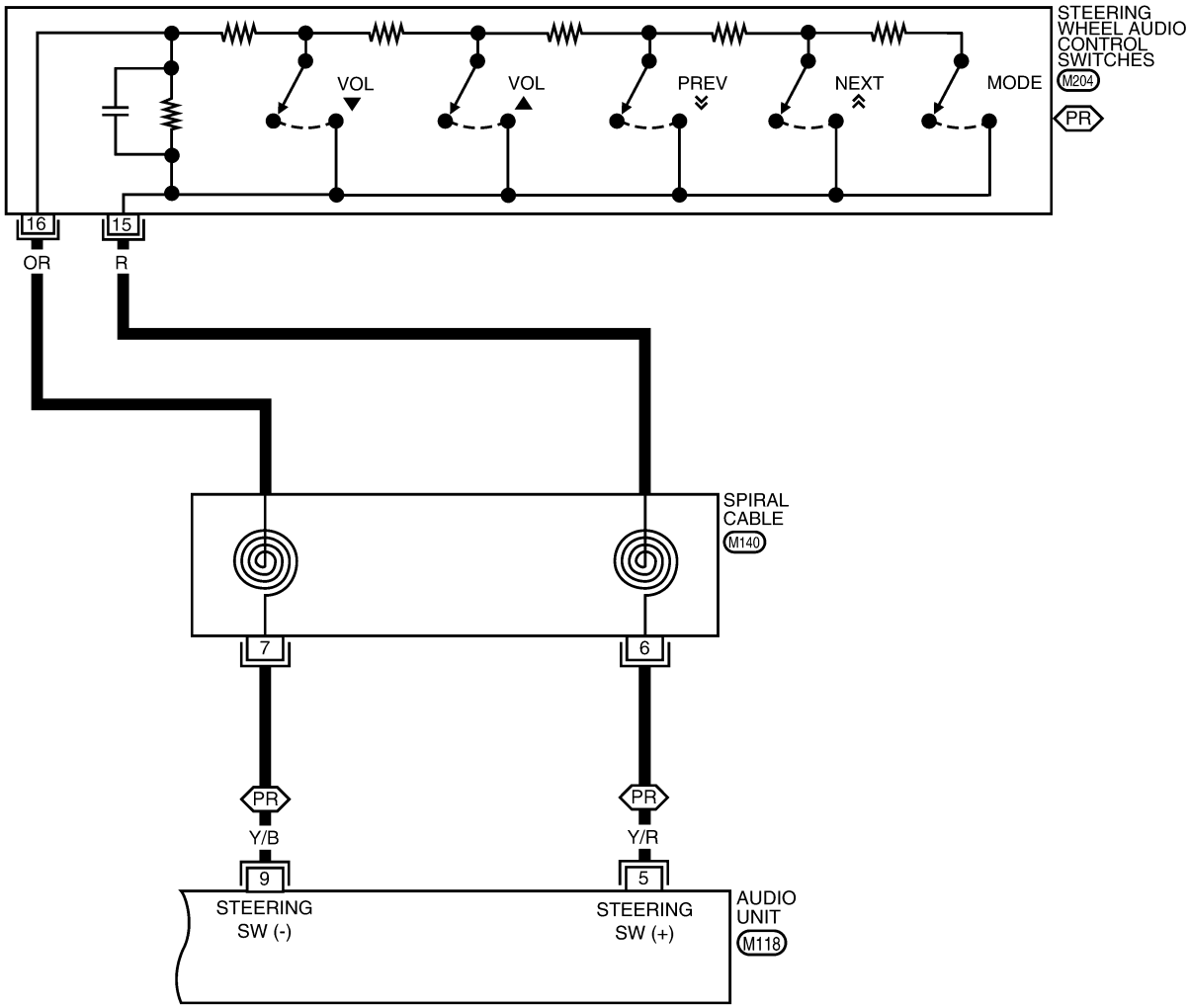

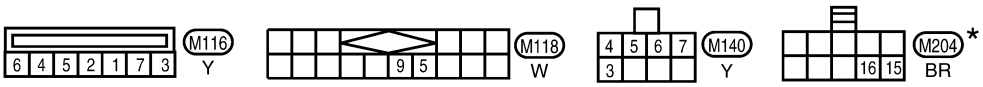

*: This connector is not shown in "HARNESS LAYOUT" of EL section.

WEL062B

CREW CAB

NEEL0157S03

EL-AUDIO-05

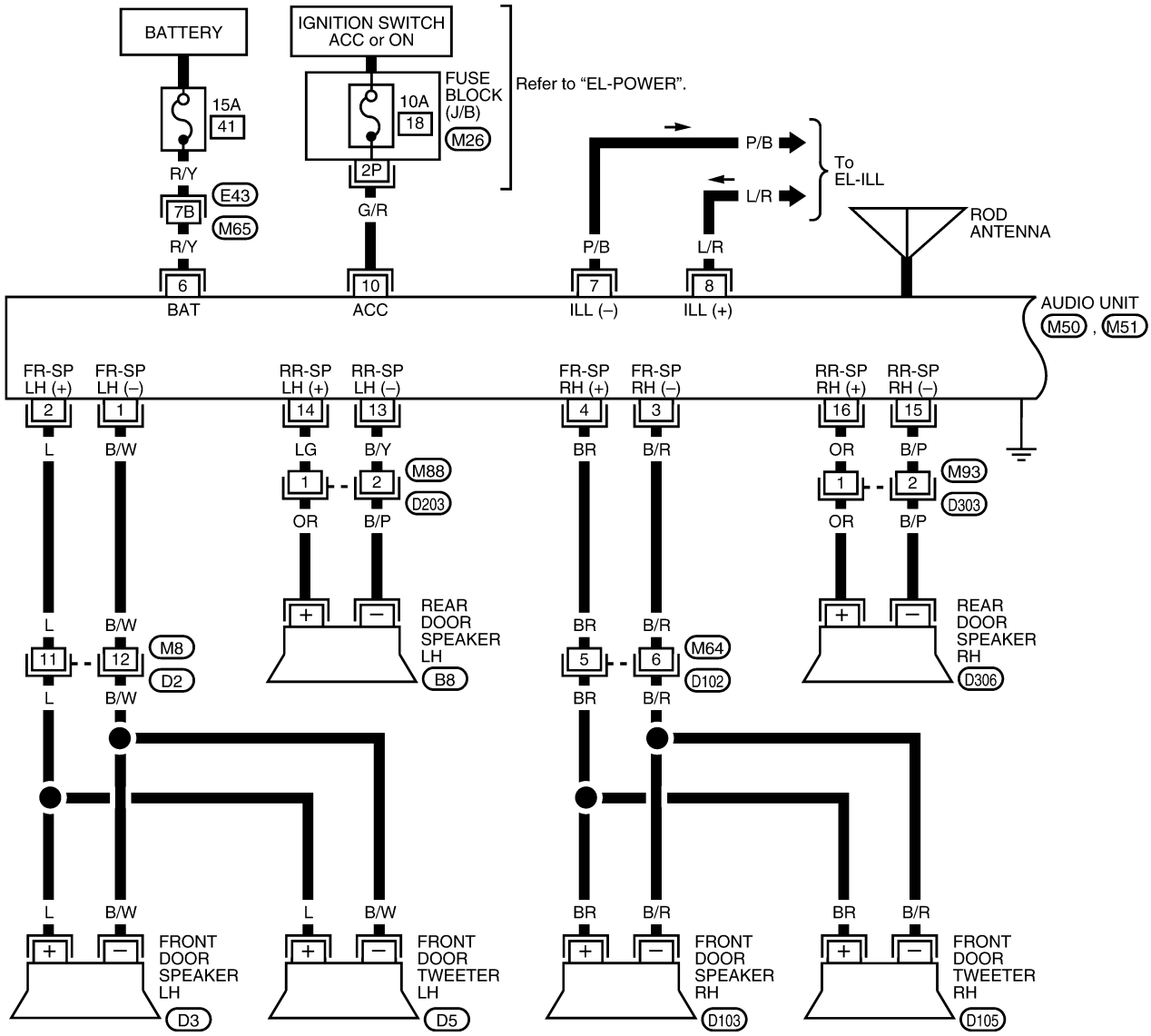

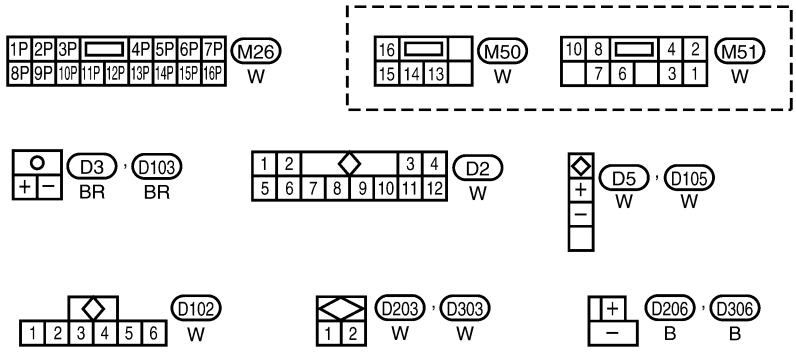

Refer to the following.
M65 , E43 - SUPER MULTIPLE JUNCTION (SMJ)

WEL463A

EL-AUDIO-06

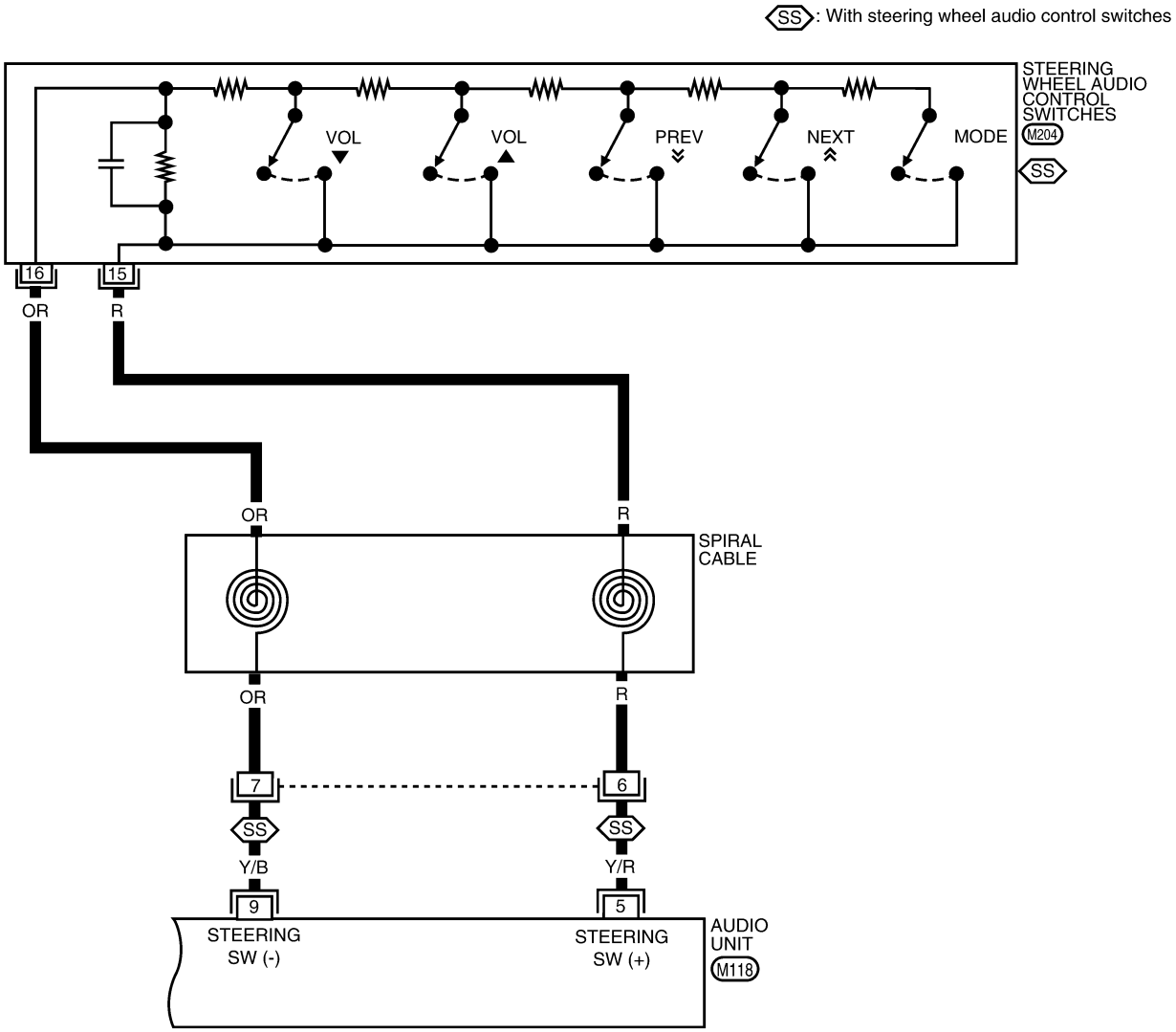

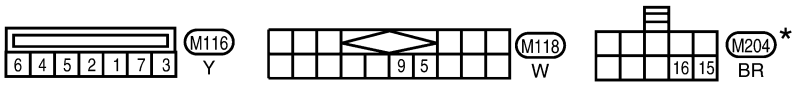

★: This connector is not shown in "HARNESS LAYOUT" of EL section.

LEL237A

Trouble Diagnoses

NEEL0082

AUDIO UNIT

NEEL0082S01

Symptom	Possible causes	Repair order
Audio unit inoperative (no digital display and no sound from speakers).	1. 10A fuse 2. Poor audio unit case ground 3. Audio unit	1. Check 10A fuse [No. 18, located in fuse block (J/B)]. Turn ignition switch ON and verify that battery positive voltage is present at terminal 10 of audio unit. 2. Check audio unit case ground. 3. Remove audio unit for repair.
Audio unit controls are operational, but no sound is heard from any speaker.	1. Audio unit output 2. Audio unit	1. Check audio unit output voltages. 2. Remove audio unit for repair.
Audio unit presets are lost when ignition switch is turned OFF.	1. 15A fuse 2. Audio unit	1. Check 15A fuse (No. 41, located in fuse and fusible link box) and verify that battery positive voltage is present at terminal 6 of audio unit. 2. Remove audio unit for repair.
Individual speaker is noisy or inoperative.	1. Speaker 2. Audio unit output 3. Speaker circuit 4. Audio unit	1. Check speaker. 2. Check audio unit output voltages. 3. Check wires for open or short between audio unit and speaker. 4. Remove audio unit for repair.
Subwoofer speaker is noisy or inoperative (2 door models with premium audio system).	1. Speaker 2. Subwoofer amplifier output 3. Poor subwoofer amplifier ground 4. Audio unit “amplifier ON” signal 5. Audio unit “amplifier ON” circuit	1. Check speaker. 2. Verify that battery positive voltage is present at terminal 8 of subwoofer amplifier 3. Check subwoofer amplifier ground. 4. Turn audio unit ON and verify that approximately 10.5 volts are present at terminal 12 of audio unit. 5. Check wire for open or short between audio unit and subwoofer amplifier.
Audio unit stations are weak or noisy.	1. Antenna 2. Poor audio unit ground 3. Audio unit	1. Check antenna. 2. Check audio unit ground. 3. Remove audio unit for repair.
Audio unit generates noise in AM and FM modes with engine running.	1. Poor audio unit ground 2. Loose or missing ground bonding straps 3. Ignition condenser or rear window defogger noise suppressor condenser (Crew Cab models) 4. Generator 5. Ignition coil or secondary wiring 6. Audio unit	1. Check audio unit ground. 2. Check ground bonding straps. 3. Replace ignition condenser or rear window defogger noise suppressor condenser (Crew Cab models). 4. Check generator. 5. Check ignition coil and secondary wiring. 6. Remove audio unit for repair.
Audio unit generates noise in AM and FM modes with accessories on (switch pops and motor noise).	1. Poor audio unit ground 2. Antenna 3. Accessory ground 4. Faulty accessory	1. Check audio unit ground. 2. Check antenna. 3. Check accessory ground. 4. Replace accessory.
Steering wheel audio control switch does not operate (except base audio system).	1. Steering wheel audio control switch 2. Audio unit output 3. Steering wheel audio control switch circuit 4. Audio unit	1. Check steering wheel audio control switch, refer to “STEERING WHEEL AUDIO CONTROL SWTICH RESISTANCE CHECK”, EL-143. 2. Check audio unit output voltage. 3. Check harness betwen audio unit and steering switch. 4. Remove audio unit for repair.

Inspection

NEEL0083

SPEAKER

NEEL0083S03

1. Disconnect speaker harness connector.
2. Measure the resistance between speaker terminals + and –.
- The resistance should be 2 - 4Ω.
3. Using jumper wires, momentarily connect a 9V battery between speaker terminals + and –.

- A momentary hum or pop should be heard.

ANTENNA

NEEL0083S02

1. Using a jumper wire, clip an auxiliary ground between antenna and body.
- If reception improves, check antenna ground (at body surface).
- If reception does not improve, check main feeder cable for short circuit or open circuit.

AUDIO UNIT

NEEL0083S01

All voltage inspections are made with:

- Ignition switch ON or ACC
- Audio unit ON
- Audio unit connected (If removed for inspection, supply a ground to the case using a jumper wire.)

AUDIO UNIT VOLTAGES

NEEL0083S04

Terminal	Wire color		Voltage (V) (Approx.)		
	2-Door Models	4-Door Models	2-Door Models with Base Audio System	2-Door Models with Premium Audio System	4-Door Models
1	B/W	B/W	5 - 7.5	5 - 7.5	5 - 7.5
2	LG	L	5 - 7.5	5 - 7.5	5 - 7.5
3	B/P	B/R	5 - 7.5	5 - 7.5	5 - 7.5
4	OR	BR	5 - 7.5	5 - 7.5	5 - 7.5
5	—	—	—	—	—
6	R/Y	R/Y	10.8 - 15.6	10.8 - 15.6	10.8 - 15.6
7	P/B	P/B	0 (Illumination)	0 (Illumination)	0 (Illumination)
8	L/R	L/R	0 - 12 (Illumination)	0 - 12 (Illumination)	0 - 12 (Illumination)
9	—	—	—	—	—
10	G/R	G/R	10.8 - 15.6	10.8 - 15.6	10.8 - 15.6
11	—	—	—	—	—
12	G*	—	—	10.5	—
13	B/W	B/Y	5 - 7.5	5 - 7.5	5 - 7.5
14	L	LG	5 - 7.5	5 - 7.5	5 - 7.5
15	B/R	B/P	5 - 7.5	5 - 7.5	5 - 7.5
16	BR	OR	5 - 7.5	5 - 7.5	5 - 7.5

* 2-door models with premium audio system only.

SUBWOOFER AMPLIFIER VOLTAGES

NEEL0083S05

Terminal	Wire color	Voltage (V) (Approx.)
1	B/W	5 - 7.5
2	L	5 - 7.5
3	B/R	5 - 7.5
4	BR	5 - 7.5
5	—	—
6	G	10.5
7	B	Body ground
8	R/Y	10.8 - 15.6

STEERING WHEEL AUDIO CONTROL SWITCH RESISTANCE CHECK

NEEL0083S06

	Terminal No.	Resistance (Ω) (Approx.)
VOLUM (DOWN) SW	15 - 16	21.7 - 22.2
VOLUM (UP) SW		69.3 - 70.7
PREVIOUS SW		108.9 - 111.1
NEXT SW		158.4 - 161.6
MODE SW		326.7 - 333.3

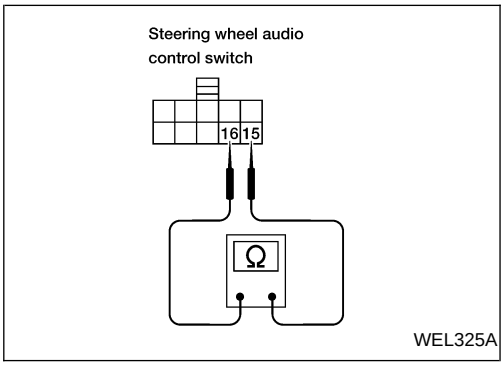

Location of Antenna

NEEL0204

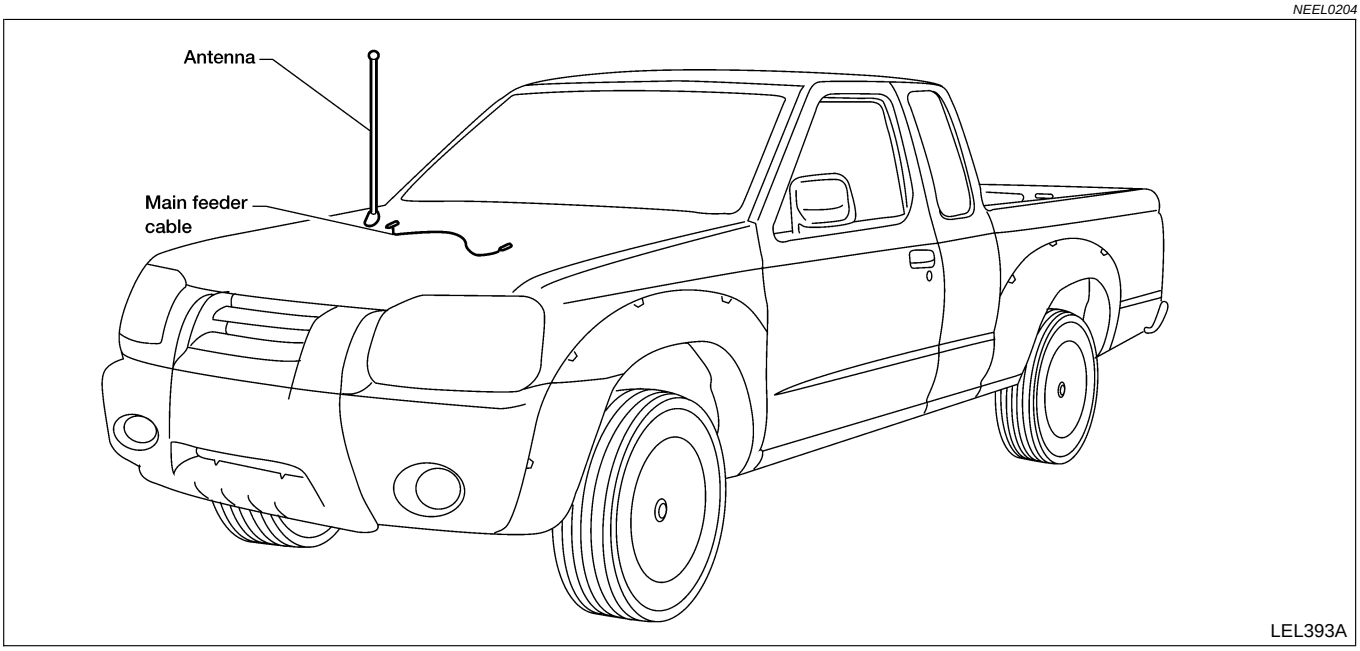

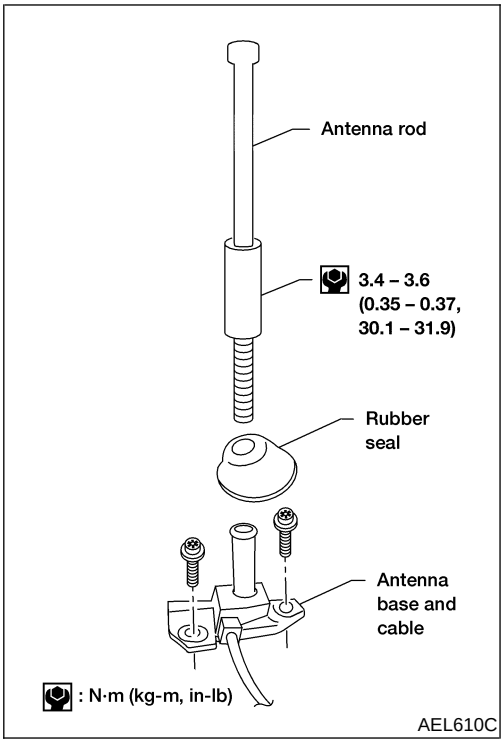

Fixed Antenna Rod Replacement

NEEL0192

REMOVAL

NEEL0192S01

1. Remove antenna rod.
2. Remove rubber seal.
3. Remove cowl screen top seal.
4. Remove right wiper arm.
5. Remove right cowl to grille.
6. Remove antenna base bolts.
7. Remove right fender splash shield.
8. Remove audio unit.
9. Disconnect antenna cable from audio unit.
10. Remove attachment clip from fender apron.
11. Remove antenna base and cable.

INSTALLATION

NEEL0192S02

Install in reverse order of removal.

CAUTION:

Always properly tighten the antenna rod during installation or the antenna rod may bend or break during vehicle operation.

Wiring Diagram — MIRROR —

NEEL0090

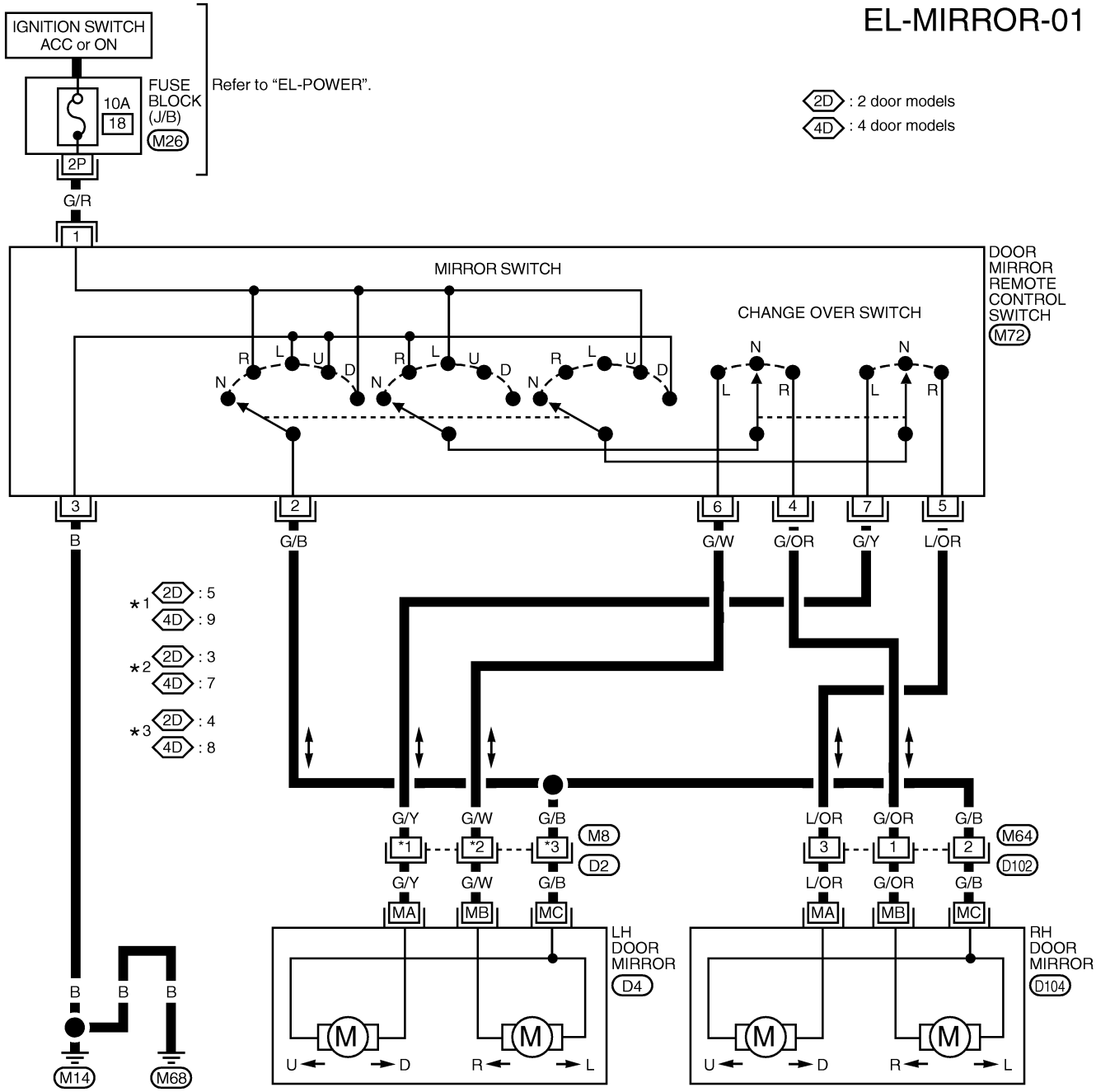

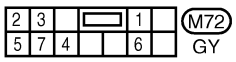

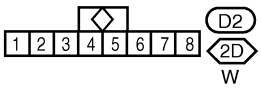

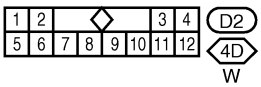

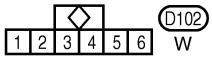

AEL475C

Component Parts and Harness Connector Location

NEEL0094

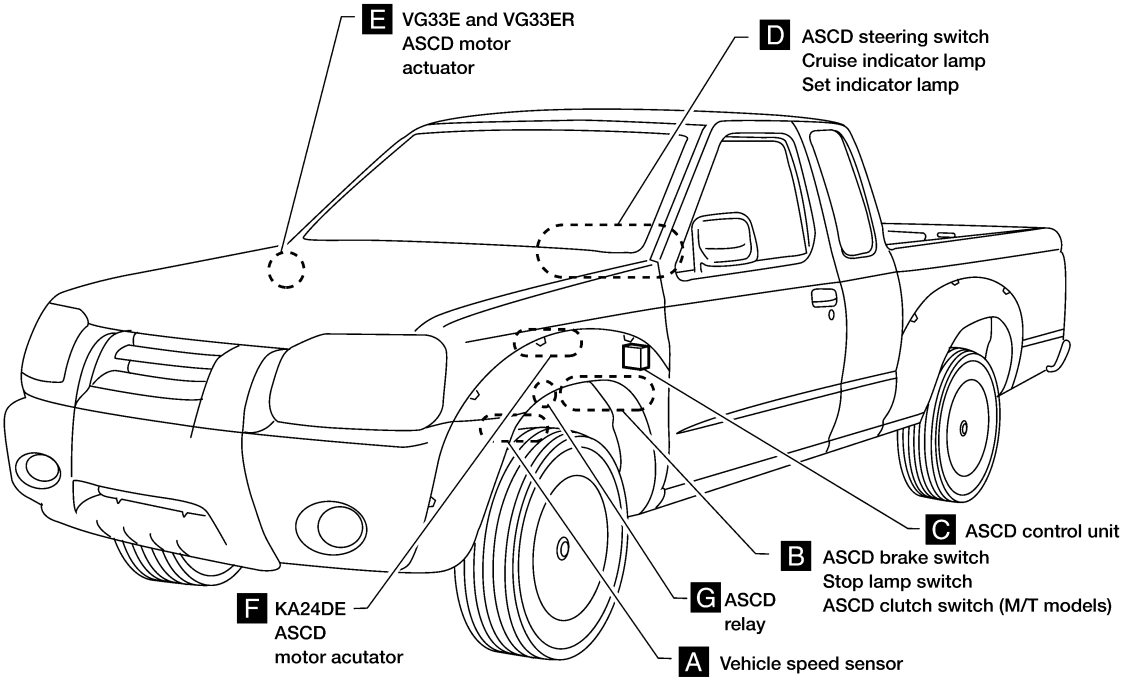

WEL446A

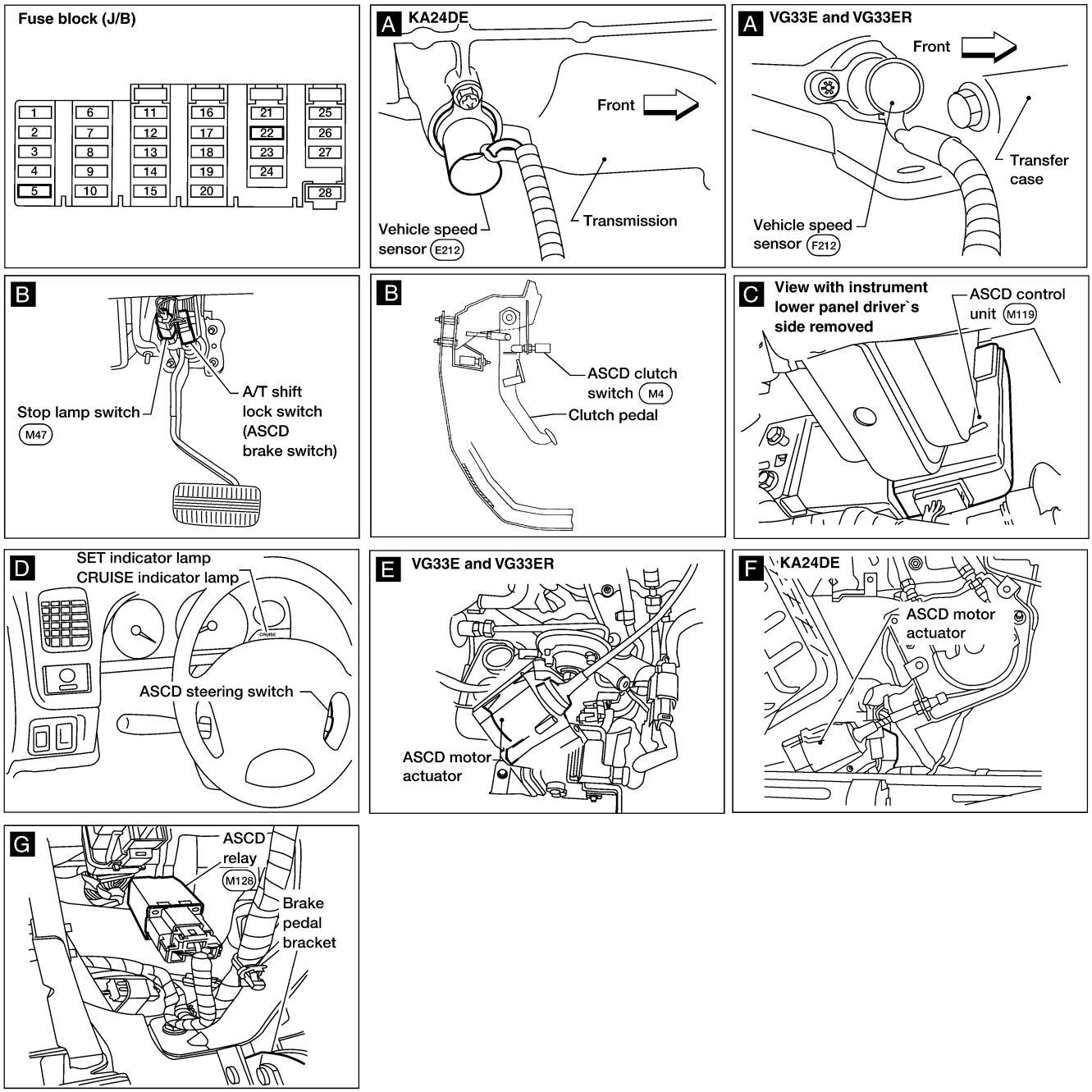
Fuse block (J/B)
1 2 3 4 5 6 7 8 9 10 11 12 13 14 15 16 17 18 19 20 21 22 23 24 25 26 27 28
A KA24DE
Front
Transmission
Vehicle speed sensor E212
A VG33E and VG33ER
Front
Transfer case
Vehicle speed sensor F212
B
Stop lamp switch M47
A/T shift lock switch (ASCD brake switch)
B
ASCD clutch switch M4
Clutch pedal
C View with instrument lower panel driver`s side removed
ASCD control unit M119
D
SET indicator lamp
CRUISE indicator lamp
ASCD steering switch
E VG33E and VG33ER
ASCD motor actuator
F KA24DE
ASCD motor actuator
G
ASCD relay M128
Brake pedal bracket

WEL448A

System Description

NEEL0206

Refer to Owner's Manual for ASCD operating instructions.

POWER SUPPLY AND GROUND

NEEL0206S01

Power is supplied at all times

- through 15A fuse [No. 22, located in the fuse block (J/B)] (2–door models) or
- through 20A fuse [No. 22, located in the fuse block (J/B)] (4–door models)
- to the stop lamp switch terminal 1

When ignition switch is in the ON or START position, power is supplied

- through 10A fuse [No. 5, located in the fuse block (J/B)]
- to ASCD control unit terminal 5.
- through 7.5A fuse [No. 12, located in the fuse block (J/B)]
- to park/neutral position switch terminal 1,
- through 10A fuse [No. 11, located in the fuse block (J/B)]
- to combination meter terminals 17 and 30.

When park/neutral position switch (A/T) is in the P or N position, ground is supplied

- to park/neutral position switch terminal 2
- through ASCD relay terminal 1
- to ASCD relay terminal 2
- through body grounds E12 and E54.

When ON●OFF switch is depressed (ON), ground is supplied

- to ASCD control unit terminal 11
- from ASCD steering switch terminal 14
- to ASCD steering switch terminal 13
- from ASCD control unit terminal 24

Then ASCD control unit illuminates CRUISE indicator.
Ground is supplied

- to combination meter terminal 46
- from ASCD control unit terminal 15.

Ground is supplied

- to ASCD control unit terminal 17
- through body grounds M14 and M68.

OPERATION

NEEL0206S02

Set Operation

NEEL0206S0201

To activate the ASCD, all of following conditions must exist

- ASCD control unit receives ON●OFF switch ON signal
- Power supply to ASCD control unit terminal 8 [Brake and clutch pedal is released (M/T), and brake pedal is released and A/T selector lever is in other than P and N position (A/T)].
- Vehicle speed is between 40 km/h (25 MPH) and 144 km/h (89 MPH). (Signal from combination meter.)

When the COAST/SET switch is depressed, ground is supplied

- to ASCD control unit terminal 11,
- from ASCD steering switch terminal 14.

Then ASCD motor actuator is activated to control throttle wire and ASCD control unit supplies ground

- to combination meter terminal 31 to illuminate SET indicator
- from ASCD control unit terminal 18.

A/T Overdrive Control during Cruise Control Driving (A/T)

NEEL0206S0202

KA24DE MODELS

When the vehicle speed is approximately 5 km/h (3 MPH) below set speed, ground is supplied

- from ASCD control unit terminal 10
- to solenoid valve unit terminal 2.

When this occurs, overdrive is canceled.
When vehicle speed returns to approximately 0.6 km/h (0.4 MPH) below set speed, overdrive is reactivated.

VG33E AND VG33ER MODELS

When the vehicle speed is approximately 5 km/h (3 MPH) below set speed, a signal is sent

- from ASCD control unit terminal 10
- to TCM terminal 24.

When this occurs, the TCM cancels overdrive.
When vehicle speed returns to approximately 0.6 km/h (0.4 MPH) below set speed, overdrive is reactivated.

Coast Operation

NEEL0206S0203

When the COAST/SET switch is depressed during cruise control driving, ASCD motor actuator returns the throttle cable to decrease vehicle set speed until the switch is released. Then ASCD will keep the new set speed.
If COAST/SET switch is pressed and released quickly during cruise control driving, vehicle set speed will be reduced by 1.6 km/h (1.0 MPH).

Accel Operation

NEEL0206S0204

When the RES/ACCEL switch is depressed, ground is supplied

- from ASCD steering switch terminal 14
- to ASCD control unit terminal 11.

If the RES/ACCEL switch is depressed during cruise control driving, ASCD motor actuator pulls the throttle cable to increase the vehicle speed until the switch is released or vehicle speed is reached to maximum controlled speed by the system. Then ASCD will keep the new set speed.
If RES/ACCEL switch is pressed and released quickly during cruise control driving, vehicle set speed will be increased by 1.6 km/h (1.0 MPH).

Cancel Operation

NEEL0206S0205

When any of following conditions exist, cruise operation will be canceled

- CANCEL switch is depressed. (Ground is supplied to ASCD control unit terminal 11)
- Brake pedal is depressed. (Power is supplied to ASCD control unit terminal 23 from stop lamp switch)
- Brake or clutch pedal is depressed (M/T), brake pedal is depressed or A/T selector lever is shifted to P or N position (A/T). (Power supply to ASCD control unit terminal 8 is interrupted.)

If ON●OFF switch is turned to OFF when ASCD is activated, all of ASCD operation will be canceled and vehicle speed memory will be erased.

Resume Operation

NEEL0206S0206

When the RES/ACCEL switch is depressed, after cancel operation other than depressing ON●OFF switch is performed, vehicle speed will return to last set speed. To resume vehicle set speed, vehicle condition must meet following conditions

- Brake pedal is released.
- Clutch pedal is released (M/T).
- A/T selector lever is in other than P and N position (A/T).
- Vehicle speed is between 40 km/h (25 MPH) and 144 km/h (89 MPH).

ASCD MOTOR ACTUATOR OPERATION

NEEL0206S03

When the ASCD activates, power is supplied

- from terminal 7 of ASCD control unit
- to ASCD motor actuator terminal 1, and
- from terminal 12 of ASCD control unit
- to ASCD motor actuator terminal 6.

Ground is supplied

- from ASCD control unit terminals 1, 13, and 14
- to terminals 3, 5, and 2 of ASCD motor actuator.

Power to the actuator motor is supplied constantly from the ASCD control unit. The ASCD control unit then switches the actuator motor ground signals ON and OFF to control actuator motor operation and vehicle speed.

Circuit Diagram

NEEL0096

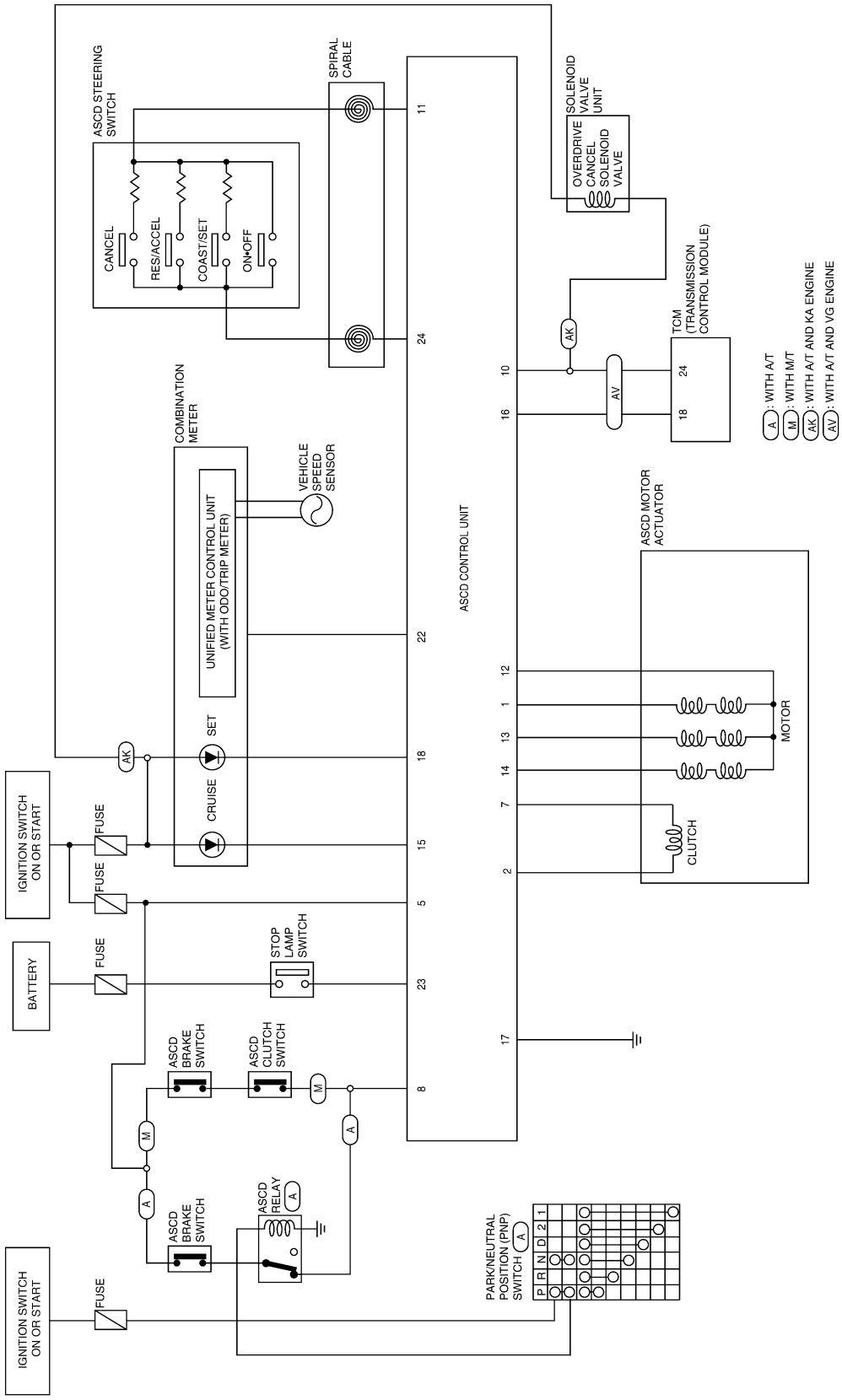

WEL057B

Wiring Diagram — ASCD —

NEEL0097

FIG. 1

NEEL0097S01

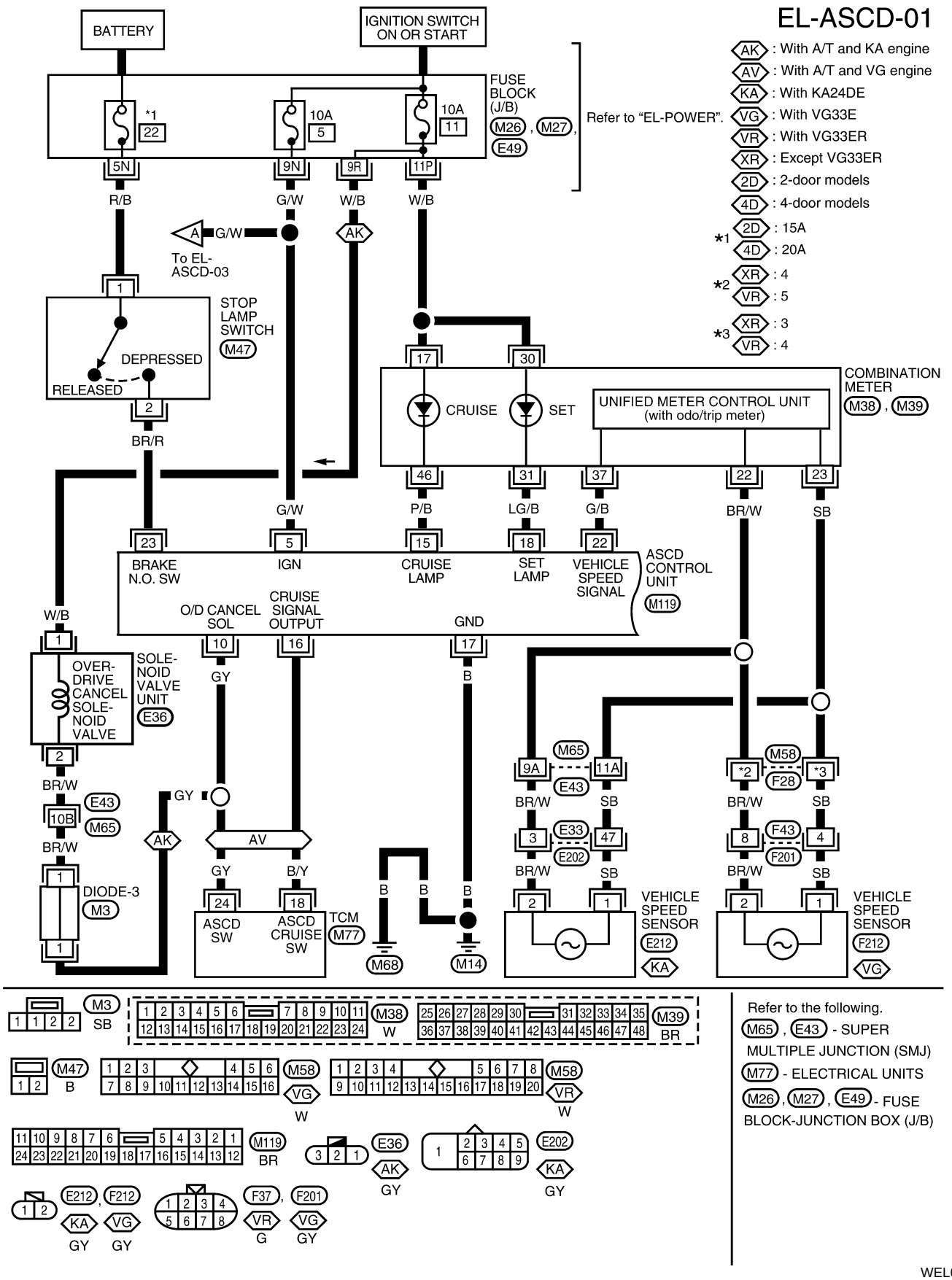

Refer to the following.
M65, E43 - SUPER MULTIPLE JUNCTION (SMJ)
M77 - ELECTRICAL UNITS
M26, M27, E49 - FUSE BLOCK-JUNCTION BOX (J/B)

WEL058B

FIG. 2

NEEL0097S02

EL-ASCD-02

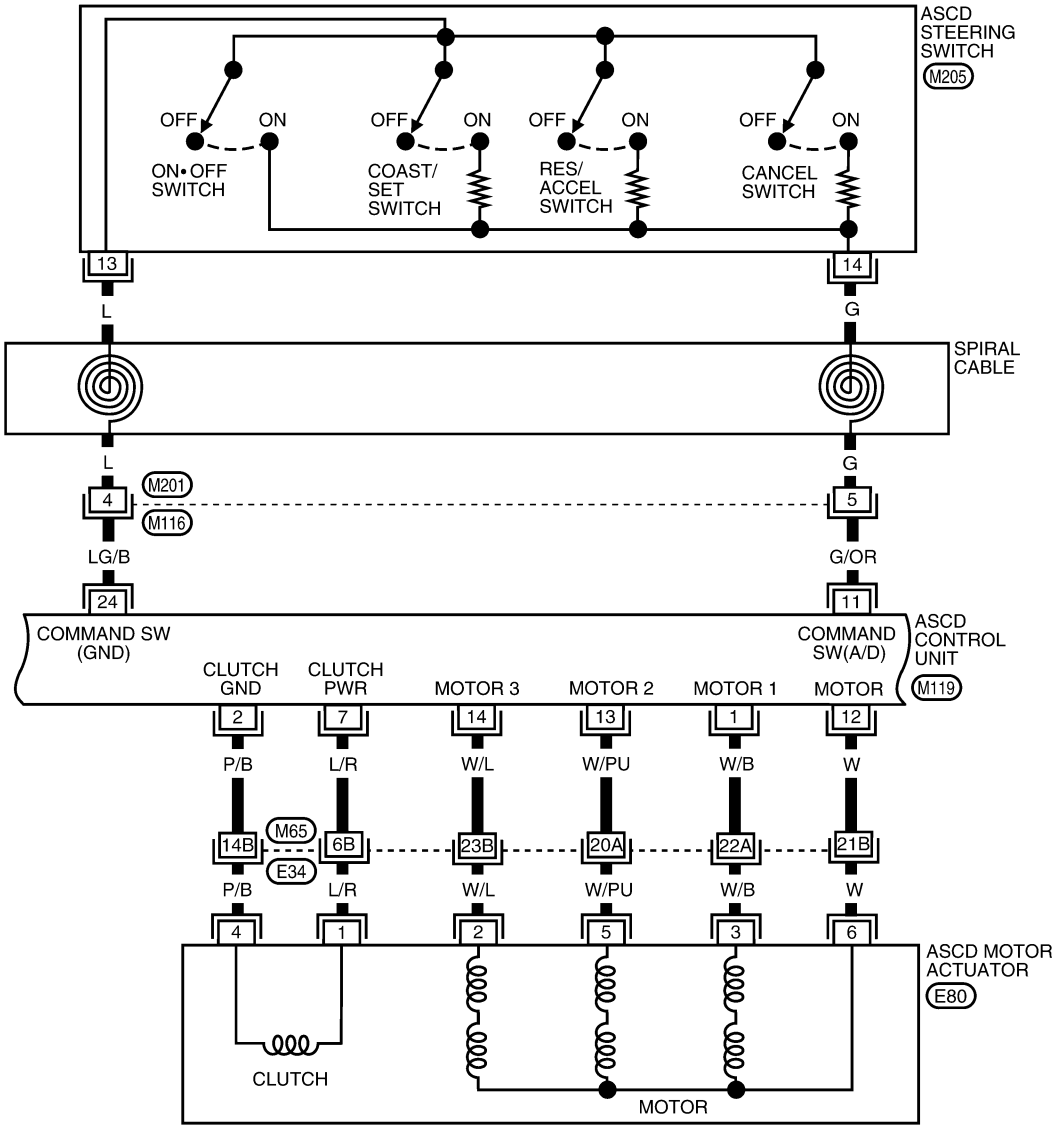

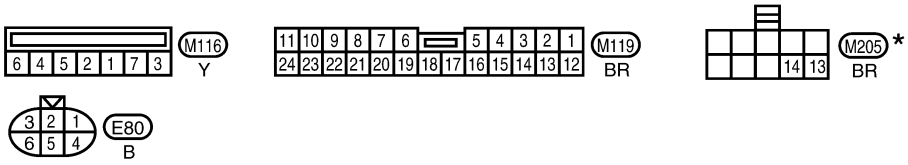

Refer to the following.
M65 , E43 - SUPER MULTIPLE JUNCTION (SMJ)

* : This connector is not shown in "HARNESS LAYOUT" of EL section.

WEL090B

FIG. 3

NEEL0097S03

EL-ASCD-03

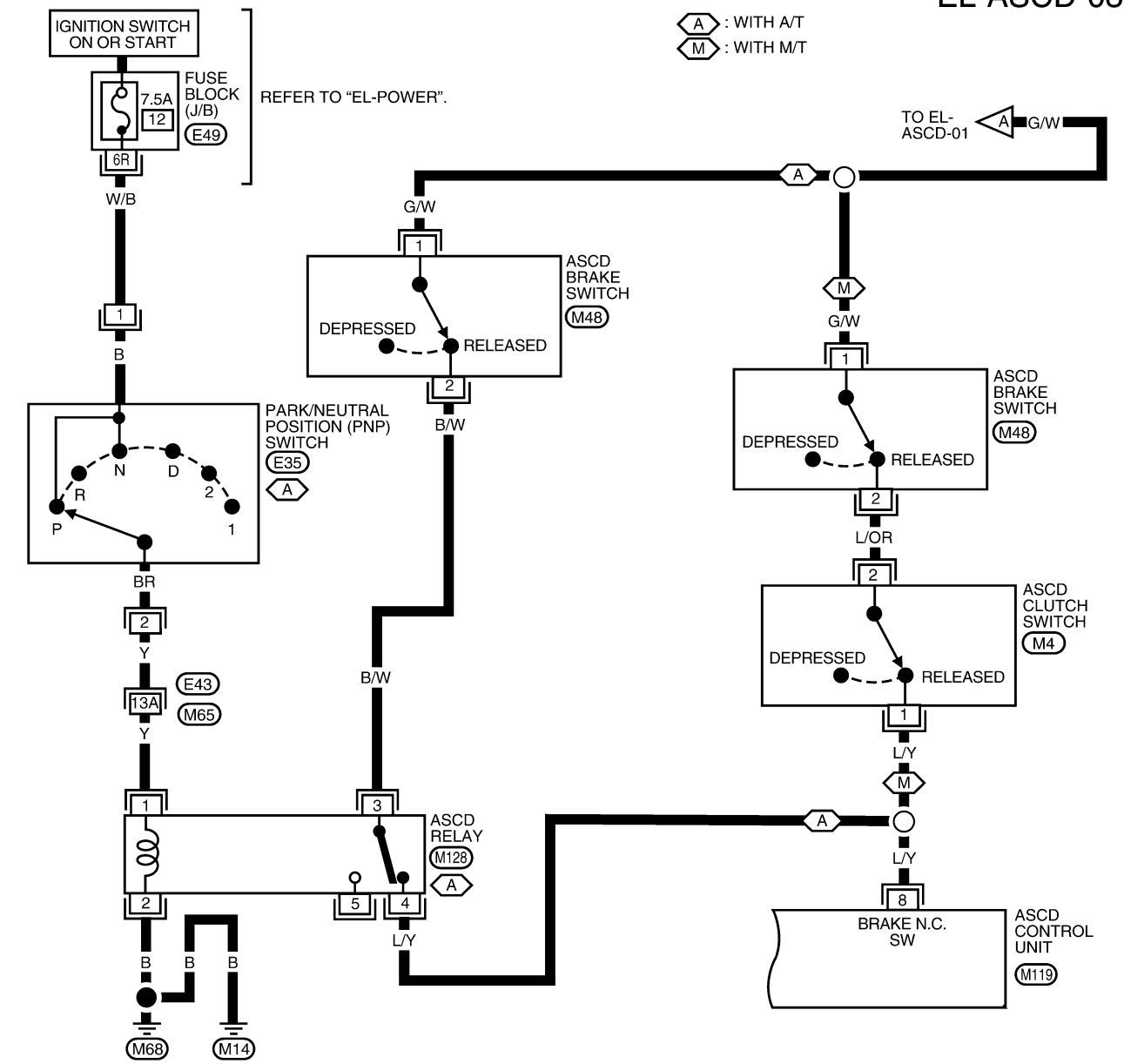

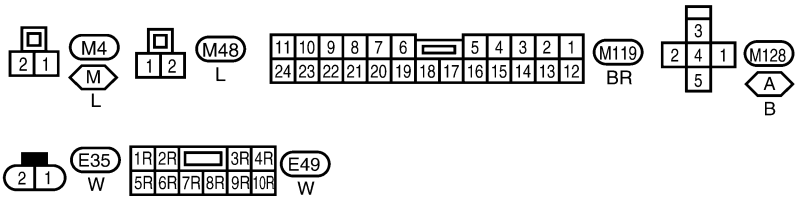

Refer to the following.
M65, E43 - SUPER MULTIPLE JUNCTION (SMJ)

WEL218A

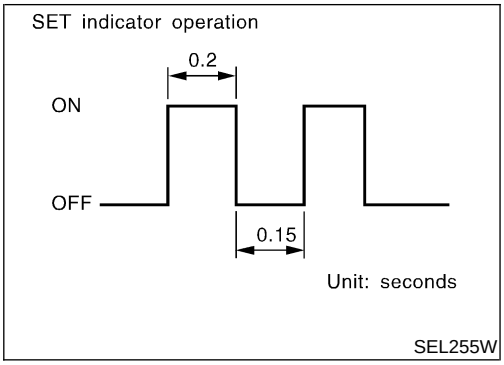

Fail-safe System

NEEL0098

DESCRIPTION

NEEL0098S01

When the fail-safe system senses a malfunction, it deactivates ASCD operation. The SET indicator in the combination meter will then flash.

MALFUNCTION DETECTION CONDITIONS

NEEL0098S02

Detection conditions	ASCD operation during malfunction detection
• ASCD steering (RES/ACCEL, CANCEL, COAST/SET) switch is stuck. • ASCD motor actuator ground circuit or power circuit is open or shorted. • ASCD motor actuator has internal malfunction. • Vehicle speed sensor is faulty. • ASCD control unit internal circuit is malfunctioning.	• ASCD is deactivated. • Vehicle speed memory is canceled.
• ASCD brake switch or stop lamp switch is faulty.	• ASCD is deactivated. • Vehicle speed memory is not canceled.

Trouble Diagnoses

SYMPTOM CHART

=NEEL0222

NEEL0222S01

PROCEDURE	Diagnostic procedure						
REFERENCE PAGE (EL-)	156	157	158	159	160	160	162
SYMPTOM	FAIL-SAFE SYSTEM CHECK	POWER SUPPLY AND GROUND CIRCUIT CHECK	ASCD BRAKE/STOP LAMP SWITCH CHECK	ASCD STEERING SWITCH CHECK	VEHICLE SPEED SENSOR CHECK	ASCD MOTOR ACTUATOR CIRCUIT CHECK	ASCD MOTOR ACTUATOR CHECK
ASCD cannot be set. (“CRUISE” indicator lamp does not turn ON.)		X		X★3			
ASCD cannot be set. (“SET” indicator lamp does not turn ON.)			X	X	X		
ASCD cannot be set. (“SET” indicator lamp blinks.★1)	X		X	X	X	X	
Vehicle speed does not decrease after COAST/SET switch has been pressed.				X			X
Vehicle speed does not return to the set speed after RES/ACCEL switch has been pressed.★2				X			X
Vehicle speed does not increase after RES/ACCEL switch has been pressed.				X			X
System is not released after CANCEL switch (steering) has been pressed.				X			X
Large difference between set speed and actual vehicle speed.					X	X	X
Deceleration is greatest immediately after ASCD has been set.					X	X	X

X: Applicable

★1: It indicates that system is in fail-safe. After completing diagnostic procedures, perform “FAIL-SAFE SYSTEM CHECK”, (EL-156) to verify repairs.

★2: If vehicle speed is greater than 40 km/h (25 MPH) after system has been released, pressing RES/ACCEL switch returns vehicle speed to the set speed previously achieved. However, doing so when the ON●OFF main switch is turned to “OFF”, vehicle speed will not return to the set speed since the memory is canceled.

★3: Check only ON●OFF switch built-in steering switch.

FAIL-SAFE SYSTEM CHECK

=NEEL0222S02

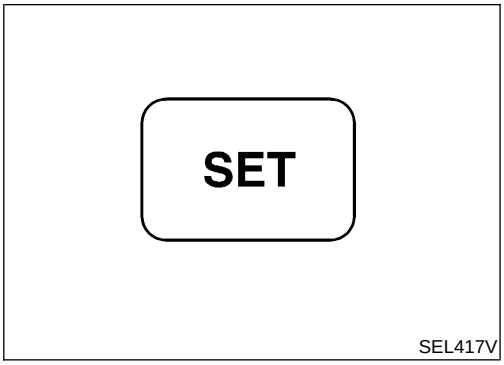

SEL417V

1. Turn ignition switch to ON position.
2. Turn CRUISE ON●OFF switch to ON and check if the "SET" indicator blinks.
   If the indicator lamp blinks, check the following.
   - ASCD steering switch. Refer to "ASCD STEERING SWITCH CHECK", EL-159.

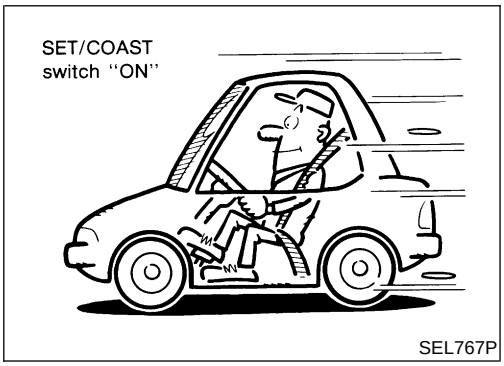

SEL767P

3. Drive the vehicle at more than 40 km/h (25 MPH) and push SET/COAST switch.
   If the indicator lamp blinks, check the following.
   - Vehicle speed sensor. Refer to "VEHICLE SPEED SENSOR CHECK", EL-160.
   - ASCD motor actuator circuit. Refer to "ASCD MOTOR ACTUATOR CIRCUIT CHECK", EL-160.
   - Replace control unit.
4. Drive the vehicle at more than 20 km/h (12 MPH).
   If the indicator lamp blinks, check the following.
   - Replace ASCD motor actuator.

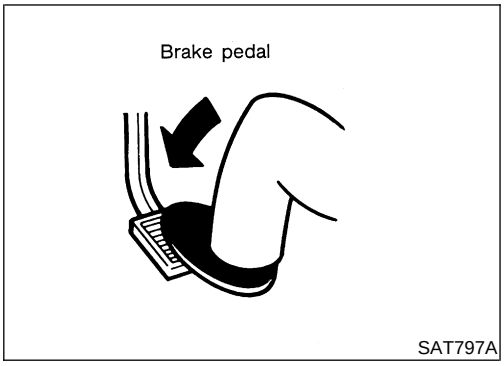

SAT797A

5. Depress brake pedal slowly (brake pedal should be depressed more than 5 seconds).
   If the indicator lamp blinks, check the following.
   - ASCD brake/stop lamp switch. Refer to "ASCD BRAKE/STOP LAMP SWITCH CHECK", EL-158.
6. END. (System is OK.)

POWER SUPPLY AND GROUND CIRCUIT CHECK

=NEEL0222S03

1	CHECK POWER SUPPLY CIRCUIT FOR ASCD CONTROL UNIT

1. Disconnect ASCD control unit harness connector.
2. Turn ignition switch ON.
3. Check voltage between ASCD control unit harness connector M119 terminal 5 (G/W) and ground.

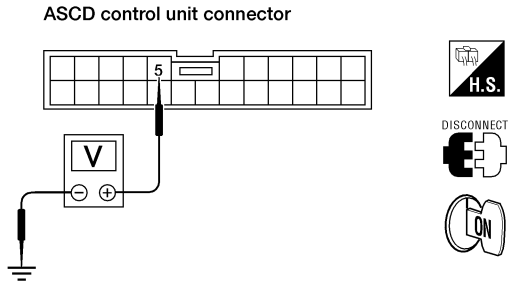

Does battery voltage exist?

WEL018A

Refer to "Wiring Diagram —ASCD—", EL-151.

Yes	▶	GO TO 2.
No	▶	**Check the following.** ● 10A fuse (No. 5 located in the fuse block) ● Harness for open or short

2	CHECK GROUND CIRCUIT FOR ASCD CONTROL UNIT

Check continuity between ASCD control unit harness connector M119 terminal 17 (B) and ground.

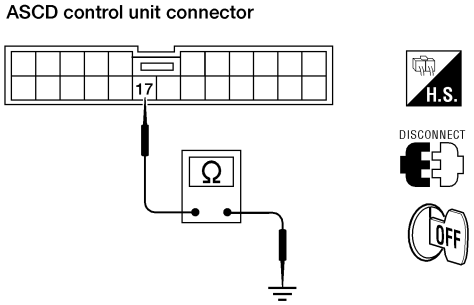

Does continuity exist?

WEL019A

Refer to "Wiring Diagram —ASCD—", EL-151.

Yes	▶	Power supply and ground circuit is OK.
No	▶	Repair harness.

ASCD BRAKE/STOP LAMP SWITCH CHECK

=NEEL0222S04

1 CHECK ASCD BRAKE SWITCH CIRCUIT

1. Turn ignition switch OFF.
2. Disconnect ASCD control unit harness connector.
3. Check continuity between ASCD control unit harness connector M119 terminal 8 (L/Y) and terminal 5 (G/W).

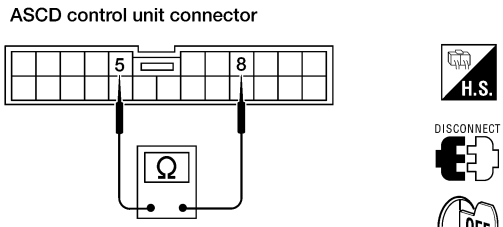

When brake or clutch pedal is depressed (M/T), or when brake pedal is depressed or A/T selector lever is in "N" or "P" range (A/T):
Continuity should not exist.

When brake and clutch pedal are released (M/T), or when both brake pedal is released and A/T selector lever is not in "N" or "P" range (A/T):
Continuity should exist.

WEL020A

OK or NG

OK	▶	GO TO 2.
NG	▶	**Check the following.** ● ASCD brake switch Refer to "ASCD BRAKE SWITCH AND STOP LAMP SWITCH", EL-163. ● Park/neutral position switch (A/T) Refer to "PARK/NEUTRAL POSITION SWITCH (A/T)", EL-163. ● Park/neutral position relay (A/T) Refer to "ASCD RELAY (A/T)", EL-164. ● ASCD clutch switch (M/T) Refer to "ASCD CLUTCH SWITCH (M/T)", EL-163. ● Harness for open or short ● ASCD control unit

2 CHECK STOP LAMP SWITCH CIRCUIT

1. Disconnect ASCD control unit harness connector.
2. Check voltage between ASCD control unit harness connector M119 terminal 23 (BR/R) and ground.

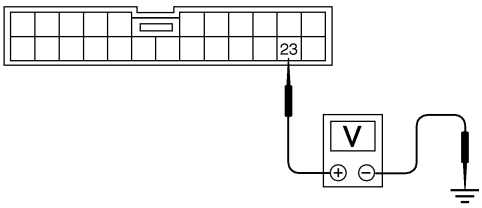

Voltage [V];
Stop lamp switch: Depressed
Approx. 12
Stop lamp switch: Released
0

WEL035A

Refer to "Wiring Diagram —ASCD—", EL-151.

OK or NG

OK	▶	ASCD brake/stop lamp switch is OK.
NG	▶	**Check the following.** ● 15A fuse (2-door models) or 20A fuse (4-door models) [No. 22, located in the fuse block (J/B)] ● Harness for open or short between ASCD control unit and stop lamp switch ● Harness for open or short between fuse and stop lamp switch ● Stop lamp switch Refer to "ASCD BRAKE SWITCH AND STOP LAMP SWITCH", EL-163.

ASCD STEERING SWITCH CHECK

=NEEL0222S05

1	CHECK ASCD STEERING SWITCH CIRCUIT FOR ASCD CONTROL UNIT

Check resistance between ASCD control unit harness connector M119 terminals 11 (G/OR) and 24 (LG/B).

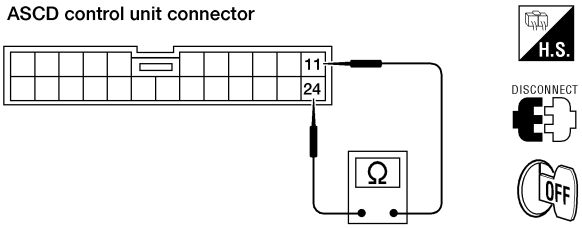

	Terminal No.	Resistance (kΩ)
CRUISE/ON-OFF SW	11 - 24	Approx. 0
SET/COAST SW		1.47 - 1.53
ACCEL/RES SW		3.24 - 3.36
CANCEL SW		5.00 - 5.20

WEL022A

Refer to "Wiring Diagram —ASCD—", EL-152.

OK or NG

OK	▶	ASCD steering switch is OK.
NG	▶	GO TO 2.

2	CHECK CIRCUIT CONTINUITY

1. Disconnect ASCD steering switch and ASCD control unit connector.
2. Check continuity between ASCD steering switch connector M205 terminal 14 (G) and ASCD control unit connector M119, terminal 11 (G/OR).
3. Check continuity between ASCD steering switch connector M205 terminal 13 (L) and ASCD control unit connector M119, terminal 24 (LG/B).

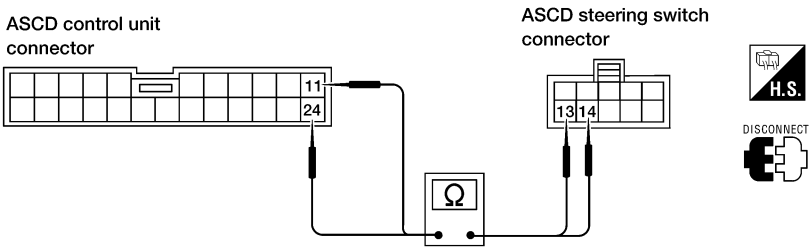

Continuity should exist.

WEL345A

Refer to "Wiring Diagram —ASCD—", EL-152.

OK or NG

OK	▶	Replace ASCD steering switch.
NG	▶	Repair or replace harness or connectors.

VEHICLE SPEED SENSOR CHECK

=NEEL0222S06

1	CHECK SPEEDOMETER OPERATION
Refer to "Wiring Diagram —ASCD—", EL-151.	
Does speedometer operate normally?	
Yes ▶	GO TO 2.
No ▶	Check speedometer and vehicle speed sensor circuit. Refer to "Trouble Diagnoses", EL-76.

2	CHECK VEHICLE SPEED INPUT

1. Apply wheel chocks and jack up drive wheel.
2. Disconnect ASCD control unit harness connector.
3. Check voltage between control unit connector M119 terminal 22 (G/B) and ground while turning drive wheel slowly by hand.

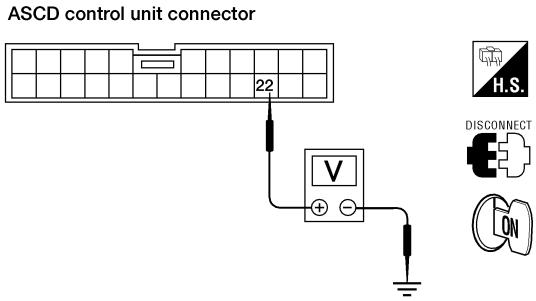

Does voltage pointer deflect?

WEL023A

Yes or No?

Yes ▶	Vehicle speed sensor is OK.
No ▶	Check harness for open or short between ASCD control unit connector M119 terminal 22 (G/B) and combination meter connector M39 terminal 37 (G/B).

ASCD MOTOR ACTUATOR CIRCUIT CHECK

NEEL0222S07

1	CHECK ASCD MOTOR ACTUATOR (CLUTCH)

1. Disconnect ASCD motor actuator connector.
2. Measure resistance between ASCD motor actuator connector E80 terminals 1 and 4.

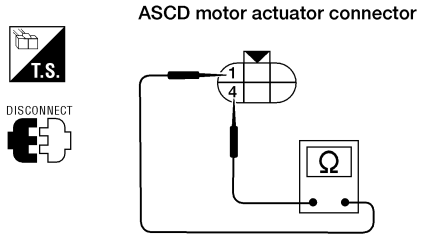

Terminals		Resistance (Ω)
1	4	Approx. 38.5

WEL024A

Refer to "Wiring Diagram —ASCD—", EL-152.

OK or NG

OK ▶	GO TO 2.
NG ▶	Replace ASCD motor actuator.

2	CHECK ASCD MOTOR ACTUATOR (MOTOR)

1. Disconnect ASCD motor actuator connector.
2. Measure resistance between ASCD motor actuator connector E80 terminal 6 and terminals 2, 3, and 5.

ASCD motor actuator connector

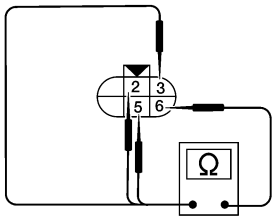

Terminals		Resistance (Ω)
6	2	Approx. 5.2
	3	
	5	

WEL089B

OK or NG

OK	▶	**Check the following.** ● Harness for open or short between ASCD motor actuator and ASCD control unit ● ASCD motor actuator (clutch) ground circuit
NG	▶	Replace ASCD motor actuator.

ASCD MOTOR ACTUATOR CHECK

=NEEL0222S08

1	CHECK ASCD WIRE

Check wire for improper installation, rust formation or breaks.

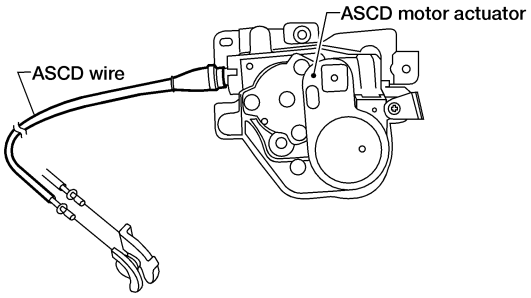

LEL620

OK or NG

OK	▶	Replace ASCD motor actuator.
NG	▶	Repair or replace wire. Refer to "ASCD Wire Adjustment", EL-165.

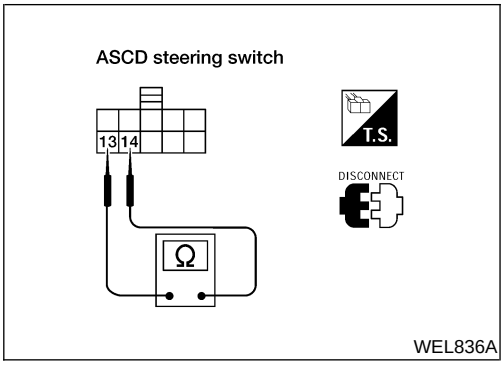

Electrical Component Inspection

=NEEL0223

ASCD STEERING SWITCH

NEEL0223S01

Check continuity between ASCD steering switch connector M205, terminals 14 and 13 by pushing each button.

Button	Terminals	Resistance (kΩ) (Approx.)
ON●OFF	13 - 14	0
COAST/SET		1.47 - 1.53
RES/ACCEL		3.24 - 3.36
CANCEL		5.00 - 5.20

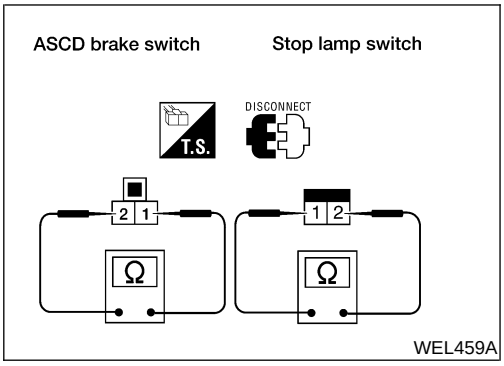

ASCD BRAKE SWITCH AND STOP LAMP SWITCH

NEEL0223S02

Condition	Continuity	
	ASCD brake switch (M48)	Stop lamp switch (M47)
When brake pedal is depressed	No	Yes
When brake pedal is released	Yes	No

Check brake pedal adjustment after checking each switch. Refer to *BR-18*, "Adjustment".

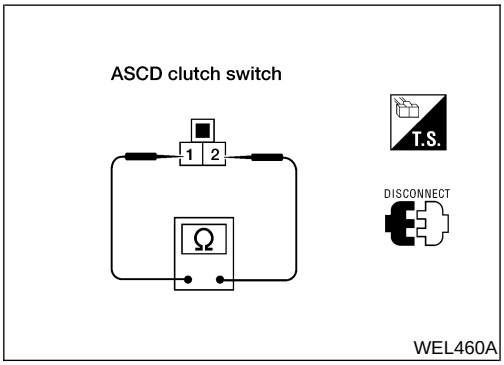

ASCD CLUTCH SWITCH (M/T)

NEEL0223S03

Check continuity between ASCD clutch switch M4 terminals 1 and 2.

Condition	Continuity
When clutch pedal is depressed	No
When clutch pedal is released	Yes

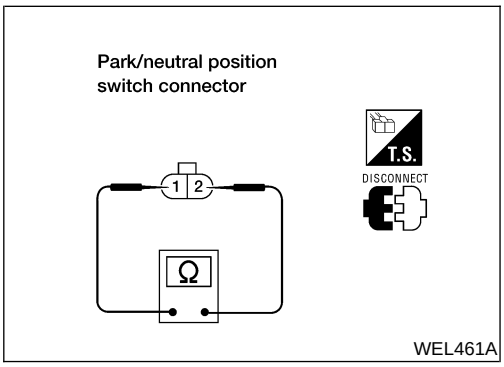

PARK/NEUTRAL POSITION SWITCH (A/T)

NEEL0223S04

Check continuity between PNP switch E35 terminals 1 and 2.

A/T selector lever position	Continuity
	Between terminals 1 and 2
"P"	Yes
"N"	Yes
Except "P" and "N"	No

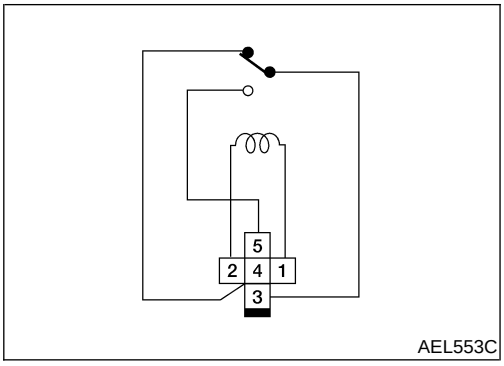

ASCD RELAY (A/T)

NEEL0223S05

Check continuity between ASCD relay harness connector M128 terminals 3 and 4, 3 and 5.

Condition	Continuity
12V direct current supply between terminals 1 and 2	Between terminals 3 and 5
No current supply	Between terminals 3 and 4

ASCD Wire Adjustment

=NEEL0224

WITH KA24DE

NEEL0224S01

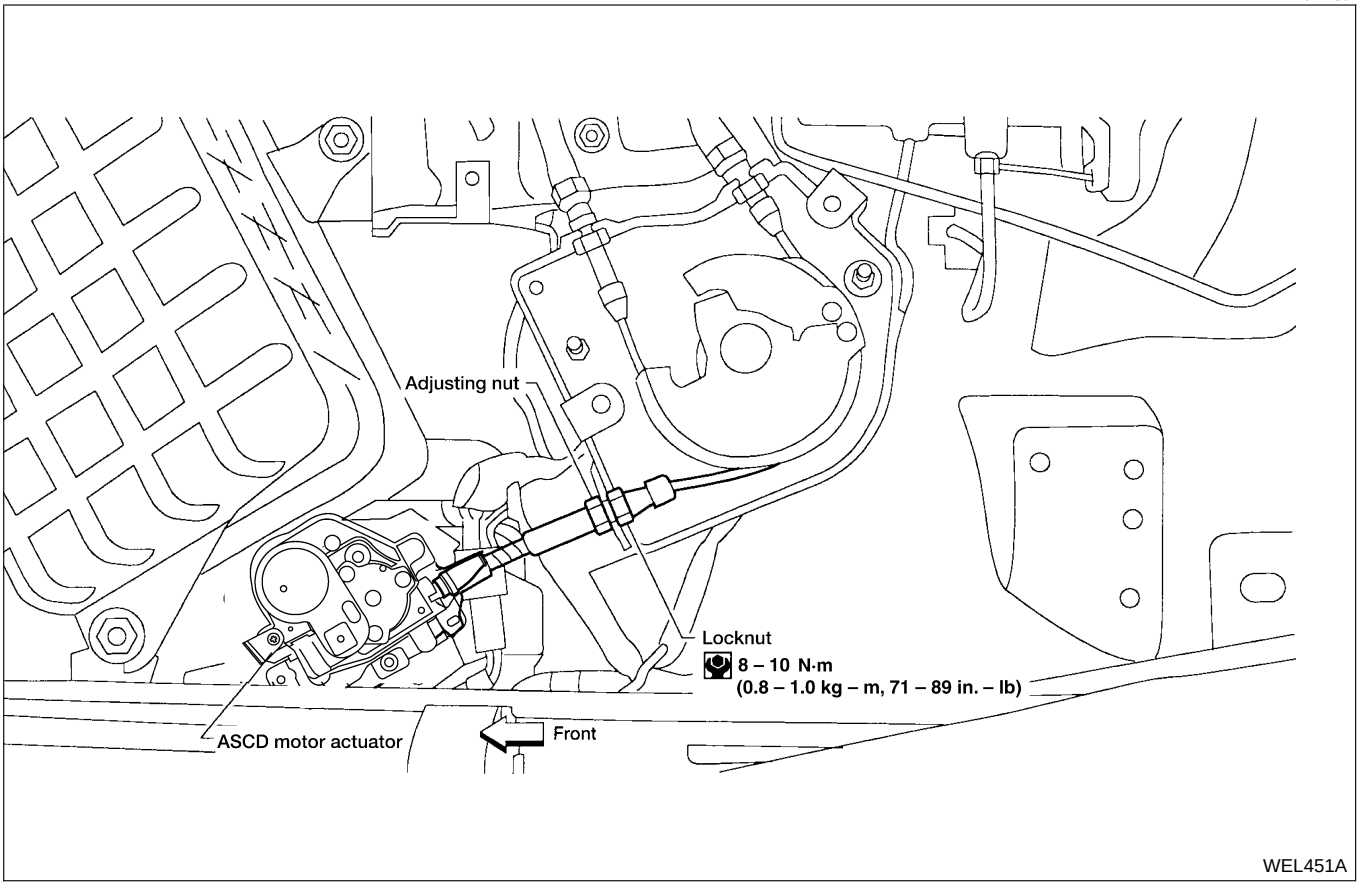

WITH VG33E

NEEL0224S02

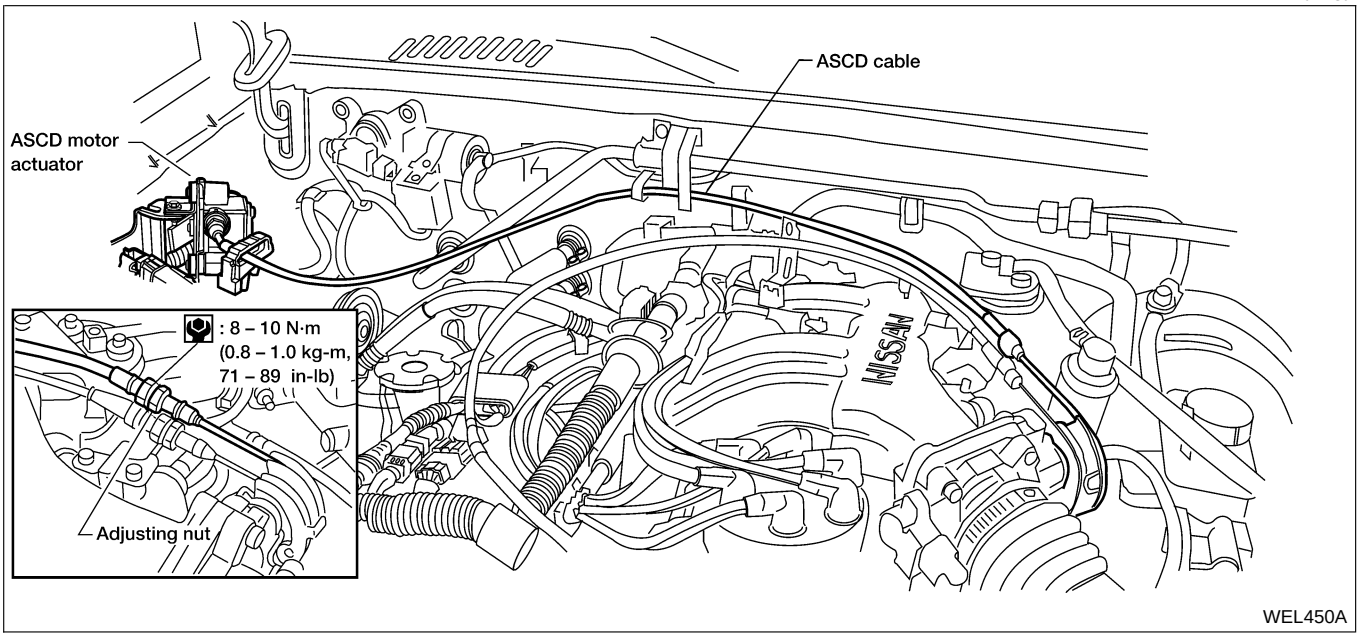

WITH VG33ER

NEEL0224S03

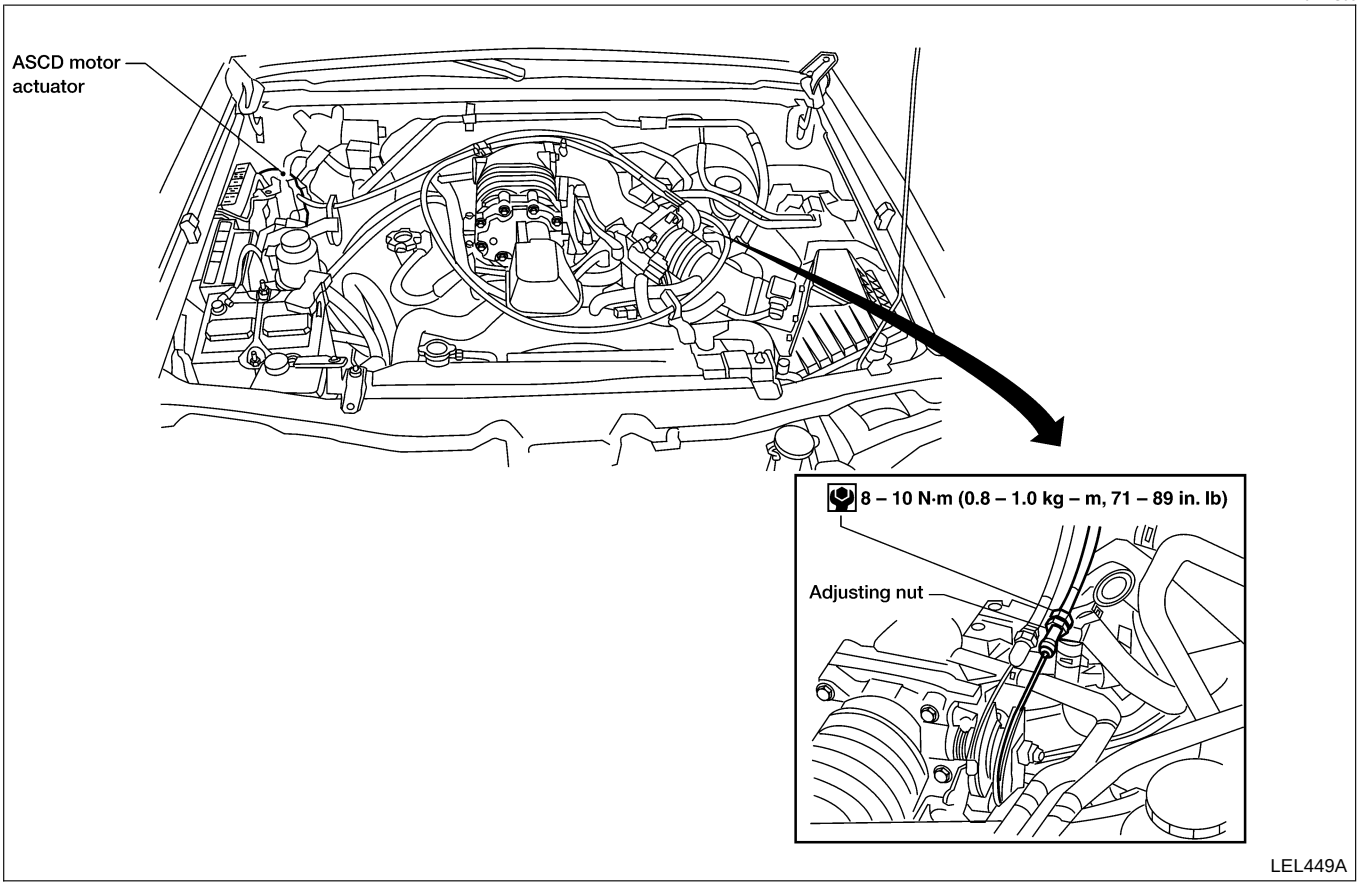

CAUTION:

- **Be careful not to twist ASCD wire when removing it.**
- **Do not tense ASCD wire excessively during adjustment.**

Adjust the tension of ASCD wire in the following manner.

1. Loosen lock nut and adjusting nut.
2. Make sure that accelerator wire is properly adjusted. Refer to ***FE-3***, "Adjusting Accelerator Wire".
3. Tighten adjusting nut just until throttle drum starts to move.
4. Loosen adjusting nut again 1/2 to 1 turn.
5. Tighten lock nut.

System Description

NEEL0102

Power is supplied at all times
- from 30A fusible link (with KA24DE) (letter **f**, located in the fuse and fusible link box) or
- from 40A fusible link (with VG33E and VG33ER) (letter **f**, located in the fuse and fusible link box)
- to circuit breaker terminal +
- through circuit breaker terminal –
- to power window relay terminal 5
- through 7.5A fuse [No. 28, located in the fuse block (J/B)]
- to smart entrance control unit terminal 49.

With the ignition switch in the ON or START position, power is supplied
- through 10A fuse [No. 5, located in the fuse block (J/B)]
- to smart entrance control unit terminal 27
- through smart entrance control unit terminal 46
- to power window relay terminal 2.

Ground is supplied to power window relay terminal 1
- through body grounds M14 and M68.

The power window relay is energized and power is supplied
- through power window relay terminal 3
- to main power window and door lock/unlock switch terminal 2
- to front power window switch RH terminal 4
- to rear power window switch LH terminal 5 (Crew Cab)
- to rear power window switch RH terminal 5 (Crew Cab).

Ground is supplied
- to main power window and door lock/unlock switch terminal 10
- through body grounds M14 and M68.

MANUAL OPERATION

NEEL0102S01

NOTE:
Numbers in parentheses are terminal numbers which apply with switch pressed in the UP and DOWN positions respectively.

Front Door LH

NEEL0102S0101

Power is supplied
- through main power window and door lock/unlock switch terminal (12, 16)
- to front power window motor LH terminal (UP, DN).

Ground is supplied
- to front power window motor LH terminal (DN, UP)
- through main power window and door lock/unlock switch terminal (16, 12).

Then, the motor raises or lowers the window until the switch is released or the window is fully closed or open.

Front Door RH

NEEL0102S0102

MAIN POWER WINDOW AND DOOR LOCK/UNLOCK SWITCH OPERATION
With front RH switch pressed, power is supplied
- through main power window and door lock/unlock switch (14, 13)
- to front power window switch RH (5, 2).

The following description is the same as the front power window switch RH description.
FRONT POWER WINDOW SWITCH RH OPERATION
Power is supplied
- through front power window switch RH (6, 3)
- to front power window motor RH (UP, DN).

Ground is supplied
- to front power window motor RH (DN, UP)
- through front power window switch RH (3, 6)
- to front power window switch RH (2, 5)

- through main power window and door lock/unlock switch (13, 14).

Then, the motor raises or lowers the window until the switch is released or the window is fully closed or open.

Rear Door LH (Crew Cab)

NEEL0102S0103

MAIN POWER WINDOW AND DOOR LOCK/UNLOCK SWITCH OPERATION
With rear LH switch pressed, power is supplied

- through main power window and door lock/unlock switch (1, 6)
- to rear power window switch LH (4, 3).

The following description is the same as the rear power window switch LH description.
REAR POWER WINDOW SWITCH LH OPERATION
Power is supplied

- through rear power window switch LH (1, 2)
- to rear power window motor LH (UP, DN).

Ground is supplied

- to rear power window motor LH (DN, UP)
- through rear power window switch LH (2, 1)
- to rear power window switch LH (3, 4)
- through main power window and door lock/unlock switch (6, 1).

Then, the motor raises or lowers the window until the switch is released or the window is fully closed or open.

Rear Door RH (Crew Cab)

NEEL0102S0104

MAIN POWER WINDOW AND DOOR LOCK/UNLOCK SWITCH OPERATION
With rear RH switch pressed, power is supplied

- through main power window and door lock/unlock switch (7, 9)
- to rear power window switch RH (4, 3).

The following description is the same as the rear power window switch RH description.
REAR POWER WINDOW SWITCH RH OPERATION
Power is supplied

- through rear power window switch RH (1, 2)
- to rear power window motor RH (UP, DN).

Ground is supplied

- to rear power window motor RH (DN, UP)
- through rear power window switch RH (2, 1)
- to rear power window switch RH (3, 4)
- through main power window and door lock/unlock switch (9, 7).

Then, the motor raises or lowers the window until the switch is released or the window is fully closed or open.

AUTO OPERATION

NEEL0102S02

The power window AUTO feature enables the driver to lower the driver window without holding the switch in the DOWN position.
The AUTO feature is activated by pressing the switch beyond the DOWN position to the AUTO position.
The AUTO feature only operates on the downward movement of the driver window.
The window can be stopped before it is fully open by pressing the window switch to the UP position.

POWER WINDOW LOCK

NEEL0102S03

The power window lock prevents operation of all windows except the driver window.
When the lock switch is pressed to lock position, ground of the front power window switch RH and the rear power window switch LH and RH (Crew Cab) is disconnected in the main power window and door lock/unlock switch. This prevents the front power window motor RH and the rear power window motor LH and RH (Crew Cab) from operating.

RETAINED POWER OPERATION (WITH POWER DOOR LOCKS)

NEEL0102S04

When the ignition switch is turned to OFF position from ON or START position, power is supplied for 45 seconds

- to power window relay terminal 2
- from smart entrance control unit terminal 46.

Ground is supplied

- to power window relay terminal 1
- through body grounds M14 and M68.

When power and ground are supplied, the power window relay continues to be energized, and the power window can be operated.
The retained power operation is cancelled when the driver or passenger side door is opened.

Circuit Diagram

NEEL0201

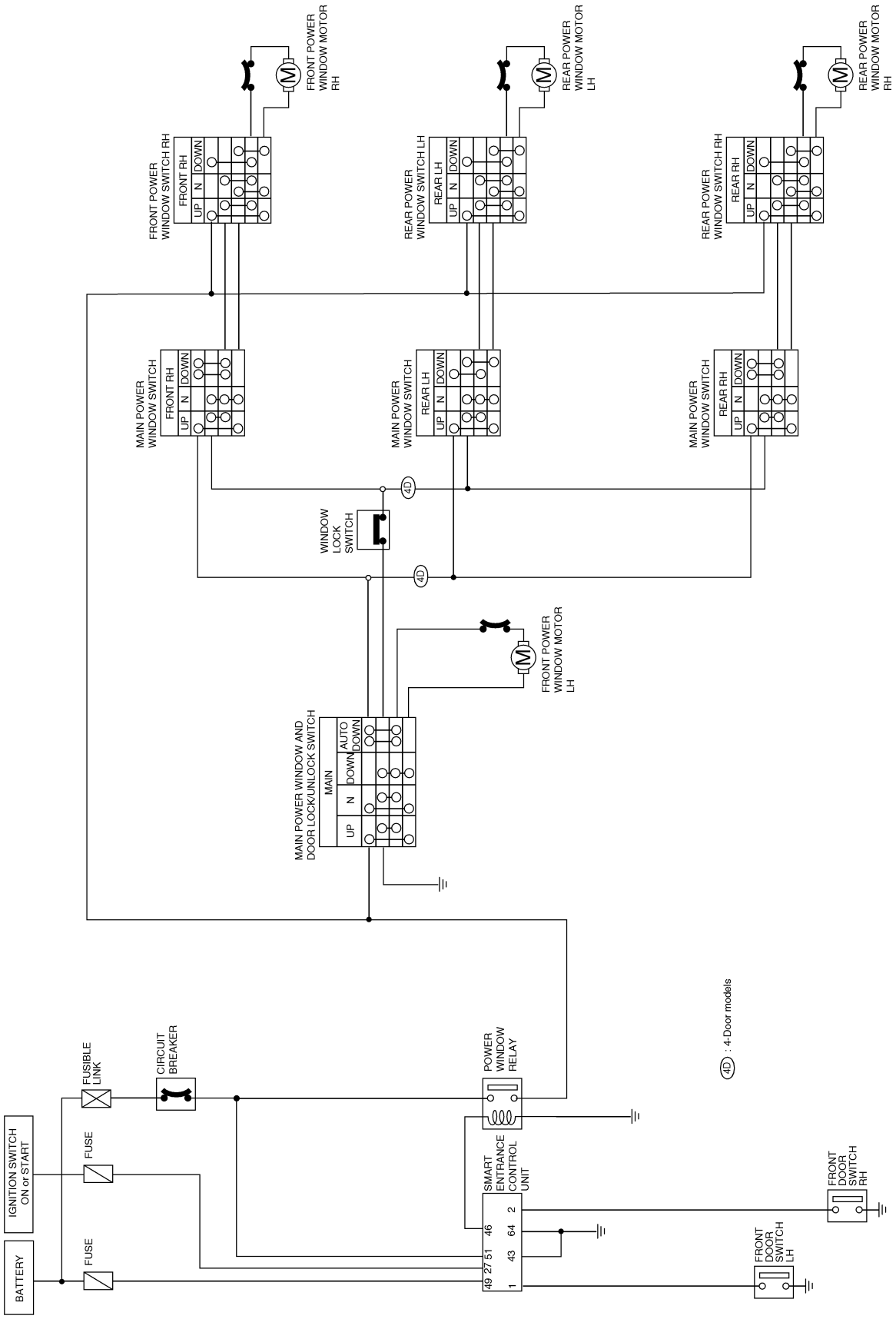

WEL501A

Wiring Diagram — WINDOW —

NEEL0104

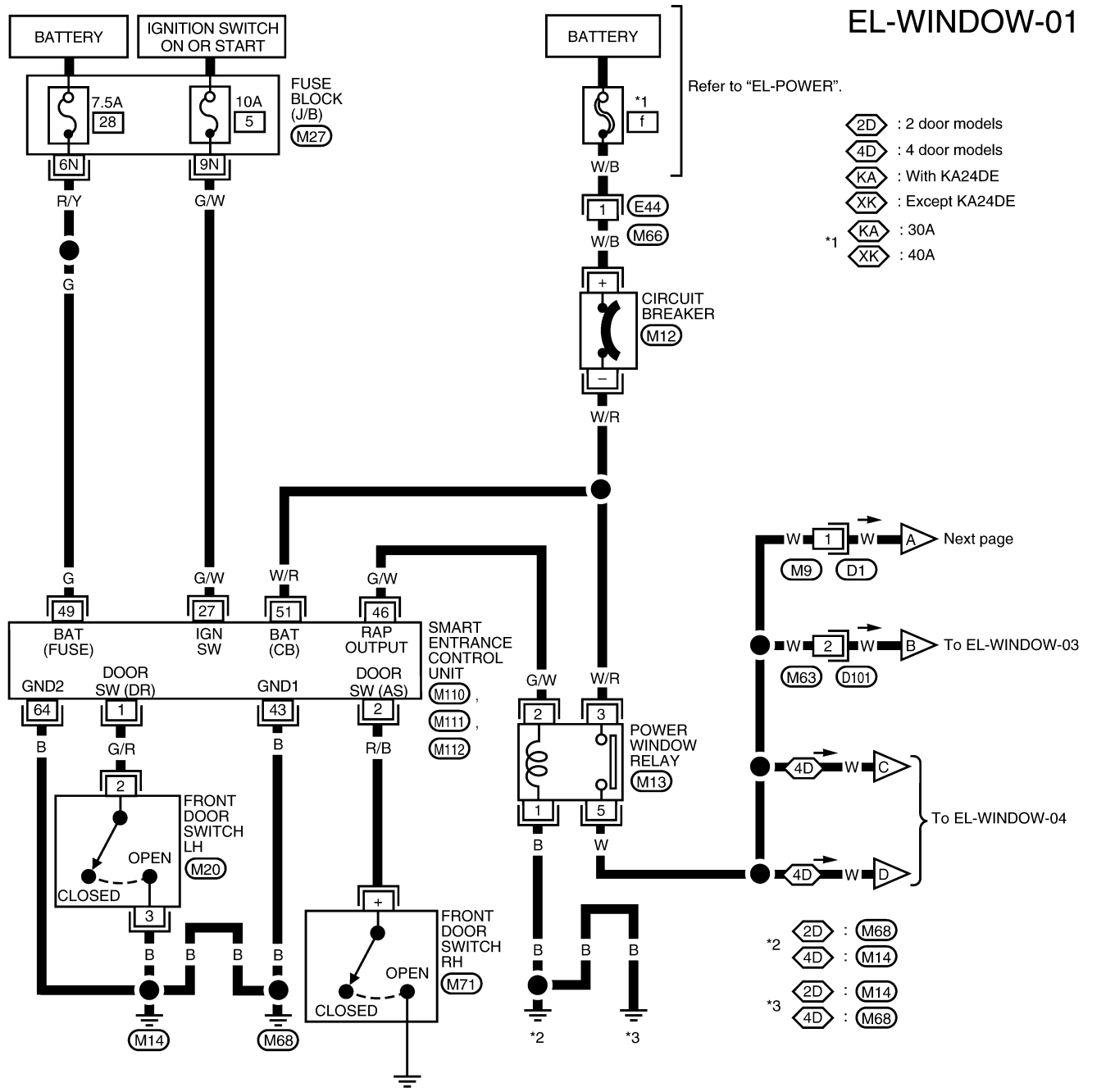

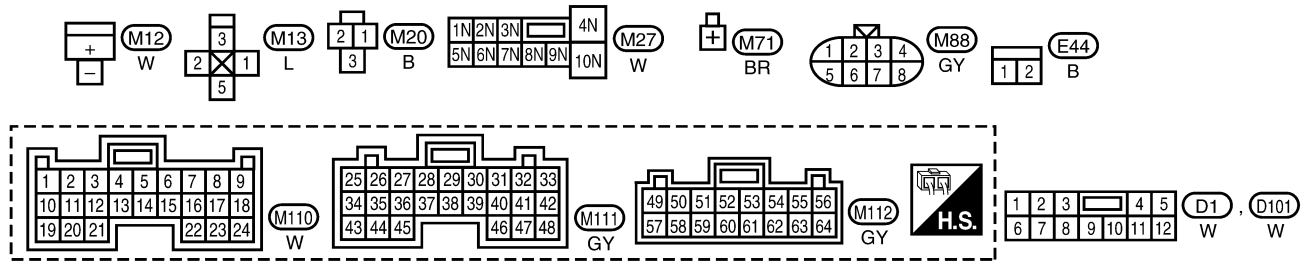

WEL485A

EL-WINDOW-02

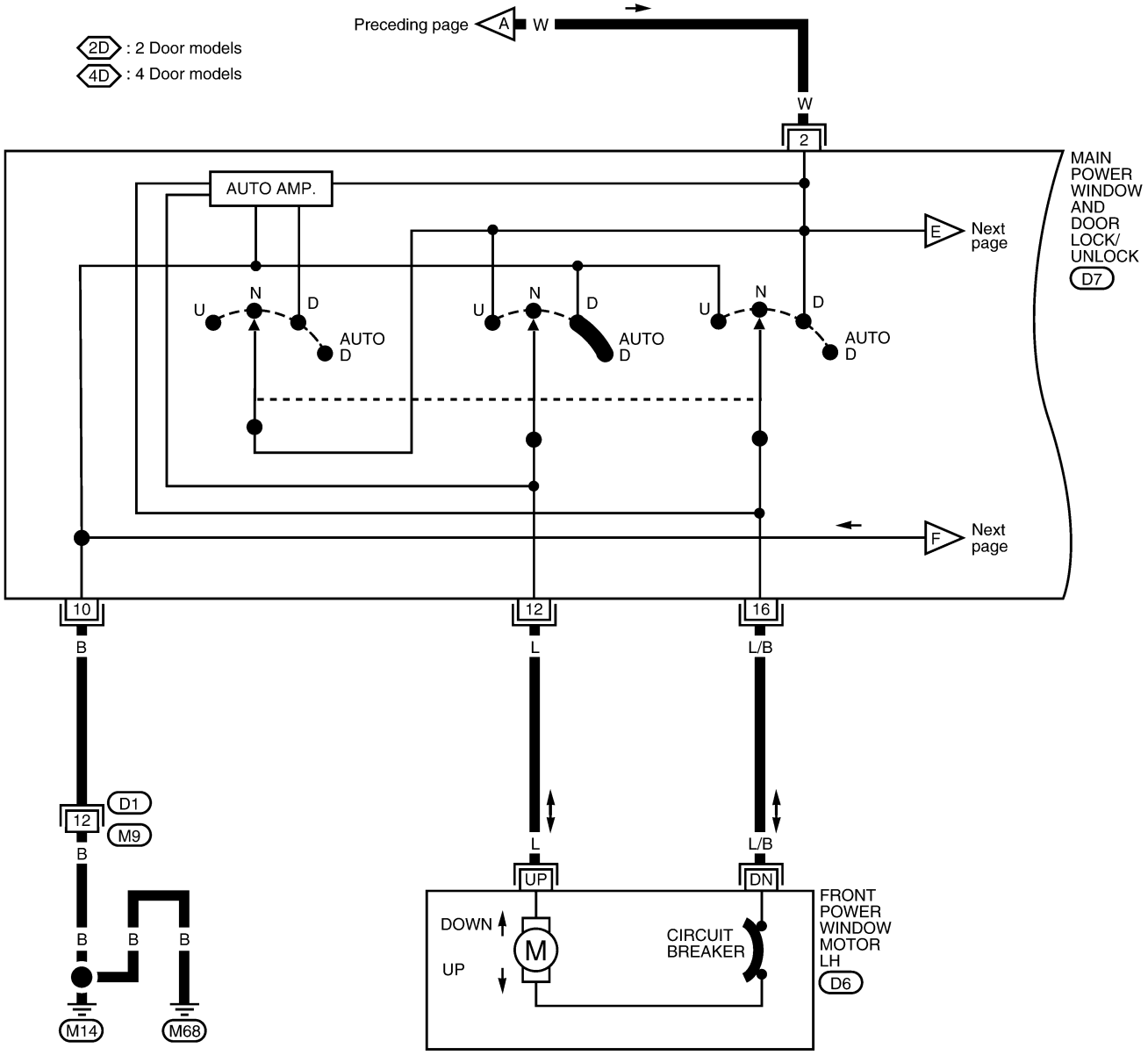

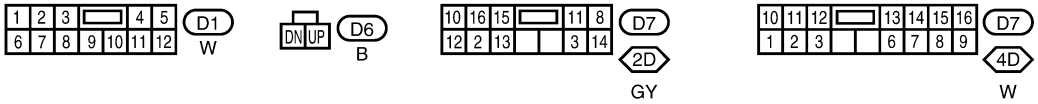

LEL770

EL-WINDOW-03

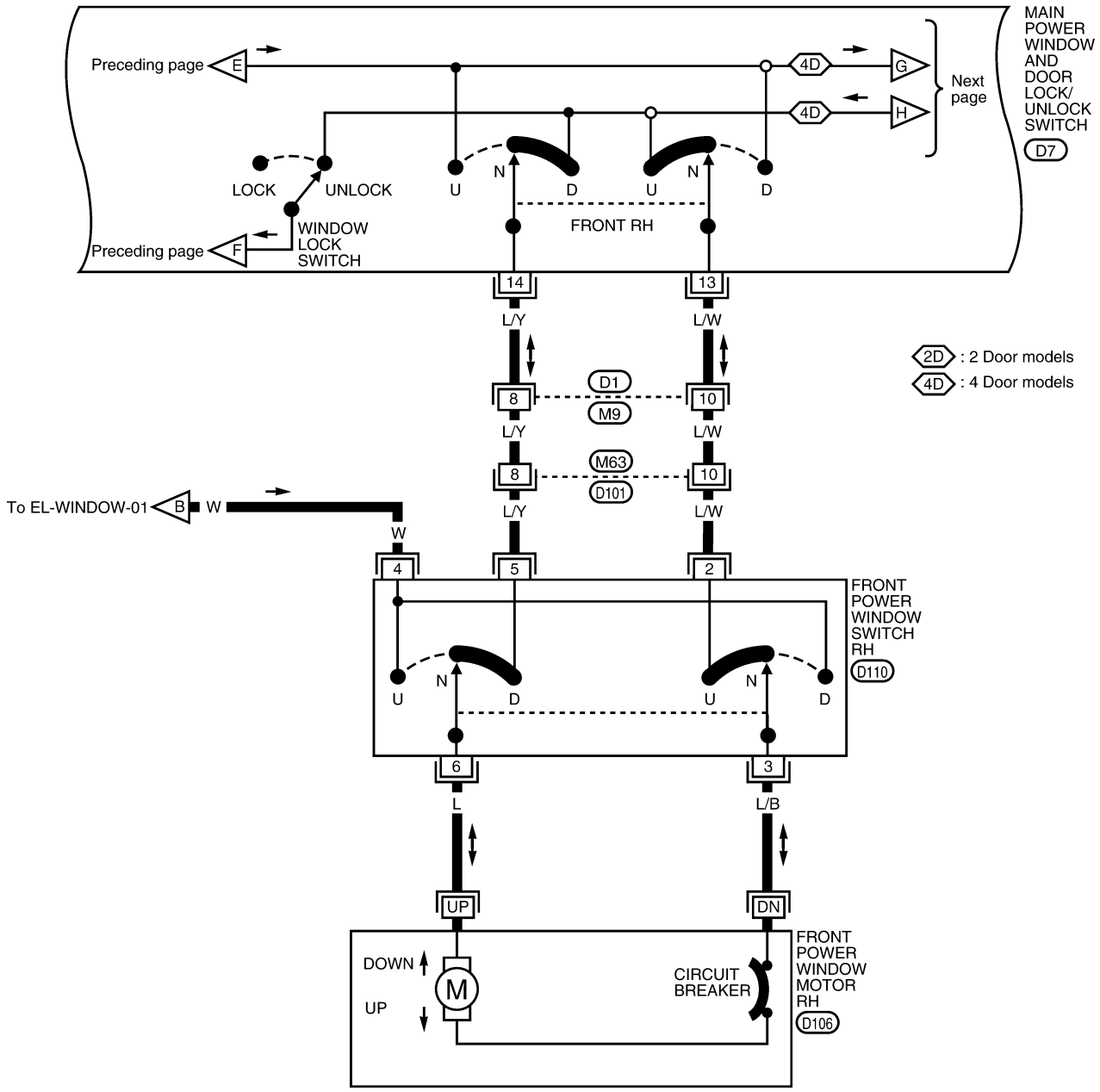

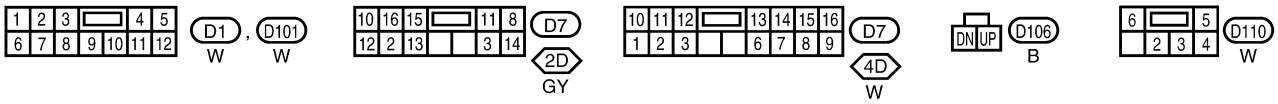

LEL771

EL-WINDOW-04

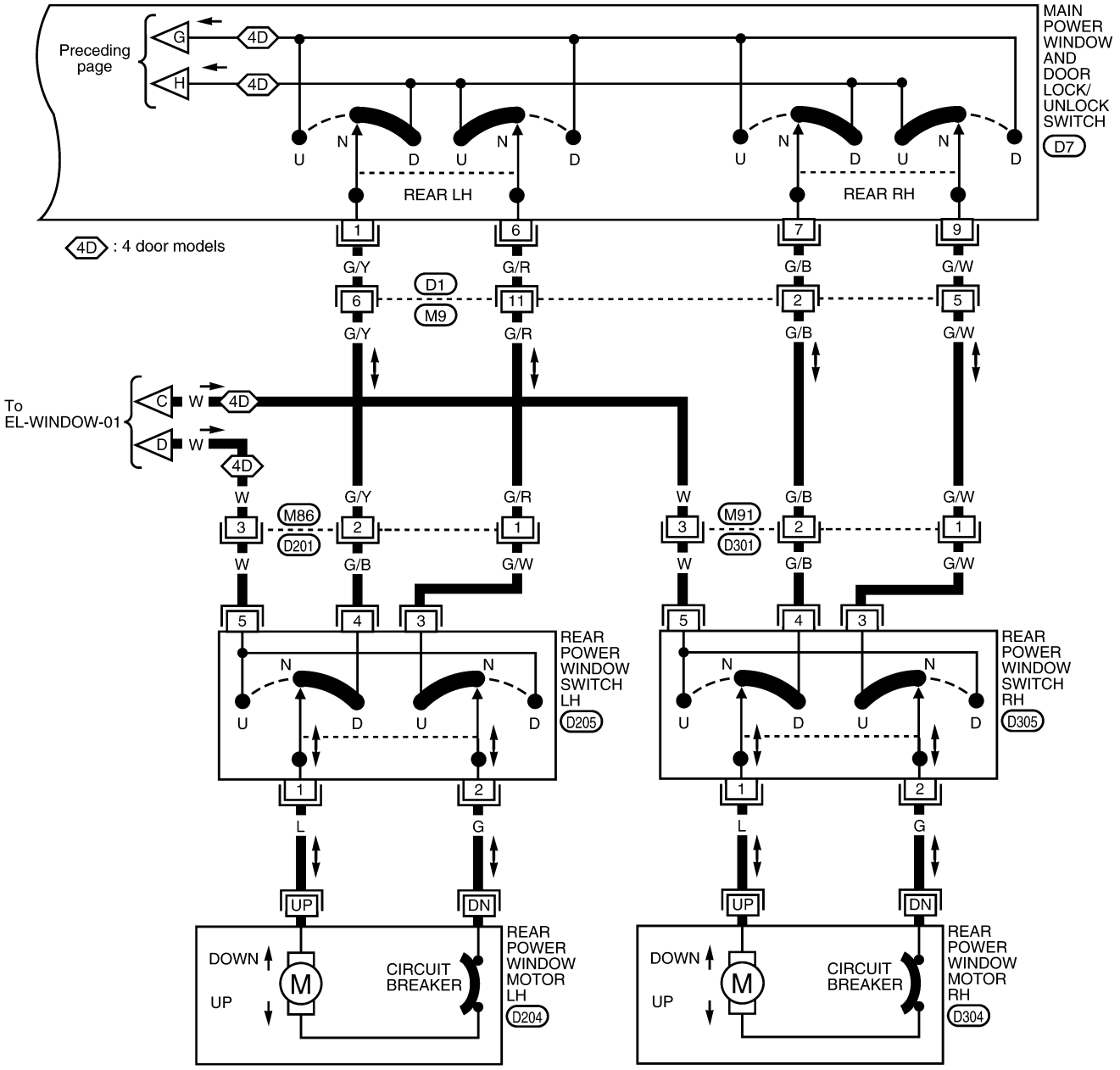

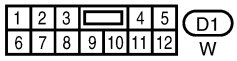

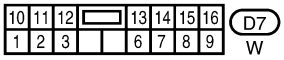

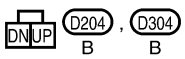

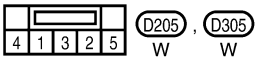

LEL772

Trouble Diagnoses

NEEL0105

Symptom	Possible cause	Repair order
None of the power windows can be operated using any switch.	1. 10A fuse, 30A fusible link (with KA24DE), or 40A fusible link (with VG33E and VG33ER) and M12 circuit breaker 2. Power window relay ground circuit 3. Power window relay 4. Open/short in main power window and door lock/unlock switch circuit 5. Open/short in power window relay control circuit 6. Smart entrance control unit	1. Check 10A fuse (No. 5, located in fuse block [J/B]), 30A fusible link (with KA24DE) (letter **f**, located in fuse and fusible link box), 40A fusible link (with VG33E and VG33ER) (letter **f**, located in fuse and fusible link box) and M12 circuit breaker. Turn ignition switch ON and verify battery positive voltage is present at smart entrance control unit terminal 27, main power window and door lock/unlock switch terminal 2, front power window switch RH terminal 4 and rear power window switch LH and RH terminal 5 (crew cab). 2. Check power window relay ground circuit. 3. Check power window relay. 4. Check circuit between power window relay and main power window and door lock/unlock switch for open/short circuit. 5. Check circuit between smart entrance control unit and power window relay for open/short circuit. 6. Check smart entrance control unit.
Front power window LH cannot be operated but other windows can be operated.	1. Front power window motor LH circuit 2. Front power window motor LH 3. Main power window and door lock/unlock switch	1. Check harness between main power window and door lock/unlock switch and front power window motor LH for open or short circuit. 2. Check front power window motor LH. 3. Check main power window and door lock/unlock switch.
Passenger power window cannot be operated.	1. Passenger power window switch 2. Passenger power window motor 3. Main power window and door lock/unlock switch 4. Power window circuit	1. Check passenger power window switch. 2. Check passenger power window motor. 3. Check main power window and door lock/unlock switch. 4. Check the following. a. Check harnesses between main power window and door lock/unlock switch and passenger power window switch for open/short circuit. b. Check harnesses between passenger power window switch and passenger power window motor for open/short circuit.
Passenger power window cannot be operated using main power window and door lock/unlock switch but can be operated by passenger power window switch.	1. Main power window and door lock/unlock switch	1. Check main power window and door lock/unlock switch.
Driver window AUTO function cannot be operated using main power window and door lock/unlock switch.	1. Main power window and door lock/unlock switch	1. Check main power window and door lock/unlock switch.
Retained power operation does not operate.	1. Retained power signal circuit 2. Driver or passenger side door switch circuit 3. Smart entrance control unit	1. Check harness between power window relay terminal 2 and smart entrance control unit terminal 46 for open circuit. 2. Check the following a. Harness between smart entrance control unit and driver or passenger side door switch for short circuit b. Driver or passenger side door switch ground circuit c. Driver or passenger side door switch 3. Check smart entrance control unit. Refer to “SMART ENTRANCE CONTROL UNIT”, EL-230.

Component Parts and Harness Connector Location

NEEL0106

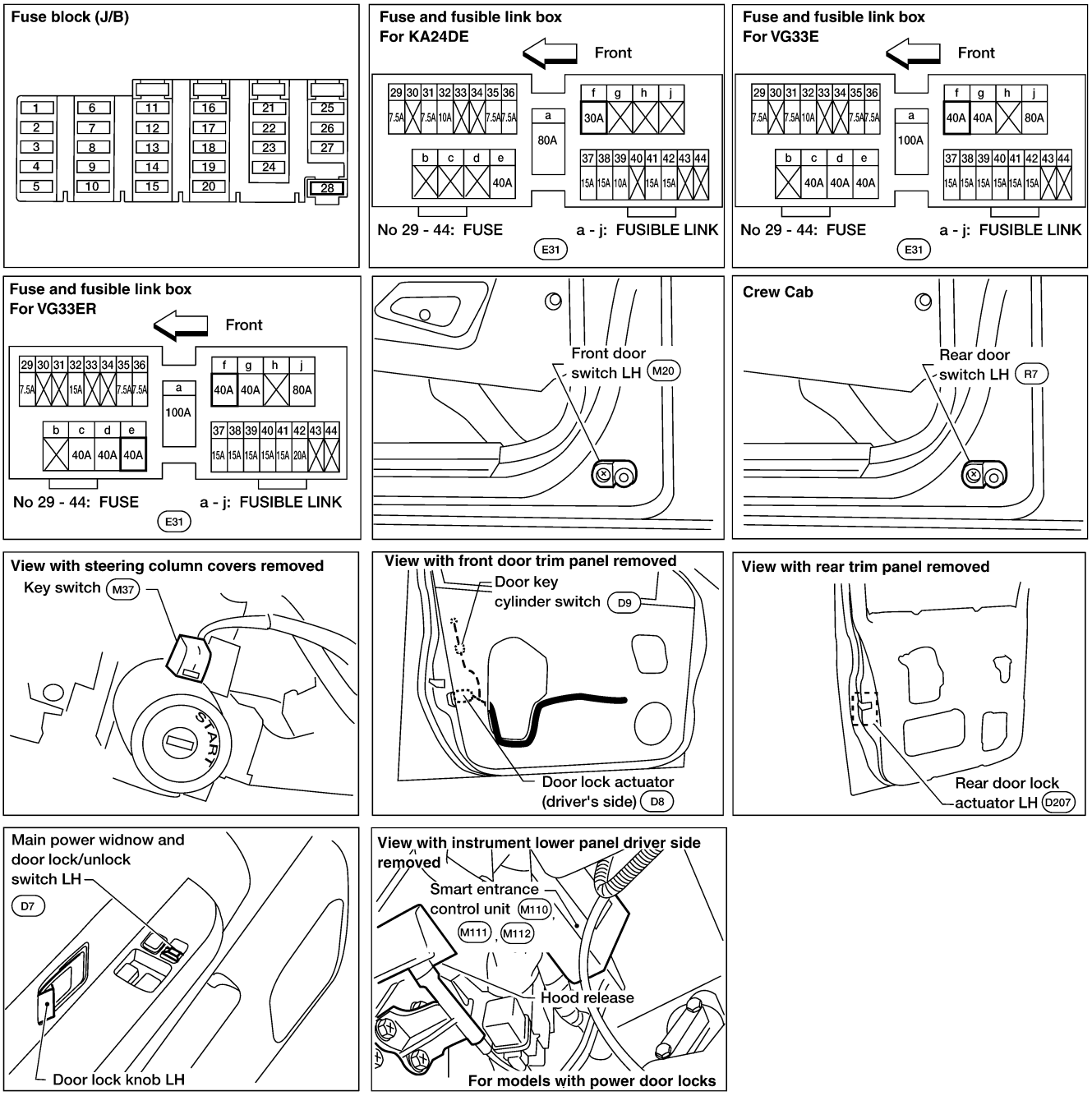

WEL466A

System Description

NEEL0107

Power is supplied at all times
- through 30A fusible link [letter **f**, located in the fuse and fusible link box (with KA24DE)] or
- through 40A fusible link [letter **f**, located in the fuse and fusible link box (with VG33E and VG33ER)]
- to circuit breaker terminal +
- through circuit breaker terminal –
- to smart entrance control unit terminal 51.

Power is supplied at all times
- through 7.5A fuse [No. 28, located in the fuse block (J/B)]
- to smart entrance control unit termnal 49 and
- to key switch terminal 1.

Ground is supplied
- to smart entrance control unit terminals 43 and 64
- through body grounds M14 and M68.

INPUT

NEEL0107S01

With the key in the ignition key cylinder, power is supplied
- through key switch terminal 2
- to smart entrance control unit terminal 25.

With front door LH open, ground is supplied
- to smart entrance control unit terminal 1
- through front door switch LH terminal 2
- through front door switch LH terminal 3
- through body grounds M14 and M68.

With front door RH open, ground is supplied
- to smart entrance control unit terminal 2
- through front door switch RH terminal +.

With rear door LH and RH (Crew Cab) open, ground is supplied
- to smart entrance control unit terminal 3
- through rear door switch LH and RH terminals +.

With the key inserted in the front door key cylinder switch LH and turned to LOCK, ground is supplied
- to smart entrance control unit terminal 11
- through front door key cylinder switch LH terminal 1
- through front door key cylinder switch LH terminal 2
- through body grounds M14 and M68.

With the key inserted in the front door key cylinder switch LH and turned to UNLOCK, ground is supplied
- to smart entrance control unit terminal 10
- through front door key cylinder switch LH terminal 3
- through front door key cylinder switch LH terminal 2
- through body grounds M14 and M68.

With the main power window and door lock/unlock switch pressed to LOCK, ground is supplied
- to smart entrance control unit terminal 5
- through main power window and door lock/unlock switch terminal 15
- through main power window and door lock/unlock switch terminal 10
- through body grounds M14 and M68.

With the door lock/unlock switch RH pressed to LOCK, ground is supplied
- to smart entrance control unit terminal 5
- through door lock/unlock switch RH terminal 6
- through door lock/unlock switch RH terminal 4
- through body grounds M14 and M68.

With the main power window and door lock/unlock switch pressed to UNLOCK, ground is supplied
- to smart entrance control unit terminal 4

- through main power window and door lock/unlock switch terminal 11
- through main power window and door lock/unlock switch terminal 10
- through body grounds M14 and M68.

With the door lock/unlock switch RH pressed to UNLOCK, ground is supplied

- to smart entrance control unit terminal 4
- through door lock/unlock switch RH terminal 3
- through door lock/unlock switch RH terminal 4
- through body grounds M14 and M68.

OUTPUT

NEEL0107S02

Unlock

NEEL0107S0201

Ground is supplied

- to front door lock actuator LH and RH and rear door lock actuator LH and RH (Crew Cab) terminal 3
- through smart entrance control unit terminal 54.

FRONT DOOR LH
Power is supplied

- to front door lock actuator LH terminal 1
- through smart entrance control unit terminal 55.

FRONT DOOR RH
Power is supplied

- to front door lock actuator RH terminal 1
- through smart entrance control unit terminal 56.

REAR DOOR LH AND RH (CREW CAB)
Power is supplied

- to rear door lock actuator LH and RH terminal 1
- through smart entrance control unit terminal 56.

Then, the doors are unlocked.

Lock

NEEL0107S0202

Ground is supplied

- to front door lock actuator LH terminal 1
- through smart entrance control unit terminal 55 and
- to front door lock actuator RH and rear door lock actuator LH and RH (Crew Cab) terminal 1
- through smart entrance control unit terminal 56.

Power is supplied

- to front door lock actuator LH and RH and rear door lock actuator LH and RH (Crew Cab) terminal 3
- through smart entrance control unit terminal 54.

Then, the doors are locked.

OPERATION

NEEL0107S03

- The main power window and door lock/unlock switch on front door LH trim and door lock/unlock switch RH on front door RH trim can lock and unlock all doors.
- With the key inserted in the front door key cylinder LH or RH, turning it to LOCK locks all doors; turning it to UNLOCK once unlocks the corresponding door; turning it to UNLOCK again within 5 seconds of the first unlock operation unlocks all other doors (signal from door key cylinder switch).

Key Reminder

NEEL0107S0301

When performing a door locking operation using either the main power window and door lock/unlock switch, the door lock/unlock switch RH, the front door LH lock knob or a multi-remote controller, all the doors will lock and then will immediately unlock if the

- key switch is in INSERTED position (key is in ignition key cylinder) and
- ignition switch is in the OFF position and
- either front door switch LH or RH is in OPEN position (door is open).

Circuit Diagram

NEEL0108

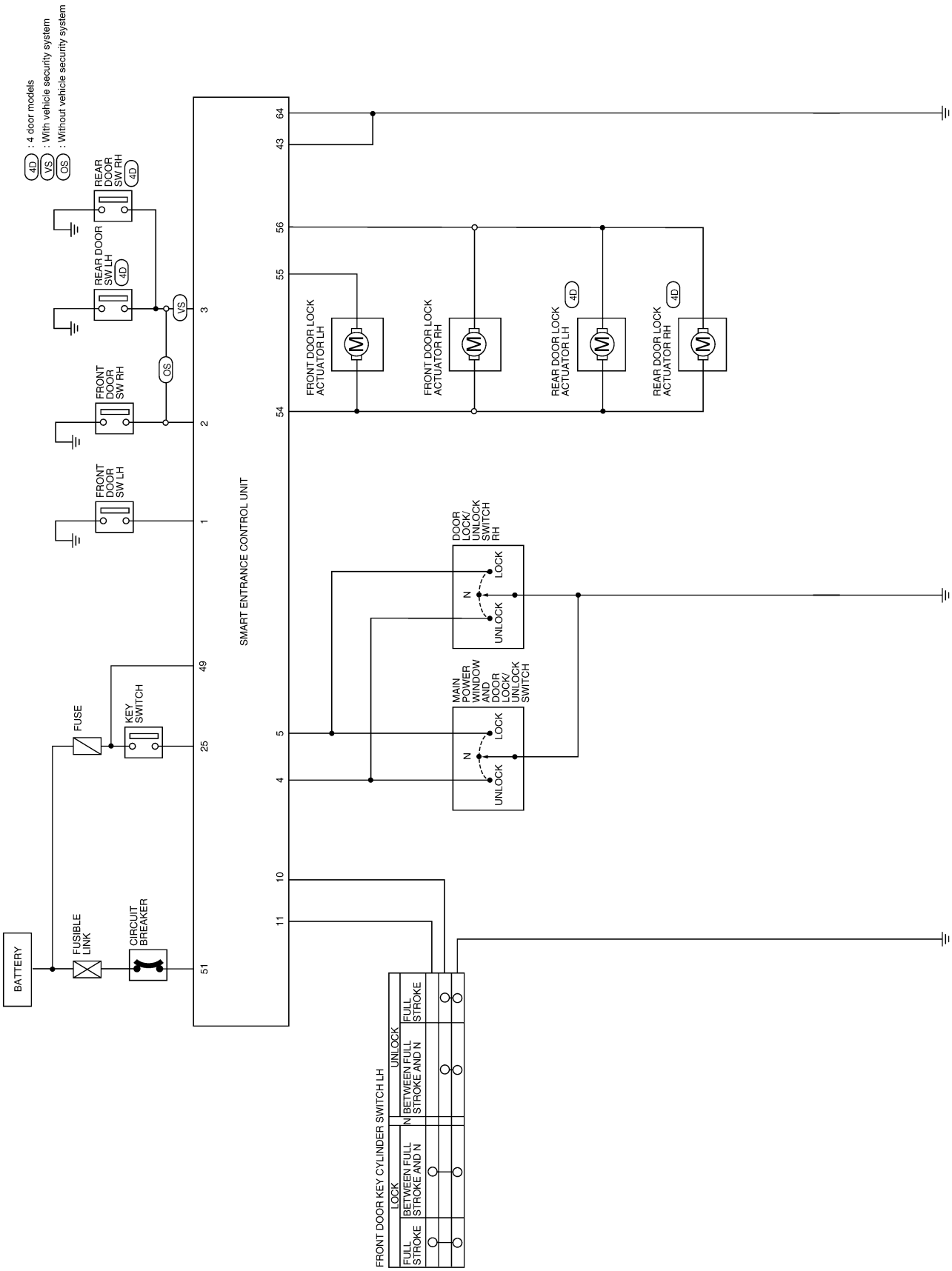

WEL083B

Wiring Diagram — D/LOCK —

NEEL0109

FIG. 1

NEEL0109S01

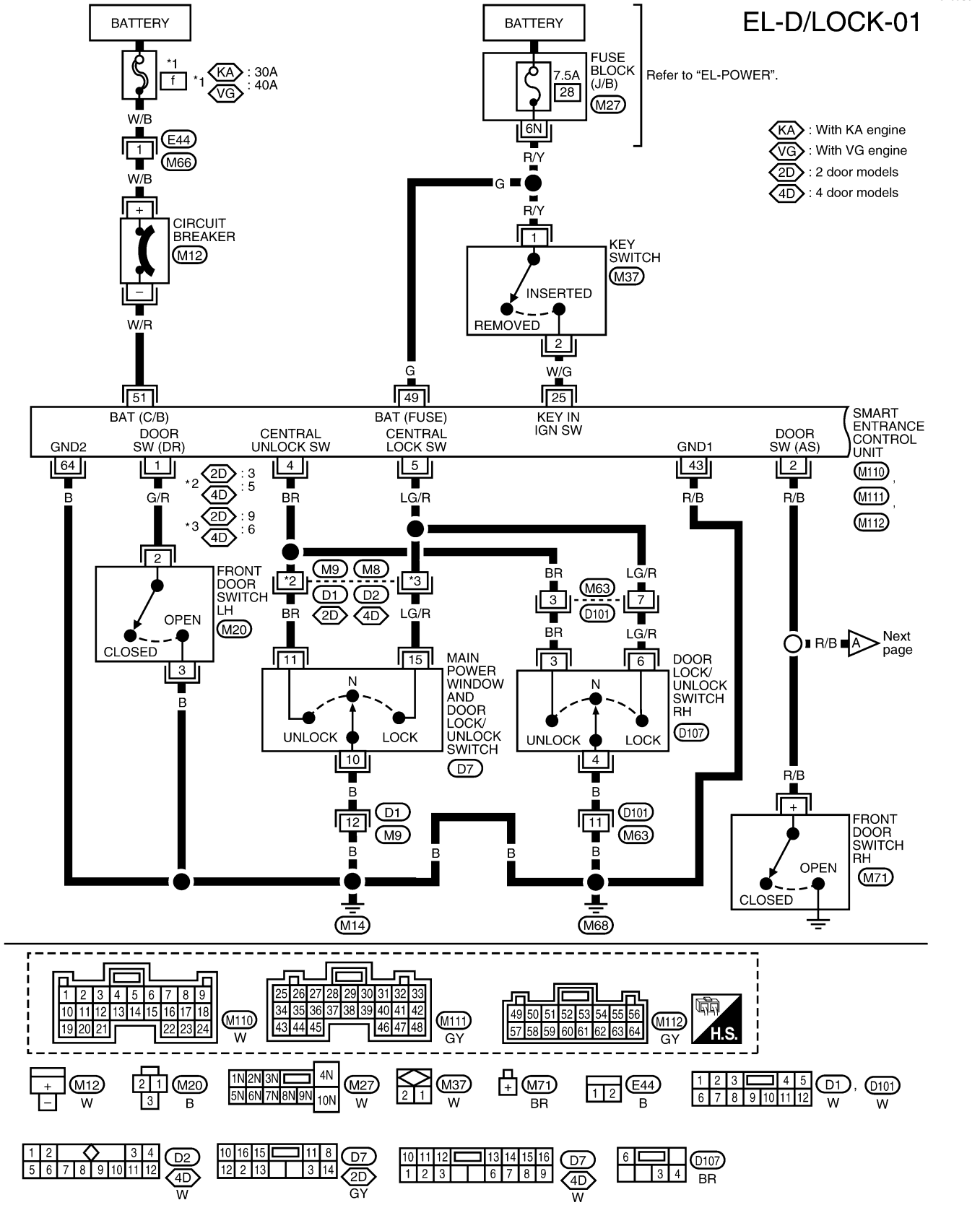

WEL084B

FIG. 2

NEEL0109S02

EL-D/LOCK-02

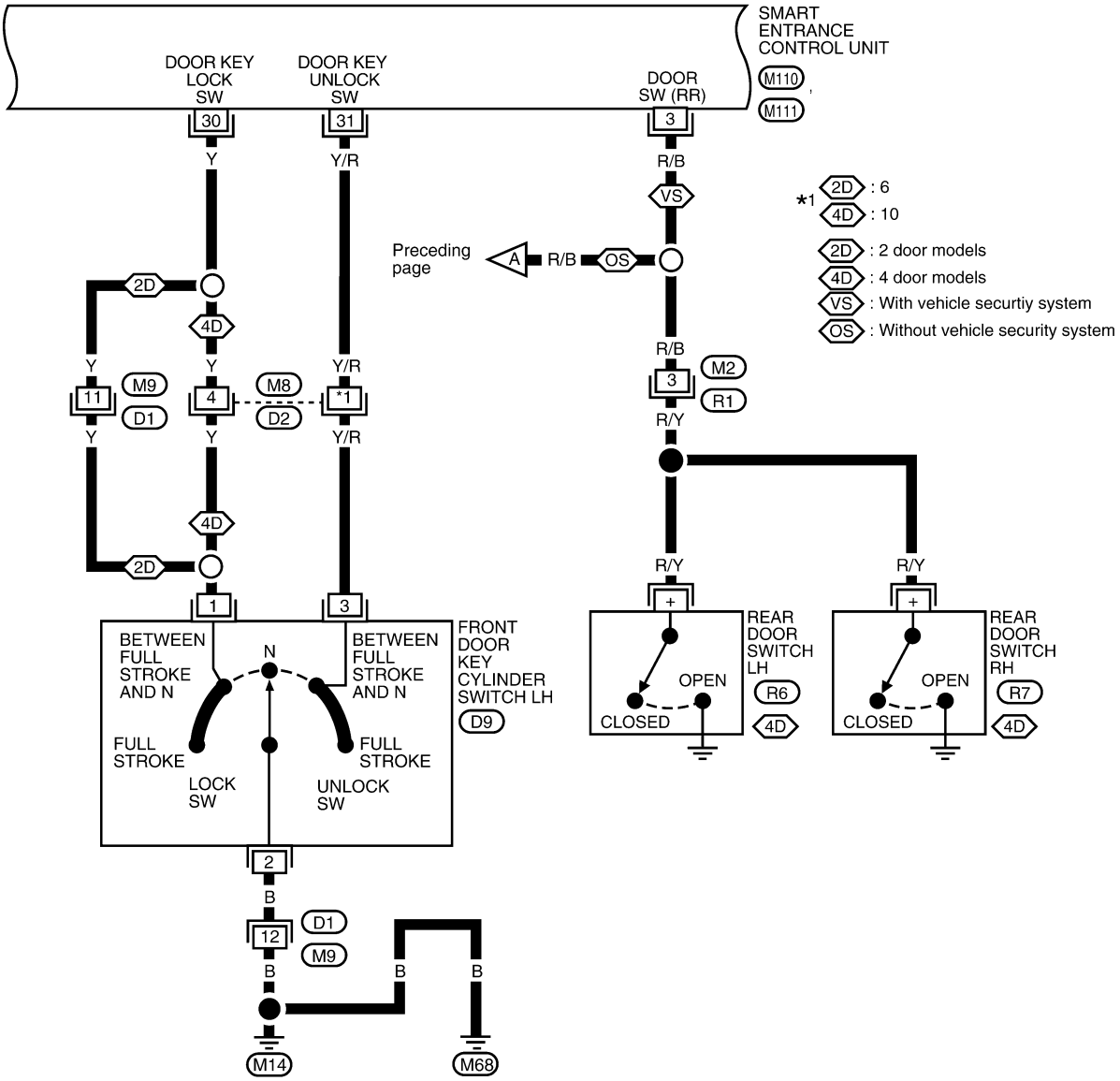

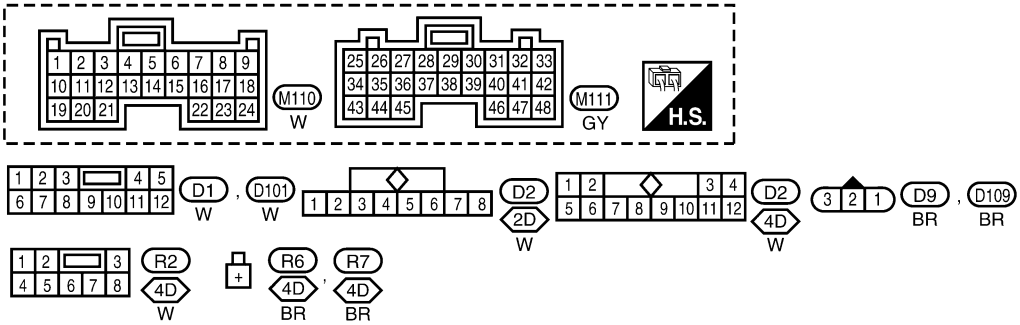

WEL085B

FIG. 3

NEEL0109S03

EL-D/LOCK-03

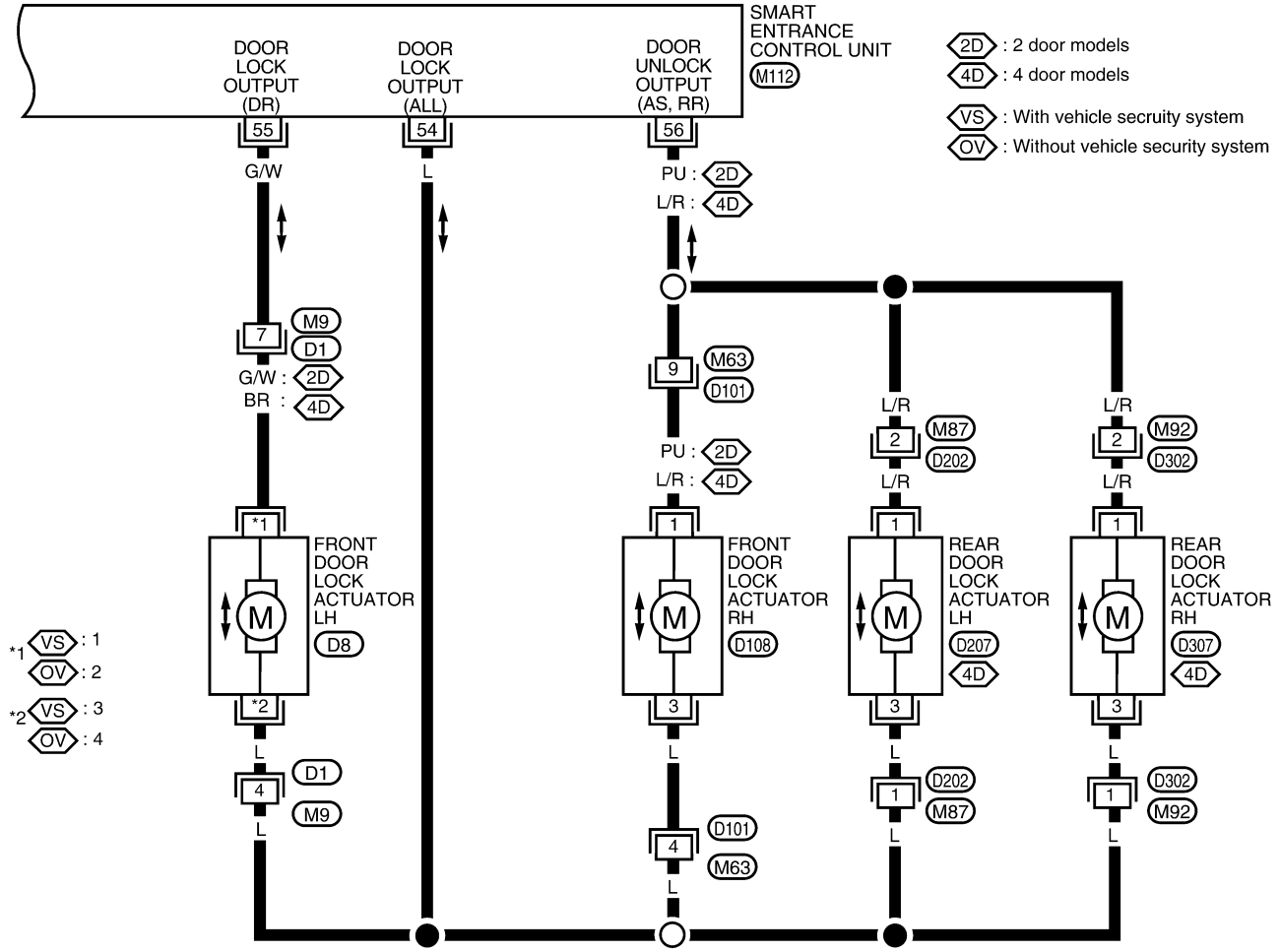

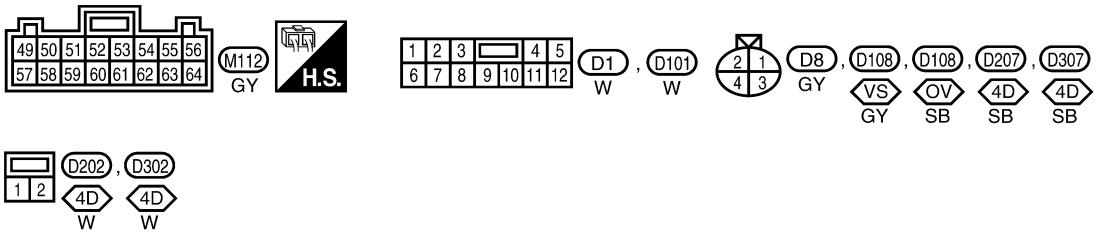

LEL224A

Trouble Diagnoses

SYMPTOM CHART

NEEL0110

NEEL0110S01

REFERENCE PAGE (EL-)	183	184	185	187	188	189
SYMPTOM	MAIN POWER SUPPLY AND GROUND CIRCUIT CHECK	DOOR SWITCH CHECK	KEY SWITCH (INSERT) CHECK	DOOR LOCK/UNLOCK SWITCH CHECK	FRONT DOOR KEY CYLINDER SWITCH CHECK	DOOR LOCK ACTUATOR CHECK
Key reminder door system does not operate properly.	X	X	X			X
Specific door lock actuator does not operate.	X					X
Power door lock does not operate with door lock and unlock switch (LH and RH) on door trim.	X			X		
Power door lock does not operate with front door key cylinder operation.	X				X	
Power door lock does not operate with back door key cylinder operation.	X					

X: Applicable

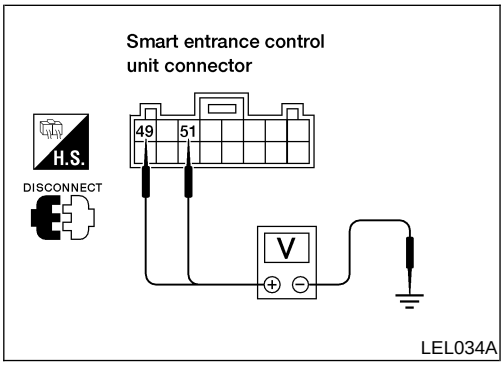

MAIN POWER SUPPLY AND GROUND CIRCUIT CHECK

NEEL0110S02

Main Power Supply Circuit Check

NEEL0110S0201

Terminal		Ignition switch		
(+)	(−)	OFF	ACC	ON
M112 - 49 (G)	Ground	Battery voltage	Battery voltage	Battery voltage
M112 - 51 (W/R)				

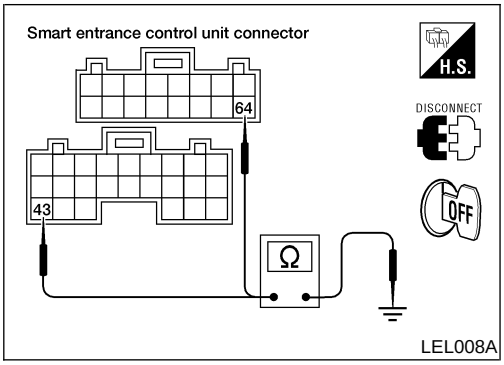

Ground Circuit Check

NEEL0110S0202

Terminals	Continuity
M111 - 43 (B) - Ground	Yes
M112 - 64 (B) - Ground	

DOOR SWITCH CHECK

NEEL0110S05

1	CHECK FRONT DOOR SWITCH INPUT SIGNAL

Check voltage between smart entrance control unit harness connector M111 terminals 1 (G/R), 2 (G/B) or 3 (R/B) and ground.

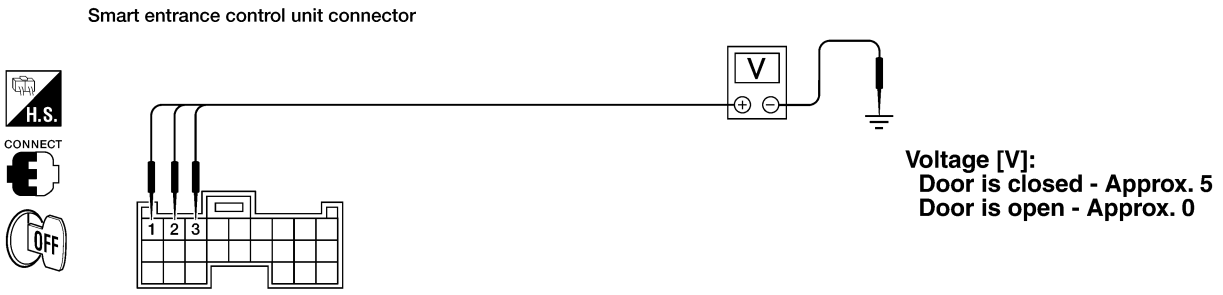

WEL517A

Refer to "Wiring Diagram", EL-180.

OK or NG

OK	▶	Door switch is OK.
NG	▶	GO TO 2.

2	CHECK FRONT DOOR SWITCH

1. Disconnect door switch harness connector.
2. Check continuity between door switch terminals.

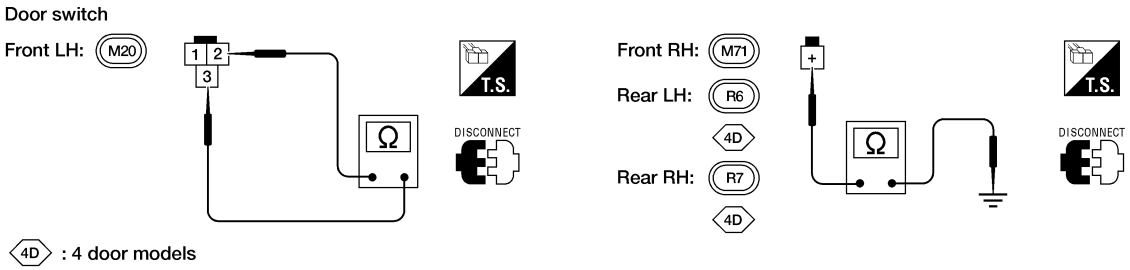

AEL577C

OK or NG

OK	▶	**Check the following** ● Front door switch LH ground circuit or front door switch RH ground condition ● Harness for open or short between smart entrance control unit and door switch
NG	▶	Replace door switch.

KEY SWITCH (INSERTED) CHECK

NEEL0110S06

1	CHECK KEY SWITCH INPUT SIGNAL

1. Disconnect smart entrance control unit harness connector.
2. Check voltage between smart entrance control unit harness connector M111 terminal 25 (W/G) and ground.

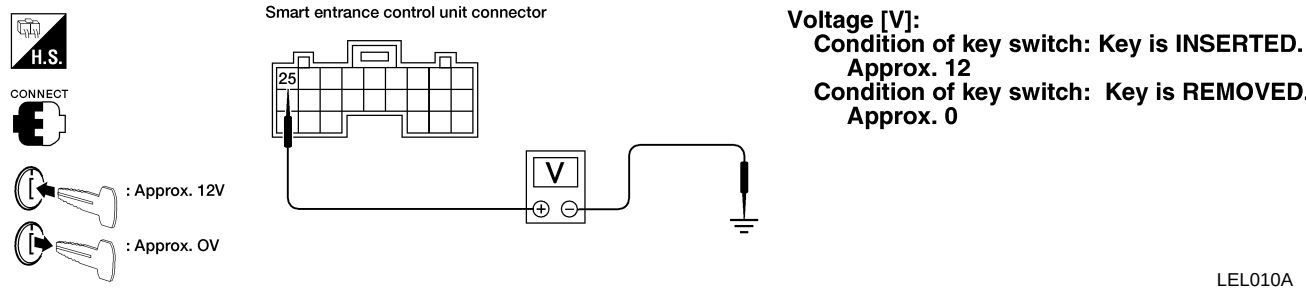

Refer to "Wiring Diagram", EL-180.

OK or NG

OK	▶	Key switch is OK.
NG	▶	GO TO 2.

2	CHECK KEY SWITCH POWER SUPPLY

1. Disconnect key switch harness connector.
2. Check voltage between key switch harness connector terminal 1 and ground.

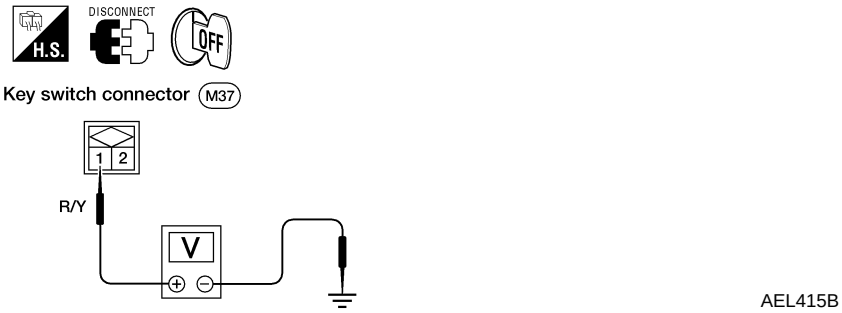

Battery voltage should exist.
Refer to "Wiring Diagram", EL-180.

OK or NG

OK	▶	GO TO 3.
NG	▶	**Check the following** ● 7.5A fuse [No. 28, located in the fuse block (J/B)] ● Harness for open or short between key switch and fuse

3	CHECK KEY SWITCH

Check continuity between key switch terminals 1 and 2.

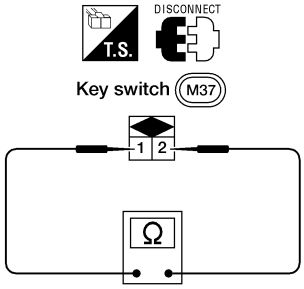

AEL416B

Continuity

Condition of key switch: Key is inserted.

Yes

Condition of key switch: Key is removed.

No

OK or NG

OK	▶	Check harness for open or short between smart entrance control unit and key switch.
NG	▶	Replace key switch.

DOOR LOCK/UNLOCK SWITCH CHECK

=NEEL0110S03

1 CHECK DOOR LOCK/UNLOCK SWITCH INPUT SIGNAL

1. Disconnect smart entrance control unit harness connector.
2. Check continuity between smart entrance control unit harness connector M110 terminal 4 (BR) or 5 (LG/R) and ground.

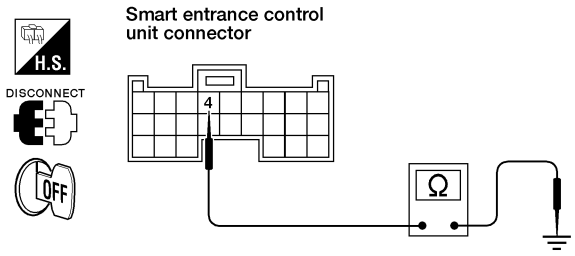

Terminals	Door lock/unlock switch (LH or RH) condition	Continuity
4 - ground	Lock	Yes
	N and Unlock	No
5 - ground	Unlock	Yes
	N and Lock	No

LEL047A

Refer to "Wiring Diagram", EL-180.

OK or NG

OK	▶	Door lock/unlock switch is OK.
NG	▶	GO TO 2.

2 CHECK DOOR LOCK/UNLOCK SWITCH

1. Disconnect door lock/unlock switch harness connector.
2. Check continuity between door lock/unlock switch terminals.

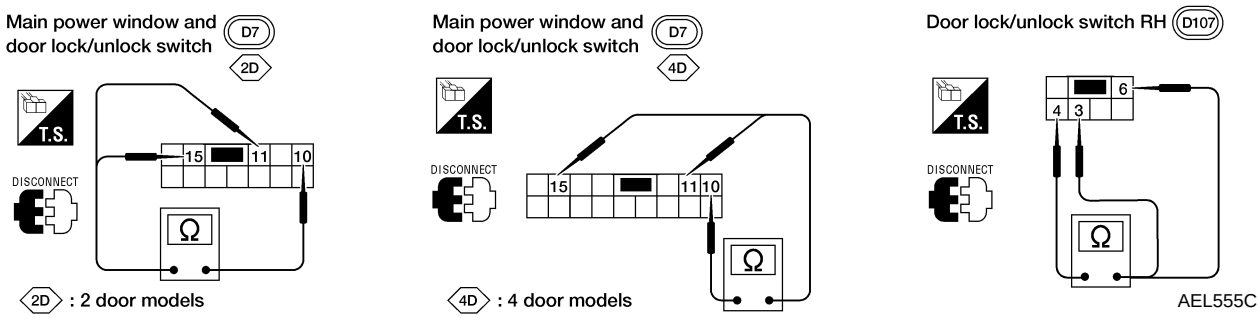

AEL555C

Main power window and door lock/unlock switch

Condition	Terminals		
	10	11	15
Lock	○		○
N	No continuity		
Unlock	○	○	

Door lock/unlock switch RH

Condition	Terminals		
	3	4	6
Lock		○	○
N	No continuity		
Unlock	○	○	

AEL556C

OK or NG

OK	▶	**Check the following.** ● Ground circuit for door lock/unlock switch ● Harness for open or short between door lock/unlock switch and smart entrance control unit
NG	▶	Replace door lock/unlock switch.

DOOR KEY CYLINDER SWITCH CHECK

NEEL0110S07

1 CHECK DOOR KEY CYLINDER SWITCH INPUT SIGNAL (LOCK/UNLOCK SIGNAL)

Check voltage between smart entrance control unit harness connector M110 terminal 10 (Y/R) or 11 (Y) and ground.

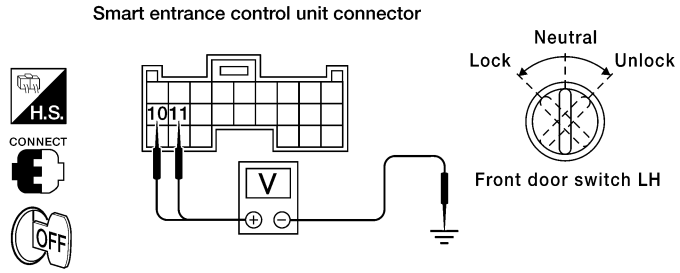

Terminals (+)	Terminals (–)	Key position	Voltage [V]
11	Ground	Neutral	Approx. 5
		Lock	0
10	Ground	Neutral	Approx. 5
		Unlock	0

WEL518A

Refer to "Wiring diagram", EL-181.

OK or NG

OK	▶	Door key cylinder switch is OK.
NG	▶	GO TO 2.

2 CHECK DOOR KEY CYLINDER SWITCH

1. Disconnect door key cylinder switch harness connector.
2. Check continuity between door key cylinder switch terminals.

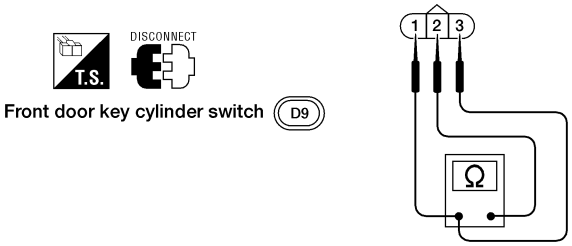

Terminals	Key position	Continuity
1 – 2	Neutral	No
	Lock	Yes
3 – 2	Neutral	No
	Unlock	Yes

LEL032A

OK or NG

OK	▶	**Check the following** ● Door key cylinder switch ground circuit ● Harness for open or short between smart entrance control unit and door key cylinder switch
NG	▶	Replace door key cylinder switch.

DOOR LOCK ACTUATOR CHECK

=NEEL0110S04

1 CHECK DOOR LOCK ACTUATOR CIRCUIT

Check voltage for door lock actuator circuits on smart entrance control unit connector M112 terminal 54 (L), 55 (G/W) or 56 (L/R) and ground.

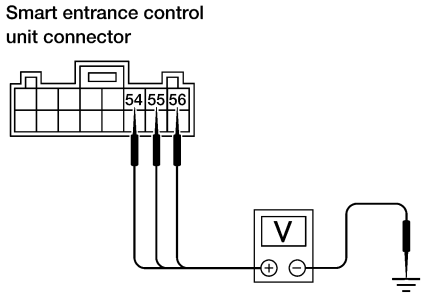

Door lock/unlock switch condition	Terminals		Voltage [V]
	+	−	
Lock	54	Ground	Approx. 12
Unlock (front door LH)	55	Ground	
Unlock (front door RH, rear door LH and RH)	56	Ground	

WEL368A

Refer to "Wiring Diagram", EL-182.

OK or NG

OK	▶	GO TO 2.
NG	▶	Replace smart entrance control unit. (Before replacing smart entrance control unit, perform other procedures indicated in "SYMPTOM CHART".)

2 CHECK DOOR LOCK ACTUATOR

1. Disconnect door lock actuator harness connector.
2. Apply 12V direct current to door lock actuator and check operation.

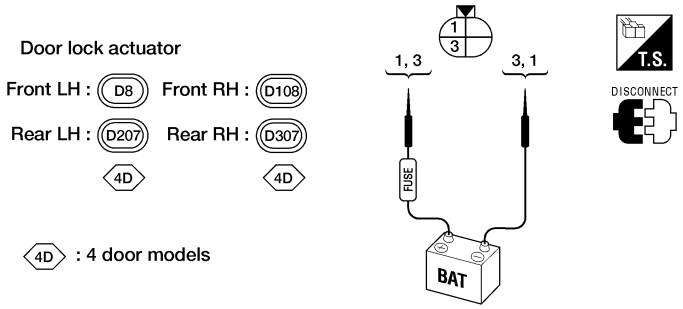

AEL574C

Door lock actuator operation	Terminals	
	+	−
Unlocked → Locked	3	1
Locked → Unlocked	1	3

AEL575C

OK or NG

OK	▶	Check harness for open or short between smart entrance control unit and door lock actuator.
NG	▶	Replace door lock actuator.

Component Parts and Harness Connector Location

NEEL0111

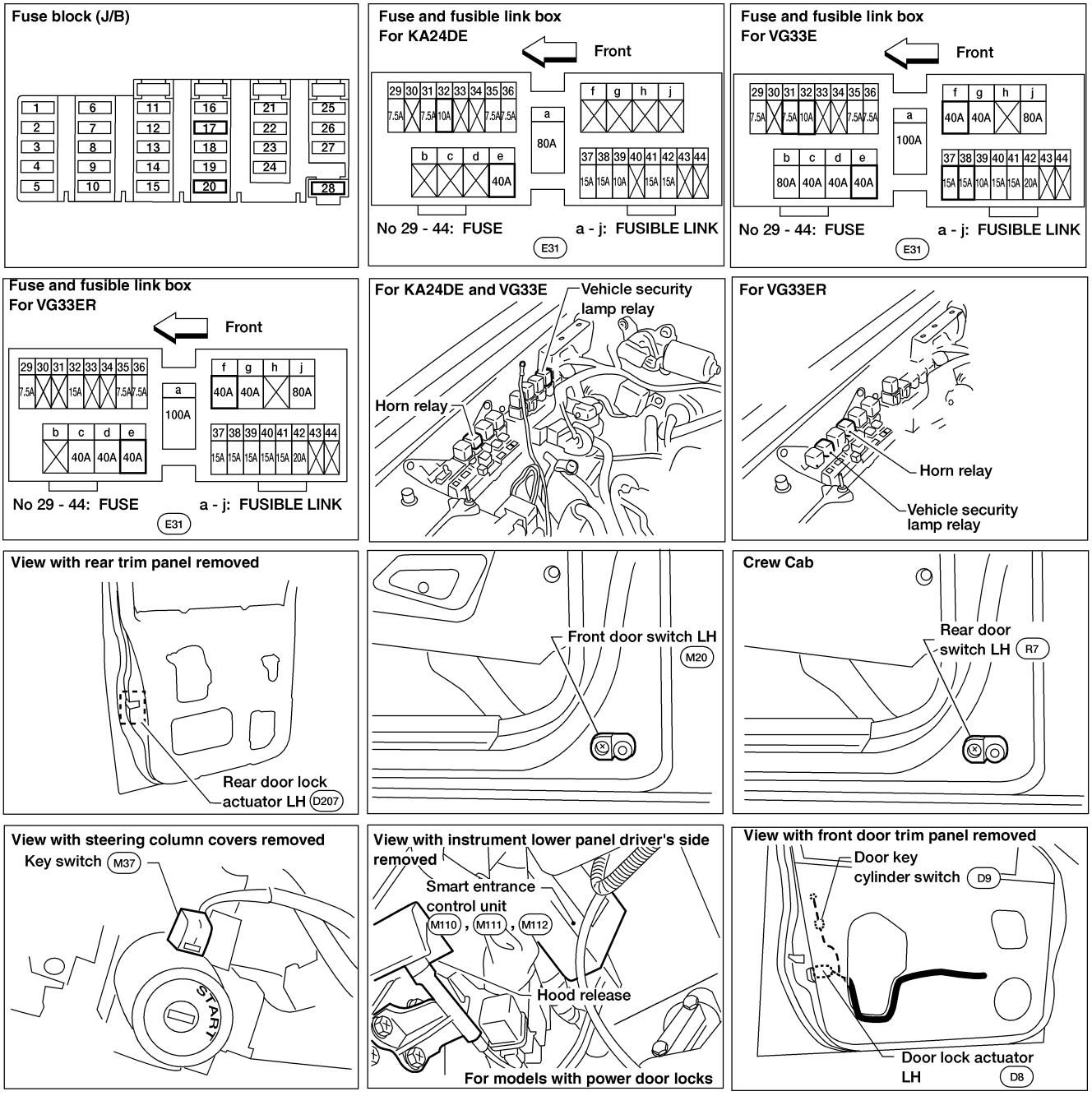

WEL467A

System Description

NEEL0112

POWER SUPPLY AND GROUND

NEEL0112S03

Power is supplied at all times
- through 30A fusible link [letter **f**, located in the fuse and fusible link box (with KA24DE)] or
- through 40A fusible link [letter **f**, located in the fuse and fusible link box (with VG33E and VG33ER)]
- to circuit breaker terminal +
- through circuit breaker terminal –
- to smart entrance control unit terminal 51.

With the ignition switch in the ACC or ON position, power is supplied
- through 7.5A fuse [No. 20, located in the fuse block (J/B)]
- to smart entrance control unit terminal 26.

Power is supplied at all times
- through 7.5A fuse [No. 28, located in the fuse block (J/B)]
- to key switch terminal 1 and
- to smart entrance control unit terminal 49.

Power is supplied at all times
- through 15A fuse (No. 37, located in the fuse and fusible link box)
- to vehicle security lamp relay terminal 7.

Power is supplied at all times
- through 15A fuse (No. 38, located in the fuse and fusible link box)
- to vehicle security lamp relay terminal 5.

Power is supplied at all times
- through 15A fuse (No. 32, located in the fuse and fusible link box)
- to horn relay terminal 1
- through horn relay terminal 2

Ground is supplied
- to smart entrance control unit terminals 43 and 64
- through body grounds M14 and M68.

INPUTS

NEEL0112S01

With the key switch in the INSERTED (key is in ignition key cylinder) position, power is supplied
- through key switch terminal 2
- to smart entrance control unit terminal 25.

With front door LH open, ground is supplied
- to smart entrance control unit terminal 1
- through front door switch LH terminal 2
- through front door switch LH terminal 3
- through body grounds M14 and M68.

With front door RH open, ground is supplied
- to smart entrance control unit terminal 2
- through front door switch RH terminal +.

With rear door LH or RH (Crew Cab) open, ground is supplied
- to smart entrance control unit terminal 3 (with vehicle security system) or terminal 2 (without vehicle security system)
- through rear door switch LH or RH terminal +.

Remote controller signal input
- through internal antenna.

The multi-remote control system controls operation of the
- power door locks
- interior lamp
- panic alarm
- hazard and horn reminder

OPERATION PROCEDURE

NEEL0112S02

Power Door Lock Operation

NEEL0112S0201

When the remote controller sends a LOCK signal with the key switch in the REMOVED position (key is not in ignition key cylinder), the smart entrance control unit locks all doors.
When the remote controller sends an UNLOCK signal once, the smart entrance control unit unlocks the front door LH.
Then, if the remote controller sends another UNLOCK signal within 5 seconds, the smart entrance control unit unlocks all other doors.

Key Reminder

NEEL0112S0207

When performing a door locking operation using either the main power window and door lock/unlock switch, the door lock/unlock switch RH, the front door LH lock knob or a multi-remote controller, all the doors will lock and then the front door LH will immediately unlock if the

- key switch is in INSERTED position (key is in ignition key cylinder) and
- ignition switch is in the OFF position
- and either front door switch LH or RH is in OPEN position (door is open).

Hazard and Horn Reminder

NEEL0112S0204

When smart entrance control unit receives LOCK or UNLOCK signal from remote controller with all doors closed, power is supplied

- through smart entrance control unit terminals 47 and 48
- to the hazard warning lamps.

Ground is supplied

- to horn relay terminal 2
- through smart entrance control unit terminal 19.

Horn relay is now energized, and hazard warning lamp flashes and horn sounds as a reminder.
The hazard and horn reminder has a horn chirp mode (C mode) and a non-horn chirp mode (S mode).

Operating function of hazard and horn reminder

	Horn chirp mode (C mode)		Non-horn chirp mode (S mode)	
	Hazard warning lamp flash	Horn sound	Hazard warning lamp flash	Horn sound
Lock	Twice	Once	Twice	—
Unlock	Once	—	—	—

How to change hazard and horn reminder mode

When LOCK and UNLOCK signals are sent from the remote controller for more than 2 seconds at the same time, the hazard and horn reminder mode is changed and hazard warning lamp flashes and horn sounds as follows:

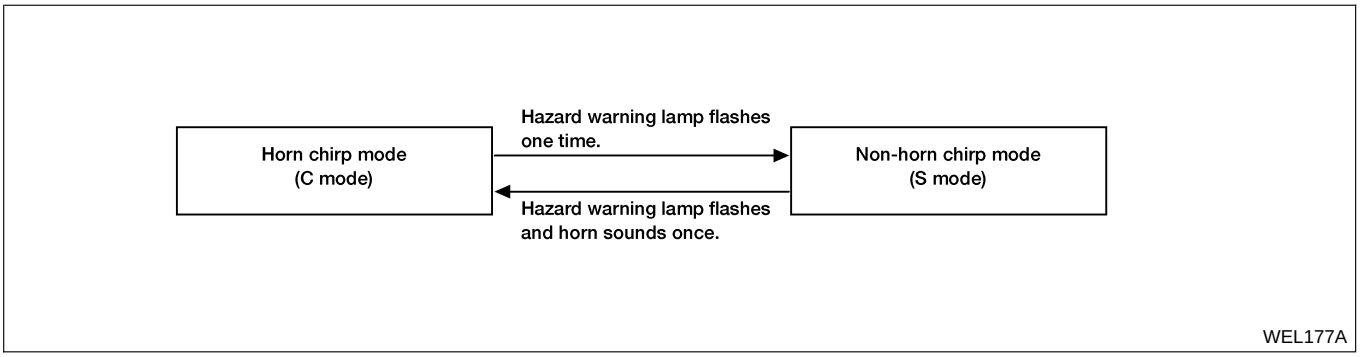

Interior Lamp Operation

NEEL0112S0205

When both of the following signals are supplied:

- all door switches in CLOSED position

Multi-remote control system turns on the front and rear room lamps for 30 seconds with input of UNLOCK signal from multi-remote controller.
For detailed description, refer to "INTERIOR ROOM LAMP", EL-62.

Panic Alarm Operation

NEEL0112S0203

When remote controller sends a PANIC ALARM signal with key switch in the REMOVED (key is not in ignition key cylinder) position, multi-remote control system operates the horn and headlamps intermittently.
For detailed description, refer to "VEHICLE SECURITY (THEFT WARNING) SYSTEM", EL-210.

Auto Relock Operation

NEEL0112S0208

All the doors will automatically lock again unless any one of the doors is opened or ignition switch is turned from OFF to ON within 5 minutes after the remote controller unlocks all the doors under the following conditions

- key switch is in INSERTED position (key is in ignition key cylinder) and
- ignition switch is in the OFF position and
- all door switches are in CLOSED position (doors are closed)
- all doors are locked.

Circuit Diagram

NEEL0113

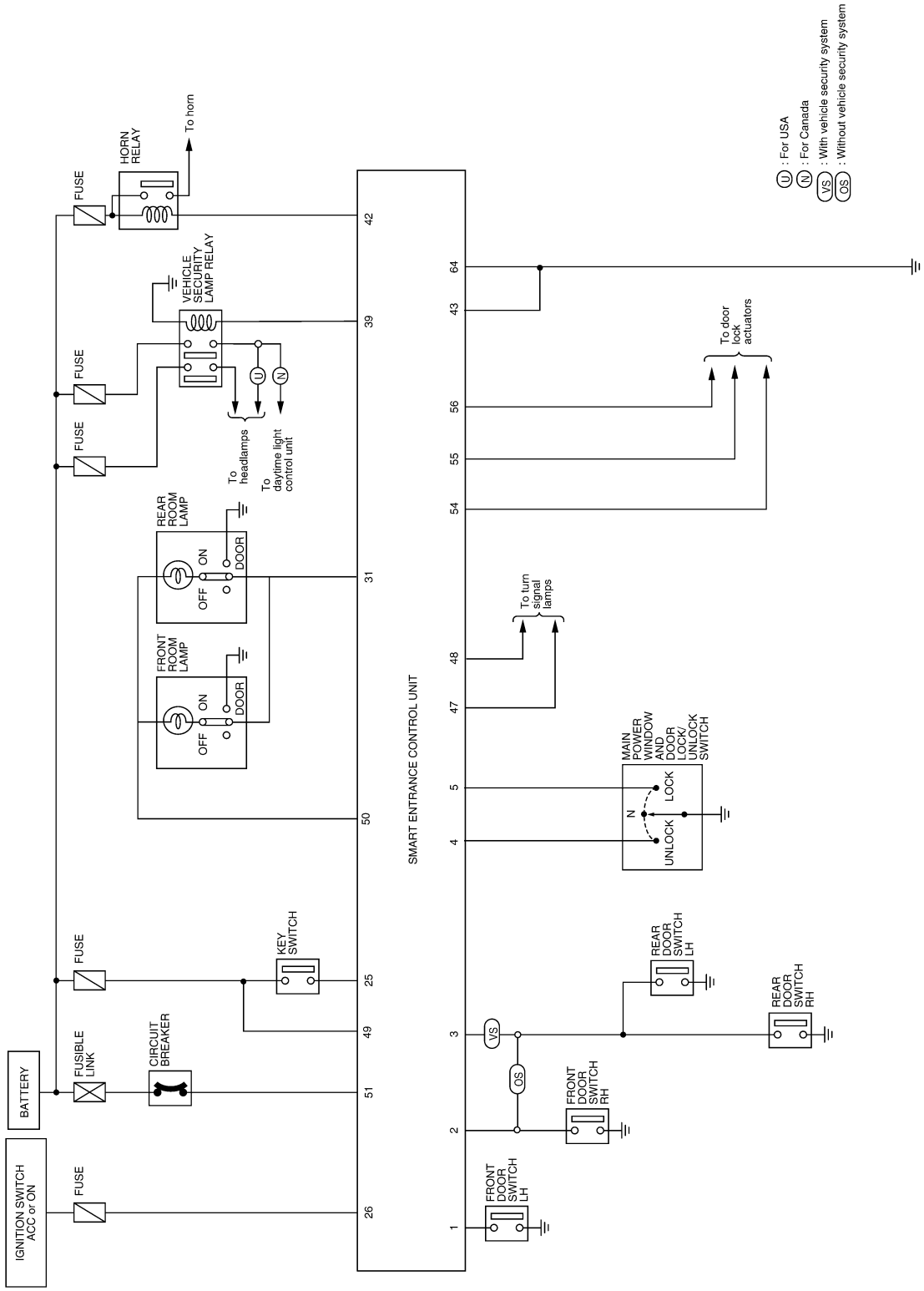

WEL087B

Wiring Diagram — MULTI —

NEEL0114

FIG. 1

NEEL0114S01

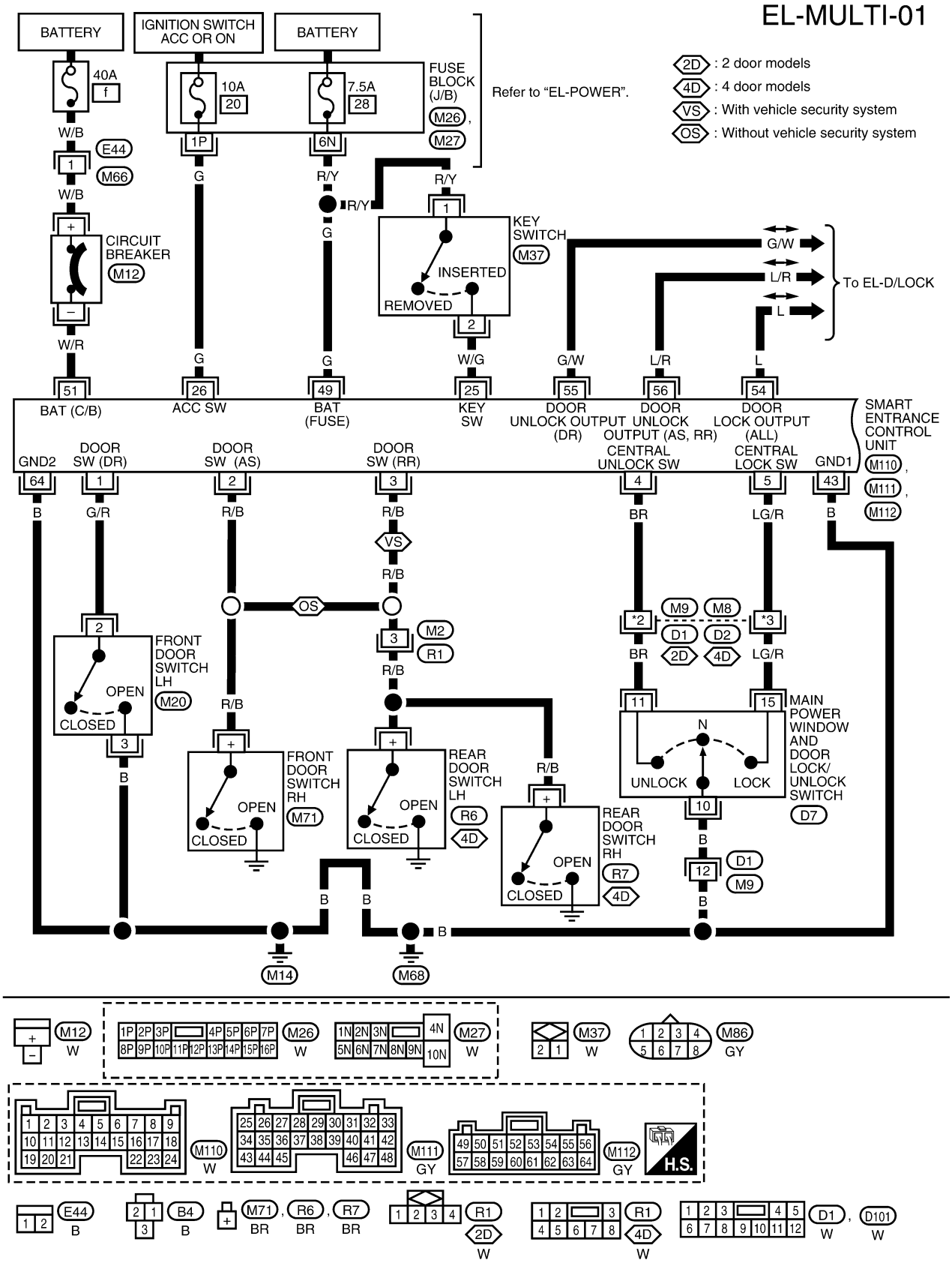

WEL086B

FIG. 2

NEEL0114S02

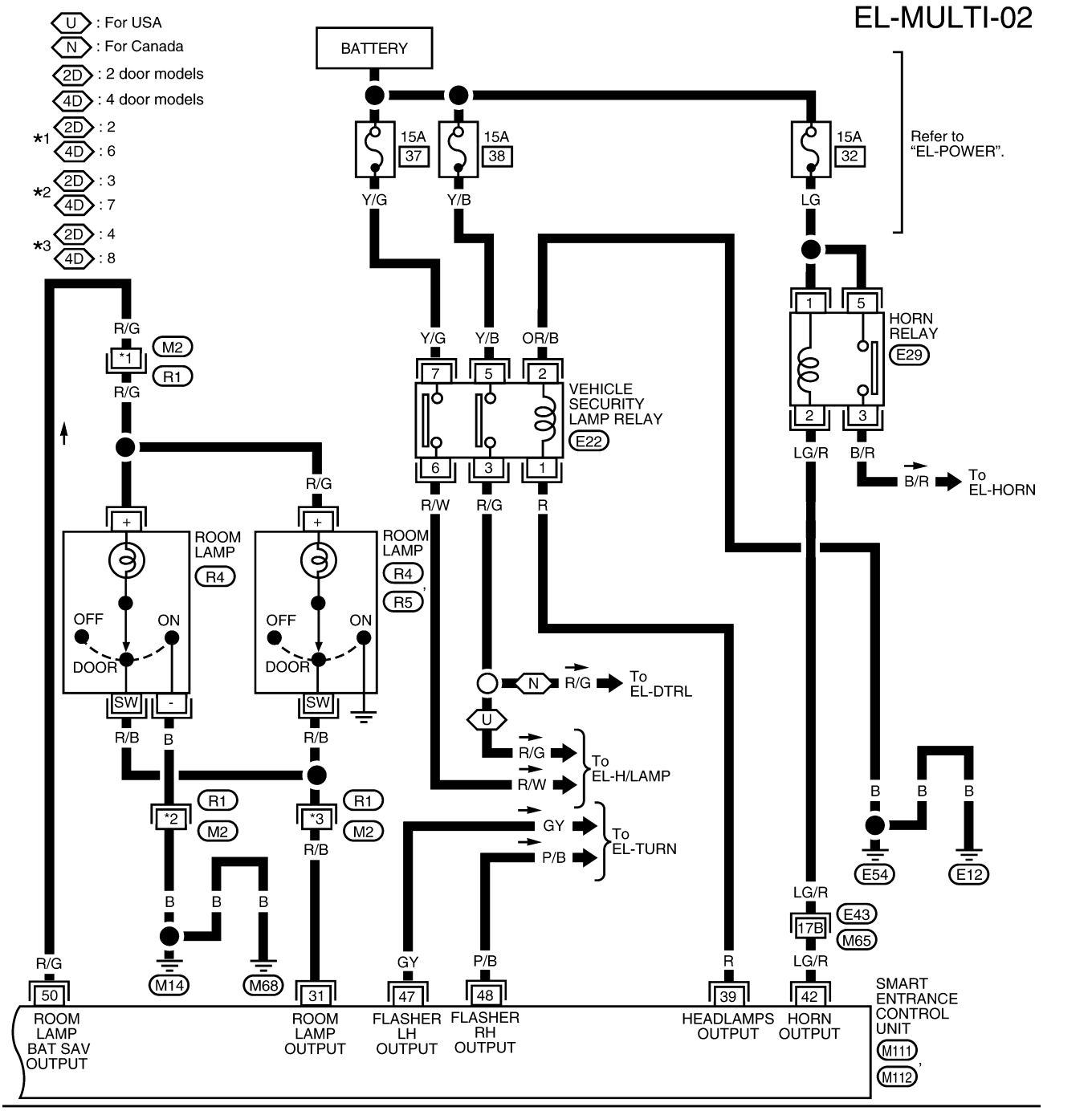

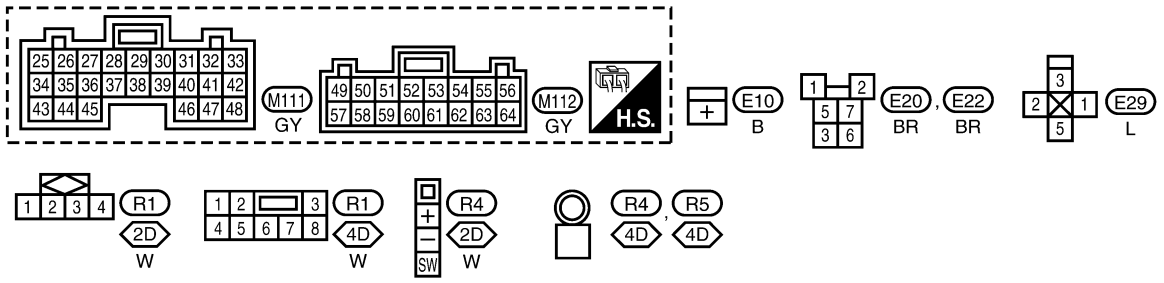

WEL063B

Trouble Diagnoses

=NEEL0115

SYMPTOM CHART

NEEL0115S01

NOTE:

- Always check remote controller battery before replacing remote controller

Symptom	Diagnoses/service procedure	Reference page (EL-)
All functions of multi-remote control system do not operate.	1. Remote controller battery check	198
	2. Power supply and ground circuit check	199
	3. Replace remote controller. Refer to ID Code Entry Procedure.	206
The new ID of remote controller cannot be entered.	1. Remote controller battery check	198
	2. Power supply and ground circuit check	199
	3. Key switch (inserted) check	202
	4. Door switch check	201
	5. Replace remote controller. Refer to ID Code Entry Procedure.	206
Door lock or unlock does not function (If the power door lock system does not operate manually, check power door lock system. Refer to “Trouble Diagnoses”, “POWER DOOR LOCK”, EL-183.).	1. Key switch (inserted) check	202
	2. Door switch check	201
	3. Replace remote controller. Refer to ID Code Entry Procedure.	206
Hazard indicator does not flash twice when pressing lock button of remote controller.	1. Hazard reminder check	204
	2. Replace remote controller. Refer to ID Code Entry Procedure.	206
Room lamp does not activate properly.	1. Room lamp operation check	204
	2. Door switch check	201
Panic alarm (horn and headlamps) does not activate when panic alarm button is pressed continuously for more than 1.5 seconds.	1. Vehicle security operation check. Refer to “PRELIMINARY CHECK”, “VEHICLE SECURITY SYSTEM”.	217
	2. Replace remote controller. Refer to ID Code Entry Procedure.	206

NOTE:

When performing a door locking operation using either the main power window and door lock/unlock switch, the door lock/unlock switch RH, the front door LH lock knob or a multi-remote controller, all the doors will lock and then the front door LH will immediately unlock if

- **the key switch is in INSERTED position (key is in ignition key cylinder) and**
- **ignition switch is in the OFF position and**
- **either front door switch LH or RH is in OPEN position (door is open).**

REMOTE CONTROLLER BATTERY CHECK

=NEEL0115S02

1	CHECK REMOTE CONTROLLER BATTERY

Remove battery (refer to "Remote Controller Battery Replacement", EL-207) and measure voltage across battery positive and negative terminals, (+) and (−).

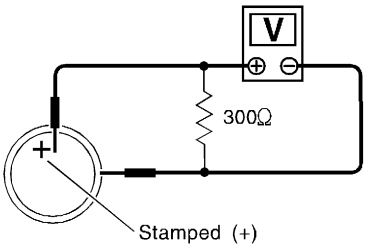

SEL277V

Voltage [V]:
2.5 - 3.0

NOTE:
Remote controller does not function if battery is not installed correctly.

OK or NG

OK	▶	Check remote controller battery terminals for corrosion and damage.
NG	▶	Replace battery.

POWER SUPPLY AND GROUND CIRCUIT CHECK

=NEEL0115S04

1	CHECK MAIN POWER SUPPLY CIRCUIT FOR CONTROL UNIT

1. Disconnect smart entrance control unit harness connector.
2. Check voltage between smart entrance control unit harness connector M112 terminals 49 (G), 51 (W/R) and ground.

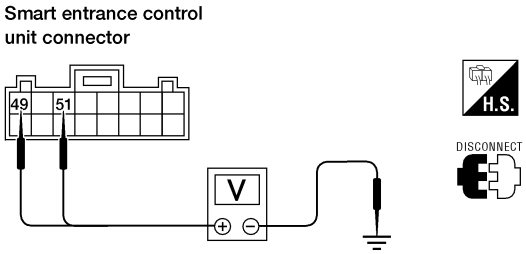

Battery voltage should exist.

LEL051A

Refer to "Wiring Diagram", EL-195.

OK or NG

OK	▶	GO TO 2.
NG	▶	**Check the following.** ● 30A fusible link (with KA24DE), 40A fusible link (with VG33E and VG33ER) (letter **f**, located in fuse and fusible link box) ● 7.5A fuse [No. 28, located in fuse block (J/B)] ● M12 circuit breaker ● Harness for open or short between smart entrance control unit and circuit breaker ● Harness for open or short between smart entrance control unit and fuse.

2	CHECK IGNITION SWITCH ACC CIRCUIT

1. Disconnect smart entrance control unit harness connector.
2. Check voltage between smart entrance control unit harness connector M111 terminal 26 (G) and ground while ignition switch is in ACC or ON position.

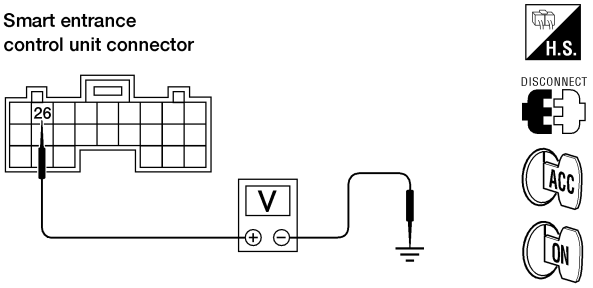

Battery voltage should exist.

LEL052A

Refer to "Wiring Diagram", EL-195.

OK or NG

OK	▶	GO TO 3.
NG	▶	**Check the following.** ● 7.5A fuse [No. 20, located in fuse block (J/B)] ● Harness for open or short between smart entrance control unit and fuse

3	CHECK GROUND CIRCUIT FOR CONTROL UNIT

Check continuity between smart entrance control unit harness connectors M111 and M112 terminals 43 (B) and 64 (B) and ground.

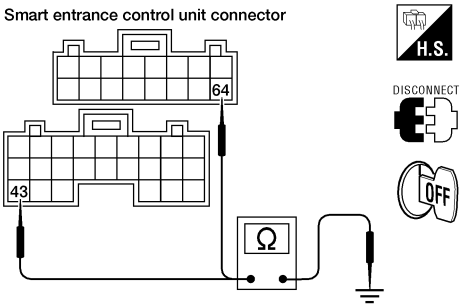

LEL008A

Refer to "Wiring Diagram", EL-195.

OK or NG

OK	▶	Power supply and ground circuits are OK.
NG	▶	Check ground harness.

DOOR SWITCH CHECK

=NEEL0115S05

1	CHECK DOOR SWITCH INPUT SIGNAL

Check voltage between smart entrance control unit connector M110 terminals 1 (G/R), 2 (G/B) or 3 (R/B) (Crew Cab with vehicle security system) and ground.

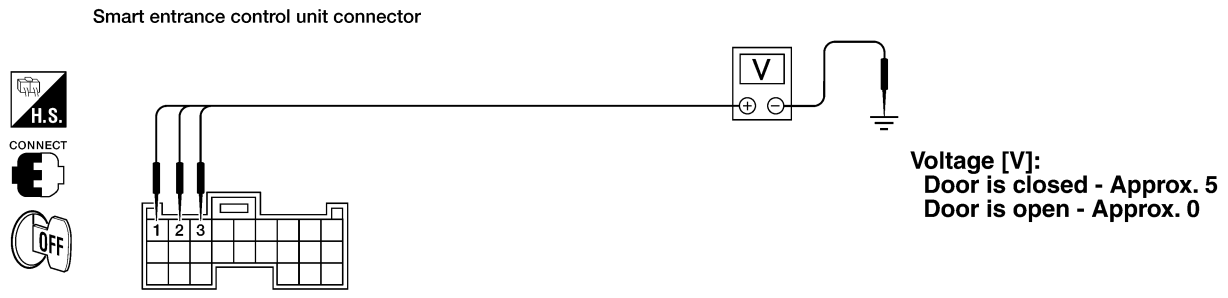

WEL517A

Refer to "Wiring Diagram", EL-195.

OK or NG

OK	▶	Door switch is OK.
NG	▶	GO TO 2.

2	CHECK DOOR SWITCH

1. Disconnect door switch harness connector.
2. Check continuity between door switch terminals.

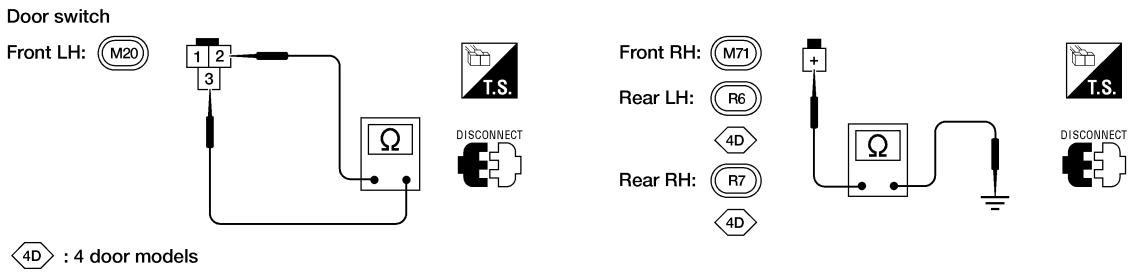

AEL577C

Continuity:

Front door switch LH terminals 2 - 3

Door switch is pressed - No

Door switch is released - Yes

Front door switch RH, rear door switch LH or RH terminal + - ground

Door switch is pressed - No

Door switch is released - Yes

OK or NG

OK	▶	**Check the following.** ● Front door switch LH ground circuit or door switch ground condition ● Harness for open or short between smart entrance control unit and door switch
NG	▶	Replace door switch.

KEY SWITCH (INSERTED) CHECK

=NEEL0115S07

1	CHECK KEY SWITCH INPUT SIGNAL

1. Disconnect smart entrance control unit harness connector.
2. Check voltage between smart entrance control unit harness connector M111 terminal 25 (W/G) and ground.

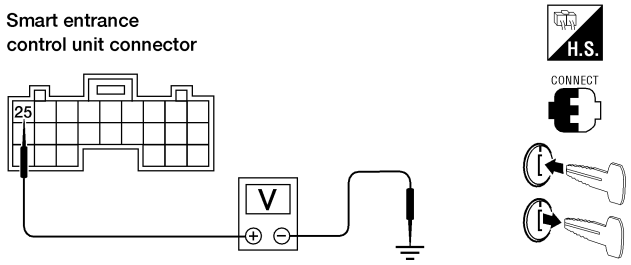

Voltage [V]:
Key is inserted - Approx. 12
Key is removed - Approx. 0

LEL053A

Refer to "Wiring Diagram", EL-195.

OK or NG

OK	▶	Key switch is OK.
NG	▶	GO TO 2.

2	CHECK KEY SWITCH POWER SUPPLY

1. Disconnect key switch harness connector.
2. Check voltage between key switch harness connector terminal 1 and ground.

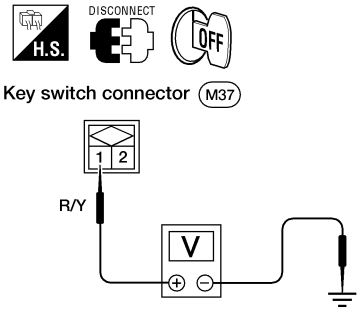

AEL415B

Battery voltage should exist.
Refer to "Wiring Diagram", EL-195.

OK or NG

OK	▶	GO TO 3.
NG	▶	**Check the following** ● 7.5A fuse [No. 28, located in the fuse block (J/B)] ● Harness for open or short between key switch and fuse

3	CHECK KEY SWITCH (INSERTED)

Check continuity between terminals 1 and 2.

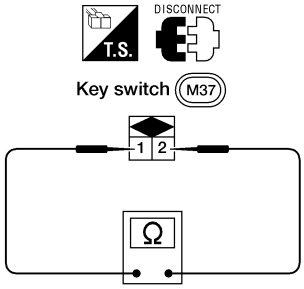

AEL416B

Continuity:
Condition of key switch: Key is inserted.
Yes
Condition of key switch: Key is removed.
No

OK or NG

OK	▶	Check harness for open or short between smart entrance control unit and key switch.
NG	▶	Replace key switch.

HAZARD REMINDER CHECK

=NEEL0115S09

1	CHECK HAZARD INDICATOR	
Check if hazard indicator flashes with hazard switch. **Does hazard indicator operate?**		
Yes	▶	GO TO 2.
No	▶	Check "hazard indicator" circuit. Refer to "Trouble Diagnoses", "TURN SIGNAL AND HAZARD WARNING LAMPS", EL-58.

2	CHECK REMOTE CONTROLLER OPERATION	
Check door lock/unlock operation with remote controller. **Does door lock/unlock operate?**		
Yes	▶	GO TO 3.
No	▶	Check remote controller battery. Refer to "Remote Controller Battery Check, EL-198.

3	CHECK HAZARD REMINDER OUTPUT SIGNAL	
Measure voltage between smart entrance control unit connector M111 terminals 48, 49 and ground with CONSULT-II or oscilloscope when hazard reminder is operated. 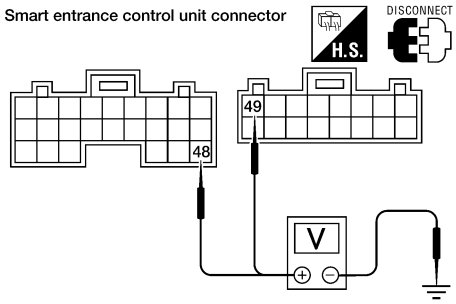 WEL369A **OK or NG**		
OK	▶	Check harness for open or short between smart entrance control unit and turn signal lamps.
NG	▶	Replace smart entrance control unit.

INTERIOR ROOM LAMP OPERATION CHECK

NEEL0115S08

1	CHECK INTERIOR ROOM LAMP	
Check if the interior room lamp switch is in the "ON" position and the lamp illuminates. **Does interior room lamp illuminate?**		
Yes	▶	GO TO 2.
No	▶	**Check the following.** ● Harness for open or short between smart entrance control unit and interior room lamp ● Interior room lamp

2	CHECK INTERIOR ROOM LAMP CIRCUIT

When interior room lamp switch is in "DOOR" position, check voltage across smart entrance control unit connector M111 terminal 31 (R/B) and ground.

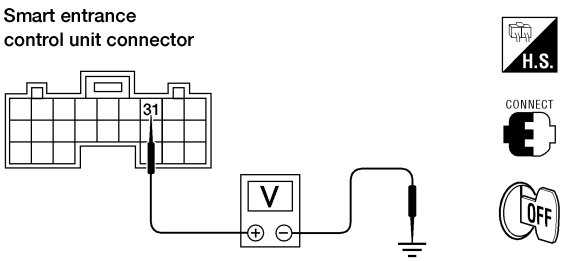

Battery voltage should exist.

LEL055A

Refer to "Wiring Diagram", EL-196.

OK or NG

OK	▶	GO TO 3.
NG	▶	Repair harness between smart entrance control unit and interior room lamp.

3	CHECK CONTROL UNIT OUTPUT

Push unlock button of remote controller with key removed and all doors closed, and check voltage across smart entrance control unit connector M111 terminal 31 (R/B) and ground.

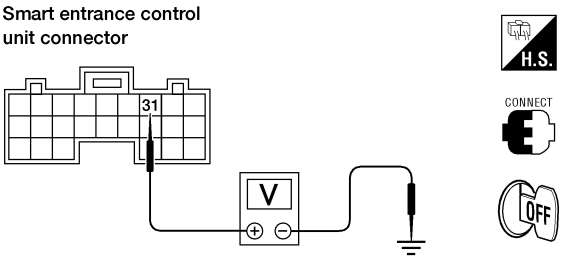

Voltage [v]:
Unlock button is pushed.
Approx. 0 (for approx. 30 seconds.)
Unlock button is not pushed.
Battery voltage

LEL056A

OK or NG

OK	▶	Check system again.
NG	▶	Replace smart entrance control unit.

ID Code Entry Procedure

NEEL0117

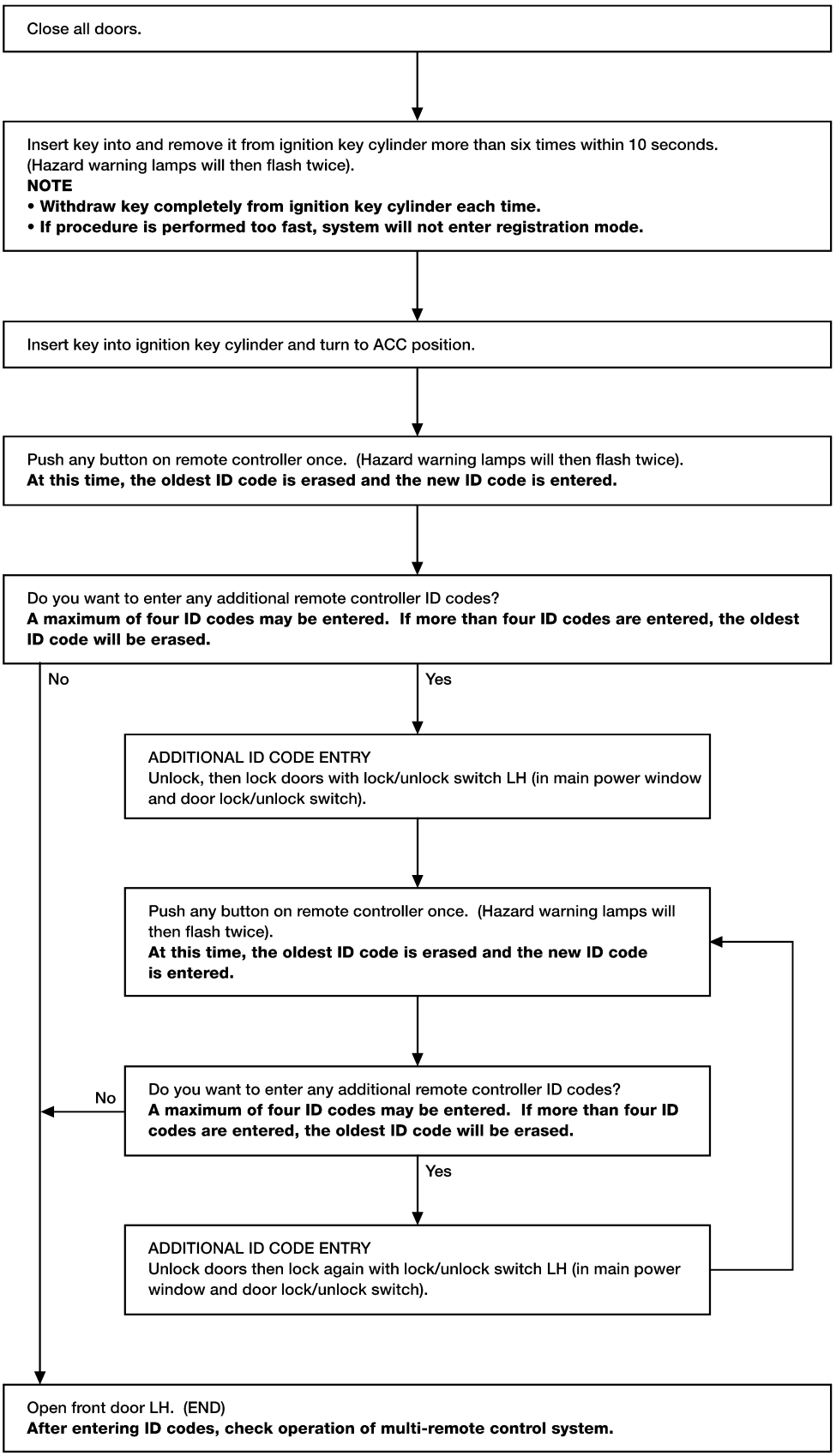

WEL519A

NOTE:

- If a remote controller is lost, the ID code of the lost remote controller must be erased to prevent unauthorized use.
  To erase all ID codes in memory, register one ID code (remote controller) four times. After all ID codes are erased, the ID codes of all remaining and/or new remote controllers must be re-registered.
- When registering an additional remote controller, the existing ID codes in memory may or may not be erased. If four ID codes are stored in memory when an additional code is registered, only the oldest code is erased. If less than four ID codes are stored in memory when an additional ID code is registered, the new ID code is added and no ID codes are erased.
- If you need to activate more than two additional new remote controllers, repeat the procedure "ADDITIONAL ID CODE ENTRY" for each new remote controller.
- Entry of a maximum of four ID codes is allowed. When more than four ID codes are entered, the oldest ID code will be erased.
- If an ID code has already been registered in the memory, the same ID code can be entered in the memory again. Each registration of an ID code counts as an additional code.

Remote Controller Battery Replacement

NEEL0118

NOTE:

- Be careful not to touch the circuit board or battery terminal.
- The remote controller is water-resistant. However, if it does get wet, wipe it dry immediately.
- After battery replacement, press the remote controller buttons two or three times to check their operation.

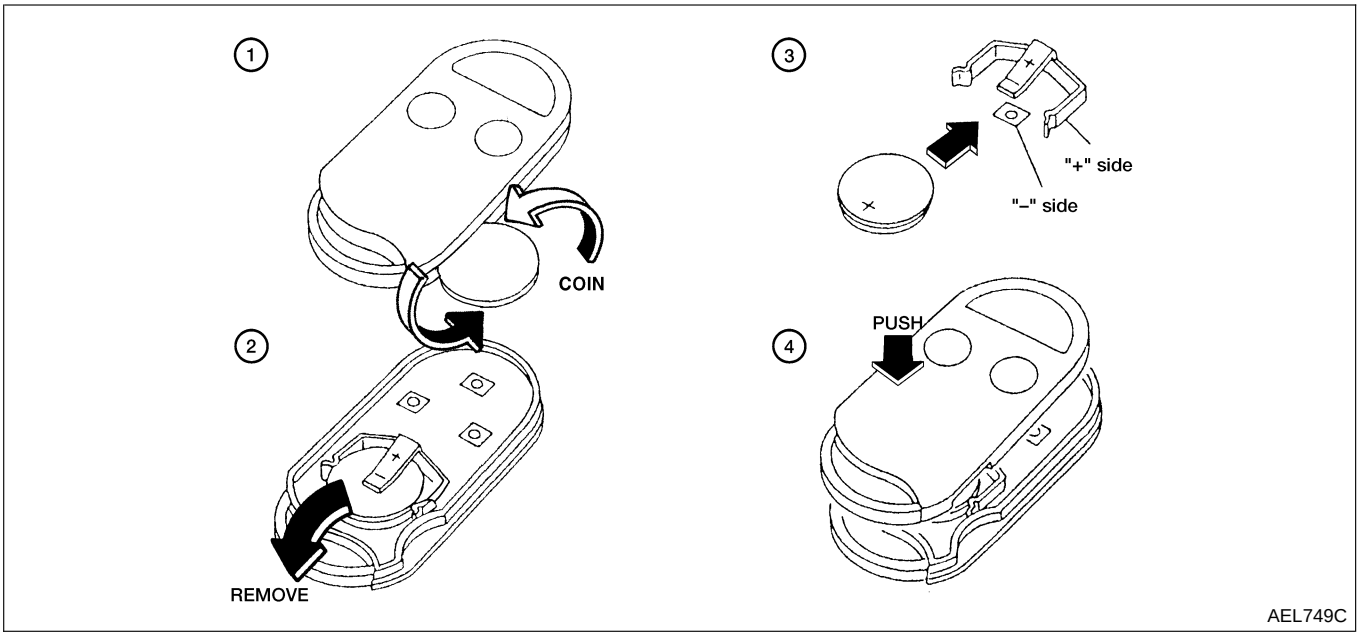

Component Parts and Harness Connector Location

NEEL0196

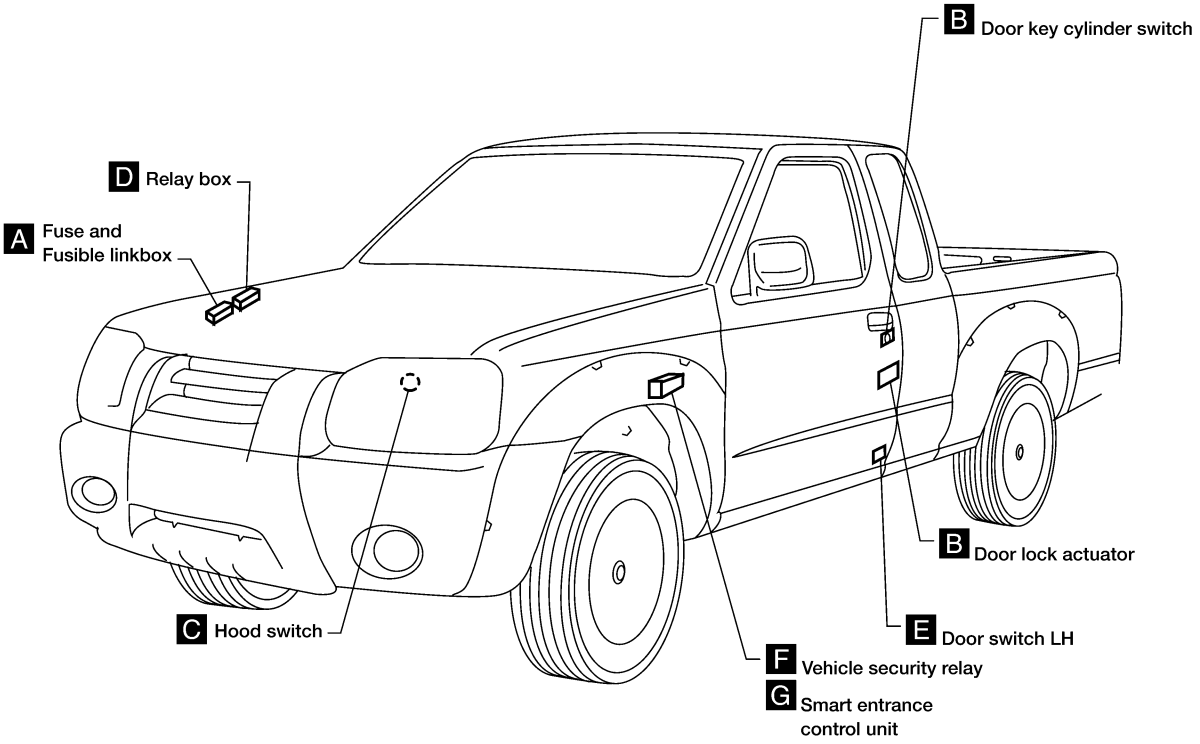

LEL399A

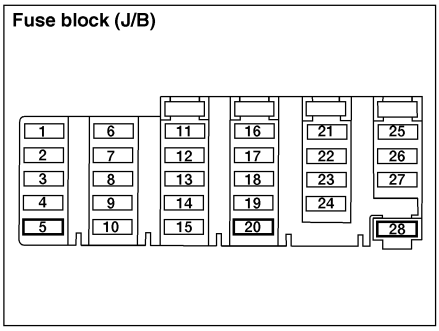
Fuse block (J/B)
1 2 3 4 5 6 7 8 9 10 11 12 13 14 15 16 17 18 19 20 21 22 23 24 25 26 27 28

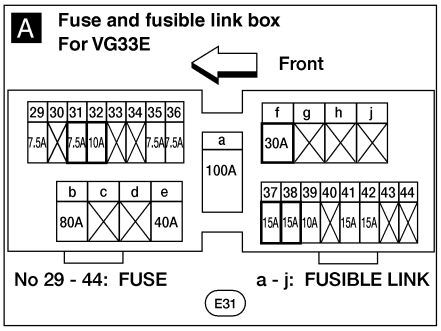
A
Fuse and fusible link box
For VG33E
Front
29 30 31 32 33 34 35 36
7.5A 7.5A 10A 7.5A 7.5A
a
100A
f g h j
30A
b c d e
80A 40A
37 38 39 40 41 42 43 44
15A 15A 10A 15A 15A
No 29 - 44: FUSE
a - j: FUSIBLE LINK
E31

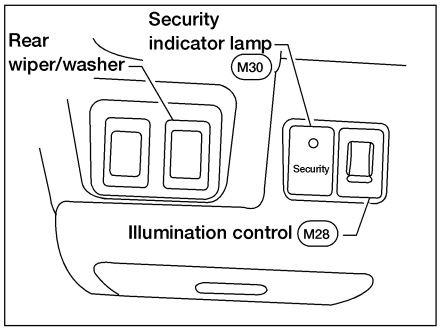
Security
indicator lamp
M30
Rear
wiper/washer
Security
Illumination control
M28

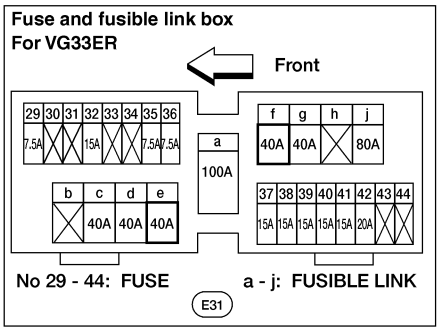
Fuse and fusible link box
For VG33ER
Front
29 30 31 32 33 34 35 36
7.5A 15A 7.5A 7.5A
a
100A
f g h j
40A 40A 80A
b c d e
40A 40A 40A
37 38 39 40 41 42 43 44
15A 15A 15A 15A 15A 20A
No 29 - 44: FUSE
a - j: FUSIBLE LINK
E31

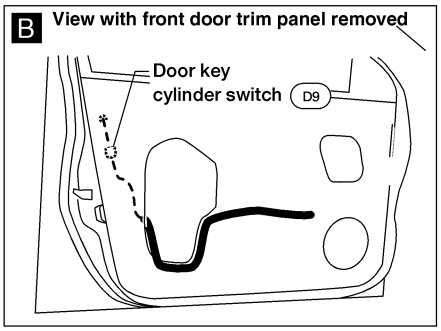
B
View with front door trim panel removed
Door key
cylinder switch
D9

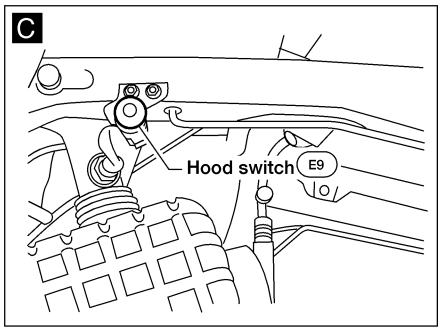
C
Hood switch
E9

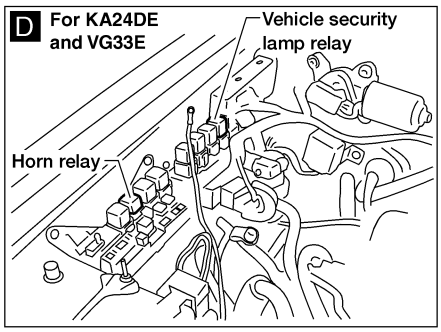
D
For KA24DE
and VG33E
Vehicle security
lamp relay
Horn relay

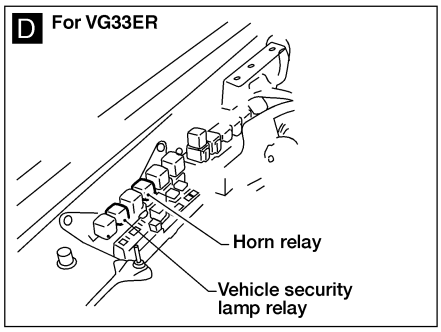
D
For VG33ER
Horn relay
Vehicle security
lamp relay

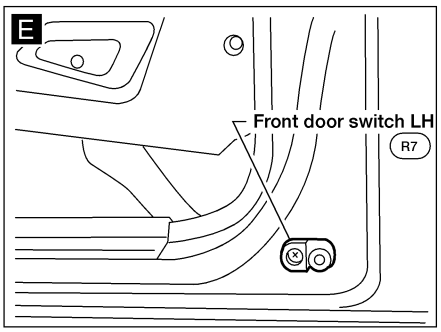
E
Front door switch LH
R7

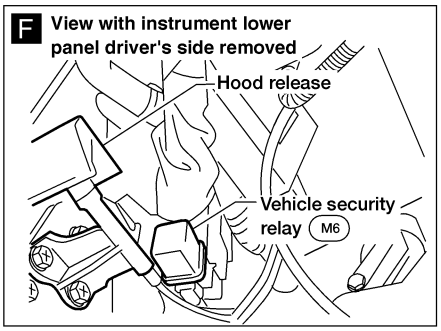
F
View with instrument lower
panel driver's side removed
Hood release
Vehicle security
relay
M6

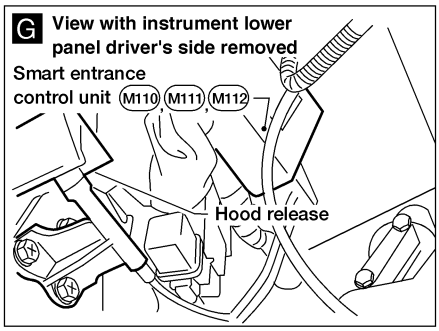
G
View with instrument lower
panel driver's side removed
Smart entrance
control unit
M110
M111
M112
Hood release

WEL468A

System Description

NEEL0197

DESCRIPTION

NEEL0197S01

1. Operation Flow

NEEL0197S0101

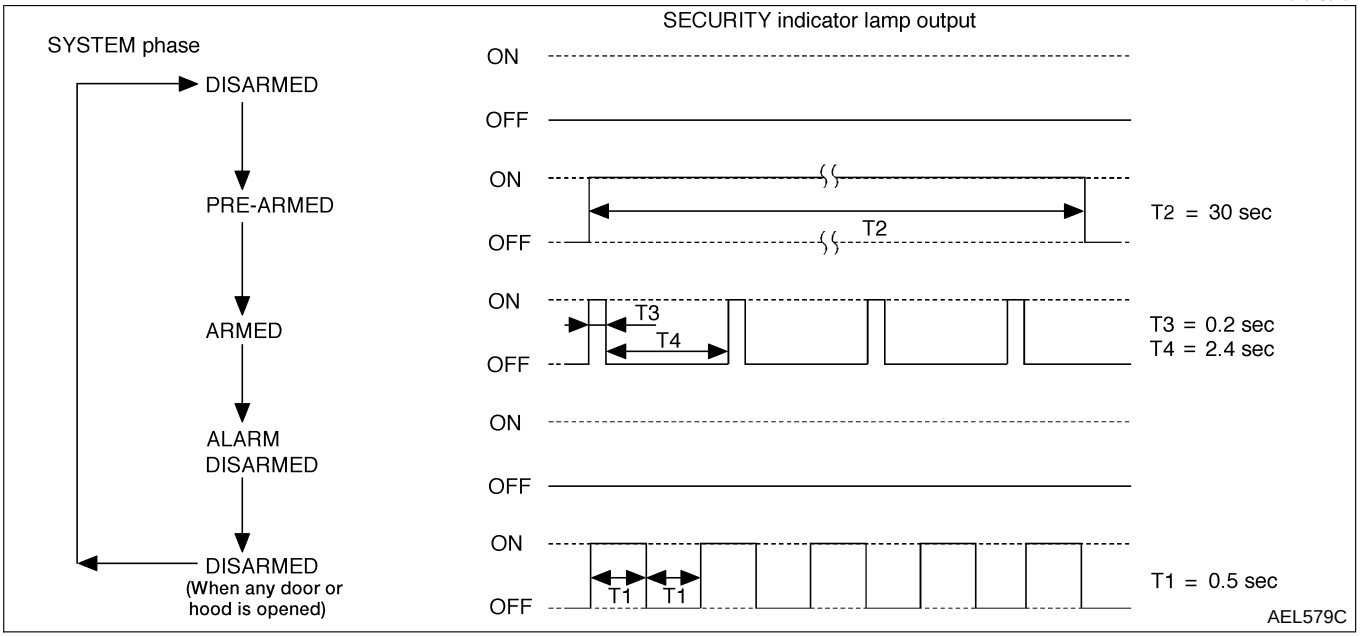

2. Setting the Vehicle Security System

NEEL0197S0102

Initial condition

1) Close all doors.
2) Close hood.

Disarmed phase

The vehicle security system is in the disarmed phase when any door(s) or hood is opened. The security indicator lamp blinks every second.

Pre-armed phase and armed phase

The vehicle security system turns into the “pre-armed” phase when hood and all doors are closed and the doors are locked by key or multi-remote controller. (The security indicator lamp illuminates.)

After about 30 seconds, the system automatically shifts into the “armed” phase (the system is set). (The security indicator lamp blinks every 2.6 seconds.)

3. Canceling the Set Vehicle Security System

NEEL0197S0103

When the doors are unlocked with the key or multi-remote controller, the armed phase is canceled.

4. Activating the Alarm Operation of the Vehicle Security System

NEEL0197S0104

Make sure the system is in the armed phase. (The security indicator lamp blinks every 2.6 seconds.)

When the following operation 1) or 2) is performed, the horn and headlamps operate intermittently for about 50 seconds. (At the same time, the system disconnects the starting system circuit.)

1) Engine hood or any door is opened before unlocking door with key or multi-remote controller.
2) Door is opened without first using key or multi-remote controller.

POWER SUPPLY AND GROUND

NEEL0197S02

Power is supplied at all times

- through 7.5A fuse [No. 28, located in the fuse block (J/B)]
- to smart entrance control unit terminal 49
- to key switch terminal 1 and
- to security indicator lamp terminal 1.

With the ignition switch in the ACC or ON position, power is supplied

- through 7.5A fuse [No. 20, located in the fuse block (J/B)]
- to smart entrance control unit terminal 26.

With the ignition switch in the ON or START position, power is supplied

- through 10A fuse [No. 5, located in the fuse block (J/B)]
- to smart entrance control unit terminal 27.

Ground is supplied

- to smart entrance control unit terminals 43 and 64
- through body grounds M14 and M68.

INITIAL CONDITION TO ACTIVATE THE SYSTEM

NEEL0197S03

To activate the vehicle security system, the smart entrance control unit must receive signals indicating the doors and hood are closed and the doors are locked.
When a door is open, smart entrance control unit terminal 1, 2, or 3 (Crew Cab) receives a ground signal from the corresponding door switch.
When the hood is open, ground is supplied

- to smart entrance control unit terminal 6
- through hood switch terminal +
- through hood switch terminal –
- through body grounds E12 and E54.

When the doors are locked with key or multi-remote controller and none of the described conditions exist, the vehicle security system will automatically shift to armed phase.

VEHICLE SECURITY SYSTEM ACTIVATION (WITH KEY OR REMOTE CONTROLLER USED TO LOCK DOORS)

NEEL0197S04

If the key is used to lock doors, ground is supplied to smart entrance control unit terminal 11

- through front door key cylinder switch LH terminal 1 or
- through front door key cylinder switch LH terminal 2
- through body grounds M14 and M68.

If this signal or lock signal from remote controller is received by the smart entrance control unit, the vehicle security system will activate automatically.
Once the vehicle security system has been activated, smart entrance control unit terminal 38 supplies ground to security indicator lamp terminal 2.
The security lamp will illuminate for approximately 30 seconds and then blink.
The vehicle security system is now in armed phase.

VEHICLE SECURITY SYSTEM ALARM OPERATION

NEEL0197S05

The vehicle security system is triggered by

- opening a door
- opening the hood

Once the vehicle security system is in armed phase, if the smart entrance control unit receives a ground signal at terminal 1, 2, or 3 (Crew Cab) or 6 (hood switch), the vehicle security system will be triggered. The horn and headlamps operate intermittently and the starting system is interrupted.
With the ignition switch in the ON or START position, power is supplied

- through 10A fuse [No. 5, located in the fuse block (J/B)].
- to vehicle security relay terminal 2.

If the vehicle security system is triggered, ground is supplied

- to vehicle security relay terminal 1
- through smart entrance control unit terminal 40.

With power and ground supplied, starter motor circuit is interrupted. The starter motor will not crank and the engine will not start.
Power is supplied at all times

- through 10A fuse (No. 32, located in fuse and fusible link box)
- to vehicle security lamp relay terminal 2.

When the vehicle security system is triggered, power is supplied intermittently

- to vehicle security lamp relay terminal 1
- through smart entrance control unit terminal 39

When the vehicle security system is triggered, ground is supplied intermittently

- to horn relay terminal 2
- through smart entrance control unit terminal 42.

The horn and headlamps operate intermittently.
The alarm automatically turns off after 50 seconds but will reactivate if the vehicle is tampered with again.

VEHICLE SECURITY SYSTEM DEACTIVATION

NEEL0197S06

To deactivate the vehicle security system, a door must be unlocked with the key or remote controller.
When the key is used to unlock the door, smart entrance control unit terminal 10 receives a ground signal

- through front door key cylinder switch LH terminal 3
- through body grounds M14 and M68.

When the smart entrance control unit receives this signal or an unlock signal from remote controller, the vehicle security system is deactivated (disarmed phase).

PANIC ALARM OPERATION

NEEL0197S07

Multi-remote control system may or may not operate vehicle security system (horn and headlamps) as required.
When the multi-remote control system is triggered, power is supplied intermittently

- to vehicle security lamp relay terminal 1
- to smart entrance control unit terminal 39

When the multi remote control system is triggered, ground is supplied intermittently

- to horn relay terminal 2
- through smart entrance control unit terminal 42.

The horn and headlamps operate intermittently.
The alarm automatically turns off after 30 seconds or when smart entrance control unit receives any signal from multi-remote controller.

Circuit Diagram

NEEL0198

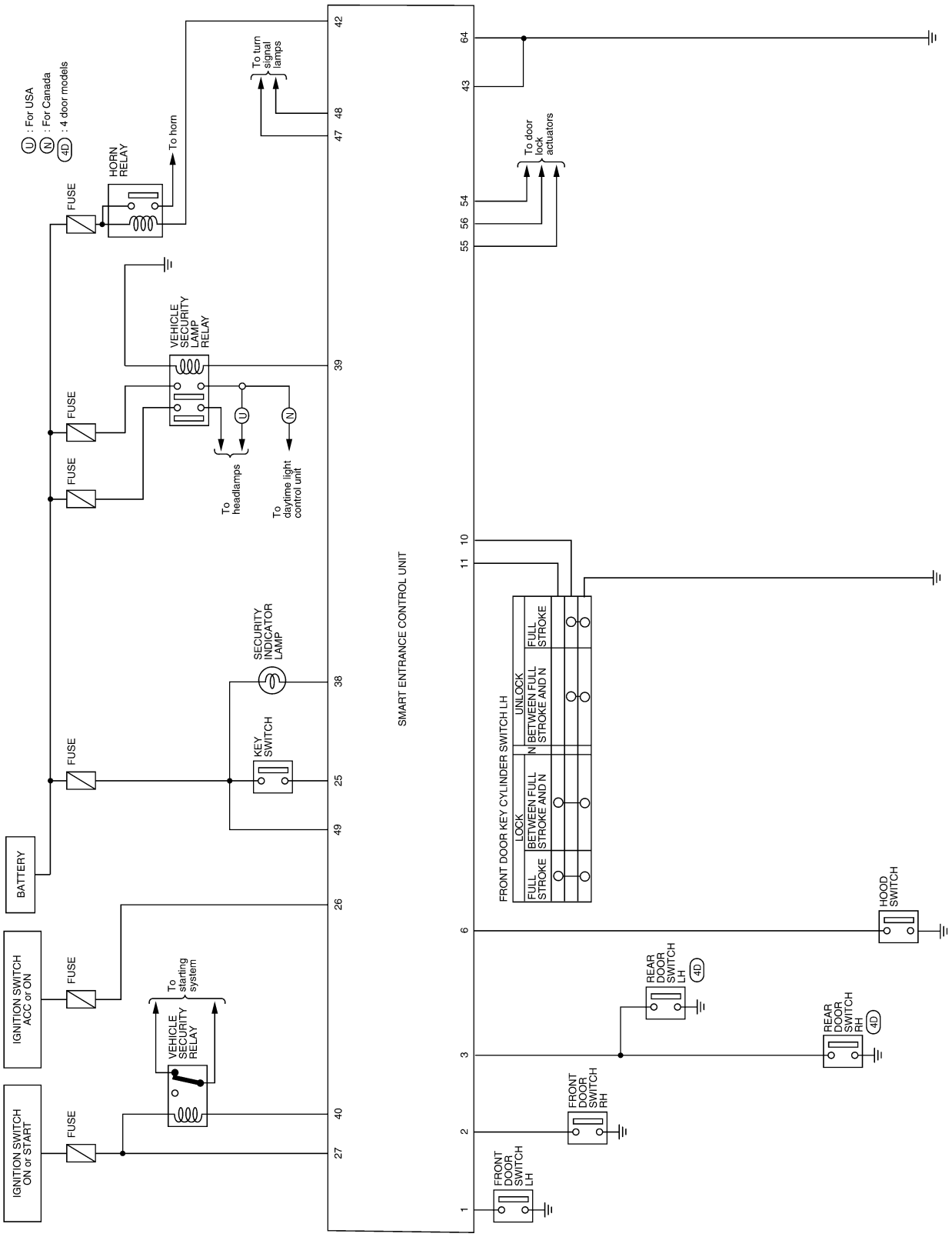

LEL229A

Wiring Diagram — VEHSEC —

NEEL0199

FIG. 1

NEEL0199S01

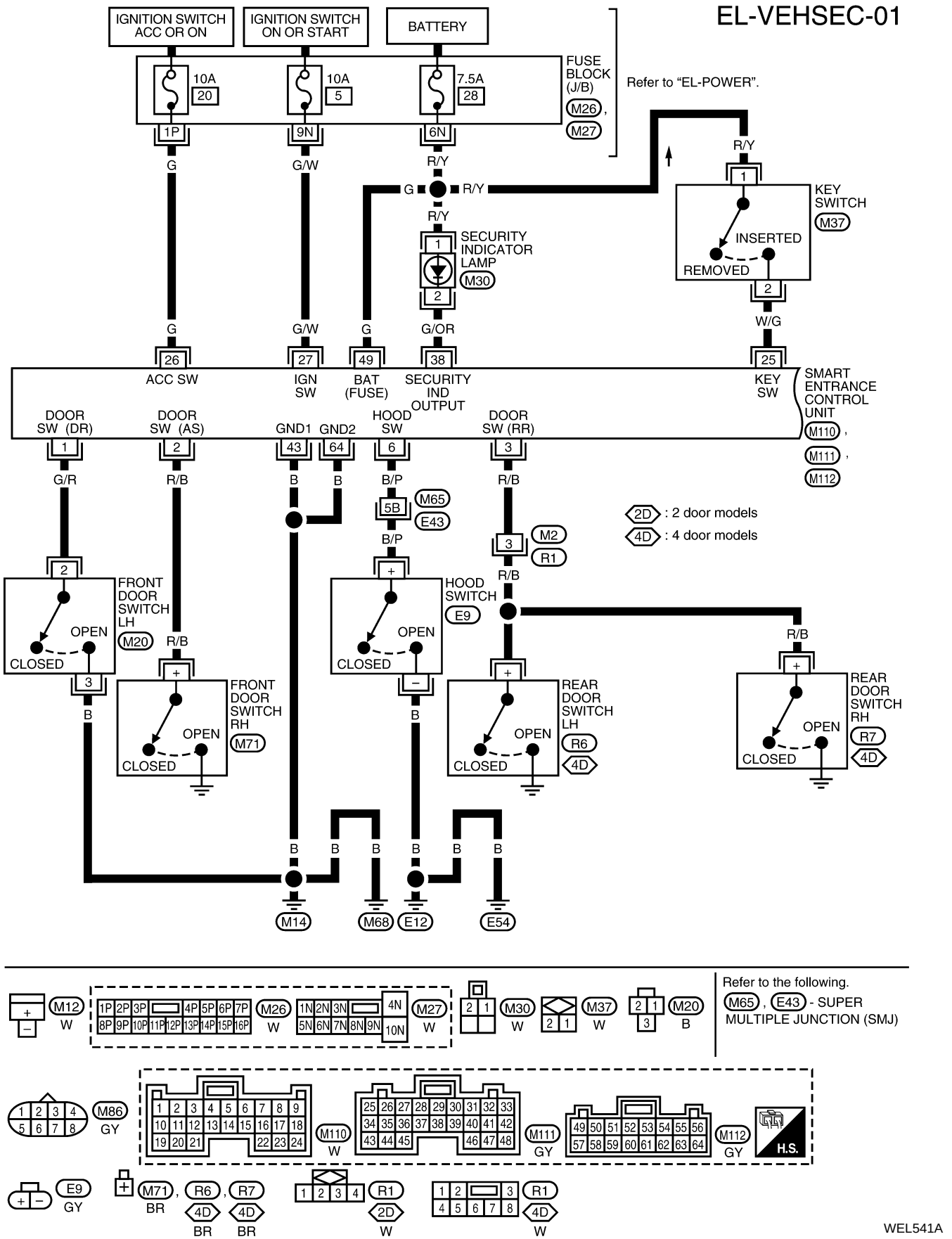

FIG. 2

NEEL0199S02

EL-VEHSEC-02

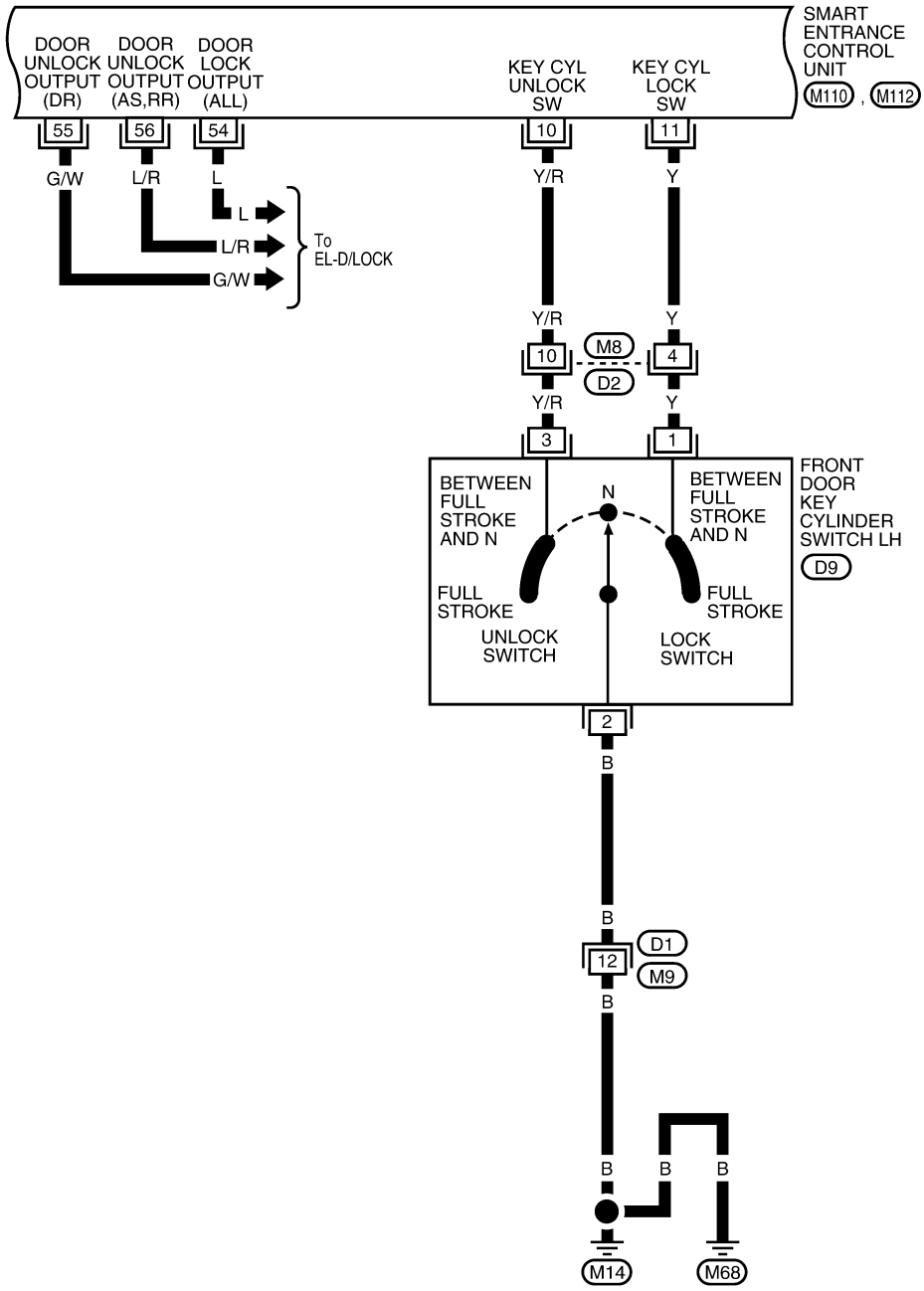

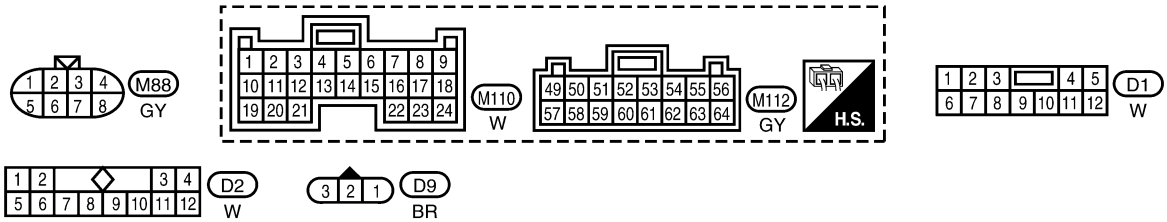

LEL783

FIG. 3

NEEL0199S03

EL-VEHSEC-03

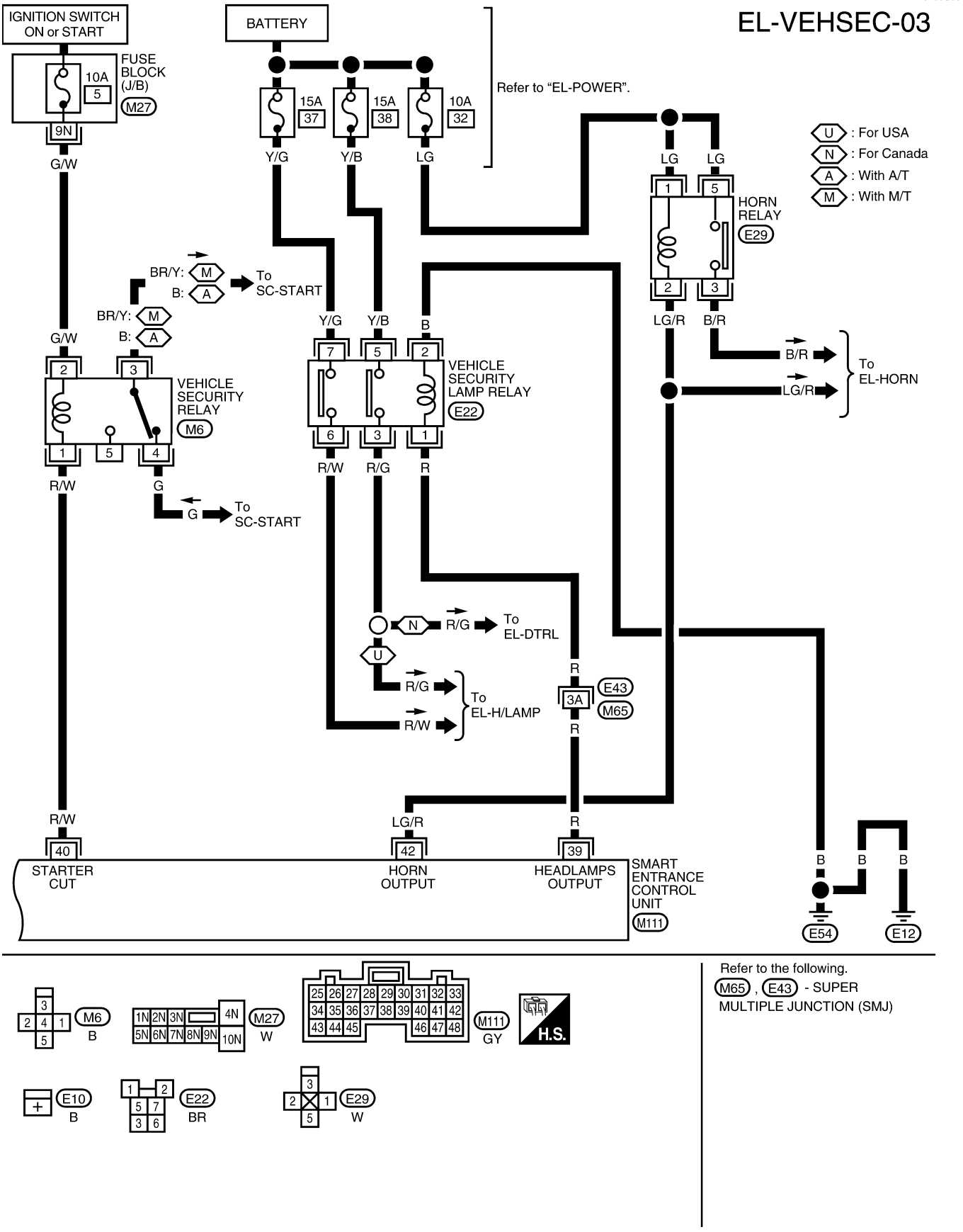

Refer to the following.
M65 , E43 - SUPER MULTIPLE JUNCTION (SMJ)

LEL232A

Trouble Diagnoses

NEEL0200

PRELIMINARY CHECK

NEEL0200S01

The system operation is canceled by turning ignition switch to ACC at any step between START and ARMED in the following flow chart.

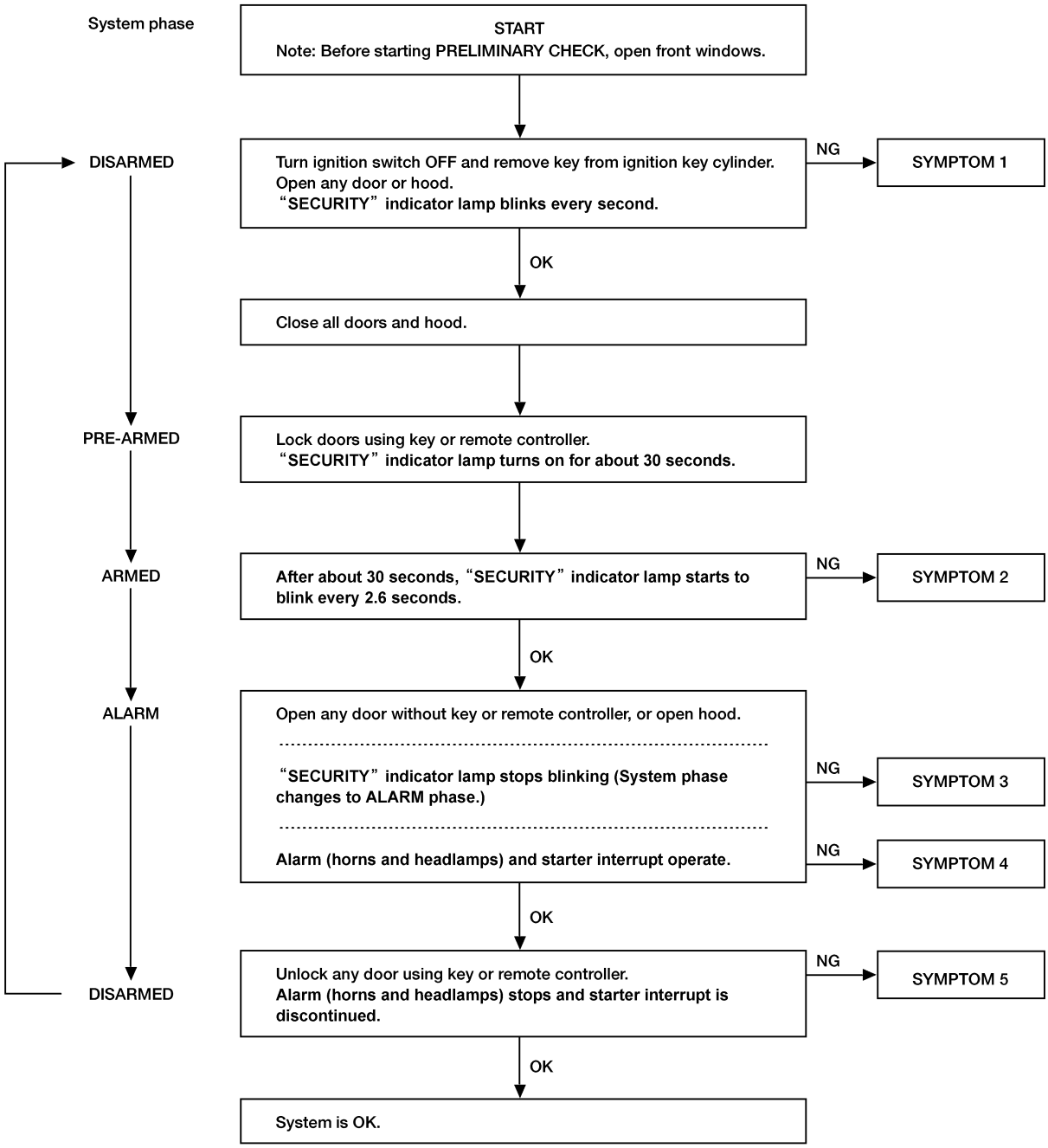

AEL763C

After performing "PRELIMINARY CHECK", go to "SYMPTOM CHART", EL-218.

SYMPTOM CHART

NEEL0200S02

REFERENCE PAGE (EL-)			217	219	220	224	225	226	228	229	197
SYMPTOM			PRELIMINARY CHECK	POWER SUPPLY AND GROUND CIRCUIT CHECK	DOOR AND HOOD SWITCH CHECK	SECURITY INDICATOR LAMP CHECK	DOOR KEY CYLINDER SWITCH CHECK	VEHICLE SECURITY HORN ALARM CHECK	VEHICLE SECURITY HEADLAMP ALARM CHECK	STARTER INTERRUPT SYSTEM CHECK	Check "MULTI-REMOTE CONTROL" system.
1	Vehicle security indicator does not turn ON or blink.		X	X		X					
2	Vehicle security system cannot be set by	All items	X	X	X						
		Door outside key	X				X				
		Multi-remote controller	X								X
3	*1 Vehicle security system does not alarm when ...	Any door is opened.	X		X						
		Front door LH or RH (regular and King Cab) is unlocked without using key or multi-remote controller.	X								
4	Vehicle security alarm does not activate.	All function	X	X	X						
		Horn alarm	X					X			
		Headlamp alarm	X						X		
		Starter interrupt	X							X	
5	Vehicle security system cannot be canceled by	Door outside key	X				X				
		Multi-remote controller	X								X

X : Applicable

*1: Make sure the system is in the armed phase.

Before starting trouble diagnoses above, perform "PRELIMINARY CHECK", EL-217.

Symptom numbers in the symptom chart correspond with those of "PRELIMINARY CHECK".

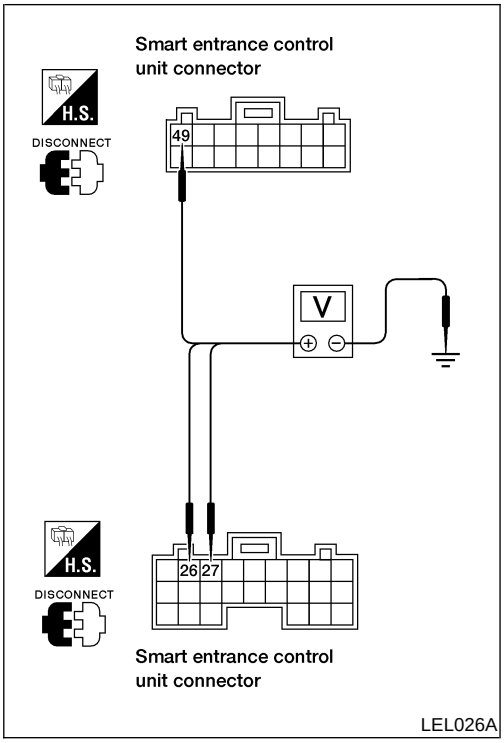

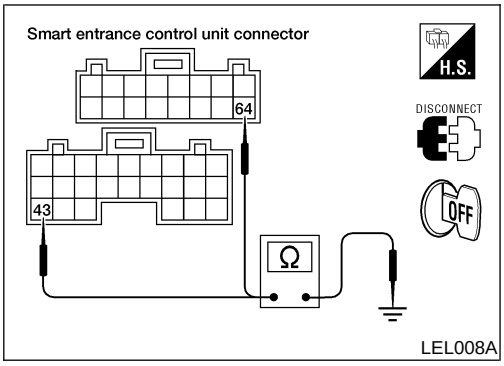

POWER SUPPLY AND GROUND CIRCUIT CHECK

NEEL0200S03

Power Supply Circuit Check

NEEL0200S0301

Terminals		Ignition switch position		
(+)	(−)	OFF	ACC	ON
M112 - 49 (G)	Ground	Battery voltage	Battery voltage	Battery voltage
M111 - 26 (G)	Ground	0V	Battery voltage	Battery voltage
M111 - 27 (G/W)	Ground	0V	0V	Battery voltage

Ground Circuit Check

NEEL0200S0302

Terminals	Continuity
M111 - 43 (B) - Ground	Yes
M112 - 64 (B) - Ground	

DOOR AND HOOD SWITCH CHECK

=NEEL0200S04

Door Switch Check

NEEL0200S0401

1	PRELIMINARY CHECK

1. Turn ignition switch OFF and remove key from ignition key cylinder.
2. Close all doors and hood.
   "SECURITY" indicator lamp should turn off.
3. Open any passenger door.
   "SECURITY" indicator lamp should blink every 2.6 seconds.

OK or NG

OK	▶	Door switch is OK. Check hood switch. Refer to "Hood Switch Check", EL-222.
NG	▶	GO TO 2.

2	CHECK DOOR SWITCH INPUT SIGNAL

Check voltage between smart entrance control unit connector M110 terminals 1 (G/R), 2 (R/B), and 3 (R/B) (Crew Cab) and ground.

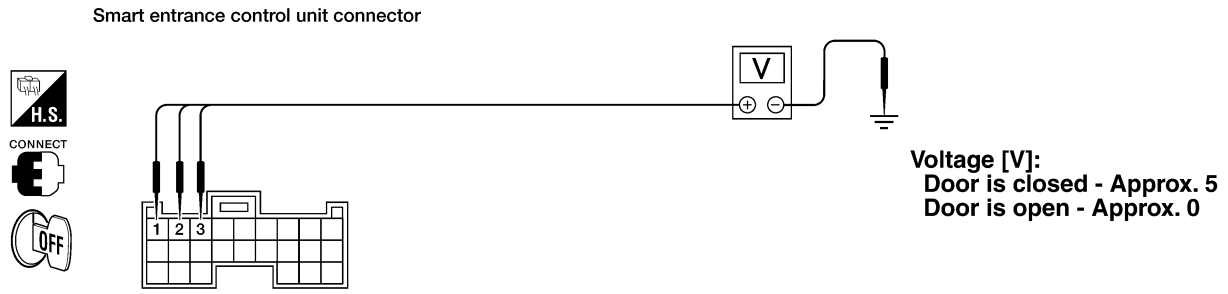

WEL517A

Refer to "Wiring Diagram", EL-214.

OK or NG

OK	▶	Door switch is OK. Check hood switch. Refer to "Hood Switch Check", EL-222.
NG	▶	GO TO 3.

3	CHECK DOOR SWITCH

1. Disconnect door switch harness connector.
2. Check continuity between door switch terminals.

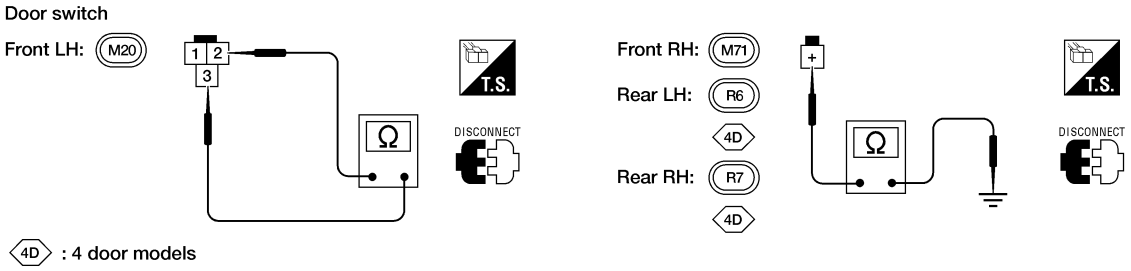

Continuity:

Front door switch LH terminals 2 - 3

Door switch is pressed - No

Door switch is released - Yes

Front door switch RH, rear door switch LH or RH terminal + - ground

Door switch is pressed - No

Door switch is released - Yes

OK or NG

OK	▶	**Check the following.** ● Front door switch LH ground circuit or door switch ground condition ● Harness for open or short between smart entrance control unit and door switch
NG	▶	Replace door switch.

Hood Switch Check

=NEEL0200S0402

1	PRELIMINARY CHECK	
1. Turn ignition switch OFF and remove key from ignition key cylinder. 2. Close all doors and hood. **"SECURITY" indicator lamp should turn off.** 3. Open hood. **"SECURITY" indicator lamp should blink every 2.6 seconds.**		
OK or NG		
OK	▶	Hood switch is OK.
NG	▶	GO TO 2.

2	CHECK HOOD SWITCH FITTING CONDITION	
OK or NG		
OK	▶	GO TO 3.
NG	▶	Adjust installation of hood switch or hood.

3	CHECK HOOD SWITCH INPUT SIGNAL	
Check voltage between smart entrance control unit connector M110 terminal 6 (B/P) and ground.		

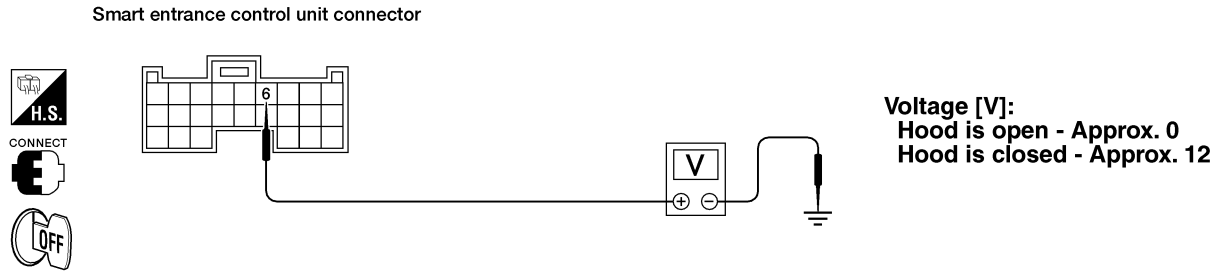

LEL029A

Refer to "Wiring Diagram", EL-214.

OK or NG		
OK	▶	Hood switch is OK.
NG	▶	GO TO 4.

4	CHECK HOOD SWITCH

1. Disconnect hood switch harness connector.
2. Check continuity between hood switch terminals + and –.

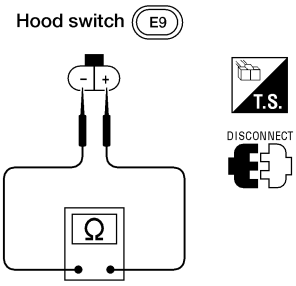

AEL430B

Continuity:
Condition: Pressed
No
Condition: Released
Yes

OK or NG

OK	▶	**Check the following.** ● Hood switch ground circuit ● Harness for open or short between smart entrance control unit and hood switch
NG	▶	Replace hood switch.

SECURITY INDICATOR LAMP CHECK

=NEEL0200S05

1	CHECK INDICATOR LAMP OUTPUT SIGNAL

1. Disconnect smart entrance control unit harness connector.
2. Check voltage between smart entrance control unit harness connector M111 terminal 38 (G/OR) and ground.

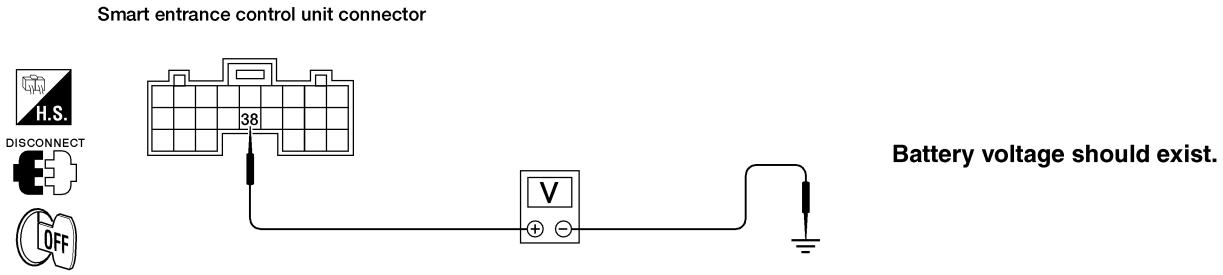

LEL030A

Refer to "Wiring Diagram", EL-214.

OK or NG

OK	▶	Security indicator lamp is OK.
NG	▶	GO TO 2.

2	CHECK INDICATOR LAMP

OK or NG

OK	▶	GO TO 3.
NG	▶	Replace indicator lamp.

3	CHECK POWER SUPPLY CIRCUIT FOR INDICATOR LAMP

1. Disconnect security indicator lamp harness connector.
2. Check voltage between security indicator lamp harness connector terminal 1 and ground.

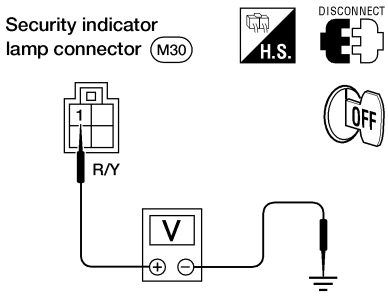

AEL145C

Does battery voltage exist?

Yes	▶	Check harness for open or short between security indicator lamp and smart entrance control unit.
No	▶	**Check the following.** ● 7.5A fuse [No. 28, located in fuse block (J/B)] ● Harness for open or short between security indicator lamp and fuse

DOOR KEY CYLINDER SWITCH CHECK

=NEEL0200S07

1 CHECK DOOR KEY CYLINDER SWITCH INPUT SIGNAL (LOCK/UNLOCK SIGNAL)

Check voltage between smart entrance control unit harness connector M111 terminal 11 (Y) or 10 (Y/R) and ground.

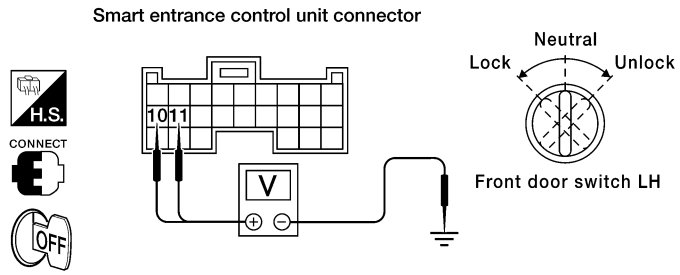

Terminals (+)	Terminals (–)	Key position	Voltage [V]
11	Ground	Neutral	Approx. 5
		Lock	0
10	Ground	Neutral	Approx. 5
		Unlock	0

WEL518A

Refer to "Wiring Diagram", EL-215.

OK or NG

OK	▶	Door key cylinder switch is OK.
NG	▶	GO TO 2.

2 CHECK DOOR KEY CYLINDER SWITCH

1. Disconnect door key cylinder switch harness connector.
2. Check continuity between door key cylinder switch terminals.

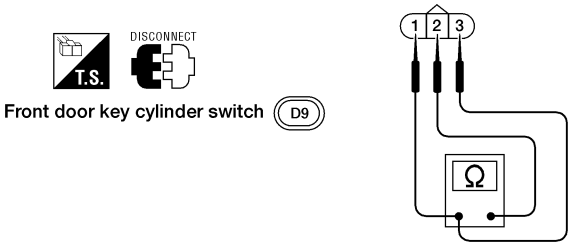

Terminals	Key position	Continuity
1 – 2	Neutral	No
	Lock	Yes
3 – 2	Neutral	No
	Unlock	Yes

LEL032A

OK or NG

OK	▶	**Check the following.** ● Door key cylinder switch ground circuit ● Harness for open or short between smart entrance control unit and door key cylinder switch
NG	▶	Replace door key cylinder switch.

HORN ALARM CHECK

=NEEL0200S09

1	CHECK HORN ALARM OPERATION

1. Disconnect smart entrance control unit harness connector.
2. Apply ground to smart entrance control unit harness connector M111 terminal 42 (LG/R).

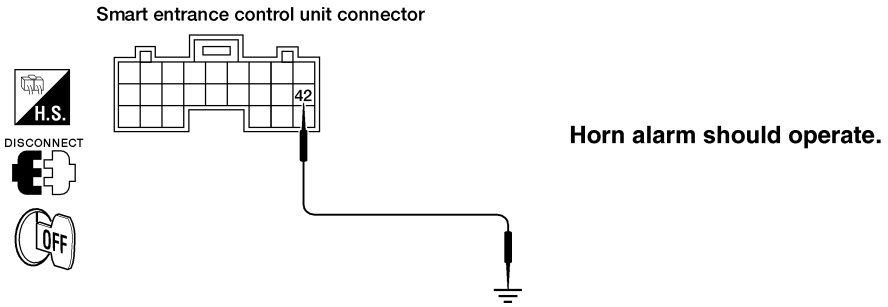

LEL033A

Refer to "Wiring Diagram", EL-216.

OK or NG

OK	▶	Horn alarm is OK.
NG	▶	GO TO 2.

2	CHECK HORN RELAY

Check horn relay.

OK or NG

OK	▶	GO TO 3.
NG	▶	Replace.

3	CHECK POWER SUPPLY FOR HORN RELAY

1. Disconnect horn relay harness connector.
2. Check voltage between horn relay harness connector E29 terminal 2 (LG/R) and ground.

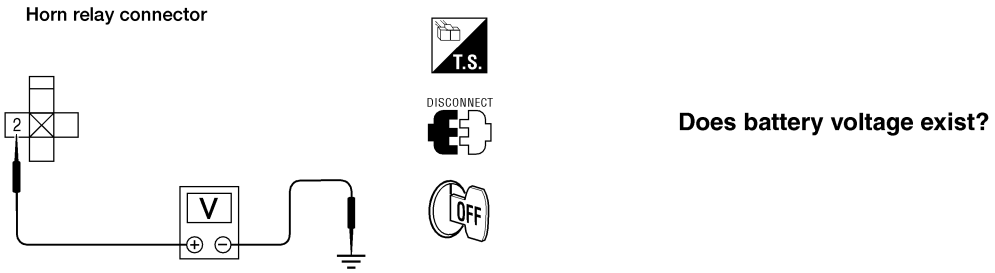

WEL371A

Does battery voltage exist?

Yes	▶	GO TO 4.
No	▶	**Check the following.** ● 10A fuse (No. 32, located in the fuse and fusible link box) ● Harness for open or short between vehicle security horn relay and fuse

4	CHECK HORN RELAY CIRCUIT

1. Disconnect horn relay harness connector.
2. Check voltage between horn relay harness connector E29 terminals 3 (B) and 5 (LG/R).
   Battery voltage should exist.

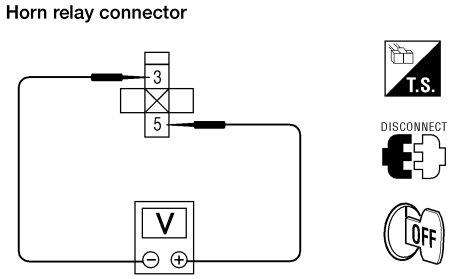

WEL372A

OK or NG

OK	▶	Check harness for open or short between vehicle security horn relay and smart entrance control unit.
NG	▶	Check harness for open or short.

VEHICLE SECURITY HEADLAMP ALARM CHECK

=NEEL0200S10

1	CHECK VEHICLE SECURITY LAMP CIRCUIT

1. Disconnect smart entrance control unit harness connector.
2. Check continuity between smart entance control unit M111 terminal 39 (R) and ground.

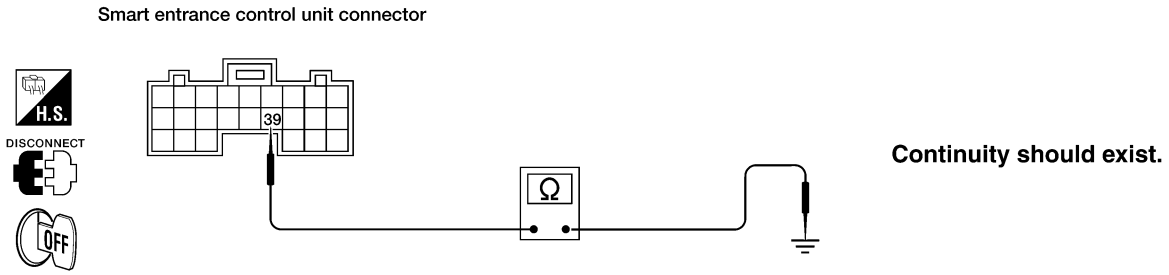

LEL363A

Refer to "Wiring Diagram", EL-216.

OK or NG

OK	▶	GO TO 2.
NG	▶	**Check the following** ● Harness for open or short between smart entrance control unit and vehicle security lamp relay ● Vehcile security lamp relay ground circuit ● Vehcile security lamp relay.

2	CHECK VEHICLE SECURITY LAMP RELAY CIRCUIT

1. Apply vehicle security lamp relay harness connector E22 terminal 3 (R/G) to 5 (R/W).
   Vehicle security headlamp should operate.
2. Apply vehicle security lamp relay harness connector E22 terminal 6 (R/W) to 7 (Y/G).
   Vehicle security headlamp should operate.

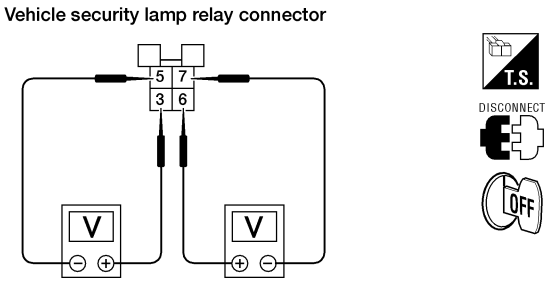

LEL068A

OK or NG

OK	▶	GO TO 3.
NG	▶	**Check the following** ● Harness for open or short between vehicle security lamp relay and headlamps ● Harness for open or short between vehicle security lamp relay and fuse

3	CHECK VEHICLE SECURITY LAMP RELAY

Check vehicle security lamp relay.

OK or NG

OK	▶	Replace smart entrance control unit.
NG	▶	Replace vehicle security lamp relay.

STARTER INTERRUPT SYSTEM CHECK

=NEEL0200S11

1	CHECK STARTER MOTOR INTERRUPT SIGNAL

1. Turn ignition switch ON.
2. Check voltage between smart entrance control unit connector M111 terminal 40 (R/W) and ground.

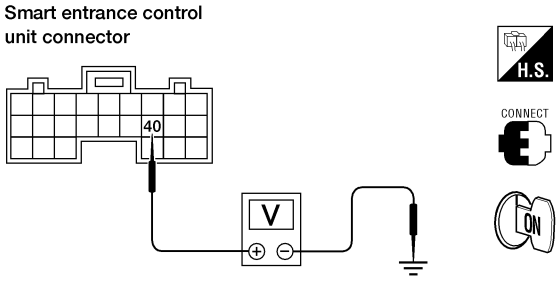

Voltage [V]:
Except starter interrupted phase - Approx. 12
Starter interrupted phase - Approx. 0

LEL057A

Refer to "Wiring Diagram", EL-216.

OK or NG

OK	▶	GO TO 2.
NG	▶	**Check the following.** ● 10A fuse [No. 5, located in fuse block (J/B)] ● Harness for open or short between vehicle security relay and fuse ● Harness for open or short between smart entrance control unit and vehicle security relay

2	CHECK VEHICLE SECURITY RELAY

Check vehicle security relay.

OK or NG

OK	▶	Check system again.
NG	▶	Replace relay.

Description

NEEL0124

The following systems are controlled by the smart entrance control unit.

- Warning chime
- Power window retained power
- Power door lock
- Multi-remote control system
- Vehicle security system
- Room lamp timer
- Rear window defogger timer
- Battery saver

For detailed description and wiring diagrams, refer to the relevant pages for the each system.
The smart entrance control unit receives data from the switches and sensors to control their corresponding system relays and actuators.

System	Input	Output
Warning chime	Key switch (insert) Ignition switch (ON) Lighting switch (1st) Seat belt buckle switch Front door switch LH	Warning chime
Power window retained power	Ignition switch Front door switch LH	Power window relay
Power door lock	Door lock/unlock switch Key switch (insert) Door switches Door key cylinder switch (lock/unlock)	Door lock actuator
Multi-remote control	Key switch (insert) Ignition switch (ACC) Door switch Door lock/unlock switches Antenna (remote controller signal)	Horn relay Vehicle security lamp relay Door lock actuator
Vehicle security	Ignition switch (ACC, ON) Door switch Hood switch Door lock/unlock switches Door key cylinder switch (lock/unlock)	Vehicle security lamp relay Vehicle security relay (Starter interrupt) Security indicator
Room lamp timer	Door switches Ignition switch Key switch (insert) Door lock/unlock switches	Room lamp
Rear window defogger timer	Ignition switch (ON) Rear window defogger switch	Rear window defogger relay
Battery saver	Ignition switch (ON) Door switches Key switch (insert)	Room lamp Map lamp

Circuit Diagram

NEEL0125

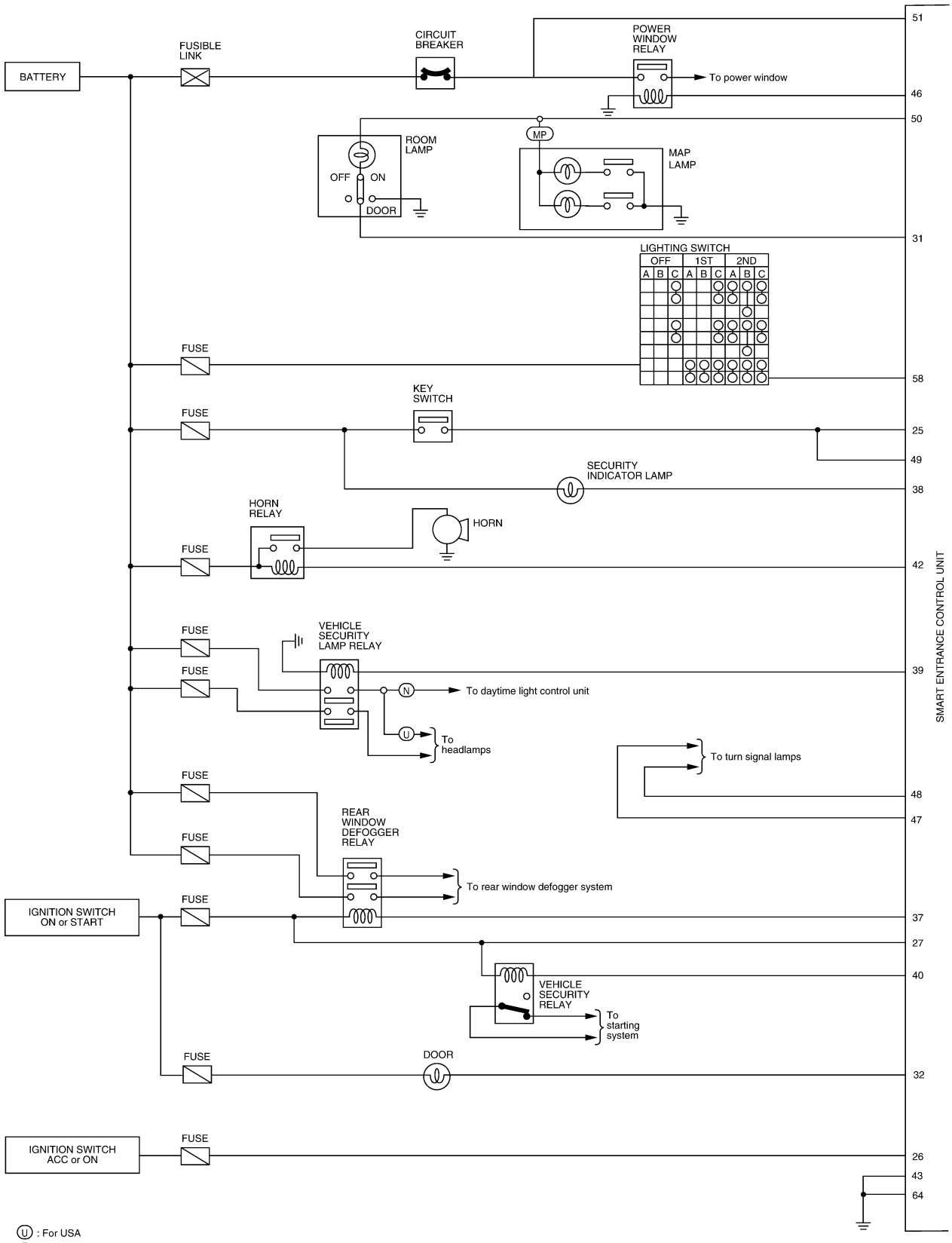

U : For USA
N : For Canada
MP : With map lamps

LEL785

Circuit Diagram (Cont'd)

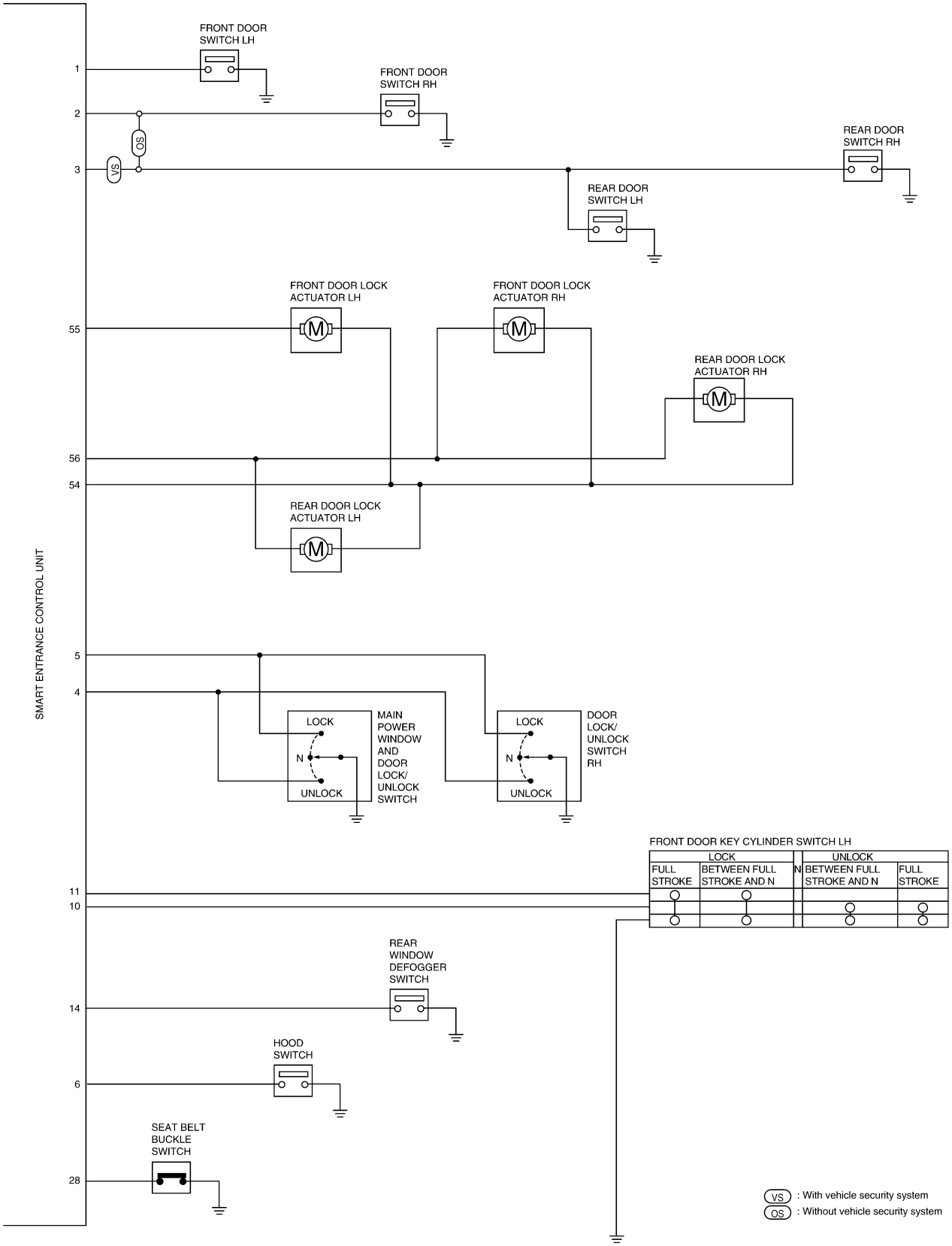

WEL088B

Smart Entrance Control Unit Inspection Table

NEEL0126

Terminal No.	Wire color	Connections	Operated condition	Voltage (Approx.)
1	G/R	Front door switch LH	OFF (Closed) → ON (Open)	5V → 0V
2	R/B	Front door switch RH and rear door switch LH and RH (Crew Cab without vehicle security system)	OFF (Closed) → ON (Open)	5V → 0V
3	R/B	Rear door switch LH and RH (Crew Cab with vehicle security system)	OFF (Closed) → ON (Open)	5V → 0V
4	BR	Main power window and door lock/unlock switch, door lock/ unlock switch RH	Neutral → Unlock	5V → 0V
5	LG/R	Main power window and door lock/unlock switch, door lock/ unlock switch RH	Neutral → Lock	5V → 0V
6	B/P	Hood switch	ON (Open) → OFF (Closed)	0V → 12V
10	Y/R	Front door key cylinder unlock switch LH	OFF (Neutral) → ON (Unlock)	5V → 0V
11	Y	Front door key cylinder lock switch LH	OFF (Neutral) → ON (Lock)	5V → 0V
14	G/B	Rear window defogger switch	OFF → ON	12V → 0V
25	W/G	Ignition key switch (Insert)	Key inserted → Key removed from ignition key cylinder	12V → 0V
26	G	Ignition switch (ACC)	ACC position	12V
27	G/W	Ignition switch (ON)	Ignition key is in ON position	12V
28	B/P	Seat belt buckle switch	Unfastened → Fastened (Ignition key is in ON position)	0V → 12V
31	R/B	Room lamp	When any door switch is in OPEN (door is open) position (Interior lamp switch in DOOR position)	12V → 0V
32	R/B	Door ajar indicator lamp	OFF → ON (Ignition key is in ON position)	12V → 0V
37	G/R	Rear window defogger relay	OFF → ON (Ignition key is in ON position)	12V → 0V
38	G/OR	Security indicator lamp	Turns OFF → Turns ON	12V → 0V
39	R	Vehicle security lamp relay	When panic alarm is operated using remote controller or when alarm is activated	12V → 0V
40	R/W	Vehicle security relay (Starter cut)	OFF → ON (Ignition key is in ON position)	12V → 0V
42	LG/R	Horn relay	When panic alarm is operated using remote controller or when alarm is activated	12V → 0V
43	B	Ground	—	—
46	G/W	Power window relay	Ignition key is in ON position → 45 seconds after ignition key is turned to OFF position	12V → 0V
47	GY	Turn signal lamp LH	When doors are locked using remote controller	12V → 0V
48	P/B	Turn signal lamp RH	When doors are locked using remote controller	12V → 0V
49	G	Power source (Fuse)	—	12V
50	R/G	Battery saver (Room lamp)	Turns OFF → Turns ON	12V → 0V
51	W/R	Power source (C/B)	—	12V

Smart Entrance Control Unit Inspection Table (Cont'd)

Terminal No.	Wire color	Connections	Operated condition		Voltage (Approx.)
54	L	Front door lock actuator LH and RH, rear door lock actuator LH and RH (Crew Cab)	Main power window and door lock/unlock switch, door lock/unlock switch RH	Lock	12V
				Neutral, unlock	0V
55	G/W	Front door lock actuator LH	Main power window and door lock/unlock switch, door lock/unlock switch RH	Unlock	12V
				Neutral, lock	0V
56	PU* L/R**	Front door lock actuator RH, rear door lock actuator LH and RH (Crew Cab)	Main power window and door lock/unlock switch, door lock/unlock switch RH	Unlock	12V
				Neutral, lock	0V
58	L/R	Lighting switch	1ST, 2ND positions: ON → OFF		12V → 0V
64	B	Ground	—		—

* Regular Cab and King Cab
** Crew Cab

Engine Compartment

NEEL0129

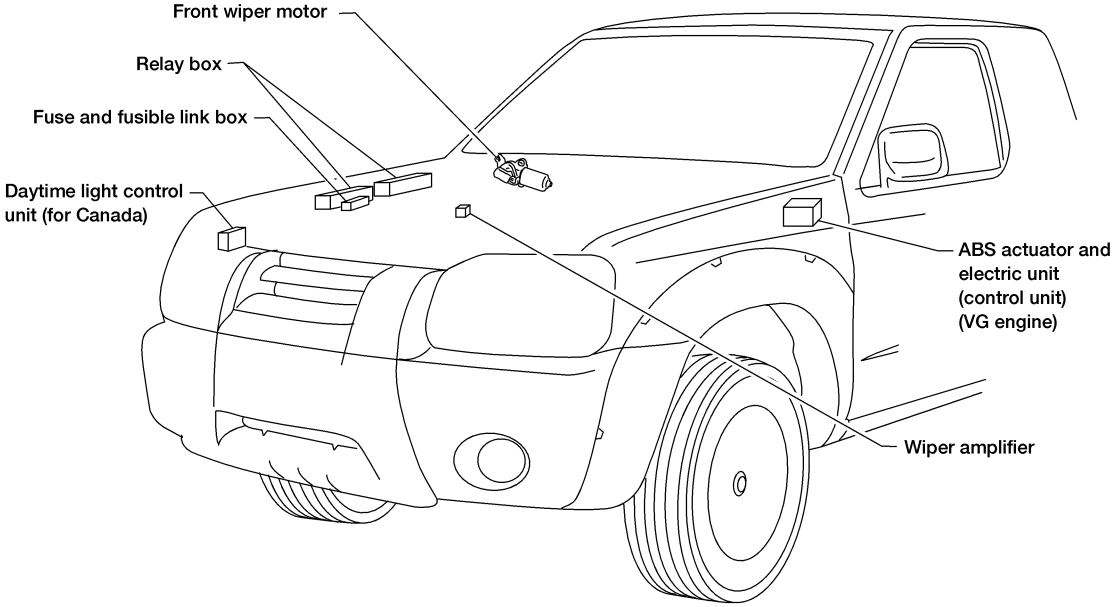

KA24DE and VG33E

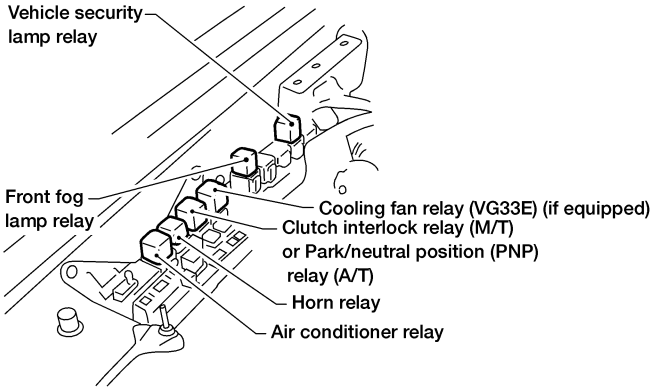

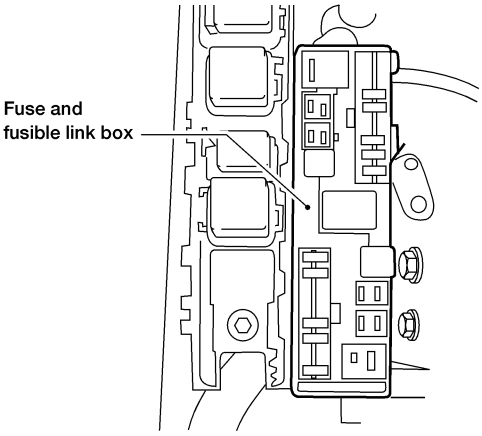

VG33ER

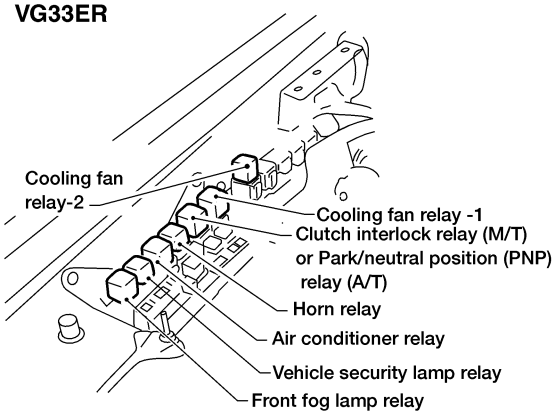

WEL452A

Passenger Compartment

NEEL0130

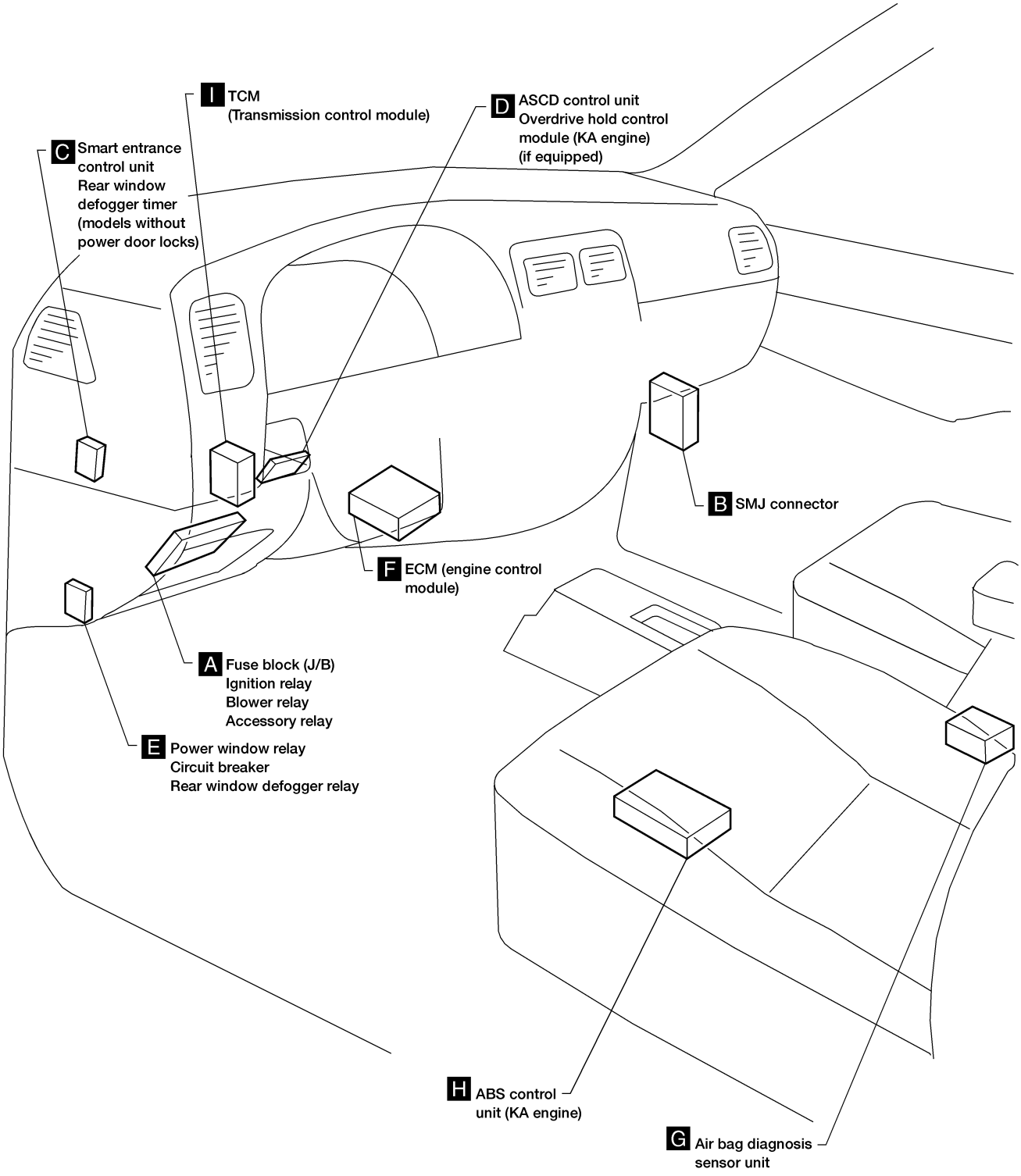

WEL508A

A

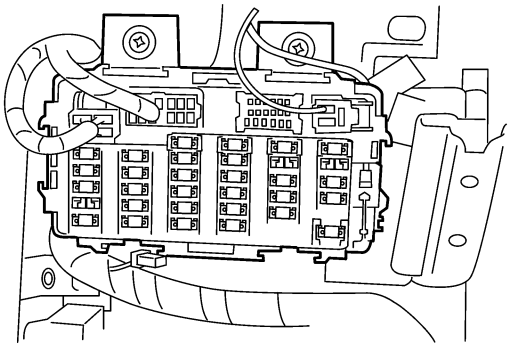

Rear view of fuse block (J/B)

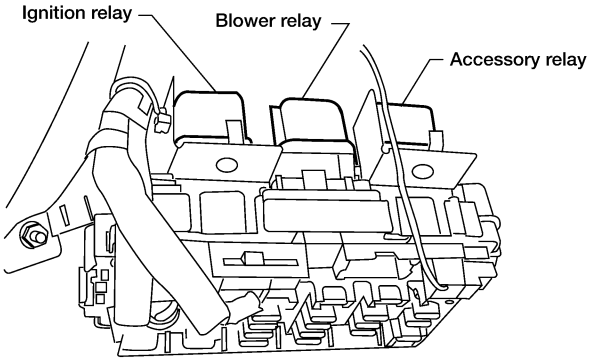

B

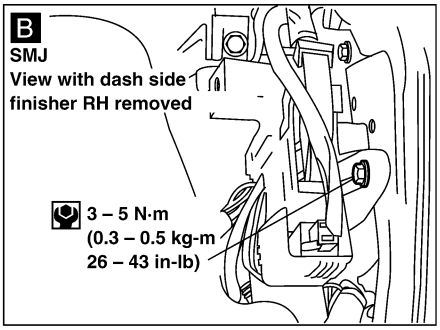

C

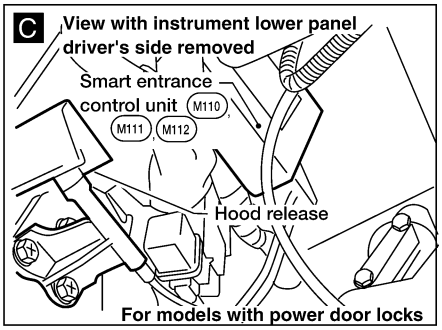

D

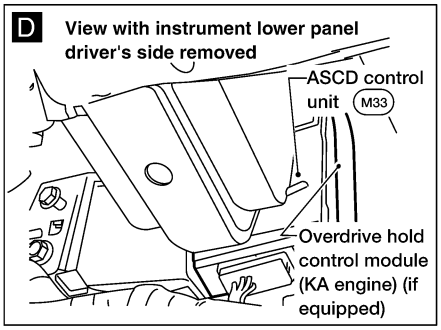

E

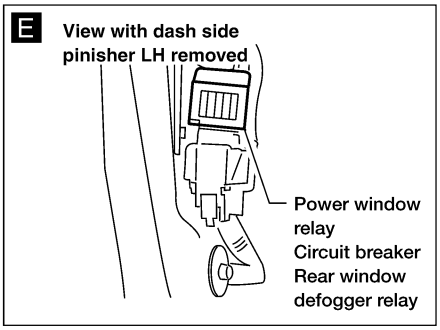

F

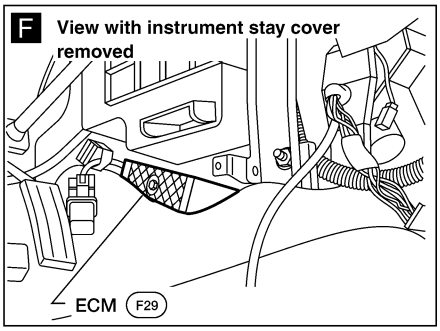

G

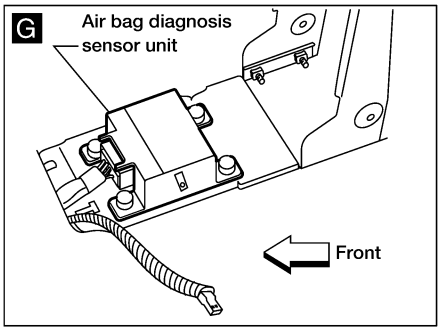

H

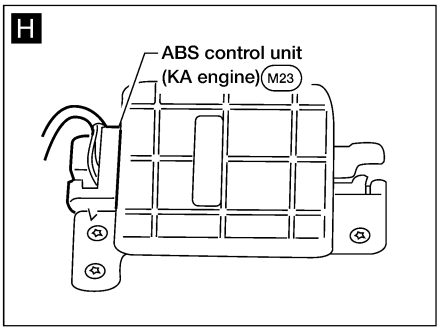

I

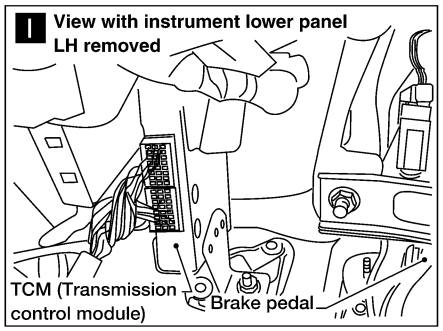

WEL509A

How to Read Harness Layout

NEEL0172

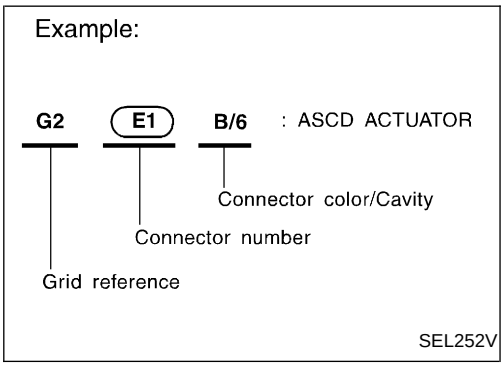

The following Harness Layouts use a map style grid to help locate connectors on the drawings:

- Main Harness and Body No. 2 Harness
- Engine Room Harness (Engine Compartment)

TO USE THE GRID REFERENCE

NEEL0172S01

1. Find the desired connector number on the connector list.
2. Find the grid reference.
3. On the drawing, find the crossing of the grid reference letter column and number row.
4. Find the connector number in the crossing zone.
5. Follow the line (if used) to the connector.

CONNECTOR SYMBOL

NEEL0172S02

Main symbols of connector (in Harness Layout) are indicated below.

Connector type	Water proof type		Standard type	
	Male	Female	Male	Female
• Cavity: Less than 4 • Relay connector				
• Cavity: From 5 to 8				
• Cavity: More than 9				
• Ground terminal etc.	—			

Outline

NEEL0173

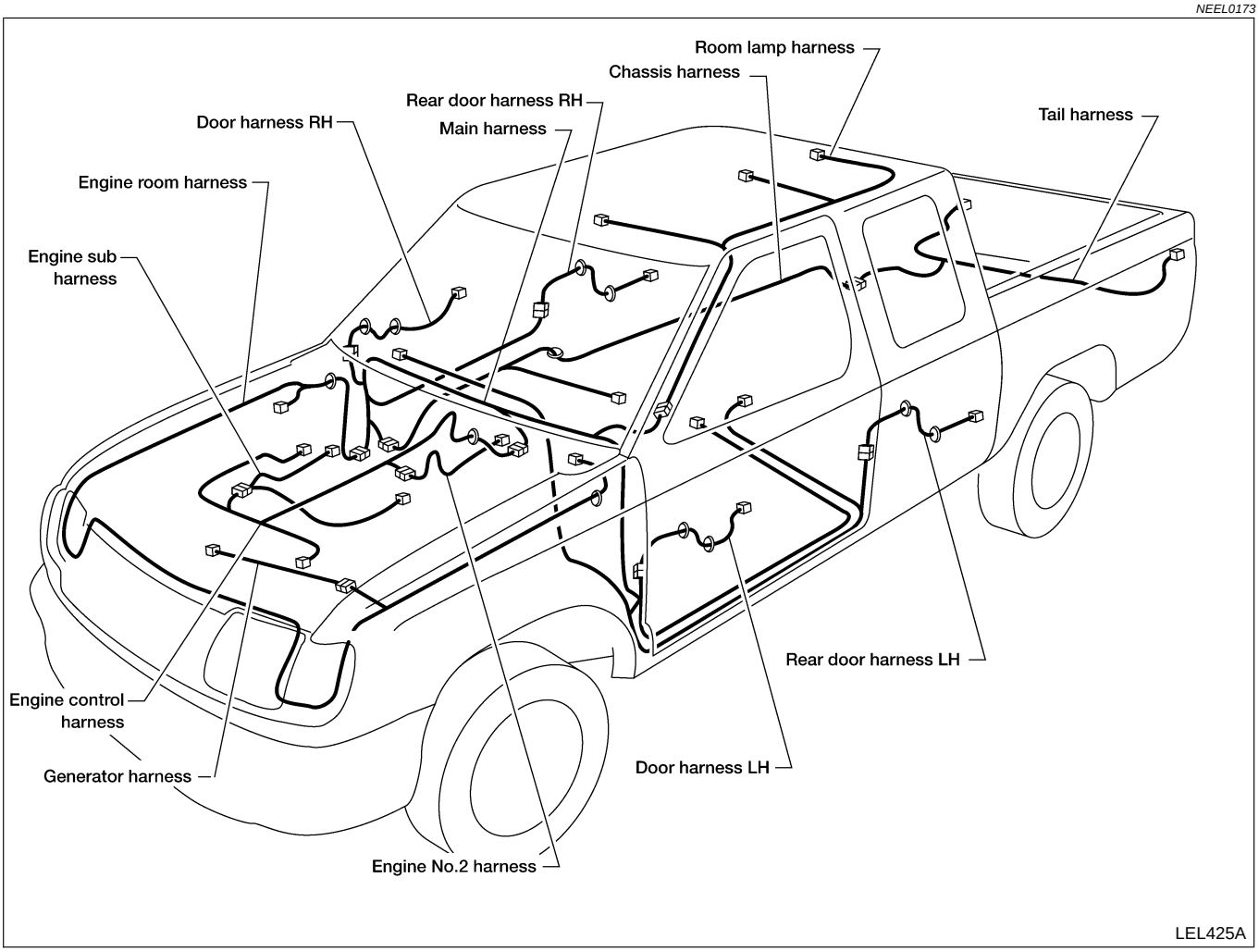

NOTE:
For detailed ground distribution information, refer to “GROUND DISTRIBUTION”, EL-17.

Main Harness (KA24DE Models)

NEEL0174

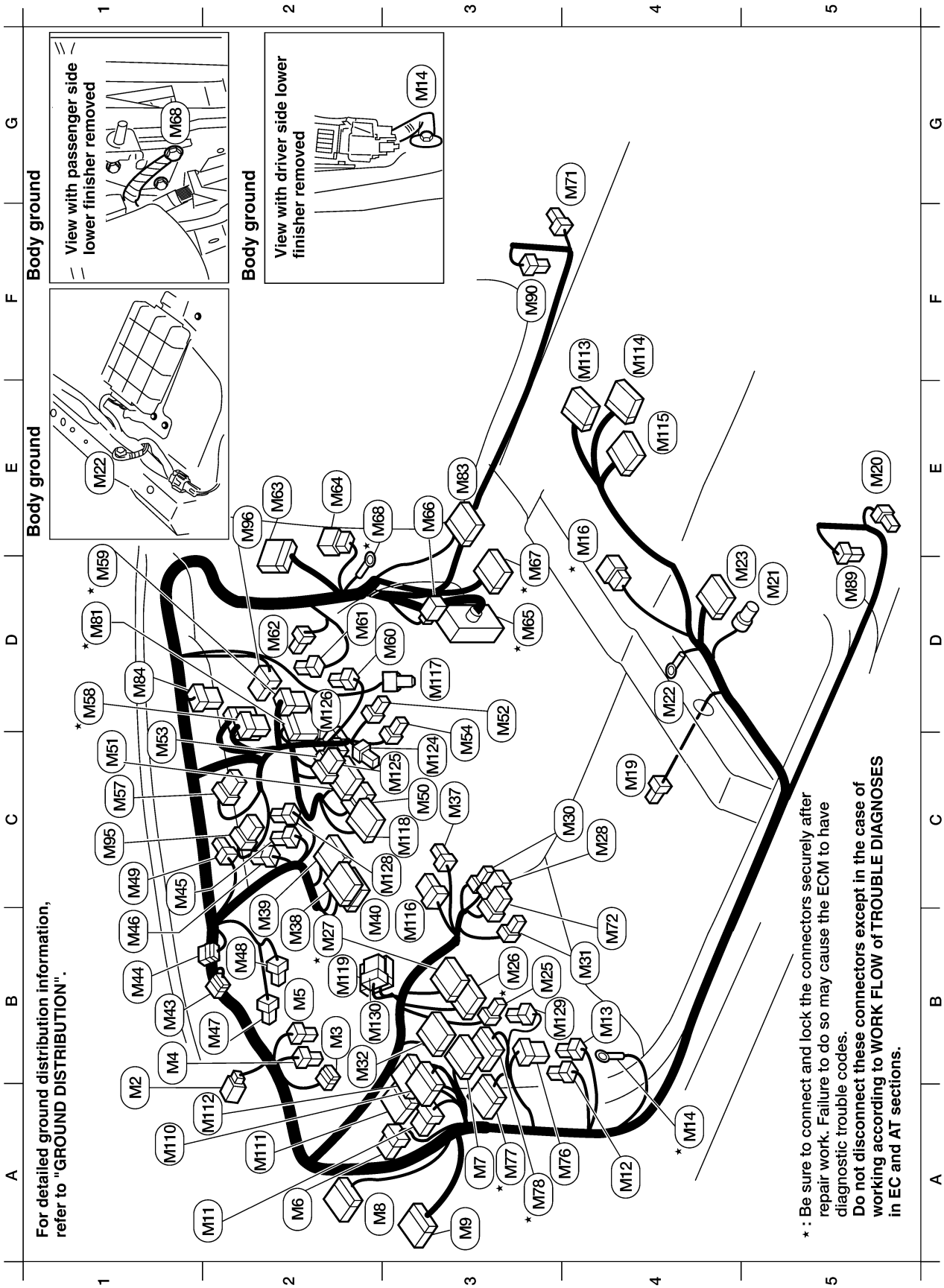

WEL064B

A1	M2	W/4	: To R1
B1	M3	GY/4	: Diode -3 (with A/T and ASCD)
B1	M4	L/2	: ASCD clutch switch (with M/T)
B2	M5	L/2	: Clutch interlock switch (with M/T)
A2	M6	B/5	: Vehicle security relay (with vehicle security system)
A3	M7	BR/12	: To E53
A2	M8	W/8	: To D2
A3	M9	W/12	: To D1
A2	M11	W/8	: Warning chime unit (without power door locks)
A4	M12	W/2	: Circuit breaker (with power door locks)
B4	M13	L/4	: Power window relay (with power windows)
A4	M14	-	: Body ground
D4*	M16	W/6	: To C15
C4	M19	W/3	: Seat belt buckle switch
E5	M20	B/3	: Front door switch LH
D5*	M21	GY/4	: Heated oxygen sensor 2 (rear)
D4	M22	-	: Body ground
D5	M23	GY/17	: ABS control unit
B3	M25	L/6	: ABS check connector
B3*	M26	W/16	: Fuse block (J/B)
B2*	M27	W/10	: Fuse block (J/B)
C4	M28	W/3	: Illumination control switch
C4	M30	W/4	: Security indicator lamp (with vehicle security system)
B4	M31	W/3	: Fuse block (J/B)
B2	M32	W/16	: Data link connector
C3	M37	W/2	: Key switch
B2	M38	W/24	: Combination meter
C2	M39	BR/24	: Combination meter
B2	M40	BR/20	: Combination meter
B1	M43	SB/4	: Diode - 4
B1	M44	SB/4	: Diode - 1 (for Canada)

Diode M44

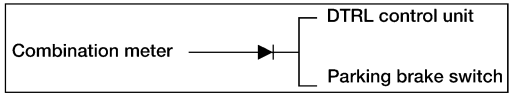

C1	M45	B/3	: Combination flasher unit
B1	M46	L/4	: Fuel pump relay
B2	M47	B/2	: Stop lamp switch
B2	M48	L/2	: ASCD brake switch (A/T shift lock brake switch)
C1	M49	W/2	: Parking brake switch
C3	M50	W/6	: Audio unit
C1	M51	W/10	: Audio unit
D3	M52	B/2	: Cigarette lighter socket (early production)
D3	M52	W/3	: Cigarette lighter socket (late production)
C1	M53	W/8	: Hazard switch
D3	M54	B/2	: Front power socket (with power socket)(early production)
D3	M54	B/3	: Front power socket (with power socket)(late production)
C1	M57	W/6	: Fan switch
D1*	M58	W/6	: To F28
E1*	M59	W/8	: To F27
D3	M60	W/3	: Thermo control amplifier
D2	M61	BR/4	: Fan resistor
D2	M62	W/2	: Blower motor
E2	M63	W/12	: To D101
E2	M64	W/6	: To D102
D3*	M65	SMJ	: To E43

*: Be sure to connect and lock the connectors securely after repair work. Failure to do so may cause the ECM to have diagnostic trouble codes. **Do not disconnect these connectors except in the case of working according to WORK FLOW of TROUBLE DIAGNOSES in EC and AT sections.**

Diode M43

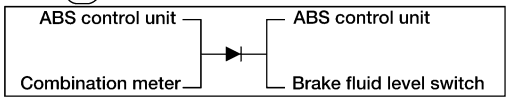

Diode M3

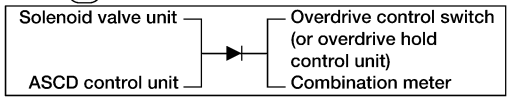

E3	M66	B/2	: To E44
E3*	M67	W/18	: To C1
E3*	M68	-	: Body ground
G4	M71	BR/1	: Front door switch RH
B4	M72	GY/12	: Door mirror remote control switch
A4*	M76	B/5	: ATP relay (with A/T)
A3*	M77	W/24	: TCM (with A/T)
A3*	M78	GY/24	: TCM (with A/T)
D2*	M81	W/20	: To F36
E3	M83	W/10	: To C11
D1	M84	B/12	: Joint Connector - 5
D5	M89	Y/2	: Drive seatbelt pre-tensioner
F3	M90	Y/2	: Passenger seatbelt pre-tensioner
B1	M94	SB/4	: Diode-2
C1	M95	B/12	: Air control
E2	M96	B/6	: Intake door motor
A1	M110	W/24	: Smart entrance control unit
A2	M111	GY/24	: Smart entrance control unit
A2	M112	GY/16	: Smart entrance control unit
E4	M113	Y/12	: Air bag unit
E4	M114	Y/20	: Air bag unit
E4	M115	Y/12	: Air bag unit
B3	M116	Y/7	: To M201
D3	M117	Y/2	: Passenger air bag module
C3	M118	W/16	: Audio unit
B2	M119	BR/24	: ASCD control unit
C3	M124	W/6	: Passenger air bag deactivation switch
D2	M126	W/2	: Passenger air bag deactivation indicator
C3	M128	B/5	: ASCD relay
B4	M129	L/4	: Overdrive cancel relay (with A/T) (if equipped)
B2	M130	W/6	: Overdrive hold control module (with A/T) (if equipped)

Main Harness (VG33E and VG33ER Models)

NEEL0226

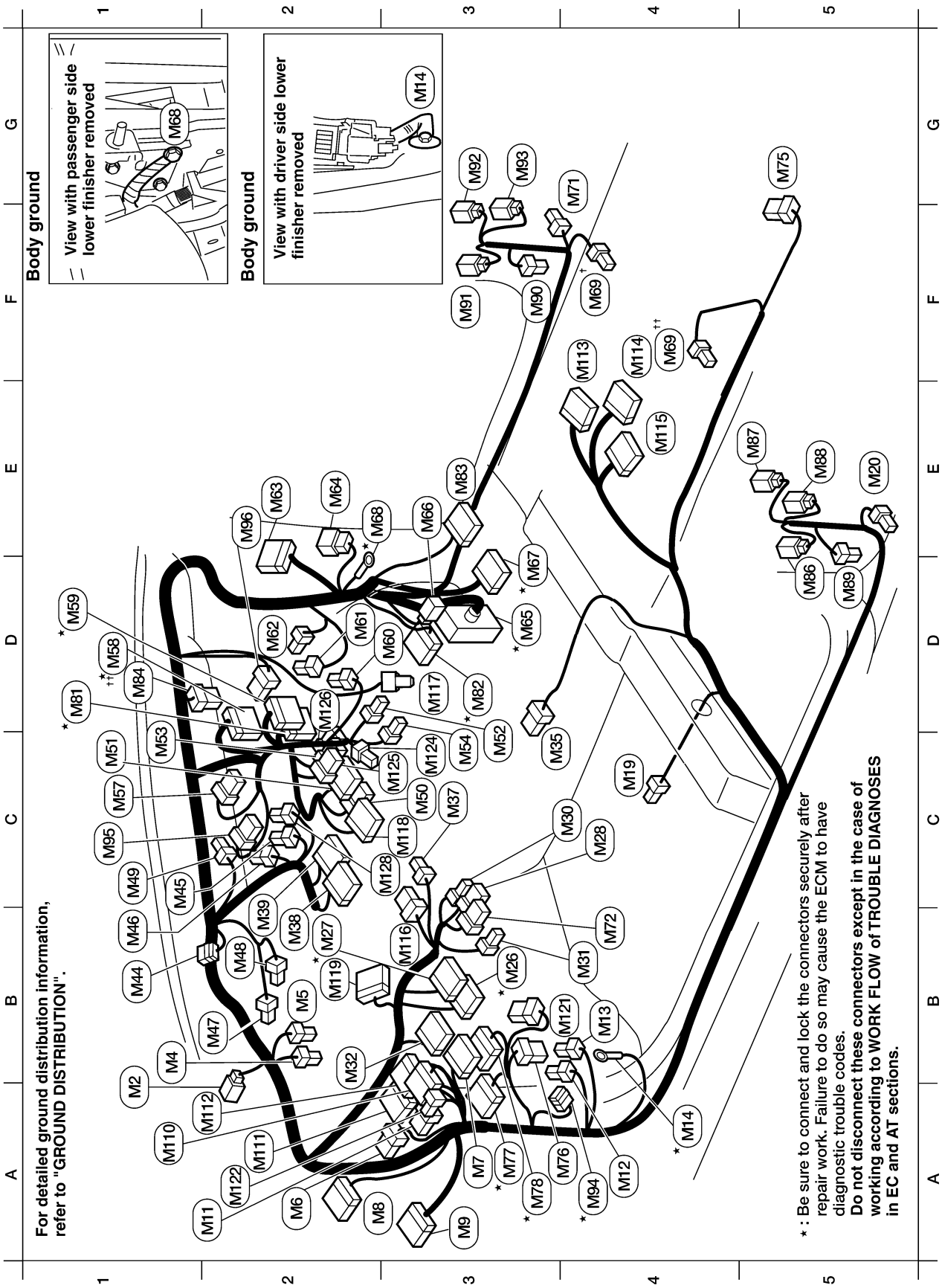

WEL066B

A1	M2	W/4	: To R1 (except Crew Cab)
A1	M2	W/8	: To R1 (Crew Cab)
B1	M4	L/2	: ASCD clutch switch (with M/T)
B2	M5	L/2	: Clutch interlock switch (with M/T)
A2	M6	B/5	: Vehicle security relay (with power door locks)
A3	M7	BR/12	: To E53
A2	M8	W/8	: To D2 (except Crew Cab)
A2	M8	W/12	: To D2 (Crew Cab)
A3	M9	W/12	: To D1
A2	M11	W/8	: Warning chime unit (without power door locks)
A4	M12	W/2	: Circuit breaker (with power door locks)
B4	M13	L/4	: Power window relay (with power windows)
A4*	M14	-	: Body ground
C4*	M19	W/3	: Seat belt buckle switch
E5	M20	B/3	: Front door switch LH
B3*	M26	W/16	: Fuse block (J/B)
B2*	M27	W/10	: Fuse block (J/B)
C4	M28	W/3	: Illumination control switch
C4	M30	W/4	: Security indicator lamp (with theft warning)
B4	M31	W/3	: Fuse block (J/B)
B2	M32	W/16	: Data link connector
C4	M35	W/6	: A/T device (with A/T)
C3	M37	W/2	: Key switch
B2	M38	W/24	: Combination meter
B2	M39	BR/24	: Combination meter
B1	M44	SB/4	: Diode - 1 (for Canada)
C1	M45	B/3	: Combination flasher unit
B1	M46	L/4	: Fuel pump relay
B2	M47	B/2	: Stop lamp switch
B2	M48	L/2	: ASCD brake switch (A/T shift lock brake switch)
C1	M49	W/2	: Parking brake switch
C3	M50	W/6	: Audio unit
C1	M51	W/10	: Audio unit
D3	M52	B/2	: Cigarette lighter socket (early production)
D3	M52	W/3	: Cigarette lighter socket (late production)
C1	M53	W/8	: Hazard switch
D3	M54	B/2	: Front power socket (with power socket) (early production)
D3	M54	B/3	: Front power socket (with power socket) (early production)
C1	M57	W/6	: Fan switch
D1*	M58	W/16	: To F28 (with VG33E)
D1*	M58	W/20	: To F28 (with VG33ER)
D1*	M59	W/18	: To F27
D3	M60	W/3	: Thermo control amplifier
D2	M61	BR/4	: Fan resistor
D2	M62	W/2	: Blower motor
E2	M63	W/12	: To D101
E2*	M64	W/6	: To D102
D3*	M65	SMJ	: To E43
E3	M66	B/2	: To E44
D3*	M67	W/18	: To C1
E3*	M68	-	: Body ground
F4	M69†	B/3	: G-sensor (4-wheel drive except Crew Cab)
F4	M69††	B/3	: G-sensor (4-wheel drive Crew Cab)
G4	M71	BR/1	: Front door switch RH
B4	M72	GY/12	: Door mirror remote control switch
G5	M75	W/8	: Subwoofer amplifier (except Crew Cab)
A4*	M76	B/5	: ATP relay (with A/T)
A3*	M77	W/24	: TCM (with A/T)
A3*	M78	GY/24	: TCM (with A/T)
D2*	M81	W/24	: To F36
D3*	M82	W/20	: To E74
E3	M83	W/10	: To C11
D1	M84	B/12	: Joint Connector-5
D5	M86	W/3	: To D201 (Crew Cab)
E5	M87	W/2	: To D202 (Crew Cab)
E5	M88	W/2	: To D203 (Crew Cab)
D5	M89	Y/2	: Drive seatbelt pre-tensioner
F3	M90	Y/2	: Passenger seatbelt pre-tensioner
F3	M91	W/3	: To D301 (Crew Cab)
G3	M92	W/2	: To D302 (Crew Cab)
G3	M93	W/2	: To D303 (Crew Cab)
A4	M94	W/2	: Diode-2 (with A/T)
C1	M95	B/12	: Air control
E2	M96	B/6	: Intake door motor
A1	M110	W/24	: Smart entrance control unit
A2	M111	GY/24	: Smart entrance control unit
A2	M112	GY/16	: Smart entrance control unit
E4	M113	Y/12	: Air bag unit
E4	M114	Y/20	: Air bag unit
E4	M115	Y/12	: Air bag unit
B3	M116	Y/7	: To M201
D3	M117	Y/2	: Passenger air bag module
C3	M118	W/16	: Audio unit
B2	M119	BR/24	: ASCD control unit
B4	M121	L/4	: Rear window defogger relay (Crew Cab)
A2	M122	W/4	: Rear window defogger timer (Crew Cab)
C3	M124	W/6	: Passenger air bag deactivation switch (except Crew Cab)
C2	M125	W/6	: Rear window defogger switch (Crew Cab)
D2	M126	W/2	: Passenger air bag deactivation indicator (except Crew Cab)
C3	M128	B/5	: ASCD relay

* : Be sure to connect and lock the connectors securely after repair work. Failure to do so may cause the ECM to have diagnostic trouble codes. **Do not disconnect these connectors except in the case of working according to WORK FLOW of TROUBLE DIAGNOSES in EC and AT sections.**

Diode M44

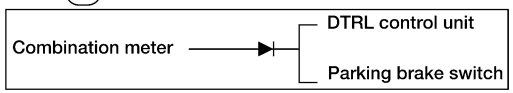

Diode M94

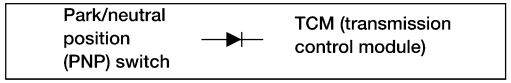

Engine Room Harness (KA24DE Models)

NEEL0175

ENGINE COMPARTMENT

NEEL0175S06

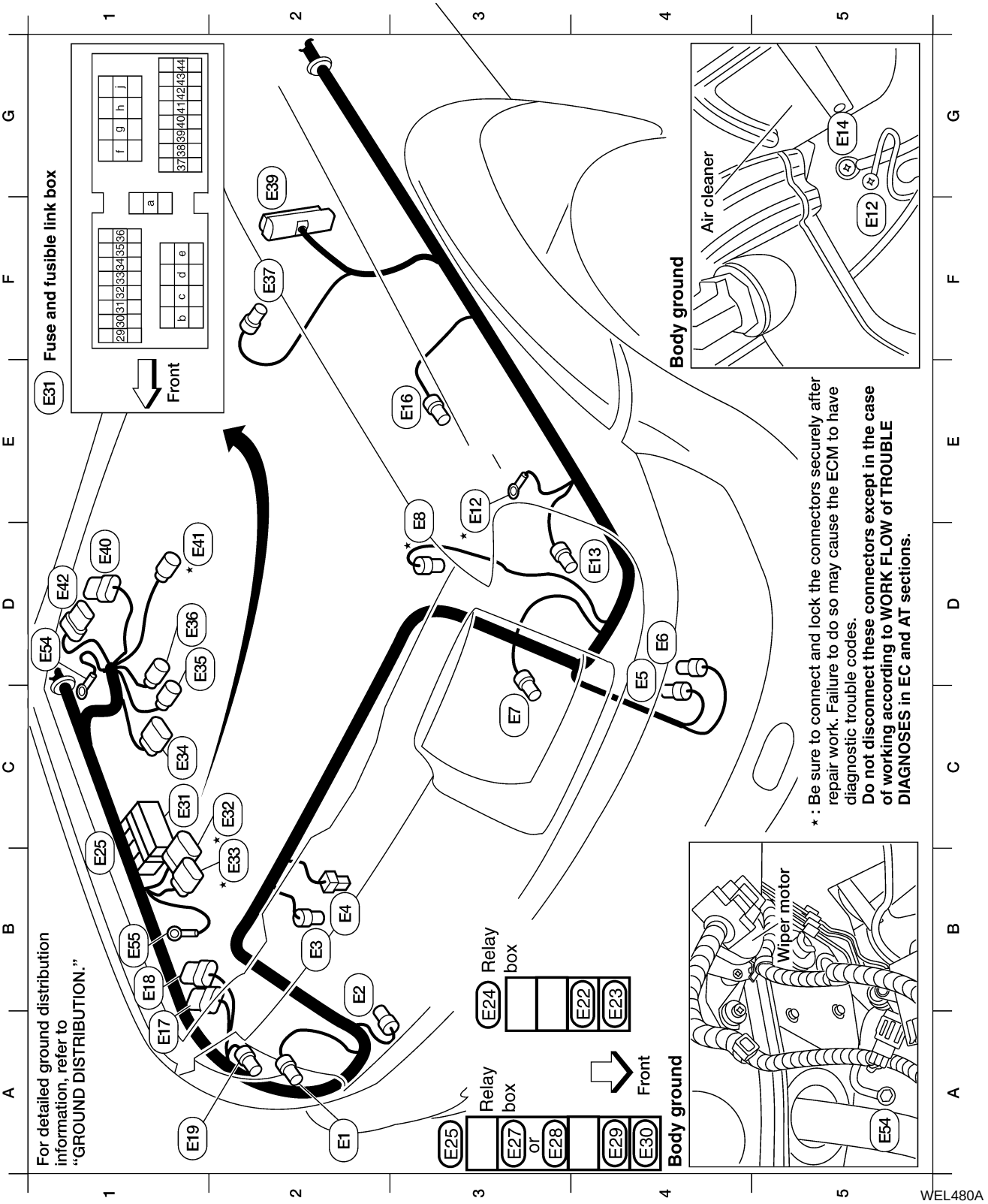

A2	E1	B/3	: Head lamp RH
B2	E2	GY/2	: Front wheel sensor RH
B2	E3	B/2	: Dual-pressure switch (with A/C)
B2	E4	B/1	: Horn
C4	E5	BR/2	: Washer fluid level switch (for Canada)
D4	E6	GY/2	: Front washer motor
C3	E7	B/3	: Headlamp LH
D3	★E8	B/2	: Intake air temperature sensor
D3	E9	GY/2	: Hood switch (with multi-remote)
D3	E10	B/1	: Theft warning horn (with multi-remote)
D3	★E12	—	: Body ground
D4	E13	GY/3	: Front combination lamp LH
E3	E16	BR/2	: Front wheel sensor LH
A1	E17	GY/8	: Daytime light control unit (with DTRL)
B1	E18	GY/6	: Daytime light control unit (with DTRL)
A1	E19	GY/3	: Front combination lamp RH
B4	E22	BR/6	: Vehicle security lamp relay (with multi-remote)
B4	E23	BR/6	: Multi-remote control relay (with multi-remote)
C1	E24	—	: Relay box
B1	E25	—	: Relay box
A3	E27	BR/6	: Park/neutral position (PNP) relay (with A/T)
A3	E28	L/4	: Clutch interlock relay (with M/T)
A4	E29	L/4	: Horn relay
A4	E30	L/4	: Air conditioner relay (with A/C)
C1	E31	—	: Fuse and fusible link box
C2	★E32	GY/9	: To E202
B2	★E33	GY/6	: To E201
C1	E34	GY/8	: Park/neutral position (PNP) switch (A/T)
C1	E35	W/2	: Park/neutral position (PNP) switch (A/T)
D1	E36	GY/3	: Solenoid valve unit
F2	E37	GY/2	: Brake fluid level switch
F2	E39	B/31	: ABS actuator and electric unit (control unit)
D1	E40	B/8	: Front wiper amplifier (with intermittent wipers)
D1	★E41	GY/3	: To F25
D1	E42	W/6	: Front wiper motor
C1	E54	—	: Body ground
B1	E55	—	: Battery
A2	E57	B/1	: Front fog lamp RH
C4	E58	B/1	: Front fog lamp LH

★ : Be sure to connect and lock the connectors securely after repair work. Failure to do so may cause the ECM to have diagnostic trouble codes.
Do not disconnect these connectors except in the case of working according to WORK FLOW of TROUBLE DIAGNOSES in EC and AT sections.

WEL542A

PASSENGER COMPARTMENT

NEEL0175S05

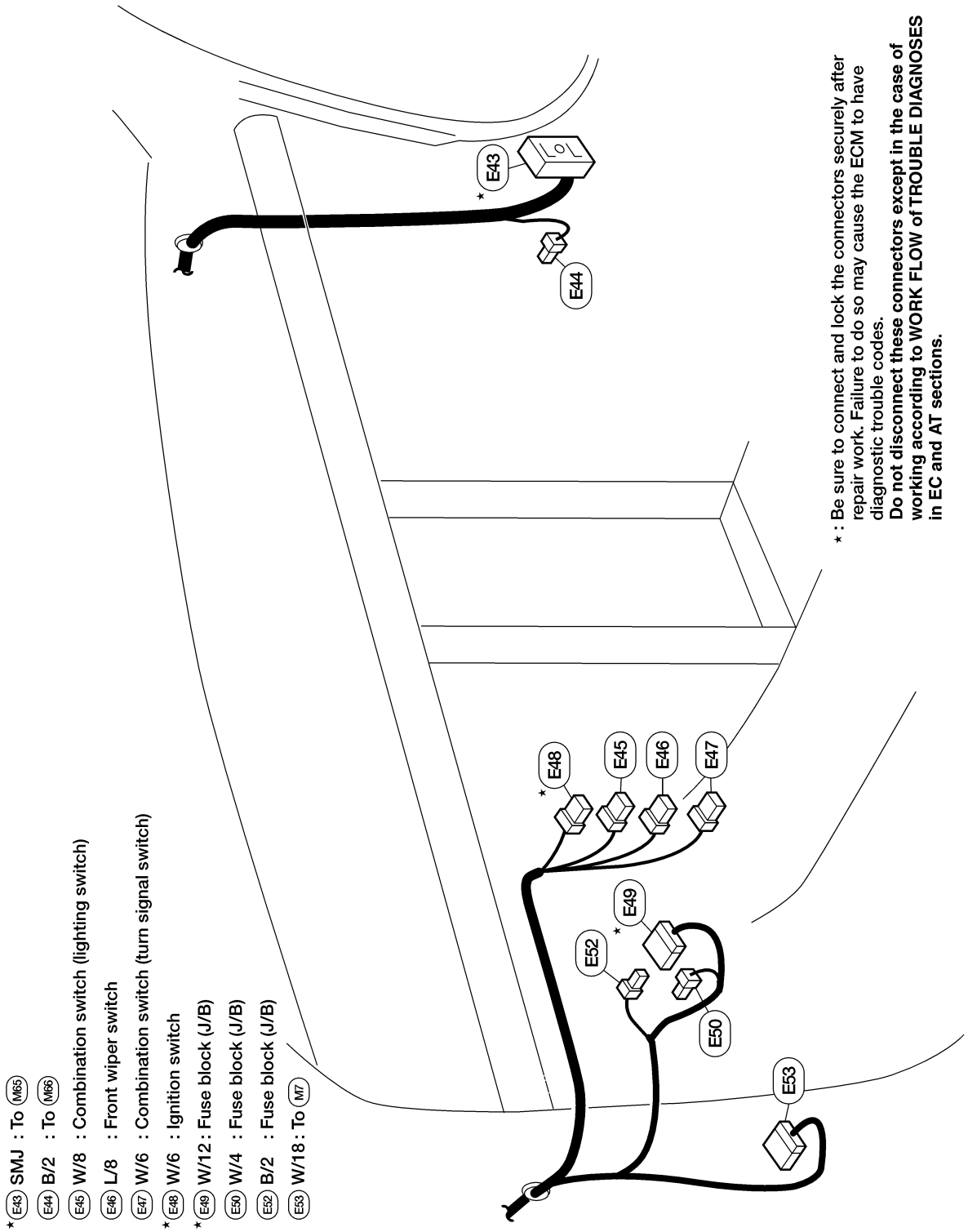

LEL155A

Engine Room Harness (VG33E and VG33ER Models)

ENGINE COMPARTMENT

NEEL0213

NEEL0213S01

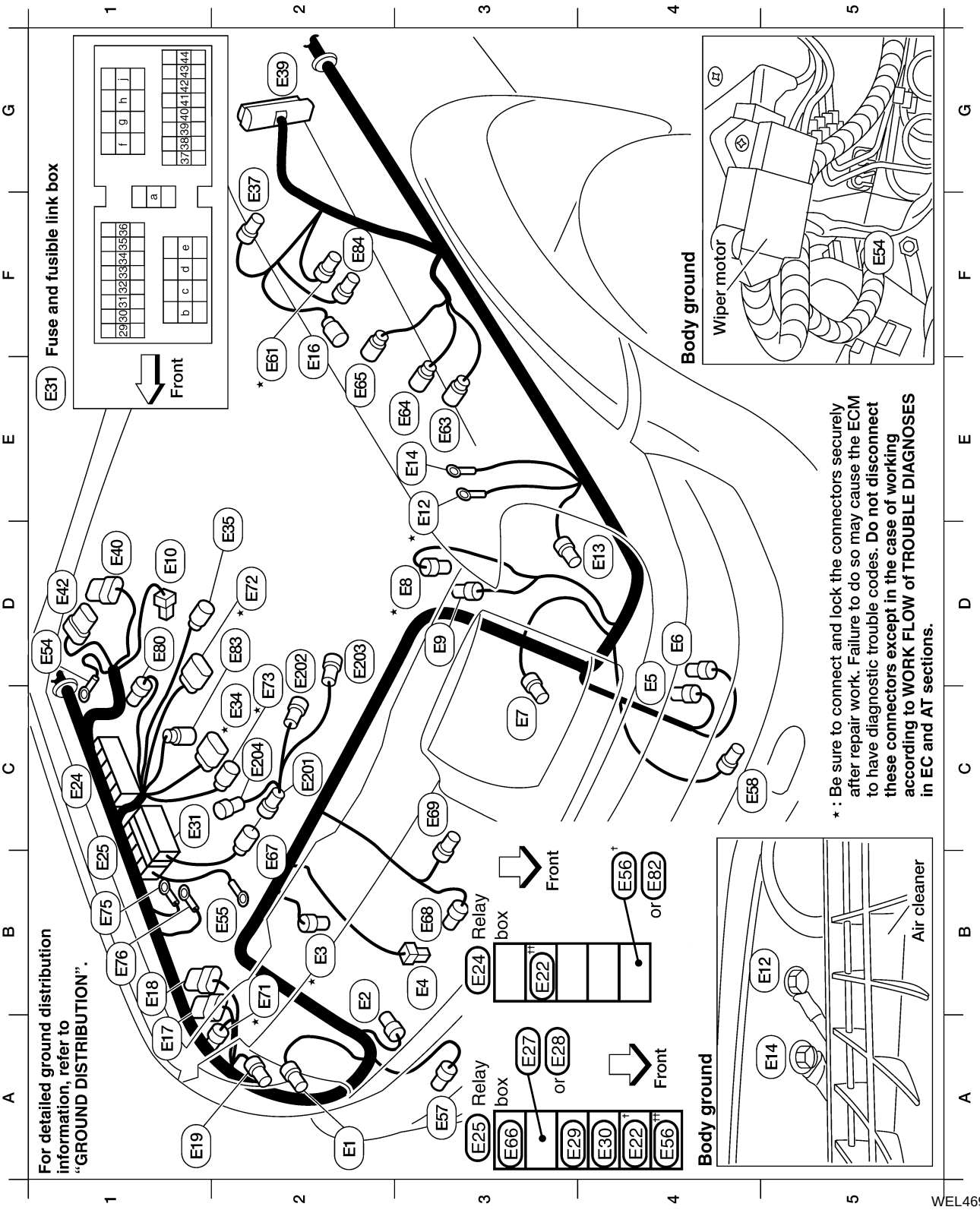

A2	E1	B/3	: Head lamp RH
B2	E2	GY/2	: Front wheel sensor RH
B2*	E3	B/4	: Triple-pressure switch
B3	E4	B/1	: Horn
C4	E5	BR/2	: Washer fluid level switch (for Canada)
D4	E6	GY/2	: Front washer motor
C3	E7	B/3	: Headlamp LH
D3*	E8	B/2	: Intake air temperature sensor
D3	E9	GY/2	: Hood switch (with power door locks)
D1	E10	B/1	: Vehicle security horn (with power door locks)
D3*	E12	-	: Body ground
D4	E13	GY/3	: Front combination lamp LH
E3	E14	-	: Body ground
E2	E16	BR/2	: Front wheel sensor LH
A1	E17	GY/8	: Daytime light control unit (with DTRL)
B1	E18	GY/6	: Daytime light control unit (with DTRL)
A1	E19	GY/3	: Front combination lamp RH
B4	E20	BR/6	: Vehicle security horn relay (w/ power door locks)
B3	E22†	BR/6	: Vehicle security lamp relay (w/ power door locks) (VG33ER models) (VG33E models)
A3	E22††	BR/6	: Vehicle security lamp relay (w/ power door locks) (VG33E models)
B3	E23	BR/6	: Multi-remote control relay (w/ power door locks)
C1	E24	-	: Relay box

Relay box

C1	E25	-	: Relay box
A3*	E27	BR/6	: Park/neutral position (PNP) relay (with A/T)
A4	E28	L/4	: Clutch interlock relay (with M/T)
A4	E29	L/4	: Horn relay
A4	E30	L/4	: A/C relay
C1	E31	-	: Fuse and fusible link box
C2*	E34	GY/8	: Park/neutral position (PNP) switch (with A/T)
E2	E35	GY/2	: Park/neutral position (PNP) switch (with A/T)
G2	E37	GY/2	: Brake fluid level switch
G2	E39	B/31	: ABS actuator and electric unit (control unit) (2WD models)
G2	E39	B/25	: ABS actuator and electric unit (control unit) (4WD models)
D1	E40	B/8	: Front wiper amplifier
D1	E42	W/6	: Front wiper motor
D1*	E54	-	: Body ground
B2	E55	-	: Battery
B4	E56†	L4	: Front fog lamp relay (relay box) (VG33E models)
A3	E56††	L/4	: Front fog lamp relay (relay box) (VG33ER models)

Relay box

A3	E57	GY/2	: Front fog lamp RH
C4	E58	GY/2	: Front fog lamp LH
E2 *	E61	L/2	: EVAP canister purge volume control solenoid valve
E3	E63	GY/1	: To A3
E3	E64	GY/1	: To A4
E2	E65	GY/4	: To A5
A3 *	E66	L/4	: Cooling fan relay (VG33E models) (if equipped) (relay box)
A3	E66	L/4	: Cooling fan relay-1 (VG33ER models) (relay box)
C2	E67	GY/2	: To E201
B3	E68	GY/2	: Ambient air temperature switch
C3*	E69	B/4	: Cooling fan motor (if equipped)
B2*	E71	GY/2	: Dropping resistor
D2*	E72	BR/8	: Terminal cord assembly
C2*	E73	GY/3	: Revolution sensor
B1	E75	-	: To E31
B1	E76	-	: To E31
D1	E80	GY/6	: ASCD motor actuator
B4*	E82	L/4	: Cooling fan relay-2 (VG33ER models)
D2	E83	L/4	: Turbine revolution sensor (with VG33ER and A/T)
F3	E84	B/2	: Supercharger bypass valve control solenoid valve (VG33ER models)
C2	E201	GY/1	: To E67
D2	E202	GY/1	: Starter motor
D2	E203	-	: Starter motor
C2	E204	-	: Battery

* : Be sure to connect and lock the connectors securely after repair work. Failure to do so may cause the ECM to have diagnostic trouble codes.
Do not disconnect these connectors except in the case of working according to WORK FLOW of TROUBLE DIAGNOSES in EC and AT sections.

WEL470A

PASSENGER COMPARTMENT

NEEL0213S02

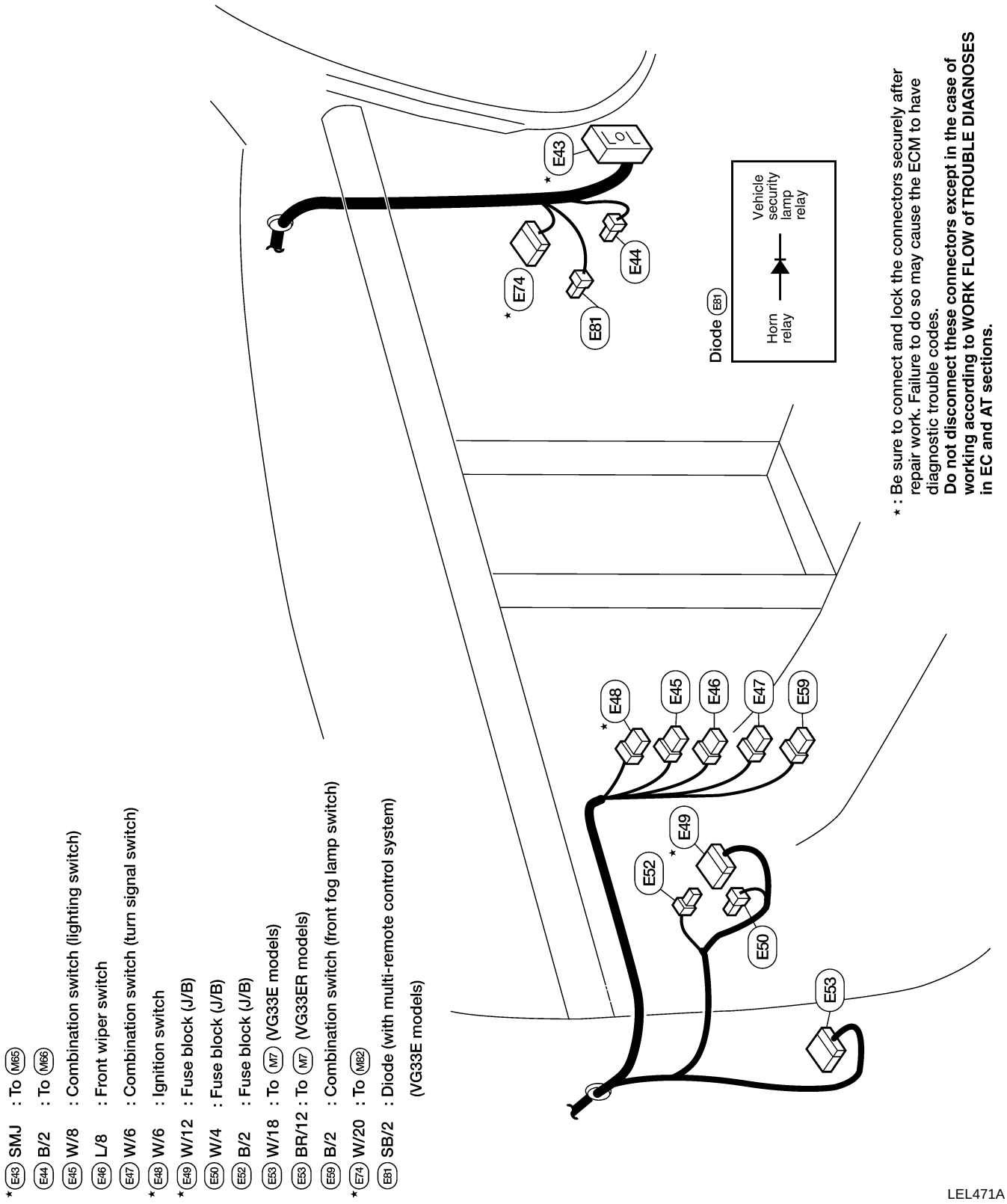

LEL471A

Engine Control Harness (KA24DE Models)

NEEL0209

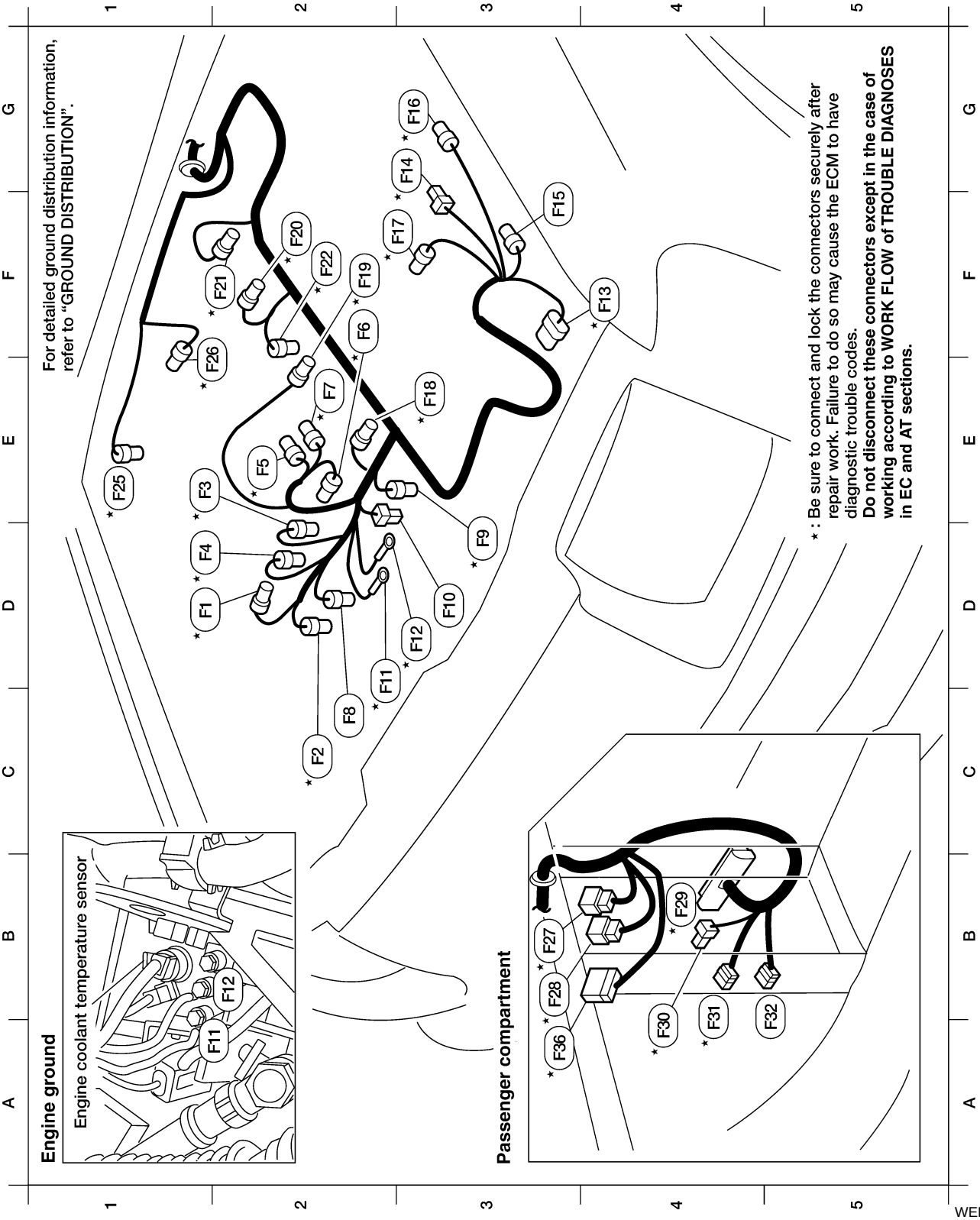

WEL080B

D2	*F1	BR/4	: Mass air flow sensor
C2	*F2	GY/2	: Knock sensor
D2	*F3	BR/3	: Throttle position sensor
D2	*F4	GY/3	: Throttle position switch (closed throttle position switch and wide open throttle position switch)
E2	*F5	GY/2	: EGR temperature sensor
F2	*F6	BR/2	: IACV-AAC valve
E2	*F7	PU/2	: IACV-FICD solenoid valve
C2	F8	B/1	: Power steering oil pressure switch
D3	*F9	GY/2	: Engine coolant temperature sensor
D3	F10	B/1	: Thermal transmitter
D2	*F11	Ñ	: Engine ground
D3	*F12	Ñ	: Engine ground
F4	*F13	GY/6	: Distributor (camshaft position sensor)
G3	*F14	GY/2	: Resistor
F3	F15-1	B/1	: A/C compressor
G3	*F16	GY/3 or SB	: Heated oxygen sensor 1 (front)
F3	*F17	GY/2	: Distributor (ignition coil)
E3	*F18	B/2	: Injector No. 1
F2	*F19	B/2	: Injector No. 2
F2	*F20	B/2	: Injector No. 3
F2	*F21	B/2	: Injector No. 4
F2	*F22	G/2	: EGRC-solenoid valve
E1	*F25	GY/3	: To E41
E2	*F26	L/2	: EVAP canister purge volume control solenoid valve
B3	*F27	W/8	: To M59
B3	*F28	W/6	: To M58
B4	*F29	GY/104	: ECM
A4	*F30	L/4	: ECM relay
A4	*F31	GY/6	: Joint connector-1
A5	F32	GY/6	: Joint connector-2
A3	*F36	W/20	: To M81

* : Be sure to connect and lock the connectors securely after repair work. Failure to do so may cause the ECM to have diagnostic trouble codes.
Do not disconnect these connectors except in the case of working according to WORK FLOW of TROUBLE DIAGNOSES in EC and AT sections.

WEL059B

Engine No. 2 Harness (KA24DE Models)

NEEL0211

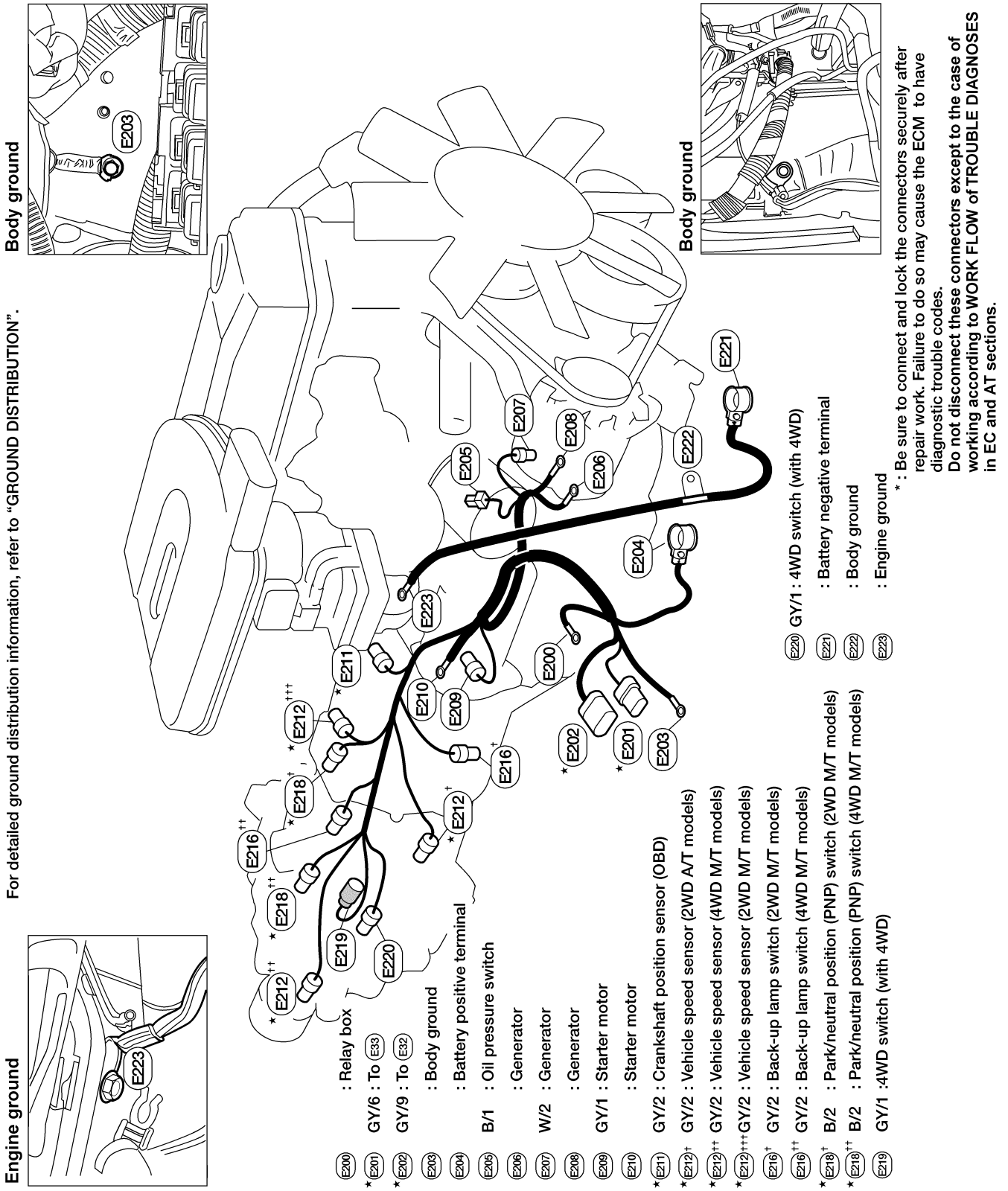

Engine Control Harness (VG33E Models)

NEEL0176

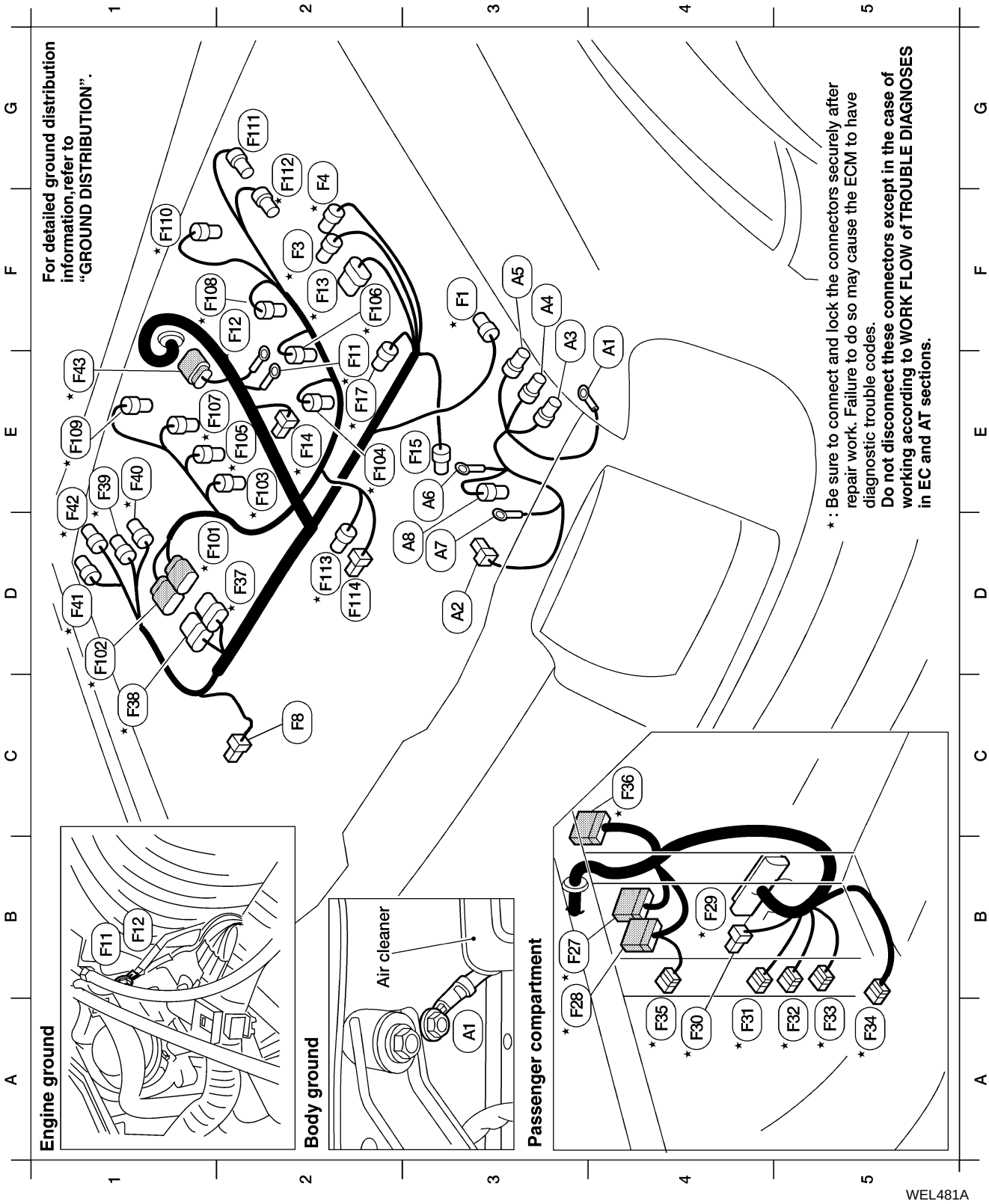

WEL481A

Engine control harness

F3	F1	BR/4	: Mass air flow sensor
F2	F3	BR/3	: Throttle position sensor
F2	F4	GY/3	: Throttle position switch (closed throttle position switch and wide open throttle position switch)
C2	F8	B/2	: Power steering oil pressure switch
D2 *	F9	GY/2	: Engine coolant temperature sensor
D2	F10	B/1	: Thermal transmitter
E2 *	F11	–	: Engine ground
F2 *	F12	–	: Engine ground
F2 *	F13	GY/6	: Distributor (camshaft position sensor)
E2 *	F14	GY/2	: Resistor
E3	F15	B/1	: A/C compressor
E2 *	F17	GY/2	: Distributor (ignition coil)
B3 *	F27	W/18	: To M59
A3 *	F28	W/16	: To M58
B4 *	F29	GY/104	: ECM
A4 *	F30	L/4	: ECM relay
A4 *	F31	GY/6	: Joint connector-1
A5 *	F32	GY/6	: Joint connector-2
A5 *	F33	GY/6	: Joint connector-3
A5 *	F34	GY/6	: Joint connector-4
A4 *	F35	SB/2	: Diode
C4 *	F36	W/24	: To M81
D2 *	F37	B/8	: To F101
C1 *	F38	GY/8	: To F102
E1 *	F39	GY/4	: Heated oxygen sensor 2 (rear) (bank 2)
E1 *	F40	GY/3	: Heated oxygen sensor 1 (front) (bank 2)

Engine control harness (continued)

D1 *	F41	GY/3	: Heated oxygen sensor 1(front) (bank 1)
D1 *	F42	GY/4	: Heated oxygen sensor 2 (rear) (bank 1)
E1 *	F43	GY/8	: To F201

Engine sub harness

D2 *	F101	B/8	: To F37
D1 *	F102	GY/8	: To F38
E2 *	F103	B/2	: Injector No. 1
E2 *	F104	B/2	: Injector No. 2
E2 *	F105	B/2	: Injector No. 3
F2 *	F106	B/2	: Injector No. 4
E2 *	F107	B/2	: Injector No. 5
F1 *	F108	B/2	: Injector No. 6
E1 *	F109	GY/2	: Knock sensor
F1 *	F110	GY/2	: Crankshaft position sensor (OBD)
G2	F111	GY/2	: IACV-FICD solenoid valve
G2 *	F112	BR/2	: IACV-AAC valve

Generator harness

F4	A1	–	: Body ground
D3	A2	B/1	: Oil pressure switch
F3	A3	GY/1	: To E63
F3	A4	GY/1	: To E64
F3	A5	GY/4	: To E65
E3	A6	–	: Generator
D3	A7	–	: Generator
D3	A8	GY/2	: Generator

Diode F35

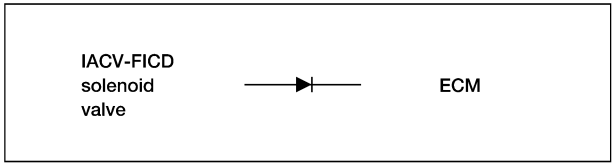

* : Be sure to connect and lock the connectors securely after repair work. Failure to do so may cause the ECM to have diagnostic trouble codes.
Do not disconnect these connectors except in the case of working according to WORK FLOW of TROUBLE DIAGNOSES in EC and AT sections.

WEL482A

Engine Control Harness (VG33ER Models)

NEEL0227

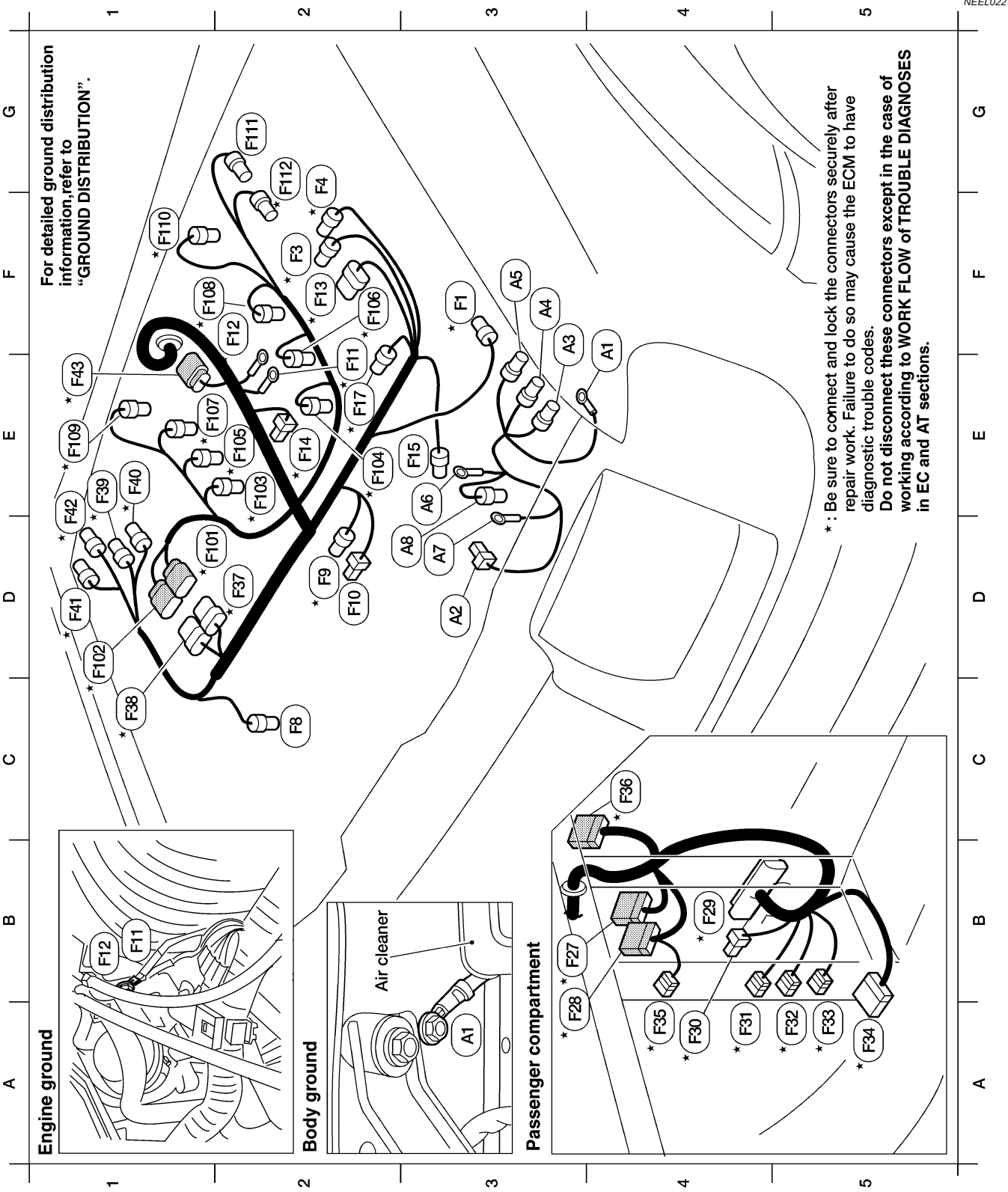

WEL472A

Engine control harness

F3	* F1	BR/4	: Mass air flow sensor
F2	* F3	BR/3	: Throttle position sensor
F2	F4	GY/3	: Throttle position switch (closed throttle position switch and wide open throttle position switch)
C2	F8	B/2	: Power steering oil pressure switch
E2	* F11	–	: Engine ground
F2	* F12	–	: Engine ground
F2	* F13	GY/6	: Distributor (camshaft position sensor)
E2	* F14	GY/2	: Resistor
E3	F15	B/1	: A/C compressor
E2	* F17	GY/2	: Distributor (ignition coil)
B3	* F27	W/18	: To M59
A3	* F28	W/20	: To M58
B4	* F29	GY/104	: ECM
A4	* F30	L/4	: ECM relay
A4	* F31	GY/6	: Joint connector-1
A5	* F32	GY/6	: Joint connector-2
A5	* F33	GY/6	: Joint connector-3
A5	* F34	GY/6	: Joint connector-4
A4	* F35	SB/2	: Diode
C4	* F36	W/24	: To M81
D2	* F37	G/10	: To F101
C1	* F38	GY/10	: To F102
E1	* F39	GY/4	: Heated oxygen sensor 2 (rear) (bank 2)
E1	* F40	GY/3	: Heated oxygen sensor 1 (front) (bank 2)

Engine control harness (continued)

D1	* F41	GY/3	: Heated oxygen sensor 1 (front) (bank 1)
D1	* F42	GY/4	: Heated oxygen sensor 2 (rear) (bank 1)
E1	* F43	GY/8	: To F201

Engine sub harness

D2	* F101	B/8	: To F37
D1	* F102	GY/10	: To F38
E2	* F103	B/2	: Injector No. 1
E2	* F104	B/2	: Injector No. 2
E2	* F105	B/2	: Injector No. 3
F2	* F106	B/2	: Injector No. 4
E2	* F107	B/2	: Injector No. 5
F1	* F108	B/2	: Injector No. 6
E1	* F109	GY/2	: Knock sensor
F1	* F110	GY/2	: Crankshaft position sensor (OBD)
G2	F111	GY/2	: IACV-FICD solenoid valve
G2	* F112	BR/2	: IACV-AAC valve
D2	* F113	GY/2	:Engine coolant temperature sensor
D2	* F114	B/1	:Thermal transmitter

Generator harness

F4	A1	–	: Body ground
D3	A2	B/1	: Oil pressure switch
F3	A3	GY/1	: To E63
F3	A4	GY/1	: To E64
F3	A5	GY/4	: To E65
E3	A6	–	: Generator
D3	A7	–	: Generator
D3	A8	GY/2	: Generator

Diode F35

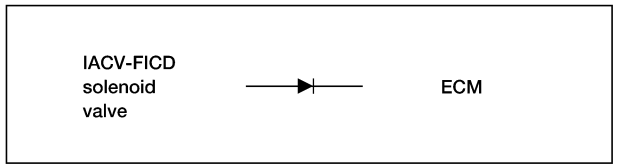

* : Be sure to connect and lock the connectors securely after repair work. Failure to do so may cause the ECM to have diagnostic trouble codes.
Do not disconnect these connectors except in the case of working according to WORK FLOW of TROUBLE DIAGNOSES in EC and AT sections.

WEL473A

Engine No. 2 Harness (VG33E and VG33ER Models)

NEEL0207

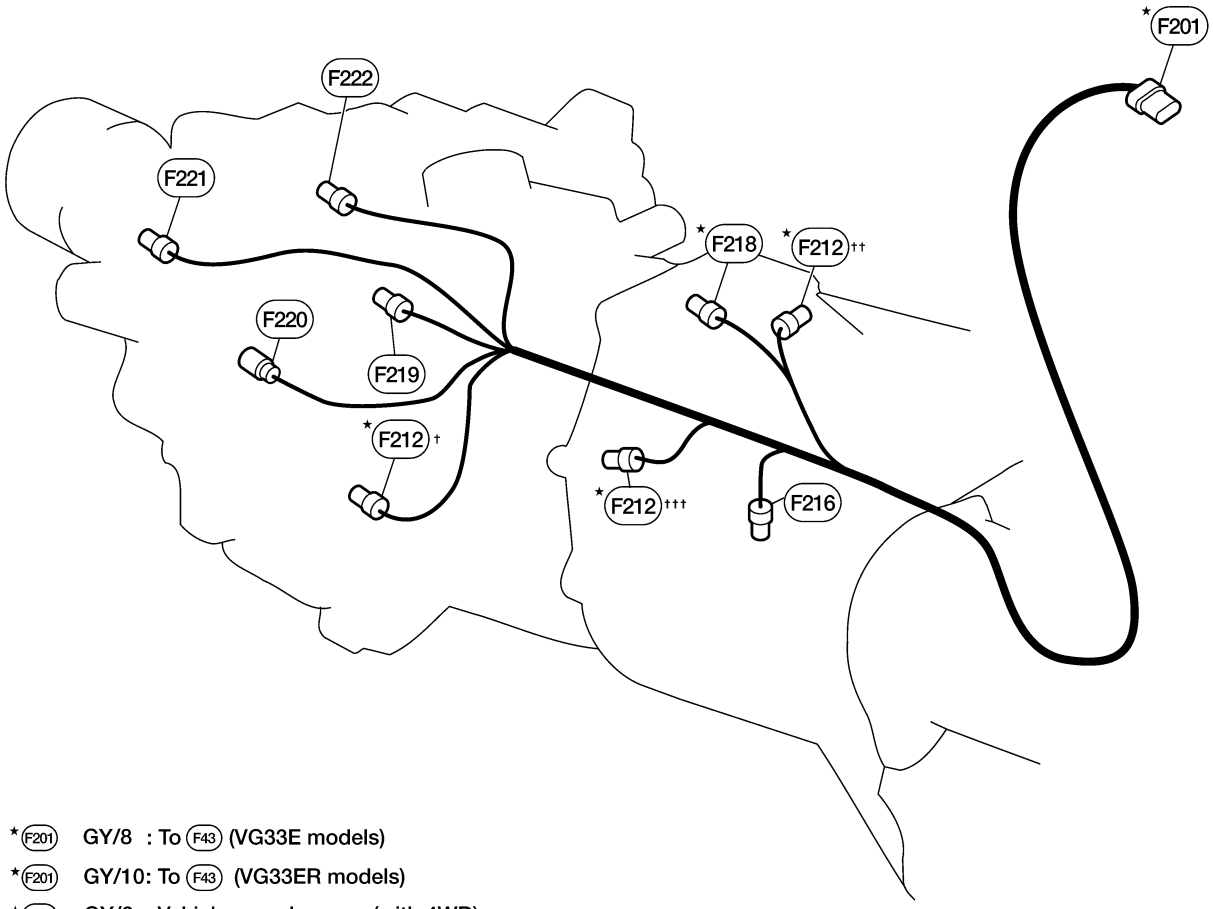

★F201 GY/8 : To F43 (VG33E models)
★F201 GY/10: To F43 (VG33ER models)
★F212† GY/2 : Vehicle speed sensor (with 4WD)
★F212†† GY/2 : Vehicle speed sensor (with 2WD M/T)
★F212††† GY/2 : Vehicle speed sensor (with 2WD A/T)
F216 GY/2 : Back-up lamp switch (with M/T)
★F218 B/2 : Park/neutral position (PNP) switch (with M/T)
F219 GY/1 : 4WD switch (with M/T)
F220 GY/1 : 4WD switch (with M/T)
F221 GY/2 : 4WD switch (with A/T)
F222 B/2 : Transfer neutral position switch (with A/T)

★ : Be sure to connect and lock the connectors securely after repair work. Failure to do so may cause the ECM to have diagnostic trouble codes.
Do not disconnect these connectors except in the case of working according to WORK FLOW of TROUBLE DIAGNOSES in EC and AT sections.

WEL474A

Chassis and Tail Harness (KA24DE Models)

NEEL0212

Chassis harness

- ★ C1 W/18 : To M67
- C2 W/8 : To M17
- C3 W/3 : To M15 (with 2WD and KA24 engine)
- C4 GY/4 : ABS actuator (with 2WD and KA24 engine)
- C5 GY/6 : Fuel level sensor unit and fuel pump
- C6 GY/2 : Rear wheel sensor
- ★ C7 GY/3 : EVAP control system pressure sensor
- ★ C8 B/2 : EVAP canister vent control valve
- ★ C9 G/2 : Vacuum cut valve bypass valve
- C10 GY/6 : To T4
- C11 W/10 : To M83

Chassis harness

- C12 GY/4 : Rear wheel sensor
- ★ C13 GY/4 : Fuel tank gauge unit
- C15 W/6 : To M128

Tail harness

- T1 GY/6 : Rear combination lamp LH
- T2 GY/2 : License plate lamp LH
- T3 GY/2 : License plate lamp RH
- T4 GY/6 : To C10
- T5 GY/6 : Rear combination lamp RH

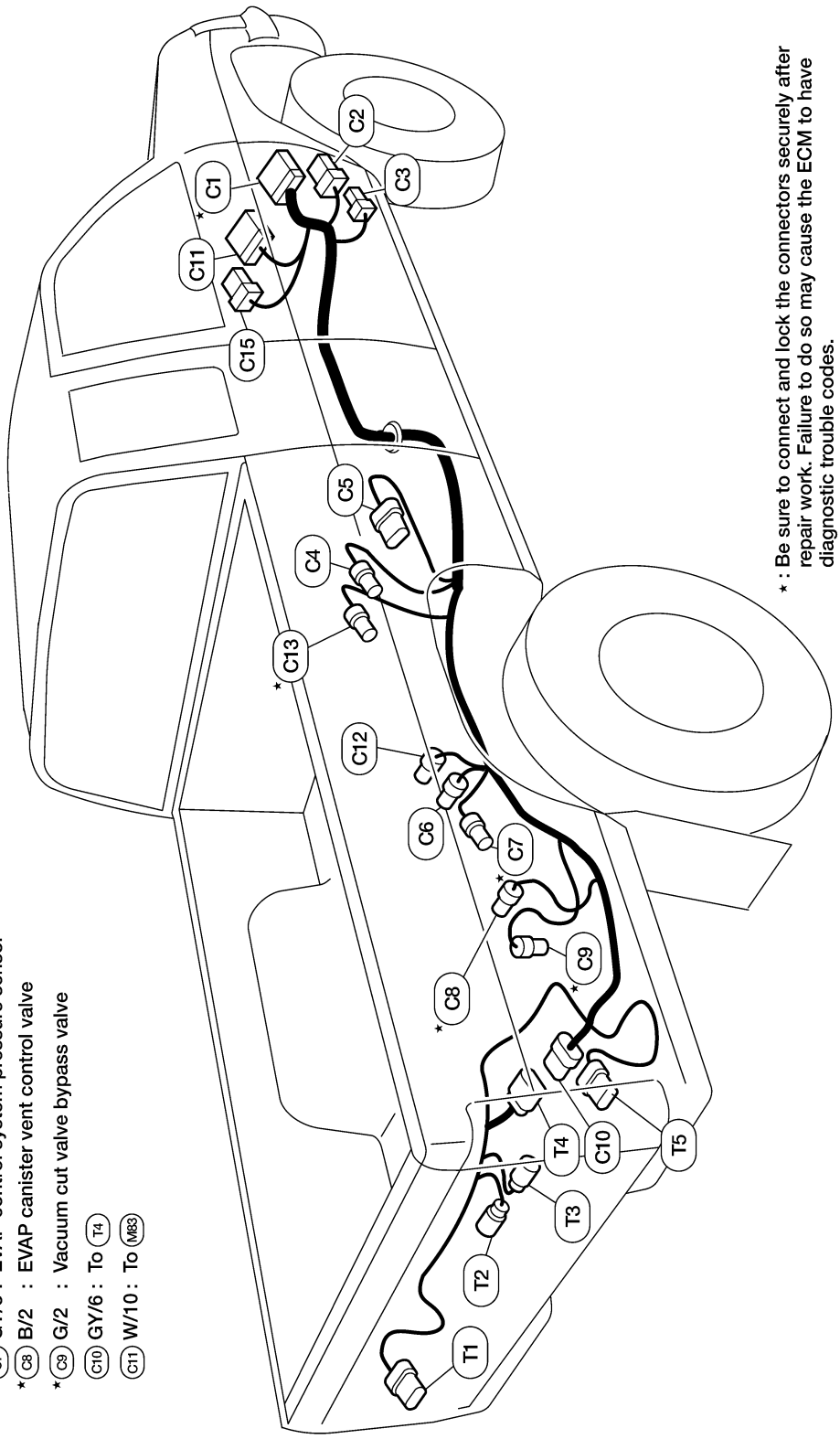

★ : Be sure to connect and lock the connectors securely after repair work. Failure to do so may cause the ECM to have diagnostic trouble codes.
Do not disconnect these connectors except in the case of working according to WORK FLOW of TROUBLE DIAGNOSES in EC and AT sections.

LEL416A

Chassis and Tail Harness (VG33E and VG33ER Models)

NEEL0177

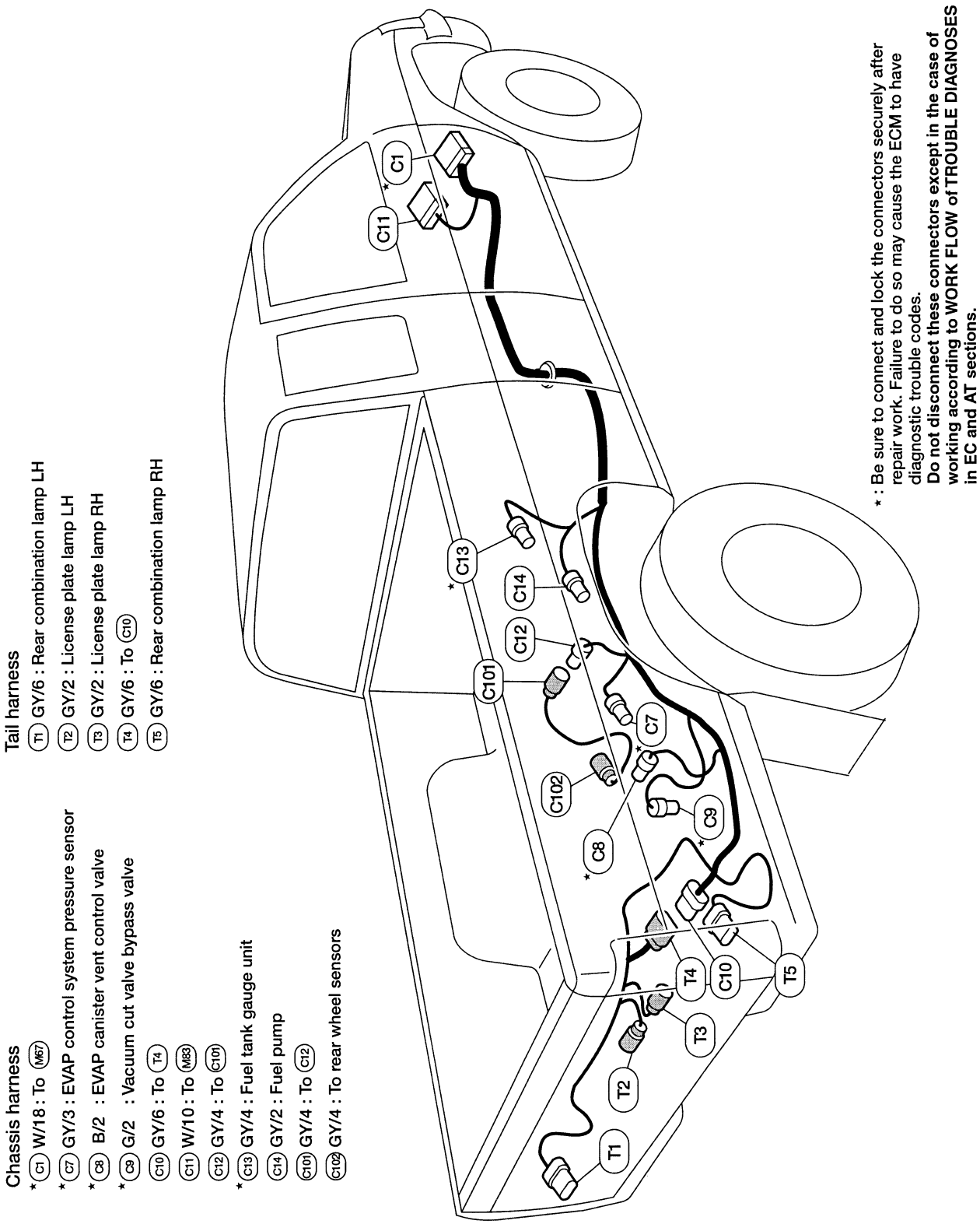

★ : Be sure to connect and lock the connectors securely after repair work. Failure to do so may cause the ECM to have diagnostic trouble codes.
Do not disconnect these connectors except in the case of working according to WORK FLOW of TROUBLE DIAGNOSES in EC and AT sections.

AEL751C

Room Lamp Harness

NEEL0180

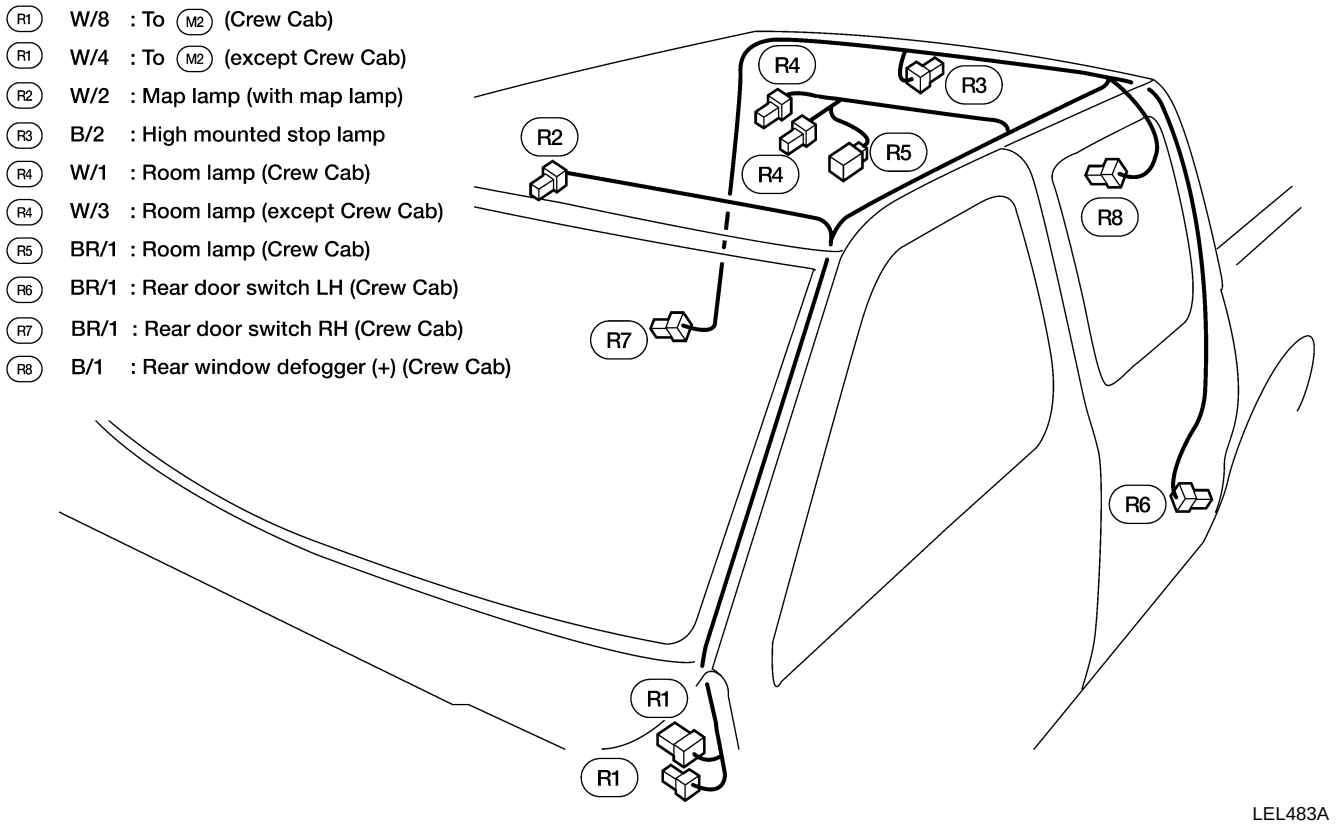

Front Door Harness

LH SIDE

NEEL0182

NEEL0182S01

(D1) W/12 : To (M9)
(D2) † W/12 : To (M8) (crewcab)
(D2) †† W/8 : To (M8) (except crewcab)
(D3) BR/2 : Door speaker LH
(D4) BR/3 : Door mirror LH
(D5) W/3 : Door tweeter LH (with premium audio)
(D6) B/2 : Front power window motor LH (with power windows)
(D7) W/16 : Main power window and door lock/unlock switch (with power windows)
(D8) GY/4 : Front door lock actuator LH (with power door locks)
(D9) BR/3 : Front door key cylinder switch LH (with power door locks)

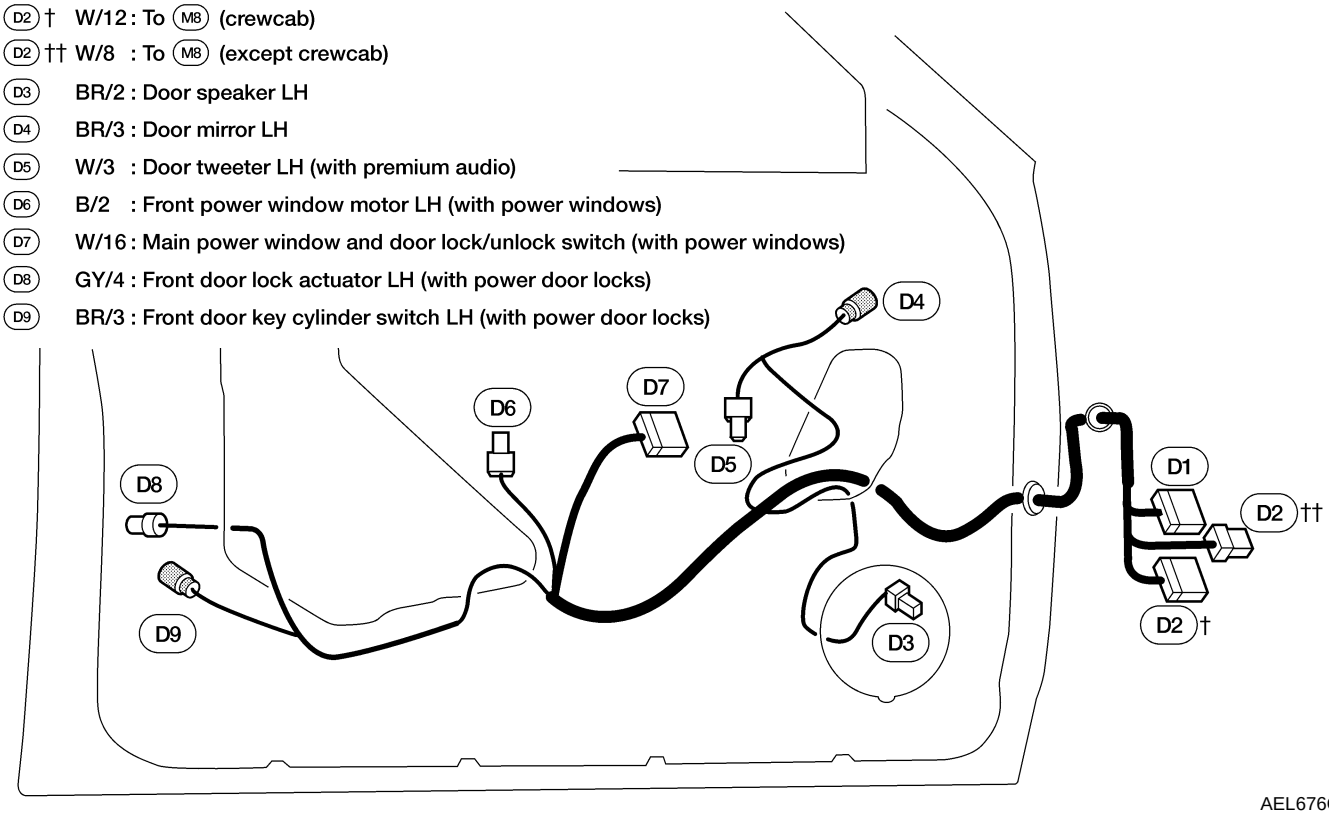

AEL676C

RH SIDE

NEEL0182S02

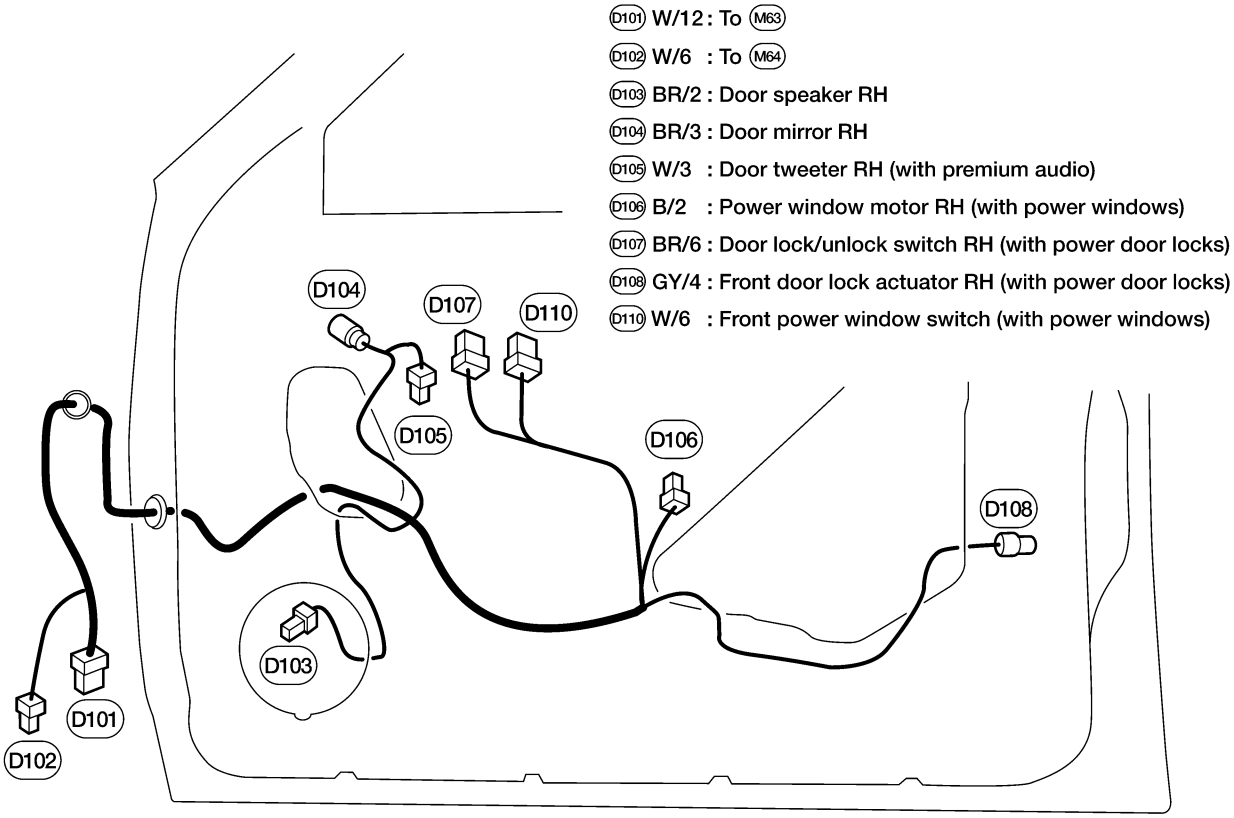

LEL444A

Rear Door Harness

LH SIDE

NEEL0183

NEEL0183S01

D201 W/3 : To M86

D202 W/2 : To M87

D203 W/2 : To M88

D204 B/2 : Rear power window motor LH (with power windows)

D205 W/7 : Rear power window switch LH (with power windows)

D206 B/2 : Rear door speaker LH

D207 GY/4 : Rear door lock actuator LH (with power door locks)

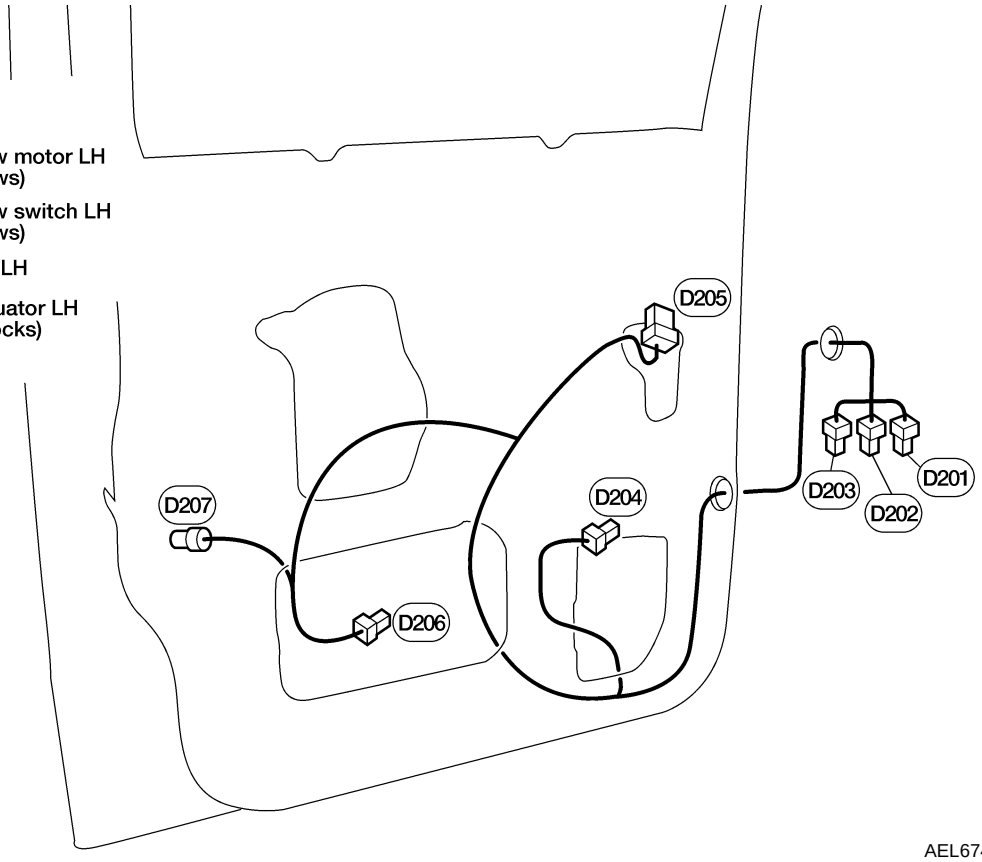

AEL674C

RH SIDE

NEEL0183S02

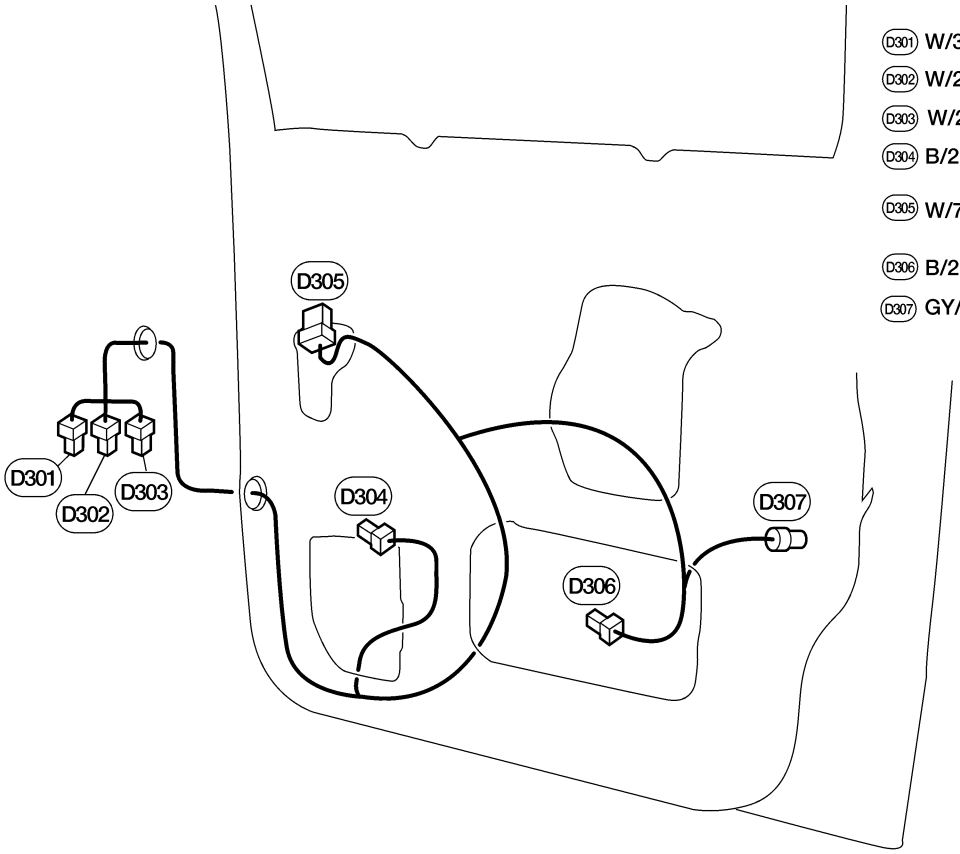

D301 W/3 : To M91
D302 W/2 : To M92
D303 W/2 : To M93
D304 B/2 : Rear power window motor RH (with power windows)
D305 W/7 : Rear power window switch RH (with power windows)
D306 B/2 : Rear door speaker RH
D307 GY/4 : Rear door lock actuator RH (with power door locks)

AEL675C

BULB SPECIFICATIONS

Headlamp

NEEL0144S03

	Wattage (W)	Bulb No.*
High/Low	65/55	9007

*: Always check with the Parts Department for the latest parts information.

Exterior Lamp

NEEL0144S01

		Wattage (W)	Bulb No.*
Front combination lamp	Turn signal	28.5	3456K
	Parking	5	168
	Side marker	5	168
Fog lamp		55	H3
Rear combination lamp	Turn signal	27	3157NA
	Stop/Tail	27/7	3157K
	Back-up	27	3156K
High-mounted stop lamp		*	*
License plate lamp		3.8	194

*: Always check with the Parts Department for the latest parts information.

Interior Lamp

NEEL0144S02

	Wattage (W)	Bulb No.*
Room lamp (Dome lamp)	10	*
Map lamp	8	578

*: Always check with the Parts Department for the latest parts information.

WIRING DIAGRAM CODES (CELL CODES)

Use the chart below to find out what each wiring diagram code stands for.
Refer to the wiring diagram code in the alphabetical index to find the location (page number) of each wiring diagram.

Code	Section	Wiring Diagram Name
1STSIG	AT	A/T 1ST Signal
2NDSIG	AT	A/T 2ND Signal
3RDSIG	AT	A/T 3RD Signal
4THSIG	AT	A/T 4TH Signal
A/C	HA	Air Conditioner
AAC/V	EC	IACV-AAC Valve
ABS	BR	Anti-lock Brake System
ASCD	EL	Automatic Speed Control Device
A/T	AT	A/T
AT/C	EC	A/T Control
ATDIAG	EC	A/T Diagnosis Communication Line
AT/IND	EL	A/T Indicator
AUDIO	EL	Audio
BA/FTS	AT	A/T Fluid Temperature Sensor and Transmission Control Module (TCM) Power Supply
BACK/L	EL	Back-up Lamp
BYPS/V	EC	Vacuum Cut Valve Bypass Valve
CHARGE	SC	Charging System
CHIME	EL	Warning Chime
CIGAR	EL	Cigarette Lighter
CKPS	EC	Crankshaft Position Sensor (OBD)
CMPS	EC	Camshaft Position Sensor
COOL/F	EC	Cooling Fan Control [VG33E (if equipped) and VG33ER]
D/LOCK	EL	Power Door Lock
DEF	EL	Rear Window Defogger
DTRL	EL	Headlamp - With Daytime Light System
ECTS	EC	Engine Coolant Temperature Sensor
EGR/TS	EC	EGR Temperature Sensor (KA24DE)
EGRC/V	EC	EGRC-solenoid Valve (KA24DE)
EGRC1	EC	EGR Function (KA24DE)
ENGSS	AT	Engine Speed Signal
F/FOG	EL	Front Fog Lamp
F/PUMP	EC	Fuel Pump
FLS1	EC	Fuel Level Sensor Unit
FLS2	EC	Fuel Level Sensor Unit
FLS3	EC	Fuel Level Sensor Unit
FICD	EC	IACV-FICD Solenoid Valve
FTTS	EC	Fuel Tank Temperature Sensor
FTS	AT	A/T Fluid Temperature Sensor
FUEL	EC	Fuel Injection System Function (KA24DE)
FUELB1	EC	Fuel Injection System Function (Bank 1) (VG33E and VG33ER)
FUELB2	EC	Fuel Injection System Function (Bank 2) (VG33E and VG33ER)
H/LAMP	EL	Headlamp
HEATER	HA	Heater System
HO2S1	EC	Heated Oxygen Sensor 1 (Front) (KA24DE)
HO2S2	EC	Heated Oxygen Sensor 2 (Rear) (KA24DE)
HO2S2H	EC	Heated Oxygen Sensor 2 (Rear) Heater (KA24DE)
HO2S1H	EC	Heated Oxygen Sensor 1 (Front) Heater (KA24DE)
HORN	EL	Horn
IATS	EC	Intake Air Temperature Sensor
IGN/SG	EC	Ignition Signal (KA24DE and VG33E)
IGNSYS	EC	Ignition Signal (VG33ER)
ILL	EL	Illumination
INJECT	EC	Injector
KS	EC	Knock Sensor
LKUP	EC	Torque Converter Clutch Solenoid Valve (KA24DE)
LPSV	AT	Line Pressure Solenoid Valve
MAFS	EC	Mass Air Flow Sensor
MAIN	AT	Main Power Supply and Ground Circuit
MAIN	EC	Main Power Supply and Ground Circuit
METER	EL	Speedometer, Tachometer, Temp., Oil and Fuel Gauges
MIL/DL	EC	MIL and Data Link Connector

Code	Section	Wiring Diagram Name
MIRROR	EL	Door Mirror
MULTI	EL	Multi-remote Control System
NONDTC	AT	Non-detectable Items
O2H1B1	EC	Heated Oxygen Sensor 1 (Front) Heater (Bank 1) (VG33E and VG33ER)
O2H1B2	EC	Heated Oxygen Sensor 1 (Front) Heater (Bank 2) (VG33E and VG33ER)
O2H2B1	EC	Heated Oxygen Sensor 2 (Rear) Heater (Bank 1) (VG33E and VG33ER)
O2H2B2	EC	Heated Oxygen Sensor 2 (Rear) Heater (Bank 2) (VG33E and VG33ER)
O2S1B1	EC	Heated Oxygen Sensor 1 (Front) (Bank 1) (VG33E and VG33ER)
O2S1B2	EC	Heated Oxygen Sensor 1 (Front) (Bank 2) (VG33E and VG33ER)
O2S2B1	EC	Heated Oxygen Sensor 2 (Rear) (Bank 1) (VG33E and VG33ER)
O2S2B2	EC	Heated Oxygen Sensor 2 (Rear) (Bank 2) (VG33E and VG33ER)
OVRCSV	AT	Overrun Clutch Solenoid Valve
PGC/V	EC	EVAP Canister Purge Volume Control Solenoid Valve
PNP/SW	AT	Park/Neutral Position Switch
PNP/SW	EC	Park/Neutral Position Switch
POWER	EL	Power Supply Routing
PRE/SE	EC	EVAP Control System Pressure Sensor
PST/SW	EC	Power Steering Oil Pressure Switch
ROOM/L	EL	Interior Room Lamp
S/CHGR	EC	Supercharger bypass valve control solenoid valve (VG33ER)
S/SIG	EC	Start Signal
SHIFT	AT	A/T Shift Lock System
SRS	RS	Supplemental Restraint System
SSV/A	AT	Shift Solenoid Valve A
SSV/B	AT	Shift Solenoid Valve B
START	SC	Starting System
STOP/L	EL	Stop lamp
TAIL/L	EL	Parking, License and Tail Lamps

Code	Section	Wiring Diagram Name
TCCSIG	AT	A/T TCC Signal (Lock Up)
TCV	AT	Torque Converter Clutch Solenoid Valve
TP/SW	EC	Throttle Position Switch
TPS	AT	Throttle Position Sensor
TPS	EC	Throttle Position Sensor
TRSA/T	AT	Turbine Revolution Sensor
TURN	EL	Turn Signal and Hazard Warning Lamps
VEHSEC	EL	Vehicle Security System
VENT/V	EC	EVAP Canister Vent Control Valve
VSS	EC	Vehicle Speed Sensor
VSSAT	AT	Vehicle Speed Sensor A/T (Revolution Sensor)
VSSMTR	AT	Vehicle Speed Sensor MTR
WARN	EL	Warning Lamps
WINDOW	EL	Power Window
WIPER	EL	Front Wiper and Washer

NOTES