SECTION CHG
CHARGING SYSTEM

CONTENTS

PRECAUTION 3

PRECAUTIONS 3
Precaution for Supplemental Restraint System (SRS) "AIR BAG" and "SEAT BELT PRE-TENSIONER" 3
Precaution for Power Generation Voltage Variable Control System 3
Precautions for Removing of Battery Terminal 3

PREPARATION 5

PREPARATION 5
Special Service Tools 5
Commercial Service Tools 5

SYSTEM DESCRIPTION 6

COMPONENT PARTS 6

CHARGING SYSTEM 6
CHARGING SYSTEM : Component Parts Location 6
CHARGING SYSTEM : Component Description 6

POWER GENERATION VOLTAGE VARIABLE CONTROL SYSTEM 6
POWER GENERATION VOLTAGE VARIABLE CONTROL SYSTEM : Component Parts Location 6
POWER GENERATION VOLTAGE VARIABLE CONTROL SYSTEM : Component Description 7

SYSTEM 8

CHARGING SYSTEM 8
CHARGING SYSTEM : System Diagram 8
CHARGING SYSTEM : System Description 8

POWER GENERATION VOLTAGE VARIABLE CONTROL SYSTEM 8
POWER GENERATION VOLTAGE VARIABLE CONTROL SYSTEM : System Diagram 8
POWER GENERATION VOLTAGE VARIABLE CONTROL SYSTEM : System Description 8

WIRING DIAGRAM 10

CHARGING SYSTEM 10
Wiring Diagram 10

BASIC INSPECTION 14

DIAGNOSIS AND REPAIR WORK FLOW 14
Work Flow (With EXP-800 NI or GR8-1200 NI) 14
Work Flow (Without EXP-800 NI or GR8-1200 NI) 18

CHARGING SYSTEM PRELIMINARY INSPECTION 21
Inspection Procedure 21

POWER GENERATION VOLTAGE VARIABLE CONTROL SYSTEM OPERATION INSPECTION 22
Inspection Procedure 22

DTC/CIRCUIT DIAGNOSIS 24

B TERMINAL CIRCUIT 24
Description 24
Diagnosis Procedure 24

L TERMINAL CIRCUIT (OPEN) 25
Description 25
Diagnosis Procedure 25

L TERMINAL CIRCUIT (SHORT) 27
Description 27
Diagnosis Procedure 27

S TERMINAL CIRCUIT 28
Description 28
Diagnosis Procedure 28

SYMPTOM DIAGNOSIS 29

CHARGING SYSTEM **29**
Symptom Table 29

REMOVAL AND INSTALLATION **30**

ALTERNATOR **30**
Exploded View 30
Removal and Installation 31
Inspection 31

SERVICE DATA AND SPECIFICATIONS (SDS) **32**

SERVICE DATA AND SPECIFICATIONS (SDS) **32**
Alternator 32

PRECAUTION

PRECAUTIONS

Precaution for Supplemental Restraint System (SRS) "AIR BAG" and "SEAT BELT PRE-TENSIONER"

INFOID:0000000009754927

The Supplemental Restraint System such as “AIR BAG” and “SEAT BELT PRE-TENSIONER”, used along with a front seat belt, helps to reduce the risk or severity of injury to the driver and front passenger for certain types of collision. This system includes seat belt switch inputs and dual stage front air bag modules. The SRS system uses the seat belt switches to determine the front air bag deployment, and may only deploy one front air bag, depending on the severity of a collision and whether the front occupants are belted or unbelted.
Information necessary to service the system safely is included in the “SRS AIR BAG” and “SEAT BELT” of this Service Manual.

WARNING:
Always observe the following items for preventing accidental activation.
- **To avoid rendering the SRS inoperative, which could increase the risk of personal injury or death in the event of a collision that would result in air bag inflation, all maintenance must be performed by an authorized NISSAN/INFINITI dealer.**
- **Improper maintenance, including incorrect removal and installation of the SRS, can lead to personal injury caused by unintentional activation of the system. For removal of Spiral Cable and Air Bag Module, see “SRS AIR BAG”.**
- **Never use electrical test equipment on any circuit related to the SRS unless instructed to in this Service Manual. SRS wiring harnesses can be identified by yellow and/or orange harnesses or harness connectors.**

PRECAUTIONS WHEN USING POWER TOOLS (AIR OR ELECTRIC) AND HAMMERS

WARNING:
Always observe the following items for preventing accidental activation.
- **When working near the Air Bag Diagnosis Sensor Unit or other Air Bag System sensors with the ignition ON or engine running, never use air or electric power tools or strike near the sensor(s) with a hammer. Heavy vibration could activate the sensor(s) and deploy the air bag(s), possibly causing serious injury.**
- **When using air or electric power tools or hammers, always switch the ignition OFF, disconnect the battery, and wait at least 3 minutes before performing any service.**

Precaution for Power Generation Voltage Variable Control System

INFOID:0000000009754928

CAUTION:
For model with power generation voltage variable control system, the battery current sensor that is installed to the battery cable at the negative terminal measures the charging/discharging current of the battery, and performs various controls. If the electrical component or the ground wire is connected directly to the battery terminal, the current other than that being measured with the battery current sensor is charging to or discharging from the battery. This condition causes the malfunction of the control, and then the battery discharge may occur. Do not connect the electrical component or the ground wire directly to the battery terminal.

Precautions for Removing of Battery Terminal

INFOID:0000000010193784

- When removing the 12V battery terminal, turn OFF the ignition switch and wait at least 30 seconds.
  NOTE:
  ECU may be active for several tens of seconds after the ignition switch is turned OFF. If the battery terminal is removed before ECU stops, then a DTC detection error or ECU data corruption may occur.
- For vehicles with the 2-batteries, be sure to connect the main battery and the sub battery before turning ON the ignition switch.
  NOTE:

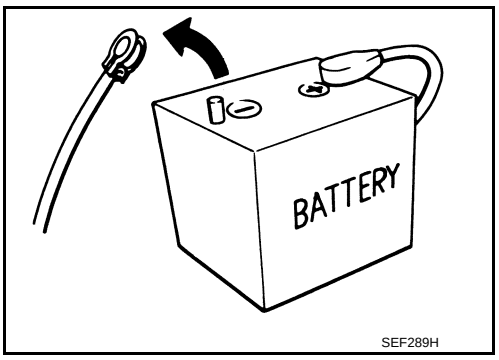

If the ignition switch is turned ON with any one of the terminals of main battery and sub battery disconnected, then DTC may be detected.

- After installing the 12V battery, always check "Self Diagnosis Result" of all ECUs and erase DTC.

NOTE:
The removal of 12V battery may cause a DTC detection error.

PREPARATION

PREPARATION

Special Service Tools

INFOID:0000000009754929

Tool number (Kent-Moore No.) Tool name		Description
— (—) Model GR8-1200 NI Multitasking battery and electrical diagnostic station	 AWIIA1239ZZ	Tests batteries, starting and charging systems and charges batteries. For operating instructions, refer to diagnostic station instruction manual.
— (—) Model EXP-800 NI Battery and electrical diagnostic analyzer	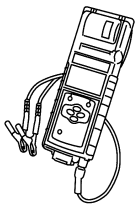 JSMIA0806ZZ	Tests batteries and charging systems. For operating instructions, refer to diagnostic analyzer instruction manual.

Commercial Service Tools

INFOID:0000000009754930

Tool name		Description
Power tool	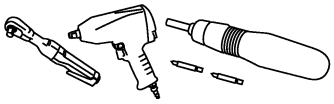 PIIB1407E	Loosening bolts, nuts and screws

SYSTEM DESCRIPTION

COMPONENT PARTS

CHARGING SYSTEM

CHARGING SYSTEM : Component Parts Location

INFOID:0000000009754931

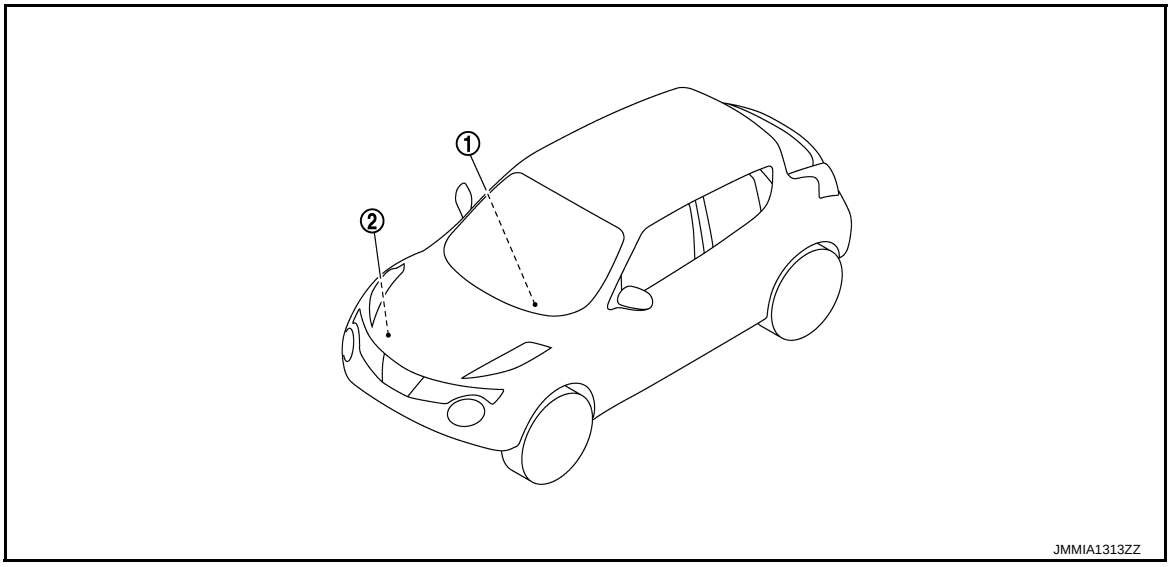

1. Charge warning lamp (On the combination meter)
2. Alternator

CHARGING SYSTEM : Component Description

INFOID:0000000009754932

Component part		Description
Alternator	“B” terminal	Refer to CHG-24, "Description".
	“S” terminal	Refer to CHG-28, "Description".
	“L” terminal	Refer to CHG-25, "Description".
Combination meter (Charge warning lamp)		The IC voltage regulator warning function activates to illuminate the charge warning lamp, if any of the following symptoms occur while alternator is operating: • Excessive voltage is produced. • No voltage is produced.

POWER GENERATION VOLTAGE VARIABLE CONTROL SYSTEM

POWER GENERATION VOLTAGE VARIABLE CONTROL SYSTEM : Component

Parts Location

INFOID:0000000009754933

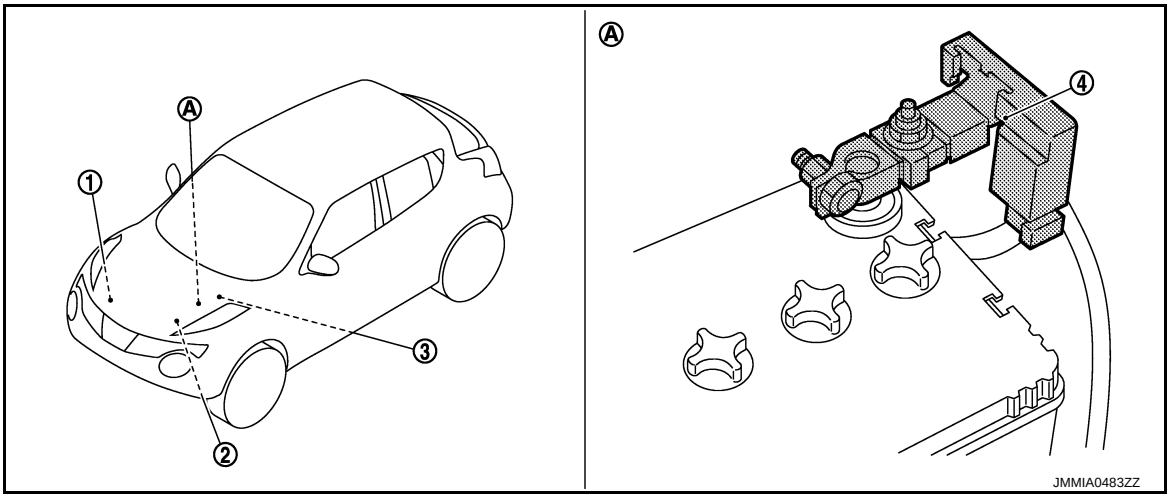

1. Alternator
2. ECM
   Refer to EC-14, "ENGINE CONTROL SYSTEM : Component Parts Location".
3. IPDM E/R
   Refer to PCS-5, "Component Parts Location" (with Intelligent Key system), PCS-37, "Component Parts Location" (without Intelligent Key system).
4. Battery current sensor (with battery temperature sensor)

A. Battery

POWER GENERATION VOLTAGE VARIABLE CONTROL SYSTEM : Component Description

INFOID:0000000009754934

Component part	Description
Alternator (IC voltage regulator)	IC voltage regulator controls the power generation voltage by the target power generation voltage based on the received power generation command signal. When there is no power generation command signal, the alternator performs the normal power generation according to the characteristic of the IC voltage regulator.
Battery current sensor (with battery temperature sensor)	Battery current sensor is installed to the battery cable at the negative terminal, and it detects the charging/discharging current of the battery and sends the voltage signal to ECM according to the current value.
ECM	Battery current sensor detects the charging/discharging current of the battery. ECM judges the battery condition based on this signal. ECM judges whether to perform the power generation voltage variable control according to the battery condition. When performing the power generation voltage variable control, ECM calculates the target power generation voltage according to the battery condition and sends the calculated value as the power generation command value signal to IPDM E/R.
IPDM E/R	IPDM E/R converts the received power generation command value into the power generation command signal (PWM signal) and sends it to the IC voltage regulator.

SYSTEM

CHARGING SYSTEM

CHARGING SYSTEM : System Diagram

INFOID:0000000009754935

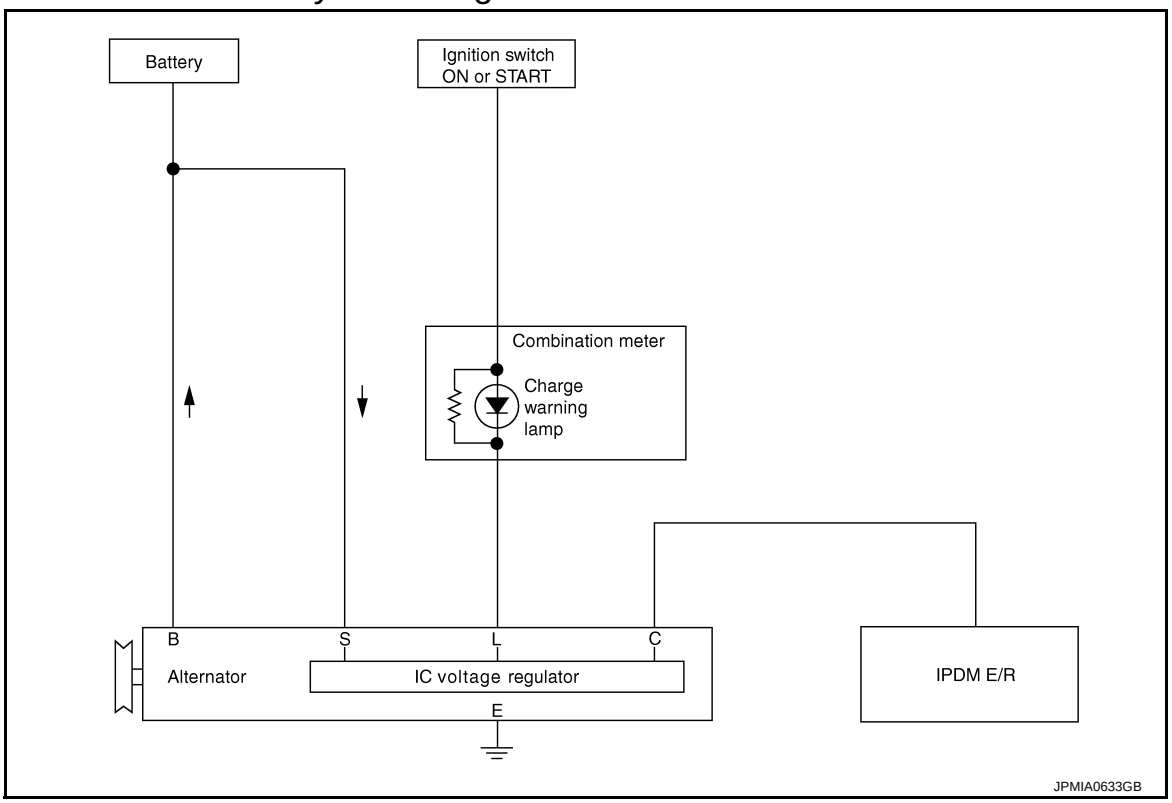

CHARGING SYSTEM : System Description

INFOID:0000000009754936

The alternator provides DC voltage to operate the vehicle's electrical system and to keep the battery charged. The voltage output is controlled by the IC voltage regulator.

POWER GENERATION VOLTAGE VARIABLE CONTROL SYSTEM

POWER GENERATION VOLTAGE VARIABLE CONTROL SYSTEM : System Diagram

INFOID:0000000009754937

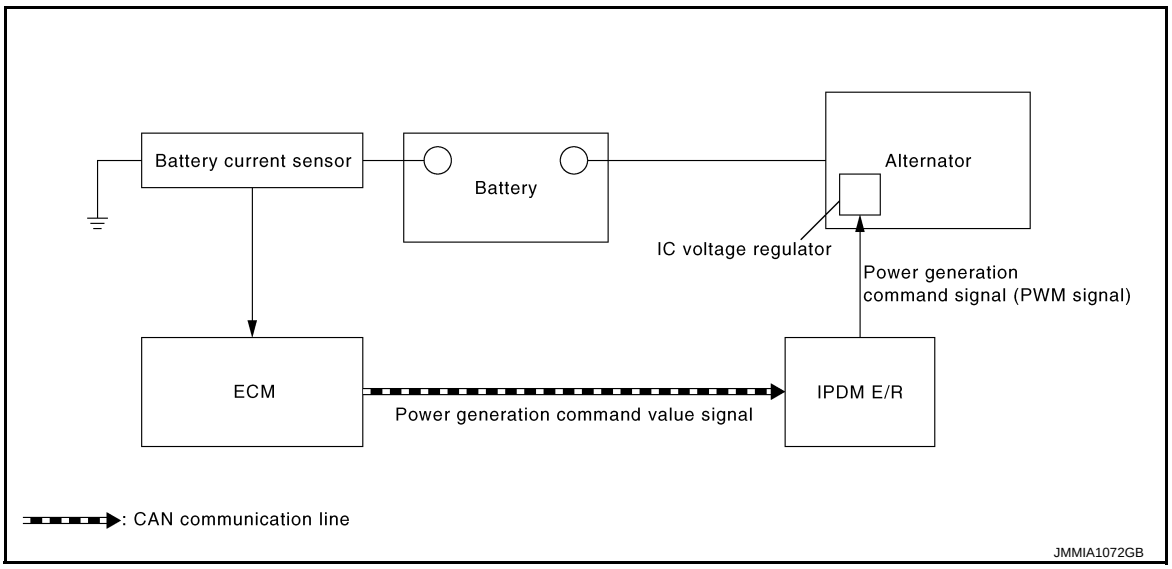

POWER GENERATION VOLTAGE VARIABLE CONTROL SYSTEM : System De-

scription

INFOID:0000000009754938

By performing the power generation voltage variable control, the engine load due to the power generation of the alternator is reduced and fuel consumption is decreased.

NOTE:

When any malfunction is detected in the power generation voltage variable control system, the power generation is performed according to the characteristic of the IC voltage regulator of the alternator.

WIRING DIAGRAM

CHARGING SYSTEM

Wiring Diagram

INFOID:0000000009754939

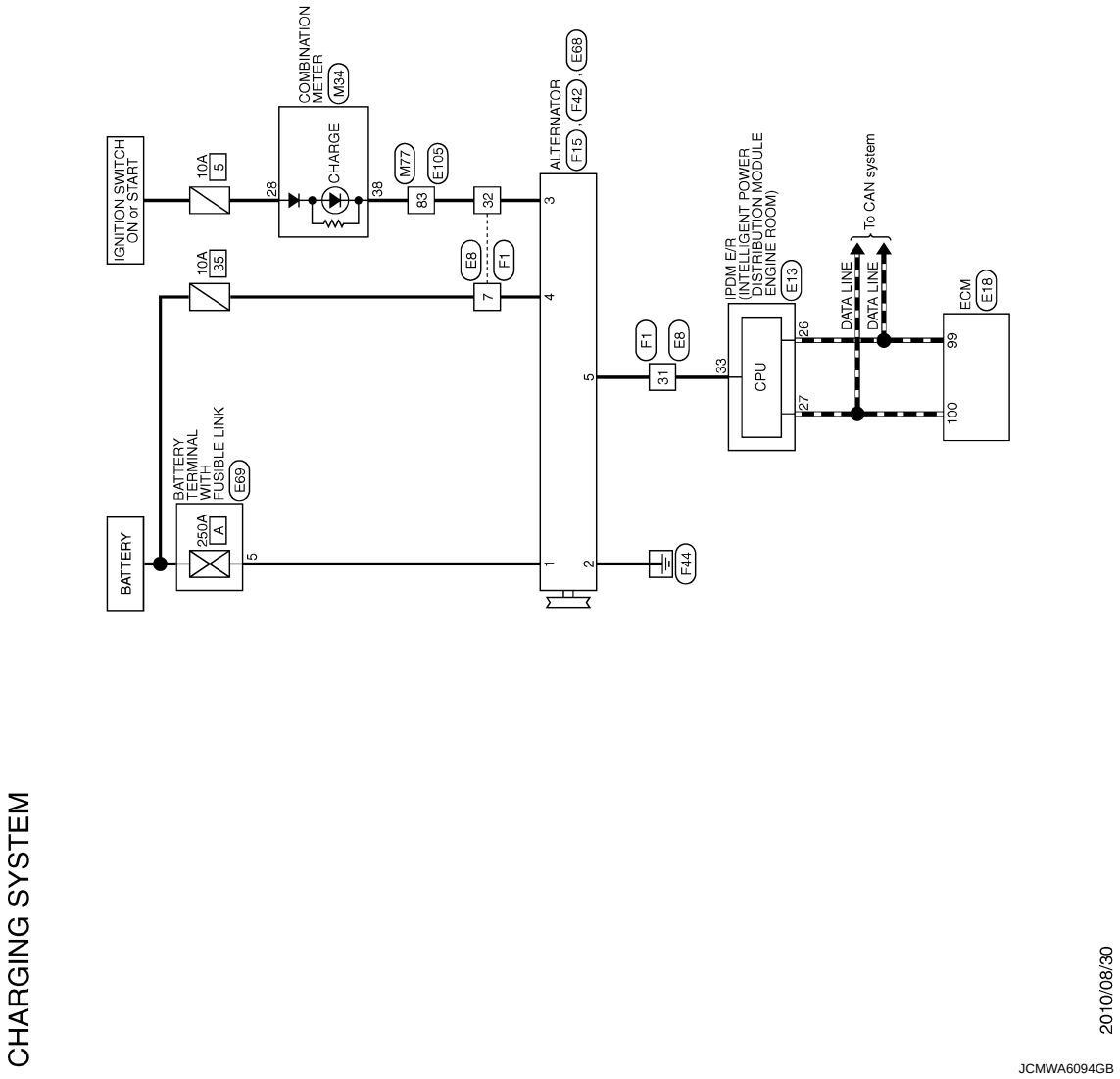

CHARGING SYSTEM

Connector No.	E8
Connector Name	WIRE TO WIRE
Connector Type	SAA38MB-RS10-SJ22

H.S.

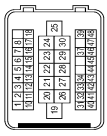

Terminal No.	Color Of Wire	Signal Name [Specification]
1	P	–
2	L	–
3	O	–
4	LG	–
5	O	–
6	V	–
7	BR	–
8	SB	–
10	R	–
11	O	–
12	G	–
13	O	–
14	Y	–
15	R	–
16	SB	–
17	GR	–
18	W	–
19	L/B	–
20	L/W	–
21	G	–
22	G	–
23	SHIELD	–
24	P	–
25	R	–
26	B	–
27	B	–
28	LG	–
29	SB	–
30	R	–
31	G	–
32	Y	–
33	BR	–
34	W	–
37	L	–
39	B	–
40	P	–
41	V	–
42	L	–
43	BR	–
44	G	–
45	BR	–
46	Y	–
47	SB	–
48	LG	–

Connector No.	E13
Connector Name	ECM & IPDM E R (INTELLIGENT POWER DISTRIBUTION MODULE ENGINE ROOM)
Connector Type	TH12FW-NH

H.S.

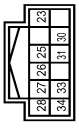

Terminal No.	Color Of Wire	Signal Name [Specification]
23	SB	–
25	BR	–
26	P	–
27	L	–
28	Y	–
30	V	–
31	Y	–
33	G	–
34	L	–

Connector No.	E18
Connector Name	ECM
Connector Type	RH24FGY-RZ8-R-RH

H.S.

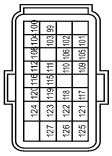

Terminal No.	Color Of Wire	Signal Name [Specification]
99	P	CAN COMMUNICATION LINE (CAN-L)
100	L	CAN COMMUNICATION LINE (CAN-H)
101	V	SENSOR POWER SUPPLY
102	R	ACCELERATOR PEDAL POSITION SENSOR 1
103	BR	PNP SIGNAL
104	R	DATA LINK CONNECTOR
105	GR	SENSOR GROUND (ACCELERATOR PEDAL POSITION SENSOR 1)
106	Y	POWER SUPPLY FOR ECM (BACKUP)
108	GR	CLUTCH PEDAL POSITION SWITCH
109	O	IGNITION SWITCH
110	P	ASCD STEERING SWITCH
111	B	SENSOR GROUND
112	BR	ECM RELAY (SELF SHAT-OFF)
115	SB	STOP LAMP SWITCH
116	G	BRAKE PEDAL POSITION SWITCH
117	Y	FUEL PUMP RELAY
118	O	SENSOR POWER SUPPLY
119	BR	ACCELERATOR PEDAL POSITION SENSOR 2
120	Y	SENSOR GROUND
121	G	POWER SUPPLY FOR ECM
122	GR	THROTTLE CONTROL MOTOR POWER SUPPLY
123	B/Y	ECM GROUND
124	B/Y	ECM GROUND
125	L	A/F SENSOR 1 HEATER
126	W	HEATED OXYGEN SENSOR 2 HEATER
127	B/Y	ECM GROUND

Connector No.	E68
Connector Name	ALTERNATOR
Connector Type	24340 65F45

H.S.

Terminal No.	Color Of Wire	Signal Name [Specification]
1	B/R	–

Connector No.	E69
Connector Name	BATTERY TERMINAL WITH FUSIBLE LINK
Connector Type	24340 79906

H.S.

Terminal No.	Color Of Wire	Signal Name [Specification]
5	B/R	–

Connector No.	E105
Connector Name	WIRE TO WIRE
Connector Type	TH80MW-CS16-TM4

H.S.

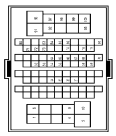

JRMWE7915GB

CHARGING SYSTEM

CHARGING SYSTEM

Terminal No.	Color Of Wire	Signal Name [Specification]
1	L	–
4	Y	–
5	GR	–
6	P	–
9	G	–
10	R	–
34	O	–
35	GR	–
36	B	–
37	P	–
52	SB	–
53	BR	–
54	V	–
55	O	–
58	L	–
59	Y	–
64	LG	–
65	GR	–
66	R	–
67	W	–
68	SB	–
70	R	–
71	LG	–
72	V	–
73	L	–
76	R	–
78	B	–
79	W	–
80	L	–
83	Y	–
84	LG	–
85	GR	–
86	O	–
90	SHIELD	–
91	G	–
92	R	–
95	BR	–
96	P	–
97	GR	–
98	W	–
99	V	–
100	O	–

Connector No.	F1
Connector Name	WIRE TO WIRE
Connector Type	SAA36FB-RS10-SJZ2

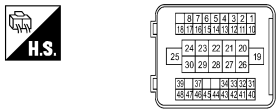

Terminal No.	Color Of Wire	Signal Name [Specification]
1	P	–
2	L	–
3	Y	–
4	BG	–
5	LG	–
6	SB	–
7	G	–
8	R	–
10	BR	–
11	Y	–
12	G	–
13	BG	–
14	L	–
15	BR	–
16	P	–
17	SB	–
18	G	–
19	G	–
20	BR	–
21	G	–
22	BR	–
23	SHIELD	–
24	R	–
25	R	–
26	B	–
27	B	–
28	R	–
29	W	–
30	R	–
31	BG	–
32	LG	–
33	BR	–
34	G	–
37	G	–
39	B	–
40	P	–
41	BR	–
42	W	–
43	L	–
44	G	–
45	BR	–
46	R	–
47	Y	–
48	GR	–

Connector No.	F15
Connector Name	ALTERNATOR
Connector Type	HS03FB

Terminal No.	Color Of Wire	Signal Name [Specification]
3	LG	–
4	G	–
5	BG	–

Connector No.	F42
Connector Name	ALTERNATOR
Connector Type	E-LA6

Terminal No.	Color Of Wire	Signal Name [Specification]
2	B	–

Connector No.	M34
Connector Name	COMBINATION METER
Connector Type	TH40FW-NH

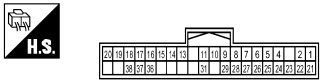

Terminal No.	Color Of Wire	Signal Name [Specification]
1	L	CAN-H
2	P	CAN-L
4	V	VEHICLE SPEED SIGNAL (8-PULSE) [With front fog lamp]
4	Y	VEHICLE SPEED SIGNAL (8-PULSE) [Without front fog lamp]
5	G	PADDLE SHIFTER UP SWITCH SIGNAL
6	BR	FUEL LEVEL SENSOR SIGNAL
7	R	AIR BAG SIGNAL
8	P	– [Without front fog lamp]
8	Y	– [With front fog lamp]
9	O	SEAT BELT BUCKLE SWITCH SIGNAL (DRIVER SIDE) [With front fog lamp]
9	W	SEAT BELT BUCKLE SWITCH SIGNAL (DRIVER SIDE) [Without front fog lamp]
10	SB	PARKING BRAKE SWITCH SIGNAL
11	G	BRAKE FLUID LEVEL SWITCH SIGNAL
13	B	ILLUMINATION CONTROL SIGNAL [With front fog lamp]
13	GR	ILLUMINATION CONTROL SIGNAL [Without front fog lamp]
14	R	MANUAL MODE SHIFT UP SIGNAL [Without front fog lamp]
14	V	MANUAL MODE SHIFT UP SIGNAL [With front fog lamp]
15	L	ACC POWER SUPPLY
16	O	MANUAL MODE SHIFT DOWN SIGNAL [With front fog lamp]
16	W	MANUAL MODE SHIFT DOWN SIGNAL [Without front fog lamp]
17	G	WASHER LEVEL SWITCH SIGNAL [Without front fog lamp]
17	W	WASHER LEVEL SWITCH SIGNAL [With front fog lamp]
18	R	SECURITY SIGNAL
19	GR	AMBIENT SENSOR SIGNAL
20	LG	AMBIENT SENSOR GROUND [With front fog lamp]
20	R	AMBIENT SENSOR GROUND [Without front fog lamp]
21	B	GROUND
22	B	GROUND
23	B	GROUND
24	L	FUEL LEVEL SENSOR GROUND
25	B	VDC GROUND
26	V	PADDLE SHIFTER DOWN SWITCH SIGNAL
27	LG	BATTERY POWER SUPPLY
28	GR	IGNITION SIGNAL
29	LG	PASSENGER SEAT BELT WARNING SIGNAL [With front fog lamp]
29	V	PASSENGER SEAT BELT WARNING SIGNAL [Without front fog lamp]

JRMWE7916GB

CHARGING SYSTEM

31	P	A/C AUTO AMP. CONNECTION RECOGNITION SIGNAL
36	LG	MANUAL MODE SIGNAL [With front fog lamp]
36	Y	MANUAL MODE SIGNAL [Without front fog lamp]
37	G	NON-MANUAL MODE SIGNAL [Without front fog lamp]
37	Y	NON-MANUAL MODE SIGNAL [With front fog lamp]
38	P	ALTERNATOR SIGNAL

Connector No.	M77
Connector Name	WIRE TO WIRE
Connector Type	TH80FW-CS16-TM4

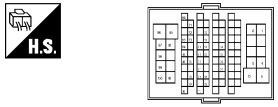

Terminal No.	Color Of Wire	Signal Name [Specification]
1	L	–
4	V	–
5	W	–
6	P	–
9	R	–
10	R	–
34	LG	–
35	SB	–
36	B	–
37	P	–
52	R	–
53	L	–
54	SB	–
55	P	–
58	LG	–
59	G	–
64	G	–
65	GR	–
66	Y	–
67	V	–
68	R	–
70	V	–
71	R	–
72	GR	–
73	G	–
76	W	–
78	LG	–
79	V	–
80	LG	–
83	P	–
84	G	–
85	BR	–
86	LG	–
90	SHIELD	–
91	Y	–
92	BR	–
95	R	– [Without Intelligent Key]
95	Y	– [With Intelligent Key]
96	L	–
97	GR	–
98	G	–
99	W	–
100	LG	–

JRMWE7917GB

BASIC INSPECTION

DIAGNOSIS AND REPAIR WORK FLOW

Work Flow (With EXP-800 NI or GR8-1200 NI)

INFOID:0000000009754940

CHARGING SYSTEM DIAGNOSIS WITH EXP-800 NI OR GR8-1200 NI

To test the charging system, use the following special service tools:

- EXP-800 NI Battery and electrical diagnostic analyzer
- GR8-1200 NI Multitasking battery and electrical diagnostic station

NOTE:

Refer to the applicable Instruction Manual for proper charging system diagnosis procedures.

OVERALL SEQUENCE

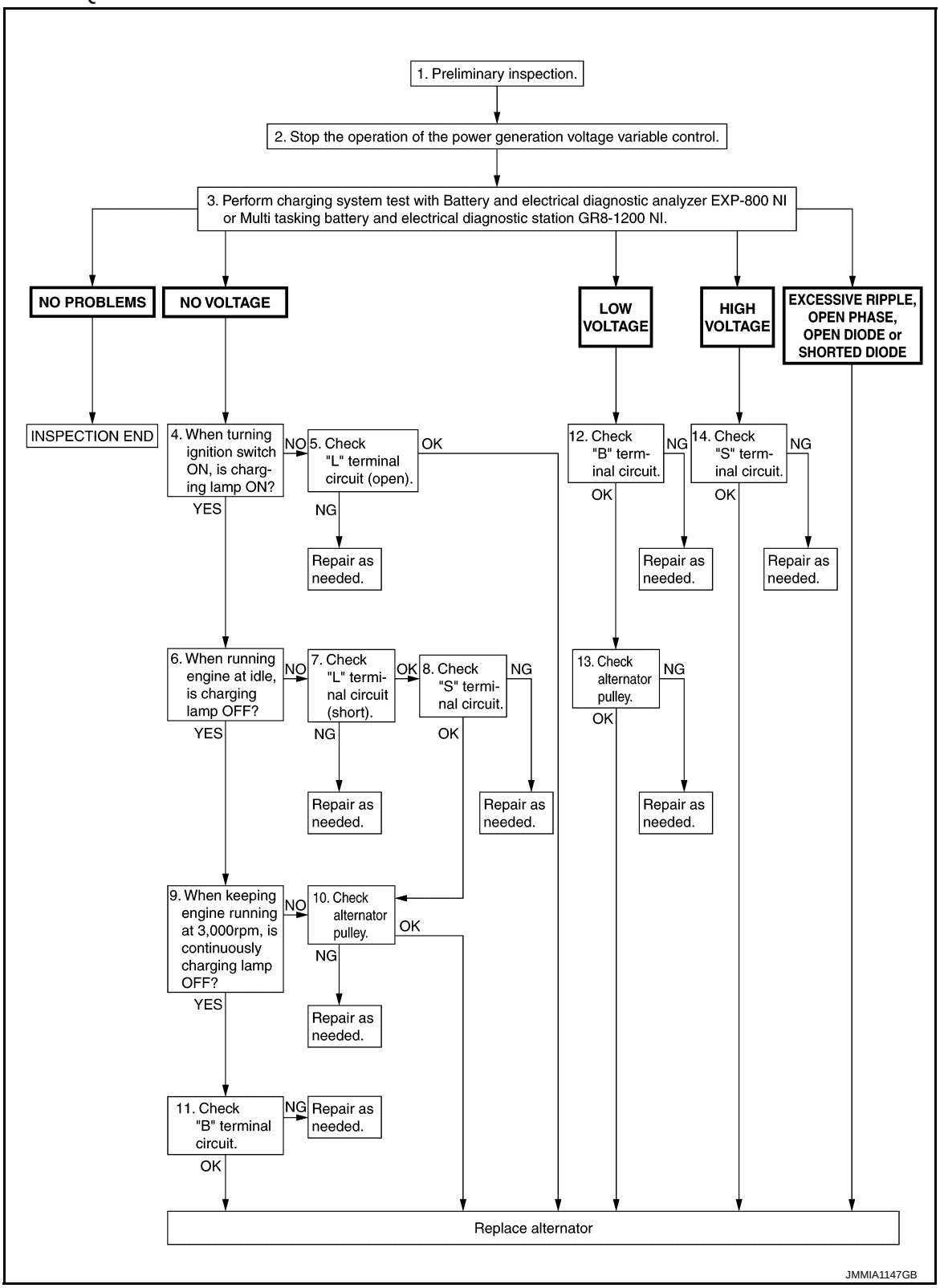

DETAILED FLOW

NOTE:

To ensure a complete and thorough diagnosis, the battery, starter and alternator test segments must be done as a set from start to finish.

1. PRELIMINARY INSPECTION

Perform the preliminary inspection. Refer to CHG-21, "Inspection Procedure".

>> GO TO 2.

2. STOP POWER GENERATION VOLTAGE VARIABLE CONTROL SYSTEM

Stop the operation of the power generation voltage variable control in either of the following procedures.

- After selecting “ENGINE” of “SELECT SYSTEM” using CONSULT, set the DUTY value of “ALTERNATOR DUTY” to 0 % by selecting “ALTERNATOR DUTY” of “Active Test”. Continue “Active Test” until the end of inspection. (When the DUTY value is 0 or 100 %, the normal power generation is performed according to the characteristic of the IC voltage regulator of the alternator.)
- Turn the ignition switch OFF, and disconnect the battery current sensor connector. [However, DTC (P1550 - P1554) of the engine might remain. After finishing the inspection, connect the battery current sensor connector and erase the self-diagnosis results history of the engine using CONSULT.]

>> GO TO 3.

3. DIAGNOSIS WITH EXP-800 NI OR GR8-1200 NI

Perform the charging system test using Multitasking battery and electrical diagnostic station GR8-1200 NI or Battery and electrical diagnostic analyzer EXP-800 NI. Refer to the applicable Instruction Manual for proper testing procedures.

Test result

NO PROBLEMS>>Charging system is normal and will also show “DIODE RIPPLE” test result.
NO VOLTAGE>>GO TO 4.
LOW VOLTAGE>>GO TO 12.
HIGH VOLTAGE>>GO TO 14.
EXCESSIVE RIPPLE, OPEN PHASE, OPEN DIODE or SHORTED DIODE>>Replace the alternator. Perform “DIODE RIPPLE” test again using Multitasking battery and electrical diagnostic station GR8-1200 NI or Battery and electrical diagnostic analyzer EXP-800 NI to confirm repair.

4. INSPECTION WITH CHARGE WARNING LAMP (IGNITION SWITCH IS ON)

Turn the ignition switch ON.

Does the charge warning lamp illuminate?

YES >> GO TO 6.
NO >> GO TO 5.

5. “L” TERMINAL CIRCUIT (OPEN) INSPECTION

Check “L” terminal circuit (open). Refer to CHG-25, "Diagnosis Procedure".

Is the “L” terminal circuit normal?

YES >> Replace alternator. Refer to CHG-31, "Removal and Installation".
NO >> Repair as needed.

6. INSPECTION WITH CHARGE WARNING LAMP (IDLING)

Start the engine and run it at idle.

Does the charge warning lamp turn OFF?

YES >> GO TO 9.
NO >> GO TO 7.

7. “L” TERMINAL CIRCUIT (SHORT) INSPECTION

Check “L” terminal circuit (short). Refer to CHG-27, "Diagnosis Procedure".

Is the “L” terminal circuit normal?

YES >> GO TO 8.
NO >> Repair as needed.

8. “S” TERMINAL CIRCUIT INSPECTION

Check “S” terminal circuit. Refer to CHG-28, "Diagnosis Procedure".

Is the “S” terminal circuit normal?

YES >> GO TO 10.
NO >> Repair as needed.

9. INSPECTION WITH CHARGE WARNING LAMP (ENGINE AT 3,000 RPM)

Increase and maintain the engine speed at 3,000 rpm.

Does the charge warning lamp remain off?

YES >> GO TO 11.
NO >> GO TO 10.

10. INSPECTION OF ALTERNATOR PULLEY

Check alternator pulley. Refer to CHG-31, "Inspection".

Is alternator pulley normal?

YES >> Replace alternator. Refer to CHG-31, "Removal and Installation".
NO >> Repair as needed.

11. "B" TERMINAL CIRCUIT INSPECTION

Check "B" terminal circuit. Refer to CHG-24, "Diagnosis Procedure".

Is "B" terminal circuit normal?

YES >> Replace alternator. Refer to CHG-31, "Removal and Installation".
NO >> Repair as needed.

12. "B" TERMINAL CIRCUIT INSPECTION

Check "B" terminal circuit. Refer to CHG-24, "Diagnosis Procedure".

Is "B" terminal circuit normal?

YES >> GO TO 13.
NO >> Repair as needed.

13. INSPECTION OF ALTERNATOR PULLEY

Check alternator pulley. Refer to CHG-31, "Inspection".

Is alternator pulley normal?

YES >> Replace alternator. Refer to CHG-31, "Removal and Installation".
NO >> Repair as needed.

14. "S" TERMINAL CIRCUIT INSPECTION

Check "S" terminal circuit. Refer to CHG-28, "Diagnosis Procedure".

Is the "S" terminal circuit normal?

YES >> Replace alternator. Refer to CHG-31, "Removal and Installation".
NO >> Repair as needed.

Work Flow (Without EXP-800 NI or GR8-1200 NI)

INFOID:0000000009754941

OVERALL SEQUENCE

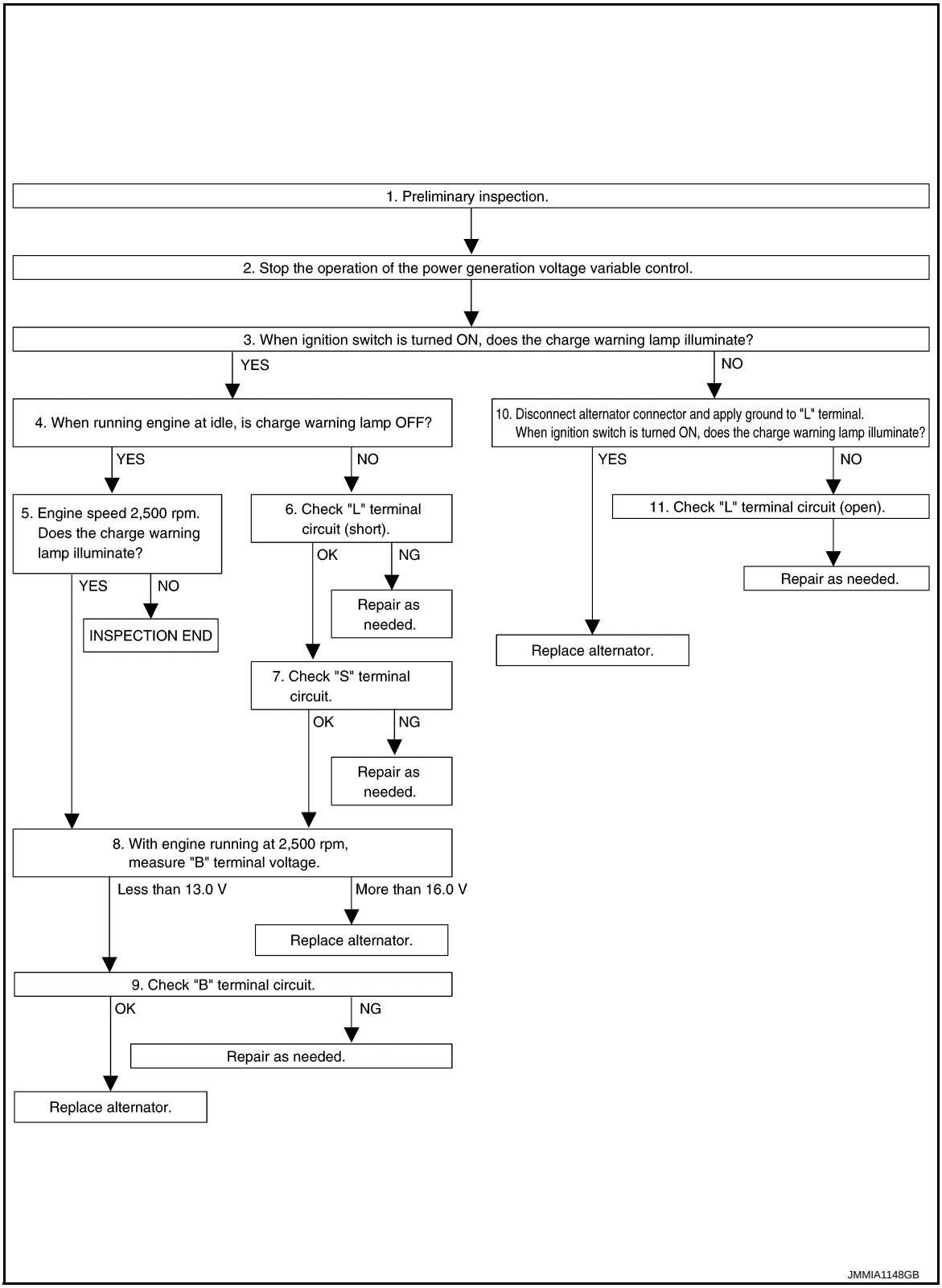

DETAILED FLOW

1. PRELIMINARY INSPECTION

Perform the preliminary inspection. Refer to CHG-21, "Inspection Procedure".

>> GO TO 2.

2. STOP POWER GENERATION VOLTAGE VARIABLE CONTROL SYSTEM

Stop the operation of the power generation voltage variable control in either of the following procedures.

- After selecting “ENGINE” of “SELECT SYSTEM” using CONSULT, set the DUTY value of “ALTERNATOR DUTY” to 0 % by selecting “ALTERNATOR DUTY” of “Active Test”. Continue “Active Test” until the end of inspection. (When the DUTY value is 0 or 100 %, the normal power generation is performed according to the characteristic of the IC regulator of the alternator.)
- Turn the ignition switch OFF, and disconnect the battery current sensor connector. [However, DTC (P1550 - P1554) of the engine might remain. After finishing the inspection, connect the battery current sensor connector and erase the self-diagnostic results history of the engine using CONSULT.]

>> GO TO 3.

3. INSPECTION WITH CHARGE WARNING LAMP (IGNITION SWITCH IS TURNED ON)

When ignition switch is turned ON

Does the charge warning lamp illuminate?

YES >> GO TO 4.
NO >> GO TO 10.

4. INSPECTION WITH CHARGE WARNING LAMP (IDLING)

Start the engine and run it at idle.

Does the charge warning lamp turn OFF?

YES >> GO TO 5.
NO >> GO TO 6.

5. INSPECTION WITH CHARGE WARNING LAMP (ENGINE AT 2,500 RPM)

Increase and maintain the engine speed at 2,500 rpm.

Does the charge warning lamp illuminate?

YES >> GO TO 8.
NO >> INSPECTION END

6. “L” TERMINAL CIRCUIT (SHORT) INSPECTION

Check “L” terminal circuit (short). Refer to CHG-27, "Diagnosis Procedure".

Is the inspection result normal?

YES >> GO TO 7.
NO >> Repair as needed.

7. “S” TERMINAL CIRCUIT INSPECTION

Check “S” terminal circuit. Refer to CHG-28, "Diagnosis Procedure".

Is the inspection result normal?

YES >> GO TO 8.
NO >> Repair as needed.

8. MEASURE “B” TERMINAL VOLTAGE

Start engine. With engine running at 2,500 rpm, measure “B” terminal voltage.

What voltage does the measurement result show?

Less than 13.0 V>>GO TO 9.
More than 16.0 V>>Replace alternator. Refer to CHG-31, "Removal and Installation".

9. “B” TERMINAL CIRCUIT INSPECTION

Check “B” terminal circuit. Refer to CHG-24, "Diagnosis Procedure".

Is the inspection result normal?

YES >> Replace alternator. Refer to CHG-31, "Removal and Installation".
NO >> Repair as needed.

10. INSPECTION WITH CHARGE WARNING LAMP (IGNITION SWITCH IS ON)

1. Disconnect alternator connector and apply ground to “L” terminal.
2. Turn the ignition switch ON.

Does the charge warning lamp illuminate?

YES >> Replace alternator. Refer to CHG-31, "Removal and Installation".
NO >> GO TO 11.

11. CHECK “L” TERMINAL CIRCUIT (OPEN)

Check “L” terminal circuit (open). Refer to CHG-25, "Diagnosis Procedure".

>> Repair as needed.

CHARGING SYSTEM PRELIMINARY INSPECTION

Inspection Procedure

INFOID:0000000009754942

1. CHECK BATTERY TERMINALS CONNECTION

Check if battery terminals are clean and tight.

Is the inspection result normal?

YES >> GO TO 2.
NO >> Repair battery terminals connection.

2. CHECK FUSE

Check for blown fuse and fusible link.

Unit	Power source (Power supply terminals)	Fuse No.
Alternator	Battery (“S” terminal)	35
Combination meter	Ignition switch ON (“L” terminal)	5

Is the inspection result normal?

YES >> GO TO 3.
NO >> Be sure to eliminate the cause of malfunction before installing new fuse.

3. CHECK “E” TERMINAL CONNECTION (ALTERNATOR GROUND)

Check if “E” terminal (alternator ground) is clean and tight.

Is the inspection result normal?

YES >> GO TO 4.
NO >> Repair “E” terminal (alternator ground) connection.

4. CHECK DRIVE BELT TENSION

Check drive belt tension. Refer to EM-19, "Inspection".

Is the inspection result normal?

YES >> INSPECTION END
NO >> Repair as needed.

POWER GENERATION VOLTAGE VARIABLE CONTROL SYSTEM OPERATION INSPECTION

Inspection Procedure

INFOID:0000000009754943

CAUTION:
When performing this inspection, always use a charged battery that has completed the battery inspection. (When the charging rate of the battery is low, the response speed of the voltage change will become slow. This can cause an incorrect inspection.)

1. CHECK ECM (CONSULT)

Perform ECM self-diagnosis with CONSULT. Refer to EC-71, "CONSULT Function".

Self-diagnostic results content

No malfunction detected>> GO TO 2.
Malfunction detected>> Check applicable parts, and repair or replace corresponding parts.

2. CHECK OPERATION OF POWER GENERATION VOLTAGE VARIABLE CONTROL SYSTEM

1. Connect CONSULT and start the engine.
2. Check that the selector lever is in “P” or “N” position (CVT models) or shifter lever is in neutral position (M/T models) and that all of the electric loads and A/C, etc. are turned OFF.
3. Select “ALTERNATOR DUTY” at “Active Test” of “ENGINE”, and then check the value of “BATTERY VOLT” monitor when DUTY value of “ALTERNATOR DUTY” is set to 40.0 %.

“BATTERY VOLT”	
2 seconds after setting the DUTY value of “ALTERNATOR DUTY” to 40.0 %	**: 12 - 13.6 V**

4. Check the value of “BATTERY VOLT” monitor when DUTY value of “ALTERNATOR DUTY” is set to 80.0%.

“BATTERY VOLT”	
20 seconds after setting the DUTY value of “ALTERNATOR DUTY” to 80.0 %	**: +0.5 V or more against the value of “BATTERY VOLT” monitor when DUTY value is 40.0 %**

Is the measurement value within the specification?

YES >> INSPECTION END
NO >> GO TO 3.

3. CHECK IPDM E/R (CONSULT)

Perform IPDM E/R self-diagnosis with CONSULT. Refer to PCS-14, "CONSULT Function (IPDM E/R)" (with Intelligent Key system), PCS-45, "CONSULT Function (IPDM E/R)" (without Intelligent Key system).

Self-diagnostic results content

No malfunction detected>> GO TO 4.
Malfunction detected>> Check applicable parts, and repair or replace corresponding parts.

4. CHECK HARNESS BETWEEN ALTERNATOR AND IPDM E/R

1. Turn ignition switch OFF.
2. Disconnect alternator connector and IPDM E/R connector.
3. Check continuity between alternator harness connector and IPDM E/R harness connector.

Alternator harness connector		IPDM E/R harness connector		Continuity
Connector	Terminal	Connector	Terminal	
F15	5	E13	33	Existed

4. Check continuity between alternator harness connector and ground.

Alternator harness connector		Ground	Continuity
Connector	Terminal		
F15	5		Not existed

Is the inspection result normal?

YES >> Replace IPDM E/R.
NO >> Repair harness or connector between IPDM E/R and alternator.

DTC/CIRCUIT DIAGNOSIS

B TERMINAL CIRCUIT

Description

INFOID:0000000009754944

"B" terminal circuit supplies power to charge the battery and to operate the vehicle's electrical system.

Diagnosis Procedure

INFOID:0000000009754945

1. CHECK "B" TERMINAL CONNECTION

1. Turn ignition switch OFF.
2. Check if "B" terminal is clean and tight.

Is the inspection result normal?

YES >> GO TO 2.
NO >> Repair "B" terminal connection. Confirm repair by performing complete Charging system test using EXP-800 NI or GR8-1200 NI (if available). Refer to the applicable Instruction Manual for proper testing procedures.

2. CHECK "B" TERMINAL CIRCUIT

Check voltage between alternator "B" terminal and ground.

Terminals			Voltage (Approx.)
(+)		(–)	
Alternator "B" terminal	Terminal		
E68	1	Ground	Battery voltage

Is the inspection result normal?

YES >> GO TO 3.
NO >> Check harness for open between alternator and fusible link.

3. CHECK "B" TERMINAL CONNECTION (VOLTAGE DROP TEST)

1. Start engine, then engine running at idle and warm.
2. Check voltage between battery positive terminal and alternator "B" terminal.

Terminals			Voltage (Approx.)
(+)	(–)		
	Alternator "B" terminal	Terminal	
Battery positive terminal	E68	1	Less than 0.2 V

Is the inspection result normal?

YES >> "B" terminal circuit is normal. Refer to CHG-14, "Work Flow (With EXP-800 NI or GR8-1200 NI)" or CHG-18, "Work Flow (Without EXP-800 NI or GR8-1200 NI)".
NO >> Check harness between battery and alternator for poor continuity.

L TERMINAL CIRCUIT (OPEN)

Description

INFOID:0000000009754946

The “L” terminal circuit controls the charge warning lamp. The charge warning lamp illuminates when the ignition switch is set to ON or START. When the alternator is providing sufficient voltage with the engine running, the charge warning lamp will go off. If the charge warning lamp illuminates with the engine running, a malfunction is indicated.

Diagnosis Procedure

INFOID:0000000009754947

1. CHECK “L” TERMINAL CONNECTION

1. Turn ignition switch OFF.
2. Check if “L” terminal is clean and tight.

Is the inspection result normal?

YES >> GO TO 2.
NO >> Repair “L” terminal connection. Confirm repair by performing complete Charging system test using EXP-800 NI or GR8-1200 NI (if available). Refer to the applicable Instruction Manual for proper testing procedures.

2. CHECK “L” TERMINAL CIRCUIT (OPEN)

1. Disconnect alternator connector.
2. Apply ground to alternator harness connector terminal.
3. Check condition of the charge warning lamp with the ignition switch in the ON position.

Alternator harness connector	Terminal	Ground	Condition	
			Ignition switch position	Charge warning lamp
F15	3		ON	Illuminate

Does it illuminate?

YES >> “L” terminal circuit is normal. Refer to CHG-14, "Work Flow (With EXP-800 NI or GR8-1200 NI)" or CHG-18, "Work Flow (Without EXP-800 NI or GR8-1200 NI)".
NO >> GO TO 3.

3. CHECK HARNESS CONTINUITY (OPEN CIRCUIT)

1. Disconnect the battery cable from the negative terminal.
2. Disconnect the combination meter connector.
3. Check continuity between alternator harness connector and combination meter harness connector.

Alternator harness connector		Combination meter harness connector		Continuity
Connector No.	Terminal No.	Connector No.	Terminal No.	
F15	3	M34	38	Existed

Is the inspection result normal?

YES >> GO TO 4.
NO >> Repair the harness or connector.

4. CHECK HARNESS CONTINUITY (OPEN CIRCUIT)

Check continuity between combination meter harness connector M34 terminal 28 and 10A fuse [No.5 located in the fuse block (J/B)].

Does continuity exist?

YES >> GO TO 5.
NO >> Repair the harness.

5. CHECK POWER SUPPLY CIRCUIT

1. Connect the battery cable to the negative terminal.
2. Check voltage between combination meter harness connector and ground.

Terminals			Condition	Voltage (Approx.)
(+)		(–)		
Combination meter harness connector	Terminal			
M34	28	Ground	When the ignition switch is in ON position	Battery voltage

Is the inspection result normal?

YES >> Replace combination meter.
NO >> Inspect the power supply circuit. Refer to PG-41, "Wiring Diagram - IGNITION POWER SUPPLY - ".

L TERMINAL CIRCUIT (SHORT)

Description

INFOID:0000000009754948

The “L” terminal circuit controls the charge warning lamp. The charge warning lamp illuminates when the ignition switch is set to ON or START. When the alternator is providing sufficient voltage with the engine running, the charge warning lamp will go off. If the charge warning lamp illuminates with the engine running, a malfunction is indicated.

Diagnosis Procedure

INFOID:0000000009754949

1. CHECK “L” TERMINAL CIRCUIT (SHORT)

1. Turn ignition switch OFF.
2. Disconnect alternator connector.
3. Turn ignition switch ON.

Does charge warning lamp illuminate?

YES >> GO TO 2.
NO >> Refer to CHG-14, "Work Flow (With EXP-800 NI or GR8-1200 NI)" or CHG-18, "Work Flow (Without EXP-800 NI or GR8-1200 NI)".

2. CHECK HARNESS CONTINUITY (SHORT CIRCUIT)

1. Turn ignition switch OFF.
2. Disconnect the battery cable from the negative terminal.
3. Disconnect combination meter connector.
4. Check continuity between combination meter harness connector and ground.

Combination meter harness connector		Ground	Continuity
Connector No.	Terminal No.		
M34	38		Not existed

Is the inspection result normal?

YES >> Replace combination meter.
NO >> Repair the harness.

S TERMINAL CIRCUIT

Description

INFOID:0000000009754950

The output voltage of the alternator is controlled by the IC voltage regulator at the “S” terminal detecting the input voltage.
The “S” terminal circuit detects the battery voltage to adjust the alternator output voltage with the IC voltage regulator.

Diagnosis Procedure

INFOID:0000000009754951

1.CHECK “S” TERMINAL CONNECTION

1. Turn ignition switch OFF.
2. Check if “S” terminal is clean and tight.

Is the inspection result normal?

YES >> GO TO 2.
NO >> Repair “S” terminal connection. Confirm repair by performing complete Charging system test using EXP-800 NI or GR8-1200 NI (if available). Refer to the applicable Instruction Manual for proper testing procedures.

2.CHECK “S” TERMINAL CIRCUIT

Check voltage between alternator harness connector and ground.

Terminals			Voltage (Approx.)
(+)		(–)	
Alternator harness connector	Terminal		
F15	4	Ground	Battery voltage

Is the inspection result normal?

YES >> Refer to CHG-14, "Work Flow (With EXP-800 NI or GR8-1200 NI)" or CHG-18, "Work Flow (Without EXP-800 NI or GR8-1200 NI)".
NO >> Check harness for open between alternator and fuse.

SYMPTOM DIAGNOSIS

CHARGING SYSTEM

Symptom Table

INFOID:0000000009754952

Symptom	Reference
Discharged battery	Refer to CHG-14, "Work Flow (With EXP-800 NI or GR8-1200 NI)" or CHG-18, "Work Flow (Without EXP-800 NI or GR8-1200 NI)".
The charge warning lamp does not illuminate when the ignition switch is set to ON.	
The charge warning lamp does not turn OFF after the engine starts.	
The charging warning lamp turns ON when increasing the engine speed.	

REMOVAL AND INSTALLATION

ALTERNATOR

Exploded View

INFOID:0000000009754953

REMOVAL

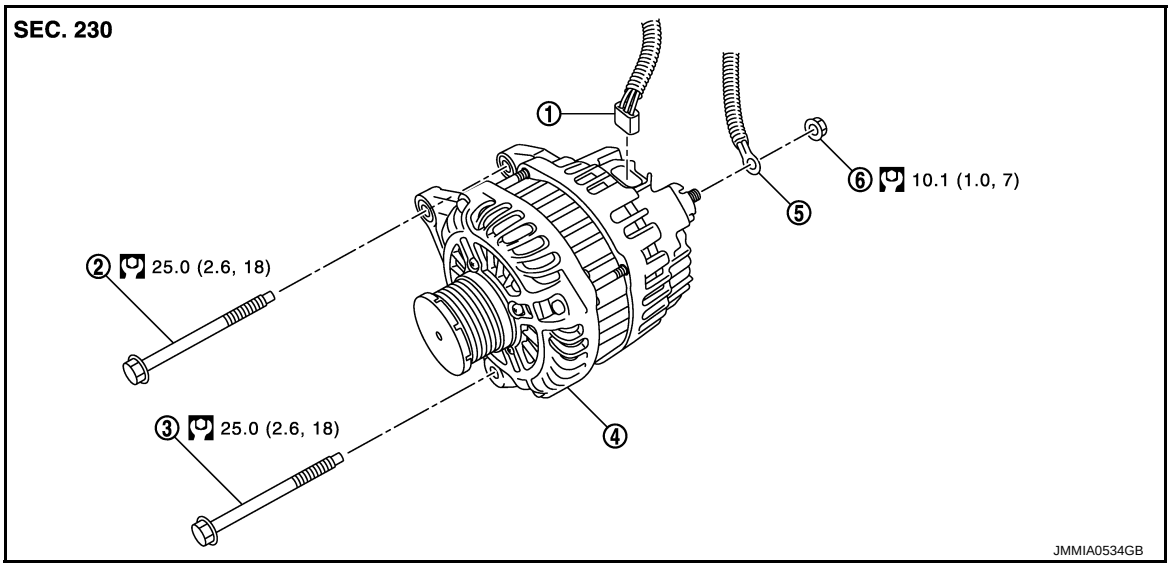

1. Alternator connector	2. Alternator mounting bolt (upper)	3. Alternator mounting bolt (lower)
4. Alternator	5. “B” terminal harness	6. “B” terminal nut

: N·m (kg-m, ft-lb)

DISASSEMBLY

Type: A002TJ1381

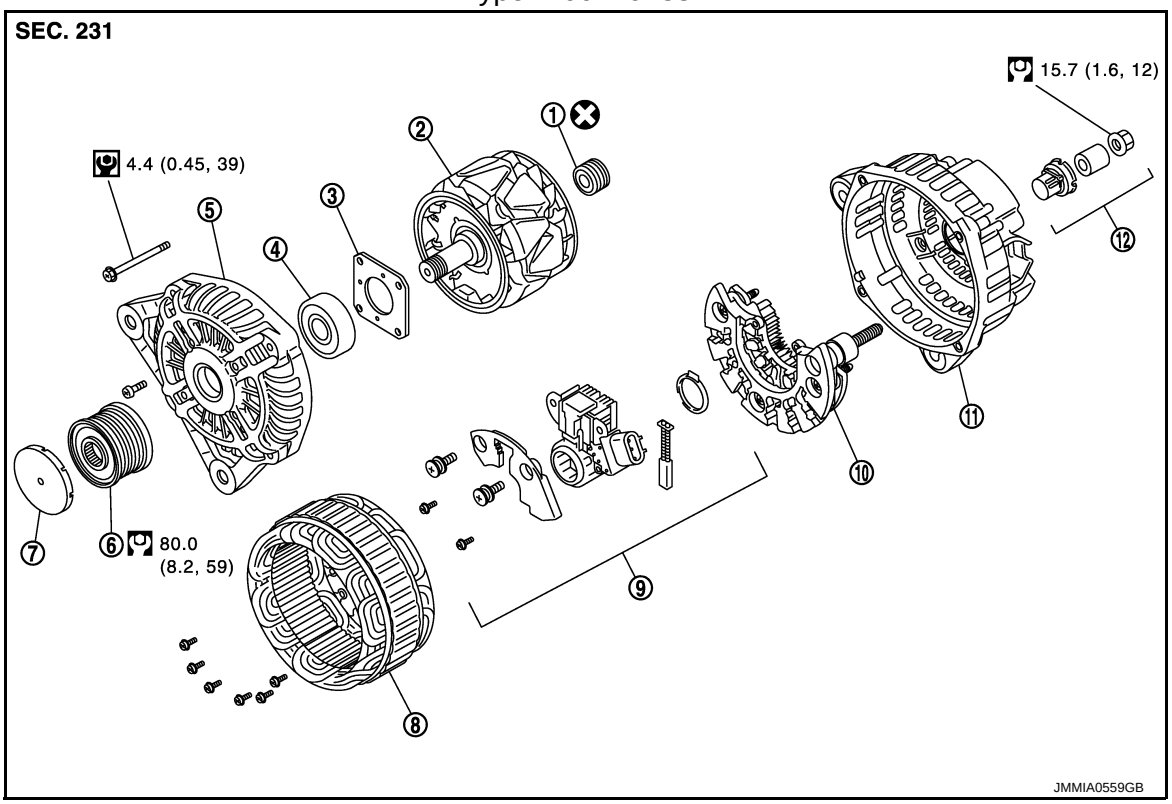

1. Rear bearing	2. Rotor assembly	3. Retainer
4. Front bearing	5. Front bracket assembly	6. Pulley
7. Pulley cap	8. Stator assembly	9. IC voltage regulator assembly
10. Diode assembly	11. Rear bracket assembly	12. Terminal set

: Always replace after every disassembly.

: N·m (kg-m, ft-lb)

: N·m (kg-m, in-lb)

Removal and Installation

INFOID:0000000009754954

REMOVAL

1. Disconnect the battery cable from the negative terminal. Refer to PG-99, "Removal and Installation".
2. Remove charge air cooler. Refer to EM-30, "Removal and Installation".
3. Remove drive belt. Refer to EM-18, "Removal and Installation".
4. Disconnect alternator connector.
5. Remove “B” terminal nut and disconnect “B” terminal harness.
6. Remove alternator mounting bolt (upper).
7. Completely loosen alternator mounting bolt (lower), and pull it out until the bolt head is in contact with the side member. And then, remove the alternator by pulling it forward.
   NOTE:
   The alternator can be removed together with the bolts by pulling it forward and using the thermostat housing bolt hole cutout.
8. Remove alternator forward from the vehicle.

INSTALLATION

Note the following items, and then install in the reverse order of removal.

CAUTION:

- **Temporarily tighten the alternator bolts in order from the lower to the upper, and then tighten them in order from the upper to the lower.**
- **For the alternator, the front side (pulley side) surface is the reference surface. Fit the reference surface to the alternator mounting part, and then tighten the bolts.**
- **Be careful to tighten “B” terminal nut carefully.**
- **Install alternator, and check tension of belt. Refer to EM-19, "Inspection".**
- **For this model, the power generation voltage variable control system that controls the power generation voltage of the alternator has been adopted. Therefore, the power generation voltage variable control system operation inspection should be performed after replacing the alternator, and then make sure that the system operates normally. Refer to CHG-22, "Inspection Procedure".**

Inspection

INFOID:0000000009754955

ALTERNATOR PULLEY INSPECTION

Perform the following.

- Make sure that alternator pulley does not rattle.
- Make sure that alternator pulley nut is tight. Refer to CHG-30, "Exploded View".

SERVICE DATA AND SPECIFICATIONS (SDS)

SERVICE DATA AND SPECIFICATIONS (SDS)

Alternator

INFOID:0000000009754956

Type		A002TJ1381
		MITSUBISHI make
Nominal rating	[V - A]	12 -110
Ground polarity		Negative
Minimum revolution under no-load (When 13.5 V is applied)	[rpm]	Less than 1,300
Hot output current (When 13.5 V is applied)	[A/rpm]	More than 95/2,500 More than 116/5,000
Regulated output voltage	[V]	14.1 – 14.7 V*

*: Adjustment range of power generation voltage variable control is 11.4 – 15.6 V.