BRAKE SYSTEM

SECTION BR

GI
MA
EM
LC
EC
FE
AT
PD
FA
RA
BR
ST
RS
BT
HA
EL
IDX

CONTENTS

CONTENTS (Cont'd)

When you read wiring diagrams:
- **Read GI section, "HOW TO READ WIRING DIAGRAMS".**
- **See EL section, "POWER SUPPLY ROUTING" for power distribution circuit.**

When you perform trouble diagnoses, read GI section, "HOW TO FOLLOW FLOW CHART IN TROUBLE DIAGNOSES".

Note: Refer to Foldout page for "TCS Wiring Diagram".

Precautions

SUPPLEMENTAL RESTRAINT SYSTEM (SRS) "AIR BAG" AND "SEAT BELT PRE-TENSIONER"

The Supplemental Restraint System "Air Bag" and "Seat Belt Pre-tensioner", used along with a seat belt, help to reduce the risk or severity of injury to the driver and front passenger in a frontal collision. The Supplemental Restraint System consists of air bag modules (located in the center of the steering wheel and on the instrument panel on the passenger side), seat belt pre-tensioners, a diagnosis sensor unit, warning lamp, wiring harness and spiral cable. Information necessary to service the system safely is included in the **RS section** of this Service Manual.

WARNING:

- **To avoid rendering the SRS inoperative, which could increase the risk of personal injury or death in the event of a collision which would result in air bag inflation, all maintenance must be performed by an authorized INFINITI dealer.**
- **Improper maintenance, including incorrect removal and installation of the SRS, can lead to personal injury caused by unintentional activation of the system.**
- **Do not use electrical test equipment on any circuit related to the SRS unless instructed to in this Service Manual. SRS wiring harnesses are covered with yellow insulation either just before the harness connectors or for the complete harness, for easy identification.**

BRAKE SYSTEM

- **Use brake fluid "DOT 3".**
- **Never reuse drained brake fluid.**
- **Be careful not to splash brake fluid on painted areas; it may cause paint damage. If brake fluid is splashed on painted areas, wash it away with water immediately.**
- **To clean master cylinder parts, disc brake caliper parts or wheel cylinder parts, use clean brake fluid.**
- **Never use mineral oils such as gasoline or kerosene. They will ruin rubber parts of hydraulic system.**
- **Use flare nut wrench when removing and installing brake tubes.**
- **Always torque brake lines when installing.**

WARNING:

- **Clean brakes with a vacuum dust collector to minimize risk of health hazard from powder caused by friction.**

Special Service Tools

Tool number (Kent-Moore No.) Tool name	Description	
KV999P1000 (—) ABS checker	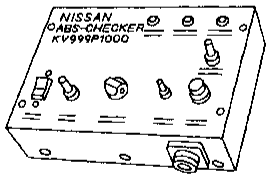 NT165	Checking brake fluid pressure of ABS actuator
KV999P1010 (—) ABS checker adapter harness	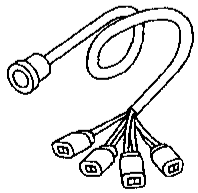 NT166	Checking brake fluid pressure of ABS actuator

Commercial Service Tools

Tool name	Description
① Flare nut crows foot ② Torque wrench	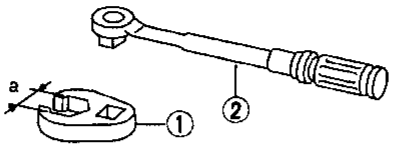 NT360 **a: 10 mm (0.39 in)**
Brake fluid pressure gauge	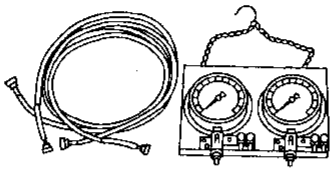 NT151 Measuring brake fluid pressure

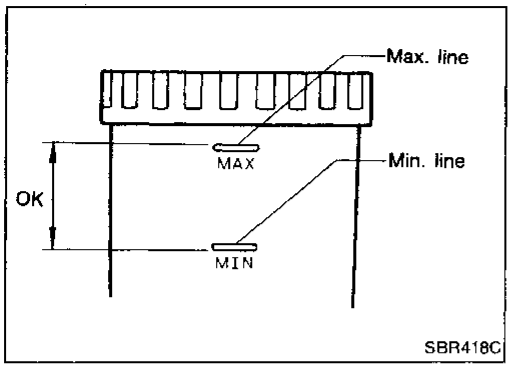

Checking Brake Fluid Level

- Check fluid level in reservoir tank. It should be between Max. and Min. lines on reservoir tank.
- If fluid level is extremely low, check brake system for leaks.
- If brake warning lamp comes on, check brake fluid level switch and parking brake switch.

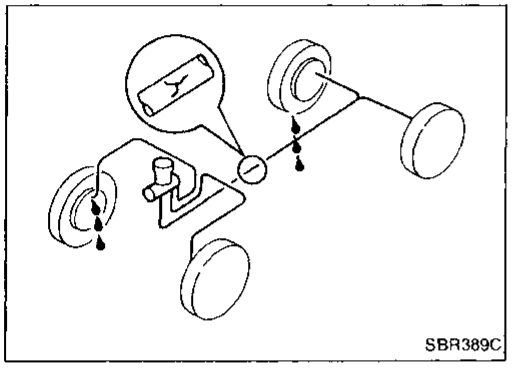

Checking Brake Line

CAUTION:
If leakage occurs around joints, retighten or, if necessary, replace damaged parts.

1. Check brake lines (tubes and hoses) for cracks, deterioration or other damage. Replace any damaged parts.
2. Check for oil leakage by fully depressing brake pedal while engine is running.

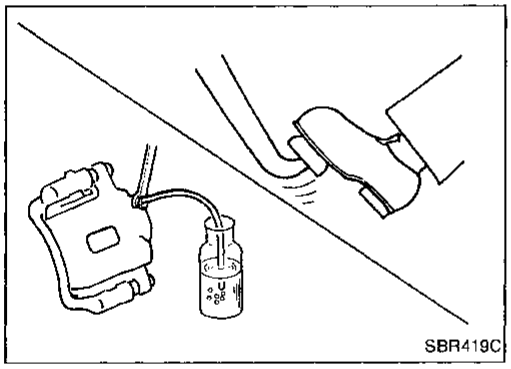

Changing Brake Fluid

CAUTION:

- **Refill with new brake fluid "DOT 3".**
- **Always keep fluid level higher than minimum line on reservoir tank.**
- **Never reuse drained brake fluid.**
- **Be careful not to splash brake fluid on painted areas; it may cause paint damage. If brake fluid is splashed on painted areas, wash it away with water immediately.**

1. Clean inside of reservoir tank, and refill with new brake fluid.
2. Connect a vinyl tube to each air bleeder valve.
3. Drain brake fluid from each air bleeder valve by depressing brake pedal.
4. Refill until brake fluid comes out of each air bleeder valve. Use same procedure as in bleeding hydraulic system to refill brake fluid. Refer to "Bleeding Brake System".

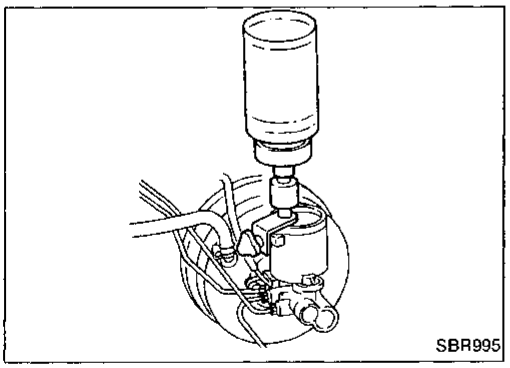

Bleeding Brake System

CAUTION:

- **Carefully monitor brake fluid level at master cylinder during bleeding operation.**
- **If master cylinder is suspected to have air inside, bleed air from master cylinder first. Refer to "Installation", "MASTER CYLINDER", BR-13.**
- **Fill reservoir with new brake fluid "DOT 3". Make sure it is full at all times while bleeding air out of system.**
- **Place a container under master cylinder to avoid spillage of brake fluid.**
- **For models with ABS, turn ignition switch OFF and disconnect ABS actuator connector or battery cable.**
- Bleed air in the following order:
  Right rear brake→Left rear brake→Right front brake→Left front brake.

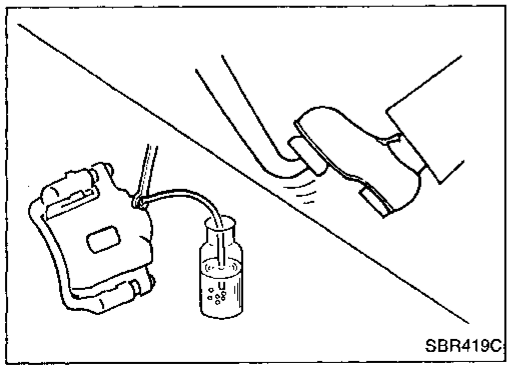

1. Connect a transparent vinyl tube to air bleeder valve.
2. Fully depress brake pedal several times.
3. With brake pedal depressed, open air bleeder valve to release air.
4. Close air bleeder valve.
5. Release brake pedal slowly.

Bleeding Brake System (Cont'd)

6. Repeat steps 2. through 5. until clear brake fluid comes out of air bleeder valve.
7. Tighten air bleeder valve.
   : 7 - 9 N·m (0.7 - 0.9 kg-m, 61 - 78 in-lb)

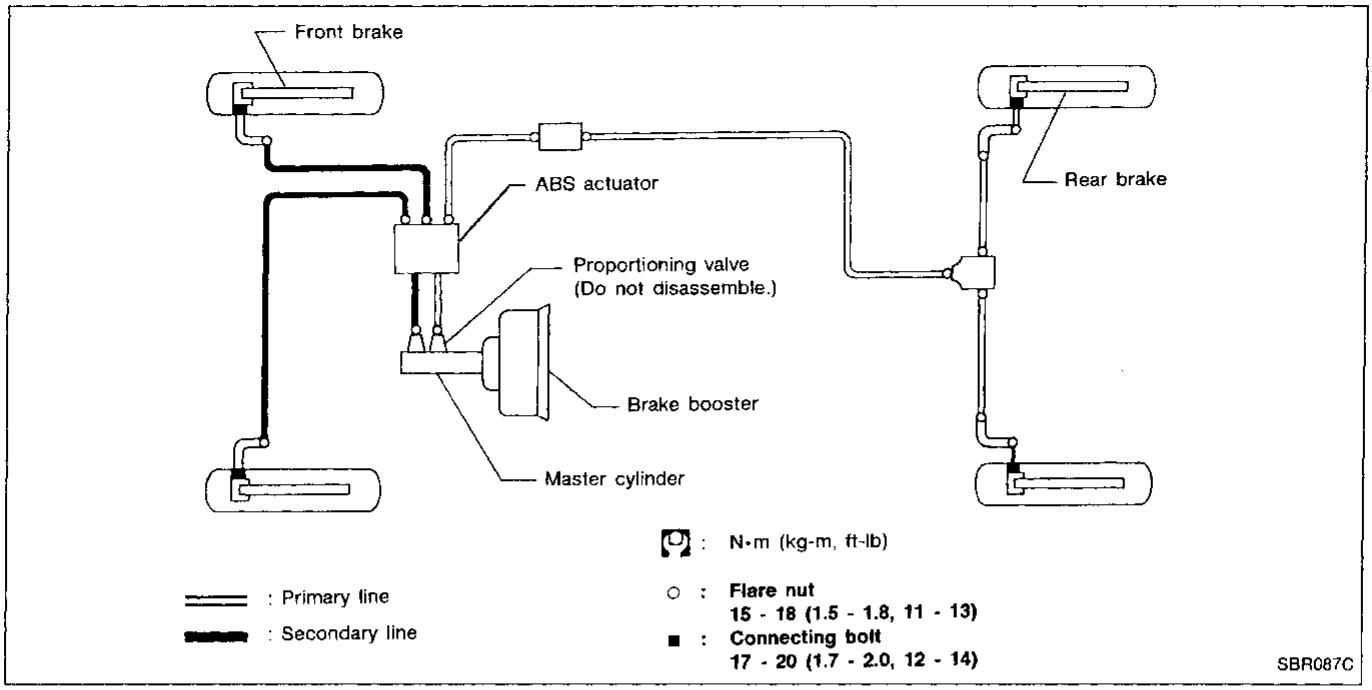

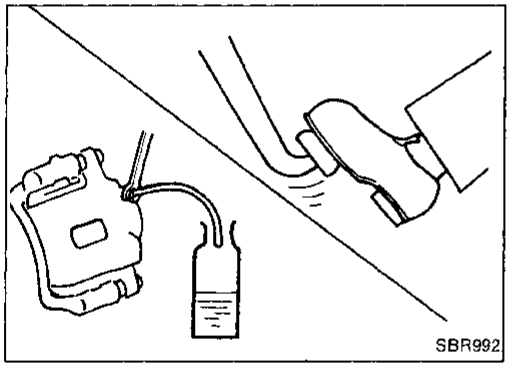

Removal

CAUTION:

- **Be careful not to splash brake fluid on painted areas; it may cause paint damage. If brake fluid is splashed on painted areas, wash it away with water immediately.**
- **All hoses must be free from excessive bending, twisting and pulling.**

1. Connect vinyl tube to air bleeder valve.
2. Drain brake fluid from each air bleeder valve by depressing brake pedal.
3. Remove flare nut connecting brake tube and hose, then withdraw lock spring.
4. Cover openings to prevent entrance of dirt whenever disconnecting brake lines.

Inspection

Check brake lines (tubes and hoses) for cracks, deterioration or other damage. Replace any damaged parts.

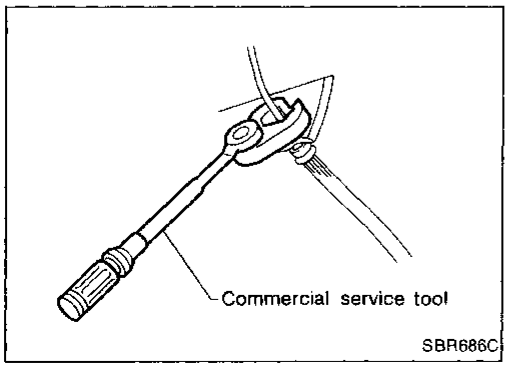

Installation

CAUTION:

- **Refill with new brake fluid "DOT 3".**
- **Never reuse drained brake fluid.**

1. Tighten all flare nuts and connecting bolts.
   Specification:
   Flare nut
   15 - 18 N·m (1.5 - 1.8 kg-m, 11 - 13 ft-lb)
   Connecting bolt
   17 - 20 N·m (1.7 - 2.0 kg-m, 12 - 14 ft-lb)

Installation (Cont'd)

2. Refill until new brake fluid comes out of each air bleeder valve.
3. Bleed air. Refer to "Bleeding Brake System", BR-5.

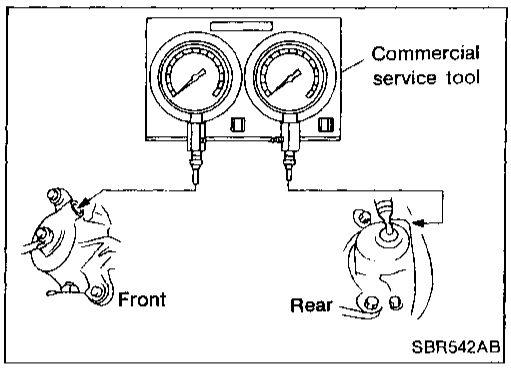

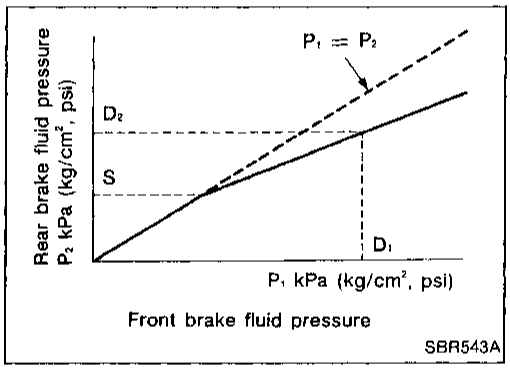

Proportioning Valve

INSPECTION

CAUTION:

- **Carefully monitor brake fluid level at master cylinder.**
- **Use new brake fluid "DOT 3".**
- **Be careful not to splash brake fluid on painted areas; it may cause paint damage. If brake fluid is splashed on paint areas, wash it away with water immediately.**
- **For models with ABS, disconnect harness connectors from ABS actuator relay box before checking.**

1. Connect tool to air bleeders of front and rear brakes on either LH or RH side.
2. Bleed air from Tool.
3. Check fluid pressure by depressing brake pedal.

Unit: kPa (kg/cm², psi)

Applied pressure (Front brake)	D_1	7,355 (75, 1,067)
Output pressure (Rear brake)	D_2	5,100 - 5,492 (52 - 56, 739 - 796)

If output pressure is out of specifications, replace master cylinder assembly.

4. Bleed air after disconnecting Tool. Refer to "Bleeding Brake System", BR-5.

Removal and Installation

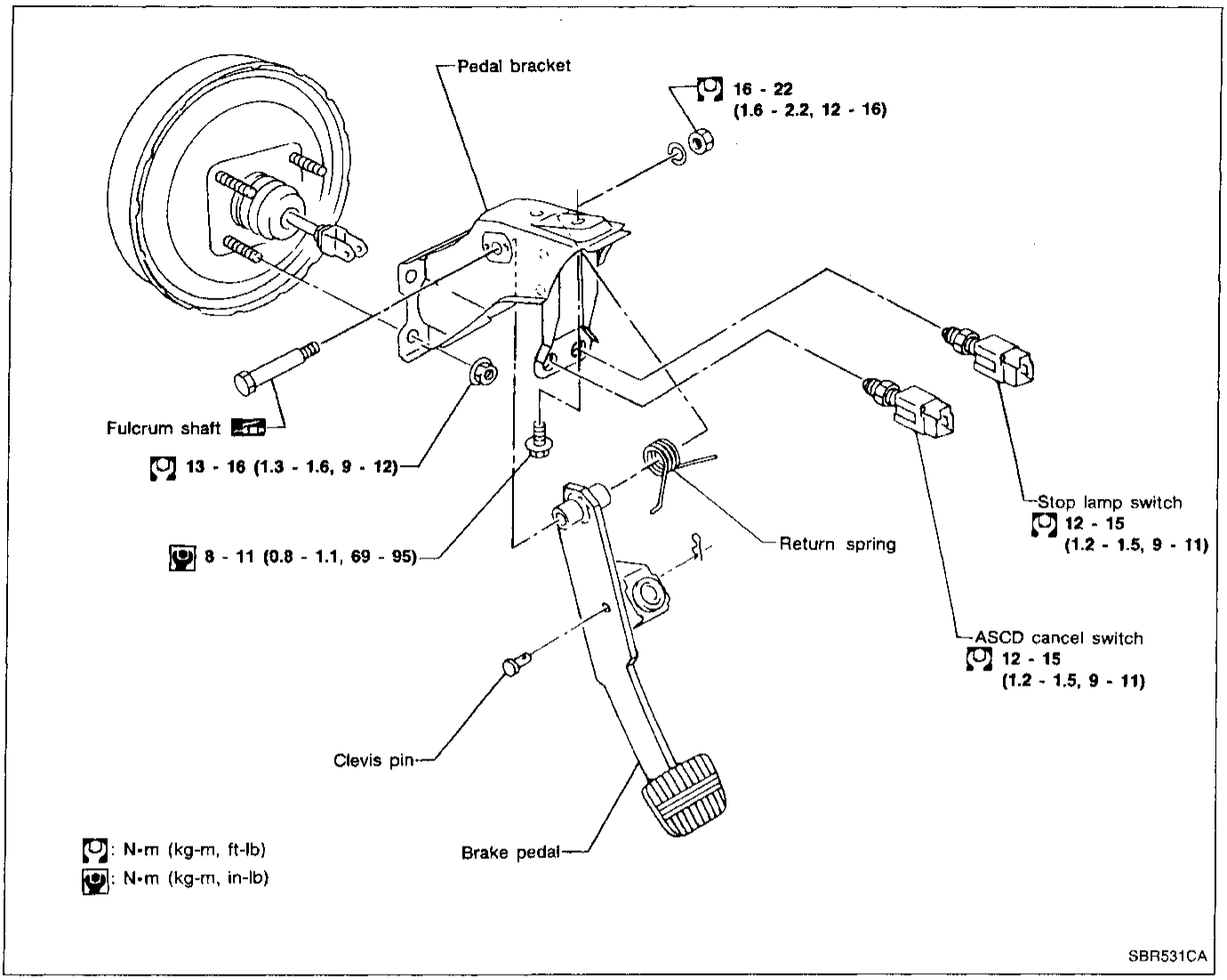

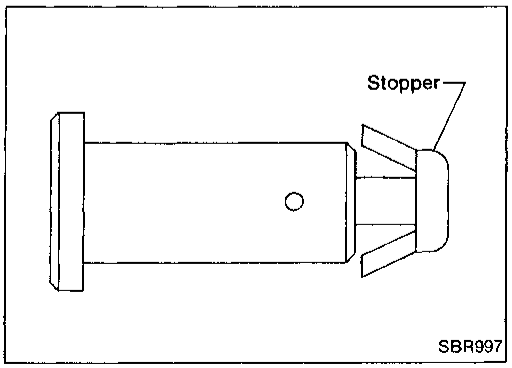

Inspection

Check brake pedal for following items.

- Brake pedal bend
- Crack of any welded portion
- Clevis pin deformation
- Crack or deformation of clevis pin stopper

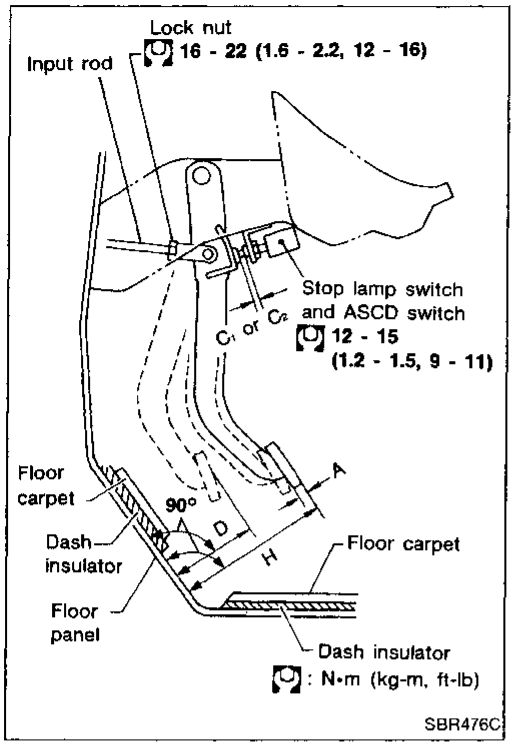

Adjustment

Check brake pedal free height from dash reinforcement panel. Adjust if necessary.

H: **Free height**
184 - 194 mm (7.24 - 7.64 in)

D: **Depressed height**
100 - 110 mm (3.94 - 4.33 in)
Under force of 490 N (50 kg, 110 lb)
with engine running

C_1, C_2: **Clearance between pedal stopper and threaded end of stop lamp switch and ASCD switch**
0.3 - 1.0 mm (0.012 - 0.039 in)

A: **Pedal free play**
1.0 - 3.0 mm (0.039 - 0.118 in)

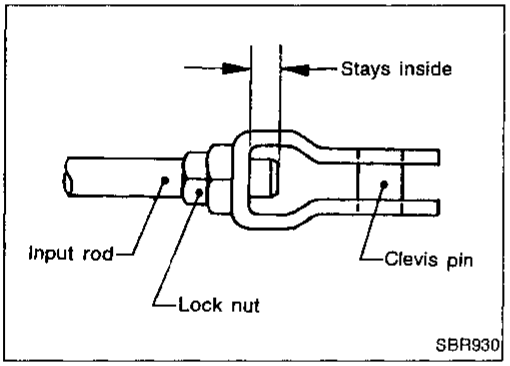

1. Loosen lock nut and adjust pedal free height by turning brake booster input rod. Then tighten lock nut.

Make sure that tip of input rod stays inside.

2. Loosen lock nut and adjust clearance "C_1" and "C_2" with stop lamp switch and ASCD switch respectively. Then tighten lock nuts.
3. Check pedal free play.

Make sure that stop lamps go off when pedal is released.

4. Check brake pedal's depressed height while engine is running.
   If lower than specification, check for leaks, air in system or damage to components (master cylinder, wheel cylinder, etc.). Then make necessary repair.

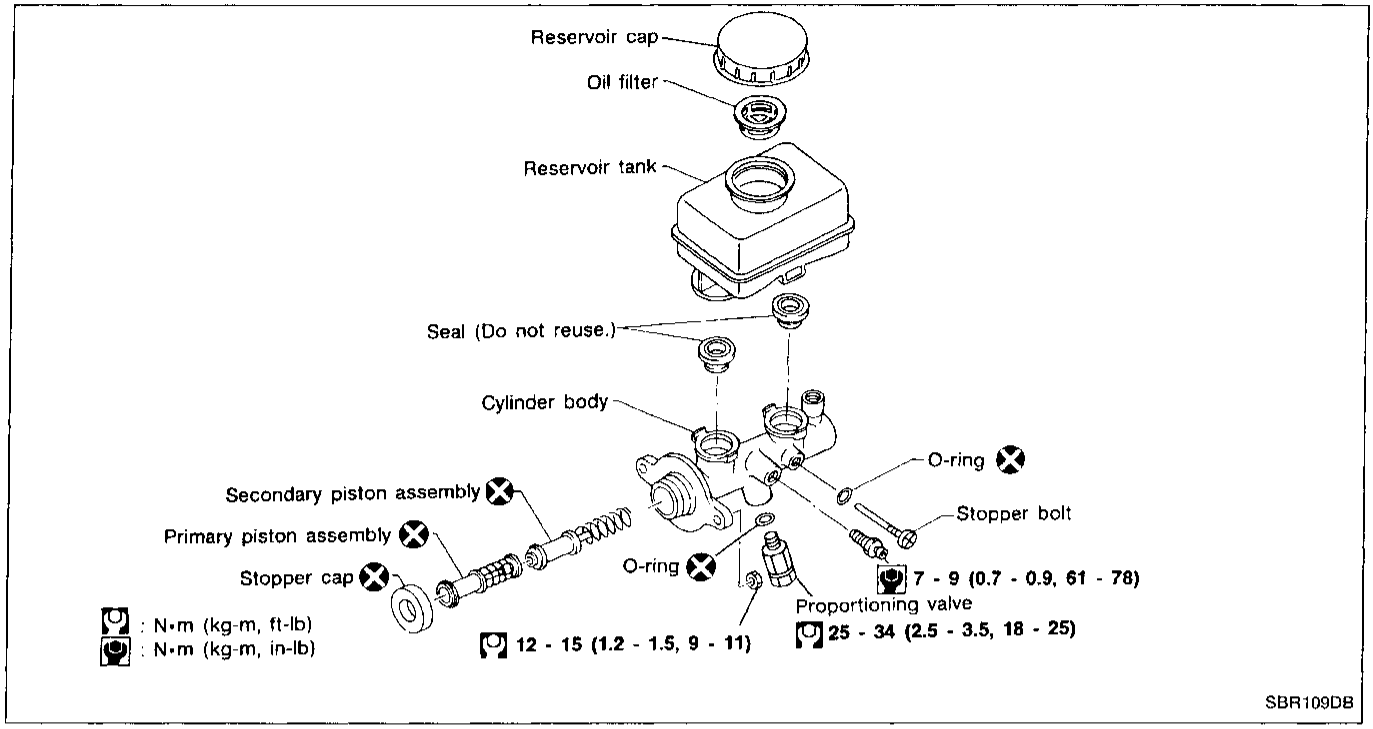

Removal

CAUTION:

- **Be careful not to splash brake fluid on painted areas; it may cause of paint damage. If brake fluid is splashed on painted areas, wash it away with water immediately.**
- **In the case of brake fluid leakage from the master cylinder, disassemble the cylinder. Then check piston cups for deformation or scratches and replace necessary parts.**

1. Connect a vinyl tube to air bleeder valve.
2. Drain brake fluid from each air bleeder valve, depressing brake pedal to empty fluid from master cylinder.
3. Remove brake pipe flare nuts.
4. Remove master cylinder mounting nuts.

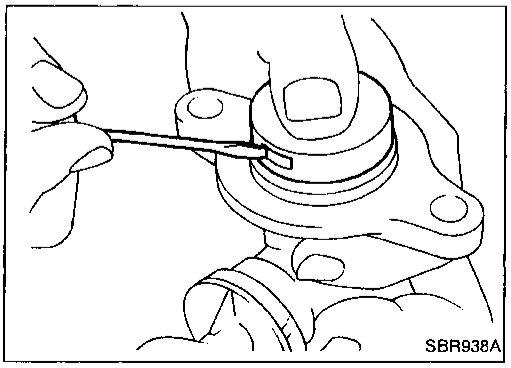

Disassembly

1. Bend claws of stopper cap outward.

Disassembly (Cont'd)

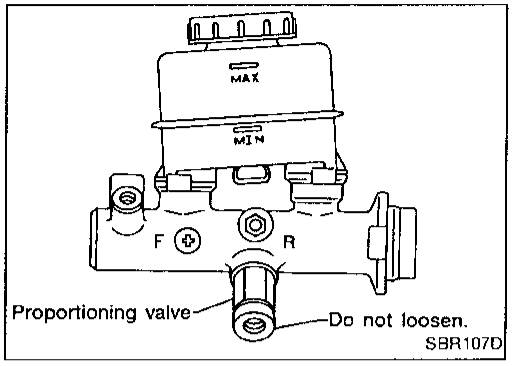

2. Remove proportioning valve.

CAUTION:
Do not loosen valve tip when removing proportioning valve.

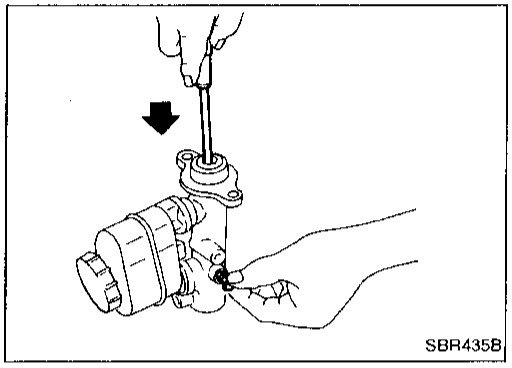

3. Remove stopper bolt while pushing piston into cylinder.
4. Remove piston assemblies.

If it is difficult to remove secondary piston assembly, gradually apply compressed air through fluid outlet.

5. Draw out reservoir tank.

Inspection

Check master cylinder inner wall for pin holes or scratches. Replace if damaged.

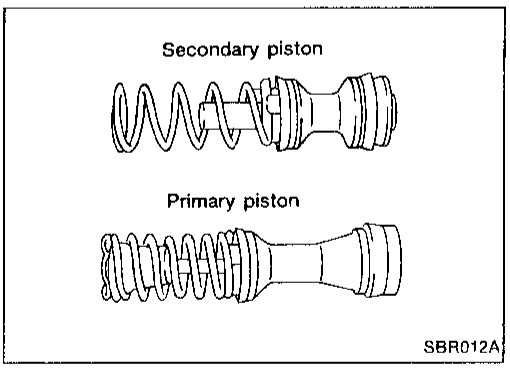

Assembly

Pay attention to direction of piston cups in figure at left. Also, insert pistons squarely to avoid scratches on cylinder bore.

1. Lightly push pistons in and assemble valve stopper.

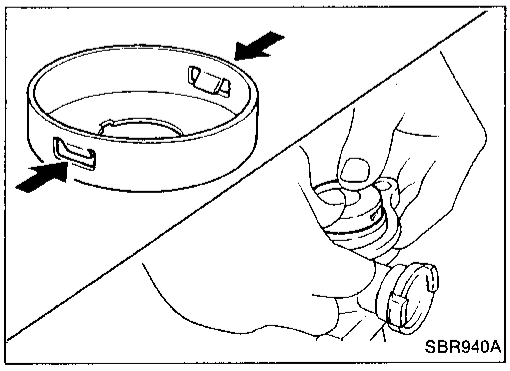

2. Install stopper cap.

Before installing stopper cap, ensure that claws are bent inward.

3. Push reservoir tank seals into cylinder body.
4. Push reservoir tank into cylinder body.

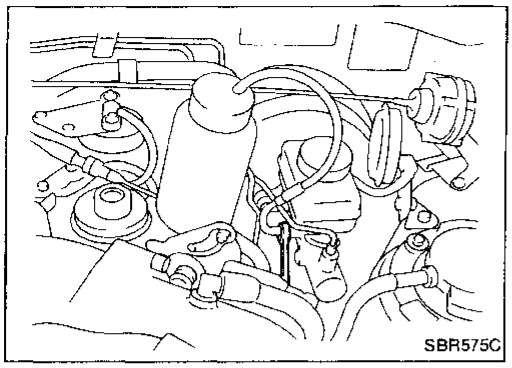

Installation

CAUTION:

- **Refill with new brake fluid "DOT 3".**
- **Never reuse drained brake fluid.**

1. Place master cylinder onto brake booster and secure mounting nuts lightly.
2. Torque mounting nuts.
   12 - 15 N·m (1.2 - 1.5 kg-m, 9 - 11 ft-lb)
3. Fit brake lines to master cylinder.
4. Torque flare nuts.
   15 - 18 N·m (1.5 - 1.8 kg-m, 11 - 13 ft-lb)
5. Fill up reservoir tank with new brake fluid.
6. Connect a vinyl tube to air bleeder of master cylinder.
7. Open air bleeder of master cylinder.
8. Have driver slowly depress brake pedal and hold.
9. Close air bleeder.
10. Have driver release brake pedal slowly.
11. Repeat steps 7. through 10. until no air bubbles come out of air bleeder.
12. Torque air bleeder.
    7 - 9 N·m (0.7 - 0.9 kg-m, 61 - 78 in-lb)
13. Bleed air from each caliper. Refer to "Bleeding Brake System", BR-5.

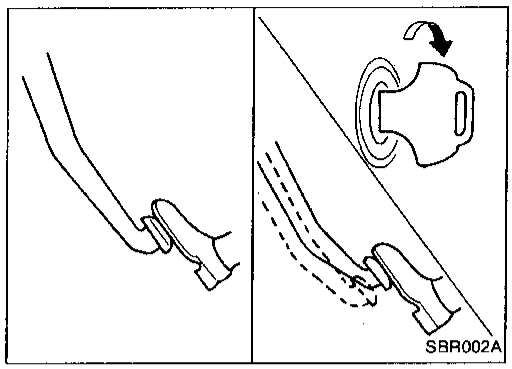

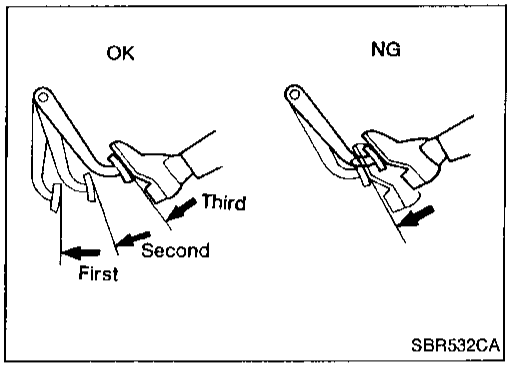

On-vehicle Service

OPERATING CHECK

- Depress brake pedal several times with engine off. After exhausting vacuum, make sure there is no change in pedal stroke.
- Depress brake pedal, then start engine. If pedal goes down slightly, operation is normal.

AIRTIGHT CHECK

- Start engine, and stop it after one or two minutes. Depress brake pedal several times slowly. Booster is airtight if pedal stroke is less each time.
- Depress brake pedal while engine is running, and stop engine with pedal depressed. The pedal stroke should not change after holding pedal down for **30 seconds**.

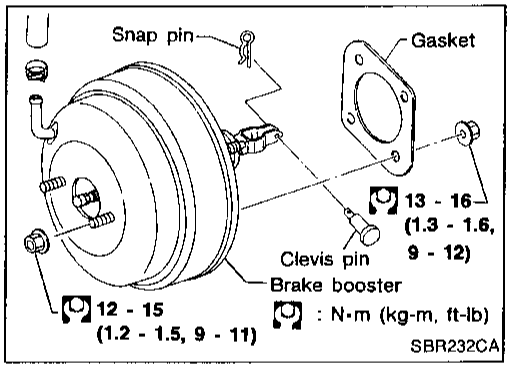

Removal

CAUTION:

- **Be careful not to splash brake fluid on painted areas; it may cause paint damage. If brake fluid is splashed on paint areas, wash it away with water immediately.**
- **Be careful not to deform or bend brake lines, during removal of booster.**

1. Remove master cylinder. Refer to "Removal" in "MASTER CYLINDER", BR-11.
2. Remove clevis pin (brake pedal to booster input rod).
3. Remove mounting nuts (brake pedal bracket to booster).
4. Draw out booster assembly.

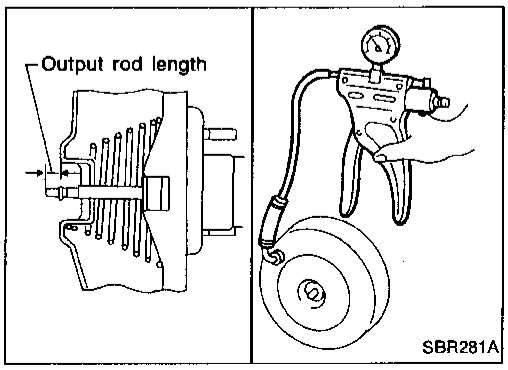

Inspection

OUTPUT ROD LENGTH CHECK

1. Apply vacuum of –66.7 kPa (–500 mmHg, –19.69 inHg) to brake booster with a hand vacuum pump.
2. Check output rod length.
   Specified length:
   10.275 - 10.525 mm (0.4045 - 0.4144 in)

Installation

CAUTION:

- **Be careful not to deform or bend brake pipes during installation of booster.**
- **Replace clevis pin if damaged.**
- **Refill with new brake fluid "DOT 3".**
- **Never reuse drained brake fluid.**
- **Take care not to damage brake booster mounting bolt thread when installing. Due to the narrow angle of installation, the threads can be damaged by the dash panel.**

1. Fit booster, then secure mounting nuts (brake pedal bracket to master cylinder) lightly.
2. Connect brake pedal and booster input rod with clevis pin.
3. Secure mounting nuts.
   Specification: 8 - 11 N·m (0.8 - 1.1 kg-m, 69 - 95 in-lb)
4. Install master cylinder. Refer to "Installation" in "MASTER CYLINDER", BR-13.
5. Bleed air. Refer to "Bleeding Brake System", BR-5.
6. Adjust brake pedal if necessary. Refer to "Adjustment" in "BRAKE PEDAL AND BRACKET", BR-10.

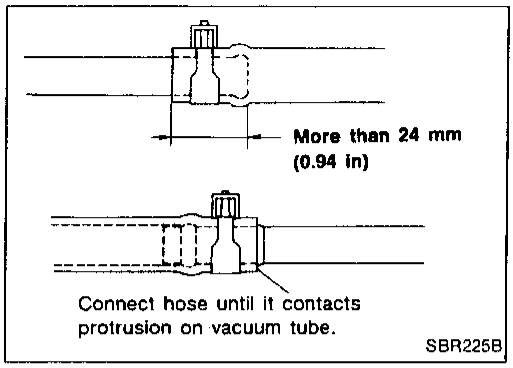

Removal and Installation

CAUTION:

When installing vacuum hoses, pay attention to the following points.

- **Do not apply any oil or lubricants to vacuum hose and check valve.**
- **Insert vacuum tube into vacuum hose more than 24 mm (0.94 in).**

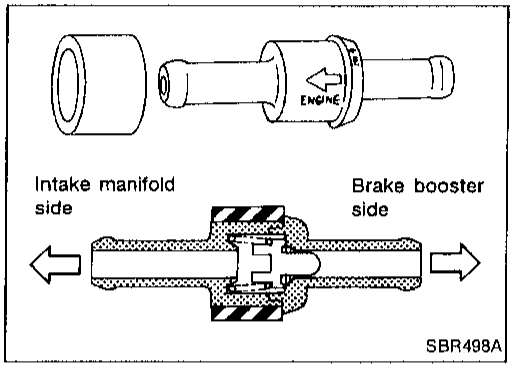

- **Install check valve, paying attention to its direction.**

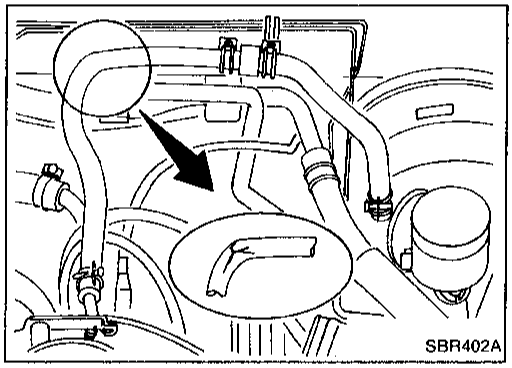

Inspection

HOSES AND CONNECTORS

Check vacuum lines, connections and check valve for airtightness, improper attachment chafing and deterioration.

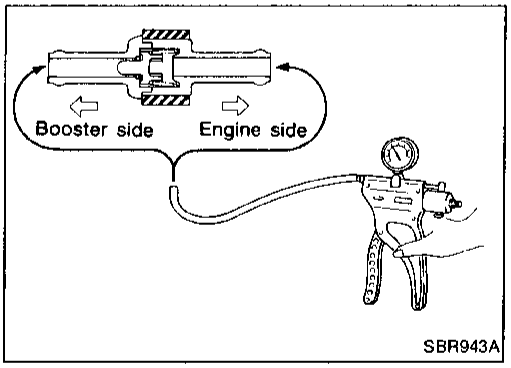

CHECK VALVE

Check vacuum with a vacuum pump.

Connect to booster side	Vacuum should exist.
Connect to engine side	Vacuum should not exist.

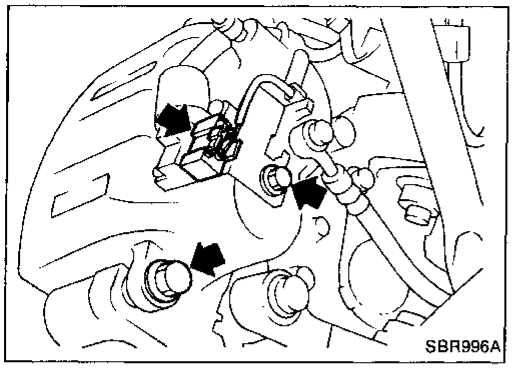

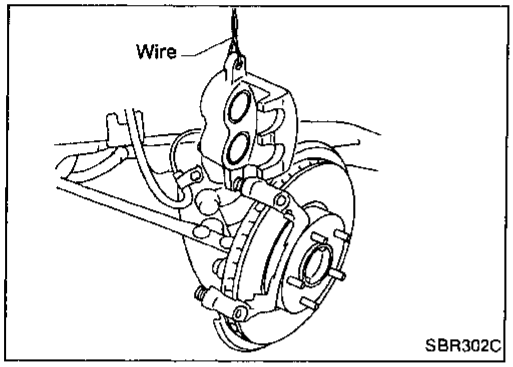

Pad Replacement

WARNING:

Clean brakes with a vacuum dust collector to minimize the hazard of airborne particles or other materials.

CAUTION:

- **When cylinder body is open, do not depress brake pedal, or piston will pop out.**
- **Be careful not to damage piston boot or get oil on rotor. Always replace shims in replacing pads.**
- **If shims are rusted or show peeling of the rubber coat, replace them with new shims.**
- **It is not necessary to remove brake hose connecting bolt except for disassembly or replacement of caliper assembly. In this case, suspend cylinder body with wire so as not to stretch brake hose.**
- **Carefully monitor brake fluid level because brake fluid will return to reservoir when pushing back piston.**

1. Remove lower slide pin bolt.
2. Pivot cylinder body upward and suspend with wire. Remove pad retainers, and inner and outer shims.
   Pad wear limit: 2.0 mm (0.079 in)
3. Replace both inner and outer pads and shims.
4. Apply brake grease to backplate of pads and both sides of inner and outer shims.
5. Install pad retainers and brake pads with the shims.

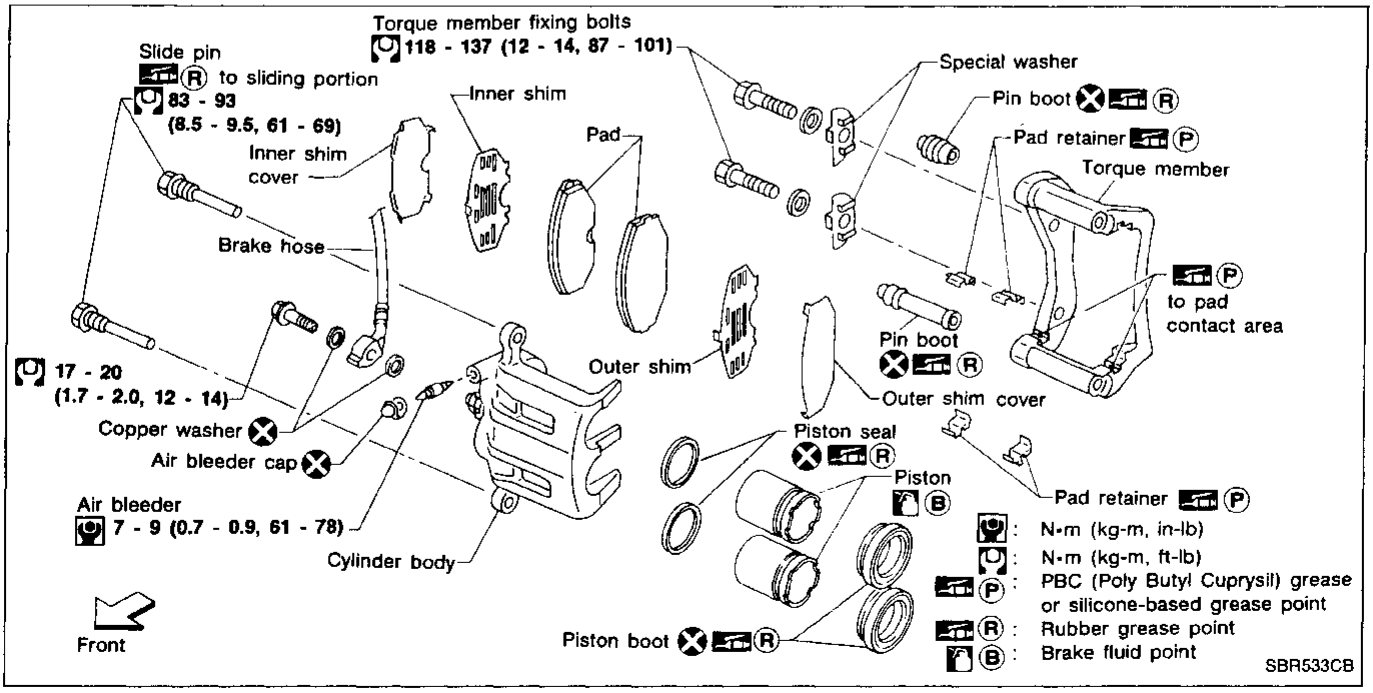

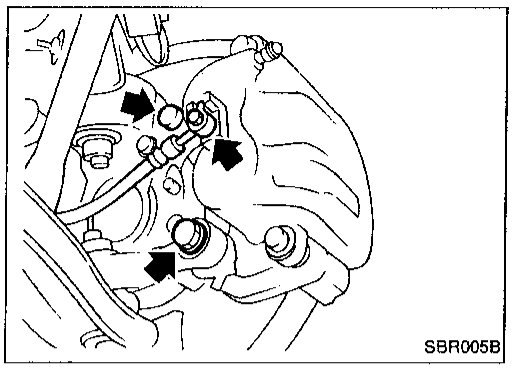

Removal

WARNING:
Clean brake pads with a vacuum dust collector to minimize the hazard of airborne particles or other materials.

CAUTION:
Suspend caliper assembly with wire so as not to stretch brake hose.

Remove torque member fixing bolts and connecting bolt.

It is not necessary to remove connecting bolt except for disassembly or replacement of caliper assembly. In this case, suspend caliper assembly with wire so as not to stretch brake hose.

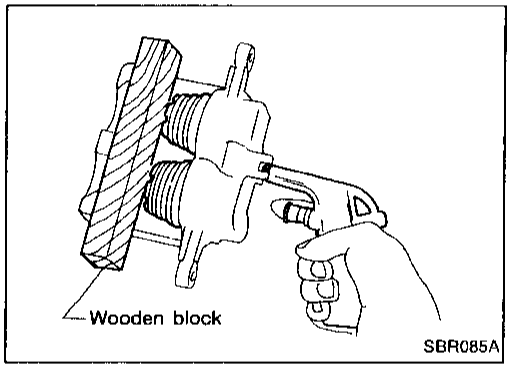

Disassembly

WARNING:
Do not place your fingers in front of piston.

CAUTION:
Do not scratch or score cylinder wall.

1. Push out piston and piston boot with compressed air.
2. Remove piston seal with a suitable tool.

Inspection — Caliper

CYLINDER BODY

- Check inside surface of cylinder for score, rust, wear, damage or presence of foreign materials. If any of the above conditions are observed, replace cylinder body.
- Minor damage from rust or foreign materials may be eliminated by polishing surface with a fine emery paper. Replace cylinder body if necessary.

CAUTION:
Use brake fluid to clean. Never use mineral oil.

PISTON

Check piston for score, rust, wear, damage or presence of foreign materials. Replace if any of the above conditions are observed.

CAUTION:
Piston sliding surface is plated. Do not polish with emery paper even if rust or foreign materials are stuck to sliding surface.

SLIDE PIN, PIN BOLT AND PIN BOOT

Check for wear, cracks or other damage. Replace if any of the above conditions are observed.

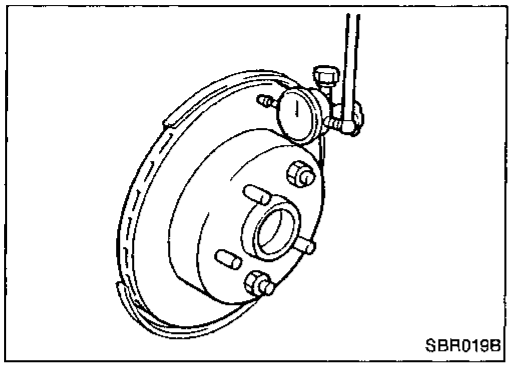

Inspection — Rotor

RUNOUT

1. Secure rotor to wheel hub with at least two nuts (M12 x 1.25).
2. Check runout using a dial indicator.

Make sure that wheel bearing axial end play is within the specifications before measuring. Refer to "ON-VEHICLE SERVICE" in FA section.

Maximum runout:
0.07 mm (0.0028 in)

3. If the runout is out of specification, find minimum runout position as follows:
   a. Remove nuts and rotor from wheel hub.
   b. Shift the rotor one hole and secure rotor to wheel hub with nuts.
   c. Measure runout.
   d. Repeat steps a. to c. so that minimum runout position can be found.
4. If the runout is still out of specification, turn rotor with on-car brake lathe ("MAD, DL-8700", "AMMCO 700 and 705" or equivalent).

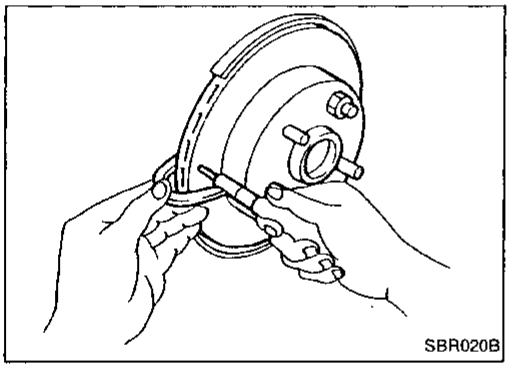

THICKNESS

Thickness variation (At least 8 positions):
Maximum 0.01 mm (0.0004 in)

If thickness variation exceeds the specification, turn rotor with on-car brake lathe.

Rotor repair limit:
26.0 mm (1.024 in)

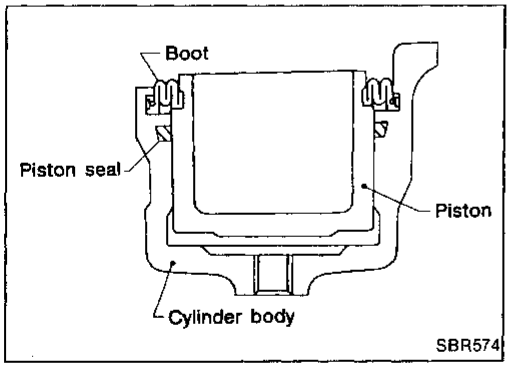

Assembly

1. Insert piston seal into groove on cylinder body.
2. With piston boot fitted to piston, insert piston boot into groove on cylinder body and install piston.
3. Properly secure piston boot.

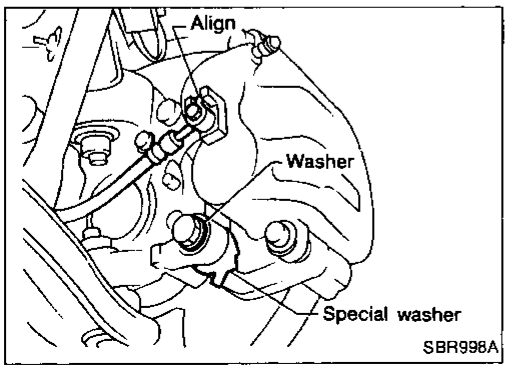

Installation

CAUTION:

- **Refill with new brake fluid "DOT 3".**
- **Never reuse drained brake fluid.**

1. Install caliper assembly.

Do not forget to install washers.

2. Install brake hose to caliper securely.
3. Install all parts and secure all bolts.
4. Bleed air. Refer to "Bleeding Brake System", BR-5.

Pad Replacement

WARNING:

Clean brake pads with a vacuum dust collector to minimize the hazard of airborne particles or other materials.

CAUTION:

- **When cylinder body is open, do not depress brake pedal, otherwise piston will pop out.**
- **Be careful not to damage piston boot or get oil on rotor. Always replace shims when replacing pads.**
- **If shims are rusted or show peeling of rubber coat, replace them with new shims.**
- **It is not necessary to remove connecting bolt except for disassembly or replacement of caliper assembly. In this case, suspend cylinder body with wire so as not to stretch brake hose**
- **Carefully monitor brake fluid level because brake fluid will return to reservoir when pushing back piston.**

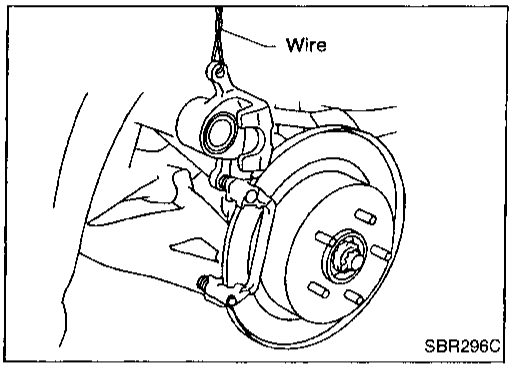

1. Remove master cylinder reservoir cap.
2. Remove lower pin bolt.
3. Open cylinder body upward. Then remove pad retainers, and inner and outer shims.

   Pad wear limit:

   2.0 mm (0.079 in)

- **Carefully monitor brake fluid level because brake fluid will return to reservoir when pushing back piston.**

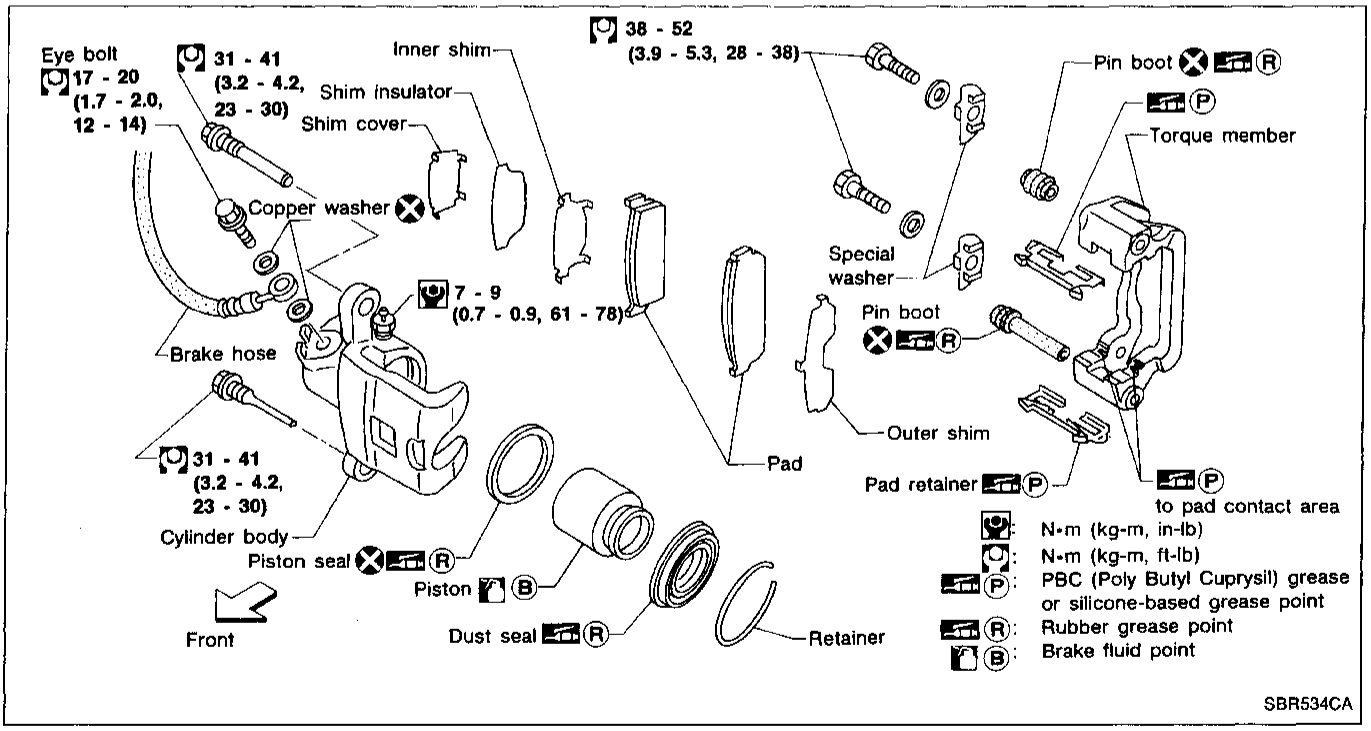

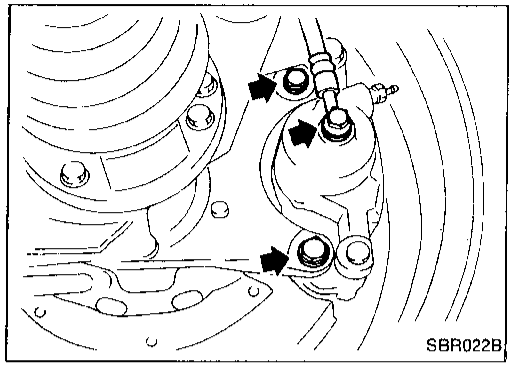

Removal

WARNING:
Clean brakes with a vacuum dust collector to minimize the hazard of airborne particles or other materials.

Remove torque member fixing bolts and connecting bolt.
On right brake, disconnect sensor harness.

It is not necessary to remove connecting bolt except for disassembly or replacement of caliper assembly. In this case, suspend caliper assembly with wire so as not to stretch brake hose.

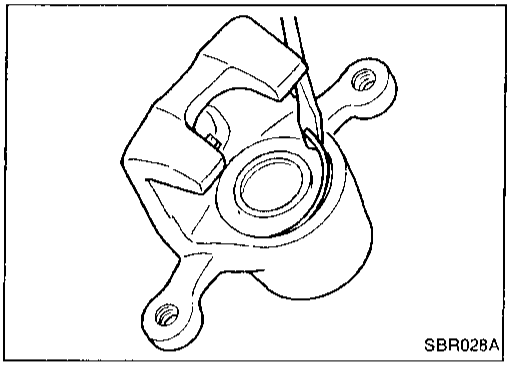

Disassembly

WARNING:
Do not place your fingers in front of piston.

CAUTION:
Do not scratch or score cylinder wall.

1. Remove dust cover retainer with a screwdriver.

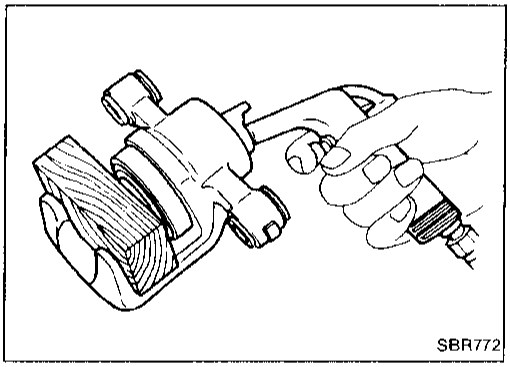

2. Push out piston and dust seal with compressed air.
3. Remove piston seal with a suitable tool.

Inspection — Caliper

CYLINDER BODY

- Check inside surface of cylinder for score, rust, wear, damage or presence of foreign materials. If any of the above conditions are observed, replace cylinder body.
- Minor damage from rust or foreign materials may be eliminated by polishing surface with a fine emery paper. Replace cylinder body if necessary.

CAUTION:
Use brake fluid to clean. Never use mineral oil.

PISTON

CAUTION:
Piston sliding surface is plated. Do not polish with emery paper even if rust or foreign materials are stuck to sliding surface.

Check piston for score, rust, wear, damage or presence of foreign materials. Replace if any of the above conditions are observed.

SLIDE PIN, PIN BOLT AND PIN BOOT

Check for wear, cracks or other damage. Replace if any of the above conditions are observed.

Inspection — Rotor

RUBBING SURFACE

Check rotor for roughness, cracks or chips.

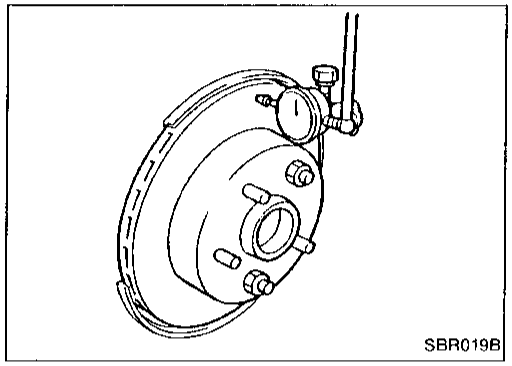

RUNOUT

1. Secure rotor to wheel hub with two nuts (M12 x 1.25).
2. Check runout using a dial indicator.

Make sure that axial end play is within the specifications before measuring. Refer to "ON-VEHICLE SERVICE" in RA section.

3. Change relative positions of rotor and wheel hub so that runout is minimized.
   Maximum runout: 0.07 mm (0.0028 in)

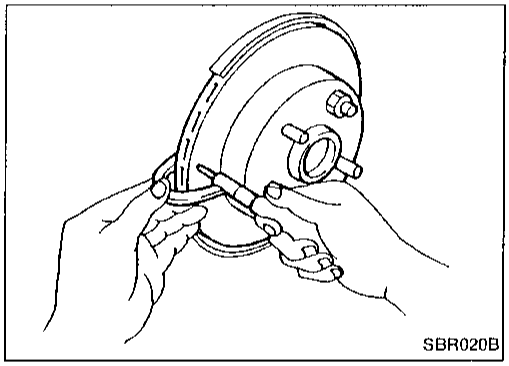

THICKNESS

Rotor repair limit: Minimum thickness
8.0 mm (0.315 in)

Replace rotor if any of the above did not meet the specifications.

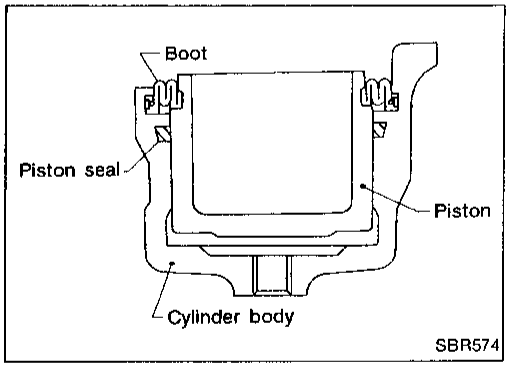

Assembly

1. Insert piston seal into groove on cylinder body.
2. With piston boot fitted to piston, insert piston boot into groove on cylinder body and install piston.
3. Properly secure piston boot.
4. Secure piston boot with retainer.

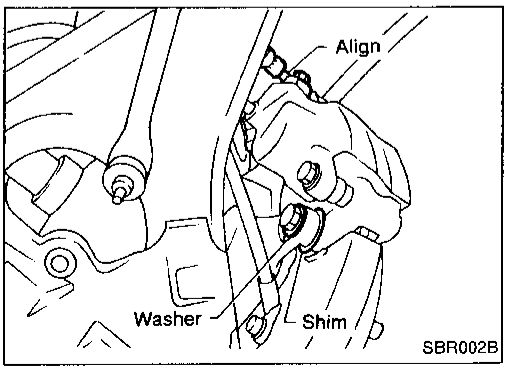

Installation

CAUTION:

- **Refill with new brake fluid "DOT 3".**
- **Never reuse drained brake fluid.**

1. Install caliper assembly.

Do not forget to install shims and washers.

2. Install brake hose to caliper securely.
3. Install all parts and secure all bolts.
4. Bleed air. Refer to "Bleeding Brake System", BR-5.

Parking Drum Brake

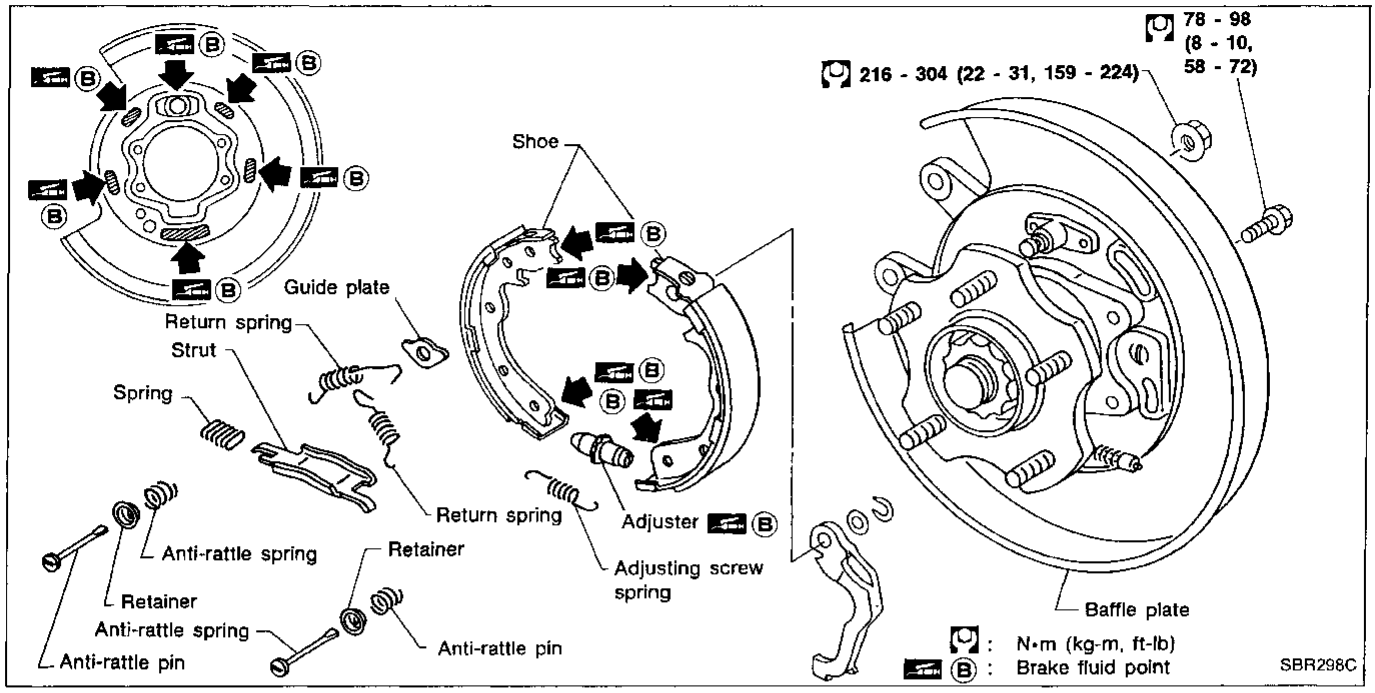

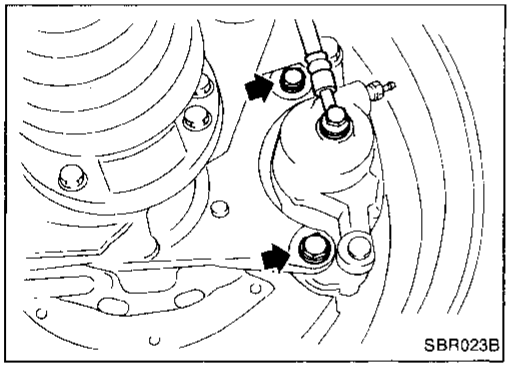

REMOVAL

WARNING:

Clean brakes with a vacuum dust collector to minimize the hazard of airborne particles or other materials.

CAUTION:

Make sure parking brake lever is released completely.

1. Remove torque member fixing bolts (Rear disc brake assembly mounting bolts).

Suspend caliper assembly with wire so as not to stretch brake hose.

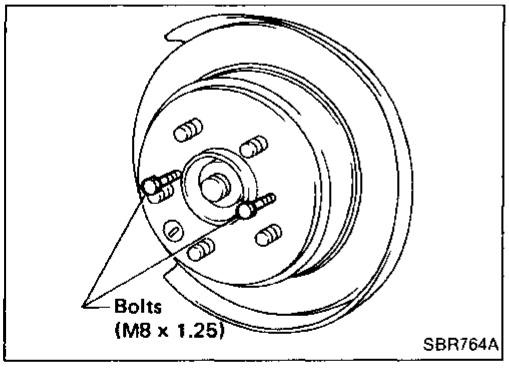

2. Remove disc rotor (With parking drum brake).

Tighten two bolts gradually if disc rotor is hard to remove.

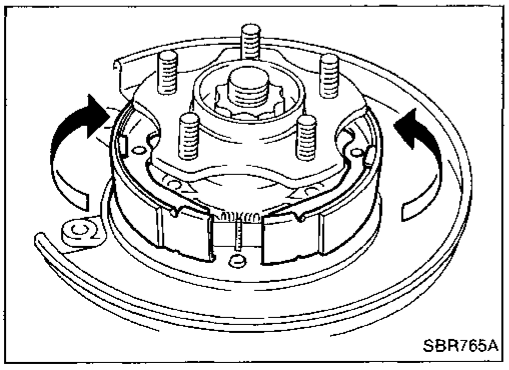

3. After removing retainer, remove spring by rotating shoes.

Be careful not to damage parking brake cable when separating it.

4. Remove adjuster.
5. Remove strut.
6. Disconnect parking brake cable from toggle lever.

Parking Drum Brake (Cont'd)

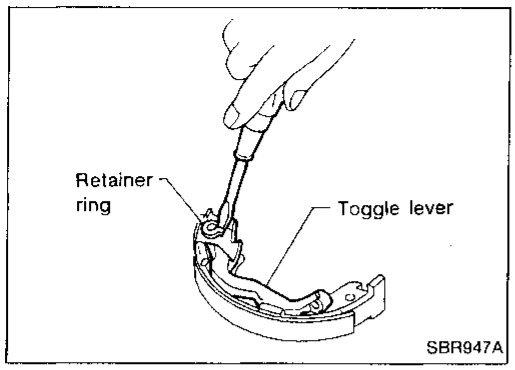

7. Remove retainer ring with a suitable tool. Then separate toggle lever and brake shoe.

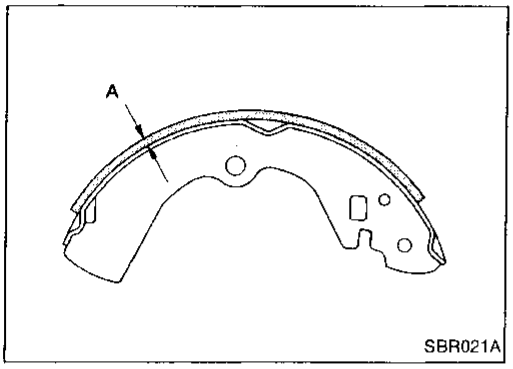

INSPECTION

Check lining thickness.

Lining wear limit (A): 1.5 mm (0.059 in)

Replace brake shoes if lining is worn beyond wear limit.

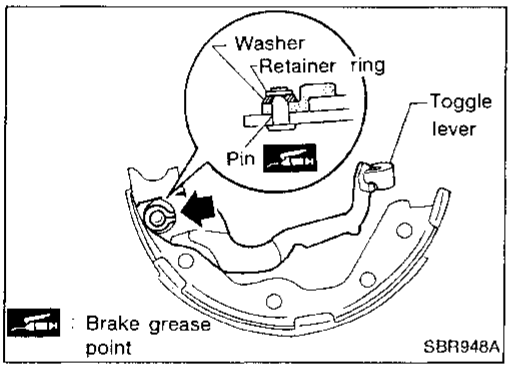

INSTALLATION

1. Fit toggle lever to brake shoe with retainer ring.

Pay attention to retainer ring direction.

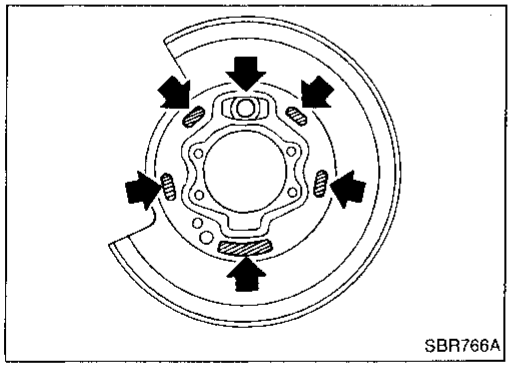

2. Apply brake grease to the contact areas shown at left.

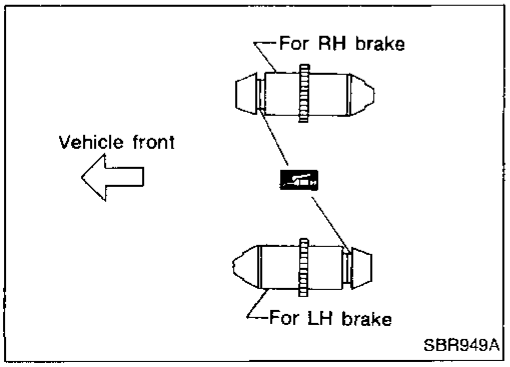

3. Shorten adjuster by rotating it.

Pay attention to direction of adjuster.

4. Connect parking brake cable to toggle lever.
5. Install all parts.

Parking Drum Brake (Cont'd)

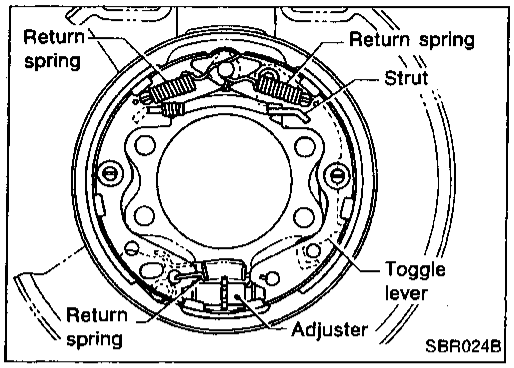

6. Check all parts are installed properly.

Pay attention to direction of adjuster.

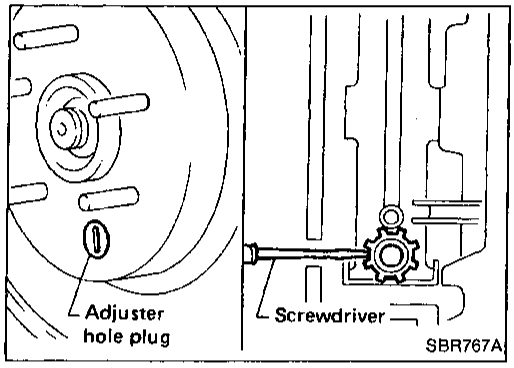

SHOE CLEARANCE ADJUSTMENT

1. Remove adjuster hole plug, and turn down adjuster wheel with a screwdriver until brake is locked.

Make sure that parking control lever is released completely.

2. Return adjuster wheel 5 to 6 notches.
3. Install adjuster hole plug, and make sure that there is no drag between shoes and brake drum when rotating disc rotor.
4. Adjust parking brake cable. Refer to "Adjustment" in "PARKING BRAKE CONTROL", BR-27.

Breaking in Drum and Lining

When a new rotor/parking brake shoe is installed, or when braking performance is poor, perform the following break-in procedure.

1. Drive the unloaded vehicle on a safe, level and dry road.
2. Depress parking brake pedal with a force of 147N (15 kg, 33 lb).
3. While depressing the pedal, continue to drive the vehicle forward 100 m (328 ft) at approximately 35 km/h (22 MPH).
4. Cool down parking brake for approx. five minutes.
5. After releasing the pedal, drive the vehicle under the normal conditions for two minutes to cool down the parking drum brake.
6. Repeat steps 1 through 5 three times and then repeat only step 5 one more time.

8 - 11 (0.8 - 1.1, 69 - 95)
8 - 11 (0.8 - 1.1, 69 - 95)
Release cable
Release lever assembly
Return spring
Damper
Pedal assembly
3.2 - 4.3 (0.33 - 0.44, 28.6 - 38.2)
Bushing
3.2 - 4.3 (0.33 - 0.44, 28.6 - 38.2)
3.2 - 4.3 (0.33 - 0.44, 28.6 - 38.2)
Front cable
3.2 - 4.3 (0.33 - 0.44, 28.6 - 38.2)
8 - 11 (0.8 - 1.1, 69 - 95)
Adjuster
RH rear cable
8 - 11 (0.8 - 1.1, 69 - 95)
LH rear cable
3.2 - 4.3 (0.33 - 0.44, 28.6 - 38.2)
8 - 11 (0.8 - 1.1, 69 - 95)
Equalizer
8 - 11 (0.8 - 1.1, 69 - 95)
: N•m (kg-m, in-lb)
SBR566CB

Removal and Installation

- Parking brake cables can be removed without removing pedal assembly.
- In order to remove front cable, it is necessary to remove center console. (Refer to "INSTRUMENT PANEL" in BT section.)
- In order to remove pedal assembly, it is necessary to remove instrument panel assembly and air duct. (Refer to "INSTRUMENT PANEL" in BT section.)

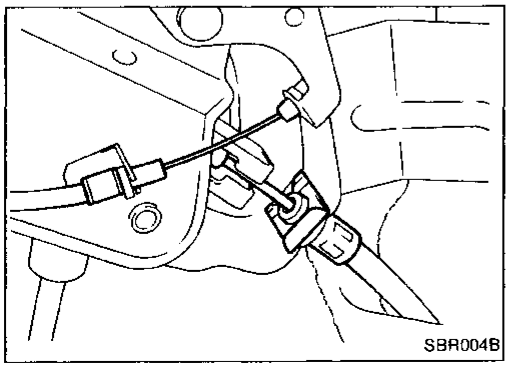

- The figure at left shows how front and release cables are connected to pedal assembly.

Inspection

1. Check pedal assembly for wear or other damage. Replace if necessary.
2. Check wires for discontinuity or deterioration. Replace if necessary.
3. Check warning lamp and switch. Replace if necessary.
4. Check parts at each connecting portion and, if found deformed or damaged, replace.

Adjustment

Adjust parking brake pedal stroke as follows.

On models equipped with parking drum brake, perform shoe clearance adjustment before adjusting control lever stroke.

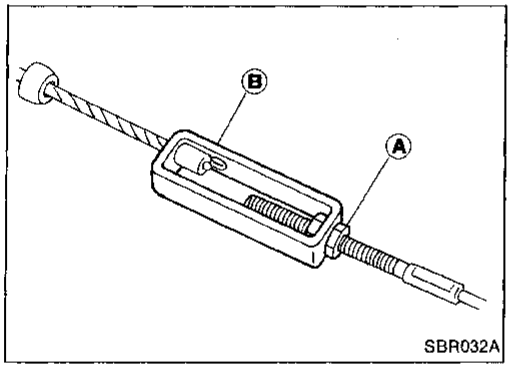

SBR032A

1. Loosen lock nut Ⓐ, rotate adjuster Ⓑ.
2. Tighten lock nut Ⓐ.

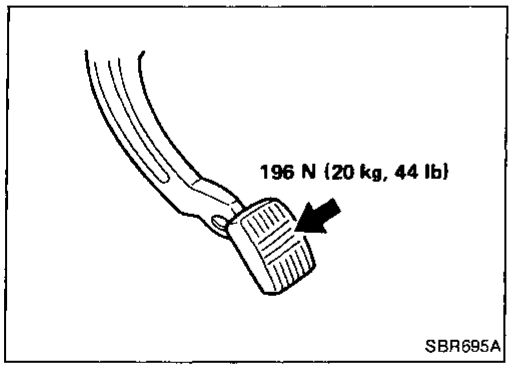

SBR695A

3. Depress parking brake pedal with specified amount of force. Check pedal stroke and ensure smooth operation.
   Pedal stroke:
   90 - 105 mm (3.54 - 4.13 in)

4. Bend warning lamp switchplate to ensure following. Warning lamp comes on when parking brake pedal is depressed "A" mm ("A" in).
   "A": 20 mm (0.79 in) or less

Purpose

The Anti-Lock Brake System (ABS) consists of electronic and hydraulic components. It allows for control of braking force so locking of the wheels can be avoided.
The ABS:
1) Improves proper tracking performance through steering wheel operation.
2) Eases obstacle avoidance through steering wheel operation.
3) Improves vehicle stability.

Operation

- When the vehicle speed is less than 10 km/h (6 MPH) this system does not work.
- The Anti-Lock Brake System (ABS) has self-test capabilities. The system turns on the ABS warning lamp for 1 second each time the ignition switch is turned "ON". After the engine is started, the ABS warning lamp turns off. The system performs a test the first time the vehicle reaches 6 km/h (4 MPH). A mechanical noise may be heard as the ABS performs this self-test. This is a normal part of the self-test feature. If a malfunction is found during this check, the ABS warning lamp will stay on.
- While driving, a mechanical noise may be heard during ABS operation. This is a normal condition.

System Components

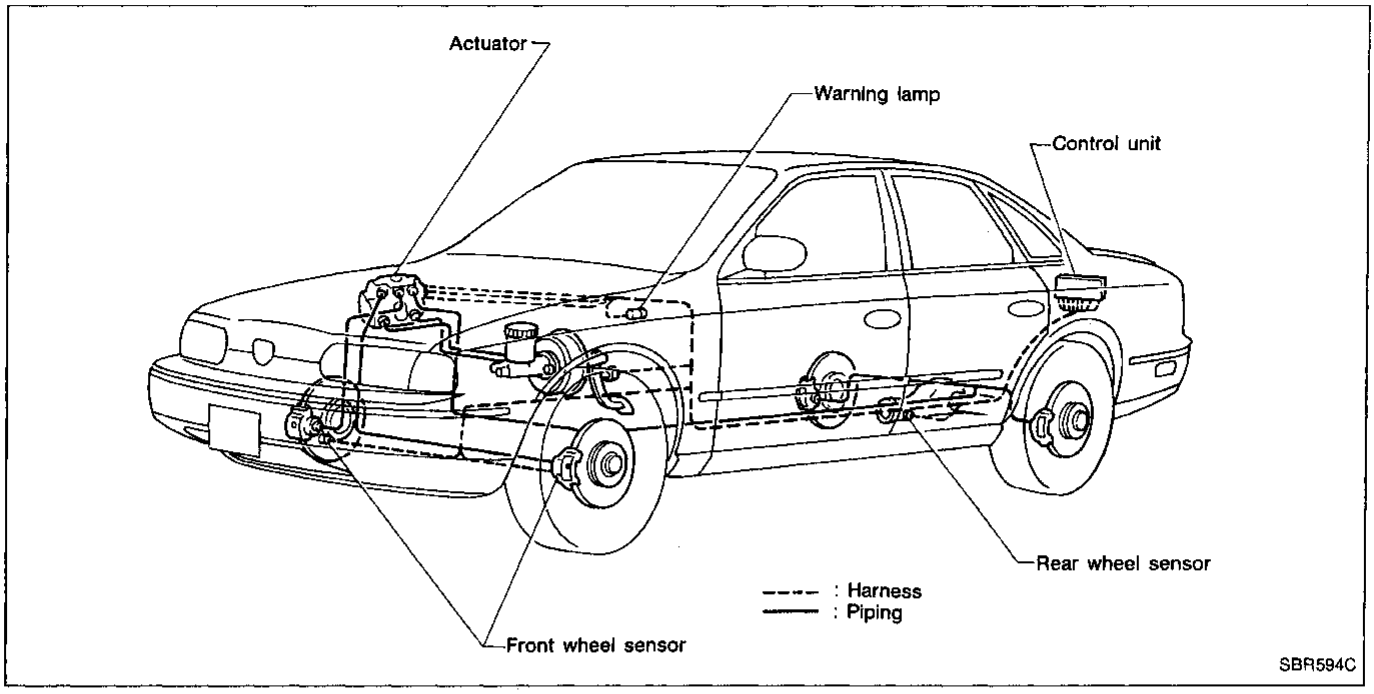

Hydraulic Circuit

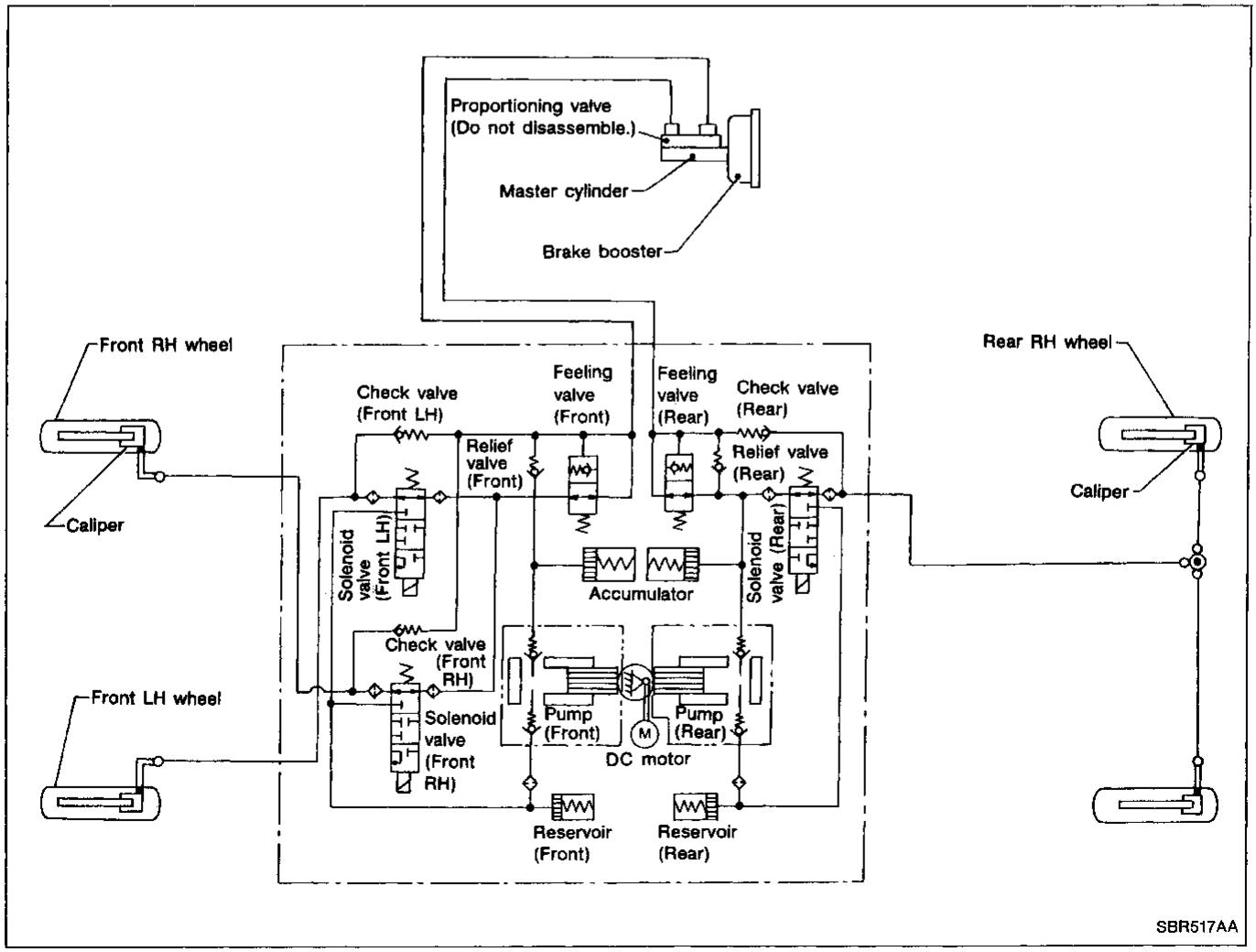

Removal and Installation

CAUTION:

Be careful not to damage sensor edge and sensor rotor teeth.

When removing the front wheel hub or final drive assembly, disconnect the ABS wheel sensor from the assembly and move it away. Failure to do so may result in damage to the sensor wires making the sensor inoperative.

FRONT WHEEL SENSOR

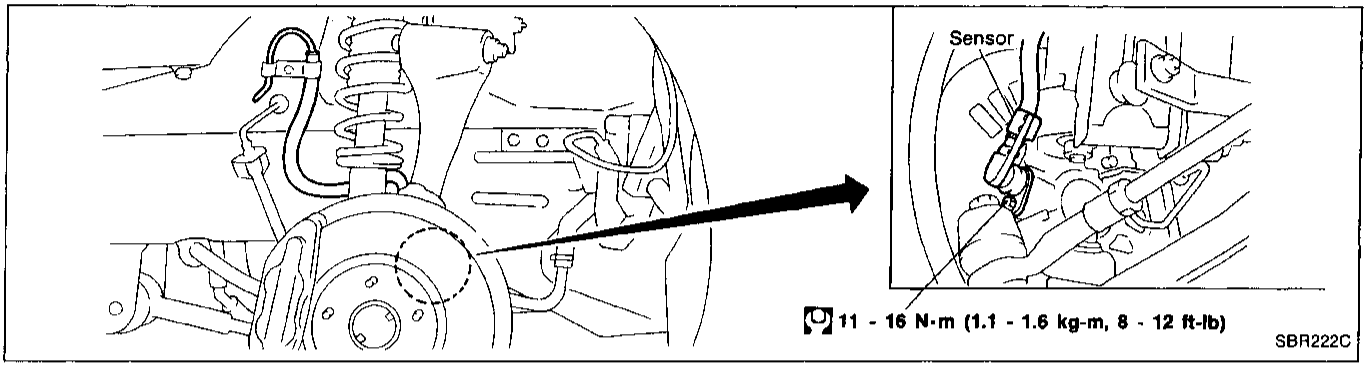

REAR WHEEL SENSOR

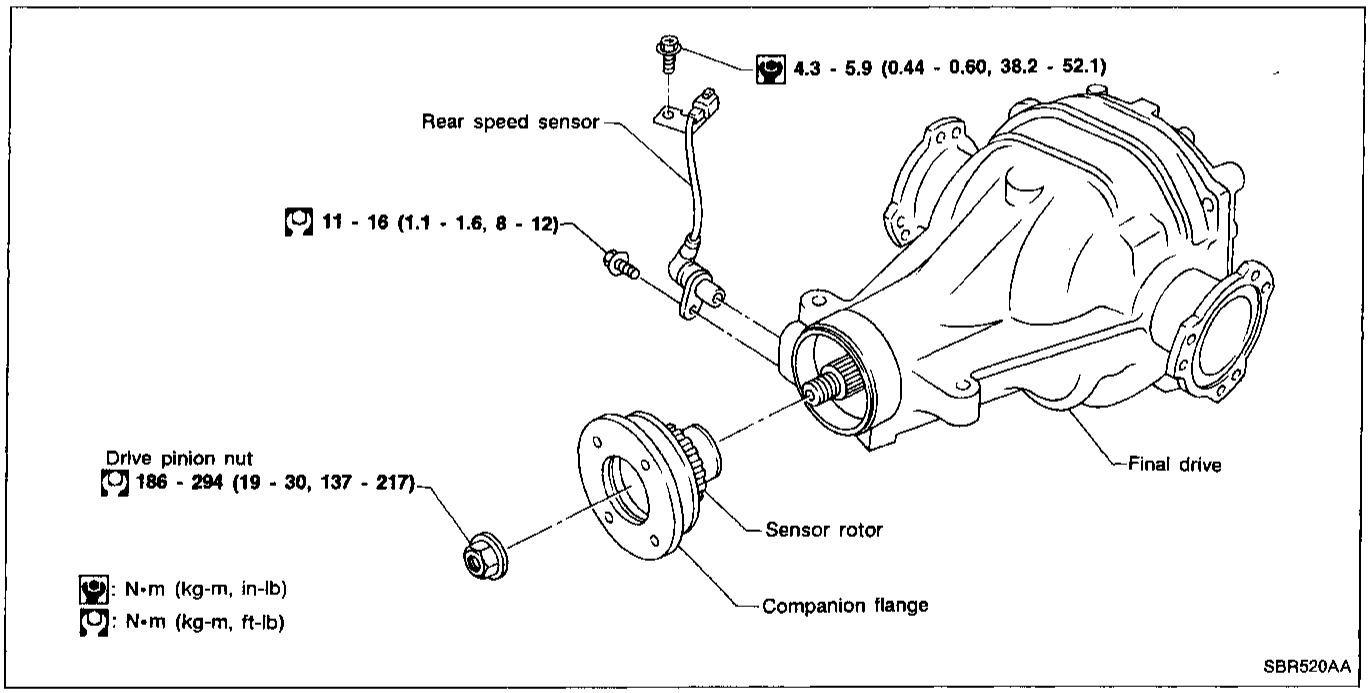

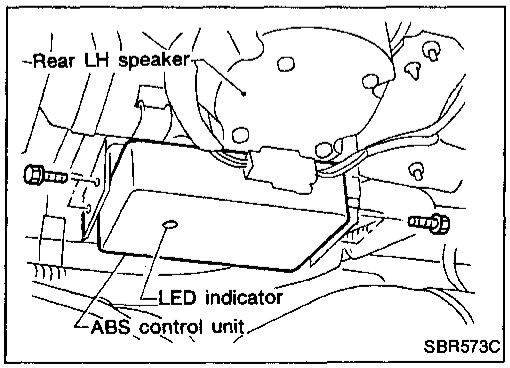

ABS CONTROL UNIT

Removal and Installation (Cont'd)

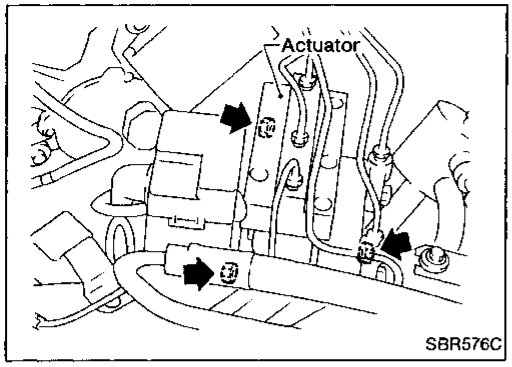

ACTUATOR

Removal

1. Disconnect battery cable.
2. Drain brake fluid. Refer to "Changing Brake Fluid" in "CHECK AND ADJUSTMENT", BR-5.
3. Disconnect connectors, brake tubes and remove fixing nuts.

Installation

CAUTION:
After installation, refill brake fluid. Then bleed air. Refer to "CHECK AND ADJUSTMENT", BR-5.

1. Connect brake tubes temporarily.
2. Secure fixing nuts.
3. Torque brake tubes.
4. Connect connectors and battery cable.

Wiring Diagram — ABS —

BR-ABS-01

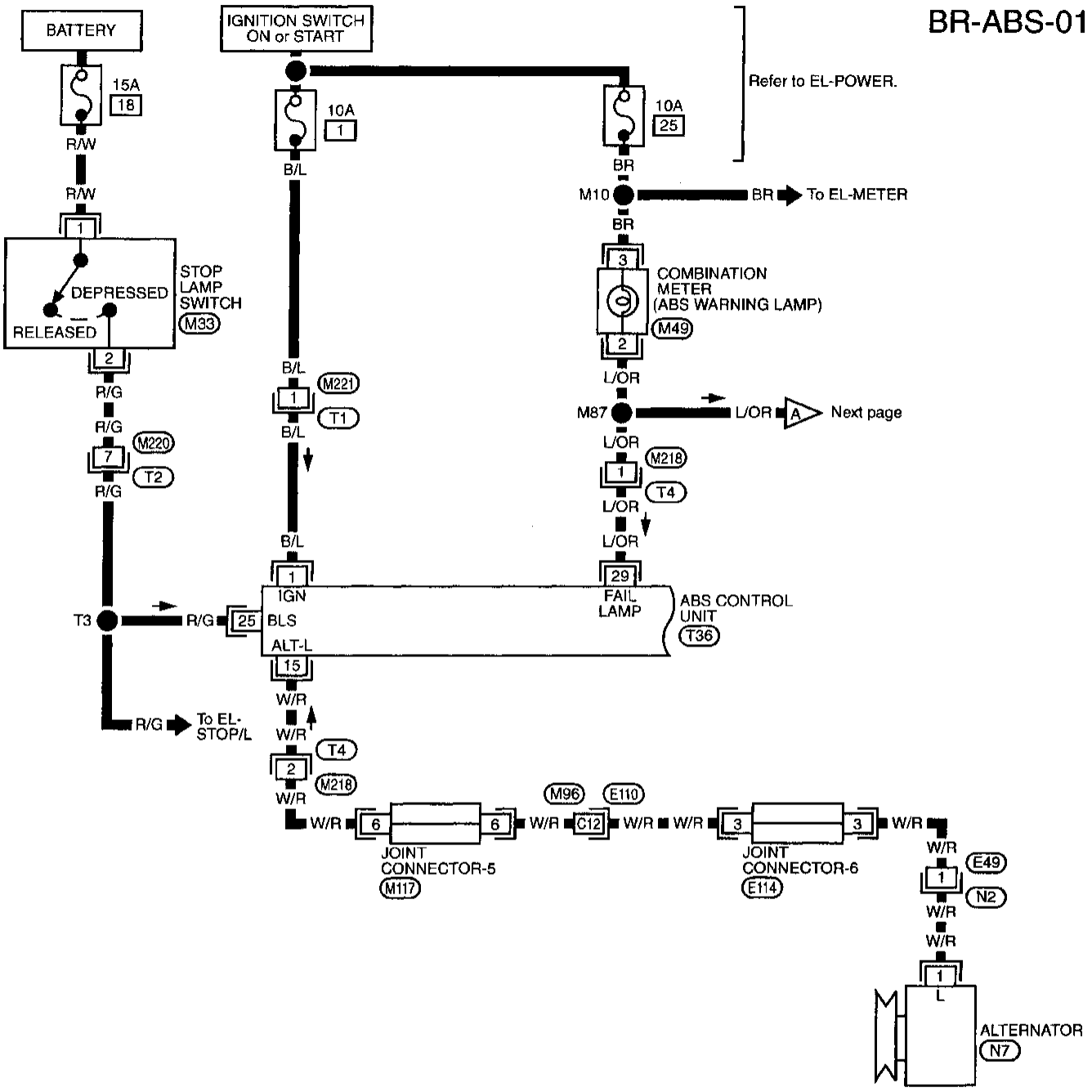

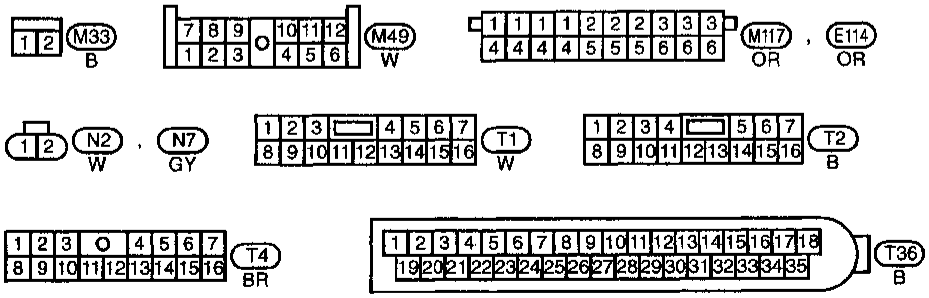

Refer to last page (Foldout page).
E110 , M96

MBR167A

Wiring Diagram — ABS — (Cont'd)

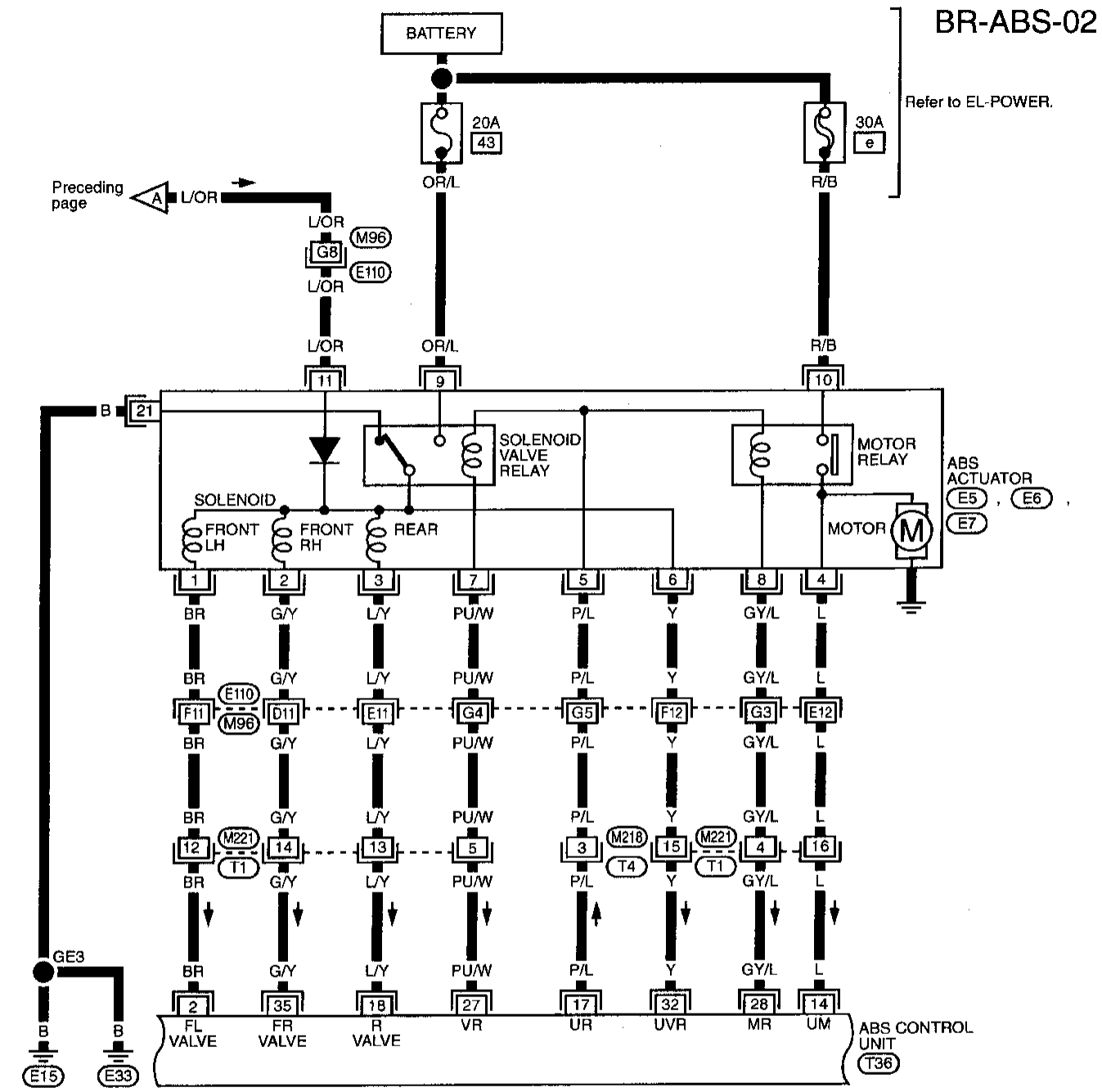

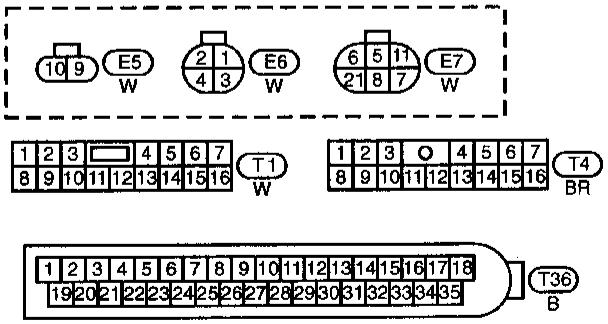

Refer to last page (Foldout page).
E110 , M96

MBR168A

Wiring Diagram — ABS — (Cont'd)

BR-ABS-03

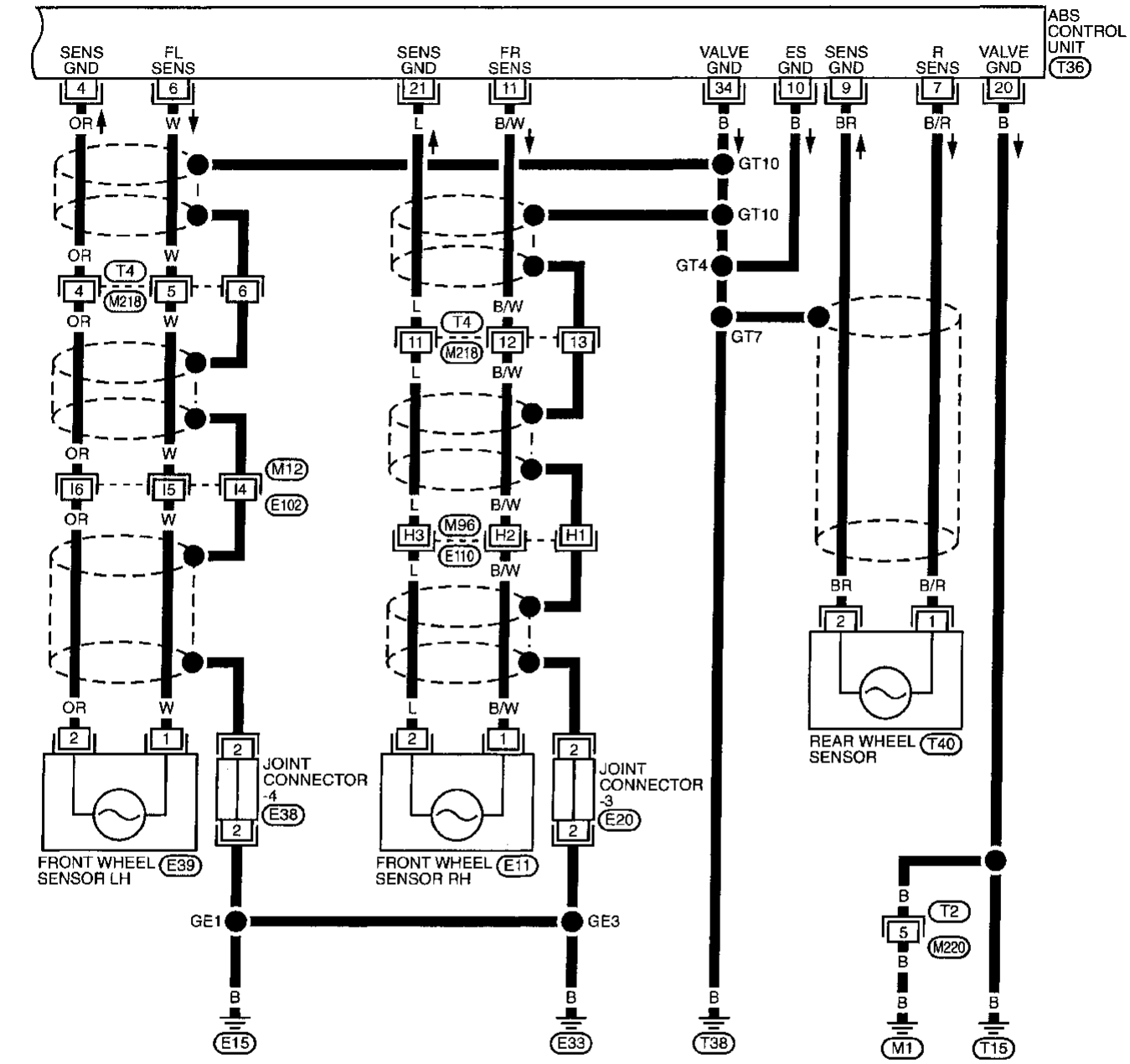

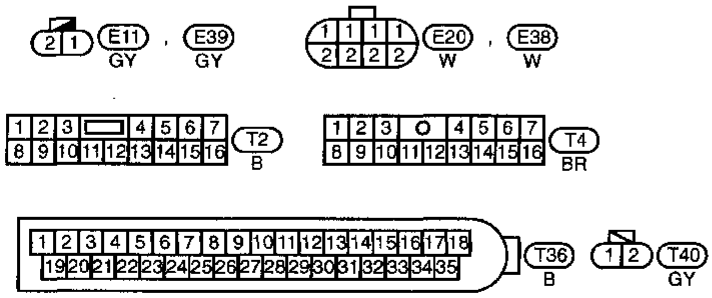

Refer to last page (Foldout page).
E102 , M12
E110 , M96

MBR169A

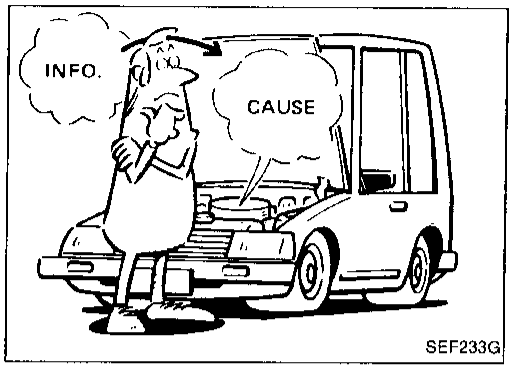

SEF233G

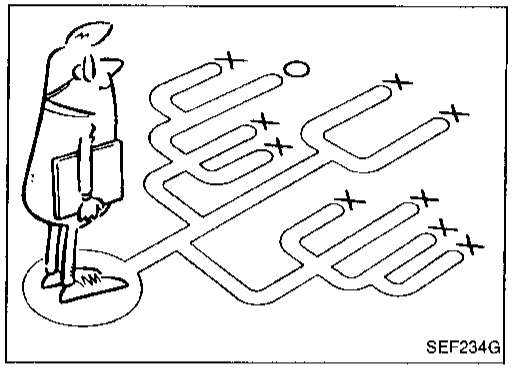
SEF234G

How to Perform Trouble Diagnoses for Quick and Accurate Repair

INTRODUCTION

The ABS system has an electronic control unit to control major functions. The control unit accepts input signals from sensors and instantly drives the actuators. It is essential that both kinds of signals are proper and stable. It is also important to check for conventional problems: such as air leaks in the booster lines, lack of brake fluid, or other problems with the brake system.

It is much more difficult to diagnose a problem that occurs intermittently rather than continuously. Most intermittent problems are caused by poor electric connections or faulty wiring. In this case, careful checking of suspicious circuits may help prevent the replacement of good parts.

A visual check only may not find the cause of the problems, so a road test should be performed.

Before undertaking actual checks, take just a few minutes to talk with a customer who approaches with a ABS complaint. The customer is a very good source of information on such problems; especially intermittent ones. Through the talks with the customer, find out what symptoms are present and under what conditions they occur.

Start your diagnosis by looking for "conventional" problems first. This is one of the best ways to troubleshoot brake problems on an ABS controlled vehicle.

How to Perform Trouble Diagnoses for Quick and Accurate Repair (Cont'd)

WORK FLOW

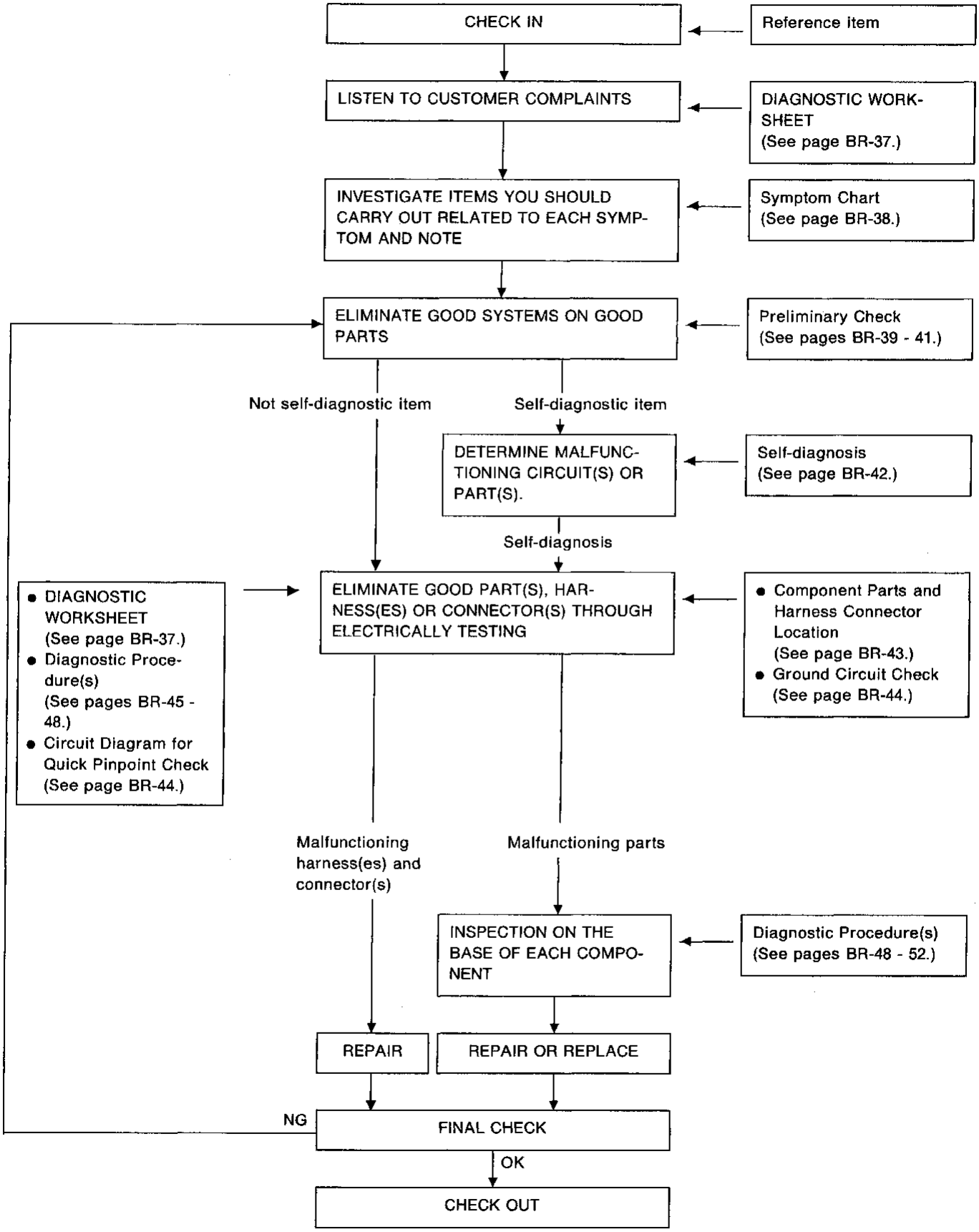

How to Perform Trouble Diagnoses for Quick and Accurate Repair (Cont'd)

KEY POINTS

WHAT ..... Vehicle model
WHEN ..... Date, Frequencies
WHERE ..... Road conditions
HOW ..... Operating conditions, Weather conditions, Symptoms

SBR339B

DIAGNOSTIC WORKSHEET

There are many kinds of operating conditions that lead to customer complaints, even if the system is normal.
A good grasp of such conditions can make trouble-shooting faster and more accurate.
In general, feelings for a problem depend on each customer's information. It is therefore important to fully understand the symptoms or under what conditions a customer complains.
Make good use of a diagnostic worksheet (such as the one shown below) in order to utilize all the complaints for trouble-shooting.

Worksheet sample

Customer name MR/MS		Model & Year			VIN		
Engine #		Trans.			Mileage		
Incident Date		Manuf. Date			In Service Date		
Symptoms	☐ Pedal vibration and noise	☐ Warning activates	☐ Long stopping distance	☐ Abnormal pedal action	☐ ABS does not work	☐ ABS works but warning activates	☐ ABS works frequently
Engine conditions	☐ When starting ☐ After starting ☐ Engine speed: 5,000 rpm or more						
Road conditions	☐ Low friction road (☐ Snow ☐ Gravel ☐ Other) ☐ Protrusion						
Driving conditions	☐ High speed cornering ☐ Vehicle speed: Greater than 10 km/h (6 MPH) ☐ Vehicle speed: 10 km/h (6 MPH) or less ☐ Vehicle is stopped						
Applying brake conditions	☐ Suddenly ☐ Gradually						
Other conditions	☐ Operation of electrical equipment ☐ Large pedal stroke ☐ Operation of clutch						

Symptom Chart

PROCEDURE	REFERENCE PAGE	SYMPTOM	Pedal vibration & noise	Warning activates	Long stopping distance	Abnormal pedal action	ABS does not work	ABS works but warning activates
Electrical Components Inspection	BR-97	Actuator inspection					○	
Ground Circuit Check	BR-44	Motor ground					○	
	BR-44	Control unit ground					○	
(Diagnostic Procedure Select inspection with LED flashing No.)	BR-52	Diagnostic Procedure 11	○	○	○	○	○	○
	BR-52	Diagnostic Procedure 10	○	○	○	○	○	○
	BR-51	Diagnostic Procedure 9	○	○	○	○	○	○
	BR-50	Diagnostic Procedure 8	○	○	○	○	○	○
	BR-49	Diagnostic Procedure 7	○	○	○	○	○	○
	BR-48	Diagnostic Procedure 6	○	○	○	○	○	○
Diagnostic Procedure	BR-48	Diagnostic Procedure 5						○
	BR-47	Diagnostic Procedure 4					○	
	BR-47	Diagnostic Procedure 3				○		
	BR-46	Diagnostic Procedure 2			○			
	BR-45	Diagnostic Procedure 1	○					
Preliminary Check	BR-41	Preliminary Check 3	○	○	○	○	○	○
	BR-40	Preliminary Check 2		○			○	
	BR-39	Preliminary Check 1			○	○		

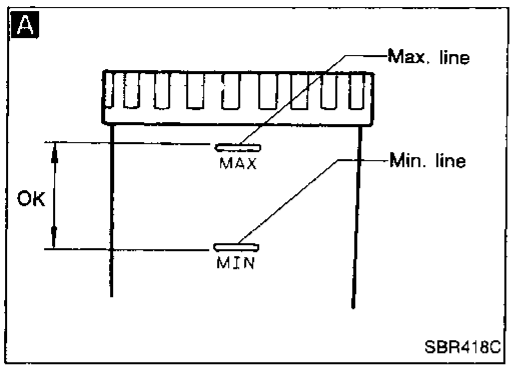

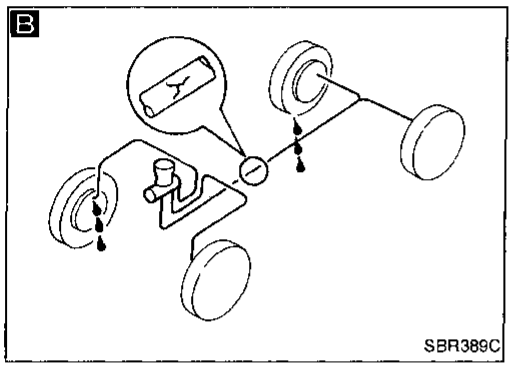

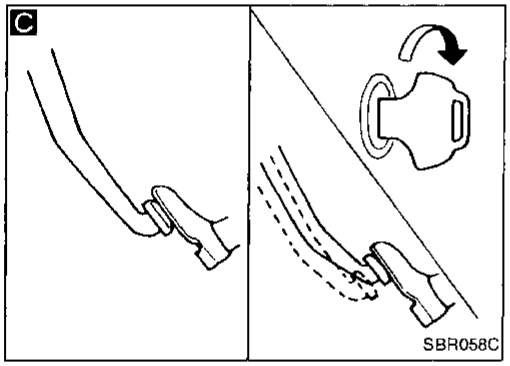

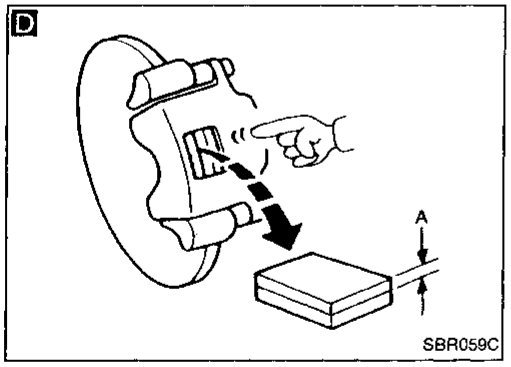

Preliminary Check 1

A

Check brake fluid level in reservoir tank.

Low fluid level may indicate brake pad wear or leakage from brake line.

B

Check brake line for leakage. — NG → Repair.

OK

C

Check brake booster for operation and air tightness.
Refer to "On-vehicle Service" of BRAKE BOOSTER, BR-14. — NG → Replace.

OK

D

Check brake pads and rotor.
Refer to "Inspection" of FRONT and REAR DISC BRAKES, BR-17, 20. — NG → Replace.

OK

A

Check brake fluid level in reservoir tank. — NG → Fill up brake fluid.

OK

END

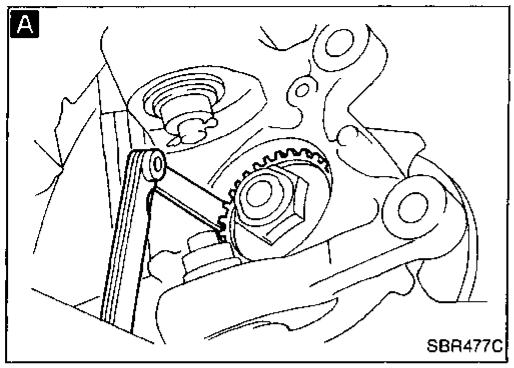

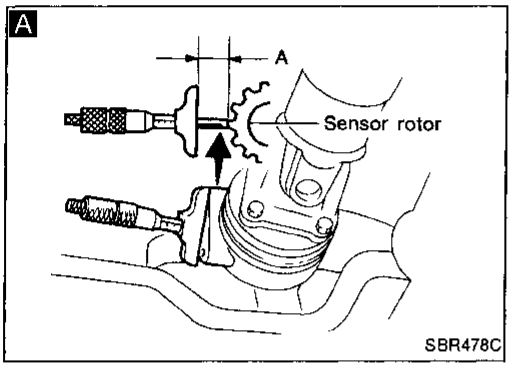

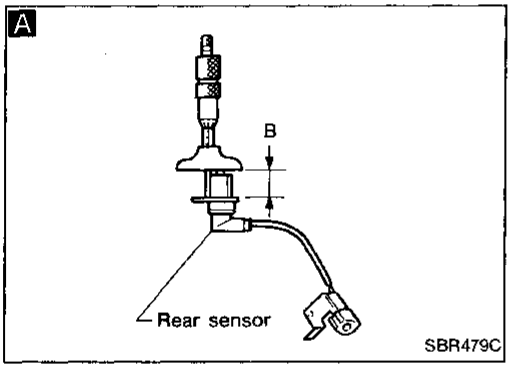

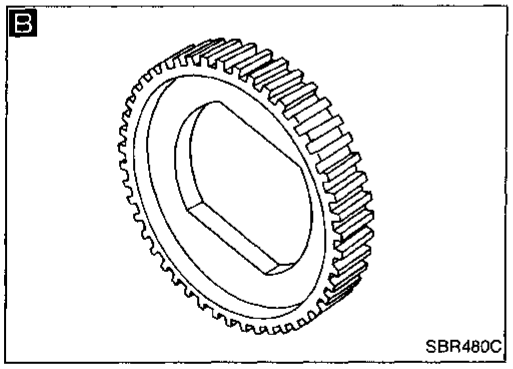

Preliminary Check 2

A

Check sensor clearance.
Clearance = A – B

	Clearance mm (in)
Front wheel sensor	0.21 - 0.71 (0.0083 - 0.0280)
Rear sensor	0.35 - 0.625 (0.0138 - 0.0246)

OK → **B**

NG → Check sensor for the following items:
- Dust, foreign materials, etc., at fastening portion
- Improper installation
- Breakage

NG → Repair or replace malfunctioning sensor.

OK → **B**

B

Check sensor rotor for teeth damage.

NG → Replace sensor rotor with wheel hub or companion flange as a set.

Preliminary Check 3

A

See page BR-44

(For the location of connectors)

SBR481CA

B

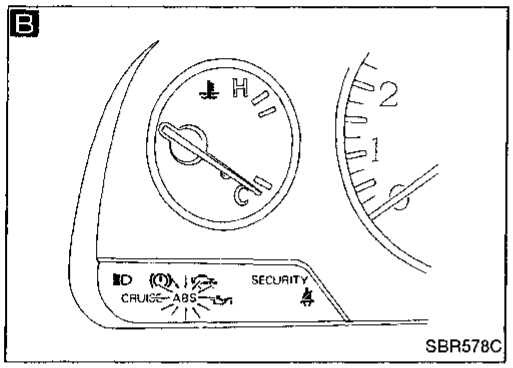

SBR578C

C

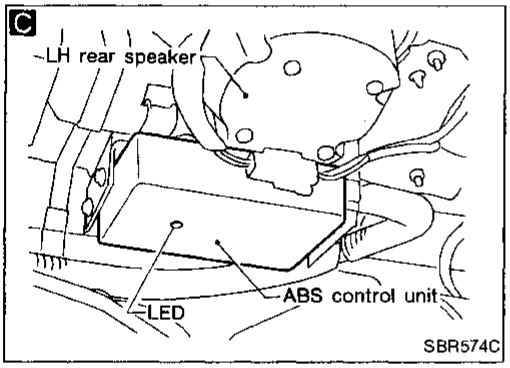

SBR574C

D

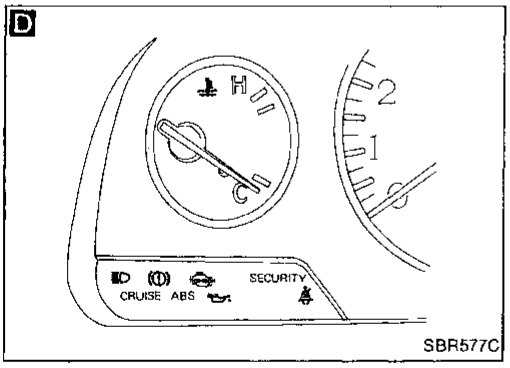

SBR577C

E

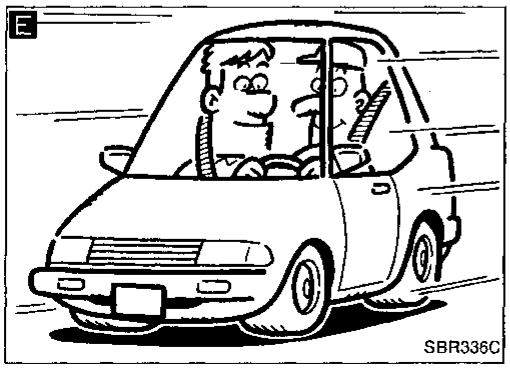

SBR336C

A

Measure each sensor resistance.
0.8 - 1.2 kΩ

NG → Replace.

OK ↓

B

Check warning lamp activation.
When ignition switch is turned on, warning lamp turns on.

NG → **C**

Check fuse.
Check bulb condition and remedy.
- Keep engine on and running
- Counter the number of LED flashes during 5 to 10 second "OFF" period.

→ Go to Self-diagnosis. (See next page.)

OK ↓

D

Check warning lamp for deactivation.
When engine starts, warning lamp deactivates.

NG → **C**

OK ↓

E

Drive vehicle at 30 km/h (19 MPH) for at least one minute.

↓

D

Ensure warning lamp remains off while driving.

NG → Go to **C** .

OK ↓

If Preliminary Check 2 is not performed and there is abnormal ABS operation, perform Preliminary Check 2.

Self-diagnosis

CHECKING THE NUMBER OF LED FLASHES

When a problem occurs in the ABS, the warning light on the instrument panel comes on. As shown in the Table, the control unit performs self-diagnosis.
For good self-diagnostic results, drive the vehicle beforehand over 30 km/h (19 MPH) for at least one minute. After the vehicle is stopped, the number of LED flashes is counted while the engine is running. The LED is located on the control unit, identifying a malfunctioning part or unit by the number of flashes. The warning light and LED will not turn off, even after the malfunction is repaired, unless the ignition switch is turned off. After repairs, turn the ignition switch "OFF". Then start the engine and drive the vehicle over 30 km/h (19 MPH) for at least one minute. This will ensure whether proper repair was made for the malfunctioning part or unit.
If more than two circuits malfunction at the same time, the LED will flash to indicate one of the malfunctioning circuits. After the circuit has been repaired, the LED will then flash to indicate that the other circuit is malfunctioning.

No. of LED flashes	Malfunctioning part or unit	Diagnostic Procedure
1	Left front actuator solenoid circuit	Diagnostic Procedure 6
2	Right front actuator solenoid circuit	
3 or 4	Rear actuator solenoid circuit	
5	Left front wheel sensor circuit	Diagnostic Procedure 7
6	Right front wheel sensor circuit	
7 or 8	Rear wheel sensor circuit	
9	Motor and motor relay	Diagnostic Procedure 8
10	Solenoid valve relay	Diagnostic Procedure 9
16 or continuous	Control unit	Diagnostic Procedure 10
Warning activates and LED "OFF"	Power supply or ground circuit for control unit	Diagnostic Procedure 11

Example

Improper operation of left front rotor sensor circuit

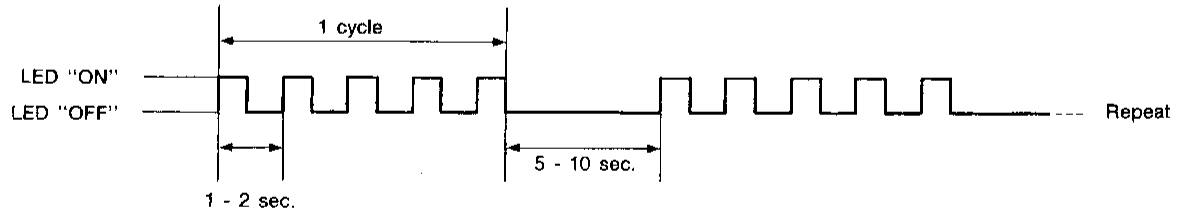

SBR535C

Component Parts and Connector Locations

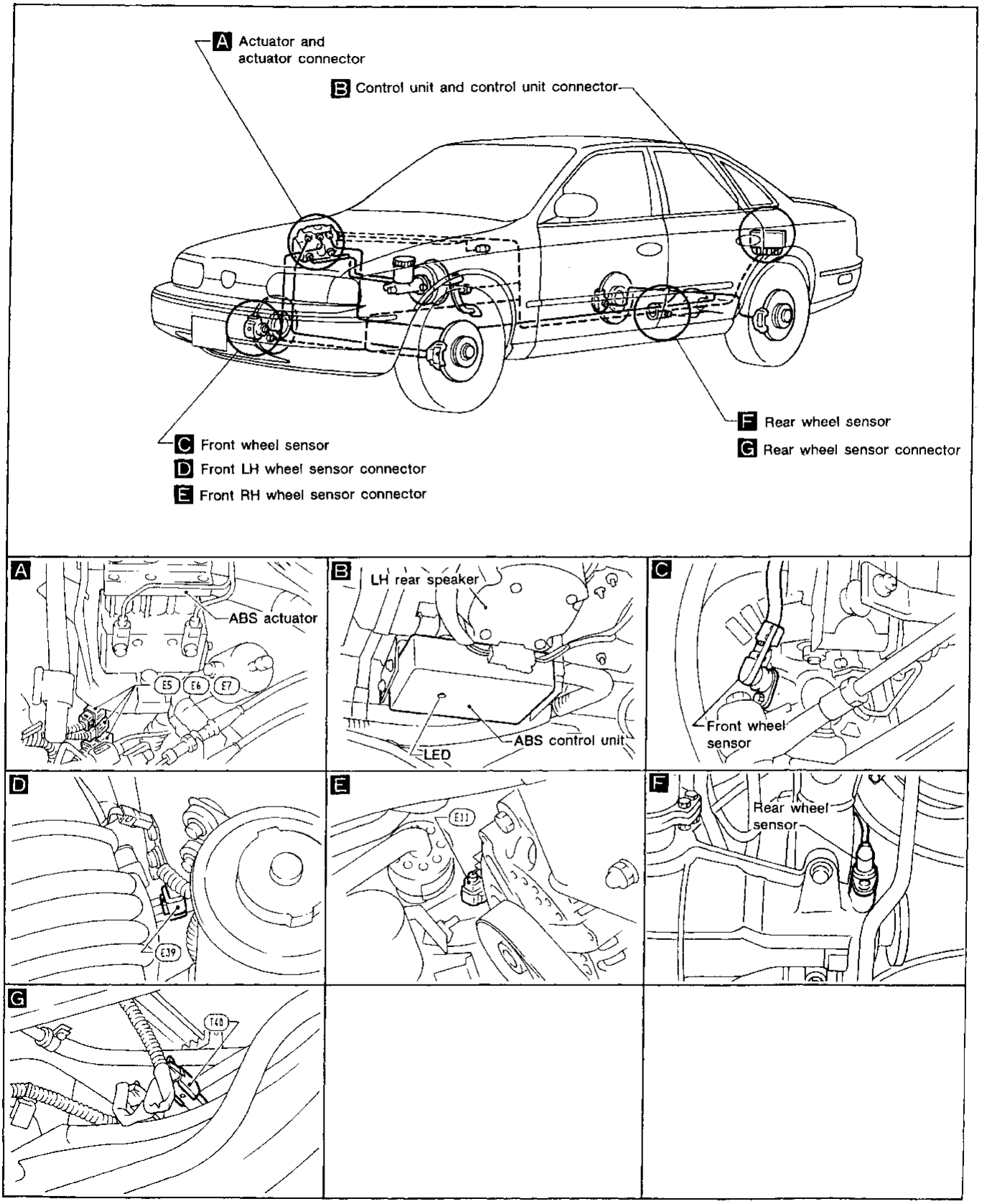

SBR579C

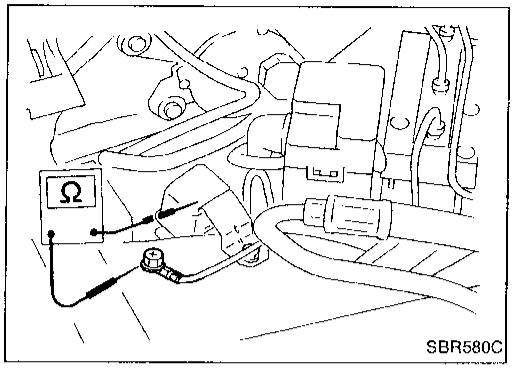

Ground Circuit Check

ACTUATOR MOTOR GROUND

- Check resistance between both terminals.
  Resistance: 0Ω

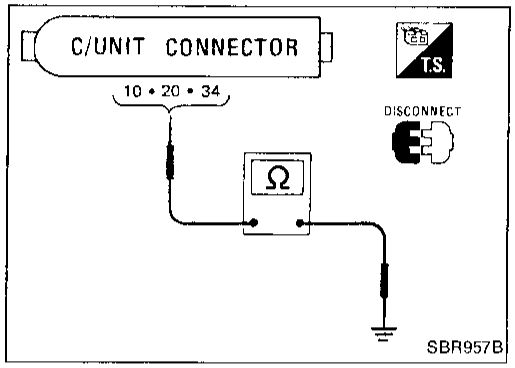

CONTROL UNIT GROUND

- Check resistance between both terminals.
  Resistance: 0Ω

Circuit Diagram for Quick Pinpoint Check

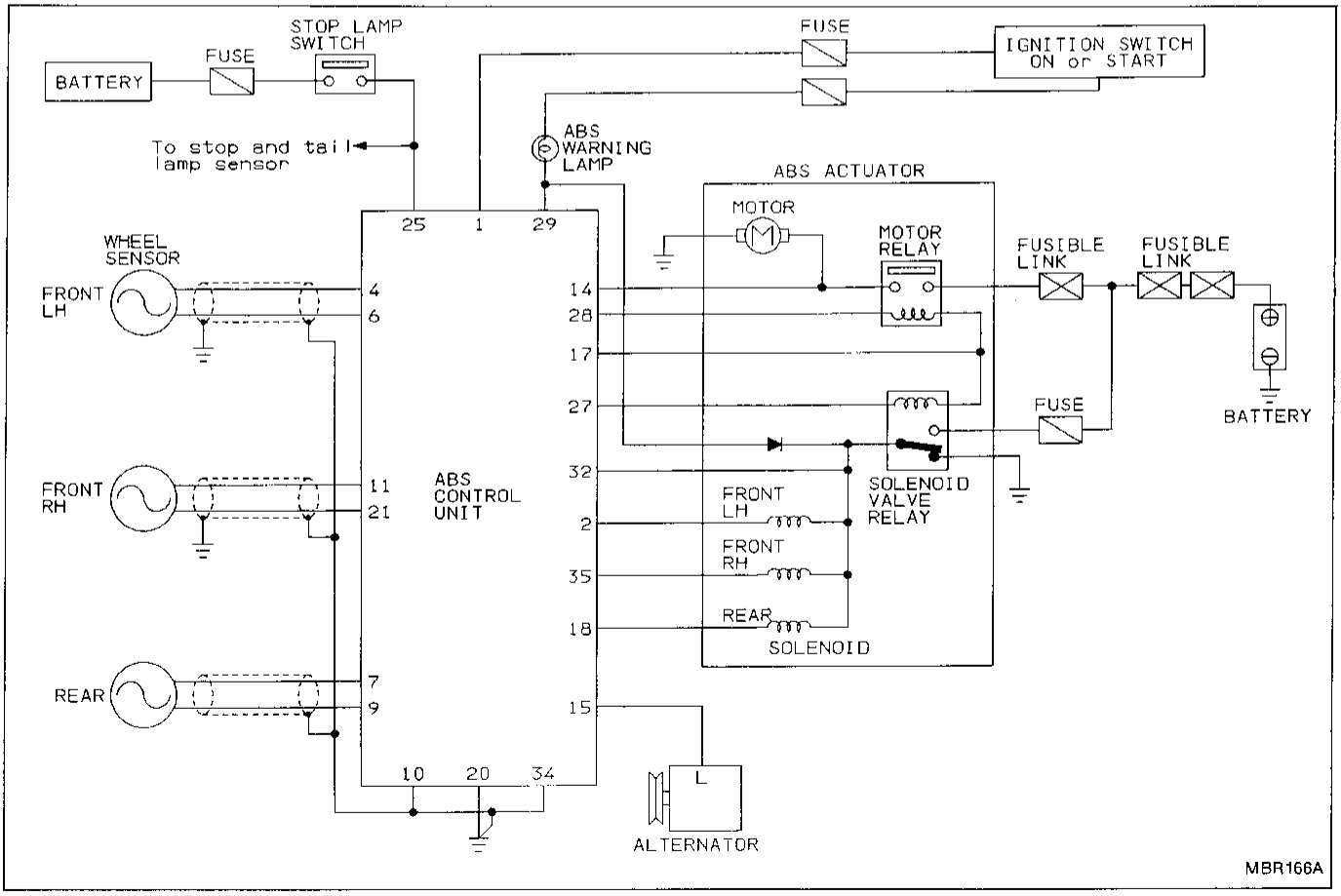

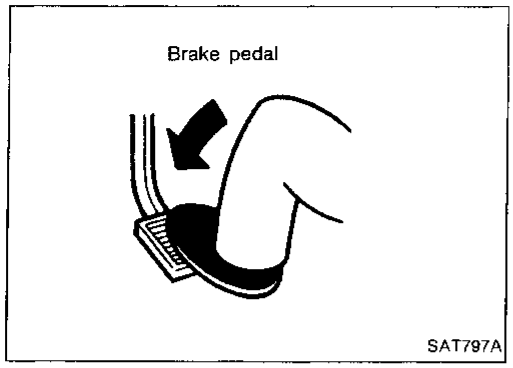

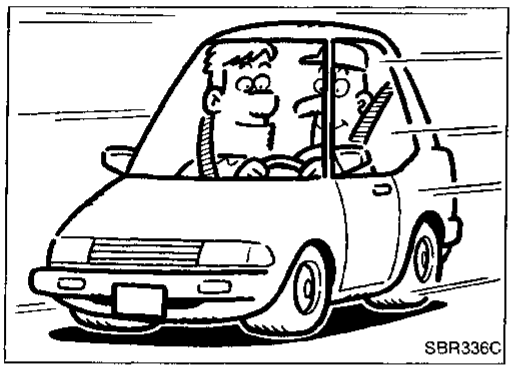

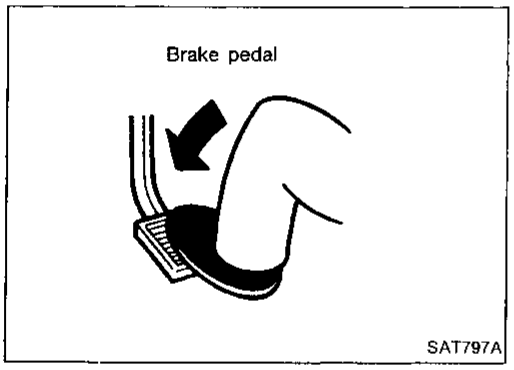

Diagnostic Procedure 1

SYMPTOM: Pedal vibration and noise

Refer to worksheet result.

- Check whether the symptom appears only when brake is applied suddenly.
  - Yes → When brake is suddenly applied, ABS works and produces pedal vibration or noise.
  - No ↓
- Check whether the symptom appears only when engine is started.
  - Yes → Refer to Preliminary Check 3 result, BR-41.
  - No ↓
- Check whether the symptom appears only when the vehicle speed is within 10 km/h (6 MPH) after starting engine.
  - Yes → Check whether the symptom disappears within 5 seconds.
    - No → Ⓐ
    - Yes → ABS may sometimes operate when load is high and voltage is low due to insufficient alternator output.
  - No ↓
- Check whether the symptom appears while the vehicle is being driven.
  - No → Ⓐ
  - Yes ↓
- Check whether the symptom appears when brake is applied gradually.
  - No (Appears when brake is not applied.) → Check if there are any conditions, among those listed below, when symptom appears.
    - Shifting
    - Operating clutch
    - Passing protrusion
    - No → Ⓑ
    - Yes → Under these conditions individual wheel speed can change suddenly. This may sometimes cause the ABS to operate.
  - Yes ↓
- Check if there are any conditions, among those listed below, when symptom appears.
  - Low friction road
  - High speed cornering
  - Passing protrusion
  - Yes → If wheel speed is considerably different between front and rear or left and right, ABS will work normally.
  - No → Ⓐ
- Ⓑ

Diagnostic Procedure 1 (Cont'd)

Ⓑ

Check whether engine speed is over 5,000 rpm with vehicle stopped.

Yes → Vibration related to sensor may cause ABS operation.

No ↓

Check whether electrical equipment switches are operated.

No → Refer to Preliminary Check 3 result, BR-41. Go to Self-diagnosis. (See page BR-42.)

Yes ↓

Check ABS control unit pin terminals for damage or the connection of the control unit harness connector.
Reconnect ABS control unit harness connector. Then retest.

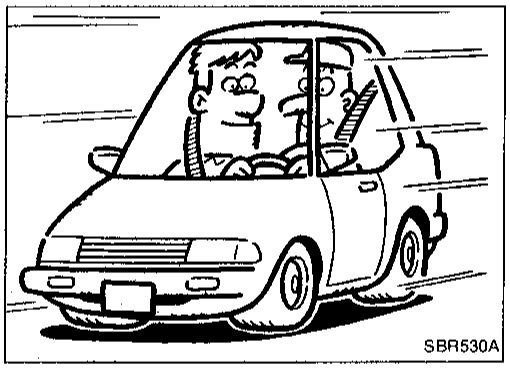

Diagnostic Procedure 2

SYMPTOM: Long stopping distance

Refer to worksheet results.

Check if road condition is slippery with snow or gravel.

Yes → Stopping distance may be longer than vehicles which are not equipped with ABS.

No ↓

Disconnect actuator connector and check whether stopping distance is still long.

No → Refer to Preliminary Check 3 result, BR-41. Go to Self-diagnosis. (See page BR-42.)

Yes ↓

Perform Preliminary Check 1 and air bleeding.

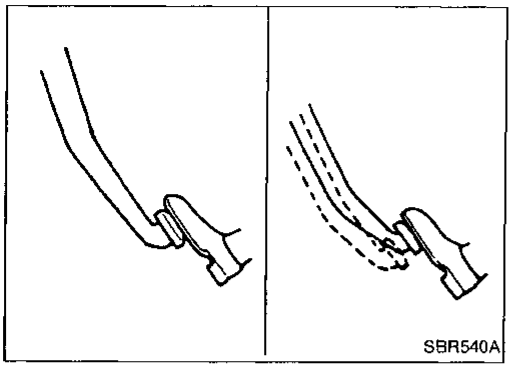

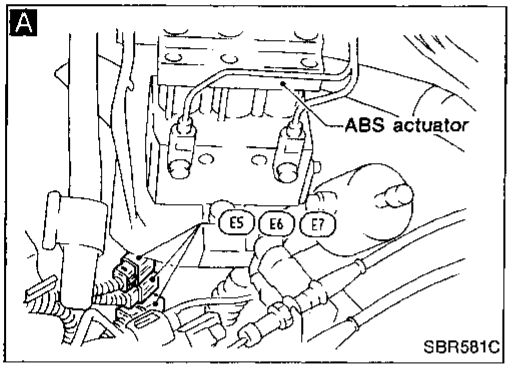

Diagnostic Procedure 3

SYMPTOM: Abnormal pedal action

Refer to worksheet results.

Check whether brake pedal stroke is abnormally large.
- Yes → Vehicle equipped with ABS may have a tendency for large pedal strokes.
- No ↓

Check that brake pedal force is firm but brake is effective.
- Yes → Normal condition.
- No ↓

A

Disconnect actuator connector and check whether brake is effective.
- Yes → Refer to Preliminary Check 3 result, BR-41. Go to Self-diagnosis. (See page BR-42.)
- No ↓

Perform Preliminary Check 1.

Diagnostic Procedure 4

SYMPTOM: ABS does not work.

Refer to worksheet results.

Check whether warning activates.
- Yes → Refer to Preliminary Check 3 result, BR-41. Go to Self-diagnosis. (See page BR-42.)
- No ↓

Check whether vehicle speed is under 10 km/h (6 MPH).
- Yes → ABS does not work in this condition.
- No ↓

Refer to Preliminary Check 3 result.

OK but ABS still does not work. ↓

Check actuator by referring to Electrical Components Inspection — ACTUATOR. (See page BR-97.)

Diagnostic Procedure 5

SYMPTOM: ABS works but warning activates.

Check whether alternator produces proper output.
Refer to "CHARGING SYSTEM" in EL section.

No → Remedy.

Yes ↓

Check whether battery has enough voltage.
Refer to "BATTERY" in EL section.

No → Remedy.

Yes ↓

Refer to Preliminary Check 3 result.
Go to Self-diagnosis. (See page BR-42.)

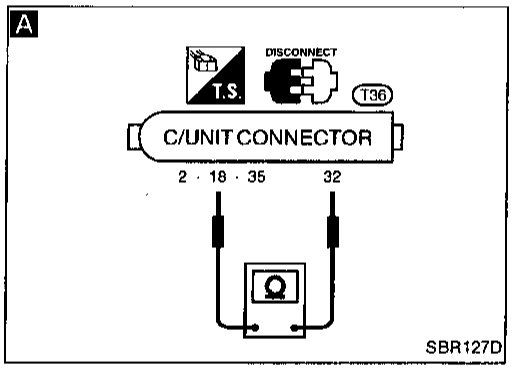

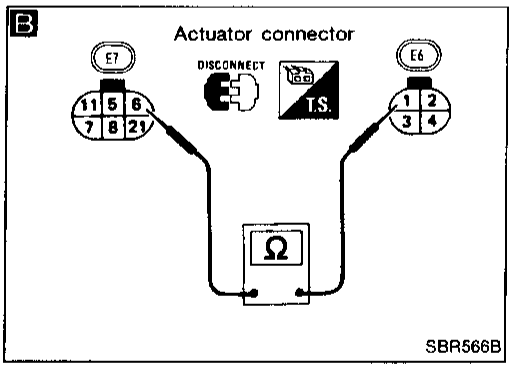

Diagnostic Procedure 6

ACTUATOR SOLENOID (LED flashing number 1 - 4)

Remove battery negative terminal connector.

A

CHECK SOLENOID VALVE RESISTANCE.
Disconnect control unit connector.
Check resistance between control unit harness connector terminals shown below.
Flashing number 1: ㉜ and ②
Flashing number 2: ㉜ and ㉟
Flashing number 3 or 4: ㉜ and ⑱
Resistance: 0.7 - 1.6Ω

OK → Replace control unit.

NG ↓

B

Disconnect actuator connector.
Check resistance between actuator connector (actuator side) terminals shown below.
Flashing number 1: ⑥ and ①
Flashing number 2: ⑥ and ②
Flashing number 3 or 4: ⑥ and ③
Resistance: 0.7 - 1.6Ω

OK → Repair harness between actuator connector and control unit connector.

NG ↓

Replace actuator.

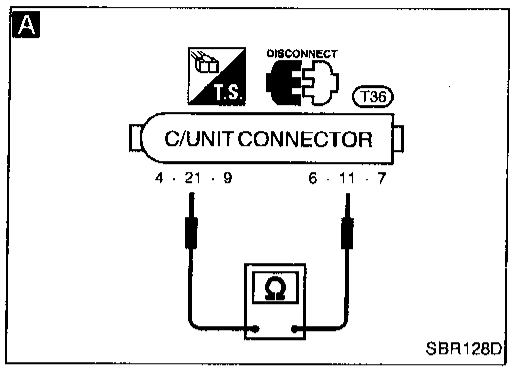

Diagnostic Procedure 7

WHEEL SPEED SENSOR (LED flashing number 5 - 8)

Remove battery negative terminal connector.

A

CHECK SPEED SENSOR RESISTANCE.
Disconnect control unit connector.
Check resistance between control unit harness connector terminals shown below.
Flashing number 5: ④ and ⑥
Flashing number 6: ⑪ and ㉑
Flashing number 7 or 8: ⑦ and ⑨
Resistance: 0.8 - 1.2 kΩ

OK → Replace control unit.

NG ↓

Refer to Preliminary Check 3 result.
Check whether sensor has 0.8 - 1.2 kΩ resistance.

NG → Replace sensor.

OK ↓

Repair harness between sensor connector and control unit connector.

Diagnostic Procedure 8

ACTUATOR MOTOR RELAY (LED flashing number 9)

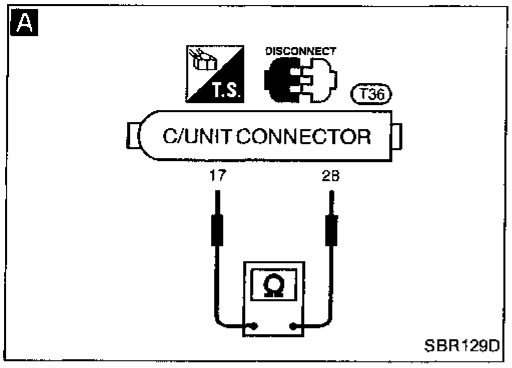

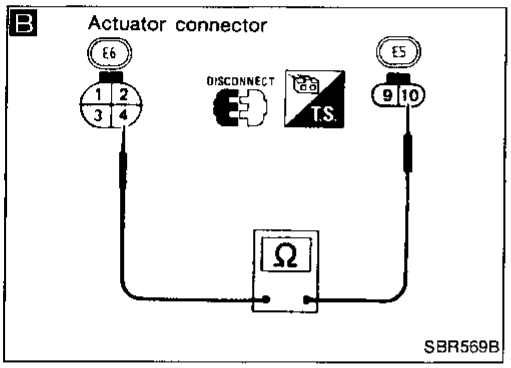

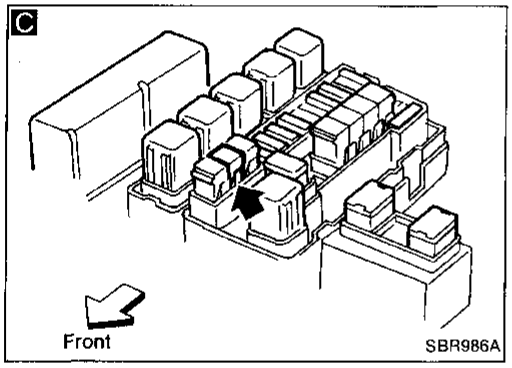

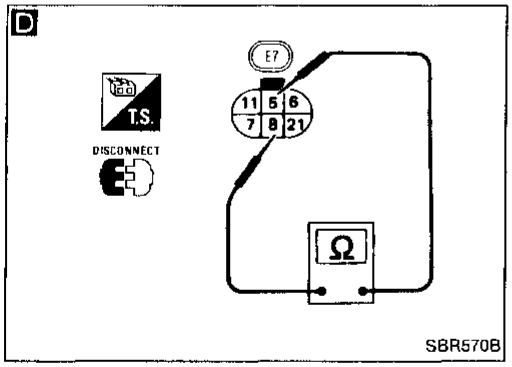

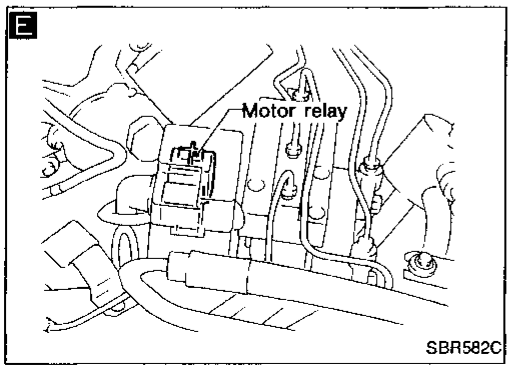

Remove battery negative terminal connector.

A

CHECK MOTOR RELAY COIL RESISTANCE.
Disconnect control unit connector.
Check resistance between control unit harness connector terminals ⑰ and ㉘.
Resistance: 45 - 55Ω

NG → **D**

Disconnect actuator connector.
Check resistance between actuator connector (actuator side) terminals ⑧ and ⑤.
Resistance: 45 - 55Ω

OK → Repair harness between actuator and control unit.

NG → **E** Replace motor relay.

OK ↓

B

CHECK MOTOR RELAY DEACTIVATION.
Disconnect actuator connector.
Check continuity between actuator connector (actuator side) terminals ④ and ⑩.

Yes → **E** Replace motor relay.

No ↓

C

Check if motor's fusible link named "ANTI SKID 30A" is blown.

Yes → Replace fusible link.

No → Perform Electrical Components Inspection — ACTUATOR.
(See page BR-53.)

OK → Replace control unit.

NG → Replace actuator.

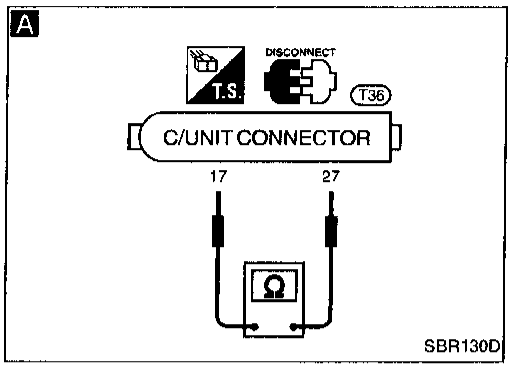

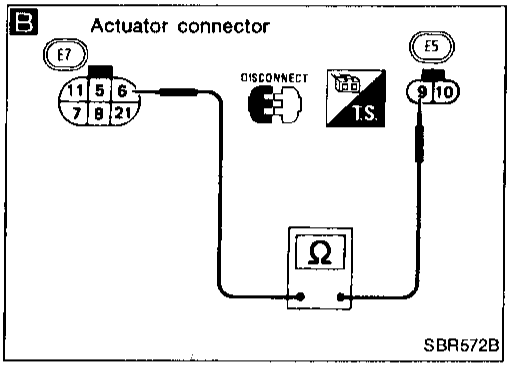

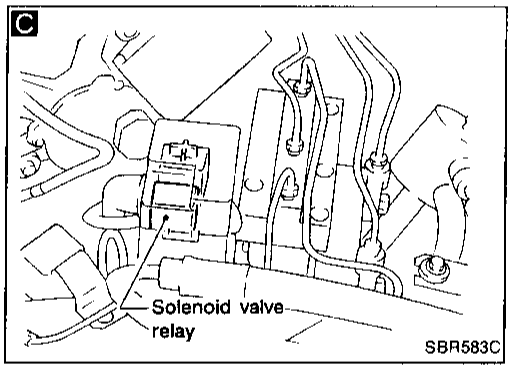

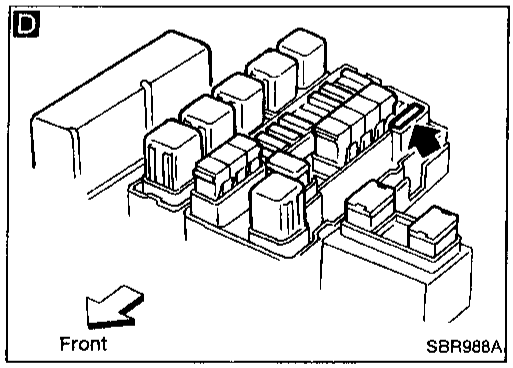

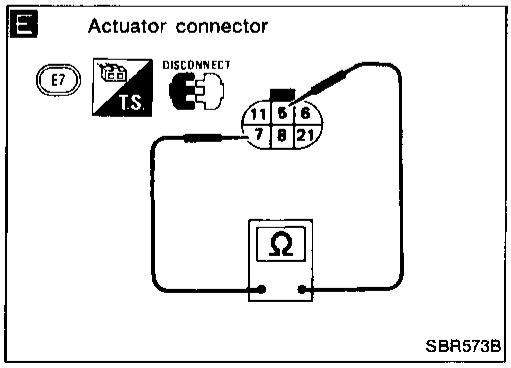

Diagnostic Procedure 9

ACTUATOR SOLENOID VALVE RELAY (LED flashing number 10)

Remove battery negative terminal connector.

A

CHECK SOLENOID VALVE RELAY COIL RESISTANCE.
Disconnect control unit connector.
Check resistance between control unit harness connector terminals ㉗ and ⑰.
Resistance: 80 - 90Ω

NG → **E**

Check resistance between actuator connector (actuator side) terminals ⑦ and ⑤.
Resistance: 80 - 90Ω

OK → Repair harness between actuator and control unit.

NG → **C** Replace solenoid valve relay.

OK → **B**

B

CHECK SOLENOID VALVE RELAY DEACTIVATION.
Disconnect actuator connector.
Check continuity between actuator connector (actuator side) terminals ⑥ and ⑨.

Yes → **C** Replace solenoid valve relay.

No → **D**

D

Check if solenoid valve relay fuse is blown.

Yes → Replace fuse.

No → Perform Electrical Components Inspection — ACTUATOR. (See page BR-53.)

NG → Replace actuator.

OK → Replace control unit.

Diagnostic Procedure 10

CONTROL UNIT (LED flashing number 16)

Control unit malfunction.

↓

Replace control unit.

Diagnostic Procedure 11

CONTROL UNIT OR POWER SUPPLY AND GROUND CIRCUIT (Warning activates but LED comes off.)

A

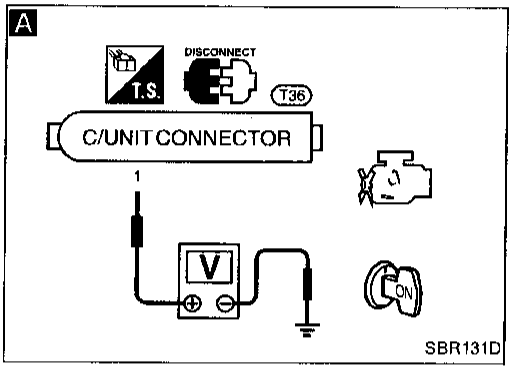

B

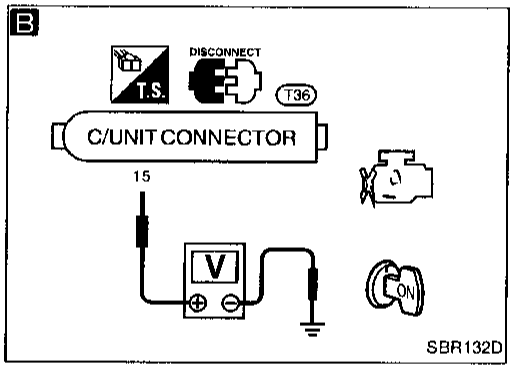

C

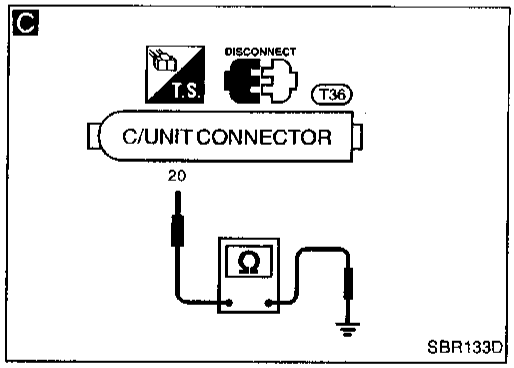

A

CHECK CONTROL UNIT POWER SUPPLY.
Disconnect control unit connector.
Check voltage between control unit harness connector terminal ① and body ground with ignition switch turned on.
Battery voltage should exist.

NG → Check if control unit "10A" fuse is blown.
- Yes → Replace fuse.
- No → Repair power supply harness.

OK ↓

B

CHECK ALTERNATOR L TERMINAL VOLTAGE.
Disconnect control unit connector.
Check voltage between control unit harness connector terminal ⑮ and body ground after engine starting.
Voltage: 14V or more

NG → Check if other warnings activate.
- Yes → Repair harness between alternator and control unit.
- No → Malfunctioning alternator.

OK ↓

C

Check continuity between control unit harness connector terminal ⑳ and body ground with ignition switch "OFF".

NG → Repair ground harness.

OK ↓

Check ABS control unit pin terminals for damage or the connection of the control unit harness connector.
Reconnect ABS control unit harness connector. Then retest.

Electrical Components Inspection

ACTUATOR (Not self-diagnostic item)

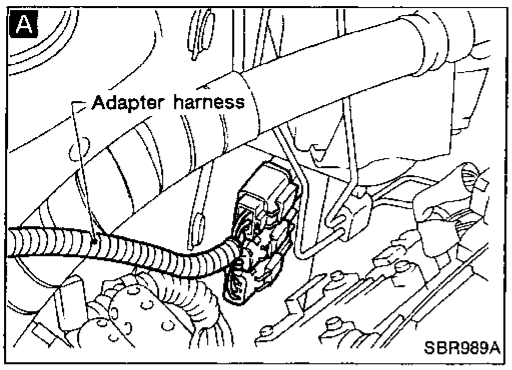

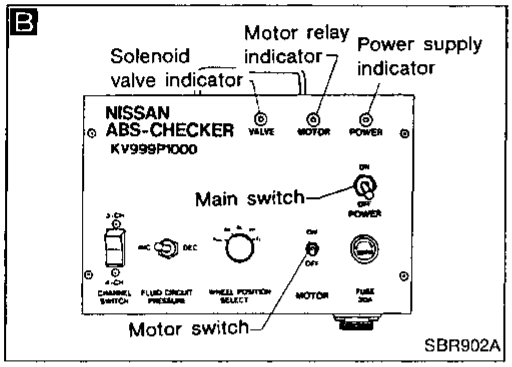

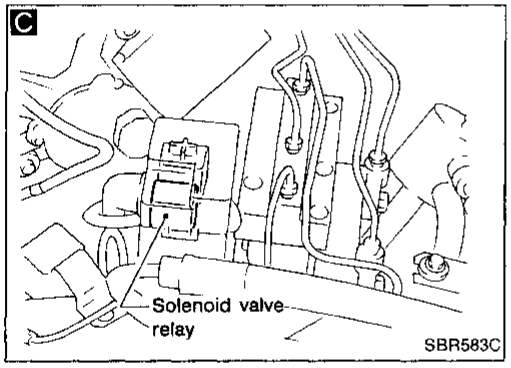

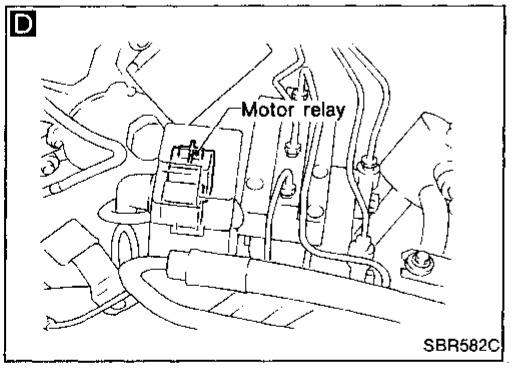

A

Connect ABS checker to actuator connector and vehicle harness. While doing this, be sure to have battery terminal connected and all checker switches turned off.
Use harness for 3 channel.
Set channel select switch to 3 channel.

↓

B

Turn checker main switch on.
Check power supply indicator for coming on.

No → Replace battery with fully charged new one, if checker connection is correct.

Yes ↓

B **C**

Check checker valve relay indicator for coming on.

No → Replace solenoid valve relay, if checker connection is correct.

Yes ↓

B Step Ⓐ

Select one valve — FL, FR or RR. (valves corresponding to each wheel position.)
Select brake circuit pressure decreasing position by switch then turn motor switch on.
Select pressure increasing position.

↓

B **D**

Check motor relay indicator for coming on while motor switch is turned on.

No → Replace motor relay, if checker connection is correct.

Yes ↓

Check motor for operational sound beside the actuator in a quiet place.

No → Replace actuator as assembly, if Diagnostic Procedures 6 - 11 are already performed and checker connection is correct.

Yes ↓

Ⓑ

Electrical Components Inspection (Cont'd)

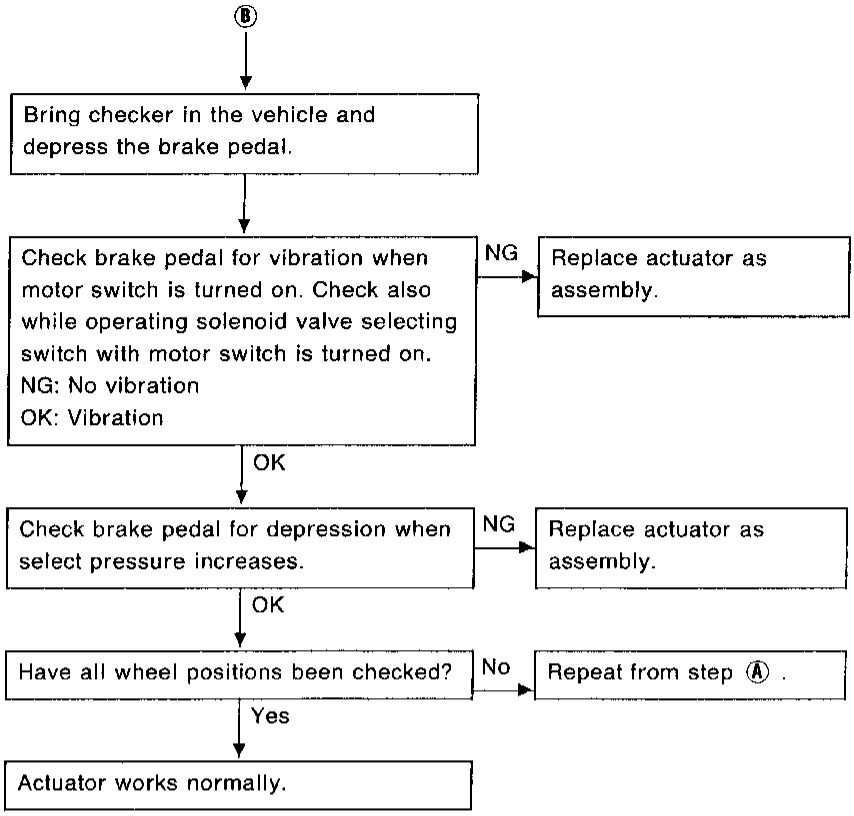

CAUTION:
Do not set checker at pressure decrease position for more than 5 seconds at a time. Actuator solenoid valve may be damaged.

Purpose of TCS

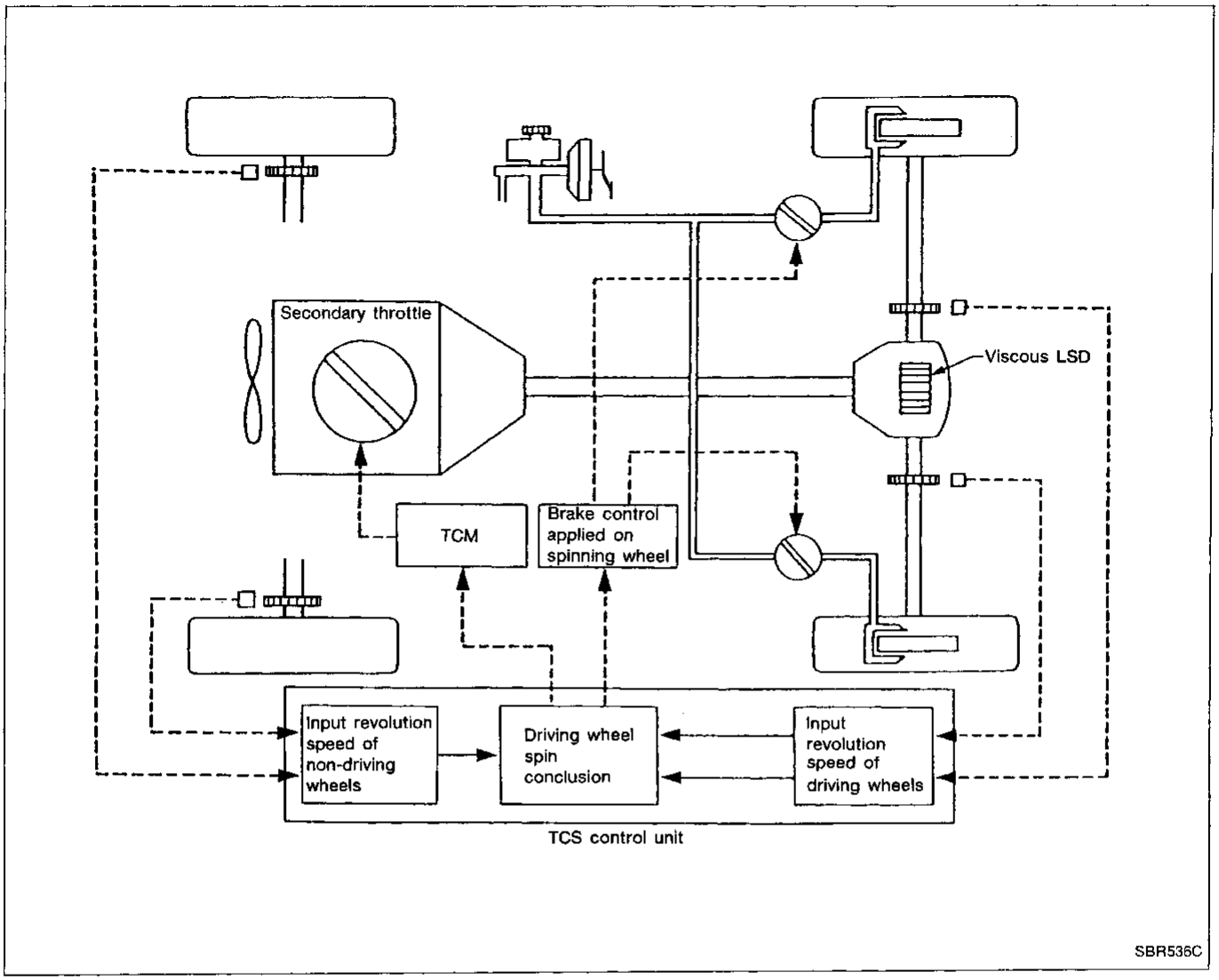

If a driver tries to accelerate hard on a slippery road, the driving wheels will start to spin. This will reduce the rate of acceleration and the vehicle's stability.

The TCS uses engine throttle control. It also uses an advanced system for individual control of the rear left and right brakes. TCS puts an appropriate amount of brake force on the spinning wheel, thus forcing the spin to end. There is also Rear Viscous LSD. This neutralizes wheel spin occurring on uneven surfaces or when accelerating while turning.

If both rear wheels should spin simultaneously, the system prevents the engine from applying further torque. It does this by closing the throttle.

The TCS plus Rear Viscous LSD has brought on new levels of cornering performance and traction. This, combined with improved control of the driving wheels, is a vital factor in relieving the driver of stress. At the same time, the driver retains firm control of the car.

System Components

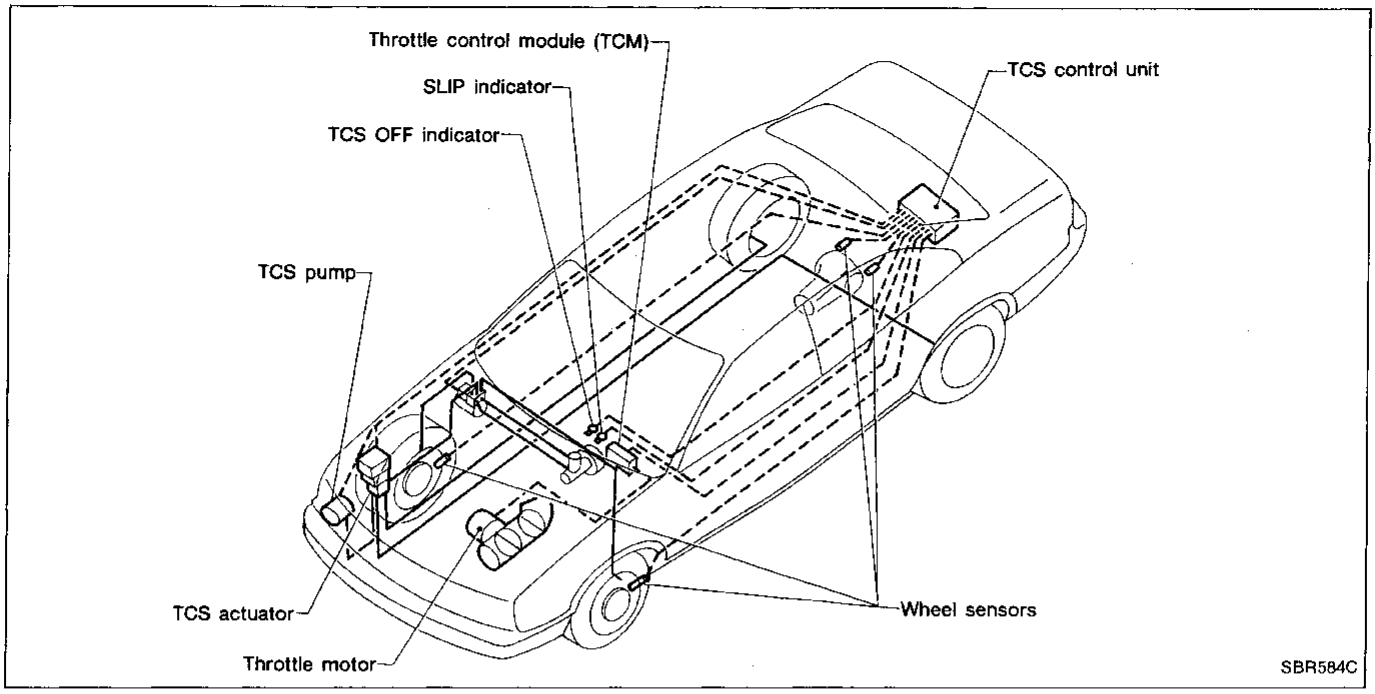

TCS consists of the following components: 1) Wheel sensors 2) TCS control unit 3) Throttle control module (TCM) 4) Throttle motor 5) TCS actuator 6) SLIP indicator 7) TCS OFF indicator.

Wheel speed sensors

Measure individual revolution speed of each wheel.

TCS control unit

Evaluates factors such as wheel slip and road and driving conditions. Evaluation is made on the basis of input signals from wheel sensors and other sources, sending control signals to TCS actuator.
The TCS control unit is provided with both self-diagnosis and fail-safe functions. When a malfunction in TCS is detected, the system releases its control over throttle and brakes. It then automatically changes into fail-safe mode.
In addition, this unit possesses ABS function.

Throttle control module (TCM)

Receives requesting signals from TCS control unit and drives throttle motor. Throttle motor optimally controls the degree of opening of secondary throttle.
TCM is also provided with both self-diagnosis and fail-safe functions. This module can be diagnosed by CONSULT. In fail-safe mode, TCS control unit is alerted and control of the throttle function is immediately released.

Throttle motor

Opens and shuts secondary throttle, positioned upstream of the throttle, in accordance with TCM signals. The engine drive torque is thereby regulated.

TCS actuator

Controls the degree of wheel spin according to the signal from TCM control unit. The degree is controlled by increasing, holding or decreasing the individual brake fluid pressure of the left and right rear brakes.

SLIP indicator

Lights when the TCS is operating, thus alerting the driver to the fact that road surface is slippery. It also warns the driver when the vehicle is nearing its limits of stability.

TCS OFF indicator

When the TCS cancel switch is turned ON, this indicator will liRRf Aland the TCS will not operate.

When TCS control unit or TCM enters fail-safe mode, the SLIP indicator and the TCS OFF indicator will light. And/or ABS warning lamp will light.

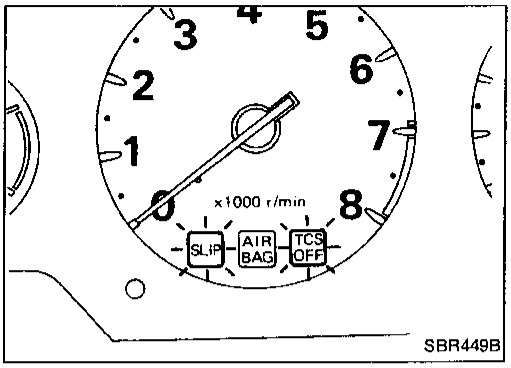

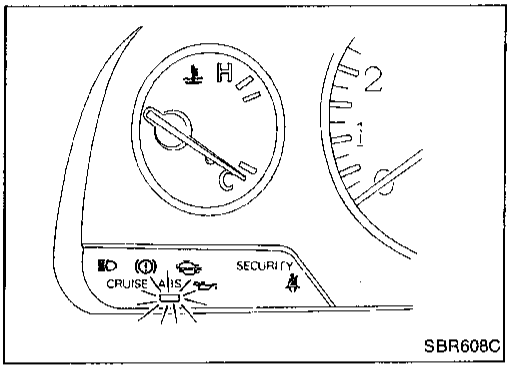

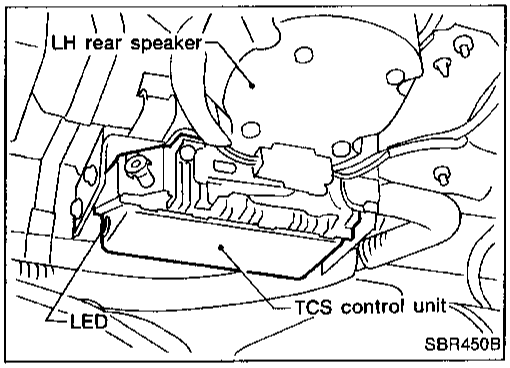

Components for TCS Brake System

TCS CONTROL UNIT

The control unit computes the rotating speed of each wheel using the signal current sent from the sensor. When the unit judges the "SLIP" for the driven wheel(s), it supplies a DC current of about 5A or 2A, or 0A to the TCS actuator pressure solenoid valve provided for each rear brake. The control unit also sends the secondary throttle valve opening signal to the throttle control module (TCM). The TCS control unit also has anti-lock brake system (ABS) control functions.

If an electrically detectable malfunction should occur in the system, it prompt the control unit to activate. The control unit will cause the SLIP and TCS OFF indicators, and/or ABS warning lamp to light up. It also causes the LSD indicator to flash the number of times which corresponds to the malfunction location. In this condition, the TCS and/or ABS will be deactivated by the control unit.

Components for TCS Brake System (Cont'd)

TCS ACTUATOR

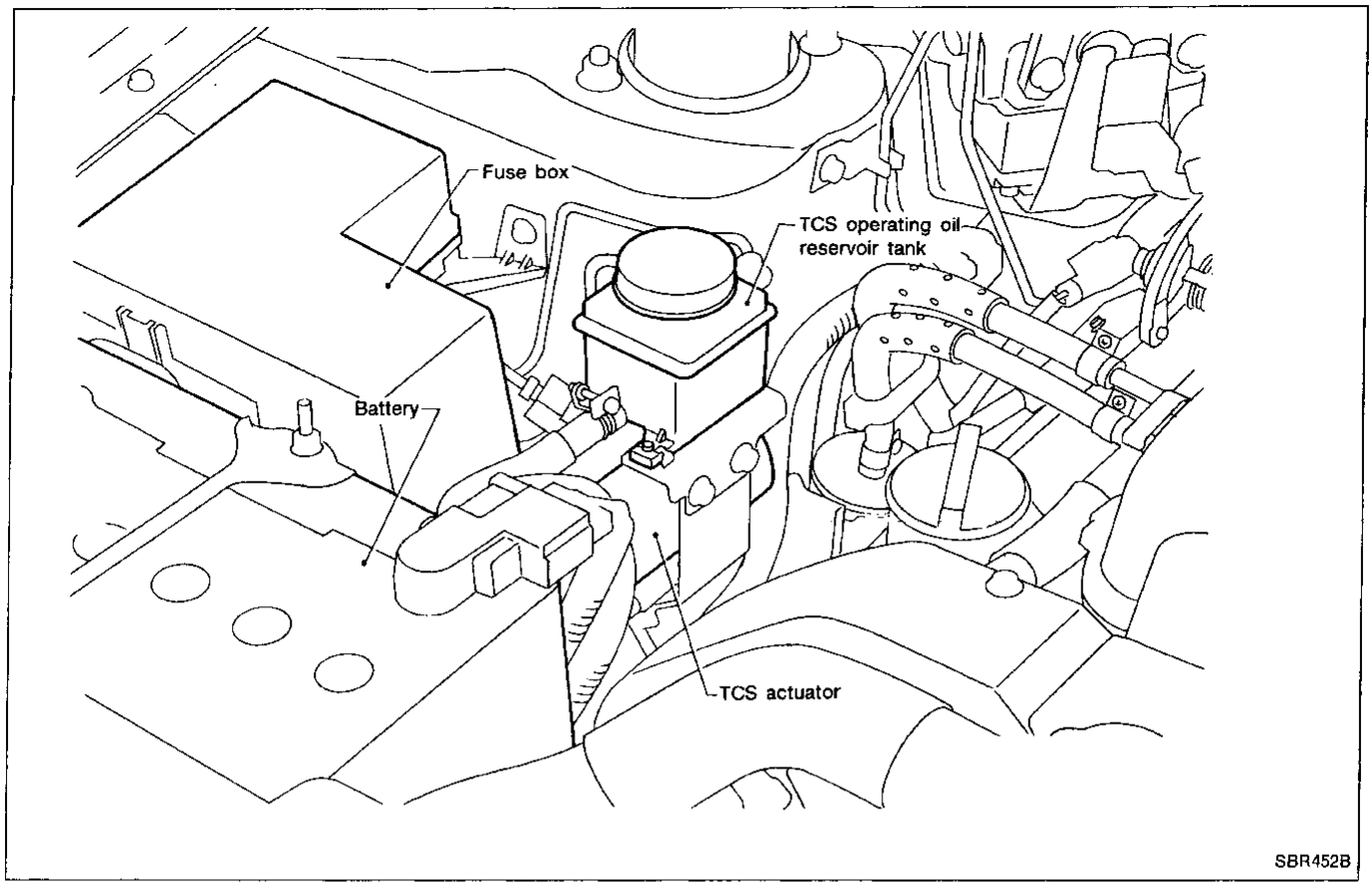

TCS PUMP

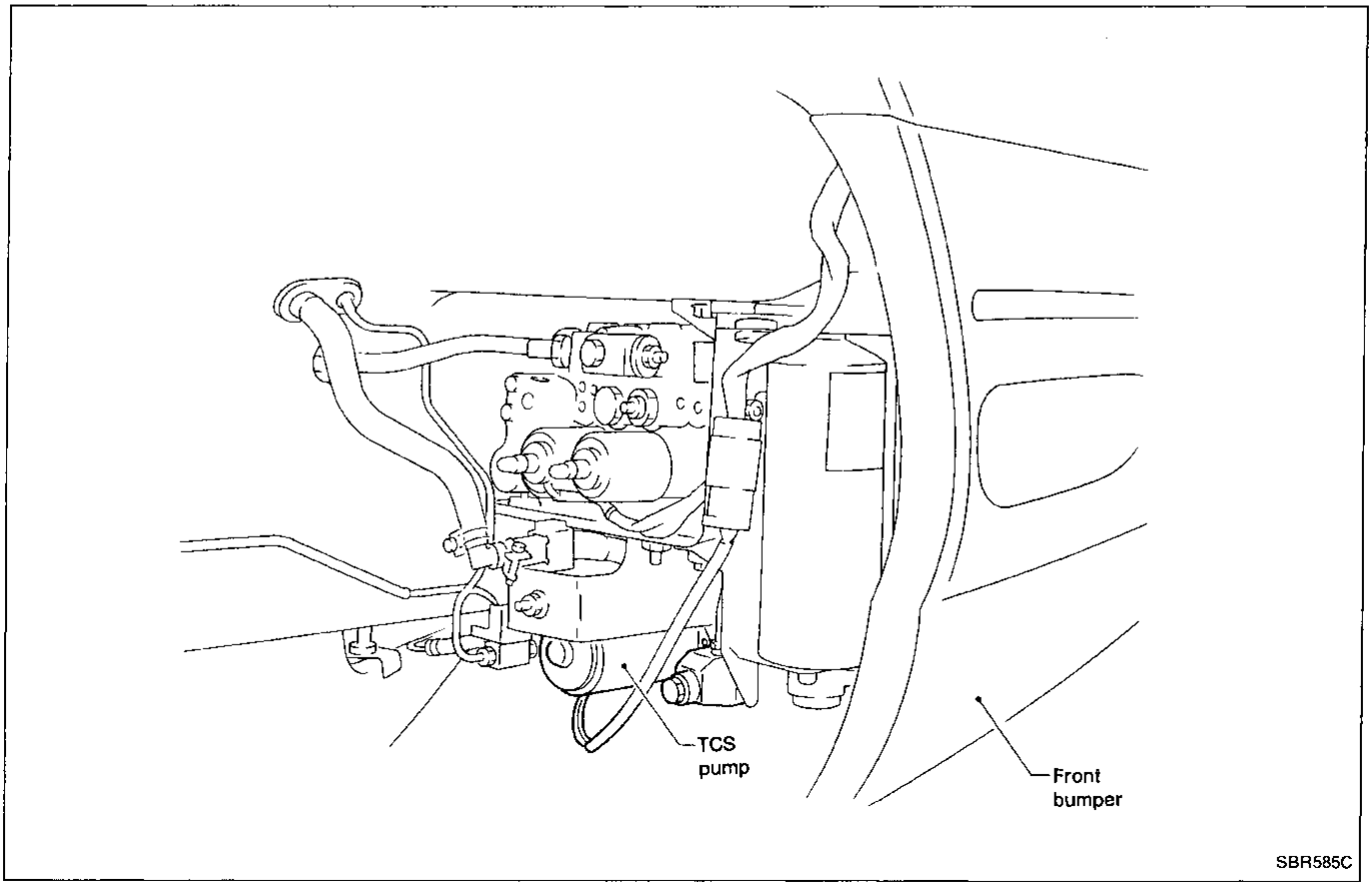

Components for TCS Brake System (Cont'd)

CAUTION:

When removing the front wheel hub or final drive assembly, disconnect the ABS wheel sensor from the assembly and move it away. Failure to do so may result in damage to the sensor wires making the sensor inoperative.

FRONT WHEEL SENSOR

The front wheel sensors are the same as the ones for the ABS.

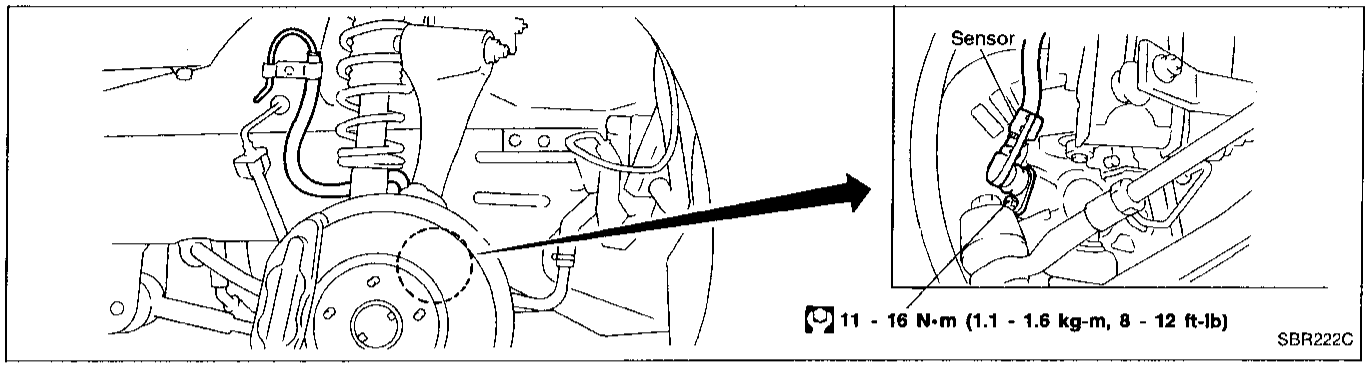

REAR WHEEL SENSOR

2 wheel sensors are located on both the left and right side flanges individually.

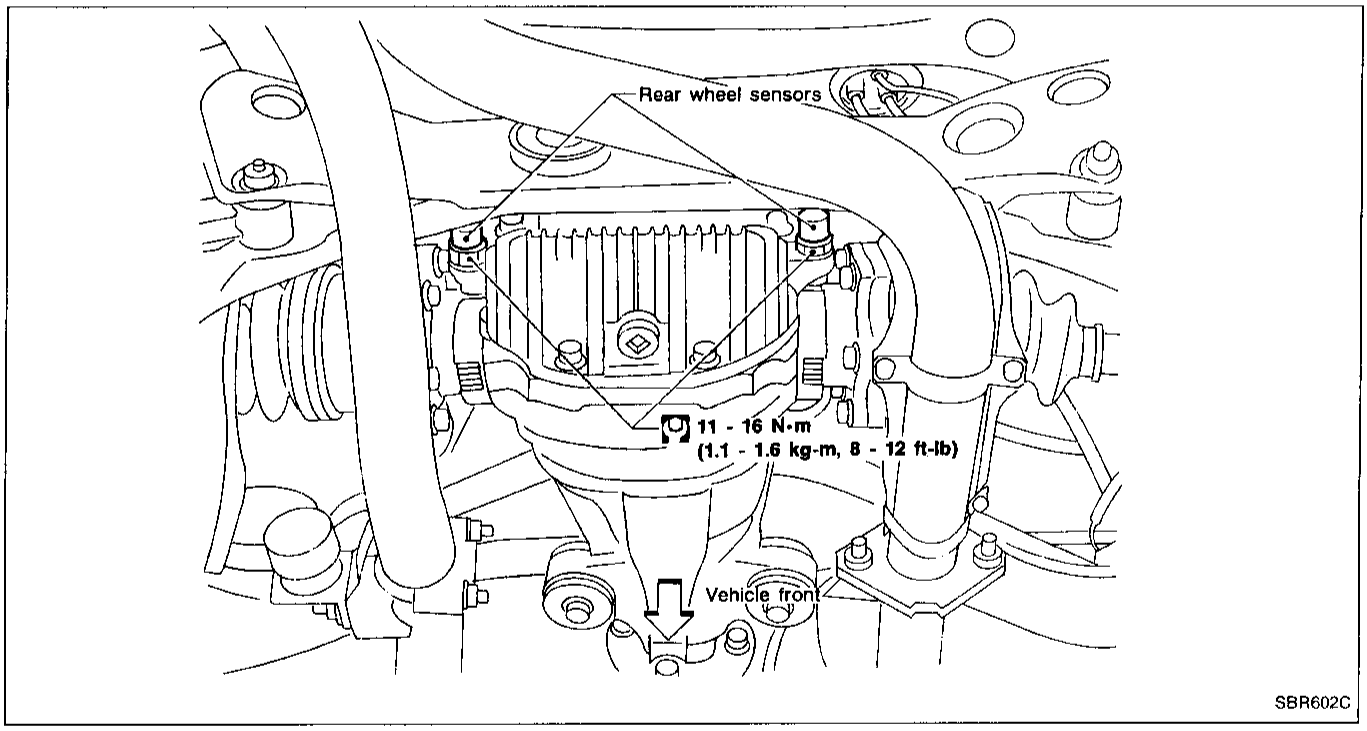

TCS ACTUATOR HYDRAULIC CIRCUIT DIAGRAM

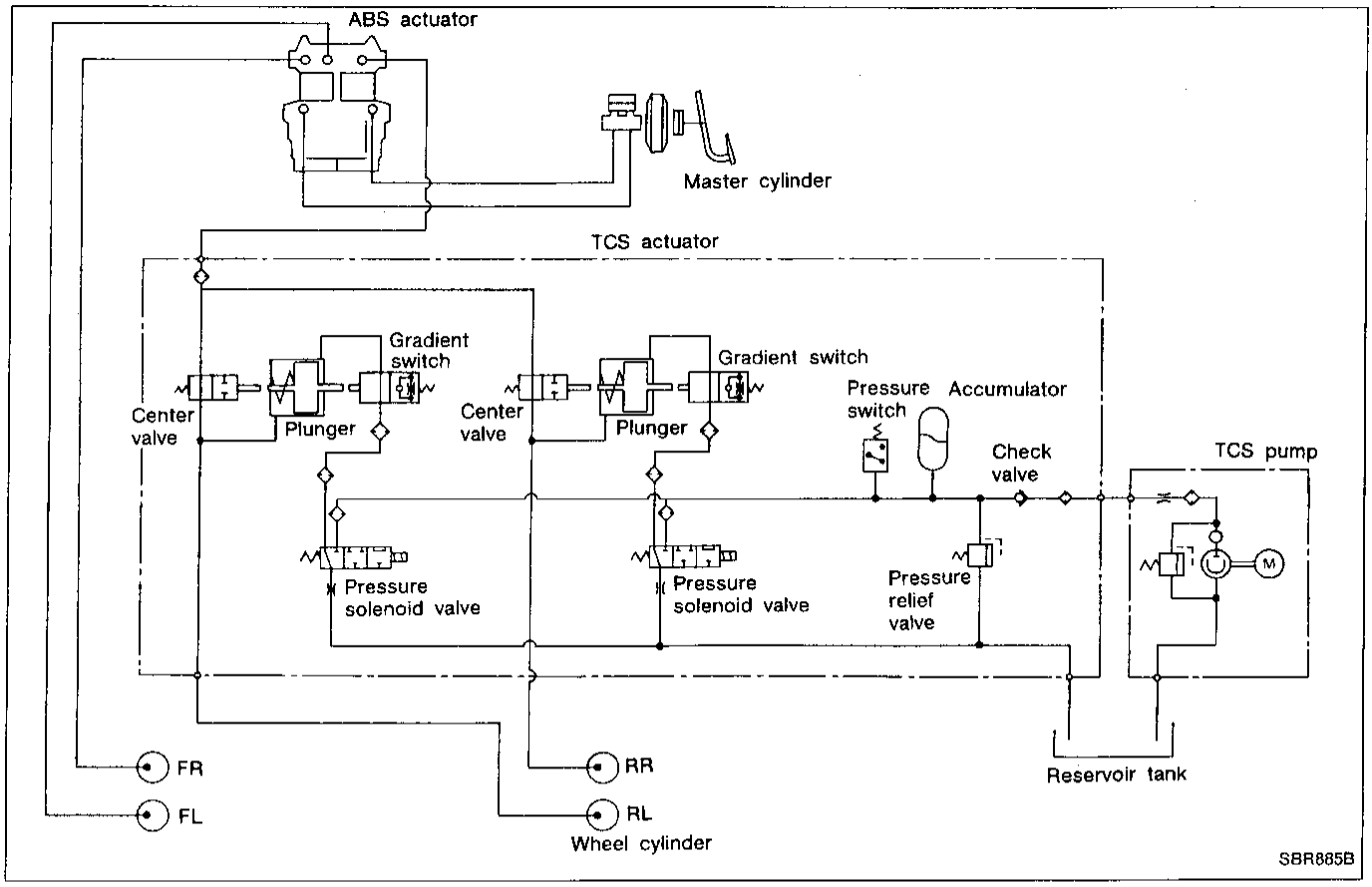

TCS HYDRAULIC CIRCUIT OPERATION

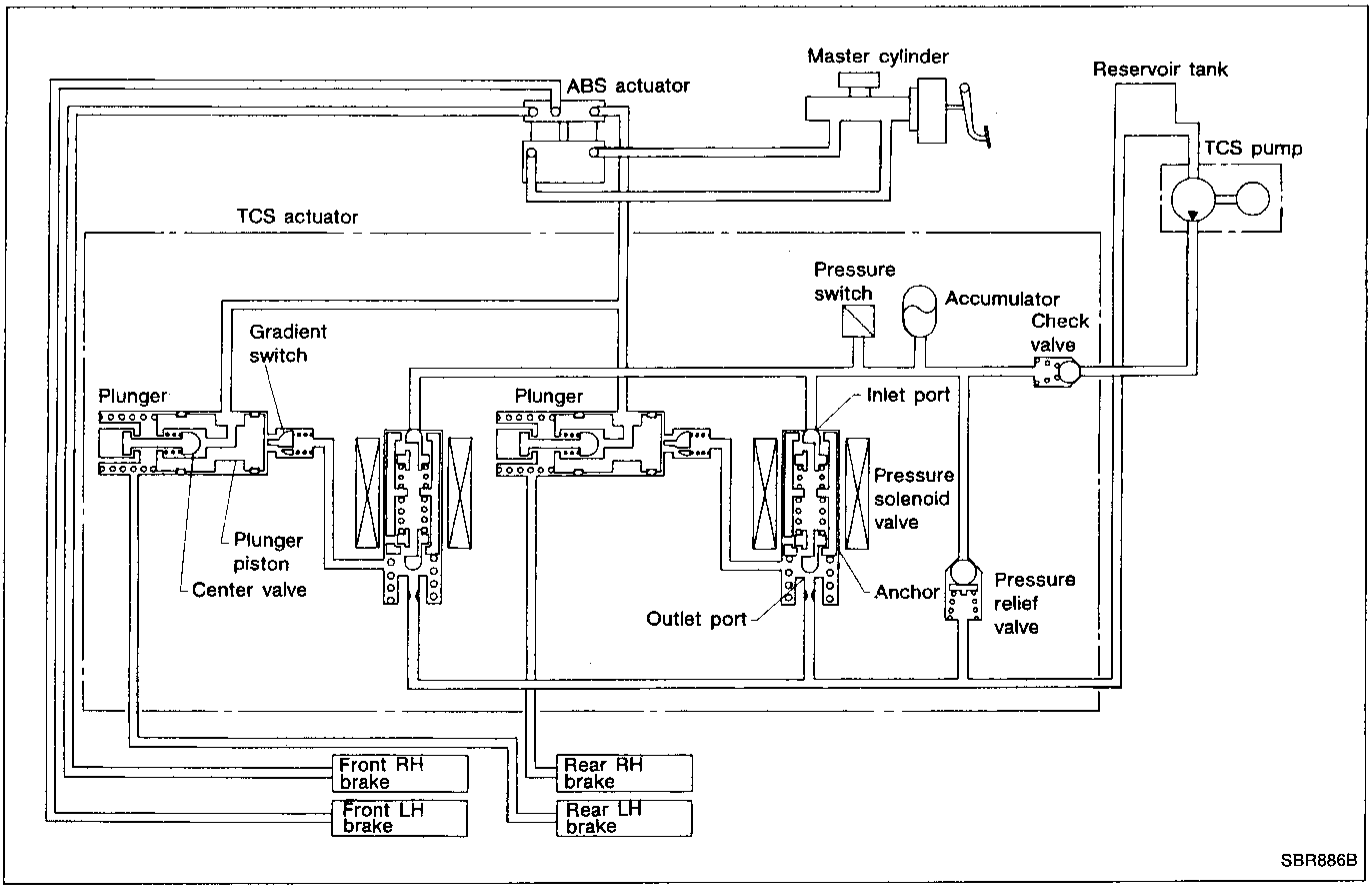

Throttle Valve Control System for TCS

This system has a secondary throttle valve which is opened/closed by a throttle motor. This is in addition to the primary throttle valve linked to the accelerator pedal. The opening angle of this valve is feedback controlled by the secondary throttle sensor.

The secondary throttle valve is normally kept in the fully opened position. When a slip of the drive wheels is detected by the wheel sensor, the TCS control unit controls braking operation. It also determines the optimum opening position of the secondary throttle valve. The TCM then closes the secondary throttle valve to the correct position according to this information. It then reduces the engine output torque, and so avoids occurrence of slip. The TCS control unit needs the primary throttle valve position signal to determine the secondary throttle valve opening position. The TCM receives the throttle sensor position signal through the ECCS control module (ECM), and the TCM sends the signal to the TCS control unit. If the TCM detects trouble in the throttle valve control system, it de-energizes a relay located up-stream of the throttle motor power supply. The secondary throttle valve is then opened fully by means of a return spring. In this case, ordinary vehicle operation is assured by the functioning of the primary throttle valve. At the same time, the TCM stops sending the throttle position sensor signal to the TCS control unit.

Engine + Brake TCS System Configuration

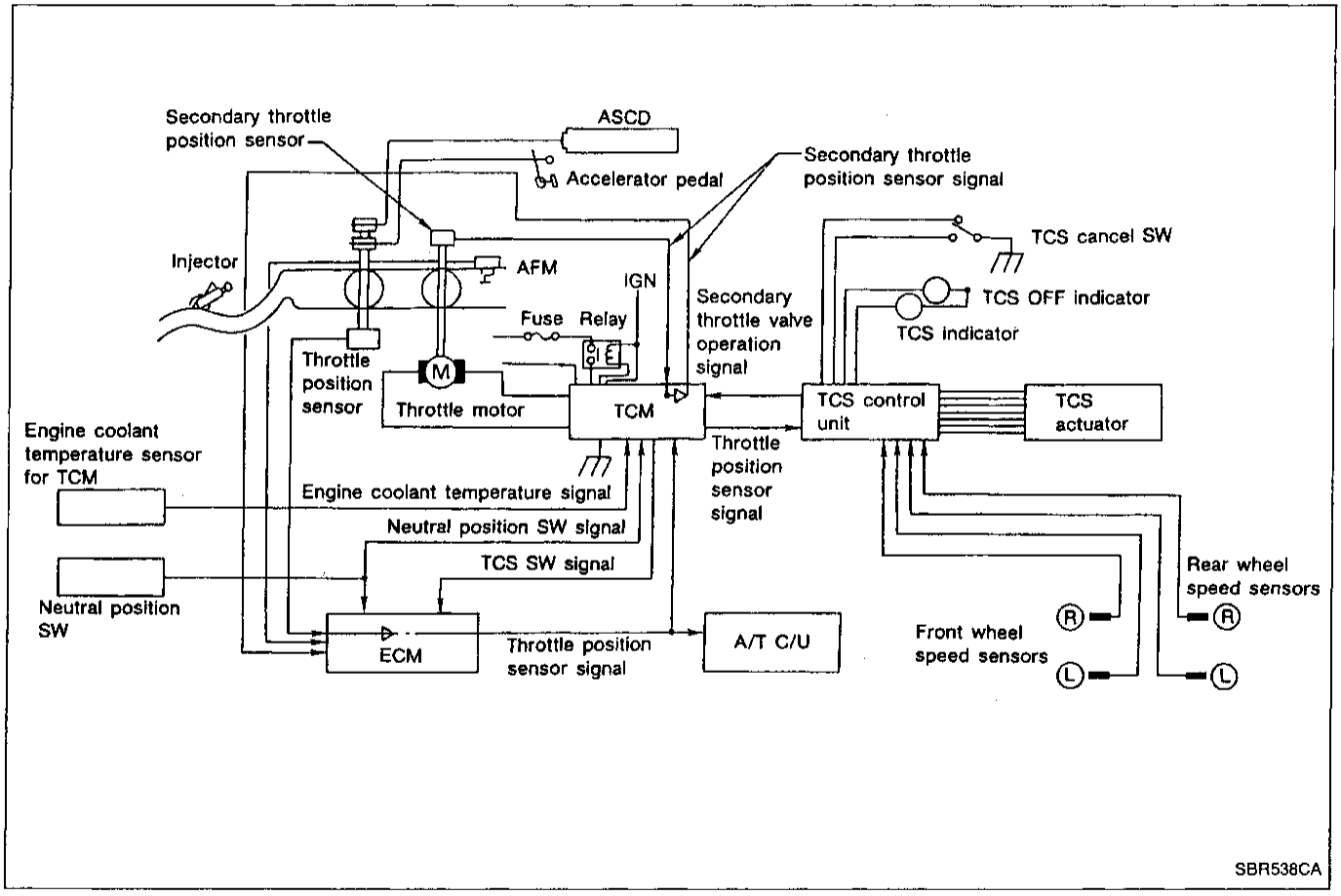

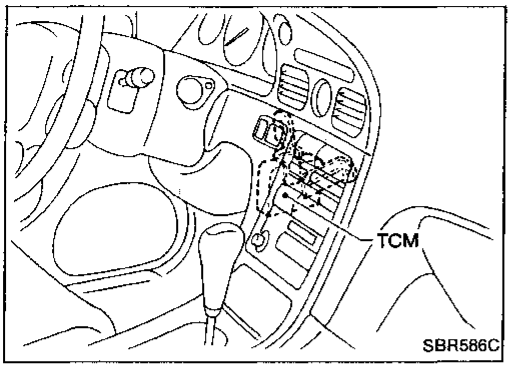

Component

TCM (Throttle Control Module)

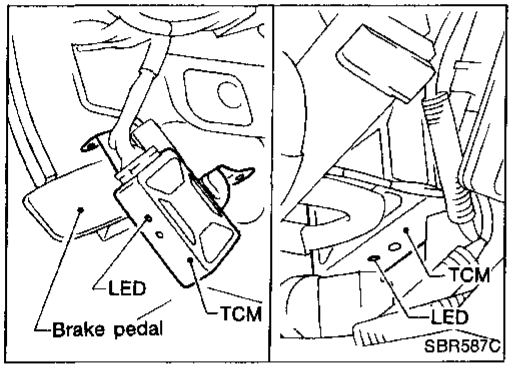

THROTTLE MOTOR

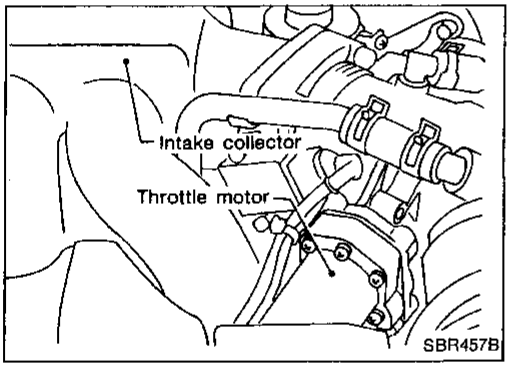

SECONDARY THROTTLE POSITION SENSOR

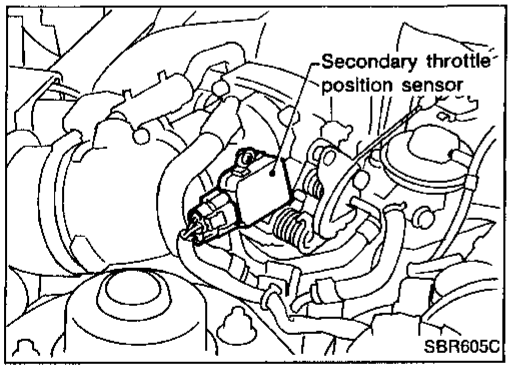

Throttle Memory Function

The secondary throttle valve does not fully open. This occurs even when the TCS is turned off by the cancel switch or by the TCS itself. The secondary throttle valve opens wider than the primary throttle valve by the specified opening amount. Because the secondary throttle valve opens wider than the primary throttle valve, no adverse effect is caused during ordinary driving.
The secondary throttle valve opening is smaller than the primary throttle valve only when the TCS is operating.

Secondary Throttle Fully-closed Position Self-learning Control

When a certain condition occurs with ignition switch ON, the TCM checks for operation of the throttle control system. It does this by fully closing the secondary throttle and then opening it fully. Simultaneously, the TCM reads the secondary throttle position sensor output values at both the fully closed/opened positions. This data is used for self-diagnosing the secondary throttle driving system. The same data is also used for improving the control accuracy of the secondary throttle.
This learning control is performed at the moment the ignition switch is turned ON under conditions: Automatic transmission is set in "N" or "P" position; Accelerator pedal is released completely.

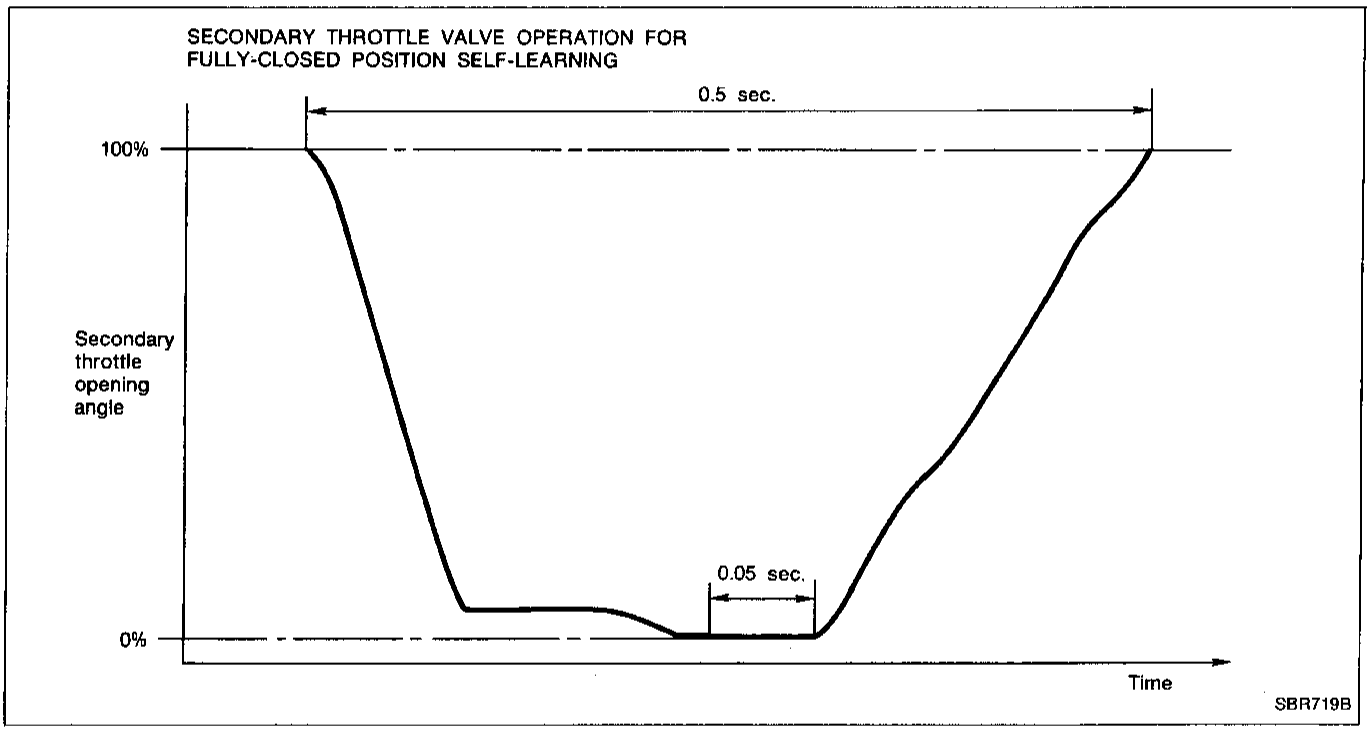

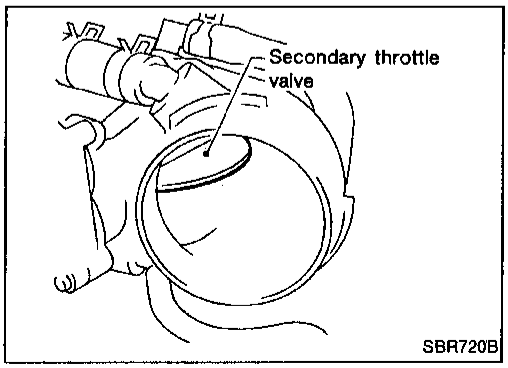

WARNING:
Before touching the secondary throttle valve, be sure to disconnect the throttle valve motor connector. Failure to do so may cause injury due to accidental actuation of the valve.

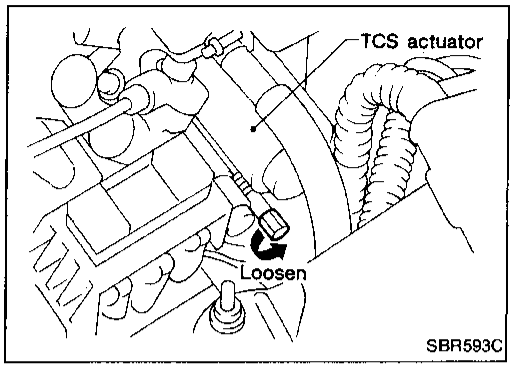

Removal and Installation of TCS Actuator

WARNING:

Loosen bleeder of TCS actuator before disconnecting TCS operating oil circuit. This prevents any injury by pressurized oil stored in TCS actuator.

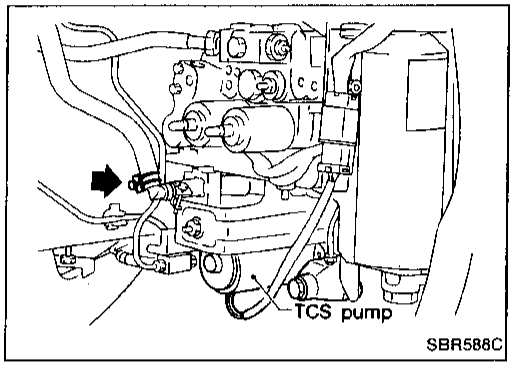

CAUTION:

- **Bleed air not only from TCS operating oil circuit but also from brake fluid line.**
- **Be careful not to splash brake fluid and TCS operating oil on the painted areas. It may cause paint damage. If either fluid is splashed on painted areas, wash it away with water immediately.**

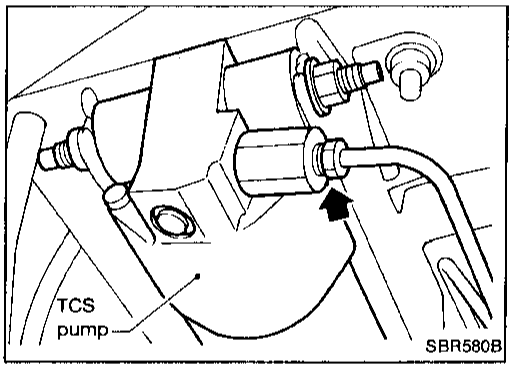

REMOVAL

1. Loosen bleeder for TCS actuator.
2. Drain brake fluid from each rear brake air bleeder valve.
3. Drain TCS operating oil from hose and tube connecting portion, and from outlet of TCS pump as shown.

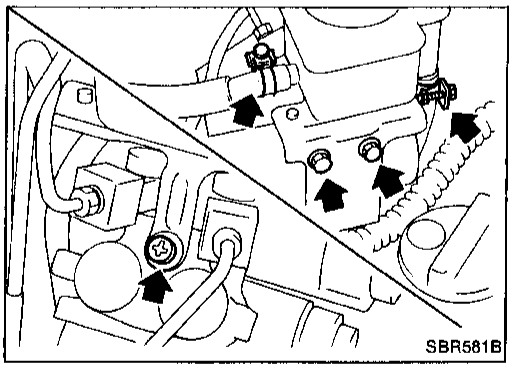

4. Remove battery and relay box.
5. Remove bolts and hose, and take away reservoir tank with bracket.

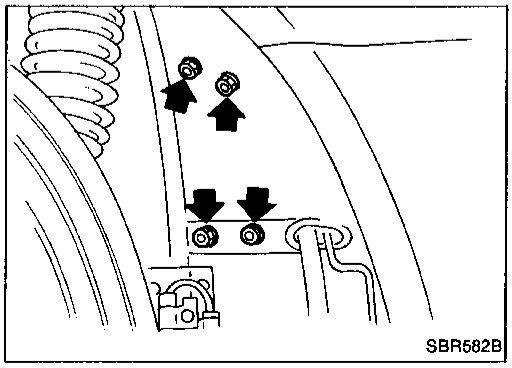

6. Disconnect connectors from TCS actuator.
7. Disconnect brake tube (4 portions) from TCS actuator.
8. Remove mounting nuts as shown.
9. Take away TCS actuator with bracket.

Removal and Installation of TCS Actuator (Cont'd)

INSTALLATION

CAUTION:

- **Refill with new brake fluid "DOT 3".**
- **Use new brake fluid "DOT 3" for TCS operating oil.**
- **Bleed air from brake fluid line and TCS operating oil circuit.**

Installation procedures are in reverse order of removal.

Tightening torque for M8 nut:

8 - 11 N·m (0.8 - 1.1 kg-m, 5.8 - 8.0 ft-lb)

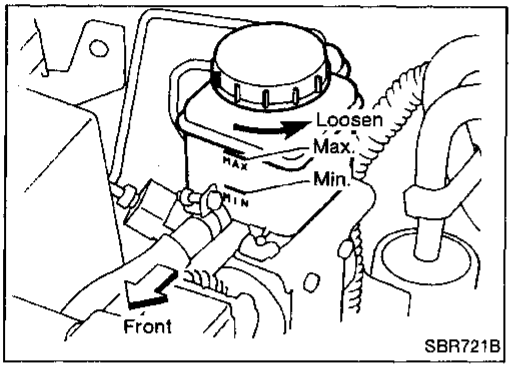

Air Bleeding for TCS

CAUTION:

- **Use new brake fluid "DOT 3" for TCS operating oil.**
- **Pay attention so as not to damage battery cable and hose for TCS during air bleeding.**
- **After bleeding air from TCS operating oil circuit, oil level in reservoir tank will be slightly lower. In such a case, do NOT add oil; it may cause oil leaks from reservoir tank.**

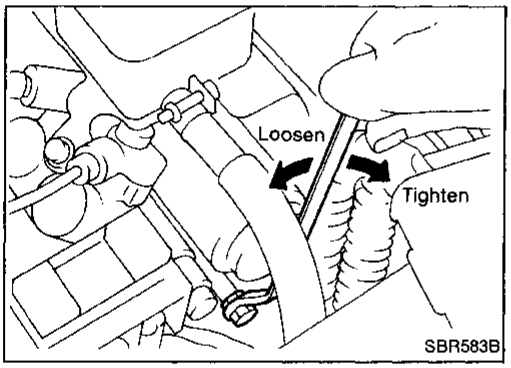

1. Loosen bleeder of TCS actuator.
2. Refill oil up to MAX. on reservoir tank, but do not fasten cap.
3. Start engine. (at this time, TCS pump operates.)
4. Tighten bleeder by nearly specified torque, and 3 to 5 seconds later (TCS pump has stopped), stop engine.
5. Start engine again and loosen bleeder. At this time, watch oil in reservoir tank.
6. Repeat steps 4 and 5 until oil returning to reservoir tank does not contain air bubbles.
7. Tighten bleeder to specified torque.

   [O]: 12.0 - 15.9 N·m (1.22 - 1.62 kg-m, 8.8 - 11.7 ft-lb)

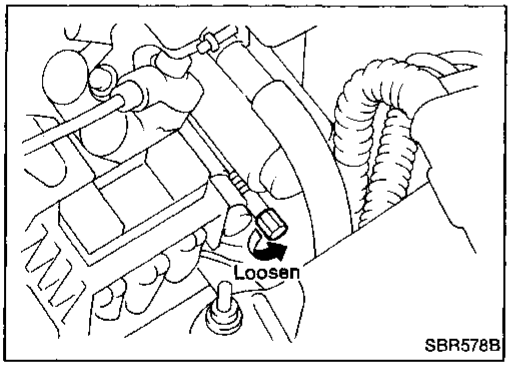

Removal and Installation of TCS Pump

WARNING:

Loosen bleeder of TCS actuator before disconnecting TCS operating oil circuit. This prevents any injury by pressurized oil stored in TCS actuator.

CAUTION:

Be careful not to splash TCS operating oil on painted areas; it may cause paint damage. If TCS operating oil is splashed on painted areas, wash it away with water immediately.

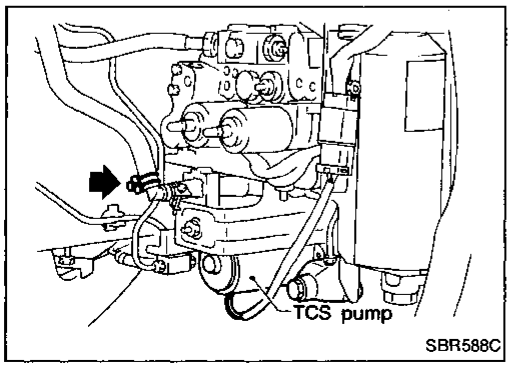

1. Drain TCS operating oil as shown.

1) Disconnect hose between reservoir tank and TCS pump.
2) Disconnect tube between TCS actuator and TCS pump (See next page).

2. After installation, bleed air from TCS operating oil circuit.

Removal and Installation of TCS Pump (Cont'd)

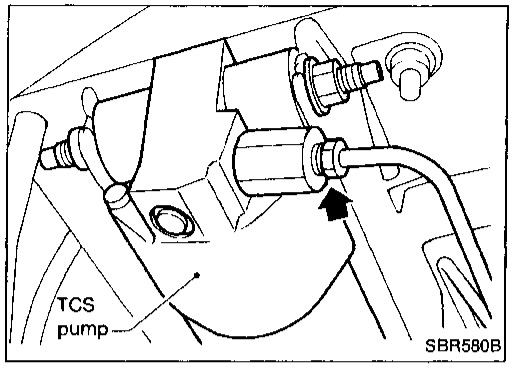

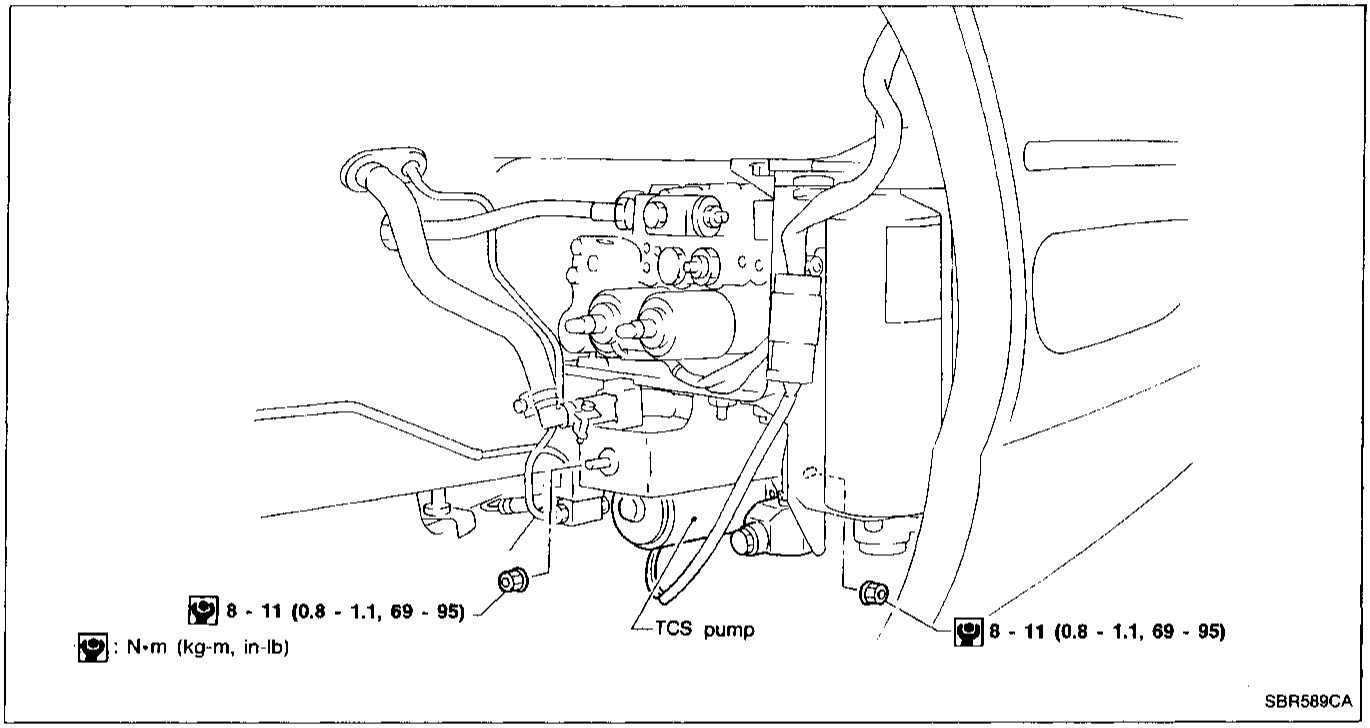

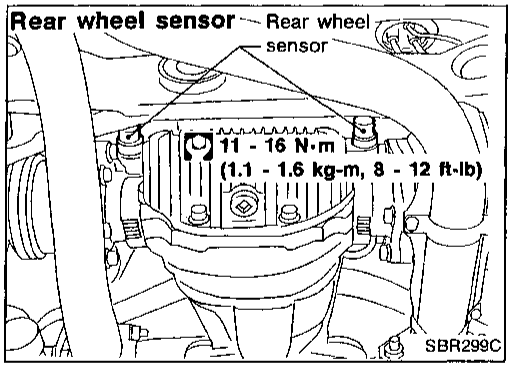

Removal and Installation of Rear Wheel Sensor

CAUTION:

When the final drive assembly or rear axle assembly needs to be removed, disconnect the ABS wheel sensor from the assembly. Then move it away from the final drive/rear axle assembly area. Failure to do so may result in the sensor wires being damaged making the sensor inoperative.

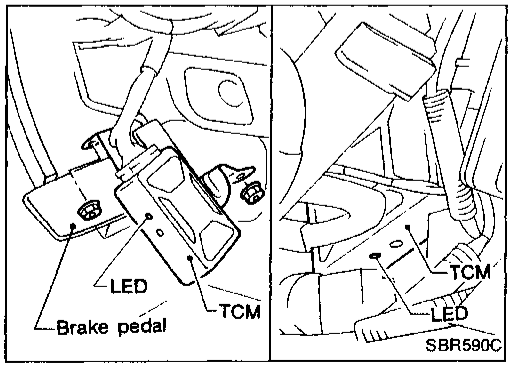

Removal and Installation of TCM

Refer to "INSTRUMENT PANEL" in BT section for details.
Remove A/T finisher and ashtray assembly.
Remove cluster lid C.
Remove cluster lid D.
Remove lower instrument cover on driver side.
Remove TCM.

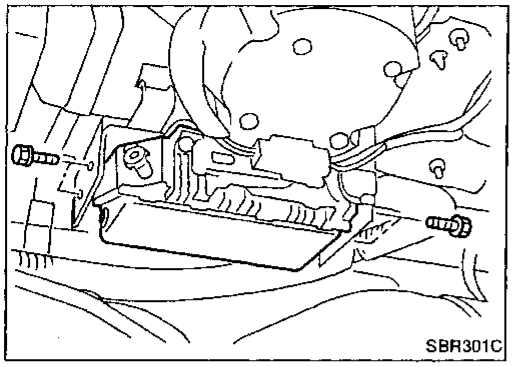

Removal and Installation of TCS Control Unit

Removal and Installation of Front Wheel Sensor

CAUTION:

When removing the wheel hub assembly, disconnect the ABS wheel sensor from the assembly and move it away. Failure to do so may result in the sensor wires being damaged making the sensor inoperative.

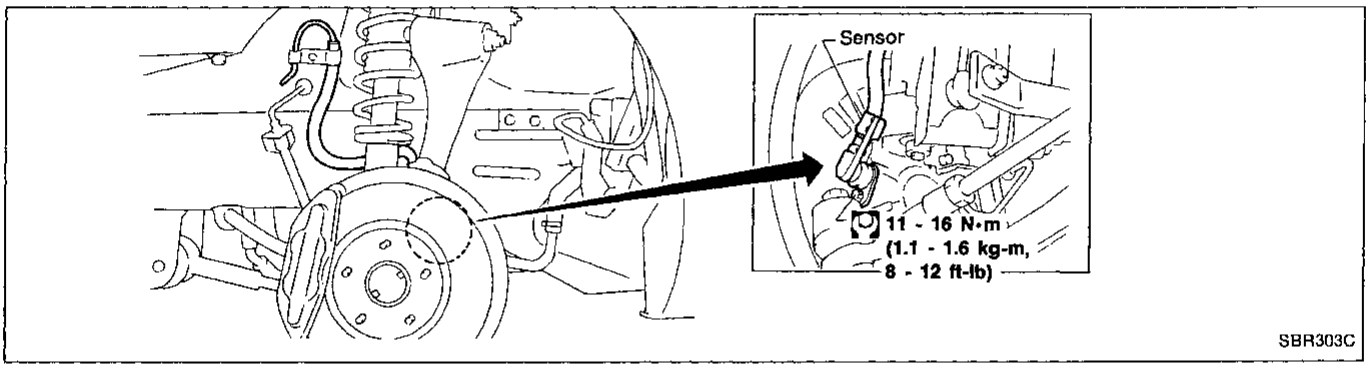

Removal and Installation of ABS Actuator

Refer to "ANTI-LOCK BRAKE SYSTEM", BR-31.

Removal and Installation of Throttle Motor

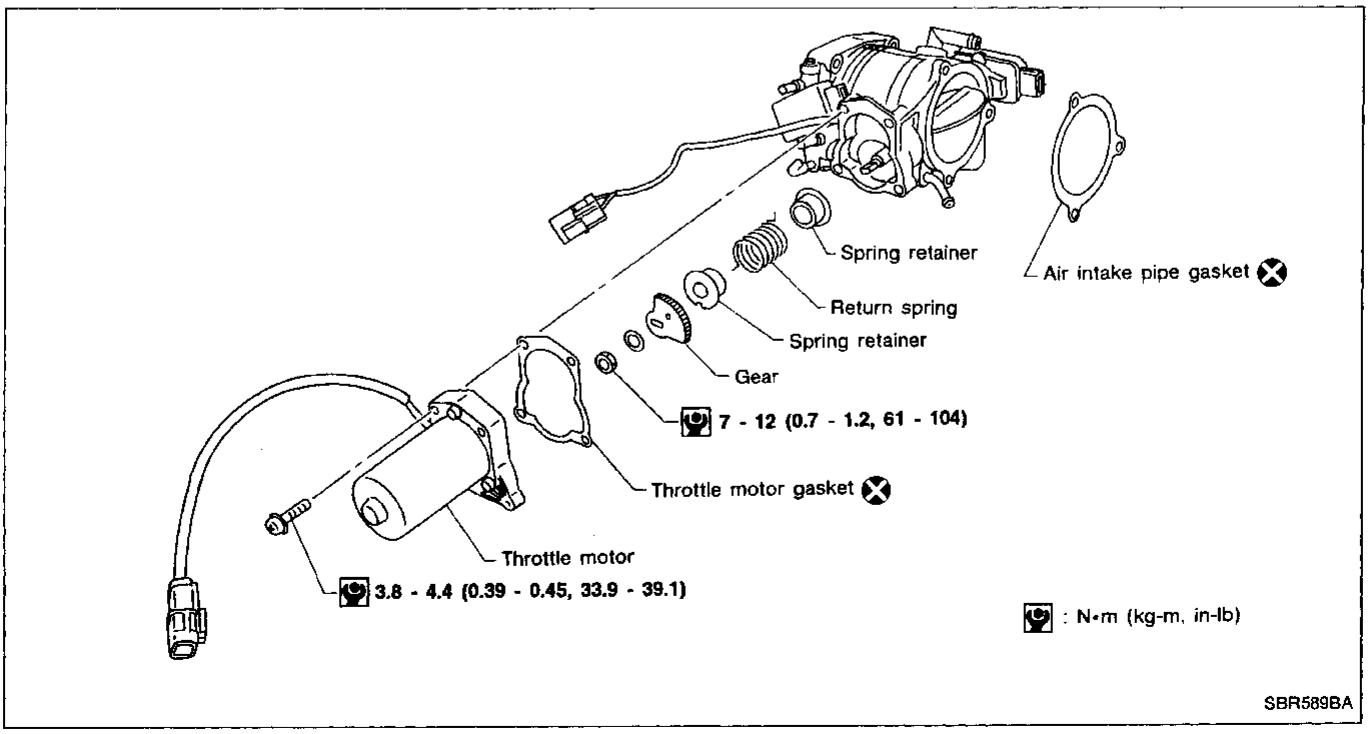

Removal and Installation of Throttle Motor (Cont'd)

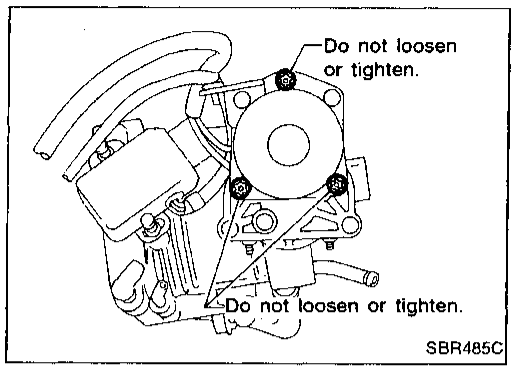

WARNING:

Before touching the secondary throttle valve, be sure to disconnect the throttle valve motor connector. Failure to do so may cause injury due to accidental actuation of the valve.

CAUTION:

- **Always replace throttle body gasket with a new one.**
- **Never loosen or tighten painted screws as shown.**

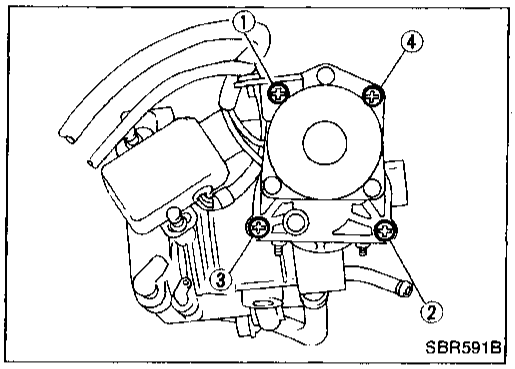

- **Tighten throttle body mounting bolts in numerical order.**

Adjustment for Secondary Throttle Position Sensor

WARNING:

Before touching the secondary throttle valve, be sure to disconnect the throttle motor connector. Failure to do so may cause injury due to accidental actuation of the valve.

1. Perform secondary throttle position sensor adjustment in WORK SUPPORT.
2. Adjust sensor position by referring to the table shown below.

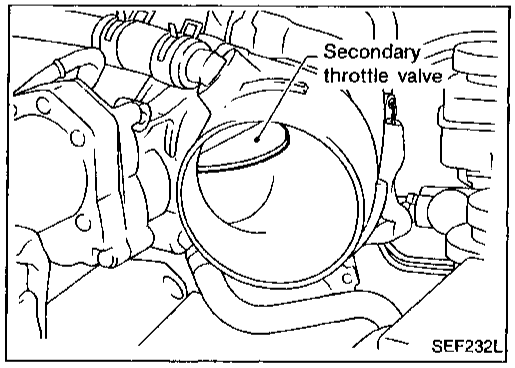

1. Disconnect rubber air duct.
2. Install secondary throttle position sensor body in throttle body.
   Do not tighten bolts.
3. Disconnect throttle motor harness connector.
4. Connect secondary throttle position sensor harness connector.
5. Turn ignition switch "ON".

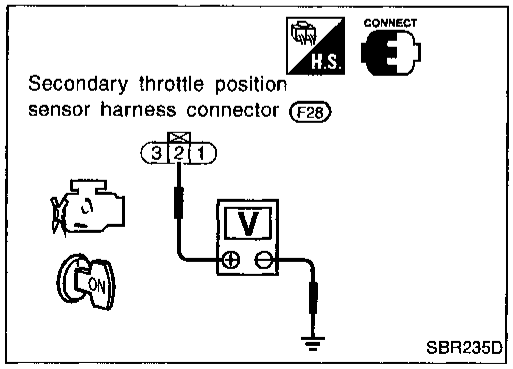

6. Make sure that voltage between terminal ② and ground changes when closing secondary throttle valve by hand.

Secondary throttle valve condition	Voltage (V)
Fully open	4.4 - 4.6
Partially open	0.4 - 4.6
Fully closed	0.4 or more

7. Adjust sensor position if necessary.

Wiring Diagram — TCS —

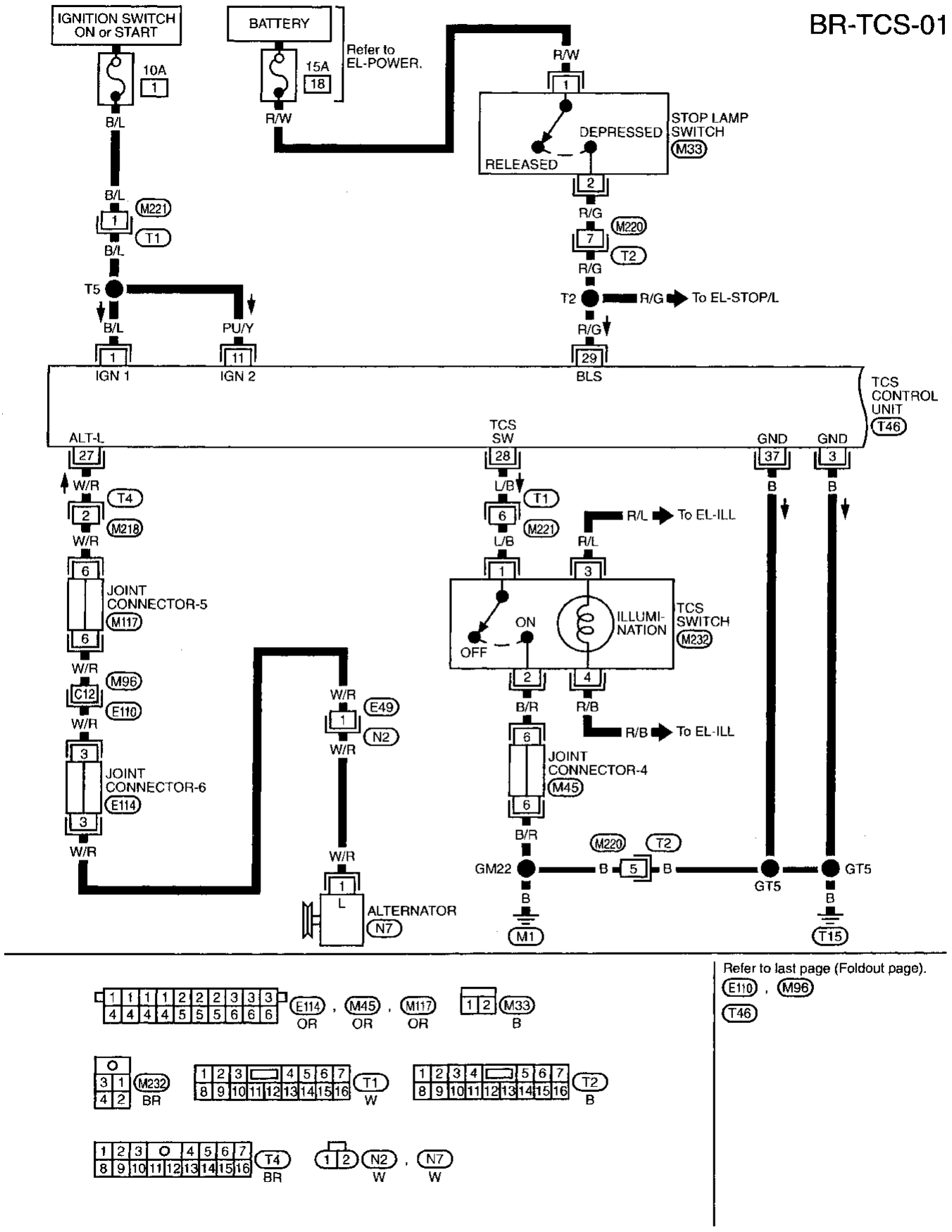

Refer to last page (Foldout page).
E110 , M96
T46

MBR171A

Wiring Diagram — TCS — (Cont'd)

BR-TCS-02

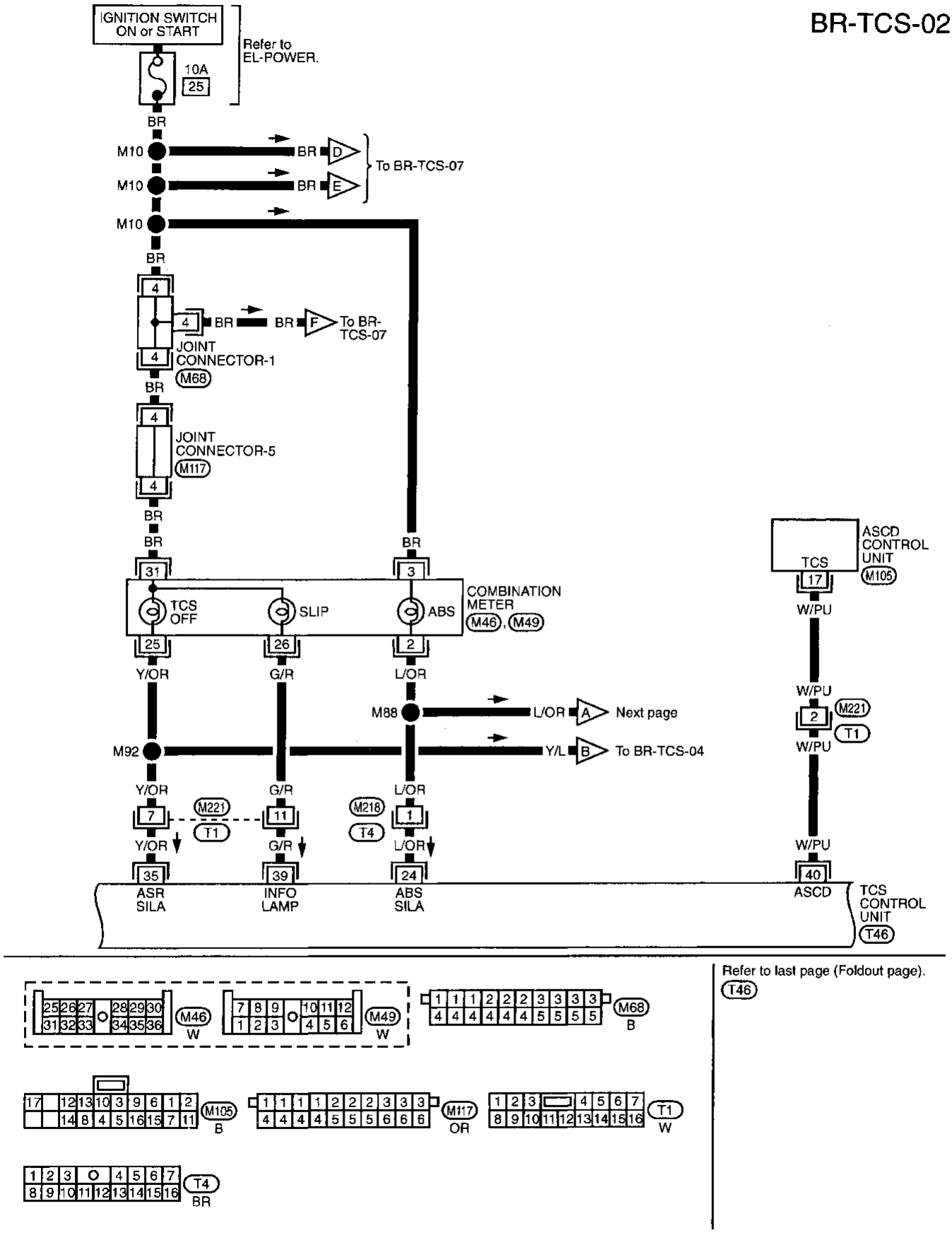

Refer to last page (Foldout page).
T46

MBR172A

Wiring Diagram — TCS — (Cont'd)

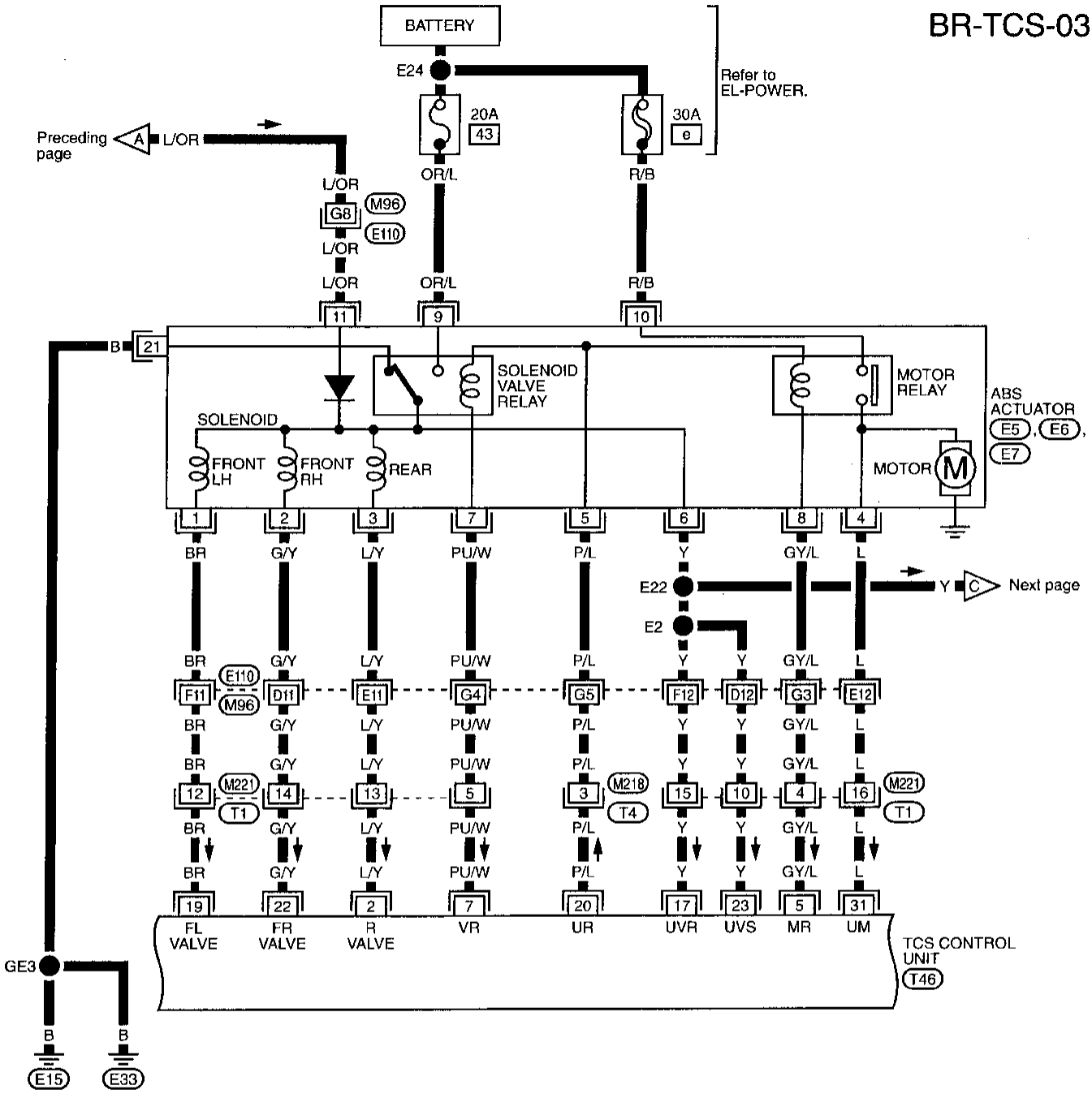

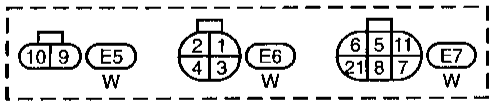

Refer to last page (Foldout page).
E110 , M96
T46

MBR173A

Wiring Diagram — TCS — (Cont'd)

BR-TCS-04

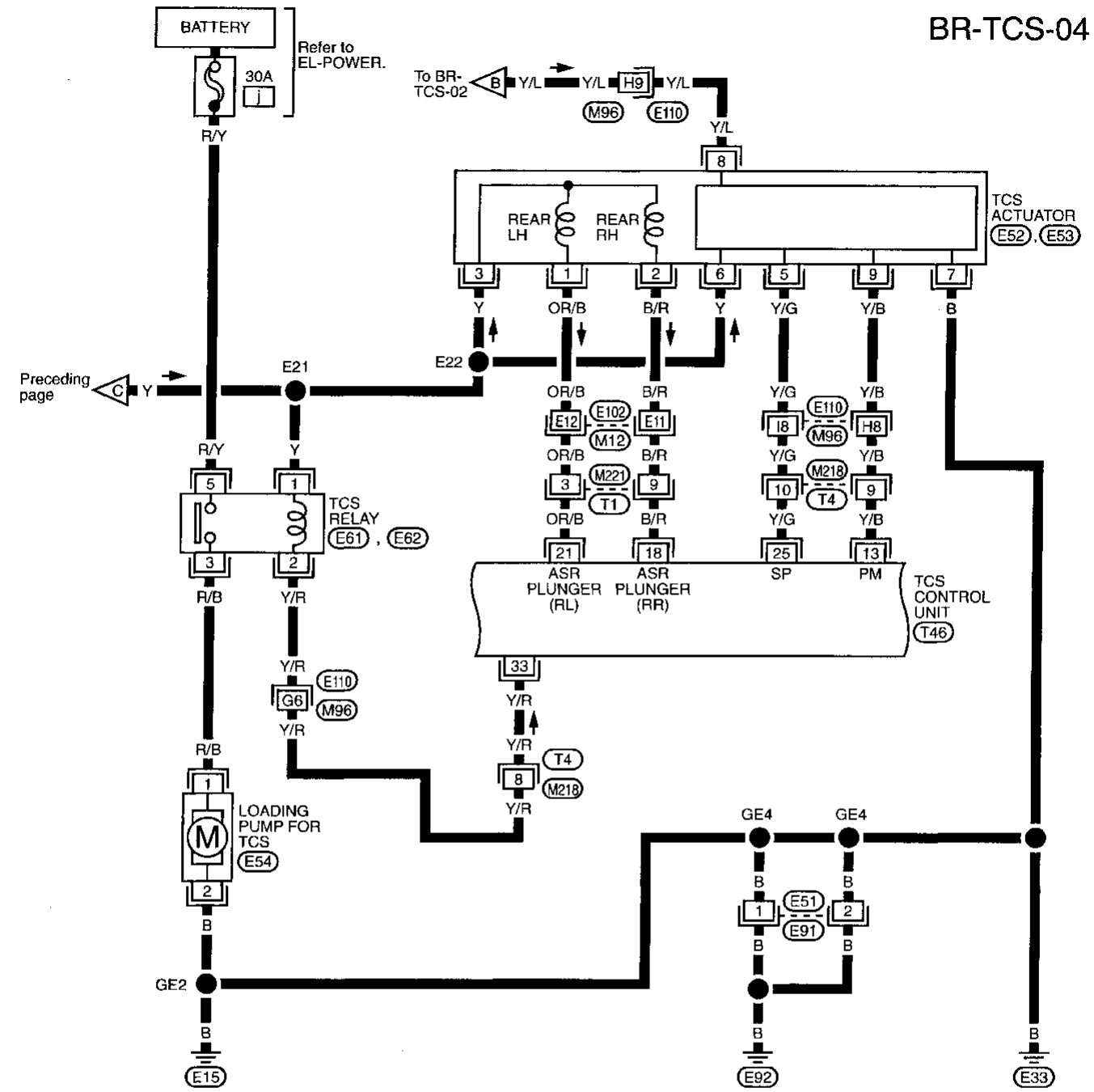

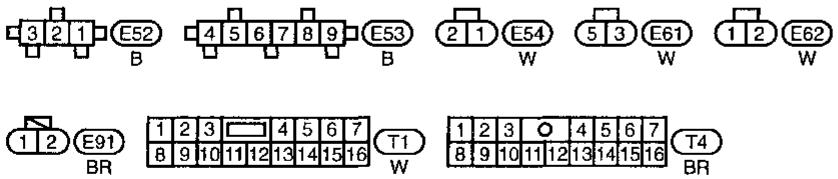

Refer to last page (Foldout page).
E102, M12
E110, M96
T46

MBR174A

Wiring Diagram — TCS — (Cont'd)

BR-TCS-05

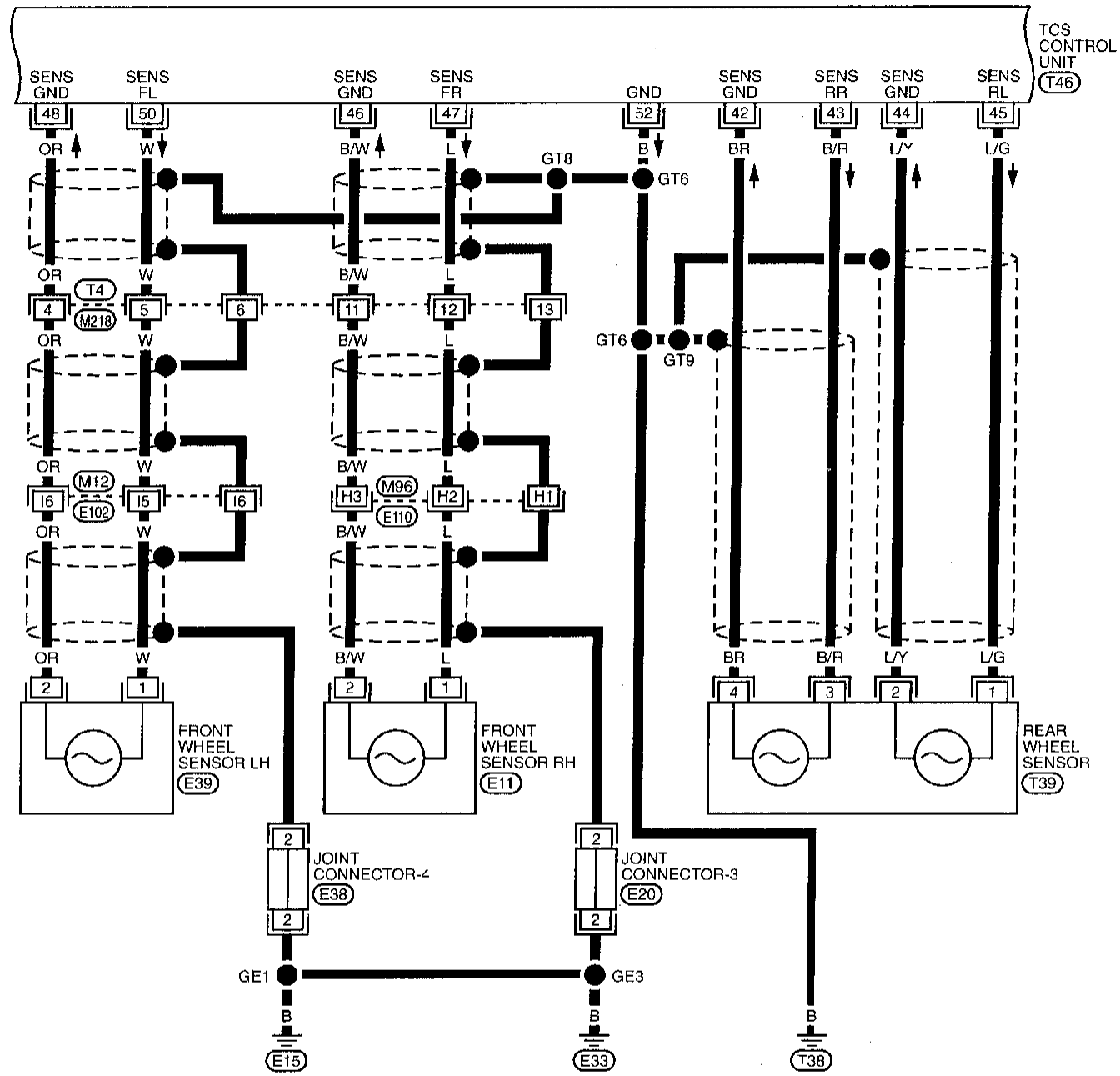

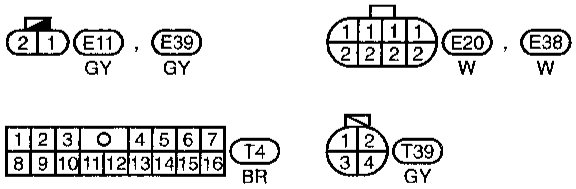

Refer to last page (Foldout page).
E102 , M12
E110 , M96
T46

MBR175A

Wiring Diagram — TCS — (Cont'd)

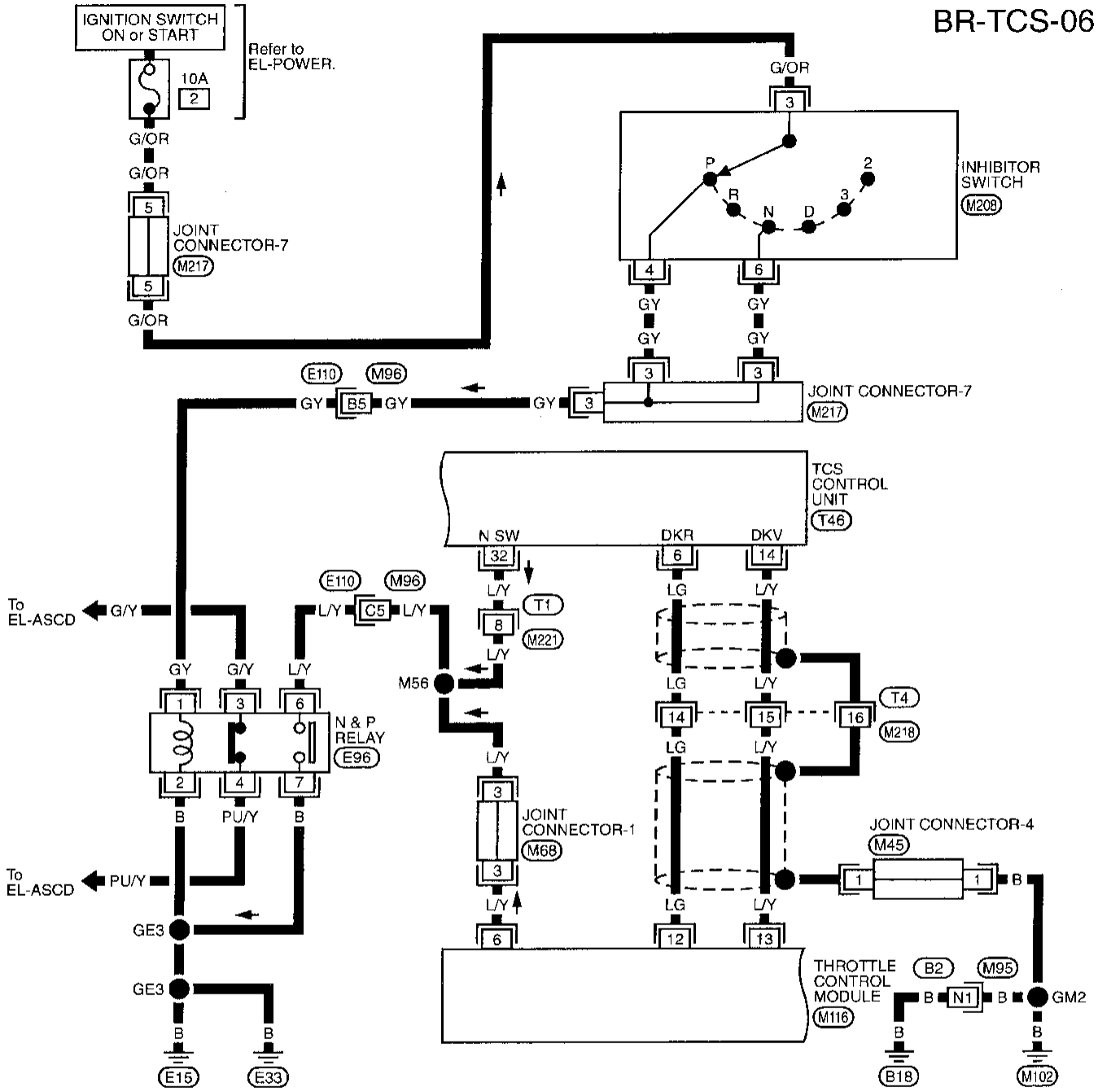

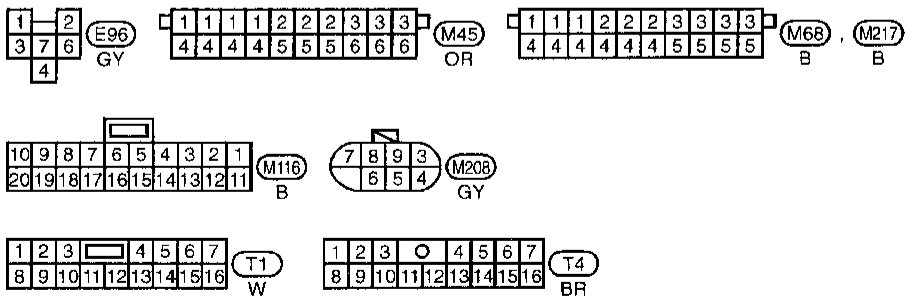

Refer to last page (Foldout page).
E110 , M96
M95 , B2
T46

MBR176A

Wiring Diagram — TCS — (Cont'd)

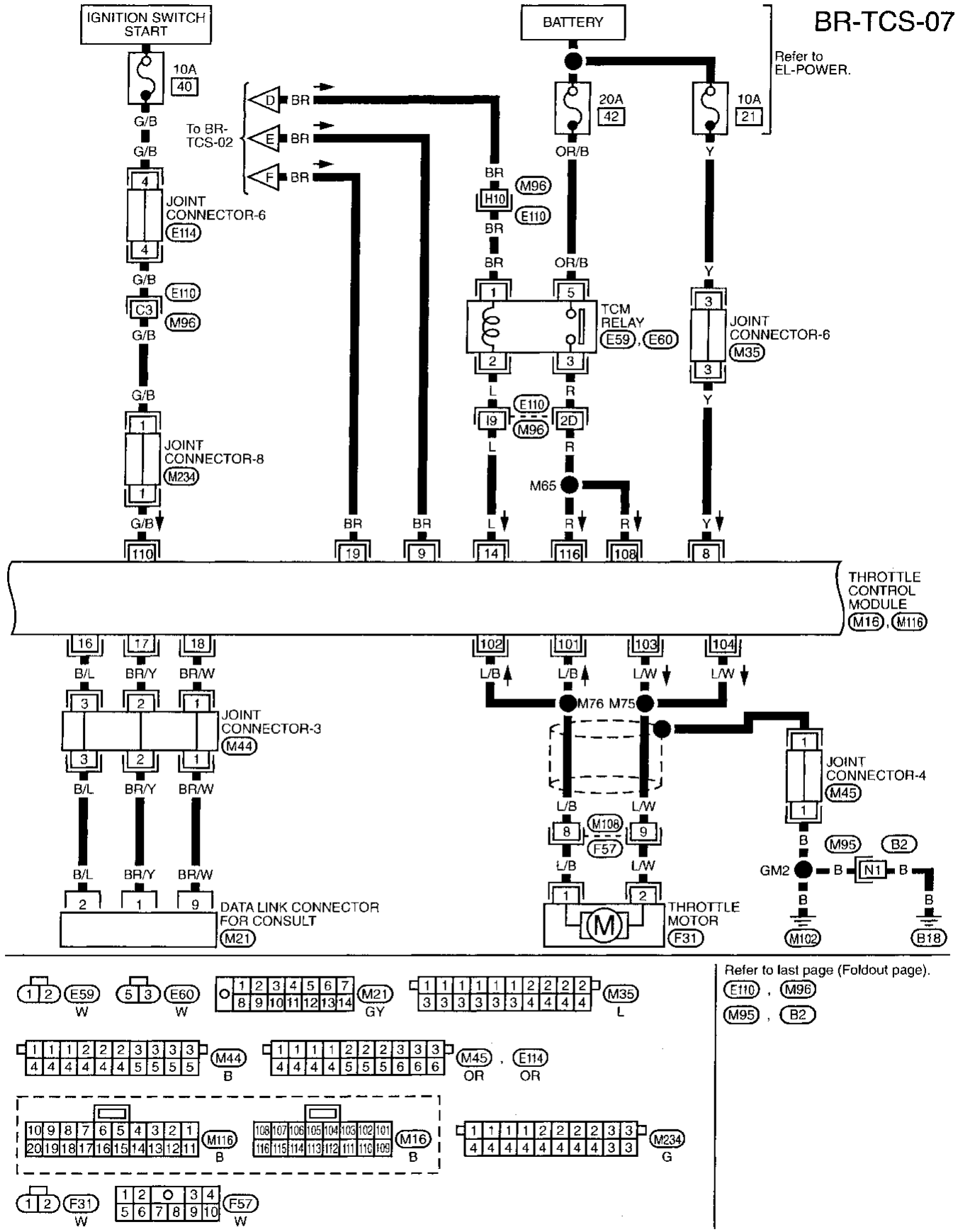

Refer to last page (Foldout page).
E110 , M96
M95 , B2

MBR177A

Wiring Diagram — TCS — (Cont'd)

BR-TCS-08

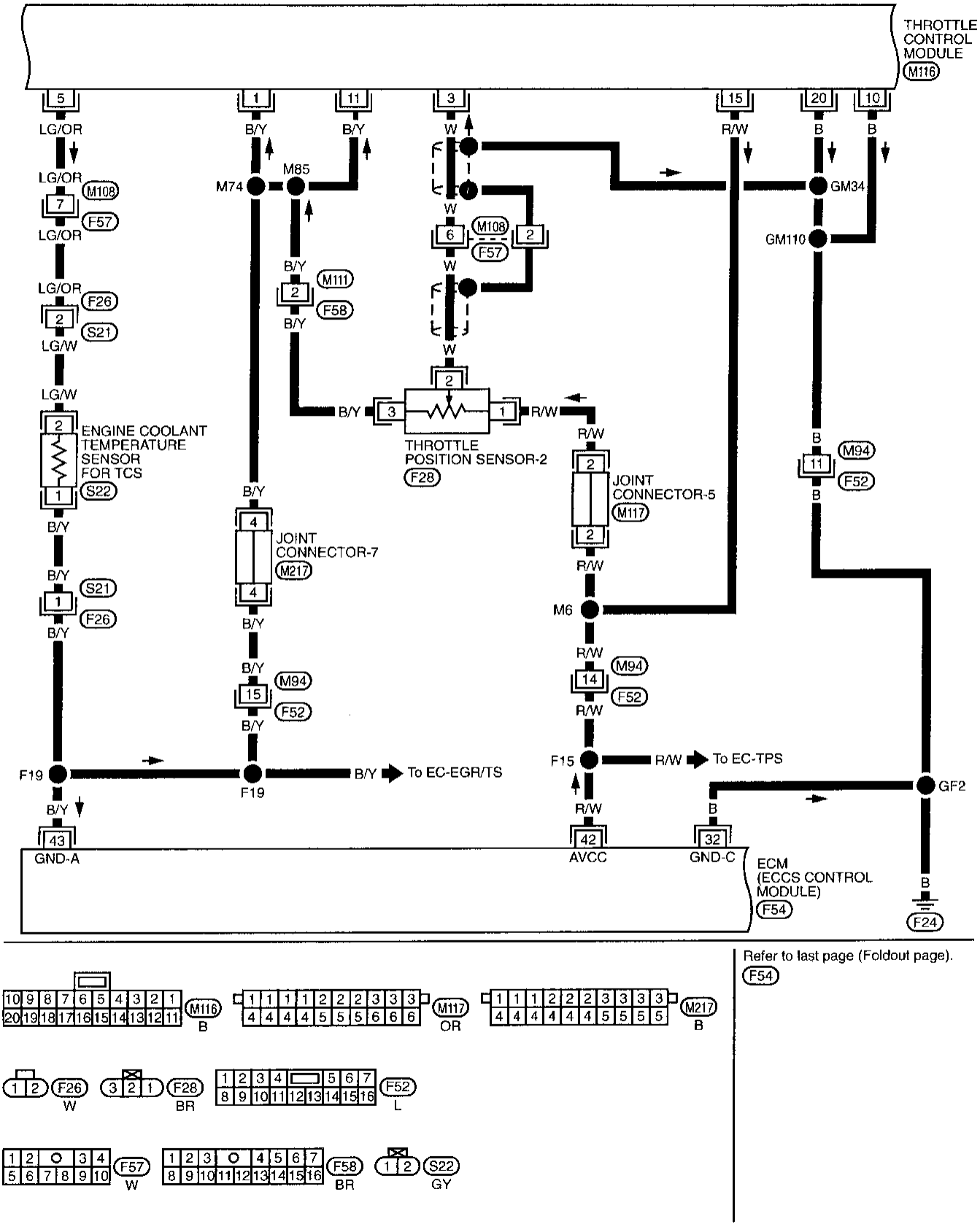

MBR178A

Wiring Diagram — TCS — (Cont'd)

BR-TCS-09

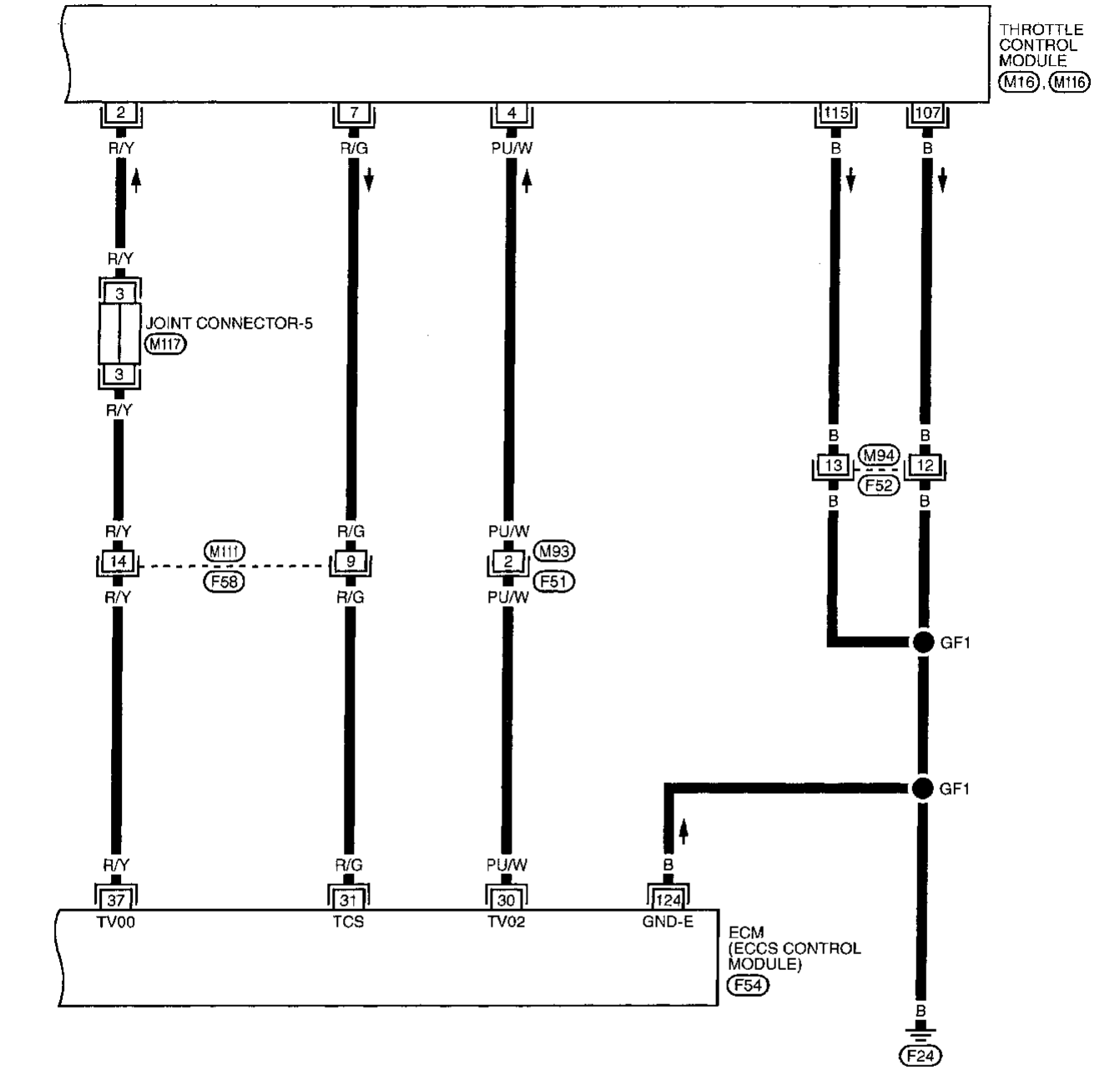

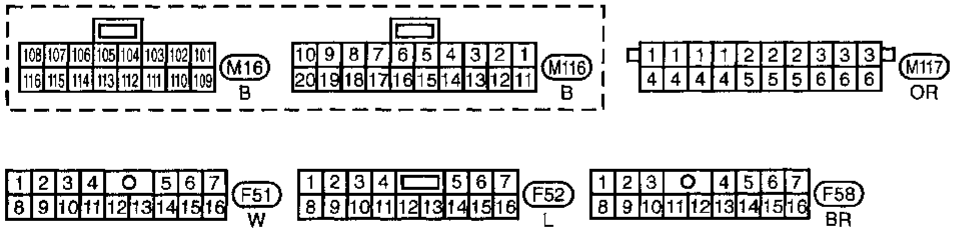

Refer to last page (Foldout page).
F54

MBR179A

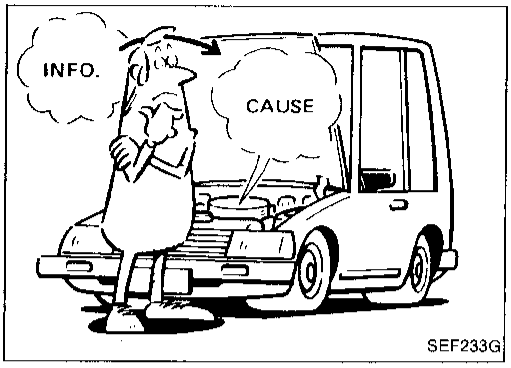

SEF233G

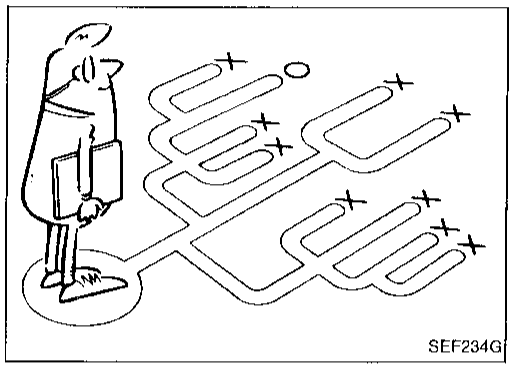
SEF234G

How to Perform Trouble Diagnoses for Quick and Accurate Repair

INTRODUCTION

The TCS has two electronic control units. One is called the TCS control unit. It is used to control the functions for applying left and right rear brakes individually, and for the ABS. The other is the throttle control module (TCM) which is used to control the throttle opening. The control units accept input signals from sensors and instantly drive actuators. It is essential that both kinds of signals are proper and stable. Also there should be no such conventional problems as oil leaks in the TCS operating circuits. Nor should there be lack of brake fluid or other problems with the brake system.

It is much more difficult to diagnose a problem that occurs intermittently rather than continuously. Most intermittent problems are caused by poor electric connections or faulty wiring. In this case, careful checking of suspicious circuits may help prevent the replacement of good parts.

A visual check only may not find the cause of the problems, so a road test should be carried out.

Before undertaking actual checks, take just a few minutes to talk with a customer who approaches with a TCS complaint. The customer is a very good source of information on such problems; especially intermittent ones. Through the talks with the customer, find out what symptoms are present and under what conditions they occur.

Start your diagnosis by looking for "conventional" problems first. This is one of the best ways to troubleshoot brake problems on a TCS controlled vehicle.

It is strongly recommended that the TCS control unit be checked for electrical problems first. Then check the TCM.

How to Perform Trouble Diagnoses for Quick and Accurate Repair (Cont'd)

WORK FLOW

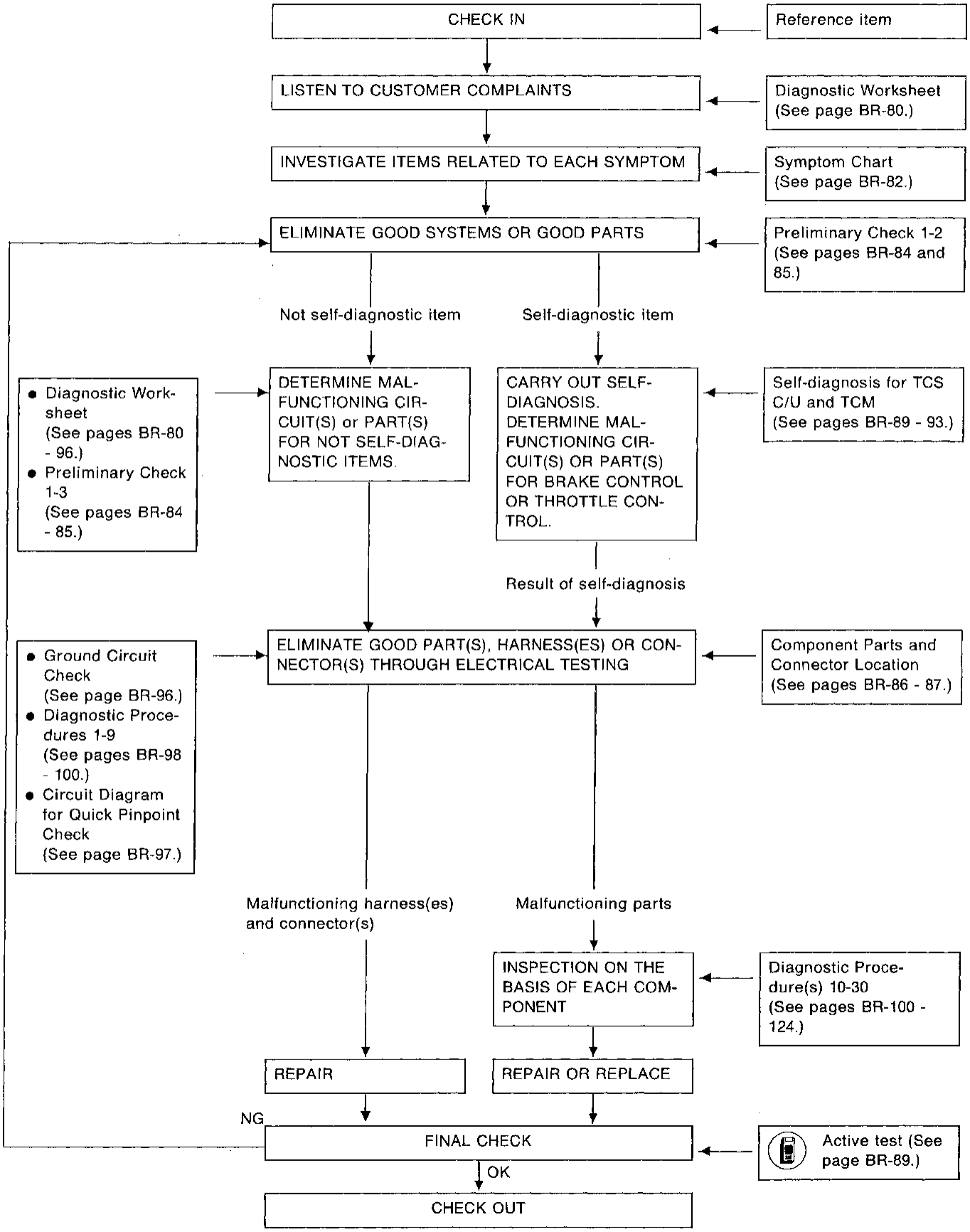

How to Perform Trouble Diagnoses for Quick and Accurate Repair (Cont'd)

KEY POINTS

WHAT ..... Vehicle model
WHEN ..... Date, Frequencies
WHERE ..... Road conditions
HOW ..... Operating conditions, Weather conditions, Symptoms

SBR339B

DIAGNOSTIC WORKSHEET

There are many kinds of operating conditions that lead to customer complaints, even if the system is normal.
A good grasp of such conditions can make trouble-shooting faster and more accurate.
It is important to fully understand the symptoms or under what conditions a customer complains.
Make good use of a diagnostic worksheet as shown below in order to utilize all the complaints for troubleshooting.

Worksheet sample

Customer name MR/MS	Model & Year		VIN
Engine #	Trans.		Mileage
Incident Date	Manuf. Date		In Service Date
Symptoms	☐ Noise and vibration (from engine compartment) ☐ Noise and vibration (from axle)	☐ Warning/Indicator activate	☐ Firm pedal operation ☐ Large stroke pedal operation
	☐ TCS does not work (Rear wheels slip when accelerating)	☐ ABS does not work. (wheels slip when braking)	☐ Lack of sense of acceleration
Engine conditions	☐ When starting ☐ After starting		
Road conditions	☐ Low friction road (☐ Snow ☐ Gravel ☐ Other) ☐ Bumps/potholes		
Driving conditions	☐ Full-acceleration ☐ High speed cornering ☐ Vehicle speed: Greater than 10 km/h (6 MPH) ☐ Vehicle speed: 10 km/h (6 MPH) or less ☐ Vehicle is stopped		
Applying brake conditions	☐ Suddenly ☐ Gradually		
Other conditions	☐ Operation of electrical equipment ☐ Shift change ☐ Other descriptions		

How to Perform Trouble Diagnoses for Quick and Accurate Repair (Cont'd)

When driving a TCS vehicle for the first time, the following phenomena may be felt somewhat uneasy as compared to driving a non-TCS vehicle. However, these phenomena are normal, and should not be considered as signs of trouble. The TCS may also be activated while certain service operations are performed.

Phenomenon	Explanation of phenomenon	Result
Motor operating sound	The TCS and ABS actuators are linked to motors. So, motor operating sound may be heard during activation of the TCS and ABS.	Normal
Sound from suspension area	During operation of the TCS or ABS, wheels are braked and released repeatedly. This may cause some sound from suspension area.	Normal
Activation of the TCS (SLIP indicator lights up.)	The TCS may be activated in the following conditions, if the wheel speed changes abruptly due to wide-open-throttle: 1. when shifting automatic transmission gears, 2. when driving on a surface where the friction coefficient changes largely (such as gravel, potholes, bumps, ice, puddles).	Normal
	The TCS may be activated in the following condition, even if the vehicle is stopping. (For example, when checking automatic transmission) When the position of the A/T shift lever is other than N or P, and the engine speed is increased.	Normal (When checking automatic transmission, it is necessary to cancel the TCS function using the TCS cancel switch.)
	The TCS is activated when a chassis dynamometer is used. With the type of chassis dynamometer which locks the front wheels, the TCS will be activated. And vehicle speed cannot be increased (in case of service inspection). This is because locking the front wheels with the rear wheels rotating is detected by the system as a slip.	Normal (When using a chassis dynamometer, it is necessary to cancel the TCS function using the TCS cancel switch.)
ABS activation	The ABS may be activated in the following conditions, even if the brake is not applied. 1. when shifting automatic transmission gears, or 2. when driving over bumps, and 3. if an abrupt change is caused in the wheel rotation speed. This phenomenon, however, is normal, and will not cause any problems.	Normal
	The ABS may be activated in the following condition, even when the brake is applied gradually. 1. when driving partially over low friction surfaces (such as frozen surfaces, potholes), or 2. when making a turn at high speeds, and 3. if the front and rear or right and left wheel speeds are different. In this case, automatic activation of the ABS provides safer operation.	Normal
Long stopping distance	The stopping distance of an ABS vehicle may become longer on low friction surfaces such as a snowy or graveled road. It is necessary to advise the driver to reduce speed when driving on such roads to ensure safe driving.	Normal
Inactivation of the ABS	The ABS is not activated by abrupt braking at low vehicle speeds [10 km/h (6 MPH) or less].	Normal
Unexpected brake pedal feel	There is little difference of the brake pedal feel between the TCS equipped and non-TCS equipped vehicles. Some drivers may sense the following: • Large stroke • Hard pedal	Normal To make sure, check the following: • Brake pedal depressed height. • Air bleeding from brake line.
Unexpected acceleration feel	The TCS controls the engine and brake operation to provide optimum traction on any road surface by eliminating wheel slip. This may cause the driver to feel the acceleration is insufficient, depending on circumstances.	Normal

Symptom Chart

PROCEDURE			—	—	Preliminary check			—	Diagnostic Procedures																		
									Not self-diagnostic items									Self-diagnostic result of TCS C/U									
REFERENCE PAGE (BR-xx)			—	80	84	85	85	96	98	98	98	99	99	99	99	99	100	100	101	102	103	105	106	106	107	108	109
SYMPTOM			Priority for TCM*1	Diagnostic Work Sheet	Preliminary Check 1	Preliminary Check 2	Preliminary Check 3	Ground Circuit Check	Diagnostic Procedure 1	Diagnostic Procedure 2	Diagnostic Procedure 3	Diagnostic Procedure 4	Diagnostic Procedure 5	Diagnostic Procedure 6	Diagnostic Procedure 7	Diagnostic Procedure 8	Diagnostic Procedure 9	Diagnostic Procedure 10	Diagnostic Procedure 11	Diagnostic Procedure 12	Diagnostic Procedure 13	Diagnostic Procedure 14	Diagnostic Procedure 15	Diagnostic Procedure 16	Diagnostic Procedure 17	Diagnostic Procedure 18	Diagnostic Procedure 19
Noise & vibration				○																							
Unexpected TCS or ABS operation				○	○	○																					
Long stopping distance				○	○																						
Unexpected pedal action				○	○																						
Warning activates, but self-diagnosis does not work.							○	○	○	○	○	○	○	○	○	○	○										
TCS cannot be canceled by TCS cancel switch																	○										
SELF-DIAGNOSTIC RESULT	TCS C/U	Code No. 1, 2, 3, 4																○									
		Code No. 5, 6, 7, 8				○													○								
		Code No. 9																		○							
		Code No. 10																			○						
		Code No. 13																				○					
		Code No. 14, 15																					○				
		Code No. 16																						○			
		Code No. 17																							○		
		Code No. 18			○																					○	
		Code No. 19			○																						○
	TCM	No code indication	—																								
		Code No. 11	❸																								
		Code No. 12	❸																								
		Code No. 13	❸															○	○	○	○	(○)	○	○	○	○	○
		Code No. 14	❸																								
		Code No. 21, 22	❸																								
		Code No. 23	❷																								
		Code No. 24	❷																								
		Code No. 31	❸																								
		Code No. 32	❸																								
		Code No. 33	❸																								
		Code No. 34	❶																								

*1: TCM displays several malfunction codes at once. Therefore, when performing trouble diagnoses, follow the diagnostic procedure according to the priority.

Symptom Chart (Cont'd)

PROCEDURE		—	Diagnostic Procedures												Electrical Component Inspection											
			Self-diagnostic result of TCM																							
REFERENCE PAGE (BR-xx)		—	112	113	114	115	116	117	118	119	121	121	122	124	126	126	126	126	127	127	127	127	127	127	128	125	*2
SYMPTOM		Priority for TCM*1	Diagnostic Procedure 20	Diagnostic Procedure 21	Diagnostic Procedure 22	Diagnostic Procedure 23	Diagnostic Procedure 24	Diagnostic Procedure 25	Diagnostic Procedure 26	Diagnostic Procedure 27	Diagnostic Procedure 28	Diagnostic Procedure 29	Diagnostic Procedure 30	Diagnostic Procedure 31	TCS Cancel Switch	Wheel Sensor	ABS Actuator Motor Relay	ABS Actuator Solenoid Valve Relay	TCS Pump Relay	Throttle Motor Relay	TCS Pump	Engine Coolant Temperature Sensor for TCM	N & P Relay	Inhibitor Switch	Throttle Motor	TCM	Secondary Throttle Position Sensor
Noise & vibration																											
Unexpected TCS or ABS operation																○											
Long stopping distance																											
Unexpected pedal action																											
Warning activates, but self-diagnosis does not work.																											
TCS cannot be canceled by TCS cancel switch															○												
SELF-DIAGNOSTIC RESULT	TCS C/U	Code No. 1, 2, 3, 4																									
		Code No. 5, 6, 7, 8														○											
		Code No. 9															○										
		Code No. 10																○									
		Code No. 13		○	○	○	○		○	○	○		○		○												
		Code No. 14, 15																									
		Code No. 16																									
		Code No. 17																	○								
		Code No. 18																									
		Code No. 19																	○		○						
	TCM	No code indication	—	○																						○	
		Code No. 11	❸		○																					○	
		Code No. 12	❸			○																				○	○
		Code No. 13	❸				(○)																				
		Code No. 14	❸					○														○					
		Code No. 21, 22	❸						○											○					○	○	
		Code No. 23	❷							○										○						○	
		Code No. 24	❷								○									○						○	
		Code No. 31	❸									○															
		Code No. 32	❸										○														
		Code No. 33	❸											○									○	○			
		Code No. 34	❶											○												○	

*1: TCM displays several malfunction codes at once. Therefore, when performing trouble diagnoses, follow the diagnostic procedure according to the priority.

*2: For Electrical Component Inspection of Secondary Throttle Position Sensor, refer to "ENGINE AND EMISSION CONTROL PARTS DESCRIPTION" in EC section.

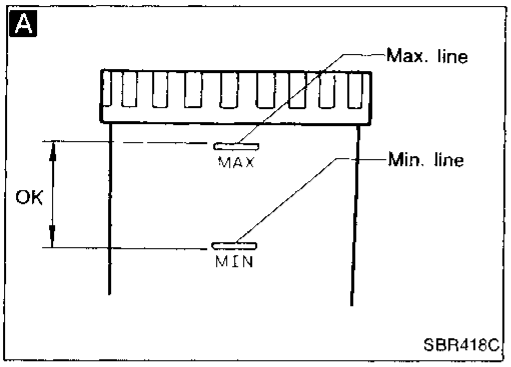

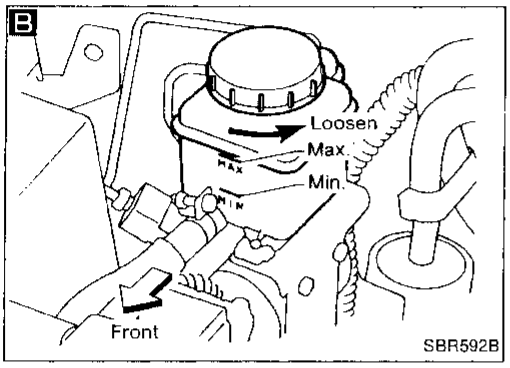

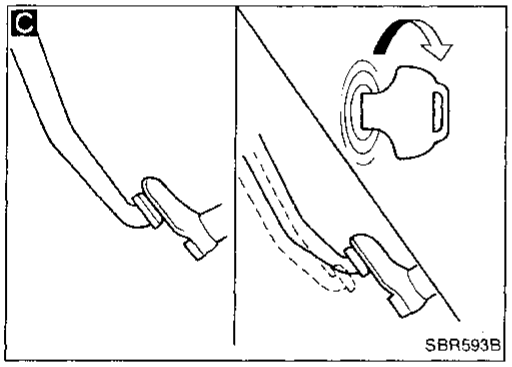

Preliminary Check 1

A

Check fluid level in reservoir tank. (Brake fluid)
- NG → Ⓐ
- OK ↓

B

Check TCS operating oil level in TCS reservoir tank.
- NG → Ⓐ
- OK ↓

C

Check brake booster operation and air-tightness. Refer to "On-vehicle Service" of BRAKE BOOSTER, BR-14.
- NG → Repair or replace brake booster.
- OK ↓

Check brake pads and rotor. Refer to FRONT and REAR DISC BRAKE, BR-39 - 20.

Ⓐ ↓

Check fluid and/or TCS operating oil leakage.
- NG → Repair hydraulic line.
- OK ↓

Refill fluid and check again.

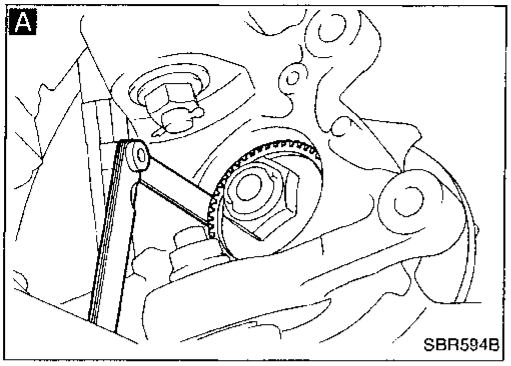

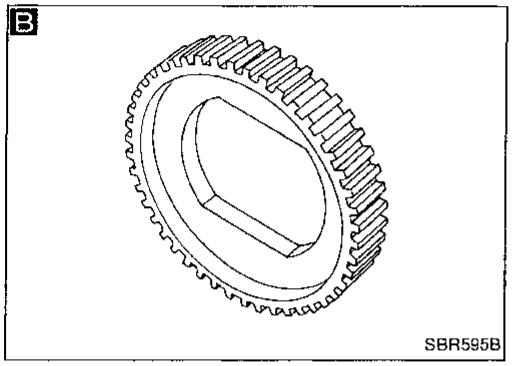

Preliminary Check 2

A

Check clearance between sensor and top of rotor.
Clearance should be:
Front
0.21 - 0.71 mm
(0.0083 - 0.0280 in)
Rear
0.33 - 0.93 mm
(0.0130 - 0.0366 in)

NG → Clean fastening portion of sensor, or replace sensor.

OK ↓

B

Check rotor for teeth damage and number of teeth.
Number of teeth should be:
Front 48
Rear 96

NG → Replace rotor.

OK ↓

Check wheel bearing play.
Refer to "ON-VEHICLE SERVICE" in FA and RA sections.

Preliminary Check 3

Check indicator/warning lamp operation for not self-diagnostic items as follows:

Ignition switch is turned "ON"			After starting engine			Diagnostic procedure
SLIP indicator	TCS OFF indicator	ABS warning lamp	SLIP indicator	TCS OFF indicator	ABS warning lamp	
*1 OFF	ON	ON	*1 OFF	ON	ON	1
ON	ON	ON	*2 ON	*2 ON	*2 ON	2
OFF	OFF	OFF	OFF	ON	ON	3, 4, 5
OFF	ON	ON	OFF	OFF	OFF	3
ON	OFF	ON	OFF	OFF	OFF	4
ON	ON	OFF	OFF	OFF	OFF	5
ON	ON	ON	ON	OFF	OFF	6
ON	ON	ON	OFF	ON	OFF	7
ON	ON	ON	OFF	OFF	ON	8

Note *1: Lamp may light dimly depending on circumstances.
*2: LED of TCS control unit does not indicate code No.

Component Parts and Connector Location

ENGINE ROOM

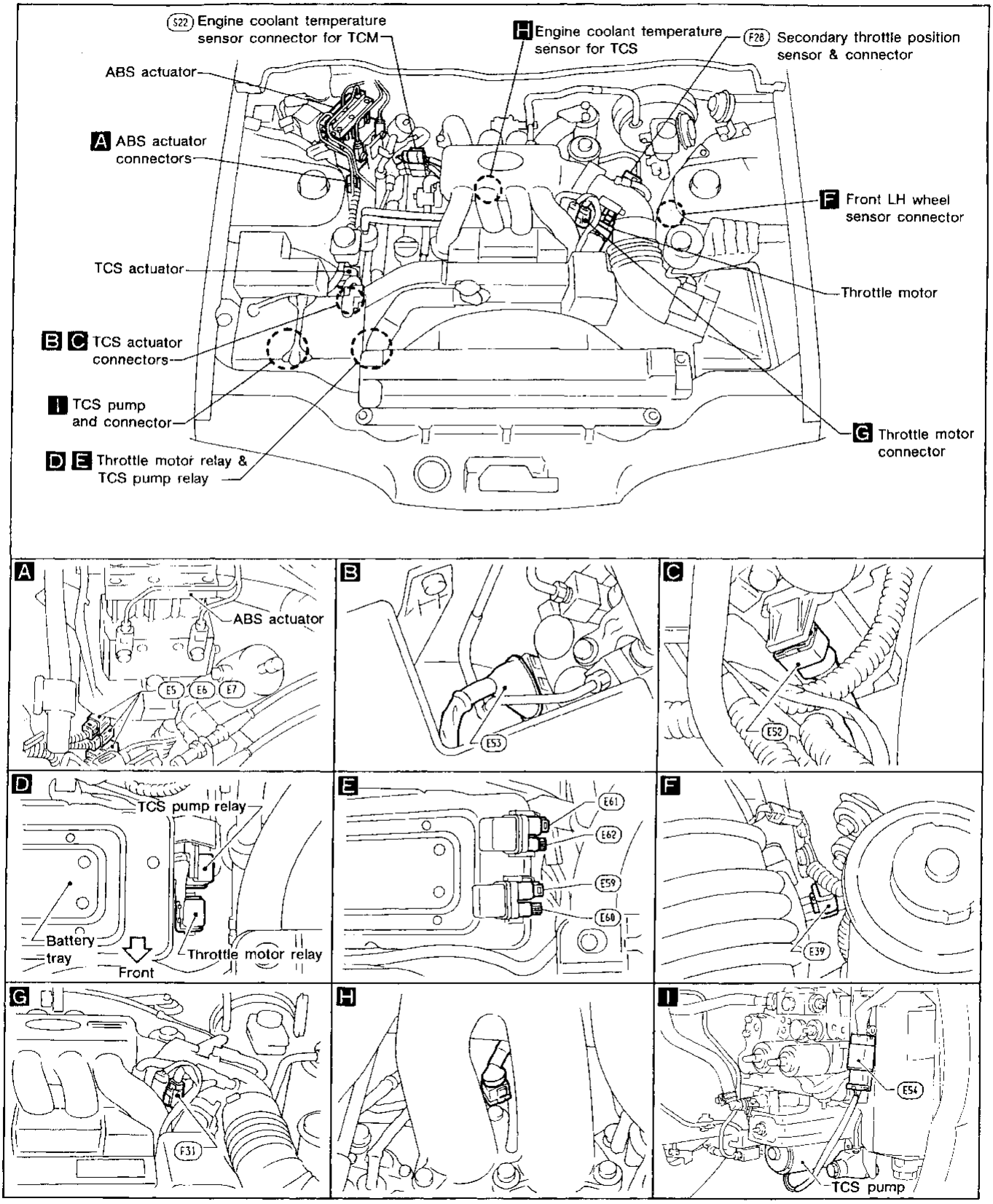

SBR591CA

Component Parts and Connector Location (Cont'd)

UNDER BODY

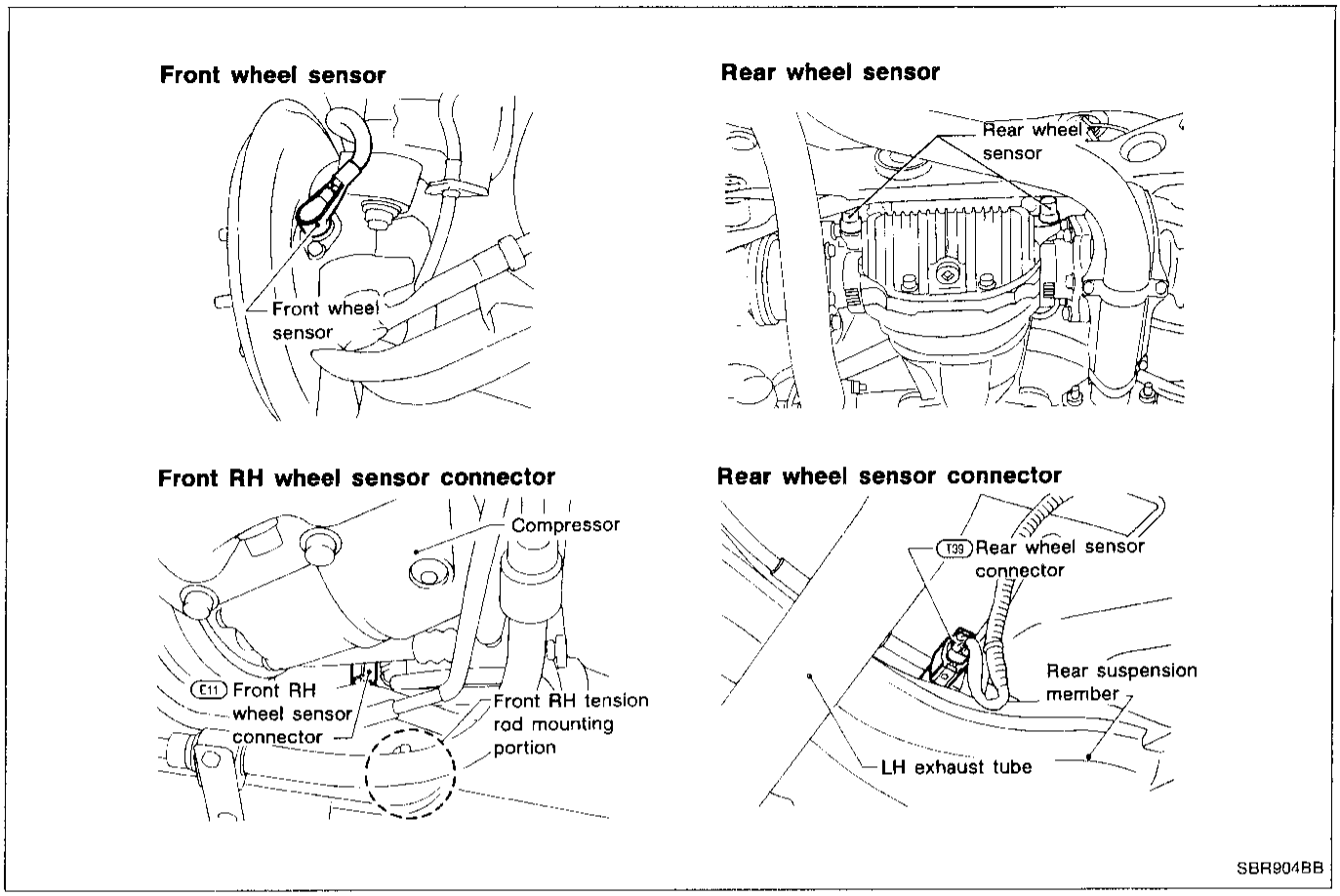

INSTRUMENT PANEL AND TRUNK ROOM

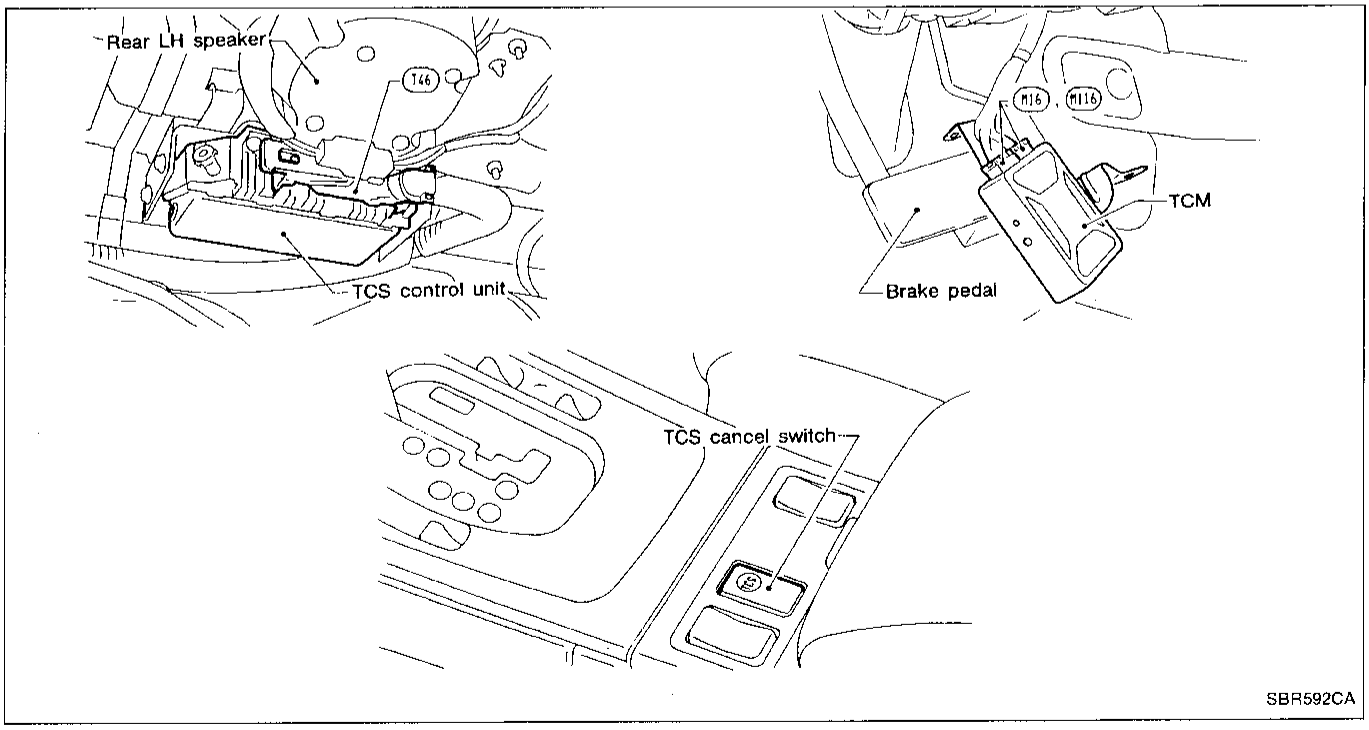

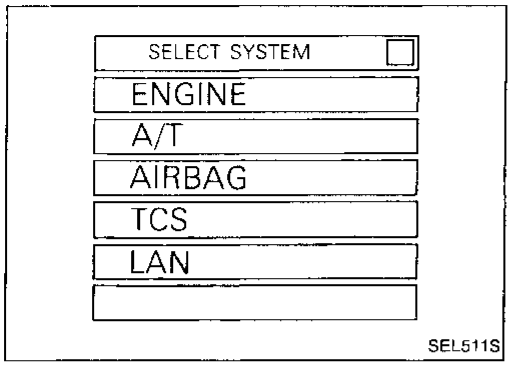

CONSULT

Start up CONSULT and touch "TCS".

TCS COMPONENT PARTS APPLICATION

	WORK SUPPORT	SELF-DIAGNOSTIC RESULTS	DATA MONITOR	ACTIVE TEST
Throttle position sensor		X	X	
Secondary throttle position sensor	X	X	X	X
Engine coolant temperature sensor for TCM		X	X	
Closed throttle position switch			X	
Neutral position switch		X	X	
Throttle motor	X	X	X	X
Throttle motor relay		X	X	X

WORK SUPPORT

Work support items	Description
Secondary throttle position sensor adjustment	• Supports the adjustment of secondary throttle position sensor showing real-time signal voltage from secondary throttle position sensor.
Secondary throttle position sensor check	• Performs throttle closed position self-learning function while showing and recording data monitor items related to secondary throttle position sensor.
Throttle motor step operation	• Rotates throttle motor to the desired opening angle while showing and recording data monitor items related to throttle motor operation.
Closed throttle position self-learning memory clear	• Erase the memory of closed throttle position self-learning of secondary throttle position sensor.

DATA MONITOR

Data monitor items	Description
Throttle position sensor (V)	• Displays throttle position sensor signal voltage.
Throttle opening angle (degree)	• Displays throttle opening angle calculated from throttle position sensor signal voltage.
Secondary throttle position sensor (V)	• Displays secondary throttle position sensor signal voltage.
Secondary throttle valve opening angle (degree)	• Displays secondary throttle valve opening angle calculated from secondary throttle position sensor signal voltage.
Engine coolant temperature sensor for TCM (°F/°C)	• Displays engine coolant temperature calculated from output voltage of engine coolant temperature sensor for TCM.
Battery voltage (V)	• Displays power supply voltage for TCM.
Throttle opening signal (ms)	• Displays pulse width of requesting signal, from TCS control unit.
Closed throttle position switch (ON/OFF)	• Displays ON/OFF condition determined by throttle position sensor signal.

Neutral position switch	(ON/OFF)	• Displays ON/OFF condition determined by neutral position switch signal.
Target secondary throttle opening angle	(degree)	• Displays target secondary throttle valve opening angle calculated by TCM.
Motor voltage	(V)	• Displays throttle motor driving voltage.
Motor duty	(%)	• Displays duty ratio of throttle motor.
Motor relay	(ON/OFF)	• Displays ON/OFF condition of throttle motor relay.
TCS operation signal	(ON/OFF)	• Displays ON if secondary throttle valve closes more than a certain degree.
TCS operation flag		• Displays VALID if TCM controls secondary throttle valve receiving the requesting signal from TCS control unit.
Communication condition	(ON/OFF)	• Displays communication condition between TCS control unit and TCM. Displays ON normally.
Self-learning	(DONE/YET)	• Displays self-learning status of fully closed position of secondary throttle valve by TCM.

ACTIVE TEST

Active test items	Description
Secondary throttle valve opening test	• The target opening angle of secondary throttle valve can be set manually. The opening angle of secondary throttle valve and the duty ratio of throttle motor are displayed in realtime.
Throttle motor operation test	• The duty ratio of throttle motor can be set manually. The opening angle of secondary throttle valve is displayed in realtime.
Throttle motor relay test	• The throttle motor relay can be turned on or off manually or alternatively.

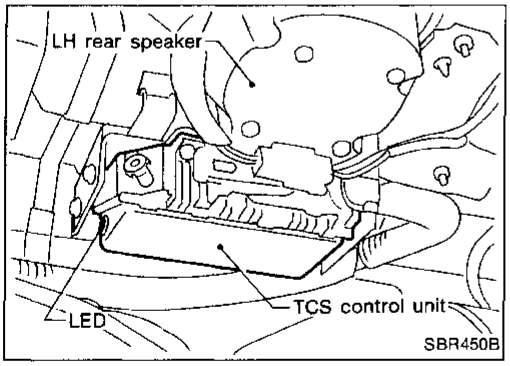

Self-diagnosis for TCS Control Unit

TCS CONTROL UNIT LED

The TCS control unit has one LED.

Description

Self-diagnosis is functioning as long as the engine is running. To obtain complete self-diagnosis results, the vehicle must be driven above 30 km/h (19 MPH) for at least one minute, then the malfunction code read while the engine is running. The malfunction code is indicated by the number of flashes of the LED as shown below.

Self-diagnosis for TCS Control Unit (Cont'd)

Example: Code No. 5

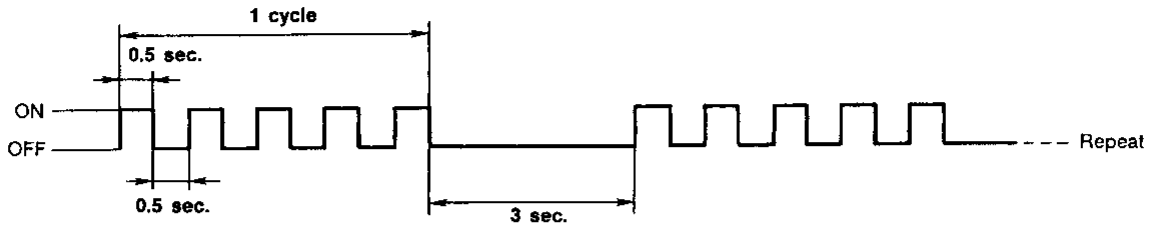

For example, the LED flashes five times for 0.5 seconds. This indicates the number "5", and refers to a malfunction in the front left wheel sensor circuit. In this way, the problems are classified by their code numbers.

Code No.	Malfunction
1	Front left solenoid valve circuit for ABS actuator
2	Front right solenoid valve circuit for ABS actuator
3 or 4	Rear solenoid valve circuit for ABS actuator
5	Front left wheel sensor circuit
6	Front right wheel sensor circuit
7	Rear right wheel sensor circuit
8	Rear left wheel sensor circuit
9	ABS actuator motor circuit open or short, or ABS actuator motor relay abnormal
10	ABS actuator solenoid valve relay circuit malfunction
13	Secondary throttle opening signal circuit open, throttle signal circuit open or fail-safe for TCM
14	Left side pressure solenoid valve circuit for TCS actuator
15	Right side pressure solenoid valve circuit for TCS actuator
16	TCS control unit
17	TCS pump relay coil circuit open
18	TCS operating oil pressure in TCS actuator abnormal
19	TCS operating oil pressure circuit for TCS actuator

NOTE:
If TCS control unit displays code No. 13, refer to throttle control module (TCM) for self-diagnosis.
If more than two circuits should malfunction at the same time, the LED flashes to indicate one of the malfunctioning circuits. After the circuit has been repaired, the LED will flash the other code number when self-diagnosis is carried out again properly.

Self-diagnosis for TCS Control Unit (Cont'd)

Code No.	Indicator			Detected items	Malfunction is detected when ...	Check item
	SLIP	TCS OFF	ABS			
1	ON	ON	ON	Front left solenoid for ABS actuator	Front left solenoid circuit for ABS actuator is open.	• Harness and connector • ABS actuator
2	ON	ON	ON	Front right solenoid for ABS actuator	Front right solenoid circuit for ABS actuator is open.	• Harness and connector • ABS actuator
3 or 4	ON	ON	ON	Rear solenoid for ABS actuator	Rear solenoid circuit for ABS actuator is open.	• Harness and connector • ABS actuator
5	ON	ON	ON	Front left wheel sensor	Front left wheel sensor circuit is malfunctioning.	• Harness and connector • Front left wheel sensor
6	ON	ON	ON	Front right wheel sensor	Front right wheel sensor circuit is malfunctioning.	• Harness and connector • Front right wheel sensor
7	ON	ON	ON	Rear right wheel sensor	Rear right wheel sensor circuit is malfunctioning.	• Harness and connector • Rear right wheel sensor
8	ON	ON	ON	Rear left wheel sensor	Rear left wheel sensor circuit is malfunctioning.	• Harness and connector • Rear left wheel sensor
9	ON	ON	ON	ABS motor and motor relay	• ABS motor circuit is open or shorted. • ABS motor relay is not operated normally.	• Harness and connector • Motor relay • Motor
10	ON	ON	ON	ABS solenoid valve relay	• ABS solenoid valve relay circuits is malfunctioning.	• Harness and connector • Solenoid valve relay
13	ON	ON	OFF	Secondary throttle opening signal	• Secondary throttle opening signal (from TCS C/U to TCM) circuit is open.	• Harness and connector
	ABS is operative even if TCS is inoperative.			Throttle position sensor signal	• TCM is entered fail-safe mode. • Throttle position sensor signal (from TCM to TCS C/U) circuit is open.	• TCM • Harness and connector
14	ON	ON	ON	Left side pressure solenoid for TCS actuator	• Left side pressure solenoid circuit for TCS actuator is open.	• Harness and connector • TCS actuator
15	ON	ON	ON	Right side pressure solenoid for TCS actuator	• Right side pressure solenoid circuit for TCS actuator is open.	• Harness and connector • TCS actuator
0 or 16	ON	ON	ON	TCS C/U	• TCS C/U is out of order.	• TCS C/U
17	ON	ON	OFF	TCS pump relay	• TCS pump relay coil circuit is open.	• Harness and connector • TCS pump relay
	ABS is operative even if TCS is inoperative.					
18	ON	ON	OFF	TCS acd module	• TCS-operating oil pressure in actuator (accumuAetor) is abnormally decreased.	• TCS pump • TCS actuator
	ABS is operative even if TCS is inoperative.					

Self-diagnosis for TCS Control Unit (Cont'd)

Code No.	Indicator			Detected items	Malfunction is detected when ...	Check item
	SLIP	TCS OFF	ABS			
19	ON	ON	OFF	TCS actuator pressure module	• Pressure switch circuit for TCS pump operation is open. • Warning switch circuit for TCS-operating oil pressure is open.	• Harness and connector • TCS actuator • TCS pump relay
	ABS is operative even if TCS is inoperative.					
—	OFF*	ON	ON	Main power supply for TCS C/U	• Main power supply circuit for TCS C/U is open.	• Harness and connector
				TCS C/U	• TCS C/U is out of order.	• TCS C/U
	ON	ON	ON	Alternator circuit	• Alternator output circuit is open.	• Harness and connector
	ABS is operative even if all lamps go on.					

*: Lamp may light dimly depending on circumstances.

Retention of diagnostic results

This control unit does not have a memory for self-diagnostic results.
Therefore, the malfunction code number is erased each time the ignition switch is turned OFF.

TCS fail-safe

Self-diagnosis item		Fail-safe condition	
Code No.	Malfunction	Type Ⓐ	Type Ⓑ
1	Front left solenoid valve circuit for ABS actuator	X	—
2	Front right solenoid valve circuit for ABS actuator	X	—
3 or 4	Rear solenoid valve circuit for ABS actuator	X	—
5	Front left wheel sensor circuit	X	—
6	Front right wheel sensor circuit	X	—
7	Rear right wheel sensor circuit	X	—
8	Rear left wheel sensor circuit	X	—
9	ABS actuator motor circuit open or shorted, or ABS actuator motor relay abnormal	X	—
10	ABS actuator solenoid valve relay circuit malfunction	X	—
13	Secondary throttle opening signal circuit open or throttle signal circuit open, or fail-safe for TCM	—	X
14	Left side pressure solenoid valve circuit for TCS actuator	X	—
15	Right side pressure solenoid valve circuit for TCS actuator	X	—
0 or 16	TCS control unit	X	—
17	TCS pump relay coil circuit open	—	X
18	TCS operating oil pressure in TCS actuator abnormal	—	X
19	TCS operating oil pressure circuit for TCS actuator	—	X

X: Available
—: Not available
Type Ⓐ: TCS control unit does not control both ABS and TCS functions.
Type Ⓑ: TCS control unit does not control TCS functions. However, TCS control unit does control ABS functions.

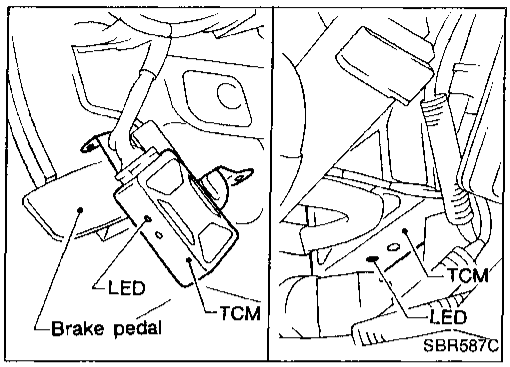

Self-diagnosis for TCM

TCM LED

The TCM has only one LED.

Description

Self-diagnosis is always functioning when the ignition switch is set in the "ON" or "START" position and can be read by CONSULT.
The malfunction code is also indicated by the number of flashes of the LED as shown below:

Example: Code No. 12 and Code No. 33

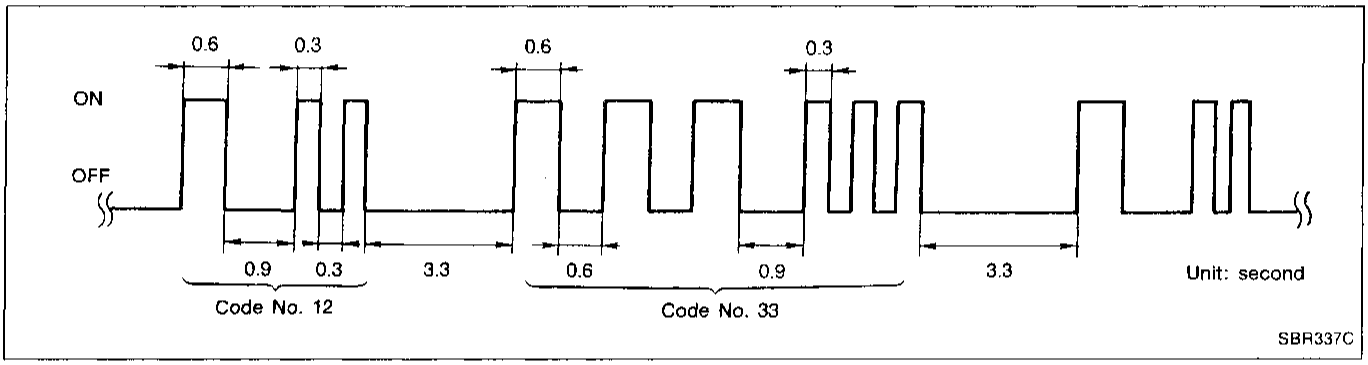

Long (0.6 second) blinking indicates the number of the first digit and short (0.3 second) blinking indicates the number of the second digit.
For example, the LED flashes once for 0.6 seconds and then it flashes twice for 0.3 seconds. This indicates the number "12" and refers to a malfunction in the secondary throttle position sensor circuit. In this way, all the problems are classified by their code numbers.

LED Code No.	CONSULT	Malfunction
11	THROTTLE POSI SEN	Throttle position sensor circuit
12	THROTTLE POSI SEN2	Secondary throttle position sensor circuit
13	THRTL POS/S-2 SIG	Secondary throttle valve operating signal circuit
14	COOLNT TEMP/S (TCM)	Engine coolant temperature sensor for TCM circuit
21	THROTTLE ACTUATOR	Throttle motor circuit (Operation and open circuit check)
22	THROTTLE MOTOR	Throttle motor circuit (Short circuit check)
23	THROTTLE MOTOR RLY [SHORT] (·a)	Throttle motor relay circuit (Short)
24	THROTTLE MOTOR RLY [OPEN] (·b)	Throttle motor relay circuit (Open)
32	THRTL/V RETURN SPR	Secondary throttle valve return spring broken
33	NEUTRAL POSI SW	Neutral position switch circuit
34	TH P/S PWR SUPPLY	Power supply circuit (for sensor)
55		No malfunction in the above circuits

Self-diagnosis for TCM (Cont'd)

LED/CONSULT	Self-diagnostic items	Malfunction is detected when ...
11 THROTTLE POSI SEN	Throttle position sensor circuit	• The throttle position sensor circuit is open or shorted. (An abnormally high or low voltage is entered.)
12 THROTTLE POSI SEN2	Secondary throttle position sensor circuit	• The secondary throttle position sensor circuit is open or shorted. (An abnormally high or low voltage is entered.)
13 THRTL POS/S-2 SIG	Secondary throttle valve operating signal circuit	• TCS control unit is in fail-safe condition or harness is abnormal.
14 COOLNT TEMP/S (TCM)	Engine coolant temperature sensor for TCM circuit	• The engine coolant temperature sensor circuits is open or shorted. (An abnormally high or low output voltage is entered.)
21 THROTTLE ACTUATOR	Throttle motor circuit (Operation and open circuit check)	• The throttle motor does not operate normally when the TCS is operating.
22 THROTTLE MOTOR	Throttle motor circuit (Short circuit check)	• The throttle motor circuit is shorted.
23 THROTTLE MOTOR RLY [SHORT] (·a)	Throttle motor relay circuit (Short)	• The throttle motor relay is shorted.
24 THROTTLE MOTOR RLY [OPEN] (·b)	Throttle motor relay circuit (Open)	• The throttle motor relay is open.
32 THRTL/V RETURN SPR	Secondary throttle valve return spring broken	• Secondary throttle valve does not fully open when current is not supplied to the motor.
33 NEUTRAL POSI SW	Neutral position switch circuit	• Neutral position switch circuit is open. • Neutral position switch circuit is shorted.
34 TH P/S PWR SUPPLY	Power supply circuit (for sensor)	• Power supply circuit for secondary throttle position sensor is open.

Retention of diagnostic results

Most of the diagnostic results will remain in the TCM memory.
The TCM memory concerning the following three items is erased after a normal signal is issued.

Code No.	Malfunction
13	Secondary throttle valve operating signal circuit
14	Engine coolant temperature sensor for TCM circuit
33	Neutral position switch circuit

Self-diagnosis for TCM (Cont'd)

How to erase self-diagnostic results

The self-diagnostic results stored in the TCM can be erased by any of the following four methods.

(1) Touch "Erase" on CONSULT screen after examining self-diagnostic result.

(2) Depress the accelerator fully (1st throttle) and set the neutral position switch to OFF (automatic transmission is in other than "P" and "N" positions). In this state, turn ON the ignition key (engine need not be started). After this, set the neutral position switch to ON, and release the accelerator. This will erase the diagnostic results of all items.

(3) If the backup power supply is disconnected for more than one minute, the diagnostic results on all items are erased. In addition, the values learned by the system are also erased.

TCM fail-safe

Self-diagnosis item		Fail-safe condition		
Code No.	Malfunction	Type Ⓐ	Type Ⓑ	Type Ⓒ
11	Throttle position sensor circuit	—	X	—
12	Secondary throttle position sensor circuit	X	—	—
13	Secondary throttle valve operating signal circuit	—	X	—
14	Engine coolant temperature sensor for TCM circuit	—	—	—
21	Throttle motor circuit (Operation and open circuit check)	X	—	—
22	Throttle motor circuit (Short circuit check)	X	—	—
23	Throttle motor relay circuit (Short)	X	—	—
24	Throttle motor relay circuit (Open)	X	—	—
32	Secondary throttle valve return spring broken	—	—	X
33	Neutral position switch circuit	—	—	—
34	Power supply circuit (for sensor)	X	—	—
55	No malfunction in the above circuits	—	—	—

X: Available
—: Not available

Type Ⓐ: TCM does not supply power for throttle motor and secondary throttle valve is fully opened by return spring.
Type Ⓑ: Secondary throttle valve is slowly opened by throttle motor.
Type Ⓒ: Secondary throttle valve is quickly opened by throttle motor.

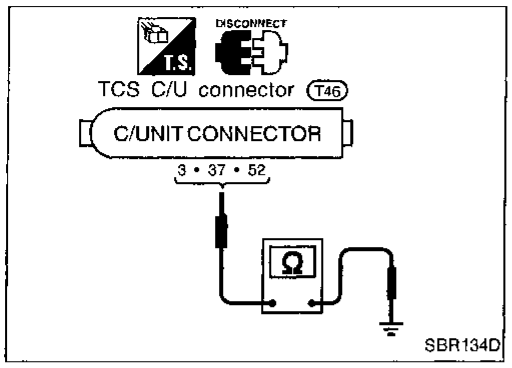

Ground Circuit Check

TCS CONTROL UNIT

Continuity should exist.

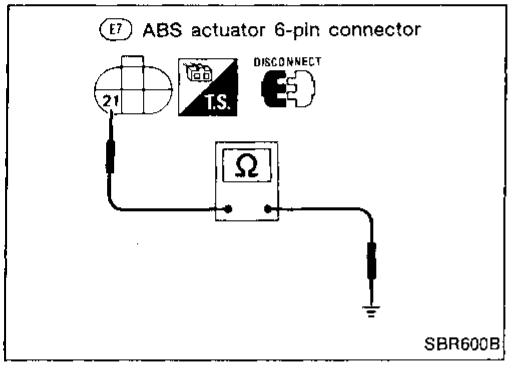

ABS ACTUATOR

Continuity should exist.

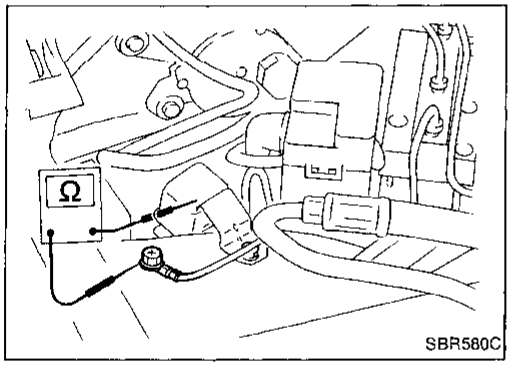

ACTUATOR MOTOR GROUND

Continuity should exist.

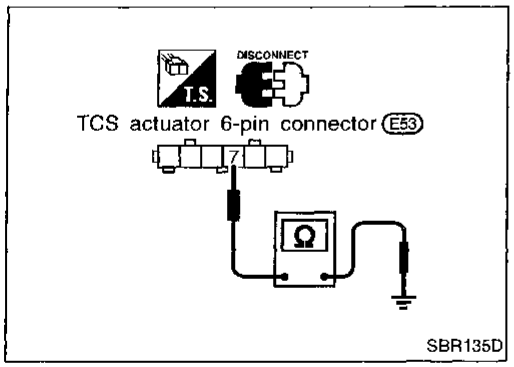

TCS ACTUATOR

Continuity should exist.

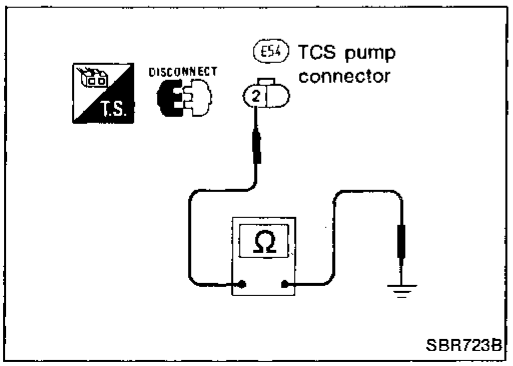

TCS PUMP

Continuity should exist.

Circuit Diagram for Quick Pinpoint Check

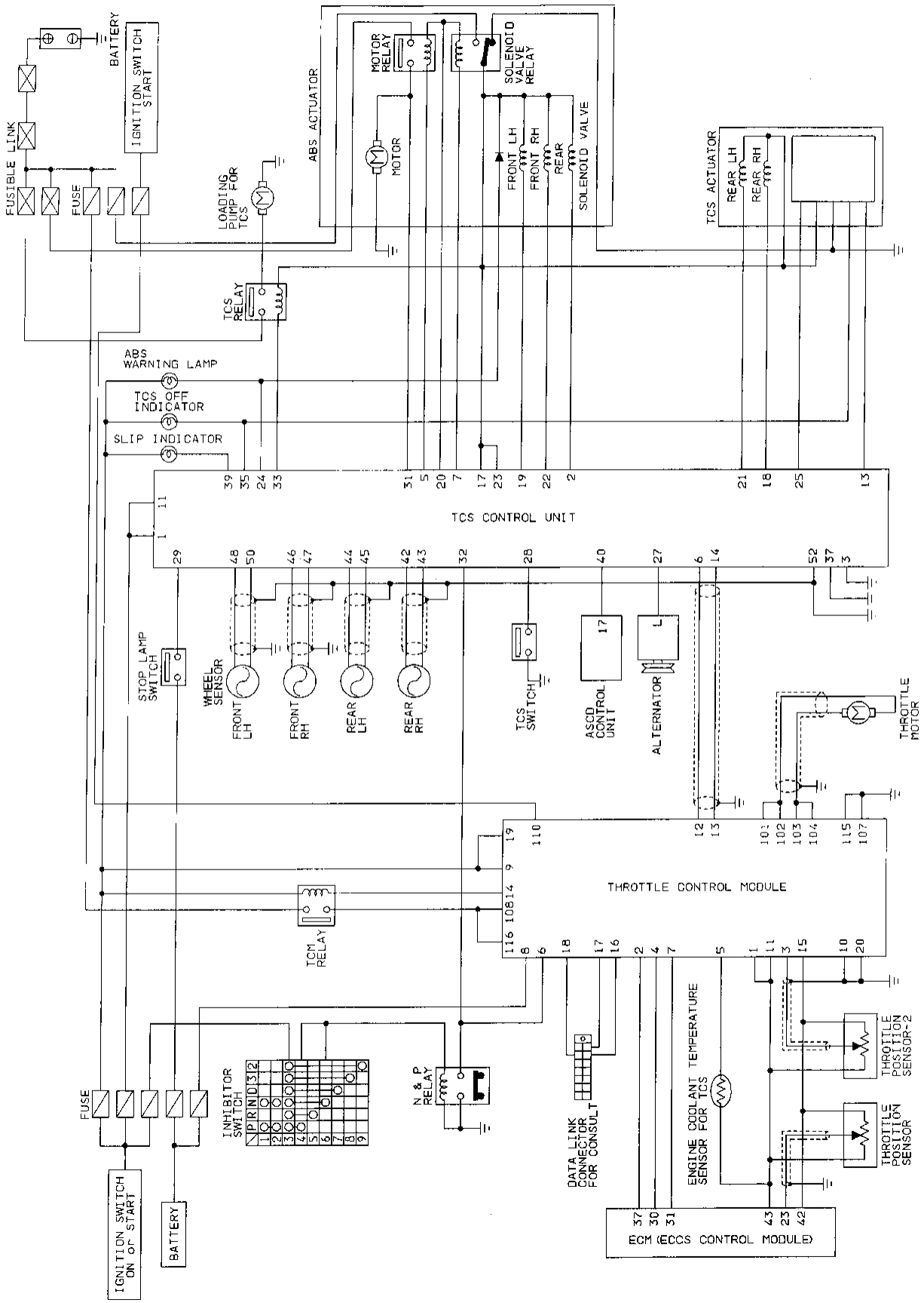

MBR170A

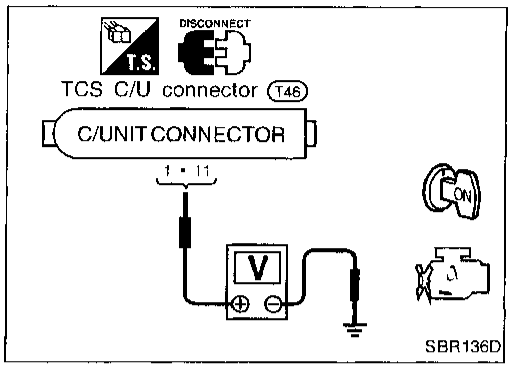

Diagnostic Procedure 1

POWER SUPPLY CIRCUIT FOR TCS C/U	NG →	Repair harness and connectors.
Check voltage between TCS C/U terminal ① and ground, and ⑪ and ground. **Battery voltage should exist.**		

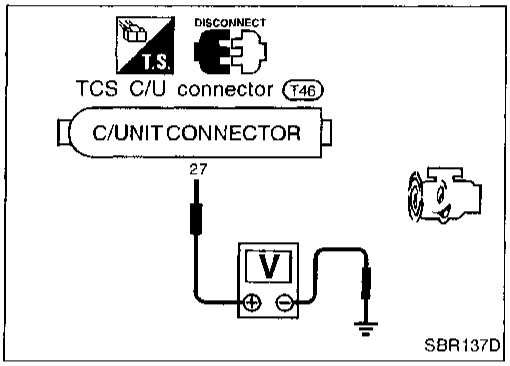

Diagnostic Procedure 2

ALTERNATOR OUTPUT SIGNAL FOR TCS C/U	NG →	Repair harness and connectors.
Check voltage between TCS C/U terminal ㉗ and ground with engine running. **Voltage : 14V or more**		

↓ OK

Carry out Diagnostic Procedures 6 through 8.	NG →	Repair harness and connectors.

↓ OK

TRY SELF-DIAGNOSIS AGAIN.

↓

Does TCS C/U display code No. "0" even if all indicators/warnings are activated? ("0" means no indication.)	Yes →	Replace TCS C/U.

↓ No

Inspect system referring to displayed code No.

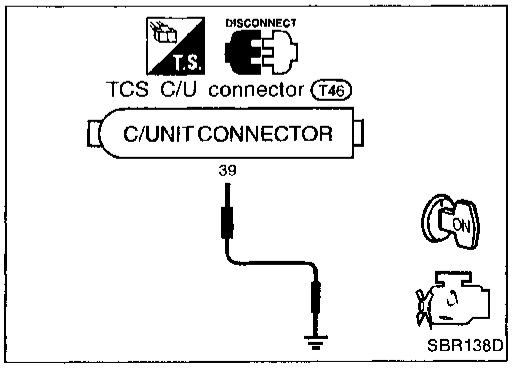

Diagnostic Procedure 3

SLIP INDICATOR CIRCUIT	NG →	• Repair harness and connectors. or • Replace bulb.
Check SLIP indicator by grounding TCS C/U terminal ㊴. **TCS indicator should be lit.**		

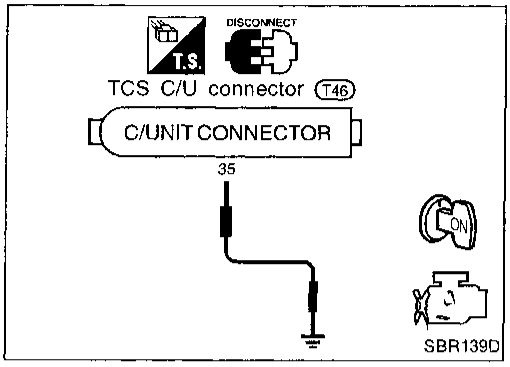

Diagnostic Procedure 4

TCS OFF INDICATOR CIRCUIT	NG →
• Disconnect 6-pin connector from TCS actuator. • Check TCS OFF indicator by grounding TCS C/U terminal 35. **TCS OFF indicator should be lit.**	• Repair harness and connectors. or • Replace bulb.

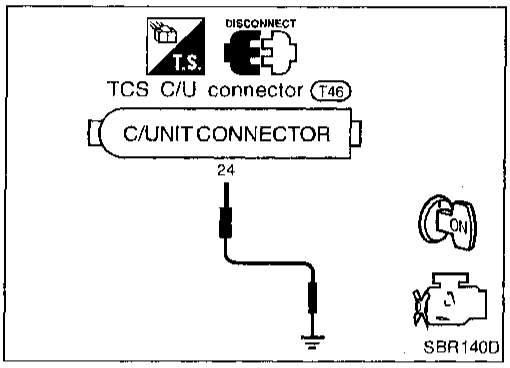

Diagnostic Procedure 5

ABS WARNING LAMP CIRCUIT	NG →
• Remove solenoid valve relay from ABS actuator. • Check ABS warning lamp by grounding TCS C/U terminal 24. **ABS warning lamp should be lit.**	• Repair harness and connectors. or • Replace bulb.

Diagnostic Procedure 6

SLIP INDICATOR CIRCUIT	NG →
Disconnect connector from TCS C/U and turn ignition switch "ON". **TCS indicator should not be lit.**	Repair harness and connector between SLIP indicator lamp and TCS C/U terminal 39.

Diagnostic Procedure 7

TCS OFF INDICATOR CIRCUIT	NG →
• Disconnect 6-pin connector from TCS actuator. • Disconnect connector from TCS C/U and turn ignition switch "ON". **TCS OFF indicator should not be lit.**	• Repair harness and connectors between TCS OFF indicator lamp and TCS C/U terminal 35. or • Repair harness and connector between TCS OFF indicator lamp and TCS actuator terminal 8.

Diagnostic Procedure 8

ABS WARNING LAMP CIRCUIT	NG →
• Remove solenoid valve relay from ABS actuator. • Disconnect connector from TCS C/U and turn ignition switch "ON". **ABS warning lamp should not be lit.**	• Repair harness and connectors between ABS warning lamp and TCS C/U terminal 24. or • Repair harness and connectors between ABS warning lamp and ABS actuator terminal 11.

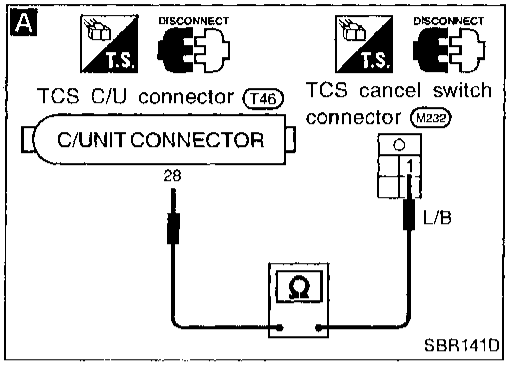

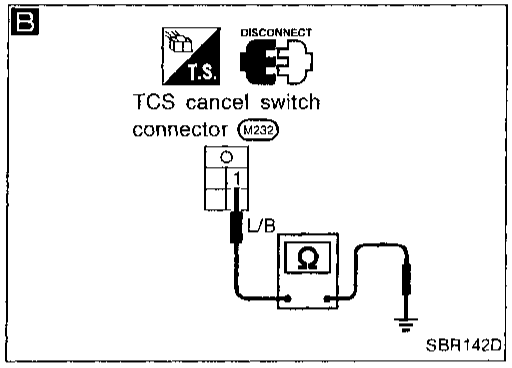

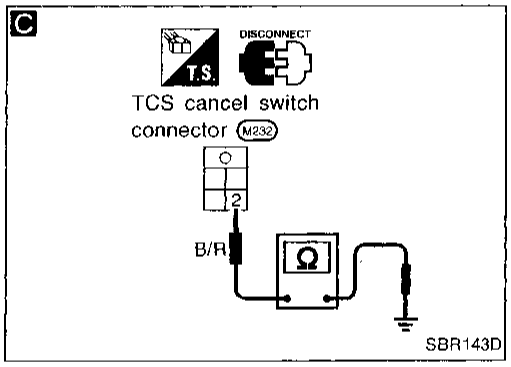

Diagnostic Procedure 9

INOPERATIVE TCS CANCEL SWITCH

CHECK TCS CANCEL SWITCH.
Refer to TCS CANCEL SWITCH in Electrical Components Inspection, BR-126.

NG → Replace TCS cancel switch.

OK ↓

A

- Disconnect connector from TCS C/U.
- Check continuity between terminal ㉘ for TCS C/U connector and terminal ① for TCS cancel switch connector.
  Continuity should exist.

NG → Repair harness and connectors.

OK ↓

B

- Check continuity between terminal ① for TCS cancel switch connector and ground.
  Continuity should not exist.

NG → Repair harness and connectors.

OK ↓

C

- Check continuity between terminal ② for TCS cancel switch connector and ground.
  Continuity should exist.

NG → Repair harness and connectors.

OK ↓

Final check

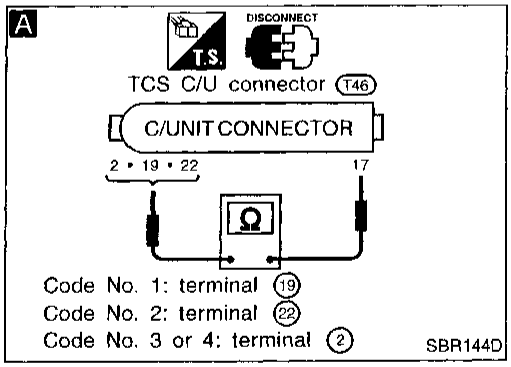

Diagnostic Procedure 10

SOLENOID CIRCUIT FOR ABS ACTUATOR (Code No. 1, 2, 3 or 4 of TCS C/U) (Code No. 13 of TCM)

A

THRTL POS/S-2 SIG
(Meaning TCS C/U in fail-safe mode)

OK → Replace TCS C/U.

SOLENOID CIRCUIT FOR ABS ACTUATOR

Check resistance between TCS C/U connector terminals and ground.
Code No. 1: Terminal ⑲ and ⑰
Code No. 2: Terminal ㉒ and ⑰
Code No. 3 or 4: Terminal ② and ⑰
Resistance: 0.8 - 1.2Ω

NG ↓

Ⓐ

Diagnostic Procedure 10 (Cont'd)

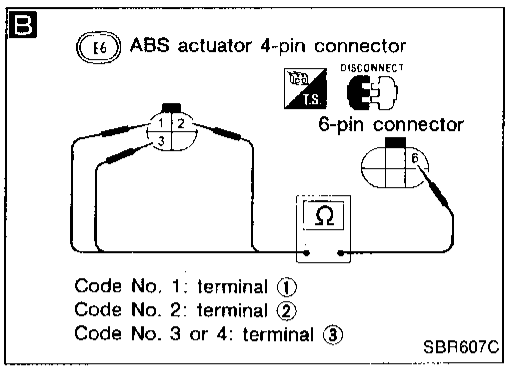

Ⓐ

B

- Disconnect 4-pin and 6-pin connectors from ABS actuator.
- Check resistance between ABS actuator connector (actuator side) terminals and ground.
  Code No. 1: Terminal ① and ⑥
  Code No. 2: Terminal ② and ⑥
  Code No. 3 or 4: Terminal ③ and ⑥
  Resistance: 0.8 - 1.2Ω

NG → Replace actuator.

OK ↓

Repair harness and connectors between actuator connector and TCS C/U connector.

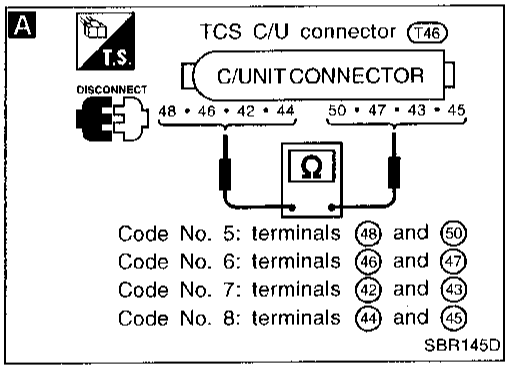

Diagnostic Procedure 11

WHEEL SENSOR CIRCUIT (Code No. 5, 6, 7 or 8 of TCS C/U) (Code No. 13 of TCM)

A

THRTL POS/S-2 SIG

(Meaning TCS C/U in fail-safe mode)

OK → Carry out Preliminary Check 2. (See page BR-85.)

NG → Repair or replace relevant part(s).

OK → Ⓐ

Ⓐ → Replace TCS C/U.

WHEEL SENSOR CIRCUIT

Check resistance between TCS C/U connector terminals.
Code No. 5: Terminals ㊽ and ㊿
Code No. 6: Terminals ㊻ and ㊼
Code No. 7: Terminals ㊷ and ㊸
Code No. 8: Terminals ㊹ and ㊺
Resistance: 0.9 - 1.1 kΩ

NG ↓

CHECK WHEEL SENSOR.
Refer to WHEEL SENSOR in Electrical Components Inspection, BR-126.

NG → Repair harness or replace wheel sensor.

OK ↓

Repair harness and connectors between wheel sensor connector and TCS C/U connector.

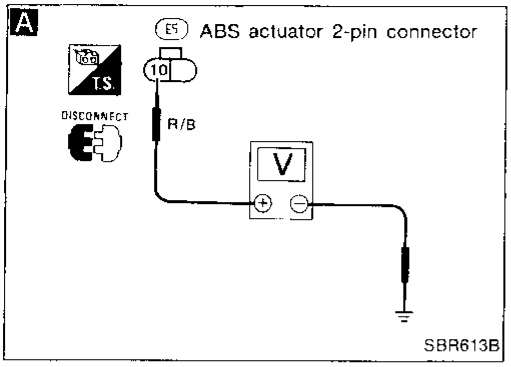

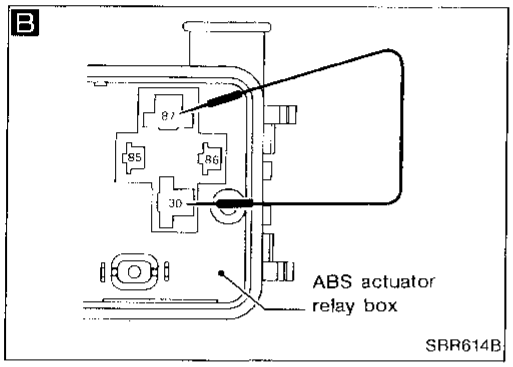

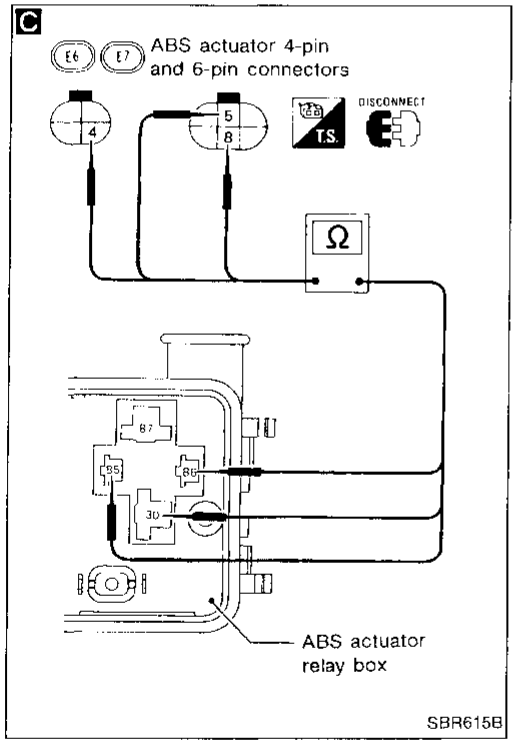

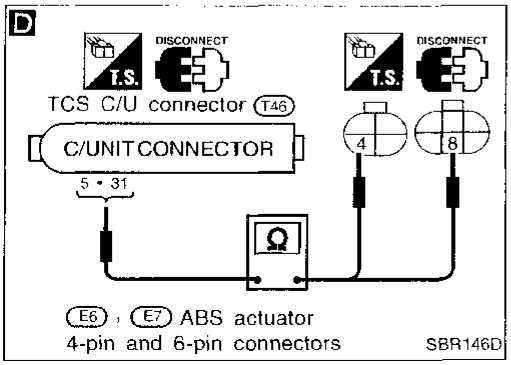

Diagnostic Procedure 12

ABS ACTUATOR MOTOR AND MOTOR RELAY CIRCUIT (Code No. 9 of TCS C/U) (Code No. 13 of TCM)

A

THRTL POS/S-2 SIG
(Meaning TCS C/U in fail-safe mode)

POWER SUPPLY CIRCUIT FOR ABS ACTUATOR MOTOR

Check voltage between 2-pin ABS actuator connector terminal ⑩ and ground.
Battery voltage should exist.

NG → • Repair harness and connectors. or • Replace fusible link.

OK ↓

B

ABS ACTUATOR MOTOR OPERATION

- Connect connector to ABS actuator and remove ABS actuator motor relay.
- Check ABS actuator motor operation using a jumper cable.
  DO NOT connect jumper cable for more than 5 seconds to prevent motor damage.
  Motor should be operated.

NG → • Repair cable from ABS actuator relay box to motor. • Repair ground wire of ABS actuator. • Replace ABS actuator.

OK ↓

CHECK ABS ACTUATOR MOTOR RELAY.
Refer to ABS ACTUATOR MOTOR RELAY in Electrical Component Inspection, BR-126.

NG → Replace ABS actuator motor relay.

OK ↓

C

- Disconnect connectors from ABS actuator.
- Check continuity between connector terminals (actuator side) and motor relay terminals.
  ④ to ㉚, ⑤ to ㊻, ⑧ to ㊺
  Continuity should exist.

NG → Replace ABS actuator.

OK ↓

D

- Disconnect connector from TCS C/U.
- Check continuity between TCS C/U connector terminals and ABS actuator connector terminals.
  ㉛ to ④, ⑤ to ⑧
  Continuity should exist.

NG → Repair harness and connectors.

OK ↓

Check TCS control unit pin terminals for damage or the connection of the control unit harness connector. Reconnect TCS control unit harness connector. Then retest.

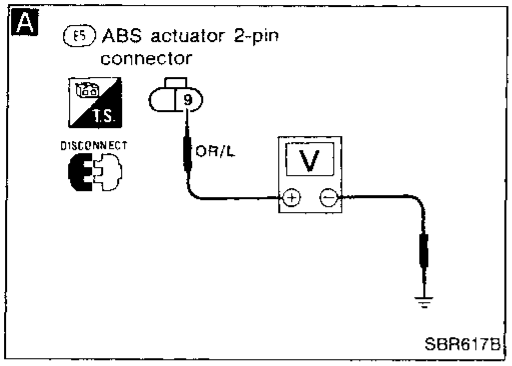

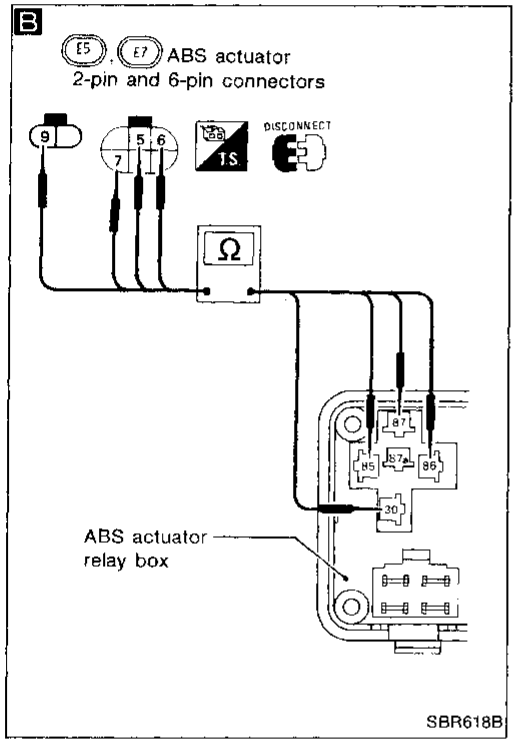

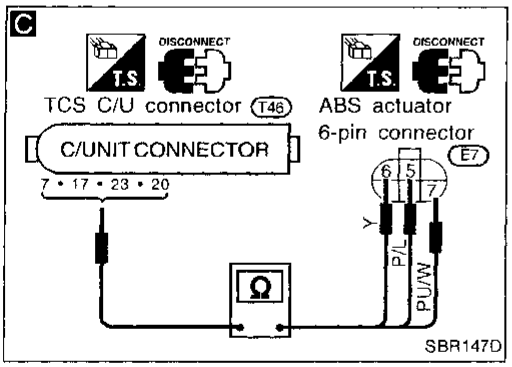

Diagnostic Procedure 13

ABS ACTUATOR SOLENOID VALVE RELAY CIRCUIT (Code No. 10 of TCS C/U) (Code No. 13 of TCM)

THRTL POS/S-2 SIG
(Meaning TCS C/U in fail-safe mode)
→ NG → Ⓐ

POWER SUPPLY CIRCUIT FOR ABS ACTUATOR SOLENOID VALVE

Check fuse No. 43.
For fuse layout, refer to foldout page Circuit Diagram.

↓ OK

A

- Disconnect 2-pin connector from ABS actuator.
- Check voltage between terminal ⑨ and ground.
  Battery voltage should exist.

→ NG → Repair harness and connector.

↓ OK

CHECK ABS ACTUATOR SOLENOID VALVE RELAY.
Refer to ABS ACTUATOR SOLENOID VALVE RELAY in Electrical Component Inspection, BR-126.

→ NG → Replace ABS actuator solenoid valve relay.

↓ OK

B

- Disconnect 6-pin connector from ABS actuator.
- Check continuity between connector terminals (actuator side) and solenoid valve relay terminals.
  ⑨ to ㊼, ⑦ to ㊺, ⑥ to ㉚, ⑤ to ㊻
  Continuity should exist.

→ NG → Replace ABS actuator.

↓ OK

C

- Disconnect connector from TCS C/U.
- Check continuity between TCS C/U connector terminals and ABS actuator connector terminals.
  ⑦ to ⑦, ⑰ to ⑥, ㉓ to ⑥, ⑳ to ⑤
  Continuity should exist.

→ NG → Repair harness and connector.

↓ OK

Check TCS control unit pin terminals for damage or the connection of the control unit harness connector.
Reconnect TCS control unit harness connector. Then retest.

Diagnostic Procedure 13 (Cont'd)

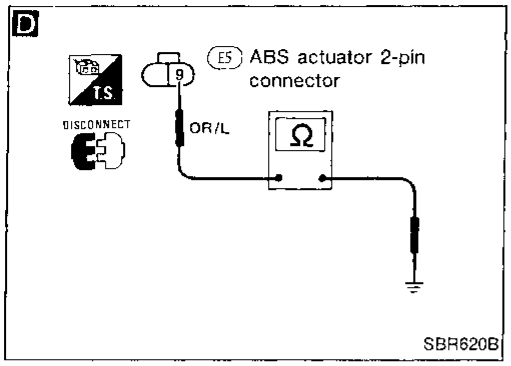

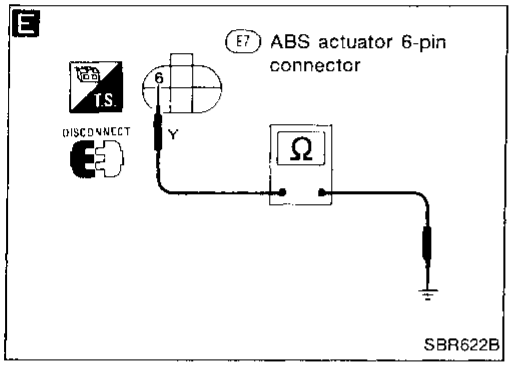

Ⓐ

- Replace fuse No. 43.
  For fuse layout, refer to foldout page of Circuit Diagram.
- Carry out self-diagnosis.
- Does TCS C/U display code No. 10 again?

No → Inspection End

Yes ↓

D

GROUND SHORT FOR POWER SUPPLY CIRCUIT FOR ABS ACTUATOR SOLENOID VALVE

- Disconnect 2-pin connector from ABS actuator.
- Check continuity between terminal ⑨ and ground before replacing with No. 43 fuse. For fuse layout, refer to foldout page of Circuit Diagram.
  Continuity should not exist.

NG → Repair harness between fuse box and ABS actuator connector.

OK ↓

E

- Disconnect connectors from TCS and ABS actuators.
- Disconnect connector from TCS C/U.
- Disconnect connector from TCS pump relay.
- Check continuity between terminal ⑥ for ABS actuator connector and ground.
  Continuity should not exist.

NG → Repair harness and connectors among as follows:
TCS C/U connector ⑰ and ㉓
TCS actuator ③ and ⑥
TCS pump relay ①
ABS actuator ⑥

OK ↓

Replace ABS actuator.

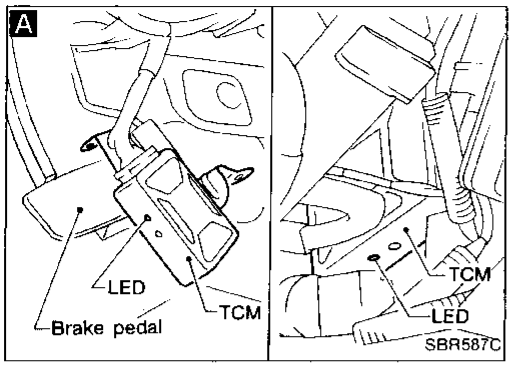

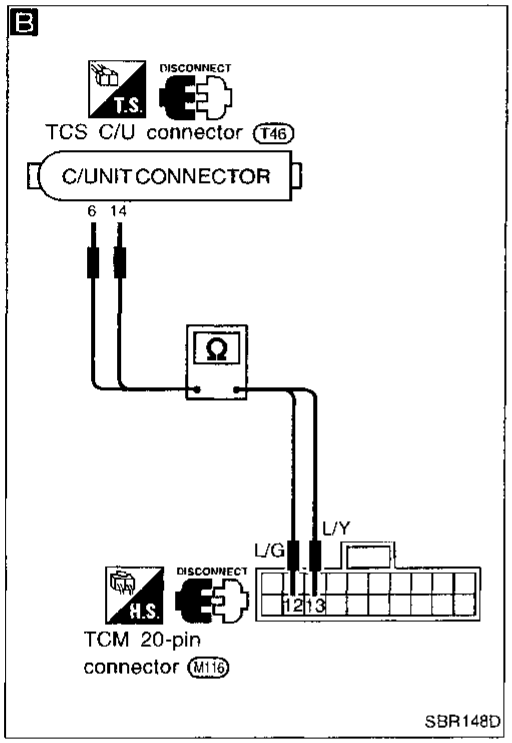

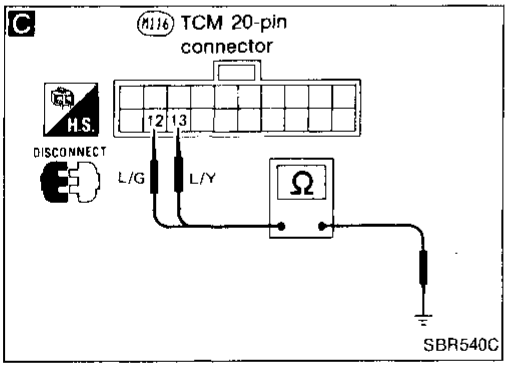

Diagnostic Procedure 14

SECONDARY THROTTLE OPENING SIGNAL CIRCUIT OR THROTTLE SIGNAL CIRCUIT (Code No. 13 of TCS C/U) (Code No. 11, 12, 13, 21, 22, 23, 24, 32, 34 of TCM)

A

Check diagnostic code for TCM.
Does TCM display any code listed above?

- Yes → Go to self-diagnosis for TCM. (See page BR-93.)
- No ↓

B

- Turn ignition switch OFF.
- Remove battery negative cable.
- Disconnect connectors from TCS C/U and TCM.
- Check continuity between connector terminals.

TCS C/U	TCM
⑥	⑫
⑭	⑬

Continuity should exist.

- NG → Repair harness and connectors.
- OK ↓

C

- Check continuity between terminal and ground.
  ⑫ to ground
  ⑬ to ground
  Continuity should not exist.

- NG → Repair harness and connectors.
- OK ↓

Final check

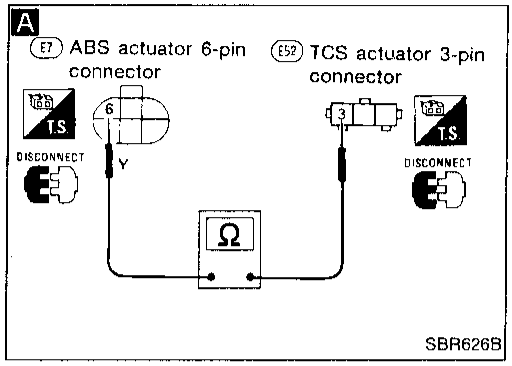

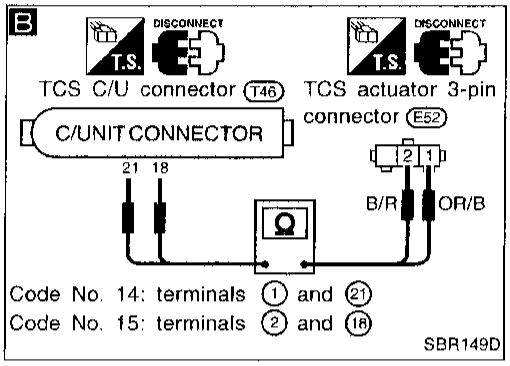

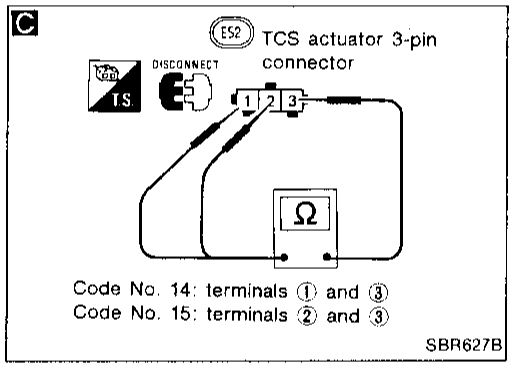

Diagnostic Procedure 15

SOLENOID CIRCUIT FOR TCS ACTUATOR (Code No. 14 or 15 of TCS C/U) (Code No. 13 of TCM)

A

THRTL POS/S-2 SIG (Meaning TCS C/U in fail-safe mode)

- Remove battery.
- Disconnect 6-pin connector from ABS actuator.
- Disconnect 3-pin connector from TCS actuator.
- Check continuity between terminal 6 for ABS actuator connector and terminal 3 for TCS actuator connector.
  Continuity should exist.

NG → Repair harness and connectors.

OK ↓

B

- Disconnect connector from TCS C/U.
- Check continuity between TCS C/U connector terminals and TCS actuator connector terminals.
  Code No. 14: 1 and 21
  Code No. 15: 2 and 18
  Continuity should exist.

NG → Repair harness and connectors.

OK ↓

C *

- Check resistance between terminals (TCS actuator side).
  Code No. 14: 1 and 3
  Code No. 15: 2 and 3
  Resistance: 1.0 - 1.8Ω

NG → Replace TCS actuator.

Note *: It is better to remove TCS actuator in advance for accurate measurements.

OK ↓

Check TCS control unit pin terminals for damage or the connection of the control unit harness connector. Reconnect TCS control unit harness connector. Then retest.

Diagnostic Procedure 16

TCS C/U (Code No. 0 or 16 of TCS C/U) (Code No. 13 of TCM)

THRTL POS/S-2 SIG (Meaning TCS C/U in fail-safe mode)

Yes → Replace TCS C/U.

Carry out self-diagnosis again.
Does TCS C/U display Code No. 0 or 16 again?

No ↓

Inspect system again referring to displayed code No.

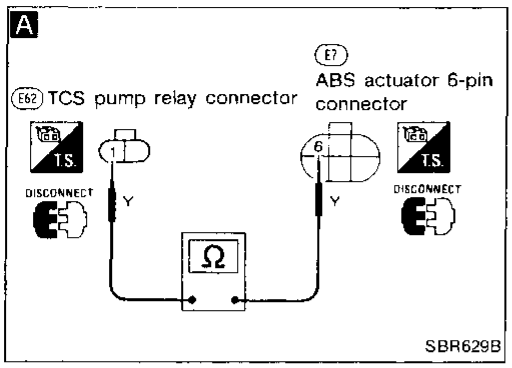

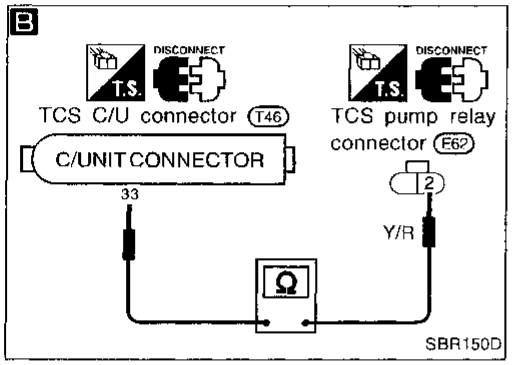

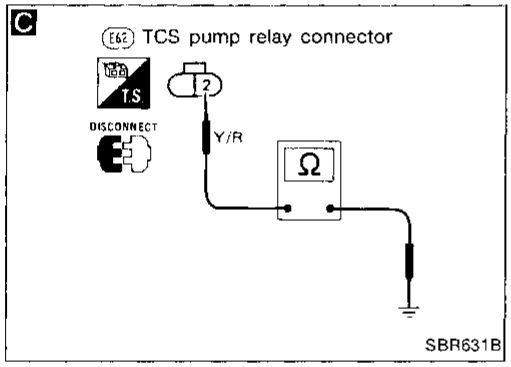

Diagnostic Procedure 17

TCS PUMP RELAY CIRCUIT (Code No. 17 of TCS C/U) (Code No. 13 of TCM)

THRTL POS/S-2 SIG

(Meaning TCS C/U in fail-safe mode)

TCS PUMP RELAY CIRCUIT

- Remove battery.
- Remove TCS pump relay.

↓

CHECK TCS PUMP RELAY.
Refer to TCS PUMP RELAY in Electrical Component Inspection, BR-127.

NG → Replace TCS pump relay.

OK ↓

A

- Disconnect 6-pin connector from ABS actuator.
- Check continuity between terminal ⑥ for ABS actuator connector and terminal ① for TCS pump relay connector.

Continuity should exist.

NG → Repair harness and connectors.

OK ↓

B

- Disconnect connector from TCS C/U.
- Check continuity between terminal ㉝ for TCS C/U connector and terminal ② for TCS pump relay connector.

Continuity should exist.

NG → Repair harness and connector.

OK ↓

C

- Check continuity between terminal ② for TCS pump relay connector and ground.

Continuity should not exist.

NG → Repair harness and connector.

OK ↓

Check TCS control unit pin terminals for damage or the connection of the control unit harness connector. Reconnect TCS control unit harness connector. Then retest.

Diagnostic Procedure 18

TCS OPERATING OIL PRESSURE (Code No. 18 of TCS C/U) (Code No. 13 of TCM)

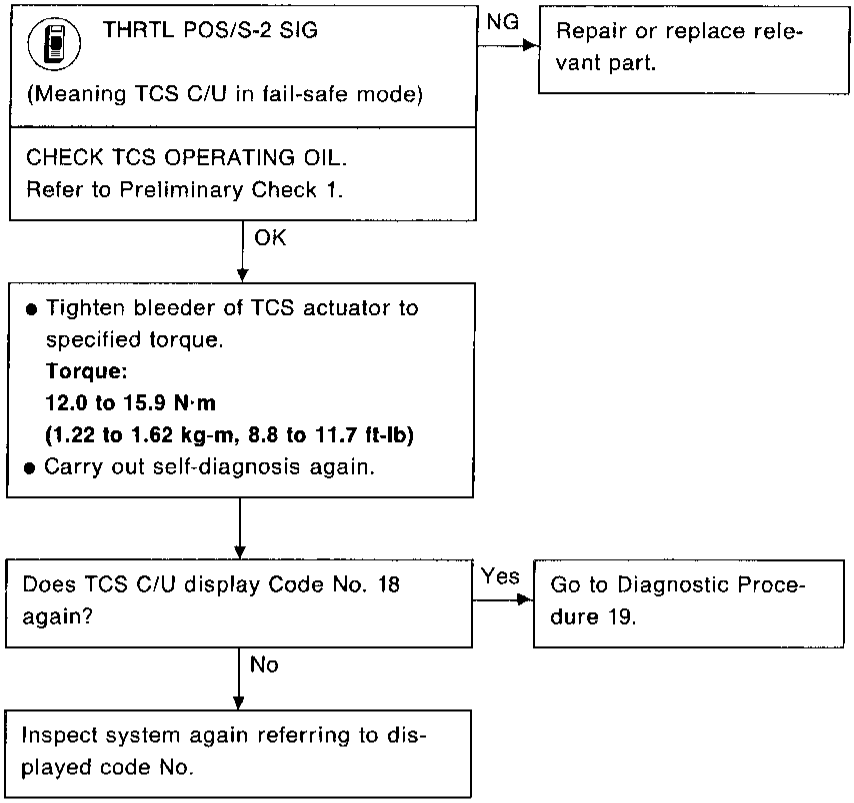

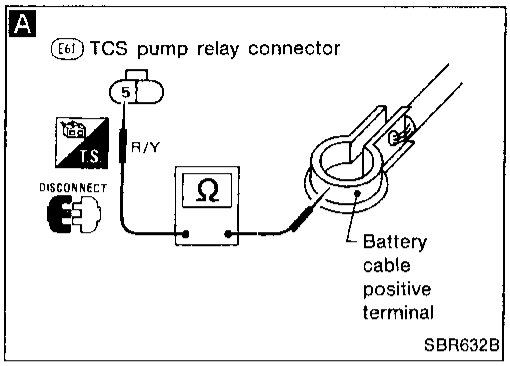

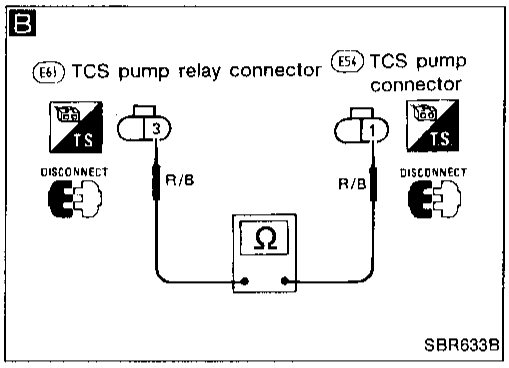

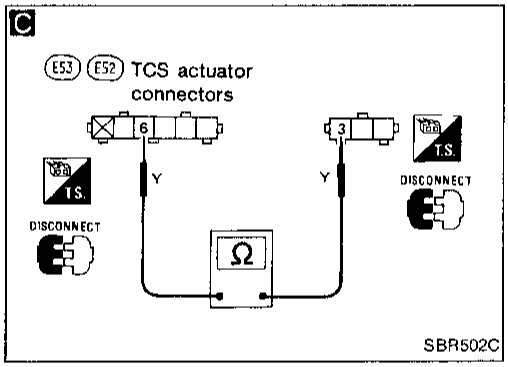

Diagnostic Procedure 19

TCS MOTOR CIRCUIT AND TCS ACTUATOR (Code No. 19 of TCS C/U) (Code No. 13 of TCM)

THRTL POS/S-2 SIG
(Meaning TCS C/U in fail-safe mode)
Does TCS pump operate while engine is running?

- Yes → Ⓐ
- No ↓

TCS MOTOR CIRCUIT
- Check 30A fusible link.

- NG → Ⓑ
- OK ↓

- Remove battery.
- Remove TCS pump relay.

CHECK TCS PUMP RELAY.
Refer to TCS PUMP RELAY in Electrical Component Inspection, BR-127.

- NG → Replace TCS pump relay.
- OK ↓

A

- Check continuity between positive terminal for battery cable and terminal ⑤ for TCS pump relay connector.
  Continuity should exist.

- NG → Repair harness and connector.
- OK ↓

CHECK TCS PUMP.
Refer to TCS PUMP in Electrical Component Inspection, BR-127.

- NG → • Repair TCS pump harness. or • Replace TCS pump.
- OK ↓

B

- Check continuity between terminal ③ for TCS pump relay connector and terminal ① for TCS pump connector.
  Continuity should exist.

- NG → Repair harness and connectors.
- OK ↓

C

- Disconnect connectors from TCS actuator.
- Check continuity between terminals ③ and ⑥ for TCS actuator connectors.
  Continuity should exist.

- NG → Repair harness and connectors.
- OK → Ⓐ

Diagnostic Procedure 19 (Cont'd)

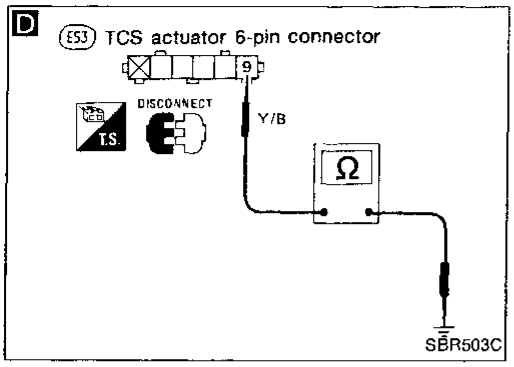

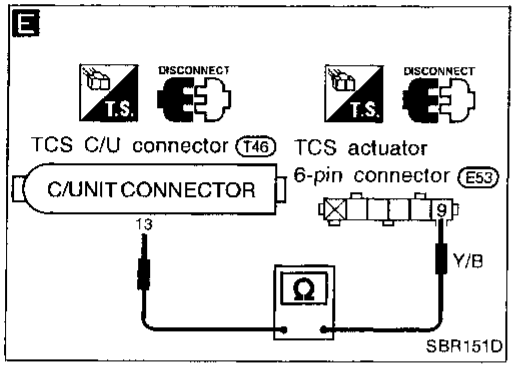

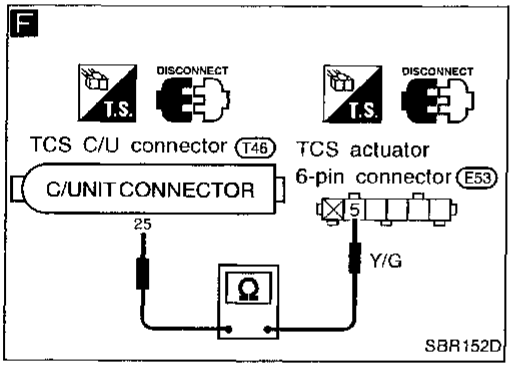

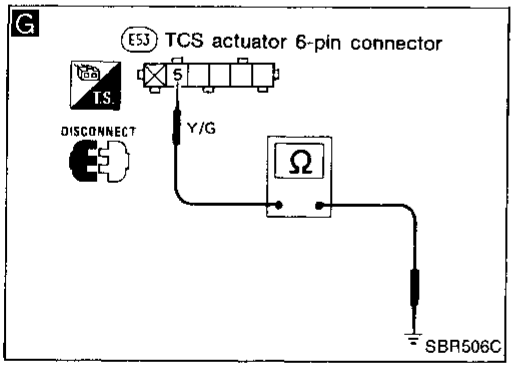

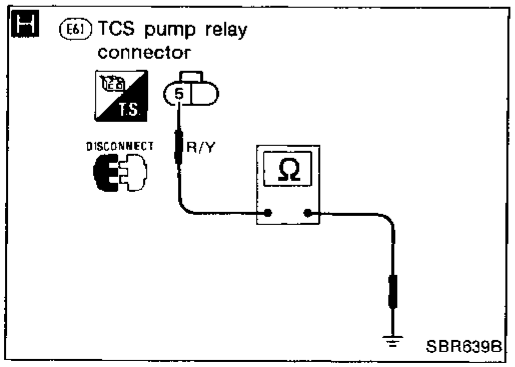

Ⓐ

D

- Disconnect connector from TCS C/U.
- (● Disconnect 6-pin connector from TCS actuator.)
- Check continuity between terminal ⑨ for TCS actuator connector and ground.

Continuity should not exist.

NG → Repair harness and connectors.

OK ↓

E

- Check continuity between terminal ⑨ for TCS actuator connector and terminal ⑬ for TCS C/U connector.

Continuity should exist.

NG → Repair harness and connectors between terminal ⑨ for TCS actuator connector and terminal ⑬ for TCS C/U connector.

OK ↓

F

- Check continuity between terminal ⑤ for TCS actuator connector and terminal ㉕ for TCS C/U connector.

Continuity should exist.

NG → (to G)

OK ↓

G

- Check continuity between terminal ⑤ for TCS actuator connector and ground.

Continuity should not exist.

NG → Repair harness and connectors.

OK ↓

Ⓑ

H

- (● Remove battery.)
- (● Remove TCS pump relay.)
- (● Disconnect connector from TCS motor.)
- Check continuity between terminal ⑤ for TCS pump relay connector and ground.

Continuity should not exist.

NG → Repair harness and connectors between terminal ⑤ for TCS pump relay connector and fuse box.

OK ↓

Ⓒ

Diagnostic Procedure 19 (Cont'd)

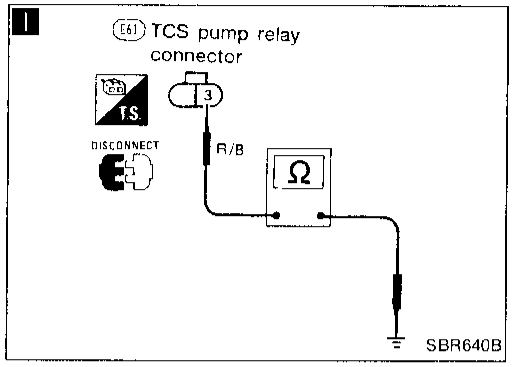

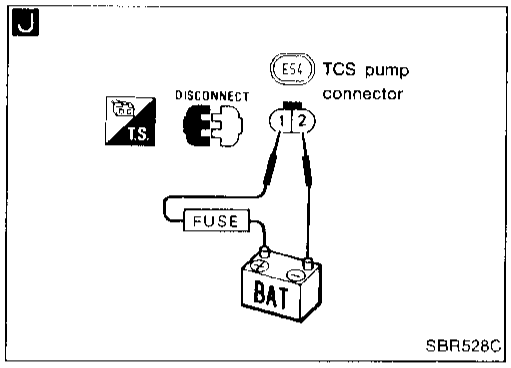

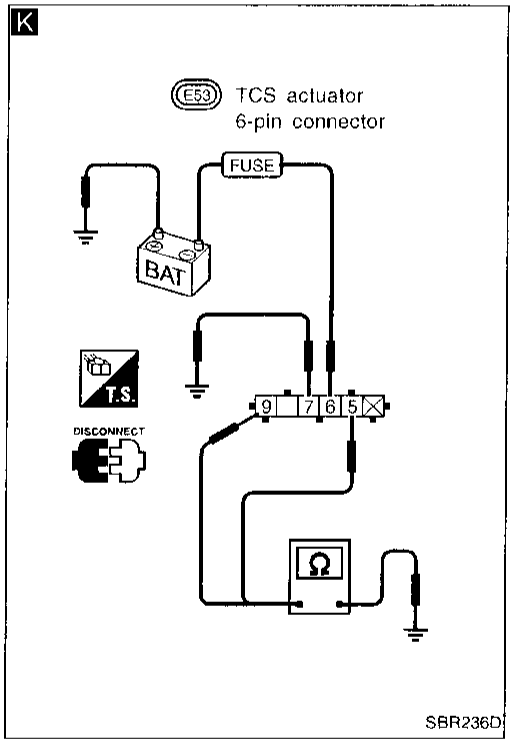

Ⓒ

I

- Check continuity between terminal ③ for TCS pump relay connector and ground.
  Continuity should not exist.

NG → Repair harness between terminal ③ for TCS pump relay connector and terminal ① for TCS pump connector.

OK ↓

J

- Tighten bleeder of TCS actuator to specified torque.
  Torque:
  12.0 to 15.9 N·m
  (1.22 to 1.62 kg-m, 8.8 to 11.7 ft-lb)
- Apply battery voltage to TCS pump for only 5 SECONDS.
  Pay attention to the polarity.

↓

K

- Apply battery voltage to terminal ⑥ for TCS actuator with suitable wire.
- Connect terminal ⑦ for TCS actuator and ground with a suitable wire.
  Pay attention so as not to short circuit for both wires.
- Check continuity between terminals ⑤ and ⑨ for TCS actuator and ground under the following conditions.
  Before loosening bleeder of TCS actuator:
  Continuity should not exist.
  After loosening bleeder of TCS actuator:
  Continuity should exist.

NG → Replace TCS actuator.

OK ↓

Final check

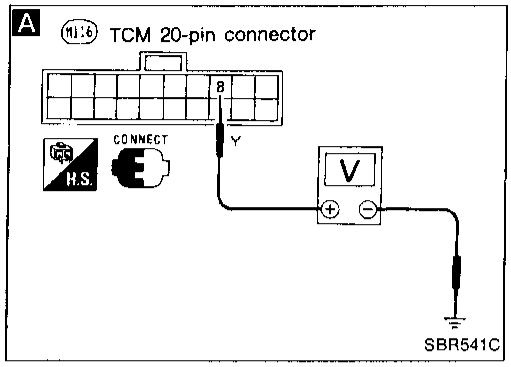

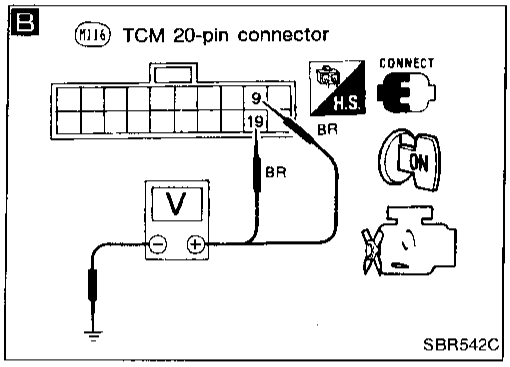

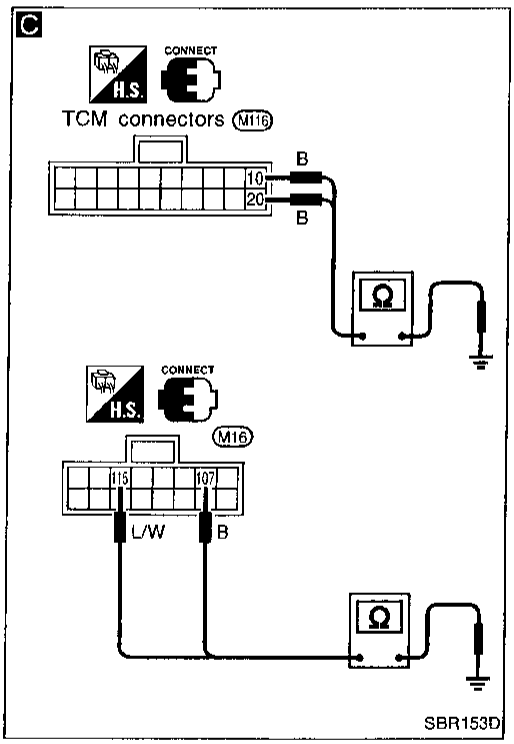

Diagnostic Procedure 20

POWER SUPPLY AND GROUND CIRCUIT FOR TCM (Code No. 13 of TCS C/U) (Code No. 0 ... LED of TCM does not blink)

A

POWER SUPPLY AND GROUND CIRCUIT FOR TCM

- Check voltage between terminal ⑧ and ground.
  Battery voltage should exist.

NG → Repair harness and connectors.

OK ↓

B

- Check voltage between terminals ⑨, ⑲ and ground when ignition switch is turned ON.
  Battery voltage should exist.

NG → Repair harness and connectors.

OK ↓

C

- Check continuity between terminals ⑩, ⑳, (103), (115) and ground.
  Continuity should exist.

NG → Repair harness and connectors.

OK ↓

Check TCM control unit pin terminals for damage or the connection of the control unit harness connector. Reconnect TCM control unit harness connector. Then retest.

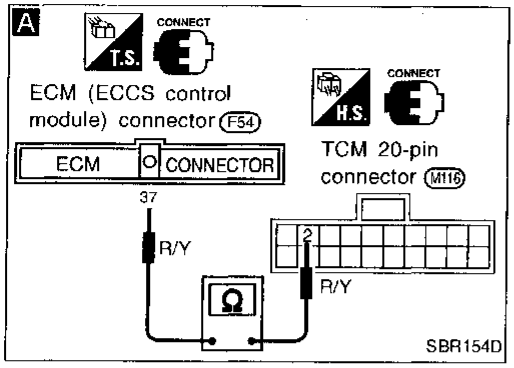

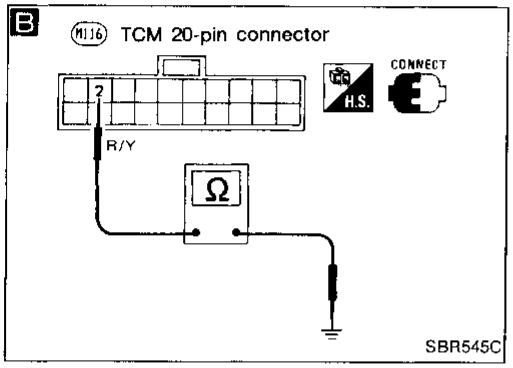

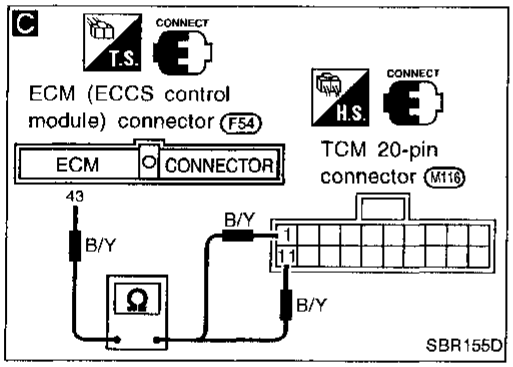

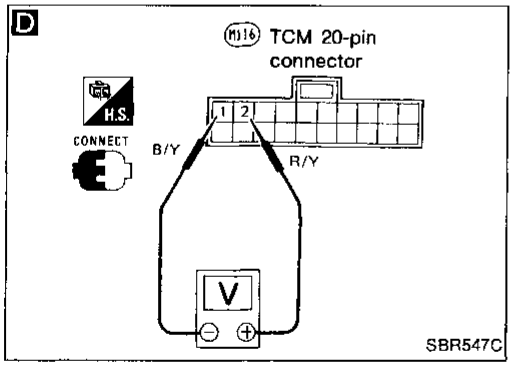

Diagnostic Procedure 21

THROTTLE POSITION SENSOR SIGNAL INPUT CIRCUIT (Code No. 13 of TCS C/U) (Code No. 11 of TCM)

THROTTLE POSI SEN

Does TCS C/U display code No. 13?

- No → Inspect system referring to code No. displayed by TCS C/U.
- Yes ↓

Does ECM (ECCS control module) display code No. 43?

- Yes → Check ECM. Refer to "TROUBLE DIAGNOSES" in EC section.
- No ↓

A

THROTTLE POSITION SENSOR SIGNAL INPUT CIRCUIT

- Check continuity between terminal ② for TCM and terminal ㊲ for ECM.
  Continuity should exist.

- NG → Repair harness and connectors.
- OK ↓

B

- Check continuity between terminal ② for TCM and ground.
  Continuity should not exist.

- NG → Repair harness and connectors.
- OK ↓

C

Check continuity between terminals ①, ⑪ for TCM and terminal ㊸ for ECM (ECCS control module).
Continuity should exist.

- NG → Repair harness and connector.
- OK ↓

D

Check voltage between terminal ② and terminal ① for TCM.
0.3V to 3.3V should exist depending on accelerator position.

- NG → Replace ECM (ECCS control module).
- OK ↓

Check TCM control unit pin terminals for damage or the connection of the control unit harness connector. Reconnect TCM control unit harness connector. Then retest.

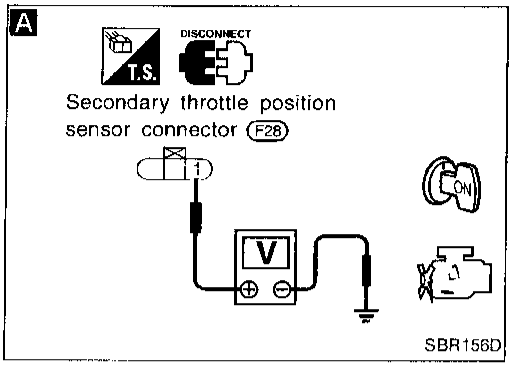

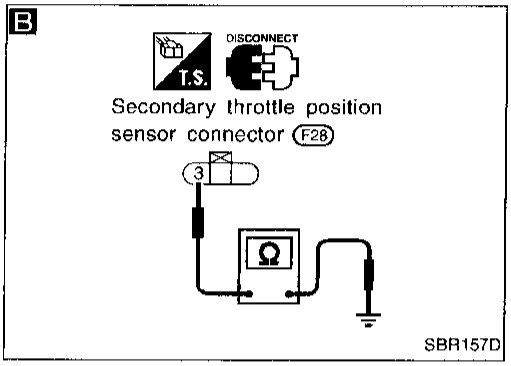

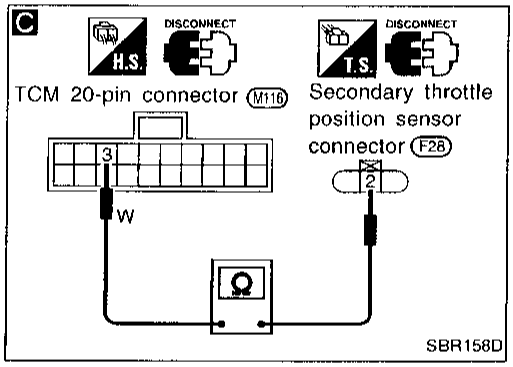

Diagnostic Procedure 22

SECONDARY THROTTLE POSITION SENSOR SIGNAL INPUT CIRCUIT (Code No. 13 of TCS C/U) (Code No. 12 of TCM)

A

THROTTLE POSI SEN2

POWER SUPPLY FOR SECONDARY THROTTLE POSITION SENSOR

Check voltage between terminal ① for secondary throttle position sensor connector and ground when ignition switch is "ON".
Voltage: Approx. 5V

NG → Repair harness and connectors between terminal ⑮ for TCM connector, ㊽ for ECM (ECCS control module) connector and terminal ⓒ.

OK ↓

B

GROUND CIRCUIT

Check continuity between terminal ③ for secondary throttle position sensor connector and ground when ignition switch is "OFF".
Continuity should exist.

NG → Repair harness and connectors between terminals ①, ⑪ for TCM connector, ㉚ for ECM (ECCS control module) connector and terminal ⓐ.

OK ↓

C

- Disconnect 20-pin connector from TCM.
- Check continuity between terminal ③ for TCM connector and terminal ② for secondary throttle position sensor connector.
Continuity should exist.

NG → Repair harness and connector.

OK ↓

CHECK SECONDARY THROTTLE POSITION SENSOR.
Refer to SECONDARY THROTTLE POSITION SENSOR in EC section.

NG → Replace secondary throttle position sensor.

OK ↓

Final check

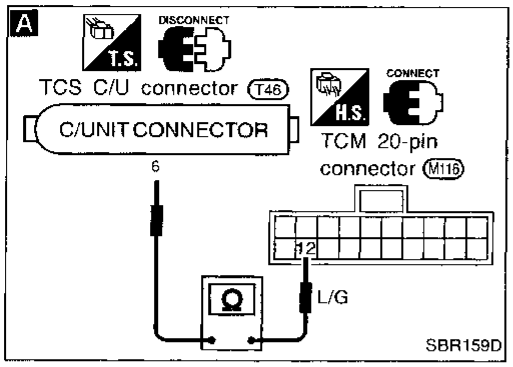

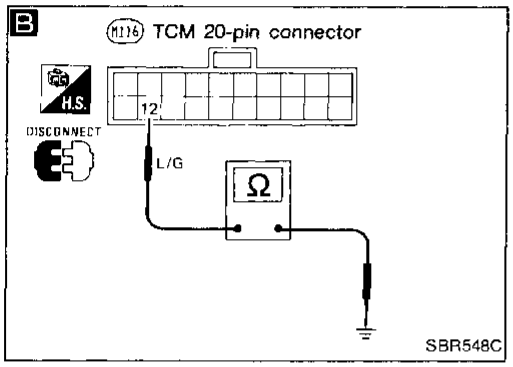

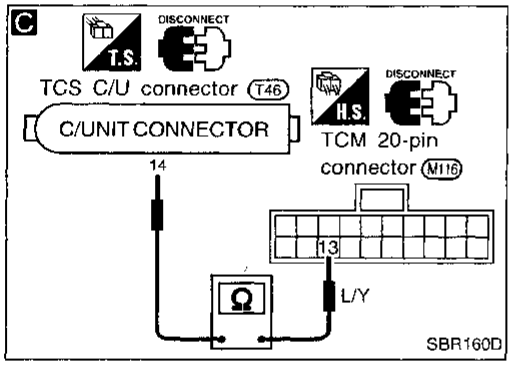

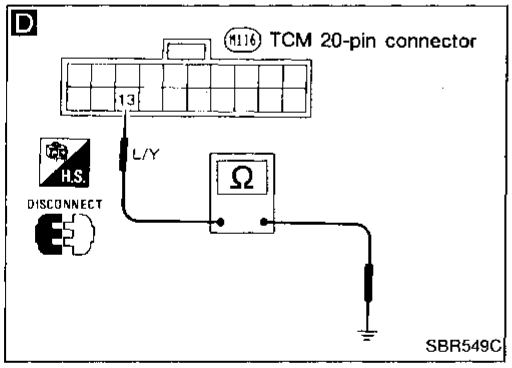

Diagnostic Procedure 23

SECONDARY THROTTLE VALVE OPERATING SIGNAL CIRCUIT AND THROTTLE VALVE OPENING SIGNAL CIRCUIT
(Code No. 13 of TCS C/U)
(Code No. 13 of TCM)

THRTL POS/S-2 SIG

Does TCS C/U display code No. 13?

- No → Inspect system referring to code No. displayed by TCS C/U.
- Yes ↓

A

SECONDARY THROTTLE VALVE OPERATING SIGNAL CIRCUIT

- Disconnect connector from TCS C/U.
- Check continuity between terminal ⑥ for TCS C/U connector and terminal ⑫ for TCM connector.
  Continuity should exist.

NG → Repair harness and connectors.

OK ↓

B

- Disconnect 20-pin connector from TCM.
- Check continuity between terminal ⑫ for TCM connector and ground.
  Continuity should not exist.

NG → Repair harness and connectors.

OK ↓

C

THROTTLE VALVE OPENING SIGNAL CIRCUIT

- Check continuity between terminal ⑭ for TCS C/U connector and terminal ⑬ for TCM connector.
  Continuity should exist.

NG → Repair harness and connectors.

OK ↓

D

- Check continuity between terminal ⑬ for TCM connector and ground.
  Continuity should not exist.

NG → Repair harness and connectors.

OK ↓

TRY A KNOWN GOOD TCM.
TRY SELF-DIAGNOSIS AGAIN.
Does TCM display code No. 13 again?

- No → Replace TCM.
- Yes ↓

Check TCM control unit pin terminals for damage or the connection of the control unit harness connector. Reconnect TCM control unit harness connector. Then retest.

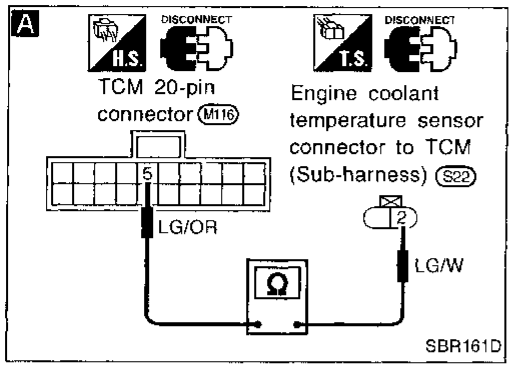

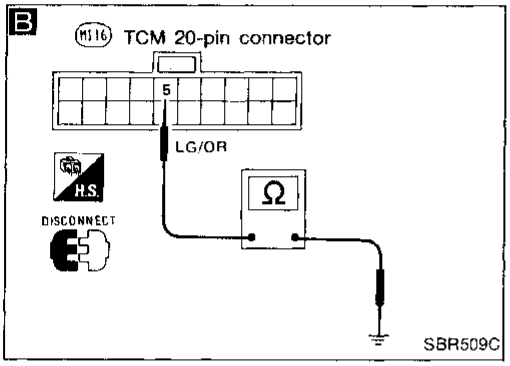

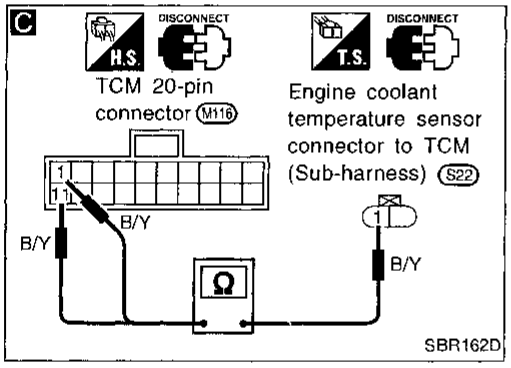

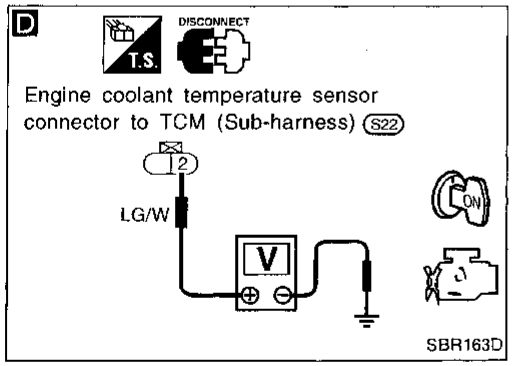

Diagnostic Procedure 24

ENGINE COOLANT TEMPERATURE SENSOR FOR TCM CIRCUIT (Code No. 14 of TCM)

A

COOLNT TEMP/S (TCM)

ENGINE COOLANT TEMPERATURE SENSOR FOR TCM CIRCUIT

- Disconnect connector from engine coolant temperature sensor for TCM and 20-pin connector from TCM.
- Check continuity between terminal ② for engine coolant temperature sensor connector for TCM and terminal ⑤ for TCM connector.
  Continuity should exist.

NG → Repair harness and connectors.

OK ↓

B

Check continuity between terminal ⑤ for TCM connector and ground.
Continuity should not exist.

NG → Repair harness and connectors.

OK ↓

C

Check continuity between terminal ① for engine coolant temperature sensor connector for TCM, terminals ① and ⑪ for TCM connector.
Continuity should exist.

NG → Repair harness and connectors.

OK ↓

CHECK ENGINE COOLANT TEMPERATURE SENSOR FOR TCM.
Refer to ENGINE COOLANT TEMPERATURE SENSOR FOR TCM in Electrical Component Inspection, BR-127.

NG → Replace engine coolant temperature sensor for TCM.

OK ↓

D

- Connect connector to TCM.
- Turn ignition switch ON.
- Check voltage between terminal ② for engine coolant temperature sensor for TCM and ground.
  Voltage: Approx. 4.8V

OK → Final check

NG ↓

Check TCM control unit pin terminals for damage or the connection of the control unit harness connector.
Reconnect TCM control unit harness connector. Then retest.

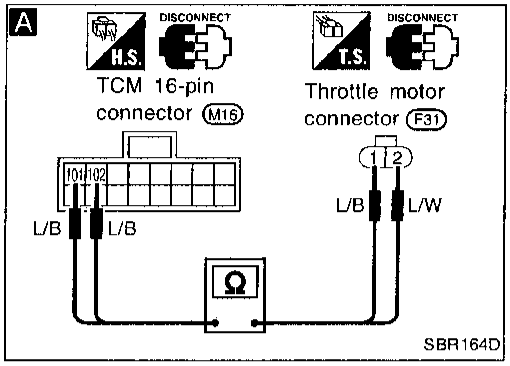

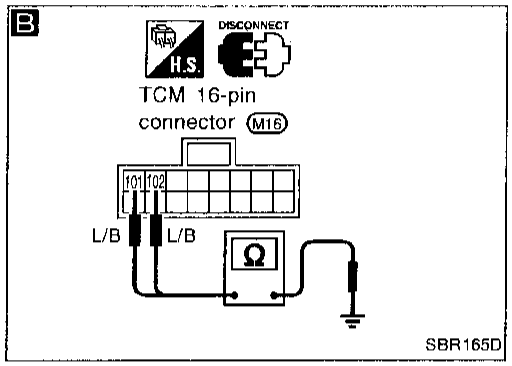

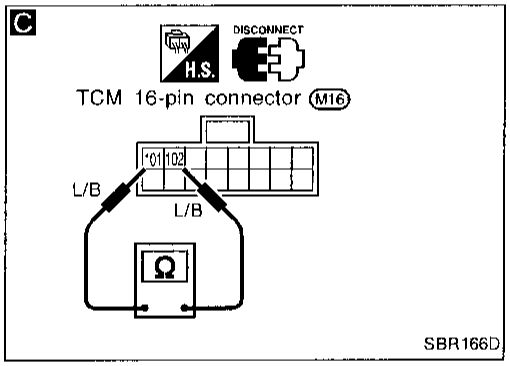

Diagnostic Procedure 25

THROTTLE MOTOR CIRCUIT (Code No. 13 of TCS C/U) (Code No. 21 and 22 of TCM)

A

THROTTLE MOTOR CIRCUIT FOR OPEN

- Disconnect 16-pin connector from TCM and connector from throttle motor.
- Check continuity.

TCM	Motor
101	1
102	2

Continuity should exist.

NG → Repair harness and connectors.

OK ↓

B

THROTTLE MOTOR CIRCUIT FOR SHORT

- Check continuity between terminals 101, 102 for TCM connector and ground.

Continuity should not exist.

NG → Repair harness and connectors.

OK ↓

C

- Disconnect connector from throttle motor.
- Check continuity between terminals 101 and 102 for TCM connector.

Continuity should not exist.

NG → Repair harness and connectors.

OK ↓

CHECK THROTTLE MOTOR.
Refer to THROTTLE MOTOR in Electrical Component Inspection, BR-128.

NG → Replace throttle motor.

OK ↓

Final Check

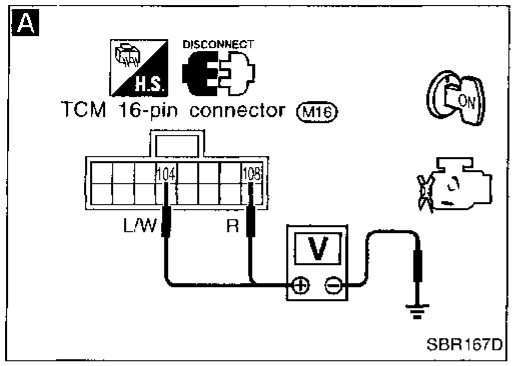

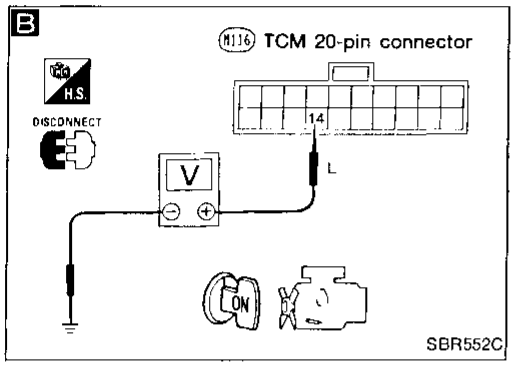

Diagnostic Procedure 26

THROTTLE MOTOR RELAY CIRCUIT FOR SHORT CIRCUIT
(Code No. 13 of TCS C/U)
(Code No. 23 of TCM)

A

THROTTLE MOTOR RLY [SHORT] (-a)

- Disconnect connectors from TCM.
- Check voltage between terminals 104 or 108 for TCM connector and ground when IGN sw is turned ON.
  Battery voltage should not exist.

OK → Final check

NG ↓

B

- Check voltage between terminal 14 and ground when IGN sw is turned ON.
  Battery voltage should exist.

NG → Repair harness and connector between terminal 2 for throttle motor relay connector and terminal 14 for TCM connector.

OK ↓

CHECK THROTTLE MOTOR RELAY

- Refer to THROTTLE MOTOR RELAY in Electrical Component Inspection, BR-127.

NG → Replace throttle motor relay.

OK ↓

Inspect throttle motor relay connector harness for short circuit.

NG → Repair harness and connector.

OK ↓

Final check

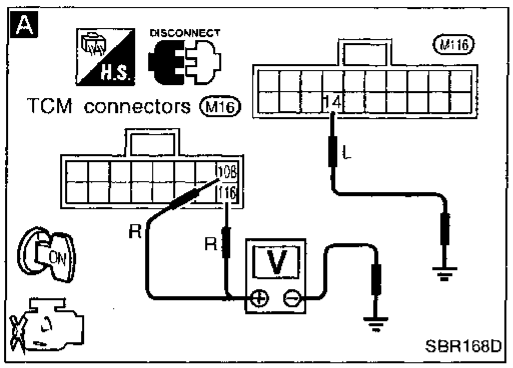

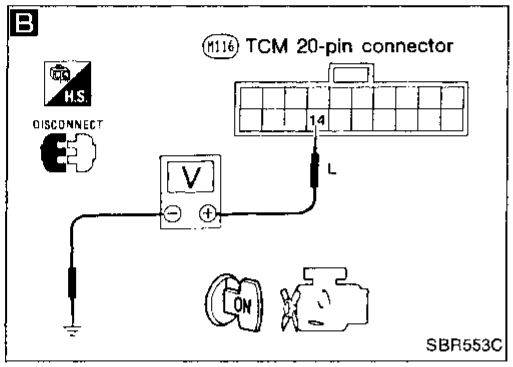

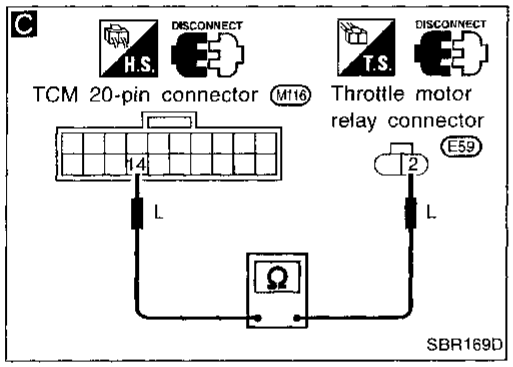

Diagnostic Procedure 27

THROTTLE MOTOR RELAY CIRCUIT FOR OPEN CIRCUIT (Code No. 13 of TCS C/U) (Code No. 24 of TCM)

A

THROTTLE MOTOR RLY [OPEN] (·b)

THROTTLE MOTOR RELAY CIRCUIT

- Disconnect connectors from TCM.
- Turn ignition switch ON.
- Check voltage between the following terminals by grounding terminal ⑭.

TCM	Motor
116	Ground
108	Ground

Battery voltage should exist.

OK → Final check

NG ↓

B

Check voltage between terminal ⑭ for TCM connector and ground.
Battery voltage should exist.

OK → Ⓐ

NG ↓

CHECK THROTTLE MOTOR RELAY.
- Remove battery.
- Remove throttle motor relay.
- Refer to THROTTLE MOTOR RELAY in Electrical Component Inspection, BR-127.

NG → Replace throttle motor relay.

OK ↓

C

- Check continuity between terminal ⑭ for TCM connector and terminal ② for throttle motor relay connector.
Continuity should exist.

NG → Repair harness and connectors.

OK ↓

Repair harness and connector between terminal ① for throttle motor relay connector and right side terminal of fuse No. 20 in fuse box.
For fuse layout, refer to foldout page of Circuit Diagram.

Diagnostic Procedure 27 (Cont'd)

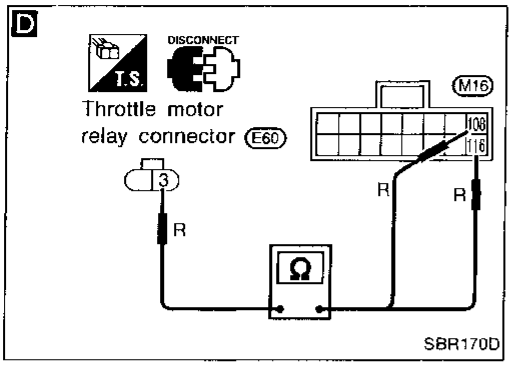

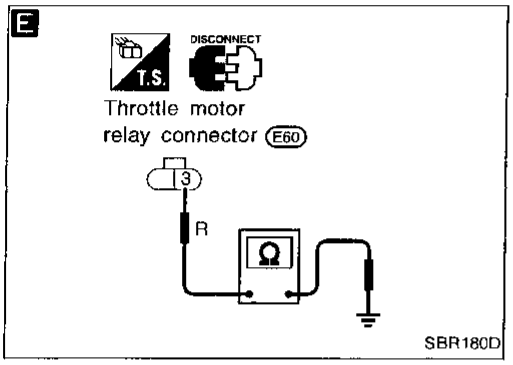

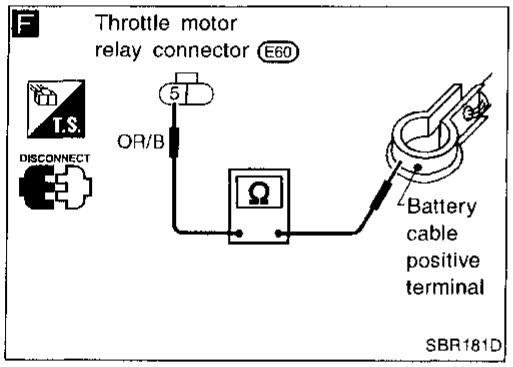

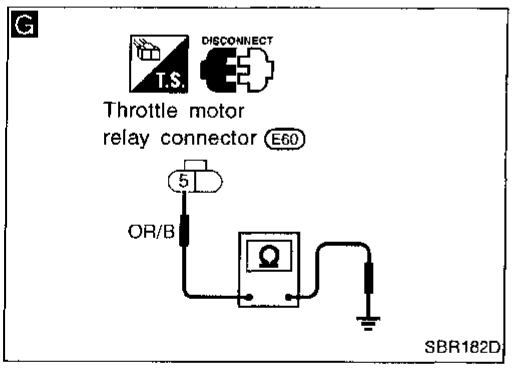

Ⓐ

Is this the first time?

- Yes → If fuse No. 42 is blown, replace fuse and check first step again. If fuse No. 42 is not blown, follow the next step. For fuse layout, refer to foldout page of Circuit Diagram.
- No ↓

CHECK THROTTLE MOTOR RELAY.
- Remove battery.
- Remove throttle motor relay.
- Refer to THROTTLE MOTOR RELAY in Electrical Component Inspection, BR-127.

NG → Replace throttle motor relay.

OK ↓

D

- Check continuity between terminal ③ for throttle motor relay connector and terminals (116) and (108) for TCM connector.
  Continuity should exist.

NG → Repair harness and connectors.

OK ↓

E

- Check continuity between terminal ③ for throttle motor relay connector and ground.
  Continuity should not exist.

NG → Repair harness and connectors.

OK ↓

F

- Replace fuse No. 43 if fuse is blown. For fuse layout, refer to foldout page of Circuit Diagram.
- Check continuity between terminal ⑤ for throttle motor relay connector and positive terminal for battery cable.
  Continuity should exist.

NG → Repair harness and connectors.

OK ↓

G

- Check continuity between terminal ⑤ for throttle motor relay connector and ground.
  Continuity should not exist.

NG → Repair harness and connectors.

OK ↓

Final check

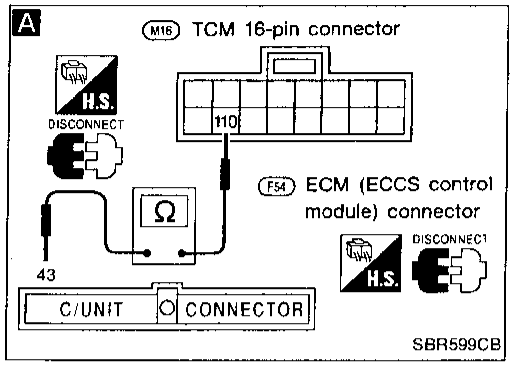

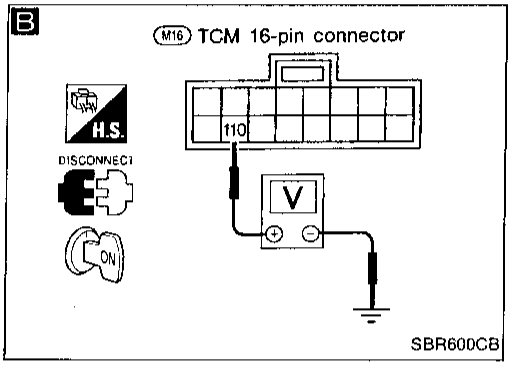

Diagnostic Procedure 28

START SIGNAL CIRCUIT (Code No. 31 of TCM)

A

- Turn ignition switch OFF.
- Disconnect connectors from TCM and ECM (ECCS control module).
- Check continuity between terminal (110) for TCM connector and terminal (43) for ECM (ECCS control module) connector.

Continuity should not exist.

NG → Repair harness and connector.

OK ↓

B

- Reconnect ECM connector.
- Turn ignition switch ON.
- Check voltage between terminal (110) for TCM connector and ground.

Voltage: Approx. 12V

NG → Repair harness and connectors between terminal (110) for TCM connector and ignition switch.

OK ↓

Final check

Diagnostic Procedure 29

SECONDARY THROTTLE RETURN SPRING (Code No. 13 of TCS C/U) (Code No. 32 of TCM)

THRTL/V RETURN SPR

Erase self-diagnosis results from TCM memory.
TRY SELF-DIAGNOSIS AGAIN.
Does TCM display code No. 32 again?

No → Inspect system again referring displayed code No.

Yes ↓

Replace secondary throttle return spring. (See page BR-67.)

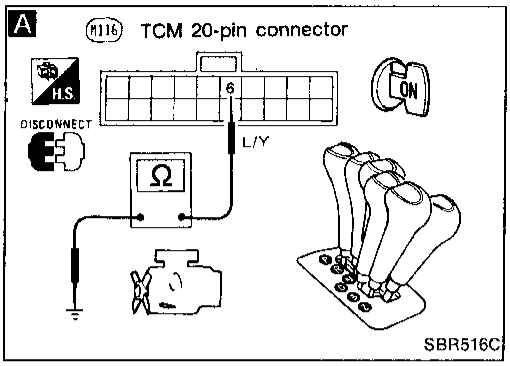

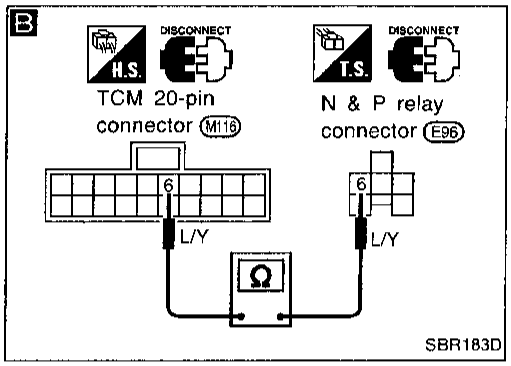

Diagnostic Procedure 30

NEUTRAL POSITION SWITCH CIRCUIT (Code No. 33 of TCM)

NEUTRAL POSI SW

Does TCM display code No. 33 still when shifting selector lever to all positions with ignition switch ON?

No → INSPECTION END

Yes ↓

A

- Disconnect 20-pin connector from TCM.
- Turn ignition switch ON.
- Check continuity between terminal ⑥ and ground when shifting selector lever to all positions.

Continuity should exist when shifting to "P" and "N".
Continuity should not exist when shifting to other than "P" and "N".

OK → INSPECTION END

NG ↓

B

- Turn ignition switch OFF.
- Remove N & P relay.
- Check continuity between terminal ⑥ for TCM connector and terminal ⑥ for N & P relay connector.

Continuity should exist.

NG → Repair harness and connectors.

OK ↓

Ⓐ

Diagnostic Procedure 30 (Cont'd)

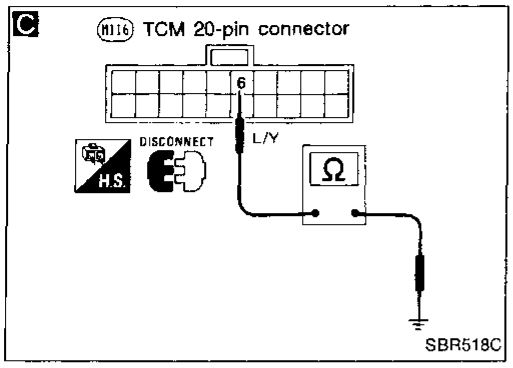

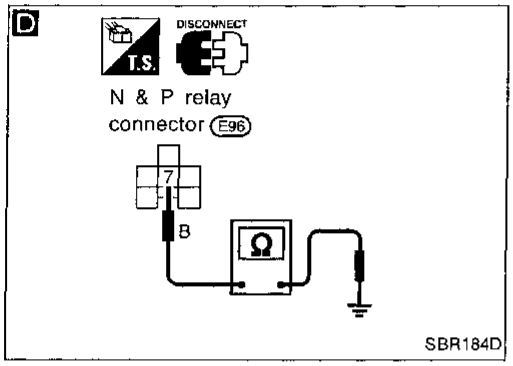

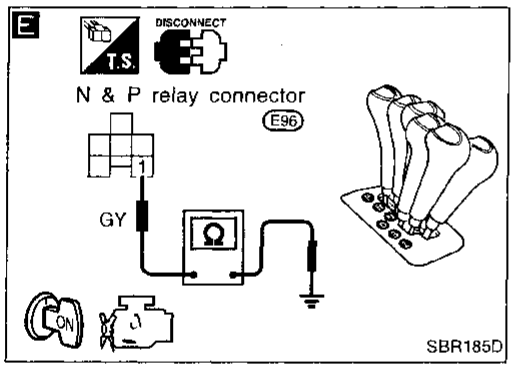

Ⓐ

C

Check continuity between terminal ⑥ for TCM connector and ground.
Continuity should exist.

NG → Repair harness and connectors.

OK ↓

D

Check continuity between terminal ⑦ for N & P relay connector and ground.
Continuity should exist.

NG → Repair harness and connectors.

OK ↓

CHECK N & P RELAY.
Refer to N & P RELAY in Electrical Component Inspection, BR-127.

NG → Replace N & P relay.

OK ↓

E

- Turn ignition switch ON.
- Check voltage between terminal ① for N & P relay connector and ground when shifting selector lever to "P" & "N".

Battery voltage should exist.

OK → Repair harness and connectors between terminal ② for N & P relay connector and ground.

NG ↓

CHECK INHIBITOR SWITCH.
Refer to INHIBITOR SWITCH in Electrical Component Inspection, BR-127.

NG → Replace inhibitor switch.

OK ↓

Check continuity between terminals ④ and ⑥ for inhibitor switch connector and terminal ① for N & P relay connector.

NG → Repair harness and connectors.

OK ↓

Repair harness and connectors between terminal ③ for inhibitor switch connector and fuse block.
or
Check No. 1 fuse. For fuse layout, refer to foldout page of Circuit Diagram.

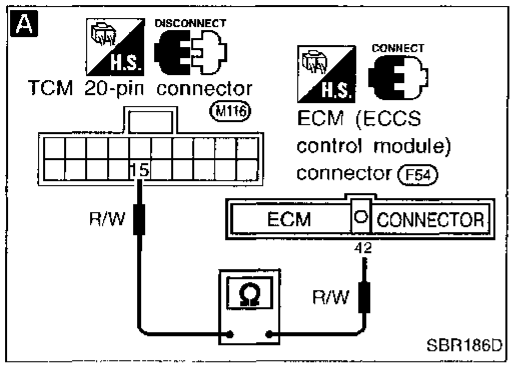

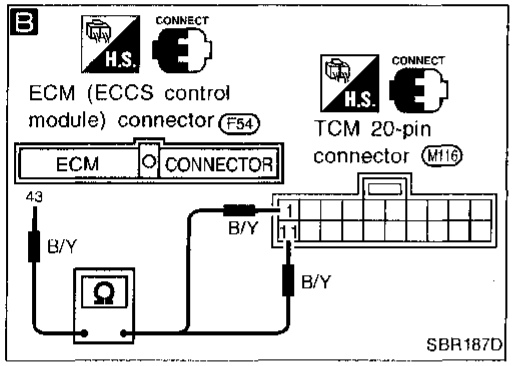

Diagnostic Procedure 31

POWER SUPPLY CIRCUIT FOR SENSOR (Code No. 13 of TCS C/U) (Code No. 34 of TCM)

A

TH P/S PWR SUPPLY

- Disconnect 20-pin connector from TCM.
- Disconnect connector from secondary throttle sensor.
- Check continuity between terminal ⑮ for TCM connector and terminal ㊷ for ECM (ECCS control module) connector.

Continuity should exist.

NG → Repair harness and connectors.

OK ↓

B

Check continuity between terminals ①, ⑪ for TCM and terminal ㊸ for ECM (ECCS control module).

Continuity should exist.

NG → Repair harness and connectors.

OK ↓

Final check

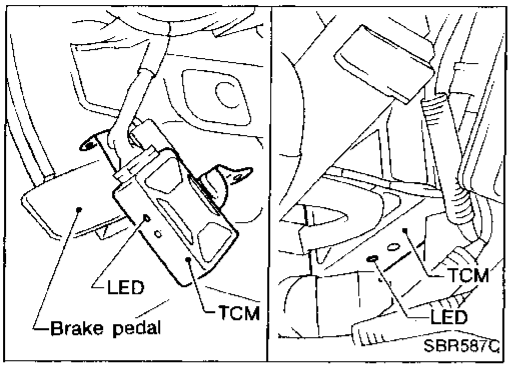

Electrical Component Inspection

INSPECTION OF TCM

- Measure voltage between each terminal and terminal ⑩ or ⑳ by following "TCM INSPECTION TABLE".

- Pin connector terminal layout.

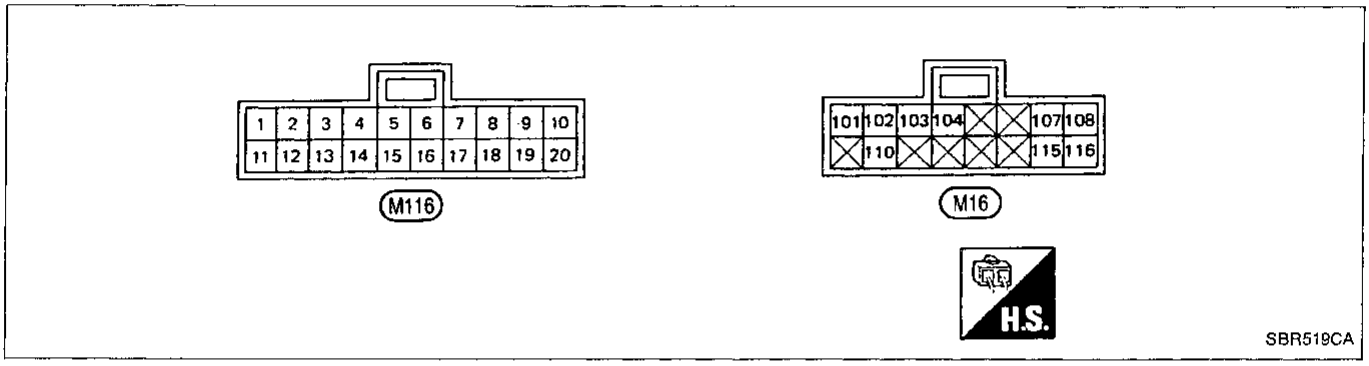

TCM Inspection table

*Data are reference values.

TERMINAL NO.	ITEM	CONDITION	*DATA
2	Throttle opening signal	Ignition switch "ON"	Approximately 0.4 - 3.1V Voltage varies with the throttle valve opening angle.
3	Secondary throttle position sensor	Vehicle is running	Approximately 0.5 - 4.1V Voltage varies with the secondary throttle valve opening angle.
4	Secondary throttle valve signal	Vehicle is running	Approximately 0.4 - 3.1V
5	Engine coolant temperature sensor for TCM	Engine is running	Approximately 0 - 5V Voltage varies with the engine coolant temperature.
7	TCS SW	Ignition switch "ON"	Approximately 10V
14	Throttle motor relay	Ignition switch "ON"	Approximately 1.5V
15	Power supply for sensor	Ignition switch "ON"	Approximately 5V

Electrical Component Inspection (Cont'd)

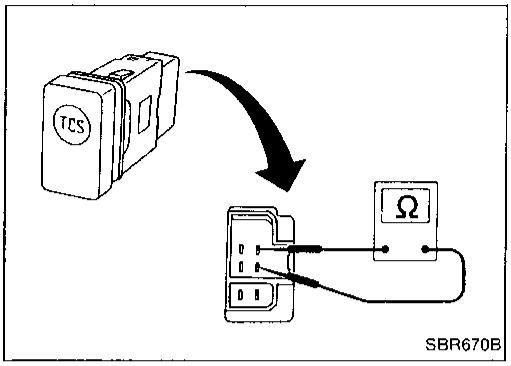

TCS CANCEL SWITCH

Check continuity between terminals as shown.

SWITCH condition	Continuity existence
Pushed	Yes
Released	No

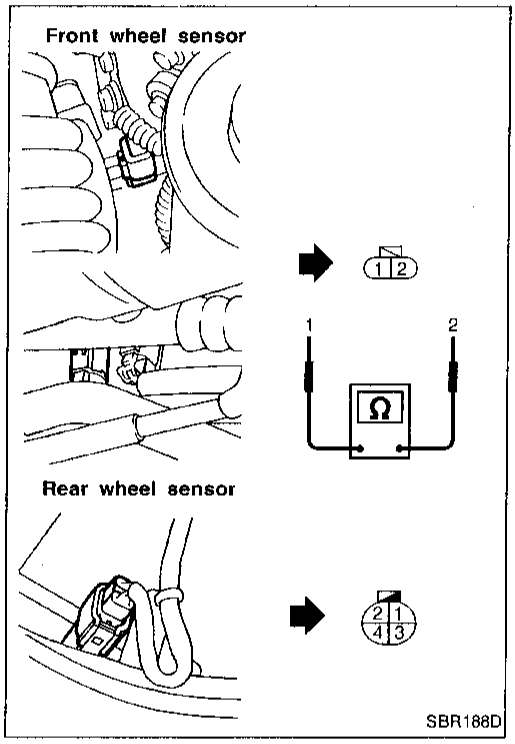

WHEEL SENSOR

Check resistance between terminals ① and ② and/or ③ and ④.

Resistance: 0.9 - 1.1 kΩ

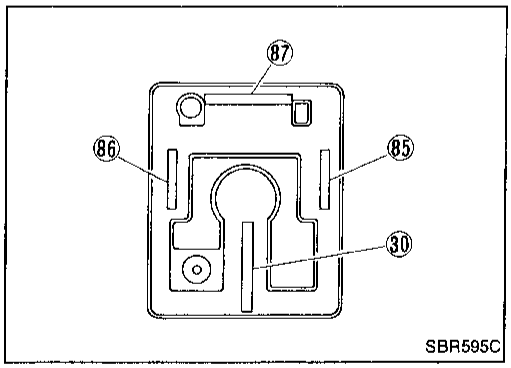

ABS ACTUATOR MOTOR RELAY

Condition	Continuity existence between terminals 30 and 87
Battery voltage not applied between terminals 85 and 86.	No
Battery voltage applied between terminals 85 and 86.	Yes

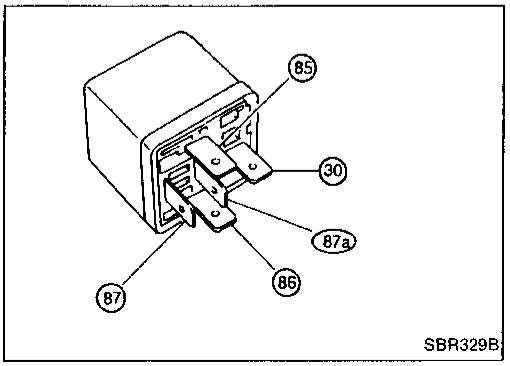

ABS ACTUATOR SOLENOID VALVE RELAY

Condition	Continuity existence between terminals 30 and 87a	Continuity existence between terminals 30 and 87
Battery voltage not applied between terminals 85 and 86.	Yes	No
Battery voltage applied between terminals 85 and 86.	No	Yes

Electrical Component Inspection (Cont'd)

TCS PUMP RELAY AND THROTTLE MOTOR RELAY

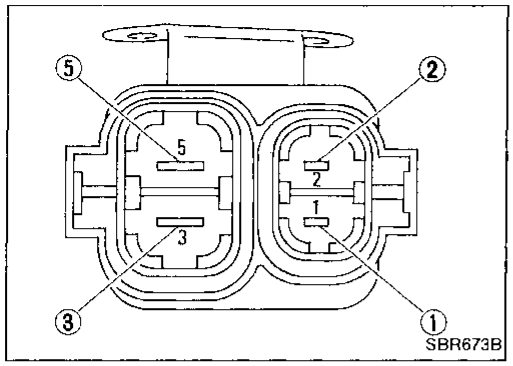

Condition	Continuity existence between terminals ③ and ⑤
Battery voltage not applied between terminals ① and ②.	No
Battery voltage applied between terminals ① and ②.	Yes

TCS PUMP

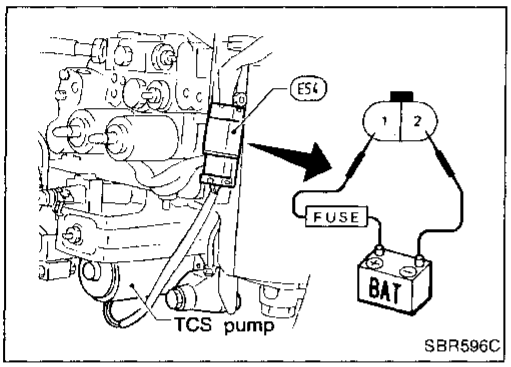

TCS pump (motor) should operate when battery voltage is applied.

CAUTION:
Do not apply battery voltage for more than 5 seconds.

ENGINE COOLANT TEMPERATURE SENSOR FOR TCM

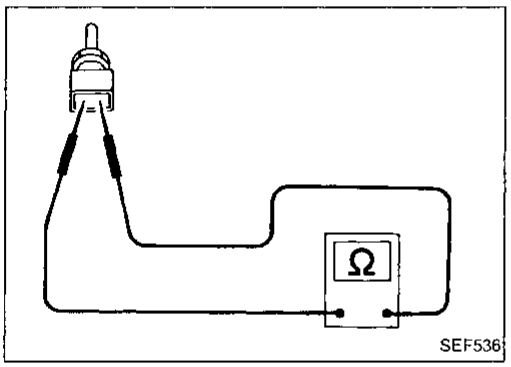

1. Disconnect engine coolant temperature sensor harness connector.
2. Check resistance as shown in the figure.

Temperature °C (°F)	Resistance kΩ
20 (68)	2.1 - 2.9
50 (122)	0.68 - 1.00
80 (176)	0.30 - 0.33

N & P RELAY

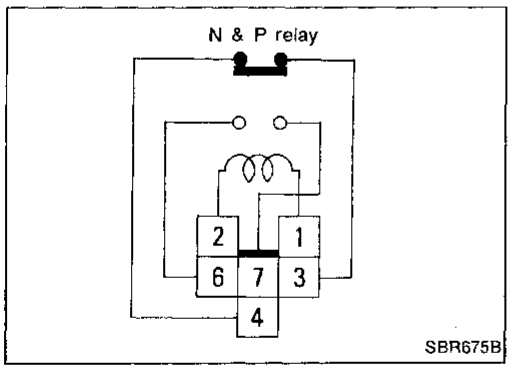

Check continuity between terminals ⑥ and ⑦.

Condition	Continuity
12V direct current supply between terminals ① and ②.	Yes
No current supply	No

INHIBITOR SWITCH

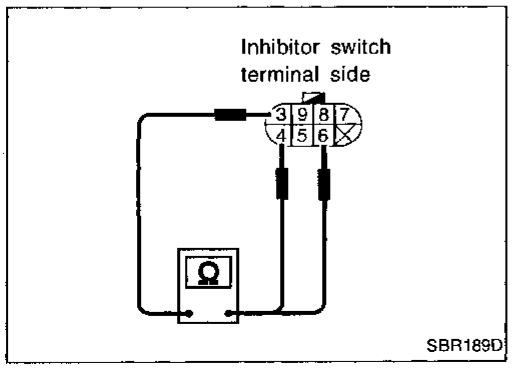

Check continuity between terminals ③ and ④, ⑥.

Condition	Continuity between terminals ③ and ④	Continuity between terminals ③ and ⑥
Shift to "P" position	Yes	No
Shift to "N" position	No	Yes
Shift to positions other than "P" and "N"	No	No

Electrical Component Inspection (Cont'd)

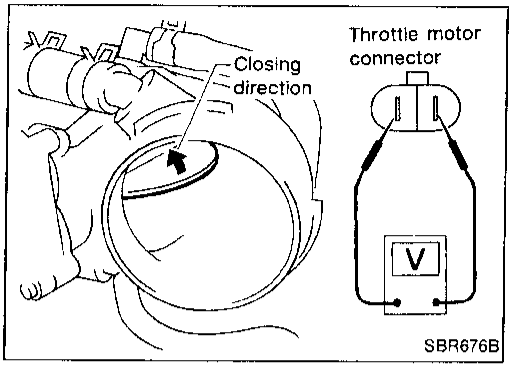

THROTTLE MOTOR

WARNING:

Before touching the secondary throttle valve, be sure to disconnect the throttle valve motor connector. Failure to do so may cause injury due to accidental actuation of the valve.

Check voltage produced by motor by opening/closing secondary throttle valve as quickly as possible.

Use needle type voltmeter.

Needle should fluctuate.

Make sure throttle valve moves smoothly from fully closed to fully open position without binding.

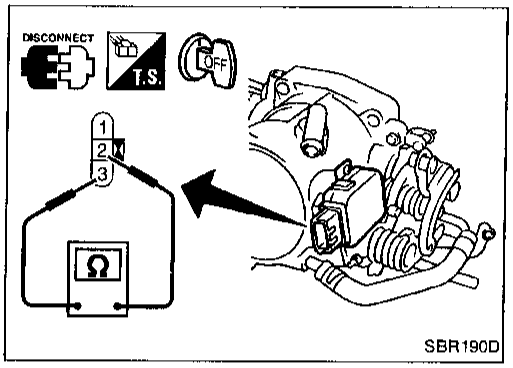

SECONDARY THROTTLE POSITION SENSOR

1. Turn ignition switch "OFF".
2. Disconnect secondary throttle position sensor harness connector.
3. Make sure that resistance between terminals ② and ③ changes when closing secondary throttle valve by hand.

Secondary throttle valve condition	Resistance (kΩ)
Fully open	Approximately 3.0 - 5.8
Partially open	0.8 - 5.8
Fully closed	Approximately 0.8

General Specifications

Front brake	
Brake model	CL28VF disc brake
Cylinder bore diameter x number of pistons mm (in)	42.8 (1.685) x 2
Lining length x width x thickness mm (in)	127 x 56 x 9.5 (5.00 x 2.20 x 0.374)
Rotor outer diameter x thickness mm (in)	280 x 28 (11.02 x 1.10)
Rear brake	
Brake model	AD11B disc brake
Cylinder bore diameter x number of piston mm (in)	38.2 (1.504) x 1
Lining length x width x thickness mm (in)	97.4 x 33.9 x 10 (3.835 x 1.335 x 0.39)
Rotor outer diameter x thickness mm (in)	292 x 9 (11.50 x 0.35)

Parking brake	
Brake model	DS17HD drum brake
Lining length x width x thickness mm (in)	154.1 x 25.0 x 3.0 (6.07 x 0.984 x 0.118)
Drum inner diameter mm (in)	172.0 (6.77)
Master cylinder	
Cylinder bore diameter mm (in)	25.40 (1)
Control valve	
Valve model	Proportioning valve (within master cylinder)
Split point [kPa (kg/cm^2, psi)] x reducing ratio	3,923 (40, 569) x 0.4
Brake booster	
Booster model	M215T
Diaphragm diameter mm (in)	Primary: 230 (9.06) Secondary: 205 (8.07)
Brake fluid	
Recommended brake fluid	DOT 3

TRACTION CONTROL SYSTEM — TCS —

TCS operating oil	Brake fluid "DOT 3"

Inspection and Adjustment

DISC BRAKE

Unit: mm (in)

Location	Front	Rear
Brake model	CL28VF	AD11B
Pad wear limit		
Minimum thickness	2.0 (0.079)	
Rotor repair limit		
Minimum thickness	26.0 (1.024)	8.0 (0.315)

DRUM BRAKE

Unit: mm (in)

Location	Rear
Brake model	DS17HD
Lining wear limit	
Minimum thickness	1.5 (0.059)
Drum repair limit	
Maximum inner diameter	173.0 (6.81)
Brake shoe "backoff" adjustment	5 - 6 latches

BRAKE PEDAL

Unit: mm (in)

Free height "H"	184 - 194 (7.24 - 7.64)
Depressed height "D" [under force of 490 N (50 kg, 110 lb) with engine running]	100 - 110 (3.94 - 4.33)
Clearance "C" between pedal stopper and threaded end of stop lamp switch or ASCD switch	0.3 - 1.0 (0.012 - 0.039)
Pedal free play	1.0 - 3.0 (0.039 - 0.118)

PARKING BRAKE

Unit: mm (in)

Control type	Foot lever
Pedal stroke [under force of 196 N (20 kg, 44 lb)]	90 - 105 (3.54 - 4.13)
Pedal stroke when warning switch comes on	20 (0.79) or less