REAR AXLE & REAR SUSPENSION

SECTION RA

CONTENTS

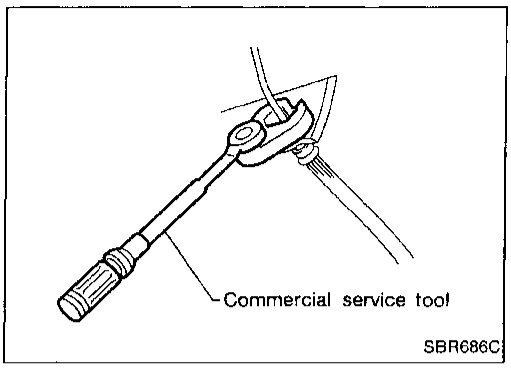

Precautions

- **When installing rubber parts, final tightening must be carried out under unladen condition* with tires on ground.**
  - *** Fuel, radiator coolant and engine oil full. Spare tire, jack, hand tools and mats in designated positions.**
- **Use flare nut wrench when removing or installing brake tubes.**
- **After installing removed suspension parts, check wheel alignment and adjust if necessary.**
- **Do not jack up at the lower arm.**
- **Always torque brake lines when installing.**

Special Service Tools

The actual shapes of Kent-Moore tools may differ from those of special service tools illustrated here.

Tool number (Kent-Moore No.) Tool name	Description	
HT71780000 (—) Spring compressor	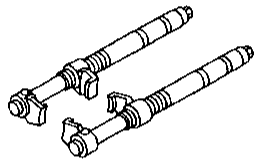 NT144	Removing and installing coil spring
ST35652000 (—) Shock absorber attachment	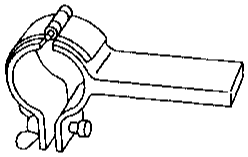 NT145	Fixing strut assembly
ST30031000 (J22912-01) Bearing puller	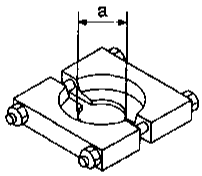 NT412	Removing inner race of wheel bearing **a: 50 mm (1.97 in) dia.**
ST38280000 (—) Arm bushing remover	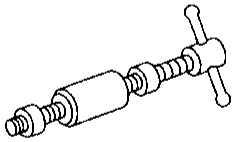 NT157	Removing and installing rear axle housing bushing
IM23600800 (—) Attachment	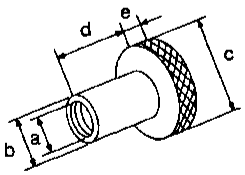 NT148	Measure rear wheel alignment **a: Screw M24 x 1.5** **b: 35 mm (1.38 in) dia.** **c: 65 mm (2.56 in) dia.** **d: 56 mm (2.20 in)** **e: 12 mm (0.47 in)**
HT72520000 (J25730-A) Ball joint remover	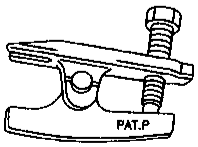 NT146	Removing tie-rod outer end and lower ball joint

Commercial Service Tools

Tool name	Description	
Rear wheel hub drift	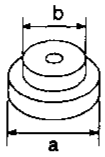 NT073	Installing wheel bearing **a: 49 mm (1.93 in) dia.** **b: 41 mm (1.61 in) dia.**
Wheel bearing drift	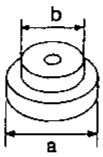 NT073	Removing rear wheel hub **a: 40 mm (1.57 in) dia.** **b: 26 mm (1.02 in) dia.**
Rear drive shaft plug seal drift	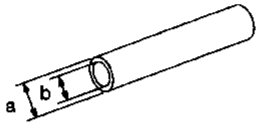 NT065	Installing rear drive shaft plug seal **a: 85 mm (3.35 in) dia.** **b: 67 mm (2.64 in) dia.**
Rear axle housing ball joint drift	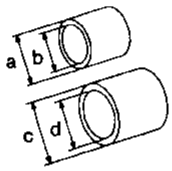 NT164	Removing ball joint **a: 28 mm (1.10 in) dia.** **b: 20 mm (0.79 in) dia.** **c: 43 mm (1.69 in) dia.** **d: 40 mm (1.57 in) dia.**
Rear axle housing ball joint drift	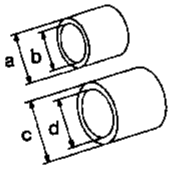 NT164	Installing ball joint **a: 43 mm (1.69 in) dia.** **b: 33 mm (1.30 in) dia.** **c: 40 mm (1.57 in) dia.** **d: 30 mm (1.18 in) dia.**
① Flare nut crows foot ② Torque wrench	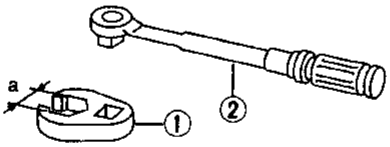 NT360	Removing and installing brake piping **a: 10 mm (0.39 in)**

SEC. 380•396•430•431

When installing rubber parts, final tightening must be carried out under unladen condition* with tires on ground.
*** Fuel, radiator coolant and engine oil full.**
Spare tire, jack, hand tools and mats in designated positions.

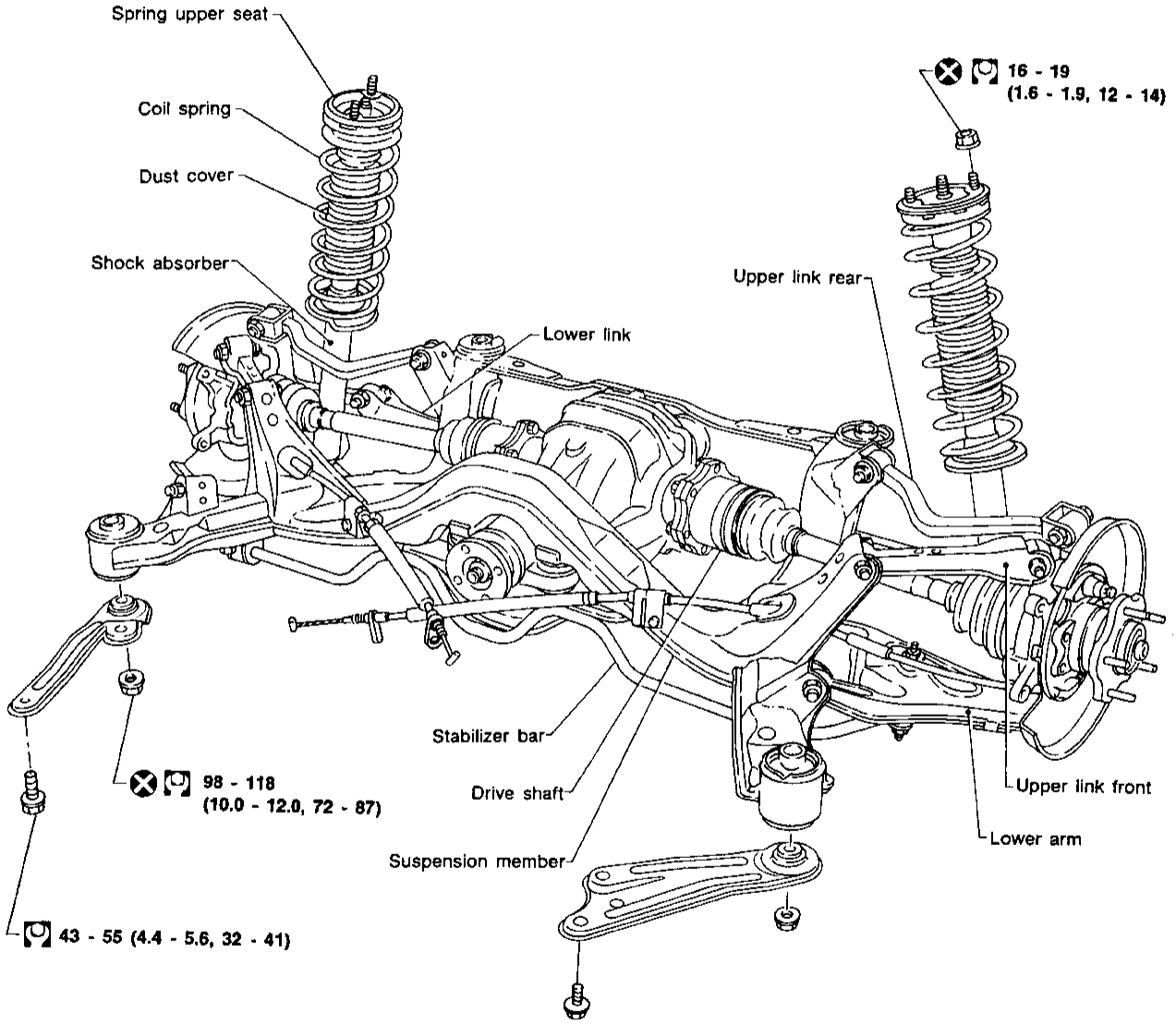

: N•m (kg-m, ft-lb)

SRA381AB

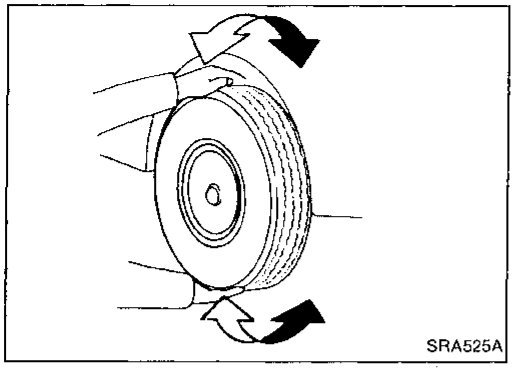
SRA525A

Rear Axle and Rear Suspension Parts

Check axle and suspension parts for excessive play, wear or damage.

- Shake each rear wheel.
- Retighten all nuts and bolts to the specified torque.
  Tightening torque:
  Refer to REAR SUSPENSION (RA-15).
- Make sure that cotter pin is inserted.

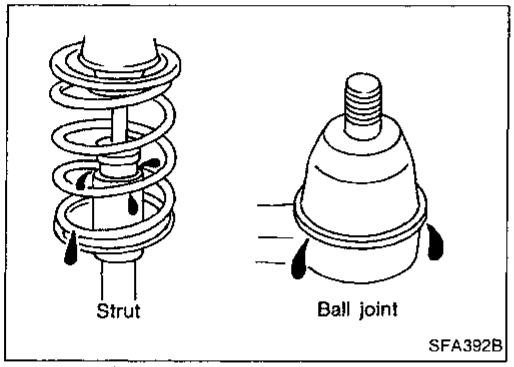

SFA392B

- Check shock absorber for oil leakage or other damage.
- Check wheelarch height. Refer to "Front Axle and Front Suspension Parts" in FA section.
- Check suspension ball joint for grease leakage and ball joint dust cover for cracks or other damage.

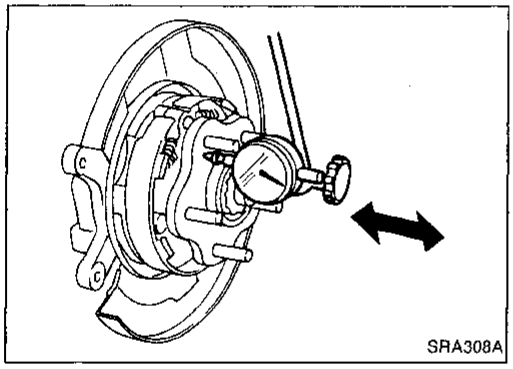
SRA308A

Rear Wheel Bearing

- Check wheel bearings for smooth operation.
- Check axial end play.
  Axial end play:
  0.05 mm (0.0020 in) or less

If out of specification or wheel bearing does not turn smoothly, replace wheel bearing assembly.
Refer to REAR AXLE — Wheel Hub and Axle Housing (RA-7).

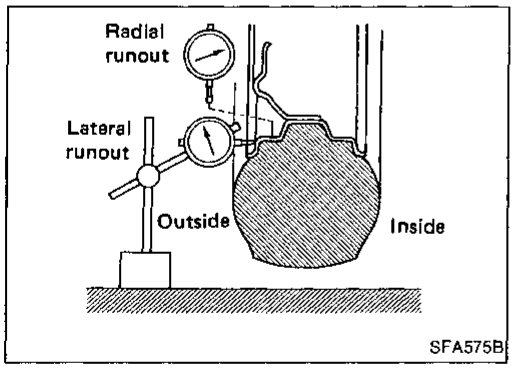

SFA575B

Rear Wheel Alignment

Before checking rear wheel alignment, be sure to make a preliminary inspection (Unladen*).
*: Fuel, radiator coolant and engine oil full. Spare tire, jack, hand tools and mats in designated positions.

PRELIMINARY INSPECTION

Make the following checks. Adjust, repair or replace if necessary.

- Check tires for wear and for improper inflation.
- Check rear wheel bearings for excessive play.
- Check wheel runout.
  Refer to SDS in FA section.
- Check that rear shock absorber works properly.
- Check rear axle and rear suspension parts for excessive play.
- Check vehicle posture (Unladen).

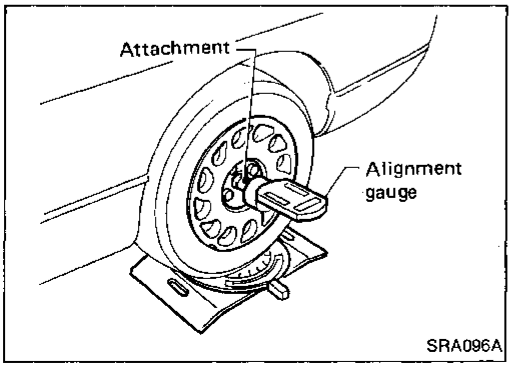

SRA096A

CAMBER

- **Measure camber of both right and left wheels with a suitable alignment gauge and adjust in accordance with the following procedures.**
  Camber:
  Refer to SDS (RA-19).

Rear Wheel Alignment (Cont'd)

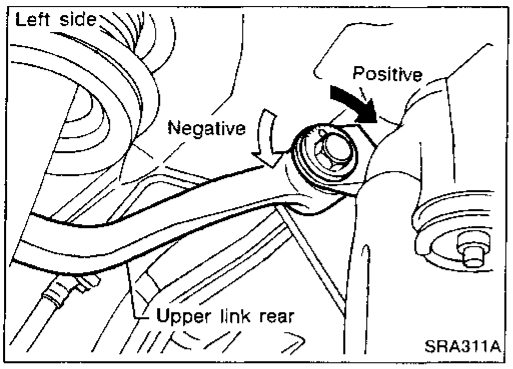

If camber is not within specification, adjust by turning the adjusting bolt.

(1) Turn the adjusting bolt to adjust.

Camber changes about 5′ with each graduation of the adjusting bolt.

(2) Tighten to the specified torque.

[O]: 69 - 88 N·m
(7.0 - 9.0 kg-m, 51 - 65 ft-lb)

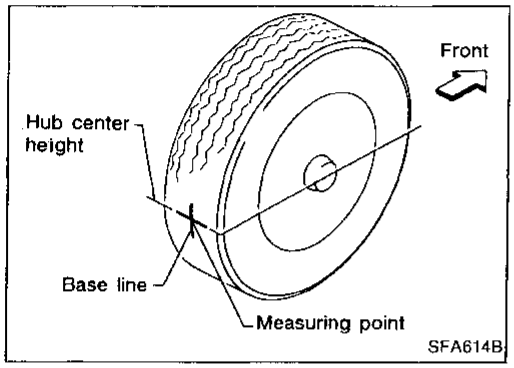

TOE-IN

Measure toe-in using following procedure.

WARNING:

- **Always perform the following procedure on a flat surface.**
- **Make sure that no person is in front of the vehicle before pushing it.**

1. Bounce front of vehicle up and down to stabilize the posture.
2. Push the vehicle straight ahead about 5 m (16 ft).
3. Put a mark on base line of the tread (rear side) of both tires at the same height as hub center. These are measuring points.
4. Measure distance "A" (rear side).
5. Push the vehicle slowly ahead to rotate the wheels 180 degrees (1/2 turn).

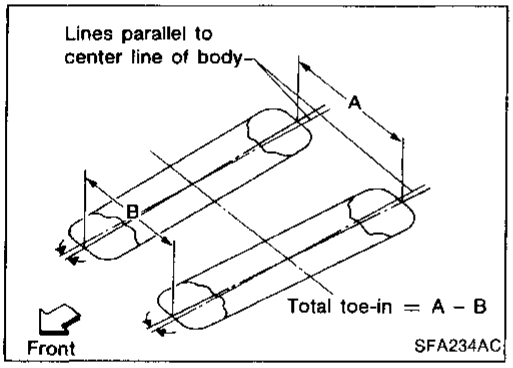

If the wheels have rotated more than 180 degrees (1/2 turn), try the above procedure again from the beginning. Never push vehicle backward.

6. Measure distance "B" (front side).

Total toe-in:
Refer to SDS (RA-19).

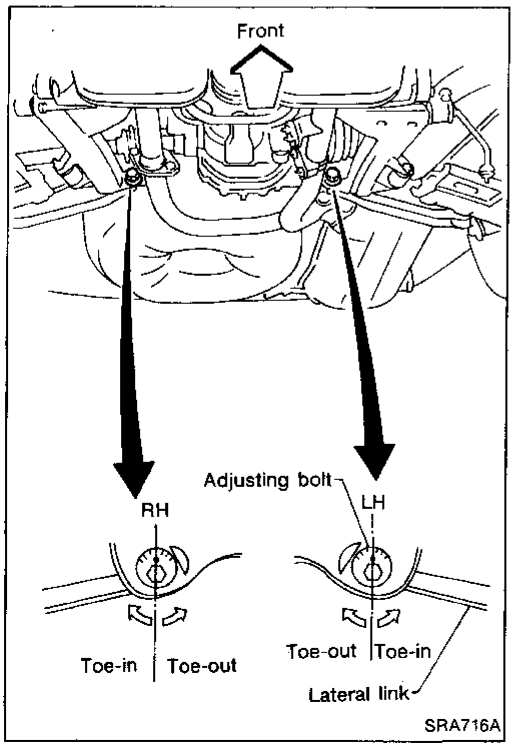

7. Adjust toe-in by turning adjusting bolts.

Toe changes about 1.5 mm (0.059 in) [One side] with each graduation of the adjusting bolt.

8. Tighten to the specified torque.

[O]: 69 - 88 N·m
(7.0 - 9.0 kg-m, 51 - 65 ft-lb)

Drive Shaft

Check boot and drive shaft for cracks, wear, damage or grease leakage.

Wheel Hub and Axle Housing

SEC. 396•430

When installing rubber parts, final tightening must be carried out under unladen condition* with tires on ground.

* Fuel, radiator coolant and engine oil full.
Spare tire, jack, hand tools and mats in designated positions.

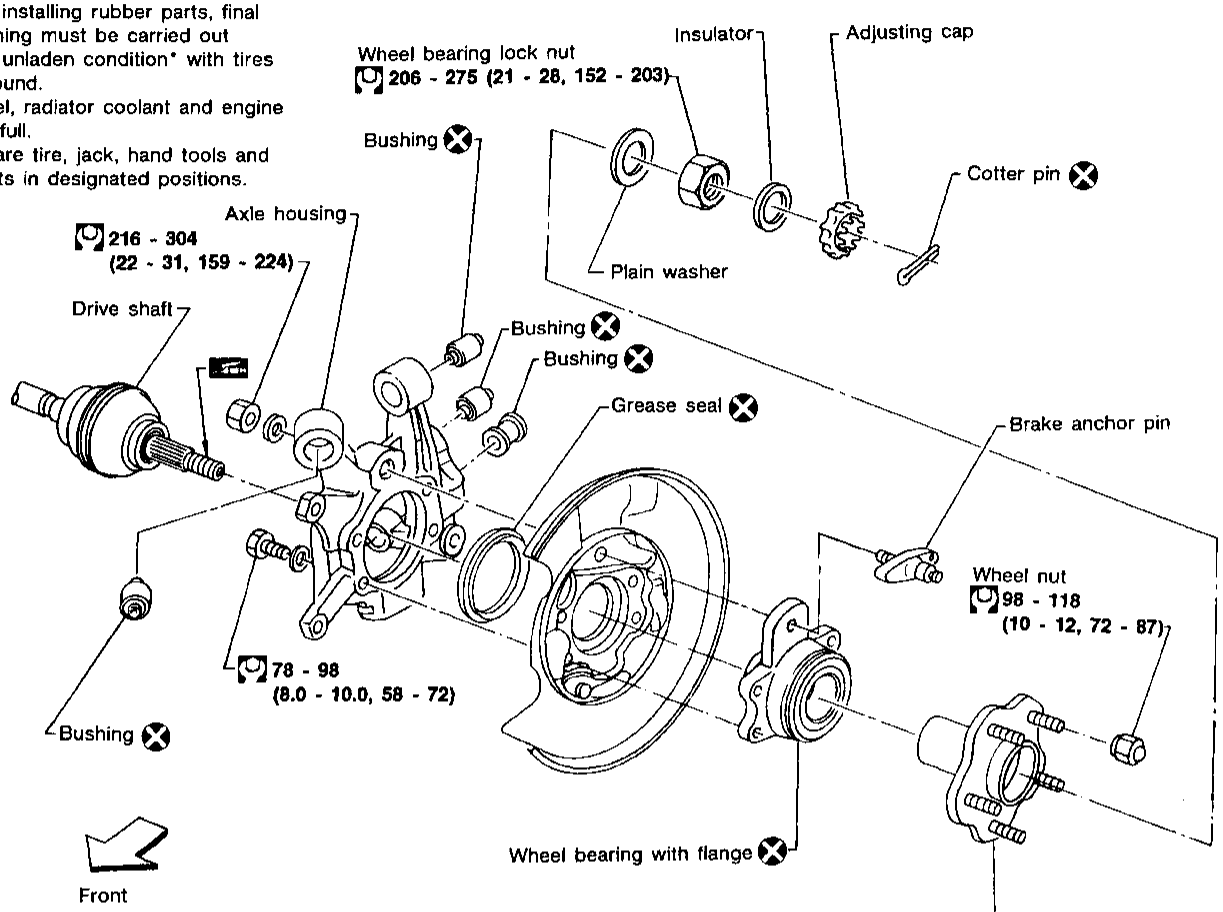

: N•m (kg-m, ft-lb)

SRA717AA

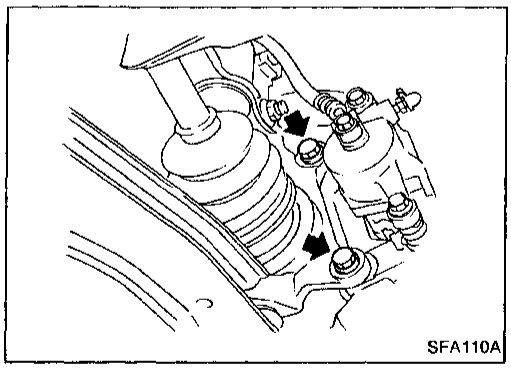

SFA110A

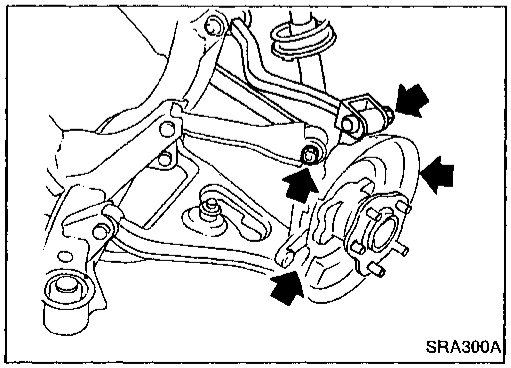

SRA300A

REMOVAL

1. Remove wheel bearing lock nut.
2. Separate drive shaft from axle housing by lightly tapping it. If it is hard to remove use puller.

When removing drive shaft, cover boots with shop towel to prevent them from being damaged.

3. Remove brake caliper assembly and rotor.

Brake line need not be disconnected from brake caliper. Be careful not to depress brake pedal, or piston will pop out. Do not pull or twist brake hose.

4. Remove axle housing.

Wheel Hub and Axle Housing (Cont'd)

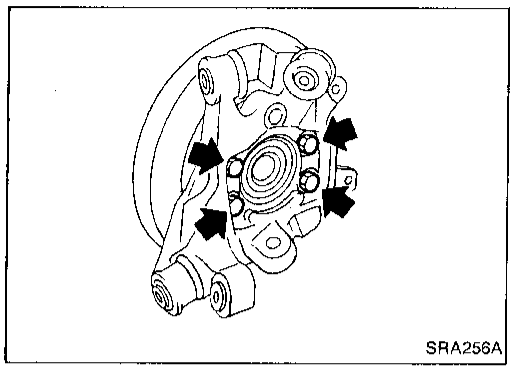
SRA256A

5. Remove wheel bearing with flange, and wheel hub from axle housing.
6. Remove baffle plate and grease seal.

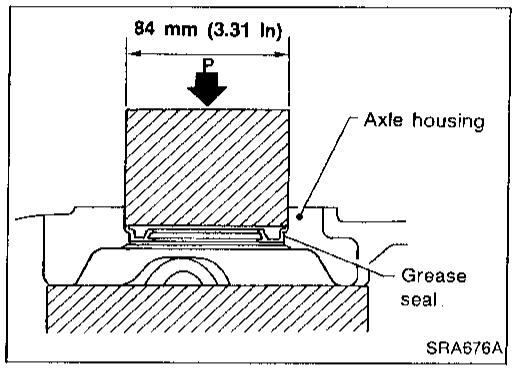

SRA676A

INSTALLATION

1. Press new grease seal into axle housing.
   Maximum load P:
   3.9 kN (0.4 ton, 0.4 US ton, 0.39 Imp ton)

Be careful not to damage grease seal.

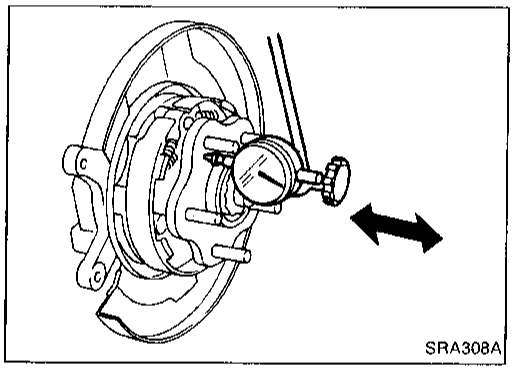
SRA308A

2. Install axle housing with wheel hub.
3. Tighten wheel bearing lock nut.
   Before tightening, apply oil to threaded portion of rear spindle and both sides of plain washer.
   [O]: 206 - 275 N·m
   (21 - 28 kg-m, 152 - 203 ft-lb)
4. Check wheel bearing axial end play.
   Axial end play: 0.05 mm (0.0020 in) or less
   Make sure that wheel bearings operate smoothly.
5. Check toe-in — Refer to ON-VEHICLE SERVICE (RA-6).

DISASSEMBLY

CAUTION:

Wheel bearing with flange does not require maintenance. If any of the following symptoms are noted, replace wheel bearing assembly (including flange, and inner and outer seals).

- **Growling noise is emitted from wheel bearing during operation.**
- **Wheel hub bearing drags or turns roughly. This occurs when turning hub by hand after bearing lock nut is tightened to specified torque.**
- **After wheel bearing is removed from hub.**

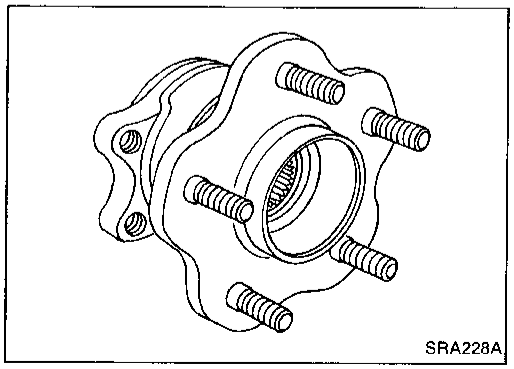
SRA228A

Wheel hub

Remove wheel bearing (with flange) and wheel hub as one unit from axle housing before disassembling.

Wheel Hub and Axle Housing (Cont'd)

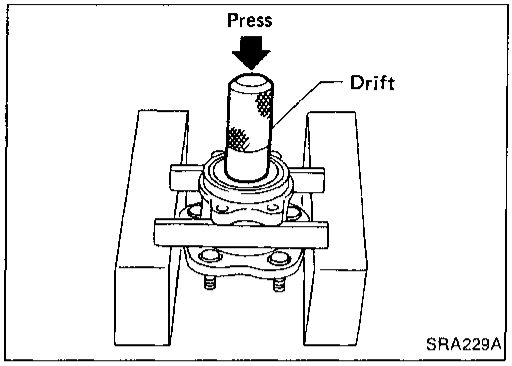

Wheel bearing

1. Using a press and drift as shown in figure at left, press wheel bearing out.
2. Discard old wheel bearing assembly. Replace with a new one.

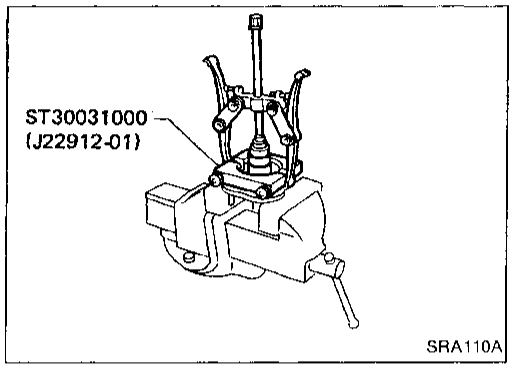

3. Remove inner race from hub using a bearing replacer/puller.

CAUTION:

- **Do not reuse old inner race although it is of the same brand as the bearing assembly.**
- **Do not replace grease seals as single parts.**

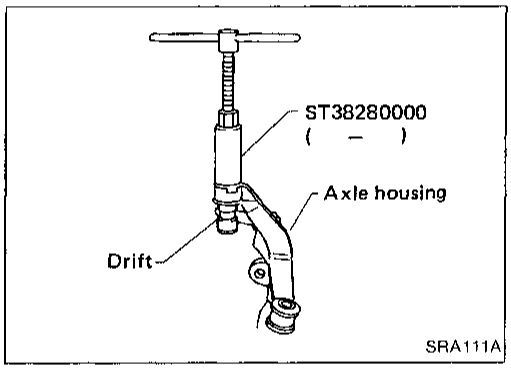

Axle housing

1. Attach a drift on outer shell of bushing as shown in figure at left. Remove bushing using arm bushing remover.

When placing axle housing in a vise, use wooden blocks or copper plates as pads.

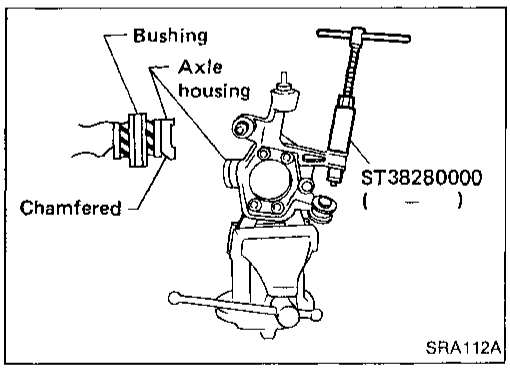

2. Ensure axle housing bore is free from scratches or deformities before pressing bushing into it.
3. Attach bushing to chamfered bore end of axle housing. Then press it until it is flush with end face of axle housing.

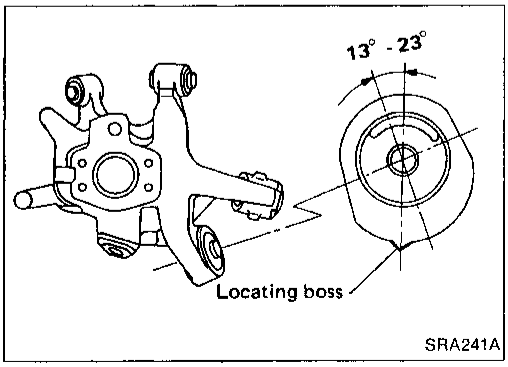

- When installing shock absorber bushing, make sure that it is positioned as shown.

Wheel Hub and Axle Housing (Cont'd)

INSPECTION

Wheel hub and axle housing

- Check wheel hub and axle housing for cracks by using a magnetic exploration or dyeing test.
- Check wheel bearing for damage, seizure, rust or rough operation.
- Check rubber bushing for wear or other damage.

Replace if necessary.

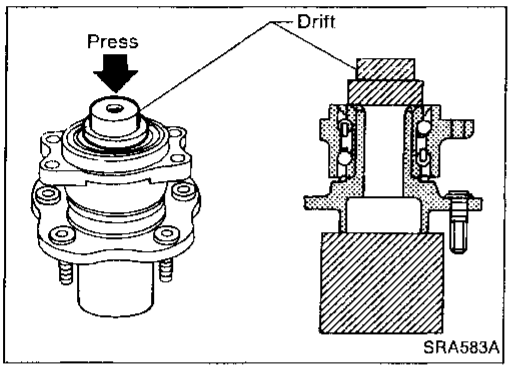

ASSEMBLY

Place hub on a block. Attach a drift to inner race of wheel bearing and press it into hub as shown.

Be careful not to damage grease seal.

Drive Shaft

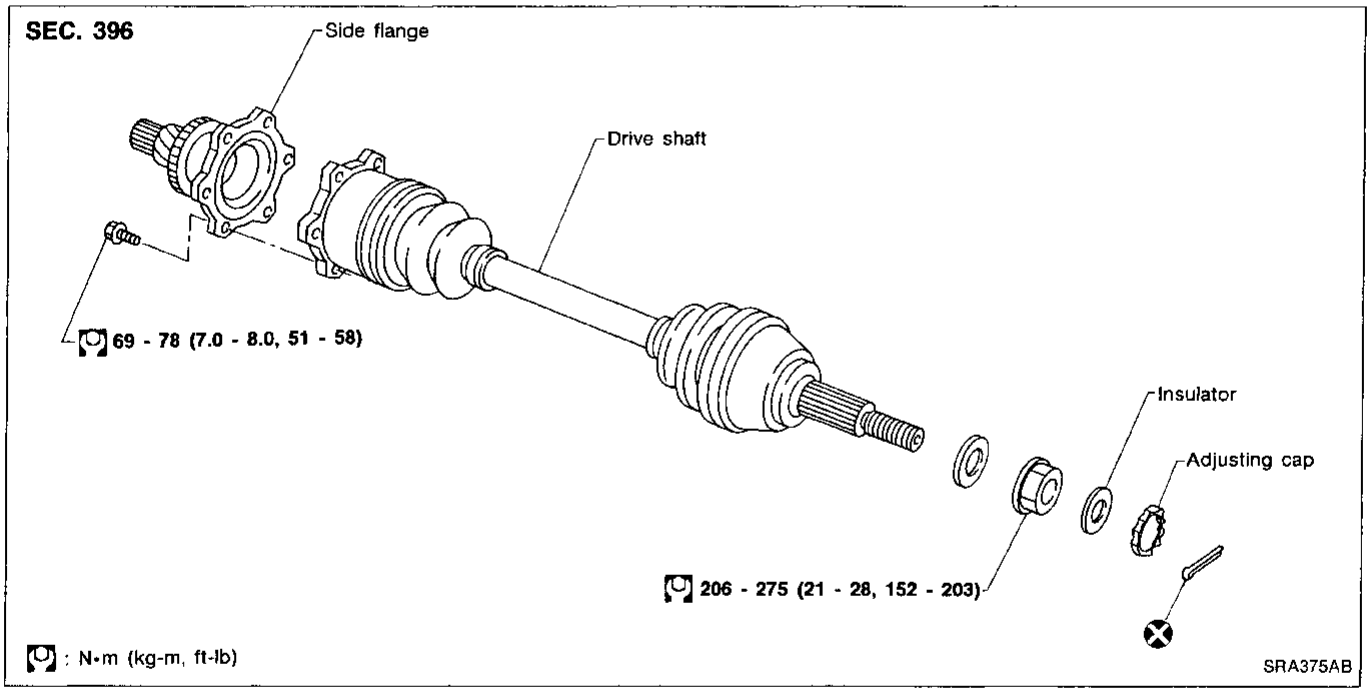

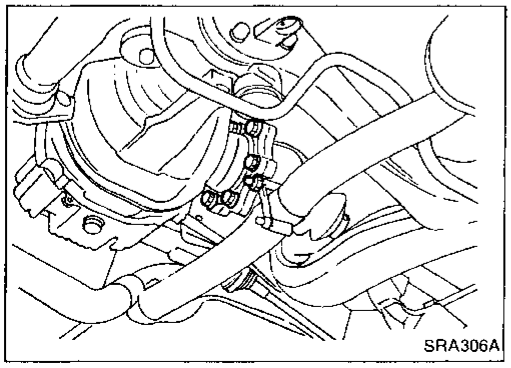

REMOVAL

Before removing the drive shaft assembly, disconnect the ABS wheel sensor to prevent the sensor from being damaged. Refer to TRACTION CONTROL SYSTEM in BR section.

When removing drive shaft, cover boots with shop towel to prevent damage to them.

Final drive side

Remove side flange mounting bolt and separate shaft.

Drive Shaft (Cont'd)

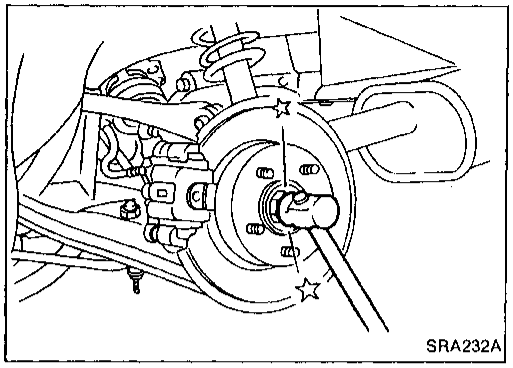

Wheel side

Remove drive shaft by lightly tapping it with a copper hammer. If it is hard to remove, use puller.

To avoid damaging threads of drive shaft, install a nut while removing drive shaft.

INSTALLATION

1. Insert drive shaft from wheel hub and temporarily tighten wheel bearing lock nut.
2. Tighten side flange mounting bolts to specified torque.
3. Tighten wheel bearing lock nut to specified torque.

COMPONENTS

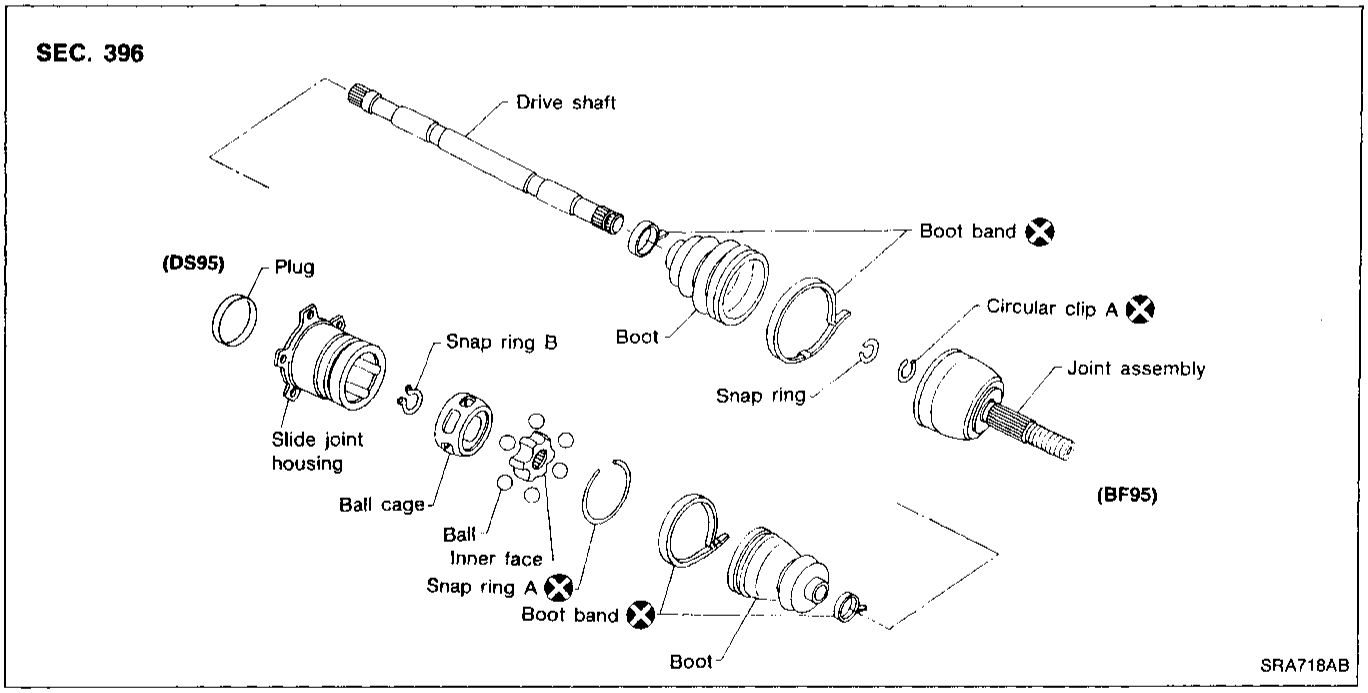

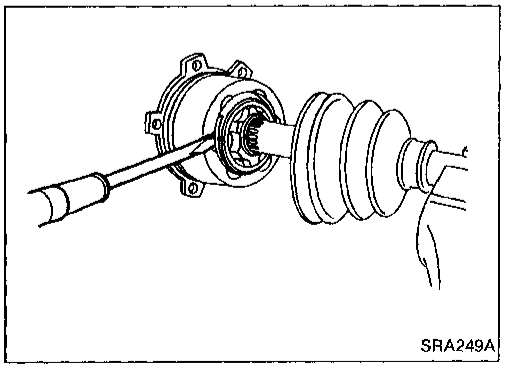

DISASSEMBLY

Final drive side

1. Remove boot bands.
2. Put matchmarks on slide joint housing and inner race, before separating joint assembly.
3. Pry off snap ring "A" with a screwdriver, and pull out slide joint housing.

Drive Shaft (Cont'd)

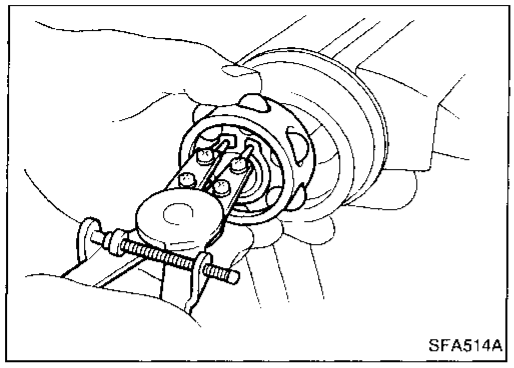

4. Put matchmarks on inner race and drive shaft.
5. Pry off snap ring "B", then remove ball cage, inner race and balls as a unit.
6. Draw out boot.

Cover drive shaft serration with tape so as not to damage the boot.

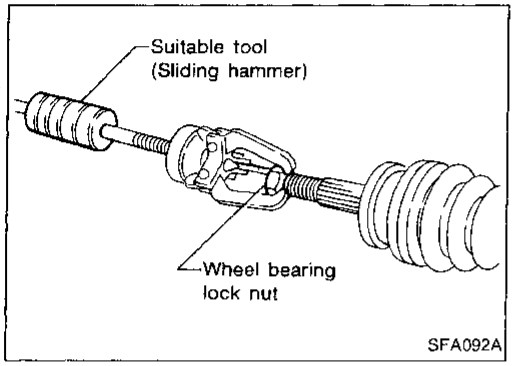

Wheel side

CAUTION:
The joint on the wheel side cannot be disassembled.

- Before separating joint assembly, put matchmarks on drive shaft and joint assembly.
- Separate joint assembly with suitable tool.

Be careful not to damage threads on drive shaft.

- Remove boot bands.

INSPECTION

Thoroughly clean all parts in cleaning solvent, and dry with compressed air. Check parts for evidence of deformation or other damage.

Drive shaft

Replace drive shaft if it is twisted or cracked.

Boot

Check boot for fatigue, cracks, or wear. Replace boot with new boot bands.

Joint assembly (Final drive side)

- Replace any parts of double offset joint which show signs of scorching, rust, wear or excessive play.
- Check serration for deformation. Replace if necessary.
- Check slide joint housing for any damage. Replace if necessary.

Joint assembly (Wheel side)

Replace joint assembly if it is deformed or damaged.

ASSEMBLY

- **After drive shaft has been assembled, ensure that it moves smoothly over its entire range without binding.**
- **Use NISSAN GENUINE GREASE or equivalent after every overhaul.**

Drive Shaft (Cont'd)

Wheel side

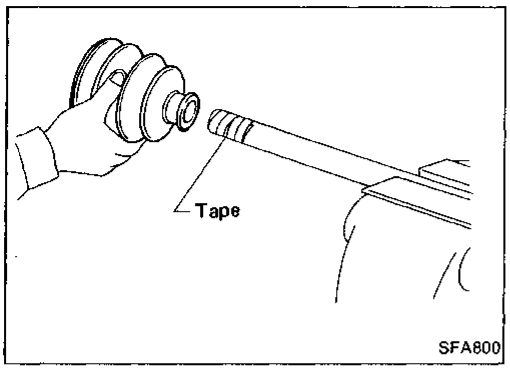

1. Install boot and new small boot band on drive shaft.

Cover drive shaft serration with tape so as not to damage boot during installation.

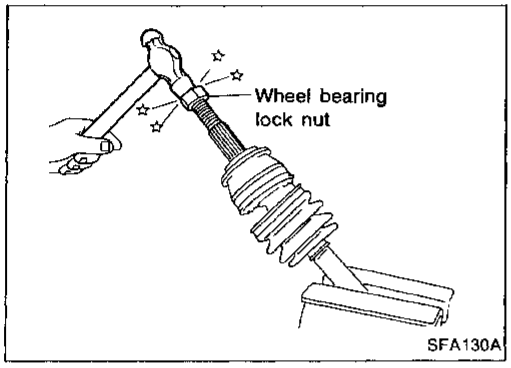

2. Set joint assembly onto drive shaft by lightly tapping it. Install joint assembly securely, ensuring marks which were made during disassembly are properly aligned.

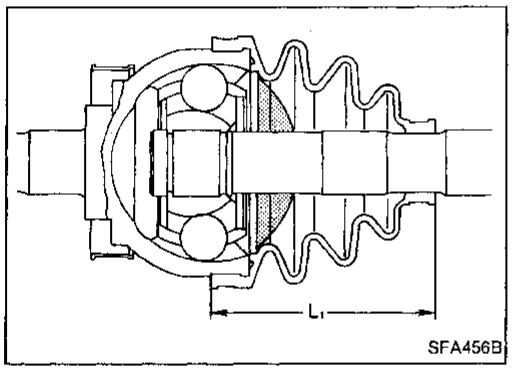

3. Pack drive shaft with specified amount of grease.
   Specified amount of grease:
   125 - 145 g (4.41 - 5.11 oz)
4. Set boot so that it does not swell and deform when its length is "L_1".

Make sure that boot is properly installed on the drive shaft groove.

Length "L_1":
102.0 mm (4.02 in)

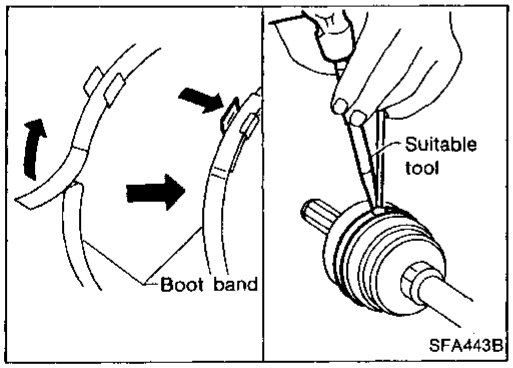

5. Lock new larger and smaller boot bands securely with a suitable tool.

Final drive side

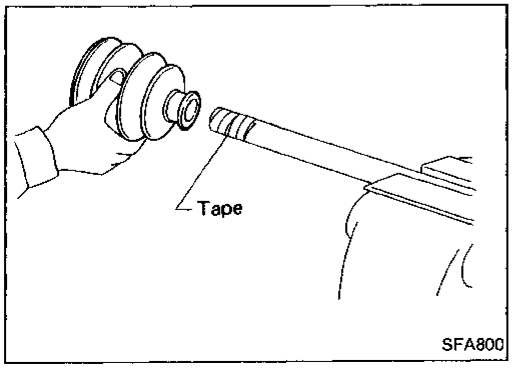

1. Install boot and new small boot band on drive shaft.

Cover drive shaft serration with tape so as not to damage boot during installation.

Drive Shaft (Cont'd)

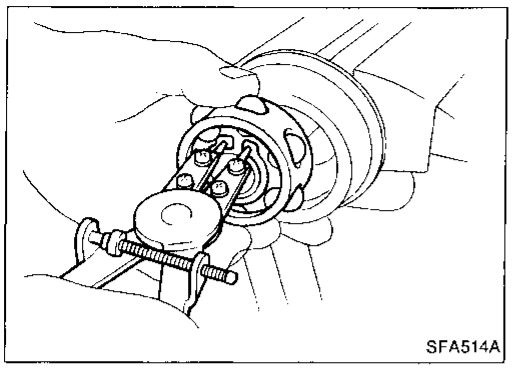

2. Securely install ball cage, inner race and balls as a unit, aligning the marks made during disassembly.
3. Install new snap ring "B".

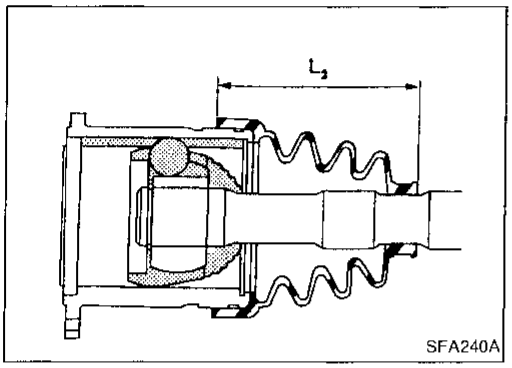

4. Pack drive shaft with specified amount of grease.
   Specified amount of grease:
   155 - 175 g (5.47 - 6.17 oz)
5. Install slide joint housing, then install new snap ring "A".
6. Set boot so that it does not swell and deform when its length is "L_2".

Make sure that boot is properly installed on the drive shaft groove.

Length "L_2":
96.5 mm (3.799 in)

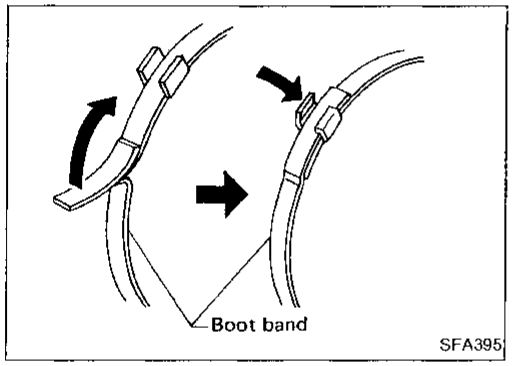

7. Lock new larger and smaller boot bands securely with a suitable tool.

SEC. 380•396•430•431

CAUTION:
Do not jack up at lower arm.
When installing rubber parts, final tightening must be carried out under unladen condition* with tires on ground.
*** Fuel, radiator coolant and engine oil full.**
Spare tire, jack, hand tools and mats in designated positions.

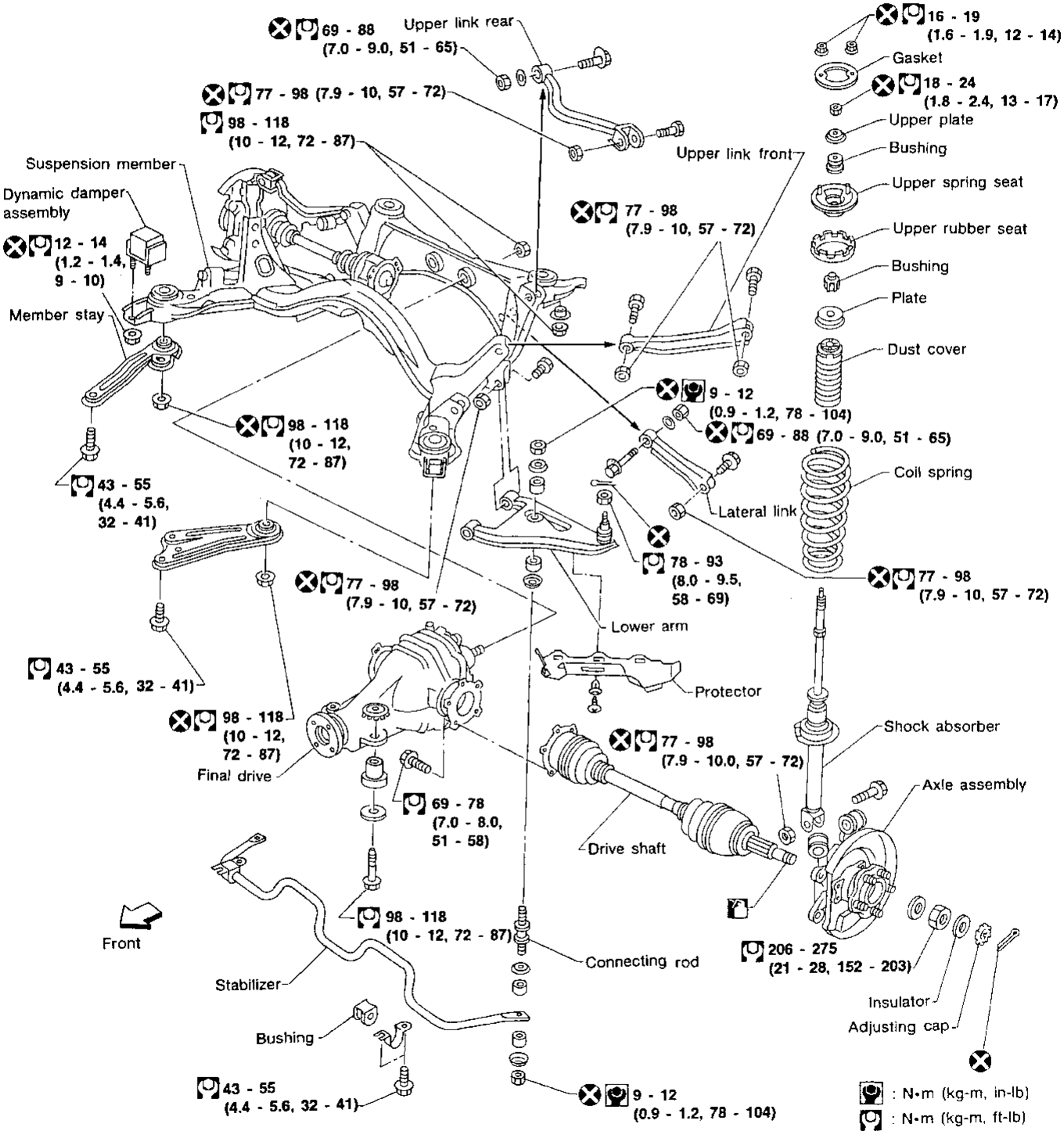

SRA719AA

Removal and Installation

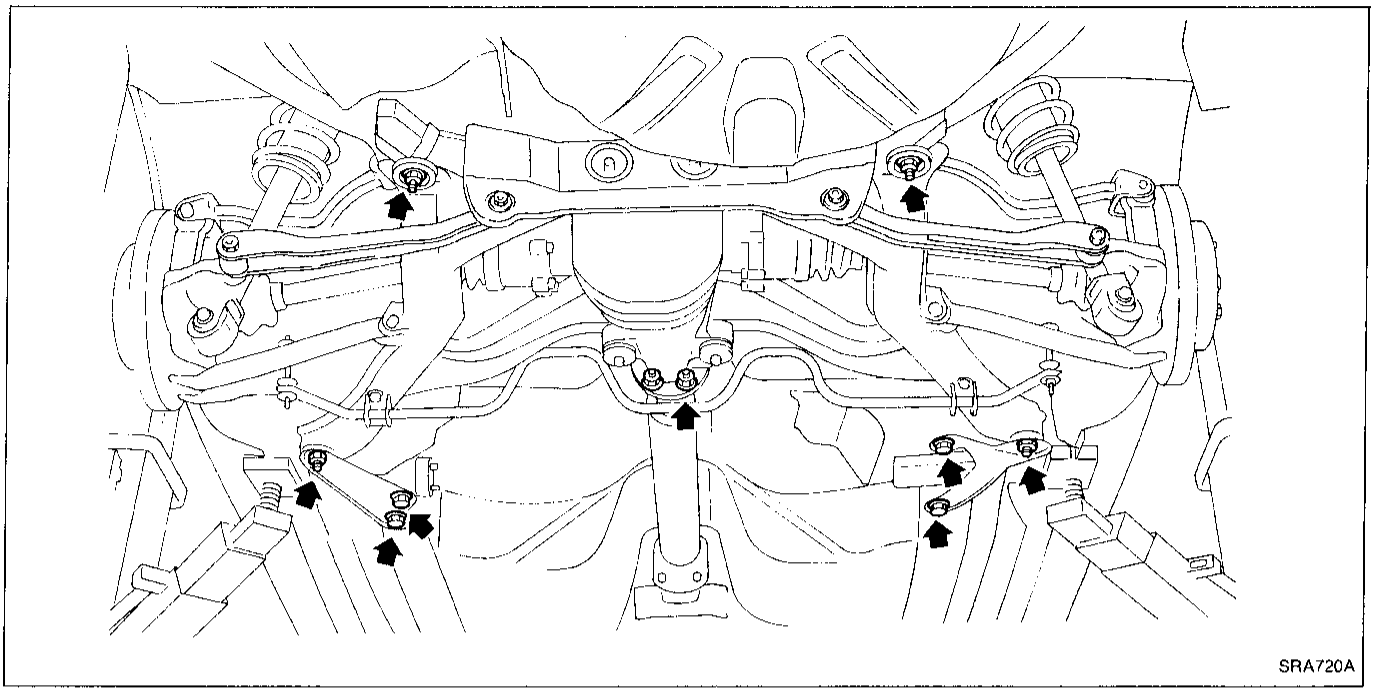

CAUTION:
Before removing the rear suspension assembly, disconnect the ABS sensor from the assembly. Then move it away from the rear suspension assembly. Failure to do so may result in damages to the sensor wires, making the sensor inoperative.

1. Remove exhaust tube.
2. Disconnect propeller shaft rear end.
3. Disconnect hand brake wire front end.

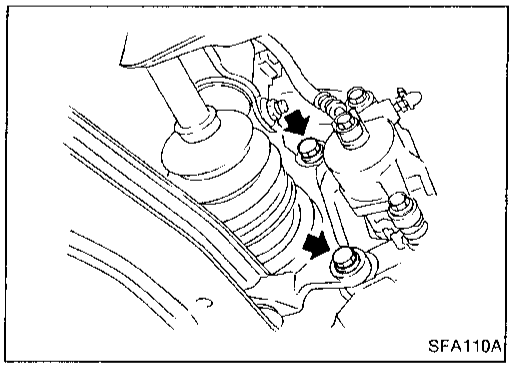

4. Remove brake caliper assembly.

Brake line need not be disconnected from brake caliper.
Be careful not to depress brake pedal, or piston will pop out.
Do not pull or twist brake hose.

5. Remove upper end nuts of shock absorber.

Do not remove piston rod lock nut.

6. Remove suspension member fixing nuts. Then draw out rear axle and rear suspension assembly.

Coil Spring and Shock Absorber

REMOVAL

Remove shock absorber upper and lower fixing nuts.

Do not remove piston rod lock nut on vehicle.

Coil Spring and Shock Absorber (Cont'd)

DISASSEMBLY

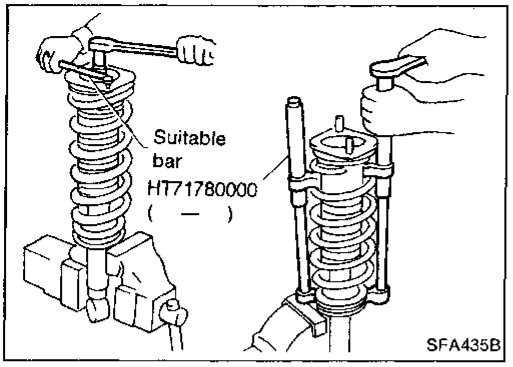

1. Set shock absorber on vise with attachment, then **loosen** piston rod lock nut.

Do not remove piston rod lock nut at this time.

2. Compress spring with Tool so that the shock absorber upper spring seat can be turned by hand.

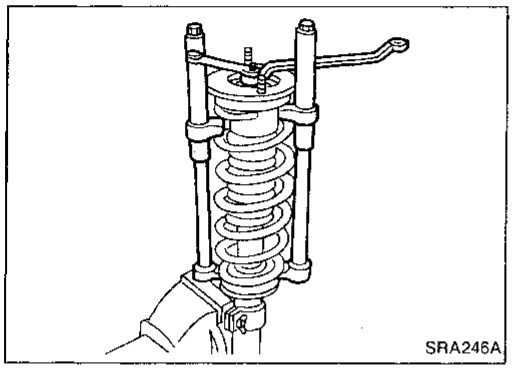

3. Remove piston rod lock nut.

INSPECTION

Shock absorber assembly

- Check for smooth operation through a full stroke, both compression and extension.
- Check for oil leakage occurring on welded or gland packing portions.
- Check piston rod for cracks, deformation or other damage. Replace if necessary.

Upper rubber seat and bushing

Check rubber parts for deterioration or cracks. Replace if necessary.

Coil spring

Check for cracks, deformation or other damage. Replace if necessary.

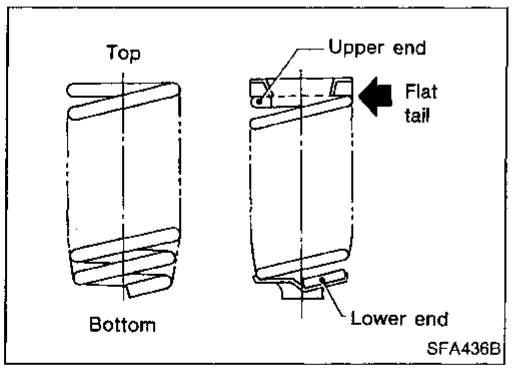

ASSEMBLY

- When installing coil spring, be careful not to reverse top and bottom direction. (Top end is flat.)
- When installing coil spring on shock absorber, it must be positioned as shown in figure at left.

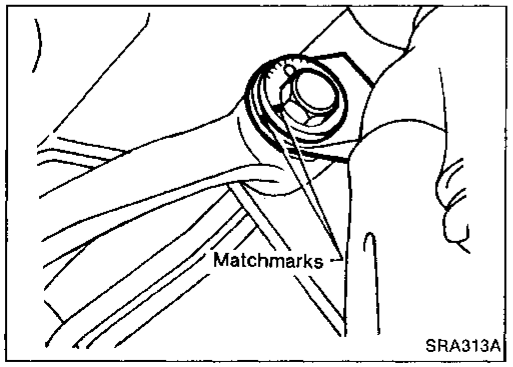

Multi-link and Lower Ball Joint

REMOVAL AND INSTALLATION

- Refer to Removal and Installation (RA-16).

Before removing, put matchmarks on adjusting bolt.

- When installing, final tightening must be done under unladen condition with tires on ground.
- After installation, check wheel alignment. Refer to Rear Wheel Alignment in ON-VEHICLE SERVICE (RA-5).

Multi-link and Lower Ball Joint (Cont'd)

INSPECTION

Rear suspension member

Replace suspension member assembly if cracked or deformed or if any part (insulator, for example) is damaged.

Upper and lower links

Replace upper or lower link as required if cracked or deformed or if bushing is damaged.

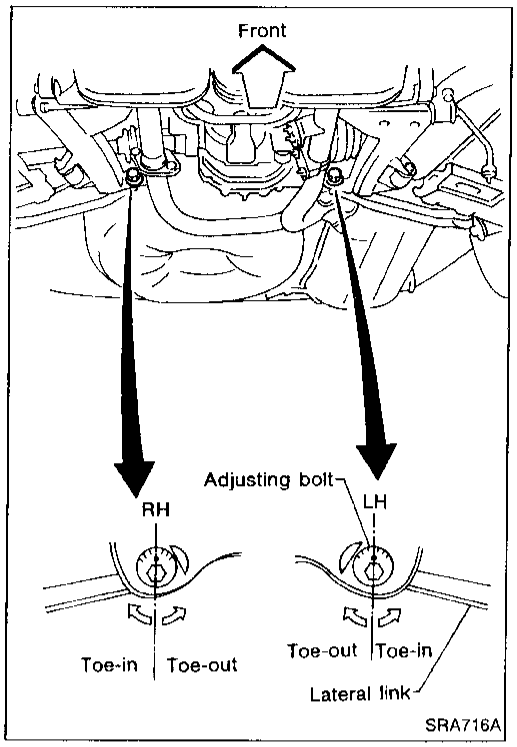

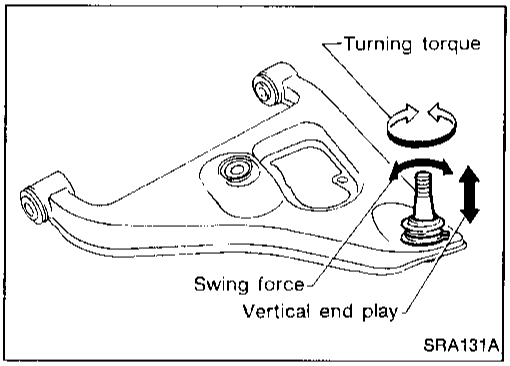

Suspension lower ball joint

- Measure swing force, turning torque and vertical end play in axial direction. (Use same measurement procedures as that of FA section.)
- If ball stud is worn, play in axial direction is excessive, or joint is hard to swing, replace lower arm.

Ball joint specifications	Swing force	7.8 - 54.9 N (0.8 - 5.6 kg, 1.8 - 12.3 lb)
	Turning torque	0.5 - 3.4 N·m (5 - 35 kg-cm, 4.3 - 30.4 in-lb)
	Vertical end play	0 mm (0 in)

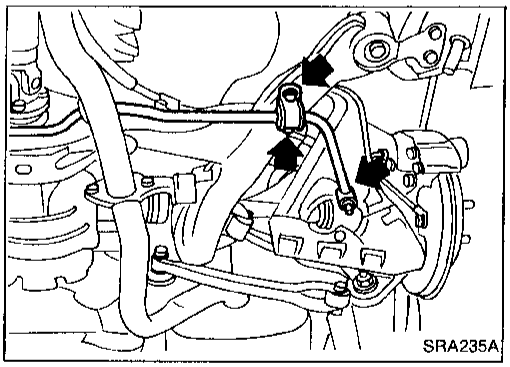

Stabilizer Bar

REMOVAL

Remove connecting rod and clamp.

INSPECTION

- Check stabilizer bar for deformation or cracks. Replace if necessary.
- Check rubber bushings for deterioration or cracks. Replace if necessary.

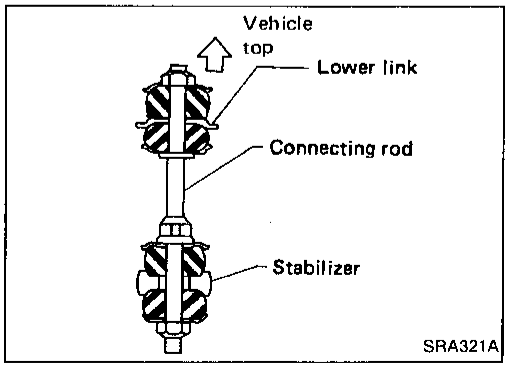

INSTALLATION

When installing connecting rod, make sure direction is correct (as shown at left).

General Specifications

COIL SPRING

Applied model	Conventional suspension
Identification color	Pink x 2

SHOCK ABSORBER

Applied model	Conventional suspension
Piston rod diameter mm (in)	12.5 (0.492)

DRIVE SHAFT

Applied model	All
Joint type	
Final drive side	DS95
Wheel side	BF95
Diameter mm (in)	
Wheel side D_1	33 (1.30)
Grease	
Quality	Nissan genuine grease or equivalent
Specified amount of grease g (oz)	
Final drive side	155 - 175 (5.47 - 6.17)
Wheel side	125 - 145 (4.41 - 5.11)
Boot length mm (in)	
Final drive side (L_2)	96.5 (3.799)
Wheel side (L_1)	102.0 (4.02)

Final drive side

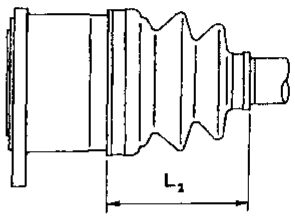

Wheel drive side

SRA598A

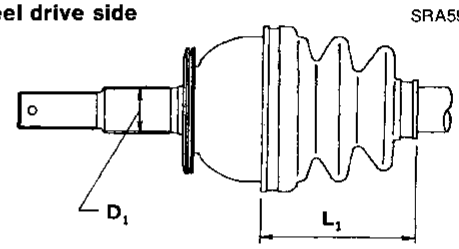

SRA599A

REAR STABILIZER BAR

Applied model	Conventional suspension
Stabilizer diameter mm (in)	
Outer	15.9 (0.626)
Inner	12.3 (0.484)

Inspection and Adjustment

WHEEL ALIGNMENT (Unladen*)

Camber	Minimum	–1°35′ (–1.58°)
Degree minute (Decimal degree)	Nominal	–1°05′ (–1.08°)
	Maximum	–0°35′ (–0.58°)
Total toe-in	Minimum	0 (0)
Distance (A–B) mm (in)	Nominal	2 (0.08)
	Maximum	4 (0.16)
Angle (left plus right)	Minimum	0′ (0.00°)
Degree minute (Decimal degree)	Nominal	11′ (0.18°)
	Maximum	22′ (0.37°)

*: Fuel, radiator coolant and engine oil full. Spare tire, jack, hand tools and mats in designated positions.

WHEEL BEARING

Wheel bearing axial end play limit mm (in)	0.05 (0.0020)
Wheel bearing lock nut Tightening torque N·m (kg-m, ft-lb)	206 - 275 (21 - 28, 152 - 203)

LOWER BALL JOINT

Swing force (Measuring point: cotter pin hole of ball stud) N (kg, lb)	7.8 - 54.9 (0.8 - 5.6, 1.8 - 12.3)
Turning torque N·m (kg-cm, in-lb)	0.5 - 3.4 (5 - 35, 4.3 - 30.4)
Vertical end play mm (in)	0 (0)