ACCELERATOR CONTROL, FUEL & EXHAUST SYSTEMS

SECTION FE

CONTENTS

Special Service Tool

The actual shapes of Kent-Moore tools may differ from those of special service tools illustrated here.

Tool number (Kent-Moore No.) Tool name	Description	
KV10114400 (J-38365) Heated oxygen sensor wrench	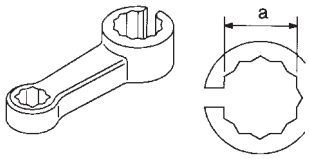 NT636	Loosening or tightening front and rear heated oxygen sensors **3/8 drive** **a: 22 mm (0.87 in)**

Commercial Service Tools

Tool number (Kent-Moore No.) Tool name	Description	
(J-43897-18) (J-43897-12) Oxygen sensor thread cleaner	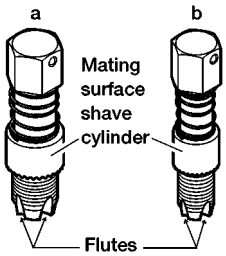 AEM488	Reconditioning the exhaust system threads before installing a new oxygen sensor (Use with anti-seize lubricant shown below.) **a: J-43897-18 [18 mm (0.71 in) dia.] for zirconia oxygen sensor** **b: J-43897-12 [12 mm (0.47 in) dia.] for titaniaoxygen sensor**
Anti-seize lubricant (Permatex 133AR or equivalent meeting MIL specification MIL-A-907)	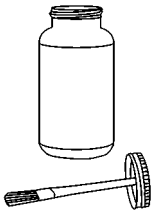 AEM489	Lubricating oxygen sensor thread cleaning tool when reconditioning exhaust system threads

CAUTION:

- **When removing accelerator wire, make a mark to indicate lock nut's initial position.**
- **Check that throttle valve opens fully when accelerator pedal is fully depressed. Also check that it returns to idle position when pedal is released.**
- **Check accelerator control parts for improper contact with any adjacent parts.**
- **When connecting accelerator wire, be careful not to twist or scratch wire.**

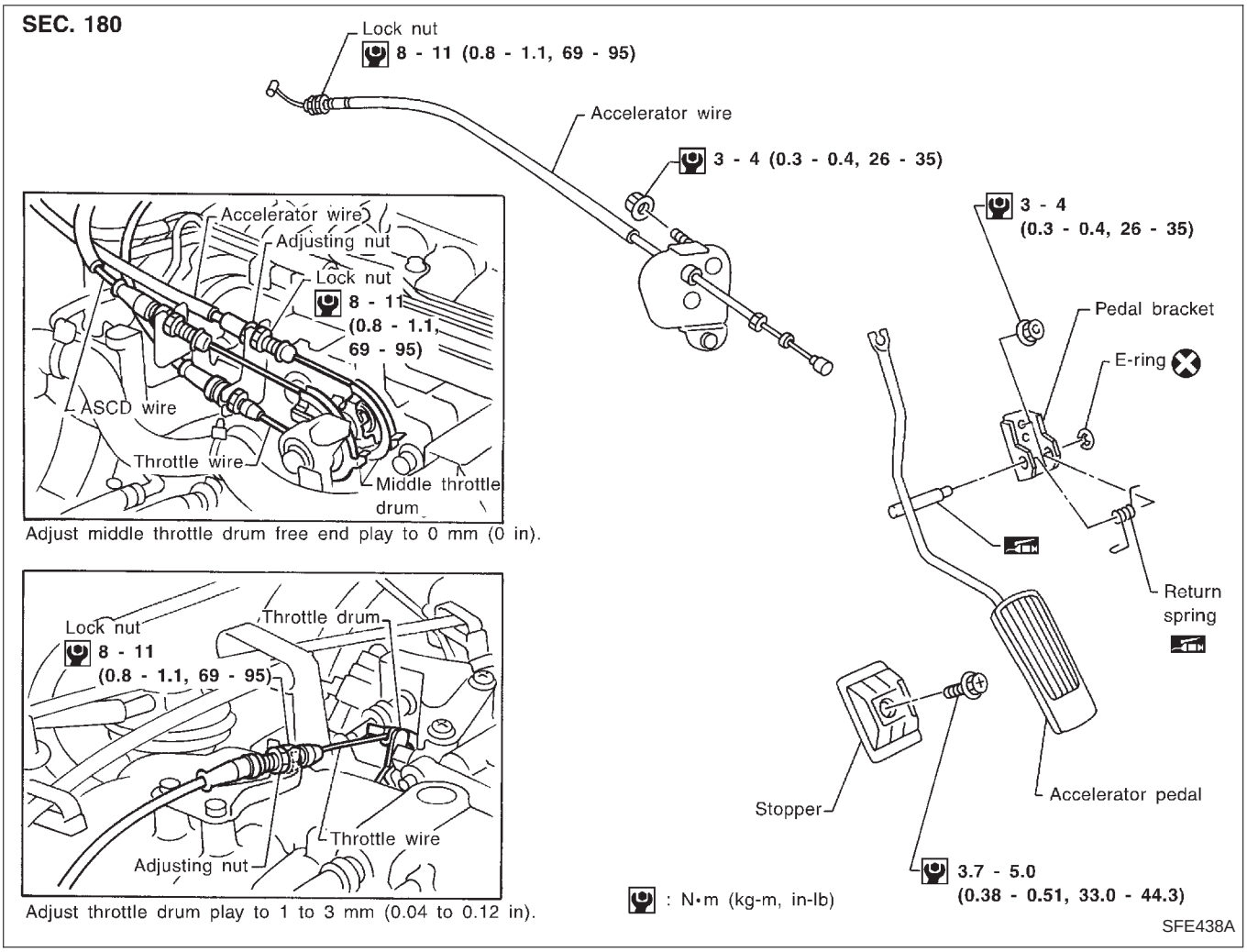

GI
MA
EM
LC
EC
FE
AT
PD
FA
RA
BR
ST
RS
BT
HA
EL
IDX

Adjusting Accelerator Wire

CAUTION:

- **Make sure the ASCD wire is not pulling the throttle drum.**
- **Refer to EL section, "AUTOMATIC SPEED CONTROL DEVICE" for ASCD wire adjustment.**

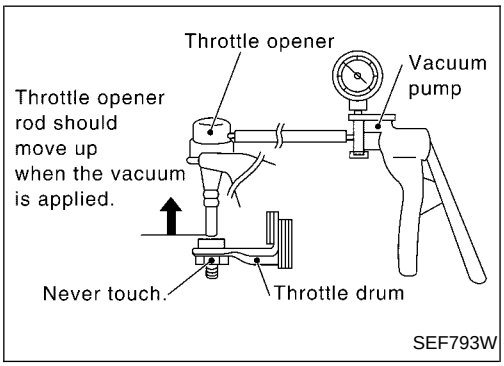

MIDDLE THROTTLE DRUM AND THROTTLE DRUM ADJUSTMENT

1. Remove the vacuum hose connected to the throttle opener.
2. Connect suitable vacuum hose to vacuum pump as shown at left.
3. Apply vacuum [more than −40.0 kPa (−300 mmHg, −11.81 inHg)] until the throttle drum becomes free from the rod of the throttle opener.

   Make sure that there is clearance between the throttle drum and rod.

   If NG, refer to EC section, "Basic Inspection".
   If OK, go to the following steps.

Middle throttle drum side

4. Loosen lock nut, and tighten adjusting nut until middle throttle drum starts to move.
5. Fasten adjusting nut with lock nut.

Throttle drum side

6. Start engine and warm it up.
7. Loosen lock nut, and tighten adjusting nut until throttle drum starts to move.
8. From that position turn back adjusting nut 1.5 to 2 turns, and fasten it with lock nut.
9. Release vacuum from the throttle opener.
10. Remove vacuum pump and vacuum hose from the throttle opener.
11. Reinstall the original vacuum hose to the throttle opener securely.

WARNING:

When replacing fuel line parts, be sure to observe the following:

- **Put a "CAUTION: FLAMMABLE" sign in workshop.**
- **Be sure to furnish workshop with a CO_2 fire extinguisher.**
- **Do not smoke while servicing fuel system. Keep open flames and sparks away from work area.**
- **Be sure to disconnect battery ground cable before conducting operations.**
- **Drain fuel from Fuel Tank and put drained fuel in an explosion-proof container and put lid on securely.**

CAUTION:

- **Before disconnecting fuel hose, release fuel pressure from fuel line. Refer to MA section, "Changing Fuel Filter".**
- **Do not disconnect any fuel line unless absolutely necessary.**
- **Plug hose and pipe openings to prevent entry of dust or dirt.**
- **Always replace O-ring and clamps with new ones.**
- **Do not kink or twist hose and tube when they are installed.**
- **Do not tighten hose clamps excessively to avoid damaging hoses.**
- **Tighten bolts to specified torque.**
- **After installation, run engine and check for fuel leaks at connections.**
- **Use only a genuine fuel filler cap as a replacement.**
- **For inspection, refer to EC section, "On Board Refueling Vapor Recovery (ORVR)".**

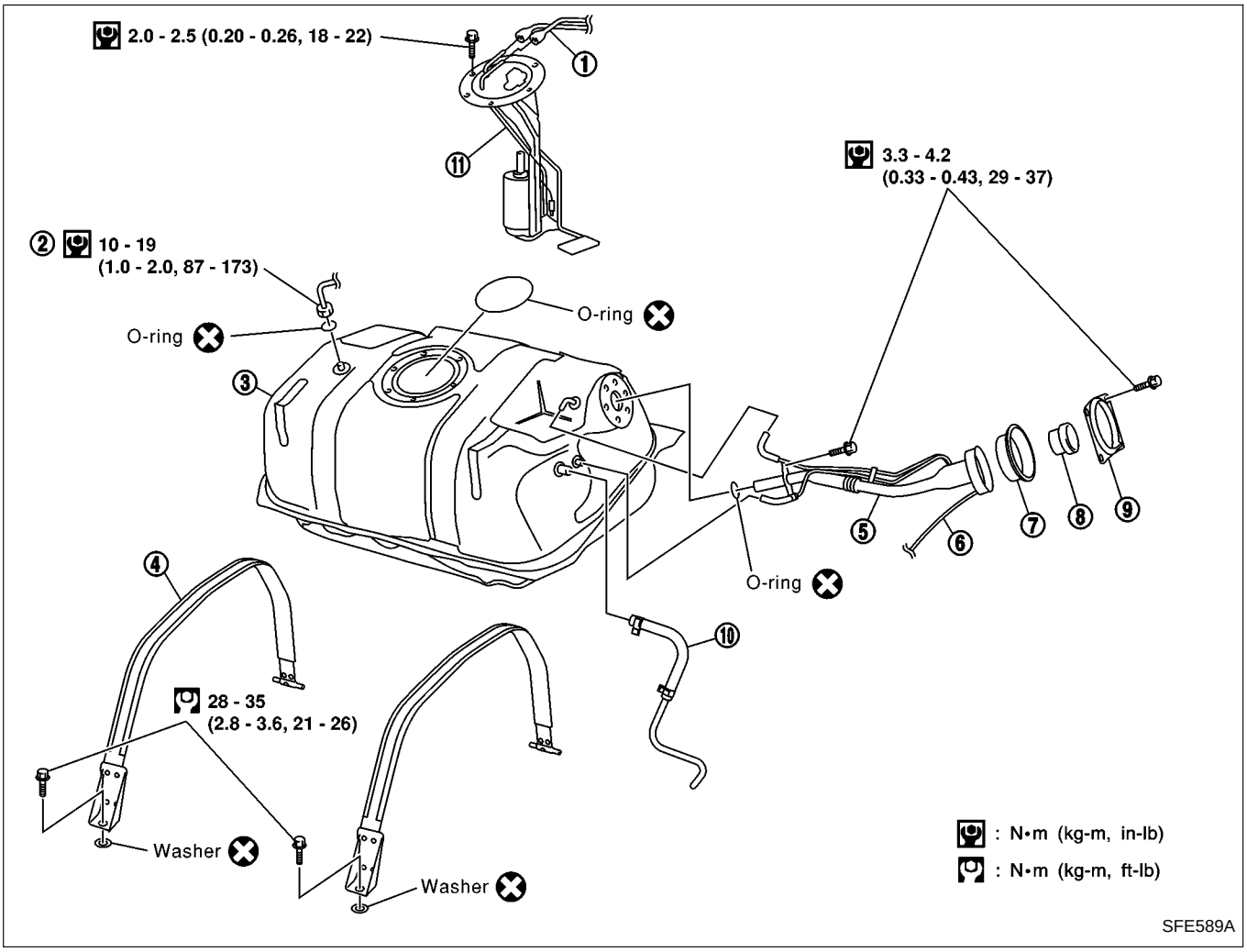

① Fuel tube
② EVAP purge line
③ Fuel tank
④ Fuel tank tightening band
⑤ Filler tube
⑥ Drain hose
⑦ Grommet
⑧ Fuel filler cap
⑨ Cover
⑩ Refueling EVAP vapor line
⑪ Fuel level sensor unit and fuel pump

Fuel Tank

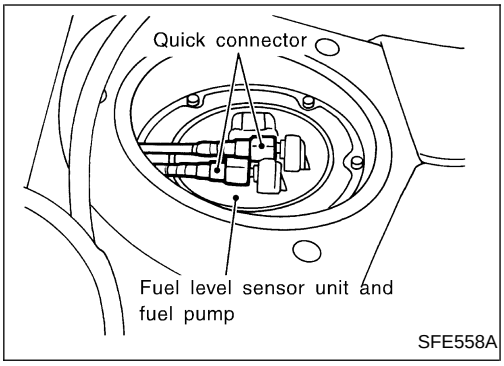

REMOVAL

1. Release fuel pressure from fuel line.
   Refer to EC section, “Fuel Pressure Release”.
2. Disconnect battery ground cable.
3. Drain fuel from fuel tank.
4. Disconnect electrical connector.
5. Remove the quick connector as follows.

a. Put mating marks on tubes and connectors for correct installation.
b. Hold the sides of the connector, push in tabs, and pull out the tube inserted in the retainer.

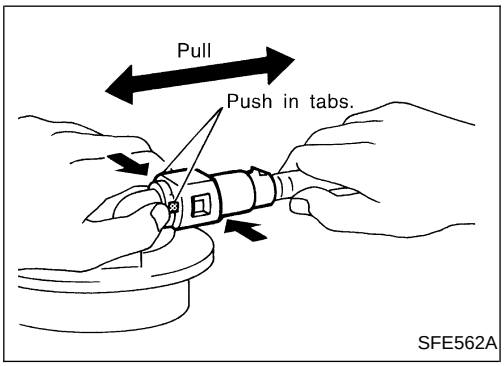

CAUTION:

- **The tube can be removed when the push in tabs are completely depressed. Do not twist it more than necessary.**
- **Do not use any tools to remove the quick connector.**

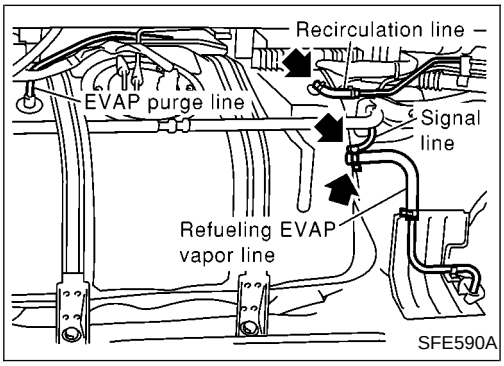

6. Disconnect EVAP purge line, recirculation line, signal line and refueling EVAP vapor line at fuel tank side.
7. Remove fuel tank mounting band bolts while supporting fuel tank.
8. Remove fuel tank.

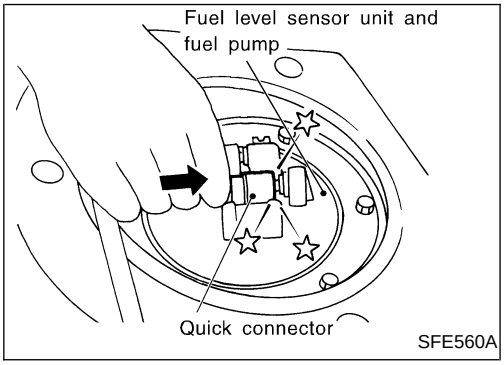

INSTALLATION

To install, reverse the removal procedure. Connect the quick connector as follows:

- Align mating marks on tubes and connectors for correct installation.
- Align push in tabs with retainer openings.
- Insert tube into the center of the connector until you hear a click.

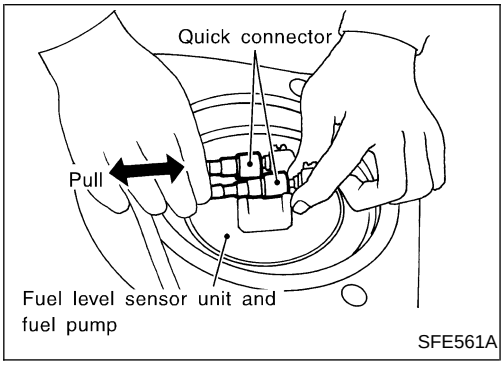

After connecting quick connector, make sure the connection is firmly made using the following method.

- Pull on the fuel tube and connector to make sure they are firmly connected.
- Start the engine, increase engine speed and verify that there are no leaks.

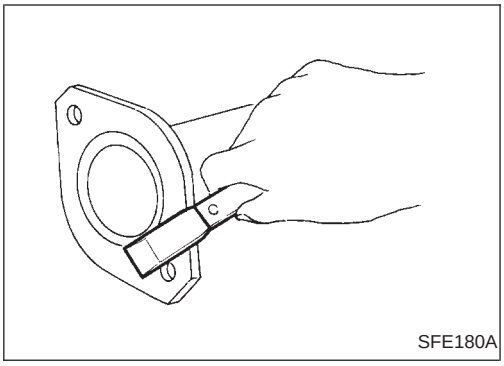

CAUTION:

- **Always replace exhaust gaskets with new ones when reassembling. If gasket is left on flange surface, scrape off completely as shown at left.**
- **With engine running, check all tube connections for exhaust gas leaks, and entire system for unusual noises.**
- **Check to ensure that mounting brackets and mounting insulators are installed properly free from undue stress. Improper installation could result in excessive noise or vibration.**
- **Discard any heated oxygen sensor which has been dropped from a height of more than 0.5 m (19.7 in) onto a hard surface such as a concrete floor; use a new one.**
- **Before installing a new oxygen sensor, clean exhaust system threads using oxygen sensor thread cleaner tool, J-43897-18 or J-43897-12, and apply anti-seize lubricant.**
- **Do not overtorque the oxygen sensor. Doing so may cause damage to the oxygen sensor, resuiting in the MIL coming on.**

SEC. 200

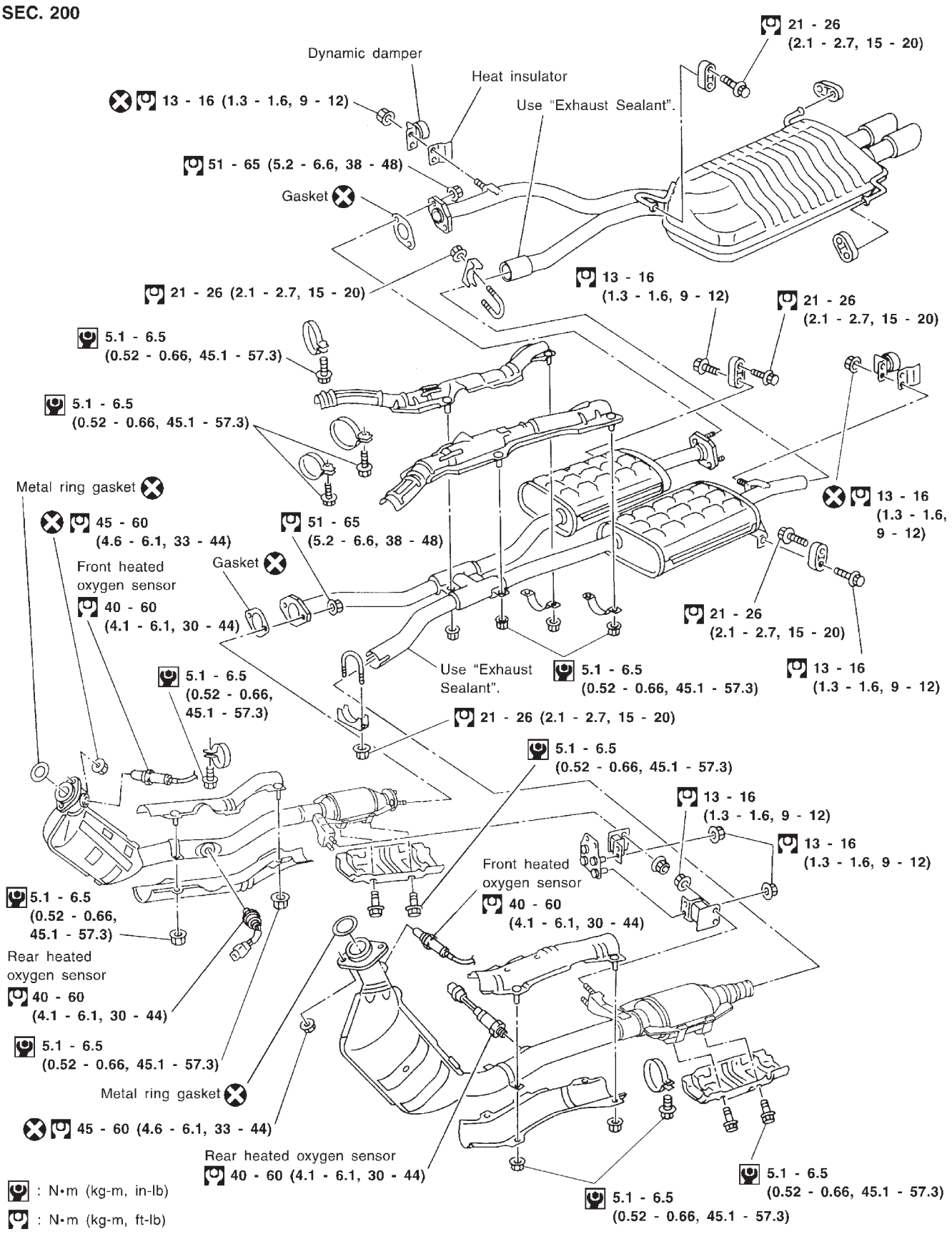

SFE467AB