SECTION ATC

AUTOMATIC AIR CONDITIONER

CONTENTS

PRECAUTIONS

PFP:00001

Precautions for Supplemental Restraint System (SRS) “AIR BAG” and “SEAT BELT PRE-TENSIONER”

EJS0022V

The Supplemental Restraint System such as “AIR BAG” and “SEAT BELT PRE-TENSIONER”, used along with a front seat belt, helps to reduce the risk or severity of injury to the driver and front passenger for certain types of collision. This system includes seat belt switch inputs and dual stage front air bag modules. The SRS system uses the seat belt switches to determine the front air bag deployment, and may only deploy one front air bag, depending on the severity of a collision and whether the front occupants are belted or unbelted.
Information necessary to service the system safely is included in the SRS and SB section of this Service Manual.

WARNING:

- **To avoid rendering the SRS inoperative, which could increase the risk of personal injury or death in the event of a collision which would result in air bag inflation, all maintenance must be performed by an authorized NISSAN/INFINITI dealer.**
- **Improper maintenance, including incorrect removal and installation of the SRS, can lead to personal injury caused by unintentional activation of the system. For removal of Spiral Cable and Air Bag Module, see the SRS section.**
- **Do not use electrical test equipment on any circuit related to the SRS unless instructed to in this Service Manual. SRS wiring harnesses can be identified by yellow and/or orange harnesses or harness connectors.**

Precautions for Working with HFC-134a (R-134a)

EJS0008R

WARNING:

- **CFC-12 (R-12) refrigerant and HFC-134a (R-134a) refrigerant are not compatible. If the refrigerants are mixed and compressor malfunction is likely to occur, refer to “CONTAMINATED REFRIGERANT” below. To determine the purity of HFC-134a (R-134a) in the vehicle and recovery tank, use Refrigerant Recovery/Recycling Recharging equipment and Refrigerant Identifier.**
- **Use only specified lubricant for the HFC-134a (R-134a) A/C system and HFC-134a (R-134a) components. If lubricant other than that specified is used, compressor malfunction is likely to occur.**
- **The specified HFC-134a (R-134a) lubricant rapidly absorbs moisture from the atmosphere. The following handling precautions must be observed:**
  - **When removing refrigerant components from a vehicle, immediately cap (seal) the component to minimize the entry of moisture from the atmosphere.**
  - **When installing refrigerant components to a vehicle, do not remove the caps (unseal) until just before connecting the components. Connect all refrigerant loop components as quickly as possible to minimize the entry of moisture into system.**
  - **Only use the specified lubricant from a sealed container. Immediately reseal containers of lubricant. Without proper sealing, lubricant will become moisture saturated and should not be used.**
  - **Avoid breathing A/C refrigerant and lubricant vapor or mist. Exposure may irritate eyes, nose and throat. Remove HFC-134a (R-134a) from the A/C system, using certified service equipment meeting requirements of SAE J2210 [HFC-134a (R-134a) recycling equipment], or J2209 [HFC-134a (R-134a) recovery equipment]. If accidental system discharge occurs, ventilate work area before resuming service. Additional health and safety information may be obtained from refrigerant and lubricant manufacturers.**
  - **Do not allow lubricant (Nissan A/C System Oil Type S) to come in contact with styrofoam parts. Damage may result.**

CONTAMINATED REFRIGERANT

If a refrigerant other than pure HFC-134a (R-134a) is identified in a vehicle, your options are:

- Explain to the customer that environmental regulations prohibit the release of contaminated refrigerant into the atmosphere.
- Explain that recovery of the contaminated refrigerant could damage your service equipment and refrigerant supply.
- Suggest the customer return the vehicle to the location of previous service where the contamination may have occurred.
- If you choose to perform the repair, recover the refrigerant using only **dedicated equipment and containers. Do not recover contaminated refrigerant into your existing service equipment.** If your facility does not have dedicated recovery equipment, you may contact a local refrigerant product retailer for available service. This refrigerant must be disposed of in accordance with all federal and local regulations. In addition, replacement of all refrigerant system components on the vehicle is recommended.
- If the vehicle is within the warranty period, the air conditioner warranty is void. Please contact Nissan Customer Affairs for further assistance.

General Refrigerant Precautions

EJS0008S

WARNING:

- **Do not release refrigerant into the air. Use approved recovery/recycling equipment to capture the refrigerant every time an air conditioning system is discharged.**
- **Always wear eye and hand protection (goggles and gloves) when working with any refrigerant or air conditioning system.**
- **Do not store or heat refrigerant containers above 52°C (125°F).**
- **Do not heat a refrigerant container with an open flame; if container warming is required, place the bottom of the container in a warm pail of water.**
- **Do not intentionally drop, puncture, or incinerate refrigerant containers.**
- **Keep refrigerant away from open flames: poisonous gas will be produced if refrigerant burns.**
- **Refrigerant will displace oxygen, therefore be certain to work in well ventilated areas to prevent suffocation.**
- **Do not pressure test or leak test HFC-134a (R-134a) service equipment and/or vehicle air conditioning systems with compressed air during repair. Some mixtures of air and HFC134a (R-134a) have been shown to be combustible at elevated pressures. These mixtures, if ignited, may cause injury or property damage. Additional health and safety information may be obtained from refrigerant manufacturers.**

Lubricant Precautions

EJS0008Y

- Use only specified lubricant for the HFC-134a (R-134a) A/C system and HFC-134a (R-134a) components. If lubricant other than that specified is used, compressor malfunction is likely to occur.
- The specified HFC-134a (R-134a) lubricant rapidly absorbs moisture from the atmosphere. The following handling precautions must be observed:
  - When removing refrigerant components from a vehicle, immediately cap (seal) the component to minimize the entry of moisture from the atmosphere.
  - When installing refrigerant components to a vehicle, do not remove the caps (unseal) until just before connecting the components. Connect all refrigerant loop components as quickly as possible to minimize the entry of moisture into system.
  - Only use the specified lubricant from a sealed container. Immediately reseal containers of lubricant. Without proper sealing, lubricant will become moisture saturated and should not be used.
- Avoid breathing A/C refrigerant and lubricant vapor or mist. Exposure may irritate eyes, nose and throat. Remove HFC-134a (R-134a) from the A/C system, using certified service equipment meeting requirements of SAE J2210 HFC-134a (R-134a) recycling equipment, or J2209 HFC-134a (R-134a) recovery equipment. If accidental system discharge occurs, ventilate work area before resuming service. Additional health and safety information may be obtained from refrigerant and lubricant manufacturers.
- Do not allow lubricant (Nissan A/C System Oil Type S) to come in contact with styrofoam parts. Damage may result.

Precautions for Refrigerant Connection

EJS0008T

A new type refrigerant connection has been introduced to all refrigerant lines except the following location.

- Expansion valve to cooling unit
- Refrigerant pressure sensor to condenser

FEATURES OF NEW TYPE REFRIGERANT CONNECTION

- The O-ring has been relocated. It has also been provided with a groove for proper installation. This eliminates the chance of the O-ring being caught in, or damaged by, the mating part. The sealing direction of the O-ring is now set vertically in relation to the contacting surface of the mating part to improve sealing characteristics.
- The reaction force of the O-ring will not occur in the direction that causes the joint to pull out, thereby facilitating piping connections.

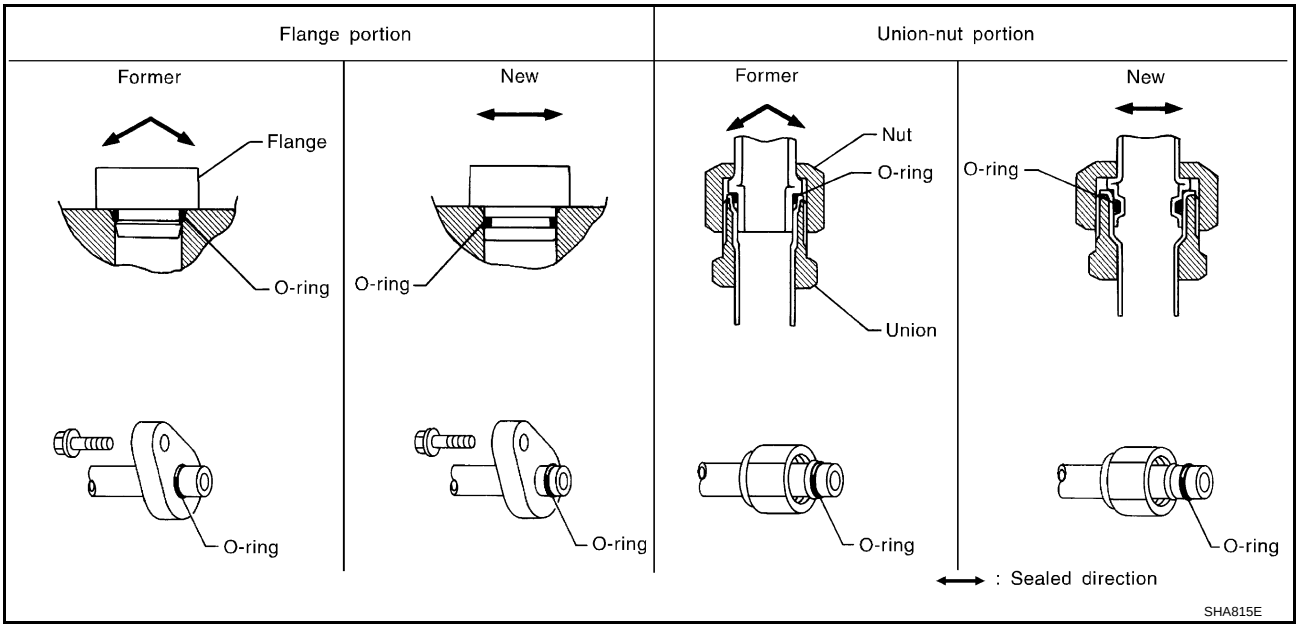

O-RING AND REFRIGERANT CONNECTION

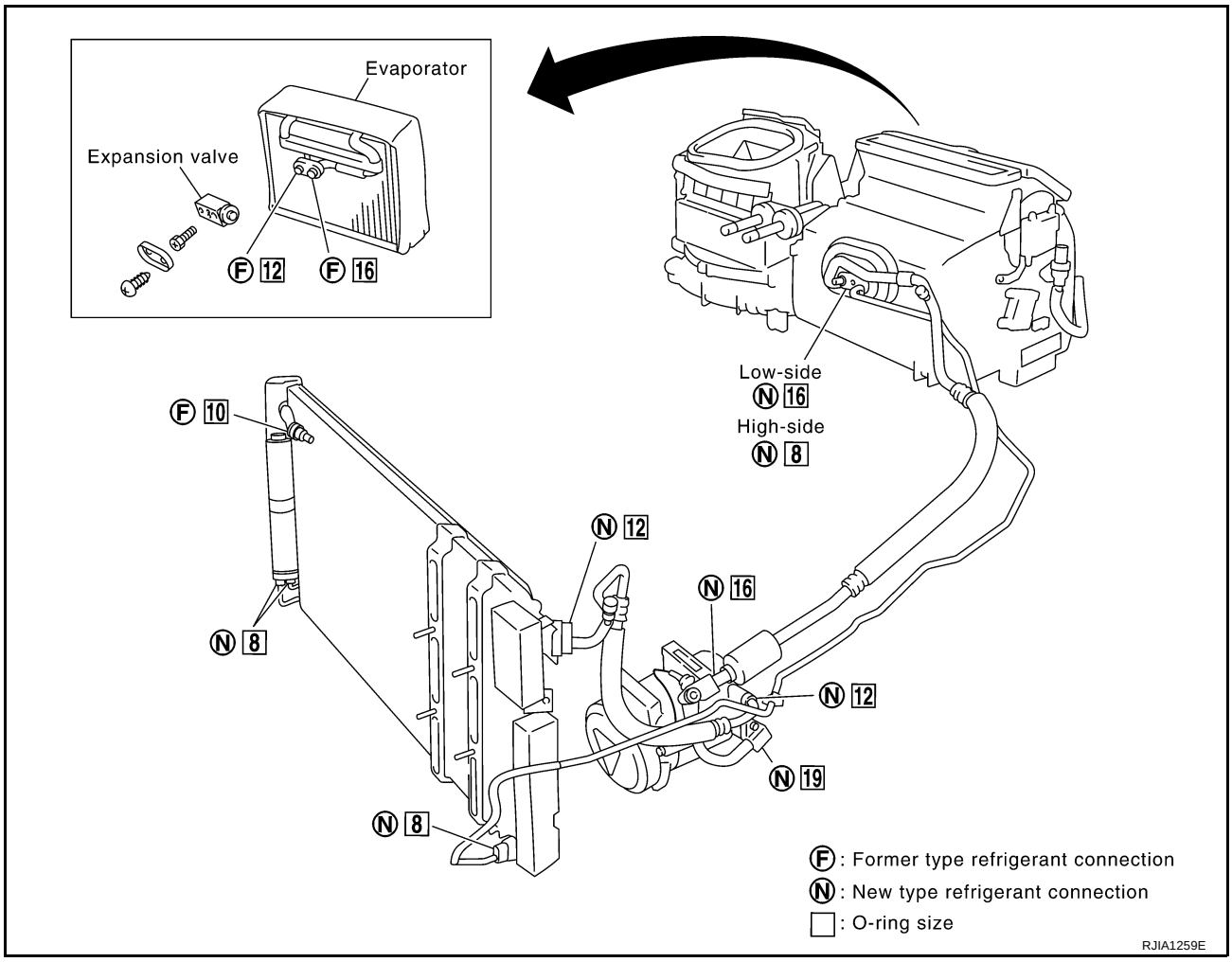

CAUTION:

The new and former refrigerant connections use different O-ring configurations. Do not confuse O-rings since they are not interchangeable. If a wrong O-ring is installed, refrigerant will leak at, or around, the connection.

O-Ring Part Numbers and Specifications

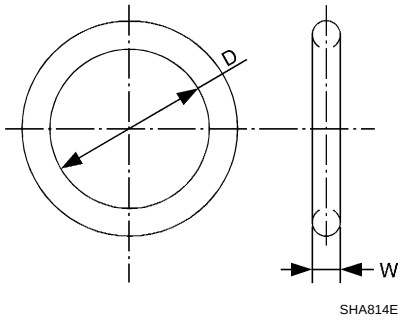

Connection type	O-ring size	Part number	D mm (in)	W mm (in)
New	8	92471 N8210	6.8 (0.268)	1.85 (0.0728)
Former		92470 N8200	6.07 (0.2390)	1.78 (0.0701)
Former	10	J2476 89956	9.25 (0.3642)	1.78 (0.0701)
New	12	92472 N8210	10.9 (0.429)	2.43 (0.0957)
Former		92475 71L00	11.0 (0.433)	2.4 (0.094)
New	16	92473 N8210	13.6 (0.535)	2.43 (0.0957)
Former		92475 72L00	14.3 (0.563)	2.3 (0.091)
New	19	92474 N8210	16.5 (0.650)	2.43 (0.0957)
Former		92477 N8200	17.12 (0.6740)	1.78 (0.0701)
New	24	92195 AH300	21.8 (0.858)	2.4 (0.094)

WARNING:
Make sure all refrigerant is discharged into the recycling equipment and the pressure in the system is less than atmospheric pressure. Then gradually loosen the discharge side hose fitting and remove it.

CAUTION:
When replacing or cleaning refrigerant cycle components, observe the following.

- **When the compressor is removed, store it in the same position as it is when mounted on the car. Malfunction to do so will cause lubricant to enter the low pressure chamber.**
- **When connecting tubes, always use a torque wrench and a back-up wrench.**
- **After disconnecting tubes, immediately plug all openings to prevent entry of dirt and moisture.**
- **When installing an air conditioner in the vehicle, connect the pipes as the final stage of the operation. Do not remove the seal caps of pipes and other components until just before required for connection.**
- **Allow components stored in cool areas to warm to working area temperature before removing seal caps. This prevents condensation from forming inside A/C components.**
- **Thoroughly remove moisture from the refrigeration system before charging the refrigerant.**
- **Always replace used O-rings.**
- **When connecting tube, apply lubricant to circle of the O-rings shown in illustration. Be careful not to apply lubricant to threaded portion.**
  Lubricant name: Nissan A/C System Oil Type S
  Part number: KLH00-PAGS0
- **O-ring must be closely attached to dented portion of tube.**
- **When replacing the O-ring, be careful not to damage O-ring and tube.**
- **Connect tube until you hear it click, then tighten the nut or bolt by hand until snug. Make sure that the O-ring is installed to tube correctly.**

- **After connecting line, conduct leak test and make sure that there is no leakage from connections. When the gas leaking point is found, disconnect that line and replace the O-ring. Then tighten connections of seal seat to the specified torque.**

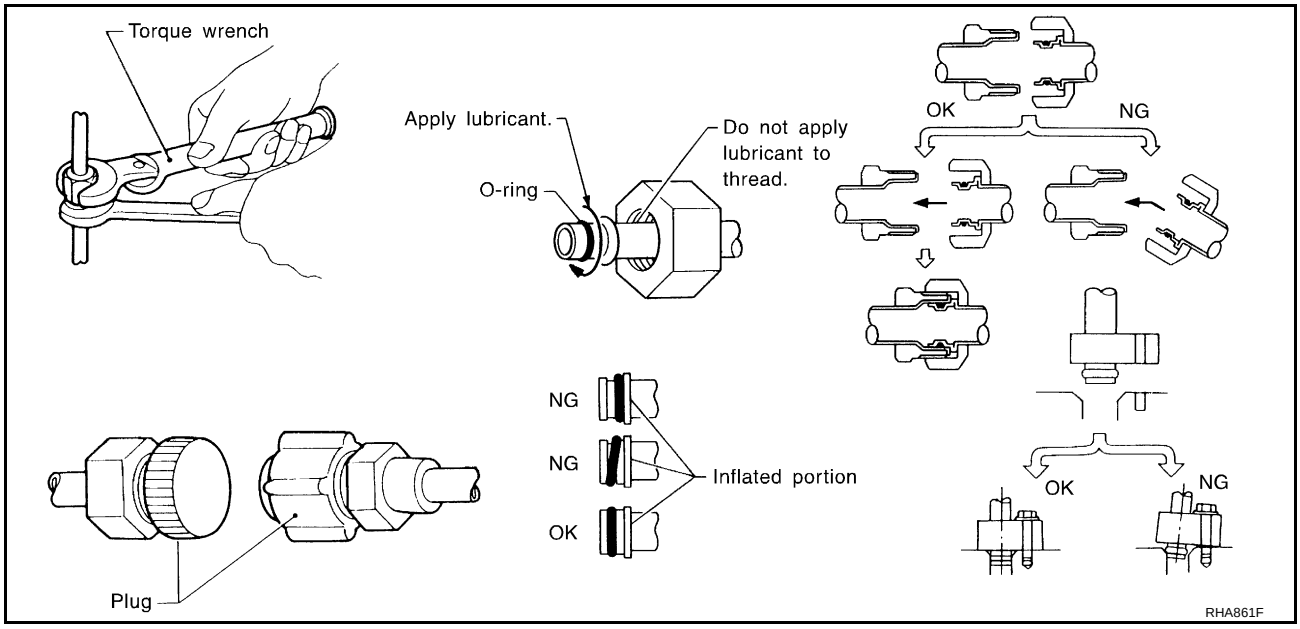

Precautions for Servicing Compressor

EJS0008U

- **Plug all openings to prevent moisture and foreign matter from entering.**
- **When the compressor is removed, store it in the same position as it is when mounted on the car.**
- **When replacing or repairing compressor, follow “Maintenance of Lubricant Quantity in Compressor” exactly. Refer to ATC-24, "Maintenance of Lubricant Quantity in Compressor" .**
- **Keep friction surfaces between clutch and pulley clean. If the surface is contaminated, with lubricant, wipe it off by using a clean waste cloth moistened with thinner.**
- **After compressor service operation, turn the compressor shaft by hand more than five turns in both directions. This will equally distribute lubricant inside the compressor. After the compressor is installed, let the engine idle and operate the compressor for one hour.**
- **After replacing the compressor magnet clutch, apply voltage to the new one and check for normal operation.**

Precautions for Service Equipment

EJS0008V

RECOVERY/RECYCLING EQUIPMENT

Be certain to follow the manufacturer’s instructions for machine operation and machine maintenance. Never introduce any refrigerant other than that specified into the machine.

ELECTRONIC LEAK DETECTOR

Be certain to follow the manufacturer’s instructions for tester operation and tester maintenance.

VACUUM PUMP

The lubricant contained inside the vacuum pump is not compatible with the specified lubricant for HFC-134a (R-134a) A/C systems. The vent side of the vacuum pump is exposed to atmospheric pressure. So the vacuum pump lubricant may migrate out of the pump into the service hose. This is possible when the pump is switched off after evacuation (vacuuming) and hose is connected to it.
To prevent this migration, use a manual valve placed near the hose-to-pump connection, as follows.

- Usually vacuum pumps have a manual isolator valve as part of the pump. Close this valve to isolate the service hose from the pump.
- For pumps without an isolator, use a hose equipped with a manual shut-off valve near the pump end. Close the valve to isolate the hose from the pump.
- If the hose has an automatic shut off valve, disconnect the hose from the pump. As long as the hose is connected, the valve is open and lubricating oil may migrate.

Some one-way valves open when vacuum is applied and close under a no vacuum condition. Such valves may restrict the pump's ability to pull a deep vacuum and are not recommended.

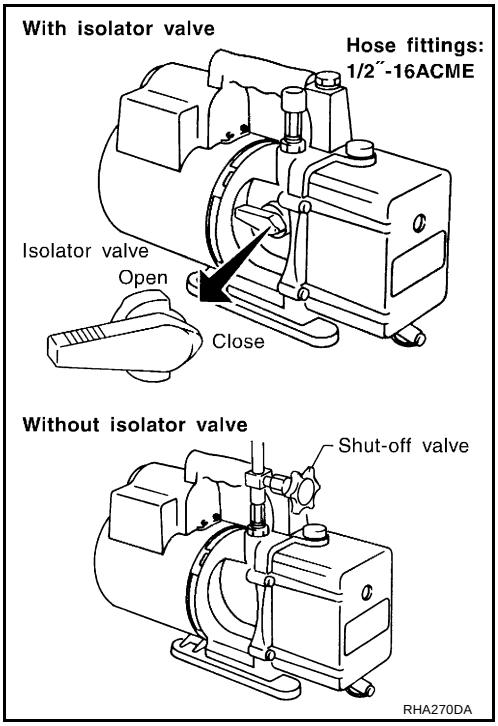

MANIFOLD GAUGE SET

Be certain that the gauge face indicates HFC-134a or R-134a. Be sure the gauge set has 1/2″-16 ACME threaded connections for service hoses. Confirm the set has been used only with refrigerant HFC-134a (R-134a) and specified lubricants.

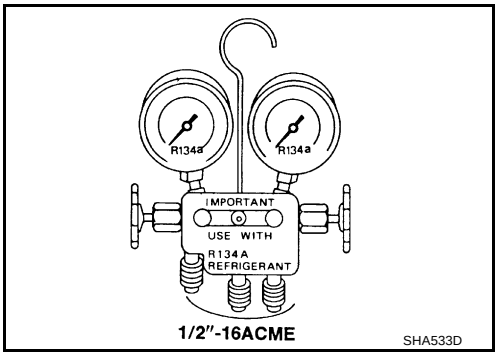

SERVICE HOSES

Be certain that the service hoses display the markings described (colored hose with black stripe). All hoses must include positive shut off devices (either manual or automatic) near the end of the hoses opposite the manifold gauge.

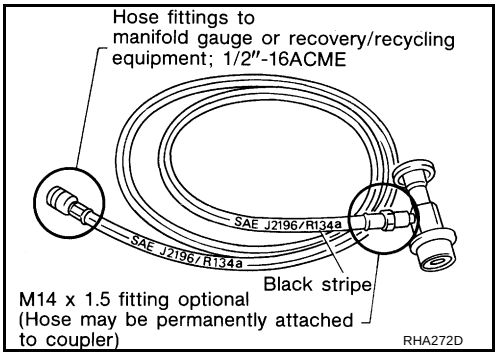

SERVICE COUPLERS

Never attempt to connect HFC-134a (R-134a) service couplers to a CFC-12 (R-12) A/C system. The HFC-134a (R-134a) couplers will not properly connect to the CFC-12 (R-12) system. However, if an improper connection is attempted, discharging and contamination may occur.

Shut-off valve rotation	A/C service valve
Clockwise	Open
Counterclockwise	Close

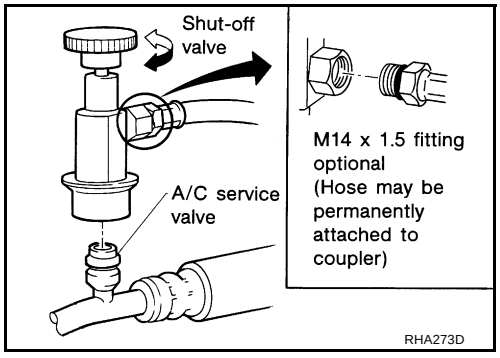

REFRIGERANT WEIGHT SCALE

Verify that no refrigerant other than HFC-134a (R-134a) and specified lubricants have been used with the scale. If the scale controls refrigerant flow electronically, the hose fitting must be 1/2″-16 ACME.

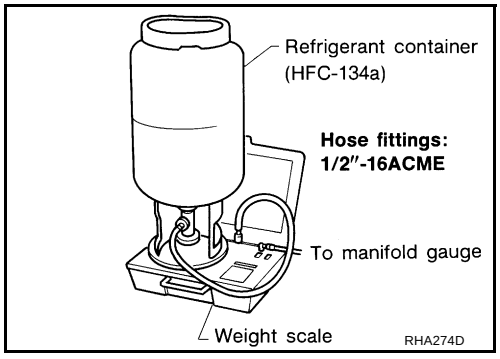

CHARGING CYLINDER

Using a charging cylinder is not recommended. Refrigerant may be vented into air from cylinder′s top valve when filling the cylinder with refrigerant. Also, the accuracy of the cylinder is generally less than that of an electronic scale or of quality recycle/recharge equipment.

Precautions for Leak Detection Dye

EJS0008W

- The A/C system contains a fluorescent leak detection dye used for locating refrigerant leaks. An ultraviolet (UV) lamp is required to illuminate the dye when inspecting for leaks.
- Always wear fluorescence enhancing UV safety goggles to protect your eyes and enhance the visibility of the fluorescent dye.
- The fluorescent dye leak detector is not a replacement for an electronic refrigerant leak detector. The fluorescent dye leak detector should be used in conjunction with an electronic refrigerant leak detector to (J-41995) pin-point refrigerant leaks.
- For your safety and your customer's satisfaction, read and follow all manufacture's operating instructions and precautions prior to performing the work.
- A compressor shaft seal should not be repaired because of dye seepage. The compressor shaft seal should only be repaired after confirming the leak with an electronic refrigerant leak detector (J-41995).
- Always remove any remaining dye from the leak area after repairs are complete to avoid a misdiagnosis during a future service.
- Do not allow dye to come into contact with painted body panels or interior components. If dye is spilled, clean immediately with the approved dye cleaner. Fluorescent dye left on a surface for an extended period of time cannot be removed.
- Do not spray the fluorescent dye cleaning agent on hot surfaces (engine exhaust manifold, etc.).
- Do not use more than one refrigerant dye bottle (1/4 ounce /7.4 cc) per A/C system.
- Leak detection dyes for HFC-134a (R-134a) and CFC-12 (R-12) A/C systems are different. Do not use HFC-134a (R-134a) leak detection dye in CFC-12 (R-12) A/C system or CFC-12 (R-12) leak detector dye in HFC-134a (R-134a) A/C system or A/C system damage may result.
- The fluorescent properties of the dye will remain for over three (3) years unless a compressor malfunction occurs.

IDENTIFICATION

NOTE:
Vehicles with factory installed fluorescent dye have a green label.
Vehicles without factory installed fluorescent dye have a blue label.

IDENTIFICATION LABEL FOR VEHICLE

Vehicles with factory installed fluorescent dye have this identification label on the front side of hood.

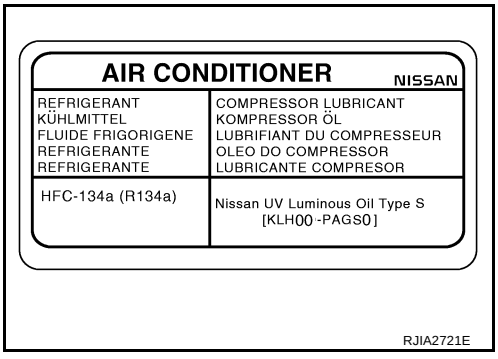

Wiring Diagrams and Trouble Diagnosis

EJS00091

When you read wiring diagrams, refer to the following:

- GI-14, "How to Read Wiring Diagrams" in GI section.
- PG-3, "Wiring Diagram — POWER —" in PG section.

When you perform trouble diagnosis, refer to the following:

- GI-10, "How to Follow Trouble Diagnoses" in GI section.
- GI-26, "How to Perform Efficient Diagnosis for an Electrical Incident" in GI section.

PREPARATION

PFP:00002

Special Service Tools

EJS00092

The actual shapes of Kent-Moore tools may differ from those of special service tools illustrated here.

Tool number (Kent-Moore No.) Tool name	Description	
KV99106100 (J-41260) Clutch disc wrench	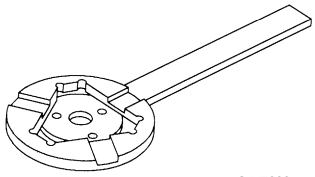 S-NT232 When replacing the magnetic clutch in the above compressor, use a clutch disc wrench with the pin side on the clutch disc to remove it. 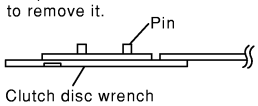 RJIA0194E	Removing shaft nut and clutch disc
KV99232340 (J-38874) or KV992T0001 (-) Clutch disc puller	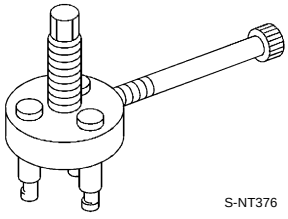 S-NT376	Removing clutch disc
KV99106200 (J-41261) Pulley installer	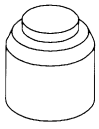 S-NT235	Installing pulley

HFC-134a (R-134a) Service Tools and Equipment

EJS00093

Never mix HFC-134a (R-134a) refrigerant and/or its specified lubricant with CFC-12 (R-12) refrigerant and/or its lubricant.

Separate and non-interchangeable service equipment must be used for handling each type of refrigerant/lubricant.

Refrigerant container fittings, service hose fittings and service equipment fittings (equipment which handles refrigerant and/or lubricant) are different between CFC-12 (R-12) and HFC-134a (R-134a). This is to avoid mixed use of the refrigerants/lubricant.

Adapters that convert one size fitting to another must never be used: refrigerant/lubricant contamination will occur and compressor malfunction will result.

Tool number (Kent-Moore No.) Tool name	Description	
HFC-134a (R-134a) refrigerant	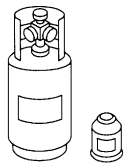 S-NT196	Container color: Light blue Container marking: HFC-134a (R-134a) Fitting size: Thread size ● Large container 1/2″-16 ACME
KLH00-PAGS0 (-) Nissan A/C System Oil Type S (DH-PS)	 S-NT197	Type: Poly alkaline glycol oil (PAG), type S (DH-PS) Application: HFC-134a (R-134a) wobble (swash) plate compressors (Nissan only) Lubricity: 40 m ℓ (1.4 US fl oz, 1.4 Imp fl oz)
(J43600) Recovery/Recycling Recharging equipment (ACR2000)	 WJIA0293E	Function: Refrigerant recovery and recycling and recharging
(J-41995) Electrical leak detector	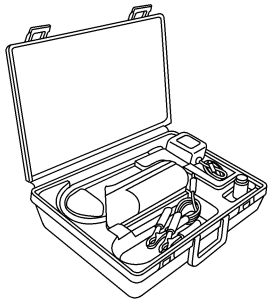 AHA281A	Power supply: ● DC 12V (Cigarette lighter)
(J-43926) Refrigerant dye leak detection kit Kit includes: (J-42220) UV lamp and UV safety goggles (J-41459) HFC-134a (R-134a) Dye injector Use with J-41447, 1/4 ounce bottle (J-41447) HFC-134a (R-134a) fluorescent leak detection dye (Box of 24, 1/4 ounce bottles) (J-43872) Refrigerant dye cleaner	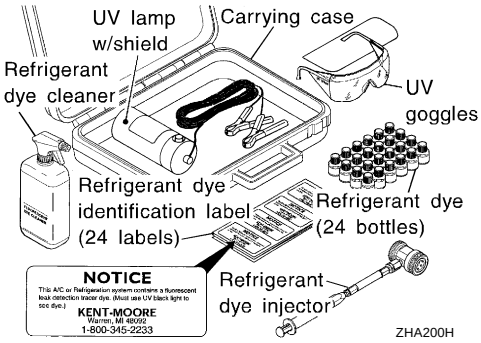 ZHA200H	Power supply: DC 12V (Battery terminal)
(J-42220) UV lamp and UV safety goggles	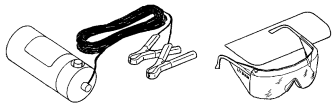 SHA438F	Power supply: DC 12V (Battery terminal) For checking refrigerant leak when fluorescent dye is installed in A/C system Includes: UV lamp and UV safety goggles

Tool number (Kent-Moore No.) Tool name	Description	
(J-41447) HFC-134a (R-134a) fluorescent leak detection dye (Box of 24, 1/4 ounce bottles)	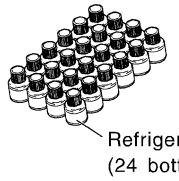 SHA439F	Application: For HFC-134a (R-134a) PAG oil Container: 1/4 ounce (7.4cc) bottle (Includes self-adhesive dye identification labels for affixing to vehicle after charging system with dye.)
(J-41459) HFC-134a (R-134a) dye injector Use with J-41447, 1/4 ounce bottle	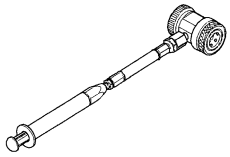 SHA440F	For injecting 1/4 ounce of fluorescent leak detection dye into A/C system
(J-43872) Refrigerant dye cleaner	 SHA441F	For cleaning dye spills
(J-39183) Manifold gauge set (with hoses and couplers)	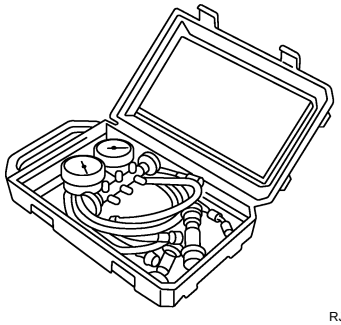 RJIA0196E	Identification: ● The gauge face indicates HFC-134a (R-134a). Fitting size: Thread size ● 1/2″-16 ACME
Service hoses ● High-pressure side hose (J-39501-72) ● Low-pressure side hose (J-39502-72) ● Utility hose (J-39476-72)	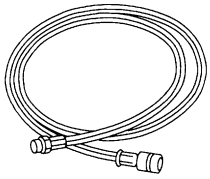 S-NT201	Hose color: ● Low hose: Blue with black stripe ● High hose: Red with black stripe ● Utility hose: Yellow with black stripe or green with black stripe Hose fitting to gauge: ● 1/2″-16 ACME
Service couplers ● High-pressure side coupler (J-39500-20) ● Low-pressure side coupler (J-39500-24)	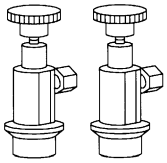 S-NT202	Hose fitting to service hose: ● M14 x 1.5 fitting is optional or permanently attached.

Tool number (Kent-Moore No.) Tool name	Description	
(J-39650) Refrigerant weight scale	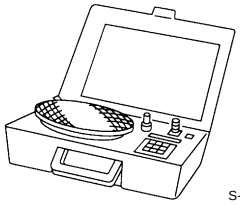 S-NT200	For measuring of refrigerant Fitting size: Thread size ● 1/2″-16 ACME
(J-39649) Vacuum pump (Including the isolator valve)	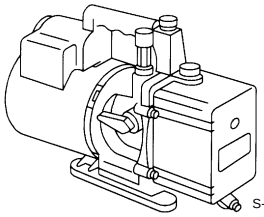 S-NT203	Capacity: ● Air displacement: 4 CFM ● Micron rating: 20 microns ● Oil capacity: 482 g (17 oz) Fitting size: Thread size ● 1/2″-16 ACME

Commercial Service Tools

EJS00094

Tool name	Description	
Refrigerant identifier equipment	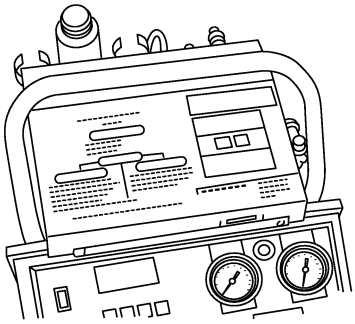 RJIA0197E	Checking for refrigerant purity and system contamination
Power tool	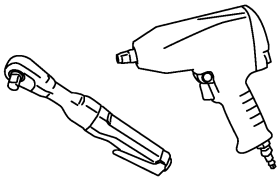 PBIC0190E	For loosening bolts and nuts

REFRIGERATION SYSTEM

PFP:KA990

Refrigerant Cycle

EJS00077

REFRIGERANT FLOW

The refrigerant flows in the standard pattern, that is, through the compressor, the condenser with liquid tank, through the evaporator, and back to the compressor. The refrigerant evaporation through the evaporator coil is controlled by an externally equalized expansion valve, located inside the evaporator case.

FREEZE PROTECTION

Under usual operating conditions, when the A/C is switched on, the compressor runs continuously, and the evaporator pressure, and therefore, temperature is controlled by the V-6 variable displacement compressor to prevent freeze up.

Refrigerant System Protection

EJS001Y3

REFRIGERANT PRESSURE SENSOR

The refrigerant system is protected against excessively high or low pressures by the refrigerant pressure sensor, located on the condenser. If the system pressure rises above, or falls below the specifications, the refrigerant pressure sensor detects the pressure inside the refrigerant line and sends the voltage signal to the ECM. ECM makes the A/C relay go OFF and stops the compressor when pressure on the high-pressure side detected by refrigerant pressure sensor is over about 2,746 kPa (28 kg/cm^2 , 398 psi), or below about 134 kPa (1.4 kg/cm^2 , 20 psi).

PRESSURE RELIEF VALVE

The refrigerant system is also protected by a pressure relief valve, located in the rear head of the compressor. When the pressure of refrigerant in the system increases to an unusual level [more than 3,727 kPa (38 kg/cm^2 , 540 psi)], the release port on the pressure relief valve automatically opens and releases refrigerant into the atmosphere.

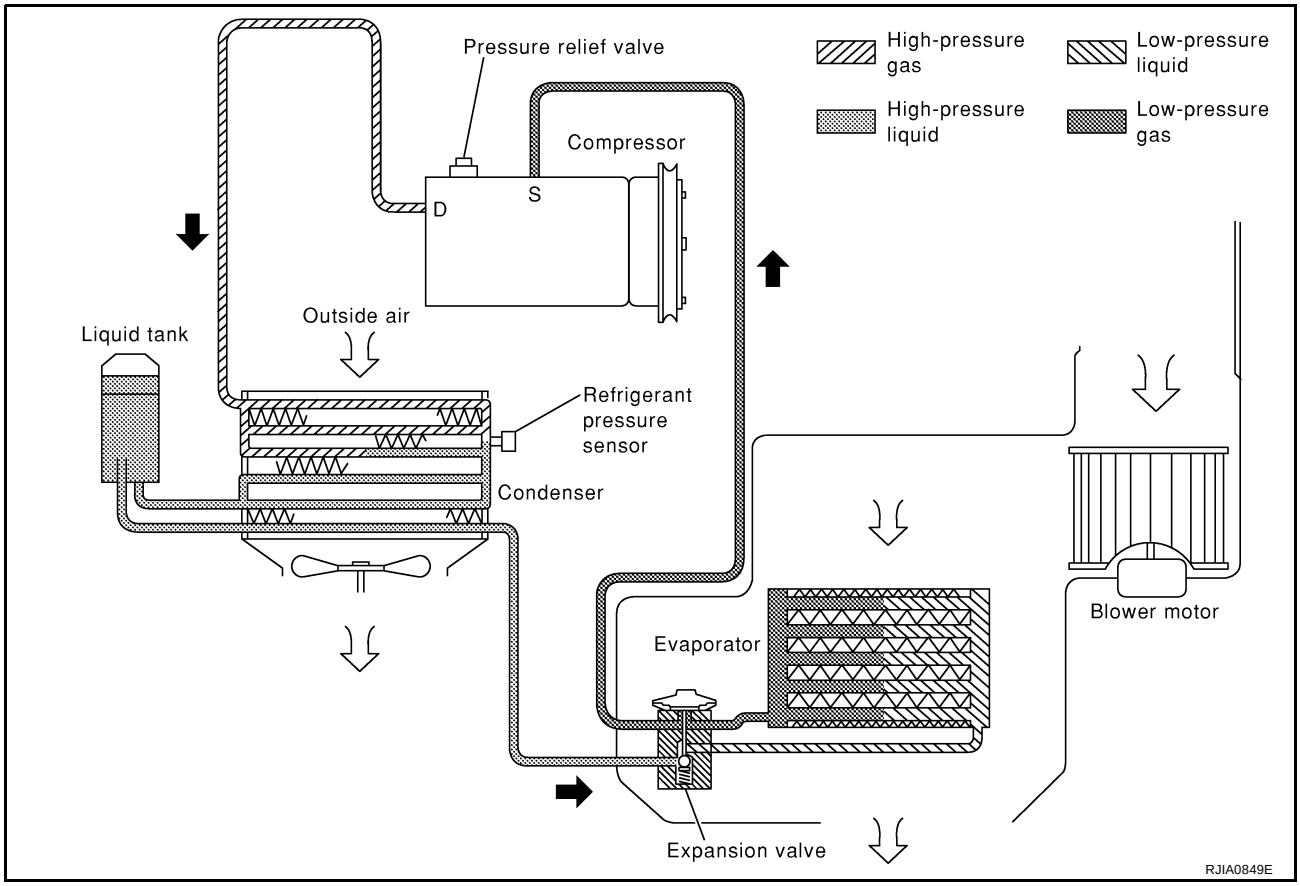

V-6 Variable Displacement Compressor

EJS001Y4

GENERAL INFORMATION

1. The V-6 variable compressor differs from previous units. The vent temperatures of the V-6 variable compressor do not drop too far below 5°C (41°F) when:
   Evaporator intake air temperature is less than 20°C (68°F).
   Engine is running at speeds less than 1,500 rpm.
   This is because the V-6 compressor provides a means of “capacity” control.
2. The V-6 variable compressor provides refrigerant control under varying conditions. During cold winters, it may not produce high refrigerant pressure discharge (compared to previous units) when used with air conditioning systems.
3. A “clanking” sound may occasionally be heard during refrigerant charge. The sound indicates that the tilt angle of the wobble (swash) plate has changed and is not a problem.
4. For air conditioning systems with the V-6 compressor, the clutch remains engaged unless: the system main switch, fan switch or ignition switch is turned OFF. When ambient (outside) temperatures are low or when the amount of refrigerant is insufficient, the clutch is disengaged to protect the compressor.

DESCRIPTION

General

The variable compressor is basically a swash plate type that changes piston stroke in response to the required cooling capacity.
The tilt of the wobble (swash) plate allows the piston's stroke to change so that refrigerant discharge can be continuously changed from 14.5 to 184 cm^3 (0.885 to 11.228 cu in).

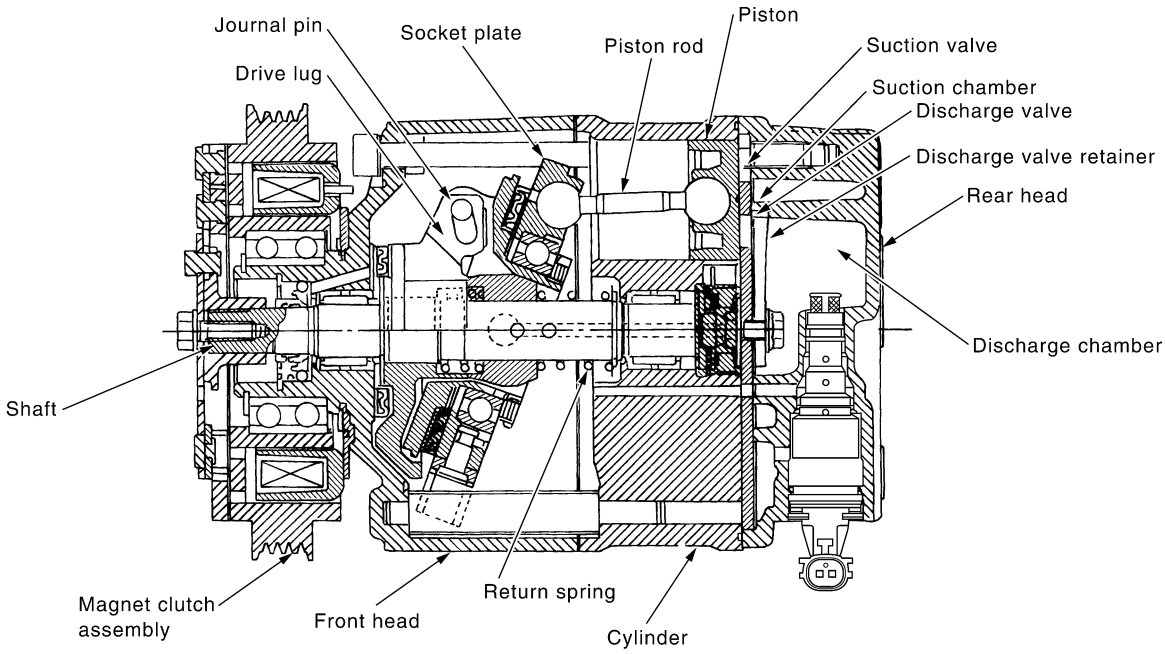

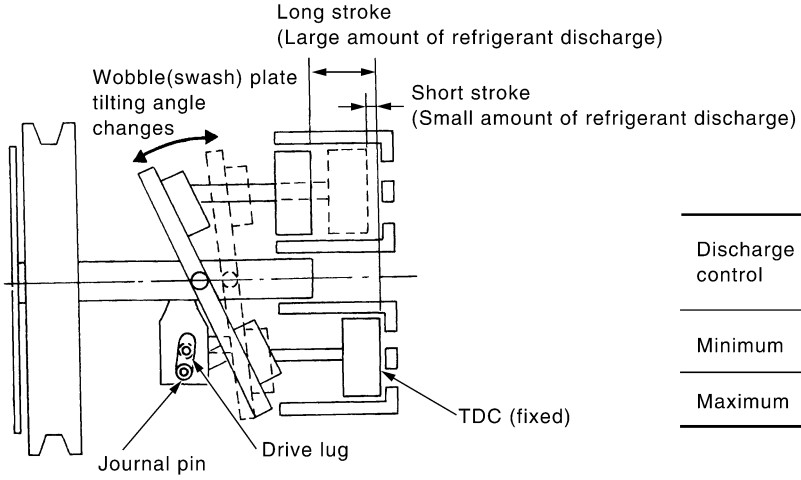

Discharge control	Discharge capacity cm^3 (cu in)/rev.	Piston stroke length mm (in)
Minimum	14.5 (0.885)	2.3 (0.091)
Maximum	184 (11.228)	28.6 (1.126)

RJIA1260E

Operation

1. Operation Control Valve

– By changing high-pressure valve lift amount, built-in compressor control valve executes the following:

- Controls high-pressure valve discharge amount.
- Changes crankcase pressure in compressor.
- Changes angle of wobble (swash) plate.

- Amount of high-pressure valve loft is determined by factors below.
  - Low-pressure applied to diaphragm
  - Spring load of set spring
  - Balance of magnetic force generated in magnet coil
- Electronic control valve (ECV) magnet coil receives electric signal (duty control) from auto amplifier. Then, magnetic force generated by electric current is changed to control high-pressure valve lift amount.

2. Maximum Cooling
   High-pressure valve is closed by magnetic force generated by electric signal sent from automatic amplifier. At this time, cylinder moves full stroke due to pressure balance between inside crankcase (Pc) and suction line (Ps).
   Under this condition, the wobble (swash) plate is set to the maximum stroke position.

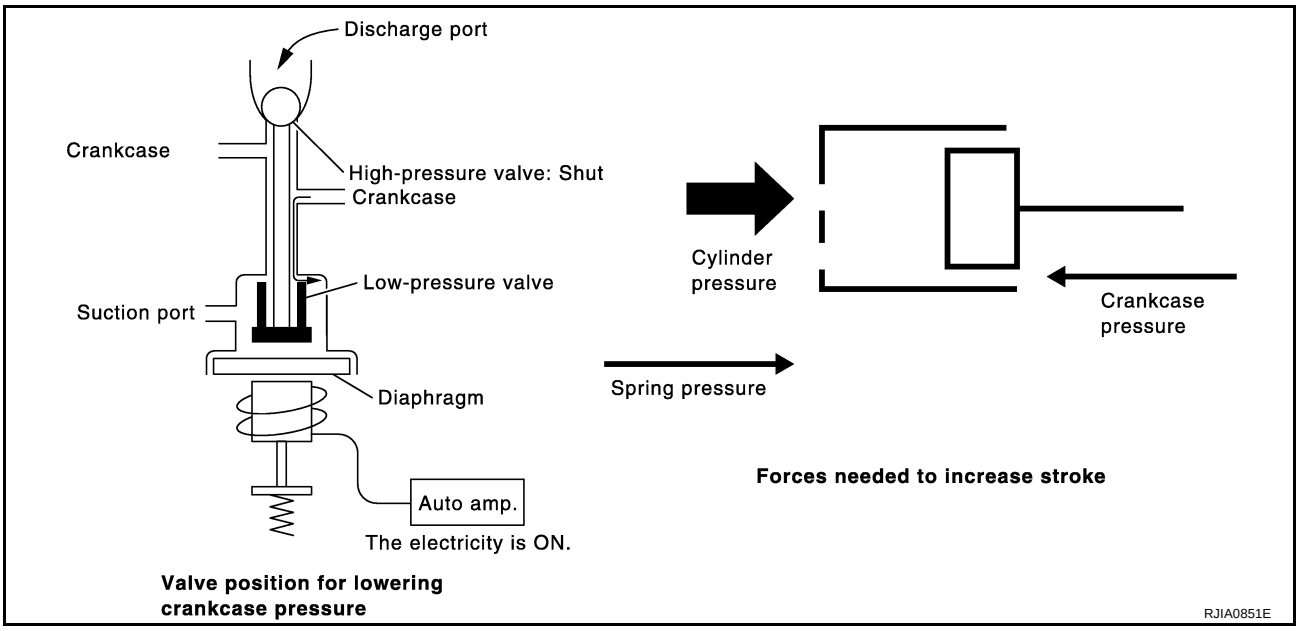

3. Capacity Control
   When no electric signal is sent from automatic amplifier (current: OFF), high-pressure valve is opened by spring force.
   Since suction pressure is low, it makes the suction port close and the discharge port open. Thus, crankcase pressure becomes high as high-pressure enters the crankcase.

- The force acts around the journal pin near the wobble (swash) plate, and is generated by the pressure difference before and behind the piston.
  The drive lug and journal pin are located where the piston generates the highest pressure. Piston pressure is between suction pressure Ps and discharge pressure Pd, which is near suction pressure Ps. If crankcase pressure Pc rises due to capacity control, the force around the journal pin makes the wobble (swash) plate angle decrease and also the piston stroke decrease. In other words, crankcase pressure

increase triggers pressure difference between the piston and the crankcase. The pressure difference changes the angle of the wobble (swash) plate.

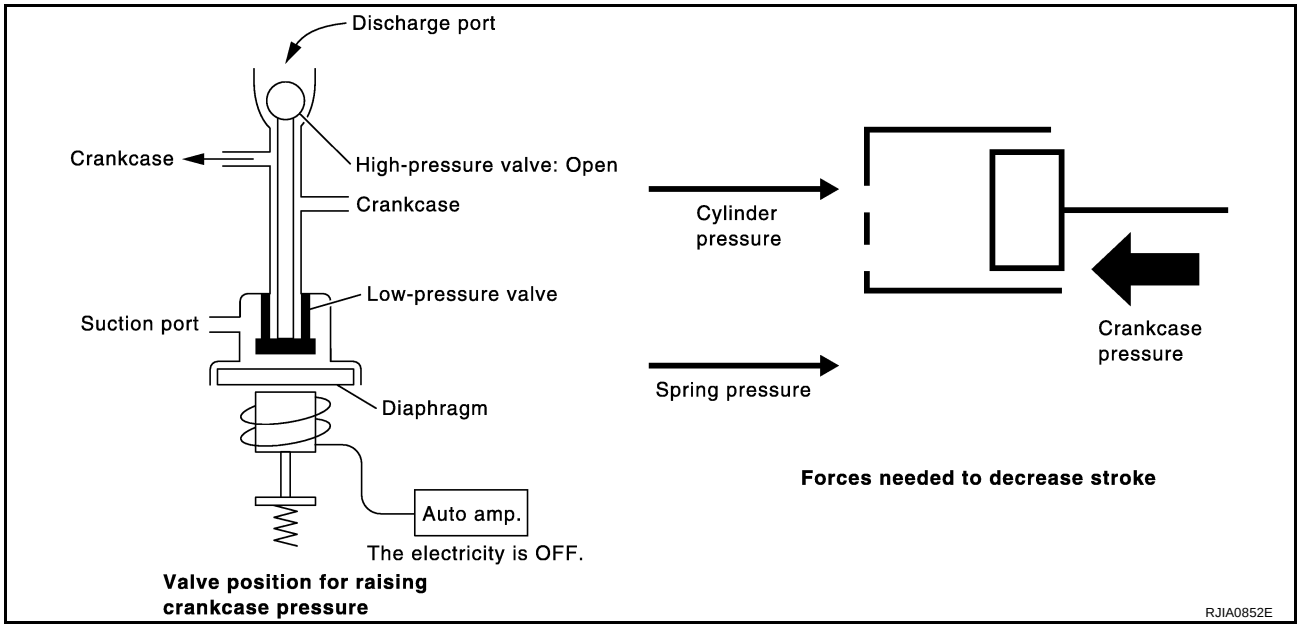

Component Layout

EJS001Y5

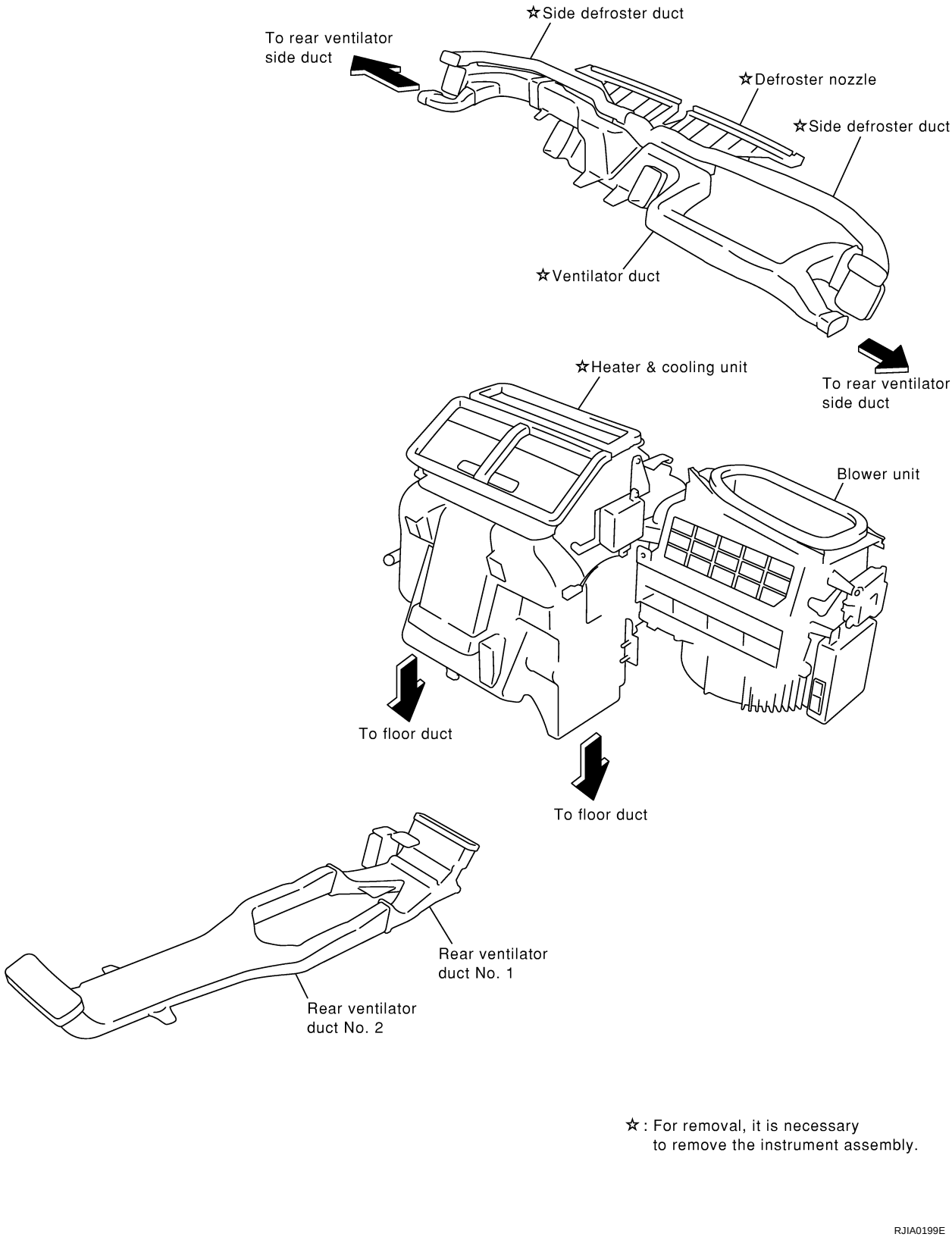

LUBRICANT

PFP:KLG00

Maintenance of Lubricant Quantity in Compressor

EJS00096

The lubricant in the compressor circulates through the system with the refrigerant. Add lubricant to compressor when replacing any component or after a large refrigerant leakage occurred. It is important to maintain the specified amount.
If lubricant quantity is not maintained properly, the following malfunctions may result:

- Lack of lubricant: May lead to a seized compressor.
- Excessive lubricant: Inadequate cooling (thermal exchange interference)

LUBRICANT

Name	**:Nissan A/C System Oil Type S**
Part number	**:KLH00-PAGS0**

LUBRICANT RETURN OPERATION

Adjust the lubricant quantity according to the test group shown below.

1. CHECK LUBRICANT RETURN OPERATION

Can lubricant return operation be performed?

- A/C system works properly.
- There is no evidence of a large amount of lubricant leakage.

CAUTION:
If excessive lubricant leakage is noted, do not perform the lubricant return operation.

YES or NO

YES >> GO TO 2.
NO >> GO TO 3.

2. PERFORM LUBRICANT RETURN OPERATION, PROCEEDING AS FOLLOWS

1. Start engine, and set the following conditions:

– Test condition
Engine speed: Idling to 1,200 rpm
A/C or AUTO switch: ON
Blower speed: Max. position
Temp. control: Optional [Set so that intake air temperature is 25 to 30°C (77 to 86°F).]
Intake position: Recirculation (REC)

2. Perform lubricant return operation for about 10 minutes.
3. Stop engine.

>> GO TO 3.

3. CHECK REPLACEMENT PART

Should the compressor be replaced?

YES >> GO TO ATC-25, "LUBRICANT ADJUSTING PROCEDURE FOR COMPRESSOR REPLACEMENT" .
NO >> GO TO ATC-25, "LUBRICANT ADJUSTING PROCEDURE FOR COMPONENTS REPLACEMENT EXCEPT COMPRESSOR" .

LUBRICANT ADJUSTING PROCEDURE FOR COMPONENTS REPLACEMENT EXCEPT COMPRESSOR

After replacing any of the following major components, add the correct amount of lubricant to the system.
Amount of lubricant to be added

Part replaced	Lubricant to be added to system	Remarks
	Amount of lubricant m ℓ (US fl oz, Imp fl oz)	
Evaporator	75 (2.5, 2.6)	-
Condenser	35 (1.2, 1.2)	-
Liquid tank	10 (0.3, 0.4)	-
In case of refrigerant leak	30 (1.0, 1.1)	Large leak
	-	Small leak *1

*1:If refrigerant leak is small, no addition of lubricant is needed.

LUBRICANT ADJUSTING PROCEDURE FOR COMPRESSOR REPLACEMENT

1. Before connecting recovery/recycling recharging equipment to vehicle, check recovery/recycling recharging equipment gauges. No refrigerant pressure should be displayed. If NG, recover refrigerant from equipment lines.
2. Connect recovery/recycling recharging equipment to vehicle. Confirm refrigerant purity in supply tank using recovery/recycling recharging equipment and refrigerant identifier. If NG, refer to ATC-6, "CONTAMINATED REFRIGERANT" .
3. Confirm refrigerant purity in vehicle A/C system using recovery/recycling recharging equipment and refrigerant identifier. If NG, refer to ATC-6, "CONTAMINATED REFRIGERANT" .
4. Discharge refrigerant into the refrigerant recovery/recycling equipment. Measure lubricant discharged into the recovery/recycling equipment.
5. Drain the lubricant from the old (removed) compressor into a graduated container and recover the amount of lubricant drained.
6. Drain the lubricant from the new compressor into a separate, clean container.
7. Measure an amount of new lubricant installed equal to amount drained from old compressor. Add this lubricant to new compressor through the suction port opening.
8. Measure an amount of new lubricant equal to the amount recovered during discharging. Add this lubricant to new compressor through the suction port opening.
9. If the liquid tank also needs to be replaced, add an additional 5 m ℓ (0.2 US fl oz, 0.2 Imp fl oz) of lubricant at this time.
   Do not add this 5 m ℓ (0.2 US fl oz, 0.2 Imp fl oz) of lubricant if only replacing the compressor.

Lubricant adjusting procedure for compressor replacement

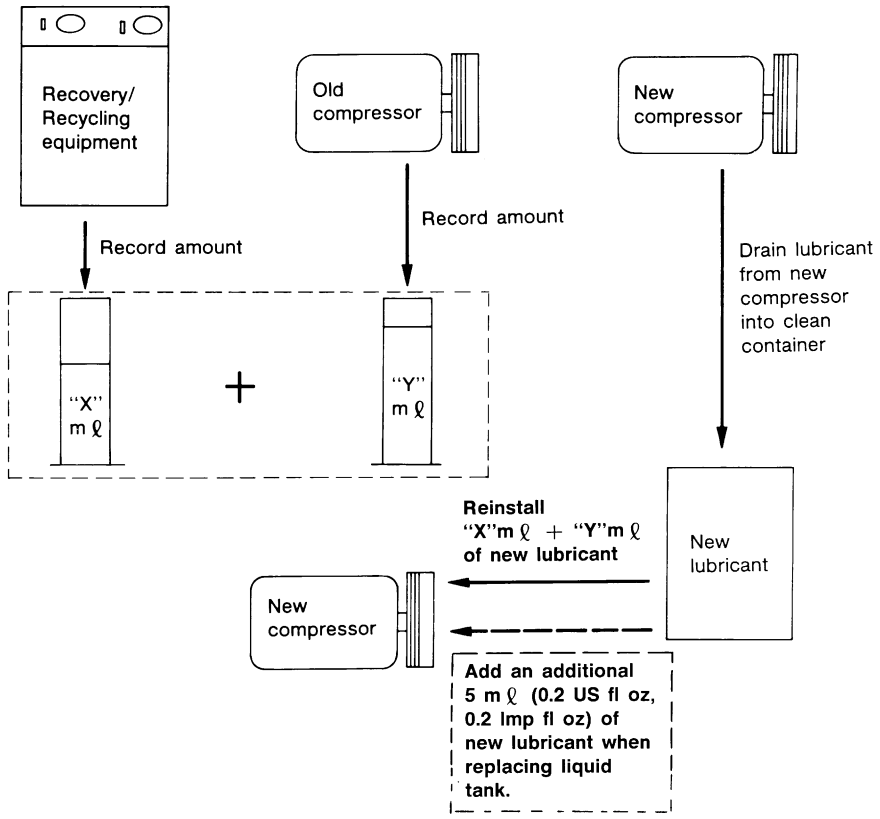

RHA065DD

AIR CONDITIONER CONTROL

PFP:27500

Description of Air Conditioner LAN Control System

EJS00097

The LAN (Local Area Network) system consists of auto amp., mode door motor, air mix door motor and intake door motor.
A configuration of these components is shown in the diagram below.

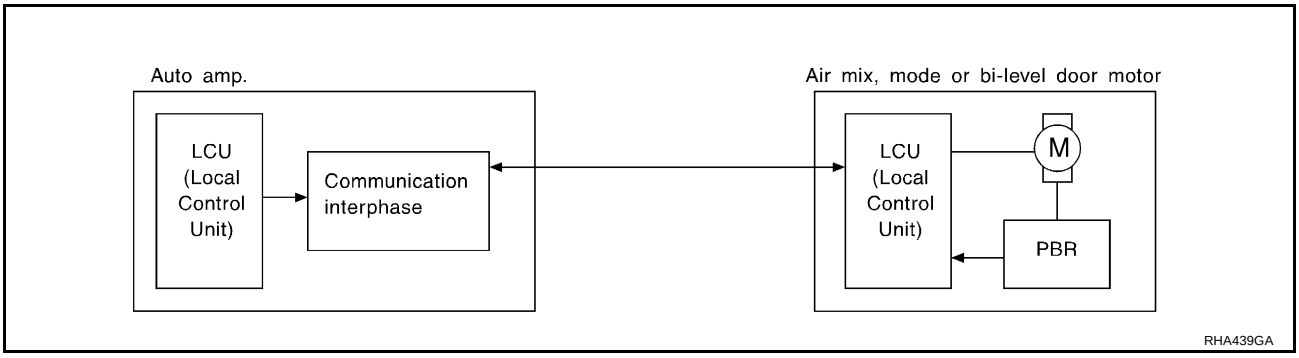

System Construction

EJS00098

A small network is constructed between the auto amp., air mix door motor, mode door motor and intake door motor. The auto amp. and motors are connected by data transmission lines and motor power supply lines. The LAN network is built through the ground circuits of each door motor.
Addresses, motor opening angle signals, motor stop signals and error checking messages are all transmitted through the data transmission lines connecting the auto amp. and each door motor.
The following functions are contained in LCUs built into the air mix door motor, mode door motor and intake door motor.

- Address
- Motor opening angle signals
- Data transmission
- Motor stop and drive decision
- Opening angle sensor (PBR function)
- Comparison
- Decision (Auto amp. indicated value and motor opening angle comparison)

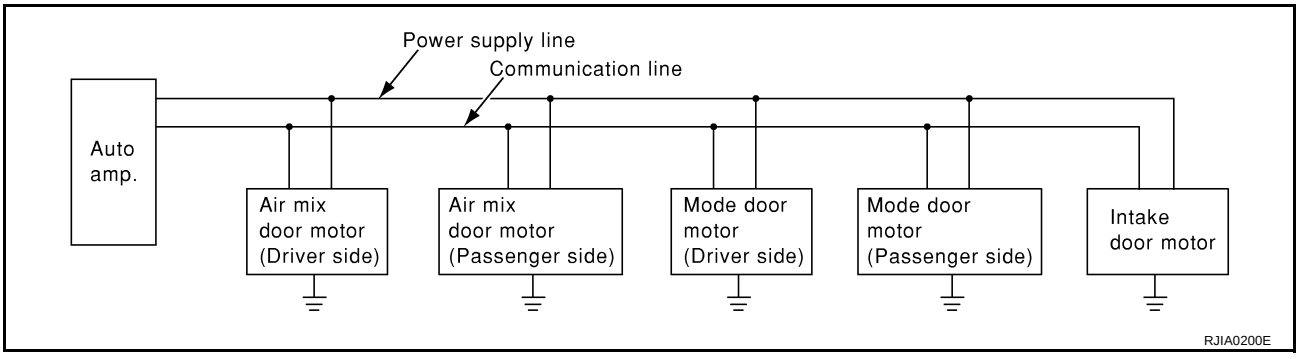

OPERATION

The auto amp. receives data from each of the sensors. The auto amp. sends mode door, air mix door and intake door opening angle data to the mode door motor LCU, air mix door motor LCU and intake door motor LCU.
The mode door motor, air mix door motor and intake door motor read their respective signals according to the address signal. Opening angle indication signals received from the auto amp. and each of the motor position sensors is compared by the LCUs in each motor with the existing decision and opening angles. Subsequently, HOT/COLD, DEFROST/VENT or FRESH/RECIRCULATION operation is selected. The new selection data is returned to the auto amp.

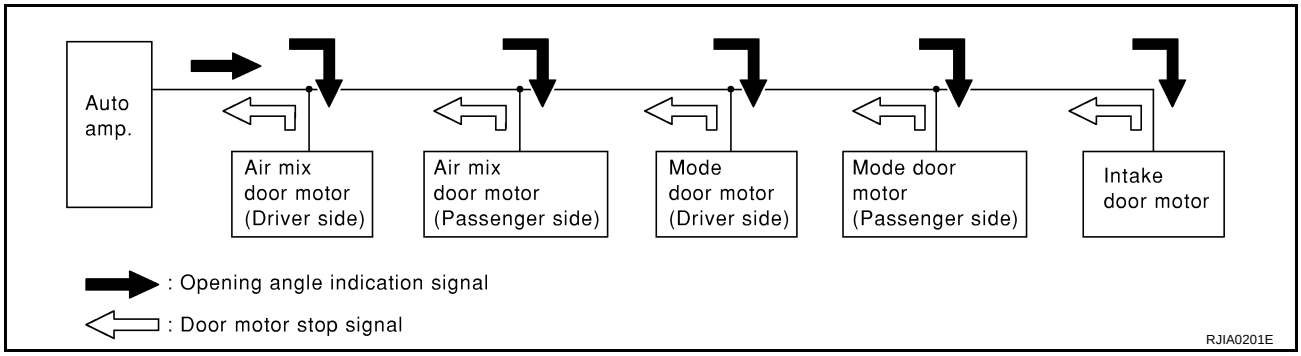

TRANSMISSION DATA AND TRANSMISSION ORDER

Auto amp. data is transmitted consecutively to each of the door motors following the form shown in figure below.

Start:

Initial compulsory signal sent to each of the door motors.

Address:

Data sent from the auto amp. is selected according to data-based decisions made by the air mix door motor, mode door motor and intake door motor.
If the addresses are identical, the opening angle data and error check signals are received by the door motor LCUs. The LCUs then make the appropriate error decision. If the opening angle data is normal, door control begins.
If an error exists, the received data is rejected and corrected data received. Finally, door control is based upon the corrected opening angle data.

Opening Angle:

Data that shows the indicated door opening angle of each door motor.

Error Check:

Procedure by which sent and received data is checked for errors. Error data is then compiled. The error check prevents corrupted data from being used by the air mix door motor, mode door motor and intake door motor. Error data can be related to the following problems.

- Malfunction electrical frequency
- Poor electrical connections
- Signal leakage from transmission lines
- Signal level fluctuation

Stop Signal:

At the end of each transmission, a stop operation, in-operation, or internal error message is delivered to the auto amp. This completes one data transmission and control cycle.

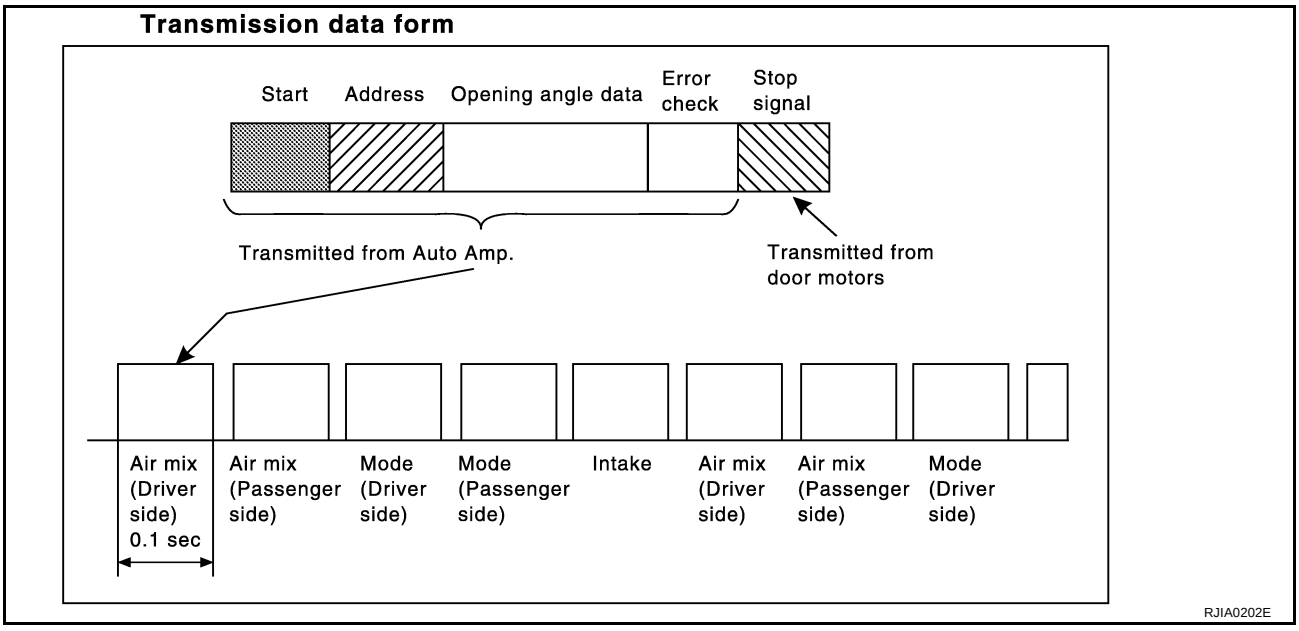

AIR MIX DOOR CONTROL (AUTOMATIC TEMPERATURE CONTROL)

The air mix door is automatically controlled so that in-vehicle temperature is maintained at a predetermined value by the temperature setting, ambient temperature, in-vehicle temperature and amount of sunload.

FAN SPEED CONTROL

Blower speed is automatically controlled by the temperature setting, ambient temperature, in-vehicle temperature, intake temperature, amount of sunload and air mix door position.
With FAN switch set to AUTO, the blower motor starts to gradually increase air flow volume.
When engine coolant temperature is low, the blower motor operation is delayed to prevent cool air from flowing.

INTAKE DOOR CONTROL

The intake doors are automatically controlled by the temperature setting, ambient temperature, in-vehicle temperature, intake temperature, amount of sunload and ON-OFF operation of the compressor.

OUTLET DOOR CONTROL

The outlet door is automatically controlled by the temperature setting, ambient temperature, in-vehicle temperature, intake temperature and amount of sunload.

MAGNET CLUTCH CONTROL

The ECM controls compressor operation using input signals from the refrigerant pressure sensor, throttle position sensor and auto amp.

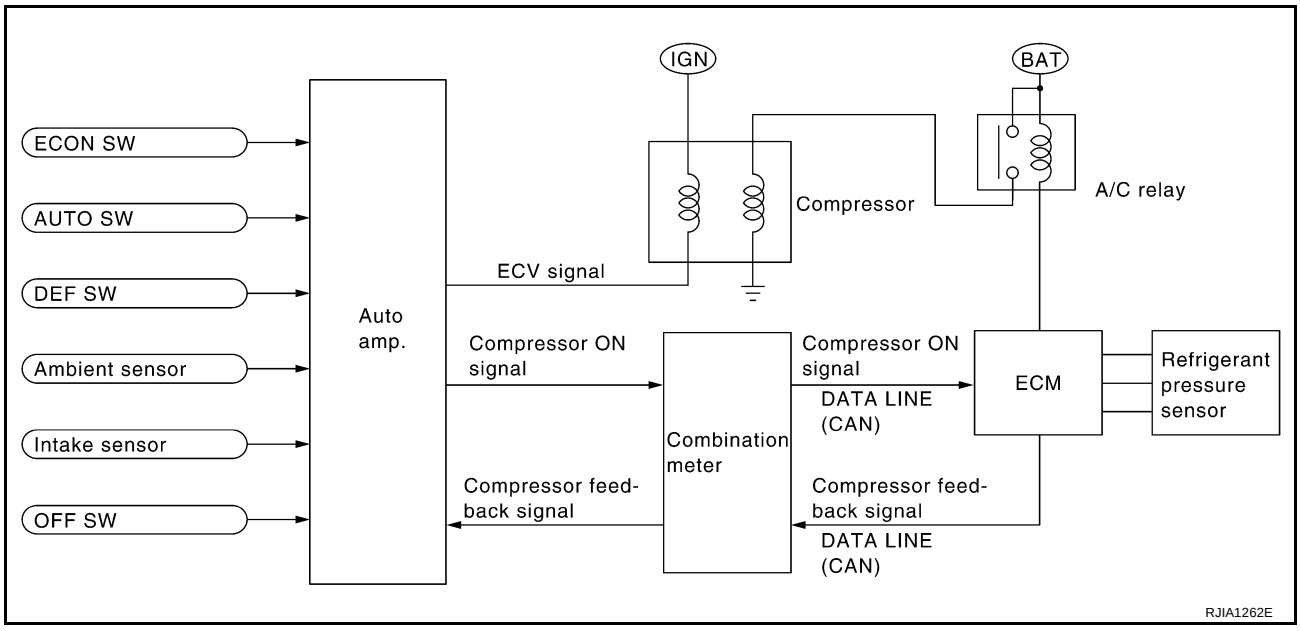

SELF-DIAGNOSTIC SYSTEM

The self-diagnostic system is built into the auto amp. to quickly locate the cause of problems.

Description of Control System

EJS000JB

The control system consists of input sensors, switches, the auto amp. (microcomputer) and outputs. The relationship of these components is shown in the diagram below:

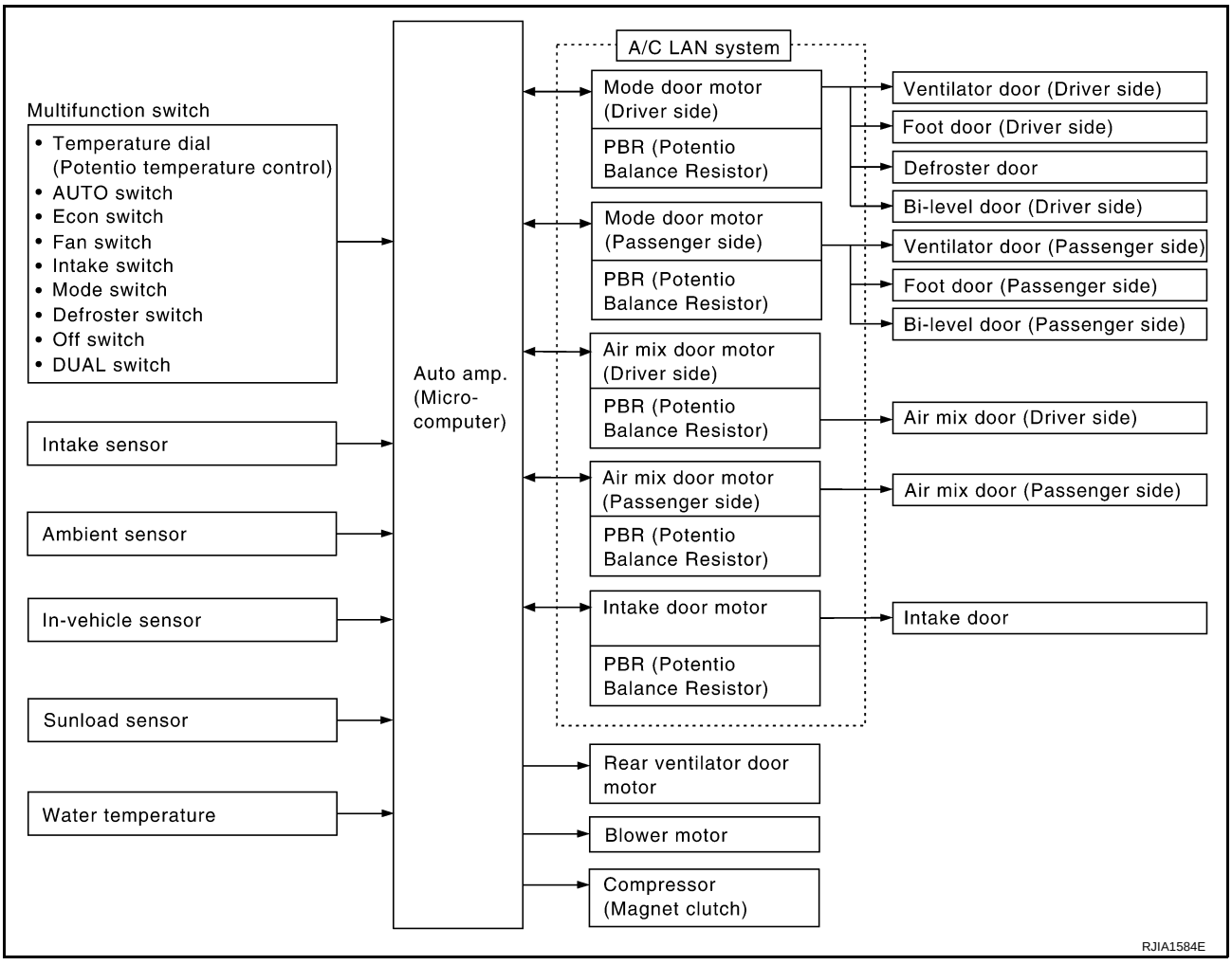

Control Operation

EJS000JC

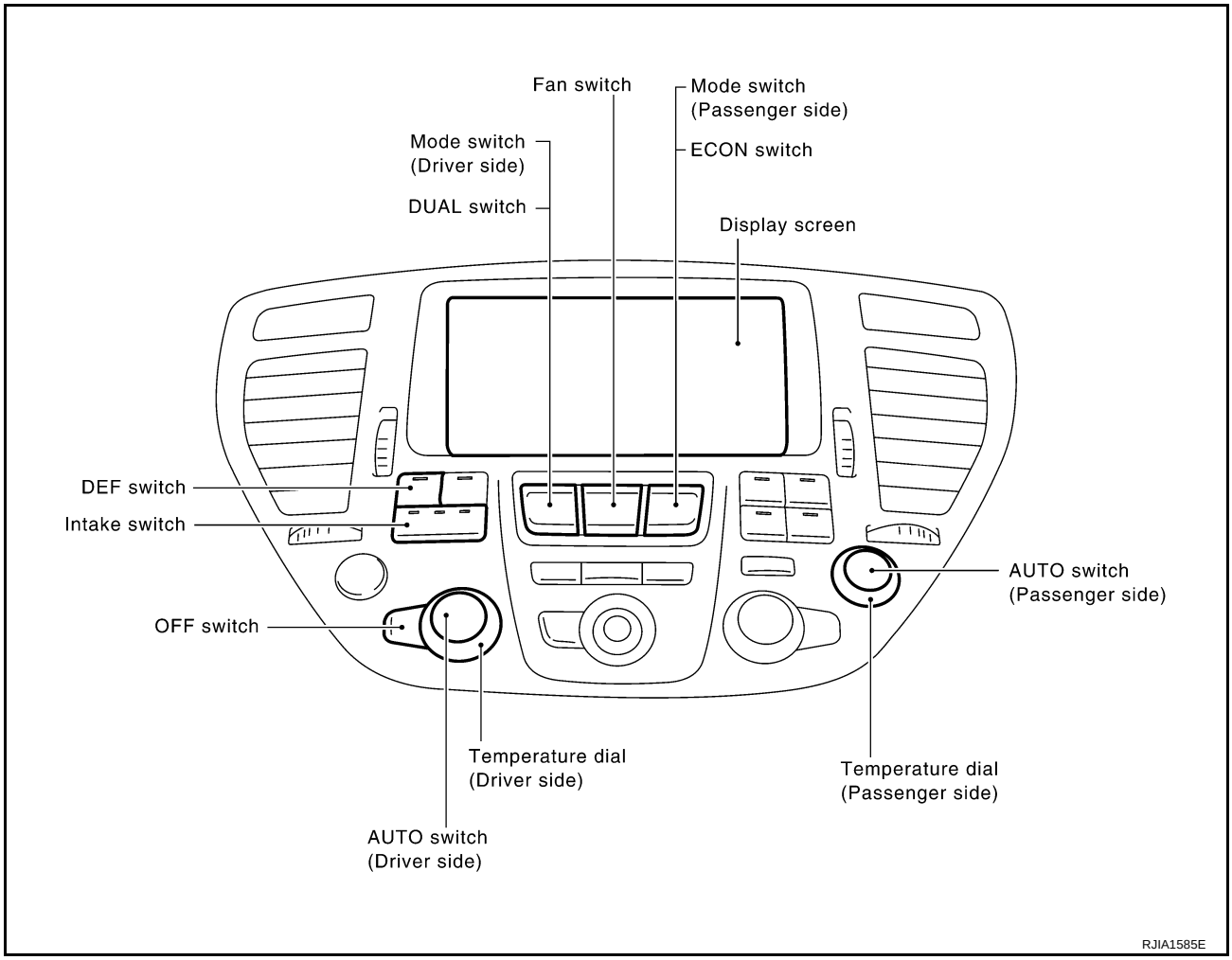

DISPLAY SCREEN

Displays the operational status of the system.

AUTO SWITCH (DRIVER SIDE)

- The compressor, intake doors, air mix doors, outlet doors and blower speed are automatically controlled so that the in-vehicle temperature will reach, and be maintained at the set temperature selected by the operator.

When the A/C system is operating, if the screen is not displayed, press the AUTO switch once to display the A/C screen. (The display time is determined by the navigation system settings.) or, when the A/C system is in manual control, and the DUAL switch is depressed, pressing the AUTO switch changes to auto-control for the driver side only.

AUTO SWITCH (PASSENGER SIDE)

The compressor, intake doors, air mix doors, outlet doors and blower speed are automatically controlled so that the in-vehicle temperature will reach, and be maintained at the set temperature selected by the operator.

- When the A/C system is operating, if the screen is not displayed, press the AUTO switch once to display the A/C screen. (The display time is determined by the navigation system settings.) Or, when the A/C system is in manual control, and the DUAL switch is depressed, pressing the AUTO switch changes to auto-control for the passenger side only.

TEMPERATURE DIAL (POTENTIO TEMPERATURE CONTROL) (DRIVER SIDE)

Increase or decrease the set temperature.

TEMPERATURE DIAL (POTENTIO TEMPERATURE CONTROL) (PASSENGER SIDE)

- Increase or decrease the set temperature.
- When the temperature dial is turned, the DUAL switch indicator will automatically illuminate.

INTAKE SWITCH

Set the inlet to automatic control or to REC-fixed. However, REC-fixed cannot be selected in DEF mode. When the FRE switch is ON, the air inlet will be automatically controlled.

DEFROSTER (DEF) SWITCH

Positions the air outlet doors to the defrost position. Also positions the intake doors to the outside air position.

OFF SWITCH

The compressor and blower are OFF, the intake doors are set to the outside air position, and the air outlet doors are set to the foot (80% foot and 20% defrost) position.

MODE SWITCH (DRIVER SIDE)

- When the DUAL switch indicator is illuminated, the left and right outlets are switched together.
- When the DUAL switch indicator is not illuminated, only the driver-side outlet is switched.

MODE SWITCH (PASSENGER SIDE)

When the MODE switch is pressed, the DUAL switch indicator illuminates, and only the passenger-side outlet is switched.

ECON (ECONOMY) SWITCH

- By pressing the ECON switch, the indicator of ECON switch should illuminate, and the control is switched to economy control.
- When press ECON switch again, the indicator of ECON switch should not illuminate and the compressor always turns OFF. With the compressor OFF, the system will not remove heat (cool) or de-humidify. The system will maintain the in-vehicle temperature at the set temperature when the set temperature is above the ambient (outside) temperature. The system will set the intake doors to the outside air position.
- When press ECON switch again, the control is switched to economy control.

FAN SWITCH

Manually controls the blower speed. Five speeds are available for manual control (as shown on the display screen).

DUAL SWITCH

- When the DUAL switch indicator is not illuminated and the DUAL switch is pressed, the driver-side outlet and passenger-side outlet, as well as the setting temperature, can each be set independently.
- When the DUAL switch indicator is illuminated and the DUAL switch is pressed, the driver-side outlet and setting temperature are applied to both sides.

Fail-safe Function

EJS0022U

- If a communication error exists between auto amp. and AV C/U or AV and NAVI C/U for 30 seconds or longer, air conditioner is controlled under following conditions:
  - Compressor: ON
  - Air outlet: AUTO
  - Air inlet: FRE (Fresh)
  - Blower fan speed: AUTO
  - Set temperature: Setting before communication error occurs

Discharge Air Flow

EJS000JD

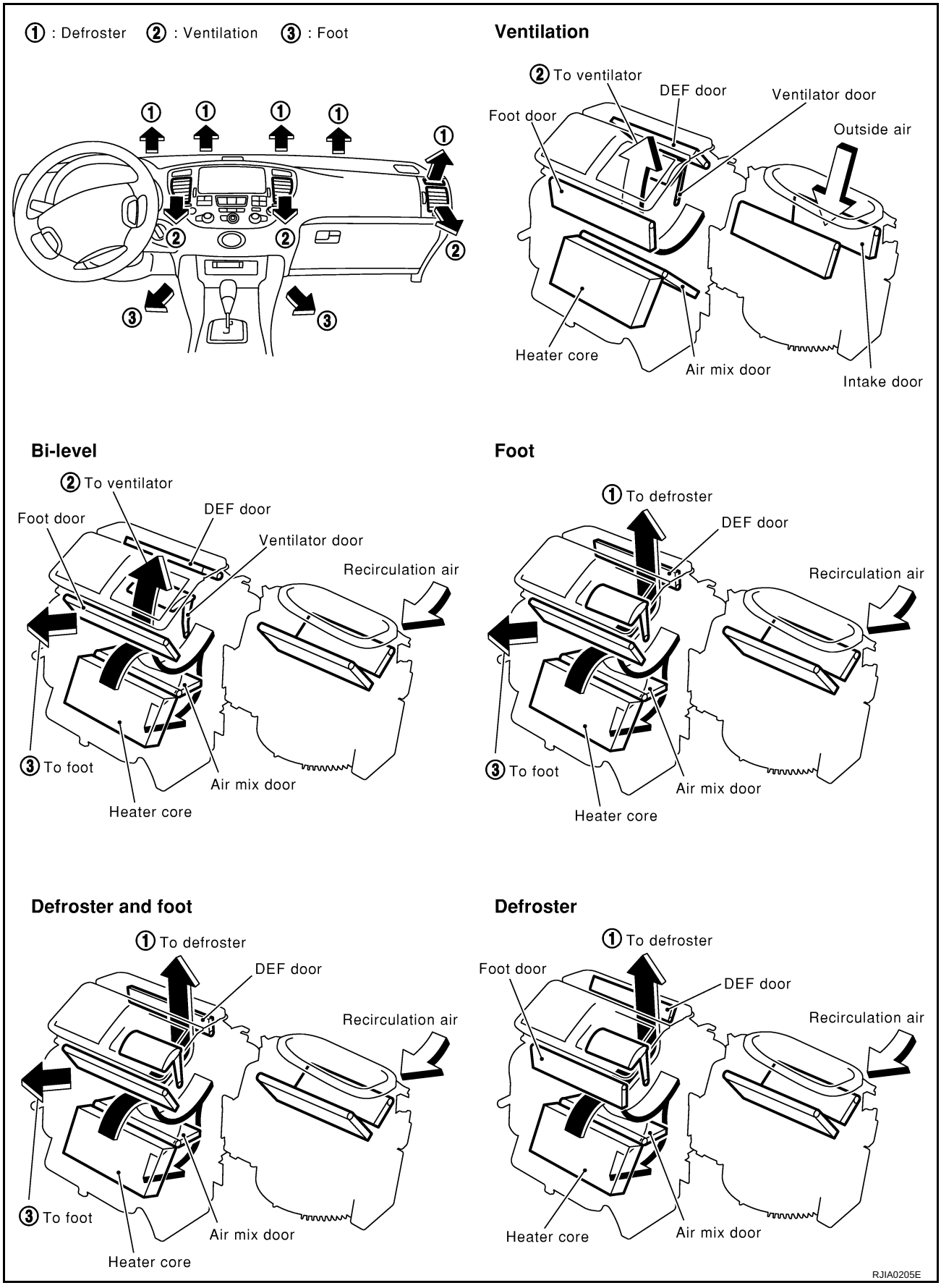

System Description

EJS000JE

SWITCHES AND THEIR CONTROL FUNCTION

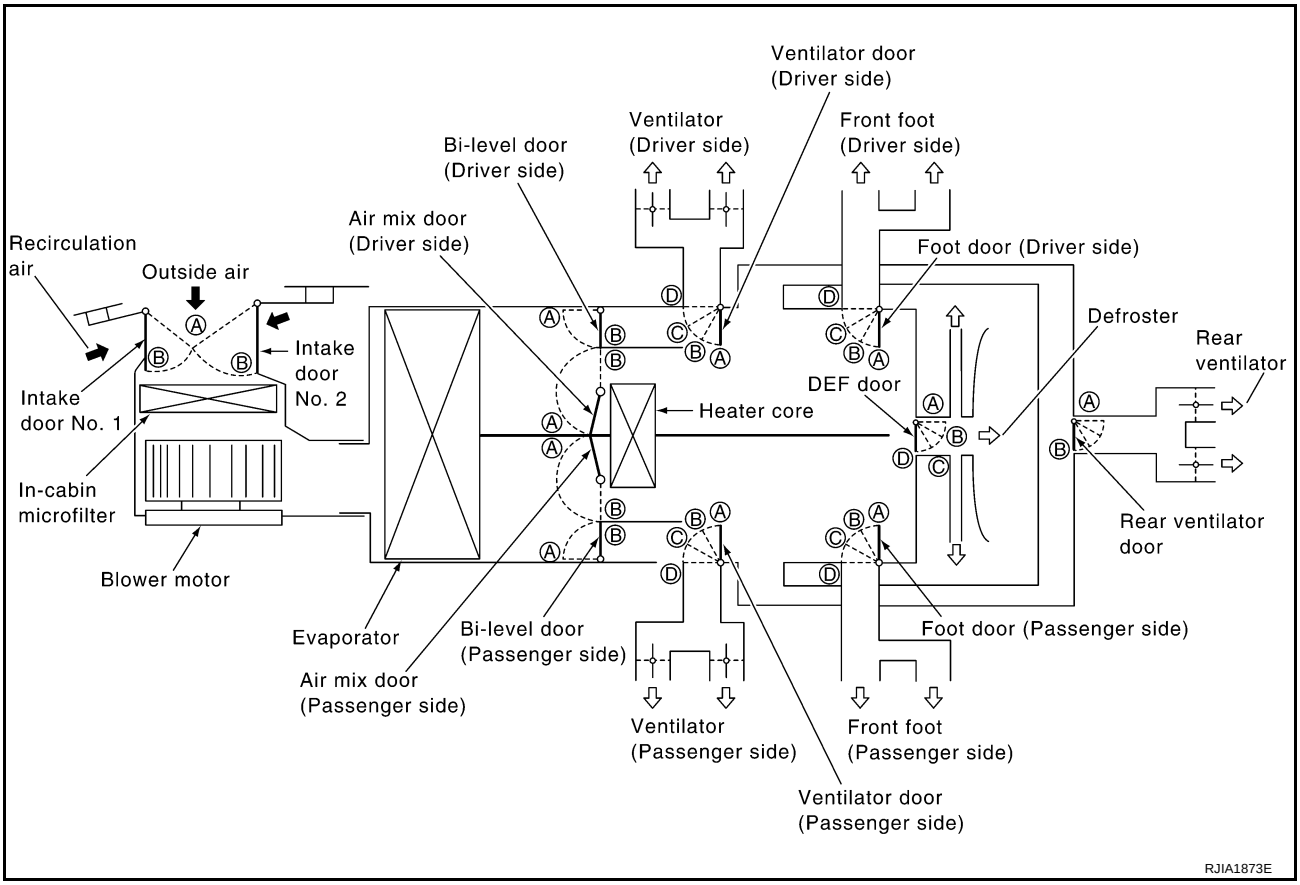

Position or switch	DUAL SW ON	DUAL SW OFF	MODE SW VENT	MODE SW B/L	MODE SW B/L2 *1	MODE SW FOOT	MODE SW D/F *2	DEF SW ON	DEF SW OFF	AUTO SW (Driver side)	AUTO SW (Passenger side)	Intake SW REC ON	Intake SW FRE ON	Rear control sw ON	Rear control sw OFF	Temperature dial (Driver side) 18°C ~ 32°C	Temperature dial (Passenger side) 18°C ~ 32°C	OFF SW OFF
VENT door (Driver side)	–		Ⓐ	Ⓑ	Ⓒ	Ⓓ	Ⓓ	Ⓓ	–	AUTO		–	–	–	–	–	–	Ⓓ
VENT door (Passenger side)	ON		Ⓐ	Ⓑ	Ⓒ	Ⓓ	–	Ⓓ	–	–	AUTO					–	–	Ⓓ
	OFF		Ⓐ	Ⓑ	Ⓒ	Ⓓ	Ⓓ	Ⓓ	–	AUTO	–					–	–	Ⓓ
Foot door (Driver side)	–		Ⓓ	Ⓒ	Ⓑ	Ⓐ	Ⓑ	Ⓓ	–	AUTO						–	–	Ⓐ
Foot door (Passenger side)	ON		Ⓓ	Ⓒ	Ⓑ	Ⓐ	–	Ⓓ	–	–	AUTO					–	–	Ⓐ
	OFF		Ⓓ	Ⓒ	Ⓑ	Ⓐ	Ⓑ	Ⓓ	–	AUTO	–					–	–	Ⓐ
DEF door	–		Ⓓ	Ⓓ	Ⓓ	Ⓒ	Ⓑ	Ⓐ	–	AUTO						–	–	Ⓒ
Air mix door (Driver side)	–		–							–						Ⓐ AUTO Ⓑ	–	–
Air mix door (Passenger side)	ON		–						–	–						–	Ⓐ AUTO Ⓑ	
	OFF		–						–	–						Ⓐ AUTO Ⓑ	–	
Bi-level door	–		Ⓐ *3	AUTO	Ⓑ	Ⓑ	Ⓑ	Ⓑ	Ⓑ	–						–	–	Ⓑ
Rear VENT door	–		–	–	–	–	–	Ⓑ	–	–				Ⓐ	Ⓑ	–	–	–
Intake door	–		–	–	–	–	–	Ⓑ	–	–		Ⓐ	AUTO	–	–	–	–	Ⓑ

*1: The B/L2 mode is selected only when the mode door is automatically controlled.
*2: When the DUAL SW is ON, passenger cannot select the D/F mode.
*3: When air door mix door position is in Ⓐ (Full cold), bi-level door position will be at Ⓐ (Open).

RJIA1586E

TROUBLE DIAGNOSIS

PFP:00004

How to Perform Trouble Diagnoses for Quick and Accurate Repair

EJS000JF

WORK FLOW

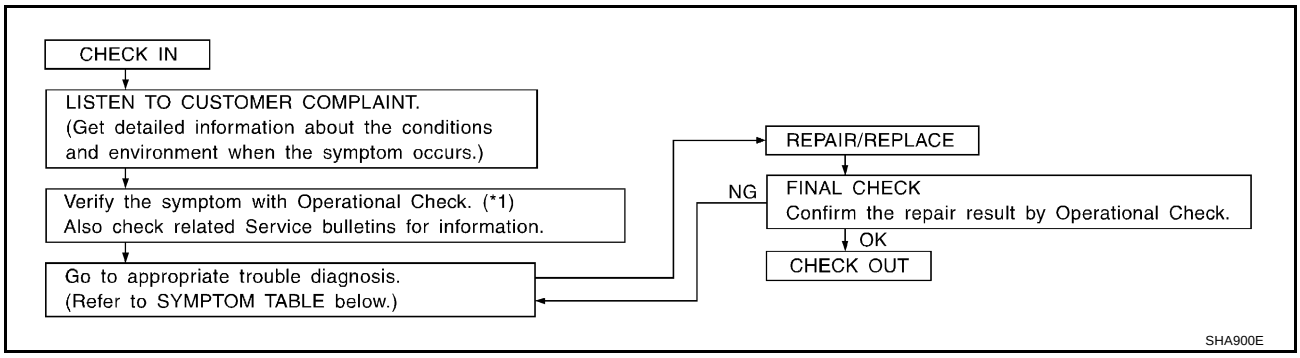

*1 ATC-64, "Operational Check".

SYMPTOM TABLE

Symptom	Reference Page	
A/C system does not come on.	Go to Trouble Diagnosis Procedure for A/C System.	ATC-67, "Power Supply and Ground Circuit for Auto Amp."
A/C system cannot be controlled.	Go to Trouble Diagnosis Procedure for Multiplex Communication Circuit.	ATC-122, "Multiplex Communication Circuit"
A/C display is not shown.	Go to Trouble Diagnosis Procedure for A/C Display.	ATC-109, "A/C Display is Malfunctioning"
A/C operation is not possible.	Go to Trouble Diagnosis Procedure for A/C Operation.	ATC-110, "A/C Operation is Malfunctioning"
Air outlet does not change.	Go to Trouble Diagnosis Procedure for Mode Door Motor. (LAN)	ATC-69, "LAN System Circuit"
Mode door motor does not operate normally.		
Discharge air temperature does not change.	Go to Trouble Diagnosis Procedure for Air Mix Door Motor. (LAN)	ATC-69, "LAN System Circuit"
Air mix door motor does not operate normally.		
Intake door does not change.	Go to Trouble Diagnosis Procedure for Intake Door Motor. (LAN)	ATC-79, "Intake Door Motor Circuit"
Intake door motor does not operate normally.		
Blower motor operation is malfunctioning.	Go to Trouble Diagnosis Procedure for Blower Motor.	ATC-83, "Blower Motor Circuit"
Blower motor operation is malfunctioning under out of starting fan speed control.		
Magnet clutch does not engage.	Go to Trouble Diagnosis Procedure for Magnet Clutch.	ATC-88, "Magnet Clutch Circuit"
Insufficient cooling	Go to Trouble Diagnosis Procedure for Insufficient Cooling.	ATC-95, "Insufficient Cooling"
	Go to Diagnostic Procedure for Insufficient Cooling.	ATC-102, "DIAGNOSTIC PROCEDURE FOR INSUFFICIENT COOLING"
Insufficient heating	Go to Trouble Diagnosis Procedure for Insufficient Heating.	ATC-104, "Insufficient Heating"
Noise	Go to Trouble Diagnosis Procedure for Noise.	ATC-105, "Noise"

Symptom	Reference Page	
Self-diagnosis cannot be performed.	Go to Trouble Diagnosis Procedure for Self-diagnosis.	ATC-106, "Self-diagnosis"
Memory function does not operate.	Go to Trouble Diagnosis Procedure for Memory Function.	ATC-107, "Memory Function"
ECON mode does not operate.	Go to Trouble Diagnosis Procedure for ECON (ECONOMY) mode.	ATC-108, "ECON (ECONOMY) MODE"

Component Parts and Harness Connector Location

EJS000JG

ENGINE COMPARTMENT

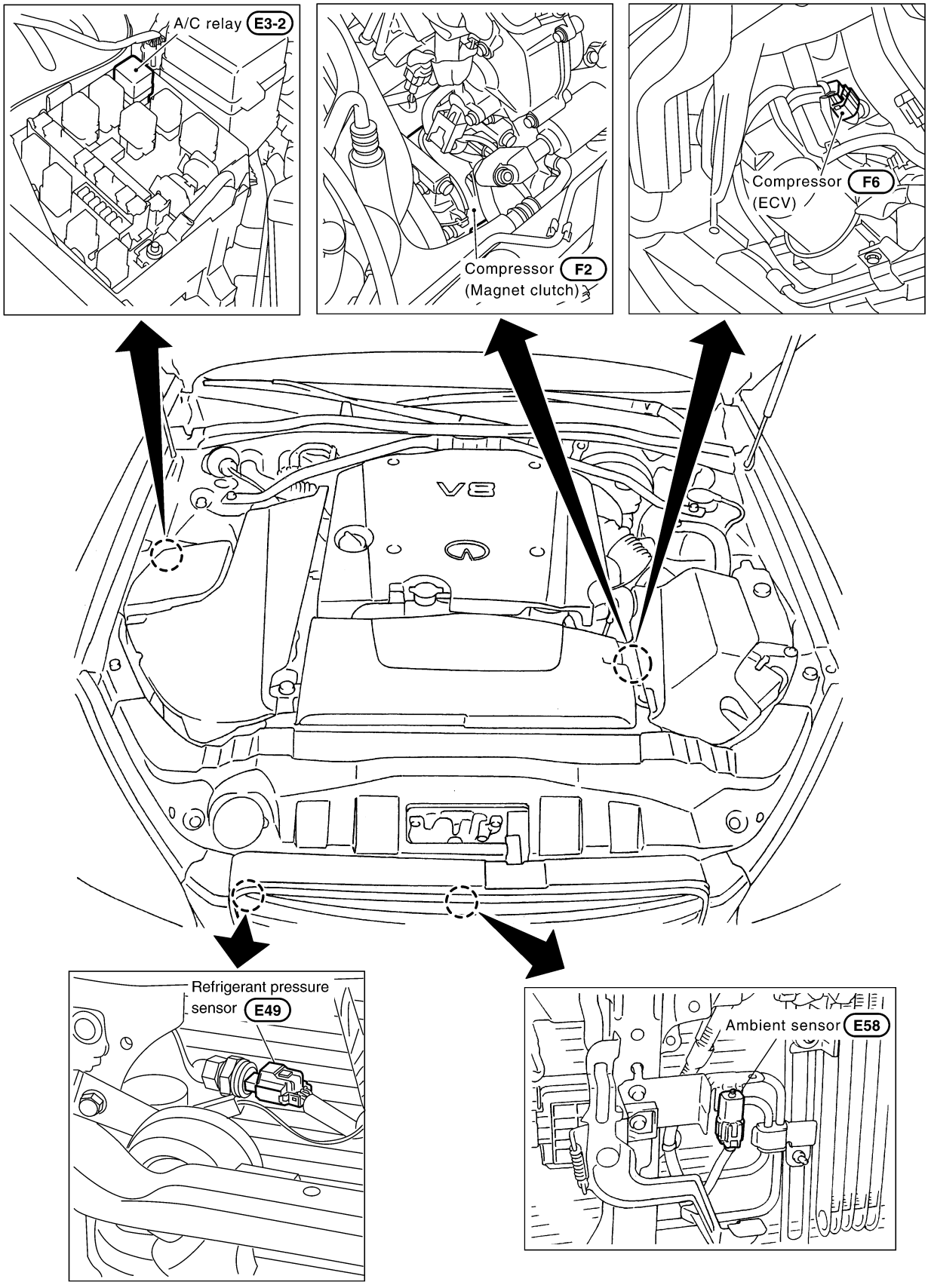

SJIA0467E

PASSENGER COMPARTMENT

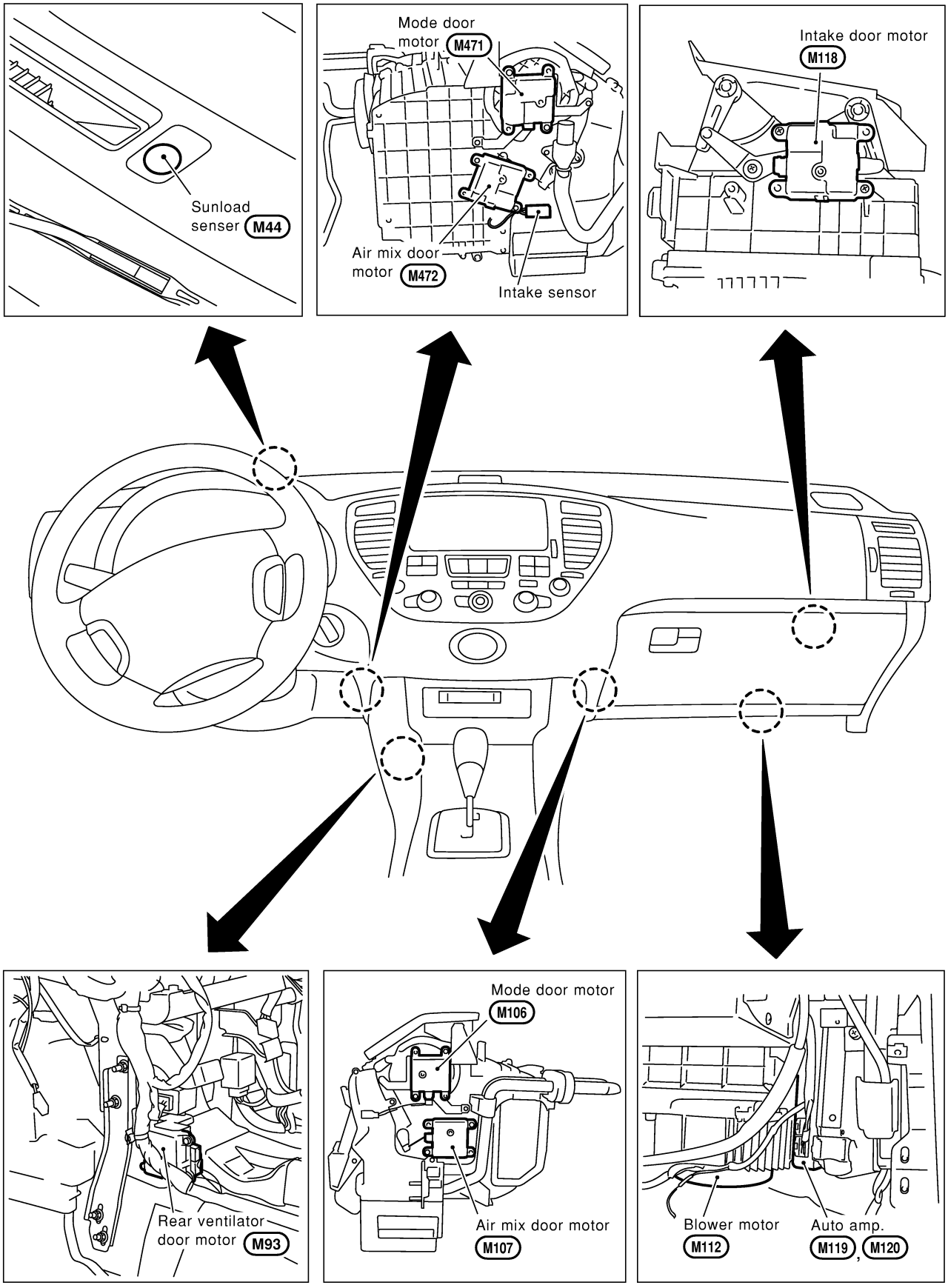

RJIA0209E

Schematic

EJS000JH

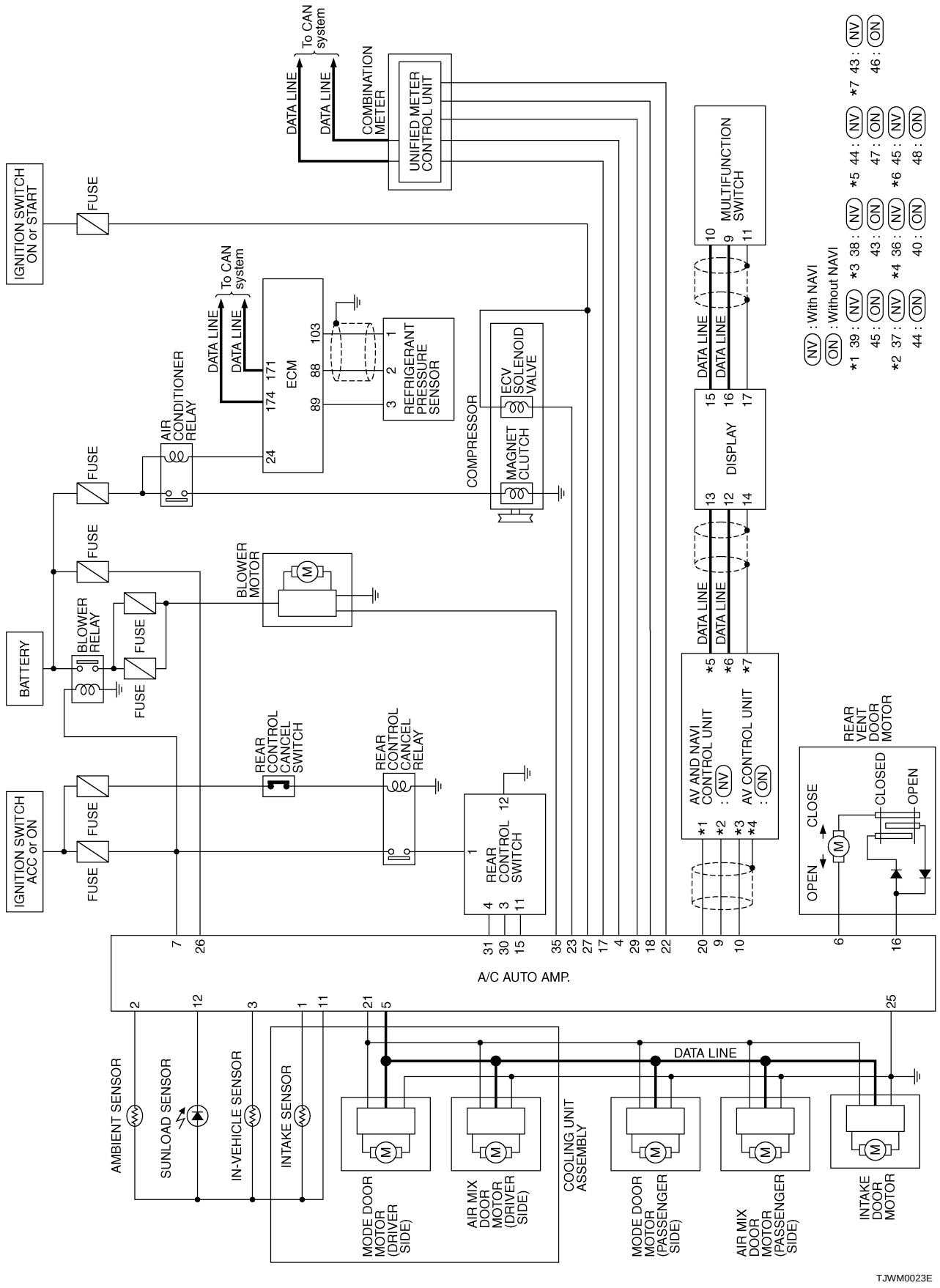

TJWM0023E

Wiring Diagram —A/C—

EJS000JI

ATC-A/C-01

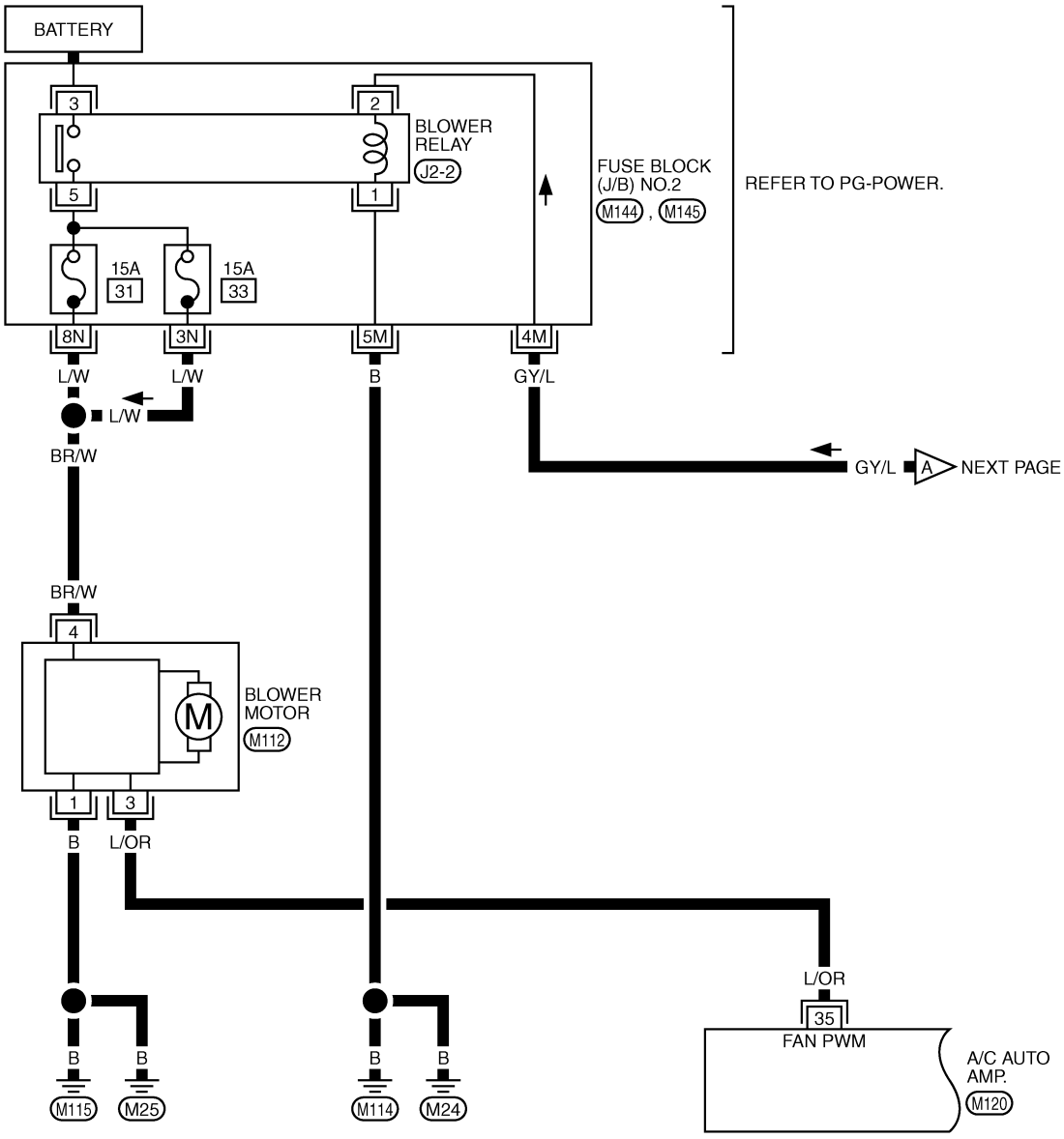

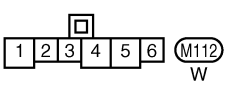

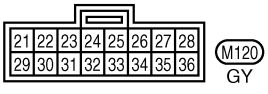

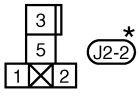

REFER TO THE FOLLOWING.
M144 , M145 -FUSE BLOCK-JUNCTION-BOX (J/B) NO.2

*: THIS CONNECTOR IS NOT SHOWN IN "HARNESS LAYOUT", PG SECTION.

TJWM0024E

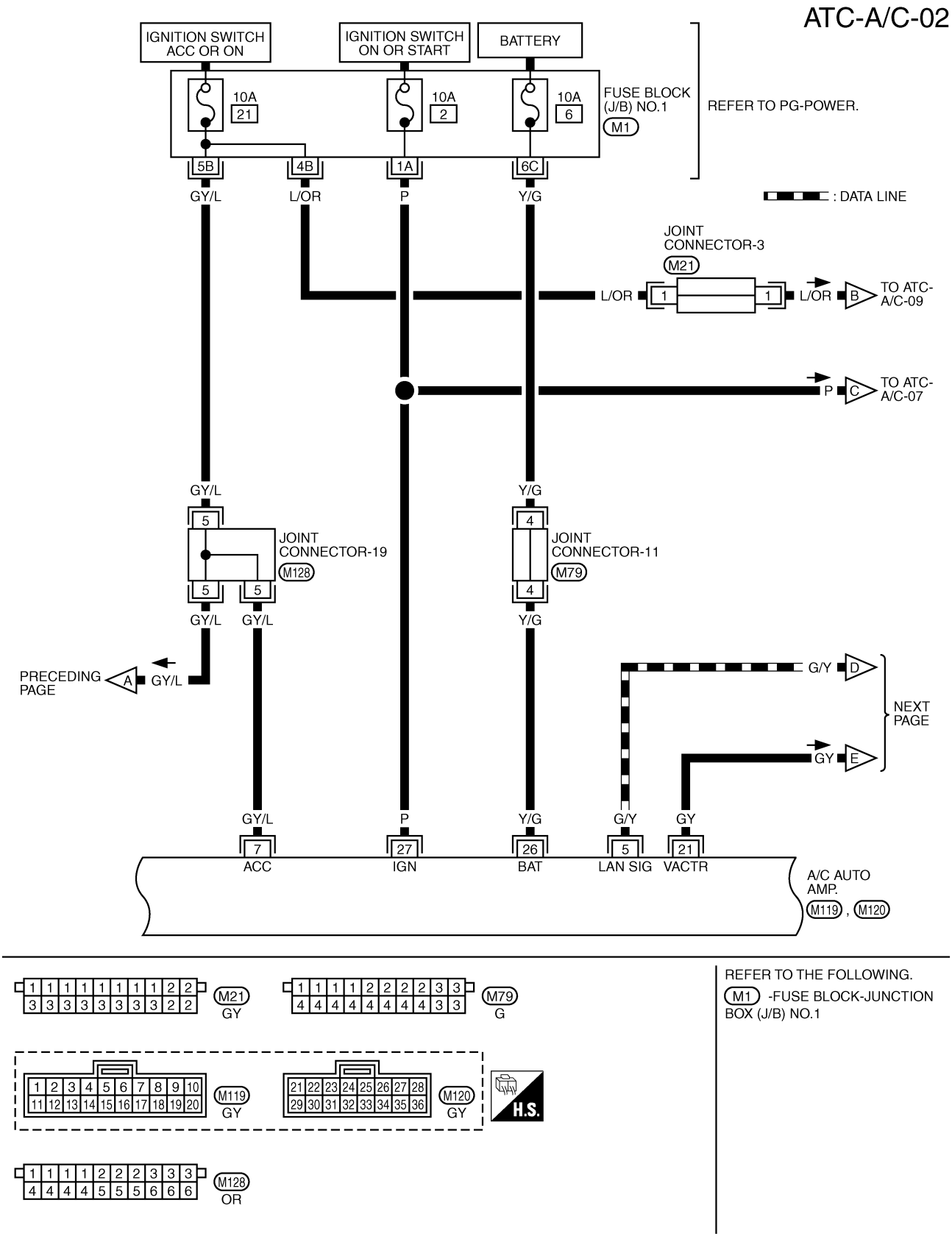
ATC-A/C-02
IGNITION SWITCH ACC OR ON
IGNITION SWITCH ON OR START
BATTERY
10A 21
10A 2
10A 6
FUSE BLOCK (J/B) NO.1
M1
REFER TO PG-POWER.
5B
4B
1A
6C
GY/L
L/OR
P
Y/G
: DATA LINE
JOINT CONNECTOR-3
M21
L/OR
1
1
L/OR
B
TO ATC-A/C-09
P
C
TO ATC-A/C-07
GY/L
Y/G
5
4
JOINT CONNECTOR-19
M128
JOINT CONNECTOR-11
M79
5
5
4
GY/L
GY/L
Y/G
PRECEDING PAGE
A
GY/L
G/Y
D
NEXT PAGE
GY
E
GY/L
P
Y/G
G/Y
GY
7
27
26
5
21
ACC
IGN
BAT
LAN SIG
VACTR
A/C AUTO AMP.
M119 , M120
M21
GY
M79
G
M119
GY
M120
GY
H.S.
M128
OR
REFER TO THE FOLLOWING.
M1 -FUSE BLOCK-JUNCTION BOX (J/B) NO.1
TJWM0025E

ATC-A/C-03

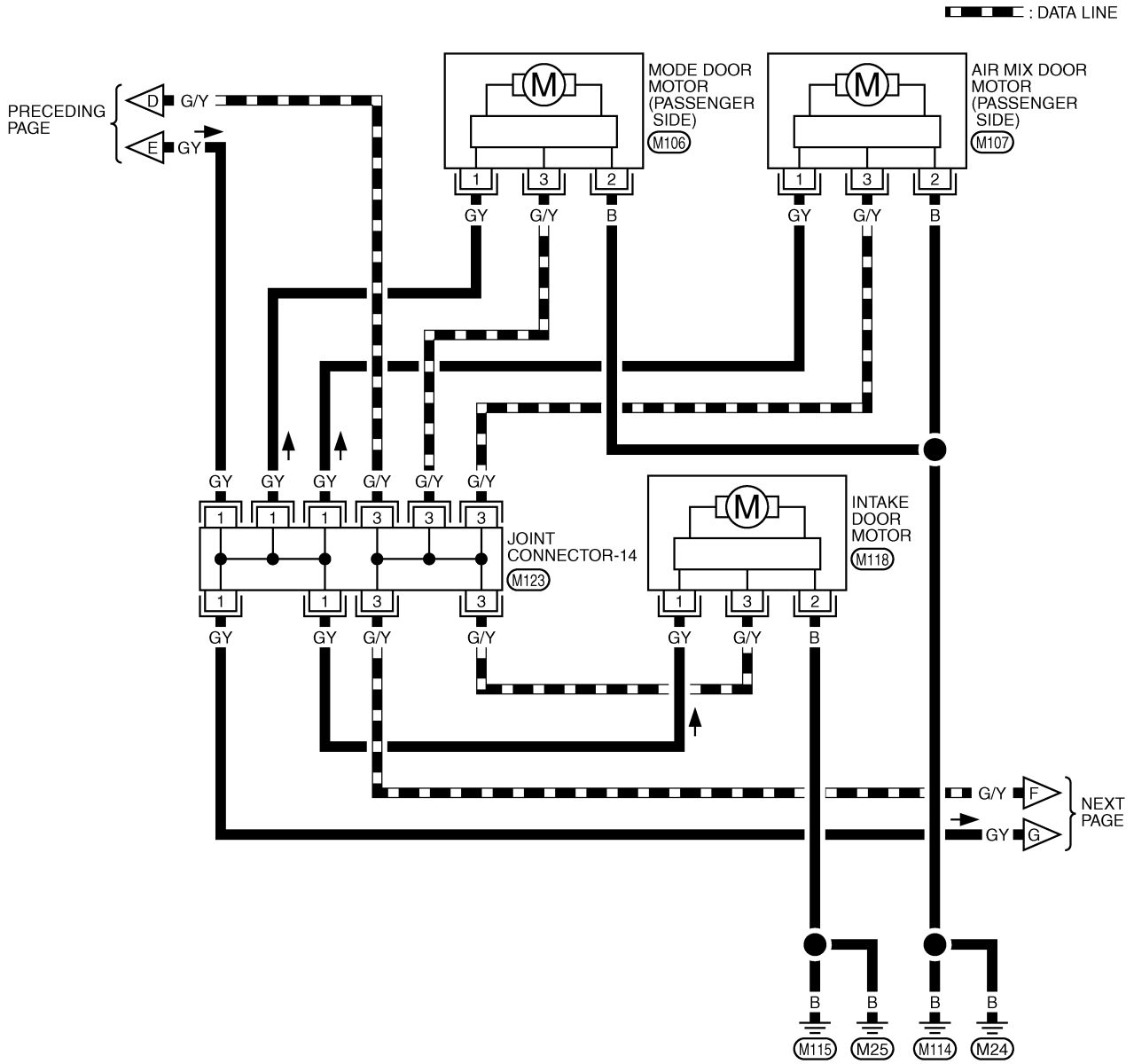

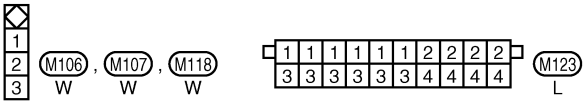

TJWM0026E

ATC-A/C-04

: DATA LINE

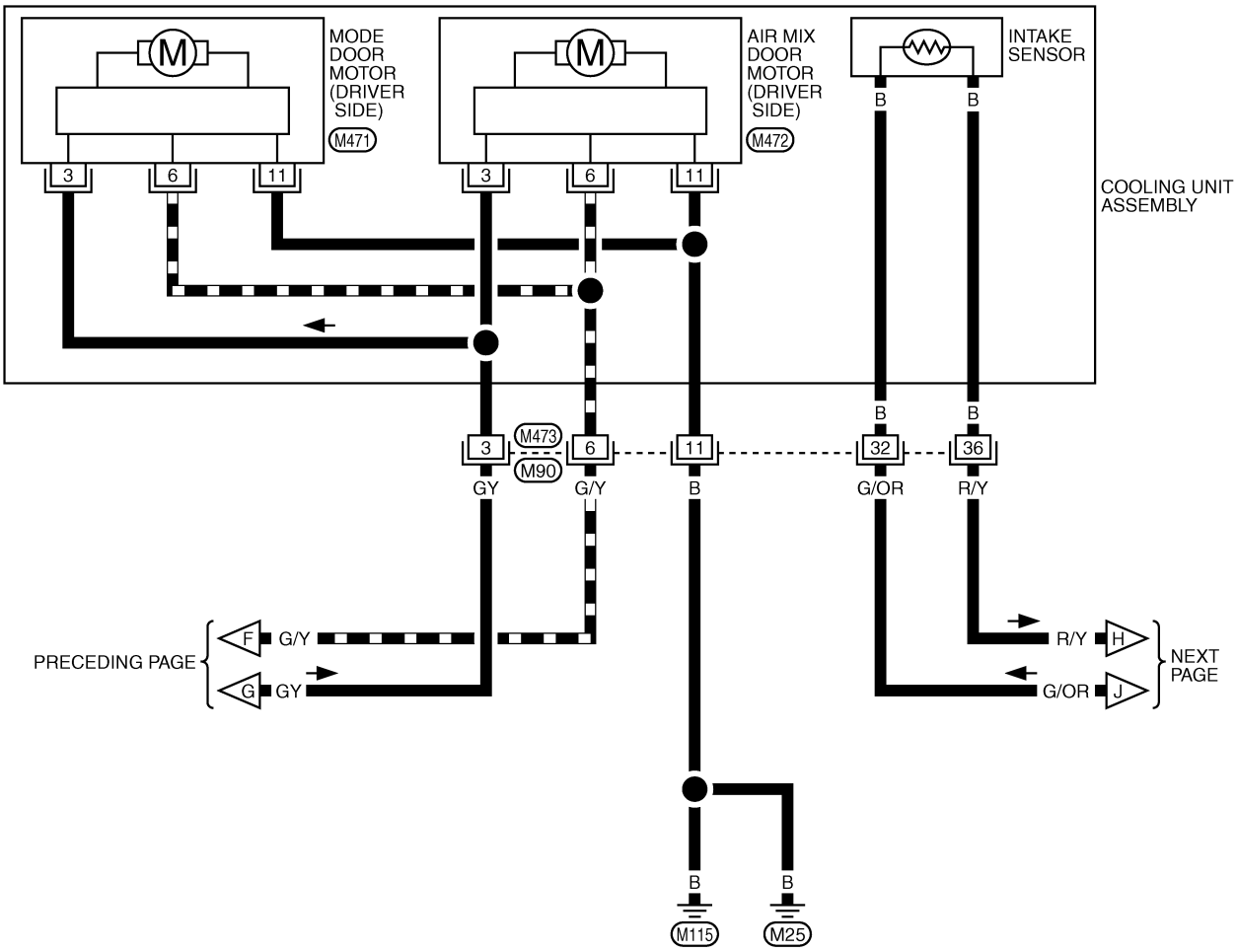

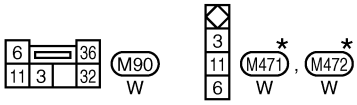

★: THIS CONNECTOR IS NOT SHOWN IN "HARNESS LAYOUT", PG SECTION.

TJWM0027E

ATC-A/C-05

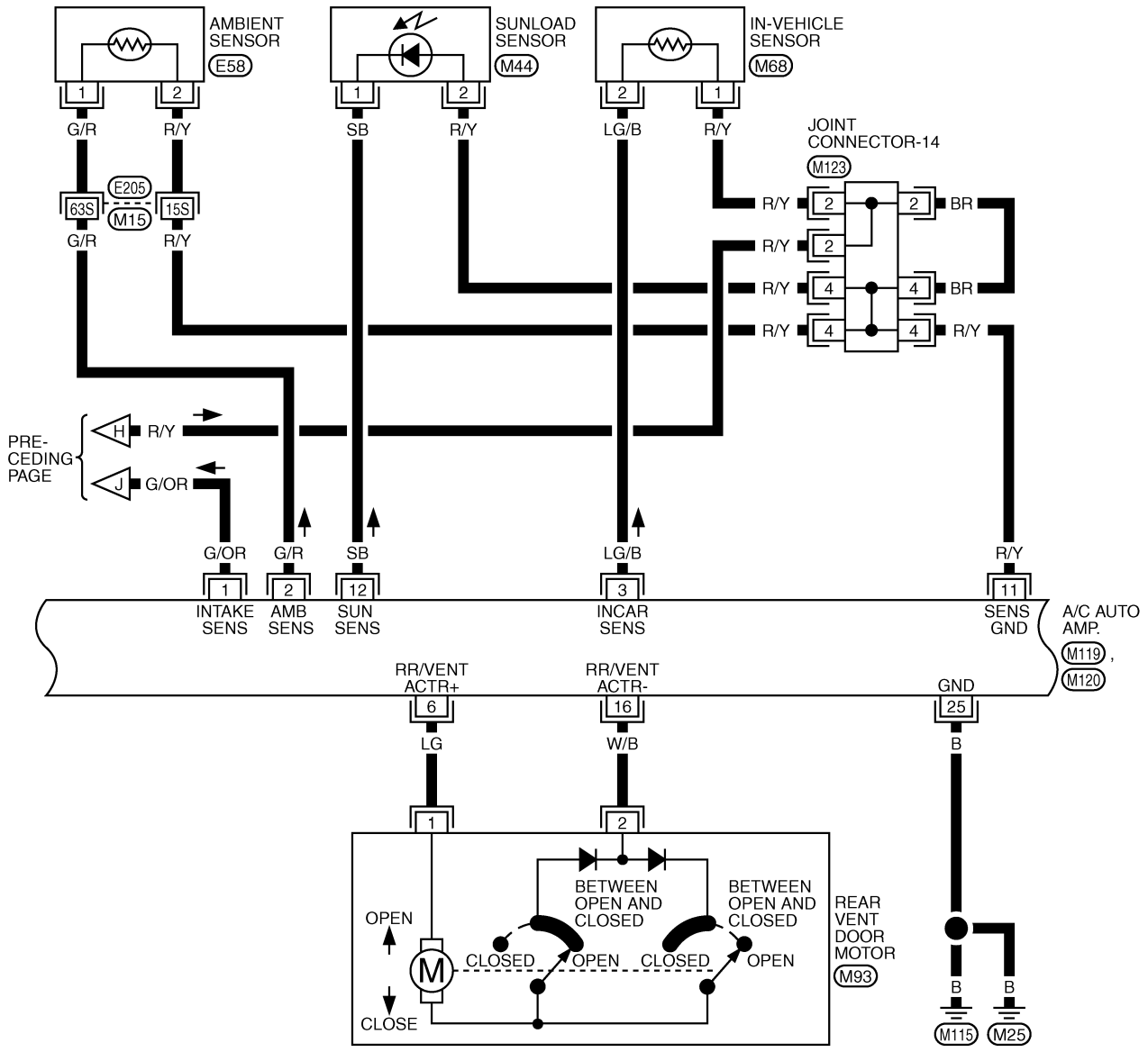

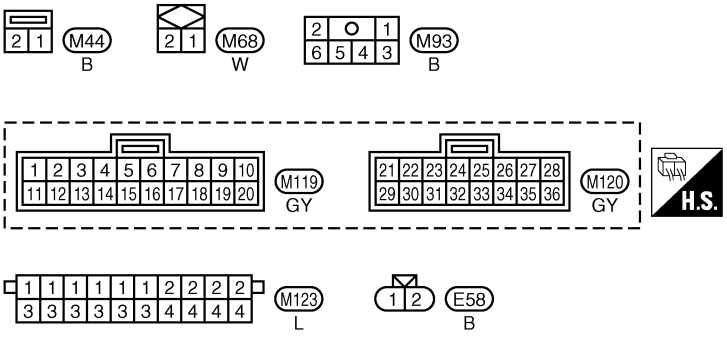

REFER TO THE FOLLOWING.
E205 -SUPER MULTIPLE JUNCTION (SMJ)

TJWM0028E

ATC-A/C-06

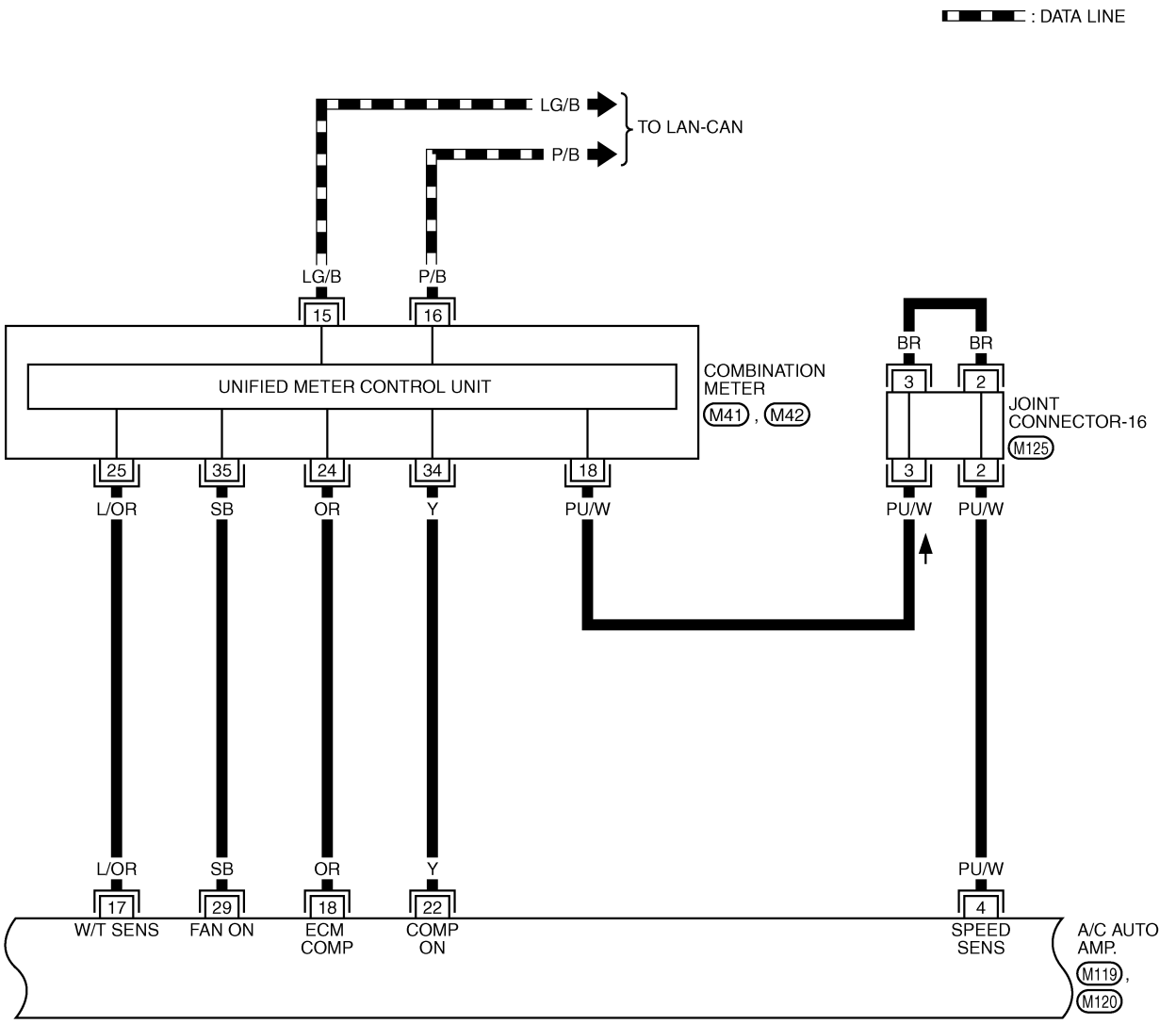

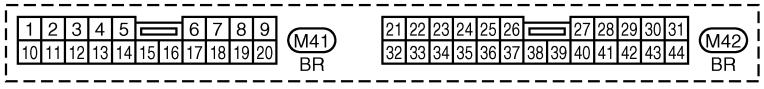

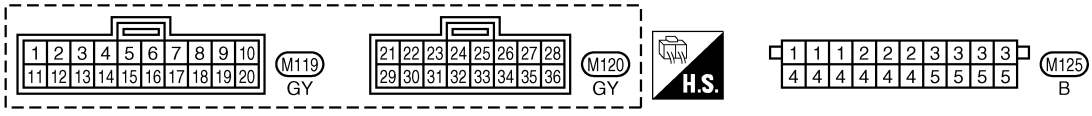

TJWM0029E

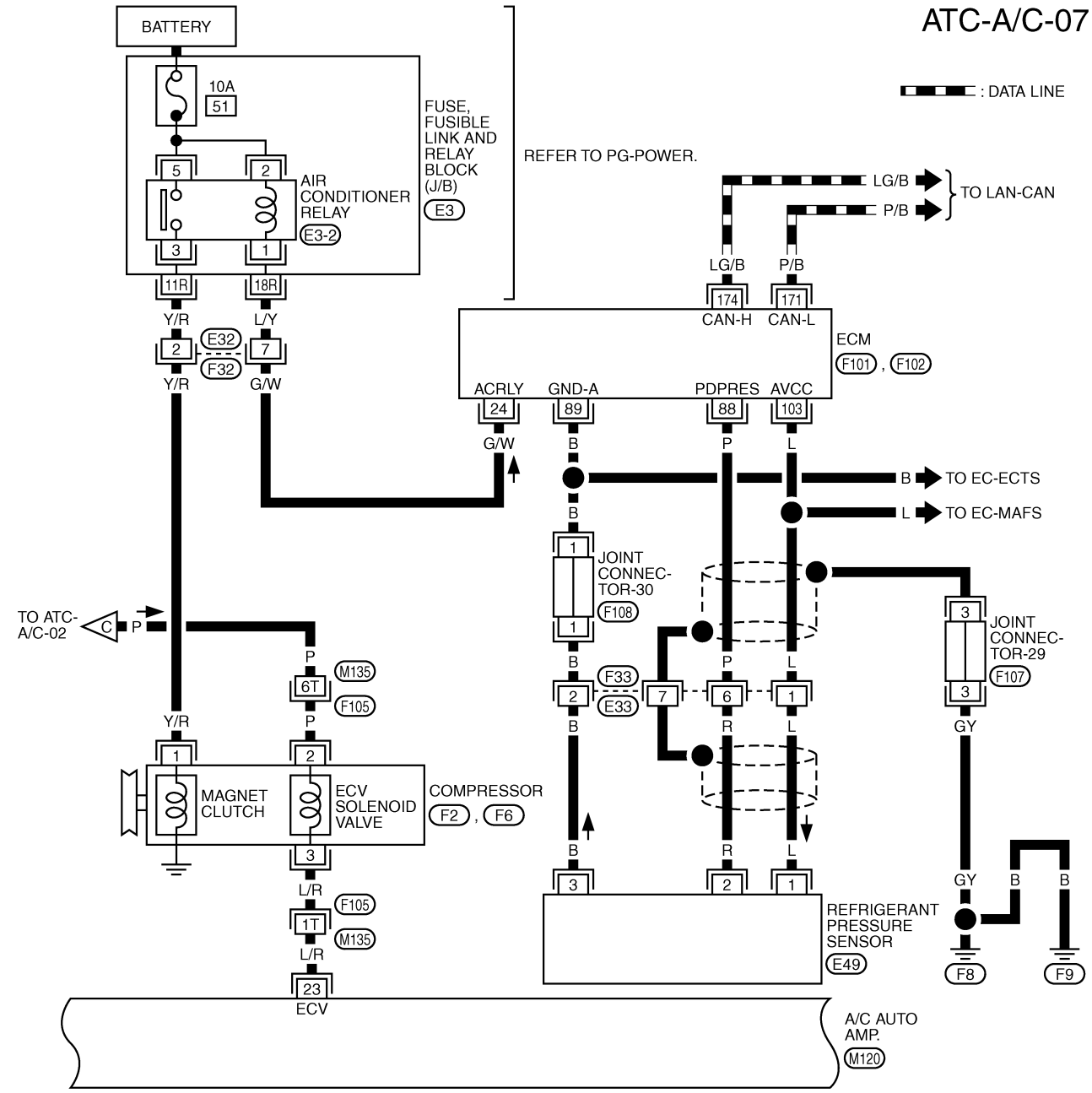

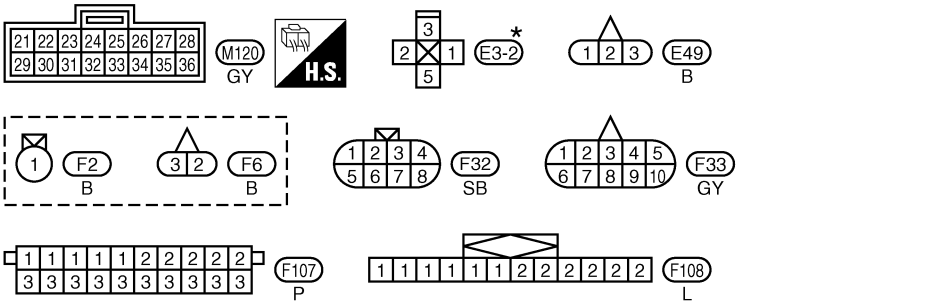

REFER TO THE FOLLOWING.

F105 -SUPER MULTIPLE JUNCTION (SMJ)

E3 -FUSE,FUSIBLE LINK AND RELAY BLOCK (J/B)

F101 , F102 -ELECTRICAL UNITS

*: THIS CONNECTOR IS NOT SHOWN IN "HARNESS LAYOUT", PG SECTION.

TJWM0030E

ATC-A/C-08

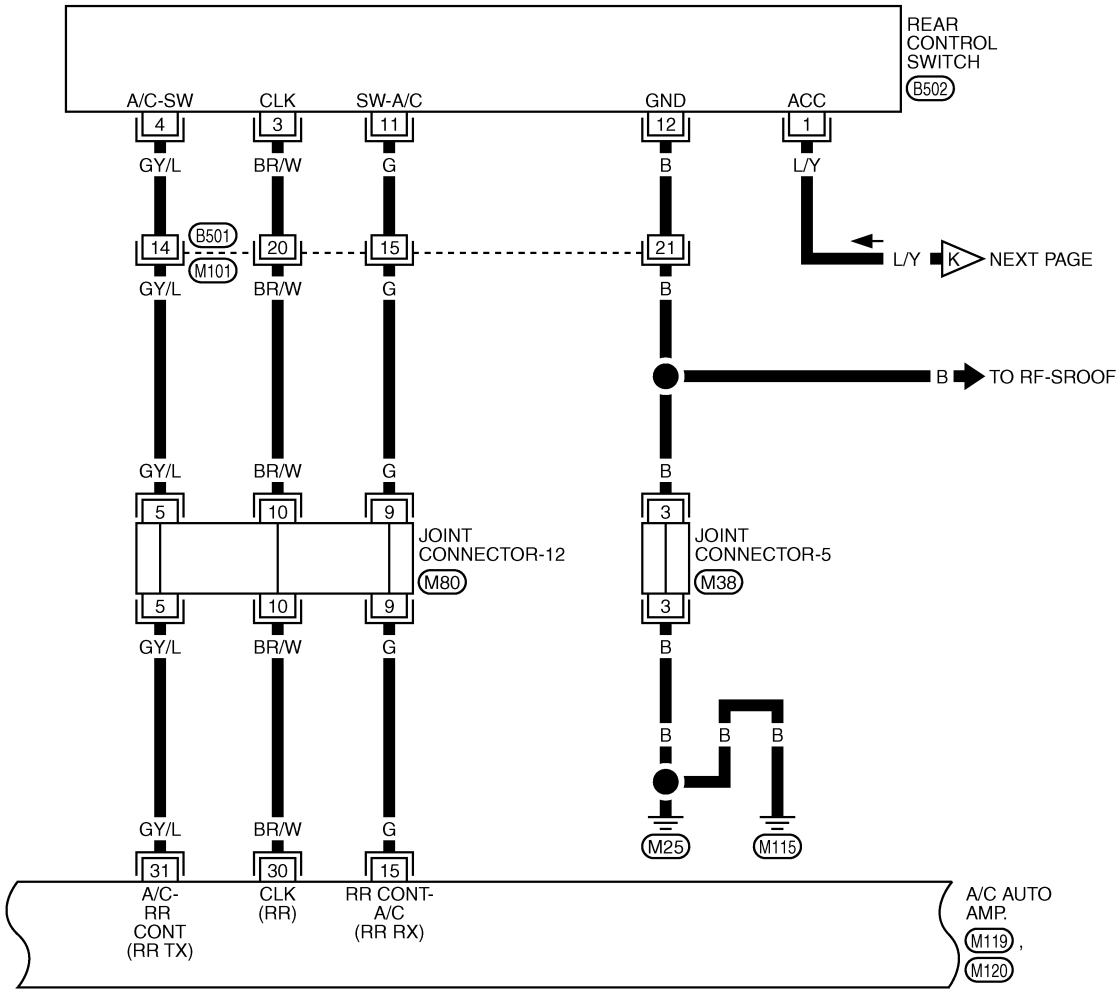

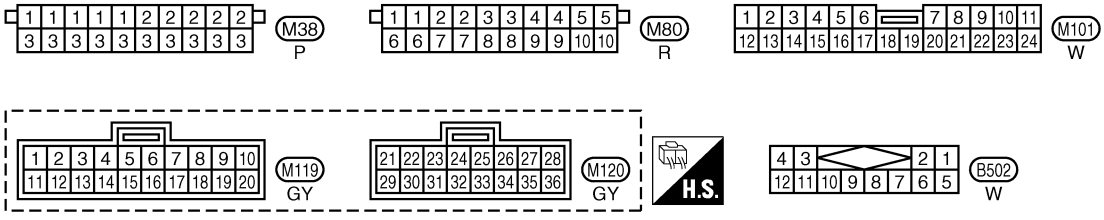

TJWM0031E

ATC-A/C-09

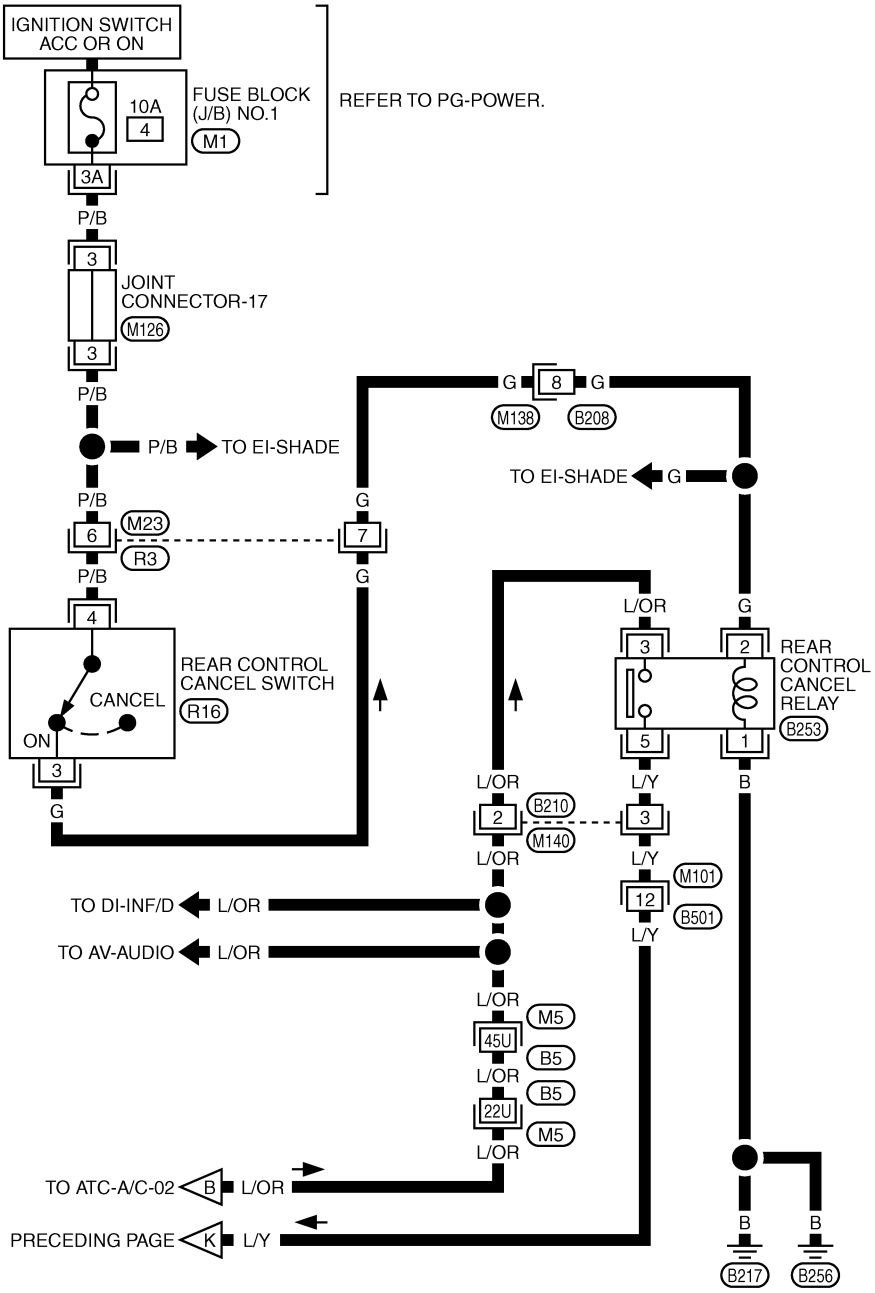

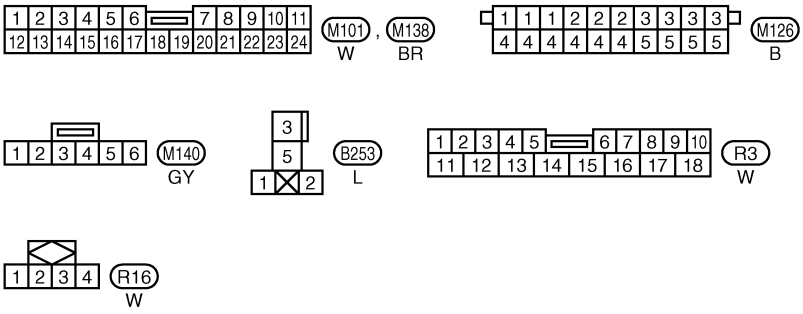

REFER TO THE FOLLOWING.

M5 -SUPER MULTIPLE JUNCTION (SMJ)

M1 -FUSE BLOCK-JUNCTION BOX (J/B) NO.1

TJWM0032E

WITHOUT NAVIGATION SYSTEM

ATC-A/C-10

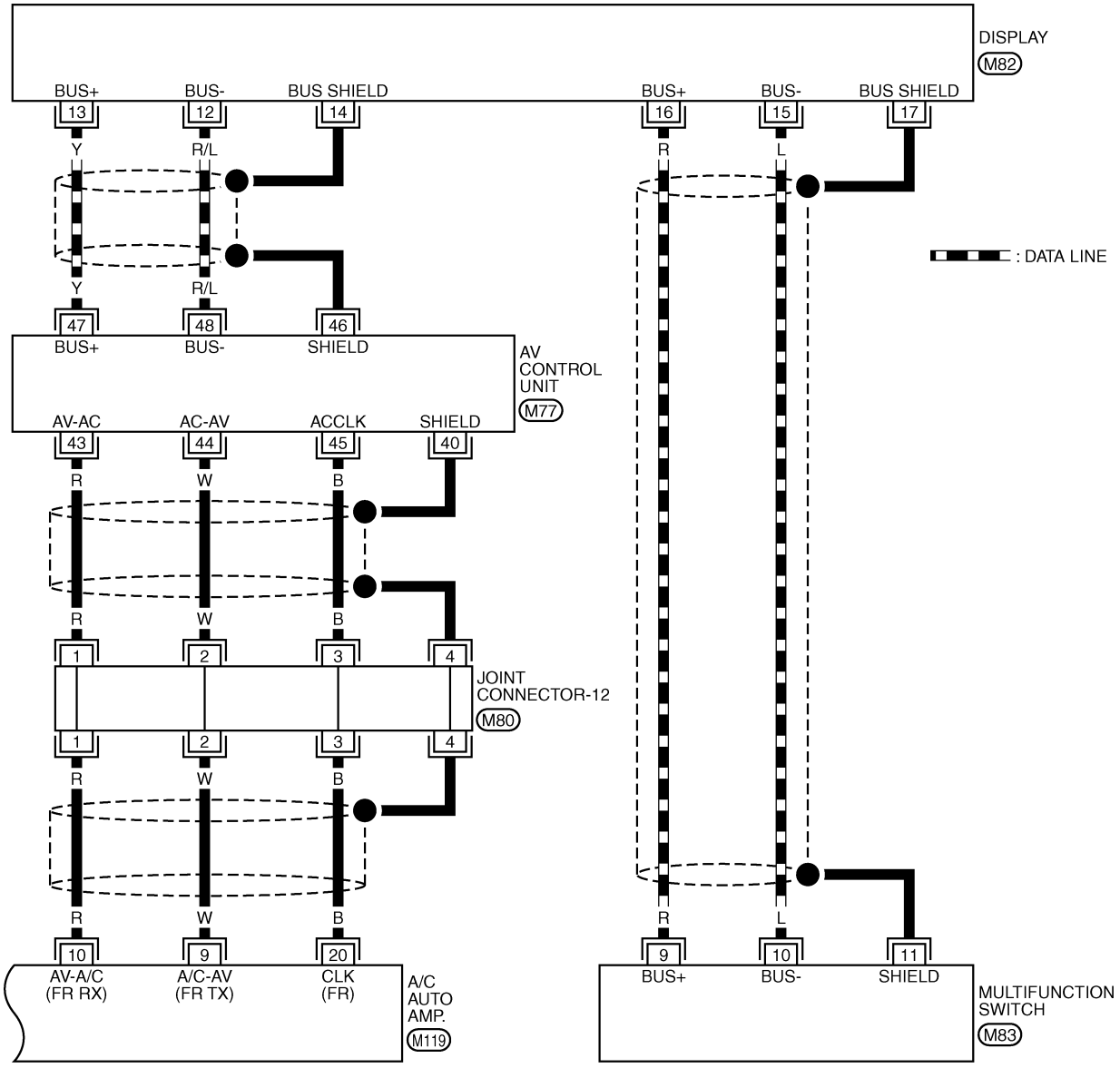

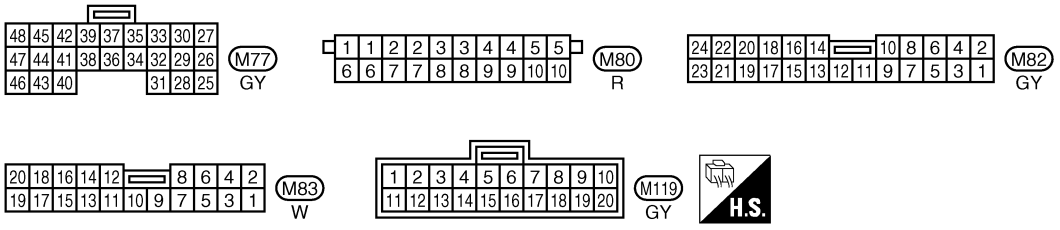

TJWM0033E

WITH NAVIGATION SYSTEM

ATC-A/C-11

: DATA LINE

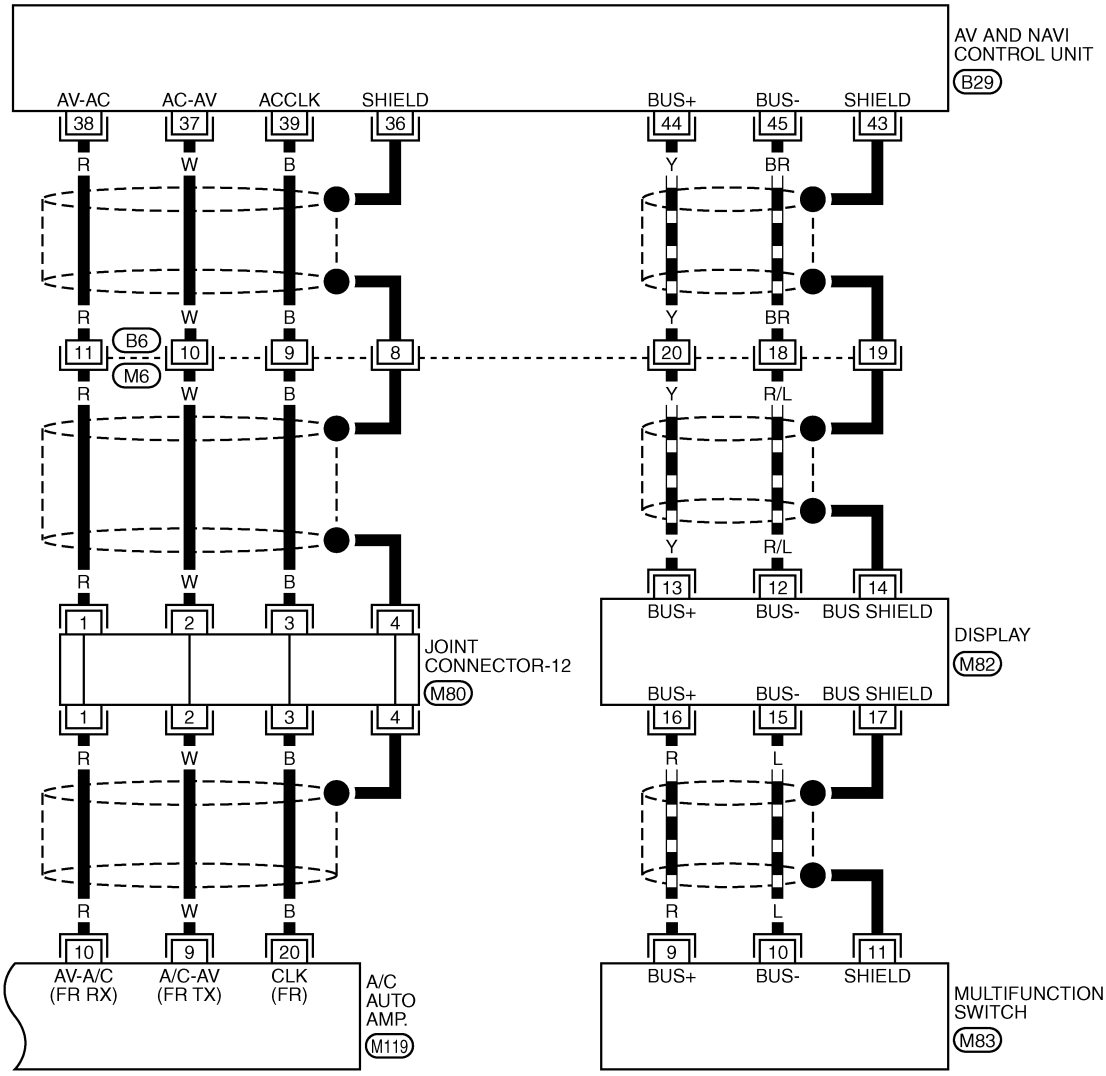

TJWM0070E

Auto Amp. Terminals and Reference Value

EJS000JJ

Measure voltage between each terminal and ground by following terminals and reference value for auto amp.

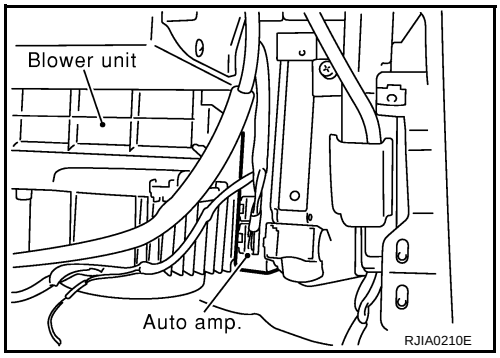

PIN CONNECTOR TERMINAL LAYOUT

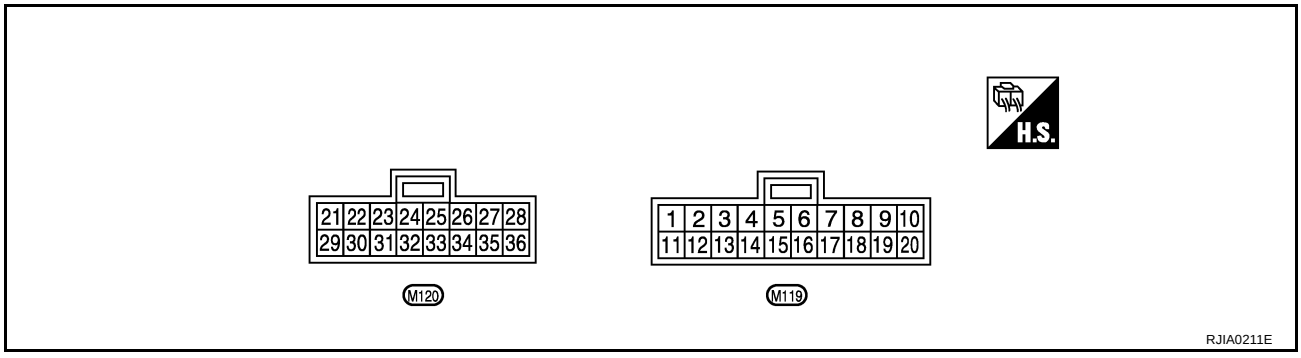

TERMINALS AND REFERENCE VALUE FOR AUTO AMP.

Terminal No.	Wire color	Item	Ignition switch	Condition	Voltage (V)
1	G/OR	Intake sensor	-	-	-
2	G/R	Ambient sensor	-	-	-
3	LG/B	In-vehicle sensor	-	-	-
4	PU/W	Vehicle speed sensor	ON	Speedometer operated [When vehicle speed is approx. 40km/h (25MPH)]	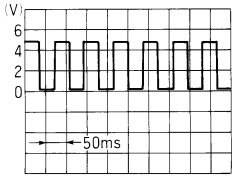 ELF1080D
5	G/Y	A/C LAN signal	ON	-	Approx. 5
6	LG	Power supply for rear vent door motor	ON	Rear vent SW: Open	Approx. 0
				Rear vent SW: Close	Approx. 12
7	GY/L	Power supply for ACC	ACC or ON	-	Battery voltage
9	W	Multiplex communication signal (Fr TX)	ON	-	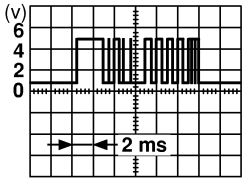 RJIA0212E

Terminal No.	Wire color	Item	Ignition switch	Condition		Voltage (V)
10	R	Multiplex communication signal (Fr RX)	ON	-		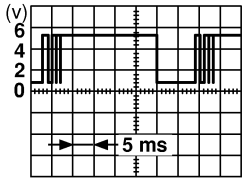 RJIA0213E
11	R/Y	Sensor ground	ON	-		Approx. 0
12	SB	Sunload sensor	-	-		-
15	G	Multiplex communication signal (Rr RX)	ON	-		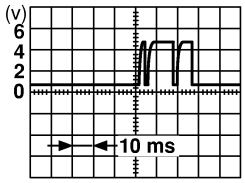 RJIA0214E
16	W/B	Power supply for rear vent door motor	ON	Rear vent switch: Open		Approx. 12
				Rear vent switch: Close		Approx. 0
17	L/OR	Water temperature sensor	-	At idle [after warming up, approx. 80°C (176°F)] **CAUTION:** **The waveforms vary depending on coolant temperature.**		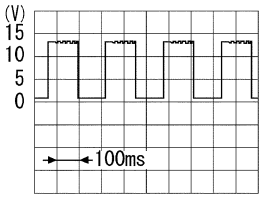 PKIA0098J
18	OR	Compressor feed back signal (Low-pressure cut)	ON	Compressor: ON (Start engine)	Blower motor operates.	Approx. 0
					When refrigerant pressure sensor connector is disconnected	Approx. 5
20	B	Multiplex communication signal (Fr CLK)	ON	-		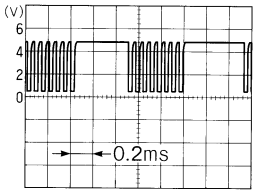 HAK0363D
21	GY	Power supply for mode door motor, air mix door motor, intake door motor	ON	-		Approx. 12
22	Y	Compressor ON signal	ON	AUTO switch: ON		Approx. 0
				AUTO switch: OFF		Approx. 5
23	L/R	ECV (Electronic Control Valve) signal	ON	Self-diagnosis: STEP-42		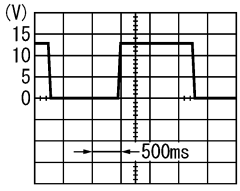 RJIA1563E
25	B	Ground	ON	-		Approx. 0
26	Y/G	Power supply for BAT	OFF	-		Battery voltage

Terminal No.	Wire color	Item	Ignition switch	Condition	Voltage (V)
27	P	Power supply for IGN	ON	-	Battery voltage
29	SB	Blower motor ON signal	ACC or ON	AUTO switch: ON (Blower motor operates.)	Approx. 0
				AUTO switch: OFF	Approx. 5
30	BR/W	Multiplex communication signal (Rr CLK)	ON	-	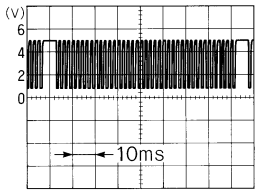 HAK0364D
31	GY/L	Multiplex communication signal (Rr TX)	ON	-	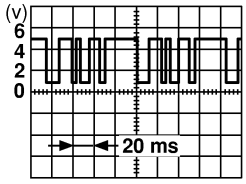 RJIA0215E
35	L/OR	Blower motor drive signal	ACC or ON	Blower speed: 1st speed	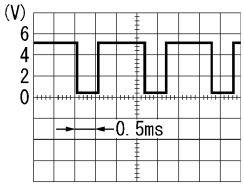 SJIA0116J

Self-diagnosis Function

EJS000JK

DESCRIPTION

The self-diagnostic system diagnoses sensors, door motors, blower motor, etc. by system line. Refer to applicable sections (items) for details. Shifting from normal control to the self-diagnostic system is accomplished by starting the engine (turning the ignition switch ON) and pressing OFF switch for at least 5 seconds. The OFF switch must be pressed within 10 seconds after starting the engine (ignition switch is turned ON). This system will be canceled by either pressing AUTO switch or turning the ignition switch OFF. Shifting from one step to another is accomplished by means of turning temperature dial, as required.

Additionally shifting from STEP-5 to AUXILIARY MECHANISM is accomplished by means of pushing (fan) UP switch.

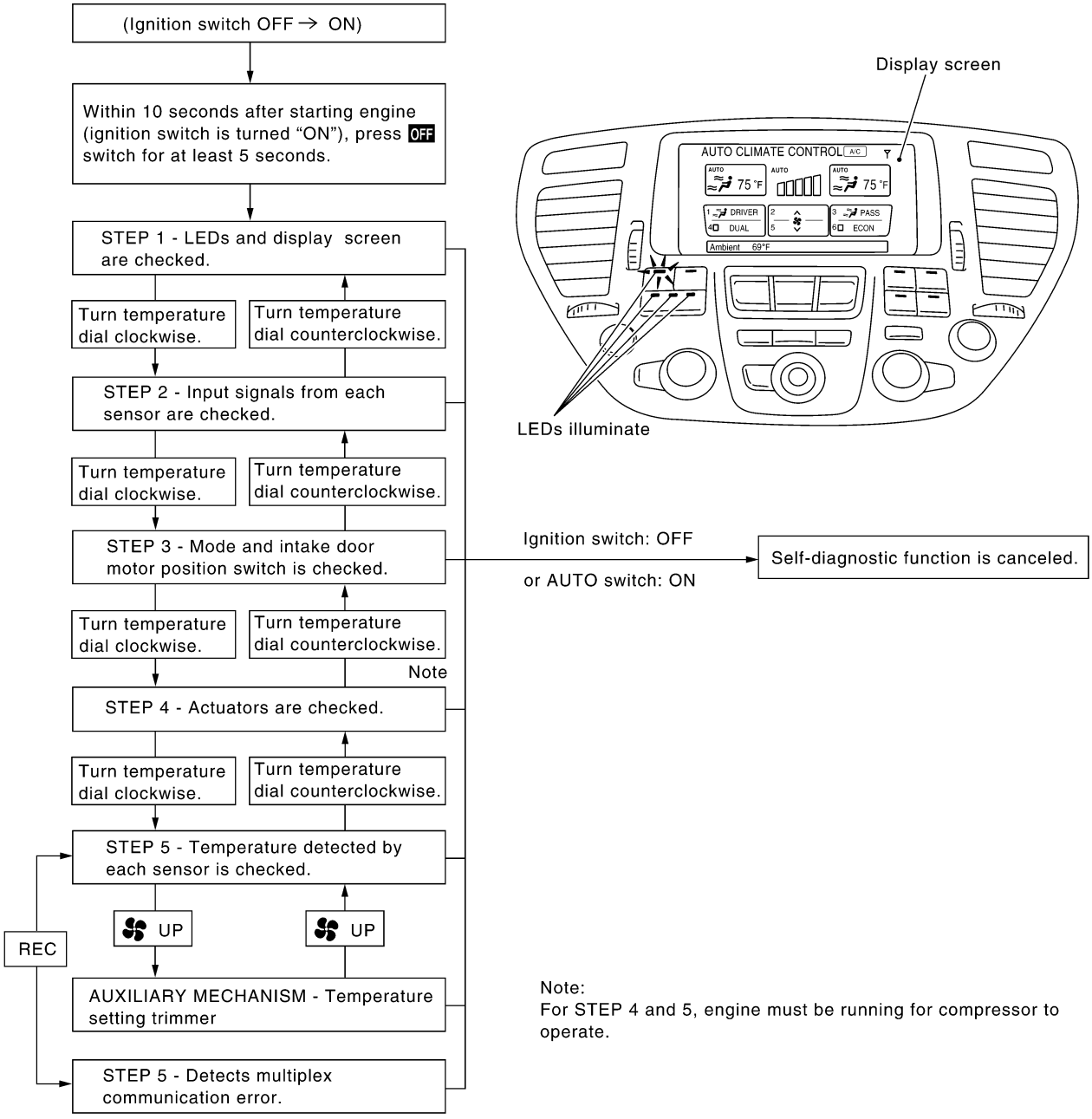

FUNCTION CONFIRMATION PROCEDURE

1. SET IN SELF-DIAGNOSTIC MODE

1. Turn ignition switch ON.
2. Set in self-diagnostic mode as follows. Within 10 seconds after starting engine (ignition switch is turned ON.), press OFF switch for at least 5 seconds.

   CAUTION:
   If battery voltage drops below 12V during diagnosis step-3, actuator speed becomes slower and as a result, the system may generate an error even when operation is normal. To avoid this, start engine before performing this diagnosis.

   >> GO TO 2.

2. STEP-1: LEDS AND DISPLAY ARE CHECKED

Check LED illumination and display screen.

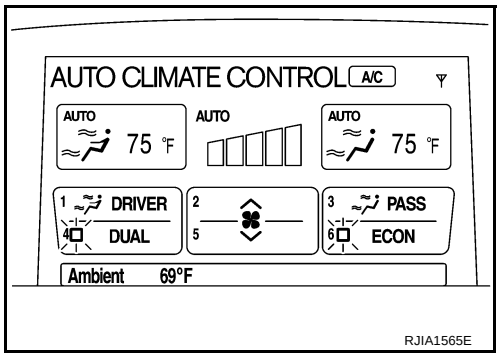

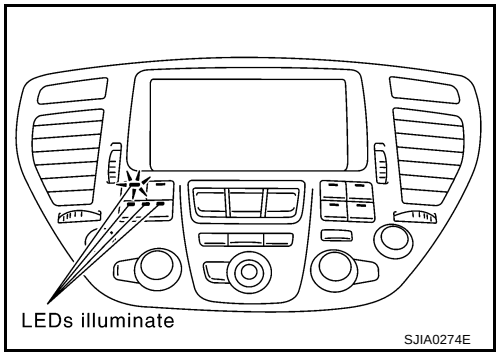

OK or NG

OK >> GO TO 3.
NG >> Malfunctioning OFF switch, LED or auto amp. Refer to ATC-106, "Self-diagnosis" .

3. CHECK TO ADVANCE SELF-DIAGNOSIS STEP-2

Turn the temperature dial (driver side) clockwise.

Advance to self-diagnosis STEP-2?

YES >> GO TO 4.
NO >> Replace multifunction switch. (Temperature dial malfunctions.)

4. CHECK TO RETURN SELF-DIAGNOSIS STEP-1

Turn the temperature dial (driver side) counterclockwise.

Return to self-diagnosis STEP-1?

YES >> GO TO 5.
NO >> Replace multifunction switch. (Temperature dial malfunctions.)

5. STEP- 2: SENSOR CIRCUITS ARE CHECKED FOR OPEN OR SHORT CIRCUIT

1. Turn the temperature dial (driver side) clockwise.
2. Does code No.20 appear on the display?

YES or NO

YES >> GO TO 6.
NO >> GO TO 14.

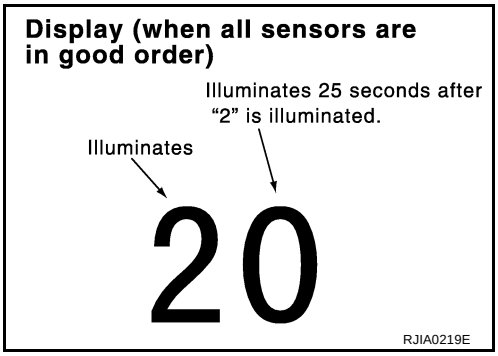

6. STEP- 3: MODE DOOR AND INTAKE DOOR POSITIONS ARE CHECKED

1. Turn the temperature dial (driver side) clockwise.
2. Does code No.30 appear on the display?

YES or NO

YES >> GO TO 7.
NO >> GO TO 15.

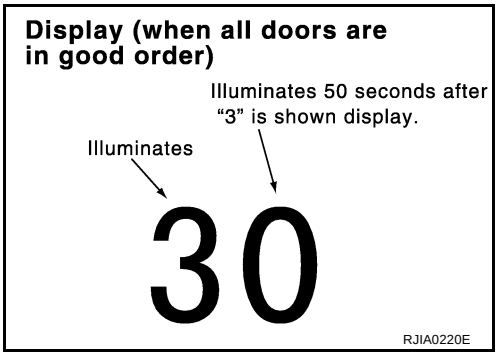

7. STEP-4: OPERATION OF EACH ACTUATOR IS CHECKED

1. Turn the temperature dial (driver side) clockwise.
2. Press (DEF) switch, code No. of each actuator test is indicated on the display.

>> GO TO 8.

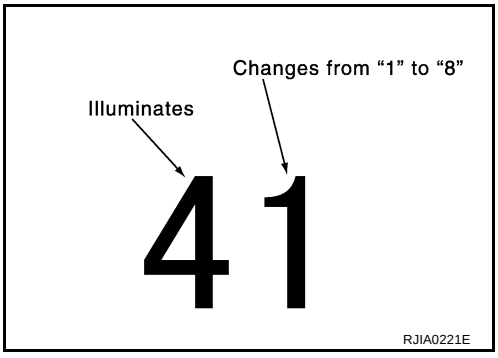

8. CHECK ACTUATORS

Refer to the following chart and confirm discharge air flow, air temperature, blower motor voltage and compressor operation.

Discharge air flow

Mode position indication		Condition	Air outlet/distribution				
Driver side	Passenger side		Front VENT	Rear VENT	Front FOOT	Rear FOOT	DEF
		DUAL SW: OFF Rear ventilator door: OPEN	87%	13%			
			50%	13%	24%	13%	
					50%	30%	20%
					37%	23%	40%
							100%

RJIA0222E

	41	42	43	44	45	46	47	48
Mode door position (Driver side)	VENT (B/L OPEN)	VENT (B/L SHUT)	B/L 1 (B/L SHUT)	B/L 1 (B/L OPEN)	B/L 2	FOOT	D/F	DEF
Mode door position (Passenger side)	VENT (B/L OPEN)	VENT (B/L SHUT)	B/L 1 (B/L SHUT)	B/L1 (B/L OPEN)	B/L 2	FOOT 1	FOOT 2	DEF
Intake door position	REC	REC	REC	20% FRE	20% FRE	FRE	FRE	FRE
Air mix door position	FULL COLD	FULL COLD	FULL COLD	FULL HOT	FULL HOT	FULL HOT	FULL HOT	FULL HOT
Blower motor duty ratio	37%	37%	91%	65%	65%	65%	65%	91%
Compressor	ON	ON	ON	OFF	OFF	OFF	ON	ON
Rear vent door position	OPEN	SHUT	SHUT	SHUT	SHUT	SHUT	SHUT	SHUT
Electronic control valve (ECV) duty ratio	100%	50%	100%	0%	0%	0%	50%	100%

Checks must be made visually, by listening to any noise, or by touching air outlets with your hand, etc. for improper operation.

OK or NG

OK >> GO TO 9.

NG >>
- Air outlet does not change.
  Go to Mode Door Motor Circuit. Refer to ATC-73, "Mode Door Motor Circuit" .
- Intake door does not change.
  Go to Intake Door Motor Circuit. Refer to ATC-79, "Intake Door Motor Circuit" .
- Blower motor operation is malfunctioning.
  Go to Blower Motor Circuit. Refer to ATC-83, "Blower Motor Circuit" .
- Magnet clutch does not engage.
  Go to Magnet Clutch Circuit. Refer to ATC-88, "Magnet Clutch Circuit" .
- Discharge air temperature does not change.
  Go to Air Mix Door Motor Circuit. Refer to ATC-76, "Air Mix Door Motor Circuit" .

9. STEP-5: TEMPERATURE OF EACH SENSOR IS CHECKED

1. Turn the temperature dial (driver side) clockwise.
2. Code No. 51 appears on the display.

>> GO TO 10.

10. CHECK AMBIENT SENSOR

Press (DEF) switch one time, temperature detected by ambient sensor is indicated on the display.

NOTE:
If temperature shown on display greatly differs from actual temperature, check sensor circuit first, then inspect sensor.

OK or NG

OK >> GO TO 11.
NG >> Go to Ambient Sensor Circuit. Refer to ATC-112, "Ambient Sensor Circuit" .

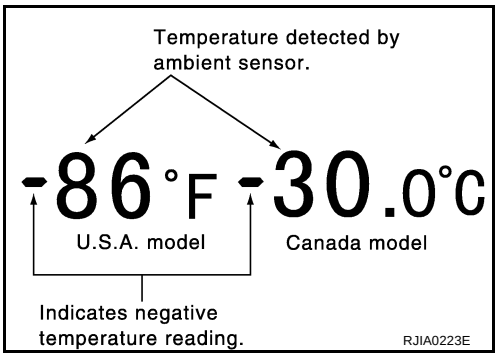

11. CHECK IN-VEHICLE SENSOR

Press (DEF) switch the second time, temperature detected by in-vehicle sensor is indicated on the display.

NOTE:
If temperature shown on display greatly differs from actual temperature, check sensor circuit first, then inspect sensor.

OK or NG

OK >> GO TO 12.
NG >> Go to In-Vehicle Sensor Circuit. Refer to ATC-114, "In-Vehicle Sensor Circuit" .

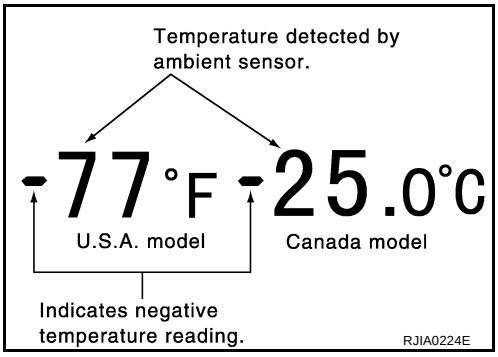

12. CHECK INTAKE SENSOR

Press (DEF) switch the third time, temperature detected by intake sensor is indicated on the display.

NOTE:
If temperature shown on display greatly differs from actual temperature, check sensor circuit first, then inspect sensor.

OK or NG

OK >> GO TO 13.
NG >> Go to Intake Sensor Circuit. Refer to ATC-120, "Intake Sensor Circuit" .

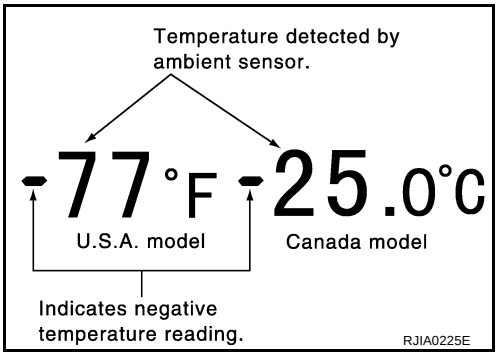

13. CHECK MULTIPLEX COMMUNICATION ERROR

1. Press intake switch.
2. Multiplex communication error between AV C/U (AV and NAVI C/U) and auto amp. can be detected as self-diagnosis results. (If plural errors occur, the display of each error will blink two times for 0.5 second intervals.)
3. Is multiplex communication error detected as self-diagnosis results?

Display	Multiplex communication error
52	In good order
52	AV(and NAVI) control unit ⇨ Auto amp.
52	Rear control SW ⇨ Auto amp.
52	Auto amp. ⇨ AV (and NAVI) control unit or rear control SW

RJIA1589E

CAUTION:

Rear control cancel switch has two positions “CANCEL” and “ON”. If rear control cancel switch has been canceled, Multiplex communication error might be detected even there is no malfunction.

So it is necessary to follow the procedure below:

1. **Switch “ON” position on the rear control cancel switch.**
2. **Disconnect the battery negative terminal for approx. 10 seconds or more in order to delete the memory of self-diagnosis.**
3. **Reconfirm the multiplex communication error as self-diagnosis result is detected.**

YES or NO

YES >> Go to Multiplex communication Circuit. Refer to ATC-122, "Multiplex Communication Circuit" .

NO >> 1. Turn ignition switch OFF or AUTO switch ON.

2. INSPECTION END

14. CHECK MALFUNCTIONING SENSOR

Refer to the following chart for malfunctioning code No.
(If two or more sensors malfunction, corresponding code Nos. blink respectively two times.)
*1: Conduct self-diagnosis STEP-2 under sunshine.
When conducting indoors, aim a light (more than 60W) at sunload sensor, otherwise code No. 25 will indicate despite that sunload sensor is functioning properly.

Code No.	Malfunctioning sensor (Including circuits)	Reference page
21 / -21	Ambient sensor	*2
22 / -22	In-vehicle sensor	*3
24 / -24	Intake sensor	*4
25 / -25	Sunload sensor	*5
26 / -26	Air mix door motor (LCU) PBR (Driver side)	*6
27 / -27	Air mix door motor (LCU) PBR (Passenger side)	*6

*2: ATC-112, "DIAGNOSTIC PROCEDURE FOR AMBIENT SENSOR" .
*3: ATC-115, "DIAGNOSTIC PROCEDURE FOR IN-VEHICLE SENSOR" .
*4: ATC-120, "DIAGNOSTIC PROCEDURE FOR INTAKE SENSOR" .
*5: ATC-117, "DIAGNOSTIC PROCEDURE FOR SUNLOAD SENSOR" .
*6: ATC-69, "DIAGNOSTIC PROCEDURE FOR LAN CIRCUIT" .

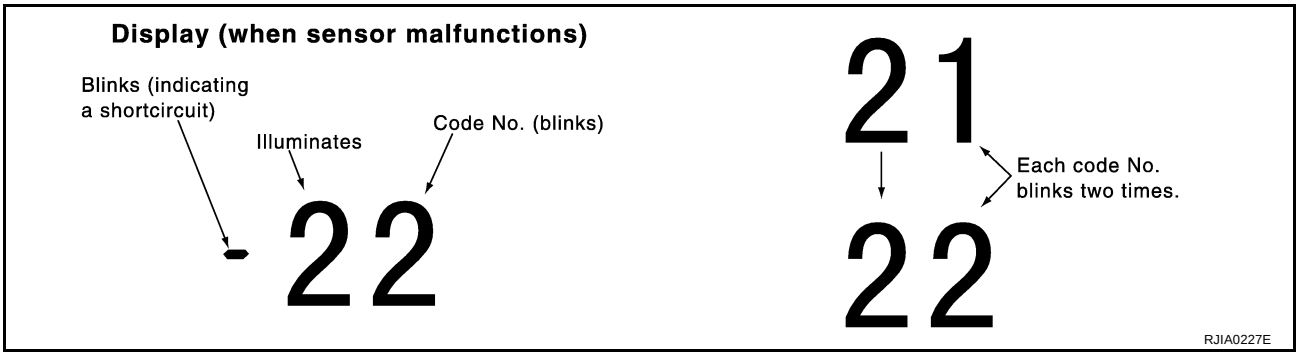

>> INSPECTION END

15. CHECK MALFUNCTIONING DOOR MOTOR POSITION SWITCH

Mode and/or intake door motor position switch(es) is/are malfunctioning.

Code No. *1 *2	Mode or intake door position		Reference page
31	VENT (Driver side)	Mode door motor	*3
32	FOOT (Driver side)		
33	DEF (Driver side)		
34	VENT (Passenger side)		
35	FOOT1 (Passenger side)		
36	DEF (Passenger side)		
37	FRE	Intake door motor	*4
38	20%FRE		
39	REC		

(If two or more mode or intake doors are out of order, corresponding code numbers blink respectively two times.)
*1: If mode door motor harness connector is disconnected, the following display pattern will appear.
31→32→33→34→35→36→Return to 31
*2: If intake door motor harness connector is disconnected, the following display pattern will appear.
37→38→39→Return to 37
*3: ATC-73, "Mode Door Motor Circuit" .
*4: ATC-79, "Intake Door Motor Circuit" .

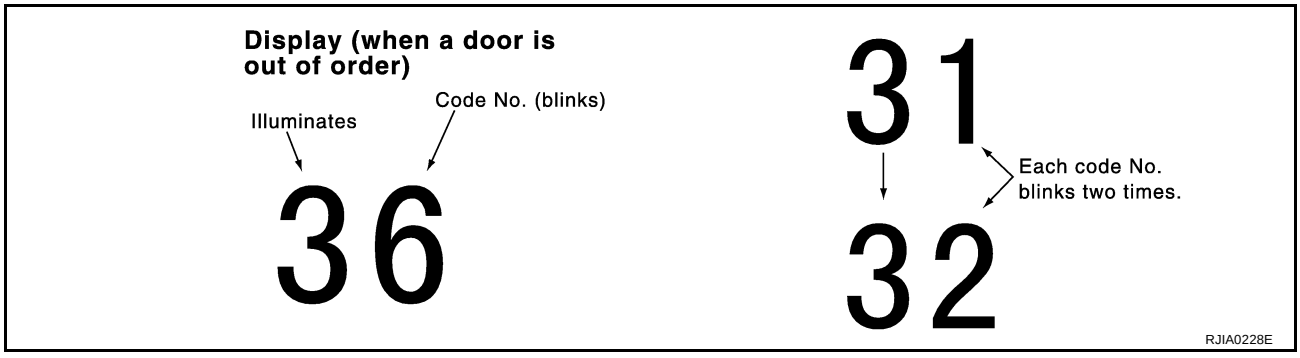

>> INSPECTION END

AUXILIARY MECHANISM: TEMPERATURE SETTING TRIMMER

The trimmer compensates for differences in range of ±3°C (±6°F) between temperature setting (displayed digitally) and temperature felt by driver.

Operating procedures for this trimmer are as follows:

- Begin Self-diagnosis STEP-5 mode. Refer to ATC-55, "Self-diagnosis Function" .
- Press (fan) UP switch to set system in auxiliary mode.
- Display shows 61 in auxiliary mechanism. It takes approximately 3 seconds.
- Turn the temperature dial as desired. Temperature will change at a rate of 0.5°C (1.0°F) each time a dial is turned.

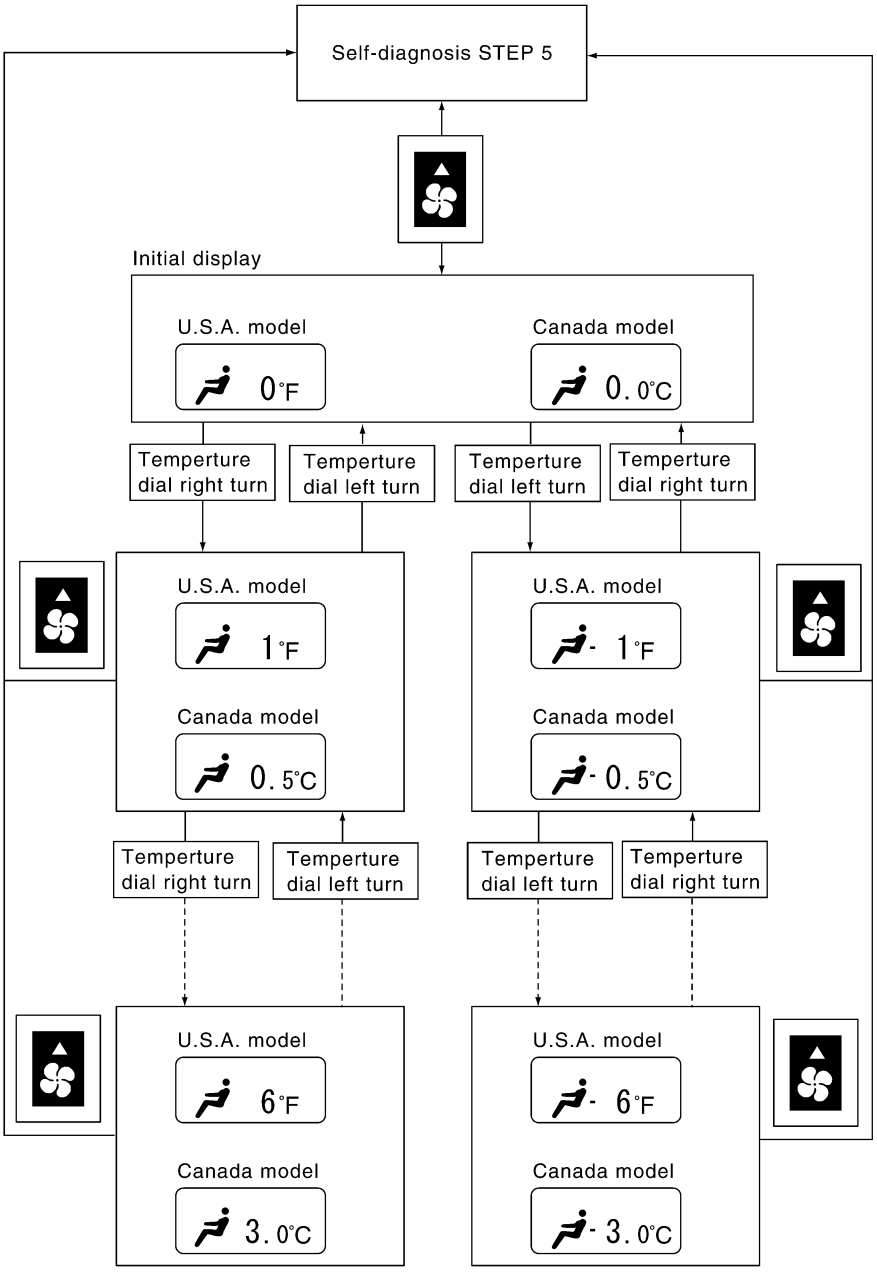

RJIA1274E

When battery cable is disconnected, trimmer operation is canceled. Temperature set becomes that of initial condition, i.e. 0°C (0°F).

Operational Check

EJS000JL

The purpose of the operational check is to confirm that the system operates properly.

Conditions :Engine running at usual operating temperature

CHECKING MEMORY FUNCTION

1. Set the temperature 90°F or 32°C.
2. Press OFF switch.
3. Turn the ignition switch OFF.
4. Turn the ignition switch ON.
5. Press the AUTO switch.
6. Confirm that the set temperature remains at previous temperature.
7. Press OFF switch.

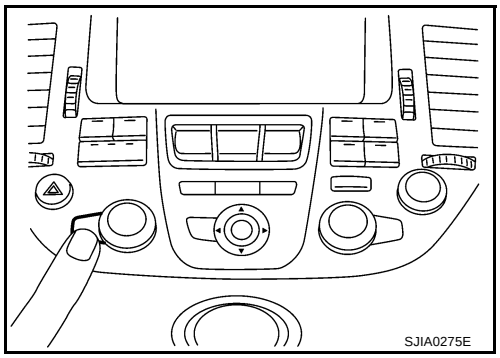

If NG, go to trouble diagnosis procedure ATC-107, "Memory Function" .
If OK, continue the check.

CHECKING BLOWER

1. Press fan switch (up side) one time. Blower should operate on low speed. The fan symbol should have one blade lit.
2. Press fan switch (up side) one more time, and continue checking blower speed and fan symbol until all speeds are checked.
3. Leave blower on MAX. speed.

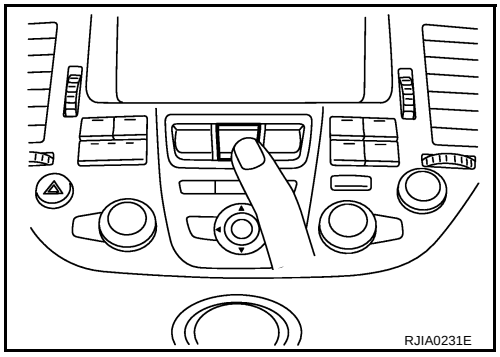

If NG, go to trouble diagnosis procedure ATC-83, "Blower Motor Circuit" .
If OK, continue the check.

CHECKING DISCHARGE AIR

1. Press mode switch four times and DEF switch.
2. Each position indicator should change shape.

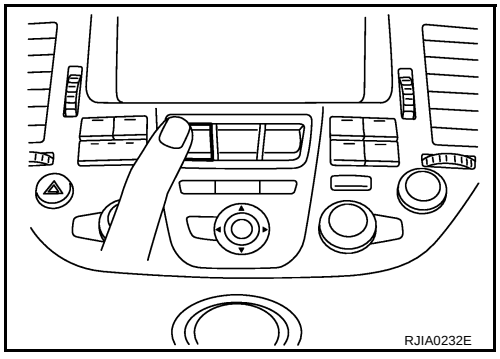

3. Confirm that discharge air comes out according to the air distribution table. Refer to ATC-34, "Discharge Air Flow" .

Discharge air flow

Mode position indication		Condition	Air outlet/distribution				
Driver side	Passenger side		Front VENT	Rear VENT	Front FOOT	Rear FOOT	DEF
		DUAL SW: OFF Rear ventilator door: OPEN	87%	13%			
			50%	13%	24%	13%	
					50%	30%	20%
					37%	23%	40%
							100%

RJIA0222E

Intake door position is checked in the next step.
If NG, go to trouble diagnosis procedure for ATC-79, "Intake Door Motor Circuit" .
If OK, continue the check.

NOTE:
Confirm that the compressor clutch is engaged (sound or visual inspection) and intake door position is at FRESH when the DEF is selected.

CHECKING RECIRCULATION

1. Press intake switch one time.
2. Press intake switch again. Recirculation indicator should illuminate.
3. Listen for intake door position change (you should hear blower sound change slightly).

If NG, go to trouble diagnosis procedure for ATC-79, "Intake Door Motor Circuit" .
If OK, continue the check.

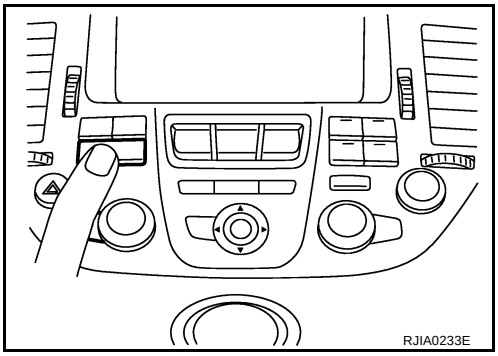

CHECKING TEMPERATURE DECREASE

1. Turn the temperature dial (driver side) until 18°C (60°F) is displayed.
2. Check for cold air at discharge air outlets.

If NG, go to trouble diagnosis procedure for ATC-95, "Insufficient Cooling" .
If OK, continue the check.

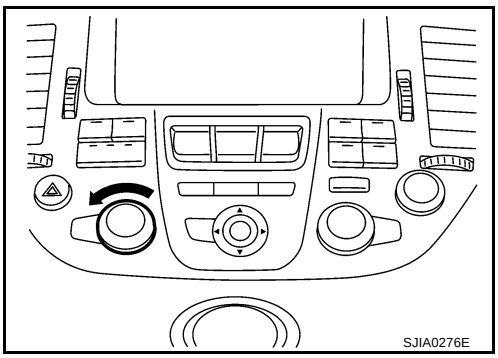

CHECKING TEMPERATURE INCREASE

1. Turn the temperature dial (driver side) until 32°C (90°F) is displayed.
2. Check for hot air at discharge air outlets.

If NG, go to trouble diagnosis procedure ATC-104, "Insufficient Heating" .
If OK, continue the check.

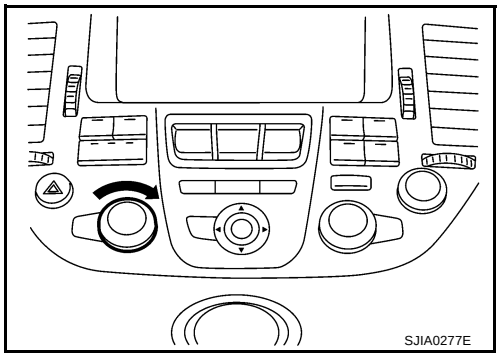

CHECK ECON (ECONOMY) MODE

1. Set the temperature 75°F or 25°C.
2. Press ECON switch.
3. Display should indicate ECON (not AUTO).
4. Press ECON switch again. Display should disappear ECON.
   - Confirm that the compressor clutch is not engaged (sound or visual inspection). (Discharge air and blower speed will depend on ambient, in-vehicle, and set temperatures.)

If NG, go to trouble diagnosis procedure ATC-108, "ECON (ECONOMY) MODE" .
If OK, continue the check.

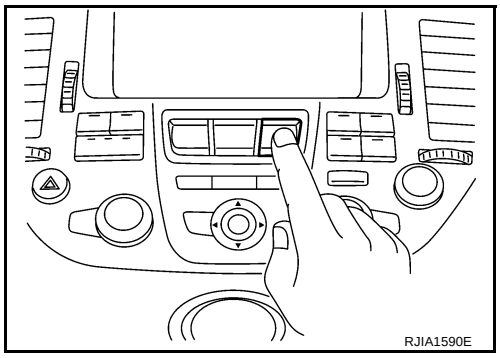

CHECKING AUTO MODE

1. Press AUTO switch.
2. Display should indicate AUTO (not ECON).
   - Confirm that the compressor clutch engages (sound or visual inspection). (Discharge air and blower speed will depend on ambient, in-vehicle, and set temperatures.)

If NG, go to trouble diagnosis procedure ATC-67, "Power Supply and Ground Circuit for Auto Amp." , then if necessary, trouble diagnosis procedure ATC-88, "Magnet Clutch Circuit" .
If all operational checks are OK (symptom cannot be duplicated), go to Incident Simulation Tests in GI-26, "How to Perform Efficient Diagnosis for an Electrical Incident" and perform tests as outlined to simulate driving conditions environment. If symptom appears, refer to ATC-36, "SYMPTOM TABLE" and perform applicable trouble diagnosis procedures.

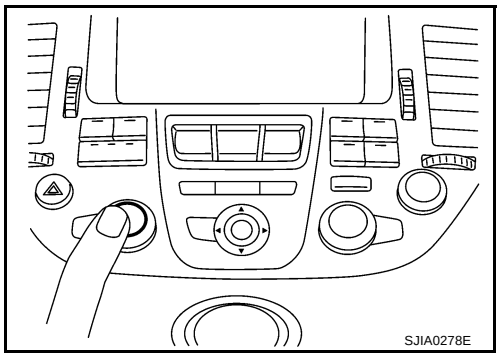

Power Supply and Ground Circuit for Auto Amp.

EJS000JM

SYMPTOM: A/C system does not come on.

INSPECTION FLOW

1. Confirm symptom by performing the following operatonal check.

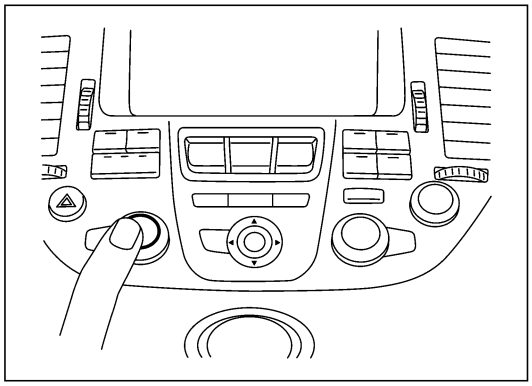

OPERATIONAL CHECK – AUTO mode

a. Press AUTO switch (driver side).
b. Display should indicate AUTO (not ECON).
Confirm that the compressor clutch engages (sound or visual inspection).
(Discharge air and blower speed will depend on ambient, in-vehicle and set temperatures.)

If OK (symptom cannot be duplicated), perform complete operational check (*2).
If NG (symptom is confirmed), continue with STEP-2 following.

2. Check for any service bulletins.
3. Check Main Power Supply and Ground Circuit. (*1)
4. Check Multiplex Communication Circuit (*3).
OK
5. Replace auto amp.

RJIA1898E

*1 ATC-67, "Power Supply and Ground Circuit for Auto Amp.".
*2 ATC-64, "Operational Check".
*3 ATC-122, "Multiplex Communication Circuit".

COMPONENT DESCRIPTION

Auto Amp. (Automatic Amplifier)

The auto amp. has a built-in microcomputer which processes information sent from various sensors needed for air conditioner operation. The air mix door motor, mode door motor, intake door motor, blower motor and compressor are then controlled.
The auto amp. is unitized with control mechanisms. When the various switches and temperature adjustment dial are operated, data is input to the auto amp. from the AV C/U or AV and NAVI C/U using multiplex communication.

Self-diagnostic functions are also built into auto amp. to provide quick check of malfunctions in the auto air conditioner system.

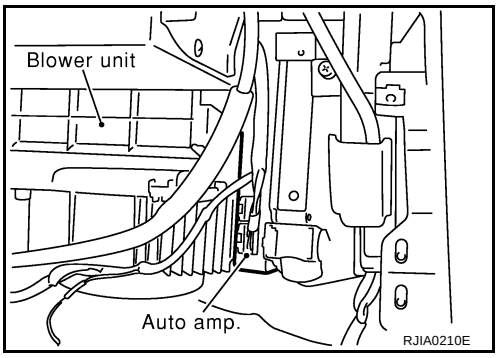

Potentio Temperature Control (PTC)

The PTC is built into the multifunction switch. It can be set at an interval of 0.5°C (1.0°F) in the 18°C (60°F) to 32°C (90°F) temperature range by turning the temperature dial. The set temperature is displayed.

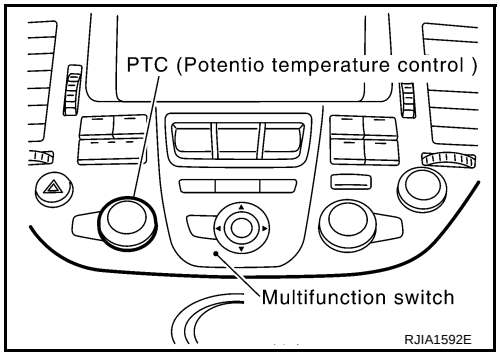

DIAGNOSTIC PROCEDURE FOR A/C SYSTEM

SYMPTOM: A/C system does not come on.

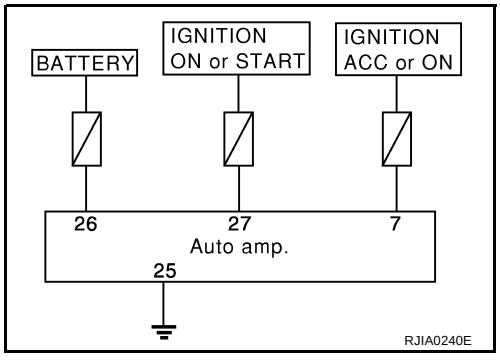

1. CHECK POWER SUPPLY CIRCUIT FOR AUTO AMP.

1. Disconnect auto amp. connector.
2. Check voltage between auto amp. harness connector M119 terminal 7 (GY/L), M120 terminals 26 (Y/G), 27 (P) and ground.

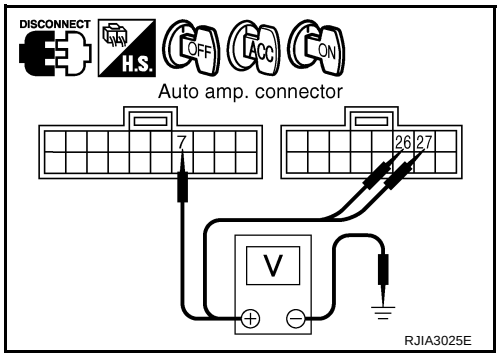

Terminals			Ignition switch position		
(+)		(-)	OFF	ACC	ON
Auto amp. connector	Terminal No. (Wire color)		voltage		
M119	7 (GY/L)	Ground	Approx. 0V	Battery voltage	Battery voltage
M120	26 (Y/G)		Battery voltage	Battery voltage	Battery voltage
M120	27 (P)		Approx. 0V	Approx. 0V	Battery voltage

OK or NG

OK >> GO TO 2.

NG >> Check 10A fuses [Nos. 2, 6 and 21 located in the fuse block (J/B) No.1]. Refer to PG-66, "FUSE BLOCK - JUNCTION BOX (J/B) NO.1" .

- If fuses are OK, check for open circuit in wiring harness. Repair or replace if necessary.
- If fuses are NG, replace fuse and check wiring harness for short circuit. Repair or replace if necessary.

2. CHECK GROUND CIRCUIT FOR AUTO AMP.

1. Turn ignition switch OFF.
2. Check continuity between auto amp. harness connector M120 terminal 25 (B) and ground.

25 – Ground : Continuity should exist.

OK or NG

OK >> Replace auto amp.
NG >> Repair or replace harness.

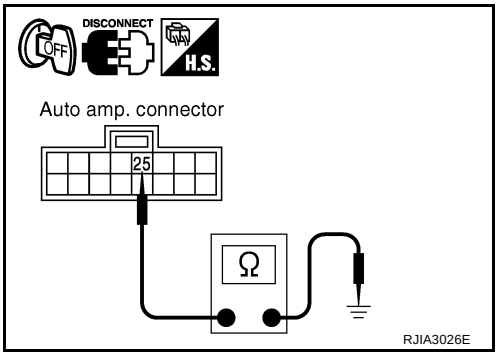

LAN System Circuit

EJS001Y7

SYMPTOM: Mode door motor, intake door motor and/or air mix door motor(s) does not operate normally.

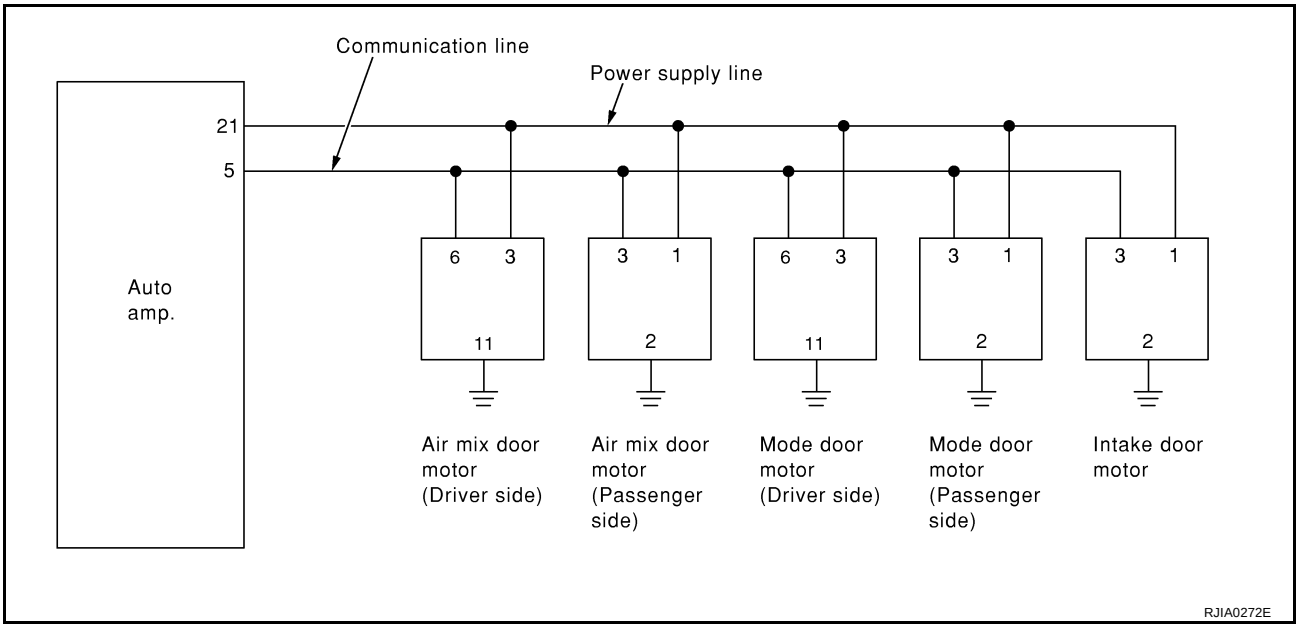

DIAGNOSTIC PROCEDURE FOR LAN CIRCUIT

1. CHECK POWER SUPPLY FOR AUTO AMP.

1. Turn ignition switch ON.
2. Check voltage between auto amp. harness connector M120 terminal 21 (GY) and ground.

21 – Ground : Approx. 12V

OK or NG

OK >> GO TO 2.
NG >> Replace auto amp.

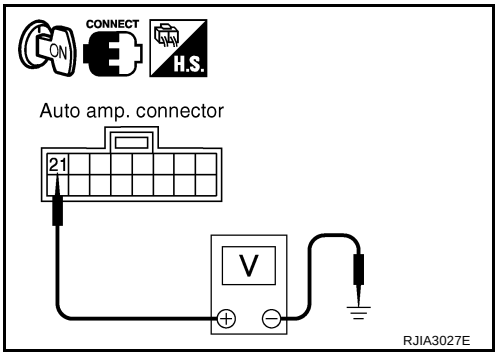

2. CHECK SIGNAL FOR AUTO AMP.

Check voltage between auto amp. harness connector M119 terminal 5 (G/Y) and ground.

5 – Ground : Approx. 5V

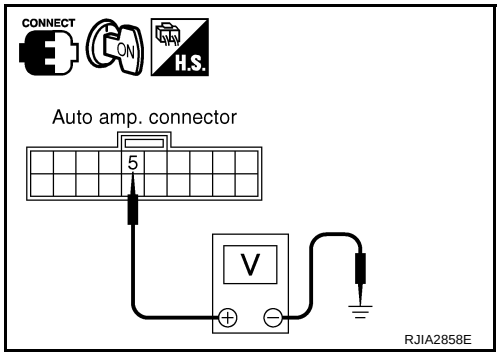

OK or NG

OK >> GO TO 3.
NG >> Replace auto amp.

3. CHECK POWER SUPPLY FOR MOTOR

Check voltage between passenger side mode door motor harness connector M106 terminal 1 (GY), passenger side air mix door motor harness connector M107 terminal 1 (GY), intake door motor harness connector M118 terminal 1 (GY), driver side mode door motor harness connector M471 terminal 3 (GY), driver side air mix door motor harness connector M472 terminal 3 (GY) and ground.

1, 3 – Ground : Approx. 12V

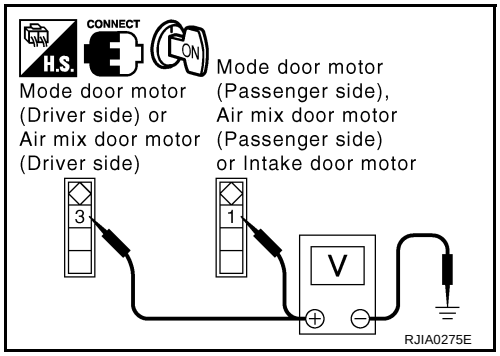

OK or NG

OK >> GO TO 4.
NG >> Replace harness or connector.

4. CHECK SIGNAL FOR MOTOR

Check voltage between passenger side mode door motor harness connector M106 terminal 3(G/Y), passenger side air mix door motor harness connector M107 terminal 3(G/Y), intake door motor harness connector M118 terminal 3(G/Y), driver side door motor harness connector M471 terminal 6(G/Y), driver side door motor connector M472 terminal 6(G/Y) and ground.

3, 6 – Ground : Approx. 5V

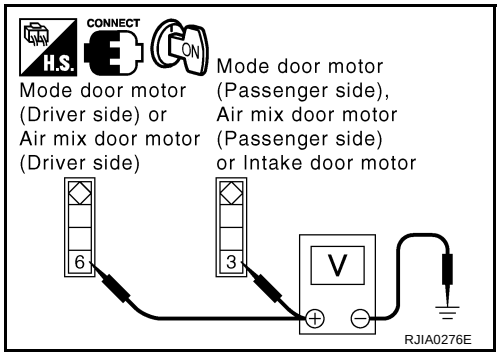

OK or NG

OK >> GO TO 5.
NG >> Replace harness or connector.

5. CHECK MOTOR GROUND CIRCUIT

1. Turn ignition switch OFF.
2. Disconnect door motor connector.
3. Check continuity between passenger side mode door motor harness connector M106 terminal 2 (B), passenger side air mix door motor harness connector M107 terminal 2 (B), intake door motor harness connector M118 terminal 2 (B), driver side mode door motor harness connector M471 terminal 11 (B), driver side air mix door motor harness connector M472 terminal 11 (B) and ground.

2, 11 – Ground : Continuity should exist.

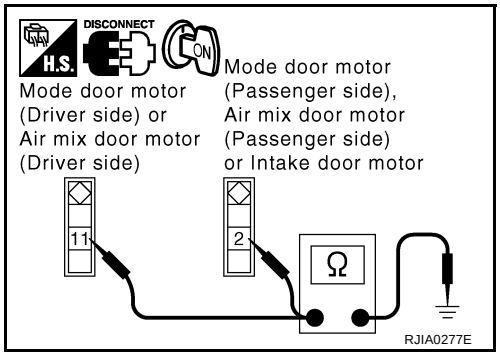

OK or NG

OK >> GO TO 6.
NG >> Replace harness or connector.

6. CHECK MOTOR OPERATION

1. Turn ignition switch OFF.
2. Disconnect each door motor connector.
3. Reconnect each door motor connector.
4. Turn ignition switch ON.
5. Confirm each door motor operation.

OK or NG

OK >> (Return to operate normally.)
- Poor contacting the motor connector

NG >> (Does not operate normally.)
- GO TO 7.

7. CHECK AIR MIX AND INTAKE DOOR MOTORS OPERATION

1. Turn ignition switch OFF.
2. Disconnect mode door motor (driver side, passenger side), air mix door motor (driver side, passenger side) and intake door motor connectors.
3. Reconnect air mix door motor (driver side, passenger side) and intake door motor connectors.
4. Turn ignition switch ON.
5. Confirm air mix door motor (driver side, passenger side) and intake door motors operation.

OK or NG

OK >> (Air mix and intake door motors operate normally.)
- GO TO 10.

NG >> (Air mix and intake door motors does not operate normally.)
- GO TO 8.

8. CHECK MODE AND INTAKE DOOR MOTORS OPERATION

1. Turn ignition switch OFF.
2. Disconnect air mix door motor connectors (driver side, passenger side).
3. Reconnect mode door motor connectors (driver side, passenger side).
4. Turn ignition switch ON.
5. Confirm mode door motor (driver side, passenger side) and intake door motors operation.

OK or NG

OK >> (Mode and intake door motors operate normally.)
- GO TO 11.

NG >> (Mode and intake door motors does not operate normally.)
- GO TO 9.

9. CHECK MODE AND AIR MIX DOOR MOTORS OPERATION

1. Turn ignition switch OFF.
2. Disconnect intake door motor connector.
3. Reconnect air mix door motor connectors (driver side, passenger side).
4. Turn ignition switch ON.
5. Confirm mode and air mix door motors operation.

OK or NG

OK >> (Mode and air mix door motors operate normally.)
- Replace intake door motor.

NG >> (Intake door motor does not operate normally.)
- Replace auto amp.

10. CHECK MODE DOOR MOTOR OPERATION

1. Turn ignition switch OFF.
2. Reconnect mode door motor (driver side) connector.
3. Turn ignition switch ON.
4. Confirm the mode door motor (driver side) operation.

OK or NG

OK >> [Mode door motor (driver side) operates normally.]
- Replace mode door motor (passenger side).

NG >> [Mode door motor (driver side) does not operate normally.]
- Replace mode door motor (driver side).

11. CHECK AIR MIX DOOR MOTOR OPERATION

1. Turn ignition switch OFF.
2. Reconnect air mix door motor (driver side) connector.
3. Turn ignition switch ON.
4. Confirm the air mix door motor (driver side) operation.

OK or NG

OK >> [Air mix door motor (driver side) operates normally.]
- Replace air mix door motor (passenger side).

NG >> [Air mix door motor (driver side) does not operate normally.]
- Replace air mix door motor (driver side).

Mode Door Motor Circuit

EJS000JO

SYMPTOM:

- Air outlet does not change.
- Mode door motor does not operate normally.

INSPECTION FLOW

1. Confirm symptom by performing the following operational check.

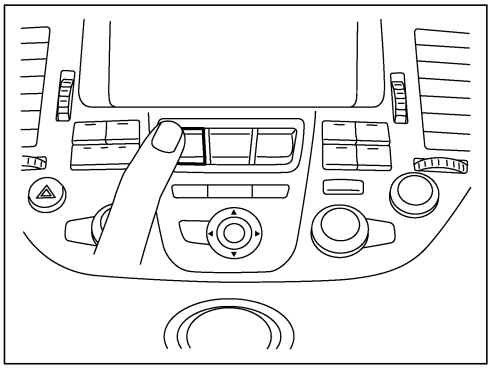

OPERATIONAL CHECK – Discharge air

a. Press mode switch four times and DEF switch.
b. Each position indicator should change shape.
c. Confirm that discharge air comes out according to the air distribution table at left.

Refer to "Discharge Air Flow" (*1).

NOTE:

- **If OK (symptom cannot be duplicated), perform complete operational check (*2).**
  If NG (symptom is confirmed), continue with STEP-2 following.
- **Confirm that the compressor clutch is engaged (sound or visual inspection) and intake door position is at FRESH when DEF is selected.**
  Intake door position is checked in the next step.

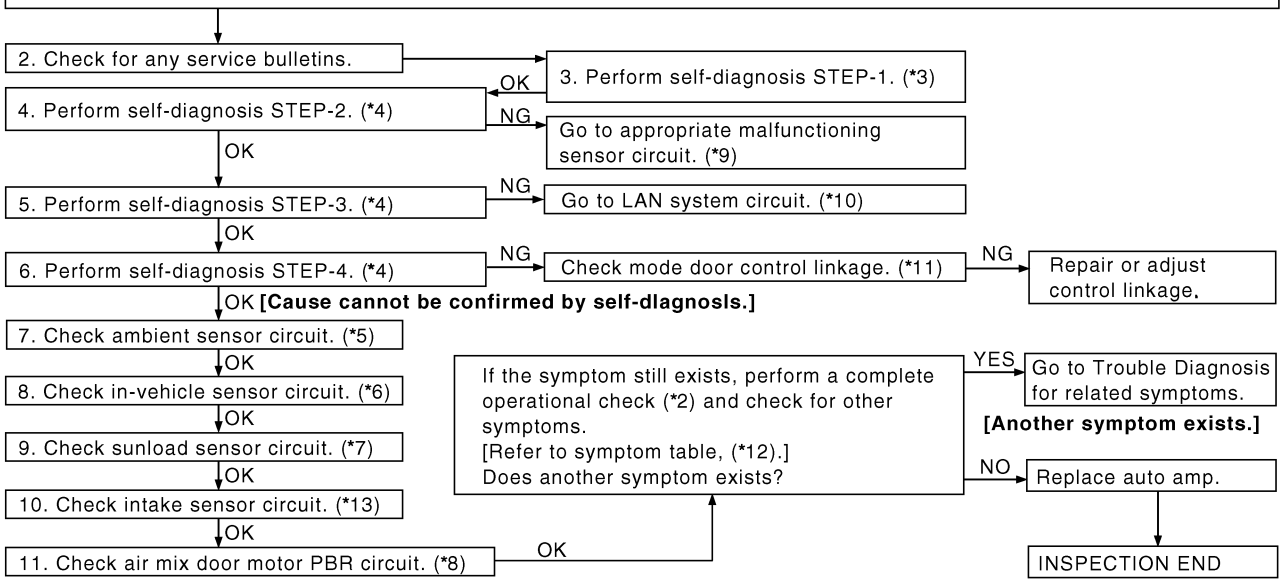

RJIA1567E

*1 ATC-34, "Discharge Air Flow".	*2 ATC-64, "Operational Check".	*3 ATC-56, "FUNCTION CONFIRMATION PROCEDURE", see No. 1.
*4 ATC-56, "FUNCTION CONFIRMATION PROCEDURE", see No. 5 to 7.	*5 ATC-112, "Ambient Sensor Circuit".	*6 ATC-114, "In-Vehicle Sensor Circuit".
*7 ATC-117, "Sunload Sensor Circuit".	*8 ATC-78, "Air Mix Door Motor PBR Circuit".	*9 ATC-56, "FUNCTION CONFIRMATION PROCEDURE", see No. 14.
*10 ATC-69, "LAN System Circuit".	*11 ATC-75, "Mode Door Motor".	*12 ATC-36, "SYMPTOM TABLE".
*13 ATC-120, "Intake Sensor Circuit".		

SYSTEM DESCRIPTION

Component Parts

Mode door control system components are:

- Auto amp.
- Mode door motor (LCU)
- A/C LAN system (PBR built-in mode door motor, air mix door motor and intake door motor)
- In-vehicle sensor
- Ambient sensor
- Sunload sensor
- Intake sensor

System Operation

The auto amp. receives data from each of the sensors. The auto amp. sends air mix door, mode door and intake door opening angle data to the air mix door motor LCU, mode door motor LCU and intake door motor LCU.

The air mix door motor, mode door motor and intake door motor read their respective signals according to the address signal. Opening angle indication signals received from the auto amp. and each of the motor position sensors are compared by the LCUs in each motor with the existing decision and opening angles. Subsequently, HOT/COLD or DEFROST/VENT or FRESH/RECIRCULATION operation is selected. The new selection data is returned to the auto amp.

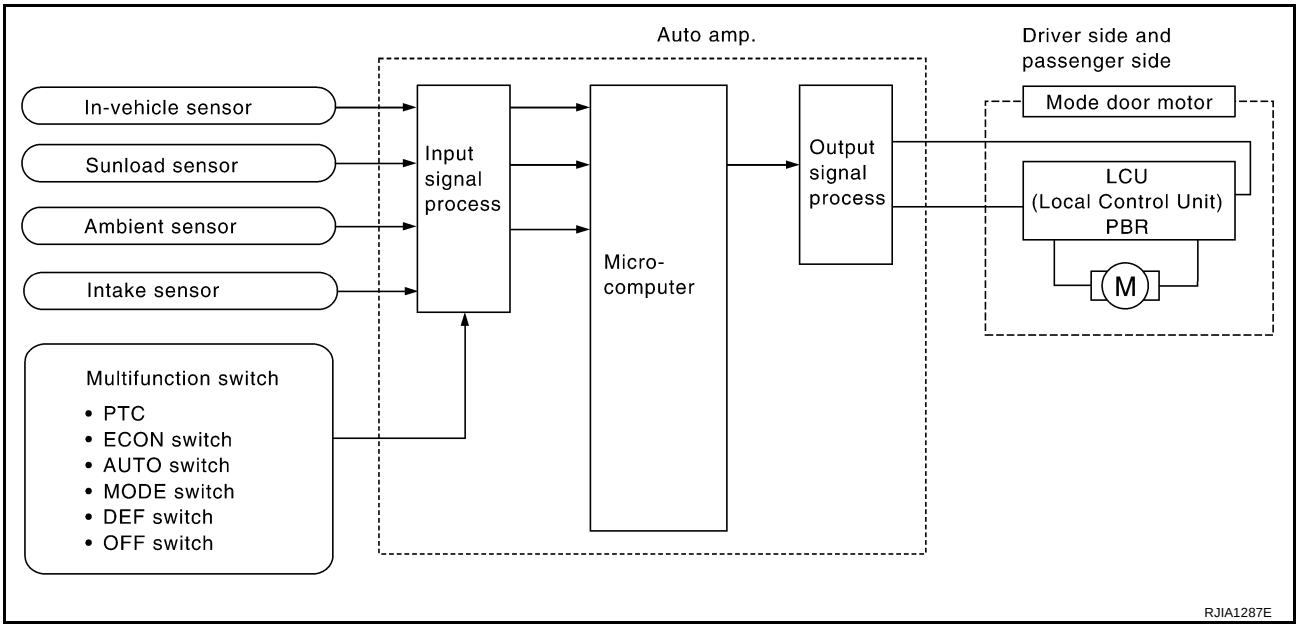

Mode Door Control Specification

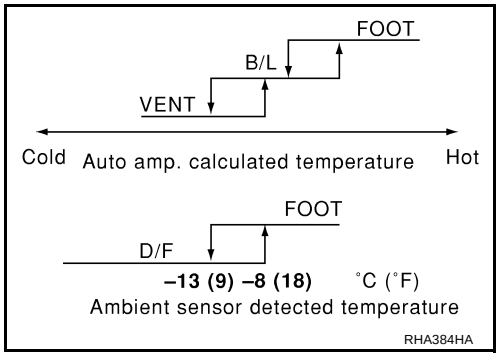

COMPONENT DESCRIPTION

Mode Door Motor

The mode door motor is attached to the heater & cooling unit. It rotates so that air is discharged from the outlet set by the auto amp. Motor rotation is conveyed to a link which activates the mode door.

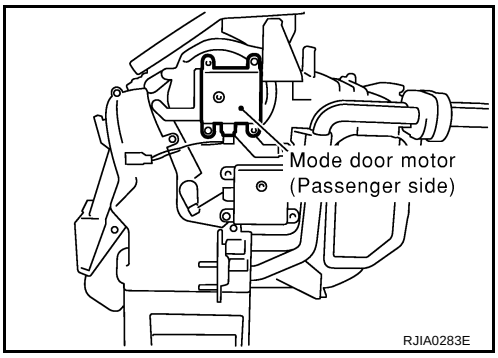

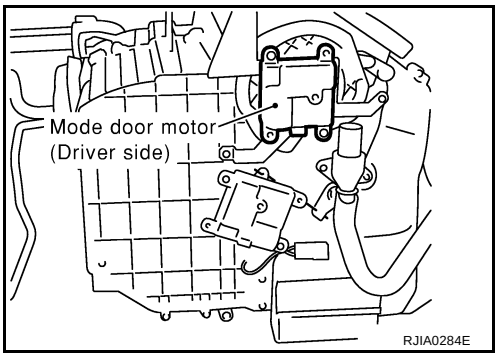

DIAGNOSTIC PROCEDURE FOR MODE DOOR MOTOR

SYMPTOM: Mode door motor does not operate normally.
Perform diagnostic procedure for ATC-69, "DIAGNOSTIC PROCEDURE FOR LAN CIRCUIT" .

Air Mix Door Motor Circuit

EJS000JP

SYMPTOM:

- Discharge air temperature does not change.
- Air mix door motor does not operate.

INSPECTION FLOW

1. Confirm symptom by performing the following operational check.

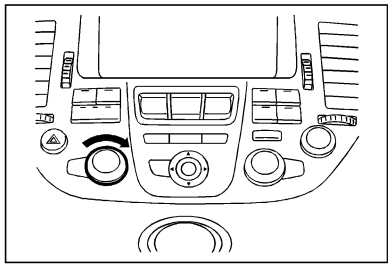

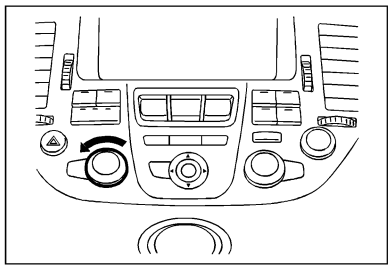

OPERATIONAL CHECK

Temperature increase

a. Turn the temperature dial clockwise until 32˚C (90˚F) is displayed.
b. Check for hot air at discharge air outlets.

Temperature decrease

a. Turn the temperature dial counterclockwise until 18˚C (60˚F) is displayed.
b. Check for cold air at discharge air outlets.

If OK (symptom cannot be duplicated), perform complete operational check (*9).
If NG (symptom is confirmed), continue with STEP-2 following.

2. Check for any service bulletins. → 3. Perform self-diagnosis STEP-1. (*1)

OK

4. Perform self-diagnosis STEP-2. (*12) — NG → Go to appropriate malfunctioning sensor circuit. (*6)

OK

5. Perform self-diagnosis STEP-4. (*12)

OK **[Cause cannot be confirmed by self-diagnosis.]**

6. Check ambient sensor circuit. (*2)

OK

7. Check in-vehicle sensor circuit. (*3)

OK

8. Check sunload sensor circuit. (*4)

OK

9. Check intake sensor circuit. (*11)

OK

10. Check air mix door motor PBR circuit. (*5)

OK

If the symptom still exists, perform a complete operational check (*9) and check for other symptoms. [Refer to symptom table, (*10).] Does another symptom exist?

Yes → Go to Trouble Diagnosis for related symptom.

Another symptom exists.

No → Replace auto amp. → INSPECTION END

NG → Check air mix door control linkage. (*8)

OK → Go to LAN system circuit. (*7)

NG → Repair or adjust control linkage. (*8)

RJIA1568E

*1	ATC-56, "FUNCTION CONFIRMATION PROCEDURE", see No. 1.	*2	ATC-112, "Ambient Sensor Circuit".	*3	ATC-114, "In-Vehicle Sensor Circuit".
*4	ATC-117, "Sunload Sensor Circuit".	*5	ATC-78, "Air Mix Door Motor PBR Circuit".	*6	ATC-56, "FUNCTION CONFIRMATION PROCEDURE", see No. 14.
*7	ATC-69, "LAN System Circuit".	*8	ATC-78, "COMPONENT DESCRIPTION" for Air mix door.	*9	ATC-64, "Operational Check".
*10	ATC-36, "SYMPTOM TABLE".	*11	ATC-120, "Intake Sensor Circuit".	*12	ATC-56, "FUNCTION CONFIRMATION PROCEDURE", see No. 5 to 7.

SYSTEM DESCRIPTION

Component Parts

Air mix door control system components are:

- Auto amp.
- Air mix door motor (LCU)
- A/C LAN system (PBR built-in mode door motor, air mix door motor and intake door motor)
- In-vehicle sensor
- Ambient sensor
- Sunload sensor
- Intake sensor

System Operation

The auto amp. receives data from each of the sensors. The auto amp. sends air mix door, mode door and intake door opening angle data to the air mix door motor LCU, mode door motor LCU and intake door motor LCU.

The air mix door motor, mode door motor and intake door motor read their respective signals according to the address signal. Opening angle indication signals received from the auto amp. and each of the motor position sensors are compared by the LCUs in each motor with the existing decision and opening angles. Subsequently, HOT/COLD or DEFROST/VENT or FRESH/RECIRCULATION operation is selected. The new selection data is returned to the auto amp.

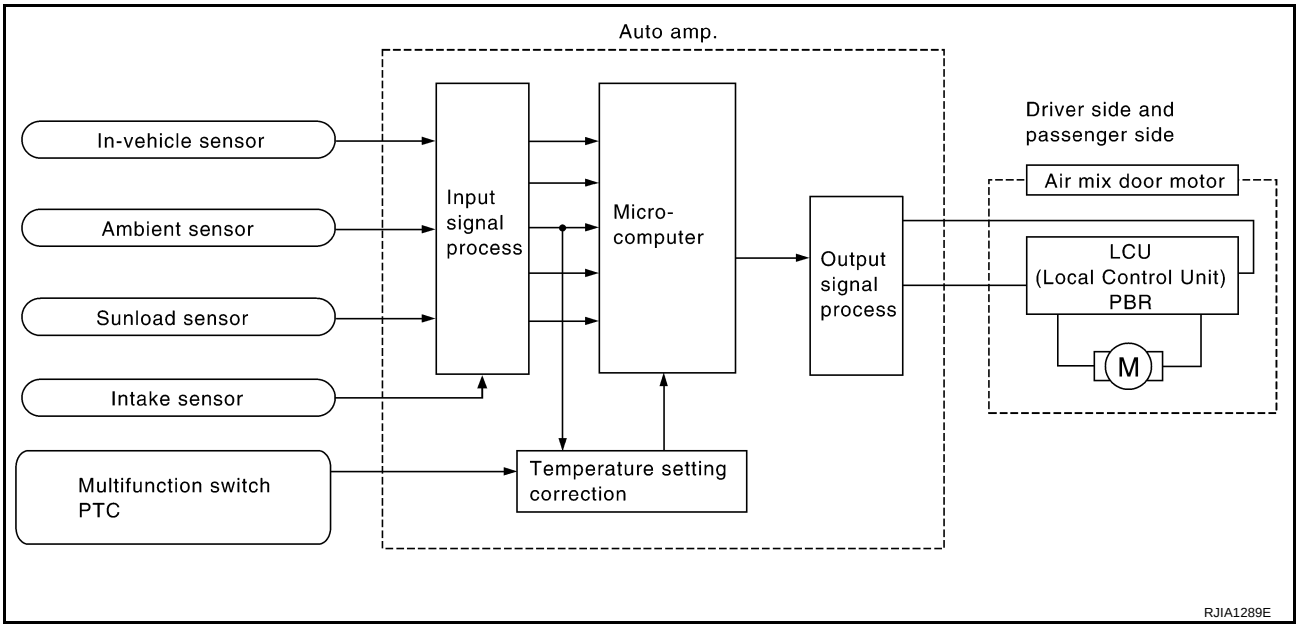

Air Mix Door Control Specification

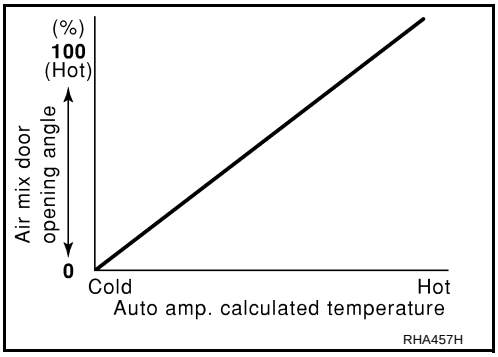

COMPONENT DESCRIPTION

Air Mix Door Motor

The air mix door motor is attached to the heater & cooling unit. It rotates so that the air mix door is opened or closed to a position set by the auto amp. Motor rotation is conveyed through a shaft and the air mix door position is then fed back to the auto amp. by PBR built-in air mix door motor.

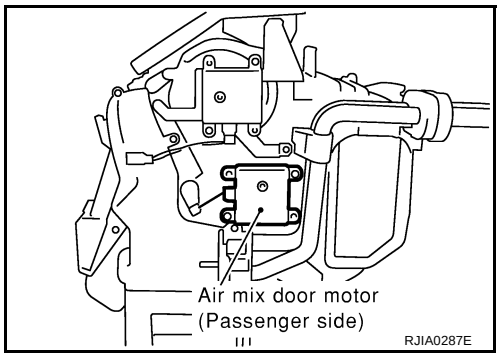

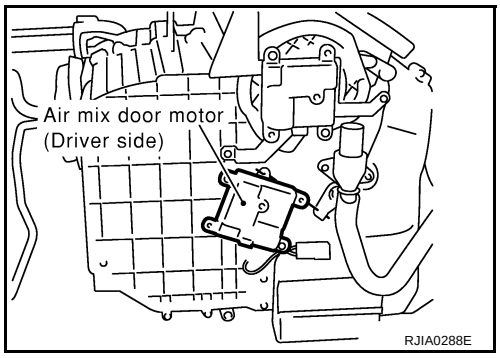

DIAGNOSTIC PROCEDURE FOR AIR MIX DOOR MOTOR

SYMPTOM: Discharge air temperature does not change.
Perform diagnostic procedure for ATC-69, "DIAGNOSTIC PROCEDURE FOR LAN CIRCUIT" .

Air Mix Door Motor PBR Circuit

EJS001Y8

SYMPTOM: If PBR circuit is open or shorted. (26/-26 or 27/-27 is indicated on auto amp. as a result of conducting Self-diagnosis STEP-2.)

DIAGNOSTIC PROCEDURE FOR AIR MIX DOOR MOTOR PBR

Perform diagnostic procedure for ATC-69, "DIAGNOSTIC PROCEDURE FOR LAN CIRCUIT" .

Intake Door Motor Circuit

EJS000JQ

SYMPTOM:

- Intake door does not change.
- Intake door motor does not operate normally.

INSPECTION FLOW

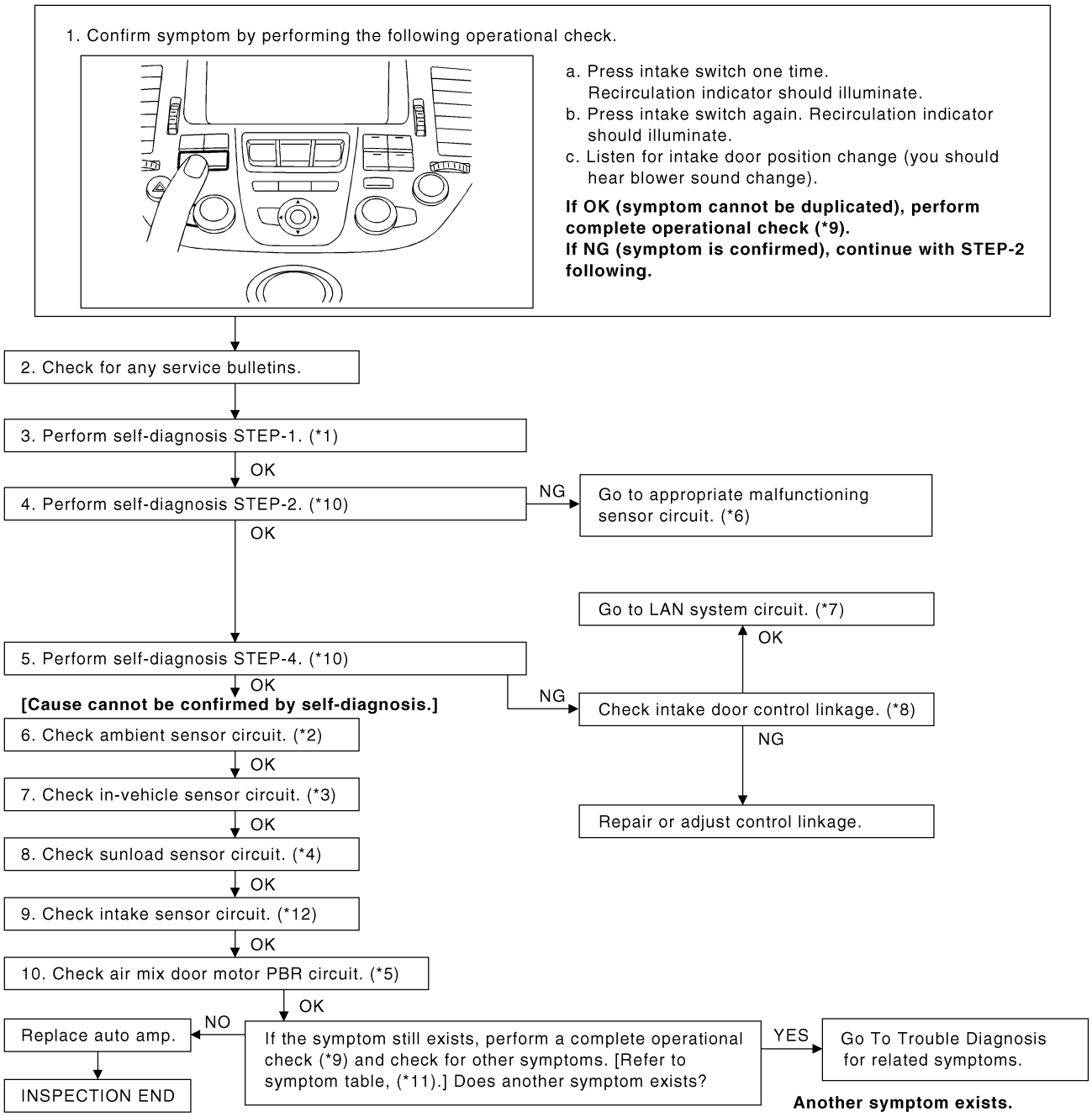

*1 ATC-56, "FUNCTION CONFIRMATION PROCEDURE", see No. 1.	*2 ATC-112, "Ambient Sensor Circuit".	*3 ATC-114, "In-Vehicle Sensor Circuit".
*4 ATC-117, "Sunload Sensor Circuit".	*5 ATC-78, "Air Mix Door Motor PBR Circuit".	*6 ATC-56, "FUNCTION CONFIRMATION PROCEDURE", see No. 14.
*7 ATC-69, "LAN System Circuit".	*8 ATC-81, "COMPONENT DESCRIPTION" for intake door motor.	*9 ATC-64, "Operational Check".
*10 ATC-56, "FUNCTION CONFIRMATION PROCEDURE", see No. 5 to 7.	*11 ATC-36, "SYMPTOM TABLE".	*12 ATC-120, "Intake Sensor Circuit".

SYSTEM DESCRIPTION

Component Parts

Intake door control system components are:

- Auto amp.
- Intake door motor
- A/C LAN system (PBR built-in mode door motor, air mix door motor and intake door motor)
- In-vehicle sensor
- Ambient sensor
- Sunload sensor
- Intake sensor

System Operation

The intake door control determines intake door position based on the ambient temperature, the intake air temperature and the in-vehicle temperature. When the ECON, DEFROST, or OFF switches are pushed, the auto amp. sets the intake door at the FRESH position.

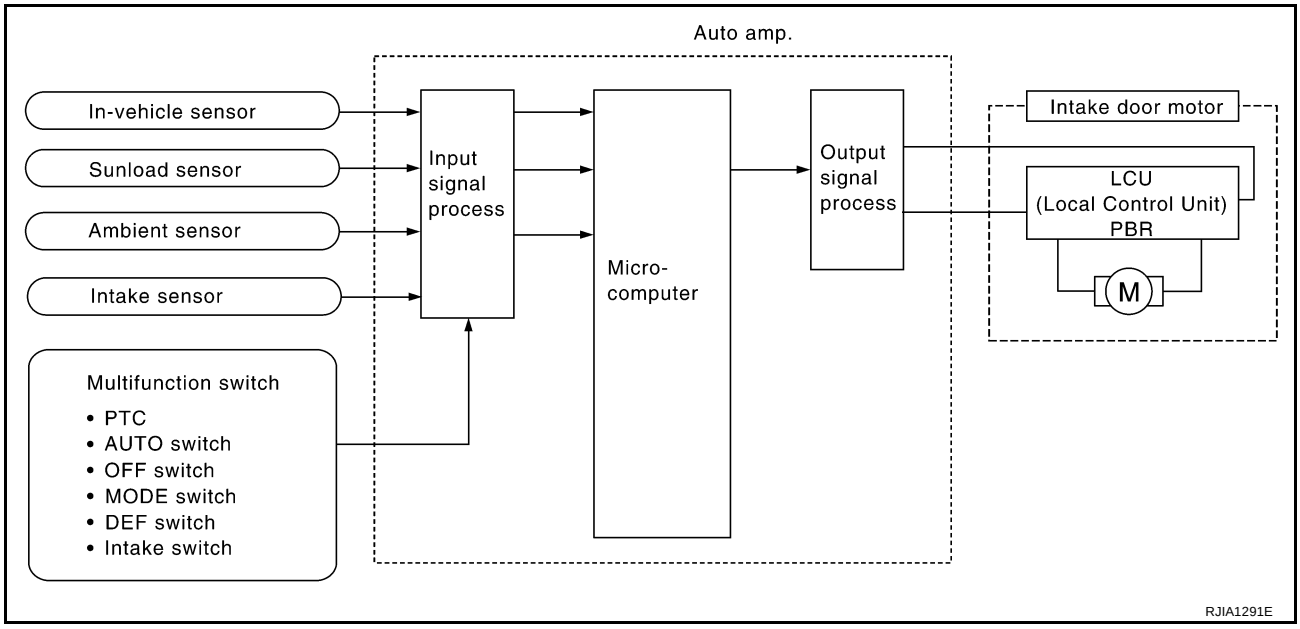

Intake Door Control Specification

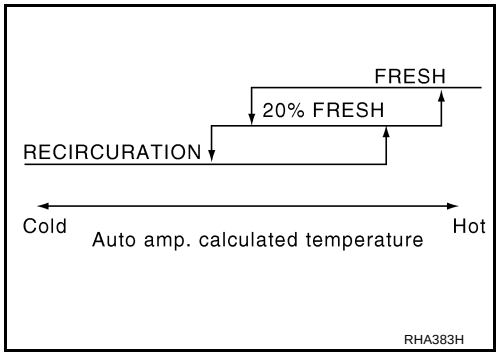

COMPONENT DESCRIPTION

Intake Door Motor

The intake door motor is attached to the intake unit. It rotates so that air is drawn from inlets set by the auto amp. Motor rotation is conveyed to a lever which activates the intake door.

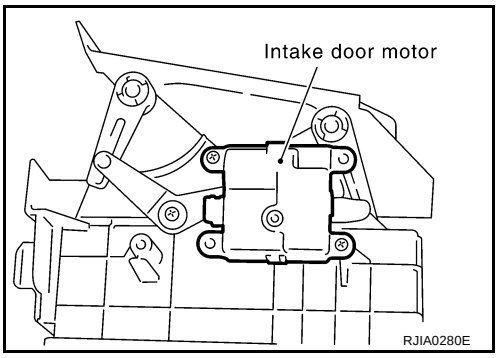

DIAGNOSTIC PROCEDURE FOR INTAKE DOOR MOTOR

SYMPTOM: Intake door motor does not operate normally.
Perform diagnostic procedure for ATC-69, "DIAGNOSTIC PROCEDURE FOR LAN CIRCUIT" .

Rear Ventilator Door Motor

EJS001Y9

COMPONENT DESCRIPTION

Rear ventilator door motor is attached to the rear ventilator duct No. 1.
Rear ventilator door is opened or closed by rear ventilator door motor.

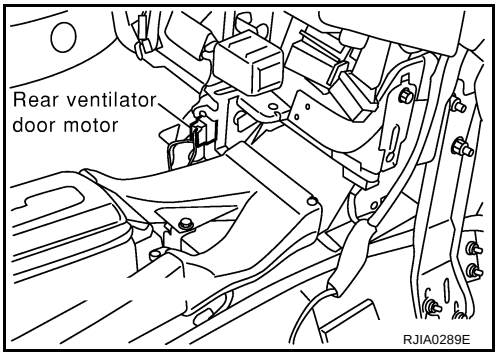

DIAGNOSTIC PROCEDURE FOR REAR VENTILATOR DOOR MOTOR

SYMPTOM: Rear ventilator door motor does not operate.

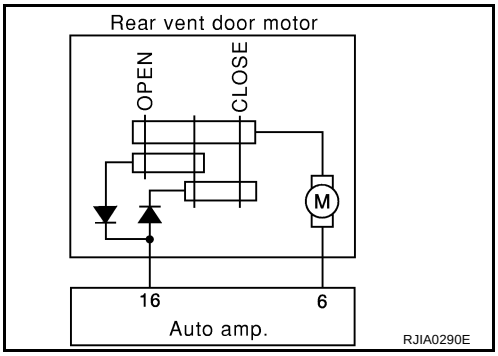

1. CHECK FOR AUTO AMP. OUTPUT

1. Disconnect rear ventilator door motor connector.
2. Set up code No. 41 and 42 in self-diagnosis STEP-4.
3. Check voltage between rear ventilator door motor harness connector M93 terminals 1 (LG), 2 (W/B) and ground.

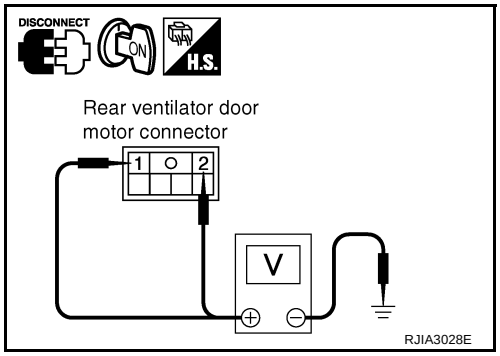

Terminals				Voltage
(+)			(-)	
Code No.	Rear vent door motor connector	Terminal No. (Wire color)		
41	M93	1 (LG)	Ground	Approx. 12V
	M93	2 (W/B)		Approx. 0V
42	M93	1 (LG)		Approx. 0V
	M93	2 (W/B)		Approx.12V

OK or NG

OK >> Replace rear ventilator door motor.
NG >> GO TO 2.

2. CHECK CIRCUIT CONTINUITY BETWEEN REAR VENTILATOR DOOR MOTOR AND AUTO AMP.

1. Turn ignition switch OFF.
2. Disconnect auto amp. connector.
3. Check continuity between rear ventilator door motor harness connector M93 terminals 1 (LG), 2 (W/B) and auto amp. harness connector M119 terminals 6 (LG), 16 (W/B).

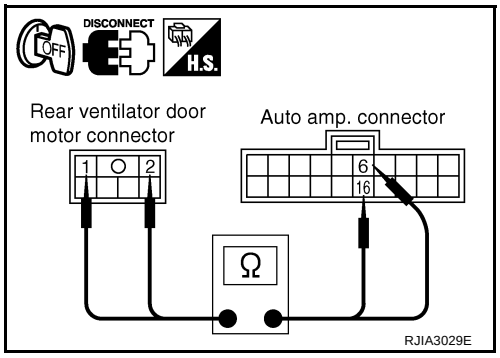

1 – 6 : Continuity should exist.
2 – 16 : Continuity should exist.

OK or NG

OK >> Replace auto amp.
NG >> GO TO ATC-82, "DIAGNOSTIC PROCEDURE FOR REAR CONTROL SWITCH" .

Rear Control Switch

EJS0023Q

DIAGNOSTIC PROCEDURE FOR REAR CONTROL SWITCH

SYMPTOM: Rear control switch does not operate.

1. CHECK MULTIPLEX COMMUNICATION ERROR

1. Set in self-diagnosis STEP-5. Refer to ATC-56, "FUNCTION CONFIRMATION PROCEDURE" .
2. Press intake switch.
3. Check multiplex communication error between rear control switch and auto amp.

OK or NG

OK >> GO TO AV-34, "Rear Control Switch Does Not Operate" .
NG >> GO TO ATC-125, "DIAGNOSTIC PROCEDURE FOR MULTIPLEX COMMUNICATION CIRCUIT (REAR CONTROL SWITCH)" .

Blower Motor Circuit

EJS0028E

SYMPTOM:

- Blower motor operation is malfunctioning.
- Blower motor operation is malfunctioning under out of starting fan speed control.

INSPECTION FLOW

1. Confirm symptom by performing the following operational check.

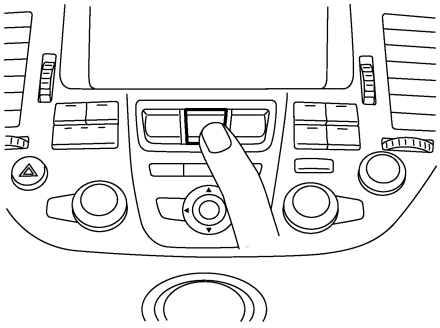

OPERATIONAL CHECK - Blower

a. Press fan switch (up side) one time.
Blower should operate on low speed.
The fan symbol should have one blade lit.

b. Press fan switch (up side) one more time, and continue checking blower speed and fan symbol until all speeds are checked.

c. Leave blower on MAX speed.

If OK (symptom cannot be duplicated), perform complete operational check (*1).
If NG (symptom is confirmed), continue with STEP-2 following.

2. Check for any service bulletins. → 3. Perform self-diagnosis STEP-1. (*2)

OK

4. Perform self-diagnosis STEP-2. (*3)
Code No. 20 should be displayed after approx. 25 seconds.

NG → Go to appropriate malfunctioning sensor circuit. (*5)

OK

5. Perform self-diagnosis STEP-4. (*4)
Does blower motor speed change according to each code No.?

Code No.	41	42	43	44	45	46	47	48
Blower motor duty ratio	37%		91%	65%				91%

NO → Go to Blower Motor Circuit. (*6)

YES

6. Is engine coolant temperature below 56˚C (133˚F)?

NO → Blower motor operation is normal.

YES

7. Is blower motor operating under starting blower speed control?

NO → Go to Blower Motor Circuit. (*6)

YES **[Cause cannot be confirmed by self-diagnosis.]**

8. Check ambient sensor circuit. (*7)

OK

9. Check in-vehicle sensor circuit. (*8)

OK

10. Check sunload sensor circuit. (*9)

OK

11. Check intake sensor circuit. (*10)

OK

If the symptom still exists, perform a complete operational check (*1) and check for other symptoms. [Refer to symptom table (*11).] Does another symptom exists?

YES → Go to Trouble Diagnosis for related symptom.

Another symptom exists.

NO

Replace auto amp. → INSPECTION END

RJIA3030E

*1	ATC-64, "Operational Check".	*2	ATC-56, "FUNCTION CONFIRMATION PROCEDURE", see No. 1.	*3	ATC-56, "FUNCTION CONFIRMATION PROCEDURE", see No. 5.
*4	ATC-56, "FUNCTION CONFIRMATION PROCEDURE", see No. 7.	*5	ATC-56, "FUNCTION CONFIRMATION PROCEDURE", see No. 14	*6	ATC-85, "DIAGNOSTIC PROCEDURE FOR BLOWER MOTOR".
*7	ATC-112, "Ambient Sensor Circuit".	*8	ATC-114, "In-Vehicle Sensor Circuit".	*9	ATC-117, "Sunload Sensor Circuit".
*10	ATC-120, "Intake Sensor Circuit".	*11	ATC-36, "SYMPTOM TABLE".		

SYSTEM DESCRIPTION

Component Parts

Fan speed control system components are:

- Auto amp.
- A/C LAN system (PBR built-in mode door motor, air mix door motor and intake door motor)
- In-vehicle sensor
- Ambient sensor
- Sunload sensor
- Intake sensor

System Operation

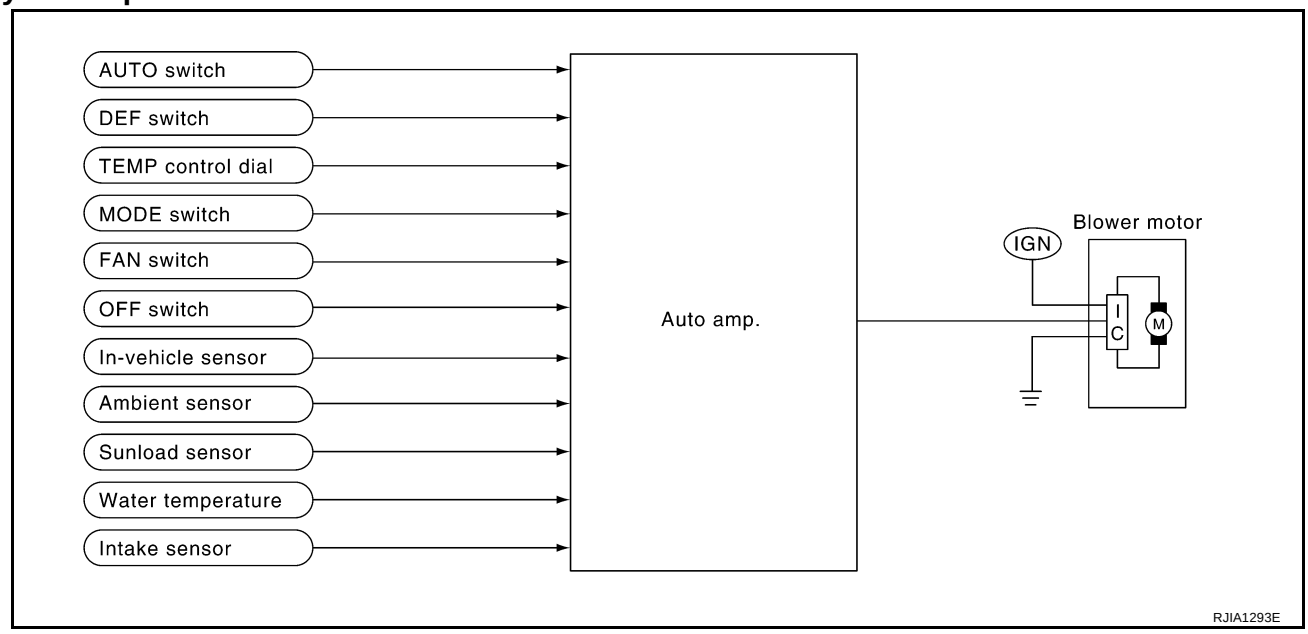

Automatic Mode

In the automatic mode, the blower motor speed is calculated by the auto amp. based on input from the PBR, in-vehicle sensor, sunload sensor, intake sensor and ambient sensor.
When the air flow is increased, the duty ratio of the blower fan motor′s drive signal is changed at 8% sec. to prevent a sudden increase in air flow.
In addition to manual air flow control and the usual automatic air flow control, starting air flow control, low water temperature starting control and high passenger compartment temperature starting control are available.
When the audio-recognition signal is input to the auto amp., the maximum fan speed is limited to the 3rd step. (Except DEF).

Starting Fan Speed Control

Start Up from COLD SOAK Condition (Automatic mode)
In a cold start up condition where the engine coolant temperature is below 56°C (133°F), the blower will not operate for a short period of time (up to 150 seconds). The exact start delay time varies depending on the ambient and engine coolant temperature.
In the most extreme case (very low ambient) the blower starting delay will be 150 seconds as described above. After this delay, the blower will operate at low speed until the engine coolant temperature rises above 56°C (133°F), at which time the blower speed will increase to the objective speed.

Start Up from Usual or HOT SOAK Condition (Automatic mode)
The blower will begin operation momentarily after the AUTO switch is pushed. The blower speed will gradually rise to the objective speed over a time period of 3 seconds or less (actual time depends on the objective blower speed).

Blower Speed Compensation

Sunload

When the in-vehicle temperature and the set temperature are very close, the blower will be operating at low speed. The low speed will vary depending on the sunload. During conditions of low or no sunload, the blower low speed is normal low speed (duty ratio 25%). During high sunload conditions, the auto amp. causes the blower fan speed to increase.(duty ratio 49%).

Fan Speed Control Specification

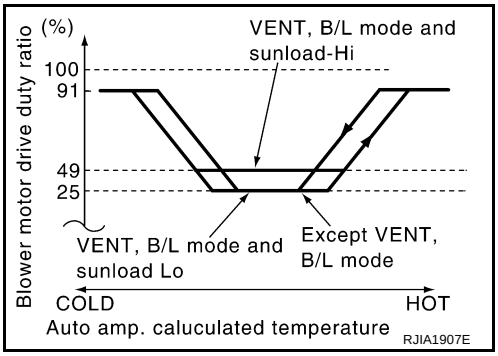

COMPONENT DESCRIPTION

Brush-Less Motor

The blower motor utilizes a brush-less motor with a rotating magnet. Quietness is improved over previous motors where the brush was the point of contact and the coil rotated.

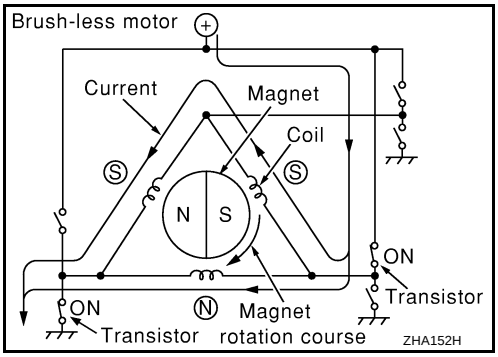

DIAGNOSTIC PROCEDURE FOR BLOWER MOTOR

SYMPTOM: Blower motor operation is malfunctioning under starting fan speed control.

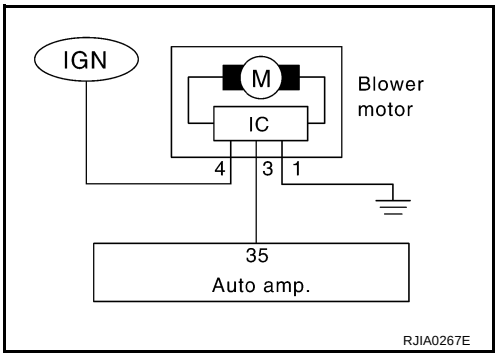

1. CHECK POWER SUPPLY FOR BLOWER MOTOR

1. Disconnect blower motor connector.
2. Turn ignition switch ON.
3. Check voltage between blower motor harness connector M112 terminal 4 (BR/W) and ground.

4 – Ground : Battery voltage

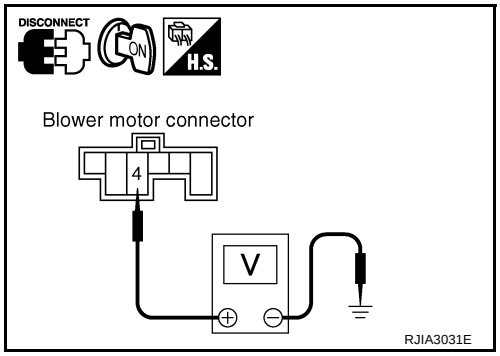

OK or NG

OK >> GO TO 2.
NG >> Check power supply circuit and 15A fuses [Nos. 31 and 33, located in the fuse block (J/B) No.2]. Refer to PG-67, "FUSE BLOCK - JUNCTION BOX (J/B) NO.2" .

- If OK, check for open circuit in wiring harness. Repair or replace if necessary.
- If NG, replace fuse and check wiring harness for short circuit. Repair or replace if necessary.

2. CHECK GROUND CIRCUIT FOR BLOWER MOTOR

1. Turn ignition switch OFF.
2. Check continuity between blower motor harness connector M112 terminal 1 (B) and ground.

1 – Ground : Continuity should exist.

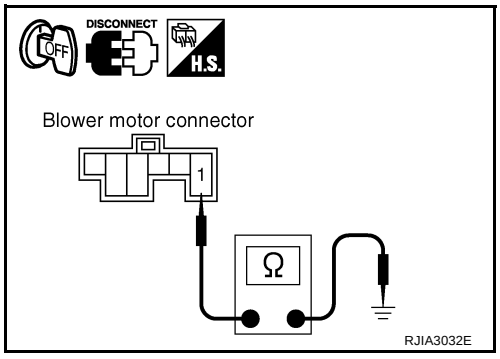

OK or NG

OK >> GO TO 3.
NG >> Repair harness or connector.

3. CHECK CIRCUIT CONTINUITY BLOWER MOTOR AND AUTO AMP.

1. Disconnect auto amp. connector.
2. Check continuity between blower motor harness connector M112 terminal 3 (L/OR) and auto amp. harness connector M120 terminal 35 (L/OR).

3 – 35 : Continuity should exist.

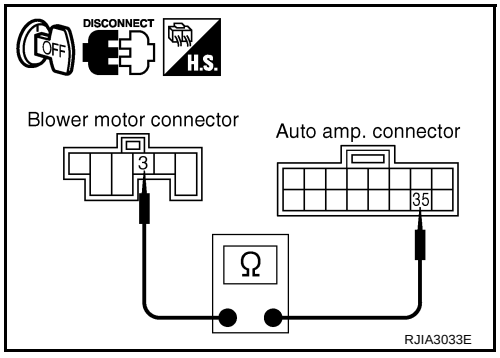

OK or NG

OK >> GO TO 4.
NG >> Repair harness or connector.

4. CHECK FOR AUTO AMP. OUTPUT

1. Reconnect blower motor connector and auto amp. connector.
2. Turn ignition switch ON.
3. Vary the fan speed between Lo and Hi and confirm the blower motor connector terminal 3 (L/OR) duty ratios using an oscilloscope. Usual terminal 3 (L/OR) drive signal duty ratios are shown in the table below.

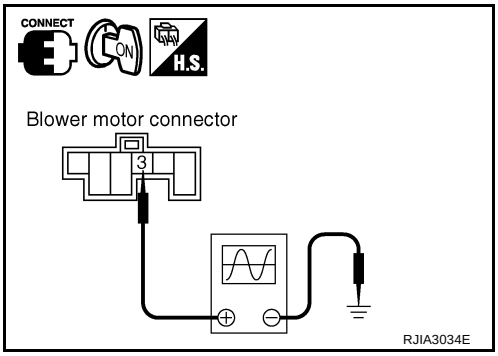

Blower fan speed	1st	2nd	3rd	4th	5th
Blower motor connector M112 Terminal No. 3 (Oscilloscope)	T1 Approx. 1.6 ms	T2 Approx. 1.6 ms	T3 Approx. 1.6 ms	T4 Approx. 1.6 ms	T5 Approx. 1.6 ms
Duty ratio	Approx. 25%	Approx. 37%	Approx. 51%	Approx. 65%	Approx. 91%

NOTE: Duty ratio = $\frac{Tx}{\text{Approx. 1.6 ms}}$ x 100 (%)

RJIA0338E

OK or NG

OK >> GO TO 5.
NG >> Replace auto amp.

5. CHECK BLOWER MOTOR DRIVE SIGNAL

If the fan air flow does not change, usual terminal 3 (L/OR) drive signal duty ratios are shown in the table above.

OK or NG

OK >> Replace blower motor.
NG >> INSPECTION END

COMPONENT INSPECTION

Blower Motor

Confirm smooth rotation of the blower motor.

- Ensure that there are no foreign particles inside the intake unit.

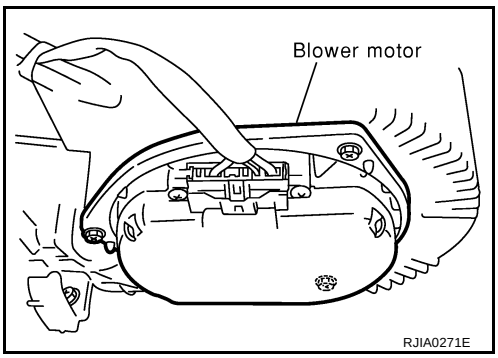

Magnet Clutch Circuit

EJS001YA

SYMPTOM: Magnet clutch does not engage.

INSPECTION FLOW

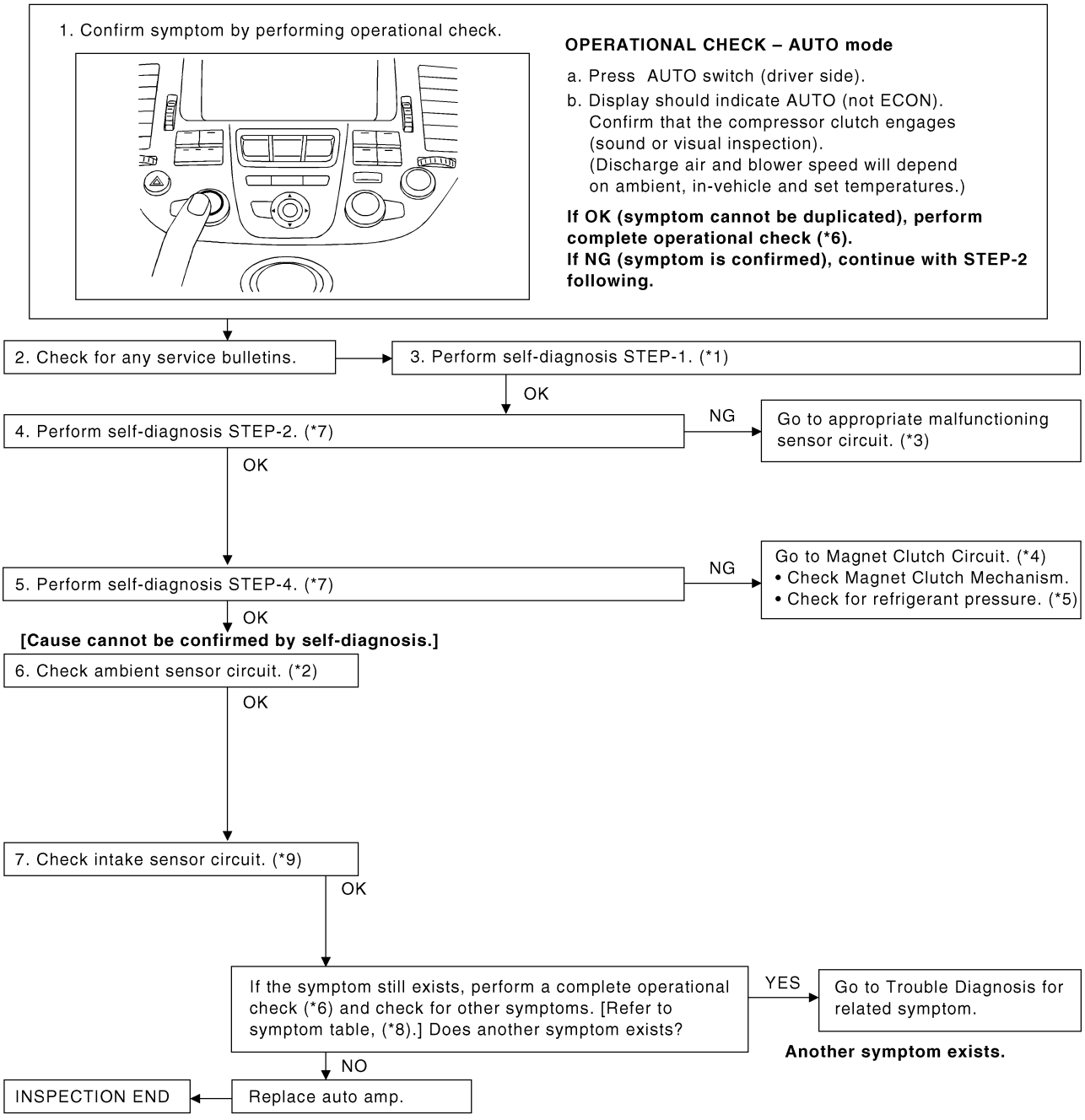

*1	ATC-56, "FUNCTION CONFIRMATION PROCEDURE", see No. 1.	*2	ATC-112, "Ambient Sensor Circuit".	*3	ATC-56, "FUNCTION CONFIRMATION PROCEDURE", see No. 14.
*4	ATC-89, "DIAGNOSTIC PROCEDURE FOR MAGNET CLUTCH".	*5	ATC-100, "TROUBLE DIAGNOSIS FOR UNUSUAL PRESSURE".	*6	ATC-64, "Operational Check".
*7	ATC-56, "FUNCTION CONFIRMATION PROCEDURE", see No. 5 to 7.	*8	ATC-36, "SYMPTOM TABLE".	*9	ATC-120, "Intake Sensor Circuit".

SYSTEM DESCRIPTION

Auto amp. controls compressor operation by ambient temperature, intake air temperature and signal from ECM.

Low Temperature Protection Control

Auto amp. will turn compressor ON or OFF as determined by a signal detected by ambient sensor and intake sensor.

When ambient temperatures are higher than -2°C (28°F), the compressor turns ON. The compressor turns OFF when ambient temperatures are lower than -5°C (23°F).

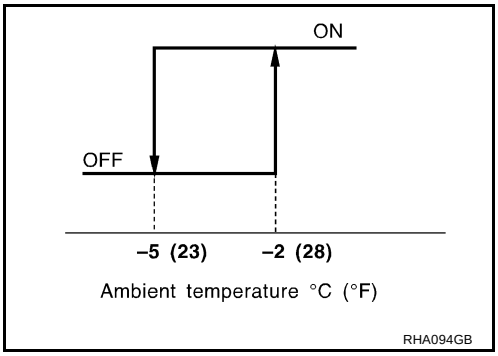

When intake air temperatures are higher than 1°C (34°F), the compressor turns ON. The compressor turns OFF when intake air temperatures are lower than -5°C (23°F).

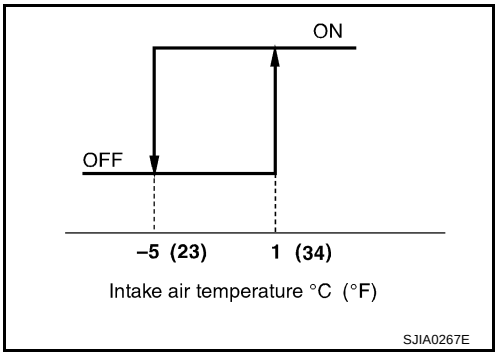

DIAGNOSTIC PROCEDURE FOR MAGNET CLUTCH

SYMPTOM: Magnet clutch does not engage when AUTO switch is ON.

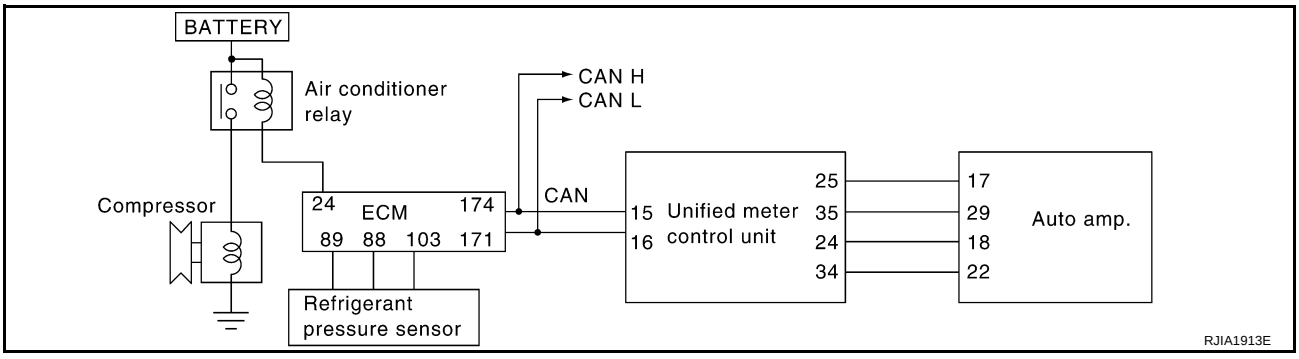

1. CHECK POWER SUPPLY FOR COMPRESSOR

1. Disconnect compressor connector.
2. Start engine and AUTO switch ON.
3. Check voltage between compressor (magnet clutch) harness connector F2 terminal 1 (Y/R) and ground.

1 – Ground : Battery voltage

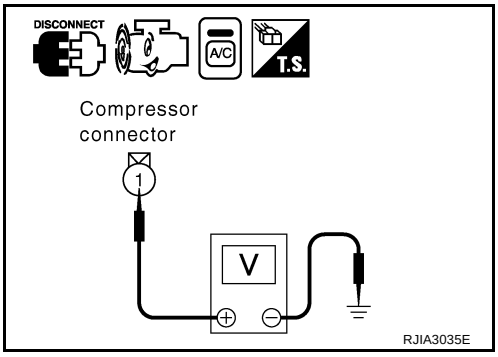

OK or NG

OK >> GO TO 2.
NG >> GO TO 3.

2. CHECK MAGNET CLUTCH CIRCUIT

Check operation sound when applying battery voltage direct current to terminal.

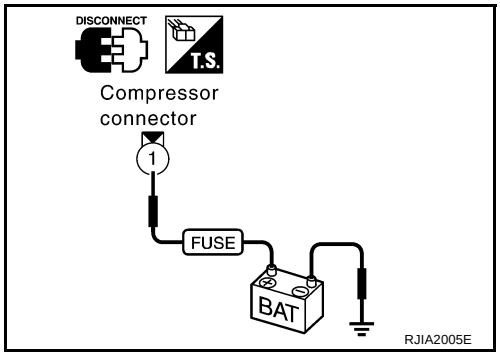

OK or NG

OK >> Repair harness or connector.
NG >> Replace magnet clutch. Refer to ATC-153, "Removal and Installation of Compressor Clutch" .

3. CHECK CIRCUIT CONTINUITY BETWEEN A/C RELAY AND COMPRESSOR

1. Turn ignition switch OFF.
2. Disconnect A/C relay.
3. Check continuity between compressor (magnet clutch) harness connector F2 terminal 1 (Y/R) and A/C relay harness connector E3-2 terminal 3 (Y/R).

1 – 3 : Continuity should exist.

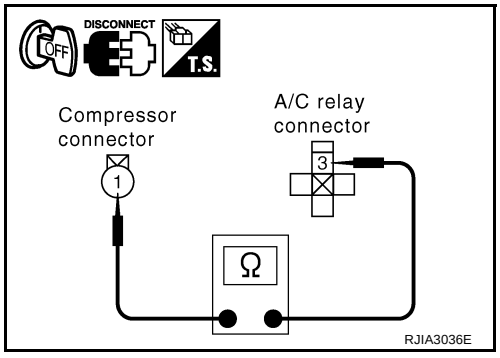

OK or NG

OK >> Check harness for short. And GO TO 4.
NG >> Repair harness or connector.

4. CHECK POWER SUPPLY FOR A/C RELAY

1. Turn ignition switch ON.
2. Check voltage between A/C relay harness connector E3-2 terminals 2, 5 and ground.

2, 5 – Ground : Battery voltage

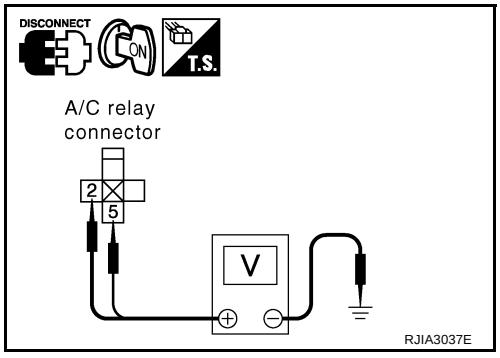

OK or NG

OK >> GO TO 5.
NG >> Check power supply circuit and 10A fuse [No. 51 located in the fuse, fusible link and relay block (J/B)]. Refer to PG-68, "FUSE, FUSIBLE LINK AND RELAY BLOCK (J/B)" .

- If OK, check for open circuit in wiring harness. Repair or replace if necessary.
- If NG, replace fuse and check wiring harness for short circuit. Repair or replace if necessary.

5. CHECK A/C RELAY AFTER DISCONNECTING IT

Refer to ATC-93, "A/C Relay" .

OK or NG

OK >> GO TO 6.
NG >> 1. Replace A/C relay.
2. Go to ATC-56, "FUNCTION CONFIRMATION PROCEDURE" and perform self-diagnosis STEP-4. Confirm that magnet clutch operation is normal.

6. CHECK COIL SIDE CIRCUIT OF A/C RELAY

1. Turn ignition switch OFF.
2. Reconnect A/C relay.
3. Turn ignition switch ON.
4. Check voltage between ECM harness connector F101 terminal 24 (G/W) and ground.

24 – Ground : Battery voltage

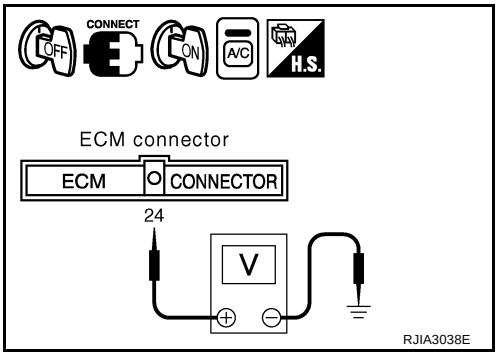

OK or NG

OK >> GO TO 8.
NG >> GO TO 7.

7. CHECK CIRCUIT CONTINUITY BETWEEN ECM AND A/C RELAY

1. Turn ignition switch OFF.
2. Disconnect A/C relay and ECM connector.
3. Check continuity between ECM harness connector F101 terminal 24 (G/W) and A/C relay harness connector E3-2 terminal 1(L/Y).

24 – 1 : Continuity should exist.

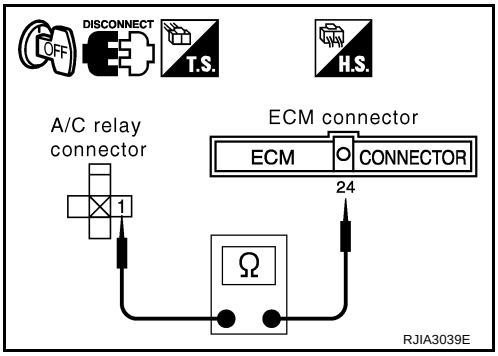

OK or NG

OK >> Replace A/C relay.
NG >> Repair harness or connector.

8. CHECK VOLTAGE FOR COMBINATION METER (FAN ON SIGNAL)

1. Turn ignition switch ON.
2. Check voltage between auto amp. harness connector M120 terminal 29 (SB) and ground.

Terminals			Condition	Voltage
(+)		(-)		
Auto amp. connector	Terminal No. (Wire color)			
M120	29 (SB)	Ground	AUTO switch: ON (Blower motor operates.)	Approx. 0V
			OFF switch: ON (A/C system: OFF)	Approx. 5V

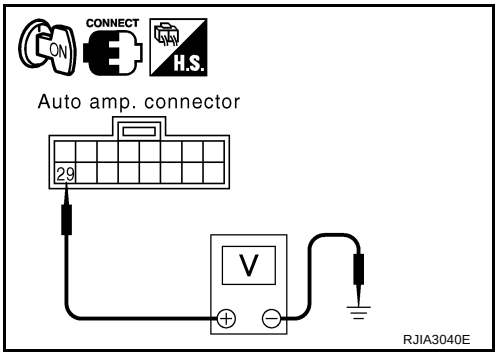

OK or NG

OK >> GO TO 9.
NG >> GO TO 12.

9. CHECK VOLTAGE FOR COMBINATION METER (COMPRESSOR ON SIGNAL)

Check voltage between auto amp. harness connector M120 terminal 22 (Y) and ground.

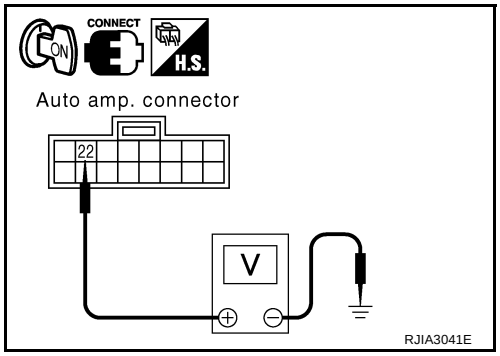

Terminals			Condition	Voltage
(+)		(-)		
Auto amp. connector	Terminal No. (Wire color)			
M120	22 (Y)	Ground	AUTO switch: ON (Blower motor operates.)	Approx. 0V
			OFF switch: ON (A/C system: OFF)	Approx. 5V

OK or NG

OK >> GO TO 10.
NG >> GO TO 13.

10. CHECK VOLTAGE FOR COMBINATION METER (COMPRESSOR FEED BACK SIGNAL)

1. Start engine and AUTO switch ON.
2. Check voltage between auto amp. harness connector M119 terminal 18 (OR) and ground.

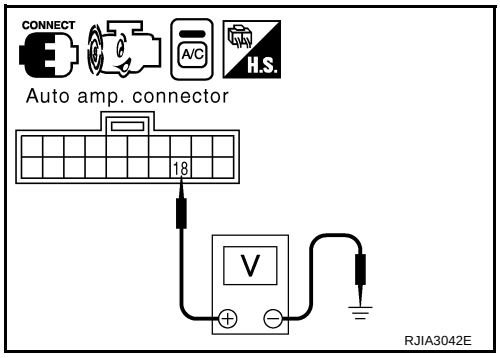

Terminals			Condition	Voltage
(+)		(-)		
Auto amp. connector	Terminal No. (Wire color)			
M119	18 (OR)	Ground	AUTO switch: ON	Approx. 0V
			AUTO switch: ON (When refrigerant pressure sensor connector is disconnected)	Approx. 5V

OK or NG

OK >> GO TO 11.
NG >> GO TO 14.

11. CHECK REFRIGERANT PRESSURE SENSOR CIRCUIT

Refer to EC-674, "REFRIGERANT PRESSURE SENSOR" .

OK or NG

OK >> INSPECTION END
NG >> Repair or replace the malfunctioning part(s).

12. CHECK CIRCUIT CONTINUITY BETWEEN COMBINATION METER AND AUTO AMP.

1. Turn ignition switch OFF.
2. Disconnect combination meter and auto amp. connector.
3. Check continuity between combination meter harness connector M42 terminal 35 (SB) and auto amp. harness connector M120 terminal 29 (SB).

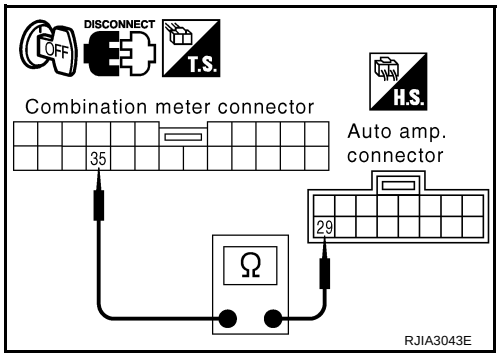

35 – 29 : Continuity should exist.

OK or NG

OK >> Replace auto amp.
NG >> Repair harness or connector.

13. CHECK CIRCUIT CONTINUITY BETWEEN COMBINATION METER AND AUTO AMP.

1. Turn ignition switch OFF.
2. Disconnect combination meter and auto amp. connector.
3. Check continuity between combination meter harness connector M42 terminal 34 (Y) and auto amp. harness connector M120 terminal 22 (Y).

34 – 22 : Continuity should exist.

OK or NG

OK >> Replace auto amp.
NG >> Repair harness or connector.

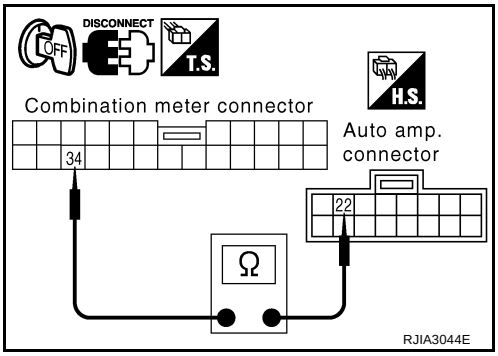

14. CHECK CIRCUIT CONTINUITY BETWEEN COMBINATION METER AND AUTO AMP.

1. Turn ignition switch OFF.
2. Disconnect combination meter and auto amp. connector.
3. Check continuity between combination meter harness connector M42 terminal 24 (OR) and auto amp. harness connector M119 terminal 18 (OR).

24 – 18 : Continuity should exist.

OK or NG

OK >> Check combination meter.
NG >> Repair harness or connector.

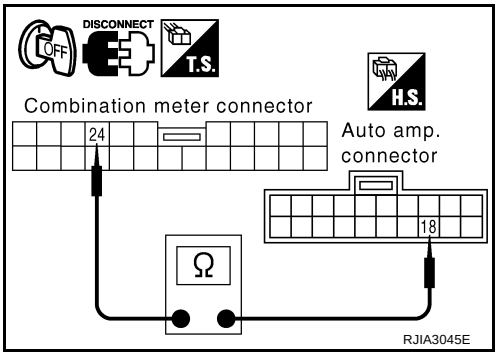

COMPONENT INSPECTION

A/C Relay

Check continuity between terminal Nos. 3 and 5.

Conditions	Continuity
12V direct current supply between terminal Nos. 1 and 2	Yes
No current supply	No

If NG, replace relay.

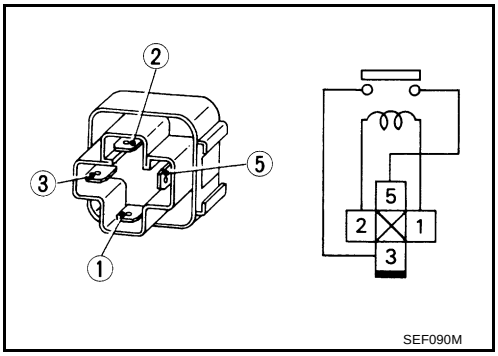

Refrigerant Pressure Sensor

The refrigerant pressure sensor is attached to the condenser.
Make sure that the A/C refrigerant pressure and sensor output voltage are within the specified range as shown in the A/C operating condition figure. Refer to EC-674, "REFRIGERANT PRESSURE SENSOR" .

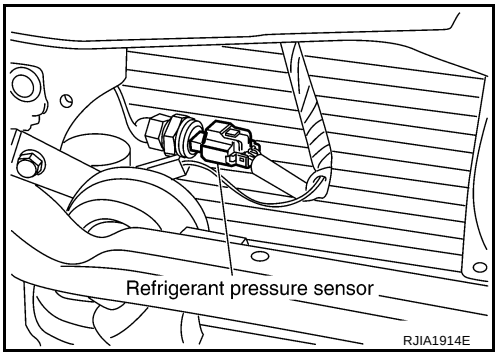

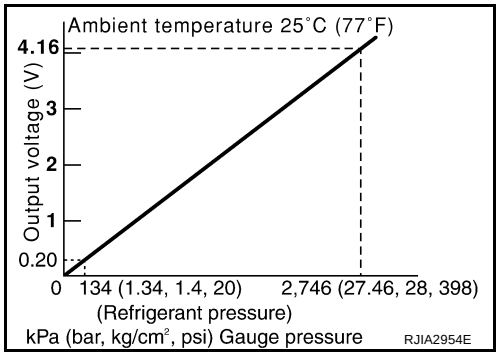
Ambient temperature 25˚C (77˚F)
4.16
3
2
1
0.20
Output voltage (V)
0
134 (1.34, 1.4, 20)
2,746 (27.46, 28, 398)
(Refrigerant pressure)
kPa (bar, kg/cm², psi) Gauge pressure
RJIA2954E

Insufficient Cooling

EJS000JU

SYMPTOM: Insufficient cooling

INSPECTION FLOW

1. Confirm symptom by performing the following operational check.

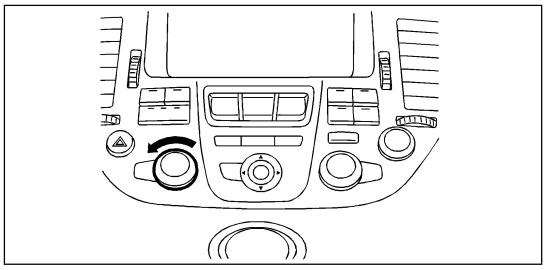

OPERATIONAL CHECK – Temperature decrease

a. Turn the temperature dial counterclockwise until 18˚C (60˚F) is displayed.

b. Check for cold air at discharge air outlets.

If OK (symptom cannot be duplicated), perform complete operational check (*10).
If NG (symptom is confirmed), continue with STEP-2 following.

2. Check for any service bulletins. → 3. Perform self-diagnosis STEP-1. (*1)

3. Perform self-diagnosis STEP-1. (*1)
- OK → 4. Perform self-diagnosis STEP-2. (*11)
- NG → Go to appropriate malfunctioning sensor circuit. (*5)

4. Perform self-diagnosis STEP-2. (*11)
- OK → 5. Perform self-diagnosis STEP-4. (*11)
- NG → Go to appropriate malfunctioning sensor circuit. (*5)

5. Perform self-diagnosis STEP-4. (*11)
- NG → **Go to appropriate malfunctioning items.**
  - Check LAN system circuit. (*6)
  - Check blower motor circuit. (*7)
  - Check magnet clutch circuit. (*8)
- OK → 6. Check compressor belt tension. Refer to (*13), “Checking Drive Belts”.

6. Check compressor belt tension. Refer to (*13), “Checking Drive Belts”.
- NG → Adjust or replace compressor belt.
- OK → 7. Check air mix door operation. (*2)

7. Check air mix door operation. (*2)
- NG → Adjust or replace air mix door control linkage.
- OK → 8. Check cooling fan motor operation.

8. Check cooling fan motor operation.
- NG → Refer to (*14), “System Description”.
- OK → 9. Before connectiong Recovery / Recycling Recharging equipment to vehicle, check Recovery / Recycling Recharging equipment gauges. No refrigerant pressure should be displayed. If NG, recover refrigerant from equipment lines.

9. Before connectiong Recovery / Recycling Recharging equipment to vehicle, check Recovery / Recycling Recharging equipment gauges. No refrigerant pressure should be displayed. If NG, recover refrigerant from equipment lines.
- OK → 10. Confirm refrigerant purity in supply tank using Recovery / Recycling Recharging equipment with refrigerant idntifier.

10. Confirm refrigerant purity in supply tank using Recovery / Recycling Recharging equipment with refrigerant idntifier.
- NG → Refer to Contaminated refrigerant. (*12)
- OK → 11. Connect Recovery / Recycling Recharging equipment to vehicle. Confirm refrigerant purity in vehicle A/C system using Recovery / Recycling Recharging equipment with refrigerant indnetifier.

11. Connect Recovery / Recycling Recharging equipment to vehicle. Confirm refrigerant purity in vehicle A/C system using Recovery / Recycling Recharging equipment with refrigerant indnetifier.
- NG → Refer to Contaminated refrigerant. (*12)
- OK → 12. Check for evaporator coil freeze up.

12. Check for evaporator coil freeze up.
- NG (Freeze up.) → Perform performance test diagnoses. Refer to (*9).
- OK (Does not freeze up.) → 13. Check refrigeration cycle pressure with manifold gauge connected. Refer to (*3).

13. Check refrigeration cycle pressure with manifold gauge connected. Refer to (*3).
- NG → Perform performance test diagnoses. Refer to (*9).
- OK → 14. Check ducts for air leaks.

14. Check ducts for air leaks.
- NG → Replair air leaks.
- OK → 15. Perform temperature setting trimmer. (*4)
  (1) Set up AUXILIARY MECHANISM mode in self-diagnosis.
  (2) Turn temperature dial counterclockwise as desired.

15. Perform temperature setting trimmer. (*4)
(1) Set up AUXILIARY MECHANISM mode in self-diagnosis.
(2) Turn temperature dial counterclockwise as desired.
- OK → INSPECTION END

INSPECTION END

RJIA3010E

*1	ATC-56, "FUNCTION CONFIRMATION PROCEDURE", see No. 1.	*2	ATC-76, "Air Mix Door Motor Circuit".	*3	ATC-99, "Test Reading".
*4	ATC-63, "AUXILIARY MECHANISM: TEMPERATURE SETTING TRIMMER".	*5	ATC-56, "FUNCTION CONFIRMATION PROCEDURE", see No. 14.	*6	ATC-69, "LAN System Circuit".
*7	ATC-83, "Blower Motor Circuit".	*8	ATC-88, "Magnet Clutch Circuit".	*9	ATC-97, "PERFORMANCE TEST DIAGNOSIS".
*10	ATC-64, "Operational Check".	*11	ATC-56, "FUNCTION CONFIRMATION PROCEDURE", see No. 5 to 7.	*12	ATC-6, "CONTAMINATED REFRIGERANT".
*13	EM-12, "Checking Drive Belts".	*14	EC-503, "SYSTEM DESCRIPTION".		

PERFORMANCE TEST DIAGNOSIS

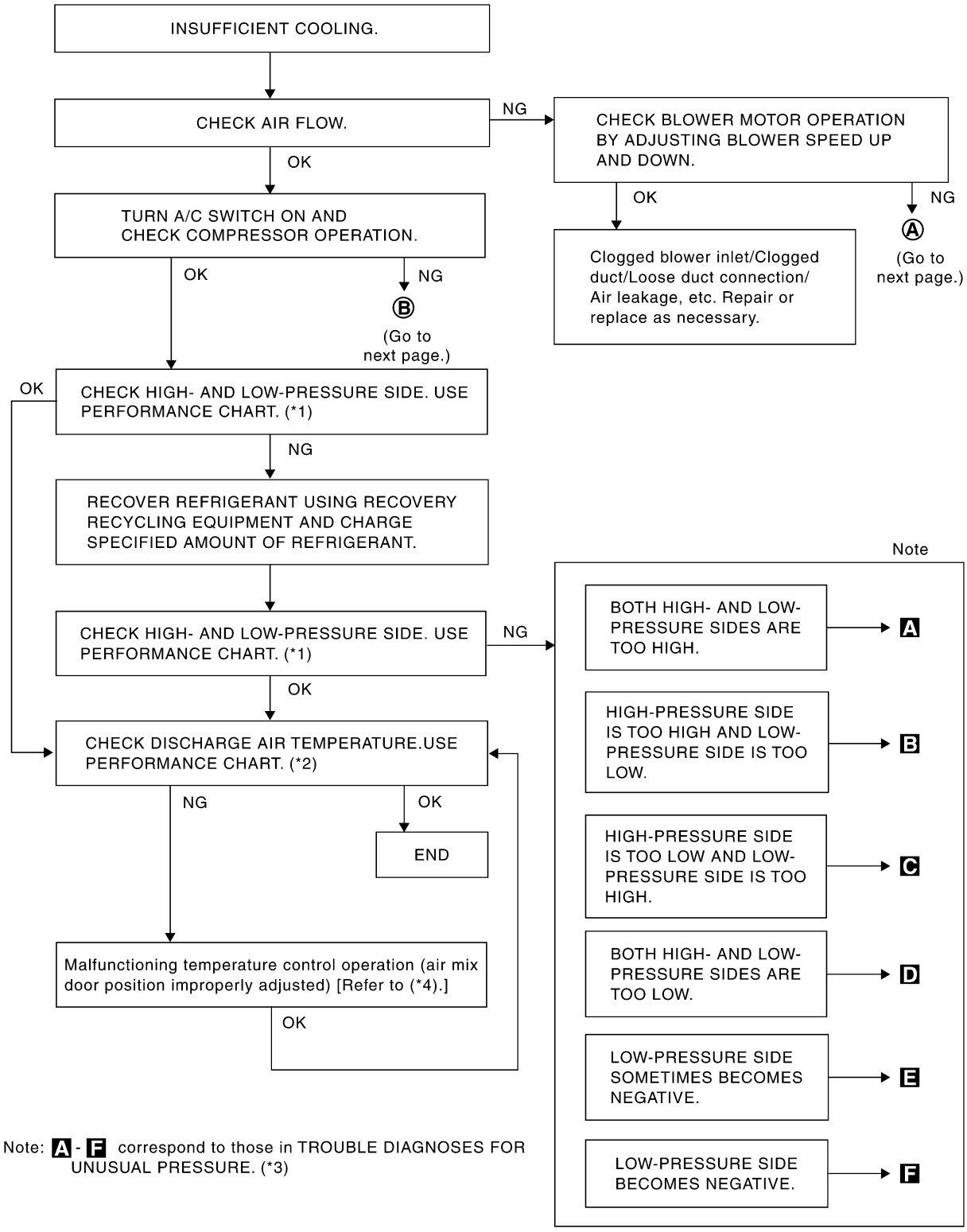

*1 ATC-99, "PERFORMANCE CHART".

*2 ATC-99, "PERFORMANCE CHART".

*3 ATC-100, "TROUBLE DIAGNOSIS FOR UNUSUAL PRESSURE".

*4 ATC-76, "Air Mix Door Motor Circuit".

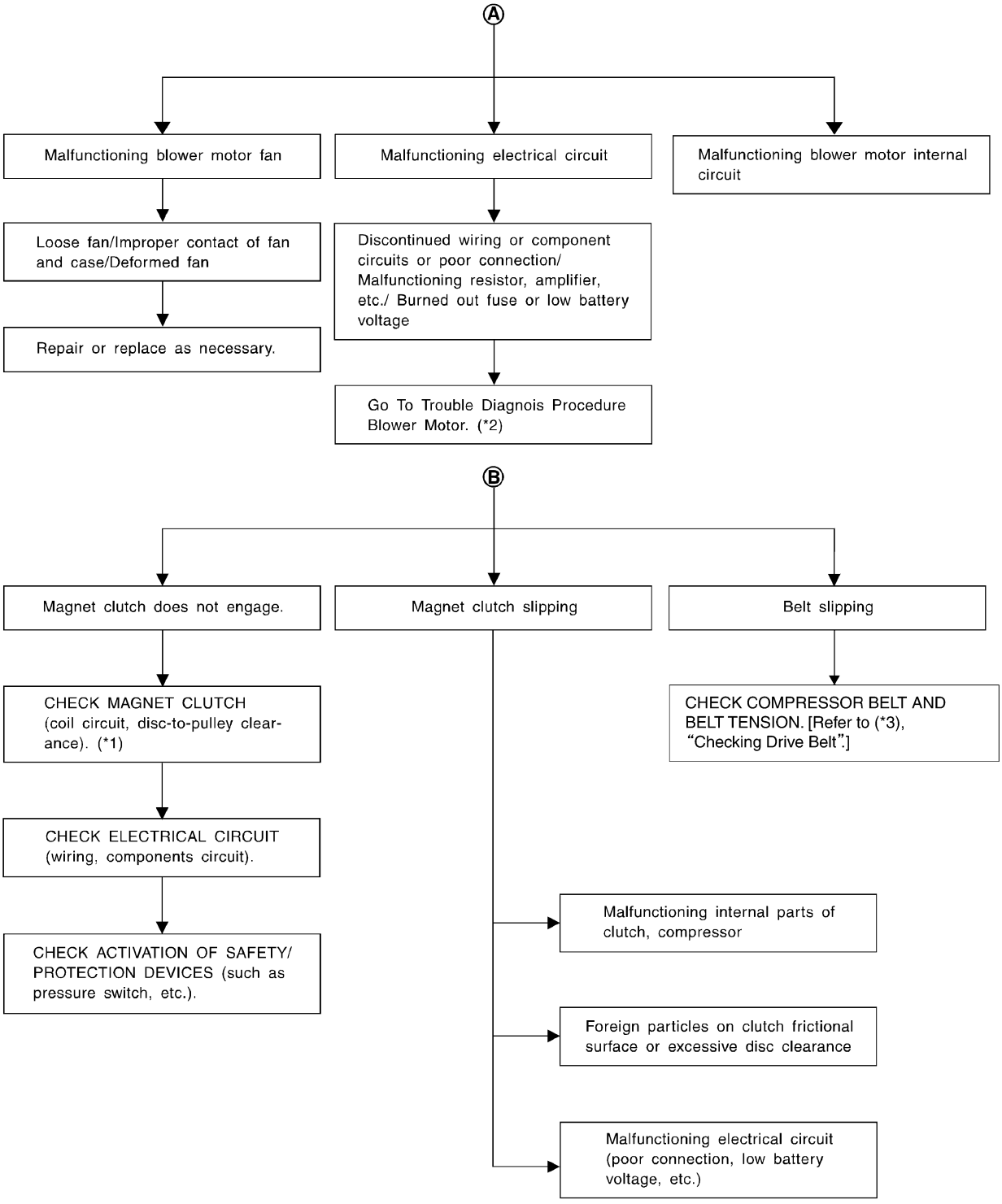

RJIA3107E

*1 ATC-153, "Removal and Installation of Compressor Clutch". *2 ATC-83, "Blower Motor Circuit". *3 EM-12, "Checking Drive Belts".

PERFORMANCE CHART

Test Condition

Testing must be performed as follows:

Vehicle location	Indoors or in the shade (in a well-ventilated place)
Doors	Closed
Door window	Open
Hood	Open
TEMP.	Max. COLD
Mode switch	(Ventilation) set
Intake switch	(Recirculation) set
Fan (blower) speed	Max. speed set
Engine speed	Idle speed
Operate the air conditioning system for 10 minutes before taking measurements.	

Test Reading

Recirculating-to-discharge Air Temperature Table

Inside air (Recirculating air) at blower assembly inlet		Discharge air temperature at center ventilator °C (°F)
Relative humidity %	Air temperature °C (°F)	
50 - 60	25 (77)	8.8 - 11.1 (48 - 52)
	30 (86)	12.2 - 15.1 (54 - 59)
	35 (95)	16.4 - 20.0 (62 - 68)
60 - 70	25 (77)	11.1 - 13.5 (52 - 56)
	30 (86)	15.1 - 18.0 (59 - 64)
	35 (95)	20.0 - 23.2 (68 - 74)

Ambient Air Temperature-to-operating Pressure Table

Ambient air		High-pressure (Discharge side) kPa (kg/cm^2 , psi)	Low-pressure (Suction side) kPa (kg/cm^2 , psi)
Relative humidity %	Air temperature °C (°F)		
50 - 70	30 (86)	1,360 - 1,660 (13.87 - 16.93, 197.2 - 240.7)	210 - 270 (2.14 - 2.70, 30.5 - 39.2)
	35 (95)	1,480 - 1,800 (15.10 - 18.00, 214.6 - 261.0)	250 - 320 (2.55 - 3.26, 36.3 - 46.4)
	40 (104)	1,900 - 2,080 (19.38 - 20.80, 275.5 - 301.6)	300 - 360 (3.06 - 3.67, 43.5 - 52.2)

TROUBLE DIAGNOSIS FOR UNUSUAL PRESSURE

Whenever system's high and/or low side pressure(s) is/are unusual, diagnose using a manifold gauge. The marker above the gauge scale in the following tables indicates the standard (usual) pressure range. Since the standard (usual) pressure, however, differs from vehicle to vehicle, refer to above table (Ambient air temperature-to-operating pressure table).

Both High- and Low-pressure Sides are Too High

Gauge indication	Refrigerant cycle	Probable cause	Corrective action
Both high- and low-pressure sides are too high. 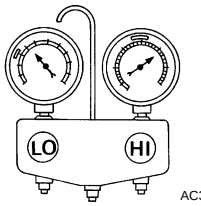 AC359A	Pressure is reduced soon after water is splashed on condenser.	Excessive refrigerant charge in refrigeration cycle	Reduce refrigerant until specified pressure is obtained.
	Air suction by cooling fan is insufficient.	Insufficient condenser cooling performance ↓ 1. Condenser fins are clogged. 2. Improper fan rotation of cooling fan	● Clean condenser. ● Check and repair cooling fan as necessary.
	● Low-pressure pipe is not cold. ● When compressor is stopped high-pressure value quickly drops by approximately 196 kPa (2 kg/cm^2 , 28 psi). It then decreases gradually thereafter.	Poor heat exchange in condenser (After compressor operation stops, high-pressure decreases too slowly.) ↓ Air in refrigeration cycle	Evacuate repeatedly and recharge system.
	Engine tends to overheat.	Engine cooling systems malfunction.	Check and repair each engine cooling system.
	● An area of the low-pressure pipe is colder than areas near the evaporator outlet. ● Plates are sometimes covered with frost.	● Excessive liquid refrigerant on low-pressure side ● Excessive refrigerant discharge flow ● Expansion valve is open a little compared with the specification. ↓ ● Improper expansion valve adjustment	Replace expansion valve.

High-Pressure Side is Too High and Low-Pressure Side is Too Low

Gauge indication	Refrigerant cycle	Probable cause	Corrective action
High-pressure side is too high- and low-pressure side is too low. 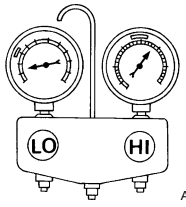 AC360A	Upper side of condenser and high-pressure side are hot, however, liquid tank is not so hot.	High-pressure tube or parts located between compressor and condenser are clogged or crushed.	● Check and repair or replace malfunctioning parts. ● Check lubricant for contamination.

High-Pressure Side is Too Low and Low-Pressure Side is Too High

Gauge indication	Refrigerant cycle	Probable cause	Corrective action
High-pressure side is too low and low-pressure side is too high. 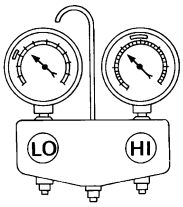 AC356A	High- and low-pressure sides become equal soon after compressor operation stops.	Compressor pressure operation is improper. ↓ Damaged inside compressor packings.	Replace compressor.
	No temperature difference between high- and low-pressure sides	Compressor pressure operation is improper. ↓ Damaged inside compressor packings.	Replace compressor.

Both High- and Low-Pressure Sides are Too Low

Gauge indication	Refrigerant cycle	Probable cause	Corrective action
Both high- and low-pressure sides are too low. 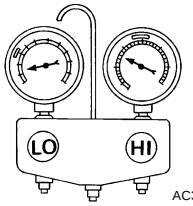 AC353A	● There is a big temperature difference between liquid tank outlet and inlet. Outlet temperature is extremely low. ● Liquid tank inlet and expansion valve are frosted.	Liquid tank inside is slightly clogged.	● Replace liquid tank. ● Check lubricant for contamination.
	● Temperature of expansion valve inlet is extremely low as compared with areas near liquid tank. ● Expansion valve inlet may be frosted. ● Temperature difference occurs somewhere in high-pressure side.	High-pressure pipe located between liquid tank and expansion valve is clogged.	● Check and repair malfunctioning parts. ● Check lubricant for contamination.
	Expansion valve and liquid tank are warm or only cool when touched.	Low refrigerant charge ↓ Leaking fittings or components	Check refrigerant for leaks. Refer to ATC-163, "Checking for Refrigerant Leaks" .
	There is a big temperature difference between expansion valve inlet and outlet while the valve itself is frosted.	Expansion valve closes a little compared with the specification. ↓ 1. Improper expansion valve adjustment 2. Malfunctioning expansion valve 3. Outlet and inlet may be clogged.	● Remove foreign particles by using compressed air. ● Check lubricant for contamination.
	An area of the low-pressure pipe is colder than areas near the evaporator outlet.	Low-pressure pipe is clogged or crushed.	● Check and repair malfunctioning parts. ● Replace expansion valve. ● Check lubricant for contamination.
	Air flow volume is not enough or is too low.	Evaporator is frozen.	● Check intake sensor circuit. Refer to ATC-120, "Intake Sensor Circuit" . ● Replace compressor. ● Repair evaporator. ● Replace evaporator. ● Refer to ATC-83, "Blower Motor Circuit" .

Low-Pressure Side Sometimes Becomes Negative

Gauge indication	Refrigerant cycle	Probable cause	Corrective action
Low-pressure side sometimes becomes negative. 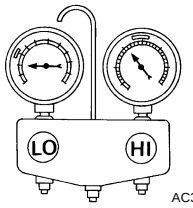	● Air conditioning system does not function and does not cyclically cool the compartment air. ● The system constantly functions for a certain period of time after compressor is stopped and restarted.	Refrigerant does not discharge cyclically. ↓ Moisture is frozen at expansion valve outlet and inlet. ↓ Water is mixed with refrigerant.	● Drain water from refrigerant or replace refrigerant. ● Replace liquid tank.

Low-Pressure Side Becomes Negative

Gauge indication	Refrigerant cycle	Probable cause	Corrective action
Low-pressure side becomes negative. 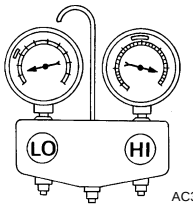	Liquid tank or front/rear side of expansion valve's pipe is frosted or dewed.	High-pressure side is closed and refrigerant does not flow. ↓ Expansion valve or liquid tank is frosted.	Leave the system at rest until no frost is present. Start it again to check whether or not the malfunction is caused by water or foreign particles. ● If water is the cause, initially cooling is okay. Then the water freezes causing a blockage. Drain water from refrigerant or replace refrigerant. ● If due to foreign particles, remove expansion valve and remove the particles with dry and compressed air (not shop air). ● If either of the above methods cannot correct the malfunction, replace expansion valve. ● Replace liquid tank. ● Check lubricant for contamination.

DIAGNOSTIC PROCEDURE FOR INSUFFICIENT COOLING

SYMPTOM: Insufficient cooling

1. CHECK POWER SUPPLY FOR ECV (ELECTRONIC CONTROL VALVE)

1. Disconnect compressor (ECV) connector.
2. Turn ignition switch ON.
3. Check voltage between compressor (ECV) harness connector F6 terminal 2 (P) and ground.

2 – Ground : Battery voltage

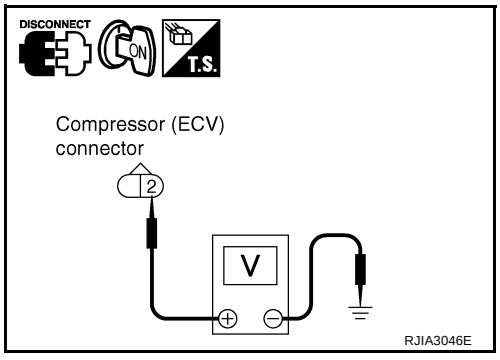

OK or NG

OK >> GO TO 2.

NG >> Check power supply circuit and 10A fuse [No. 12, located in the fuse block (J/B) No. 1]. Refer to PG-66, "FUSE BLOCK - JUNCTION BOX (J/B) NO.1" .

2. CHECK ECV CONTROL SIGNAL

1. Turn ignition switch OFF.
2. Reconnect compressor (ECV) connector.
3. Turn ignition switch ON.
4. Set in self-diagnosis STEP-42. Refer to ATC-56, "FUNCTION CONFIRMATION PROCEDURE" .
5. Confirm the auto amp. harness connector M120 terminal 23 (L/R) duty ratio using an oscilloscope.

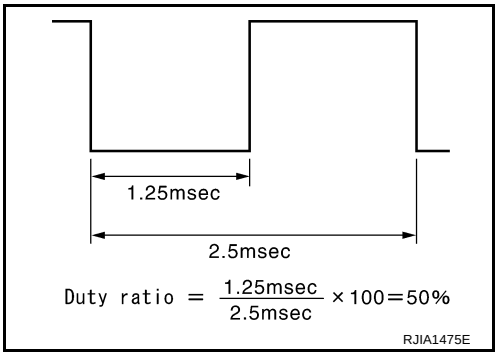

OK or NG

OK >> Replace compressor.
NG >> GO TO 3.

3. CHECK CIRCUIT CONTINUITY BETWEEN ECV AND AUTO AMP.

1. Turn ignition switch OFF.
2. Disconnect compressor (ECV) and auto amp. connector.
3. Check continuity between compressor (ECV) harness connector F6 terminal 3 (L/R) and auto amp. harness connector M120 terminal 23 (L/R).

3 – 23 : Continuity should exist.

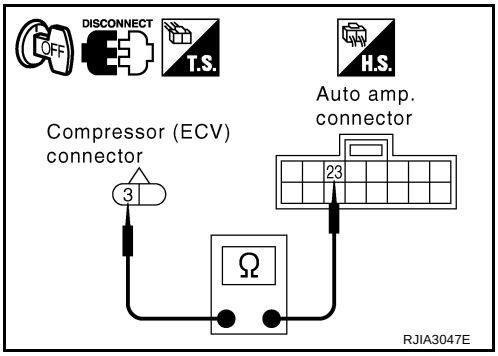

OK or NG

OK >> GO TO 4.
NG >> Repair harness or connector.

4. CHECK ECV

Check continuity between compressor (ECV) connector F6 terminal 2 and 3.

2 – 3 : Continuity should exist.

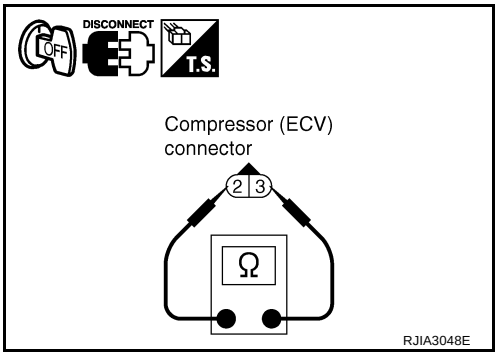

OK or NG

OK >> Replace auto amp.
NG >> Replace compressor.

Insufficient Heating

EJS000JV

SYMPTOM: Insufficient heating

INSPECTION FLOW

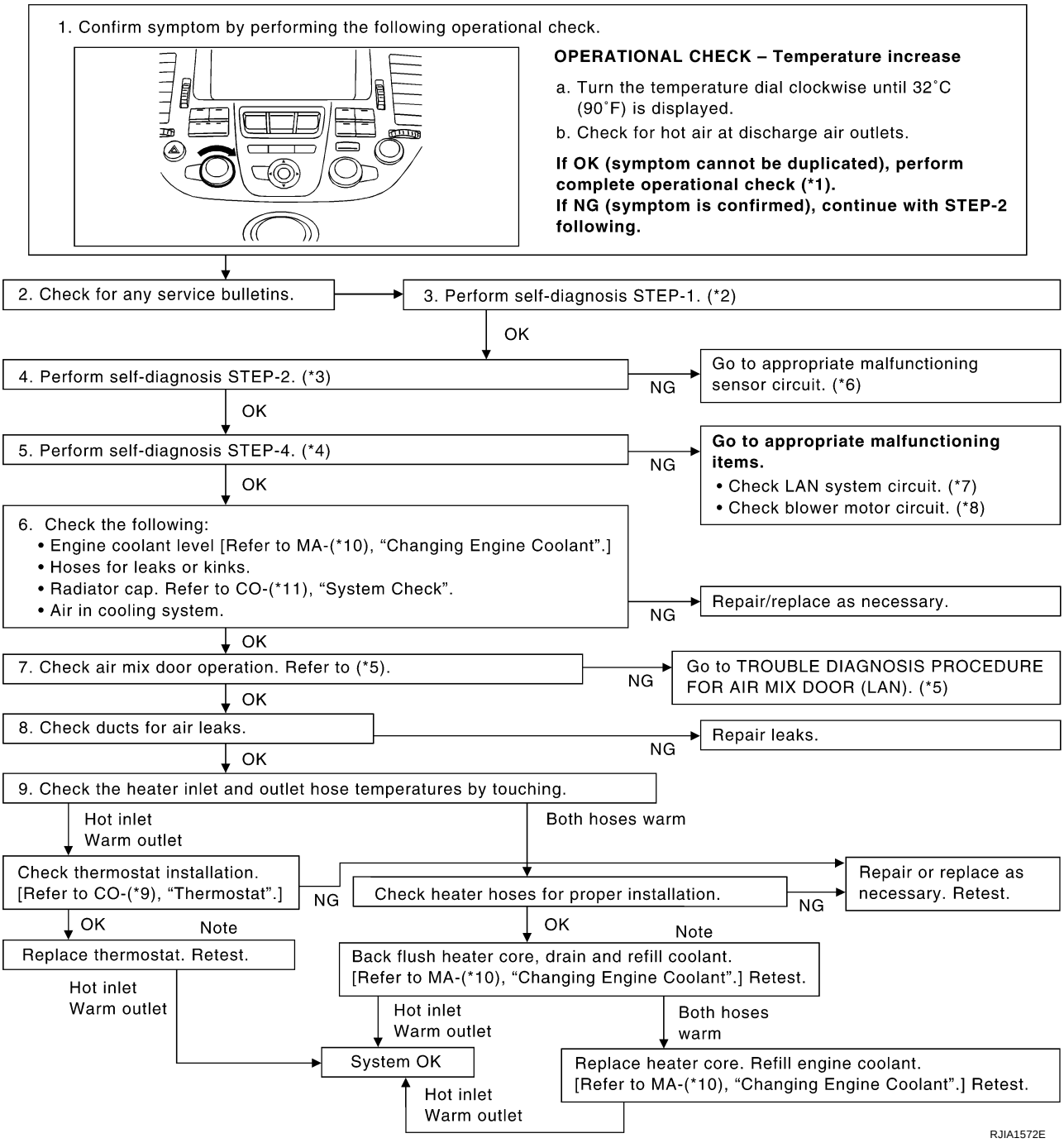

*1 ATC-64, "Operational Check".

*2 ATC-56, "FUNCTION CONFIRMATION PROCEDURE", see No.1.

*3 ATC-56, "FUNCTION CONFIRMATION PROCEDURE", see No.5.

*4 ATC-56, "FUNCTION CONFIRMATION PROCEDURE", see No.7.

*5 ATC-76, "Air Mix Door Motor Circuit".

*6 ATC-56, "FUNCTION CONFIRMATION PROCEDURE", see No.14.

*7 ATC-69, "LAN System Circuit".

*8 ATC-83, "Blower Motor Circuit".

*9 Thermostat CO-24, "Removal and Installation" .

*10 CO-9, "Changing Engine Coolant".

*11 CO-13, "CHECKING RADIATOR CAP".

Noise

EJS000SW

SYMPTOM: Noise

INSPECTION FLOW

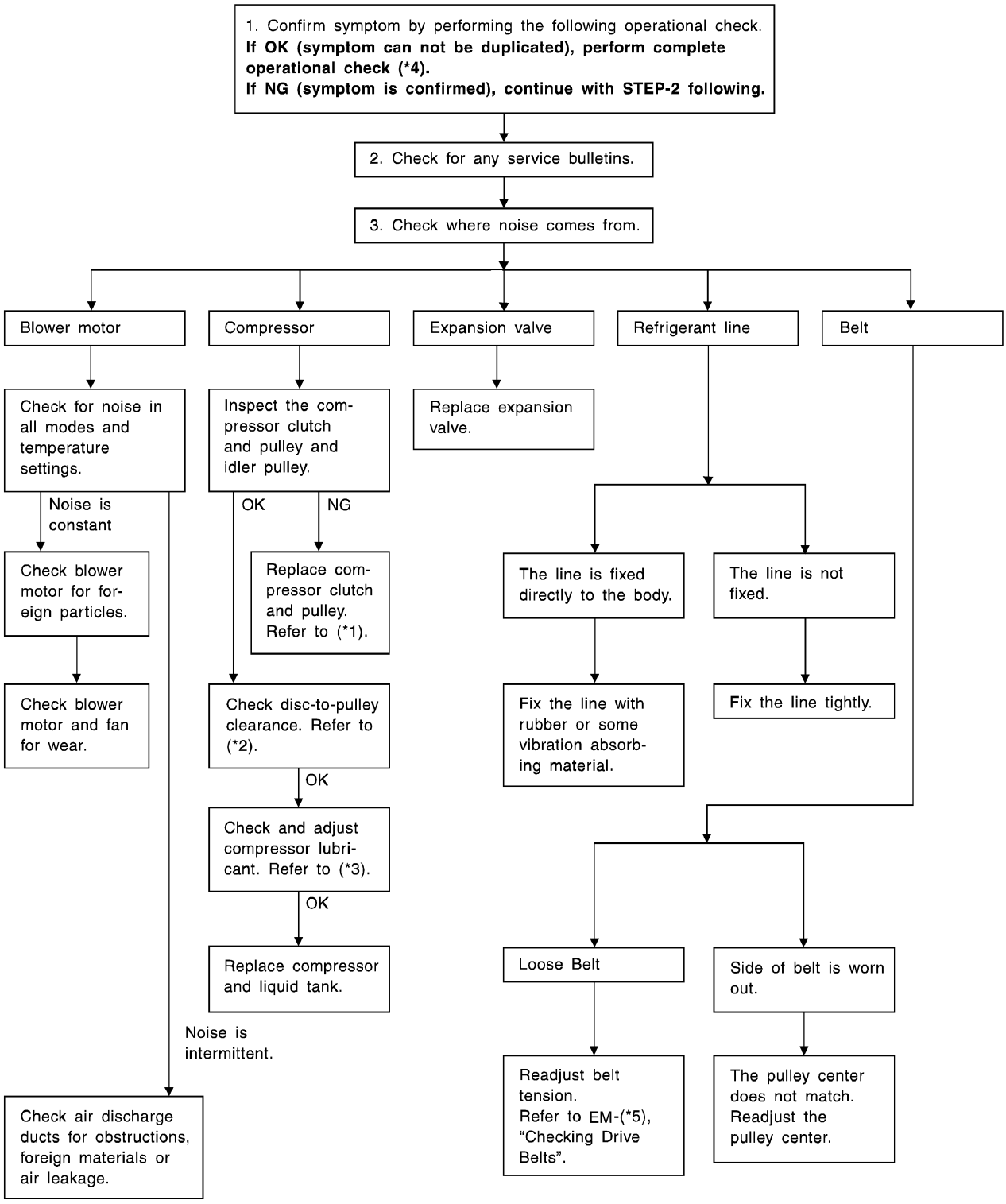

RJIA1596E

*1 Compressor clutch ATC-153, "REMOVAL" .

*2 Compressor clutch ATC-155, "INSTALLATION" .

*3 ATC-24, "Maintenance of Lubricant Quantity in Compressor".

*4 ATC-64, "Operational Check".

*5 EM-12, "Checking Drive Belts".

Self-diagnosis

EJS000JX

SYMPTOM: Self-diagnosis cannot be performed.

INSPECTION FLOW

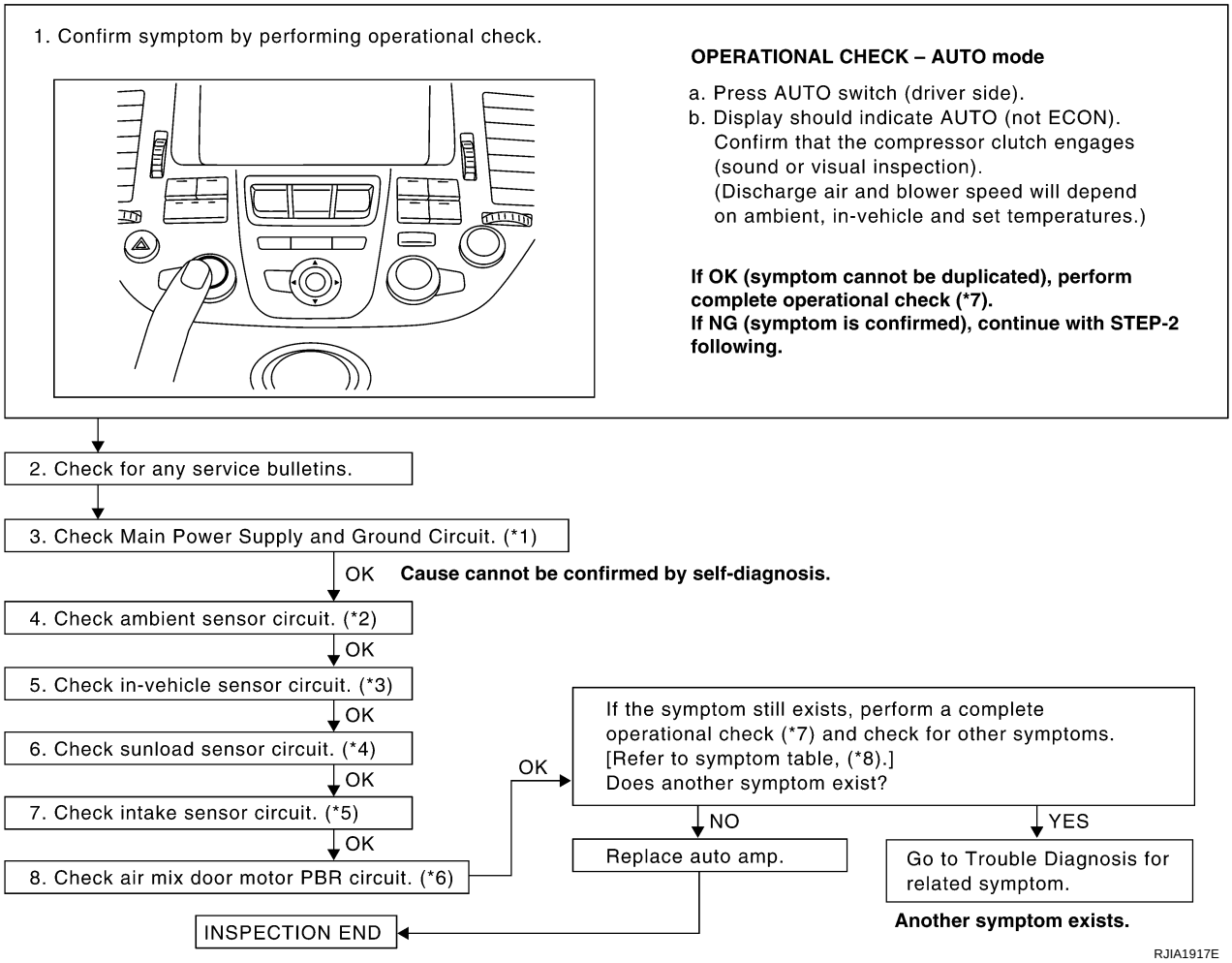

*1 ATC-67, "Power Supply and Ground Circuit for Auto Amp.". *2 ATC-112, "Ambient Sensor Circuit". *3 ATC-114, "In-Vehicle Sensor Circuit".

*4 ATC-117, "Sunload Sensor Circuit". *5 ATC-120, "Intake Sensor Circuit". *6 ATC-78, "Air Mix Door Motor PBR Circuit".

*7 ATC-64, "Operational Check". *8 ATC-36, "SYMPTOM TABLE".

Memory Function

EJS000JY

SYMPTOM: Memory function does not operate.

INSPECTION FLOW

1. Confirm symptom by performing the following operational check.

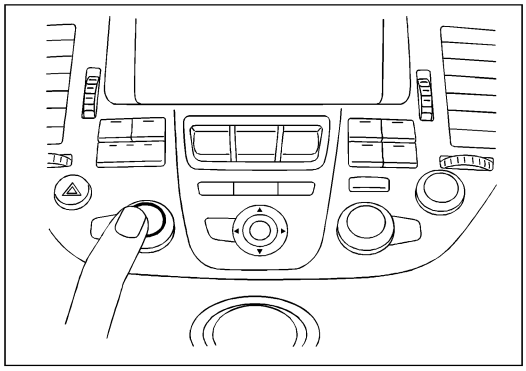

OPERATIONAL CHECK – Memory function

a. Set the temperature 90˚F or 32˚C.
b. Press OFF switch.
c. Turn the ignition off.
d. Turn the ignition on.
e. Press the A/C switch.
f. Confirm that the set temperature remains at previous temperature.
g. Press OFF switch.

If OK (symptom cannot be duplicated), perform complete operational check (*2).
If NG (symptom is confirmed), continue with STEP-2 following.

2. Check for any service bulletins.

3. Check Main Power Supply and Ground Circuit. (*1)

OK

4. Replace auto amp.

5. FINAL CHECK
Go to self-diagnosis function confirmation procedure (*3) and perform self-diagnosis STEP-2.
Confirm that code No. 20 is displayed.

RJIA1574E

*1 ATC-67, "Power Supply and Ground Circuit for Auto Amp.".
*2 ATC-64, "Operational Check".
*3 ATC-56, "FUNCTION CONFIRMATION PROCEDURE".

ECON (ECONOMY) MODE

EJS000JZ

SYMPTOM: ECON mode does not operate.

INSPECTION FLOW

1. Confirm symptom by performing the following operational check.

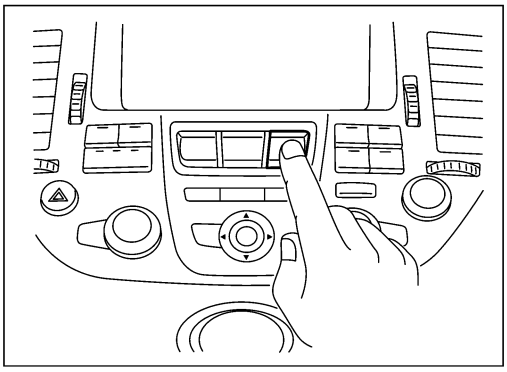

OPERATIONAL CHECK – ECON (ECONOMY) mode

a. Set the temperature 75˚F or 25˚C.
b. Press ECON switch.
c. Display should indicate ECON (not AUTO).
Confirm that the compressor clutch is not engaged (visual inspection).
(Discharge air and blower speed will depend on ambient, in-vehicle, and set temperatures.)

If OK (symptom cannot be duplicated), perform complete operational check (*2).
If NG (symptom is confirmed), continue with STEP-2 following.

↓

2. Check for any service bulletins.

↓

3. Check Main Power Supply and Ground Circuit. (*1)

OK ↓

4. Replace auto amp.

↓

5. FINAL CHECK
Go to self-diagnosis function confirmation procedure (*3) and perform self-diagnosis STEP-2.
Confirm that code No. 20 is displayed.

RJIA1575E

*1 ATC-67, "Power Supply and Ground Circuit for Auto Amp.".
*2 ATC-64, "Operational Check".
*3 ATC-56, "FUNCTION CONFIRMATION PROCEDURE".

A/C Display is Malfunctioning

EJS001YB

DIAGNOSTIC PROCEDURE

SYMPTOM: A/C Display is not shown.

1. CHECK CIRCUIT CONTINUITY BETWEEN AV (AND NAVI) C/U AND AUTO AMP.

1. Disconnect auto amp. connector and AV and NAVI C/U or AV C/U connector.
2. Check continuity between AV and NAVI C/U harness connector B29 terminals 37 (W), 39 (B) or AV C/U harness connector M77 terminals 44 (W), 45 (B) and ground.

37, 39 – Ground : Continuity should not exist.
44, 45 – Ground : Continuity should not exist.

3. Check continuity between AV and NAVI C/U harness connector B29 terminals 37 (W), 39 (B) or AV C/U harness connector M77 terminals 44 (W), 45 (B) and auto amp. harness connector M119 terminals 9 (W), 20 (B).

37, 44 – 9 : Continuity should exist.
39, 45 – 20 : Continuity should exist.

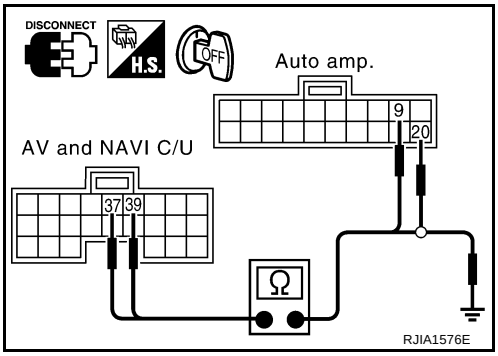

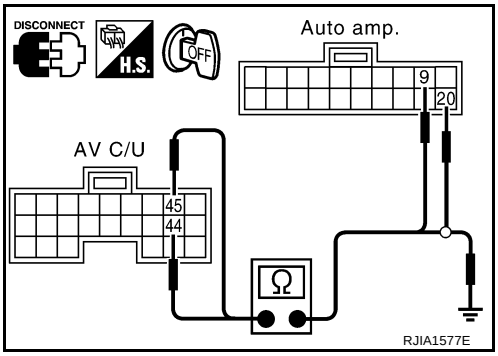

OK or NG

OK >> GO TO 2.
NG >> ● Check harness between auto amp. and AV and NAVI C/U or AV C/U.
● Check connector housings for disconnected or loose terminals.

2. A/C–AV, AC–CLK COMMUNICATION SIGNAL CHECK

1. Reconnect auto amp. connector.
2. Turn the ignition switch ON.
3. Check voltage between AV and NAVI C/U harness connector B29 terminals 37 (W), 39 (B) or AV C/U harness connector M77 terminals 44 (W), 45 (B) and ground.

37, 39 – Ground : Approx. 3.5V or more
44, 45 – Ground : Approx. 3.5V or more

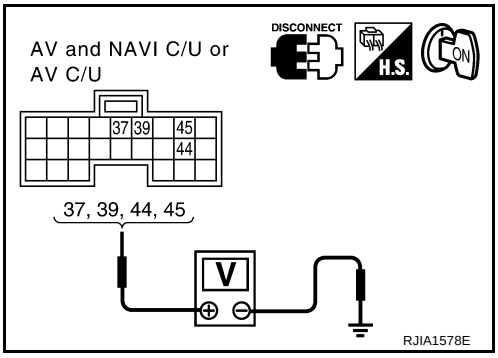

OK or NG

OK >> GO TO 3.
NG >> Replace auto amp.

3. A/C–AV, AC–CLK COMMUNICATION SIGNAL CHECK

1. Turn ignition switch OFF.
2. Reconnect AV and NAVI C/U or AV C/U connector.
3. Turn the ignition switch ON.
4. Check voltage between AV and NAVI C/U harness connector B29 terminals 37 (W), 39 (B) or AV C/U harness connector M77 terminals 44 (W), 45 (B) and ground.

37, 39 – Ground	**: AV-78, "Terminals and Reference Value for AV and NAVI Control Unit"**
44, 45 – Ground	**: DI-92, "Terminals and Reference Value for AV Control Unit"**

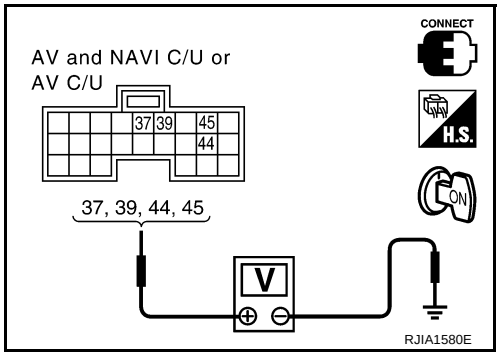

OK or NG

OK >> Replace auto amp.
NG >> Replace AV and NAVI C/U or AV C/U.

A/C Operation is Malfunctioning

EJS001YC

DIAGNOSTIC PROCEDURE

SYMPTOM: A/C operation is not possible.

1. CHECK CIRCUIT CONTINUITY BETWEEN AV (AND NAVI) C/U AND AUTO AMP.

1. Disconnect auto amp. connector and AV and NAVI C/U or AV C/U connector.
2. Check continuity between AV and NAVI C/U harness connector B29 terminals 38 (R), 39 (B) or AV C/U harness connector M77 terminals 43 (R), 45 (B) and ground.

38, 39 – Ground	**: Continuity should not exist.**
43, 45 – Ground	**: Continuity should not exist.**

3. Check continuity between AV and NAVI C/U harness connector B29 terminals 38 (R), 39 (B) or AV C/U harness connector M77 terminals 43 (R), 45 (B) and auto amp. harness connector M119 terminals 10 (R), 20 (B).

38, 43 – 10	**: Continuity should exist.**
39, 45 – 20	**: Continuity should exist.**

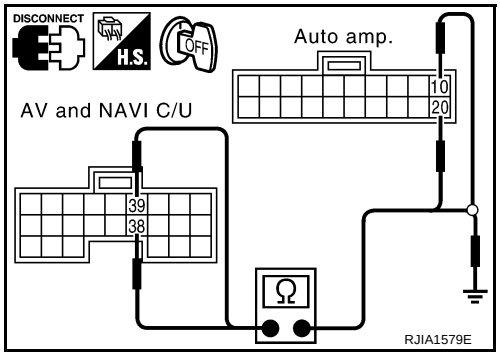

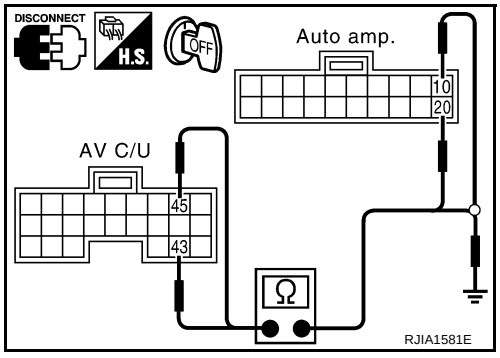

OK or NG

OK >> GO TO 2.
NG >>
- Check harness for open or short between auto amp. and AV and NAVI C/U or AV C/U.
- Check connector housings for disconnected or loose terminals.

2. AV–A/C, AC–CLK COMMUNICATION SIGNAL CHECK

1. Connect auto amp. connector.
2. Turn the ignition switch ON.
3. Check voltage between AV and NAVI C/U harness connector B29 terminal 38 (R) or AV C/U harness connector M77 terminal 43 (R) and ground.

38 – Ground	**: Approx. 3.5V or more**
43 – Ground	**: Approx. 3.5V or more**

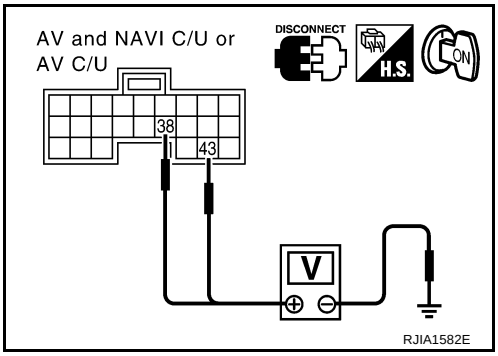

OK or NG

OK >> GO TO 3.
NG >> Replace auto amp.

3. AV–A/C, AC–CLK COMMUNICATION SIGNAL CHECK

1. Turn ignition switch OFF.
2. Connect AV and NAVI C/U or AV C/U connector.
3. Turn the ignition switch ON.
4. Check voltage between AV and NAVI C/U harness connector B29 terminals 38 (R), 39 (B) or AV C/U harness connector M77 terminals 43 (R), 45 (B) and ground.

38, 39 – Ground	**: AV-78, "Terminals and Reference Value for AV and NAVI Control Unit"**
43, 45 – Ground	**: DI-92, "Terminals and Reference Value for AV Control Unit"**

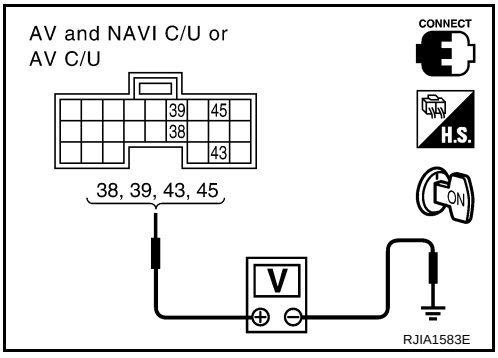

OK or NG

OK >> Replace auto amp.
NG >> Replace AV and NAVI C/U or AV C/U.

Ambient Sensor Circuit

EJS001YD

COMPONENT DESCRIPTION

Ambient Sensor

The ambient sensor is attached on the hood lock stay. It detects ambient temperature and converts it into a resistance value which is then input into the auto amp.

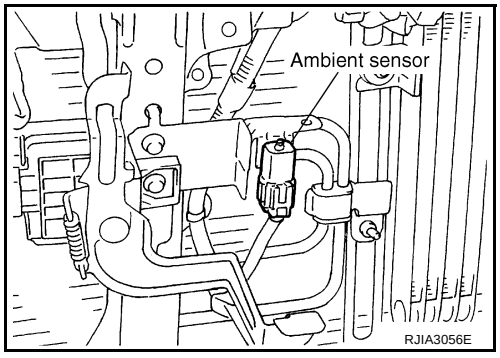

AMBIENT TEMPERATURE INPUT PROCESS

The auto amp. includes a processing circuit for the ambient sensor input. However, when the temperature detected by the ambient sensor increases quickly, the processing circuit retards the auto amp. function. It only allows the auto amp. to recognize an ambient temperature increase of 0.33°C (0.6°F) per 100 seconds.
As an example, consider stopping for a few minutes after high speed driving. Although the actual ambient temperature has not changed, the temperature detected by the ambient sensor will increase. This is because the heat from the engine compartment can radiate to the front grille area, location of the ambient sensor.

DIAGNOSTIC PROCEDURE FOR AMBIENT SENSOR

SYMPTOM: Ambient sensor circuit is open or shorted. (21 or –21 is indicated on auto amp. As a result of conducting self-diagnosis STEP-2.)

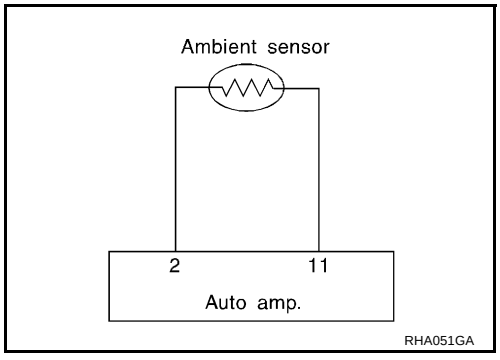

1. CHECK VOLTAGE BETWEEN AMBIENT SENSOR AND GROUND

1. Disconnect ambient sensor connector.
2. Turn ignition switch ON.
3. Check voltage between ambient sensor harness connector E58 terminal 1 (G/R) and ground.

1 – Ground : Approx. 5V

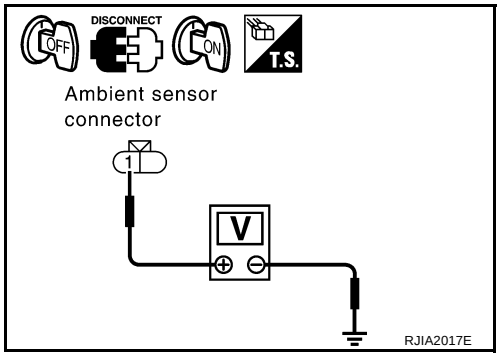

OK or NG

OK >> GO TO 2.
NG >> GO TO 4.

2. CHECK CIRCUIT CONTINUITY BETWEEN AMBIENT SENSOR AND AUTO AMP.

1. Turn ignition switch OFF.
2. Disconnect auto amp. connector.
3. Check continuity between ambient sensor harness connector E58 terminal 2 (R/Y) and auto amp. harness connector M119 terminal 11 (R/Y).

2 – 11 : Continuity should exist.

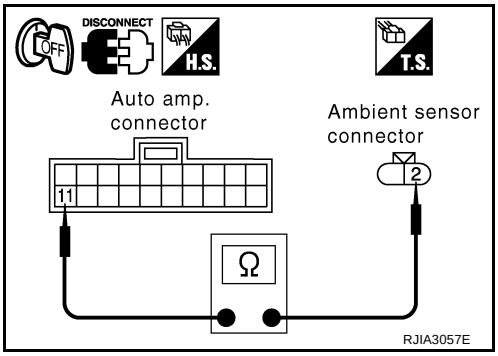

OK or NG

OK >> GO TO 3.
NG >> Repair harness or connector.

3. CHECK AMBIENT SENSOR

Refer to ATC-114, "Ambient Sensor"

OK or NG

OK >> 1. Replace auto amp.
2. Go to self-diagnosis ATC-56, "FUNCTION CONFIRMATION PROCEDURE" and perform self-diagnosis STEP-2. Confirm that code No. 20 is displayed.

NG >> 1. Replace ambient sensor.
2. Go to self-diagnosis ATC-56, "FUNCTION CONFIRMATION PROCEDURE" and perform self-diagnosis STEP-2. Confirm that code No. 20 is displayed.

4. CHECK CIRCUIT CONTINUITY BETWEEN AMBIENT SENSOR AND AUTO AMP.

1. Turn ignition switch OFF.
2. Disconnect auto amp. connector.
3. Check continuity between ambient sensor harness connector E58 terminal 1 (G/R) and auto amp. harness connector M119 terminal 2 (G/R).

1 – 2 : Continuity should exist.

4. Check continuity between auto amp. harness connector M119 terminal 2 (G/R) and ground.

2 – Ground : Continuity should not exist.

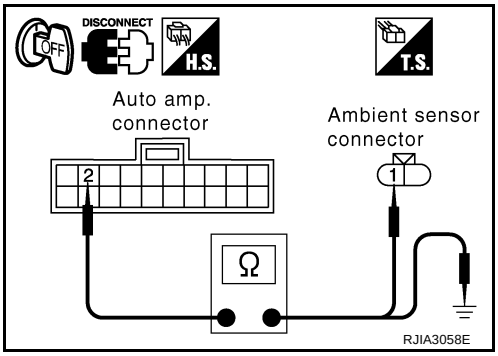

OK or NG

OK >> 1. Replace auto amp.
2. Go to self-diagnosis ATC-56, "FUNCTION CONFIRMATION PROCEDURE" and perform self-diagnosis STEP-2. Confirm that code No. 20 is displayed.

NG >> Repair harness or connector.

COMPONENT INSPECTION

Ambient Sensor

After disconnecting ambient sensor connector E58, measure resistance between terminals 2 and 1 at sensor side, using the table below.

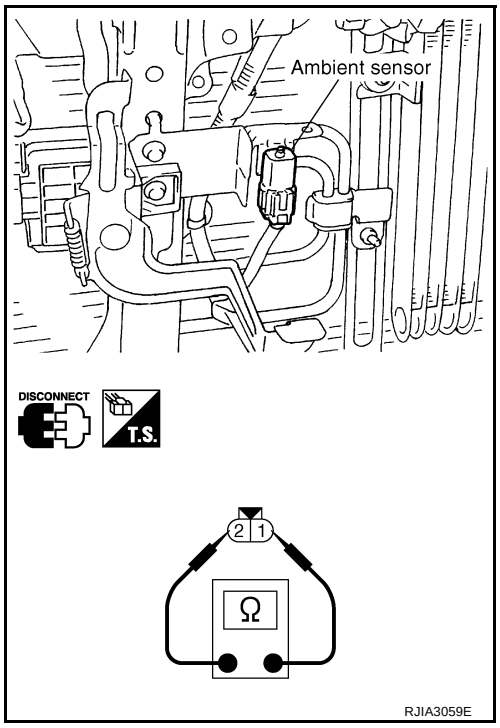

Temperature °C (°F)	Resistance kΩ
–15 (5)	12.73
–10 (14)	9.92
–5 (23)	7.80
0 (32)	6.19
5 (41)	4.95
10 (50)	3.99
15 (59)	3.24
20 (68)	2.65
25 (77)	2.19
30 (86)	1.81
35 (95)	1.51
40 (104)	1.27
45 (113)	1.07

If NG, replace ambient sensor.

In-Vehicle Sensor Circuit

EJS001YE

COMPONENT DESCRIPTION

In-Vehicle Sensor

The in-vehicle sensor is located on instrument lower panel. It converts variations in temperature of compartment air drawn from the aspirator into a resistance value. It is then input into the auto amp.

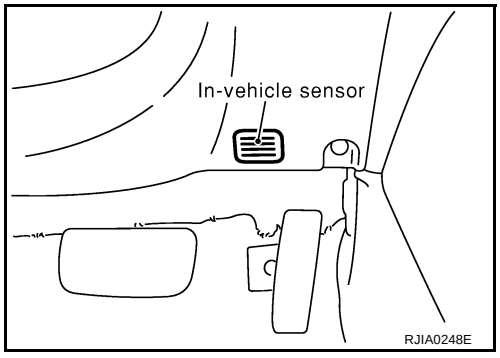

Aspirator

The aspirator is located on driver's side of heater & cooling unit. It produces vacuum pressure due to air discharged from the heater & cooling unit, continuously taking compartment air in the aspirator.

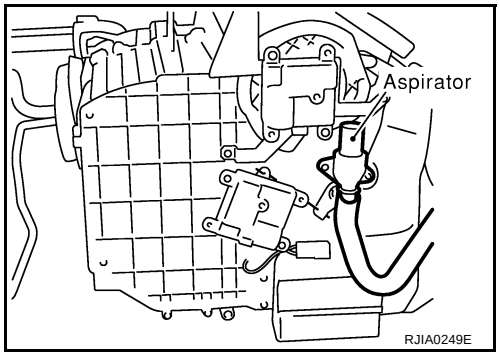

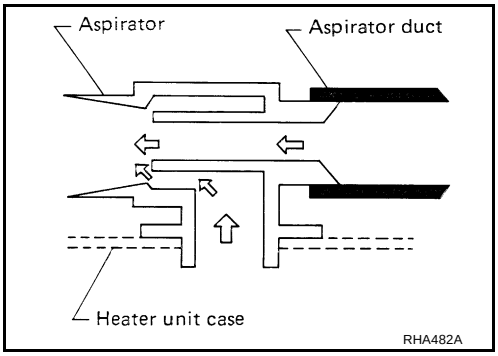

DIAGNOSTIC PROCEDURE FOR IN-VEHICLE SENSOR

SYMPTOM: In-vehicle sensor circuit is open or shorted. (22 or –22 is indicated on auto amp. as a result of conducting self-diagnosis STEP-2.)

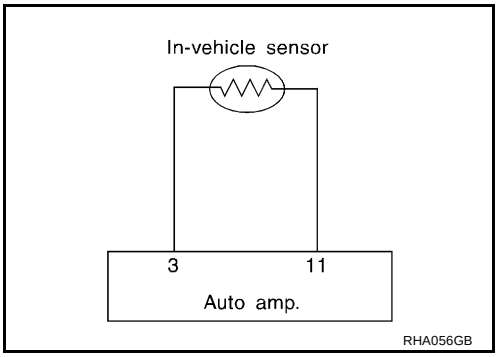

1. CHECK VOLTAGE BETWEEN IN-VEHICLE SENSOR AND GROUND

1. Disconnect in-vehicle sensor connector.
2. Turn ignition switch ON.
3. Check voltage between in-vehicle sensor harness connector M68 terminal 2 (LG/B) and ground.

2 – Ground : Approx. 5V

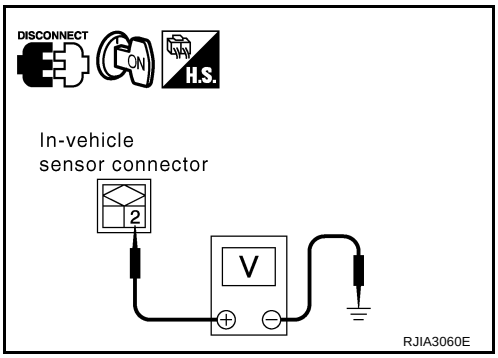

OK or NG

OK >> GO TO 2.
NG >> GO TO 4.

2. CHECK CIRCUIT CONTINUITY BETWEEN IN-VEHICLE SENSOR AND AUTO AMP.

1. Turn ignition switch OFF.
2. Disconnect auto amp. connector.
3. Check continuity between in-vehicle sensor harness connector M68 terminal 1 (R/Y) and auto amp. harness connector M119 terminal 11 (R/Y).

1 – 11 : Continuity should exist.

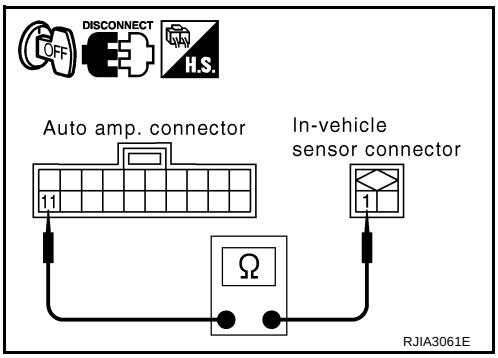

OK or NG

OK >> GO TO 3.
NG >> Repair harness or connector.

3. CHECK IN-VEHICLE SENSOR

Refer to ATC-116, "In-Vehicle Sensor" .

OK or NG

OK >> 1. Replace auto amp.
2. Go to self-diagnosis ATC-56, "FUNCTION CONFIRMATION PROCEDURE" and perform self-diagnosis STEP-2. Confirm that code No. 20 is displayed.

NG >> 1. Replace in-vehicle sensor.
2. Go to self-diagnosis ATC-56, "FUNCTION CONFIRMATION PROCEDURE" and perform self-diagnosis STEP-2. Confirm that code No. 20 is displayed.

4. CHECK CIRCUIT CONTINUITY BETWEEN IN-VEHICLE SENSOR AND AUTO AMP.

1. Turn ignition switch OFF.
2. Disconnect auto amp. connector.
3. Check continuity between in-vehicle sensor harness connector M68 terminal 2 (LG/B) and auto amp. harness connector M119 terminal 3 (LG/B).

2 – 3 : Continuity should exist.

4. Check continuity between auto amp. harness connector M119 terminal 3 (LG/B) and ground.

3 – Ground : Continuity should not exist.

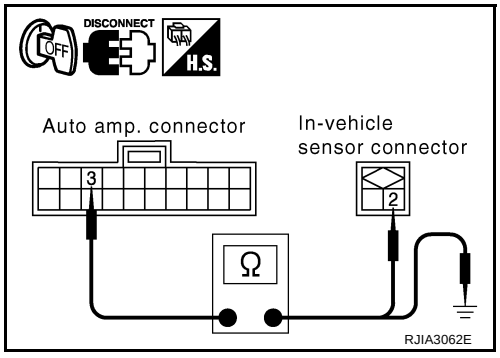

OK or NG

OK >> 1. Replace auto amp.
2. Go to self-diagnosis ATC-56, "FUNCTION CONFIRMATION PROCEDURE" and perform self-diagnosis STEP-2. Confirm that code No. 20 is displayed.

NG >> Repair harness or connector.

COMPONENT INSPECTION

In-Vehicle Sensor

After disconnecting in-vehicle sensor connector M68, measure resistance between terminals 1 and 2 at sensor side, using the table below.

Temperature °C (°F)	Resistance kΩ
–15 (5)	12.73
–10 (14)	9.92
–5 (23)	7.80
0 (32)	6.19
5 (41)	4.95
10 (50)	3.99
15 (59)	3.24
20 (68)	2.65
25 (77)	2.19
30 (86)	1.81
35 (95)	1.51
40 (104)	1.27
45 (113)	1.07

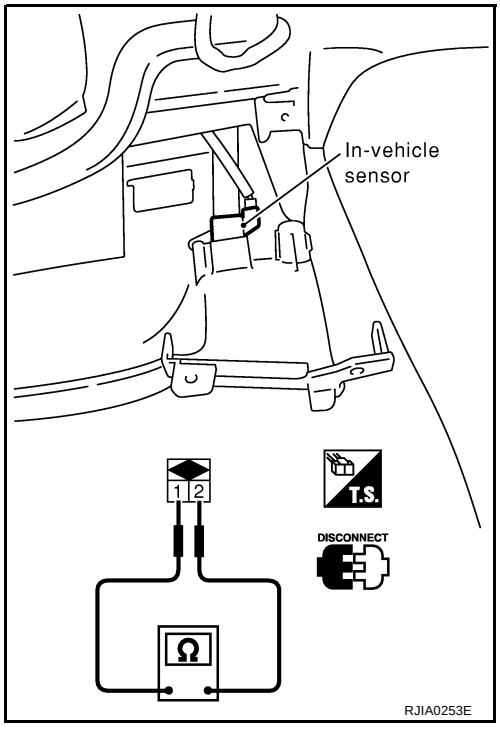

If NG, replace in-vehicle sensor.

Sunload Sensor Circuit

EJS001YF

COMPONENT DESCRIPTION

The sunload sensor is located on the left defroster grille. It detects sunload entering through windshield by means of a photo diode. The sensor converts the sunload into a current value which is then input into the auto amp.

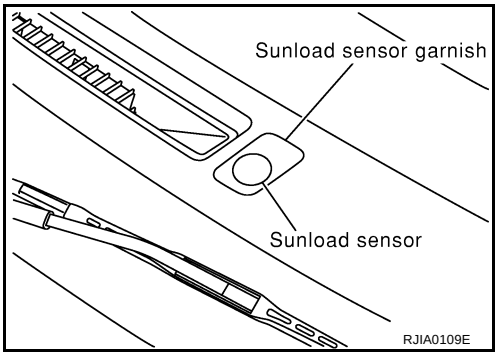

SUNLOAD INPUT PROCESS

The auto amp. also includes a processing circuit which averages the variations in detected sunload over a period of time. This prevents drastic swings in the ATC system operation due to small or quick variations in detected sunload.

For example, consider driving along a road bordered by an occasional group of large trees. The sunload detected by the sunload sensor will vary whenever the trees obstruct the sunlight. The processing circuit averages the detected sunload over a period of time, so that the (insignificant) effect of the trees momentarily obstructing the sunlight does not cause any change in the ATC system operation. On the other hand, shortly after entering a long tunnel, the system will recognize the change in sunload, and the system will react accordingly.

DIAGNOSTIC PROCEDURE FOR SUNLOAD SENSOR

SYMPTOM: Sunload sensor circuit is open or shorted. (25 or –25) is indicated on auto amp. as a result of conducting self-diagnosis STEP-2.

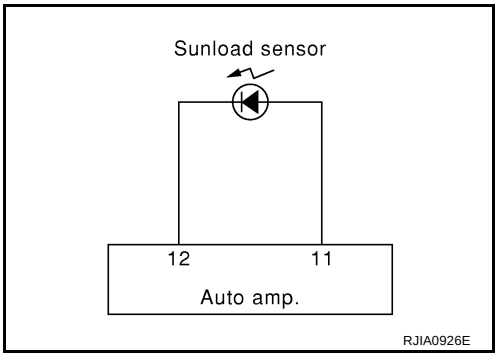

1. CHECK VOLTAGE BETWEEN SUNLOAD SENSOR AND GROUND

1. Disconnect sunload sensor connector.
2. Turn ignition switch ON.
3. Check voltage between sunload sensor harness connector M44 terminal 1 (SB) and ground.

1 – Ground : Approx. 5V

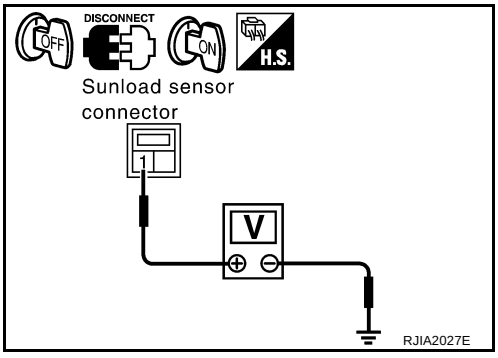

OK or NG

OK >> GO TO 2.
NG >> GO TO 4.

2. CHECK CIRCUIT CONTINUITY BETWEEN SUNLOAD SENSOR AND AUTO AMP.

1. Turn ignition switch OFF.
2. Disconnect auto amp. connector.
3. Check continuity between sunload sensor harness connector M44 terminal 2 (R/Y) and auto amp. harness connector M119 terminal 11 (R/Y).

2 – 11 : Continuity should exist.

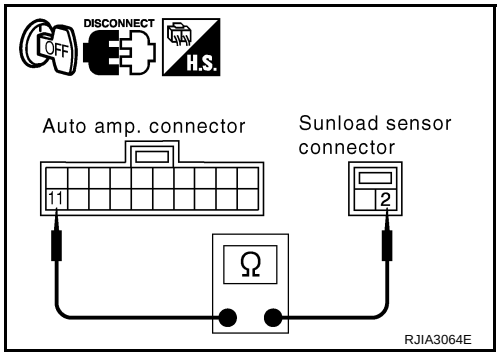

OK or NG

OK >> GO TO 3.
NG >> Repair harness or connector.

3. CHECK SUNLOAD SENSOR.

Refer to ATC-119, "Sunload Sensor" .

OK or NG

OK >> 1. Replace auto amp.
2. Go to self-diagnosis ATC-56, "FUNCTION CONFIRMATION PROCEDURE" and perform self-diagnosis STEP-2. Confirm that code No. 20 is displayed.

NG >> 1. Replace sunload sensor.
2. Go to self-diagnosis ATC-56, "FUNCTION CONFIRMATION PROCEDURE" and perform self-diagnosis STEP-2. Confirm that code No. 20 is displayed.

4. CHECK CIRCUIT CONTINUITY BETWEEN SUNLOAD SENSOR AND AUTO AMP.

1. Turn ignition switch OFF.
2. Disconnect auto amp. connector.
3. Check continuity between sunload sensor harness connector M44 terminal 1 (SB) and auto amp. harness connector M119 terminal 12 (SB).

1 – 12 : Continuity should exist.

4. Check continuity between auto amp. harness connector M119 terminal 12 (SB) and ground.

12 – Ground : Continuity should not exist.

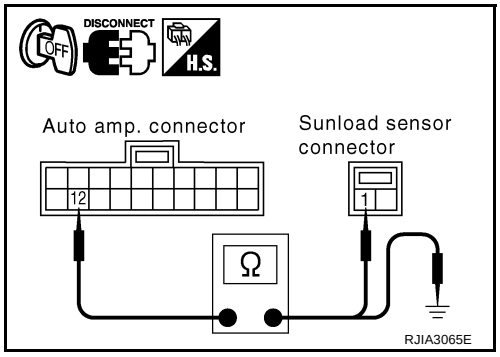

OK or NG

OK >> 1. Replace auto amp.
2. Go to self-diagnosis ATC-56, "FUNCTION CONFIRMATION PROCEDURE" and perform self-diagnosis STEP-2. Confirm that code No. 20 is displayed.

NG >> Repair harness or connector.

COMPONENT INSPECTION

Sunload Sensor

Measure voltage between auto amp. harness connector M119 terminal 12 (SB) and ground.
If NG, replace sunload sensor.

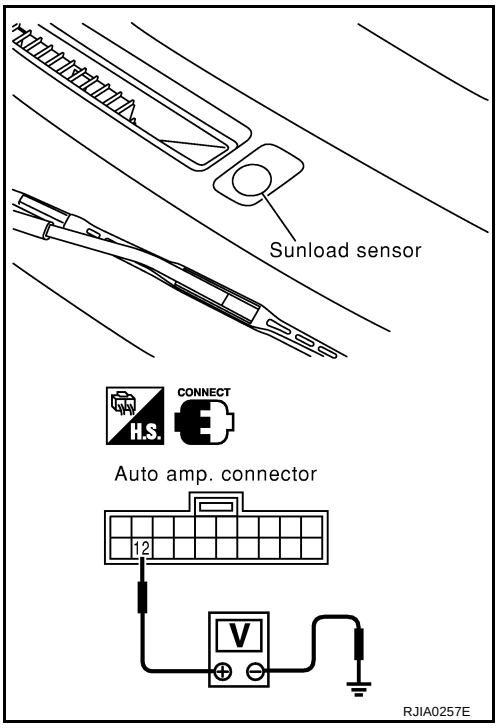

- When checking sunload sensor, select a place where sun shines directly on it.

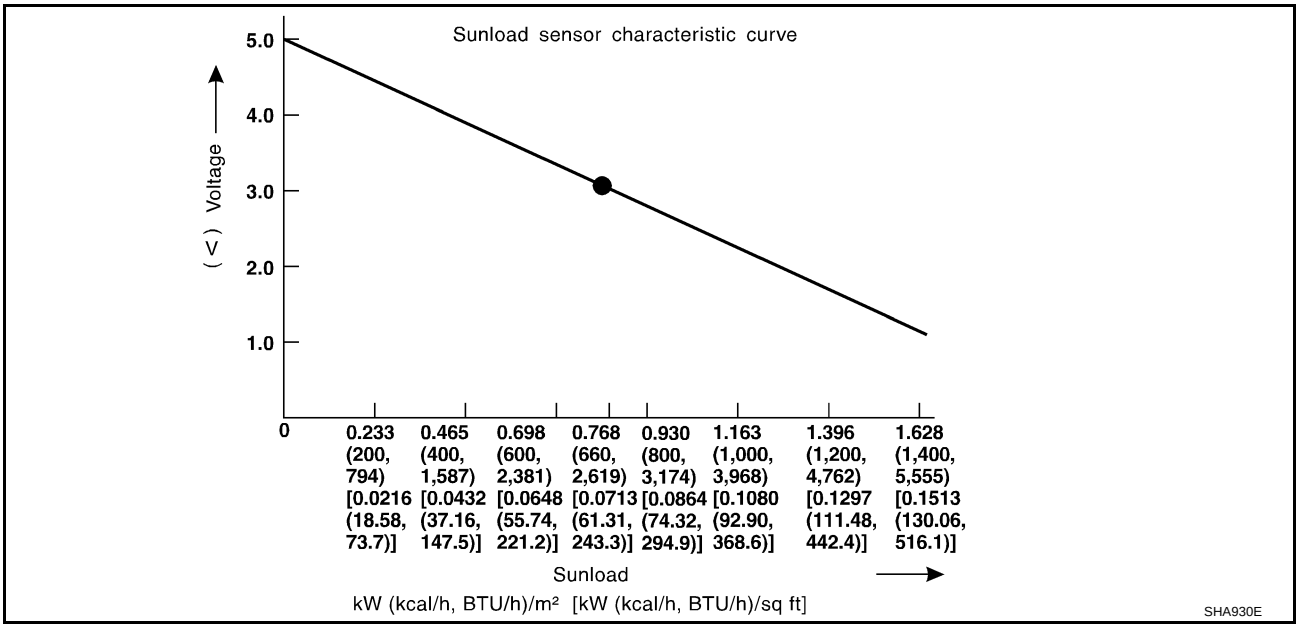

Intake Sensor Circuit

EJS001YG

COMPONENT DESCRIPTION

Intake Sensor

The intake sensor is located on the heater & cooling unit. It converts temperature of air after it passes through the evaporator into a resistance value which is then input to the auto amp.

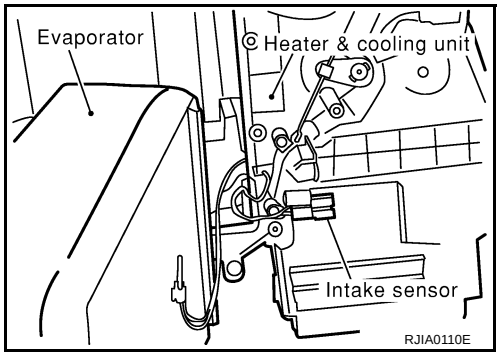

DIAGNOSTIC PROCEDURE FOR INTAKE SENSOR

SYMPTOM: Intake sensor circuit is open or shorted. (24 or –24 is indicated on auto amp. as a result of conducting self-diagnosis STEP-2.)

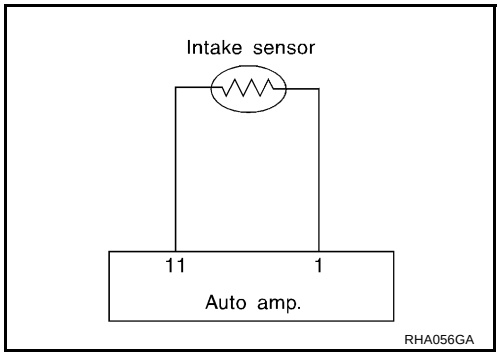

1. CHECK VOLTAGE BETWEEN INTAKE SENSOR AND GROUND

1. Disconnect intake sensor connector.
2. Turn ignition switch ON.
3. Check voltage between intake sensor harness connector M90 terminal 32 (G/OR) and ground.

32 – Ground : Approx. 5V

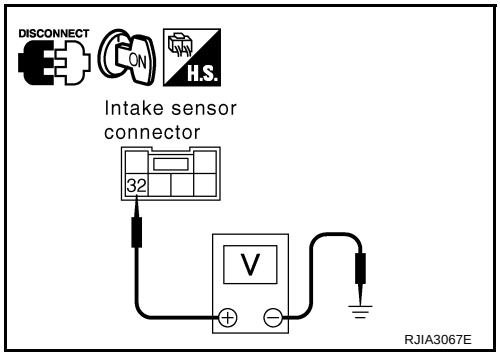

OK or NG

OK >> GO TO 2.
NG >> GO TO 4.

2. CHECK CIRCUIT CONTINUITY BETWEEN INTAKE SENSOR AND AUTO AMP.

1. Turn ignition switch OFF.
2. Disconnect auto amp. connector.
3. Check continuity between intake sensor harness connector M90 terminal 36 (R/Y) and auto amp. harness connector M119 terminal 11 (R/Y).

36 – 11 : Continuity should exist.

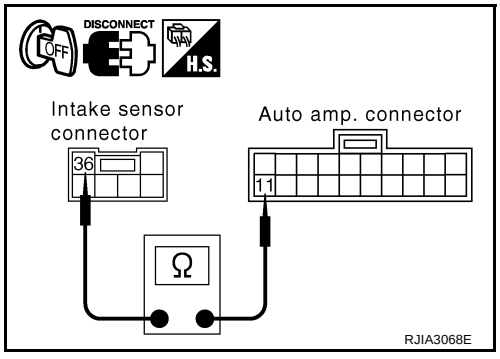

OK or NG

OK >> GO TO 3.
NG >> Repair harness or connector.

3. CHECK INTAKE SENSOR

Refer to ATC-121, "Intake Sensor" .

OK or NG

OK >> 1. Replace auto amp.
2. Go to self-diagnosis ATC-56, "FUNCTION CONFIRMATION PROCEDURE" and perform self-diagnosis STEP-2. Confirm that code No. 20 is displayed.

NG >> 1. Replace intake sensor.
2. Go to self-diagnosis ATC-56, "FUNCTION CONFIRMATION PROCEDURE" and perform self-diagnosis STEP-2. Confirm that code No. 20 is displayed.

4. CHECK CIRCUIT CONTINUITY BETWEEN INTAKE SENSOR AND AUTO AMP.

1. Turn ignition switch OFF.
2. Disconnect auto amp. connector.
3. Check continuity between intake sensor harness connector M90 terminal 32 (G/OR) and auto amp. harness connector M119 terminal 1 (G/OR).

32 – 1 : Continuity should exist.

4. Check continuity between auto amp. connector M119 terminal 1 (G/OR) and ground.

1 – Ground : continuity should not exist.

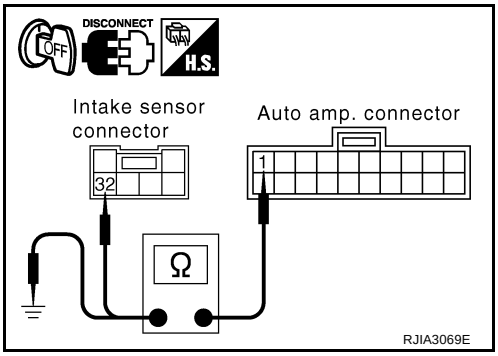

OK or NG

OK >> 1. Replace auto amp.
2. Go to self-diagnosis ATC-56, "FUNCTION CONFIRMATION PROCEDURE" and perform self-diagnosis STEP-2. Confirm that code No. 20 is displayed.

NG >> Repair harness or connector.

COMPONENT INSPECTION

Intake Sensor

After disconnecting intake sensor connector M90, measure resistance between terminals 32 and 36 at sensor side, using the table below.

Temperature °C (°F)	Resistance kΩ
–15 (5)	12.34
–10 (14)	9.62
–5 (23)	7.56
0 (32)	6.00
5 (41)	4.80
10 (50)	3.87
15 (59)	3.15
20 (68)	2.57
25 (77)	2.12
30 (86)	1.76
35 (95)	1.47
40 (104)	1.23
45 (113)	1.04

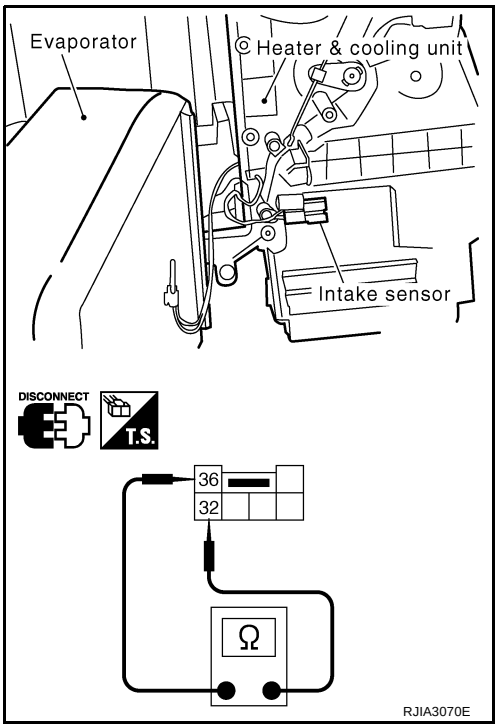

If NG, replace intake sensor.

Multiplex Communication Circuit

EJS0023R

DIAGNOSTIC PROCEDURE FOR MULTIPLEX COMMUNICATION CIRCUIT (FRONT CONTROLLER)

SYMPTOM:

- A/C system does not come on.
- A/C system cannot be controlled.

1. CHECK FOR AUTO AMP. OUTPUT

1. Turn ignition switch ON.
2. Confirm multiplex communication signal between auto amp. harness connector M119 terminal 9 (W), 20 (B) and ground using an oscilloscope.

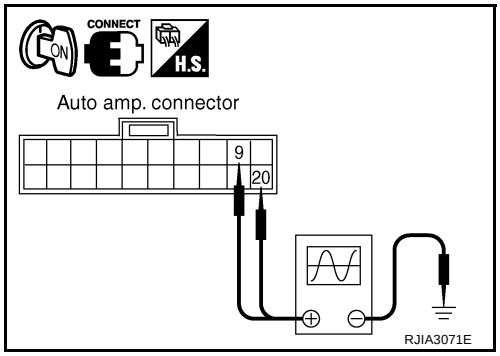

Terminals			Voltage
(+)		(-)	
Auto amp. connector	Terminal No. (wire color)		
M119	9 (W)	Ground	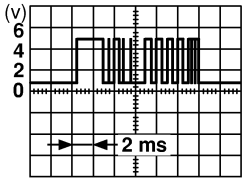 RJIA0212E
	20 (B)		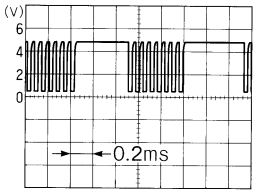 HAK0363D

OK or NG

OK >> GO TO 2
NG >> Replace auto amp.

2. CHECK CIRCUIT CONTINUITY BETWEEN AV AND NAVI C/U (AV C/U) AND AUTO AMP.

1. Turn ignition switch OFF.
2. Disconnect AV and NAVI C/U (AV C/U) and auto amp. connector.
3. Check continuity between AV and NAVI C/U harness connector B29 terminals 37(W), 39(B) or AV C/U harness connector M77 terminals 44 (W), 45 (B) and auto amp. harness connector M119 terminals 9 (W), 20 (B).

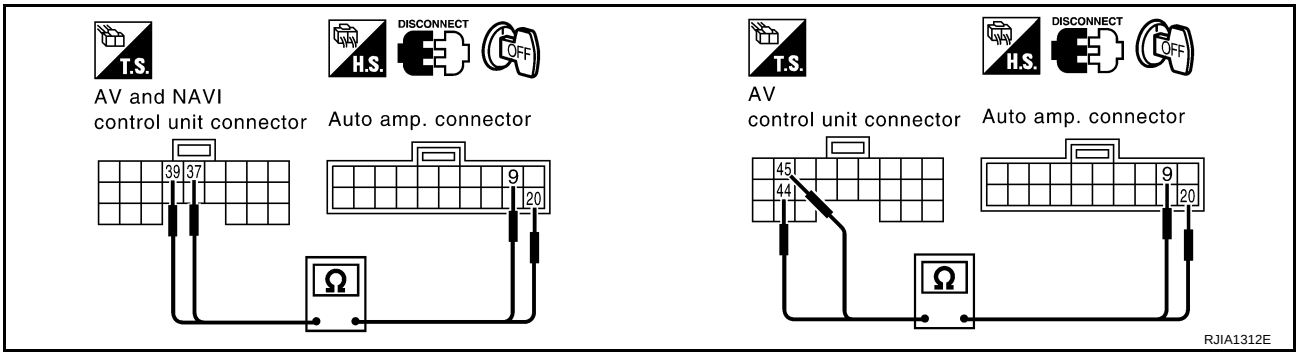

	Terminals				Continuity
	AV C/U or AV and NAVI C/U connector	Terminal No. (Wire color)	Auto amp. connector	Terminal No. (Wire color)	
AV C/U	M77	44 (W)	M119	9 (W)	Yes
	M77	45 (B)	M119	20 (B)	
AV and NAVI C/U	B29	37 (W)	M119	9 (W)	
	B29	39 (B)	M119	20 (B)	

OK or NG

OK >> GO TO 3.
NG >> Repair harness or connector.

3. CHECK FOR AUTO AMP. INPUT

1. Reconnect AV and NAVI C/U (AV C/U) and auto amp. connector.
2. Turn ignition switch ON.
3. Confirm multiplex communication signal between auto amp. harness connector M119 terminal 10 (R) and ground using an oscilloscope.

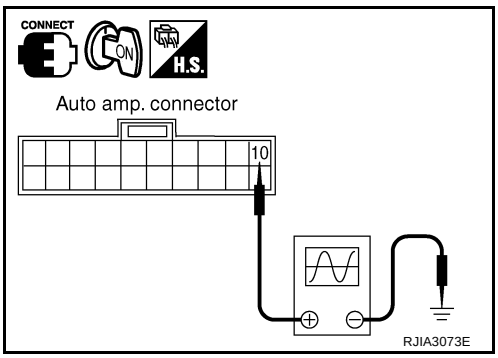

Terminals			Voltage
(+)		(-)	
Auto amp. connector	Terminal No. (wire color)		
M119	10 (R)	Ground	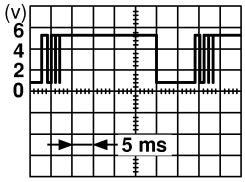 RJIA0213E

OK or NG

OK >> INSPECTION END
NG >> GO TO 4.

4. CHECK CIRCUIT CONTINUITY BETWEEN AV AND NAVI C/U (AV C/U) AND AUTO AMP.

1. Turn ignition switch OFF.
2. Disconnect AV and NAVI C/U (AV C/U) connector and auto amp. connector.
3. Check continuity between AV and NAVI C/U harness connector B29 terminal 38 (R) or AV C/U harness connector M77 terminal 43 (R) and auto amp. harness connector M119 terminal 10 (R).

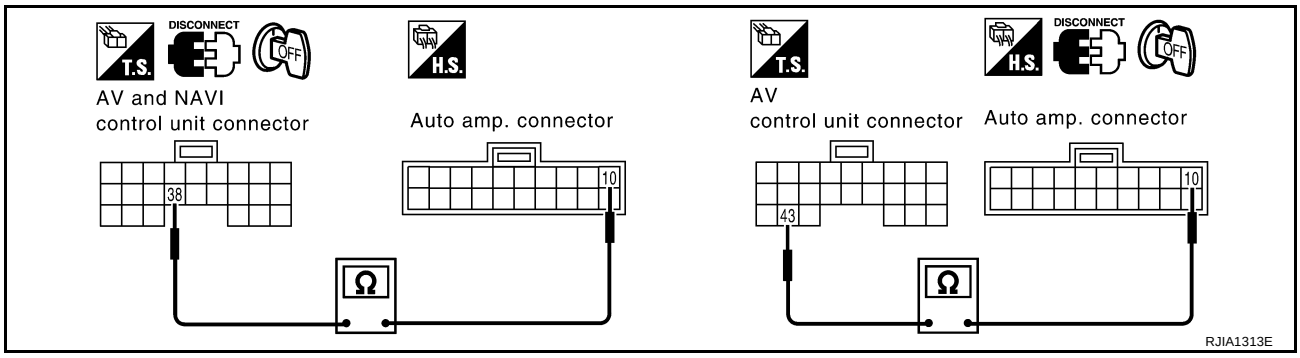

38 – 10 : Continuity should exist.

43 – 10 : Continuity should exist.

OK or NG

OK >> Replace auto amp.
NG >> Repair harness or connector.

DIAGNOSTIC PROCEDURE FOR MULTIPLEX COMMUNICATION CIRCUIT (REAR CONTROL SWITCH)

SYMPTOM:

- Rear control switch A/C operation does not work.

1. CHECK FOR AUTO AMP. OUTPUT

1. Turn ignition switch ON.
2. Confirm multiplex communication signal between auto amp. harness connector M120 terminal 30 (BR/W), 31 (GY/L) and ground using an oscilloscope.

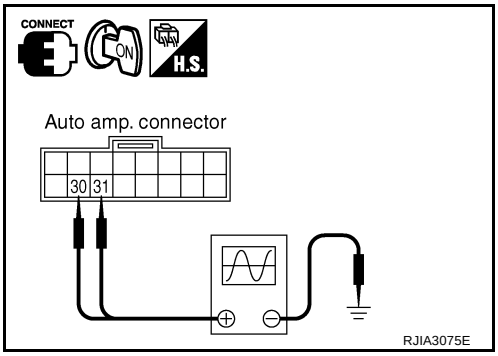

Terminals			Voltage
(+)		(-)	
Auto amp. connector	Terminal No. (wire color)		
M120	30 (BR/W)	Ground	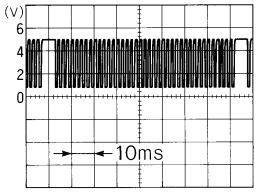
	31 (GY/L)		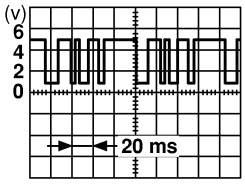

OK or NG

OK >> GO TO 2
NG >> Replace auto amp.

2. CHECK CIRCUIT CONTINUITY BETWEEN REAR CONTROL SWITCH AND AUTO AMP.

1. Turn ignition switch OFF.
2. Disconnect rear control switch and auto amp. connector.
3. Check continuity between rear control switch harness connector B502 terminals 3 (BR/W), 4 (GY/L) and auto amp. harness connector M120 terminals 30 (BR/W), 31 (GY/L).

3 – 30 : Continuity should exist.
4 – 31 : Continuity should exist.

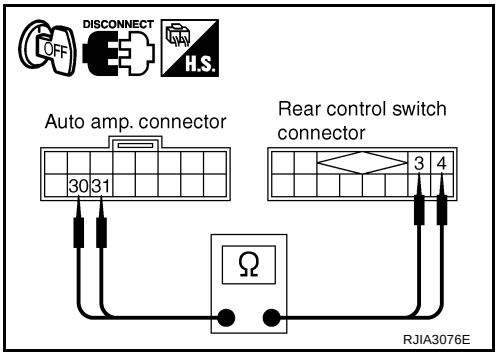

OK or NG

OK >> GO TO 3.
NG >> Repair harness or connector.

3. CHECK FOR AUTO AMP. INPUT

1. Reconnect rear control switch and auto amp. connector.
2. Turn ignition switch ON.
3. Confirm multiplex communication signal between auto amp. harness connector M119 terminal 15 (G) and ground using an oscilloscope.

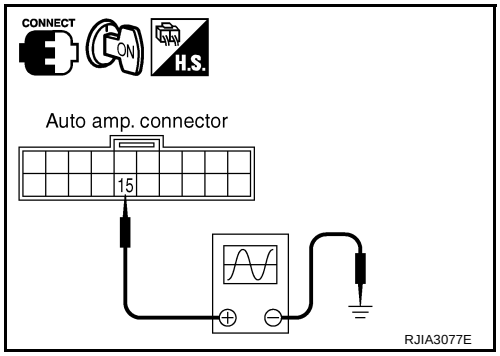

Terminals			Voltage
(+)		(-)	
Auto amp. connector	Terminal No. (wire color)		
M119	15 (G)	Ground	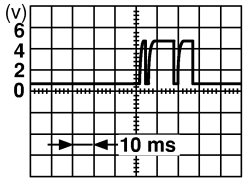 RJIA0214E

OK or NG

OK >> INSPECTION END
NG >> GO TO 4.

4. CHECK CIRCUIT CONTINUITY BETWEEN REAR CONTROL SWITCH AND AUTO AMP.

1. Turn ignition switch OFF.
2. Disconnect rear control switch connector and auto amp. connector.
3. Check continuity between rear control switch harness connector B502 terminal 11 (G) and auto amp. harness connector M119 terminal 15 (G).

11–15 : Continuity should exist.

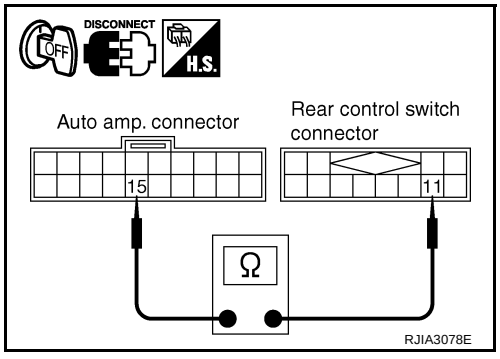

OK or NG

OK >> Replace rear control switch.
NG >> Repair harness or connector.

CONTROL UNIT

PFP:27500

Removal and Installation

EJS001Y6

REMOVAL

Refer to AV-121, "Removal and Installation of AV and NAVI Control Unit" .

INSTALLATION

Installation is basically the reverse order of removal.

AMBIENT SENSOR

PFP:27722

Removal and Installation

EJS0009Q

REMOVAL

1. Remove front grille. Refer to EI-19, "FRONT GRILLE" .
2. Disconnect ambient sensor connector, and then remove ambient sensor.

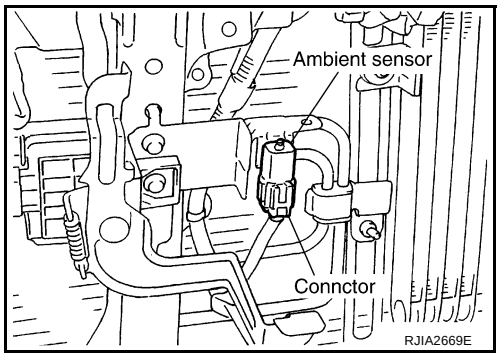

INSTALLATION

Installation is basically the reverse order of removal.

IN-VEHICLE SENSOR

PFP:27720

Removal and Installation

EJS0009R

REMOVAL

1. Remove instrument lower driver panel. Refer to IP-10, "Removal and Installation" .
2. Disconnect in-vehicle sensor connector and aspirator duct.
3. Remove mounting screw, and then remove in-vehicle sensor.

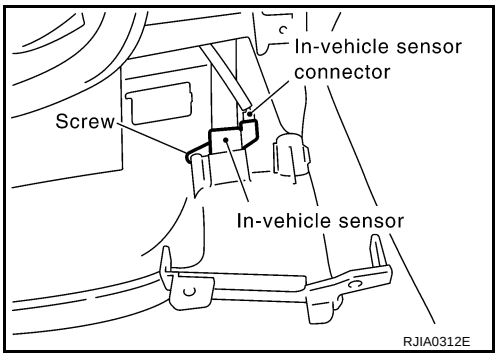

INSTALLATION

Installation is basically the reverse order of removal.

SUNLOAD SENSOR

PFP:27721

Removal and Installation

EJS0009S

REMOVAL

1. Remove sunload sensor garnish.
2. Disconnect sunload sensor connector, and then remove the sunload sensor.

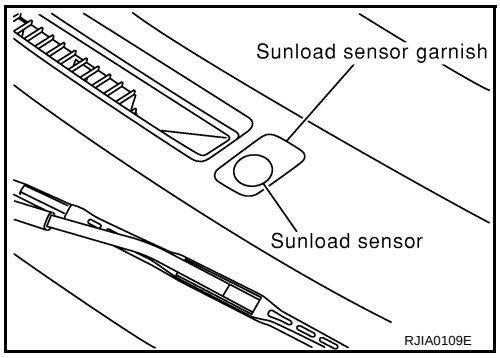

INSTALLATION

Installation is basically the reverse order of removal.

INTAKE SENSOR

PFP:27723

Removal and Installation

EJS001Y2

REMOVAL

1. Remove heater & cooling unit. Refer to ATC-137, "HEATER & COOLING UNIT ASSEMBLY" .
2. Remove the evaporator from heater & cooling unit.
3. Separate the heater & cooling unit case.
4. Remove the intake sensor.

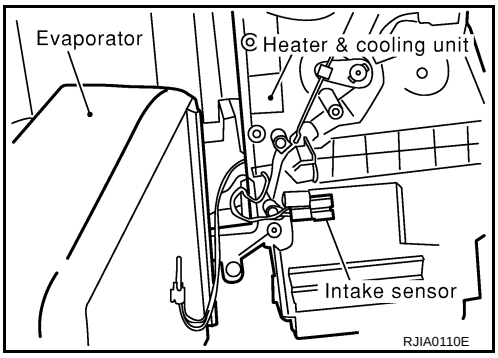

INSTALLATION

Installation is basically the reverse order of removal.

BLOWER UNIT

PFP:27200

Removal and Installation

EJS0009U

REMOVAL

1. Remove glove box assembly. Refer to IP-10, "Removal and Installation" .
2. Remove glove box cover, instrument lower assistant panel and instrument panel bracket. Refer to IP-10, "Removal and Installation" .
3. Remove the ECM and audio unit. Refer to AV-40, "Removal and Installation of Audio Unit" .
4. Disconnect the blower motor connector, intake door motor connector and auto amp. connector.
5. Remove the screws from the blower unit, and then remove it.

CAUTION:

Slide the blower unit toward right, remove location pins (2 pieces), then move it downwards.

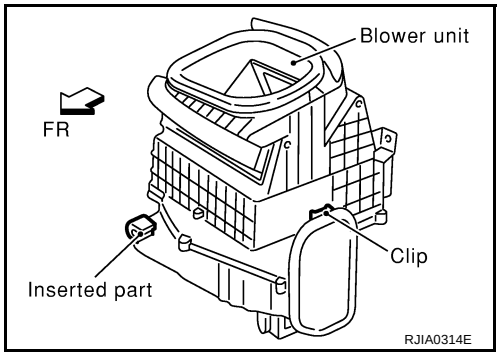

INSTALLATION

Installation is basically the reverse order of removal.

CAUTION:

- **Make sure the location pins (2 pieces) are securely installed.**

NOTE:

- When attaching the blower unit, the work will be easier if the blower motor is removed first.

Disassembly and Assembly

EJS0009V

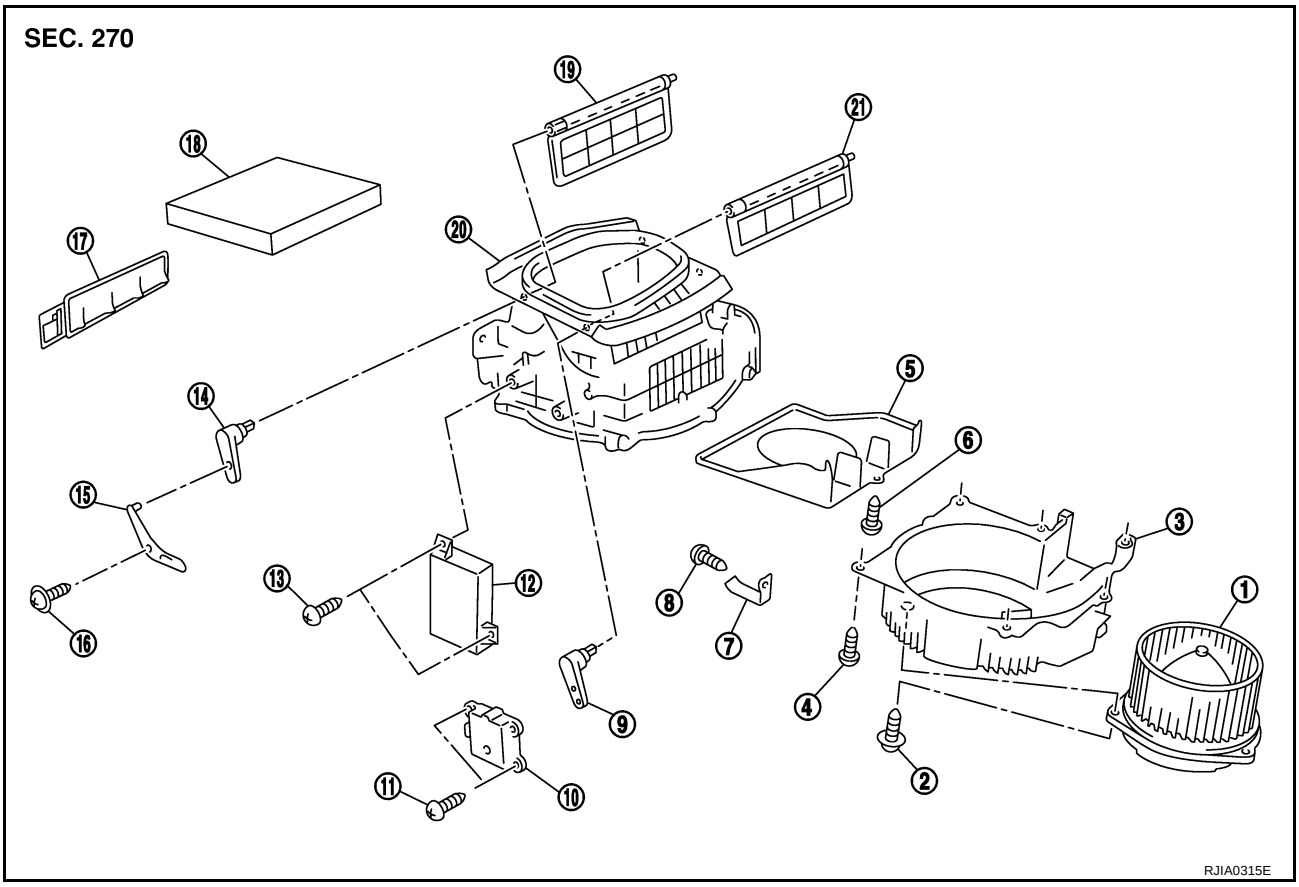

1.	Blower motor assembly	2.	Screw	3.	Lower case
4.	Screw	5.	Bell mouth	6.	Screw
7.	Clamp	8.	Screw	9.	Intake door lever No. 1
10.	Intake door motor	11.	Screw	12.	Auto amp.
13.	Screw	14.	Intake door lever No. 2	15.	Intake door link
16.	Screw	17.	Filter cover	18.	In-cabin microfilter
19.	Intake door No. 2	20.	Upper case	21.	Intake door No. 1

BLOWER MOTOR

PFP:27226

Removal and Installation

EJS001YI

REMOVAL

1. Remove the glove box and instrument lower assistant panel. Refer to IP-10, "Removal and Installation" .
2. Disconnect blower motor connector.
3. Remove the screws from blower motor, and then remove it.

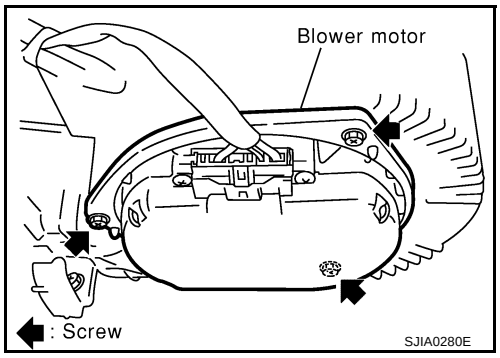

INSTALLATION

Installation is basically the reverse order of removal.

INTAKE DOOR MOTOR

PFP:27730

Removal and Installation

EJS001YJ

REMOVAL

1. Remove instrument lower assistant cover and instrument reinforcement. Refer to IP-10, "Removal and Installation" .
2. Remove ECM with bracket attached.
3. Disconnect intake door motor connector.
4. Remove mounting screws, and then remove intake door motor from blower unit.

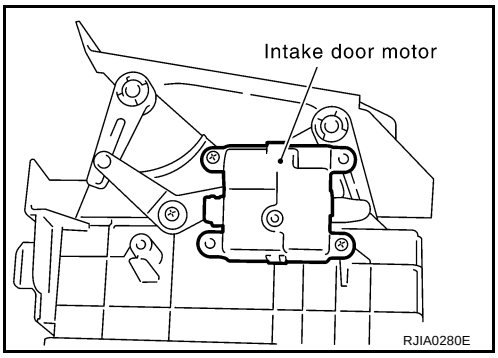

INSTALLATION

Installation is basically the reverse order of removal.

IN-CABIN MICROFILTER

PFP:27277

Removal and Installation

EJS00087

FUNCTION

Air inside passenger compartment is kept clean at either recirculation or fresh mode by installing in-cabin microfilter into blower unit.

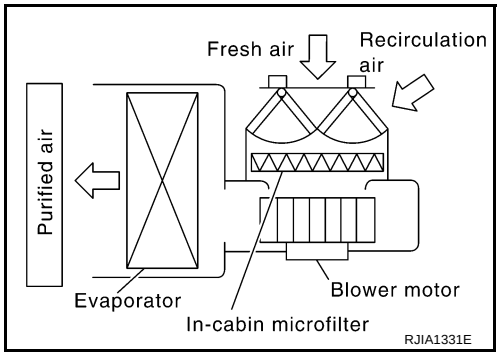

REPLACEMENT TIMING

Replace in-cabin microfilter.
Refer to MA-7, "CHASSIS AND BODY MAINTENANCE" in SCHEDULE 1 and MA-9, "CHASSIS AND BODY MAINTENANCE" in SCHEDULE 2.

Caution label is fixed inside the glove box.

REPLACEMENT PROCEDURES

1. Remove the glove box. Refer to IP-10, "Removal and Installation" .
2. Remove the center cover of the glove box cover.

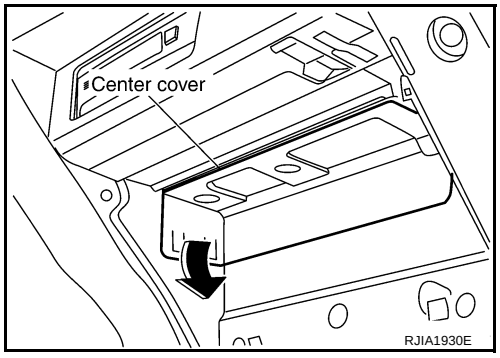

3. Remove filter cover.
4. Take out the in-cabin microfilter from blower unit.
5. Replace with new one and reinstall on blower unit.
6. Reinstall the glove box.

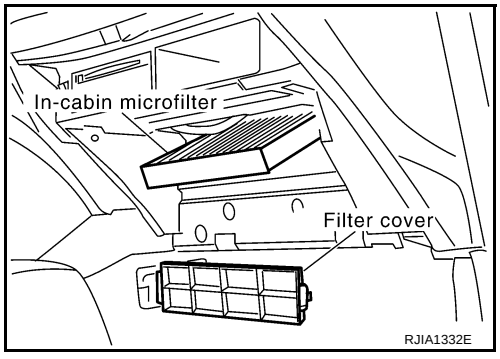

HEATER & COOLING UNIT ASSEMBLY

PFP:27110

Removal and Installation

EJS004T5

REMOVAL

1. Remove engine cover and air cleaner cover. Refer to EM-11, "ENGINE ROOM COVER" and EM-15, "AIR CLEANER AND AIR DUCT" .
2. Use a refrigerant collecting equipment (for HFC-134a) to discharge refrigerant.
3. Remove the tower bar. Refer to FSU-5, "FRONT SUSPENSION ASSEMBLY" .
4. Drain coolant from cooling system. Refer to CO-9, "Changing Engine Coolant" .
5. Disconnect two heater hoses from heater core pipe.
6. Disconnect low-pressure flexible hose and high-pressure pipe from evaporator.

   CAUTION:
   Cap or wrap the open ends of the pipe with a suitable material such as vinyl tape to avoid the entry of air.
7. Remove instrument panel. Refer to IP-10, "Removal and Installation" .
8. Remove blower unit. Refer to ATC-132, "BLOWER UNIT" .
9. Remove clips of vehicle harness from steering member.

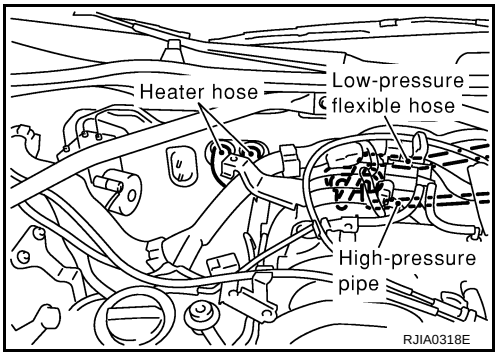

10. Remove mounting nuts, and then instrument stays (driver side, passenger side).
11. Remove defroster nozzle and ventilator ducts.

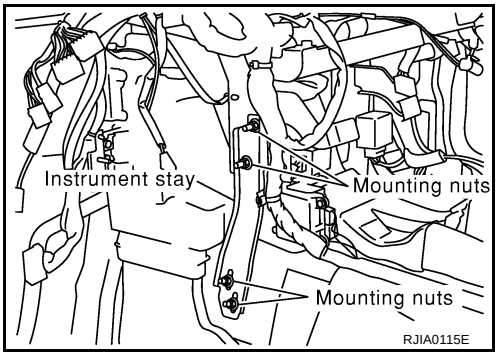

12. Remove mounting bolts from heater & cooling unit.

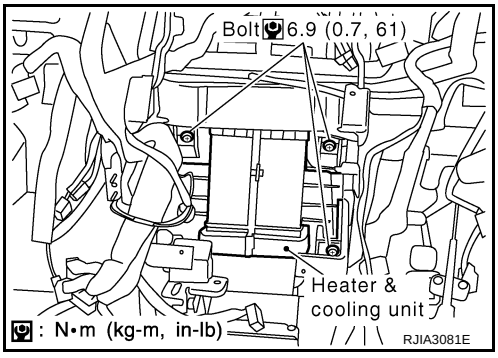

13. Remove steering member.

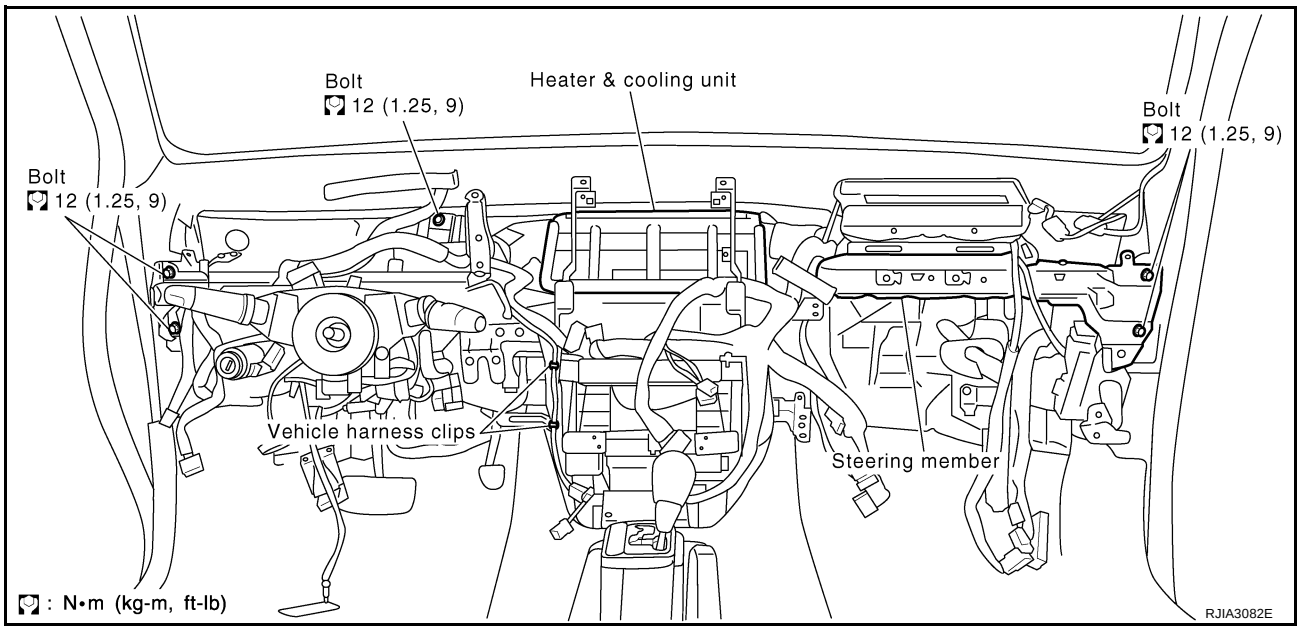

14. Remove heater & cooling unit.

INSTALLATION

Installation is basically the reverse order of removal.

NOTE:

When filling radiator with coolant, refer to CO-9, "Changing Engine Coolant" . Recharge the A/C system.

Disassembly and Assembly

EJS004T6

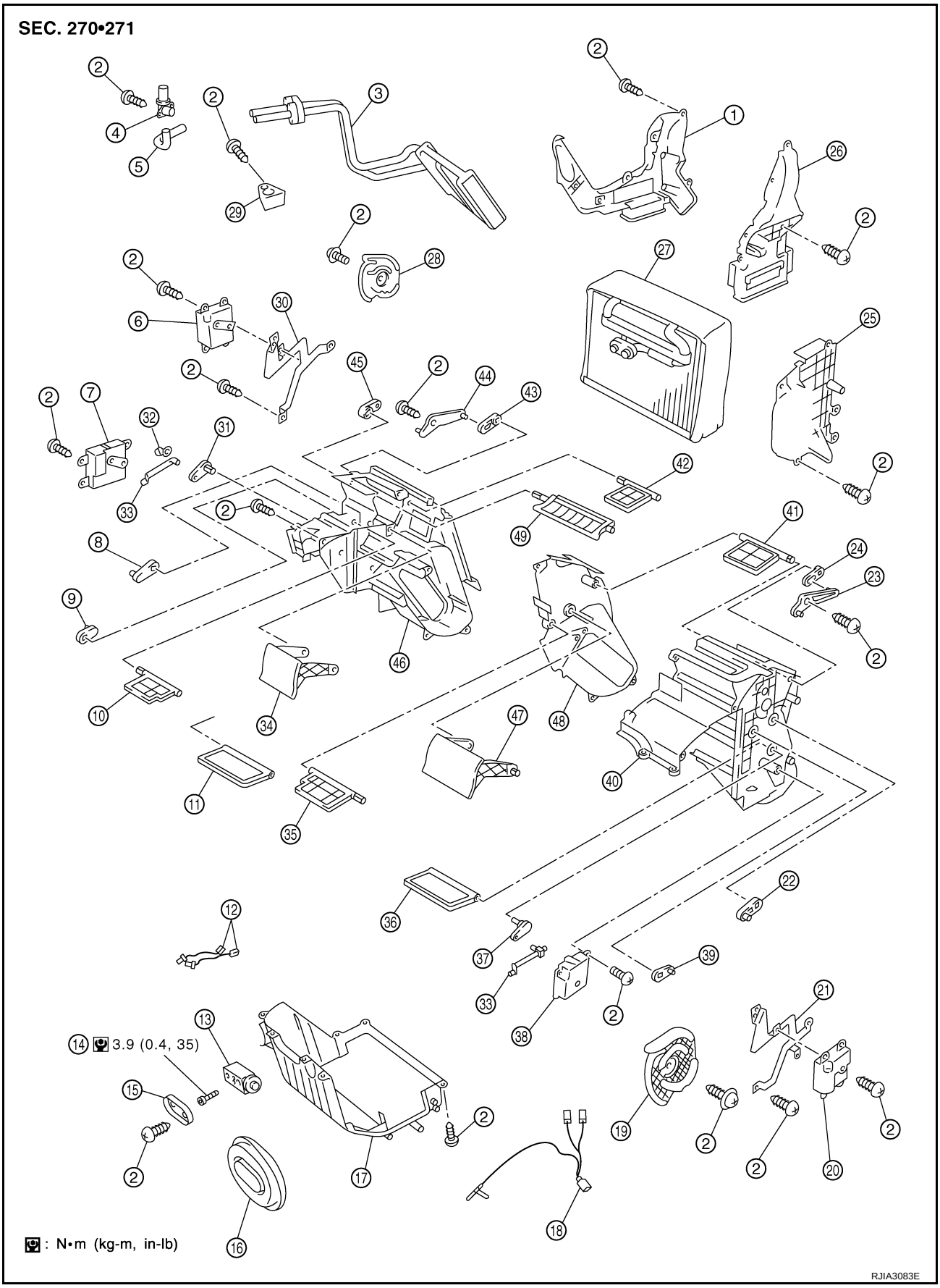

HEATER & COOLING UNIT ASSEMBLY

1. Foot duct (right)
2. Screw
3. Heater core
4. Aspirator
5. Aspirator duct
6. Mode door motor (passenger side)
7. Air mix door motor (passenger side)
8. Ventilator door lever (right)
9. Bi-level door lever (right)
10. Bi-level door (right)
11. Air mix door (right)
12. Sub harness
13. Expansion valve
14. Bolt
15. Expansion valve cover
16. Cooler grommet
17. Heater & cooling unit case (lower)
18. Intake sensor
19. Side link (left)
20. Mode door motor (driver side)
21. Mode door motor bracket (left)
22. Ventilator door lever (left)
23. Foot door link (left)
24. Foot door lever (left)
25. Evaporator cover
26. Foot duct (left)
27. Evaporator
28. Side link (right)
29. Heater pipe bracket
30. Mode door motor bracket (right)
31. Air mix door lever (right)
32. Rod holder
33. Rod
34. Ventilator door (right)
35. Bi-level door (left)
36. Air mix door (left)
37. Air mix door lever (left)
38. Air mix door motor (driver side)
39. Bi-level door lever (left)
40. Heater & cooling unit case (driver side)
41. Foot door (left)
42. Foot door (right)
43. Foot door lever (right)
44. Foot door link (right)
45. Defroster door lever (right)
46. Heater & cooling unit case (passenger side)
47. Ventilator door (left)
48. Heater & cooling unit case (center)
49. Defroster door

HEATER CORE

PFP:27140

Removal and Installation

EJS004T9

REMOVAL

1. Remove heater & cooling unit. Refer to ATC-137, "HEATER & COOLING UNIT ASSEMBLY" .
2. Remove mounting screw, and then remove foot duct (right).

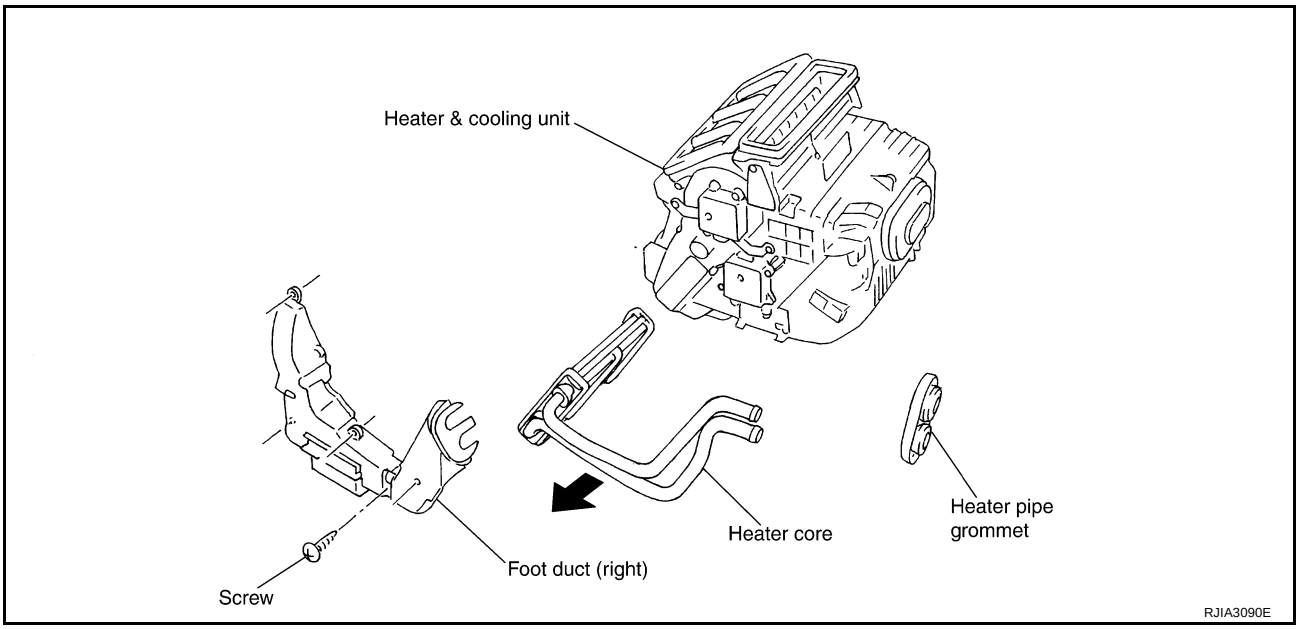

3. Remove heater core from heater & cooling unit.

INSTALLATION

Installation is basically the reverse order of removal.

MODE DOOR MOTOR

PFP:27731

Removal and Installation

EJS001YK

REMOVAL

Driver Side Mode Door Motor

1. Remove instrument lower driver panel. Refer to IP-10, "Removal and Installation" .
2. Disconnect mode door motor connector.
3. Remove mounting screw, and then remove mode door motor.

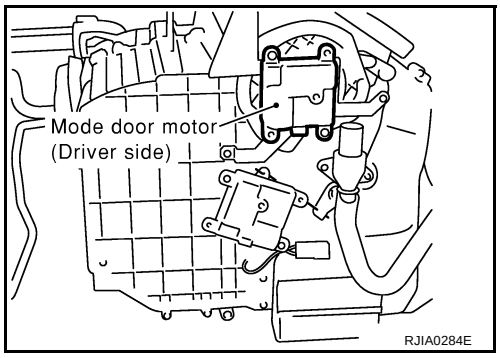

Passenger Side Mode Door Motor

1. Remove blower unit. Refer to ATC-132, "BLOWER UNIT" .
2. Disconnect mode door motor connector.
3. Remove mounting screw, and then remove mode door motor.

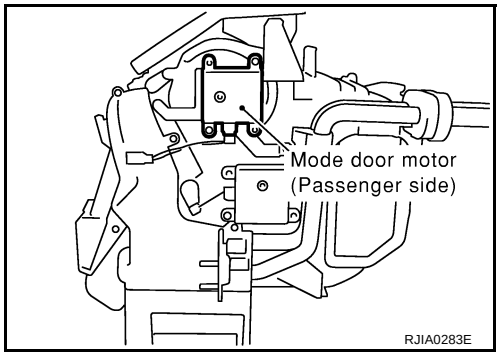

INSTALLATION

Installation is basically the reverse order of removal.

AIR MIX DOOR MOTOR

PFP:27732

Removal and Installation

EJS001YL

REMOVAL

Driver Side Air Mix Door Motor

1. Remove instrument lower driver panel. Refer to IP-10, "Removal and Installation" .
2. Remove air mix door rod from rod holder.
3. Disconnect air mix door motor connector.
4. Remove mounting screws, and then remove the air mix door motor.

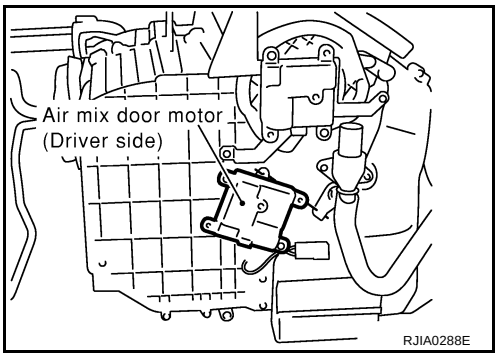

Passenger Side Air Mix Door Motor

1. Remove blower unit. Refer to ATC-132, "BLOWER UNIT" .
2. Remove air mix door rod from rod holder.
3. Disconnect air mix door motor connector.
4. Remove mounting screws, and then remove the air mix door motor.

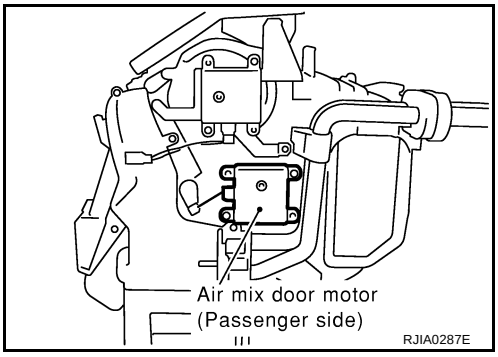

INSTALLATION

Installation is basically the reverse order of removal.

REAR VENTILATOR DOOR MOTOR

PFP:27141

Removal and Installation

EJS004T7

REMOVAL

1. Remove rear ventilator duct No.1. Refer to ATC-147, "Removal of Rear Ventilator Ducts" .

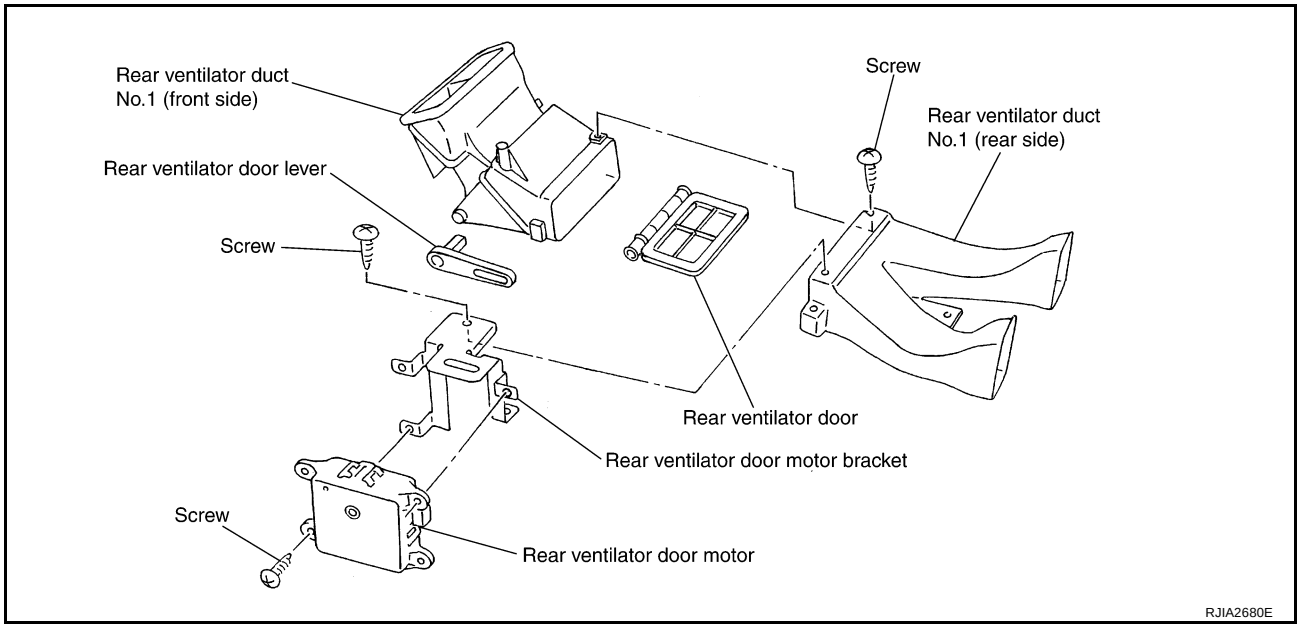

2. Remove mounting screw, and then remove rear ventilator door motor bracket.
3. Remove mounting screw, and then remove rear ventilator door motor.

INSTALLATION

Installation is basically the reverse order of removal.

DUCTS AND GRILLES

PFP:27860

Removal and Installation

EJS001YM

REMOVAL

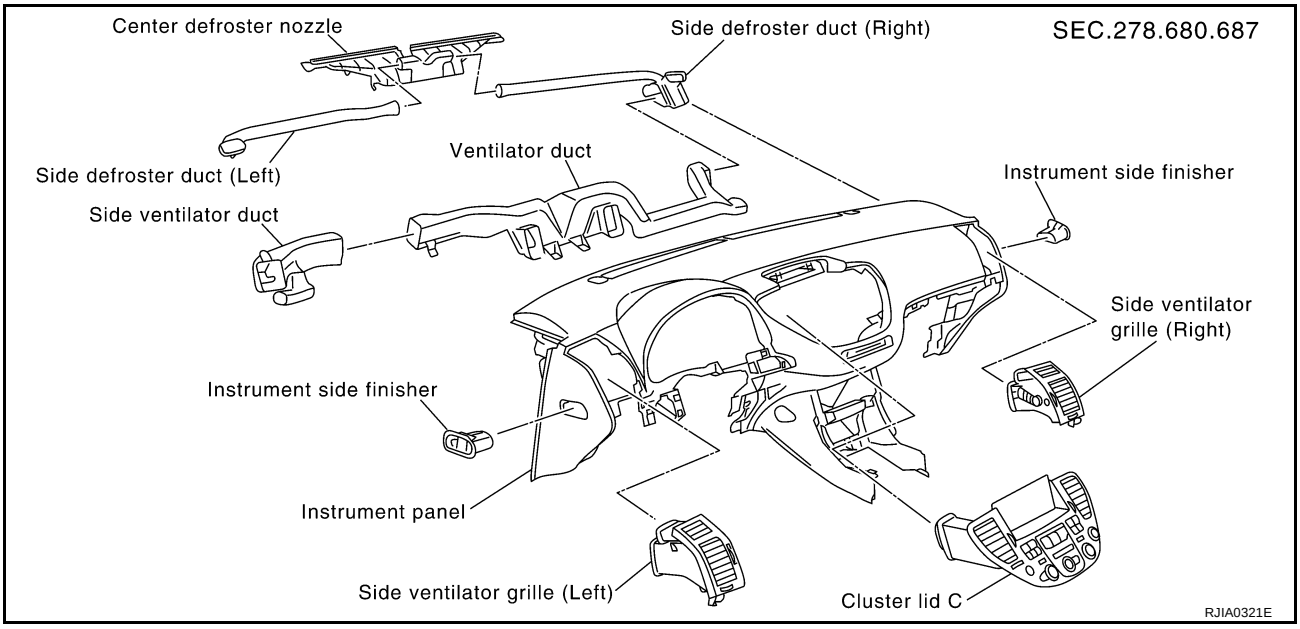

Removal of Center Ventilator Grille

1. Remove cluster lid C. Refer to IP-10, "Removal and Installation" .
2. Remove mounting screw and clips, and then remove center ventilator grille.

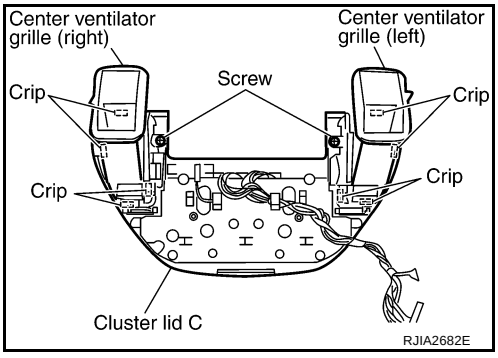

Removal of Side Ventilator Grille

1. Remove instrument finisher. Refer to IP-10, "Removal and Installation" .
2. Remove mounting screw and clips.
3. Remove side ventilator grille (right).
4. Remove instrument lower driver panel. Refer to IP-10, "Removal and Installation" .
5. Remove side ventilator grille (left) mounting clips.
6. Remove side ventilator grille (left).

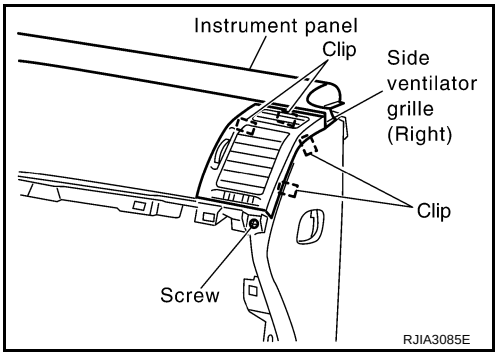

Removal of Rear Ventilator Grille

1. Remove console rear cover. Refer to IP-10, "Removal and Installation" .
2. Remove mounting screws, and then remove rear ventilator grille.

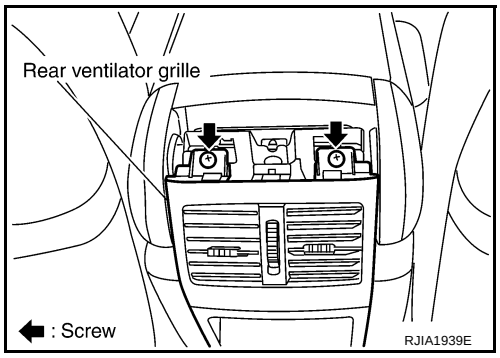

Removal of Rear Ventilator Side Grille

Remove mounting clips, and then remove rear ventilator side grille.

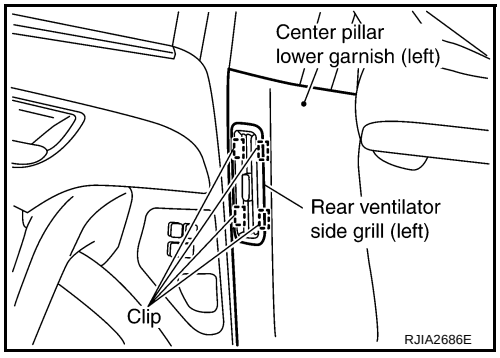

Removal of Defroster Nozzle, Duct and Ventilator Duct

1. Remove instrument panel. Refer to IP-10, "Removal and Installation" .
2. Remove mounting clips and harness clip.

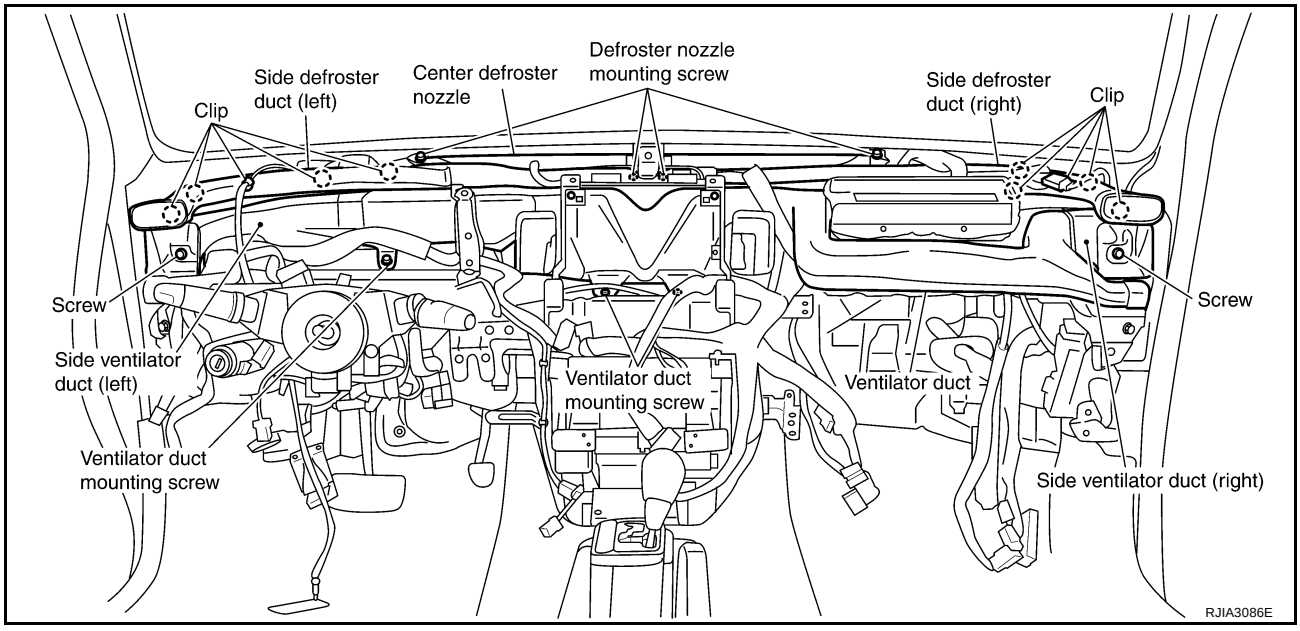

3. Remove side defroster duct.
4. Remove mounting screws, and then remove defroster nozzle.
5. Remove mounting screw, and then remove side ventilator duct.
6. Remove mounting screws, and then remove ventilator duct.

Removal of Rear Ventilator Ducts

1. Remove console box. Refer to IP-10, "Removal and Installation" .
2. Remove rear ventilator duct No. 2.
3. Remove instrument panel. Refer to IP-10, "Removal and Installation" .

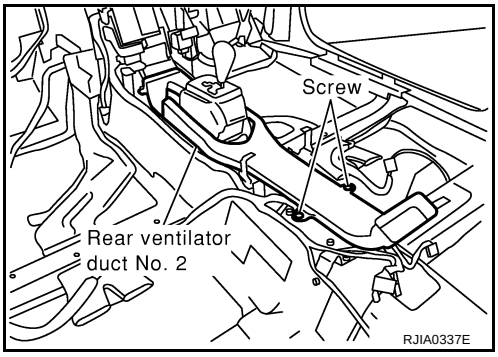

4. Remove mounting screws, and then remove rear ventilator duct No. 1 (rear side).
5. Disconnect rear ventilator door motor connector.
6. Remove rear ventilator duct No. 1 (front side).

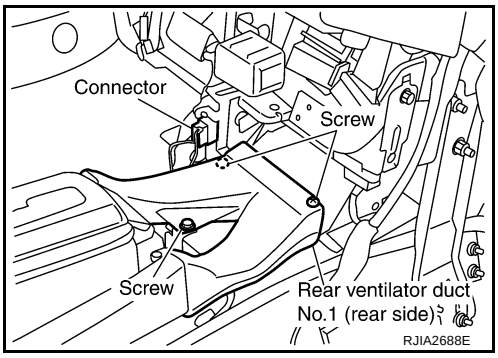

Removal of Rear Ventilator Side Ducts

1. Remove front door finisher. Refer to EI-31, "DOOR FINISHER" .
2. Remove mounting screws, and then remove rear ventilator side duct No. 1.

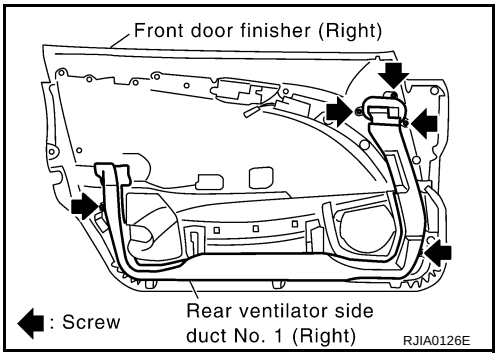

3. Remove center pillar upper garnish. Refer to EI-41, "CENTER PILLAR UPPER GARNISH" .
4. Remove mounting screws and clip, and then remove rear ventilator side duct No. 2.

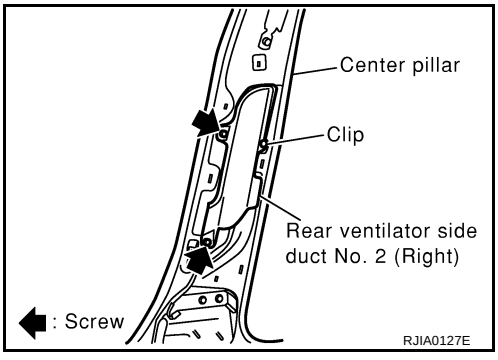

Removal of Foot Duct

1. Remove heater & cooling unit. Refer to ATC-137, "HEATER & COOLING UNIT ASSEMBLY" .
2. Remove mounting screws, and then remove foot duct (right).
3. Remove aspirator from heater & cooling unit.
4. Remove mounting screws, and then remove foot duct (left).

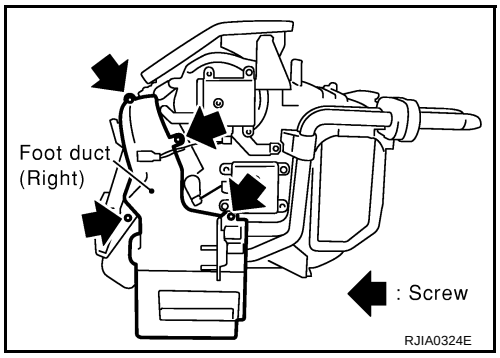

Removal of Floor Duct

1. Remove the front seats and console box. Refer to SE-187, "FRONT SEAT" and IP-10, "Removal and Installation" .
2. Peel back the floor trim to a point where the floor duct is visible.
3. Remove the floor duct No. 2 (left and right).
4. Remove the mounting screw from the floor duct No.1.
5. Remove the floor duct No. 1 (left and right).

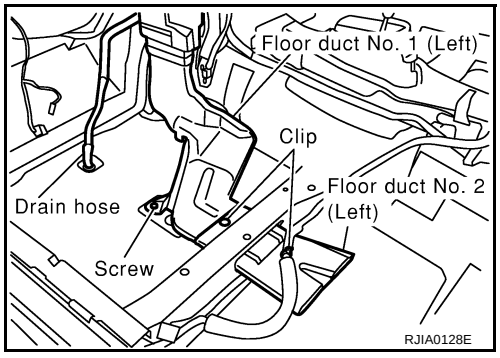

INSTALLATION

Installation is basically the reverse order of removal.

REFRIGERANT LINES

PFP:92600

HFC-134a (R-134a) Service Procedure

EJS000KE

SETTING OF SERVICE TOOLS AND EQUIPMENT

Discharging Refrigerant

WARNING:

Avoid breathing A/C refrigerant and lubricant vapor or mist. Exposure may irritate eyes, nose and throat. Remove HFC-134a (R-134a) from A/C system using certified service equipment meeting requirements of SAE J2210 [HFC-134a (R-134a) recycling equipment] or J2209 [HFC-134a (R-134a) recovery equipment]. If accidental system discharge occurs, ventilate work area before resuming service. Additional health and safety information may be obtained from refrigerant and lubricant manufacturers.

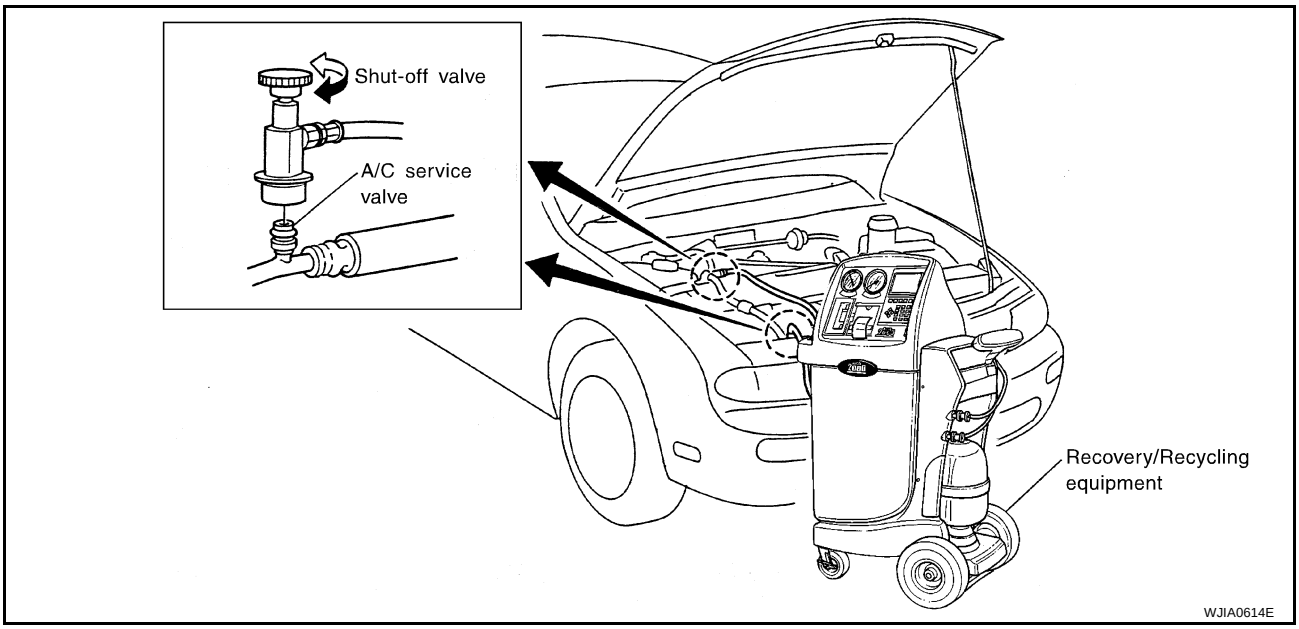

Evacuating System and Charging Refrigerant

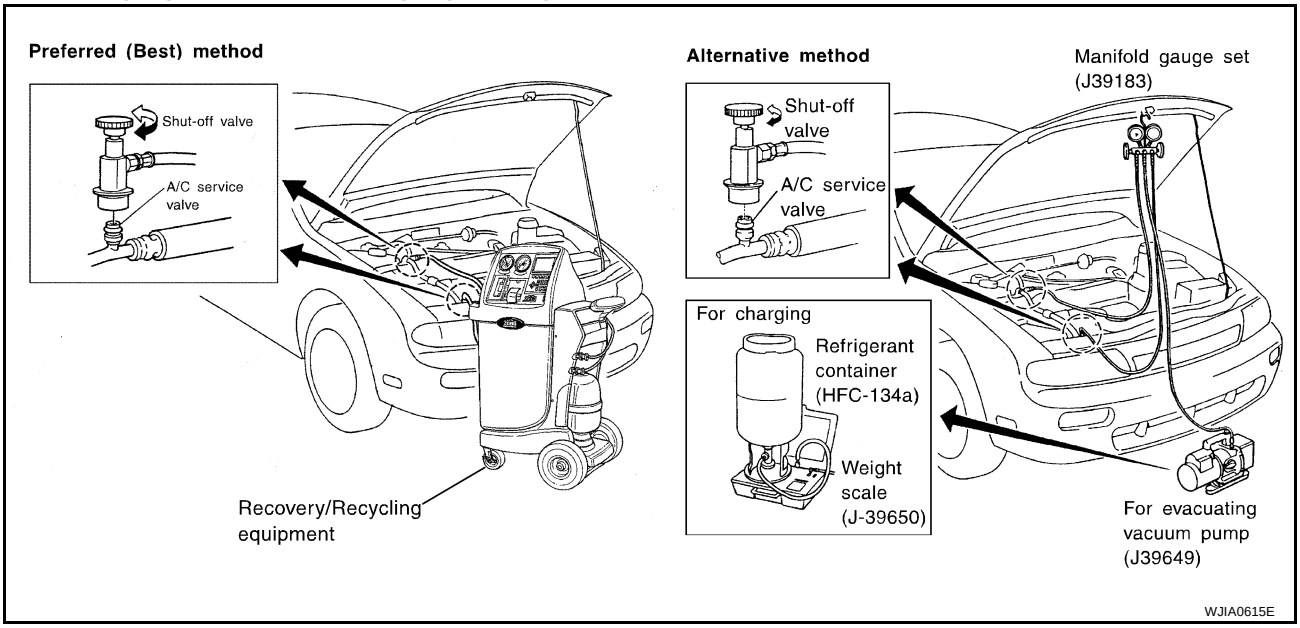

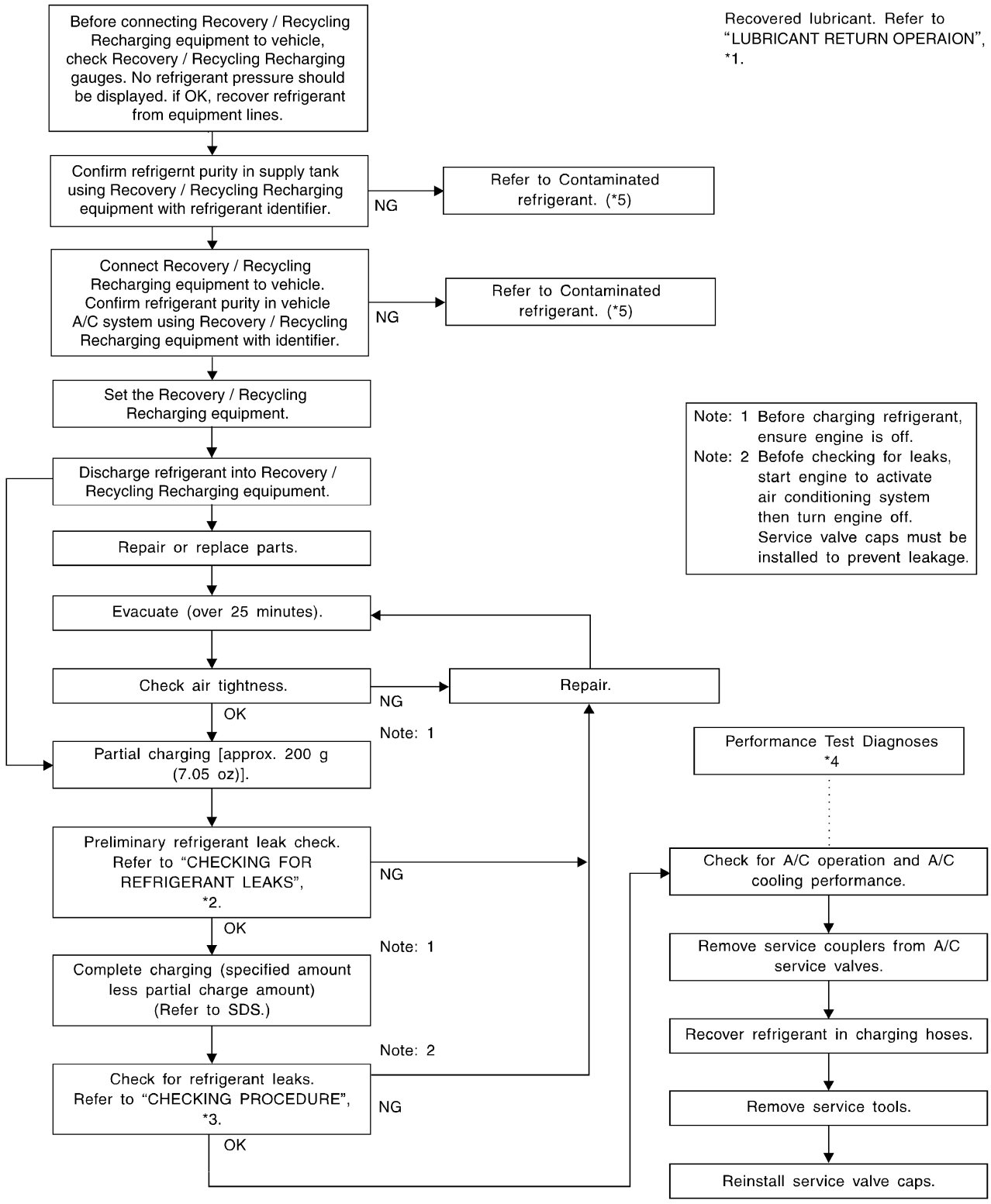

*1 ATC-24, "LUBRICANT RETURN OPERATION".

*2 ATC-163, "Checking for Refrigerant Leaks".

*3 ATC-165, "CHECKING PROCEDURE".

*4 ATC-97, "PERFORMANCE TEST DIAGNOSIS".

*5 ATC-6, "CONTAMINATED REFRIGERANT".

Components

EJS004T8

Refer to ATC-7, "Precautions for Refrigerant Connection" .

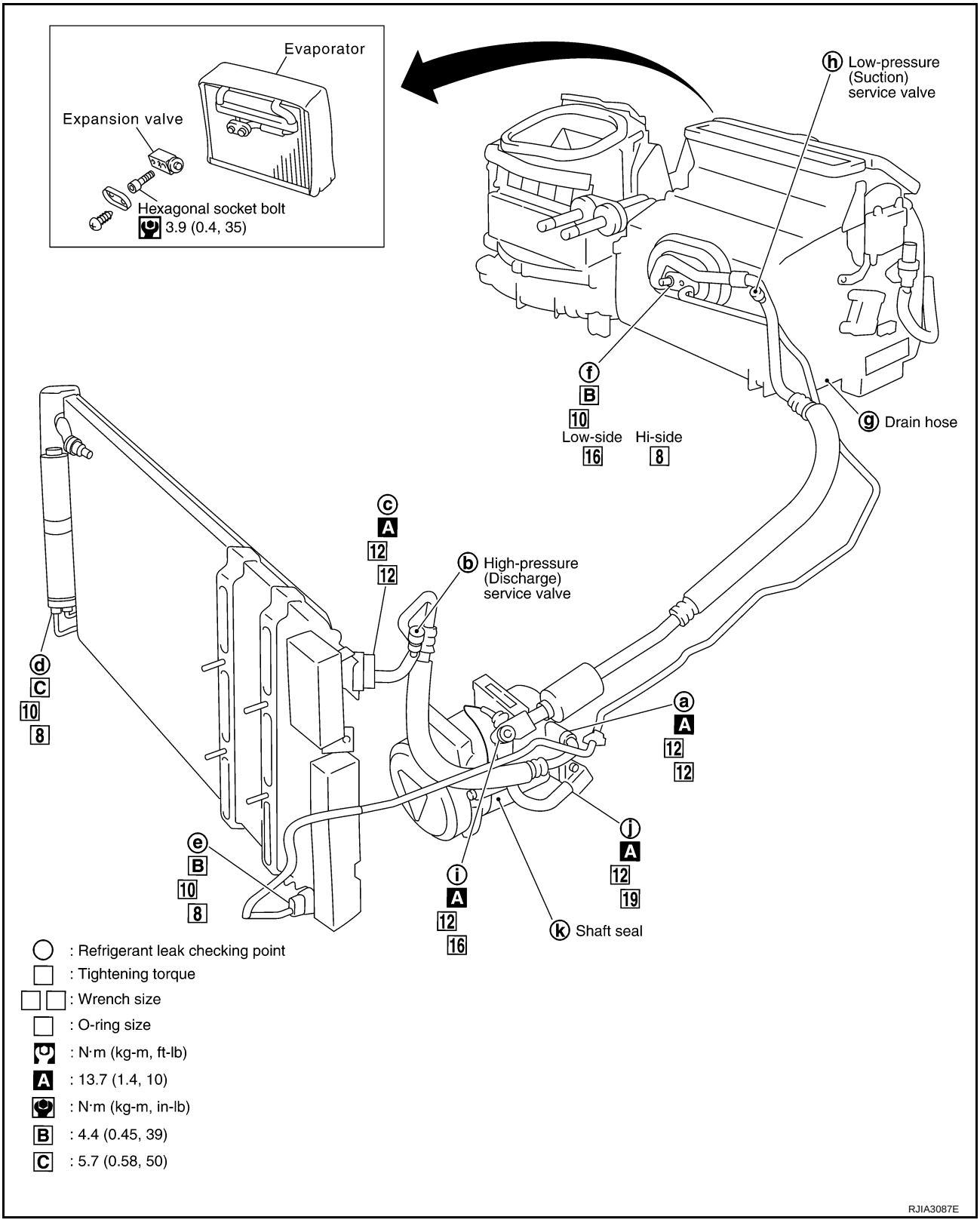

Removal and Installation of Compressor

EJS0026Z

REMOVAL

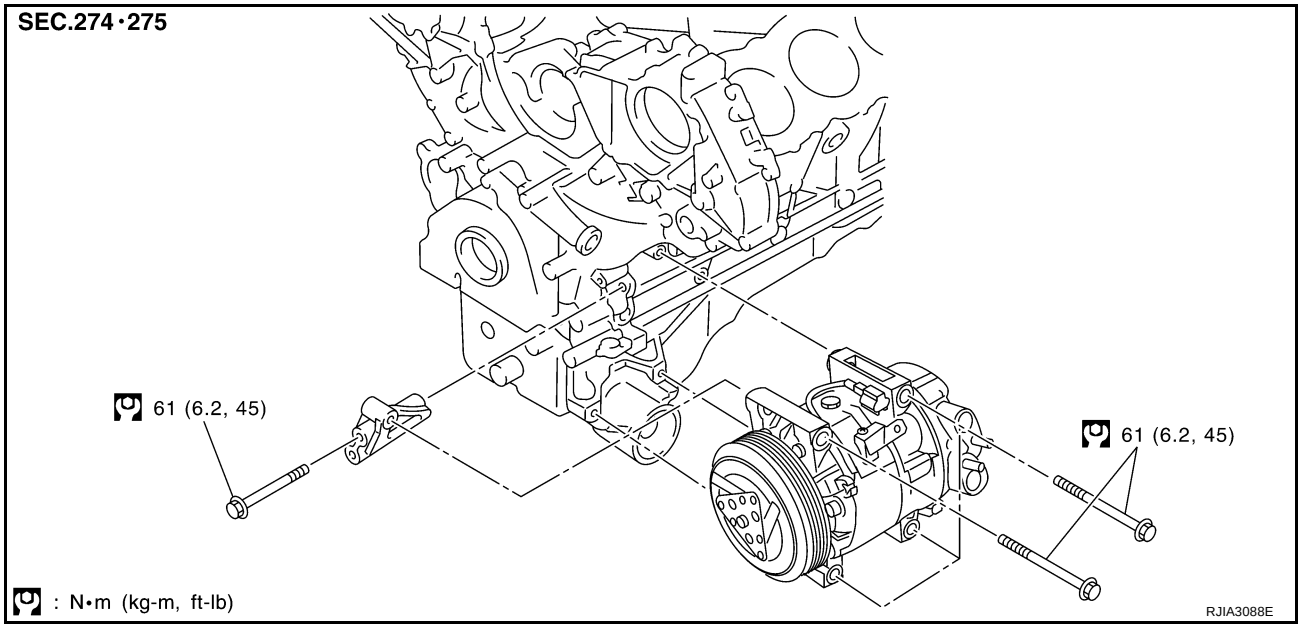

1. Remove engine cover and air cleaner cover. Refer to EM-11, "ENGINE ROOM COVER" .
2. Use a refrigerant collecting equipment (for HFC-134a) to discharge the refrigerant.
3. Remove engine under cover, using power tools.
4. Remove air cleaner assembly, air duct and air inlet pipe. Refer to EM-15, "AIR CLEANER AND AIR DUCT" .
5. Remove compressor-alternator belt. Refer to MA-12, "Checking Drive Belts" .

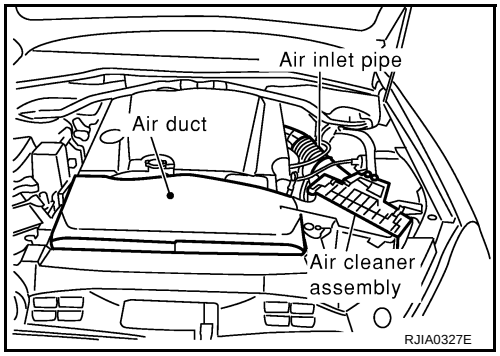

6. Remove mounting nuts from both high-pressure flexible hose and low-pressure flexible hose.

   CAUTION:
   Cap or wrap the joint of the pipe with a suitable material such as vinyl tape to avoid the entry of air.
7. Disconnect compressor connectors (magnet clutch and ECV).
8. Remove mounting bolt from radiator pipe bracket.
9. Remove high-pressure flexible hose. Refer to ATC-157, "Removal and Installation of High-Pressure Flexible Hose" .

   CAUTION:
   Cap or wrap the joint of the pipe with a suitable material such as vinyl tape to avoid the entry of air.
10. Remove high-pressure pipe mounting clips.
11. Remove mounting bolts from compressor, using power tools.
12. Move radiator hose to right side of the vehicle.
13. Remove compressor from the upper side of the vehicle.

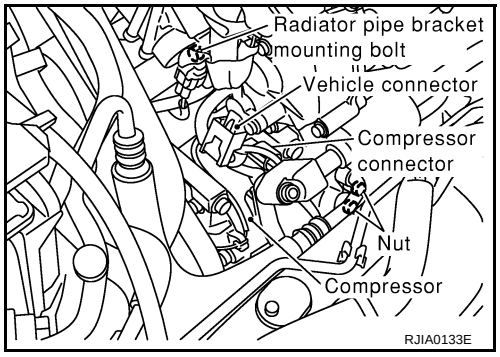

INSTALLATION

Installation is basically the reverse order of removal.

CAUTION:

- **Replace low-pressure flexible hose and high-pressure flexible hose O-rings with new ones. Apply compressor oil prior to installation.**
- **When recharging refrigerant, check for leaks.**

Removal and Installation of Compressor Clutch

EJS000KF

REMOVAL

Overhaul

1. When removing center bolt, hold clutch disc with a wrench.

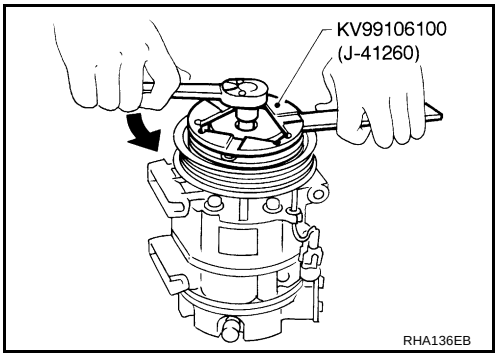

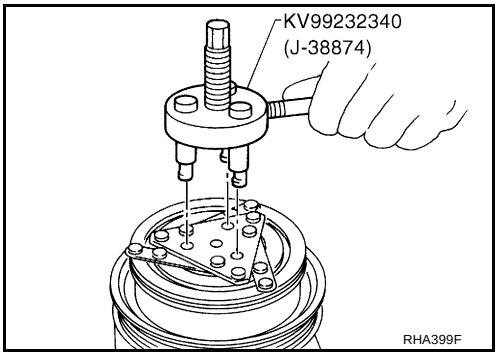

2. Remove clutch disc using the clutch disc puller.

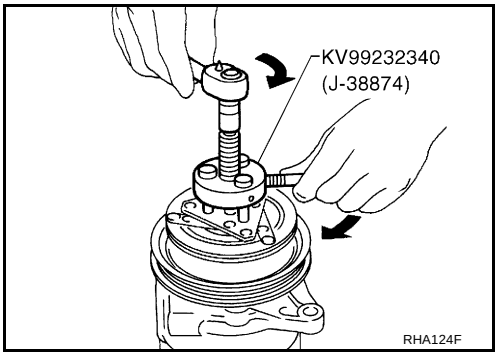

3. Remove snap ring using external snap ring pliers.

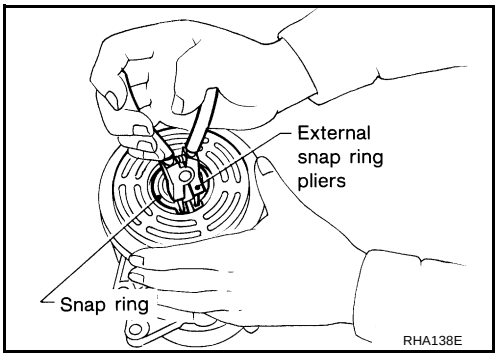

4. Position center pulley puller on the end of the driveshaft, and remove pulley assembly using any commercially available pulley puller.
   To prevent the pulley groove from being deformed, the puller claws should be positioned at the edge of the pulley assembly.

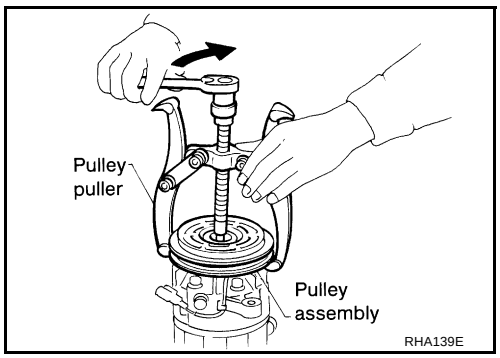

5. Remove field coil harness clip using a pair of pliers.

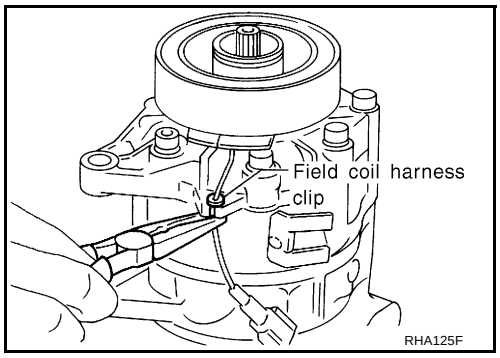

6. Remove snap ring using external snap ring pliers.

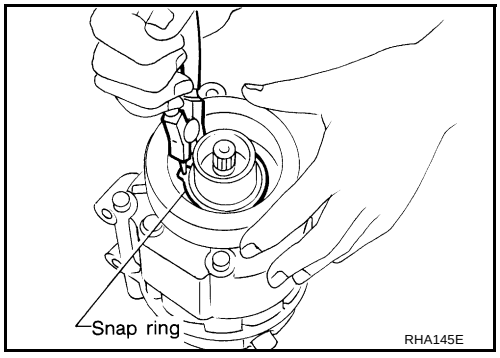

Inspection

Clutch disc
If the contact surface shows signs of damage due to excessive heat, replace clutch disc and pulley.

Pulley
Check appearance of the pulley assembly. If contact surface of pulley shows signs of excessive grooving, replace clutch disc and pulley. Pulley assembly contact surfaces should be cleaned with a suitable solvent before reinstallation.

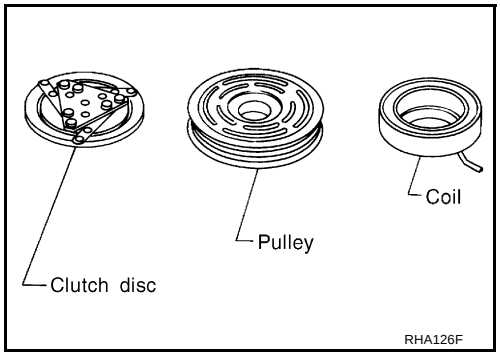

Coil

Check coil for loose connection or cracked insulation.

INSTALLATION

1. Install field coil.
   Be sure to align coil pin with hole in the front head of the compressor.
2. Install field coil harness clip using a screwdriver.

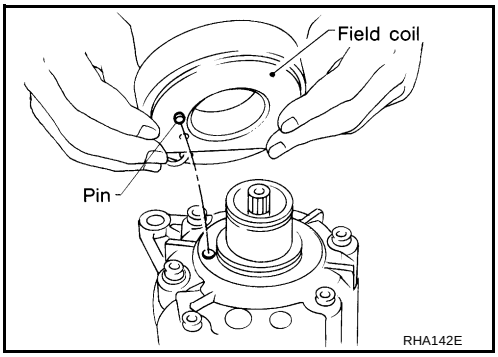

3. Install pulley assembly using the installer and a hand press, and then install snap ring using snap ring pliers.

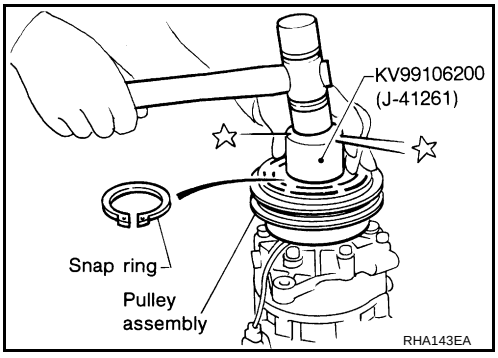

4. Install clutch disc on the drive shaft, together with the original shim(s). Press the clutch disc down by hand.

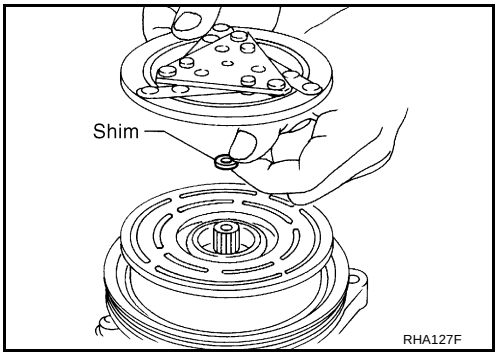

5. Using a holder to prevent clutch disc rotation.

   Tightening torque **14 N·m (1.4 kg-m, 10 ft-lb)**

   After tightening the bolt, insure the pulley rotates smoothly.

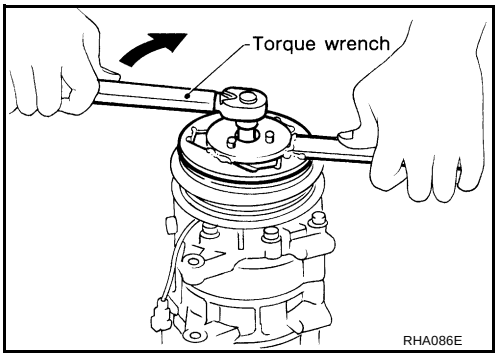

6. Check clearance around the entire periphery of clutch disc.

   Disc to pulley clearance **: 0.25 - 0.6 mm (0.010 - 0.024 in)**

   If the specified clearance is not obtained, replace adjusting spacer and readjust.

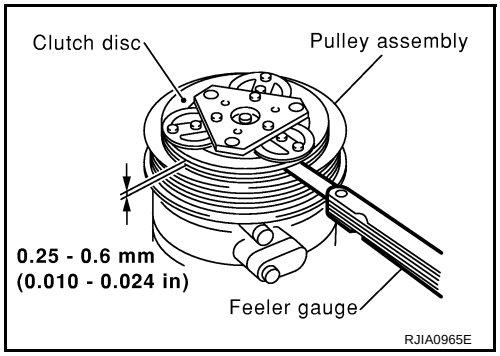

Break-In Operation

When replacing compressor clutch assembly, always carry out the break-in operation. This is done by engaging and disengaging the clutch about thirty times. Break-in operation raises the level of transmitted torque.

Removal and Installation of Low-Pressure Flexible Hose

EJS000A7

REMOVAL

1. Remove engine cover and air cleaner cover. Refer to EM-11, "ENGINE ROOM COVER" .
2. Use a refrigerant collecting equipment (for HFC-134a) to discharge the refrigerant.
3. Drain the coolant from cooling system, and disconnect two heater hoses. Refer to CO-9, "Changing Engine Coolant" .
4. Remove tower bar, air cleaner assembly, air duct and air inlet pipe. Refer to FSU-5, "FRONT SUSPENSION ASSEMBLY" and EM-15, "AIR CLEANER AND AIR DUCT" .

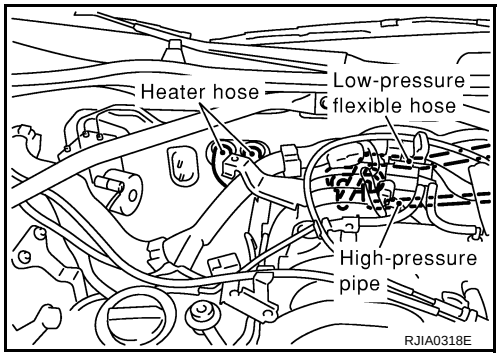

5. Remove accelerator wire bracket.

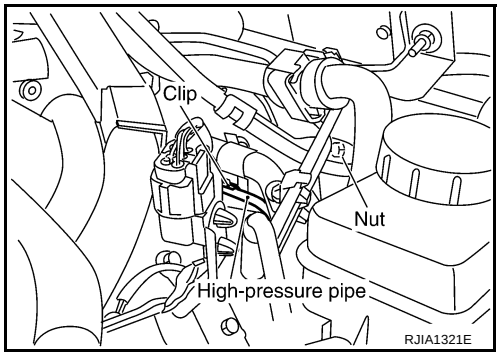

6. Remove vehicle harness from the clip.
7. Remove mounting bolts from low-pressure flexible hose bracket.
8. Remove clip from low-pressure flexible hose.

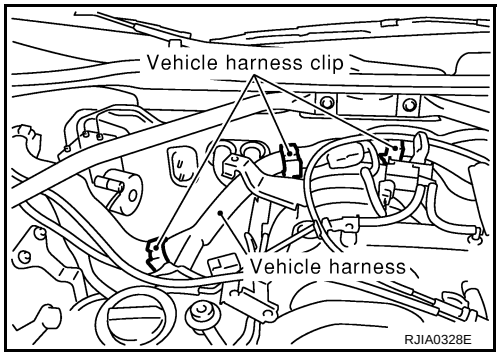

9. Remove mounting bolts from low-pressure flexible hose.

   CAUTION:
   Cap or wrap the joint of the pipe with a suitable material such as vinyl tape to avoid the entry of air.

10. Remove low-pressure flexible hose.

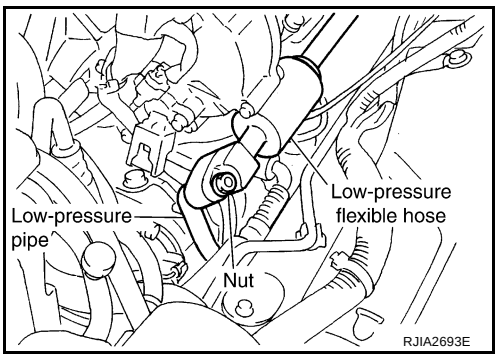

11. Remove mounting nut, and then remove low-pressure pipe.

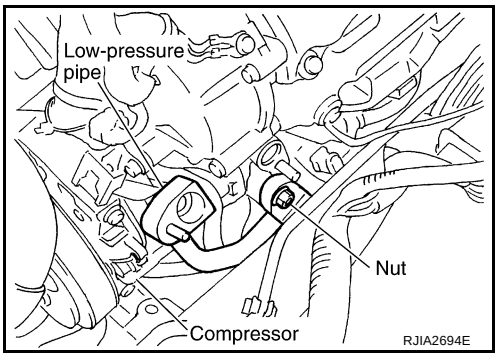

INSTALLATION

Installation is basically the reverse order of removal.

CAUTION:

- **Replace low-pressure flexible hose O-ring with a new one. Apply compressor oil prior to installation.**
- **When recharging refrigerant, check for leaks.**

Removal and Installation of High-Pressure Flexible Hose

EJS000A8

REMOVAL

1. Remove engine cover and air cleaner cover. Refer to EM-11, "ENGINE ROOM COVER" .
2. Use a refrigerant collecting equipment (for HFC-134a) to discharge the refrigerant.
3. Remove air cleaner assembly, air duct and air inlet pipe. Refer to EM-15, "AIR CLEANER AND AIR DUCT" .
4. Remove mounting bolt and nut from high-pressure flexible hose, then remove it.

   CAUTION:
   Cap or wrap the joint of the pipe with a suitable material such as vinyl tape to avoid the entry of air.

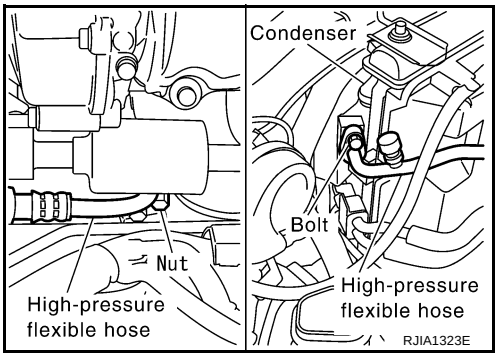

INSTALLATION

Installation is basically the reverse order of removal.

CAUTION:

- **Replace high-pressure flexible hose O-ring with a new one. Apply compressor oil prior to installation.**
- **When recharging refrigerant, check for leaks.**

Removal and Installation of High-Pressure Pipe

EJS000A9

REMOVAL

1. Remove engine cover and air cleaner cover. Refer to EM-11, "ENGINE ROOM COVER" .
2. Use a refrigerant collecting equipment (for HFC-134a) to discharge the refrigerant.
3. Drain coolant from cooling system and disconnect heater hoses. Refer to CO-9, "Changing Engine Coolant" .
4. Remove tower bar, air cleaner assembly, air duct and air inlet pipe. Refer to FSU-5, "FRONT SUSPENSION ASSEMBLY" and EM-15, "AIR CLEANER AND AIR DUCT" .

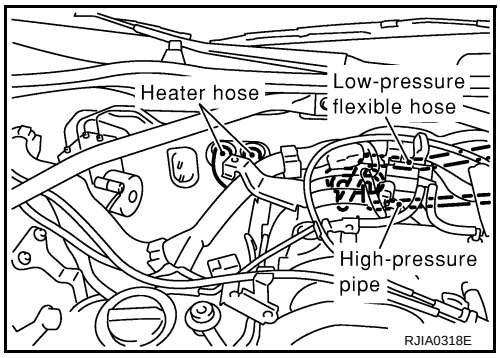

5. Remove vehicle harness from the clip.
6. Remove low-pressure flexible hose. Refer to ATC-156, "Removal and Installation of Low-Pressure Flexible Hose" .
7. Remove high-pressure flexible hose. Refer to ATC-157, "Removal and Installation of High-Pressure Flexible Hose" .

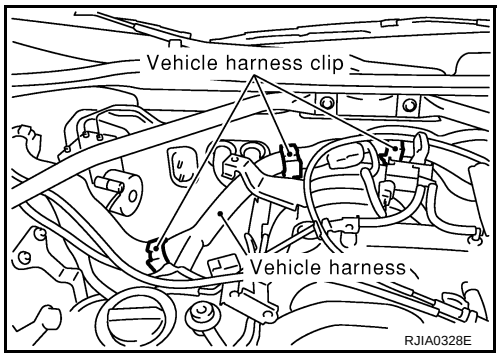

8. Remove mounting bolt from high-pressure pipe.

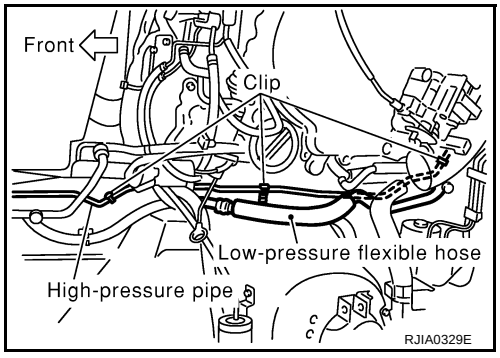

9. Remove front grille, battery, battery tray and radiator mounting bracket. Refer to EI-19, "FRONT GRILLE" , SC-4, "BATTERY" and CO-12, "RADIATOR" .
10. Slide the radiator assembly to right side of vehicle.
11. Remove mounting bolt from high-pressure pipe, and then remove high-pressure pipe.

    CAUTION:
    Cap or wrap the joint of the pipe with suitable material such as vinyl tape to avoid the entry of air.

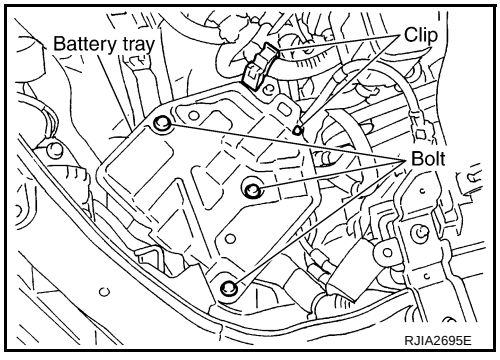

INSTALLATION

Installation is basically the reverse order of removal.

CAUTION:

- **Replace high-pressure pipe O-ring with a new one. Apply compressor oil prior to installation.**
- **When recharging refrigerant, check for leaks.**

Removal and Installation of Refrigerant Pressure Sensor

EJS001YN

REMOVAL

1. Use a refrigerant collecting equipment (for HFC-134a) to discharge the refrigerant.
2. Remove front grille. Refer to EI-19, "FRONT GRILLE" .
3. Remove horn.
4. Disconnect connector and remove refrigerant pressure sensor.

CAUTION:

- **Secure refrigerant pressure sensor installation pipe with an open-end wrench. Be careful not to deform pipe during the operation.**
- **Be careful not to damage the core surface of the condenser during the operation.**

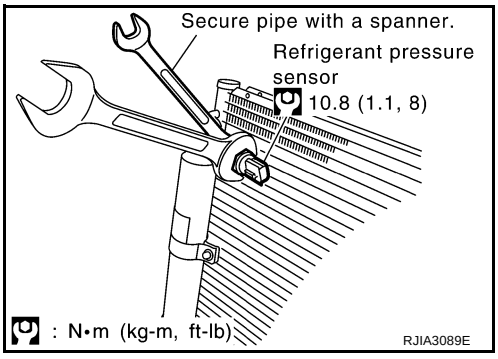

INSTALLATION

Installation is basically the reverse order of removal.

CAUTION:

- **Replace high-pressure pipe O-ring with a new one. Apply compressor oil prior to installation.**
- **When recharging refrigerant, check for leaks.**

Removal and Installation of Condenser

EJS000AC

REMOVAL

1. Remove engine cover and air cleaner cover. Refer to EM-11, "ENGINE ROOM COVER" .
2. Use a refrigerant collecting equipment (for HFC-134a) to discharge the refrigerant.
3. Remove tower bar, air cleaner assembly, air duct and air inlet pipe. Refer to FSU-5, "FRONT SUSPENSION ASSEMBLY" and EM-15, "AIR CLEANER AND AIR DUCT" .
4. Disconnect high-pressure flexible hose and high-pressure pipe from the condenser.

   CAUTION:
   Cap or wrap the joint of the pipe with a suitable material such as vinyl tape to avoid the entry of air.
5. Remove oil cooler pipe clips from left and right sides of condenser.
6. Slide condenser up and remove it from the radiator clip.

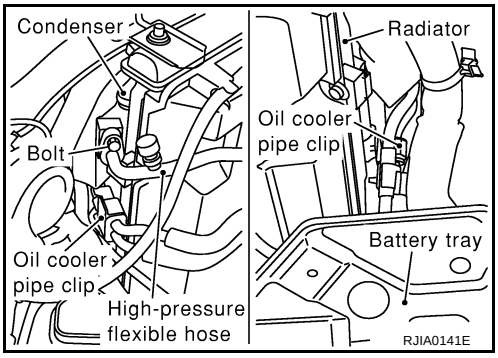

7. Remove oil cooler from condenser (if equipped).
8. Remove front grille, battery, battery tray and radiator mounting bracket. Refer to EI-19, "FRONT GRILLE" , SC-4, "BATTERY" and CO-12, "RADIATOR" .

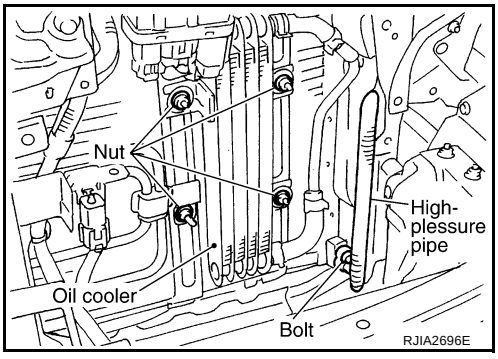

9. Remove power steering oil tank and canister.
10. Remove cooling fan shroud. Refer to CO-18, "Removal and Installation" .

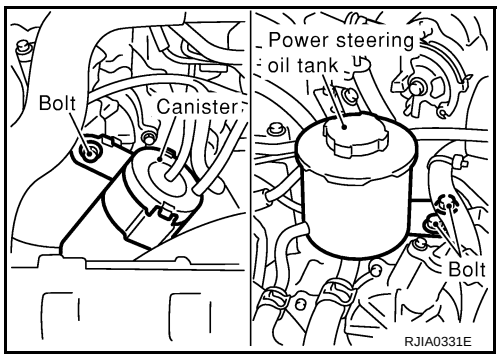

11. Remove mounting bolts from condenser.
12. Slide condenser up and remove it from radiator clip.
13. Remove radiator from lower mount, move it to engine side, then remove condenser between radiator and radiator core support.

    CAUTION:
    Be careful not to damage the core surface of the condenser and the radiator.

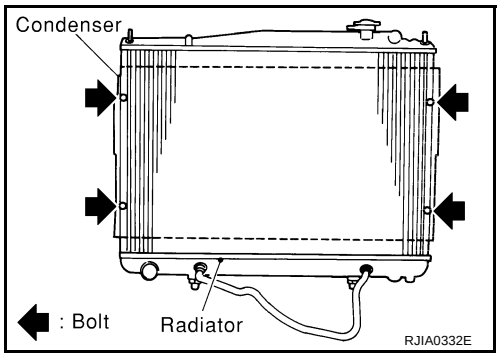

INSTALLATION

Installation is basically the reverse order of removal.

CAUTION:

- **Replace high-pressure pipe and high-pressure flexible hose O-rings with new ones. Apply compressor oil prior to installation.**
- **When recharging refrigerant, check for leaks.**

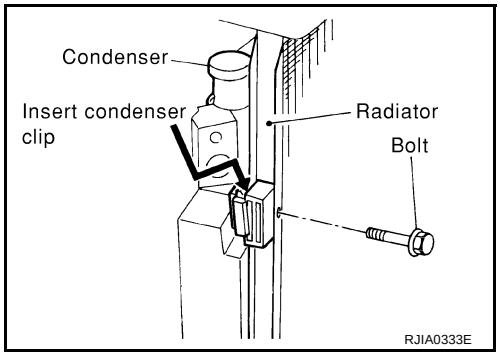

Removal and Installation of Liquid Tank

EJS001JS

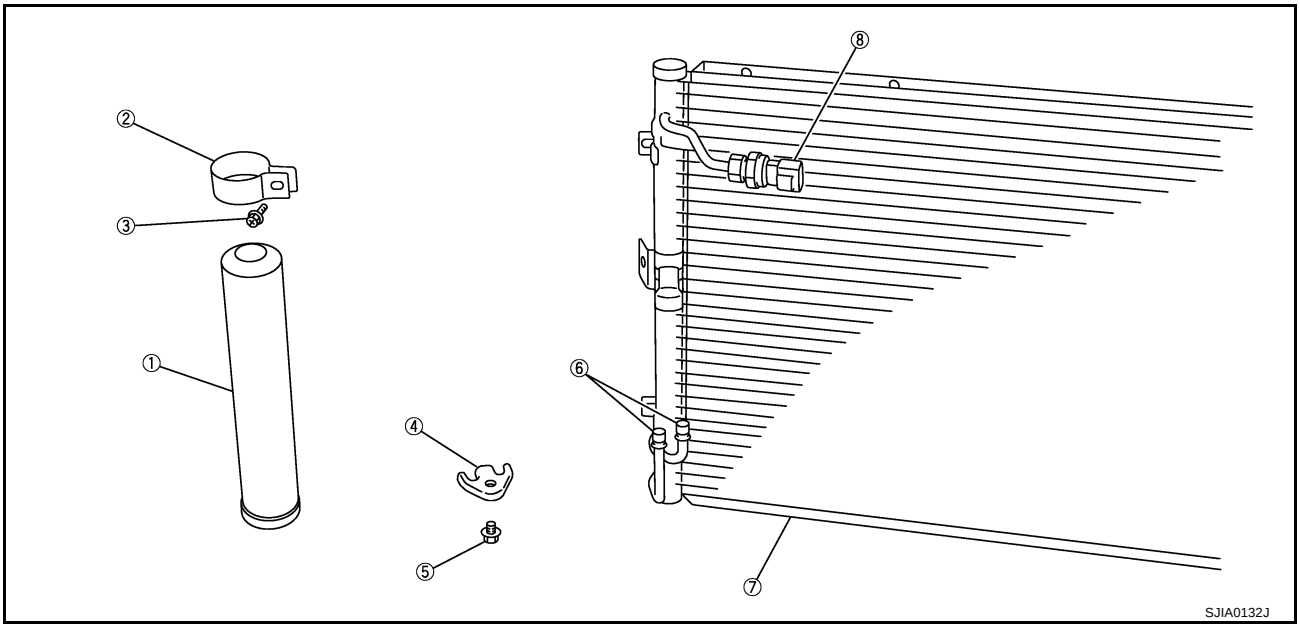

1. Liquid tank
2. Liquid tank securing bands
3. Screw
4. Securing bracket piping
5. Screw
6. O-ring
7. Condenser
8. Refrigerant pressure sensor

REMOVAL

1. Use a refrigerant collecting equipment (for HFC-134a) to discharge the refrigerant.
2. Remove air cleaner cover and front air guide. Refer to EM-15, "AIR CLEANER AND AIR DUCT" .
3. Remove front grille. Refer to EI-19, "FRONT GRILLE" .
4. Unscrew, and remove the securing bracket piping.
5. Unscrew liquid tank securing bands.
6. Pull out the liquid tank and liquid tank securing bands through the top.

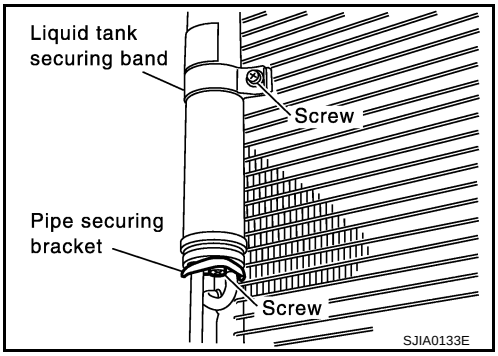

INSTALLATION

Installation is basically the reverse order of removal.

CAUTION:

- **Replace high-pressure pipe and high-pressure flexible hose O-rings with new ones. Apply compressor oil prior to installation.**
- **When recharging refrigerant, check for leaks.**

Removal and Installation of Evaporator

EJS000AD

REMOVAL

1. Remove heater & cooling unit. Refer to ATC-137, "HEATER & COOLING UNIT ASSEMBLY" .
2. Remove cooler grommet, expansion valve cover, expansion valve.
3. Remove air mix door motor and mode door motor bracket.
4. Remove evaporator cover.

5. Slide evaporator, then remove it from heater & cooling unit.
6. Remove intake sensor from evaporator, and then remove evaporator.

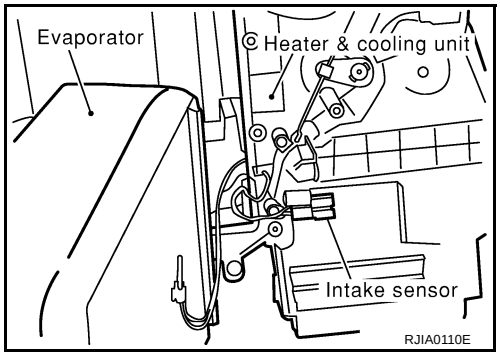

INSTALLATION

Installation is basically the reverse order of removal.

CAUTION:

- **Replace low-pressure flexible hose and high-pressure pipe O-rings with new ones. Apply compressor oil prior to installation.**
- **Mark mounting position of the intake sensor bracket.**
- **When recharging refrigerant, check for leaks.**

Removal and Installation of Expansion Valve

EJS001YO

REMOVAL

1. Remove engine cover and air cleaner cover. Refer to EM-11, "ENGINE ROOM COVER" .
2. Use a refrigerant collecting equipment (for HFC-134a) to discharge the refrigerant.
3. Drain coolant from cooling system and disconnect heater hoses. Refer to CO-9, "Changing Engine Coolant" .
4. Disconnect low-pressure flexible hose and high-pressure pipe from the evaporator.

   CAUTION:
   Cap or wrap the joint of low-pressure flexible hose and high-pressure pipe with a suitable material such as a vinyl tape to avoid the entry of air.

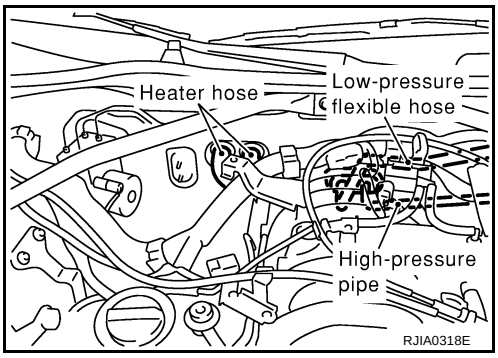

5. Remove expansion valve cover.
6. Remove expansion valve.

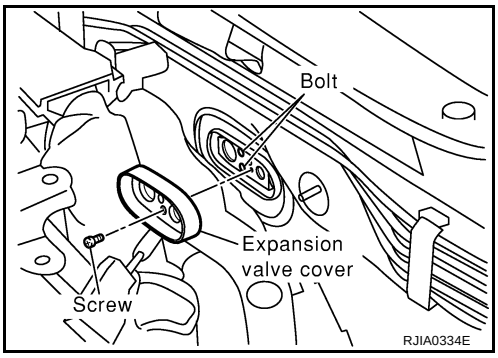

INSTALLATION

Installation is basically the reverse order of removal.

CAUTION:

- **Replace O-rings with new ones, then apply compressor oil to them when installing them.**
- **When recharging refrigerant, check for leaks.**

Checking for Refrigerant Leaks

EJS000KI

Perform a visual inspection of all refrigeration parts, fittings, hoses and components for signs of A/C lubricant leakage, damage and corrosion. A/C lubricant leakage may indicate an area of refrigerant leakage. Allow extra inspection time in these areas when using either an electronic refrigerant leak detector or fluorescent dye leak detector.

If dye is observed, confirm the leak with an electronic refrigerant leak detector. It is possible a prior leak was repaired and not properly cleaned.

When searching for leaks, do not stop when one leak is found but continue to check for additional leaks at all system components and connections.

When searching for refrigerant leaks using an electronic leak detector, move the probe along the suspected leak area at 1 to 2 inches per second and no further than 1/4 inch from the component.

CAUTION:

Moving the electronic leak detector probe slower and closer to the suspected leak area will improve the chances of finding a leak.

Checking System for Leaks Using the Fluorescent Leak Detector

EJS000KJ

1. Check A/C system for leaks using the UV lamp and safety goggles (J-42220) in a low sunlight area (area without windows preferable). Illuminate all components, fittings and lines. The dye will appear as a bright green/yellow area at the point of leakage. Fluorescent dye observed at the evaporator drain opening indicates an evaporator core assembly (tubes, core or expansion valve) leak.
2. If the suspected area is difficult to see, use an adjustable mirror or wipe the area with a clean shop rag or cloth.
3. After the leak is repaired, remove any residual dye using dye cleaner (J-43872) to prevent future misdiagnosis.
4. Perform a system performance check and verify the leak repair with an approved electronic refrigerant leak detector.

NOTE:
Other gases in the work area or substances on the A/C components, for example, anti-freeze, windshield washer fluid, solvents and lubricants, may falsely trigger the leak detector. Make sure the surfaces to be checked are clean.
Clean with a dry cloth or blow off with shop air.
Do not allow the sensor tip of the detector to come in contact with any substance. This can also cause false readings and may damage the detector.

Dye Injection

EJS000KK

(This procedure is only necessary when recharging the system or when the compressor has seized and was replaced.)

1. Check A/C system static (at rest) pressure. Pressure must be at least 345 kPa (3.52 kg/cm^2 , 50 psi).
2. Pour one bottle (1/4 ounce / 7.4 cc) of the A/C refrigerant dye into the injector tool (J-41459).
3. Connect the injector tool to the A/C LOW PRESSURE side service fitting.
4. Start engine and switch A/C ON.
5. When the A/C operating (compressor running), inject one bottle (1/4 ounce / 7.4 cc) of fluorescent dye through the low-pressure service valve using dye injector tool J-41459 (refer to the manufacture's operating instructions).
6. With the engine still running, disconnect the injector tool from the service fitting.

   CAUTION:
   Be careful when servicing the A/C system or replacing a component, pour the dye directly into the open system connection and proceed with the service procedures.
7. Operate the A/C system for a minimum of 20 minutes to mix the dye with the system oil. Depending on the leak size, operating conditions and location of the leak, it may take anywhere from minutes to days for the dye to penetrate a leak and become visible.

Electronic Refrigerant Leak Detector

EJS000KL

PRECAUTIONS FOR HANDLING LEAK DETECTOR

When performing a refrigerant leak check, use an A/C leak detector (J-41995) or equivalent. Ensure that the instrument is calibrated and set properly as per the operating instructions.
The leak detector is a delicate device. In order to use the leak detector properly, read the operating instructions and perform any specified maintenance.

J-41995 (A/C leak detector) SHA196FA

1. Position probe approximately 5 mm (3/16 in) away from point to be checked.

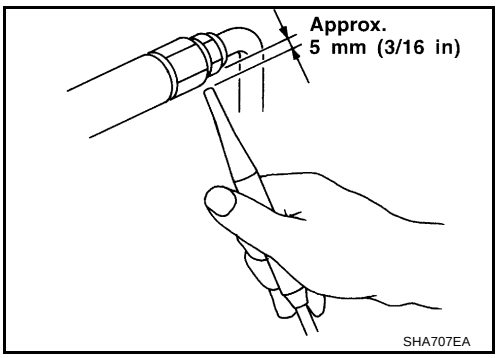

2. When testing, circle each fitting completely with probe.

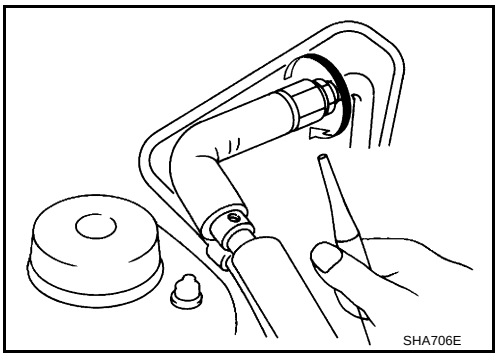

3. Move probe along component approximately 25 to 50 mm (1 to 2 in)/sec.

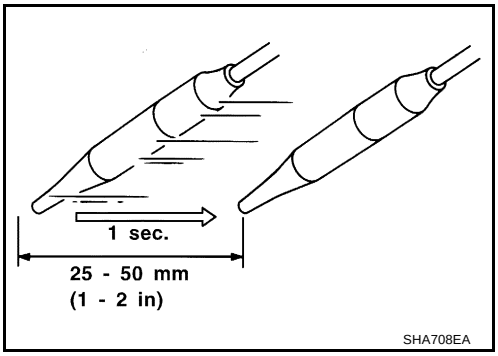

CHECKING PROCEDURE

To prevent inaccurate or false readings, make sure there is no refrigerant vapor, shop chemicals, or cigarette smoke in the vicinity of the vehicle. Perform the leak test in calm area (low air/wind movement) so that the leaking refrigerant is not dispersed.

1. Turn engine OFF.
2. Connect a suitable A/C manifold gauge set to the A/C service ports.
3. Check if the A/C refrigerant pressure is at least 345 kPa (3.52 kg/cm^2 , 50 psi) above 16°C (61°F). If less than specification, recover/evacuate and recharge the system with the specified amount of refrigerant.

   NOTE:
   At temperatures below 16°C (61°F), leaks may not be detected since the system may not reach 345 kPa (3.54 kg/cm^2 , 50 psi).
4. Conduct the leak test from the high-pressure side (compressor discharge a to evaporator inlet f) to the low-pressure side (evaporator drain hose g to shaft seal k). Refer to ATC-151, "Components" . Perform a leak check for the following areas carefully. Clean the component to be checked and move the leak detection probe completely around the connection/component.
   Compressor
   Check the fitting of high- and low- pressure hoses, relief valve and shaft seal.
   Liquid tank
   Check the refrigerant connection.
   Service valves
   Check all around the service valves. Ensure service valve caps are secured on the service valves (to prevent leaks).

NOTE:
After removing A/C manifold gauge set from service valves, wipe any residue from valves to prevent any false readings by leak detector.
Cooling unit (Evaporator)
With engine OFF, turn blower fan on “High” for at least 15 seconds to dissipate any refrigerant trace in the cooling unit. Wait a minimum of 10 minutes accumulation time (refer to the manufacturer′s recommended procedure for actual wait time) before inserting the leak detector probe into the drain hose.
Keep the probe inserted for at least 10 seconds. Use caution not to contaminate the probe tip with water or dirt that may be in the drain hose.

5. If a leak detector detects a leak, verify it at least once by blowing compressed air into area of suspected leak and repeating the check as outlined above.
6. Do not stop when one leak is found. Continue to check for additional leaks at all system components.
   If no leaks are found, perform steps 7 - 10.
7. Start engine.
8. Set the heater A/C control as follows;

a. AUTO switch: ON
b. Face mode
c. Intake position: Recirculation
d. Max cold temperature
e. Fan speed: High

9. Run engine at 1,500 rpm for at least 2 minutes.
10. Turn engine off and perform leak check again by following steps 4 through 6 above.
    Refrigerant leaks should be checked immediately after stopping the engine. Begin with the leak detector at the compressor. The pressure on the high pressure side will gradually drop after refrigerant circulation stops and pressure on the low pressure side will gradually rise, as shown in the graph. Some leaks are more easily detected when pressure is high.

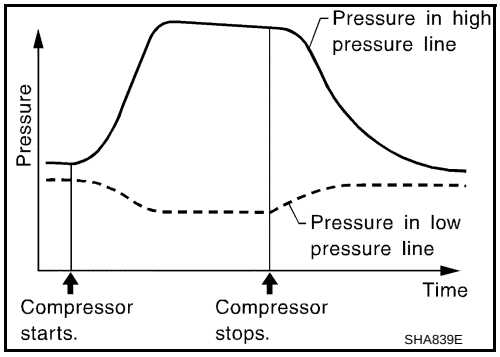

11. Before connecting recovery/recycling recharging equipment to vehicle, check recovery/recycling recharging equipment gauges. No refrigerant pressure should be displayed. If pressure is displayed, recover refrigerant from equipment lines and then check refrigerant purity.
12. Confirm refrigerant purity in supply tank using recovery/recycling recharging equipment and refrigerant identifier.
13. Confirm refrigerant purity in vehicle A/C system using recovery/recycling recharging equipment and refrigerant identifier.
14. Discharge A/C system using approved refrigerant recovery equipment. Repair or replace the leaking fitting or component if necessary.
15. Evacuate and recharge A/C system and perform the leak test to confirm there are no remaining refrigerant leaks.
16. Conduct A/C performance test to ensure system works properly.

SERVICE DATA AND SPECIFICATIONS (SDS)

PFP:00030

Compressor

EJS001QE

Model		Calsonic Kansei make CWE-618
Type		V-6 variable displacement
Displacement cm^3 (cu in)/rev	Max.	184 (11.228)
	Min.	14.5 (0.885)
Cylinder bore × stroke mm (in)		37 (1.46) × [2.3 - 28.6 (0.091 - 1.126)]
Direction of rotation		Clockwise (viewed from drive end)
Drive belt		Poly V

Lubricant

EJS001QF

Model		Calsonic Kansei make CWE-618
Name		Nissan A/C System Oil Type S (DH-PS)
Part number		KLH00-PAGS0
Capacity m ℓ (US fl oz, Imp fl oz)	Total in system	180 (6.0, 6.3)
	Compressor (Service part) charging amount	180 (6.0, 6.3)

Refrigerant

EJS001QG

Type	HFC-134a (R-134a)
Capacity kg (lb)	0.60 (1.32)

Engine Idling Speed

EJS001QH

Refer to EC-701, "Idle Speed and Ignition Timing" .

Belt Tension

EJS001QI

Refer to EM-12, "DRIVE BELTS" .