SECTION AV

AUDIO, VISUAL, NAVIGATION & TELEPHONE SYSTEM

CONTENTS

PRECAUTIONS

PFP:00001

Precautions for Supplemental Restraint System (SRS) “AIR BAG” and “SEAT BELT PRE-TENSIONER”

EKS007K6

The Supplemental Restraint System such as “AIR BAG” and “SEAT BELT PRE-TENSIONER”, used along with a front seat belt, helps to reduce the risk or severity of injury to the driver and front passenger for certain types of collision. This system includes seat belt switch inputs and dual stage front air bag modules. The SRS system uses the seat belt switches to determine the front air bag deployment, and may only deploy one front air bag, depending on the severity of a collision and whether the front occupants are belted or unbelted.
Information necessary to service the system safely is included in the SRS and SB section of this Service Manual.

WARNING:

- **To avoid rendering the SRS inoperative, which could increase the risk of personal injury or death in the event of a collision which would result in air bag inflation, all maintenance must be performed by an authorized NISSAN/INFINITI dealer.**
- **Improper maintenance, including incorrect removal and installation of the SRS, can lead to personal injury caused by unintentional activation of the system. For removal of Spiral Cable and Air Bag Module, see the SRS section.**
- **Do not use electrical test equipment on any circuit related to the SRS unless instructed to in this Service Manual. SRS wiring harnesses can be identified by yellow and/or orange harnesses or harness connectors.**

Wiring Diagrams and Trouble Diagnosis

EKS007K7

When you read wiring diagrams, refer to the following:

- GI-15, "How to Read Wiring Diagrams".
- PG-4, "POWER SUPPLY ROUTING CIRCUIT".

When you perform trouble diagnosis, refer to the following:

- GI-11, "HOW TO FOLLOW TEST GROUPS IN TROUBLE DIAGNOSES".
- GI-27, "How to Perform Efficient Diagnosis for an Electrical Incident".

PREPARATION

PFP:00002

Commercial Service Tool

EKS007K8

Tool name	Description
Power tool 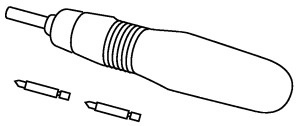 PBIC0191E	Loosening bolts and nuts

AUDIO

PFP:28111

Component Parts and Harness Connector Location

EKS007K9

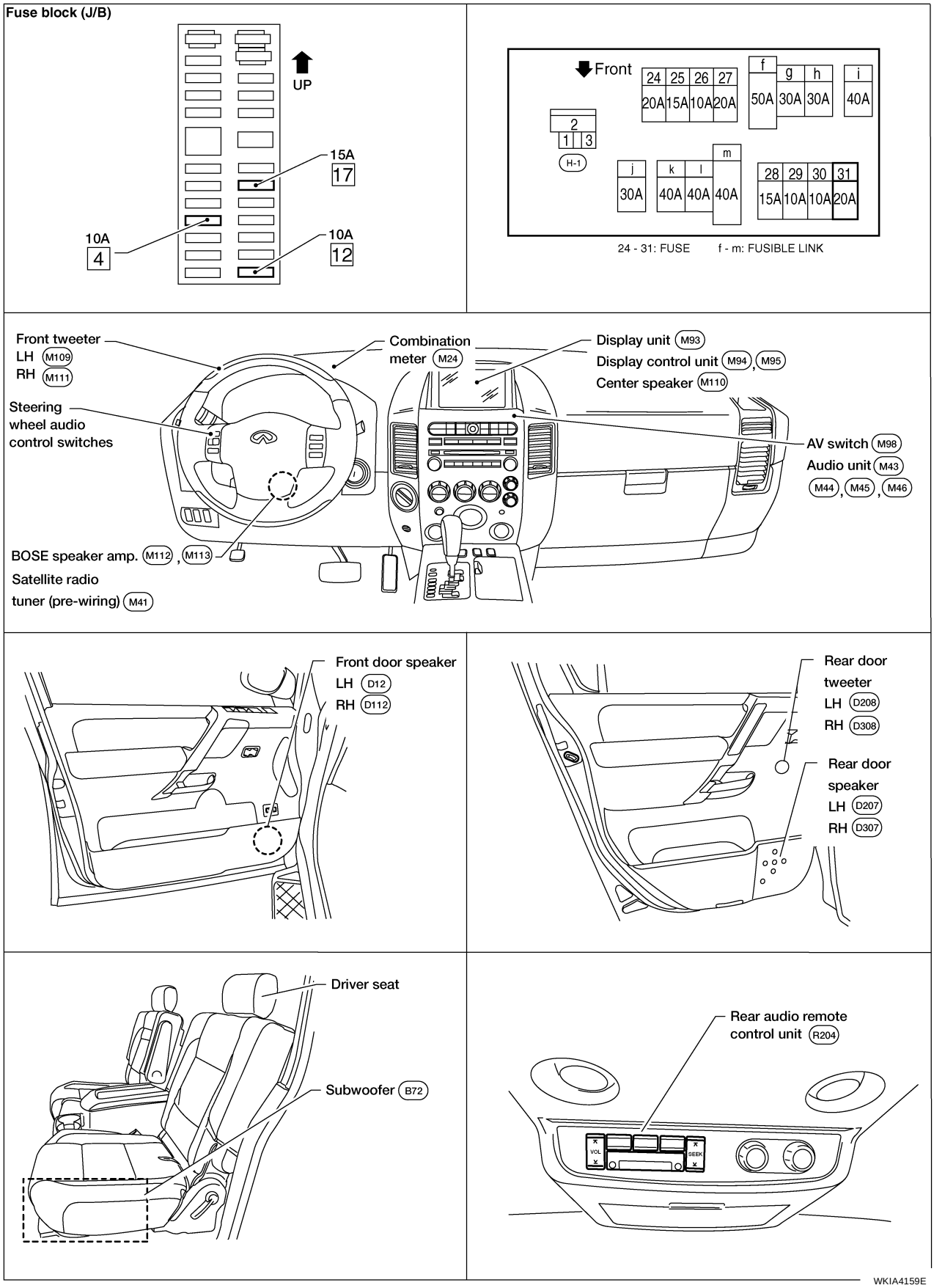

System Description

EKS007KA

Refer to Owner's Manual for audio system operating instructions.
Power is supplied at all times

- through 15A fuse [No. 17, located in the fuse block (J/B)]
- to subwoofer terminal 6
- through 20A fuse [No. 31, located in the fuse and fusible link box]
- to audio unit terminal 6
- to BOSE speaker amp. terminal 1
- to AV switch terminal 1 and
- to display control unit terminal 1.

With the ignition switch in the ACC or ON position, power is supplied

- through 10A fuse [No. 4, located in the fuse block (J/B)]
- to audio unit terminal 10 and
- to AV switch terminal 2 and
- to display control unit terminal 10.

With the ignition switch in the ON or START position, power is supplied

- through 10A fuse [No. 12, located in the fuse block (J/B)]
- to display control unit terminal 12.

Ground is supplied through the case of the audio unit.
Ground is also supplied

- to subwoofer terminal 5
- through body grounds B7 and B19 and
- to BOSE speaker amp. terminal 17
- to AV switch terminal 5 and
- to display unit terminal 1 and
- to display control unit terminal 3
- through body grounds M57, M61 and M79.

Then audio signals are supplied

- through audio unit terminals 1, 2, 3, 4, 13, 14, 15 and 16
- to BOSE speaker amp. terminals 23, 24, 25, 26, 27, 28, 29 and 30.

Audio signals are amplified by the BOSE speaker amp.
The amplified audio signals are supplied

- through BOSE speaker amp. terminals 2, 3, 9,10,11,12, 13, 14, 15, 16, 18 and 19
- to terminals + and - of front door speaker LH and RH and
- to terminals + and - of front tweeter LH and RH and
- to terminals + and - of center speaker and
- to terminals + and - of rear door speaker LH and RH and
- to terminals + and - of rear door tweeter LH and RH and
- to terminals 1 and 2 of subwoofer.

When one of steering wheel audio control switches is pushed, the resistance in steering switch circuit changes depending on which button is pushed.

REAR AUDIO REMOTE CONTROL UNIT

Power is supplied

- from audio unit terminal 32
- to rear audio remote control unit terminal 13.

Ground is supplied

- to rear audio remote control unit terminal 15
- through body grounds B117 and B132.

Audio signals are supplied

- through audio unit terminals 26, 27, 28 and 29
- to terminals 1, 2, 3, and 4 of rear audio remote control unit.

SATELLITE RADIO TUNER (PRE-WIRING)

The satellite radio tuner pre-wiring allows connection of a satellite radio tuner.
Power is supplied at all times

- through 20A fuse [No. 31, located in the fuse and fusible link box]
- to satellite radio tuner pre-wiring terminal 32.

With the ignition switch in the ACC or ON position, power is supplied

- through 10A fuse [No. 4, located in the fuse block (J/B)]
- to satellite radio tuner pre-wiring terminal 36.

Ground is supplied through the case of the satellite radio tuner.

SPEED SENSITIVE VOLUME SYSTEM

Volume level of this system goes up and down automatically in proportion to the vehicle speed. The control level can be selected by the customer. Refer to Owner's Manual for operating instructions.

Schematic

EKS007KB

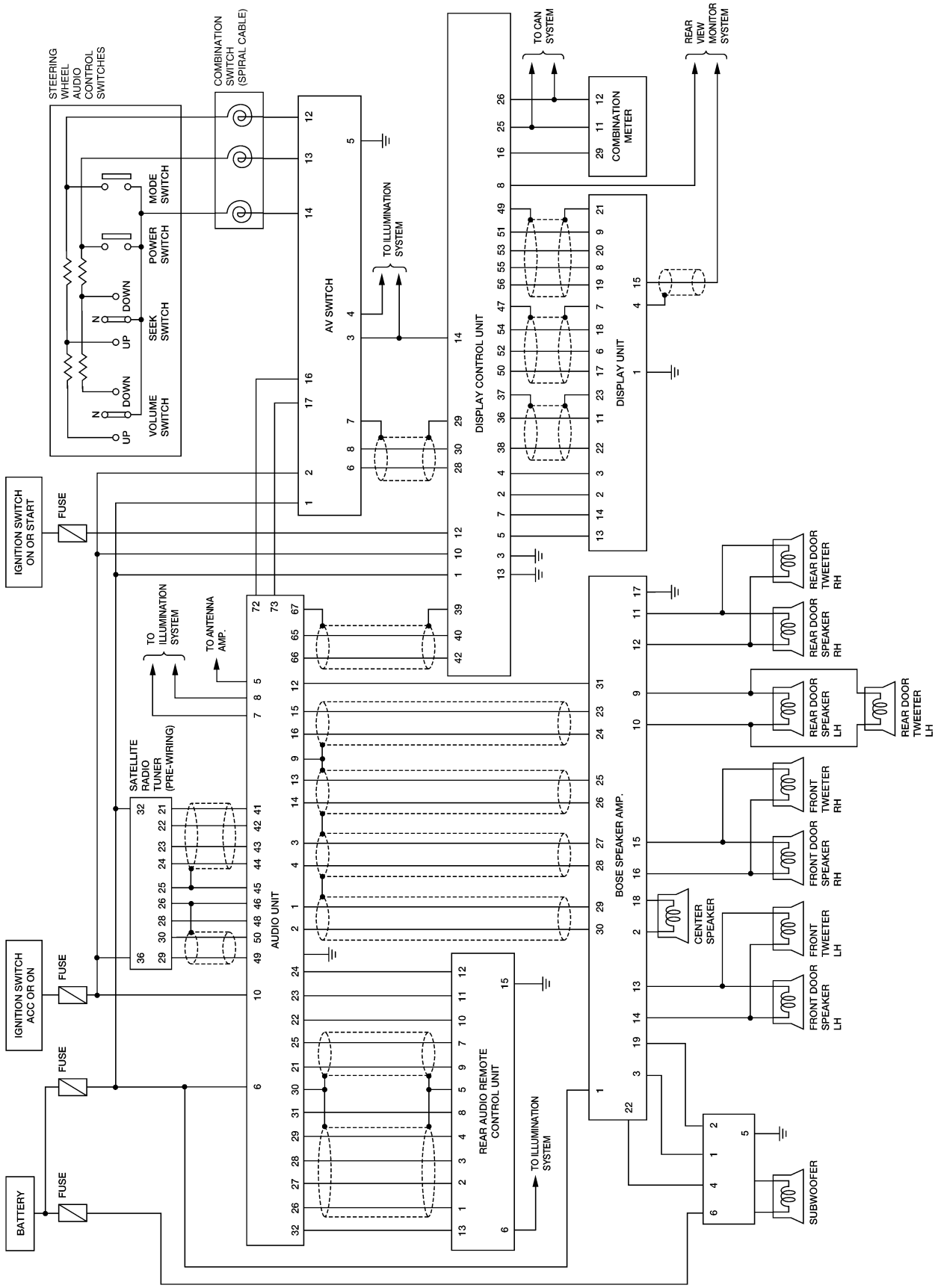

Wiring Diagram -AUDIO-

EKS007KC

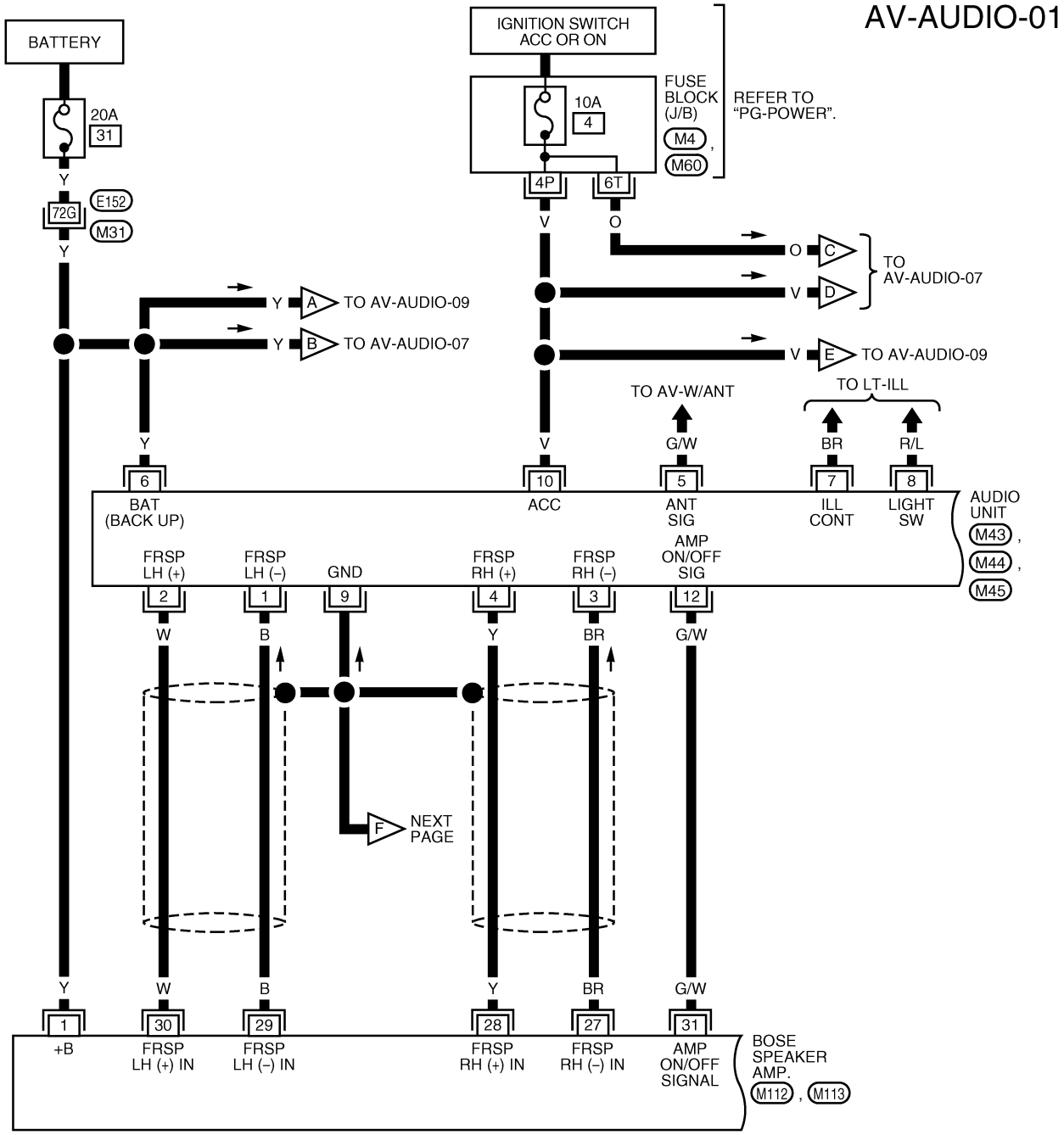

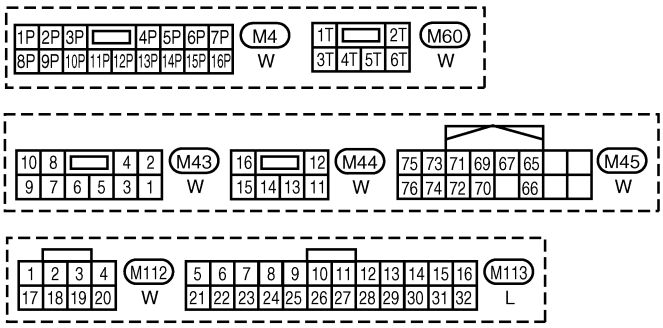

REFER TO THE FOLLOWING.
M31 - SUPER MULTIPLE JUNCTION (SMJ)

WKWA1235E

AV-AUDIO-02

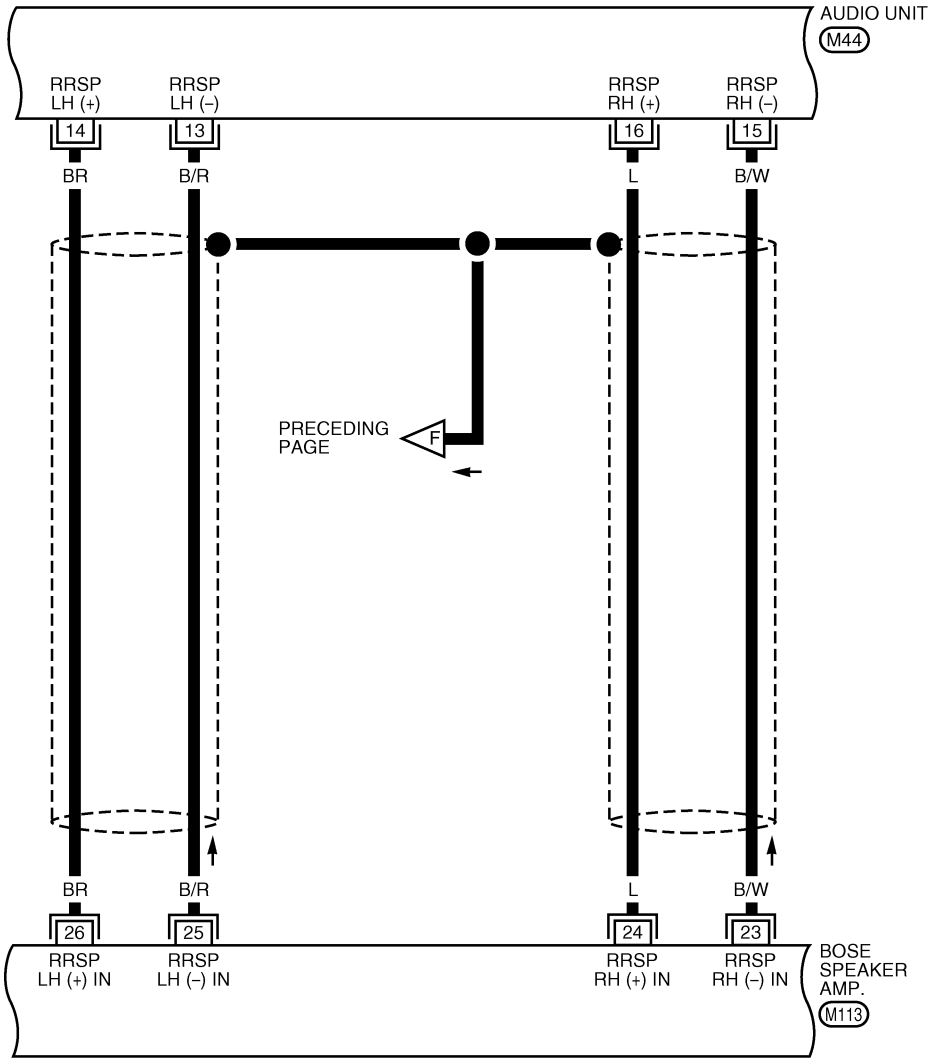

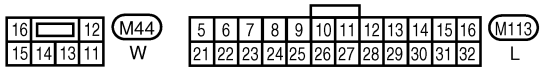

WKWA1236E

AV-AUDIO-03

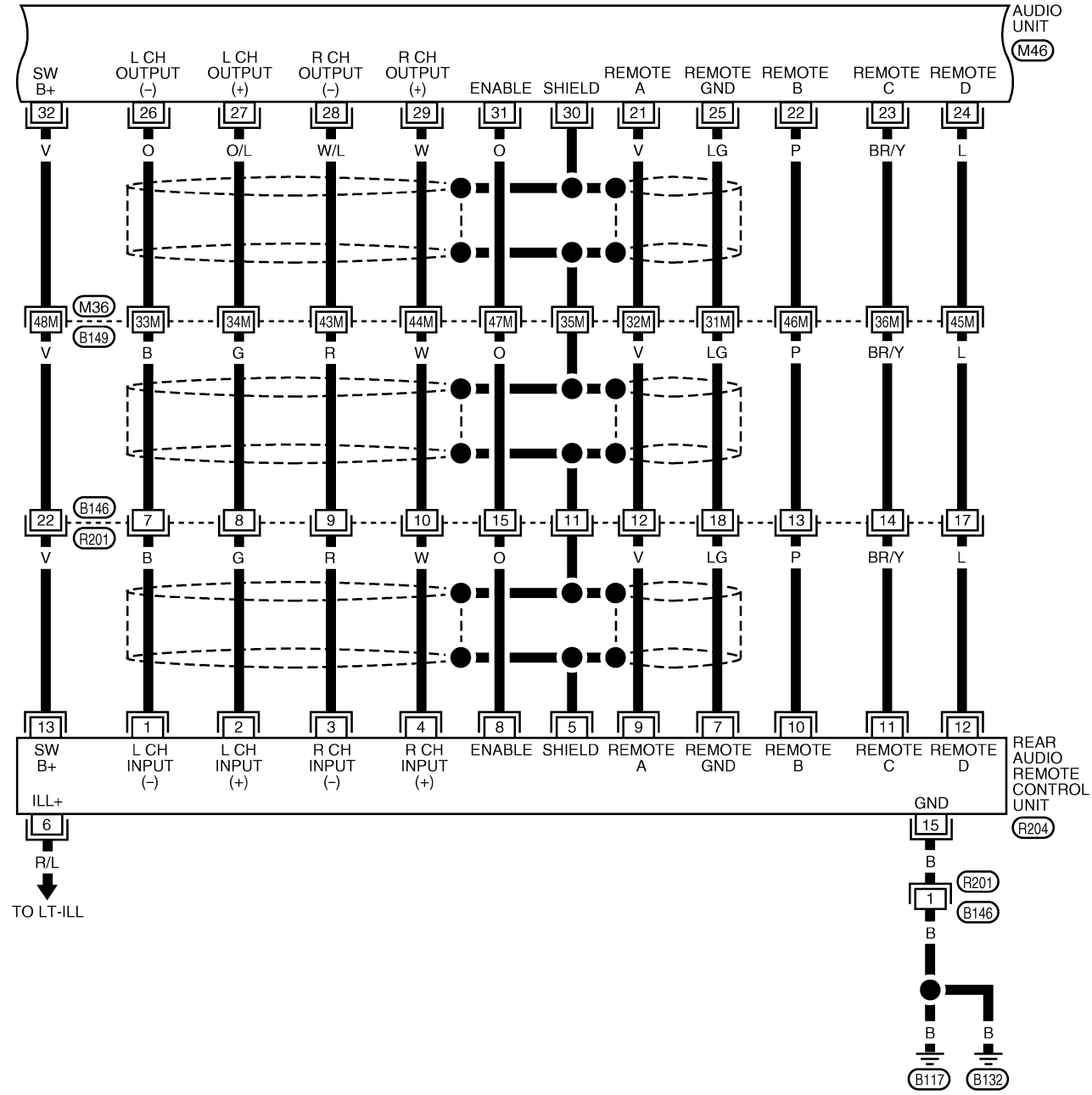
AUDIO UNIT
M46
SW B+
L CH OUTPUT (–)
L CH OUTPUT (+)
R CH OUTPUT (–)
R CH OUTPUT (+)
ENABLE
SHIELD
REMOTE A
REMOTE GND
REMOTE B
REMOTE C
REMOTE D
32 26 27 28 29 31 30 21 25 22 23 24
V O O/L W/L W O V LG P BR/Y L
M36
B149
48M 33M 34M 43M 44M 47M 35M 32M 31M 46M 36M 45M
V B G R W O V LG P BR/Y L
B146
R201
22 7 8 9 10 15 11 12 18 13 14 17
V B G R W O V LG P BR/Y L
13 1 2 3 4 8 5 9 7 10 11 12
SW B+
L CH INPUT (–)
L CH INPUT (+)
R CH INPUT (–)
R CH INPUT (+)
ENABLE
SHIELD
REMOTE A
REMOTE GND
REMOTE B
REMOTE C
REMOTE D
ILL+
GND
REAR AUDIO REMOTE CONTROL UNIT
R204
6
R/L
TO LT-ILL
15
B
R201
1
B146
B
B
B
B117
B132
M46
W
R201
BR
R204
W
REFER TO THE FOLLOWING.
M36 - SUPER MULTIPLE JUNCTION (SMJ)
WKWA1237E

AV-AUDIO-04

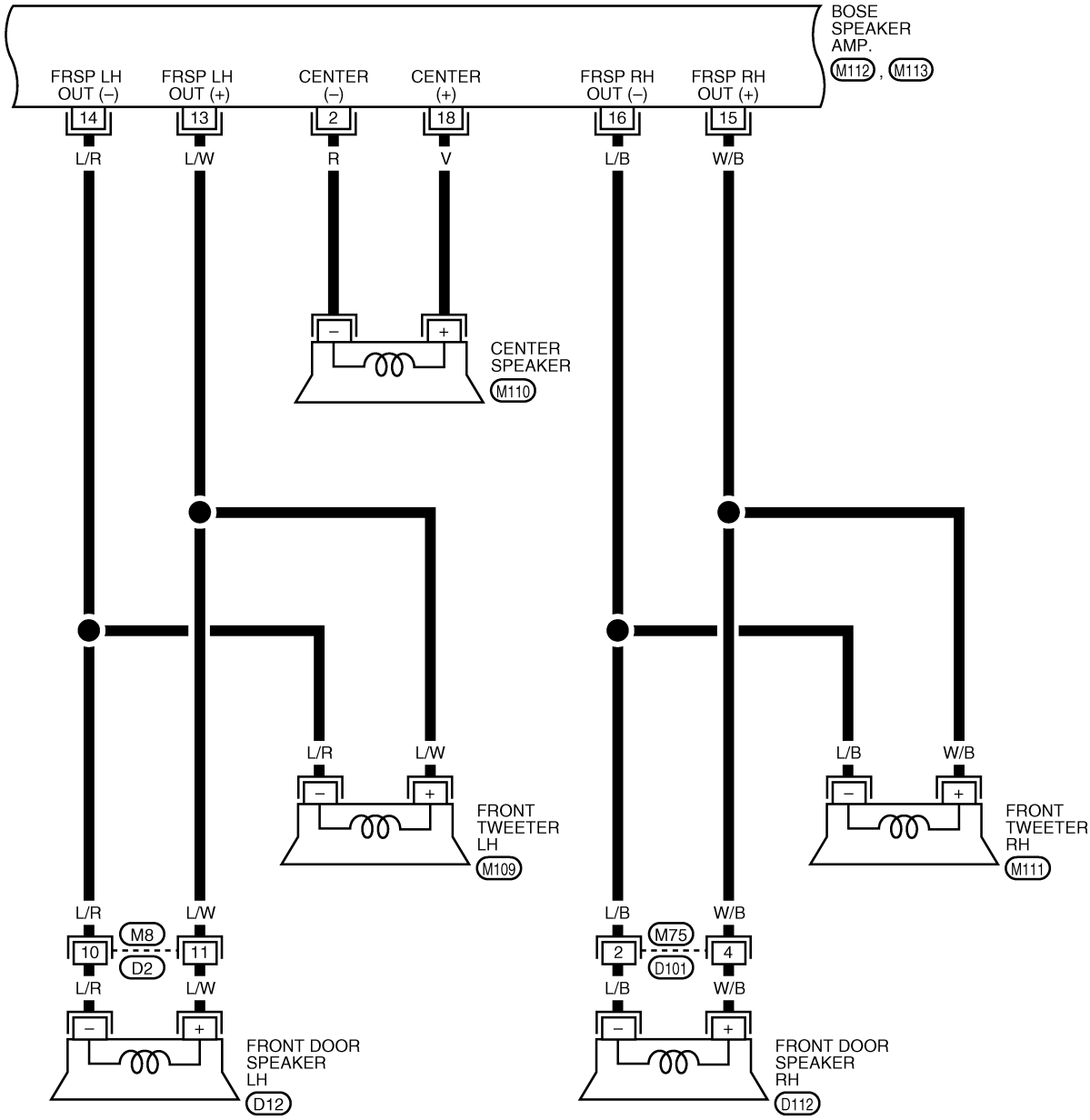

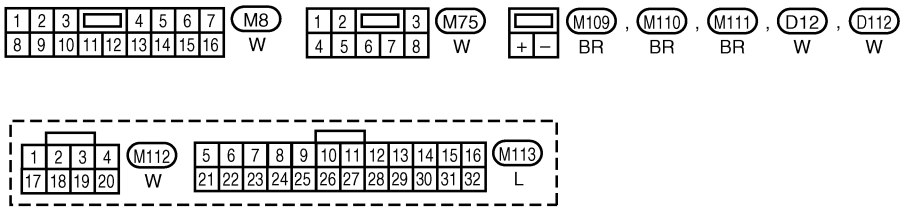

WKWA1238E

AV-AUDIO-05

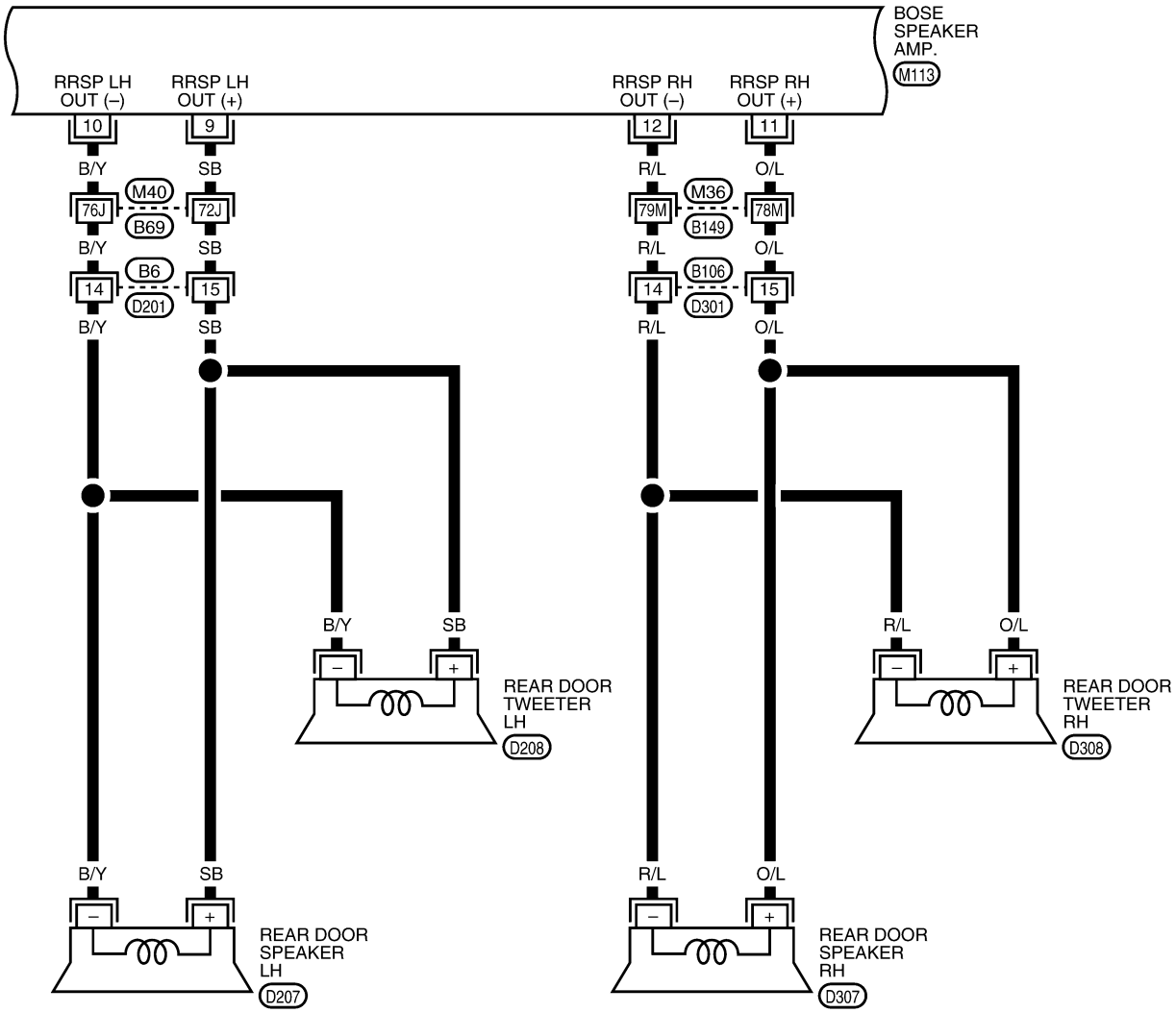

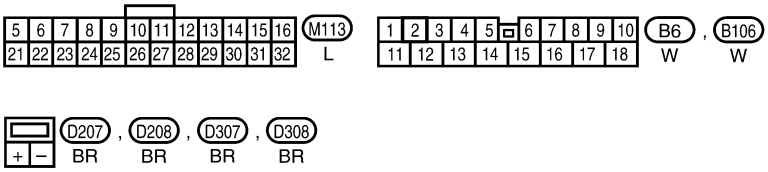

REFER TO THE FOLLOWING.
M36 , M40 - SUPER MULTIPLE JUNCTION (SMJ)

WKWA1239E

AV-AUDIO-06

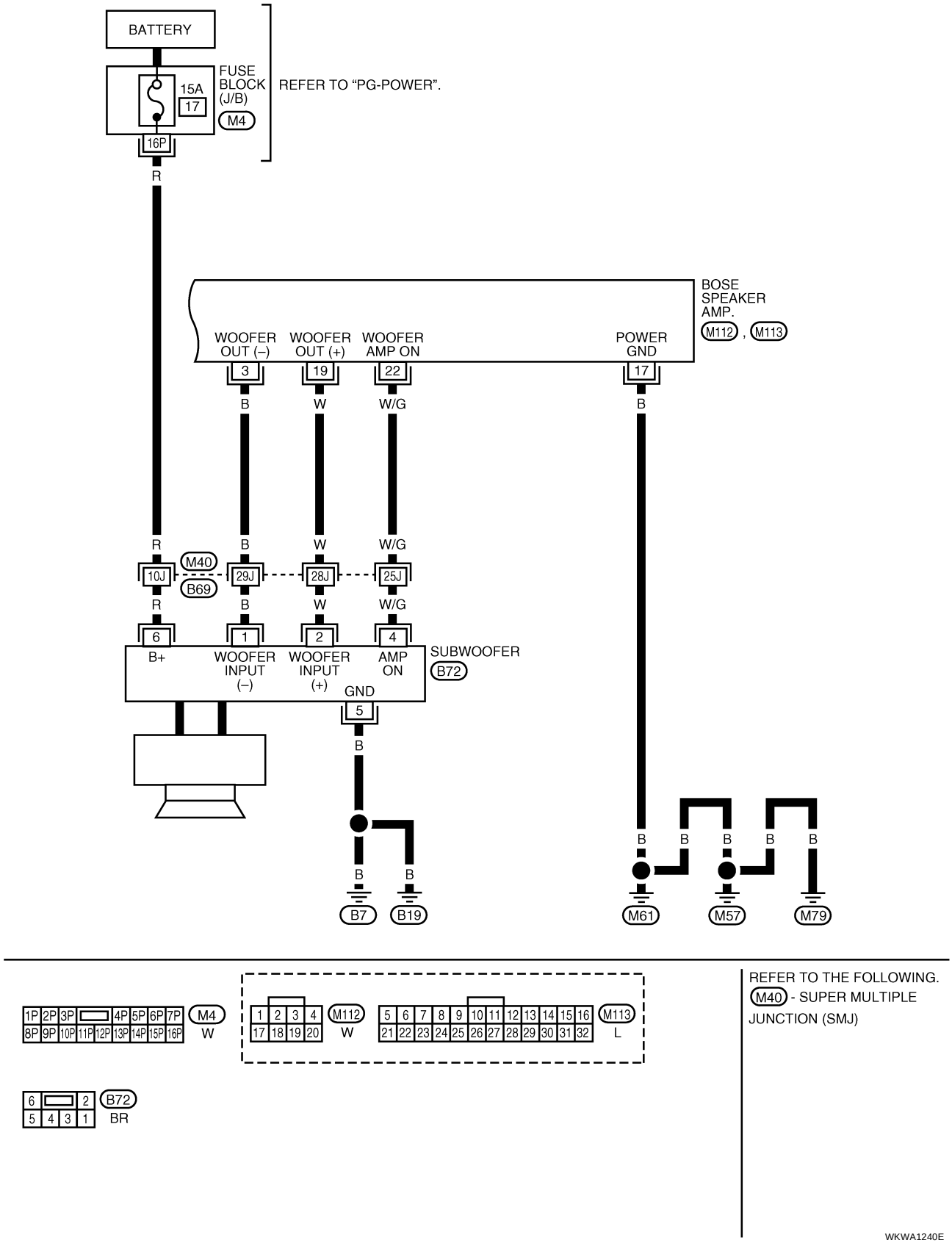
BATTERY
FUSE BLOCK (J/B)
M4
15A
17
16P
REFER TO “PG-POWER”.
R
BOSE SPEAKER AMP.
M112 , M113
WOOFER OUT (–)
WOOFER OUT (+)
WOOFER AMP ON
POWER GND
3
19
22
17
B
W
W/G
B
R
B
W
W/G
M40
B69
10J
29J
28J
25J
R
B
W
W/G
6
1
2
4
B+
WOOFER INPUT (–)
WOOFER INPUT (+)
AMP ON
SUBWOOFER
B72
GND
5
B
B
B
B
B
B
B
B
B
B7
B19
M61
M57
M79
1P 2P 3P 4P 5P 6P 7P
8P 9P 10P 11P 12P 13P 14P 15P 16P
M4
W
1 2 3 4
17 18 19 20
M112
W
5 6 7 8 9 10 11 12 13 14 15 16
21 22 23 24 25 26 27 28 29 30 31 32
M113
L
6 2
5 4 3 1
B72
BR
REFER TO THE FOLLOWING.
M40 - SUPER MULTIPLE JUNCTION (SMJ)
WKWA1240E

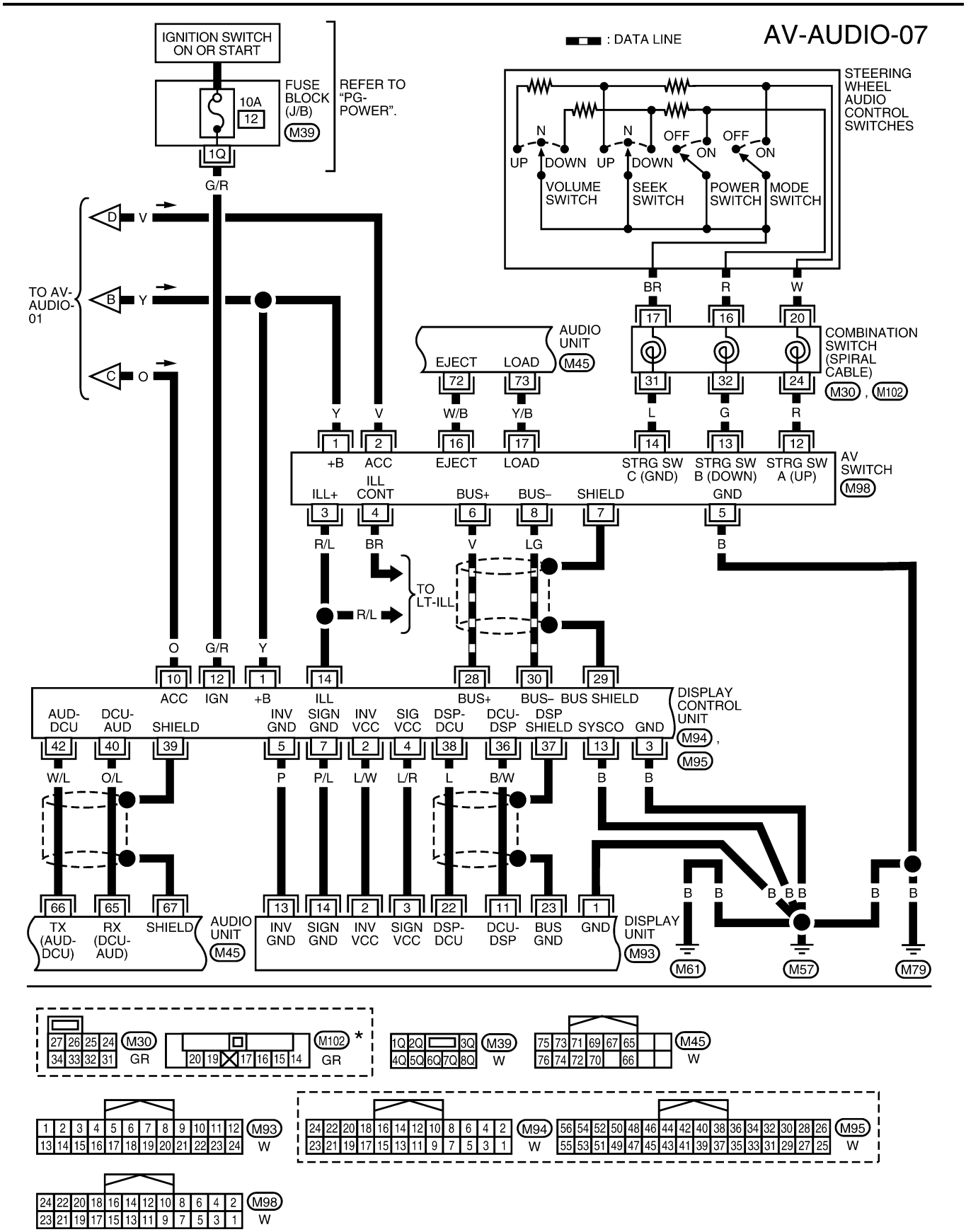
AV-AUDIO-07
: DATA LINE
IGNITION SWITCH ON OR START
FUSE BLOCK (J/B)
M39
10A
12
1Q
REFER TO "PG-POWER".
G/R
TO AV-AUDIO-01
D V
B Y
C O
STEERING WHEEL AUDIO CONTROL SWITCHES
N
UP
DOWN
VOLUME SWITCH
SEEK SWITCH
OFF
ON
POWER SWITCH
MODE SWITCH
BR
R
W
17
16
20
COMBINATION SWITCH (SPIRAL CABLE)
M30 , M102
31
32
24
L
G
AUDIO UNIT
M45
EJECT
LOAD
72
73
W/B
Y/B
Y
V
1
2
16
17
14
13
12
+B
ACC
EJECT
LOAD
STRG SW C (GND)
STRG SW B (DOWN)
STRG SW A (UP)
AV SWITCH
M98
ILL+
ILL CONT
BUS+
BUS–
SHIELD
GND
3
4
6
8
7
5
R/L
BR
V
LG
B
TO LT-ILL
R/L
O
G/R
Y
10
12
1
14
28
30
29
ACC
IGN
+B
ILL
BUS+
BUS–
BUS SHIELD
DISPLAY CONTROL UNIT
AUD-DCU
DCU-AUD
SHIELD
INV GND
SIGN GND
INV VCC
SIG VCC
DSP-DCU
DCU-DSP
DSP SHIELD
SYSCO
GND
M94 , M95
42
40
39
5
7
2
4
38
36
37
13
3
W/L
O/L
P
P/L
L/W
L/R
L
B/W
B
B
66
65
67
13
14
2
3
22
11
23
1
TX (AUD-DCU)
RX (DCU-AUD)
SHIELD
AUDIO UNIT
M45
INV GND
SIGN GND
INV VCC
SIGN VCC
DSP-DCU
DCU-DSP
BUS GND
GND
DISPLAY UNIT
M93
B B B B B B B
M61
M57
M79
M30
GR
M102 *
GR
M39
W
M45
W
M93
W
M94
W
M95
W
M98
W
*: THIS CONNECTOR IS NOT SHOWN IN "HARNESS LAYOUT" OF PG SECTION.
WKWA2186E

AV-AUDIO-08

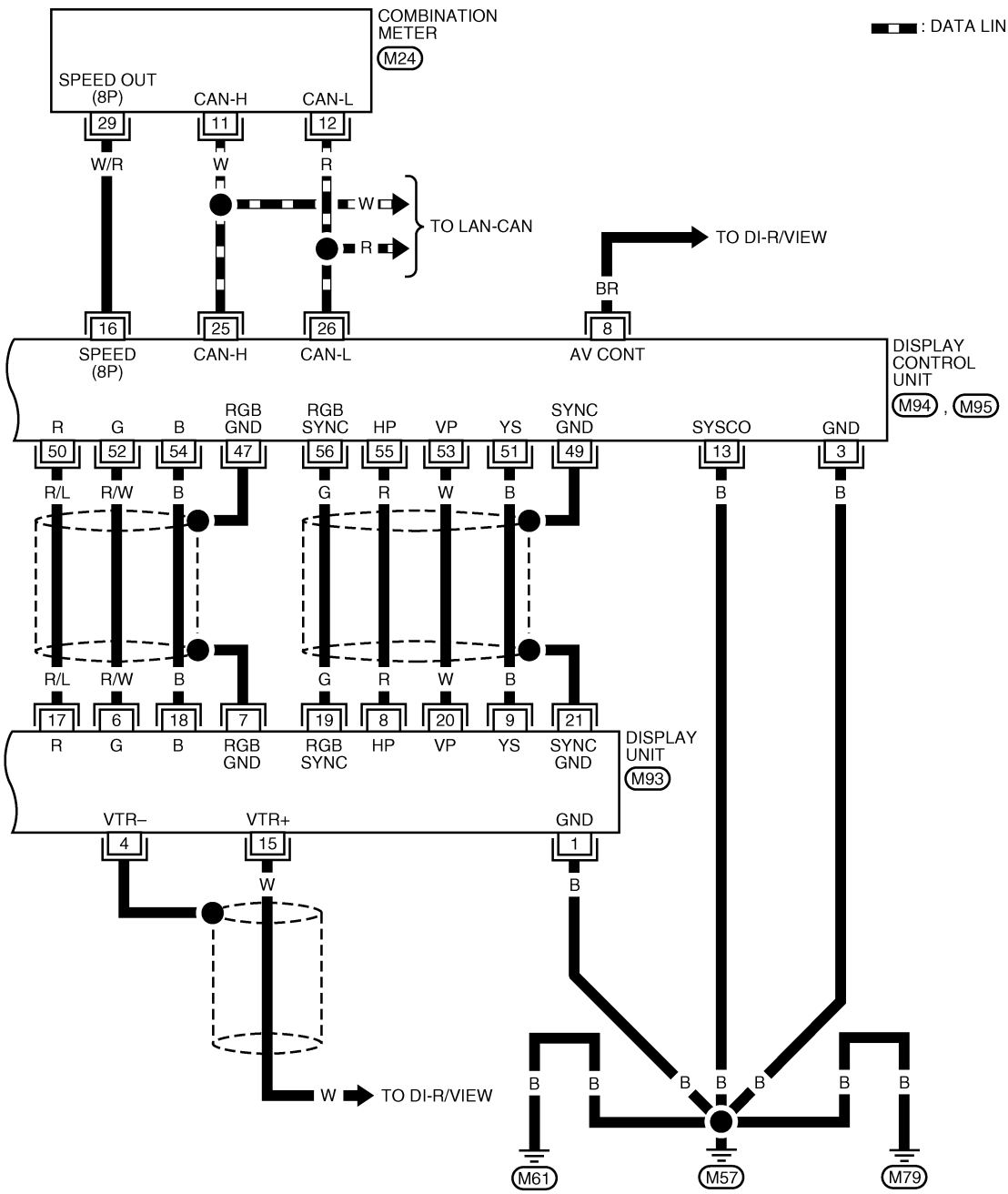

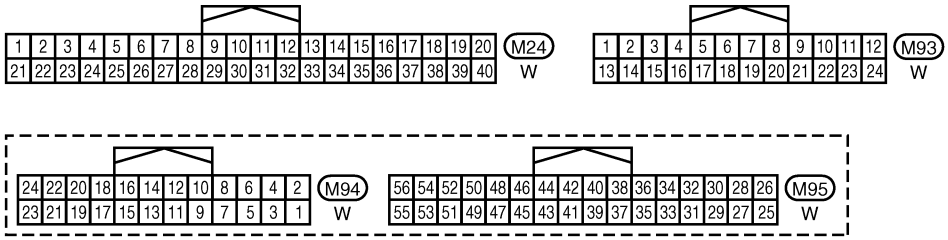

WKWA1242E

AV-AUDIO-09

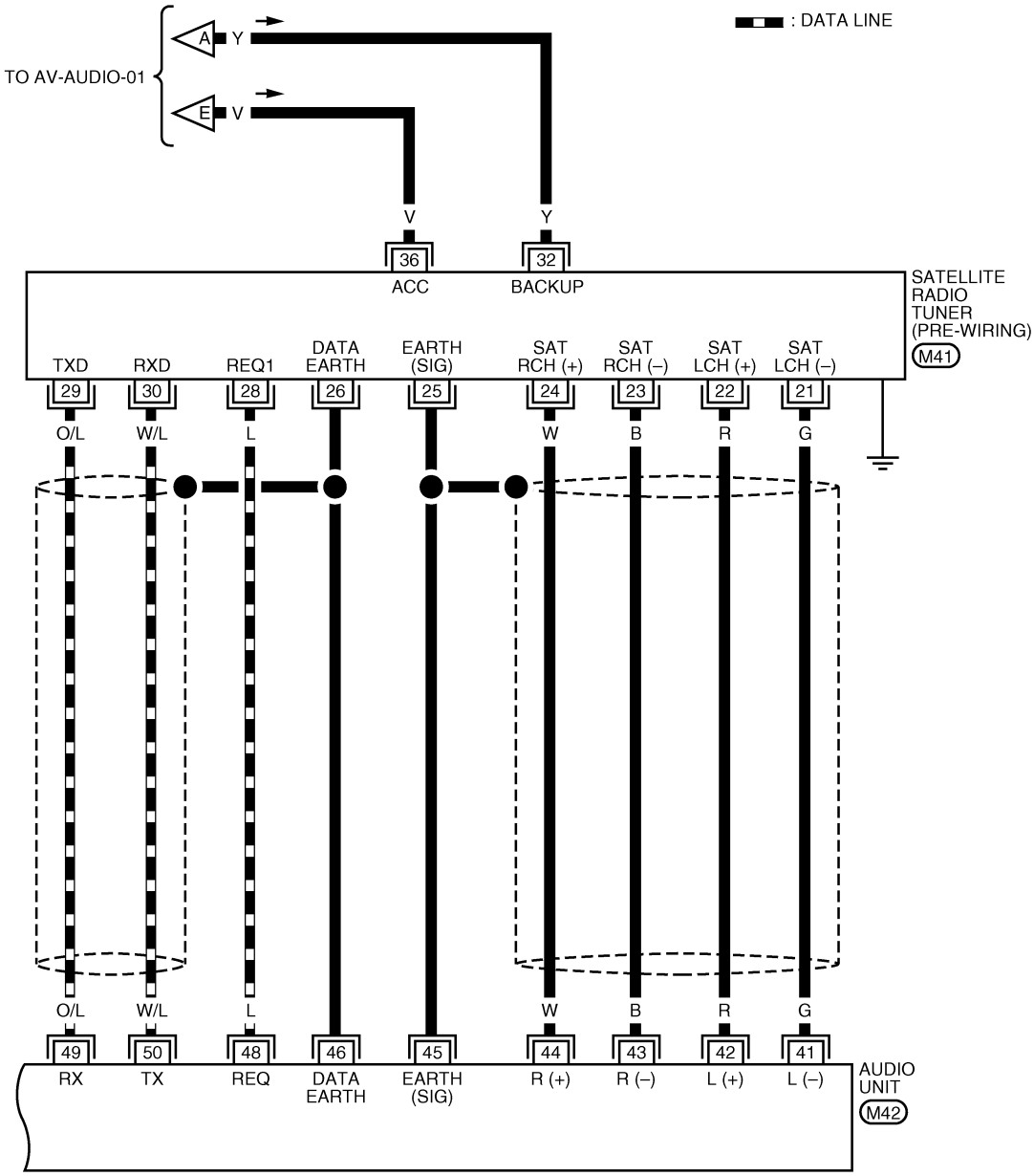

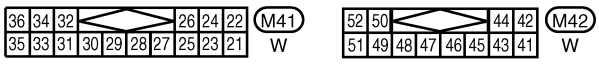

WKWA1243E

Terminals and Reference Value for Audio Unit

EKS007KE

Terminal (Wire color) +	Terminal (Wire color) –	Item	Signal input/ output	Condition: Ignition switch	Condition: Operation	Reference value (Approx.)	Example of symptom
2 (W)	1 (B)	Audio sound signal front LH	Output	ON	Receive audio signal	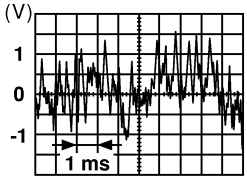 SKIA0177E	No sound from front door speaker LH or tweeter LH.
4 (Y)	3 (BR)	Audio sound signal front RH	Output	ON	Receive audio signal	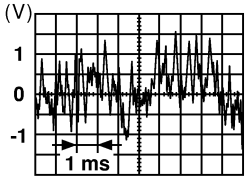 SKIA0177E	No sound from front door speaker RH or tweeter RH.
5 (G/W)	Ground	Antenna signal	Output	ON	–	More than 10V	Poor radio reception.
6 (Y)	Ground	Battery power	Input	–	–	Battery voltage	System does not work properly.
7 (BR)	Ground	Illumination control signal	Input	ON	Illumination control switch is operated by lighting switch in 1st position.	Changes between 0 and 12V	Audio unit illumination cannot be controlled.
8 (R/L)	Ground	Illumination signal	Input	OFF	Lighting switch is in 1st position.	Battery voltage	Audio unit illumination does not come on when lighting switch is in 1st position.
					Lighting switch is OFF.	3V or less	
9	–	Shield	–	–	–	0V	Interference and distortion heard from speakers.
10 (V)	Ground	ACC signal	Input	ON	–	Battery voltage	System does not work properly.
12 (G/W)	Ground	Amp. ON signal	Output	ON	–	More than 6.5V	Amp. does not work properly.
14 (BR)	13 (B/R)	Audio sound signal rear LH	Output	ON	Receive audio signal	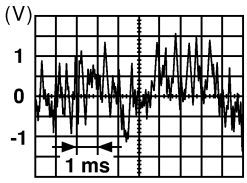 SKIA0177E	No sound from rear door speaker LH or rear door tweeter LH.
16 (L)	15 (B/W)	Audio sound signal rear RH	Output	ON	Receive audio signal	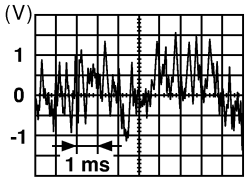 SKIA0177E	No sound from rear door speaker RH or rear door tweeter RH.

Terminal (Wire color)		Item	Signal input/ output	Condition		Reference value (Approx.)	Example of symptom
+	–			Ignition switch	Operation		
21 (V)	Ground	Remote control A	Output	ON	Audio unit ON	5V	Rear audio remote control unit does not operate properly.
22 (P)	Ground	Remote control B	Output	ON	Audio unit ON	5V	Rear audio remote control unit does not operate properly.
23 (BR/Y)	Ground	Remote control C	Output	ON	Audio unit ON	5V	Rear audio remote control unit does not operate properly.
24 (L)	Ground	Remote control D	Output	ON	Audio unit ON	5V	Rear audio remote control unit does not operate properly.
25 (LG)	–	Remote control ground	–	–	–	0V	Rear audio remote control switches do not function.
27 (O/L)	26 (O)	Audio sound signal LH	Output	ON	Receive audio signal	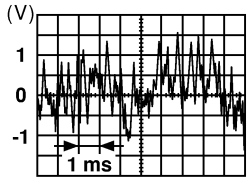 SKIA0177E	No sound from LH headphone channel.
29 (W)	28 (W/L)	Audio sound signal RH	Output	ON	Receive audio signal	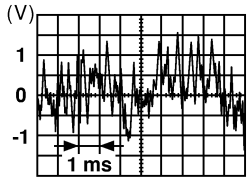 SKIA0177E	No sound from RH headphone channel.
30	–	Shield	–	–	–	0V	Interference and distortion heard from headphones or rear audio remote control unit switches not operating properly.
31 (O)	Ground	Remote control enable signal	Output	ON	Audio unit ON	5V	Rear audio remote control unit does not operate.
32 (V)	Ground	Remote control switch power supply	Output	ON	Audio unit ON	12V	Rear audio remote control unit does not operate.
42 (R)	41 (G)	Audio left channel sound signal from satellite radio tuner	Input	ON	Receive audio signal	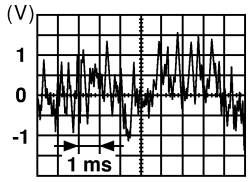 SKIA0177E	No sound from satellite radio tuner left channel.

Terminal (Wire color) +	Terminal (Wire color) –	Item	Signal input/ output	Condition: Ignition switch	Condition: Operation	Reference value (Approx.)	Example of symptom
44 (W)	43 (B)	Audio right channel sound signal from satellite radio tuner	Input	ON	Receive audio signal	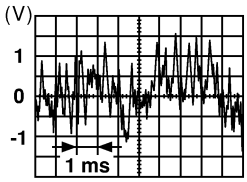 SKIA0177E	No sound from satellite radio tuner right channel.
45	–	Shield ground (audio signal)	–	–	–	0V	–
46	–	Shield ground (data)	–	–	–	0V	–
48 (L)	Ground	Satellite radio tuner request to audio unit	Input	ON	Turn audio unit ON	5V	Satellite radio tuner does not operate properly.
49 (O/L)	Ground	Audio RX	Input	ON	Operate audio volume	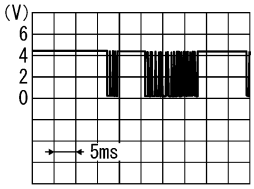 SKIA4403E	Satellite radio tuner audio information does not display properly.
50 (W/L)	Ground	Audio TX	Output	ON	Operate audio volume	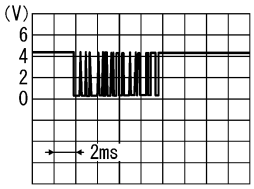 SKIA4402E	Satellite radio tuner audio information does not display properly.
65 (O/L)	Ground	Audio RX	Input	ON	Operate audio volume	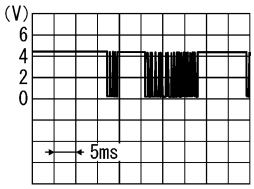 SKIA4403E	Audio does not operate properly.
66 (W/L)	Ground	Audio TX	Output	ON	Operate audio volume	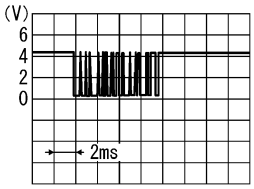 SKIA4402E	Audio does not operate properly.
67	–	Shield	–	ON	–	0V	Interference and distortion heard from speakers.
70	–	Shield	–	–	–	0V	Interference and distortion heard from speakers.

Terminal (Wire color)		Item	Signal input/ output	Condition		Reference value (Approx.)	Example of symptom
+	–			Ignition switch	Operation		
71 (B)	69 (W)	Voice guide signal (with NAVI)	Output	ON	Press the "GUIDE/VOICE" button.	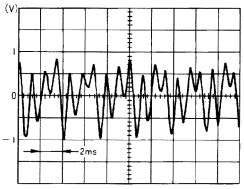 SKIA0171J	Only route guide and operation guide are not heard.
72 (W/B)	Ground	CD eject signal	Input	ON	Operate EJECT button	0V→5V	CD will not eject from audio unit.
73 (Y/B)	Ground	CD load signal	Input	ON	Operate LOAD button	0V→5V	CD will not load into audio unit.

Terminals and Reference Value for BOSE Speaker Amp.

EKS007KF

Terminal (wire color)		Item	Signal input/ output	Condition		Reference value (Approx.)	Example of symptom
+	–			Ignition switch	Operation		
1 (Y)	Ground	Battery	Input	–	–	Battery voltage	System does not work properly.
9 (SB)	10 (B/Y)	Rear door speaker LH and rear door tweeter LH	Output	ON	Receive audio signal	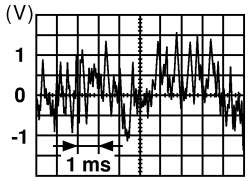 SKIA0177E	No sound from rear door speaker LH or rear door tweeter LH.
11 (O/L)	12 (R/L)	Rear door speaker RH and rear door tweeter RH	Output	ON	Receive audio signal	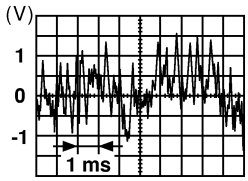 SKIA0177E	No sound from rear door speaker RH or rear door tweeter RH.
13 (L/W)	14 (L/R)	Front door speaker LH and front tweeter LH	Output	ON	Receive audio signal	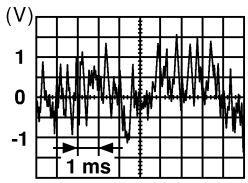 SKIA0177E	No sound from front door speaker LH or front tweeter LH.
15 (W/B)	16 (L/B)	Front door speaker RH and front tweeter RH	Output	ON	Receive audio signal	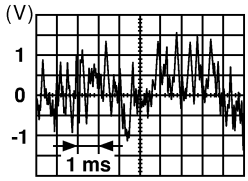 SKIA0177E	No sound from front door speaker RH or front tweeter RH.
17 (B)	Ground	Ground	–	ON	–	–	–

Terminal (wire color)		Item	Signal input/ output	Condition		Reference value (Approx.)	Example of symptom
+	–			Ignition switch	Operation		
18 (V)	2 (R)	Center speaker	Output	ON	Receive audio signal	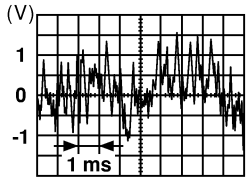 SKIA0177E	No sound from center speaker.
19 (W)	3 (B)	Subwoofer	Output	ON	Receive audio signal	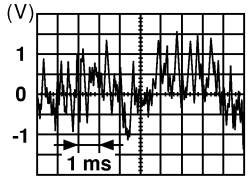 SKIA0177E	No sound from subwoofer.
22 (W/G)	Ground	Subwoofer ON signal	Input	ON	–	More than 6.5V	Subwoofer does not work properly.
24 (L)	23 (B/W)	Audio sound signal rear RH	Input	ON	Receive audio signal	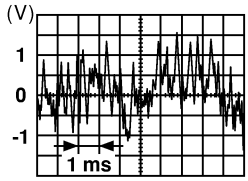 SKIA0177E	No sound from rear door speaker RH or rear door tweeter RH.
26 (BR)	25 (B/R)	Audio sound signal rear LH	Input	ON	Receive audio signal	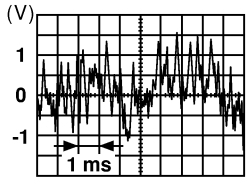 SKIA0177E	No sound from rear door speaker LH or rear door tweeter LH.
28 (Y)	27 (BR)	Audio sound signal front RH	Input	ON	Receive audio signal	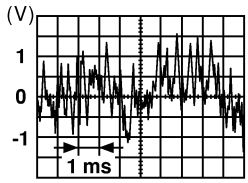 SKIA0177E	No sound from front door speaker RH or front tweeter RH.
30 (W)	29 (B)	Audio sound signal front LH	Input	ON	Receive audio signal	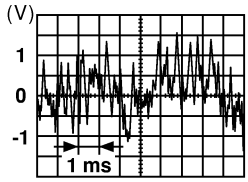 SKIA0177E	No sound from front door speaker LH or front tweeter LH.
31 (G/W)	Ground	Amp. ON signal	Input	ON	–	More than 6.5V	System does not work properly.

Terminals and Reference Value for Rear Audio Remote Control Unit

EKS007KG

Terminal (Wire color)		Item	Signal input/ output	Condition		Reference value (Approx.)	Example of symptom
+	–			Ignition switch	Operation		
2 (G)	1 (B)	Audio sound signal LH	Input	ON	Receive audio signal	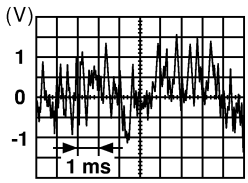 SKIA0177E	No sound from LH headphone channel.
4 (W)	3 (R)	Audio sound signal RH	Input	ON	Receive audio signal	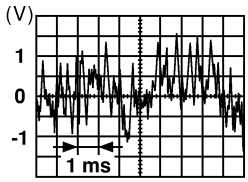 SKIA0177E	No sound from RH headphone channel.
5	–	Shield	–	–	–	0V	Interference and distortion heard from headphones or rear audio remote control unit switches not operating properly.
6 (R/L)	Ground	Illumination	Input	ON	Lighting switch ON	12V	Rear audio remote control unit does not illuminate.
					Lighting switch OFF	0V	
7 (LG)	–	Remote control ground	–	–	–	0V	Rear audio remote control unit switches do not function.
8 (O)	Ground	Remote control enable signal	Input	ON	Audio unit ON	5V	Rear audio remote control unit does not operate.
9 (V)	Ground	Remote control A	Input	ON	Audio unit ON	5V	Rear audio remote control unit does not operate properly.
10 (P)	Ground	Remote control B	Input	ON	Audio unit ON	5V	Rear audio remote control unit does not operate properly.
11 (BR/Y)	Ground	Remote control C	Input	ON	Audio unit ON	5V	Rear audio remote control unit does not operate properly.
12 (L)	Ground	Remote control D	Input	ON	Audio unit ON	5V	Rear audio remote control unit does not operate properly.
13 (V)	Ground	Remote control switch power supply	Input	ON	Audio unit ON	12V	Rear audio remote control does not operate.
15 (B)	–	Ground	–	ON	–	0V	–

Terminals and Reference Value for AV Switch

EKS007KH

Terminal No. (Wire color) +	Terminal No. (Wire color) –	Item	Signal input/ output	Condition: Ignition switch	Condition: Operation	Voltage (Approx.)	Example of symptom
1 (Y)	Ground	Battery power	Input	OFF	–	Battery voltage	System does not work properly.
2 (V)	Ground	ACC signal	Input	ACC	–	Battery voltage	System does not work properly.
3 (R/L)	Ground	Illumination signal	Input	OFF	Lighting switch is ON (position 1).	Battery voltage	AV switch illumination does not come on when lighting switch is ON (position 1).
					Turn lighting switch OFF.	Approx. 3.0V or less	
4 (BR)	Ground	Illumination control signal	Input	ON	Illumination control switch is operated by lighting switch in 1st position.	Changes between 0 and 12V.	AV switch illumination cannot be controlled.
5 (B)	Ground	Ground	–	ON	–	0V	–
6 (V)	Ground	Communication signal (+)	Input/ output	ON	–	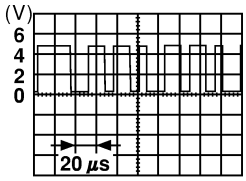 SKIA0175E	System does not work properly.
7	–	Shield ground	–	–	–	–	
8 (LG)	Ground	Communication signal (-)	Input/ output	ON	–	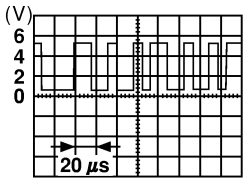 SKIA0176E	System does not work properly.
12 (R)	Ground	Remote control A	Input	ON	Press MODE switch	0V	Steering wheel audio controls do not function.
					Press SEEK UP switch	0.75V	
					Press VOL UP switch	2V	
					Except for above	5V	
13 (G)	Ground	Remote control B	Input	ON	Press POWER switch	0V	Steering wheel audio controls do not function.
					Press SEEK DOWN switch	0.75V	
					Press VOL DOWN switch	2V	
					Except for above	5V	
14 (L)	–	Remote control ground	–	–	–	–	Steering wheel audio controls do not function.
16 (W/B)	Ground	CD EJECT signal	Output	ON	Pressed	0V	CD eject does not function.
					Released	5V	

Terminal No. (Wire color)		Item	Signal input/ output	Condition		Voltage (Approx.)	Example of symptom
+	–			Ignition switch	Operation		
17 (Y/B)	Ground	CD LOAD signal	Output	ON	Pressed	0V	CD load does not function.
					Released	5V	
24 (W/R)	Ground	Vehicle speed signal	Input	ON	Vehicle is driven	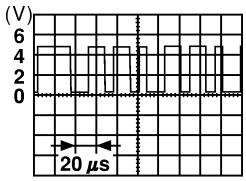 SKIA0175E	Speed sensitive volume function does not work properly.

AV Switch Self-Diagnosis Function

EKS007KI

It can check ON/OFF operation of each switch in the AV switch and diagnose the input signals from the steering switch.

STARTING THE SELF-DIAGNOSIS MODE

1. Turn ignition switch from OFF to ACC.
2. Within 10 seconds press and hold the switches “PAUSE/MUTE” and “PREV” simultaneously for 3 seconds.
   Then the self-diagnosis operates. A single beep indicates self-diagnosis mode is active.
3. Press each switch and listen for beep.

   NOTE:
   CD player LOAD and EJECT buttons are not included in this test and will not beep when pressed.

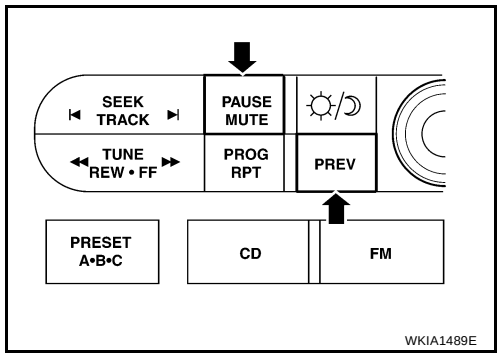

EXITING THE SELF-DIAGNOSIS MODE

- Turn ignition switch OFF. Then the self-diagnosis ends.

DIAGNOSIS FUNCTION

- It can check for continuity of the switches by sounding the beep when each AV switch and steering switch is pressed.
- It can check for continuity of harness between AV switch and steering switch.

Trouble Diagnosis

EKS007KJ

The majority of the audio troubles are the result of outside causes (bad CD, electromagnetic interference, etc.). Check the inspection items below to diagnose the malfunction.

MALFUNCTION WITH RADIO AND CD

Before proceeding, confirm that other AV switch functions (except audio functions) operate. If not, refer to AV-145, "Unable to Operate All of AV Switches (Unable to Start Self-Diagnosis)" .

Symptom	Possible cause
Inoperative	● Audio unit power circuit check. Refer to AV-30, "Power Supply Circuit Inspection" . ● Audio communication line check. Refer to AV-126, "Audio Communication Line Check (Between Display Control Unit and Audio Unit)" . ● AV switch check. Refer to AV-33, "AV Switch Check" . If above check is OK, remove audio unit for repair.
Steering switch does not operate	● Steering switch check. Refer to AV-32, "Steering Switch Check" . ● AV switch check. Refer to AV-33, "AV Switch Check" . If above check is OK, replace audio unit.
Audio information is not displayed on screen (with NAVI)	● Display unit check. Refer to AV-101, "Self-Diagnosis Mode (DCU)" .
All speakers do not sound	● Audio unit ● BOSE speaker amp. power supply and ground circuit check. Refer to AV-30, "Power Supply Circuit Inspection" . ● BOSE speaker amp. ON signal ● BOSE speaker amp.
One or several speakers do not sound	● Front door speaker check. Refer to AV-34, "Sound Is Not Heard From Front Door Speaker or Front Tweeter" . ● Rear door speaker check. Refer to AV-38, "Sound Is Not Heard From Rear Door Speaker or Rear Door Tweeter" . ● Subwoofer check. Refer to AV-42, "Sound Is Not Heard From Subwoofer" . ● Center speaker check. Refer to AV-41, "Sound Is Not Heard From Center Speaker" .
Poor sound	● Audio unit ● BOSE speaker amp. ● Speaker
Noisy	● Audio unit ● BOSE speaker amp. ● Electrical equipment (generator, bonding wire, etc.)

FOR RADIO ONLY

Symptom	Possible cause
No sound	● Audio unit ● Antenna feeder, wiring or connections ● Antenna amplifier, power supply, wiring or connections
Noisy	● Audio unit ● Audio unit case ground ● Antenna feeder, wiring or connections ● Antenna amplifier, power supply, wiring or connections ● Noise prevention parts ● Each electrical equipment ● Wire harness of each piece of electrical equipment
All radio stations stored in memory are deleted	● Audio unit power circuit check. Refer to AV-30, "Power Supply Circuit Inspection" . ● Audio unit

NOTE:

1. The following noise results from variations in field strength, such as fading noise and multi-path noise, or external noise from trains and other sources. It is not a malfunction.

- Fading noise: This noise occurs because of variations in the field strength in a narrow range due to mountains or buildings blocking the signal.
- Multi-path noise: This noise results from the waves sent directly from the broadcast station arriving at the antenna at a different time from the waves which reflect off mountains or buildings.

FOR CD ONLY

Symptom	Possible cause
CD cannot be inserted.	● CD ● Audio unit
CD cannot be ejected.	
The CD cannot be played.	
The sound skips, stops suddenly, or is distorted.	

Noise Inspection

EKS007KK

The vehicle itself can be a source of noise if noise prevention parts or electrical equipment is malfunctioning. Check if noise is caused and/or changed by engine speed, ignition switch turned to each position, and operation of each piece of electrical equipment, and determine the cause.

NOTE:
The source of the noise can be found easily by listening to the noise while removing the fuses of electrical components, one by one.

TYPE OF NOISE AND POSSIBLE CAUSE

Occurrence condition		Possible cause
Occurs only when engine is ON.	A continuous growling noise occurs. The speed of the noise varies with changes in the engine speed.	● Ignition components
	A whistling noise occurs while the engine speed is high. A booming noise occurs while the engine is running and the lighting switch is ON.	● Generator
The occurrence of the noise is linked with the operation of the fuel pump.		● Fuel pump condenser
Noise only occurs when various electrical components are operating.	A cracking or snapping sound occurs with the operation of various switches.	● Relay malfunction, audio unit malfunction
	The noise occurs when various motors are operating.	● Motor case ground ● Motor
The noise occurs constantly, not just under certain conditions.		● Rear defogger coil malfunction ● Open circuit in printed heater ● Poor ground of antenna amplifier or antenna feeder line
A cracking or snapping sound occurs while the vehicle is being driven, especially when it is vibrating excessively.		● Ground wire of body parts ● Ground due to improper part installation ● Wiring connections or a short circuit

Power Supply Circuit Inspection

EKS007KL

1. CHECK FUSES

- Check that the following fuses are not blown.

Unit	Terminals	Signal name	Fuse No.
Audio unit	6	Battery power	31
	10	Ignition switch ACC or ON	4
AV switch	1	Battery power	31
	2	Ignition switch ACC or ON	4
BOSE speaker amp.	1	Battery power	31
Subwoofer	6	Battery power	17

OK or NG

OK >> GO TO 2.
NG >> If fuse is blown, be sure to eliminate cause of problem before installing new fuse. Refer to PG-4, "POWER SUPPLY ROUTING CIRCUIT" .

2. POWER SUPPLY CIRCUIT CHECK

1. Disconnect audio unit, subwoofer or BOSE speaker amp. connector.
2. Check voltage between the audio unit and ground.

Unit	Terminal No. (+) Connector	Terminal No. (+) Terminal (wire color)	Terminal No. (-)	OFF	ACC	ON
Audio unit	M43	6 (Y)	Ground	Battery voltage	Battery voltage	Battery voltage
		10 (V)	Ground	0 V	Battery voltage	Battery voltage

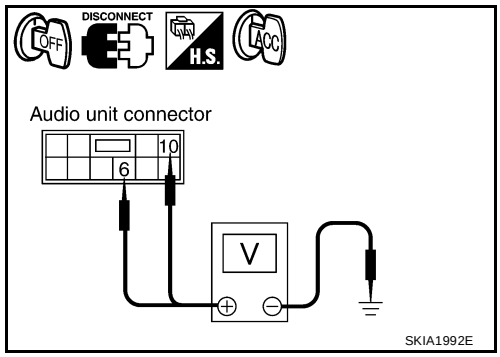

3. Check voltage between subwoofer and ground.

Unit	Terminal No. (+) Connector	Terminal No. (+) Terminal (wire color)	Terminal No. (-)	OFF	ACC	ON
Sub-woofer	B72	6 (R)	Ground	Battery voltage	Battery voltage	Battery voltage

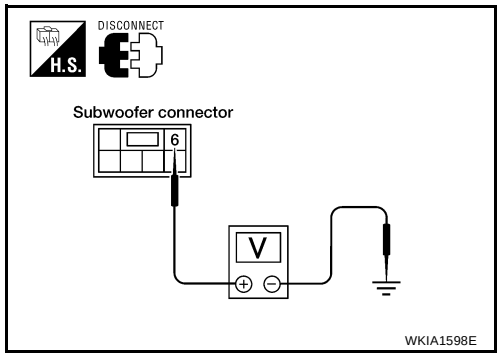

4. Check voltage between BOSE speaker amp. and ground.

Unit	Terminal No. (+) Connector	Terminal No. (+) Terminal (wire color)	Terminal No. (-)	OFF	ACC	ON
BOSE speaker amp.	M112	1 (Y)	Ground	Battery voltage	Battery voltage	Battery voltage

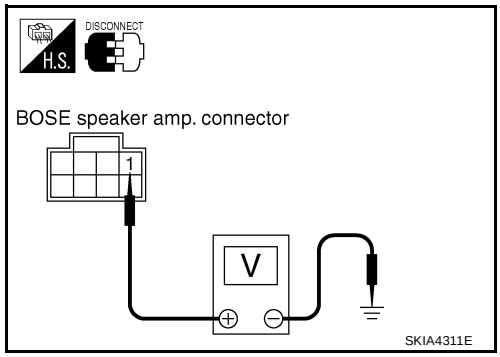

OK or NG

OK >> GO TO 3.

NG >> ● Check connector housings for disconnected or loose terminals.
● Repair harness or connector.

3. GROUND CIRCUIT CHECK

Check continuity between subwoofer harness connector B72 terminal 5 (B) and BOSE speaker amp. harness connector M112 terminal 17 (B) and ground.

Continuity should exist.

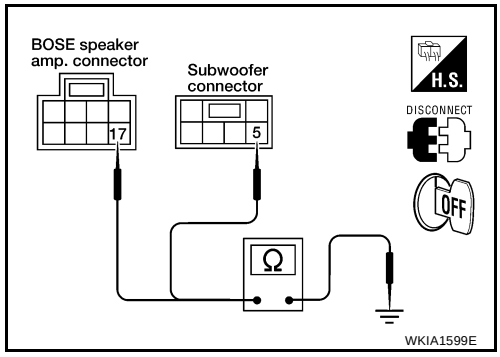

OK or NG

OK >> Inspection End.

NG >> ● Check connector housings for disconnected or loose terminals.
● Repair harness or connector.

Steering Switch Check

EKS007KM

1. AV SWITCH SELF-DIAGNOSIS FUNCTION CHECK

1. Start AV switch self-diagnosis function. Refer to AV-27, "AV Switch Self-Diagnosis Function" .
2. Operate steering switch.

Does steering switch operate normally?

YES >> Inspection End.
NO >> GO TO 2.

2. CHECK HARNESS

1. Turn ignition switch OFF.
2. Disconnect AV switch connector and spiral cable connector.
3. Check continuity between spiral cable harness connector terminal and AV switch harness connector terminal.

Terminals				Continuity
Spiral cable		AV switch		
Connector	Terminal	Connector	Terminal (Wire color)	
M30	32 (G)	M98	13 (G)	Yes
	31 (L)		14 (L)	
	24 (R)		12 (R)	

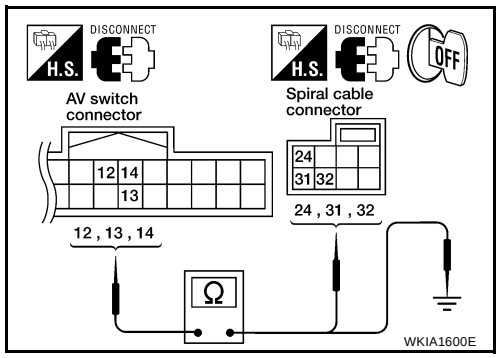

4. Check continuity between AV switch and ground.

Terminals			Continuity
AV switch		—	
Connector	Terminal (Wire color)		
M98	12 (R)	Ground	No
	13 (G)		
	14 (L)		

OK or NG

OK >> GO TO 3.
NG >> Repair harness.

3. SPIRAL CABLE CHECK

1. Disconnect spiral cable connector.
2. Check continuity between spiral cable terminals.

Terminals		Continuity
Spiral cable		
Terminal	Terminal	
32	16	Yes
31	17	
24	20	

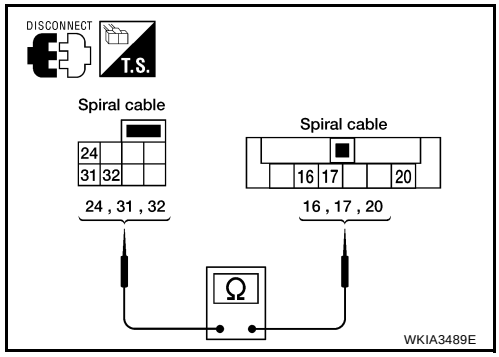

OK or NG

OK >> GO TO 4.
NG >> Replace spiral cable. Refer to SRS-47, "Removal and Installation" .

4. CHECK STEERING SWITCH RESISTANCE

Check resistance between steering switch terminals.

Terminal		Signal name	Condition	Resistance (Ω) (Approx.)
16	17	Seek (down)	Depress (station) down switch.	165
		Power	Depress power switch.	0
		Volume (down)	Depress volume down switch.	652
20	17	Seek (up)	Depress (station) up switch.	165
		Mode	Depress mode switch.	0
		Volume (up)	Depress volume up switch.	652

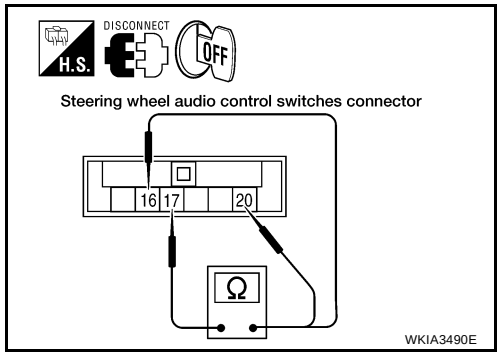

OK or NG

OK >> Inspection End.
NG >> Replace steering switch. Refer to AV-47, "Removal and Installation of Steering Wheel Audio Control Switches" .

AV Switch Check

EKS007KN

1. AV SWITCH SELF-DIAGNOSIS FUNCTION CHECK

1. Perform AV switch self-diagnosis function. Refer to AV-27, "AV Switch Self-Diagnosis Function" .

Does AV switch operate normally?

YES >> Inspection End.
NO >> GO TO 2.

2. CHECK AV SWITCH POWER SUPPLY AND GROUND CIRCUIT

1. Check AV switch power supply and ground circuit. Refer to AV-120, "Power Supply and Ground Circuit Check for AV Switch" .

OK or NG

YES >> Replace AV switch. Refer to AV-45, "Removal and Installation for AV Switch" .
NO >> Repair malfunctioning part.

Audio Communication Line Check

EKS007KO

1. CHECK AUDIO COMMUNICATION LINE

- Start audio communication line check. Refer to AV-126, "Audio Communication Line Check (Between Display Control Unit and Audio Unit)" .

OK or NG

OK >> Inspection End.
NG >> Replace malfunctioning part.

Sound Is Not Heard From Front Door Speaker or Front Tweeter

EKS007KR

1. HARNESS CHECK

1. Disconnect BOSE speaker amp. connector M113 and suspect speaker connector.
2. Check continuity between BOSE speaker amp. harness connector terminal M113 and suspect speaker harness connector terminal.

Terminals				Continuity
BOSE speaker amp.		Speaker or tweeter		
Connector	Terminal (Wire color)	Connector	Terminal (Wire color)	
M113	13 (L/W)	D12	+ (L/W)	Yes
	14 (L/R)		- (L/R)	
	15 (W/B)	D112	+ (W/B)	
	16 (L/B)		- (L/B)	
	13 (L/W)	M109	+ (L/W)	
	14 (L/R)		- (L/R)	
	15 (W/B)	M111	+ (W/B)	
	16 (L/B)		- (L/B)	

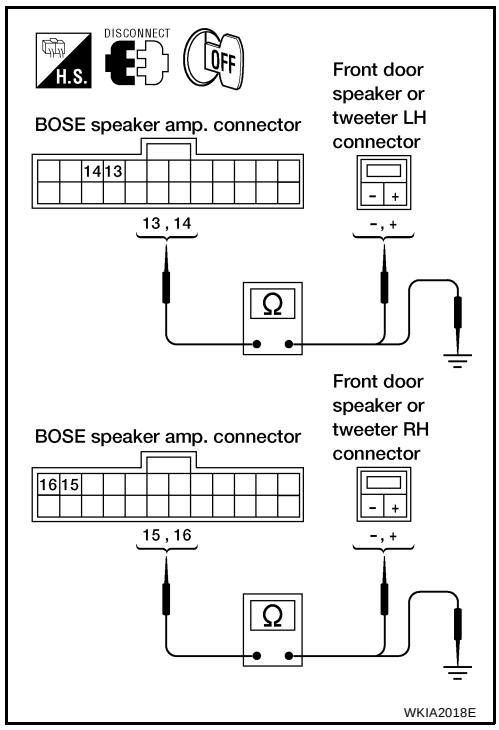

3. Check continuity between BOSE speaker amp. harness connector terminal M113 and ground.

Terminals			Continuity
BOSE speaker amp.		—	
Connector	Terminal (Wire color)		
M113	13 (L/W)	Ground	No
	14 (L/R)		
	15 (W/B)		
	16 (L/B)		

OK or NG

OK >> GO TO 2.

NG >> ● Check connector housings for disconnected or loose terminals.
● Repair harness or connector.

2. FRONT SPEAKER SIGNAL CHECK

1. Connect BOSE speaker amp. connector M113 and suspect speaker connector.
2. Turn ignition switch to ACC.
3. Push “POWER” switch.
4. Check the signal BOSE speaker amp. harness connector M113 terminal with CONSULT-II or oscilloscope.

Terminals				Condi-tion	Reference signal
(+)		(-)			
Con-nector	Terminal (Wire color)	Con-nector	Termi-nal (Wire color)		
M113	13 (L/W)	M113	14 (L/R)	Receive audio signal	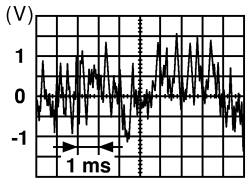 SKIA0177E
	15 (W/B)		16 (L/B)		

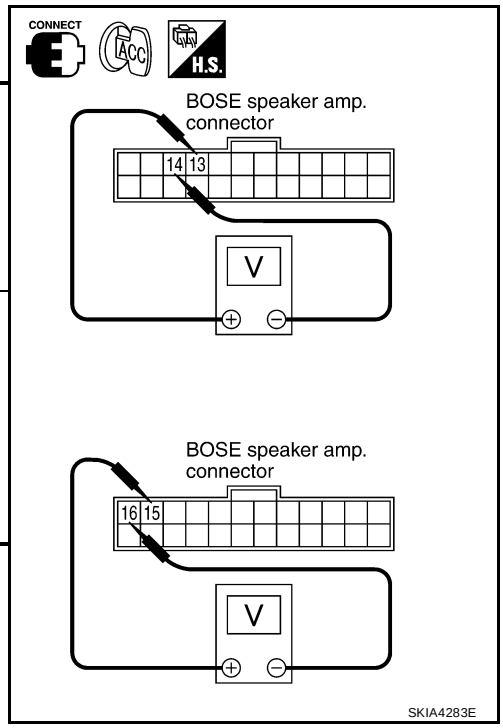

OK or NG

OK >> Replace suspect speaker. Refer to AV-45, "Removal and Installation of Front Door Speaker" or AV-46, "Removal and Installation of Front Tweeter" .

NG >> GO TO 3.

3. HARNESS CHECK

1. Disconnect audio unit connector and BOSE speaker amp. connector.
2. Check continuity between audio unit harness connector terminal and BOSE speaker amp. harness connector terminal.

Terminals				Continuity
Audio unit		BOSE speaker amp.		
Connector	Terminal (Wire color)	Connector	Terminal (Wire color)	
M43	1 (B)	M113	29 (B)	Yes
	2 (W)		30 (W)	
	3 (BR)		27 (BR)	
	4 (Y)		28 (Y)	

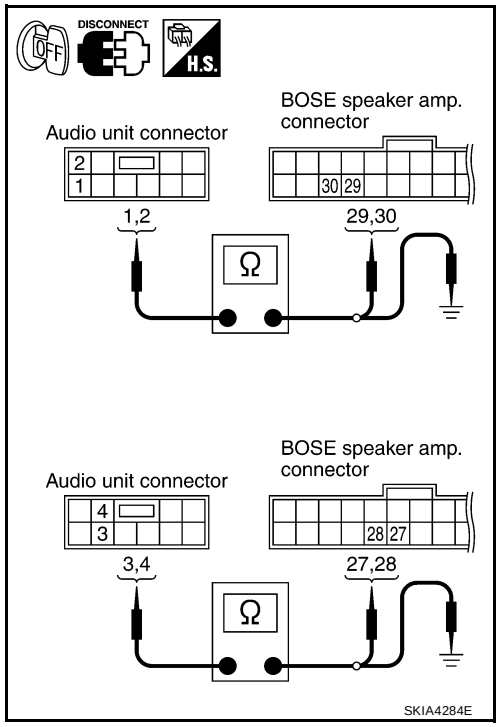

3. Check continuity between audio unit harness connector terminal and ground.

Terminals			Continuity
Audio unit		—	
Connector	Terminal (Wire color)		
M43	1 (B)	Ground	No
	2 (W)		
	3 (BR)		
	4 (Y)		

OK or NG

OK >> GO TO 4.

NG >> ● Check connector housings for disconnected or loose terminals.
● Repair harness or connector.

4. FRONT SPEAKER SIGNAL CHECK

1. Connect audio unit connector and BOSE speaker amp. connector.
2. Turn ignition switch ACC.
3. Push “POWER” switch.
4. Check the signal audio unit harness connector terminal with CONSULT-II or oscilloscope.

Terminals				Condi-tion	Reference signal
(+)		(-)			
Con-nector	Termi-nal (Wire color)	Con-nector	Termi-nal (Wire color)		
M43	2 (W)	M43	1 (B)	Receive audio signal	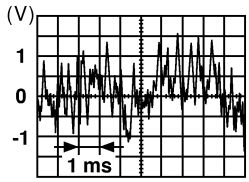
	4 (Y)		3 (BR)		

SKIA0177E

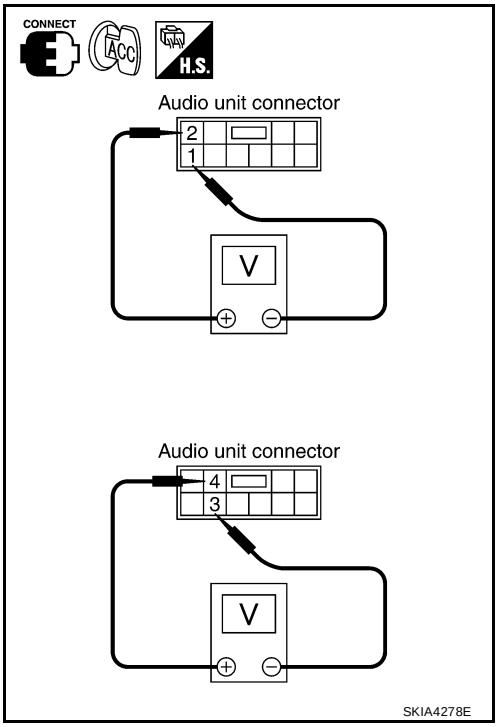

SKIA4278E

OK or NG

OK >> Replace BOSE speaker amp. Refer to AV-46, "Removal and Installation of BOSE Speaker Amp." .

NG >> Replace audio unit. Refer to AV-45, "Removal and Installation for Audio Unit" .

Sound Is Not Heard From Rear Door Speaker or Rear Door Tweeter

EKS007KS

1. HARNESS CHECK

1. Disconnect BOSE speaker amp. connector M113 and suspect speaker connector.
2. Check continuity between BOSE speaker amp. harness connector terminal M113 and suspect speaker harness connector terminal.

Terminals				Continuity
BOSE speaker amp.		Speaker or tweeter		
Connector	Terminal (Wire color)	Connector	Terminal (Wire color)	
M113	9 (SB)	D207	+ (SB)	Yes
	10 (B/Y)		- (B/Y)	
	11 (O/L)	D307	+ (O/L)	
	12 (R/L)		- (R/L)	
	9 (SB)	D208	+ (SB)	
	10 (B/Y)		- (B/Y)	
	11 (O/L)	D308	+ (O/L)	
	12 (R/L)		- (R/L)	

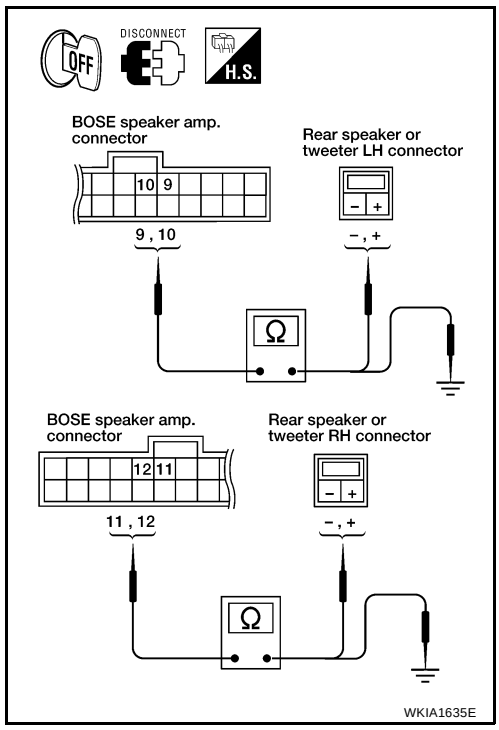

3. Check continuity between BOSE speaker amp. harness connector M113 terminal and ground.

Terminals			Continuity
BOSE speaker amp.		—	
Connector	Terminal (Wire color)		
M113	9 (SB)	Ground	No
	10 (B/Y)		
	11 (O/L)		
	12 (R/L)		

OK or NG

OK >> GO TO 2.

NG >> ● Check connector housings for disconnected or loose terminals.
● Repair harness or connector.

2. REAR SPEAKER SIGNAL CHECK

1. Connect BOSE speaker amp. connector M113 and suspect speaker connector.
2. Turn ignition switch to ACC.
3. Push “POWER” switch.
4. Check the signal BOSE speaker amp. harness connector M113 terminal with CONSULT-II or oscilloscope.

Terminals				Condi-tion	Reference signal
(+)		(-)			
Con-nec-tor	Terminal (Wire color)	Con-nec-tor	Terminal (Wire color)		
M113	9 (SB)	M113	10 (B/Y)	Receive audio signal	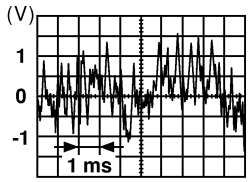 SKIA0177E
	11 (O/L)		12 (R/L)		

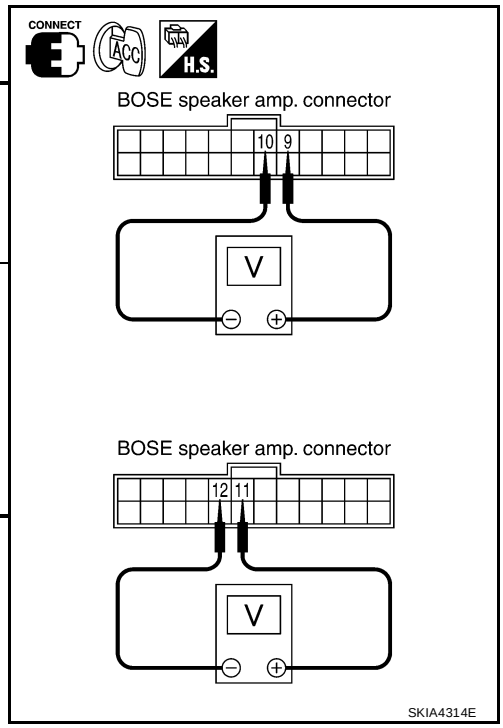

OK or NG

OK >> Replace suspect speaker. Refer to AV-45, "Removal and Installation of Rear Door Speaker" or AV-46, "Removal and Installation of Rear Door Tweeter" .

NG >> GO TO 3.

3. HARNESS CHECK

1. Disconnect audio unit connector M44 and BOSE speaker amp. connector M113.
2. Check continuity between audio unit harness connector M44 terminal and BOSE speaker amp. harness connector M113 terminal.

Terminals				Continuity
Audio unit		BOSE speaker amp.		
Connector	Terminal (Wire color)	Connector	Terminal (Wire color)	
M44	13 (B/R)	M113	25 (B/R)	Yes
	14 (BR)		26 (BR)	
	15 (B/W)		23 (B/W)	
	16 (L)		24 (L)	

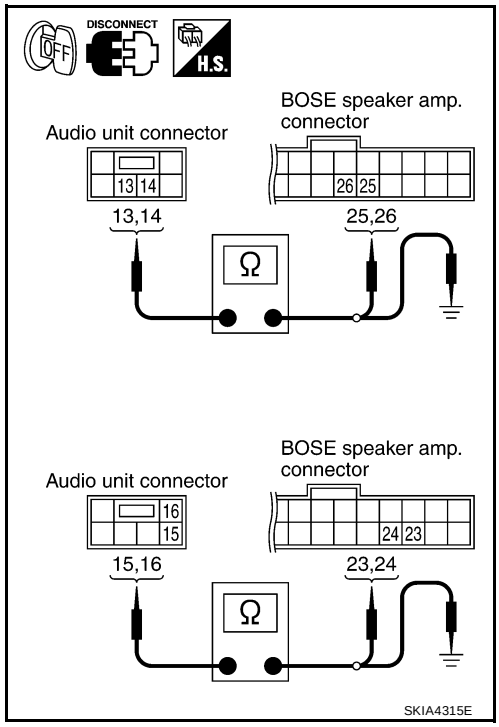

3. Check continuity between audio unit harness connector terminal and ground.

Terminals			Continuity
Audio unit		—	
Connector	Terminal (Wire color)		
M44	13 (B/R)	Ground	No
	14 (BR)		
	15 (B/W)		
	16 (L)		

OK or NG

OK >> GO TO 4.
NG >> ● Check connector housings for disconnected or loose terminals.
● Repair harness or connector.

4. REAR SPEAKER SIGNAL CHECK

1. Connect audio unit connector M44 and BOSE speaker amp. connector M113.
2. Turn ignition switch to ACC.
3. Push “POWER” switch.
4. Check the signal at audio unit harness connector M44 terminal with CONSULT-II or oscilloscope.

Terminals				Condi-tion	Reference signal
(+)		(-)			
Con-nector	Termi-nal (Wire color)	Con-nector	Terminal (Wire color)		
M44	14 (BR)	M44	13 (B/R)	Receive audio signal	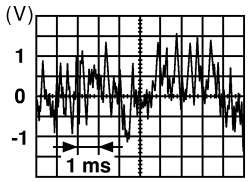
	16 (L)		15 (B/W)		

SKIA0177E

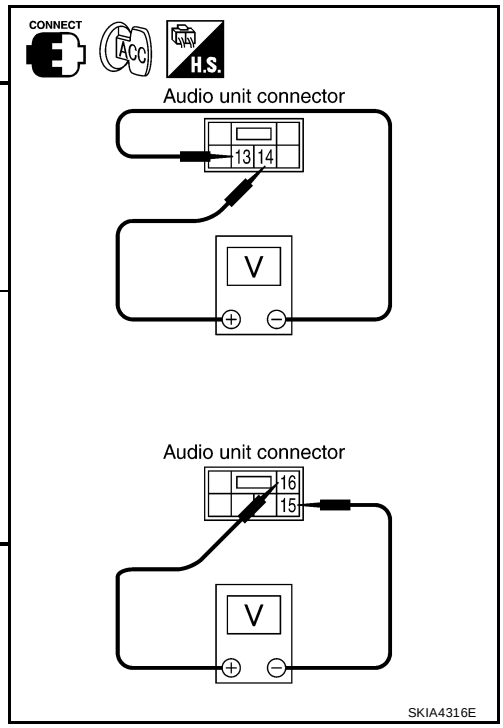

SKIA4316E

OK or NG

OK >> Replace BOSE speaker amp. Refer to AV-46, "Removal and Installation of BOSE Speaker Amp." .

NG >> Replace audio unit. Refer to AV-45, "Removal and Installation for Audio Unit" .

Sound Is Not Heard From Center Speaker

EKS007KT

1. HARNESS CHECK

1. Disconnect BOSE speaker amp. connector M112 and center speaker connector M110.
2. Check continuity between BOSE speaker amp. harness connector terminal M112 center speaker harness connector terminal M110.

Terminals				Continuity
BOSE speaker amp.		Center speaker		
Connector	Terminal (Wire color)	Connector	Terminal (Wire color)	
M112	2 (R)	M110	- (R)	Yes
	18 (V)		+ (V)	

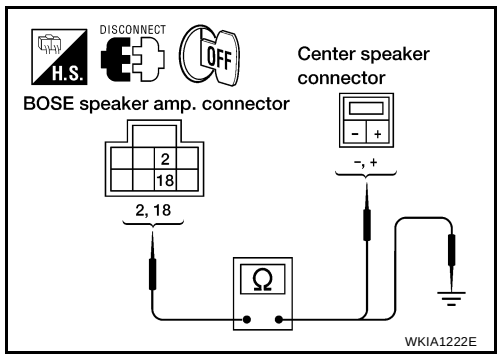

WKIA1222E

3. Check continuity between BOSE speaker amp. harness connector M112 terminal and ground.

Terminals			Continuity
BOSE speaker amp.		—	
Connector	Terminal (Wire color)		
M112	2 (R)	Ground	No
	18 (V)		

OK or NG

OK >> GO TO 2.

NG >> ● Check connector housings for disconnected or loose terminals.
● Repair harness or connector.

2. CENTER SPEAKER SIGNAL CHECK

1. Connect BOSE speaker amp. connector M112 and center speaker connector M110.
2. Turn ignition switch to ACC.
3. Push “POWER” switch.
4. Check the signal BOSE speaker amp. harness connector M112 terminal with CONSULT-II or oscilloscope.

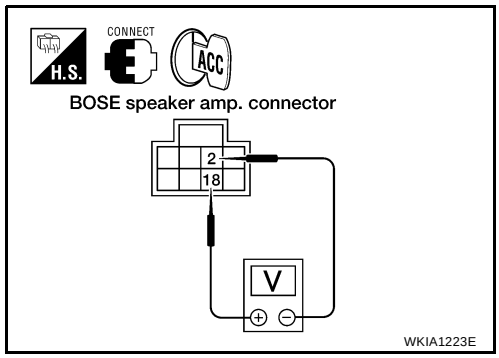

Terminals				Condi-tion	Reference signal
(+)		(-)			
Con-nec-tor	Terminal (Wire color)	Con-nec-tor	Terminal (Wire color)		
M112	18 (V)	M112	2 (R)	Receive audio signal	(V) 1 0 -1 1 ms SKIA0177E

OK or NG

OK >> Replace center speaker. Refer to AV-46, "Removal and Installation of Center Speaker" .

NG >> Replace BOSE speaker amp. Refer to AV-46, "Removal and Installation of BOSE Speaker Amp." .

Sound Is Not Heard From Subwoofer

EKS007KU

1. CHECK FUSE

- Check that the following fuse is not blown.

Unit	Terminal	Signal name	Fuse No.
Subwoofer	6	Battery power	17

OK or NG

OK >> GO TO 2.

NG >> If fuse is blown, be sure to eliminate cause of problem before installing new fuse. Refer to PG-4, "POWER SUPPLY ROUTING CIRCUIT" .

2. POWER SUPPLY CIRCUIT CHECK

1. Disconnect subwoofer connector.
2. Check voltage between the subwoofer and ground.

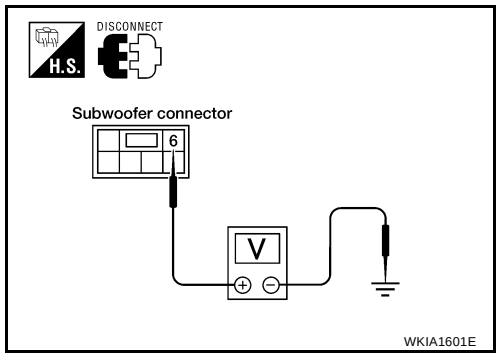

Unit	Terminal No.			OFF	ACC	ON
	(+)		(-)			
	Connector	Terminal (wire color)				
Sub-woofer	B72	6 (R)	Ground	Battery voltage	Battery voltage	Battery voltage

OK or NG

OK >> GO TO 3.

NG >>
- Check connector housings for disconnected or loose terminals.
- Repair harness or connector.

3. GROUND CIRCUIT CHECK

Check continuity between subwoofer harness connector B72 terminal 5 (B) and ground.

Continuity should exist.

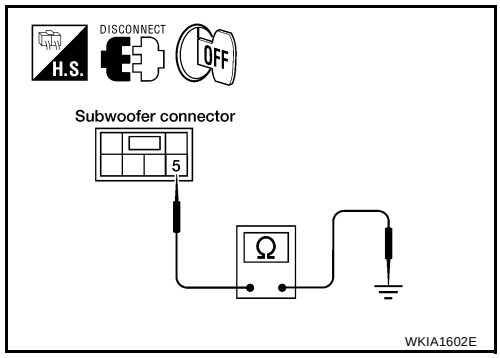

OK or NG

OK >> GO TO 4.

NG >> ● Check connector housings for disconnected or loose terminals.
● Repair harness or connector.

4. CHECK SUBWOOFER AMP. ON SIGNAL

1. Operate system and check voltage between subwoofer harness connector B72 terminal 4 (W/G) and ground.

Voltage : More than approx. 6.5V

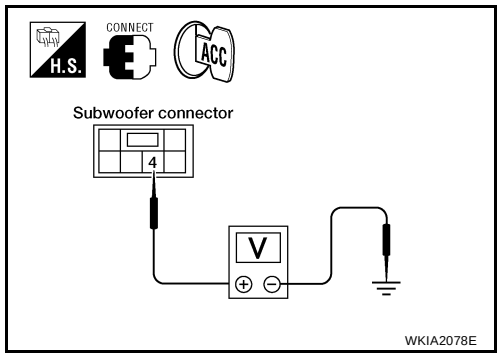

OK or NG

OK >> GO TO 5.

NG >> ● Check connector housings for disconnected or loose terminals.
● Repair harness or connector.

5. HARNESS CHECK

1. Disconnect BOSE speaker amp. connector and subwoofer connectors.
2. Check continuity between BOSE speaker amp. harness connector terminal and subwoofer harness connector harness connector terminal.

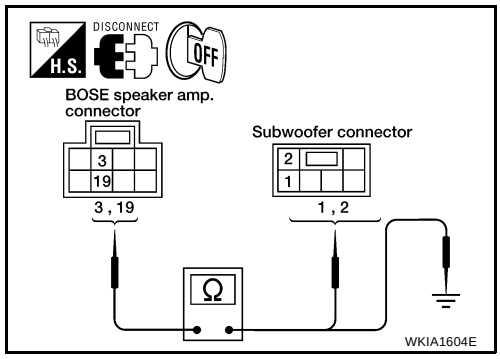

Terminals				Continuity
BOSE speaker amp.		Subwoofer		
Connector	Terminal (Wire color)	Connector	Terminal (Wire color)	
M112	3 (B)	B72	1 (B)	Yes
	19 (W)	B72	2 (W)	

3. Check continuity between BOSE speaker amp. harness connector terminal and ground.

Terminals			Continuity
BOSE speaker amp.		—	
Connector	Terminal (Wire color)		
M112	3 (B)	Ground	No
	19 (W)		

OK or NG

OK >> GO TO 6.

NG >> ● Check connector housings for disconnected or loose terminals.
● Repair harness or connector.

6. SUBWOOFER SIGNAL CHECK

1. Connect BOSE speaker amp. connector and subwoofer connector.
2. Turn ignition switch to ACC.
3. Check the signal BOSE speaker amp. harness connector terminal with CONSULT-II or oscilloscope.

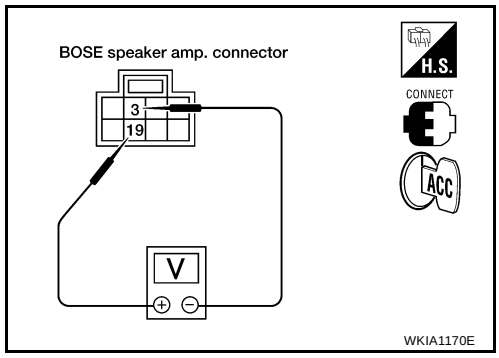

Terminals				Condition	Reference signal
(+)		(-)			
Connector	Terminal (Wire color)	Connector	Terminal (Wire color)		
M112	19 (W)	M112	3 (B)	Receive audio signal	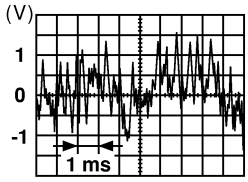 SKIA0177E

OK or NG

OK >> Replace subwoofer. Refer to AV-46, "Removal and Installation of Subwoofer" .

NG >> Replace BOSE speaker amp. Refer to AV-46, "Removal and Installation of BOSE Speaker Amp." .

Removal and Installation for Audio Unit

EKS007KV

1. Remove cluster lid C. Refer to IP-12, "Cluster Lid C" .
2. Disconnect the negative battery cable.
3. Using power tool, remove the four audio unit screws.
4. Pull out audio unit and disconnect connectors.
5. Installation is in the reverse order of removal.

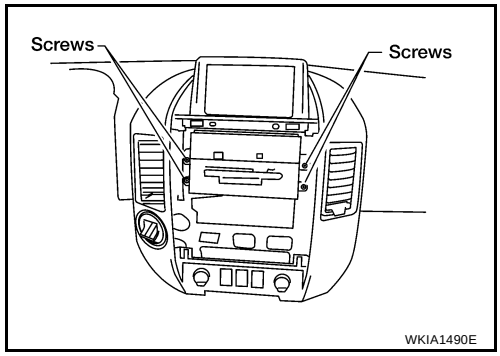

Removal and Installation for AV Switch

EKS007KW

1. Remove cluster lid C. Refer to IP-12, "Cluster Lid C" .
2. Remove the four AV switch screws.
3. Carefully remove the AV switch.
4. Installation is in the reverse order of removal.

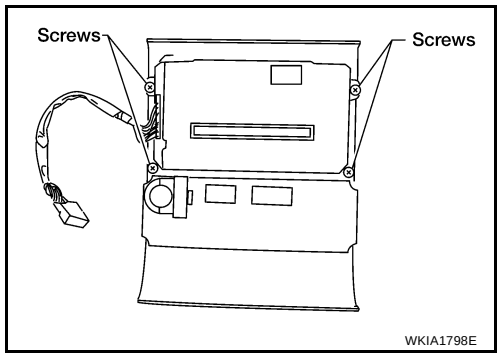

Removal and Installation of Front Door Speaker

EKS007KX

1. Remove door finisher. Refer to EI-31, "DOOR FINISHER" .
2. Remove the four front door speaker screws.
3. Disconnect connector and remove the speaker.
4. Installation is in the reverse order of removal.

Front door speaker screws	**: 3.5 N·m (0.36 kg-m, 31 in-lb)**

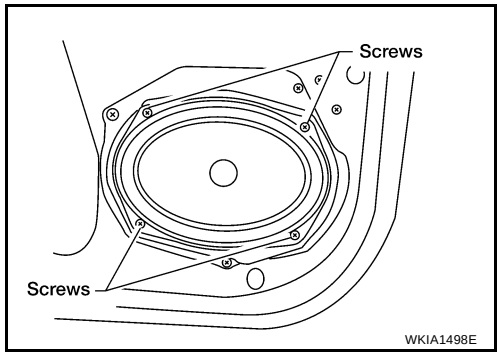

Removal and Installation of Rear Door Speaker

EKS007KY

1. Remove door finisher. Refer to EI-31, "DOOR FINISHER" .
2. Remove the three rear speaker screws and remove speaker.
3. Disconnect connector.
4. Installation is in the reverse order of removal.

Rear speaker screws	**: 3.5 N·m (0.36 kg-m, 31 in-lb)**

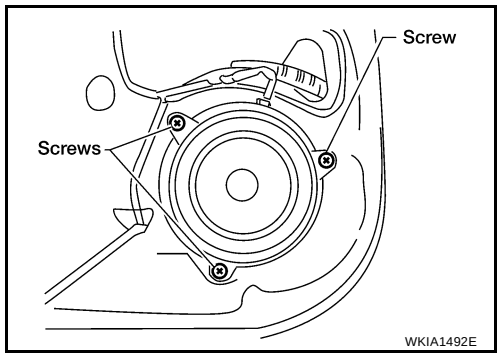

Removal and Installation of Front Tweeter

EKS007KZ

1. Remove tweeter grille. Refer to IP-10, "INSTRUMENT PANEL ASSEMBLY" .
2. Remove tweeter fasteners.
3. Disconnect connector and remove tweeter.
4. Installation is in the reverse order of removal.

Removal and Installation of Rear Door Tweeter

EKS007L0

1. Remove door finisher. Refer to EI-31, "DOOR FINISHER" .
2. Remove screws and remove tweeter.
3. Installation is in the reverse order of removal.

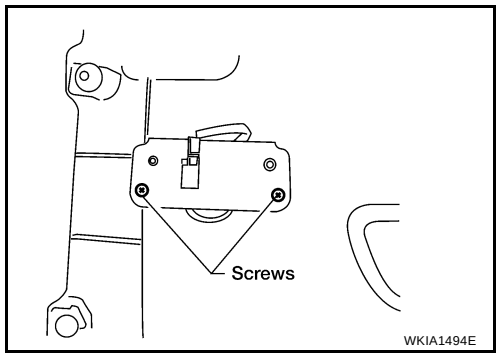

Removal and Installation of Center Speaker

EKS007L1

1. Remove cluster lid D. Refer to IP-12, "Cluster Lid D" .
2. Remove the screws and remove the center speaker.
3. Installation is in the reverse order of removal.

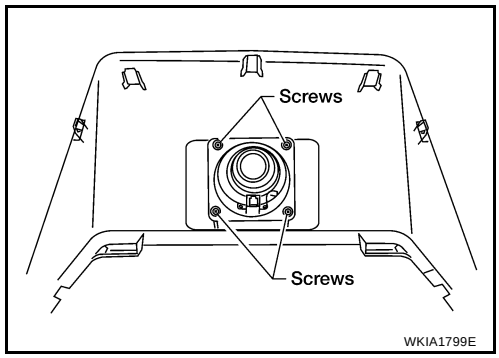

Removal and Installation of Subwoofer

EKS007L2

1. Remove front seat LH. Refer to SE-96, "Components" .
2. Remove the subwoofer bolts.
3. Disconnect the connector and remove the subwoofer.
4. Installation is in the reverse order of removal.

Subwoofer mounting bolts	**: 3.5 N·m (0.36 kg-m, 31 in-lb)**

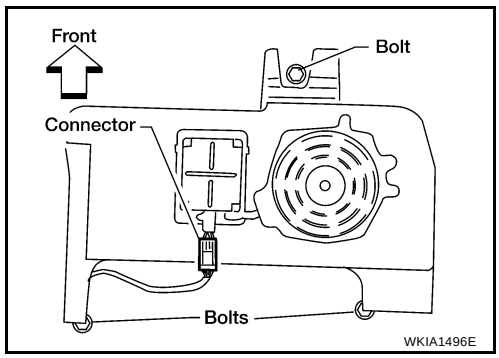

Removal and Installation of BOSE Speaker Amp.

EKS007L3

1. Remove BCM. Refer to BCS-19, "Removal and Installation of BCM" .

2. Remove BOSE speaker amp. bracket screws and slide BOSE speaker amp. down.
3. Disconnect connectors and remove BOSE speaker amp.
4. Installation is in the reverse order of removal.

BOSE speaker amp. mounting screws : 3.5 N·m (0.36 kg-m, 31 in-lb)

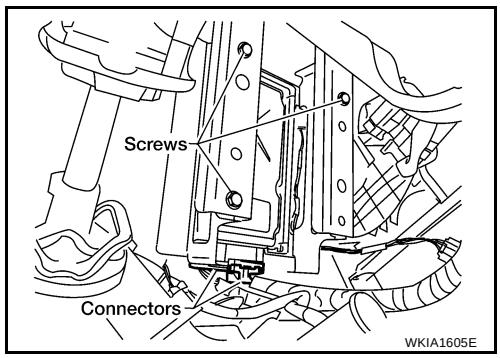

Removal and Installation of Rear Audio Remote Control Unit

EKS007L4

1. Carefully remove the rear audio remote control unit from the rear roof console assembly.

   CAUTION:
   Wrap removal tool with clean shop cloth to prevent damage to the headliner.
2. Disconnect connector and remove the rear audio control unit.
3. Installation is in the reverse order of removal.

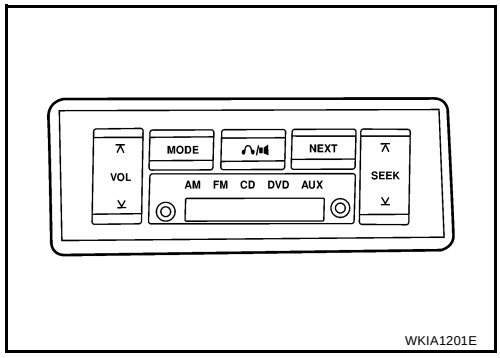

Removal and Installation of Steering Wheel Audio Control Switches

EKS007L5

1. Remove steering wheel. Refer to PS-8, "Removal and Installation" .
2. Remove steering wheel rear cover screws and remove steering wheel rear cover.
3. Remove steering wheel switch assembly screws and steering wheel switches.
4. Installation is in the reverse order of removal.

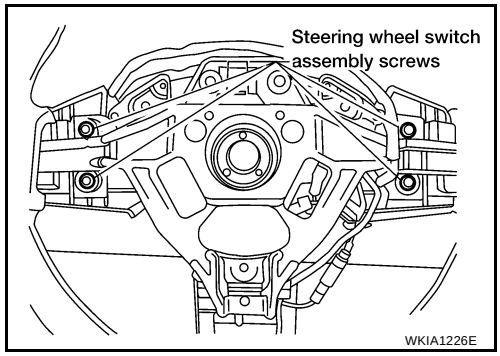

AUDIO ANTENNA

PFP:28200

System Description

EKS007L6

With the ignition switch in ACC or ON, power is supplied

- through 10A fuse [No. 4, located in the fuse block (J/B)]
- to audio unit terminal 10.

Ground is supplied through the case of the antenna amp.
When the radio switch is turned ON, antenna signal is supplied

- through audio unit terminal 5
- to the antenna amp. terminal 1.

Then the antenna amp. is activated.
The amplified radio signals are supplied to the audio unit through the antenna amp.

Wiring Diagram — W/ANT —

EKS007L7

AV-W/ANT-01

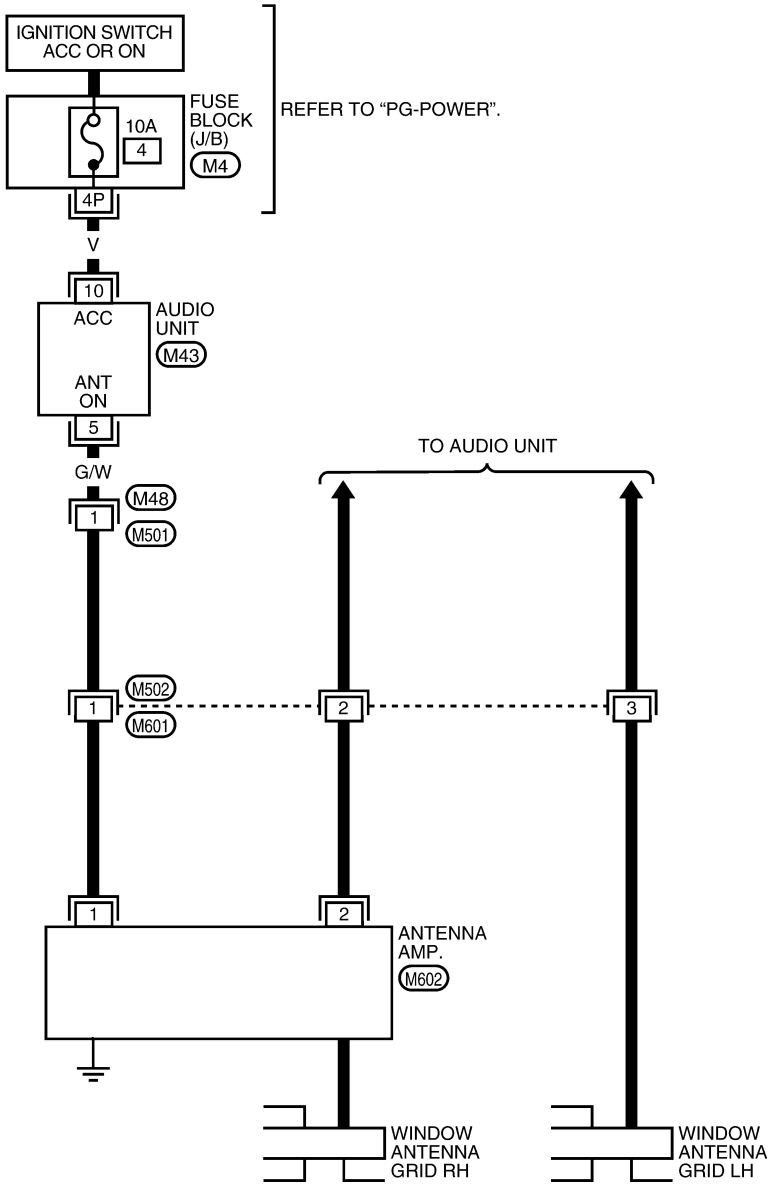

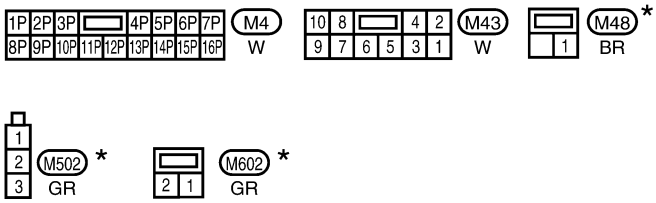

*: THIS CONNECTOR IS NOT SHOWN IN “HARNESS LAYOUT” OF PG SECTION.

WKWA2158E

Location of Antenna

EKS007L8

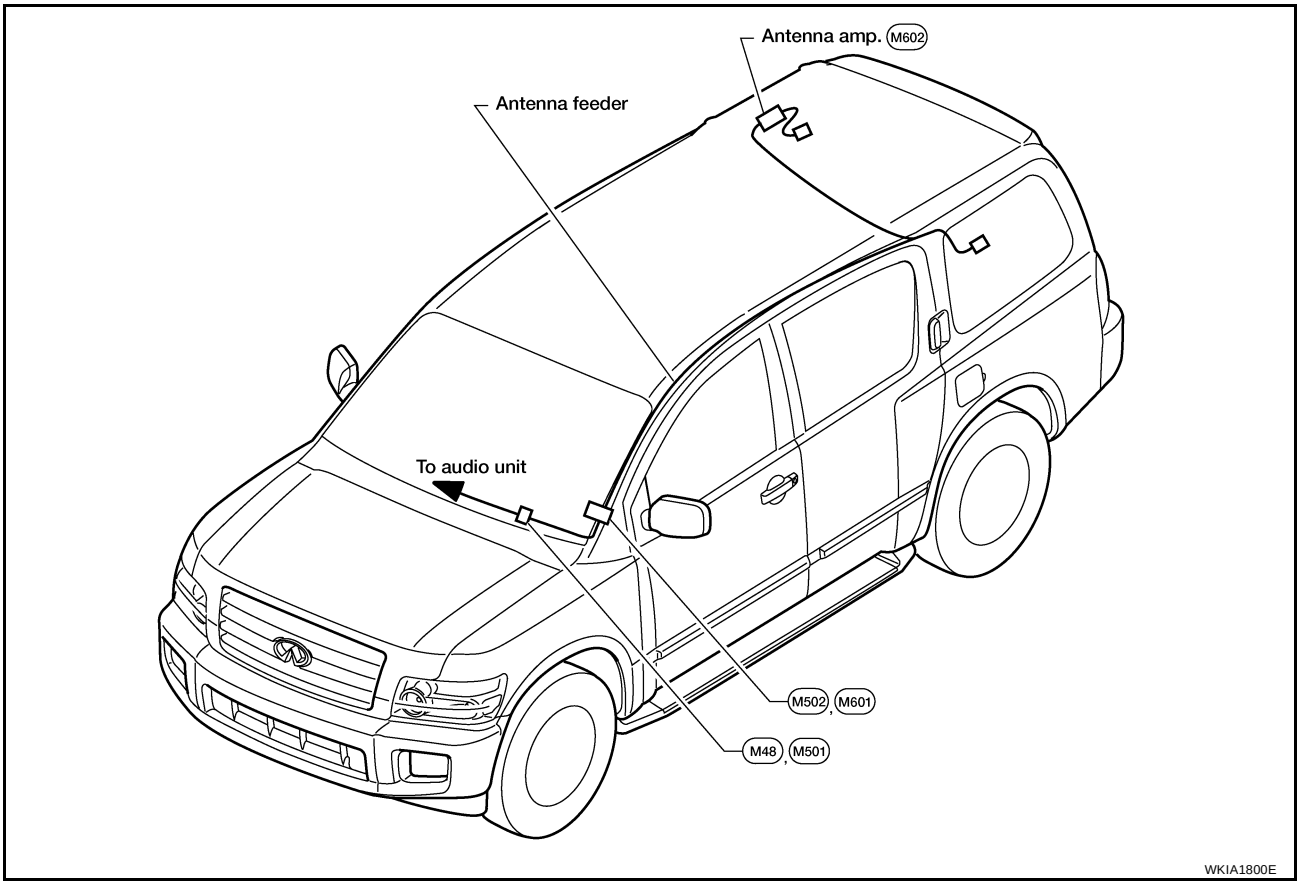

Window Antenna Repair

EKS007L9

ELEMENT CHECK

1. Attach probe circuit tester (ohm setting) to antenna terminal on each side.

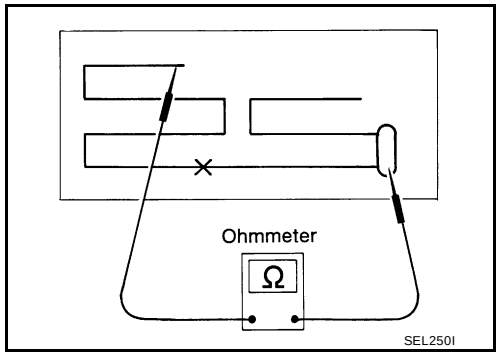

- **When measuring continuity, wrap tin foil around the top of probe. Then, press the foil against the wire with your finger.**

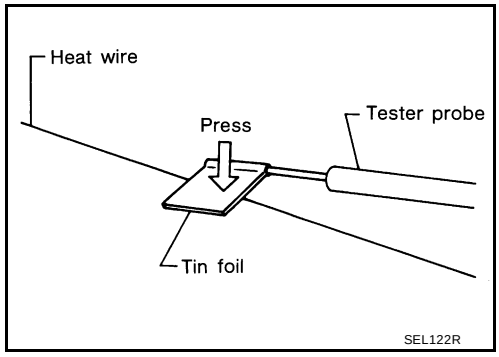

2. If an element is broken, no continuity will exist.

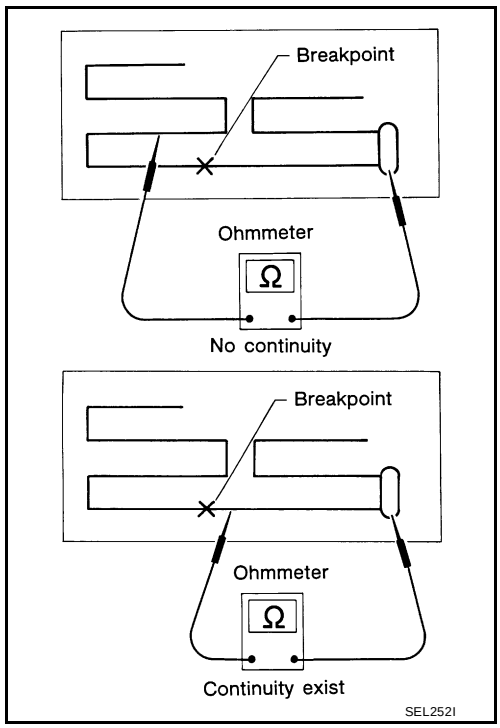

3. To locate a break, move probe along element. Tester indication will change abruptly when probe passes the broken point.

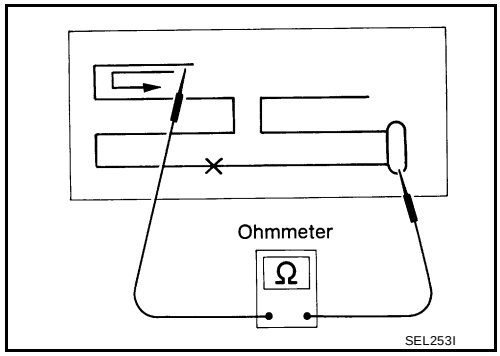

ELEMENT REPAIR

Refer to GW-97, "Filament Repair" .

DVD ENTERTAINMENT SYSTEM

PFP:28184

Component Parts and Harness Connector Location

EKS007LA

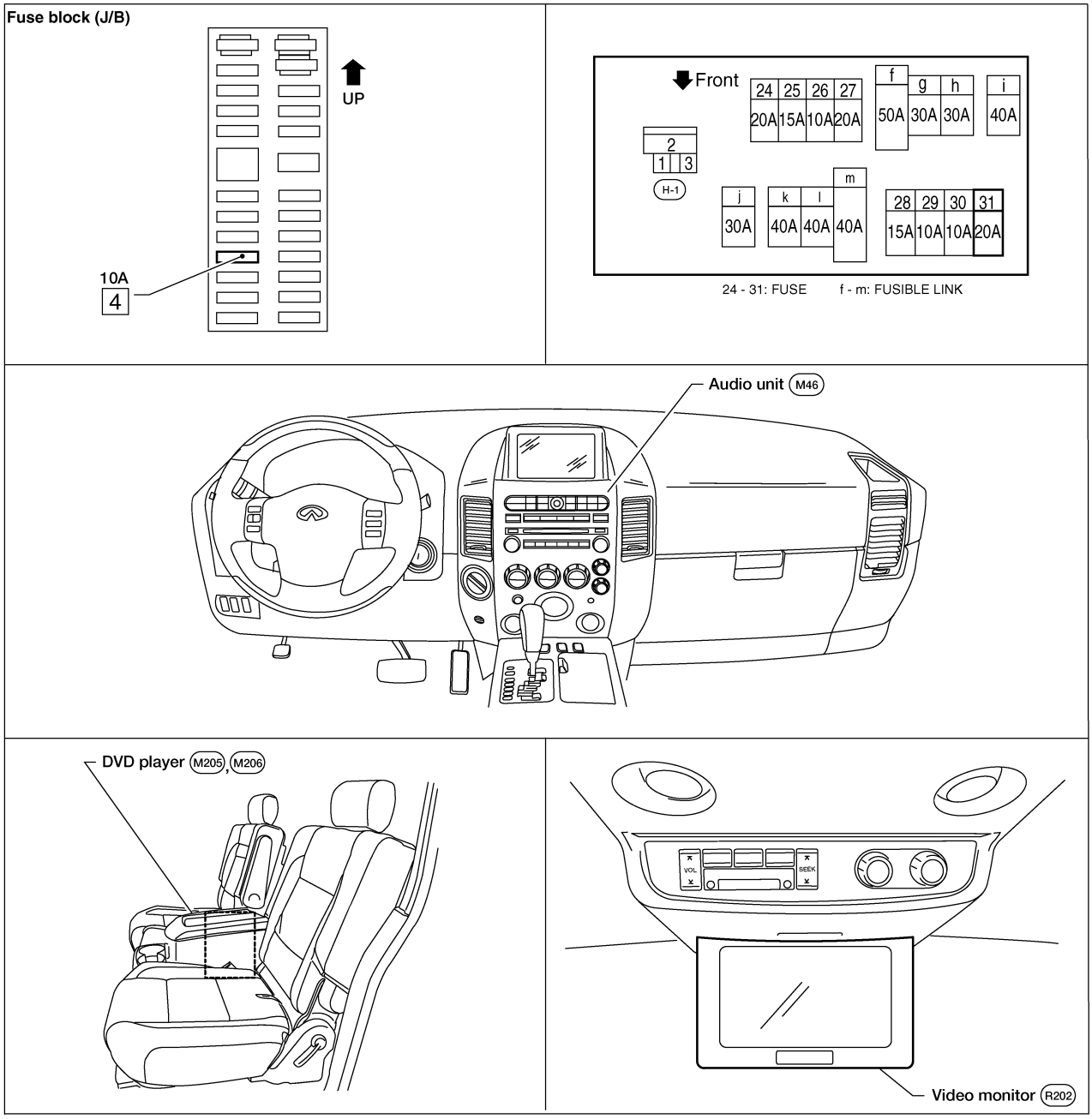

WKIA4160E

System Description

EKS007LB

Refer to Owner's Manual for DVD entertainment system operating instructions.
Power is supplied at all times

- through 20A fuse (No. 31, located in the fuse and fusible link box)
- to DVD player terminal 16.

With the ignition switch in the ACC or ON position, power is supplied

- through 10A fuse [No. 4, located in the fuse block (J/B)]
- to DVD player terminal 15.

Power is also supplied

- from DVD player terminals 31 and 32
- to video monitor terminals 11 and 12.

Ground is supplied

- to DVD player terminal 22
- through body grounds M57, M61 and M79.

Audio signals are supplied

- through DVD player terminals 1, 2, 3 and 4
- to audio unit terminals 34, 35, 36 and 37.

Video signals are supplied

- through DVD player terminals 23, 24, 28 and 29
- to video monitor terminals 5, 6, 7 and 8.

Schematic

EKS007LC

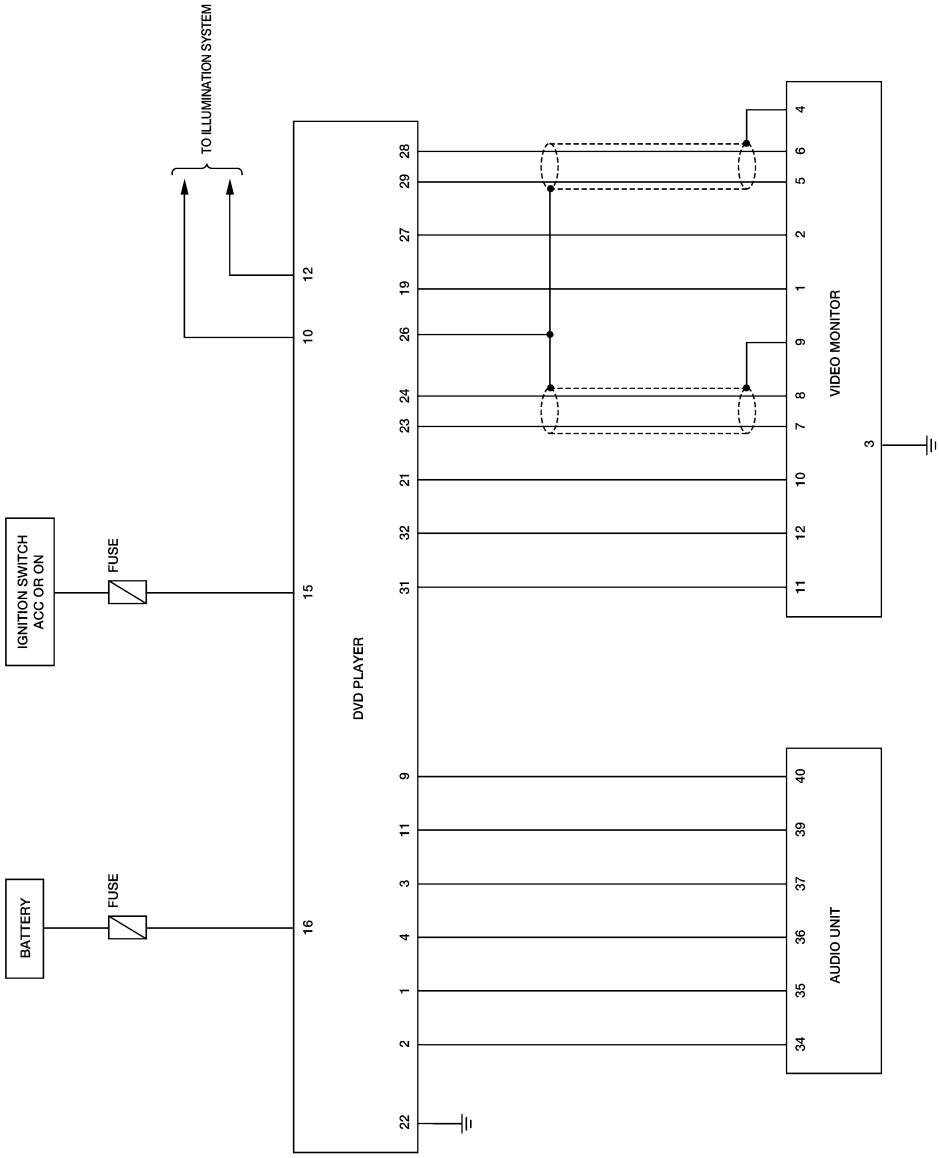

WKWA0801E

Wiring Diagram — DVD —

EKS007LD

AV-DVD-01

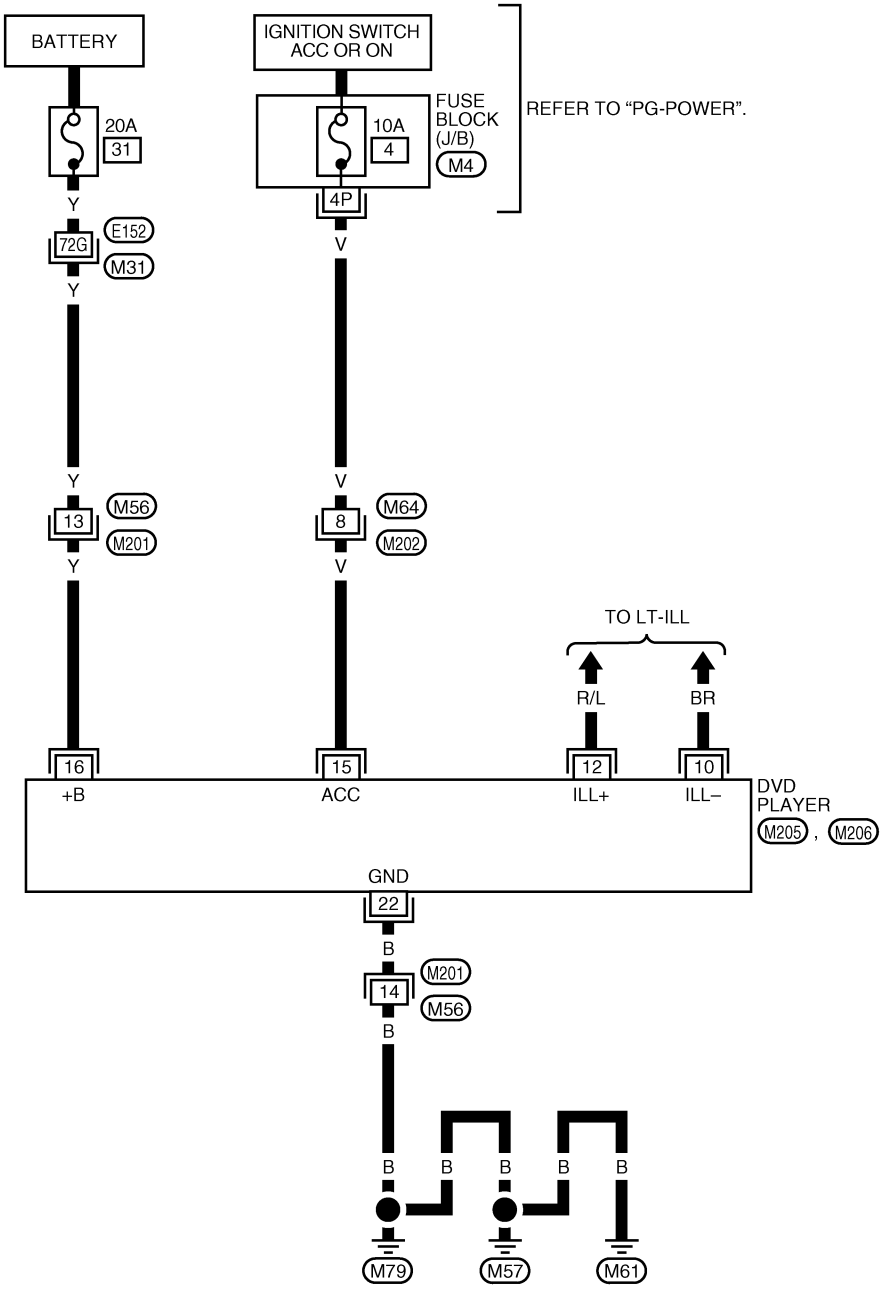

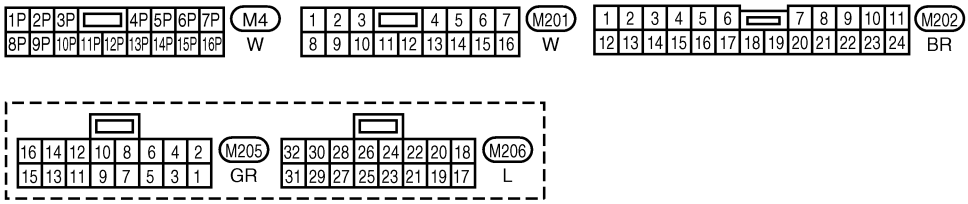

REFER TO THE FOLLOWING.
M31 - SUPER MULTIPLE JUNCTION (SMJ)

WKWA1408E

AV-DVD-02

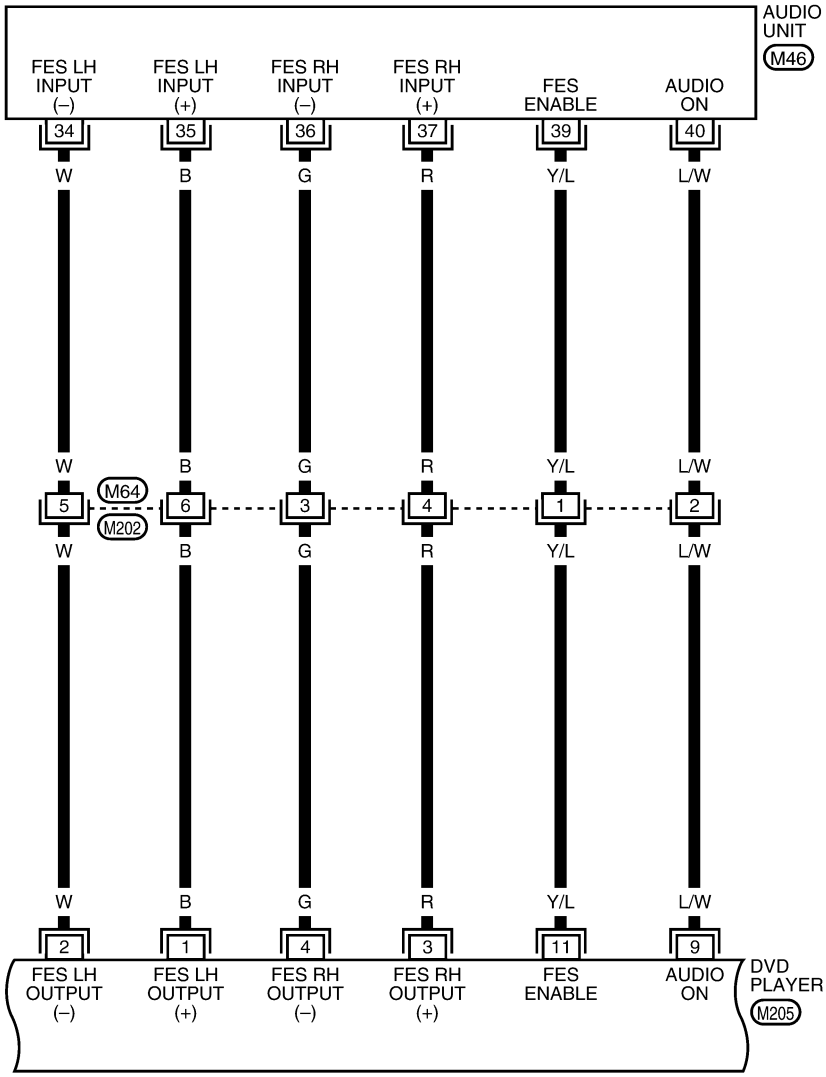

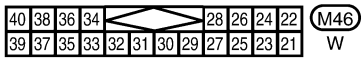

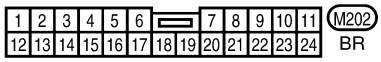

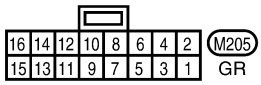

WKWA1188E

AV-DVD-03

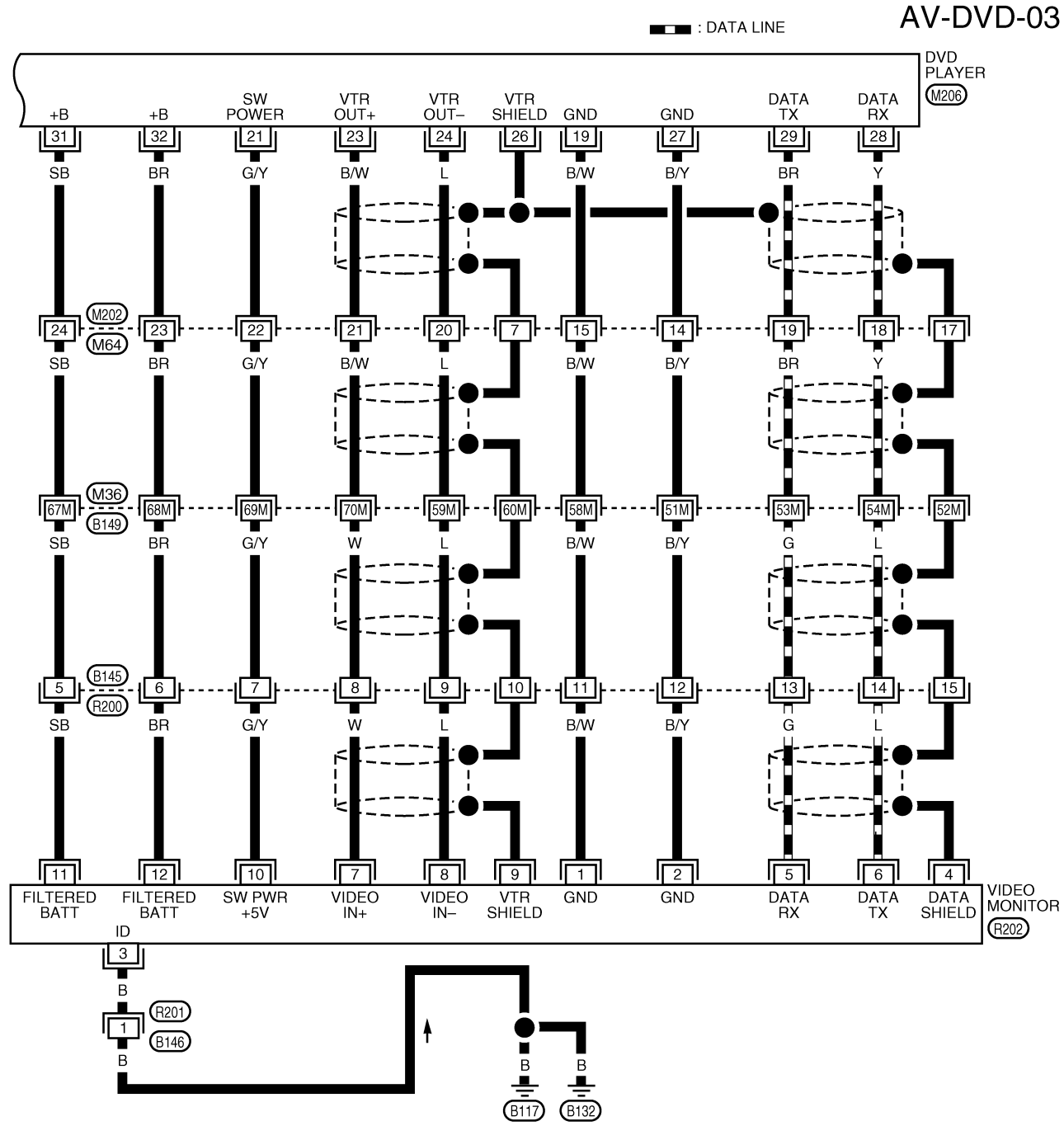

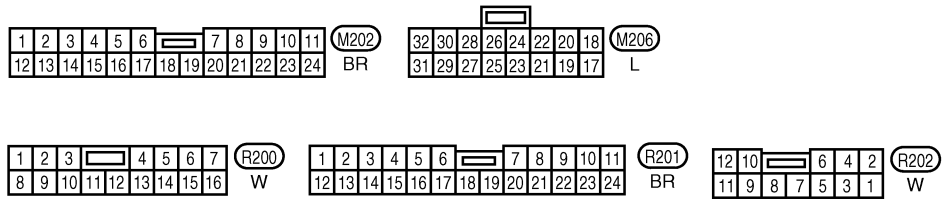

REFER TO THE FOLLOWING.
M36 - SUPER MULTIPLE JUNCTION (SMJ)

WKWA1244E

Trouble Diagnosis

EKS007LE

Symptom	Possible causes	Repair order
DVD player inoperative	1. Power supply 2. Ground circuit 3. Audio enable circuit 4. DVD enable signal 5. Audio enable signal 6. DVD player 7. Audio unit	1. Refer to AV-59, "Power Supply Circuit Inspection" . 2. Refer to AV-59, "Power Supply Circuit Inspection" . 3. Check audio enable circuits for open or short between audio unit terminals 39, 40 and DVD player terminals 11, 9. 4. Push power switch of DVD player and verify approx. 5V is present at terminal 39 of audio unit. 5. Push power switch of DVD player and verify approx. 5V is present at terminal 9 of DVD player. 6. Remove DVD player for repair. 7. Remove audio unit for repair.
No sound when playing DVD	1. Audio signal circuits 2. DVD player 3. Audio unit	1. Check audio signal circuits for open or short between DVD player terminals 1, 2, 3 and 4 and audio unit terminals 34, 35, 36 and 37. 2. Remove DVD player for repair. 3. Remove audio unit for repair.
Video monitor is inoperative/does not operate properly	1. Power supply 2. Video monitor ground circuit 3. Video circuits 4. Data signal 5. Video monitor 6. DVD player	1. Operate DVD player and verify battery positive voltage is present at terminals 11 and 12 of video monitor. Verify approximately 5 volts is present at terminal 10 of video monitor. 2. Check video monitor ground circuits between DVD player terminals 19 and 27 and video monitor terminals 1 and 2. 3. Check video circuits between DVD player terminals 23 and 24 and video monitor terminals 7 and 8. 4. Check data signal circuit for open or short between DVD player terminal 29 and video monitor terminal 5. 5. Remove video monitor for repair. 6. Remove DVD player for repair.
DVD remote control is inoperative/does not operate properly	1. Data signal 2. DVD player remote control batteries 3. DVD player remote control 4. Video monitor	1. Check data signal circuit for open or short between DVD player terminal 28 and video monitor terminal 6. 2. Replace DVD player remote control batteries. 3. Replace DVD player remote control. 4. Remove video monitor for repair.
Headphones inoperative	1. Headphone batteries 2. Headphones 3. Rear audio remote control unit	1. Replace headphone batteries. 2. Replace headphones. 3. Replace rear audio remote control unit.
Snowy video/poor audio	1. Harness or connectors 2. DVD player	1. Check harness and connectors for open or short. 2. Check DVD player.
Snowy video (audio OK)	1. Harness or connectors 2. DVD player	1. Check harness and connectors for open or short. 2. Check DVD player.
No video (audio OK)	1. Harness or connectors 2. DVD player 3. Video monitor	1. Check harness and connectors for open or short. 2. Check DVD player. 3. Check video monitor.
Dim video (audio OK)	1. Harness or connectors 2. DVD player 3. Video monitor	1. Check harness and connectors for open or short. 2. Check DVD player. 3. Check video monitor.

Power Supply Circuit Inspection

EKS007LF

1. CHECK FUSES

- Check that the following fuses are not blown.

Unit	Terminals	Signal name	Fuse No.
DVD player	16	Battery power	31
	15	Ignition switch ACC or ON	4

OK or NG

OK >> GO TO 2.
NG >> If fuse is blown, be sure to eliminate cause of problem before installing new fuse. Refer to PG-4, "POWER SUPPLY ROUTING CIRCUIT" .

2. POWER SUPPLY CIRCUIT CHECK

1. Disconnect DVD player connector.
2. Check voltage between the DVD player and ground.

Unit	Terminal No. (+) Connector	Terminal (wire color)	(-)	OFF	ACC	ON
DVD player	M205	16 (Y)	Ground	Battery voltage	Battery voltage	Battery voltage
		15 (V)	Ground	0 V	Battery voltage	Battery voltage

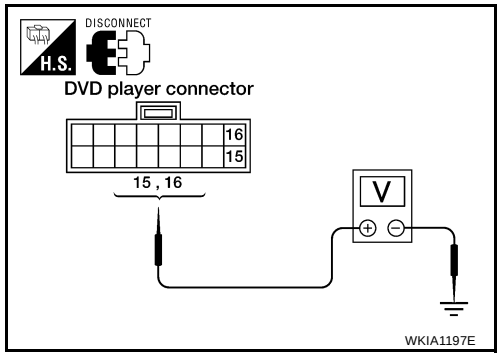

OK or NG

OK >> GO TO 3.
NG >> ● Check connector housings for disconnected or loose terminals.
● Repair harness or connector.

3. GROUND CIRCUIT CHECK

Check continuity between DVD player harness connector P105 terminal 22 (B) and ground.

Continuity should exist.

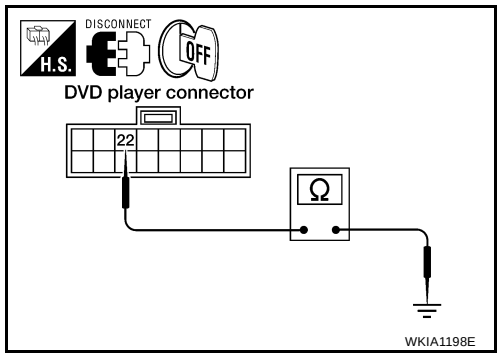

OK or NG

OK >> Inspection End.
NG >> ● Check connector housings for disconnected or loose terminals.
● Repair harness or connector.

Removal and Installation of DVD Player

EKS007LG

1. Remove center console compartment. Refer to IP-15, "Center Console" .

2. Remove the screws and DVD player.
3. Installation is in reverse order of removal.

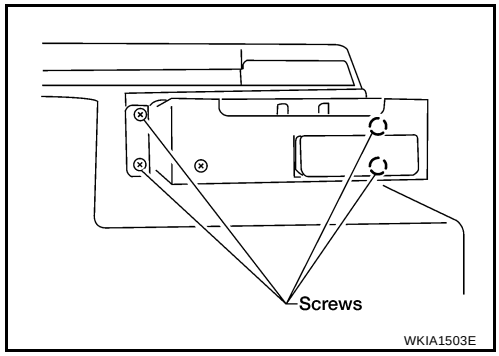

Removal and Installation of Video Monitor

EKS007LH

1. Remove rear roof console assembly. Refer to EI-37, "HEADLINING" .
2. Disconnect the video monitor connector.
3. Remove the video housing screws.
4. Remove the video monitor and housing.

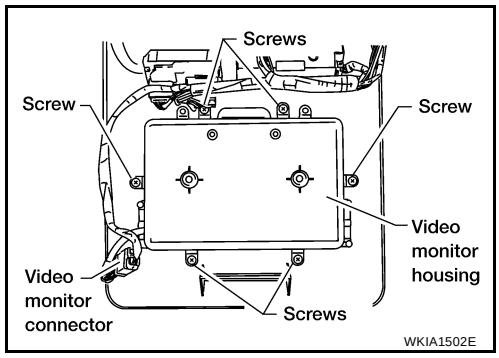

5. Remove the video monitor hinge screws and remove the video monitor.
6. Installation is in reverse order of removal.

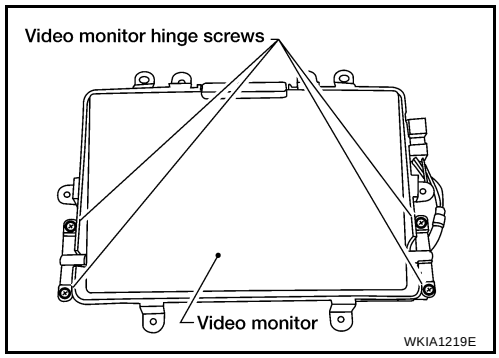

NAVIGATION SYSTEM

PFP:25915

System Description

EKS007LI

The navigation system periodically calculates the vehicle's current position according to the following three signals: Travel distance of the vehicle as determined by the vehicle speed sensor, turning angle of the vehicle as determined by the gyroscope (angular velocity sensor), and the direction of vehicle travel as determined by the GPS antenna (GPS information).
The current position of the vehicle is then identified by comparing the calculated vehicle position with map data read from the map DVD-ROM, which is stored in the DVD-ROM drive (map-matching), and indicated on the screen with a current-location mark.

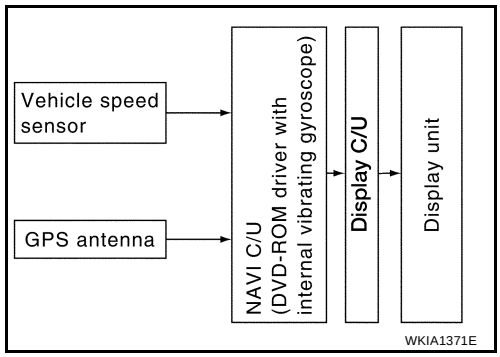

By comparing the vehicle position detection results found by the GPS and by map-matching, more accurate vehicle position data can be used.
The current vehicle position will be calculated by detecting the distance the vehicle moved from the previous calculation point and its direction.

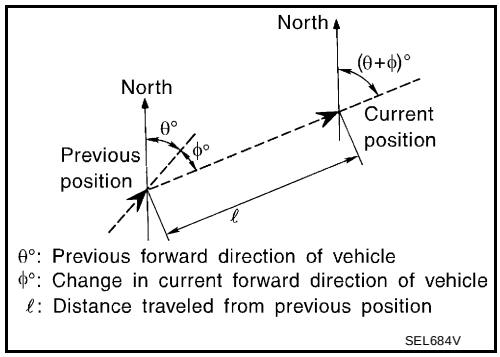

TRAVEL DISTANCE

Travel distance calculations are based on the vehicle speed sensor input signal. Therefore, the calculation may become incorrect as the tires wear down. To prevent this, an automatic distance fine adjustment function has been adopted. Adjustments can be made in extreme cases (such as driving with tire chain fitted on tires). Refer to AV-107, "Confirmation/Adjustment Mode" .

TRAVEL DIRECTION

Change in the travel direction of the vehicle is calculated by a gyroscope (angular velocity sensor) and a GPS antenna (GPS information). As the gyroscope and GPS antenna have both merit and demerit, input signals from them are prioritized in each situation. However, this order of priority may change in accordance with more detailed travel conditions so that the travel direction is detected more accurately.

Type	Advantage	Disadvantage
Gyroscope (angular velocity sensor)	● Can detect the vehicle's turning angle quite accurately.	● Direction errors may accumulate when the vehicle is driven for long distances without stopping.
GPS antenna (GPS information)	● Can detect the vehicle's travel direction (North/South/East/West).	● Correct direction cannot be detected when the vehicle speed is low.

MAP-MATCHING

Map-matching is a function that repositions the vehicle on the road map when a new location is judged to be the most accurate. This is done by comparing the current vehicle position, calculated by the method described in the position detection principle, with the road map data around the vehicle, read from the map DVD-ROM stored in the DVD-ROM drive.
Therefore, the vehicle position may not be corrected after the vehicle is driven over a certain distance or time in which GPS information is hard to receive. In this case, the current-location mark on the display must be corrected manually.

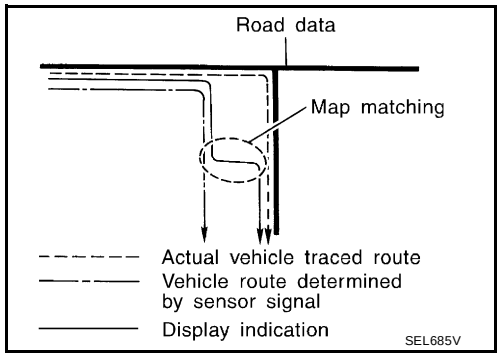

CAUTION:
The road map data is based on data stored in the map DVD-ROM.

- In map-matching, alternative routes to reach the destination will be shown and prioritized, after the road on which the vehicle is currently driven has been judged and the current-location mark has been repositioned.
  If there is an error in distance and/or direction, the alternative routes will be shown in different order of priority, and the wrong road can be avoided.
  If two roads are running in parallel, they are of the same priority. Therefore, the current-location mark may appear on either of them alternately, depending on maneuvering of the steering wheel and configuration of the road.

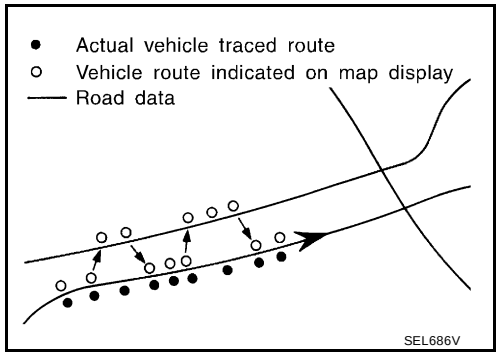

- Map-matching does not function correctly when the road on which the vehicle is driving is new and not recorded in the map DVD-ROM, or when the road pattern stored in the map data and the actual road pattern are different due to repair.
  When driving on a road not present in the map, the map-matching function may find another road and position the current-location mark on it. Then, when the correct road is detected, the current-location mark may leap to it.
- Effective range for comparing the vehicle position and travel direction calculated by the distance and direction with the road data read from the map DVD-ROM is limited. Therefore, when there is an excessive gap between the current vehicle position and the position on the map, correction by map-matching is not possible.

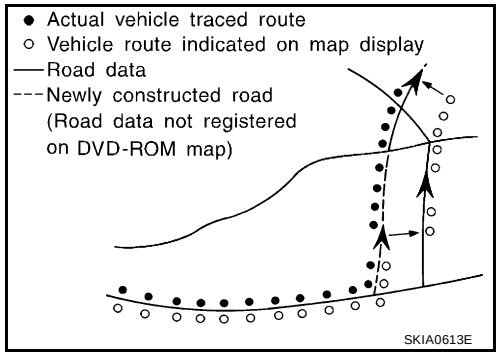

GPS (GLOBAL POSITIONING SYSTEM)

GPS (Global Positioning System) has been developed and controlled by the US Department of Defense. The system utilizes GPS satellite (NAVSTAR), sending out radio waves while flying on an orbit around the earth at the height of approx. 21,000 km (13,000 miles).
The GPS receiver calculates the vehicle's position in three dimensions (latitude/longitude/altitude) according to the time lag of the radio waves received from four or more GPS satellites (three-dimensional positioning). If radio waves were received only from three GPS satellites, the GPS receiver calculates the vehicle's position in two dimensions (latitude/longitude), utilizing the altitude data calculated previously by using radio waves from four or more GPS satellites (two-dimensional positioning).

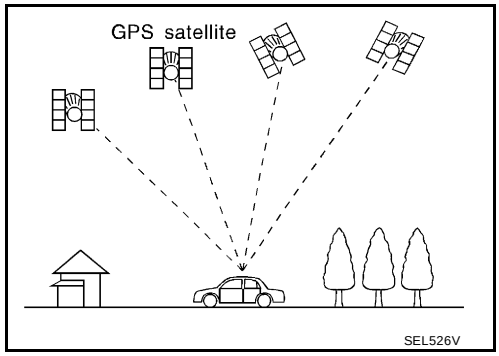

Accuracy of the GPS will deteriorate under the following conditions.

- In two-dimensional positioning, the GPS accuracy will deteriorate when the altitude of the vehicle position changes.
- There may be an error of approximately 10 m (30 ft) in position detected by three-dimensional positioning, which is more accurate than two-dimensional positioning. The accuracy can be even lower depending on the arrangement of the GPS satellites utilized for the positioning.
- Position detection is not possible when the vehicle is in an area where radio waves from the GPS satellite do not reach, such as in a tunnel, parking lot in a building, and under an elevated highway. Radio waves from the GPS satellites may not be received when some object is located over the GPS antenna.
- Position correction by GPS is not available while the vehicle is stopped.

COMPONENT DESCRIPTION

NAVI Control Unit

- The gyro (angular speed sensor) and the DVD-ROM drive are built-in units that control the navigation functions.
- Signals are received from the gyro, the vehicle speed sensor, and the GPS antenna. Vehicle location is determined by combining this data with the data contained in the DVD-ROM map. Location information is shown on liquid crystal display (display unit).

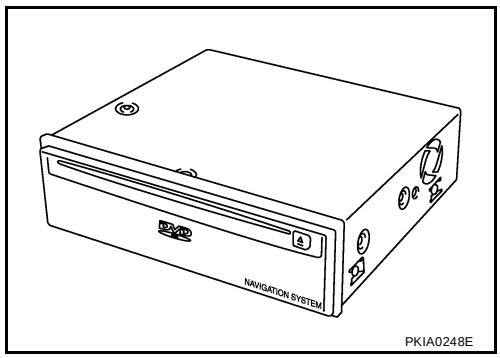

DVD-ROM Drive

Maps, traffic control regulations, and other pertinent information can be easily read from the DVD-ROM disc.

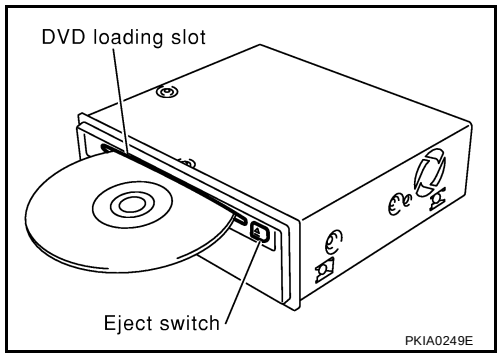

Map DVD-ROM

- The map DVD-ROM has maps, traffic control regulations, and other pertinent information.
- To improve DVD-ROM map matching and route determination functions, the DVD-ROM uses an exclusive Nissan format. Therefore, the use of a DVD-ROM provided by other manufacturers cannot be used.

Gyro (Angular Speed Sensor)

- The oscillator gyro sensor is used to detect changes in vehicle steering angle.
- The gyro is built into the navigation (NAVI) control unit.

BIRDVIEW™

The BIRDVIEW™ provides a detailed and easily seen display of road conditions covering the vehicle's immediate to distant area.

- PLAN VIEW

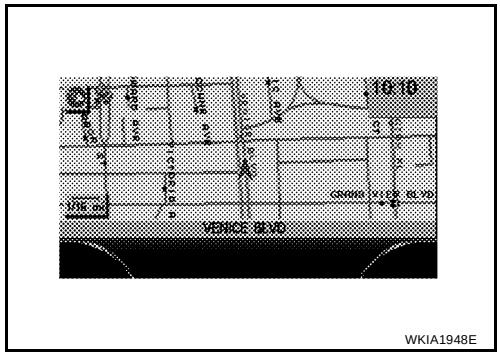

- BIRDVIEW™

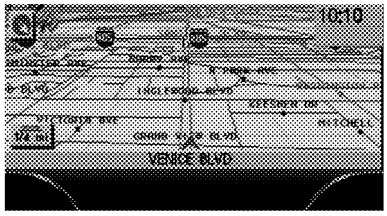

WKIA1949E

Description

- Display area: Trapezoidal representation showing approximate distances (Wn, D, and Wd).
- Ten horizontal grid lines indicate display width while six vertical grid lines indicate display depth and direction.
- Pushing the “ZOOM IN” button during operation displays the scale change and the view point height on the left side of the screen.
  The height of the view point increases or decreases when “ZOOM” or “WIDE” is selected with the joystick.

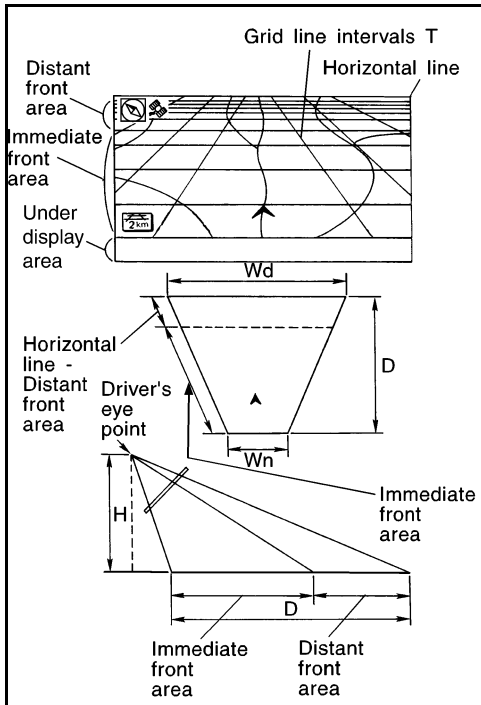

SKIA5613E

MAP DISPLAY

Function of each icon is as follows:

1. Azimuth indication.
2. Position marker.
   - The tip of the arrow shows the current location. The shaft of the arrow indicates the direction in which the vehicle is traveling.
3. GPS reception signal (indicates current reception conditions).
4. Distance display (shows the distance in a reduced scale).

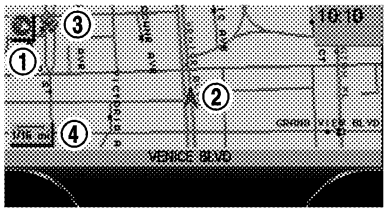

WKIA1950E

FUNCTION OF CENTER SWITCH

Display with Pushed “DEST” button

- Easy Mode ("Short Menus" ON)

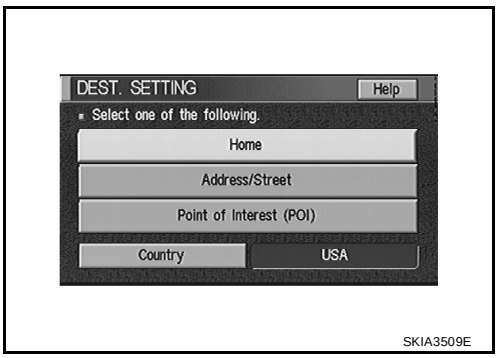

- Expert Mode ("Short Menus" OFF)

The function of each icon is as follows:

Icon	Mode		Description
	Easy	Expert	
Address Book		×	Favorite place can be saved to memory.
Address/Street	×	×	The destination can be searched from the address.
Point of Interest (POI)	×	×	The destination of favorite facility can be searched.
Previous Dest.		×	The previous ten destinations stored in memory are displayed.
Intersection		×	The destination can be searched from the intersection.
City		×	The destination can be searched from city name.
Map		×	The destination can be searched from the map.
Phone Number		×	The destination can be set by entering the phone number.
Home	×		Sets the home as a destination.
Help	×		Explanation of navigational functions appear on the display.
Country	×	×	Select country (USA, CANADA)

Display with Pushed “ROUTE” button

- Easy Mode ("Short Menus" ON)

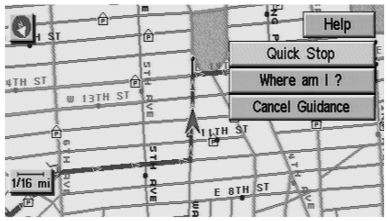

SKIA4494E

- Expert Mode ("Short Menus" OFF)

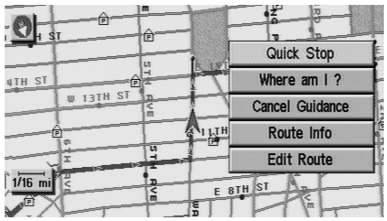

SKIA4495E

The function of each icon is as follows:

Icon	Mode		Description
	Easy	Expert	
Quick Stop	×	×	The selected facility is set as the destination or way point. (Route guidance has been turned OFF or the destination has been reached.)
Where am I?	×	×	Next, current and previous street names can be displayed.
Cancel Guidance	×	×	The following items can be selected. ● All Destinations ● Way point ● Not Cancel (Displayed only when the destination area has been set.)
Route Info.*		×	The following items can be selected. ● Complete Route ● Turn List ● Route Simulation (Displayed only when the destination area has been set.)
Edit Route*		×	Change the destination or add the transit points of the route set in the route guide. (Displayed only when the automatic reroute function has been turned OFF and the recommended route is not followed.)
Help	×		Explanation of navigational functions appear on the display.

*: When in Easy Mode, “Route Info.” and “Edit Route” are not displayed.

Display with Pushed “SETTING” button

The function of each icon is as follows:

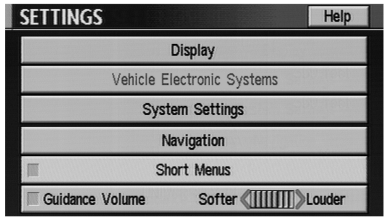

SKIA4496E

Icon	Description
Display	Settings of display can be performed.
Vehicle Electronic Systems	Settings of vehicle electrical equipment can be performed.
System Settings	Settings of linguistic select, time adjusting and beep sound can be performed.
Navigation	Settings and adjusting of navigation can be performed.
Short Menus	Easy Mode and Expert Mode can be switched.
Guidance Volume	The volume and/or on/off of voice prompt can be controlled by the joystick.
Help (only easy mode)	Explanation of navigational functions appear on the display.

Display Settings

How To Perform Display Setting

1. Start the engine.
2. Push “SETTING” button.
3. Select “Display” with "ENTER" button.

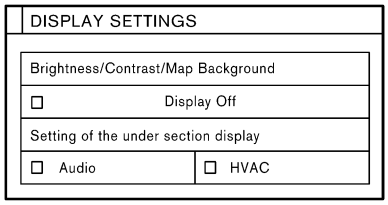

SKIA5791E

Application Items

Icon	Description	Reference page
Brightness/Contrast/Map Background	Brightness, Contrast and Map Background can be set.	AV-67
Display Off	Display sleep mode ON/OFF can be switched.	AV-67
Setting of the under section display	The setting status of A/C or AV can be shown.	AV-68

Brightness/Contrast/Map Back ground

How To Perform Navigation Setting

1. Select “Brightness/Contrast/Map Background”.

- Brightness, Contrast and Background are shown at the lower part of the screen, and it can be set with the joystick.

Display Off

How To Perform Navigation Setting

1. Select “Display Off”.

- When setting is turned on (Indicator light ON), the display will be under sleep mode.

Setting of the under section display

How To Perform Under Section Display Setting

1. Select “Setting of the Under Section Display”.

- The setting status that is selected from A/C or AV is shown at the lower part of the screen.

Vehicle Electronic Systems

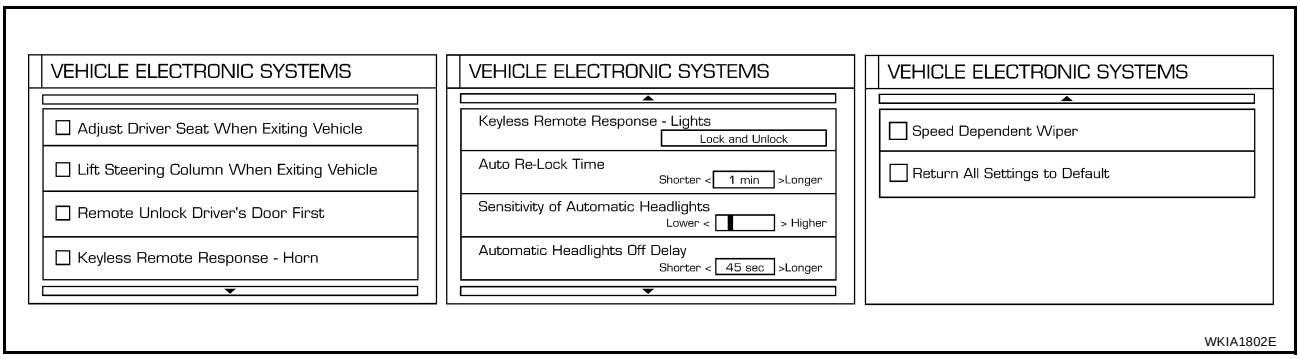

Application Items

Icon	Description
Adjust Driver Seat When Exiting Vehicle	The driver's seat automatically moves back and returns to the original position.
Lift Steering Column When Exiting Vehicle	The steering column automatically tilts up and returns to the original position.
Remote Unlock Driver's Door First	This option allows selection of which doors will unlock first during an unlocking operation.
Keyless Remote Response — Horn	This option allows the horn chirp mode when pressing the LOCK or UNLOCK button on the keyfob to be changed.
Keyless Remote Response — Lights	This option allows the hazard flash mode when pressing the LOCK or UNLOCK button on the keyfob to be changed.
Auto Re-Lock Time	This option allows the length of time before doors auto re-lock to be set.
Sensitivity of Automatic Headlights	This option allows the sensitivity of the autolights to be set.
Automatic Headlights Off Delay	This option allows the length of time before the autolights turn off to be set.
Speed Dependent Wiper	This option allows the driving speed dependent wiper function to be turned on or off.
Return All Settings to Default	All settings will return to the initial conditions.

How To Perform Navigation Setting

1. Start the engine.
2. Push “SETTING” button.
3. Select “Vehicle Electronic Systems”.

System Settings

How To Perform System Setting

1. Start the engine.
2. Push “SETTING” button.
3. Select “System Settings”.

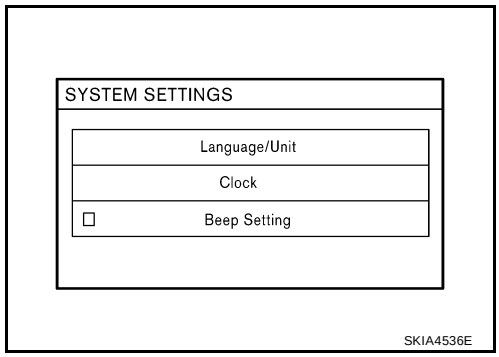

Application Items

Icon	Description	Reference page
Language/Unit	Settings of language or unit can be performed.	AV-69
Clock	Settings of clock can be performed.	AV-69
Beep Setting	Settings of beep sound can be performed.	AV-69

Language Setting

How To Perform Language Setting

1. Select "Language/Unit".

- Language setting can be switched.
- Unit setting can be changed.

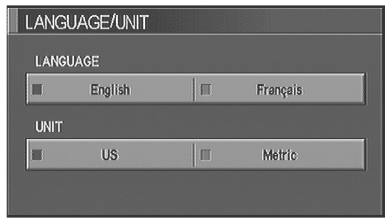

SKIA2065E

Clock Settings

How To Perform Clock Setting

1. Select “Clock”.

- Select the "Hours" or "Minutes" key and tilt the joystick to the right or left to adjust the time.
- Turn ON and OFF daylight saving time.
- Select the "Auto Adjust" key. The time will be reset to the GPS time.
- Select the "Select Time Zone" key. The [TIME ZONE] screen will appear.

SKIA2063E

Beep Setting

How To Perform Beep Setting

1. Select “Beep Setting”.

- When Beep Setting is on (indicator light on), a beep will sound if the button is pushed.

NOTE:

Items in exception of Beep Setting ON/OFF.

- An error beep.
- An interrupted-screen beep.

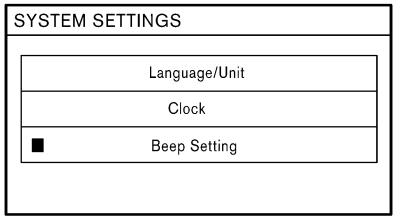

SKIA4829E

Navigation Setting

How To Perform Navigation Setting

1. Start the engine.
2. Push “SETTING” button.
3. Select “NAVIGATION”.

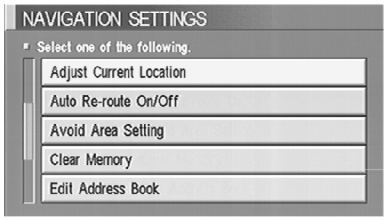

SKIA0551E

Application Items

Icon	Description	Reference page
View	Map display mode can be switched.	AV-70
Heading	Heading of the map display can be customized for either north heading or the actual driving direction of the vehicle.	AV-71
Nearby Display Icons*	Icons of facilities can be displayed. Facilities to be displayed can be selected from the variety selections.	AV-71
Save Current Location*	Current vehicle location can be registered in Address Book.	AV-71
Adjust Current Location*	Current location of position marker can be adjusted. Direction of position marker also can be calibrated when heading direction of the vehicle on the display is not matched with the actual direction.	AV-71
Auto Re-route On/Off*	ON/OFF of Auto Re-route can be switched.	AV-72
Avoid Area Setting*	A particular area can be avoided when routing.	AV-72
Clear Memory*	Address Book, Previous destination or Avoid area can be deleted.	AV-72
Edit Address Book*	Address Book can be edited.	AV-73
GPS Information*	The GPS data includes longitude, latitude and altitude (distance above sea level) of the present vehicle position, and current date and time for the area in which the vehicle is being driven. Also indicated are the GPS reception conditions and the GPS satellite position.	AV-73
Quick Stop Customer Setting*	One facility of your selection can be added to your Quick Stop.	AV-73
Set Average Speed for Estimated Journey Time*	Average vehicle speed can be set to calibrate estimated journey time for the destination.	AV-73
Tracking On/Off*	Tracking to the present vehicle position can be displayed.	AV-74

*: Not displayed in Easy Mode.

“VIEW” MODE

1. Select “Birdview™” or “Plan View” icon.
   - To open the map screen display with Birdview™, select “Birdview™”.
   - To open the map screen display with Plan View, select “Plan View”.

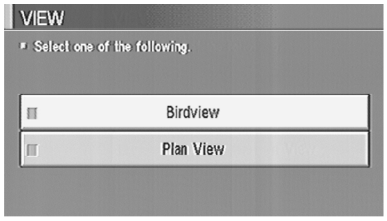

SKIA0554E

“HEADING” MODE

- To display North up, select “North up”.
- To display the car heading up, select “Heading up”.

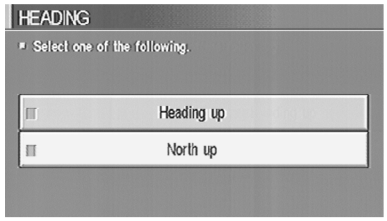

SKIA0561E

“NEARBY DISPLAY ICONS” MODE

- Select an icon to display on the map screen.

SKIA0562E

“SAVE CURRENT LOCATION” MODE

- The current vehicle location can be registered in “Address Book”.

  NOTE:
  “Address Book” can store 50 items maximum.

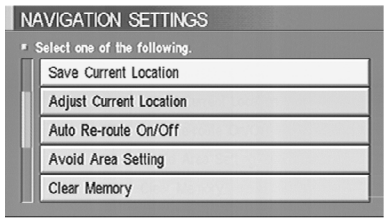

SKIA0556E

“ADJUST CURRENT LOCATION” MODE

1. Move marker to correct location.
2. Select "SET" and then vehicle mark will be located in the current position.
3. Select an icon “right” or “left” to calibrate the heading direction. (Arrow marks will rotate corresponding to the calibration key.)

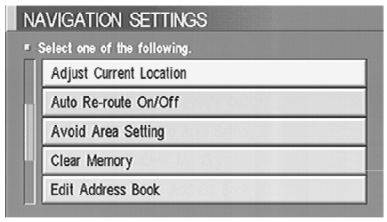

SKIA0563E

4. Select “Set”. Then the vehicle mark will be matched to the arrow mark.

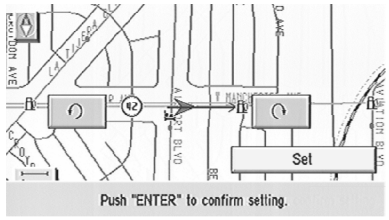

SKIA0564E

“AUTO RE-ROUTE” MODE

- To activate “AUTO RE-ROUTE” mode, select “On”.
- To deactivate “AUTO RE-ROUTE” mode, select “Off”.

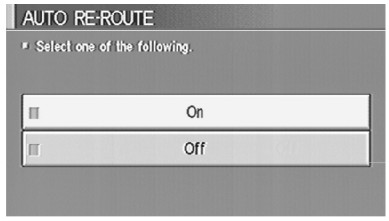

SKIA0558E

“AVOID AREA SETTINGS” MODE

- Areas to avoid can be registered.

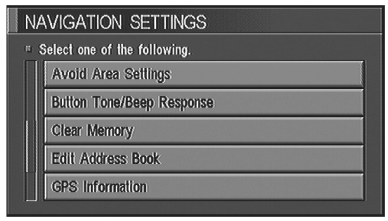

SKIA2058E

“CLEAR MEMORY” MODE

- To delete all the stored places in “Address Book”, “Avoid Area” and “Previous Destinations”, select “Yes”.

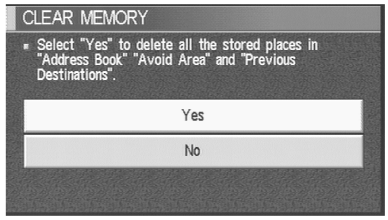

SKIA3572E

“EDIT ADDRESS BOOK” MODE

- Edit the items registered in Address Book.

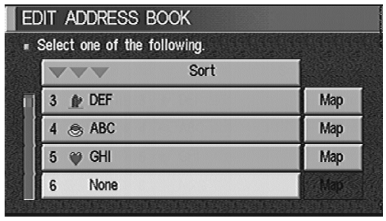

SKIA3511E

“GPS INFORMATION” MODE

- Latitude, longitude, altitude, astrometric state, and satellite location are displayed as GPS information.

  NOTE:
  Altitude is displayed only in three-dimensional status.

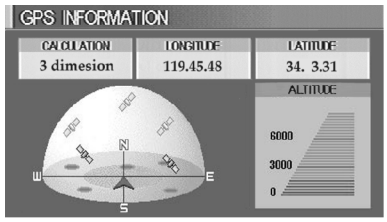

SKIA0555E

“QUICK STOP CUSTOMER SETTING” MODE

- Select a category for the “Quick Stop” menu.

  NOTE:
  This only replaces the fifth position on the "Quick Stop" menu when "Route" is pressed.

SKIA0557E

“SET AVERAGE SPEED” MODE

- Set the average vehicle speed to calibrate the estimated journey time for the destination.
- Set three items: “Freeway”, “Main Roads”, and “Ordinary Roads”.

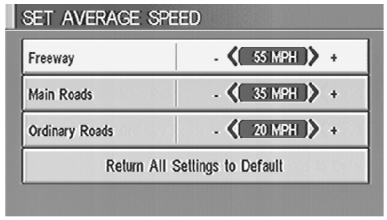

SKIA0565E

"TRACKING" MODE

- To delete the tracking marks on the map, select "Off".
- To leave the tracking marks on the map, select "On".

NOTE:
When a trail display is turned OFF, trail data is erased from the memory.

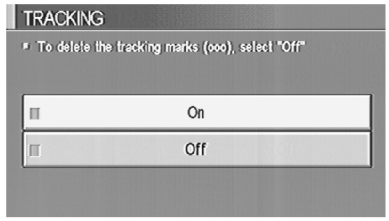

SKIA0559E

GUIDANCE VOLUME

Description

Following guidance volume settings can be changed.

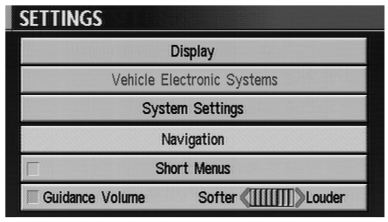

SKIA4497E

Activation/Deactivation Setting

- The voice prompt can be turned on/off by pressing the "Guidance Volume" button.

Voice Volume Setting

- Volume of the voice can be controlled by tilting the joystick to left/right.

DISPLAY WITH PUSHED "TRIP" BUTTON

- When the "TRIP" button is pushed, the following items will display on the screen.
- Warning message (if there are any) →TRIP1→TRIP2→FUEL ECONOMY→MAINTENANCE→OFF.

Display items	Display/Setting contents		Reference page
Trip1 or Trip2	Elapsed Time	Displays driving time with a range of 0000:00:00 to 9999:59:59.	AV-75
	Driving Distance [(km) or (miles)]	Displays driving distance with a range of 00000.0 to 99999.9.	
	Average speed [(km/h) or (MPH)]	Displays average speed with a range of 000.0 to 999.9.	
Fuel Economy	Average Fuel Economy [(MPG) or (l/100km)]	Displays fuel economy with ignition switch ON, average fuel economy each 30 seconds.	AV-75
	Distance to Empty [(km) or (miles)]	Displays possible driving distance with remaining fuel.	
	Fuel Economy [(MPG) or (l/100km)]	Displays fuel economy each approx. 100 ms.	
Maintenance	Engine oil	Maintenance intervals of engine oil and setting of oil change cycle.	AV-75
	Tire rotation	Maintenance intervals of tire and setting of tire replacement cycle.	
	Tire pressure	Tire pressure displayed as tire pressure information.	

TRIP 1 OR TRIP 2

- Elapsed time, Driving distance and Average speed are displayed as Trip 1 information or Trip 2 information.
- The way to reset is by pushing the “Reset” switch or by pushing “TRIP” button more than 1.5 seconds.

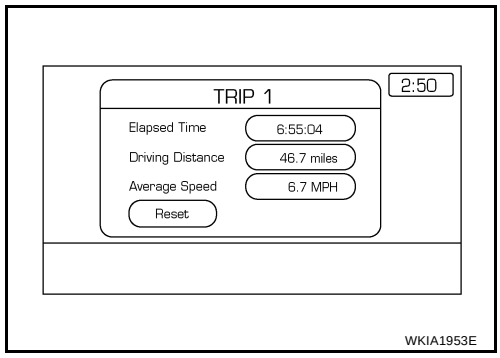

FUEL ECONOMY

- Average Fuel Economy, Distance to Empty, Fuel Economy are displayed as Fuel Economy information.
- The way to reset is by pushing the “Reset” switch or by pushing “TRIP” button more than 1.5 seconds.

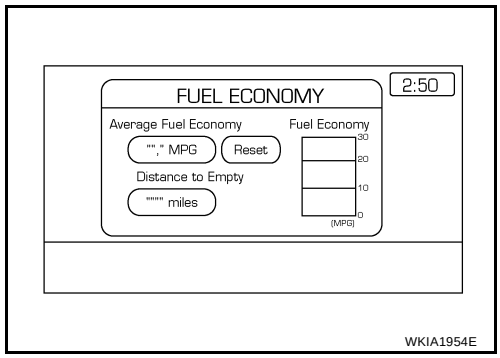

MAINTENANCE

- Engine Oil, Tire Rotation and Tire pressure are displayed as Maintenance information.

NOTE:
In a case of a vehicle with low tire pressure warning control unit, “Tire Pressure” switch is displayed.

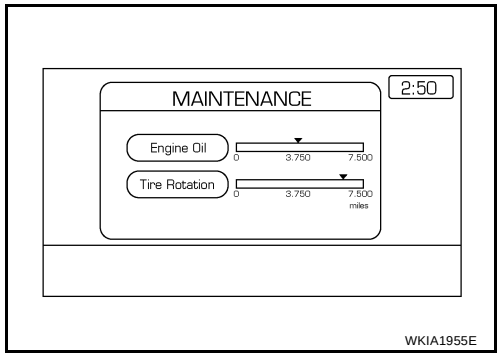

ENGINE OIL OR TIRE ROTATION

- Possible to set up interval of engine oil and tire rotation by tilting joystick right and left.

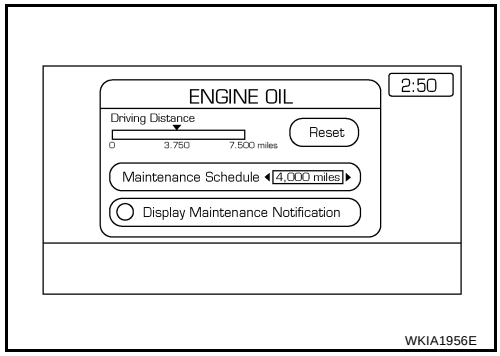

TIRE PRESSURE

- Pressure indication in ** psi on the screen indicates that the pressure is being measured. After a few trips, the pressures for all four tires will be displayed.
- The order of tire pressure figures displayed on the screen does not correspond with the actual order of tire position.
- Tire pressure rises and falls depending on the heat caused by the vehicle's traveling condition and the temperature.
- In case of low tire pressure, the low tire pressure warning light will come on and/or a warning is displayed on the screen.
- FLAT TIRE – very low tire pressure.

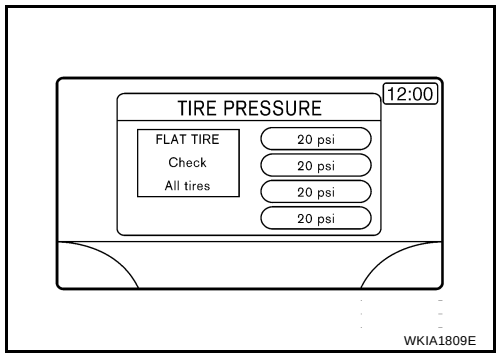

NOTE:

- In a case of FLAT TIRE pressure, interrupt screen is not shown on the display.
- On the screen of TIRE PRESSURE, "FLAT TIRE Check All tires" is displayed.

WARNING INDICATIONS

Warning signal (Door switch signal) is received from BCM through CAN communication line.

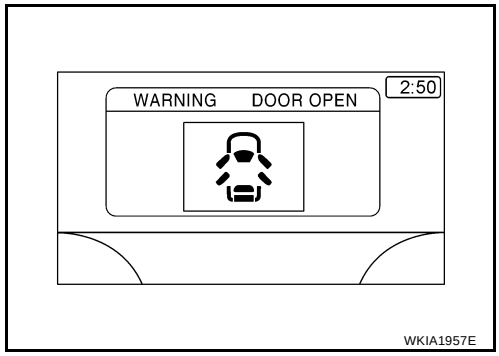

Warning indicators	Warning lamps in instrument panel	Warning detection and cancel conditions		Cases of malfunction
DOOR OPEN	Door	Detection condition	Vehicle is running [approx. 5 km/h (3 MPH) or faster] and door ajar of any of the doors is detected.	Door is open
		Cancel condition	Vehicle is stopped and all the doors lock.	

CAN Communication System Description

EKS008IM

Refer to LAN-5, "CAN COMMUNICATION" .

Component Parts Location

EKS007LJ

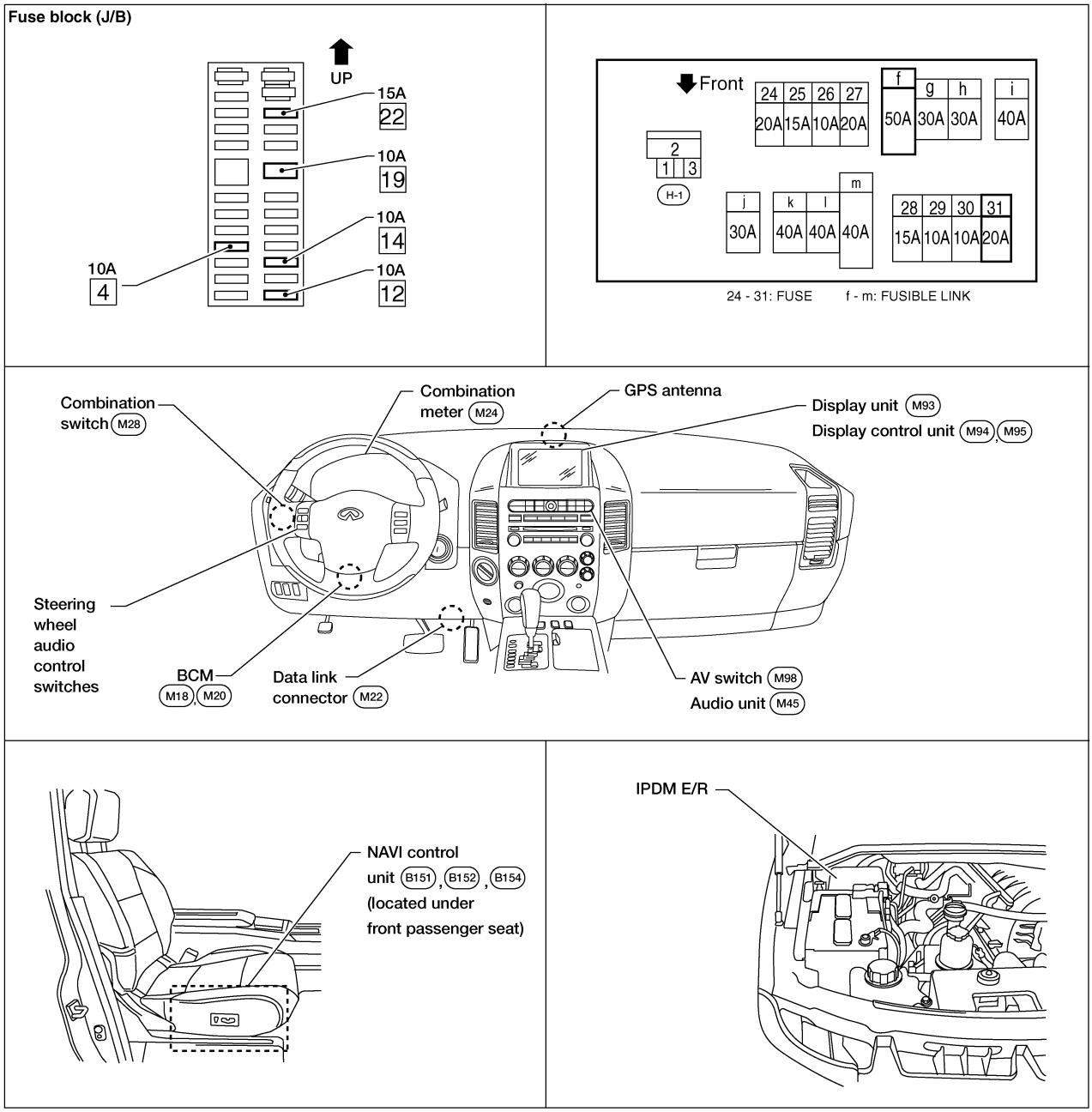

WKIA4161E

Schematic

EKS007LK

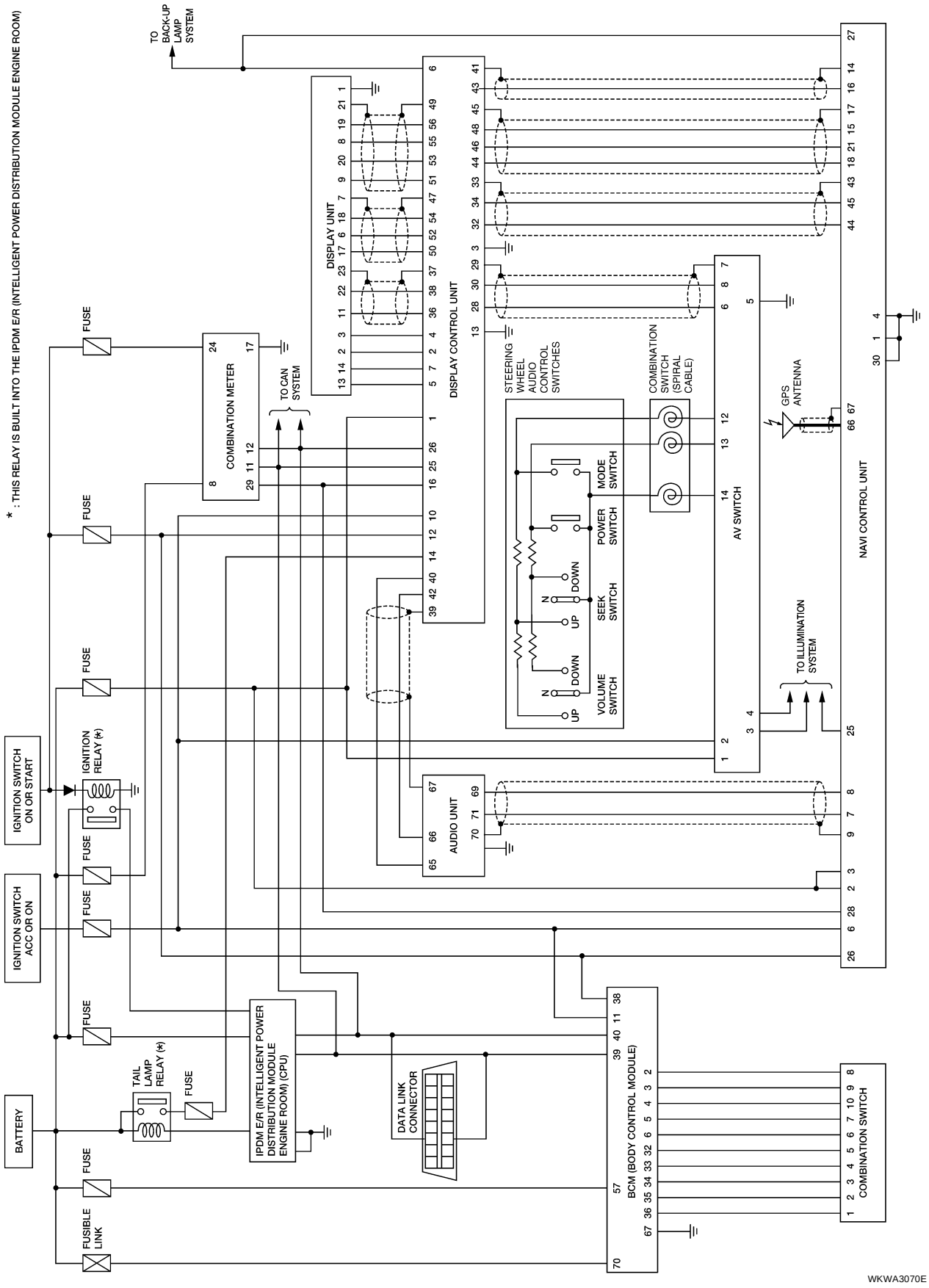

Wiring Diagram —NAVI—

EKS007LL

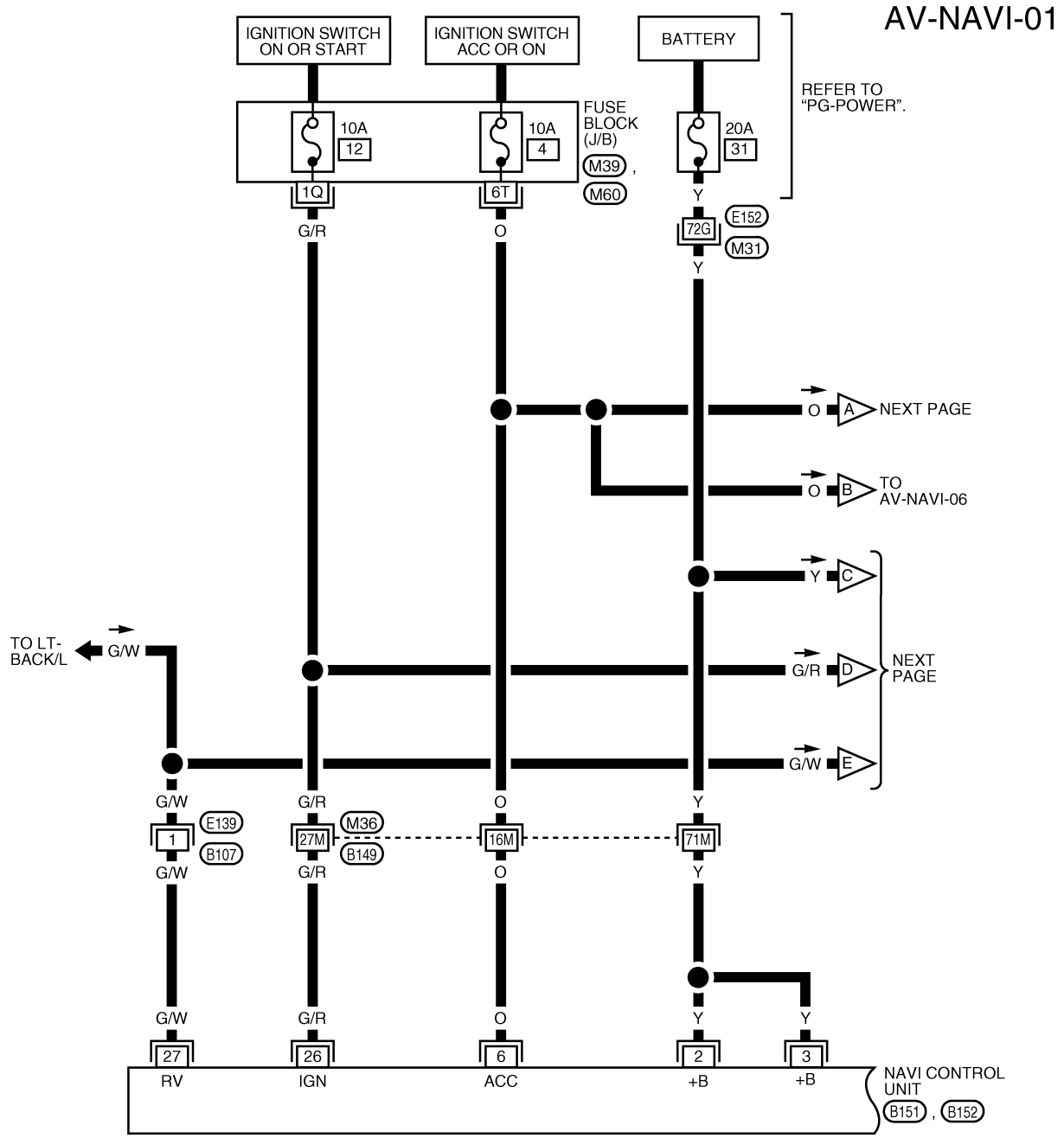

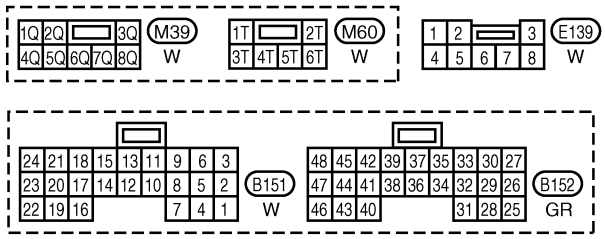

REFER TO THE FOLLOWING.
M31 , M36 - SUPER MULTIPLE JUNCTION (SMJ)

WKWA1499E

AV-NAVI-02

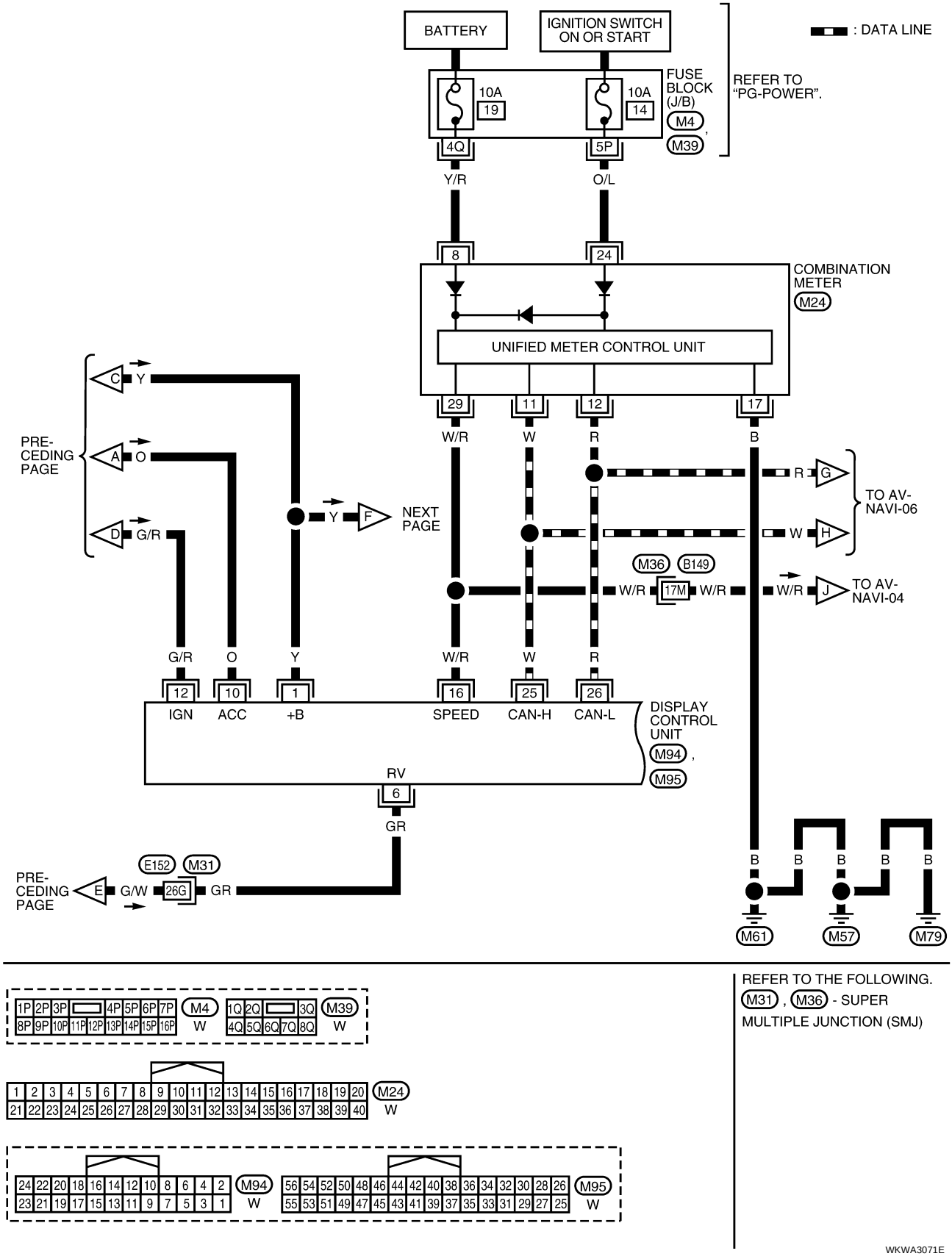
BATTERY
IGNITION SWITCH ON OR START
: DATA LINE
FUSE BLOCK (J/B)
M4
M39
REFER TO "PG-POWER".
10A 19
10A 14
4Q
5P
Y/R
O/L
8
24
COMBINATION METER
M24
UNIFIED METER CONTROL UNIT
29
11
12
17
W/R
W
R
B
PRE-CEDING PAGE
C Y
A O
D G/R
Y F
NEXT PAGE
R G
W H
TO AV-NAVI-06
M36
B149
W/R 17M W/R
W/R J
TO AV-NAVI-04
G/R
O
Y
W/R
W
R
12
10
1
16
25
26
IGN
ACC
+B
SPEED
CAN-H
CAN-L
DISPLAY CONTROL UNIT
M94
M95
RV
6
GR
E152
M31
PRE-CEDING PAGE
E G/W
26G
GR
B
M61
M57
M79
REFER TO THE FOLLOWING.
M31 , M36 - SUPER MULTIPLE JUNCTION (SMJ)
M4 W
M39 W
M24 W
M94 W
M95 W
WKWA3071E

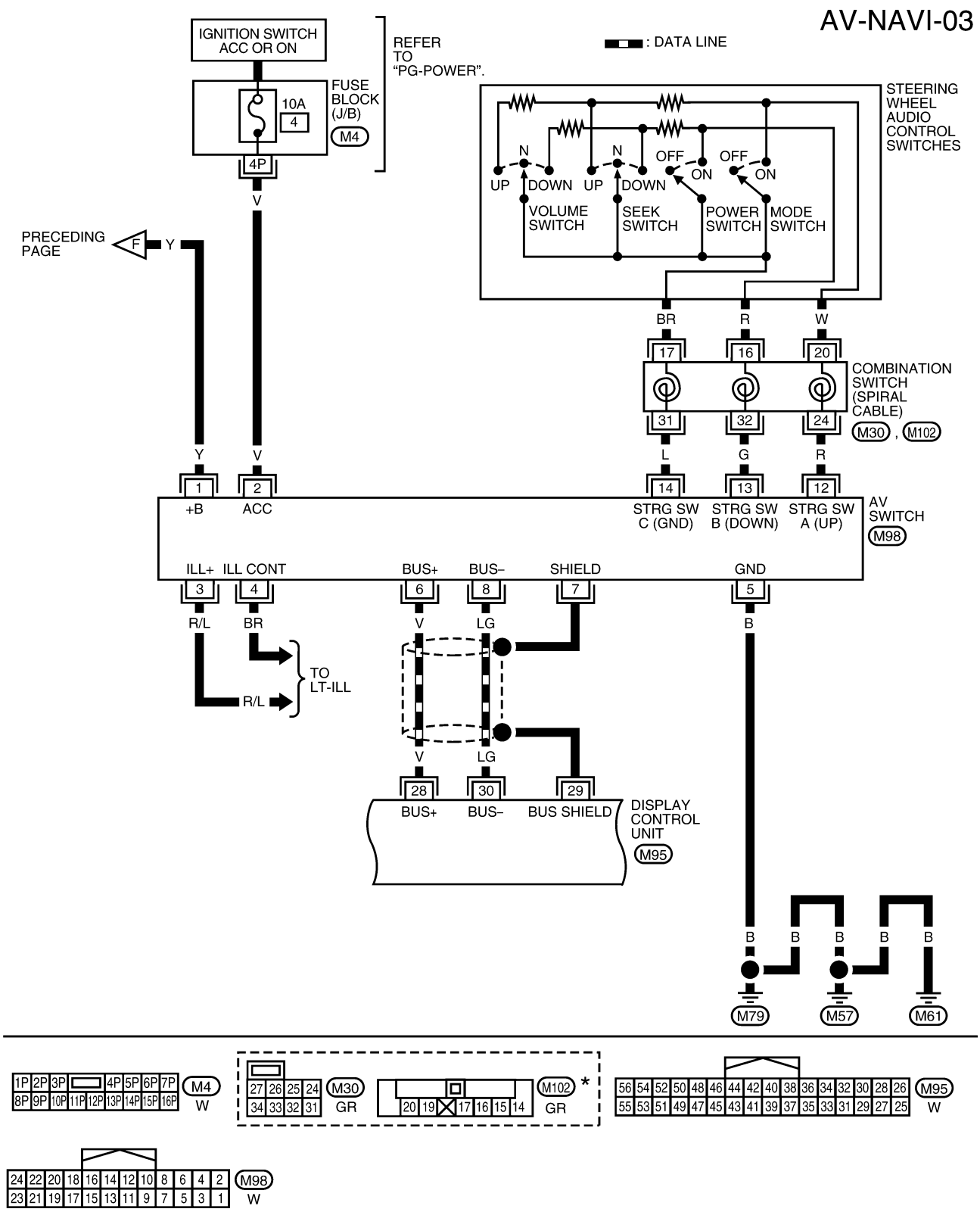

★: THIS CONNECTOR IS NOT SHOWN IN "HARNESS LAYOUT" OF PG SECTION.

WKWA3072E

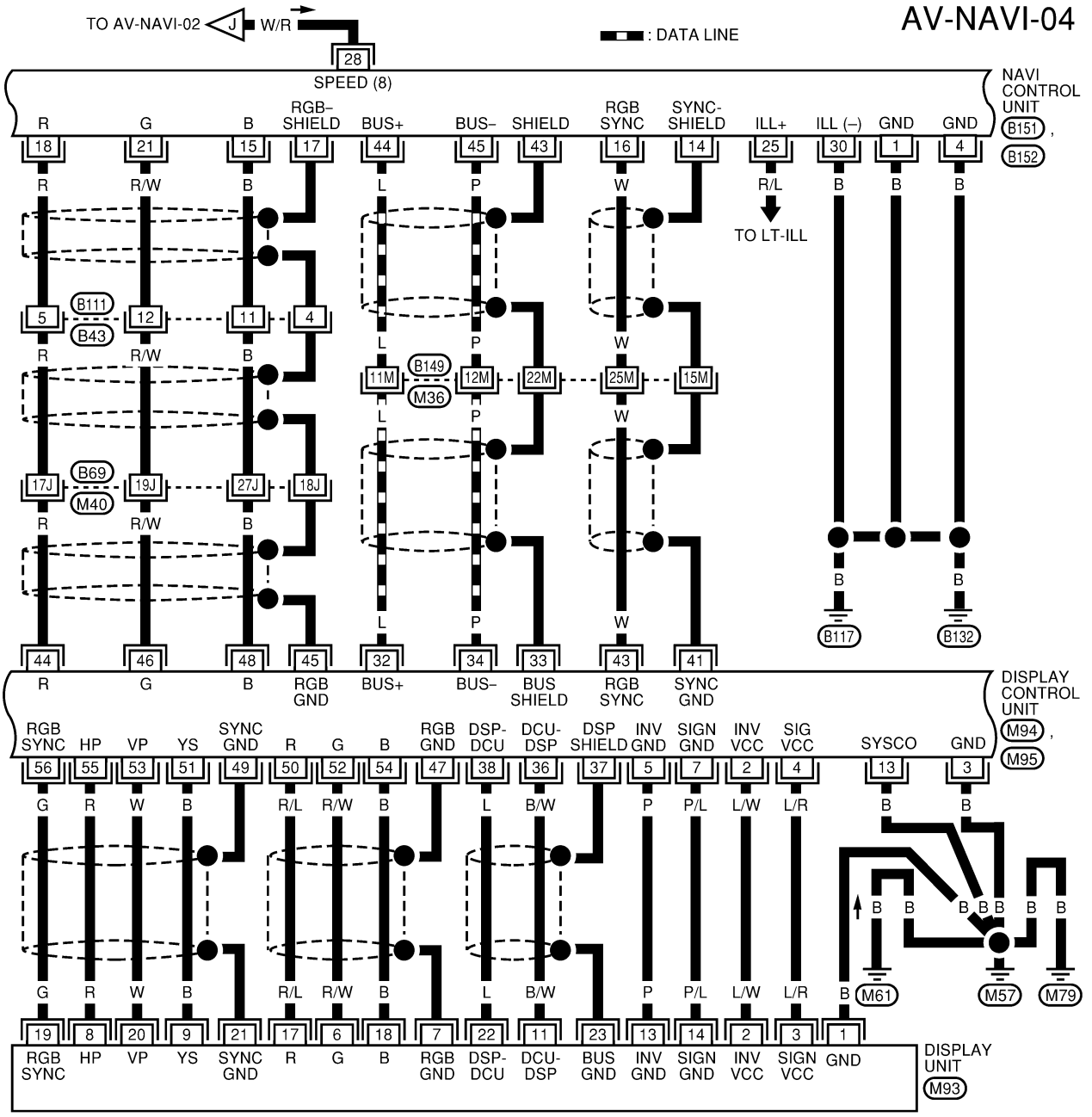

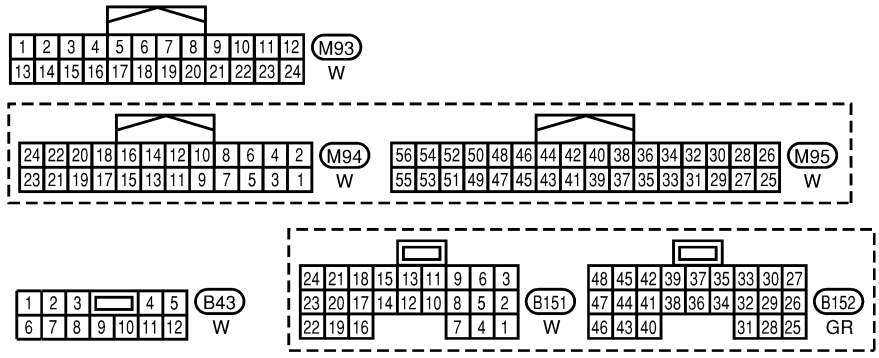

REFER TO THE FOLLOWING.
M36, M40 - SUPER MULTIPLE JUNCTION (SMJ)

WKWA1247E

AV-NAVI-05

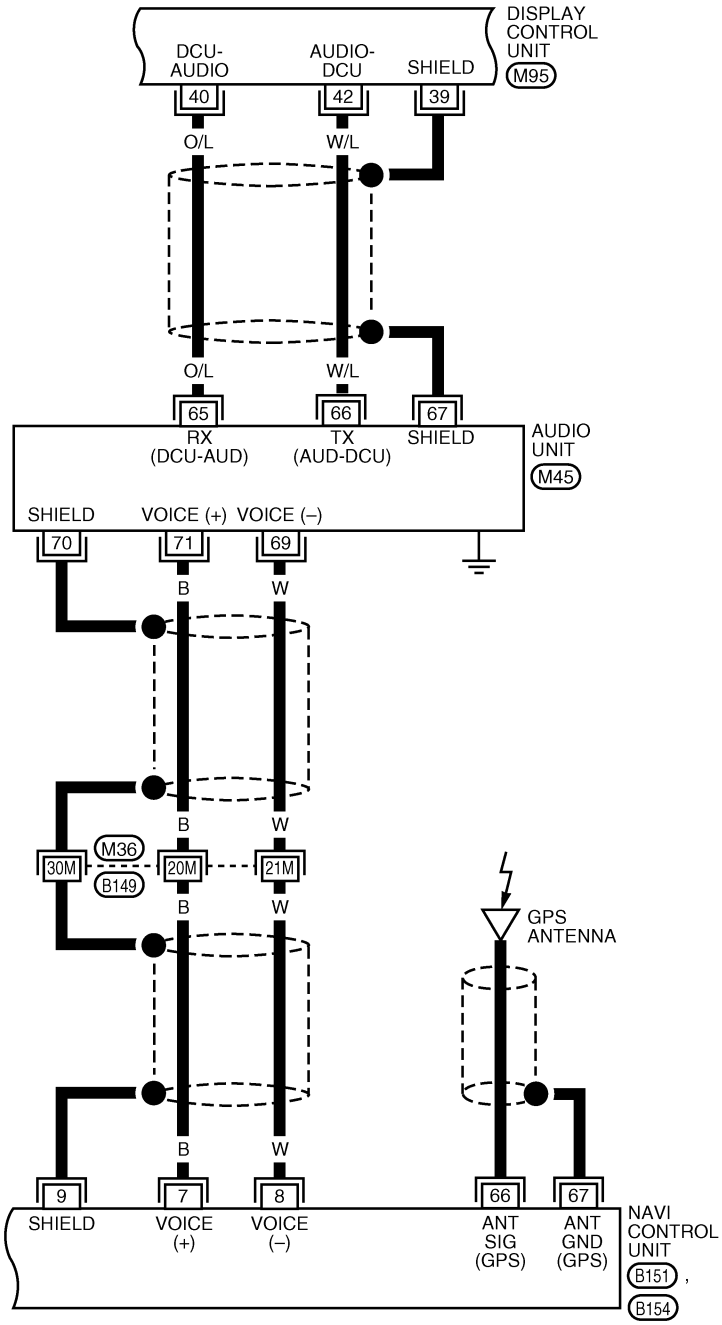

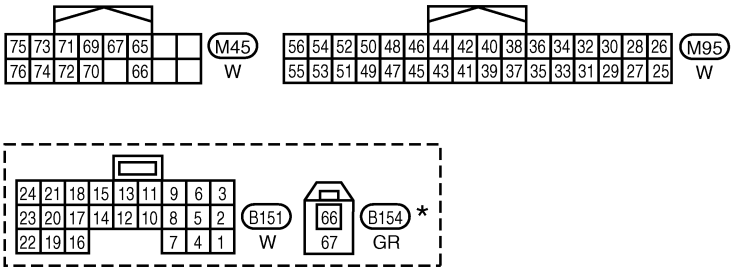

*: THIS CONNECTOR IS NOT SHOWN IN "HARNESS LAYOUT" OF PG SECTION.

REFER TO THE FOLLOWING.
M36 - SUPER MULTIPLE JUNCTION (SMJ)

WKWA1410E

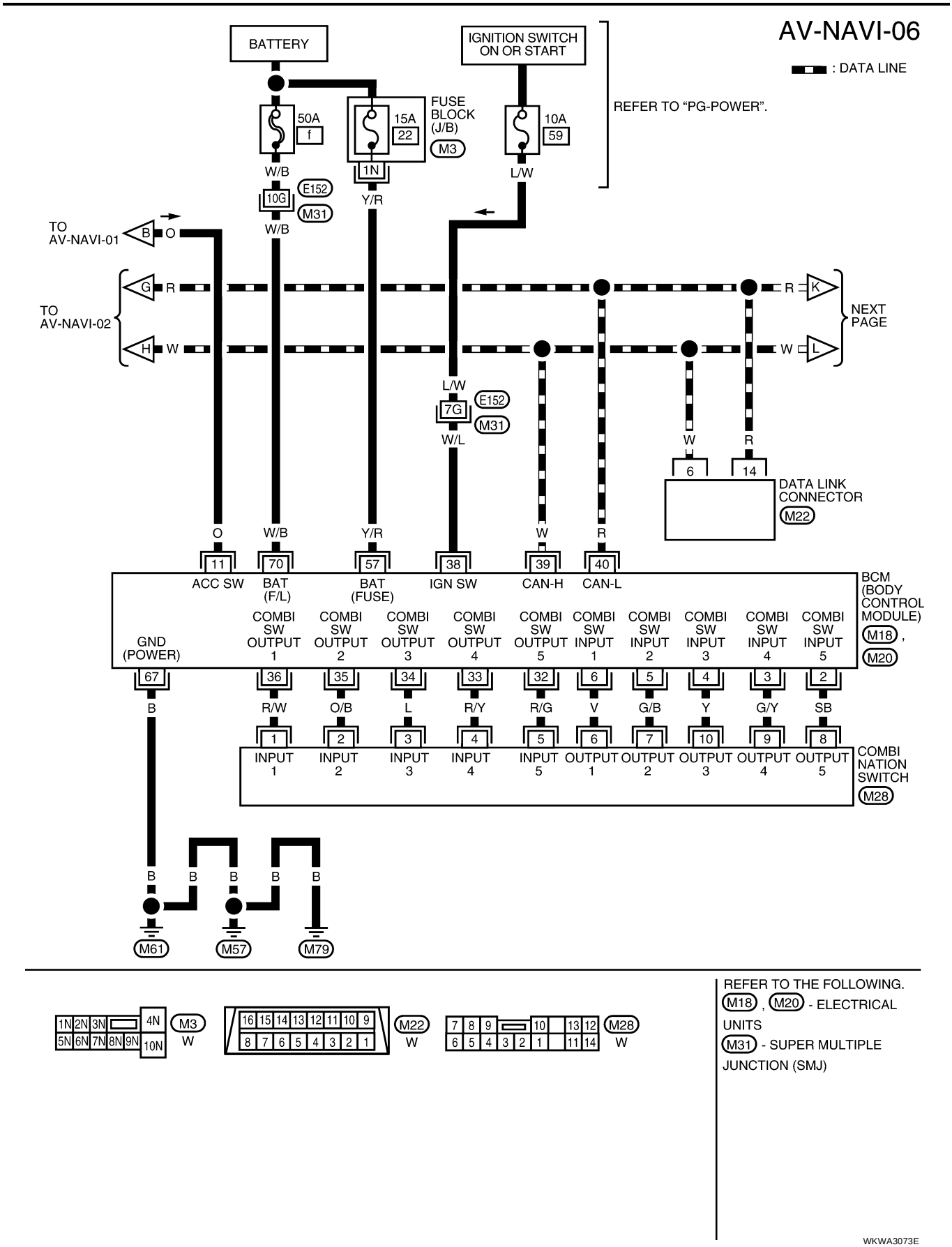
AV-NAVI-06
: DATA LINE
BATTERY
IGNITION SWITCH ON OR START
REFER TO "PG-POWER".
FUSE BLOCK (J/B)
M3
50A
f
15A
22
10A
59
W/B
1N
Y/R
L/W
10G
E152
M31
TO AV-NAVI-01
B
O
TO AV-NAVI-02
G
R
H
W
NEXT PAGE
K
L
7G
W/L
6
14
DATA LINK CONNECTOR
M22
11
70
57
38
39
40
ACC SW
BAT (F/L)
BAT (FUSE)
IGN SW
CAN-H
CAN-L
BCM (BODY CONTROL MODULE)
M18
M20
GND (POWER)
COMBI SW OUTPUT 1
COMBI SW OUTPUT 2
COMBI SW OUTPUT 3
COMBI SW OUTPUT 4
COMBI SW OUTPUT 5
COMBI SW INPUT 1
COMBI SW INPUT 2
COMBI SW INPUT 3
COMBI SW INPUT 4
COMBI SW INPUT 5
67
36
35
34
33
32
6
5
4
3
2
R/W
O/B
L
R/Y
R/G
V
G/B
Y
G/Y
SB
1
2
3
4
5
6
7
10
9
8
INPUT 1
INPUT 2
INPUT 3
INPUT 4
INPUT 5
OUTPUT 1
OUTPUT 2
OUTPUT 3
OUTPUT 4
OUTPUT 5
COMBI NATION SWITCH
M28
M61
M57
M79
1N 2N 3N 4N 5N 6N 7N 8N 9N 10N
M3
W
16 15 14 13 12 11 10 9
8 7 6 5 4 3 2 1
M22
W
7 8 9 10 13 12
6 5 4 3 2 1 11 14
M28
W
REFER TO THE FOLLOWING.
M18 , M20 - ELECTRICAL UNITS
M31 - SUPER MULTIPLE JUNCTION (SMJ)
WKWA3073E

AV-NAVI-07

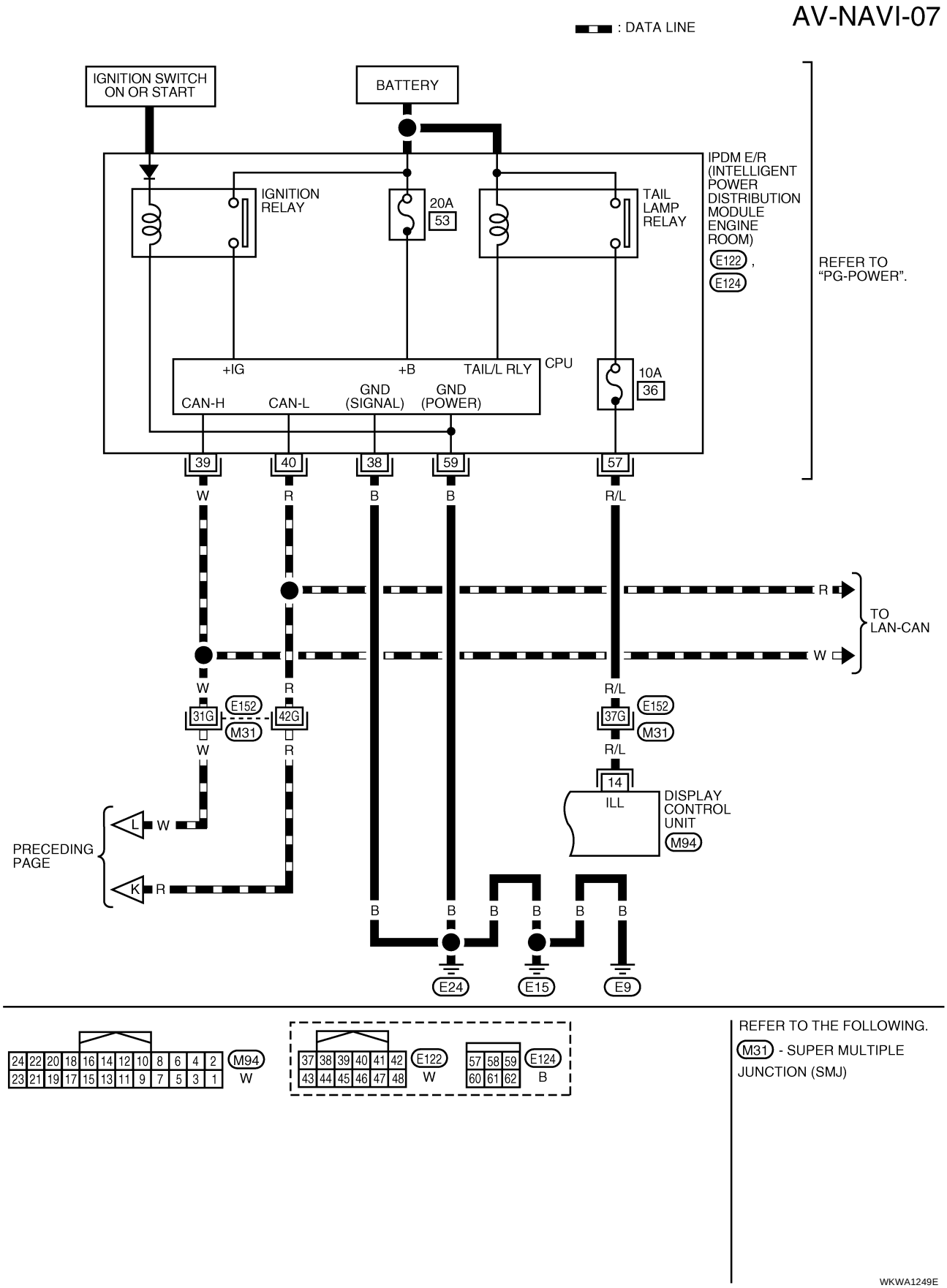
: DATA LINE
IGNITION SWITCH ON OR START
BATTERY
IPDM E/R (INTELLIGENT POWER DISTRIBUTION MODULE ENGINE ROOM)
E122 , E124
REFER TO "PG-POWER".
IGNITION RELAY
20A
53
TAIL LAMP RELAY
CPU
+IG
+B
TAIL/L RLY
CAN-H
CAN-L
GND (SIGNAL)
GND (POWER)
10A
36
39
40
38
59
57
W
R
B
B
R/L
TO LAN-CAN
31G
42G
37G
E152
M31
14
ILL
DISPLAY CONTROL UNIT
M94
PRECEDING PAGE
L
K
E24
E15
E9
M94
W
E122
W
E124
B
REFER TO THE FOLLOWING.
M31 - SUPER MULTIPLE JUNCTION (SMJ)
WKWA1249E

Schematic

EKS007LM

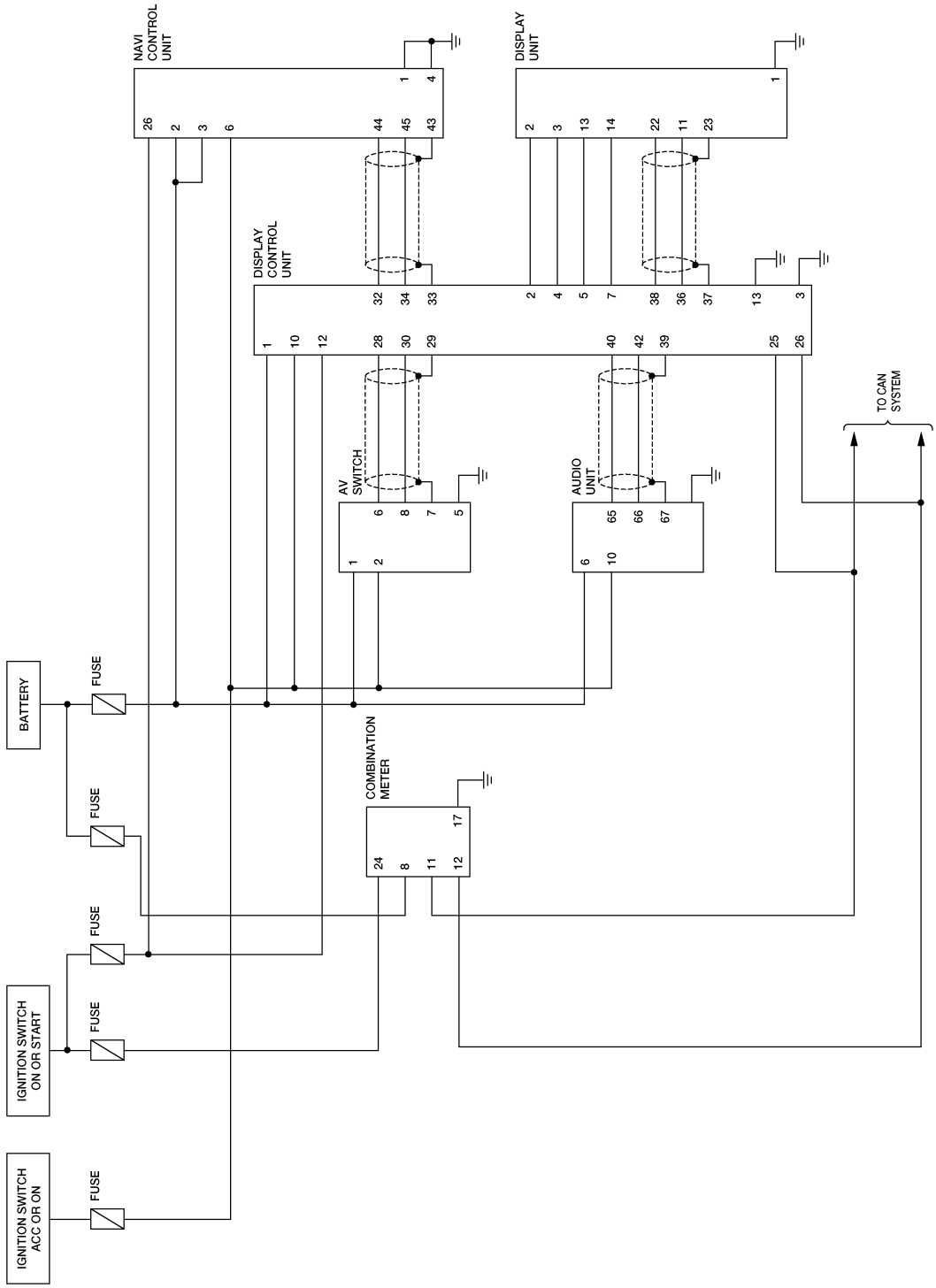

WKWA1460E

Wiring Diagram — COMM —

EKS007LN

AV-COMM-01

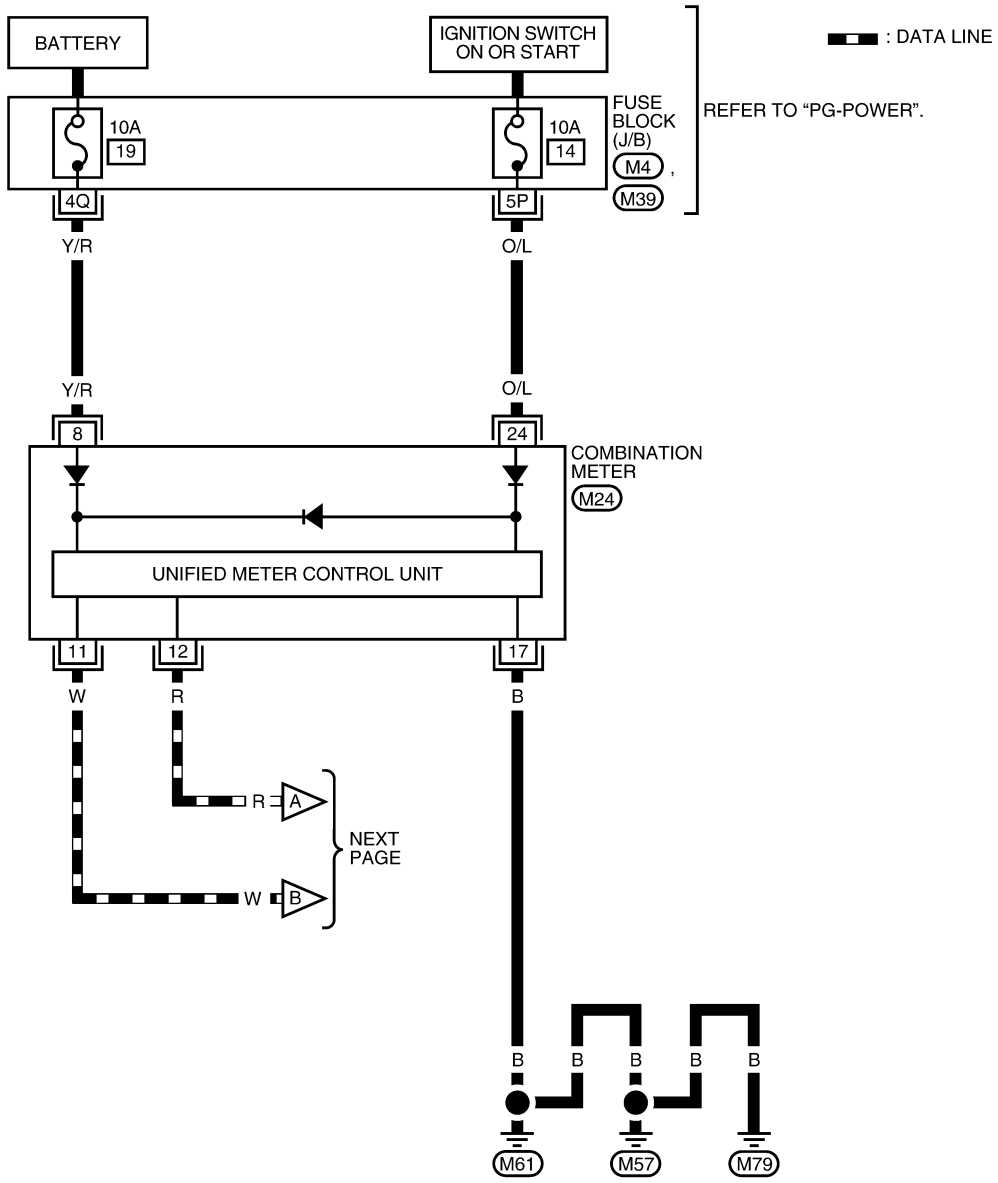

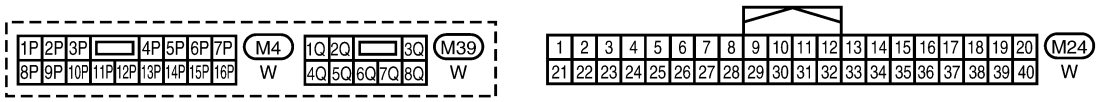

WKWA3074E

AV-COMM-02

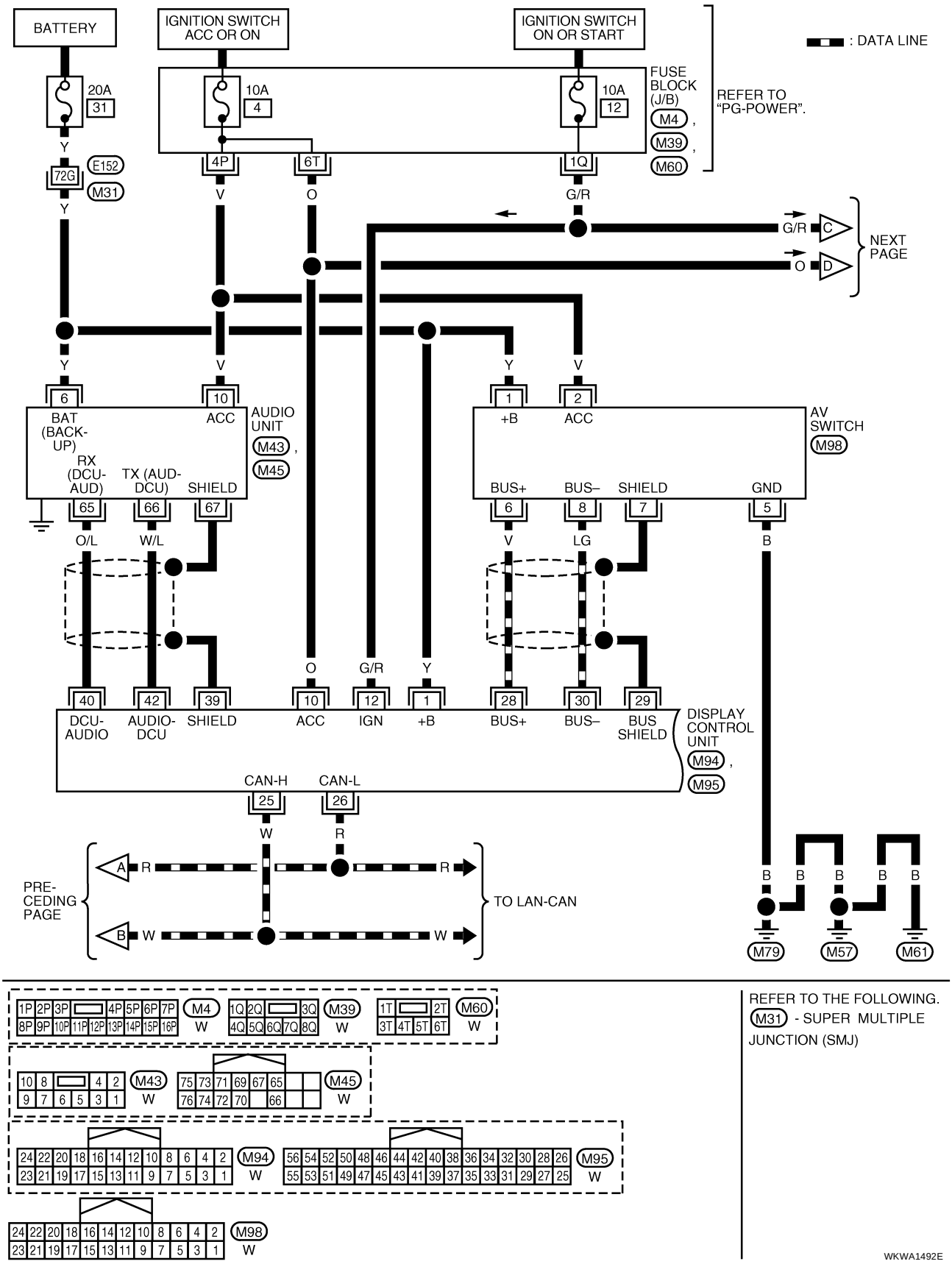
BATTERY
IGNITION SWITCH ACC OR ON
IGNITION SWITCH ON OR START
: DATA LINE
20A
31
10A
4
10A
12
FUSE BLOCK (J/B)
M4
M39
M60
REFER TO "PG-POWER".
Y
72G
E152
M31
4P
6T
1Q
V
O
G/R
NEXT PAGE
C
D
6
10
BAT (BACK-UP)
ACC
AUDIO UNIT
M43
M45
RX (DCU-AUD)
TX (AUD-DCU)
SHIELD
65
66
67
O/L
W/L
1
2
+B
ACC
AV SWITCH
M98
BUS+
BUS–
SHIELD
GND
6
8
7
5
V
LG
B
40
42
39
10
12
1
28
30
29
DCU-AUDIO
AUDIO-DCU
SHIELD
ACC
IGN
+B
BUS+
BUS–
BUS SHIELD
DISPLAY CONTROL UNIT
M94
M95
CAN-H
CAN-L
25
26
W
R
PRE-CEDING PAGE
A
B
TO LAN-CAN
M79
M57
M61
M4
M39
M60
M43
M45
M94
M95
M98
REFER TO THE FOLLOWING.
M31 - SUPER MULTIPLE JUNCTION (SMJ)
WKWA1492E

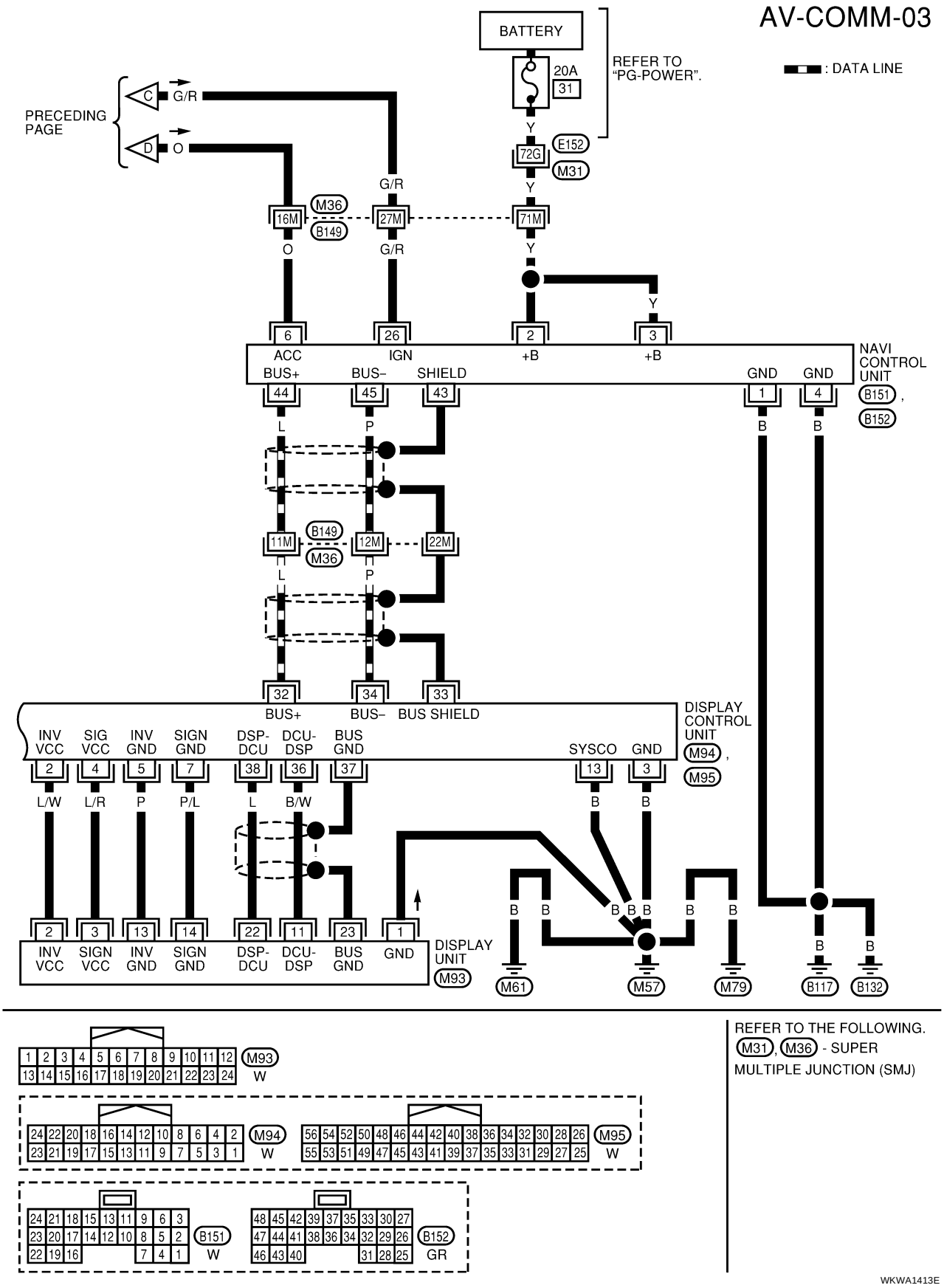
AV-COMM-03
: DATA LINE
BATTERY
20A
31
REFER TO "PG-POWER".
PRECEDING PAGE
C
G/R
D
O
Y
E152
72G
M31
G/R
Y
M36
16M
B149
27M
71M
O
G/R
Y
Y
6
26
2
3
ACC
IGN
+B
+B
NAVI CONTROL UNIT
BUS+
BUS−
SHIELD
GND
GND
44
45
43
1
4
B151
B152
L
P
B
B
B149
11M
12M
22M
M36
L
P
32
34
33
BUS+
BUS−
BUS SHIELD
DISPLAY CONTROL UNIT
INV VCC
SIG VCC
INV GND
SIGN GND
DSP-DCU
DCU-DSP
BUS GND
SYSCO
GND
2
4
5
7
38
36
37
13
3
M94
M95
L/W
L/R
P
P/L
L
B/W
B
B
2
3
13
14
22
11
23
1
INV VCC
SIGN VCC
INV GND
SIGN GND
DSP-DCU
DCU-DSP
BUS GND
GND
DISPLAY UNIT
M93
M61
M57
M79
B117
B132
M93
W
M94
W
M95
W
B151
W
B152
GR
REFER TO THE FOLLOWING.
M31, M36 - SUPER MULTIPLE JUNCTION (SMJ)
WKWA1413E

Terminals and Reference Value for NAVI Control unit

EKS007LO

Terminal No. (Wire color) +	Terminal No. (Wire color) –	Item	Signal input/ output	Condition: Igni-tion switch	Condition: Operation	Voltage (Approx.)	Example of symptom
1 (B)	Ground	Ground	–	ON	–	0 V	–
2 (Y) 3 (Y)	Ground	Battery power	Input	OFF	–	Battery voltage	System does not work properly.
4 (B)	Ground	Ground	–	ON	–	0 V	–
6 (O)	Ground	ACC signal	Input	ACC	–	Battery voltage	System does not work properly.
7 (B)	8 (W)	Voice guide signal	Output	ON	Press the “GUIDE/ VOICE” button.	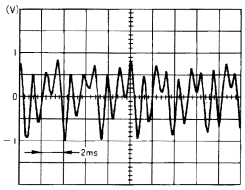 SKIA0171J	Only route guide and operation guide are not heard.
9	–	Shield ground	–	–	–	–	Audio noise interference.
14	–	Shield ground	–	–	–	–	Video display interference.
15 (B)	17	RGB signal (B: blue)	Output	ON	Select “Display Diagnosis (NAVI)” of CONFIRMATION/ ADJUSTMENT function.	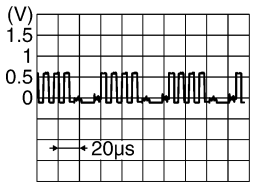 SKIA4979E	NAVI screen looks yellowish.
16 (W)	14	RGB syn-chronizing signal	Output	ON	Press the “MAP” button.	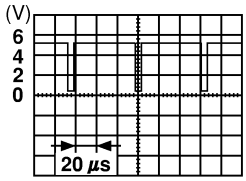 SKIA0164E	NAVI screen is rolling.
17	–	Shield ground	–	–	–	–	Video display interference.
18 (R)	17	RGB signal (R: red)	Output	ON	Select “Display Diagnosis (NAVI)” of CONFIRMATION/ ADJUSTMENT function.	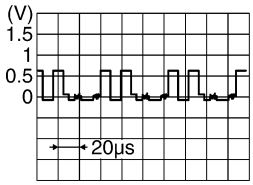 SKIA4977E	NAVI screen looks bluish.
21 (R/W)	17	RGB signal (G: green)	Output	ON	Select “Display Diagnosis (NAVI)” of CONFIRMATION/ ADJUSTMENT function.	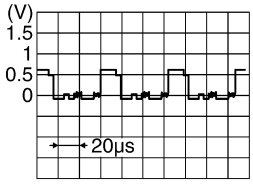 SKIA4978E	NAVI screen looks reddish.

Terminal No. (Wire color) +	Terminal No. (Wire color) –	Item	Signal input/ output	Condition: Igni-tion switch	Condition: Operation	Voltage (Approx.)	Example of symptom
25 (R/L)	30 (B)	Illumination signal	Input	ON	Lighting switch in 1st position	Battery voltage	Display unit illu-mination does not change when lighting switch is turned to 1st position.-
					Lighting switch is OFF	3V or less	
26 (G/R)	Ground	Ignition signal	Input	ON	–	Battery voltage	Navigation cur-rent location mark does not indicate the cor-rect position.
27 (G/W)	Ground	Reverse signal	Input	ON	Selector lever in R position	Battery voltage	The navigation current location mark moves strangely when the vehicle is moving back-wards.
					Selector lever not in R position	0V	
28 (W/R)	Ground	Vehicle speed signal (8-pulse)	Input	ON	When vehicle speed is approx. 40 km/h (25 MPH)	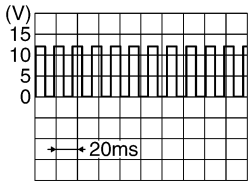 PKIA1935E	Navigation cur-rent location mark does not indicate the cor-rect position.
43	–	Shield ground	–	–	–	–	–
44 (L)	Ground	Communica-tion signal (+)	Input/ output	ON	–	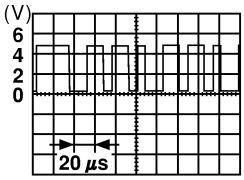 SKIA0175E	System does not work properly.
45 (P)	Ground	Communica-tion signal (–)	Input/ output	ON	–	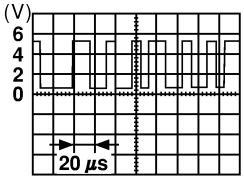 SKIA0176E	System does not work properly.
66	67	GPS signal	Input	ON	Connector is not connected.	5 V	Navigation sys-tem GPS correc-tion is not possible.

Terminals and Reference Value for Display Control unit

EKS007LP

Terminal No. (Wire color) +	Terminal No. (Wire color) –	Item	Signal input/ output	Condition: Igni-tion switch	Condition: Operation	Voltage (Approx.)	Example of symptom
1 (Y)	Ground	Battery Power	Input	OFF	–	Battery voltage	System does not work properly.
2 (L/W)	Ground	Power Sup-ply (Inverter)	Output	ON	–	9 V	Screen is not shown.
3 (B)	Ground	Ground	–	ON	–	0 V	–
4 (L/R)	Ground	Power Sup-ply (Signal)	Output	ON	–	9 V	Screen is not shown.
5 (P)	Ground	(Inverter) Ground	–	ON	–	0 V	–
6 (GR)	Ground	Reverse signal	Input	ON	Selector lever in R position	Battery voltage	Impossible to gain direction of vehicle.
					Selector lever not in R position	0 V	
7 (P/L)	Ground	(Signal) Ground	–	ON	–	0 V	–
10 (O)	Ground	ACC signal	Input	ACC	–	Battery voltage	System does not work properly.
12 (G/R)	Ground	Ignition signal	Input	ON	–	Battery voltage	Vehicle informa-tion setting is not possible.
13 (B)	Ground	Ground	–	ON	–	0 V	–
14 (R/L)	Ground	Illumination signal	Input	OFF	Lighting switch posi-tion 1st or 2nd	Battery voltage	Display unit does not change when lighting switch is turned to 1st position.
					Lighting switch posi-tion OFF	0 V	
16 (W/R)	Ground	Vehicle speed signal (8–pulse)	Input	ON	When vehicle speed is approx. 40 km/h (25 MPH)	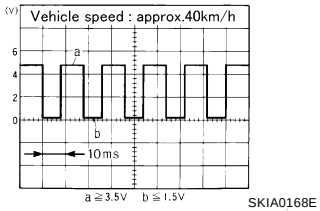 SKIA0168E	Value of vehicle speed informa-tion is not accu-rately displayed.
25 (W)	–	CAN H	–	–	–	–	–
26 (R)	–	CAN L	–	–	–	–	–
28 (V)	Ground	Communica-tion signal (+)	Input/ Output	ON	–	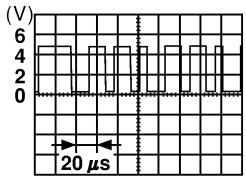 SKIA0175E	System does not work properly.
29	–	Shield ground	–	–	–	–	–

Terminal No. (Wire color) +	Terminal No. (Wire color) –	Item	Signal input/ output	Condition: Igni-tion switch	Condition: Operation	Voltage (Approx.)	Example of symptom
30 (LG)	Ground	Communica-tion signal (–)	Input/ output	ON	–	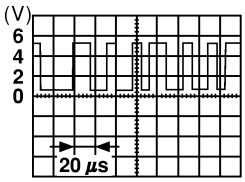 SKIA0176E	System does not work properly.
32 (L)	Ground	Communica-tion signal (+)	Input/ output	ON	–	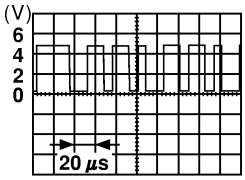 SKIA0175E	System does not work properly.
33	–	Shield ground	–	–	–	–	–
34 (P)	Ground	Communica-tion signal (–)	Input/ output	ON	–	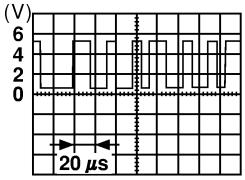 SKIA0176E	System does not work properly.
36 (B/W)	37	Display Com-munication signal (DCU-DSP)	Output	ON	Press the “TRIP” button.	 SKIA4364E	Though a screen is displayed, it is impossible to adjust bright-ness.
37	–	Shield ground	–	–	–	–	–
38 (L)	37	Display Com-munication signal (DSP-DCU)	Input	ON	Press the “TRIP” button.	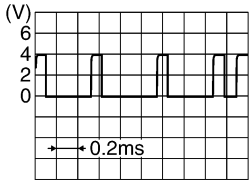 SKIA4363E	Though a screen is displayed, it is impossible to adjust bright-ness.
39	–	Shield ground	–	–	–	–	–
40 (O/L)	Ground	Audio TX Communica-tion signal	Output	ON	Operate audio volume.	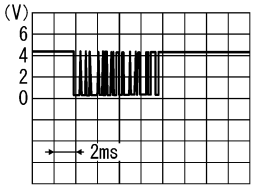 SKIA4402E	Audio does not operate properly.

Terminal No. (Wire color)		Item	Signal input/ output	Condition		Voltage (Approx.)	Example of symptom
+	–			Igni-tion switch	Operation		
41	–	Shield ground	–	–	–	–	–
42 (W/L)	Ground	Audio RX communica-tion signal	Input	ON	Operate audio volume.	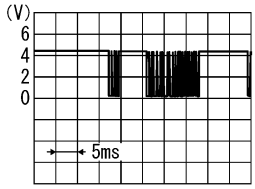 SKIA4403E	Audio does not operate properly.
43 (W)	41	RGB syn-chronizing signal	Input	ON	Press the “MAP” button.	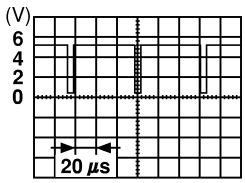 SKIA0164E	NAVI screen is rolling.
44 (R/L)	45	RGB signal (R: red)	Input	ON	Select “Display Diagnosis (NAVI)” of CONFIRMATION/ ADJUSTMENT function.	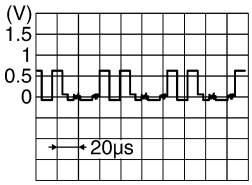 SKIA4977E	NAVI screen looks bluish.
45	–	Shield ground	–	–	–	–	–
46 (R/W)	45	RGB signal (G: green)	Input	ON	Select “Display Diagnosis (NAVI)” of CONFIRMATION/ ADJUSTMENT function.	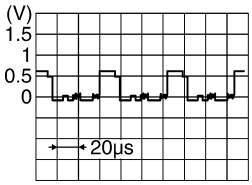 SKIA4978E	NAVI screen looks reddish.
47	–	Shield ground	–	–	–	–	–
48 (B)	45	RGB signal (B: blue)	Input	ON	Select “Display Diagnosis (NAVI)” of CONFIRMATION/ ADJUSTMENT function.	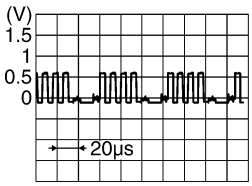 SKIA4979E	NAVI screen looks yellowish.
49	–	Shield ground	–	–	–	–	–
50 (R/L)	47	RGB signal (R: red)	Output	ON	Select “Display Diagnosis (DCU)” of CONFIRMATION/ ADJUSTMENT function.	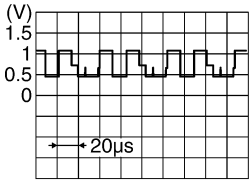 SKIA4980E	NAVI screen looks bluish.

Terminal No. (Wire color)		Item	Signal input/ output	Condition		Voltage (Approx.)	Example of symptom
+	–			Igni-tion switch	Operation		
51 (B)	49	RGB area (YS) signal	Output	ON	Press the“TRIP” button.	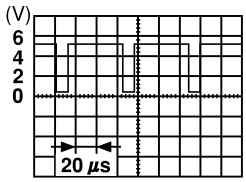 SKIA0162E	RGB screen is not shown.
52 (R/W)	47	RGB signal (G: green)	Output	ON	Select “Display Diagnosis (DCU)” of CONFIRMATION/ ADJUSTMENT function.	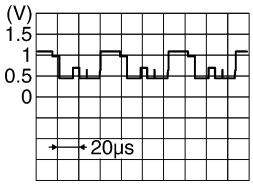 SKIA4981E	Screen looks reddish.
53 (W)	49	Vertical syn-chronizing (VP) signal	Input	ON	–	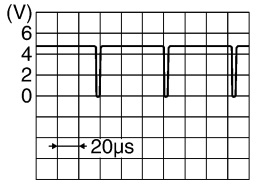 SKIA4983E	Operating screen for audio and A/C is not displayed when showing NAVI screen.
54 (B)	47	RGB signal (B: blue)	Output	ON	Select “Display Diagnosis (DCU)” of CONFIRMATION/ ADJUSTMENT function.	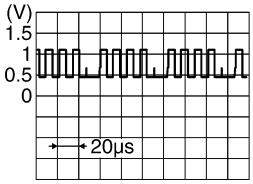 SKIA4982E	Screen looks yellowish.
55 (R)	49	Horizontal synchroniz-ing (HP) sig-nal	Input	ON	–	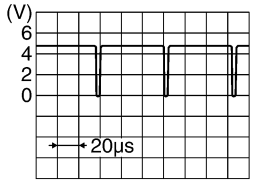 SKIA4983E	Operating screen for audio and A/C is not displayed when showing NAVI screen.
56 (G)	49	RGB syn-chronizing signal	Output	ON	Press the “TRIP” button.	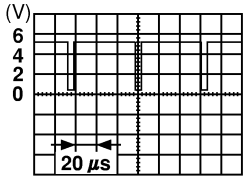 SKIA0164E	NAVI screen is rolling.

Terminals and Reference Value for Display unit

EKS007LQ

Terminal No. (Wire color)		Item	Signal input/ output	Condition		Voltage (Approx.)	Example of symptom
+	–			Igni-tion switch	Operation		
1 (B)	Ground	Ground	–	ON	–	0 V	–
2 (L/W)	Ground	Power sup-ply (Inverter)	Input	ON	–	9 V	Screen is not shown.
3 (L/R)	Ground	Power sup-ply (Signal)	Input	ON	–	9 V	Screen is not shown.
6 (R/W)	7	RGB signal (G: green)	Input	ON	Select “Display Diagnosis (DCU)” of CONFIRMATION/ ADJUSTMENT function.	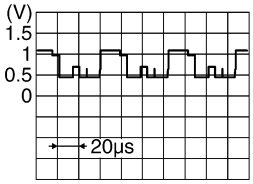 SKIA4981E	Screen looks reddish.
7	–	Shield ground	–	–	–	–	–
8 (R)	21	Horizontal synchroniz-ing (HP) sig-nal	Output	ON	–	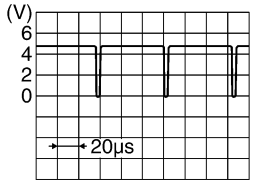 SKIA4983E	Operating screen for audio and A/C is not displayed when showing NAVI screen.
9 (B)	21	RGB area (YS) signal	Input	ON	Press the “TRIP” button.	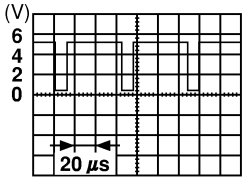 SKIA0162E	RGB screen is not shown.
11 (B/W)	23	Display com-munication signal (DCU-DSP)	Input	ON	–	 SKIA4364E	Though a screen is displayed, it is impossible to adjust bright-ness.
13 (P)	Ground	(Inverter) Ground	–	ON	–	0 V	–
14 (P/L)	Ground	(Signal) Ground	–	ON	–	0 V	–
17 (R/L)	7	RGB signal (R: red)	Input	ON	Select “Display Diagnosis (DCU)” of CONFIRMATION/ ADJUSTMENT function.	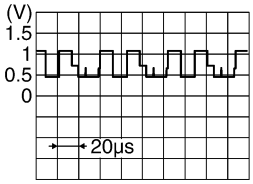 SKIA4980E	Screen looks bluish.

Terminal No. (Wire color)		Item	Signal input/ output	Condition		Voltage (Approx.)	Example of symptom
+	–			Igni-tion switch	Operation		
18 (B)	7	RGB signal (B: blue)	Input	ON	Select “Display Diagnosis (DCU)” of CONFIRMATION/ ADJUSTMENT function.	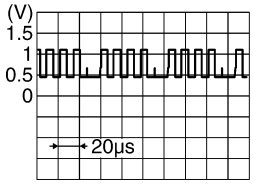 SKIA4982E	Screen looks yellowish.
19 (G)	21	RGB syn-chronizing signal	Input	ON	Press the “TRIP” button.	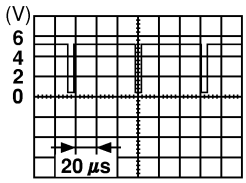 SKIA0164E	NAVI screen is rolling.
20 (W)	21	Vertical syn-chronizing (VP) signal	Output	ON	–	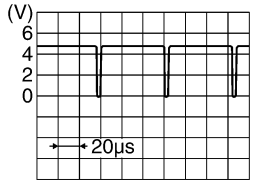 SKIA4983E	Operating screen for audio and A/C is not displayed when showing NAVI screen.
21	–	Shield ground	–	–	–	–	–
22 (L)	23	Display com-munication signal (DSP-DCU)	Output	ON	–	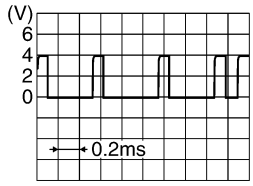 SKIA4363E	Though a screen is displayed, it is impossible to adjust bright-ness.
23	–	Shield ground	–	–	–	–	–

Terminals and Reference Value for AV Switch

EKS007LR

Terminal No. (Wire color) +	Terminal No. (Wire color) –	Item	Signal input/ output	Condition: Ignition switch	Condition: Operation	Voltage (Approx.)	Example of symptom
1 (Y)	Ground	Battery power	Input	OFF	-	Battery voltage	System does not work properly.
2 (V)	Ground	ACC signal	Input	ACC	-	Battery voltage	System does not work properly.
3 (R/L)	Ground	Illumination signal	Input	OFF	Lighting switch is ON (position 1).	Battery voltage	AV switch illumination does not come on when lighting switch is ON (position 1).
					Turn lighting switch OFF.	3.0V or less	
4 (BR)	Ground	Illumination control signal	Input	ON	Illumination control switch is operated by lighting switch in 1st position.	Changes between 0 and 12V.	AV switch illumination cannot be controlled.
5 (B)	Ground	Ground	-	ON	-	0V	-
6 (V)	Ground	Communication signal (+)	Input/ output	ON	-	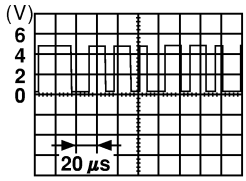 SKIA0175E	System does not work properly.
7	-	Shield ground	-	-	-	-	-
8 (LG)	Ground	Communication signal (-)	Input/ output	ON	-	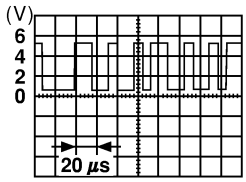 SKIA0176E	System does not work properly.
12 (R)	Ground	Remote control A	Input	ON	Press MODE switch	0V	Steering wheel audio controls do not function.
					Press SEEK UP switch	0.75V	
					Press VOL UP switch	2V	
					Except for above	5V	
13 (G)	Ground	Remote control B	Input	ON	Press POWER switch	0V	Steering wheel audio controls do not function.
					Press SEEK DOWN switch	0.75V	
					Press VOL DOWN switch	2V	
					Except for above	5V	
14 (L)	-	Remote control ground	-	-	-	-	Steering wheel audio controls do not function.

Terminals and Reference Value for BCM

EKS007LS

Terminal No.	Wire color	Signal name	Measuring condition		Reference value (Approx.)
			Ignition switch	Operation or condition	
2	SB	Combination switch input 5	ON	Lighting, turn, wiper OFF Wiper dial position 4	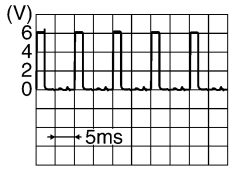 SKIA5291E
3	G/Y	Combination switch input 4	ON	Lighting, turn, wiper OFF Wiper dial position 4	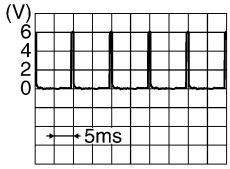 SKIA5292E
4	Y	Combination switch input 3	ON	Lighting, turn, wiper OFF Wiper dial position 4	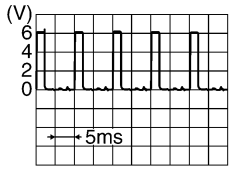 SKIA5291E
5	G/B	Combination switch input 2	ON	Lighting, turn, wiper OFF Wiper dial position 4	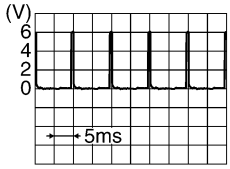 SKIA5292E
6	V	Combination switch input 1			
11	O	Ignition switch ACC	ACC	—	Battery voltage
32	R/G	Combination switch output 5	ON	Lighting, turn, wiper OFF Wiper dial position 4	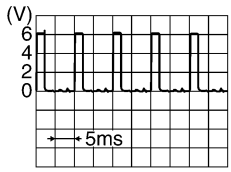 SKIA5291E
33	R/Y	Combination switch output 4	ON	Lighting, turn, wiper OFF Wiper dial position 4	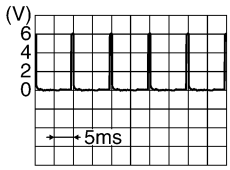 SKIA5292E
34	L	Combination switch output 3	ON	Lighting, turn, wiper OFF Wiper dial position 4	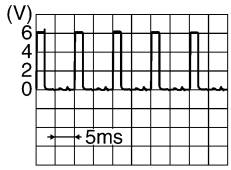 SKIA5291E

Terminal No.	Wire color	Signal name	Measuring condition		Reference value (Approx.)
			Ignition switch	Operation or condition	
35	O/B	Combination switch output 2	ON	Lighting, turn, wiper OFF Wiper dial position 4	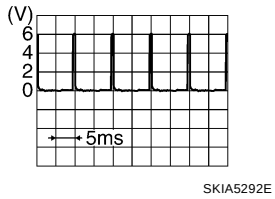
36	R/W	Combination switch output 1			
38	W/L	Ignition switch (ON)	ON	—	Battery voltage
39	W	CAN– H	—	—	—
40	R	CAN– L	—	—	—
57	Y/R	Battery power supply	OFF	—	Battery voltage
67	B	Ground	ON	—	0V
70	W/B	Battery power supply (fusible link)	OFF	—	Battery voltage

On Board Self-Diagnosis Function

EKS007LT

DESCRIPTION

- Diagnosis function consists of the self-diagnosis mode performed automatically and the CONFIRMATION/ADJUSTMENT mode operated manually.
- Self-diagnosis mode checks for connections between the units constituting this system, analyzes each individual unit at the same time, and displays the results on the LCD screen.
- CONFIRMATION/ADJUSTMENT mode is used to perform trouble diagnosis that require operation and judgment by an operator (trouble that cannot be automatically judged by the system), to check/change the set value, and to display the History of Errors of the navigation system.

DIAGNOSIS ITEM

Mode				Description
Self-diagnosis (DCU)				Display control unit diagnosis.
Self-diagnosis (NAVI)				● NAVI Control unit diagnosis (DVD-ROM drive) will not be diagnosed when no map DVD-ROM is in it. ● Analyzes connection between the NAVI control unit and the GPS antenna and operation of each unit.
CONFIRMATION/ADJUSTMENT	Display diagnosis			In display control unit mode, color tone and shading of the screen can be checked by the display of a color bar and a gray scale.
	Vehicle signals			In display control unit mode, analyzes the following vehicle signals: Vehicle speed signal, light signal[NOTE], ignition switch signal, and reverse signal.
	Auto Climate Control			A/C self-diagnosis of A/C system.
	Navigation	Display diagnosis		In NAVI C/U mode, color tone and shading of the screen can be checked by the display of a color bar and a gray scale.
		Vehicle signals		In NAVI C/U mode, analyzes the following vehicle signals: Vehicle speed signal, light signal, ignition switch signal, and reverse signal.
		History of Errors		Diagnosis results previously stored in the memory (before turning ignition switch ON) are displayed in this mode. Time and location when/where the errors occurred are also displayed.
		Navigation	Display Longitude & Latitude	Display the map. Use the joystick to adjust position. Longitude and latitude will be displayed.
			Speed Calibration	Under ordinary conditions, the navigation system distance measuring function will automatically compensate for minute decreases in wheel and tire diameter caused by tire wear or low-pressure. Speed calibration immediately restores system accuracy in cases such as when distance calibration is needed because of the use of tire chains in inclement weather.
			Angle adjustment	Corrects difference between actual turning angle of a vehicle and turning angle of the car mark on the display.
			Initialize Location	This mode is for initializing the current location. Use when the vehicle is transported a long distance on a trailer, etc.
CAN DIAG SUPPORT MONITOR				Display status of CAN communication.

NOTE:
Make the status that is set by D/N function be shown.

Self-Diagnosis Mode (DCU)

EKS007LU

OPERATION PROCEDURE

1. Start the engine.
2. Turn the audio system off.

3. While pressing the “PAUSE/MUTE” button, turn the volume control dial clockwise or counterclockwise for 30 clicks or more. (When the self-diagnosis mode is started, a short beep will be heard.)
   - Shifting from current screen to previous screen is performed by pressing “PREV” button.

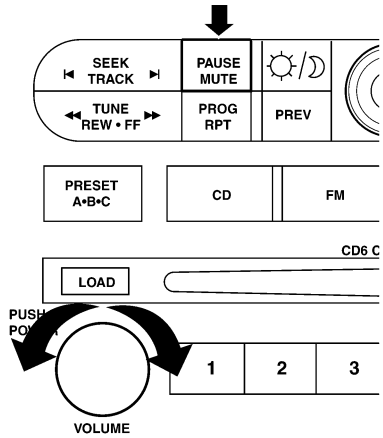

WKIA1504E

4. The initial self-diagnosis screen will be shown, and items “Self-Diagnosis (DCU)”, “Self-Diagnosis (NAVI)”, “Confirmation/Adjustment” and “CAN DIAG SUPPORT MONITOR” will become selective.

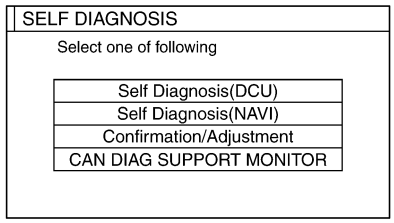

SKIA4207E

5. Perform self-diagnosis by selecting the “Self-diagnosis”.
   - Self-diagnosis subdivision screen will be shown and the operation enters the self-diagnosis mode.
   - A bar graph shown below the self-diagnosis subdivision screen indicates progress of the diagnosis.

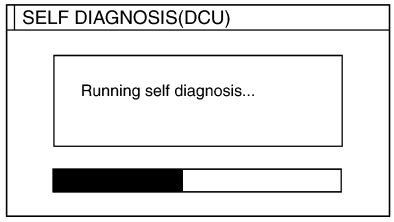

SKIA4208E

6. When the self-diagnosis completes, optional part confirmation screen will be shown.
   - When connection of an optional part is judged error, a screen to check if the optional part is actually fitted on the vehicle or not will be shown. When fitted, select the switch of the part on the screen and press “End”. Then the “SELF DIAGNOSIS” screen will be shown.
   - When the optional part is connected normally, the switch for the part will not appear on the screen.

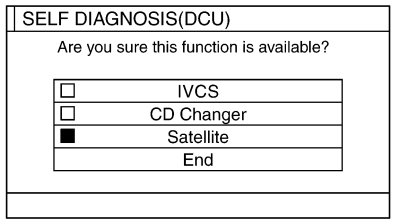

SKIA4209E

7. On the “SELF DIAGNOSIS” screen, each unit name will be colored according to the diagnosis result, as follows.

   Green : Not malfunctioning.

   Yellow : Cannot be judged by self-diagnosis results.

   Red : Unit is malfunctioning.

   Gray : Diagnosis has not been done.

   - If several malfunctions are present in a unit, color of its switch on the screen will be either red, yellow, or gray, determined by the malfunction of the highest priority.

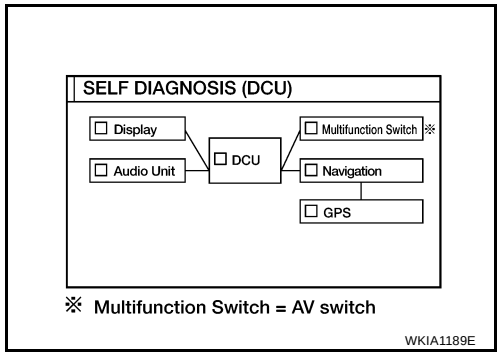

8. Select a switch on the “SELF DIAGNOSIS” screen and comments for the diagnosis results will be shown.
   - When the switch is green, the following comment will be shown. “Self-diagnosis was successful. Further diagnosis and adjustments are recommended. Follow the “confirmation/ adjustment” menu or refer to the service manual.”
   - When the switch is yellow, the following comment will be shown. “Connection to the following unit is abnormal. See the service manual for further details”.
   - When the switch is red, the following comment will be shown. “DCU is abnormal”.

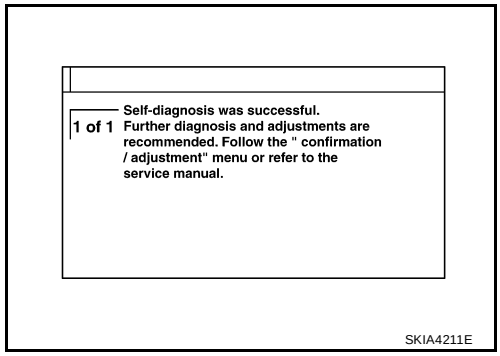

SELF–DIAGNOSIS RESULT

Quick reference table

1. Select a malfunctioning diagnosis No. in the diagnosis result quick reference table.
2. Find estimated malfunctioning system in the diagnosis No. table and perform check by referring to AV-87, "Wiring Diagram — COMM —" .
3. Turn the ignition switch OFF and perform self-diagnosis again.

Screen switch						Diagnosis No.
Switch color	DCU*	DISPLAY	Audio unit	Navigation	GPS antenna	
Red	×					1
Gray	×	x				2
	x		x			3
	×			×	×	4

*: DCU = Display control unit

CAUTION:

- **When AV switch has a malfunction, you cannot start. Refer to AV-145, "Unable to Operate All of AV Switches (Unable to Start Self-Diagnosis)" .**
- **When display unit has a malfunction, you cannot start. Refer to AV-143, "Screen is Not Shown" .**

Self-Diagnosis Codes

Diagnosis No.	Possible cause	Reference page
1	Display control unit malfunction	Refer to AV-158 .
2	Display communication line between display control unit and display unit	Refer to AV-128 .
3	Audio unit power supply and ground circuit Audio communication line between display control unit and audio unit	Refer to AV-126 .
4	NAVI control unit power supply and ground circuit AV communication line between display control unit and NAVI control unit	Refer to AV-125 .

Self-Diagnosis Mode (NAVI)

EKS007LV

OPERATION PROCEDURE

1. Start the engine.
2. Turn the audio system off.
3. While pressing the “PAUSE/MUTE” button, turn the volume control dial clockwise or counterclockwise for 30 clicks or more. (When the self-diagnosis mode is started, a short beep will be heard.)
   - Shifting from current screen to previous screen is performed by pressing “PREV” button.

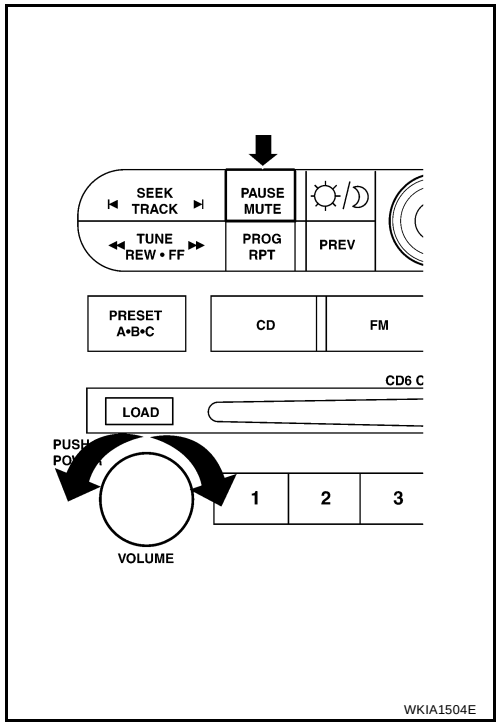

4. The initial self-diagnosis screen will be shown, and items “Self-Diagnosis (DCU)”, “Self-Diagnosis (NAVI)”, “Confirmation/Adjustment” and “CAN DIAG SUPPORT MONITOR” will become selective.

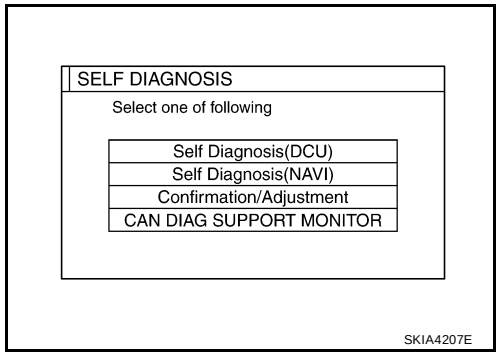

5. Perform self-diagnosis by selecting the “Self-diagnosis (NAVI)”.
   - Self-diagnosis subdivision screen will be shown and the operation enters the self-diagnosis mode.
   - A bar graph will be shown on the screen to indicate progress of the diagnosis.

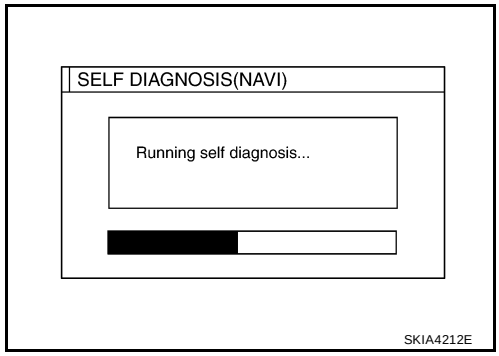

6. On the “SELF DIAGNOSIS” screen, each unit name will be colored according to the diagnosis result, as follows.

   Green : Not malfunctioning.

   Yellow : Cannot be judged by self-diagnosis results.

   Red : Unit is malfunctioning.

   Gray : Diagnosis has not been done.

   - If several malfunctions are present in a unit, color of its switch on the screen will be either red, yellow, or gray, determined by the malfunction of the highest priority.

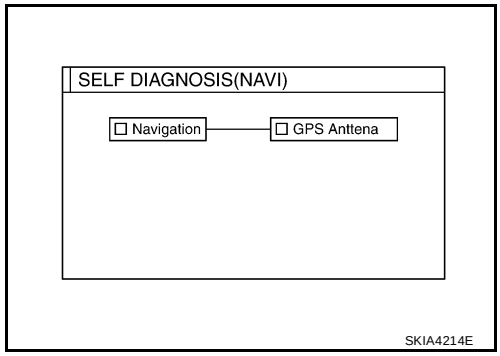

7. Select a switch on the “SELF DIAGNOSIS” screen and comments for the diagnosis results will be shown.
   - When the switch is green, the following comment will be shown. “Self-diagnosis was successful. Further diagnosis and adjustments are recommended. Follow the “Confirmation and Adjustments” menu or refer to the service manual.”
   - When the switch is yellow, the following comment will be shown. “Connection to the following unit is abnormal. See the service manual for further details”.
   - When the switch is red, the following comment will be shown. “Center Control Unit is abnormal”.
   - When the switch is gray, the following comment will be shown. “Self-diagnosis for DVD-ROM DRIVER of NAVI was not conducted because no DVD-ROM was available.”

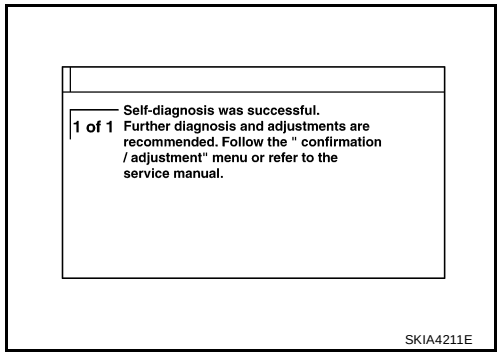

SELF–DIAGNOSIS RESULT

Quick reference table

1. Select an malfunctioning diagnosis No. in the diagnosis result quick reference table.
2. Find estimated malfunctioning system in the diagnosis No. table and perform check by referring to AV-87, "Wiring Diagram — COMM —" .
3. Turn the ignition switch OFF and perform self-diagnosis again.

Screen switch			Diagnosis No.
Switch color	Center control unit*	GPS antenna	
Red	×		1
Gray	×		2
Yellow	×		3
	×		4
	×	×	5

*: Center Control unit = NAVI control unit

CAUTION:

- **When AV switch has a malfunction, you cannot start. Refer to AV-145, "Unable to Operate All of AV Switches (Unable to Start Self-Diagnosis)" .**
- **When display unit has a malfunction, you cannot start. Refer to AV-143, "Screen is Not Shown" .**

Self-diagnosis codes

Diagnosis No.	Possible cause	Reference page
1	NAVI control unit malfunction.	Refer to AV-157
2	No map DVD-ROM is inserted in the NAVI control unit.	Refer to AV-131

Diagnosis No.	Possible cause	Reference page
3	When “DVD-ROM error. Please check disc.” is shown. 1. Eject map DVD-ROM and check if it is compatible with the system. 2. Check ejected DVD-ROM for dirt, damage, and warpage. 3. If no error is found, insert a known good map DVD-ROM of the same type and perform self-diagnosis again. If same result is shown, the NAVI control unit is malfunctioning. If result is normal, the map DVD-ROM is malfunctioning.	Refer to AV-131
4	If “Error found in DVD-ROM or DVD-ROM driver in control unit. Please perform diagnosis in accordance with service manual” is shown, carry out same inspection as diagnosis No. 3.	Refer to AV-131
5	GPS antenna system. 1. Visually check for a broken wire in the GPS antenna coaxial cable. 2. Disconnect GPS antenna connector, and make sure approximately 5V is supplied from the NAVI control unit. If not, the NAVI control unit is malfunctioning. If 5V is supplied, replace the GPS antenna. If the connection is still malfunction after the replacement of the GPS antenna, the NAVI control unit is malfunctioning.	Refer to AV-132

Confirmation/Adjustment Mode

EKS007LW

OPERATION PROCEDURE

1. Start the engine.
2. Turn the audio system off.
3. While pressing the “PAUSE/MUTE” button, turn the volume control dial clockwise or counterclockwise for 30 clicks or more. (When the self-diagnosis mode is started, a short beep will be heard.)
   - Shifting from current screen to previous screen is performed by pressing “PREV” button.

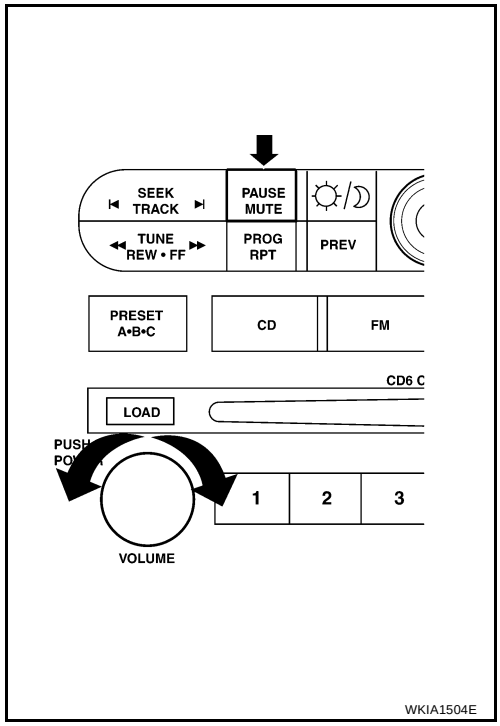

4. The initial self-diagnosis screen will be shown, and items “Self-Diagnosis (DCU)”, “Self-Diagnosis (NAVI)”, “Confirmation/Adjustment” and “CAN DIAG SUPPORT MONITOR” will become selective.

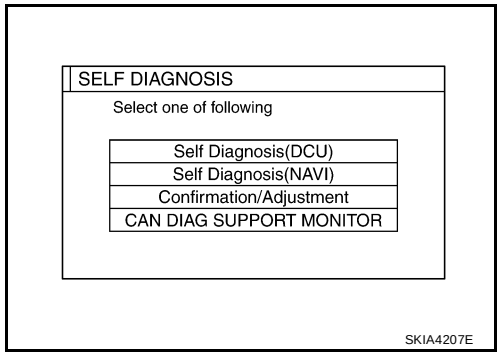

5. When “Confirmation/Adjustment” is selected on the initial self-diagnosis screen, the operation will enter the CONFIRMATION/ADJUSTMENT mode. In this mode, check and adjustment of each item will become possible.
6. The initial trouble diagnosis screen will be shown, and items “Display Diagnosis”, “Vehicle Signals”, “Auto Climate Control” and “Navigation” will become selective.
7. Select each switch on “CONFIRMATION/ADJUSTMENT” screen to display the relevant diagnosis screen.

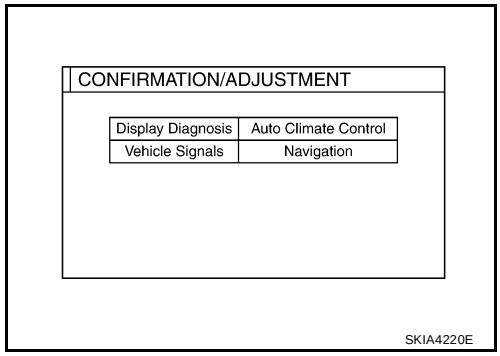

DISPLAY DIAGNOSIS

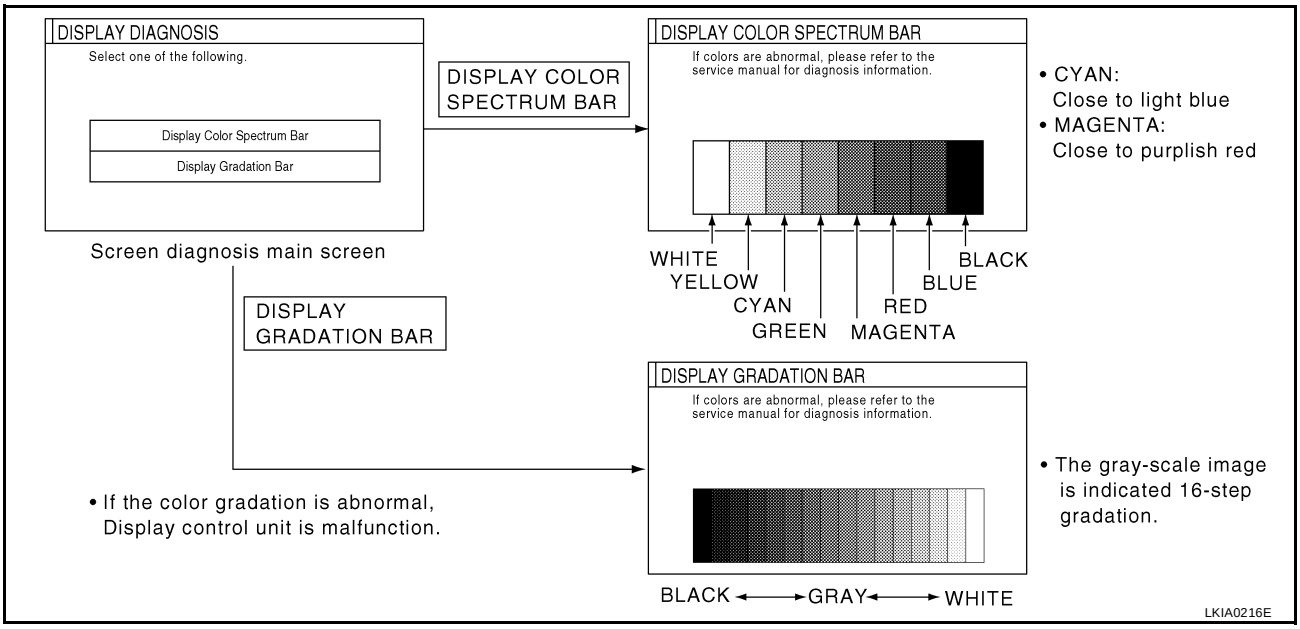

- When RGB signal error occurred in the RGB system, tone of the color bar will change as follows.

  R (red) signal error : Screen looks bluish
  G (green) signal error : Screen looks reddish
  B (blue) signal error : Screen looks yellowish

- When the color of the screen looks unusual, refer to AV-137, "Color of RGB Image is Not Proper (All Screen Looks Bluish)" , AV-138, "Color of RGB Image is Not Proper (All Screen Looks Reddish)" and AV-139, "Color of RGB Image is Not Proper (All Screen Looks Yellowish)" .

VEHICLE SIGNALS

- A comparison check can be made of each actual vehicle signal and the signals recognized by the system.

  CAUTION:
  In case of confirming light signal, set D/N mode to ON/OFF of lighting switch (normal setting).
  - **OFF: D (Day mode)**
  - **ON: N (Night mode)**

  Unless above setting, light signal (ON/OFF) may not be accurately displayed.

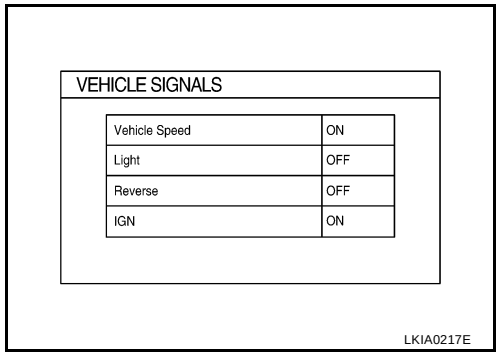

Diagnosis item	Display	Condition	Remarks
Vehicle speed	ON	Vehicle speed > 0 km/h (0 MPH)	Changes in indication may be delayed by approx. 1.5 seconds. This is normal.
	OFF	Vehicle speed = 0 km/h (0 MPH)	
	–	Ignition switch in ACC position	
Light	ON	Lighting switch ON	–
	OFF	Lighting switch OFF	
IGN	ON	Ignition switch ON	–
	OFF	Ignition switch ACC	
Reverse	ON	Selector lever in R position	Changes in indication may be delayed by approx. 1.5 seconds. This is normal.
	OFF	Selector lever in other than R position	
	–	Ignition switch in ACC position	

- If vehicle speed is NG, refer to AV-122, "Vehicle Speed Signal Check for Display Control Unit" .
- If light is NG, refer to AV-123, "Illumination Signal Check for Display Control Unit" .
- If IGN is NG, refer to AV-124, "Ignition Signal Check for Display Control Unit" .
- If reverse is NG, refer to AV-124, "Reverse Signal Check for Display Control Unit" .

NAVIGATION

1. The initial confirmation/adjustment screen will be shown, and items “Display Diagnosis”, “Vehicle Signals”, “History of Errors” and “Navigation” will become selective.
2. Select each switch on “CONFIRMATION/ADJUSTMENT” screen to display the relevant diagnosis screen.

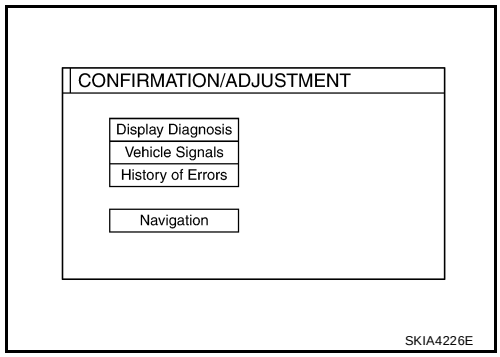

DISPLAY DIAGNOSIS

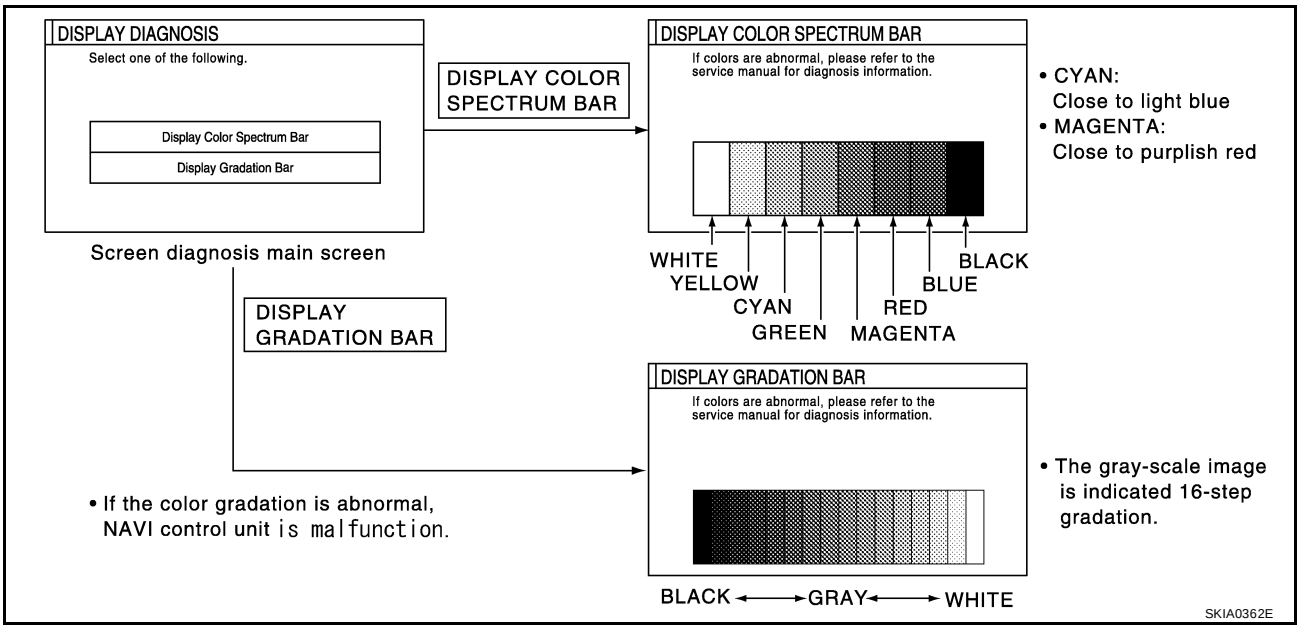

- When RGB signal error occurred in the RGB system, tone of the color bar will change as follows.

R (red) signal error	**: Screen looks bluish**
G (green) signal error	**: Screen looks reddish**
B (blue) signal error	**: Screen looks yellowish**

- When the color of the screen looks unusual, refer to AV-134, "Color of RGB Image is Not Proper (Only NAVI Screen Looks Bluish)" , AV-135, "Color of RGB Image is Not Proper (Only NAVI Screen Looks Reddish)" and AV-139, "Color of RGB Image is Not Proper (All Screen Looks Yellowish)" .

VEHICLE SIGNALS

- A comparison check can be made of each actual vehicle signal and the signals recognized by the system.

  CAUTION:
  In case of confirming light signal, set D/N mode to ON/OFF of light switch (normal setting).
  - **OFF: D (Day mode)**
  - **ON: N (Night mode)**

  Unless mode is in above setting, light signal (ON/OFF) may not be accurately displayed.

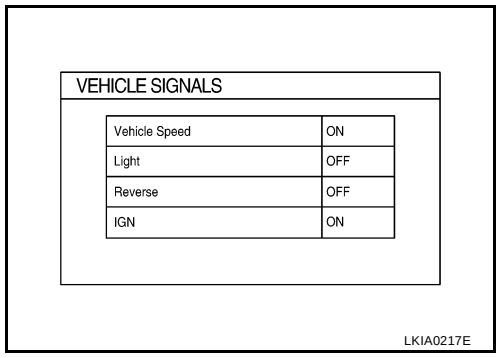

Diagnosis item	Display	Condition	Remarks
Vehicle speed	ON	Vehicle speed > 0 km/h (0 MPH)	Changes in indication may be delayed by approx. 1.5 seconds. This is normal.
	OFF	Vehicle speed = 0 km/h (0 MPH)	
	–	Ignition switch in ACC position	
Light	ON	Lighting switch ON	–
	OFF	Lighting switch OFF	
IGN	ON	Ignition switch ON	–
	OFF	Ignition switch ACC	
Reverse	ON	Selector lever in R position	Changes in indication may be delayed by approx. 1.5 seconds. This is normal.
	OFF	Selector lever in other than R position	
	–	Ignition switch in ACC position	

- If vehicle speed is NG, refer to AV-121, "Vehicle Speed Signal Check for NAVI Control Unit" .
- If light is NG, refer to AV-123, "Illumination Signal Check for NAVI Control Unit" .
- If IGN is NG, refer to AV-123, "Ignition Signal Check for NAVI Control Unit" .
- If reverse is NG, refer to AV-124, "Reverse Signal Check for NAVI Control Unit" .

HISTORY OF ERRORS

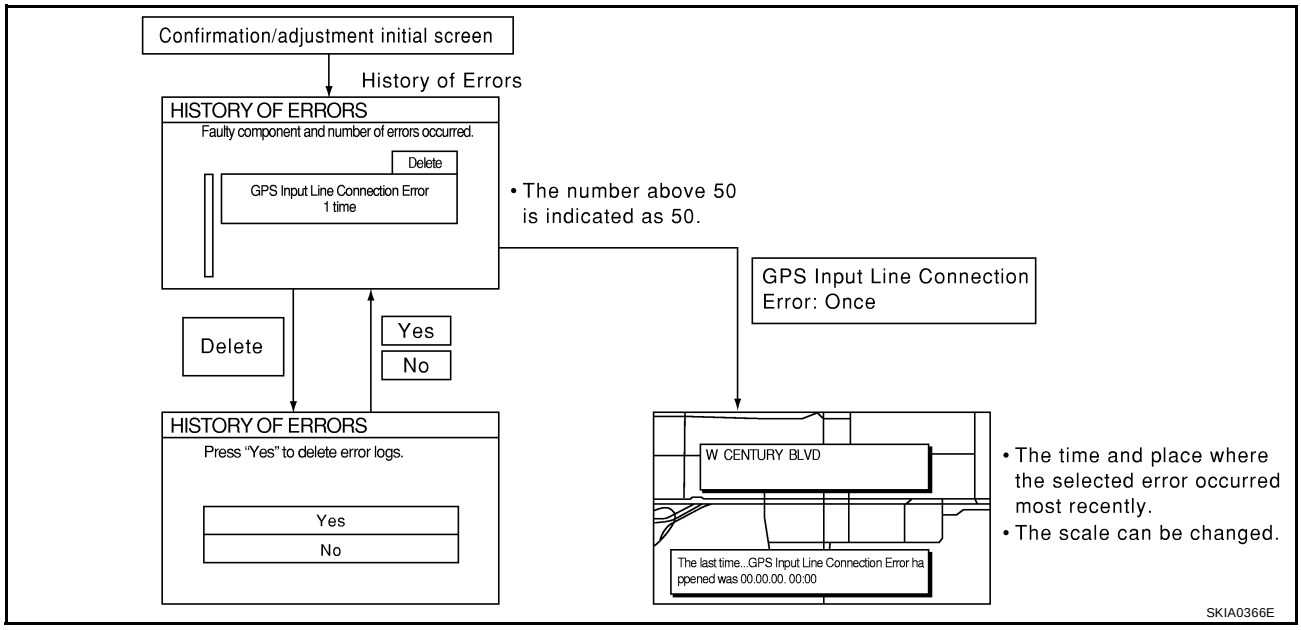

DIAGNOSIS BY HISTORY OF ERRORS

The "Self-diagnosis" results indicate whether an error occurred during the period from when the ignition switch is turned to ON until "Self-diagnosis" is completed.

If an error occurred before the ignition switch was turned to ON and does not occur again until the “Self-diagnosis” is completed, the diagnosis result will be judged normal. Therefore, those errors in the past which cannot be found by the “Self-diagnosis” must be found by diagnosing the “History of Errors”.
The History of Errors displays the time and place of the most recent occurrence of that error. However, take note of the following points.

- Correct time of the error occurrence may not be displayed when the GPS antenna substrate within the NAVI control unit has malfunctioned.
- Place of the error occurrence is represented by the position of the current-location mark at the time when the error occurred. If the current-location mark has deviated from the correct position, then the place of the error occurrence may be located correctly.
- The maximum number of occurrences which can be stored is 50. For the 51st and later occurrences, the displayed number remains 50.

When a reproducible malfunction occurred but its cause cannot be identified because several errors are present, record the item, number and place (longitude/latitude) of error occurrence (or delete the History of Errors), then turn the ignition switch from OFF to ON to reproduce the malfunction. Check the History of Errors to find the items which show an increased number of occurrences, and diagnose the item.

Error item	Possible causes Action/symptom	Example of symptom
Gyro sensor disconnected	Communications malfunction between NAVI control unit and internal gyro. ● Perform self-diagnosis. ● When the NAVI control unit is judged normal by self-diagnosis, the symptom may be intermittent, caused by strong radio interference.	● Navigation location detection performance has deteriorated. (Angular velocity cannot be detected.)
GPS disconnected	Communication error between NAVI control unit and internal GPS substrate. ● Perform self-diagnosis. ● When the NAVI control unit is judged normal by self-diagnosis, the symptom may be intermittent, caused by strong radio interference.	● Navigation location detection performance has deteriorated. (Location correction using GPS is not performed.) ● GPS receiving status remains gray.
GPS transmission cable malfunction	Malfunctioning transmission wires to NAVI control unit and internal GPS substrate. ● Perform self-diagnosis. ● When the NAVI control unit is judged normal by self-diagnosis, the symptom may be intermittent, caused by strong radio interference.	● During self-diagnosis, GPS diagnosis is not performed.
GPS input line connection error	Malfunctioning receiving wires to NAVI control unit and internal GPS substrate. ● Perform self-diagnosis. ● When the NAVI control unit is judged normal by self-diagnosis, the symptom may be intermittent, caused by strong radio interference.	● Navigation location detection performance has deteriorated. (Location correction using GPS is not performed.) ● GPS receiving status remains gray.
GPS TCX0 over GPS TCX0 under	Oscillating frequency of the GPS substrate frequency synchronizing oscillation circuit exceeded (or below) the specification ● Perform self-diagnosis. ● When the NAVI control unit is judged normal by self-diagnosis, the symptom may be intermittent, caused by strong radio interference, or the control unit may have been subjected to excessively high or low temperatures.	● Navigation location detection performance has deteriorated. (Location correction using GPS is not performed.) ● GPS receiving status remains gray.
GPS ROM malfunction GPS RAM malfunction	Contents of ROM (or RAM) in GPS substrate are malfunctioning. ● Perform self-diagnosis. ● When the NAVI control unit is judged normal by self-diagnosis, the symptom may be intermittent, caused by strong radio interference.	● Location detection accuracy of the navigation system will deteriorate, depending on the error area in the memory, because GPS cannot make correct positioning. (Location correction using GPS is not performed.)

Error item	Possible causes Action/symptom	Example of symptom
GPS RTC malfunction	Clock IC in GPS substrate is malfunctioning. ● Perform self-diagnosis. ● When the NAVI control unit is judged normal by self-diagnosis, the symptom may be intermittent, caused by strong radio interference.	● Correct time may not be displayed. ● After the power is turned on, the system always takes some time until GPS positioning becomes possible. (The GPS receiver starts positioning without re-collecting the whole satellite information when it judged the data stored in the receiver is correct.) ● Correct time of error occurrence may not be stored in the ″History of Errors″.
GPS antenna disconnected	Malfunctioning connection between GPS substrate in NAVI control unit and GPS antenna. ● Perform self-diagnosis. ● When connection between NAVI control unit and GPS antenna is judged normal by self-diagnosis, the symptom may be intermittent, caused by impact or vibration.	● Navigation location detection performance has deteriorated. (Location correction using GPS is not performed.) ● GPS receiving status remains gray.
Low voltage of GPS	The power voltage supplied to the GPS circuit board has decreased. ● Perform self-diagnosis. ● When connection between NAVI control unit and GPS antenna is judged normal by self-diagnosis, the symptom may be intermittent, caused by impact or vibration.	● Navigation location detection performance has deteriorated. (Location correction using GPS is not performed.) ● GPS receiving status remains gray.
DVD-ROM Malfunction DVD-ROM Read error DVD-ROM Response Error	Malfunctioning NAVI control unit.	-
	Dedicated map DVD-ROM is in the system, but the data cannot be read. ● Is map DVD-ROM damaged, warped, or dirty? – If damaged or warped, the map DVD-ROM is malfunctioning. – If dirty, wipe the DVD-ROM clean with a soft cloth. ● Perform self-diagnosis. ● When NAVI control unit is judged normal by self-diagnosis, the symptom is judged intermittent, caused by vibration.	● The map of a particular location cannot be displayed. ● Specific guidance information cannot be displayed. ● Map display is slow. ● Guidance information display is slow. ● System has been affected by vibration.

NAVIGATION

1. The navigation screen will be shown, and items “Display Longitude & Latitude”, “Speed Calibration”, “Angle Adjustment” and “Initialize Location” will become selective.
2. Select each switch on “NAVIGATION” screen to display the relevant diagnosis screen.

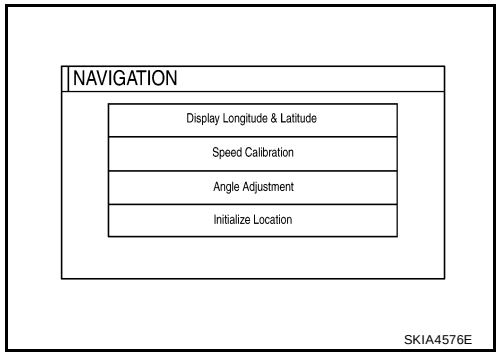

Display Longitude & Latitude

- Able to confirm/adjust longitude and latitude.

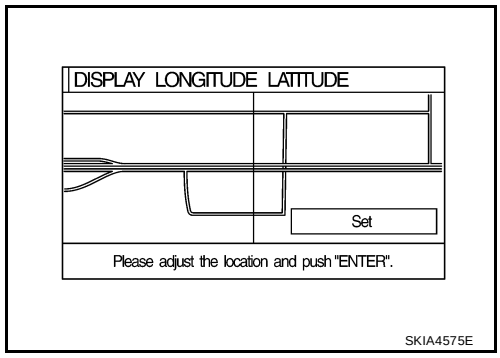

Angle adjustment

- Adjusts turning angle output detected by the gyroscope.

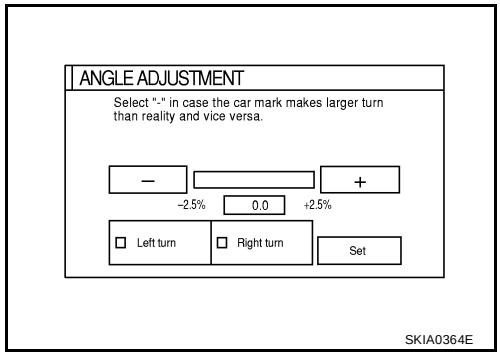

Speed Calibration

- During normal driving, distance error caused by tire wear and tire pressure change is automatically adjusted for by the automatic distance correction function. This function, on the other hand, is for immediate adjustment, in cases such as driving with tire chain fitted on tires.

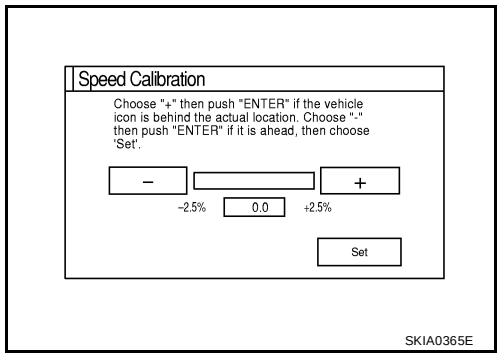

Initialize Location

- This mode is for initializing the current location.

CAN DIAG SUPPORT MONITOR

EKS007LX

OPERATION PROCEDURE

1. Start the engine.
2. Turn the audio system off.
3. While pressing the “PAUSE/MUTE” button, turn the volume control dial clockwise or counterclockwise for 30 clicks or more. (When the self-diagnosis mode is started, a short beep will be heard.)
   - Shifting from current screen to previous screen is performed by pressing “PREV” button.

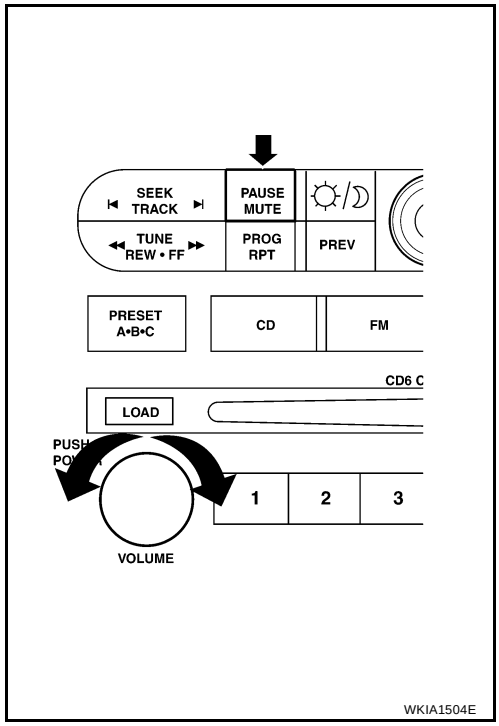

4. The initial self-diagnosis screen will be shown, and items “Self-Diagnosis (DCU)”, “Self-Diagnosis (NAVI)”, “Confirmation/Adjustment” and “CAN DIAG SUPPORT MONITOR” will become selective.
5. Select “CAN DIAG SUPPORT MONITOR”.

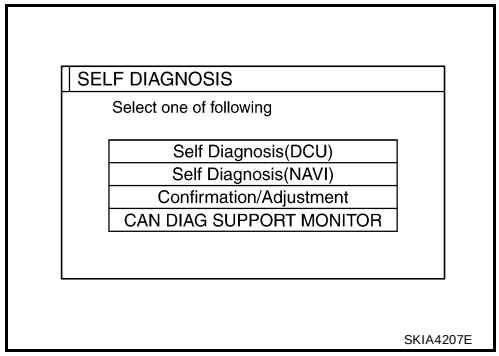

6. Display status of CAN communication.

Item	Content	Error counter
CANCOMM	OK/NG	0-50
CAN_CIRC_1	OK/UNKWN	0-50
CAN_CIRC_2	OK/UNKWN	0-50
CAN_CIRC_3	OK/UNKWN	0-50
CAN_CIRC_4	OK/UNKWN	0-50
CAN_CIRC_5	OK/UNKWN	0-50
CAN_CIRC_6	OK/UNKWN	0-50
CAN_CIRC_7	OK/UNKWN	0-50
CAN_CIRC_8	OK/UNKWN	0-50
CAN_CIRC_9	OK/UNKWN	0-50

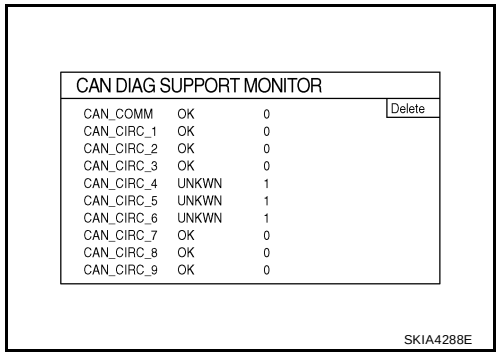

- If the ignition is turned on and UNKWN is shown on the screen, the value of the counter will be up. (MAX50)

- The value of the counter does not change if the ignition changes to OFF. (MAX50)
- If the counter shows the value of 50 and UNKWN is shown, the value of 50 will not be changed.

AV Switch Self-Diagnosis Function

EKS007LY

Refer to AV-27, "AV Switch Self-Diagnosis Function" .

Power Supply and Ground Circuit Check for NAVI Control Unit

EKS007LZ

1. CHECK FUSE

- Make sure the following fuses of the NAVI control unit are not blown.

Terminals		Power source	Fuse No.
Connector	Terminal (Wire color)		
B151	2 (Y), 3 (Y)	Battery power	31
	6 (O)	ACC power	4

OK or NG

OK >> GO TO 2.
NG >> If fuse is blown, be sure to eliminate case of malfunction before installing new fuse. Refer to PG-4, "POWER SUPPLY ROUTING CIRCUIT" .

2. CHECK POWER SUPPLY CIRCUIT

1. Disconnect NAVI control unit connector.
2. Check voltage between connector terminals and ground as follows.

Terminals			Ignition switch position		
(+)		(–)	OFF	ACC	ON
Connector	Terminal (Wire color)				
B151	2 (Y), 3 (Y)	Ground	Battery voltage	Battery voltage	Battery voltage
	6 (O)		0V	Battery voltage	Battery voltage

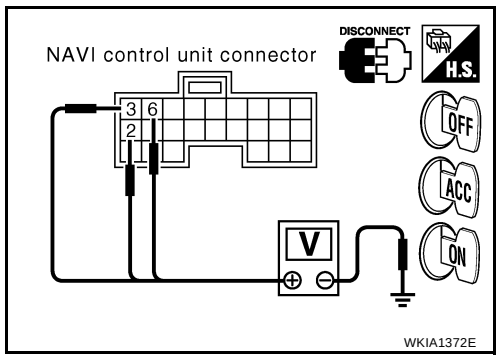

OK or NG

OK >> GO TO 3.
NG >> Check harness for open or short between NAVI control unit and fuse.

3. CHECK GROUND CIRCUIT

Check continuity between the following NAVI control unit and ground.

Terminals			Ignition switch	Continuity
Connector	Terminal (Wire color)	—		
B151	1 (B), 4 (B)	Ground	OFF	Yes

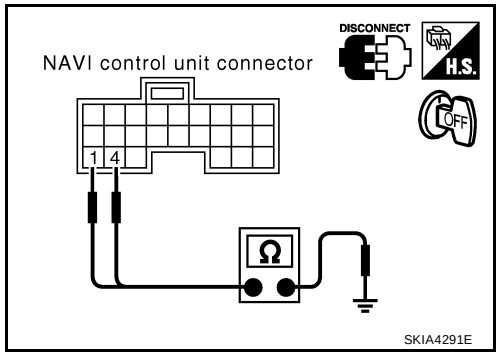

OK or NG

OK >> Inspection End.
NG >> Repair or replace harness.

Power Supply and Ground Circuit Check for Display Control Unit

EKS007M0

1. CHECK FUSE

- Make sure the following fuses of the display control unit are not blown.

Terminals		Power source	Fuse No.
Connector	Terminal (Wire color)		
M94	1 (Y)	Battery power	31
	10 (O)	ACC power	4

OK or NG

OK >> GO TO 2.

NG >> If fuse is blown, be sure to eliminate case of malfunction before installing new fuse. Refer to PG-4, "POWER SUPPLY ROUTING CIRCUIT" .

2. CHECK POWER SUPPLY CIRCUIT

1. Disconnect display control unit connector.
2. Check voltage between connector terminals and ground as follows.

Terminals			Ignition switch position		
(+)		(–)	OFF	ACC	ON
Connector	Terminal (Wire color)				
M94	1 (Y)	Ground	Battery voltage	Battery voltage	Battery voltage
	10 (O)		0V	Battery voltage	Battery voltage

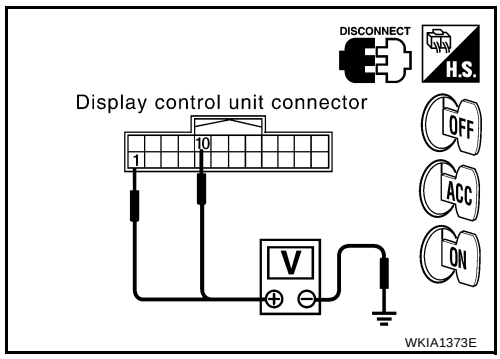

OK or NG

OK >> GO TO 3.

NG >> Check harness for open or short between display control unit and fuse.

3. CHECK GROUND CIRCUIT

Check continuity between the following display control unit and ground.

Terminals			Ignition switch	Continuity
Connector	Terminal (Wire color)	—		
M94	3 (B)	Ground	OFF	Yes
	13 (B)			

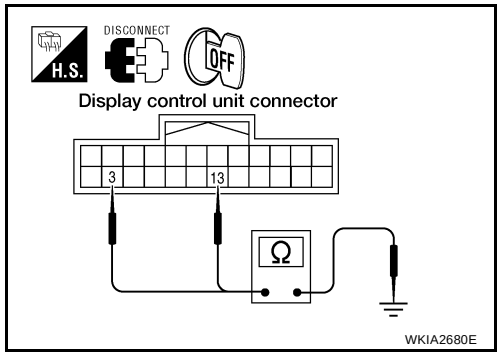

OK or NG

OK >> Inspection End.

NG >> Repair or replace harness.

Power Supply and Ground Circuit Check for Display Unit

EKS007M1

1. CHECK POWER SUPPLY AND GROUND CIRCUIT FOR DISPLAY CONTROL UNIT

1. Check power supply and ground circuit for display control unit. Refer to AV-117, "Power Supply and Ground Circuit Check for Display Control Unit" .

OK or NG

OK >> GO TO 2.
NG >> Repair malfunctioning part.

2. CHECK POWER SUPPLY CIRCUIT FOR DISPLAY UNIT

1. Disconnect display unit connector.
2. Turn ignition switch ON.
3. Check voltage between display unit harness connector M93 terminals 2 (L/W), 3 (L/R) and ground.

Approx. 9V

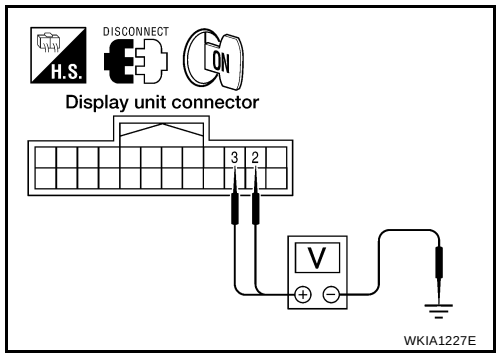

OK or NG

OK >> GO TO 4.
NG >> GO TO 3.

3. CHECK HARNESS

1. Turn ignition switch OFF.
2. Disconnect display unit connector and display control unit connector.
3. Check continuity between display control unit harness connector M94 terminals 2 (L/W), 4 (L/R) and display unit harness connector M93 terminals 2 (L/W), 3 (L/R).

Terminals				Continuity
Display control unit		Display unit		
Connector	Terminal (Wire color)	Connector	Terminal (Wire color)	
M94	2 (L/W)	M93	2 (L/W)	Yes
	4 (L/R)		3 (L/R)	

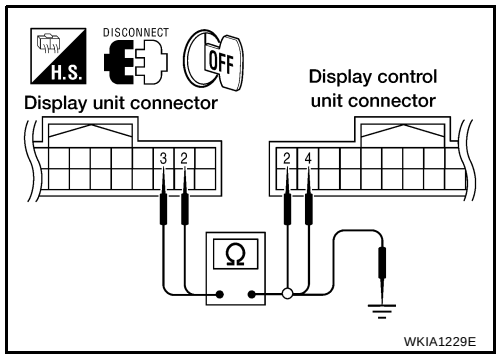

4. Check continuity between display unit and ground.

Terminals			Continuity
Display unit		—	
Connector	Terminal (Wire color)		
M93	2 (L/W)	Ground	No
	3 (L/R)		

OK or NG

OK >> Replace display control unit. Refer to AV-158, "Removal and Installation of Display Control Unit" .
NG >> Repair harness.

4. CHECK GROUND CIRCUIT

1. Turn ignition switch OFF.
2. Check continuity between display unit harness connector M93 terminals 13 (P), 14 (P/L) and ground.

Continuity should exist.

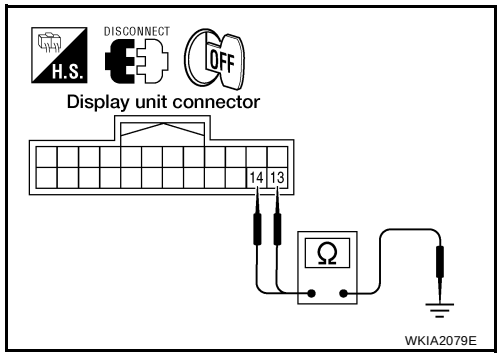

OK or NG

OK >> GO TO 6.
NG >> GO TO 5.

5. CHECK HARNESS

1. Disconnect display control unit connector.
2. Check continuity between display unit harness connector M93 terminals 13 (P), 14 (P/L) and display control unit harness connector M94 terminals 5 (P), 7 (P/L).

Continuity should exist.

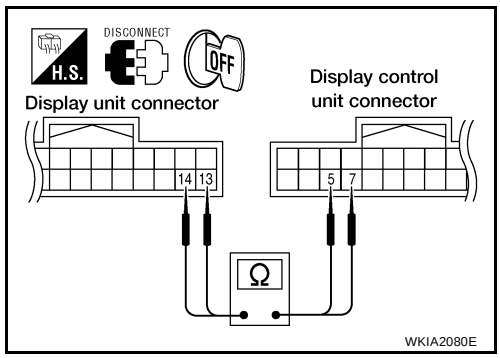

OK or NG

OK >> Replace display control unit. Refer to AV-158, "Removal and Installation of Display Control Unit" .
NG >> Repair harness.

6. CHECK GROUND CIRCUIT

Check continuity between display unit and ground as follows.

Terminals			Ignition switch	Continuity
Connector	Terminal (Wire color)	—		
M93	1 (B)	Ground	OFF	Yes

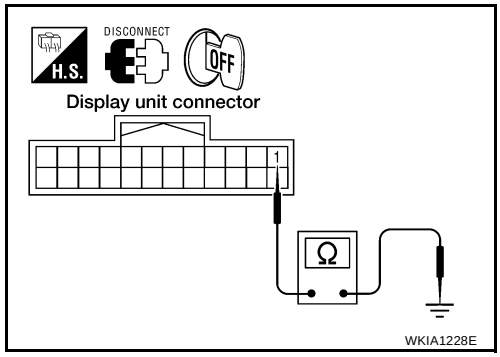

OK or NG

OK >> Inspection End.
NG >> Repair harness.

Power Supply and Ground Circuit Check for AV Switch

EKS007M2

1. CHECK FUSE

- Make sure the following fuses of the AV switch are not blown.

Terminals		Power source	Fuse No.
Connector	Terminal (Wire color)		
M98	1 (Y)	Battery power	31
	2 (V)	ACC power	4

OK or NG

OK >> GO TO 2.
NG >> If fuse is blown, be sure to eliminate case of malfunction before installing new fuse. Refer to PG-4, "POWER SUPPLY ROUTING CIRCUIT" .

2. CHECK POWER SUPPLY CIRCUIT

1. Disconnect AV switch connector.
2. Check voltage between connector terminals and ground as follows.

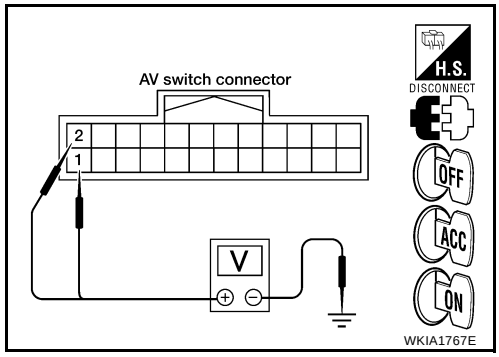

Terminals			Ignition switch position		
(+)		(–)	OFF	ACC	ON
Connector	Terminal (Wire color)				
M98	1 (Y)	Ground	Battery voltage	Battery voltage	Battery voltage
	2 (V)		0V	Battery voltage	Battery voltage

OK or NG

OK >> GO TO 3.
NG >> Check harness for open or short between AV switch and fuse.

3. CHECK GROUND CIRCUIT

Check continuity between AV switch and ground as follows.

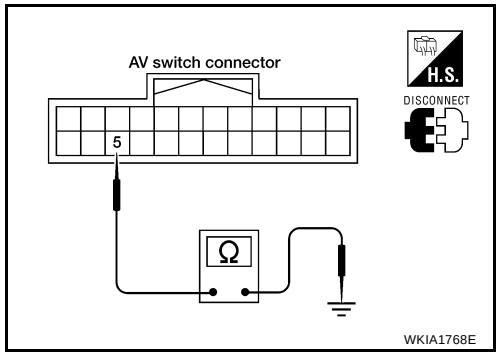

Terminals			Ignition switch	Continuity
Connector	Terminal (Wire color)	—		
M98	5 (B)	Ground	OFF	Yes

OK or NG

OK >> Inspection End.
NG >> Repair or replace harness.

Vehicle Speed Signal Check for NAVI Control Unit

EKS007M3

1. CHECK HARNESS

1. Turn ignition switch OFF.
2. Disconnect NAVI control unit connector, combination meter connector, display control unit connector and shift lock control unit connector.
3. Check continuity between NAVI control unit harness connector B152 terminal 28 (W/R) and combination meter harness connector M24 terminal 29 (W/R).

   Continuity should exist.

4. Check continuity between NAVI control unit harness connector B152 terminal 28 (W/R) and ground.

   Continuity should not exist.

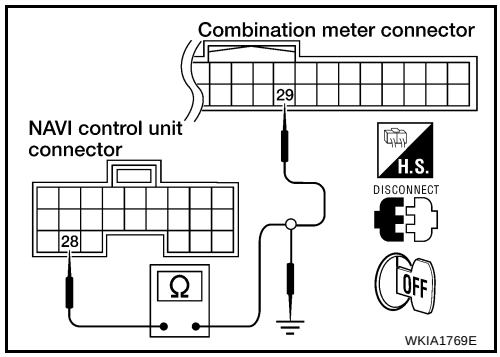

OK or NG

OK >> GO TO 2.
NG >> Repair harness.

2. CHECK 1: VEHICLE SPEED SIGNAL

1. Connect NAVI control unit connector.
2. Turn ignition switch ON.
3. Check voltage between NAVI control unit harness connector B152 terminal 28 (W/R) and ground.

   Approx. 3.5V or more

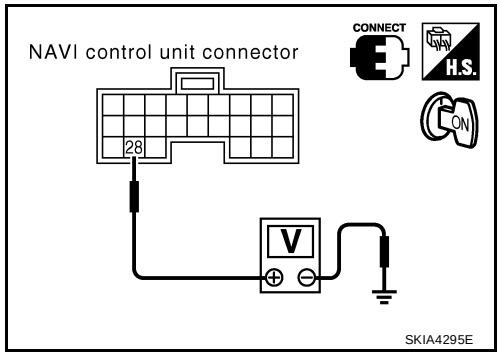

OK or NG

OK >> GO TO 3.
NG >> Replace NAVI control unit. Refer to AV-157, "Removal and Installation of NAVI Control Unit" .

3. CHECK 2: VEHICLE SPEED SIGNAL

1. Connect combination meter connector, display control unit connector and shift lock control unit connector.
2. Drive vehicle at a constant speed.
3. Check signal between NAVI control unit harness connector B152 terminal 28 (W/R) and ground with CONSULT-II or oscilloscope.

   28 (W/R) – Ground **: Refer to AV-90, "Terminals and Reference Value for NAVI Control unit" .**

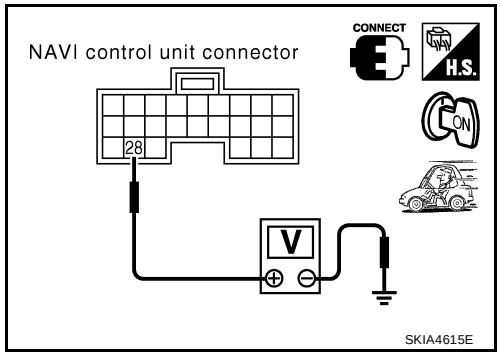

OK or NG

OK >> Replace NAVI control unit. Refer to AV-157, "Removal and Installation of NAVI Control Unit" .
NG >> Check combination meter system. Refer to DI-19, "Vehicle Speed Signal Inspection" .

Vehicle Speed Signal Check for Display Control Unit

EKS007M4

1. CHECK HARNESS

1. Turn ignition switch OFF.
2. Disconnect display control unit connector, combination meter connector, NAVI control unit connector and shift lock control unit connector.
3. Check continuity between display control unit harness connector M94 terminal 16 (W/R) and combination meter harness connector M24 terminal 29 (W/R).

   Continuity should exist.

4. Check continuity between display control unit harness connector M94 terminal 16 (W/R) and ground.

   Continuity should not exist.

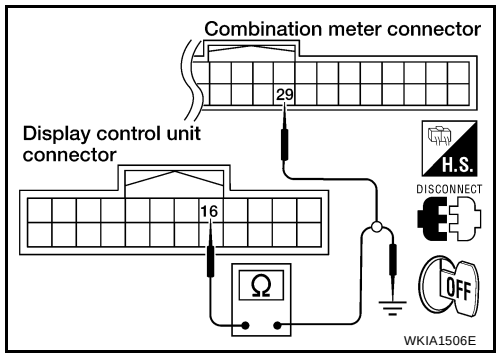

OK or NG

OK >> GO TO 2.
NG >> Repair harness.

2. CHECK 1: VEHICLE SPEED SIGNAL

1. Connect display control unit connector.
2. Turn ignition switch ON.
3. Check voltage between display control unit harness connector M94 terminal 16 (W/R) and ground.

   Approx. 3.5V or more

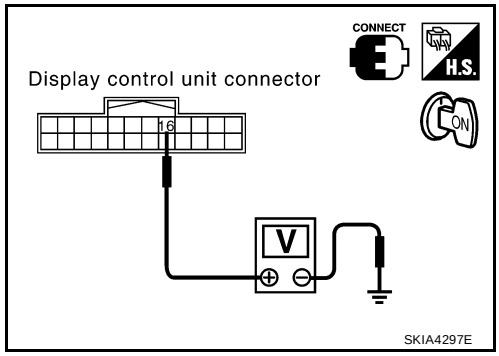

OK or NG

OK >> GO TO 3.
NG >> Replace display control unit. Refer to AV-158, "Removal and Installation of Display Control Unit" .

3. CHECK 2: VEHICLE SPEED SIGNAL

1. Connect combination meter connector, NAVI control unit connector and shift lock control unit connector.
2. Drive vehicle at a constant speed.
3. Check signal between display control unit harness connector M94 terminal 16 (W/R) and ground with CONSULT-II or oscilloscope.

   16 (W/R) – Ground **: Refer to AV-92, "Terminals and Reference Value for Display Control unit" .**

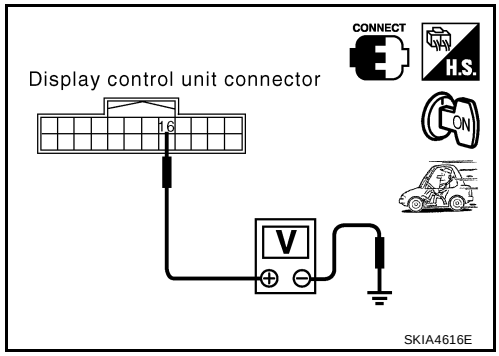

OK or NG

OK >> Replace display control unit. Refer to AV-158, "Removal and Installation of Display Control Unit" .
NG >> Check combination meter system. Refer to DI-19, "Vehicle Speed Signal Inspection" .

Illumination Signal Check for NAVI Control Unit

EKS007M5

1. CHECK ILLUMINATION SIGNAL

1. Turn the ignition switch ON.
2. Check voltage between NAVI control unit and ground.

Terminals			Lighting switch position	
(+)		(–)		
Connector	Terminal (Wire color)		1st or 2nd position	OFF
B152	25 (R/L)	Ground	Battery voltage	Approx. 0V

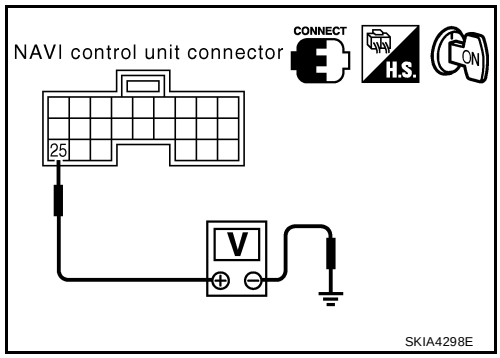

OK or NG

OK >> Replace NAVI control unit. Refer to AV-157, "Removal and Installation of NAVI Control Unit" .

NG >> Check harness for open or short between NAVI control unit and IPDM E/R.

Illumination Signal Check for Display Control Unit

EKS007M6

1. CHECK ILLUMINATION SIGNAL

1. Turn ignition switch ON.
2. Check voltage between display control unit and ground.

Terminals			Lighting switch position	
(+)		(–)		
Connector	Terminal (Wire color)		1st or 2nd position	OFF
M94	14 (R/L)	Ground	Battery voltage	Approx. 0V

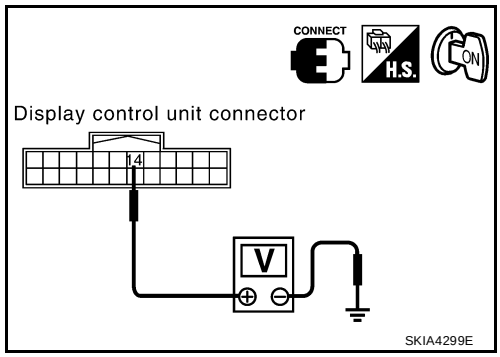

OK or NG

OK >> Replace display control unit. Refer to AV-158, "Removal and Installation of Display Control Unit" .

NG >> Check harness for open or short between display control unit and IPDM E/R.

Ignition Signal Check for NAVI Control Unit

EKS007M7

1. CHECK IGNITION SIGNAL

1. Disconnect NAVI control unit connector.
2. Turn ignition switch ON.
3. Check voltage between NAVI control unit harness connector B152 terminal 26 (G/R) and ground.

Battery voltage should exist.

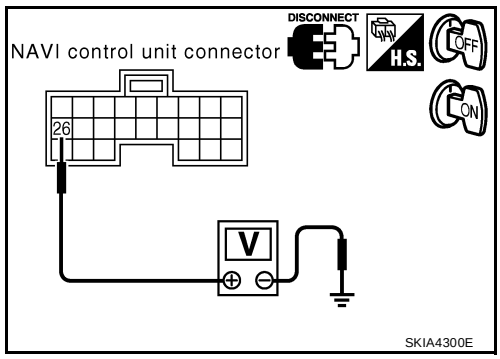

OK or NG

OK >> Replace NAVI control unit. Refer to AV-157, "Removal and Installation of NAVI Control Unit" .

NG >> Check harness for open or short between NAVI control unit and fuse.

Ignition Signal Check for Display Control Unit

EKS007M8

1. CHECK IGNITION SIGNAL

1. Disconnect display control unit connector.
2. Turn ignition switch ON.
3. Check voltage between display control unit harness connector M94 terminal 12 (G/R) and ground.

Battery voltage should exist.

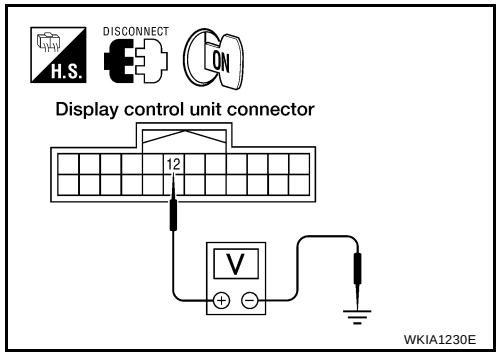

OK or NG

OK >> Replace display control unit. Refer to AV-158, "Removal and Installation of Display Control Unit" .

NG >> Check harness for open or short between display control unit and fuse.

Reverse Signal Check for NAVI Control Unit

EKS007M9

1. CHECK REVERSE LAMP

1. Turn ignition switch ON.
2. Place selector lever into R-position. Do back-up lamps come on?

YES or NO

YES >> GO TO 2.

NO >> Check back-up lamp system. Refer to LT-106, "BACK-UP LAMP" .

2. CHECK REVERSE SIGNAL

With the selector lever in R-position, check voltage between NAVI control unit and ground.

Terminals			Selector lever position	
(+)		(–)		
Connector	Terminal (Wire color)		R-position	Other than R-position
B152	27 (G/W)	Ground	Battery voltage	Approx. 0V

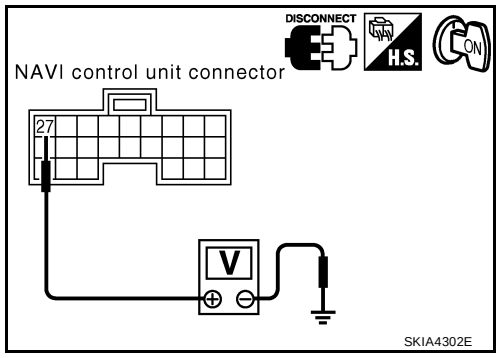

OK or NG

OK >> Replace NAVI control unit. Refer to AV-157, "Removal and Installation of NAVI Control Unit" .

NG >> Check harness for open or short between NAVI control unit and back-up lamp position relay.

Reverse Signal Check for Display Control Unit

EKS007MA

1. CHECK REVERSE LAMP

1. Turn ignition switch ON.
2. Place selector lever into R-position. Do back-up lamps come on?

YES or NO

YES >> GO TO 2.

NO >> Check back-up lamp system. Refer to LT-106, "BACK-UP LAMP" .

2. CHECK REVERSE SIGNAL

With the selector lever in R-position, check voltage between display control unit and ground.

Terminals			Selector lever position	
(+)		(–)		
Connector	Terminal (Wire color)		R-position	Other than R-position
M94	6 (GR)	Ground	Battery voltage	Approx. 0V

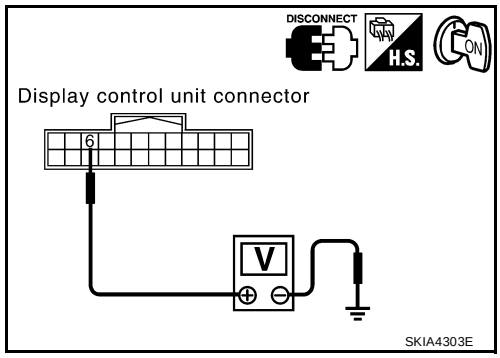

OK or NG

OK >> Replace display control unit. Refer to AV-158, "Removal and Installation of Display Control Unit" .

NG >> Check harness for open or short between display control unit and back-up lamp position relay.

AV Communication Line Check (Between Display Control Unit and NAVI Control Unit)

EKS007MB

1. CHECK POWER SUPPLY AND GROUND CIRCUIT

1. Check power supply and ground circuit for NAVI control unit. Refer to AV-116, "Power Supply and Ground Circuit Check for NAVI Control Unit" .

OK or NG

OK >> GO TO 2.

NG >> Check the malfunctioning parts.

2. CHECK HARNESS

1. Turn ignition switch OFF.
2. Disconnect NAVI control unit connector and display control unit connector.
3. Check continuity between NAVI control unit and display control unit.

Terminals				Continuity
NAVI control unit		Display control unit		
Connector	Terminal (Wire color)	Connector	Terminal (Wire color)	
B152	44 (L)	M95	32 (L)	Yes
	45 (P)		34 (P)	

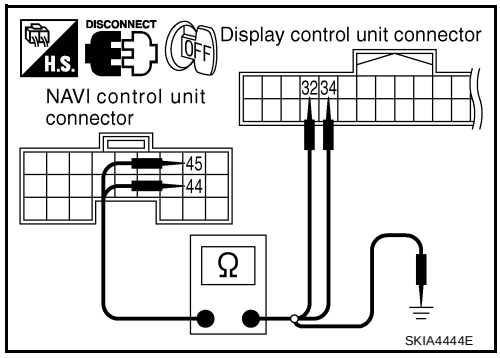

4. Check continuity between NAVI control unit and ground.

Terminals			Continuity
NAVI control unit		—	
Connector	Terminal (Wire color)		
B152	44 (L)	Ground	No
	45 (P)		

OK or NG

OK >> GO TO 3.

NG >> Repair harness or connector.

3. CHECK SELF-DIAGNOSIS OF DCU

1. Replace NAVI control unit.
2. Connect NAVI control unit connector and display control unit connector.
3. Turn ignition switch ON.
4. Start self-diagnosis of DCU and check the self-diagnosis result.

OK or NG

OK >> Inspection End.
NG >> Replace display control unit. Refer to AV-158, "Removal and Installation of Display Control Unit" .

Audio Communication Line Check (Between Display Control Unit and Audio Unit)

EKS007MC

1. CHECK POWER SUPPLY AND GROUND CIRCUIT

1. Check system of power supply and ground circuit audio unit. Refer to AV-30, "Power Supply Circuit Inspection" .

OK or NG

OK >> GO TO 2.
NG >> Check the malfunctioning parts.

2. CHECK HARNESS

1. Turn ignition switch OFF.
2. Disconnect audio unit connector and display control unit connector.
3. Check continuity between audio unit and display control unit.

Terminals				Continuity
Display control unit		Audio unit		
Connector	Terminal (Wire color)	Connector	Terminal (Wire color)	
M95	40 (O/L)	M45	65 (O/L)	Yes
	42 (W/L)		66 (W/L)	

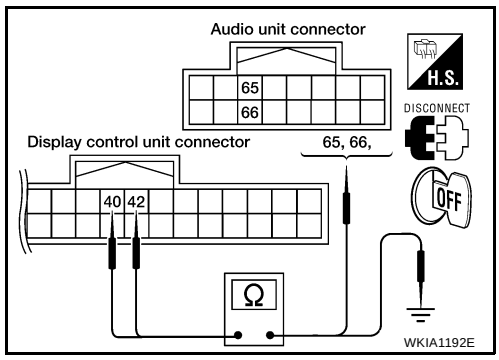

4. Check continuity between display control unit and ground.

Terminals			Continuity
Display control unit		—	
Connector	Terminal (Wire color)		
M95	40 (O/L)	Ground	No
	42 (W/L)		

OK or NG

OK >> GO TO 3.
NG >> Repair harness or connector.

3. CHECK 1: AUDIO-TX COMMUNICATION SIGNAL

1. Connect display control unit connector.
2. Turn ignition switch ON.
3. Check voltage between display control unit harness connector M95 terminal 42 (W/L) and ground.

Approx. 3.5V or more.

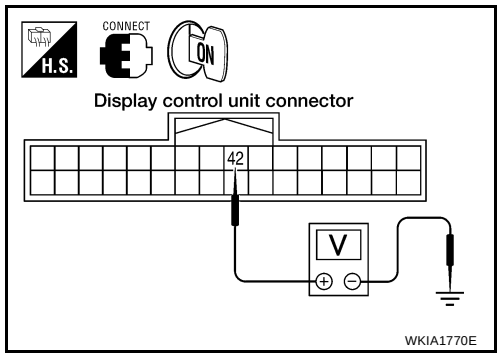

OK or NG

OK >> GO TO 4.
NG >> Replace display control unit. Refer to AV-158, "Removal and Installation of Display Control Unit" .

4. CHECK 2: AUDIO-RX COMMUNICATION SIGNAL

1. Turn ignition switch OFF.
2. Disconnect display control unit connector.
3. Connect audio unit connector.
4. Turn ignition switch ON.
5. Check voltage between audio unit harness connector M45 terminal 65 (O/L) and ground.

Approx. 3.5V or more.

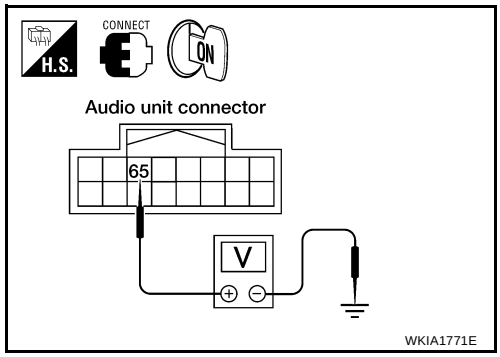

OK or NG

OK >> GO TO 5.
NG >> Replace audio unit. Refer to AV-45, "Removal and Installation for Audio Unit" .

5. CHECK 3: AUDIO-TX COMMUNICATION SIGNAL

1. Turn ignition switch OFF.
2. Connect display control unit connector.
3. Turn ignition switch ON.
4. Check signal between display control unit harness connector M95 terminal 40 (O/L) and ground with CONSULT-II or oscilloscope.

40 (O/L) - Ground **: Refer to AV-92, "Terminals and Reference Value for Display Control unit" .**

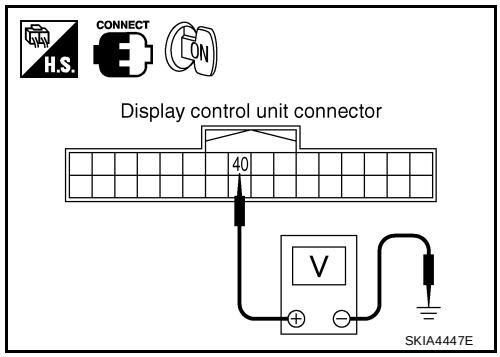

OK or NG

OK >> GO TO 6.
NG >> Replace display control unit. Refer to AV-158, "Removal and Installation of Display Control Unit" .

6. CHECK 4: AUDIO-RX COMMUNICATION SIGNAL

1. Turn ignition switch ON.
2. Check signal between display control unit harness connector M95 terminal 42 (W/L) and ground with CONSULT-II or oscilloscope.

42 (W/L) - Ground **: Refer to AV-92, "Terminals and Reference Value for Display Control unit" .**

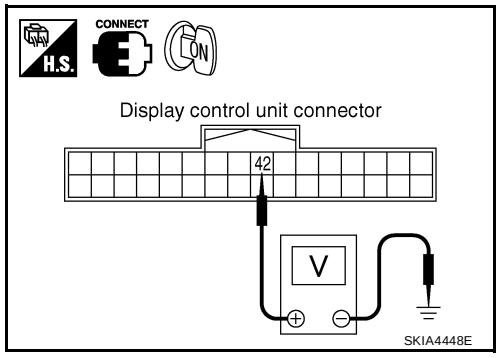

OK or NG

OK >> Inspection End.
NG >> Replace audio unit. Refer to AV-45, "Removal and Installation for Audio Unit" .

Display Communication Line Check (Between Display Control Unit and Display Unit)

EKS007MD

1. CHECK HARNESS

1. Turn ignition switch OFF.
2. Disconnect display unit connector and display control unit connector.
3. Check continuity between display control unit and display unit.

Terminals				Continuity
Display control unit		Display unit		
Connector	Terminal (Wire color)	Connector	Terminal (Wire color)	
M95	36 (B/W)	M93	11 (B/W)	Yes
	38 (L)		22 (L)	

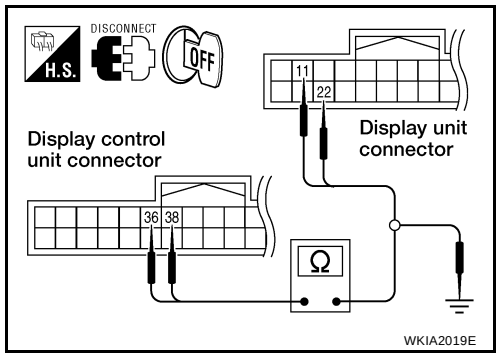

4. Check continuity between display control unit and ground.

Terminals			Continuity
Display control unit		—	
Connector	Terminal (Wire color)		
M95	36 (B/W)	Ground	No
	38 (L)		

OK or NG

OK >> GO TO 2.
NG >> Repair harness or connector.

2. CHECK 1: COMMUNICATION SIGNAL (DCU–DSP)

1. Connect display unit connector.
2. Turn ignition switch ON.
3. Check voltage between display unit harness connector M93 terminal 11 (B/W) and ground.

Approx. 3.5V or more.

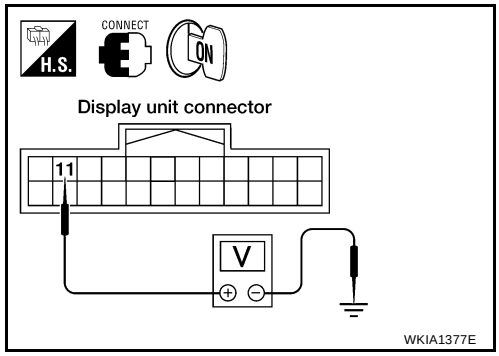

OK or NG

OK >> GO TO 3.
NG >> Replace display unit. Refer to AV-158, "Removal and Installation of Display Unit" .

3. CHECK 2: COMMUNICATION SIGNAL (DSP–DCU)

1. Turn ignition switch OFF.
2. Disconnect display control unit connector.
3. Connect display control unit connector.
4. Turn ignition switch ON.
5. Check voltage between display control unit harness connector M95 terminal 38 (L) and ground.

Approx. 3.5V or more.

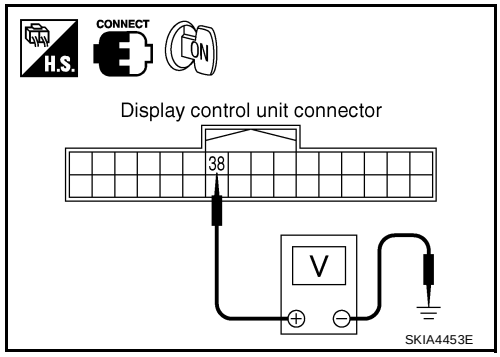

OK or NG

OK >> GO TO 4.
NG >> Replace display control unit. Refer to AV-158, "Removal and Installation of Display Control Unit" .

4. CHECK 3: COMMUNICATION SIGNAL (DCU–DSP)

1. Turn ignition switch OFF.
2. Connect display unit connector.
3. Turn ignition switch ON.
4. Check signal between display control unit harness connector M95 terminal 36 (B/W) and ground with CONSULT-II or oscilloscope.

36 (B/W) – Ground **: Refer to AV-92, "Terminals and Reference Value for Display Control unit" .**

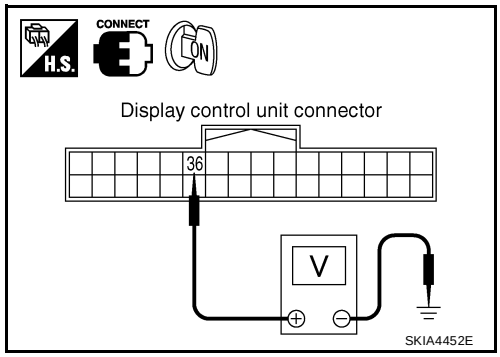

OK or NG

OK >> GO TO 5.
NG >> Replace display control unit. Refer to AV-158, "Removal and Installation of Display Control Unit" .

5. CHECK 4: COMMUNICATION SIGNAL (DSP–DCU)

1. Turn ignition switch ON.
2. Check signal between display control unit harness connector M95 terminal 38 (L) and ground with CONSULT-II or oscilloscope.

38 (L) – Ground **: Refer to AV-92, "Terminals and Reference Value for Display Control unit" .**

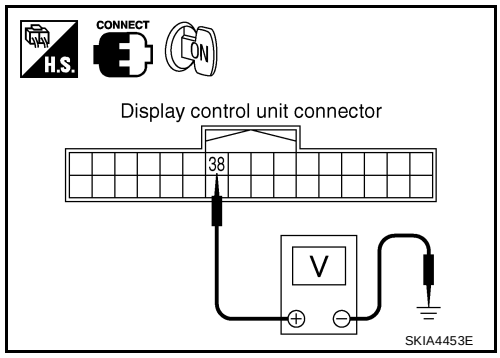

OK or NG

OK >> Inspection End.
NG >> Replace display unit. Refer to AV-158, "Removal and Installation of Display Unit" .

AV Communication Line Check (Between Display Control Unit and AV Switch)

EKS007ME

1. CHECK AV SWITCH CIRCUIT

1. Turn ignition switch OFF.
2. Disconnect display control unit connector and AV switch connector.
3. Check continuity between display control unit and AV switch.

Terminals				Continuity
Display control unit		AV switch		
Connector	Terminal (Wire color)	Connector	Terminal (Wire color)	
M95	28 (V)	M98	6 (V)	Yes
	30 (LG)		8 (LG)	

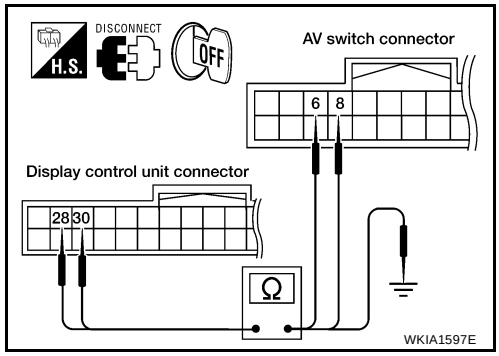

4. Check continuity between display control unit and ground.

Terminals			Continuity
Display control unit		—	
Connector	Terminal (Wire color)		
M95	28 (V)	Ground	No
	30 (LG)		

OK or NG

OK >> GO TO 2.
NG >> Repair harness or connector.

2. CHECK SELF-DIAGNOSIS OF DCU

1. Replace AV switch.
2. Connect display control unit connector and AV switch connector.
3. Turn ignition switch ON.
4. Start self-diagnosis of DCU and check the self-diagnosis result.

OK or NG

OK >> Inspection End.
NG >> Replace display control unit. Refer to AV-158, "Removal and Installation of Display Control Unit" .

CAN Communication Line Check

EKS007MF

1. CHECK MONITOR DESCRIPTION

1. Start display control unit self-diagnosis. Refer to AV-101, "Self-Diagnosis Mode (DCU)" .
2. Select “CAN DIAG SUPPORT MONITOR”. Refer to AV-114, "CAN DIAG SUPPORT MONITOR" .

Item	content		Error counter
	Normal condition	Error (Example)	
CAN_COMM	OK	NG	0-50
CAN_CIRC_1	OK	UNKWN	0-50
CAN_CIRC_2	OK	UNKWN	0-50
CAN_CIRC_3	OK	UNKWN	0-50
CAN_CIRC_4	OK	UNKWN	0-50
CAN_CIRC_5	OK	UNKWN	0-50
CAN_CIRC_6	OK	UNKWN	0-50
CAN_CIRC_7	OK	UNKWN	0-50
CAN_CIRC_8	OK	UNKWN	0-50
CAN_CIRC_9	OK	UNKWN	0-50

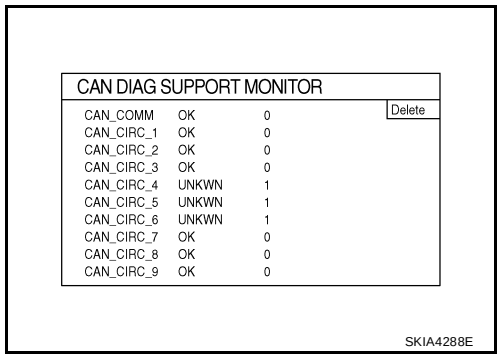

3. Record each item display description (OK/NG/UKNWN) displayed on the following CAN DIAG SUPPORT MONITOR Check Sheet.

CAN DIAG SUPPORT MONITOR Check Sheet

Diagnosis item	Screen display		Diagnosis item	Screen display	
CAN_COMM	OK	NG	CAN_CIRC_5	OK	UNKWN
CAN_CIRC_1	OK	UNKWN	CAN_CIRC_6	OK	UNKWN
CAN_CIRC_2	OK	UNKWN	CAN_CIRC_7	OK	UNKWN
CAN_CIRC_3	OK	UNKWN	CAN_CIRC_8	OK	UNKWN
CAN_CIRC_4	OK	UNKWN	CAN_CIRC_9	OK	UNKWN

>> After filling in CAN DIAG SUPPORT MONITOR Check Sheet, GO TO LAN-5, "CAN COMMUNICATION" .

If NAVI Control Unit Detects That DVD-ROM Map is Not Inserted

EKS007MG

1. CHECK DVD-ROM

1. Make sure identified DVD-ROM map is inserted.

OK or NG

OK >> Replace NAVI control unit. Refer to AV-157, "Removal and Installation of NAVI Control Unit" .
NG >> Insert identified DVD-ROM map.

If NAVI Control Unit Detects That Inserted DVD-ROM Map Malfunctioning or If It is Impossible to Load Data from DVD-ROM Map

EKS007MH

1. CHECK 1: DVD-ROM

1. Remove inserted DVD-ROM map to check that it is identified.

OK or NG

OK >> GO TO 2.
NG >> Replace identified DVD-ROM map.

2. CHECK 2: DVD-ROM

1. Check DVD-ROM for dirt, scratches and warpage.

OK or NG

OK >> GO TO 3.
NG >> Replace DVD-ROM map.

3. CHECK 3: DVD-ROM

1. Insert same DVD-ROM to make sure same diagnosis result is found as last self-diagnosis.

OK or NG

OK >> Replace NAVI control unit. Refer to AV-157, "Removal and Installation of NAVI Control Unit" .
NG >> Replace DVD-ROM map.

If Connection Between NAVI Control Unit and GPS Antenna is Malfunctioning

EKS007MI

1. CHECK GPS ANTENNA

1. Check cable for GPS antenna for damage.

OK or NG

OK >> GO TO 2.
NG >> Replace GPS antenna. Refer to AV-157, "Removal and Installation of GPS Antenna" .

2. CHECK BY REPLACEMENT OF GPS ANTENNA

1. Replace other functional GPS antenna to try self-diagnosis again.

Result of self-diagnosis; Found same result?

Yes >> Replace NAVI control unit. Refer to AV-157, "Removal and Installation of NAVI Control Unit" .
No >> Replace GPS antenna. Refer to AV-157, "Removal and Installation of GPS Antenna" .

Operating Screen for Audio and A/C is Not Displayed When Showing NAVI Screen

EKS007MJ

1. CHECK HARNESS

1. Turn ignition switch OFF.
2. Disconnect display control unit connector and display unit connector.
3. Check continuity between display control unit harness connector M95 terminal 49, 51 (B), 53 (W), 55 (R) and display unit harness connector M93 terminal 21, 9 (B), 20 (W), 8 (R).

   Continuity should exist.

4. Check continuity between display control unit harness connector M95 terminal 49, 51 (B), 53 (W), 55 (R) and ground.

   Continuity should not exist.

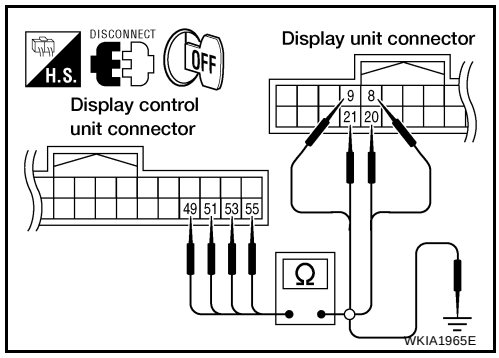

OK or NG

OK >> GO TO 2.
NG >> Repair harness.

2. CHECK HORIZONTAL SYNCHRONIZATION SIGNAL

1. Connect display control unit connector and display unit connector.
2. Turn ignition switch ON.
3. Check signal between display control unit connector M95 terminals 55 (R) and 49 with CONSULT-II or oscilloscope.

55 (R) - 49 : Refer to AV-92, "Terminals and Reference Value for Display Control unit" .

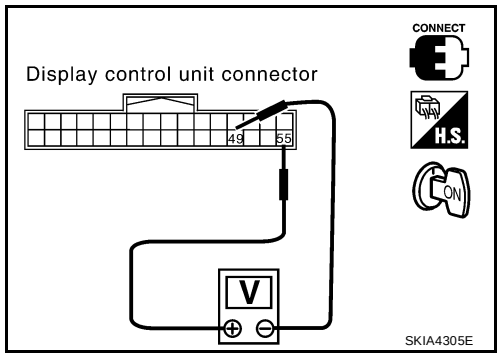

OK or NG

OK >> GO TO 3.
NG >> Replace display unit. Refer to AV-158, "Removal and Installation of Display Unit" .

3. CHECK VERTICAL SYNCHRONIZATION SIGNAL

1. Turn ignition switch ON.
2. Check signal between display control unit connector M95 terminals 53 (W) and 49 with CONSULT-II or oscilloscope.

53 (W) - 49 : Refer to AV-92, "Terminals and Reference Value for Display Control unit" .

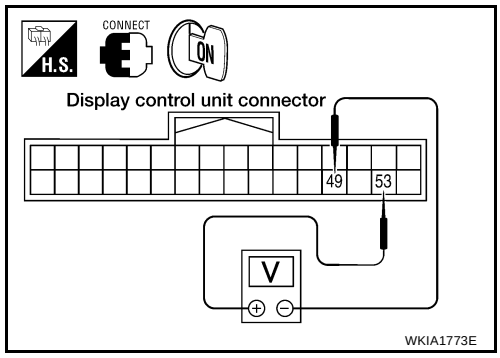

OK or NG

OK >> GO TO 4.
NG >> Replace display unit. Refer to AV-158, "Removal and Installation of Display Unit" .

4. CHECK RGB AREA SIGNAL

1. Press the “TRIP” button.
2. Check signal between display control unit connector M95 terminals 51 (B) and 49 with CONSULT-II or oscilloscope.

51 (B) – 49 : Refer to AV-92, "Terminals and Reference Value for Display Control unit" .

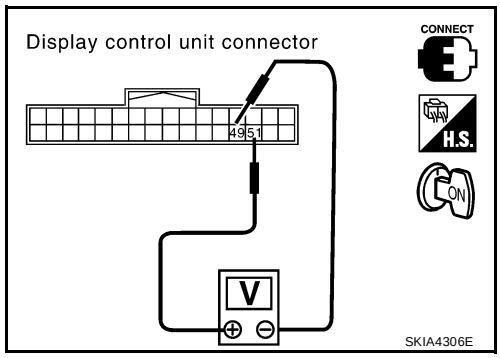

OK or NG

OK >> Replace display unit. Refer to AV-158, "Removal and Installation of Display Unit" .
NG >> Replace display control unit. Refer to AV-158, "Removal and Installation of Display Control Unit" .

Color of RGB Image is Not Proper (Only NAVI Screen Looks Bluish)

EKS007MK

1. CHECK RGB HARNESS

1. Turn ignition switch OFF.
2. Disconnect NAVI control unit connector and display control unit connector.
3. Check continuity between NAVI control unit and display control unit.
4. Check continuity between NAVI control unit and ground.

- **When the screen looks bluish.**

Terminals				Continuity
NAVI control unit		Display control unit		
Connector	Terminal (Wire color)	Connector	Terminal (Wire color)	
B151	18 (R)	M95	44 (R/L)	Yes
	17		45	

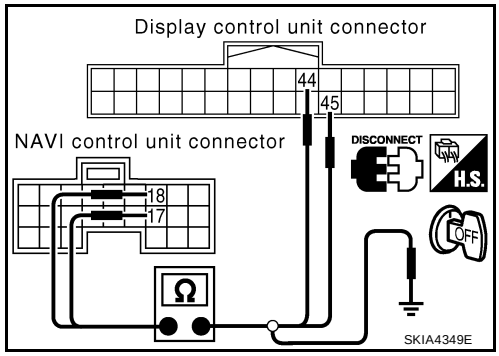

Terminals			Continuity
NAVI control unit		—	
Connector	Terminal (Wire color)		
B151	18 (R)	Ground	No
	17		

OK or NG

OK >> GO TO 2.
NG >> Repair harness or connector.

2. CHECK RGB SIGNAL

1. Connect NAVI control unit connector and display control unit connector.
2. Turn ignition switch ON.
3. Display “Color bar” by “CONFIRMATION/ADJUSTMENT” mode.
4. Check signal between NAVI control unit connector B151 terminal 18 (R) and 17 with CONSULT-II or oscilloscope.

- **When the screen looks bluish.**
  Voltage signal between NAVI control unit connector B151 terminal 18 (R) and 17.

18 (R) – 17 **: Refer to AV-90, "Terminals and Reference Value for NAVI Control unit" .**

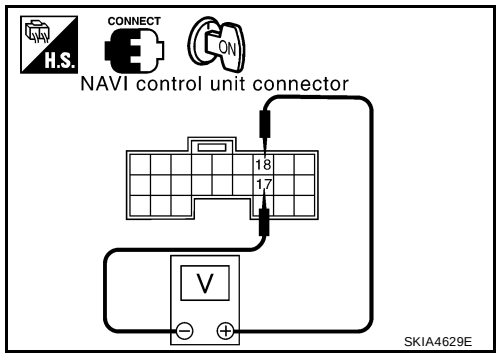

OK or NG

OK >> Replace display control unit. Refer to AV-158, "Removal and Installation of Display Control Unit" .
NG >> Replace NAVI control unit. Refer to AV-157, "Removal and Installation of NAVI Control Unit" .

Color of RGB Image is Not Proper (Only NAVI Screen Looks Reddish)

EKS007ML

1. CHECK RGB HARNESS

1. Turn ignition switch OFF.
2. Disconnect NAVI control unit connector and display control unit connector.
3. Check continuity between NAVI control unit and display control unit.
4. Check continuity between NAVI control unit and ground.

- **When the screen looks reddish**.

Terminals				Continuity
NAVI control unit		Display control unit		
Connector	Terminal (Wire color)	Connector	Terminal (Wire color)	
B151	21 (R/W)	M95	46 (R/W)	Yes
	17		45	

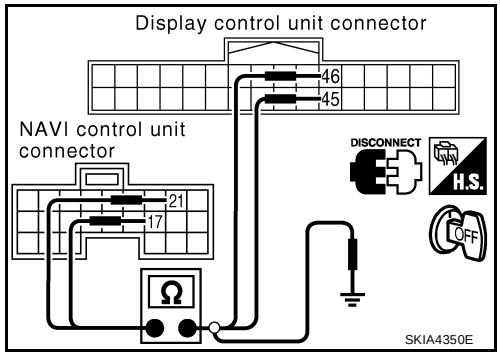

Terminals			Continuity
NAVI control unit		—	
Connector	Terminal (Wire color)		
B151	21 (R/W)	Ground	No
	17		

OK or NG

OK >> GO TO 2.
NG >> Repair harness or connector.

2. CHECK RGB SIGNAL

1. Connect NAVI control unit connector and display control unit connector.
2. Turn ignition switch ON.
3. Display ″Color bar″ by ″CONFIRMATION/ADJUSTMENT″ mode.
4. Check signal between NAVI control unit connector B151 terminal 21 (R/W) and 17 with CONSULT-II or oscilloscope.

- **When the screen looks reddish.**
  Voltage signal between NAVI control unit connector B151 terminal 21 (R/W) and 17.

21 (R/W) – 17 **: Refer to AV-90, "Terminals and Reference Value for NAVI Control unit"** .

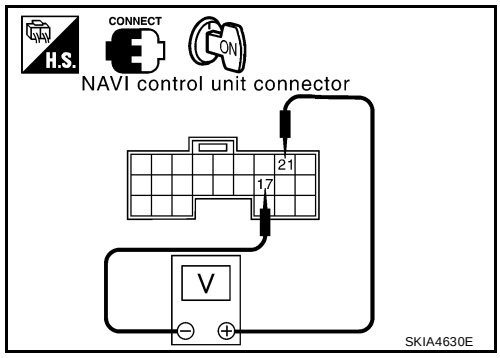

OK or NG

OK >> Replace display control unit. Refer to AV-158, "Removal and Installation of Display Control Unit" .
NG >> Replace NAVI control unit. Refer to AV-157, "Removal and Installation of NAVI Control Unit" .

Color of RGB Image is Not Proper (Only NAVI Screen Looks Yellowish)

EKS007MM

1. CHECK RGB HARNESS

1. Turn ignition switch OFF.
2. Disconnect NAVI control unit connector and display control unit connector.
3. Check continuity between NAVI control unit and display control unit.
4. Check continuity between NAVI control unit and ground.

- **When the screen looks yellowish**.

Terminals				Continuity
NAVI control unit		Display control unit		
Connector	Terminal (Wire color)	Connector	Terminal (Wire color)	
B151	15 (B)	M95	48 (B)	Yes
	17		45	

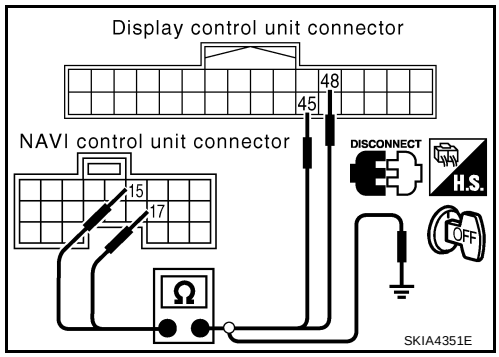

Terminals			Continuity
NAVI control unit		—	
Connector	Terminal (Wire color)		
B151	15 (B)	Ground	No
	17		

OK or NG

OK >> GO TO 2.
NG >> Repair harness or connector.

2. CHECK RGB SIGNAL

1. Connect NAVI control unit connector and display control unit connector.
2. Turn ignition switch ON.
3. Display ″Color bar″ by ″CONFIRMATION/ADJUSTMENT″ mode.
4. Check signal between NAVI control unit connector B151 terminal 15 (B) and 17 with CONSULT-II or oscilloscope.

- **When the screen looks yellowish.**
  Voltage signal between NAVI control unit connector B151 terminal 15 (B) and 17.

15 (B) – 17 **: Refer to AV-90, "Terminals and Reference Value for NAVI Control unit" .**

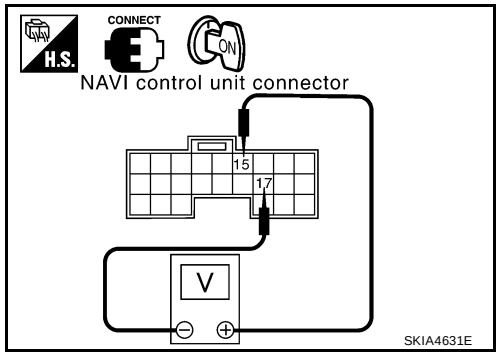

OK or NG

OK >> Replace display control unit. Refer to AV-158, "Removal and Installation of Display Control Unit" .
NG >> Replace NAVI control unit. Refer to AV-157, "Removal and Installation of NAVI Control Unit" .

Color of RGB Image is Not Proper (All Screen Looks Bluish)

EKS007MN

1. CHECK RGB HARNESS

1. Turn ignition switch OFF.
2. Disconnect display control unit connector and display unit connector.
3. Check continuity between display control unit and display unit.
4. Check continuity between display control unit and ground.

- **When the screen looks bluish.**

Terminals				Continuity
Display control unit		Display unit		
Connector	Terminal (Wire color)	Connector	Terminal (Wire color)	
M95	50 (R/L)	M93	17 (R/L)	Yes
	47		7	

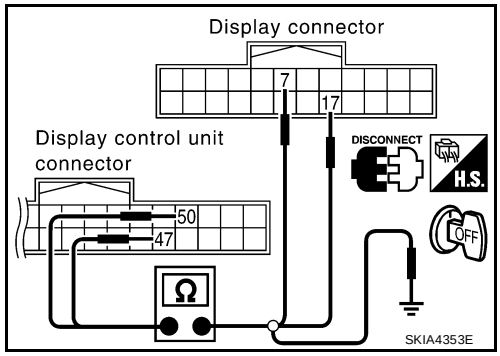

Terminals			Continuity
Display control unit		—	
Connector	Terminal (Wire color)		
M95	50 (R/L)	Ground	No
	47		

OK or NG

OK >> GO TO 2.
NG >> Repair harness or connector.

2. CHECK RGB SIGNAL

1. Connect display control unit connector and display unit connector.
2. Turn ignition switch ON.
3. Display “Color bar” by “CONFIRMATION/ADJUSTMENT” mode.
4. Check the following with CONSULT-ll or oscilloscope.

- **When the screen looks bluish.**
  Voltage signal between display control unit connector M95 terminal 50 (R/L) and 47.

50 (R/L) – 47 **: Refer to AV-92, "Terminals and Reference Value for Display Control unit" .**

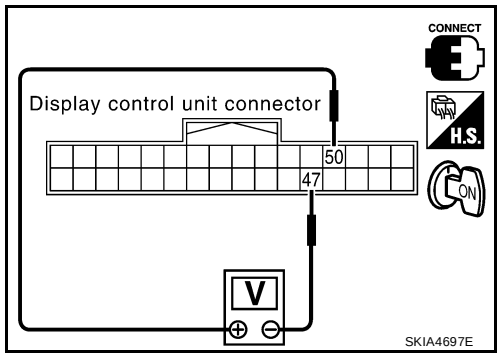

OK or NG

OK >> Replace display unit. Refer to AV-158, "Removal and Installation of Display Unit" .
NG >> Replace display control unit. Refer to AV-158, "Removal and Installation of Display Control Unit" .

Color of RGB Image is Not Proper (All Screen Looks Reddish)

EKS007MO

1. CHECK RGB HARNESS

1. Turn ignition switch OFF.
2. Disconnect display control unit connector and display unit connector.
3. Check continuity between display control unit and display unit.
4. Check continuity between display control unit and ground.

- **When the screen looks reddish.**

Terminals				Continuity
Display control unit		Display unit		
Connector	Terminal (Wire color)	Connector	Terminal (Wire color)	
M95	52 (R/W)	M93	6 (R/W)	Yes
	47		7	

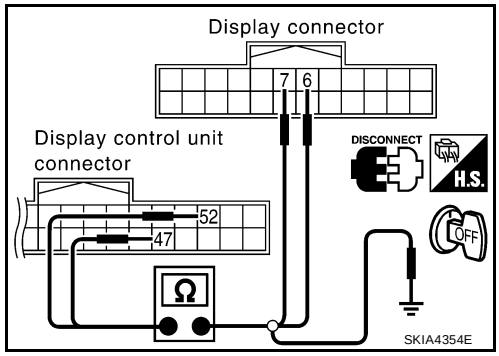

Terminals			Continuity
Display control unit		—	
Connector	Terminal (Wire color)		
M95	52 (R/W)	Ground	No
	47		

OK or NG

OK >> GO TO 2.
NG >> Repair harness or connector.

2. CHECK RGB SIGNAL

1. Connect display control unit connector and display unit connector.
2. Turn ignition switch ON.
3. Display “Color bar” by “CONFIRMATION/ADJUSTMENT” mode.
4. Check the following with CONSULT-II or oscilloscope.

- **When the screen looks reddish.**
  Voltage signal between display control unit connector M95 terminal 52 (R/W) and 47.

52 (R/W) – 47 **: Refer to AV-92, "Terminals and Reference Value for Display Control unit"** .

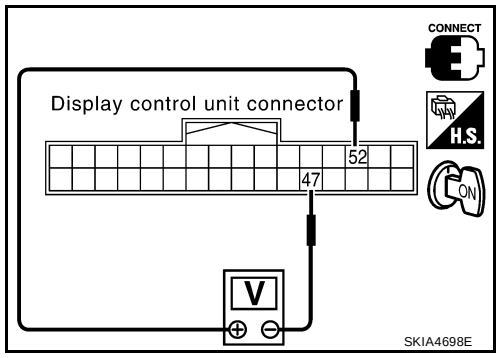

OK or NG

OK >> Replace display unit. Refer to AV-158, "Removal and Installation of Display Unit" .
NG >> Replace display control unit. Refer to AV-158, "Removal and Installation of Display Control Unit" .

Color of RGB Image is Not Proper (All Screen Looks Yellowish)

EKS007MP

1. CHECK RGB HARNESS

1. Turn ignition switch OFF.
2. Disconnect display control unit connector and display unit connector.
3. Check continuity between display control unit and display unit.
4. Check continuity between display control unit and ground.

- **When the screen looks yellowish**.

Terminals				Continuity
Display control unit		Display unit		
Connector	Terminal (Wire color)	Connector	Terminal (Wire color)	
M95	54 (B)	M93	18 (B)	Yes
	47		7	

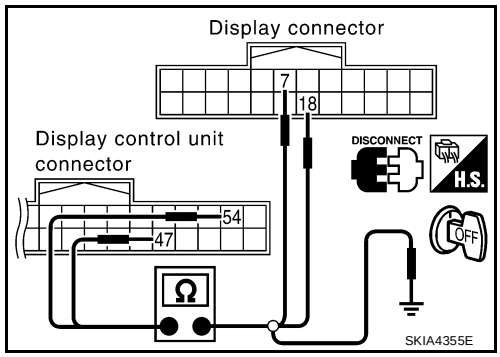

Terminals			Continuity
Display control unit		—	
Connector	Terminal (Wire color)		
M95	54 (B)	Ground	No
	47		

OK or NG

OK >> GO TO 2.
NG >> Repair harness or connector.

2. CHECK RGB SIGNAL

1. Connect display control unit connector and display unit connector.
2. Turn ignition switch ON.
3. Display “Color bar” by “CONFIRMATION/ADJUSTMENT” mode.
4. Check the following with CONSULT-II or oscilloscope.

- **When the screen looks yellowish.**
  Voltage signal between display control unit connector M95 terminal 54 (B) and 47.

54 (B) – 47 **: Refer to AV-92, "Terminals and Reference Value for Display Control unit" .**

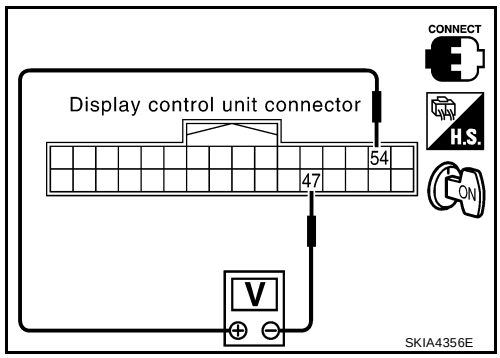

OK or NG

OK >> Replace display unit. Refer to AV-158, "Removal and Installation of Display Unit" .
NG >> Replace display control unit. Refer to AV-158, "Removal and Installation of Display Control Unit" .

NAVI Screen is Rolling

EKS007MQ

1. CHECK HARNESS

1. Turn ignition switch OFF.
2. Disconnect NAVI control unit connector and display control unit connector.
3. Check continuity between NAVI control unit and display control unit.

Terminals				Continuity
NAVI control unit		Display control unit		
Connector	Terminal (Wire color)	Connector	Terminal (Wire color)	
B151	16 (W)	M95	43 (W)	Yes
	14		41	

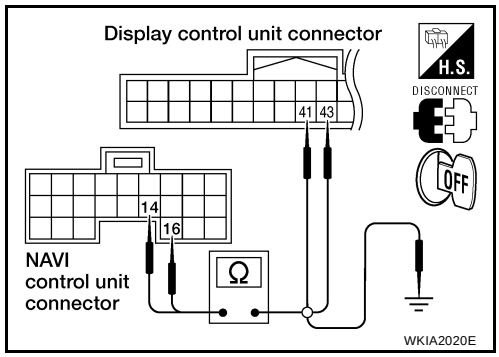

4. Check continuity between NAVI control unit and ground.

Terminals			Continuity
NAVI control unit		—	
Connector	Terminal (Wire color)		
B151	16 (W)	Ground	No
	14		

OK or NG

OK >> GO TO 2.
NG >> Repair harness.

2. CHECK RGB SYNCHRONIZING SIGNAL

1. Connect NAVI control unit connector and display control unit connector.
2. Turn ignition switch ON.
3. Check signal between NAVI control unit connector M95 terminals 16 (W) and 14 with CONSULT-II or oscilloscope.

16 (W) - 14 **: Refer to AV-90, "Terminals and Reference Value for NAVI Control unit" .**

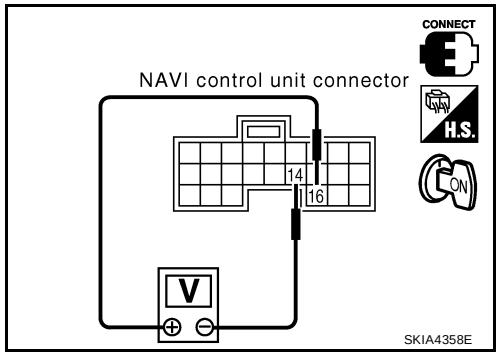

OK or NG

OK >> GO TO 3.
NG >> Replace NAVI control unit. Refer to AV-157, "Removal and Installation of NAVI Control Unit" .

3. CHECK HARNESS

1. Turn ignition switch OFF.
2. Disconnect display control unit connector and display unit connector.
3. Check continuity between display control unit and display unit.

Terminals				Continuity
Display control unit		Display unit		
Connector	Terminal (Wire color)	Connector	Terminal (Wire color)	
M95	56 (G)	M93	19 (G)	Yes
	49		21	

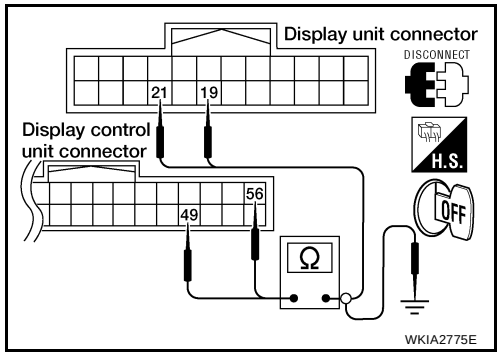

4. Check continuity between display control unit and ground.

Terminals			Continuity
Display control unit		—	
Connector	Terminal (Wire color)		
M95	56 (G)	Ground	No
	49		

OK or NG

OK >> GO TO 4.
NG >> Repair harness.

4. CHECK RGB SYNCHRONIZING SIGNAL

1. Connect display control unit connector and display unit connector.
2. Turn ignition switch ON.
3. Check signal between display unit connector M93 terminals 19 (G) and 21 with CONSULT-II or oscilloscope.

19 (G) - 21 **: Refer to AV-96, "Terminals and Reference Value for Display unit" .**

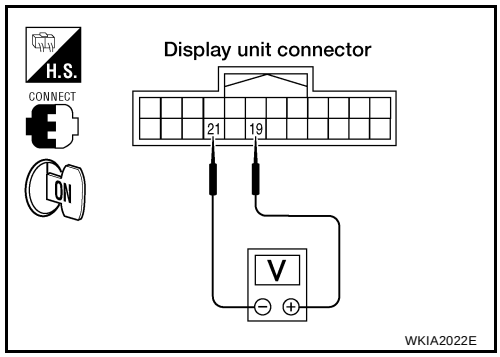

OK or NG

OK >> Replace display unit. Refer to AV-158, "Removal and Installation of Display Unit" .
NG >> Replace display control unit. Refer to AV-158, "Removal and Installation of Display Control Unit" .

Guide Sound is Not Heard

EKS007MS

1. CHECK VOICE GUIDE SETTING

While driving in the dark pink route, voice guide does not operate. (note)

NOTE:
Voice guide is only available at intersections that satisfy certain conditions (indicated by ● on the map). Therefore, guidance may not be given even when the route on the map changes direction.

Is volume setting switched OFF?

YES >> Switch the setting ON and turn the volume up.
NO >> GO TO 2.

2. CHECK HARNESS

1. Turn ignition switch OFF.
2. Disconnect NAVI control unit connector and audio unit connector.
3. Check continuity between NAVI control unit and audio unit.

Terminals				Continuity
NAVI control unit		Audio unit		
Connector	Terminal (Wire color)	Connector	Terminal (Wire color)	
B151	7 (B)	M45	71 (B)	Yes
	8 (W)		69 (W)	

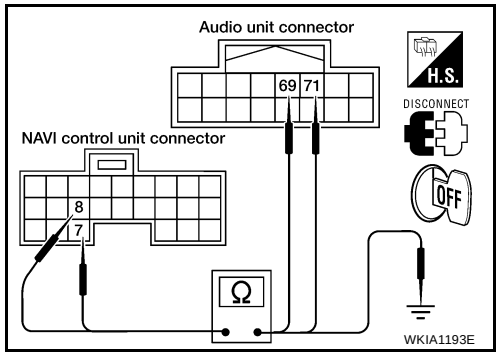

4. Check continuity between NAVI control unit and ground.

Terminals			Continuity
NAVI control unit		—	
Connector	Terminal (Wire color)		
B151	7 (B)	Ground	No
	8 (W)		

Ok or NG

OK >> GO TO 3.
NG >> Repair harness.

3. CHECK VOICE GUIDE

1. Connect NAVI control unit connector and audio unit connector.
2. Turn ignition switch ON.
3. Check signal between NAVI control unit harness connector B151 terminal 7 (B) and 8 (W) with CONSULT-II or oscilloscope.

7 (B) – 8 (W) **: Refer to AV-90, "Terminals and Reference Value for NAVI Control unit" .**

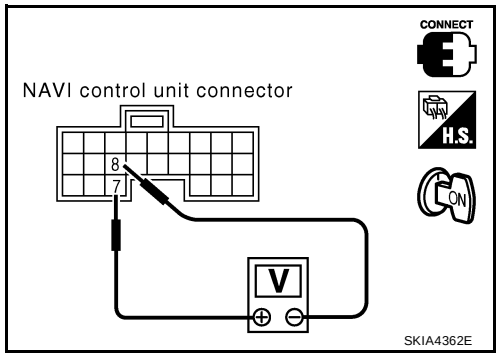

OK or NG

OK >> Replace audio unit. Refer to AV-45, "Removal and Installation for Audio Unit" .
NG >> Replace NAVI control unit. Refer to AV-157, "Removal and Installation of NAVI Control Unit" .

Screen is Not Shown

EKS007MT

1. POWER SUPPLY AND GROUND CIRCUIT CHECK

Check power supply and ground circuit. Refer to AV-118, "Power Supply and Ground Circuit Check for Display Unit" .

OK or NG

OK >> Replace display unit. Refer to AV-158, "Removal and Installation of Display Unit" .
NG >> Check the malfunctioning parts.

A/C Screen is Not Shown (NAVI Screen is Shown)

EKS007MV

1. CHECK IGNITION SIGNAL

Check ignition signal. Refer to AV-124, "Ignition Signal Check for Display Control Unit" .

OK or NG

OK >> GO TO 2.
NG >> Check the malfunctioning parts.

2. CHECK CAN COMMUNICATION LINE

Check CAN communication line. Refer to AV-131, "CAN Communication Line Check" .

OK or NG

OK >> Replace display control unit. Refer to AV-158, "Removal and Installation of Display Control Unit" .
NG >> After filling out CAN DIAG SUPPORT MONITOR check sheet, GO TO LAN-5, "CAN COMMUNICATION" .

FUEL ECONOMY Screen is Not Shown

EKS007MW

1. CHECK IGNITION SIGNAL

Check ignition signal. Refer to AV-124, "Ignition Signal Check for Display Control Unit" .

OK or NG

OK >> GO TO 2.
NG >> Check the malfunctioning parts.

2. CHECK CAN COMMUNICATION LINE

Check CAN communication line. Refer to AV-131, "CAN Communication Line Check" .

OK or NG

OK >> Replace display control unit. Refer to AV-158, "Removal and Installation of Display Control Unit" .
NG >> After filling out CAN DIAG SUPPORT MONITOR check sheet, GO TO LAN-5, "CAN COMMUNICATION" .

Average Fuel Economy Displayed is Not Shown (“ *** ” is Shown)

EKS007MX

1. CHECK VEHICLE SPEED SIGNAL

Check vehicle speed signal. Refer to AV-122, "Vehicle Speed Signal Check for Display Control Unit" .

OK or NG

OK >> GO TO 2.
NG >> Check the malfunctioning parts.

2. CHECK CAN COMMUNICATION LINE

Check CAN communication line. Refer to AV-131, "CAN Communication Line Check" .

OK or NG

OK >> Replace display control unit. Refer to AV-158, "Removal and Installation of Display Control Unit" .
NG >> After filling out CAN DIAG SUPPORT MONITOR check sheet, GO TO LAN-5, "CAN COMMUNICATION" .

Distance to Empty Displayed is Not Shown (“ *** ” is Shown)

EKS007MY

1. CHECK SPEEDOMETER

Confirm that speedometer is functioning.

Is speedometer functioning?

YES >> GO TO 2.
NO >> Refer to DI-19, "Vehicle Speed Signal Inspection" .

2. CHECK FUEL GAUGE

Confirm that fuel gauge is functioning.

Is fuel gauge functioning?

YES >> GO TO 3.
NO >> Refer to DI-22, "Fuel Level Sensor Unit Inspection" .

3. CHECK CAN COMMUNICATION LINE

Check CAN communication line. Refer to AV-131, "CAN Communication Line Check" .

OK or NG

OK >> Replace display control unit. Refer to AV-158, "Removal and Installation of Display Control Unit" .
NG >> After filling out CAN DIAG SUPPORT MONITOR check sheet, GO TO LAN-5, "CAN COMMUNICATION" .

Driving Distance or Average Speed Displayed is Not Shown (“ *** ” is Shown)

EKS007MZ

1. CHECK IGNITION SIGNAL

Check ignition signal. Refer to AV-124, "Ignition Signal Check for Display Control Unit" .

OK or NG

OK >> GO TO 2.
NG >> After filling out CAN DIAG SUPPORT MONITOR check sheet, GO TO LAN-5, "CAN COMMUNICATION" .

2. CHECK VEHICLE SPEED SIGNAL

Check vehicle speed signal. Refer to AV-122, "Vehicle Speed Signal Check for Display Control Unit" .

OK or NG

OK >> Replace display control unit. Refer to AV-158, "Removal and Installation of Display Control Unit" .
NG >> Check the malfunctioning parts.

WARNING DOOR OPEN Screen is Not Shown

EKS007N0

1. CHECK IGNITION SIGNAL

Check ignition signal. Refer to AV-124, "Ignition Signal Check for Display Control Unit" .

OK or NG

OK >> GO TO 2.
NG >> Check the malfunctioning parts.

2. CHECK VEHICLE SPEED SIGNAL

Check vehicle speed signal. Refer to AV-122, "Vehicle Speed Signal Check for Display Control Unit" .

OK or NG

OK >> GO TO 3.
NG >> Check the malfunctioning parts.

3. CHECK CAN COMMUNICATION LINE

Check CAN communication line. Refer to AV-131, "CAN Communication Line Check" .

OK or NG

OK >> Replace display control unit. Refer to AV-158, "Removal and Installation of Display Control Unit" .
NG >> After filling out CAN DIAG SUPPORT MONITOR check sheet, GO TO LAN-5, "CAN COMMUNICATION" .

Unable to Operate All of AV Switches (Unable to Start Self-Diagnosis)

EKS007N1

1. CHECK POWER SUPPLY AND GROUND CIRCUIT

Check power supply and ground circuit. Refer to AV-120, "Power Supply and Ground Circuit Check for AV Switch" .

OK or NG

OK >> GO TO 2.
NG >> Check the malfunctioning parts.

2. AV SWITCH SELF-DIAGNOSIS

AV switch self-diagnosis. Refer to AV-115, "AV Switch Self-Diagnosis Function" .

OK or NG

OK >> GO TO 3.
NG >> Check the malfunctioning parts.

3. CHECK POWER SUPPLY AND GROUND CIRCUIT

Check power supply and ground circuit. Refer to AV-117, "Power Supply and Ground Circuit Check for Display Control Unit" .

OK or NG

OK >> GO TO 4.
NG >> Check the malfunctioning parts.

4. CHECK COMMUNICATION LINE

Check communication line. Refer to AV-130, "AV Communication Line Check (Between Display Control Unit and AV Switch)" .

OK or NG

OK >> Replace AV switch. Refer to AV-158, "Removal and Installation of AV Switch" .
NG >> Replace display control unit. Refer to AV-158, "Removal and Installation of Display Control Unit" .

Audio Does Not Work

EKS007N2

Refer to AV-28, "Trouble Diagnosis" .

Navigation System Does Not Activate

EKS007N4

1. POWER SUPPLY AND GROUND CIRCUIT CHECK

Check power supply and ground circuit. Refer to AV-116, "Power Supply and Ground Circuit Check for NAVI Control Unit" .

OK or NG

OK >> Replace NAVI control unit. Refer to AV-157, "Removal and Installation of NAVI Control Unit" .
NG >> Check the malfunctioning parts.

Previous NAVI Conditions are Not Stored

EKS007N5

1. CHECK BATTERY POWER

- Check NAVI control unit battery power.
  Refer to AV-116, "Power Supply and Ground Circuit Check for NAVI Control Unit" .

OK or NG

OK >> Replace NAVI control unit. Refer to AV-157, "Removal and Installation of NAVI Control Unit" .
NG >> Check NAVI control unit battery power system harness.

Previous Vehicle Conditions are Not Stored

EKS007N6

1. CHECK BATTERY POWER

- Check display control unit battery power.
  Refer to AV-117, "Power Supply and Ground Circuit Check for Display Control Unit" .

OK or NG

OK >> Replace display control unit. Refer to AV-158, "Removal and Installation of Display Control Unit" .
NG >> Check display control unit battery power system harness.

Position of Current Location Mark is Not Correct

EKS007N7

1. SELF-DIAGNOSIS

- Perform “Self-diagnosis mode” of the self-diagnosis function. Refer to AV-104, "Self-Diagnosis Mode (NAVI)" .

OK or NG

OK >> GO TO 2.
NG >> Check the malfunctioning parts.

2. HISTORY OF ERRORS DIAGNOSIS

- Was any error stored in AV-110, "HISTORY OF ERRORS" of the CONFIRMATION/ADJUSTMENT mode?

YES or NO

YES >> AV-110, "DIAGNOSIS BY HISTORY OF ERRORS".
NO >> AV-147, "Driving Test".

Radio Wave From GPS Satellite is Not Received

EKS007N8

1. CHECK ENVIRONMENT

- Check if any metal object that intercepts radio waves or an object that emits radio waves (such as a portable phone) is located near the GPS antenna. Check if the vehicle is shielded by a building.

OK or NG

OK >> ● System is not malfunctioning.
The GPS antenna may not be able to receive radio waves from the GPS satellite if it is shielded by metal object or an object emitting radio waves is placed near it.

NG >> GO TO 2.

2. SELF-DIAGNOSIS

- Perform “Self-diagnosis mode” of the self-diagnosis function. Refer to AV-104, "Self-Diagnosis Mode (NAVI)" .

OK or NG

OK >> Replace GPS antenna. Refer to AV-157, "Removal and Installation of GPS Antenna" .
NG >> Check the malfunctioning parts.

Driving Test

EKS007N9

1. DRIVING TEST 1

1. Scroll the map screen to display the area to make correction. Press “ENTER” and select “CURRENT LOCATION CORRECTION”.
2. Correct direction of the vehicle mark.
3. Perform the distance correction of the CONFIRMATION/ADJUSTMENT mode.
   Note: Normally, adjustment is not necessary because this system has automatic distance correction function. However, when a tire chain is fitted, adjustment in accordance with the tire diameter ratio must be made.
4. Are symptoms malfunctioning to the AV-148, "Example of Symptoms Judged Not Malfunction" present after driving the vehicle?

YES or NO

YES >> Limit of the location detection capacity of the navigation system.
NO >> GO TO 2.

2. DRIVING TEST 2

- Did any malfunction occur when the proper test in the following test patterns is performed?
- Test pattern
  Driving test finds the difference between the symptoms monitored with and without each sensor.
  - Test pattern 1: Test method with no GPS location correction
    Disconnect GPS antenna connector (GT5) connected to the NAVI control unit. Accurately adjust the current location and the direction, then drive the vehicle.
  - Test pattern 2: Test method with no map-matching
    Accurately adjust the current location and the direction. Eject the map DVD-ROM from the NAVI control unit with ignition switch turned to OFF, then drive the vehicle. After driving, insert the map DVD-ROM back in the unit, display the track of the vehicle on the map screen and compare it with the actual road configuration.
- Sample tests
  - <To determine if the current-location mark skips at the same position, if so, whether it is caused by map-matching or by GPS>
    Perform test pattern 1.
  - <To determine if the pattern of streets displayed is correct or not>
    Perform test pattern 1 & 2.
    Compare the track of the vehicle on the map screen and the actual road configuration. For fairly accurate tracking, plotting shall be made every several hundred meters (feet).
  - <When the distance is adjusted accurately>
    Perform test pattern 1 & 2.
    Drive on a road of which distance is accurately known (by utilizing distance posts on a highway). Calculate the rate of change (increased/decreased) of the distance by comparing with the actual distance.
    Correction = A/B
    A: Distance shown on the screen
    B: Actual distance

YES or NO

YES >>
- If adjustment is insufficient, perform adjustment again.
- If any error is found in the map, please contact map data supplier. Refer to Navigation System Owner's Manual for contact information.
- Replace NAVI control unit. Refer to AV-157, "Removal and Installation of NAVI Control Unit" .

NO >> Limit of the location detection capacity of the navigation system.

Example of Symptoms Judged Not Malfunction

EKS007NA

BASIC OPERATION

Symptom	Cause	Remedy
No image is shown.	Display brightness adjustment is set fully to DARK side.	Adjust the display brightness.
No guide sound is heard. Audio guide volume is too low or too high.	Volume control is set to OFF, MIN or MAX.	Adjust the audio guide volume.
	Audio guidance is not available while the vehicle is driving on a dark pink route.	System is not malfunctioning.
Screen is too dark. Motion of the image is too slow.	Temperature inside the vehicle is low.	Wait until the temperature inside the vehicle reaches the proper temperature.
Small black or bright spots appear on the screen.	Symptom peculiar to a liquid crystal display (display unit).	System is not malfunction.

VEHICLE MARK

Symptom	Cause	Remedy
Map screen and BIRDVIEW™ Name of the place varies with the screen.	Some thinning of the character data is done to prevent the display becoming to complex. In some cases and in some locations, the display contents may differ. The same place name, street name, etc. may not be displayed every time on account of the data processing.	System is not malfunctioning.
Vehicle mark is not positioned correctly.	Vehicle is transferred by ferry or by towing after its ignition switch is turned to OFF.	Drive the vehicle for a while in the GPS satellite signal receiving condition.
Screen will not switch to nighttime mode after the lighting switch is turned ON.	The daytime screen is selected by the “SWITCH SCREENS” when the last time the screen dimming setting is done. Switching between daytime/nighttime screen may be inhibited by the automatic illumination adjustment function.	Perform screen dimming and select the nighttime screen by “SWITCH SCREENS”.
Map screen will not scroll in accordance with the vehicle travel.	Current location is not displayed.	Press “MAP” button to display the current location.
Vehicle mark will not be shown.	Current location is not displayed.	Press “MAP” button to display the current location.
Accuracy indicator (GPS satellite mark) on the map screen stays gray.	GPS satellite signal is intercepted because the vehicle is in or behind a building.	Move the vehicle out to an open space.
	GPS satellite signal cannot be received because an obstacle is placed on top of the instrument panel.	Do not place anything in the center on top of the display.
	GPS satellites are not visible from current location.	Wait until GPS satellites are visible by moving the vehicle.
Vehicle location accuracy is low.	Accuracy indicator (GPS satellite mark) on the map screen stays gray.	Current location is not determined.
	Vehicle speed setting by the vehicle speed pulse has been deviated (advanced or retarded) from the actual vehicle speed because tire chain is fitted or the system has been used on another vehicle.	Drive the vehicle for a while [for approx. 30 minutes at approx. 30 km/h (19 MPH)] and the deviation will be automatically adjusted. If advancement or retard still occur, perform the distance adjustment by CONFIRMATION/ADJUSTMENT mode of diagnosis function.
	Map data has error or omission. (Vehicle mark is always deviated to the same position.)	As a rule, an updated map DVD–ROM will be released once a year.

DESTINATION, PASSING POINTS, AND MENU ITEMS CANNOT BE SELECTED/SET

Symptom	Cause	Remedy
Destination cannot be set.	Destination to be set is on an expressway.	Set the destination on an ordinary road.
Passing point is not searched when re-searching the route.	The vehicle has already passed the passing point, or the system judged so.	To include the passing points that have been passed into the route again, set the route again.
Route information will not be displayed.	Route searching has not been done.	Set the destination and perform route searching.
	Vehicle mark is not on the recommended route.	Drive on the recommended route.
	Route guide is turned OFF.	Turn route guide ON.
	Route information is not available on the dark pink route.	System is not malfunctioning.
After the route searching, no guide sign will appear as the vehicle goes near the entrance/exit to the toll road.	Vehicle mark is not on the recommended route. (On the display, only guide signs related to the recommended route will be shown.)	Drive on the recommended route.
Automatic route searching is not possible.	Vehicle is driving on a highway (gray route), or no recommended route is available.	Drive on a road to be searched. Or re–search the route manually. In this case, however, the whole route will be searched.
Performed automatic detour search (or detour search). However, the result is the same as that of the previous search.	Performed search with every condition considered. However, the result is the same as that of the previous search.	System is not malfunctioning.
Passing points cannot be set.	More than five passing points were set.	Passing points can be set up to five. To stop at more than five points, perform sharing in several steps.
When setting the route, the starting point cannot be selected.	The current vehicle location is always set as the starting point of a route.	System is not malfunctioning.
Some menu items cannot be selected.	The vehicle is being driven.	Stop the vehicle at a safe place and then operate the system.

VOICE GUIDE

Symptom	Cause	Remedy
Voice guide will not operate.	Note: Voice guide is only available at intersections that satisfy certain conditions (indicated by ● on the map). Therefore, guidance may not be given even when the route on the map changes direction.	System is not malfunctioning.
	The vehicle is not on the recommended route.	Return to the recommended route or research the route.
	Voice guide is turned OFF.	Turn voice guide ON.
	Route guide is turned OFF.	Turn route guide ON.
Voice guide does not match the actual road pattern.	Voice guide may vary with the direction to which the vehicle is turned and the connection of the road to other roads.	Drive in conformity to the actual traffic rules.

ROUTE SEARCH

Symptom	Cause	Remedy
No route is shown.	No road to be searched is found around the destination.	Find wider road (orange road or wider) nearby and reset the destination and passing points onto it. Take care of the traveling direction when there are separate up and down roads.
	Starting point and the destination are too close.	Set the destination at more distant point.
	Conditional traffic regulation (day of the week/ time of the day) is set at the area around the current location or the destination.	Turn the time-regulating search conditions OFF. Turn “Avoid regulation time” in the search conditions OFF.
Indicated route is intermittent.	In some areas, highways (gray routes) are not used for the search(Note) Therefore, the route to the current location or the passing points may be intermittent.	System is not malfunctioning.
When the vehicle has passed the recommended route, it is deleted from the screen.	A recommended route is controlled by each section. When the vehicle has passed the passing point 1, then the map data from the starting point up to the passing point 1 will be deleted. (The data may remain undeleted in some areas.)	System is not malfunctioning.
Detouring route is recommended.	In some areas, highways (gray routes) are not used for the search. (Note). Therefore, detour route may be recommended.	Set the route closer to the basic route (gray route).
	A detour route may be shown when some traffic regulation (one-way traffic, etc.) is set at the area around the starting point or the destination.	Slightly move the starting point or the destination, or set the passing point on the route of your choice.
	In the area where highways (gray routes) are used for the search, left turn has priority around the current location and the destination (passing points). For this reason, the recommended route may be detouring.	System is not malfunctioning.
Landmarks on the map do not match the actual ones.	This can be happen due to omission or error in the map data.	As a rule, an updated map DVD-ROM will be released once a year. Wait until the latest map has become available.
Recommended route is far from the starting point, passing points, and destination.	Starting point, passing points, and destination of the route guide were set far from the desired points because route searching data around these area were not stored.	Reset the destination onto the road nearby. If this road is one of the highways (gray routes), an ordinary road nearby may be displayed as the recommended route.

NOTE:
Except for the ordinance-designated cities. (Malfunctioning areas may be changed in the updated map disc.)

EXAMPLES OF CURRENT-LOCATION MARK DISPLACEMENT

Vehicle's travel amount is calculated by reading its travel distance and turning angle. Therefore, if the vehicle is driven in the following manner, an error will occur in the vehicle's current location display. If correct location has not been restored after driving the vehicle for a while, perform location correction.

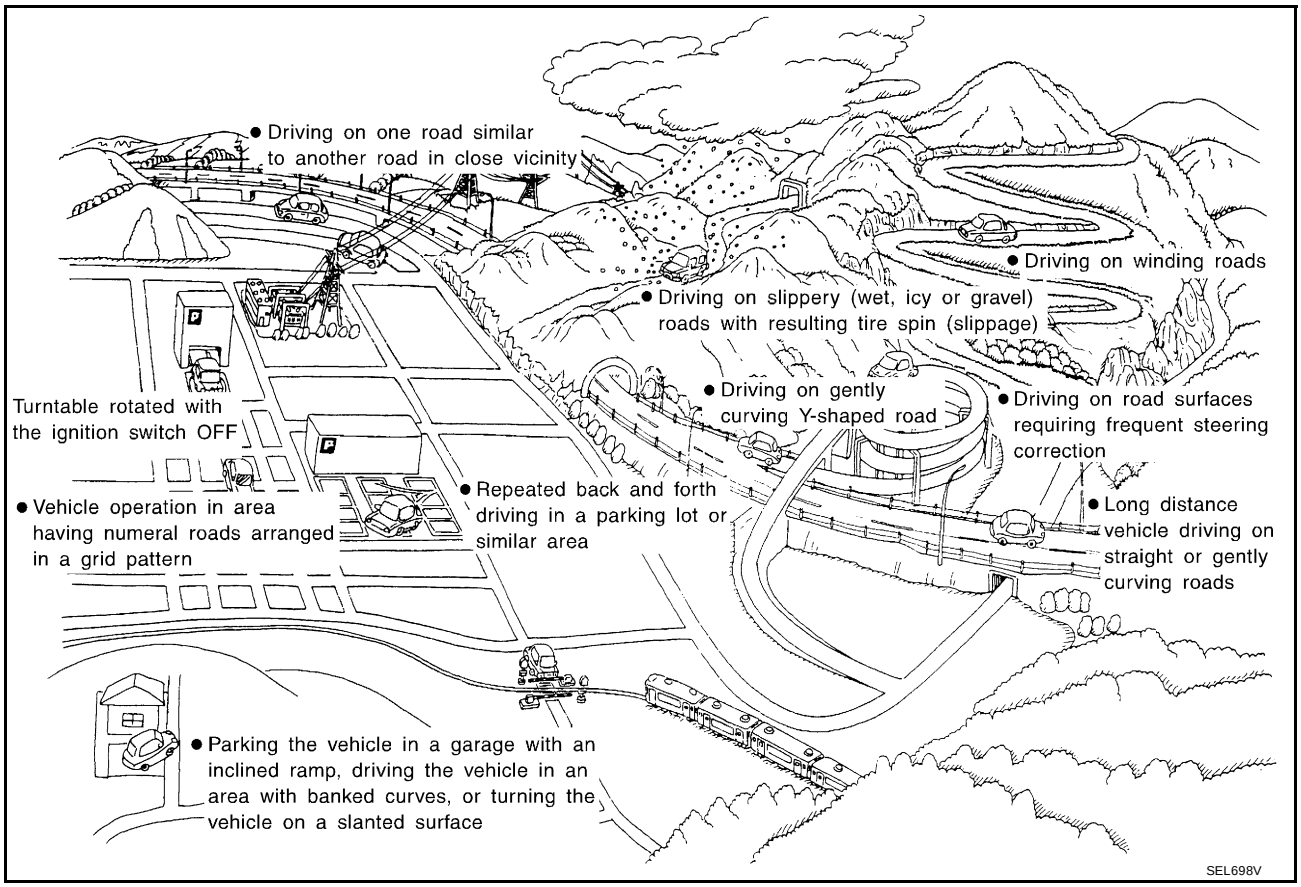

Cause (condition) –: While driving ooo: Display		Driving condition	Remarks (correction, etc.)
Road configuration	Y–intersections 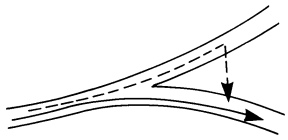 ELK0192D	At a Y intersection or similar gradual division of roads, an error in the direction of travel deduced by the sensor may result in the current-location mark appearing on the wrong road.	If after travelling about 10 km (6 miles) the correct location has not been restored, perform location correction and, if necessary, direction correction.
	Spiral roads 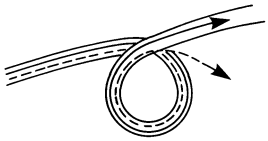 ELK0193D	When driving on a large, continuous spiral road (such as loop bridge), turning angle error is accumulated and the vehicle mark may deviate from the correct location.	
	Straight roads 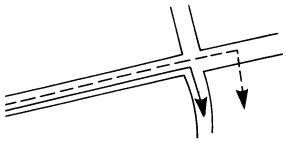 ELK0194D	When driving on a long, straight road and slow curve without stopping, map-matching does not work effectively enough and distance errors may accumulate. As a result, the vehicle mark may deviate from the correct location when the vehicle is turned at a corner.	
	Zigzag roads 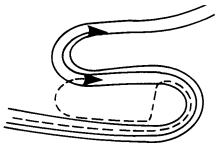 ELK0195D	When driving on a zigzag road, the map may be matched to other roads in the similar direction nearby at every turn, and the vehicle mark may deviate from the correct location.	
	Roads laid out in a grid pattern 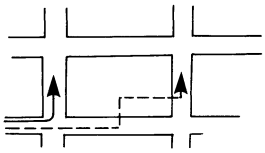 ELK0196D	When driving where roads are laid out in a grid pattern, or where many roads are running in the similar direction nearby, the map may be matched to them by mistake and the vehicle mark may deviate from the correct location.	
	Parallel roads 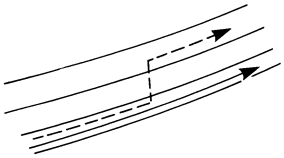 ELK0197D	When two roads are running in parallel (such as highway and sideway), the map may be matched to the other road by mistake and the vehicle mark may deviate from the correct location.	

Cause (condition) –: While driving ooo: Display		Driving condition	Remarks (correction, etc.)
Place	In a parking lot 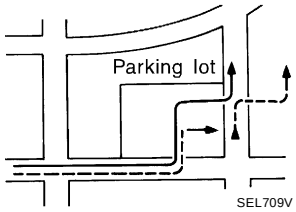	When driving in a parking lot, or other location where there are no roads on the map, matching may place the vehicle mark on a nearby road. When the vehicle returns to the road, the vehicle mark may have deviated from the correct location. When driving in circle or turning the steering wheel repeatedly, direction errors accumulate, and the vehicle mark may deviate from the correct location.	If after travelling about 10 km (6 miles) the correct location has not been restored, perform location correction and, if necessary, direction correction.
	Turntable 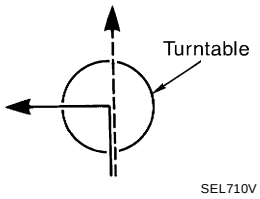	When the ignition switch is OFF, the navigation system cannot get the signal from the gyroscope (angular speed sensor). Therefore, the displayed direction may be wrong and the correct road may not be easily returned to after rotating the vehicle on a turntable with the ignition OFF.	
	Slippery roads	On snow, wet roads, gravel, or other roads where tires may slip easily, accumulated mileage errors may cause the vehicle mark to deviate from the correct road.	
	Slopes	When parking in sloped garages, when travelling on banked roads, or in other cases where the vehicle turns when tilted, an error in the turning angle will occur, and the vehicle mark may deviate from the road.	
Map data	Road not displayed on the map screen 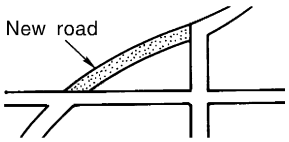	When driving on new roads or other roads not displayed on the map screen, map matching does not function correctly and matches the location to a nearby road. When the vehicle returns to a road which is on the map, the vehicle mark may deviate from the correct road.	
	Different road pattern (Changed due to repair) 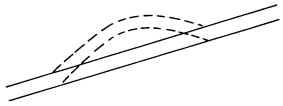	If the road pattern stored in the map data and the actual road pattern are different, map matching does not function correctly and matches the location to a nearby road. The vehicle mark may deviate from the correct road.	
Vehicle	Use of tire chains	When tire chains are used, the mileage is not correctly detected, and the vehicle mark may deviate from the correct road.	Drive the vehicle for a while. If the distance still deviates, adjust it by using the distance adjustment function. (If the tire chain is removed, recover the original value.)

Cause (condition) –: While driving ooo: Display		Driving condition	Remarks (correction, etc.)
Precautions for driving	Just after the engine is started	If the vehicle is driven just after the engine is started when the gyroscope (angular speed sensor) correction is not completed, the vehicle can lose its direction and may have deviated from the correct location.	Wait for a short while before driving after starting the engine.
	Continuous driving without stopping	When driving long distances without stopping, direction errors may accumulate, and the current-location mark may deviate from the correct road.	Stop and adjust the orientation.
	Abusive driving	Spinning the wheels or engaging in other kinds of abusive driving may result in the system being unable perform correct detection, and may cause the vehicle mark to deviate from the correct road.	If after travelling about 10 km (6 miles) the correct location has not been restored, perform location correction and, if necessary, direction correction.
How to correct location	Position correction accuracy 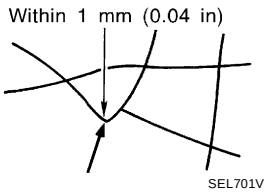	If the accuracy of location settings is poor, accuracy may be reduced when the correct road cannot be found, particularly in places where there are many roads.	Enter in the road displayed on the screen with an accuracy of approx. 1mm. Caution: Whenever possible, use detailed map for the correction.
	Direction when location is corrected 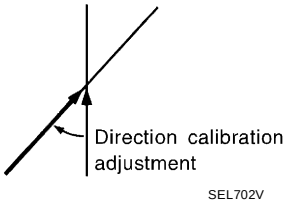	If the accuracy of location settings during correction is poor, accuracy may be reduced afterwards.	Perform direction correction.

CURRENT LOCATION MARK SHOWS A POSITION WHICH IS COMPLETELY WRONG

In the following cases, the current-location mark may appear on completely different position in the map depending on the GPS satellite signal receiving conditions. In this case, perform location correction and direction correction.

- When location correction has not been done
  - If the receiving conditions of the GPS satellite signal is poor, or if the current-location mark becomes out of place, it may move to a completely different location and not come back if location correction is not done. The position will be corrected if the GPS signal can be received.
- When the vehicle has traveled by ferry, or when the vehicle has been towed
  - Because calculation of the current location cannot be done when travelling with the ignition OFF, for example when traveling by ferry or when being towed, the location before travel is displayed. If the precise location can be detected with GPS, the location will be corrected.

CURRENT-LOCATION MARK JUMPS

In the following cases, the current-location mark may appear to jump as a result of automatic correction of the current location.

- When map-matching has been done
  - If the current location and the current-location mark are different when map-matching is done, the current-location mark may seem to jump. At this time, the location may be “corrected” to the wrong road or to a location which is not on a road.
- When GPS location correction has been done
  - If the current location and the current-location mark are different when the location is corrected using GPS measurements, the current-location mark may seem to jump. At this time, the location may be “corrected” to a location which is not on a road.

CURRENT LOCATION MARK IS IN A RIVER OR SEA

The navigation system moves the current-location mark with no distinction between land and rivers or sea. If the location mark is somehow out of place, it may appear that the vehicle is driving in a river or the sea.

WHEN DRIVING ON SAME ROAD, SOMETIMES CURRENT-LOCATION MARK IS IN RIGHT PLACE AND SOMETIMES IT IS WRONG PLACE

The conditions of the GPS antenna (GPS data) and gyroscope (angular speed sensor) change gradually. Depending on the road traveled and the operation of the steering wheel, the location detection results will be different. Therefore, even on a road on which the location has never been wrong, conditions may cause the vehicle mark to deviate.

LOCATION CORRECTION BY MAP-MATCHING IS SLOW

- The map-matching function needs to refer to the data of the surrounding area. It is necessary to drive some distance for the function to work.
- Because map-matching operates on this principle, when there are many roads running in similar directions in the surrounding area, no matching determination may be made. The location may not be corrected until some special feature is found.

ALTHOUGH GPS RECEIVING DISPLAY IS GREEN, VEHICLE MARK DOES NOT RETURN TO CORRECT LOCATION

- The GPS accuracy has an error of approximately 10 m (30 ft). In some cases the current-location mark may not be on the correct street, even when GPS location-correction is done.
- The navigation system compares the results of GPS location detection with the results from map-matching location detection. The one which is determined to have higher accuracy is used.
- GPS location correction may not be performed when the vehicle is stopped.

NAME OF CURRENT PLACE IS NOT DISPLAYED

The current place name may not be displayed if there are no place names displayed on the map screen.

CONTENTS OF DISPLAY DIFFER FOR BIRDVIEW™ AND THE (FLAT) MAP SCREEN

Difference of the BIRDVIEW™ screen from the flat map screen are as follows.

- The current place name displays names which are primarily in the direction of vehicle travel.
- The amount of time before the vehicle travel or turn angle is updated on the screen is longer than for the (flat) map display.
- The conditions for display of place names, roads, and other data are different for nearby areas and for more distant areas.
- Some thinning of the character data is done to prevent the display becoming too complex. In some cases and in some locations, the display contents may differ.
- The same place name, street name, etc. may be displayed multiple times.

Program Loading of NAVI Control Unit

EKS007NB

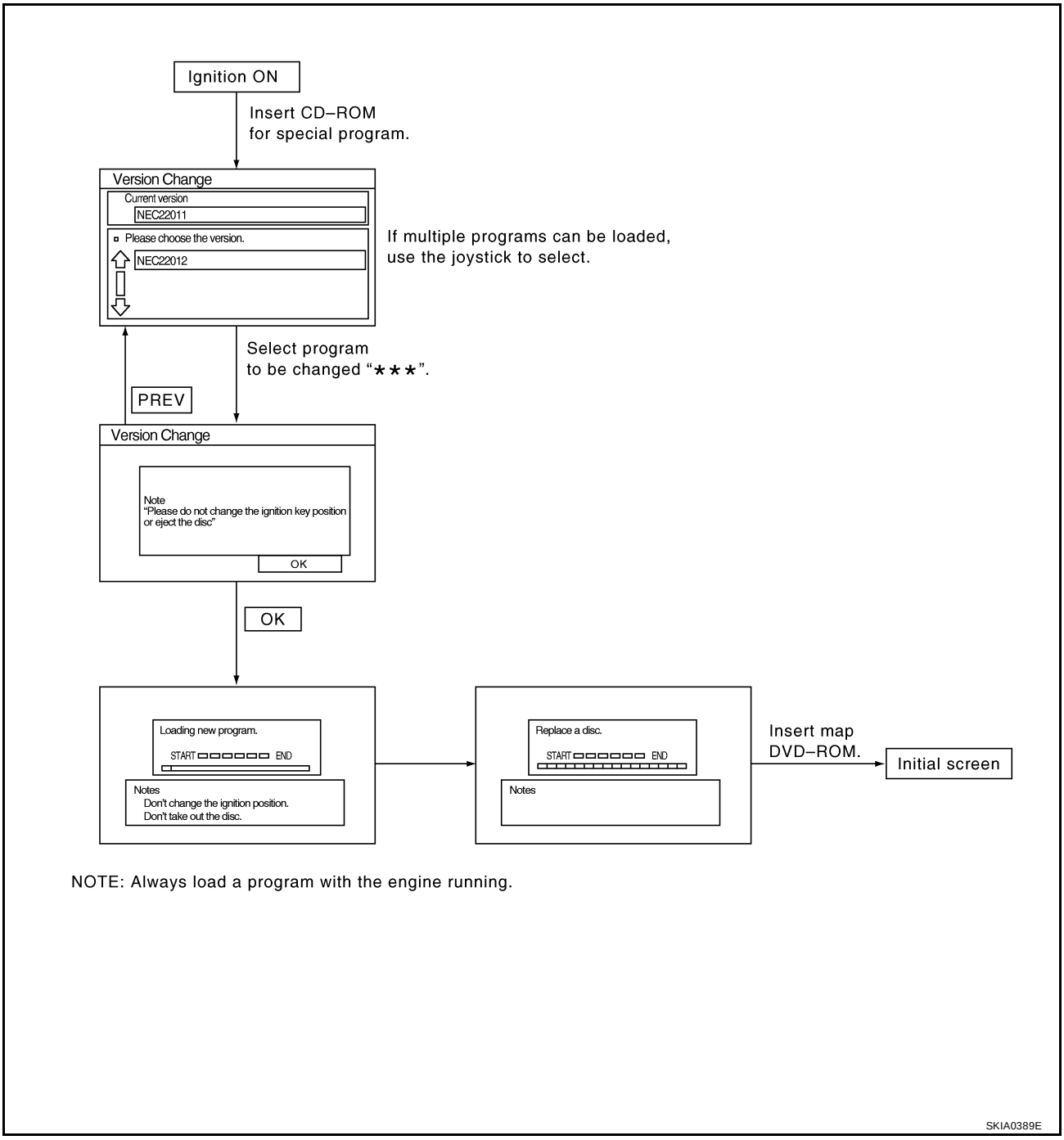

NOTE: Always load a program with the engine running.

Removal and Installation of NAVI Control Unit

EKS007NC

CAUTION:

To avoid damage, eject map DVD-ROM before removing the NAVI control unit.

1. Slide front seat RH fully forward.
2. Remove NAVI control unit kick shield.

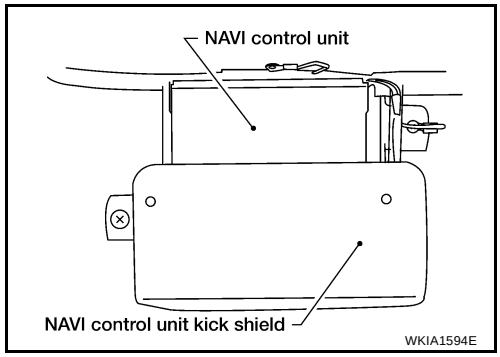

3. Disconnect connectors.
4. Remove screws and remove NAVI control unit.
5. Remove screws and brackets from NAVI control unit.
6. Installation is in the reverse order of removal.

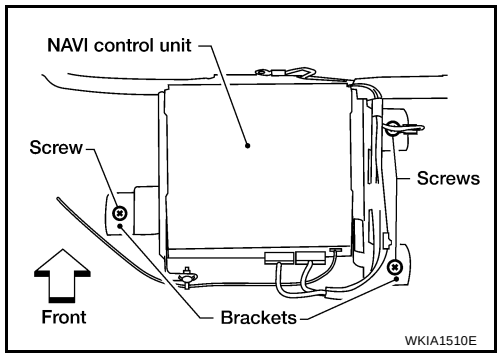

Removal and Installation of GPS Antenna

EKS007ND

1. Remove defrost grille.
2. Remove screws.
3. Remove center console. Refer to IP-15, "Center Console" .

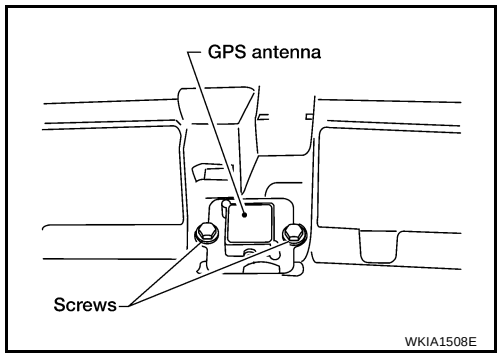

4. Disconnect GPS antenna connector and remove GPS antenna and feeder assembly out the top.
5. Installation is in the reverse order of removal.

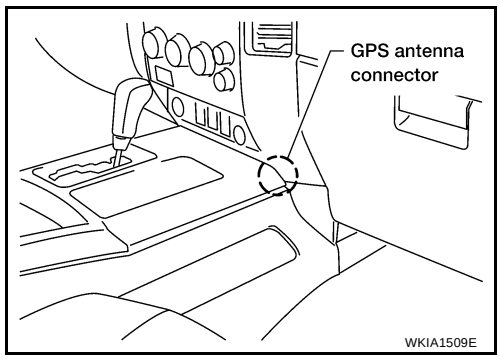

Removal and Installation of Steering Wheel Switch

EKS007NE

Refer to AV-47, "Removal and Installation of Steering Wheel Audio Control Switches" .

Removal and Installation of AV Switch

EKS007NF

Refer to AV-45, "Removal and Installation for AV Switch" .

Removal and Installation of Display Unit

EKS007NG

1. Remove cluster lid D.
2. Remove the four display unit assembly screws.
3. Disconnect connectors and remove display unit assembly.
4. Remove screws and remove display unit from brackets.
5. Installation is in reverse order of removal.

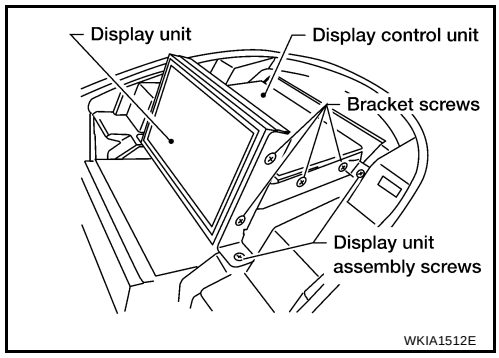

Removal and Installation of Display Control Unit

EKS007NH

1. Remove cluster lid D.
2. Remove the four display unit assembly screws.
3. Disconnect connectors and remove display unit assembly.
4. Remove screws and remove display control unit from brackets.
5. Installation is in reverse order of removal.