FRONT & REAR SUSPENSION

SECTION SU

CONTENTS

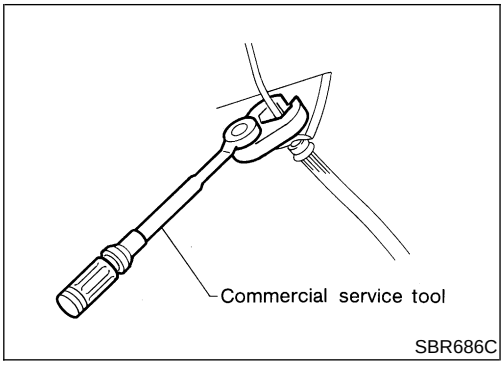

Precautions

PRECAUTIONS

NGSU0001

- **When installing rubber parts, final tightening must be carried out under unladen condition* with tires on ground.**
  ***: Fuel, radiator coolant and engine oil full. Spare tire, jack, hand tools and mats in designated positions.**
- **Use flare nut wrench when removing and installing brake tubes.**
- **After installing removed suspension parts, check wheel alignment and adjust if necessary.**
- **Always torque brake lines when installing.**

Preparation

SPECIAL SERVICE TOOLS

NGSU0002

The actual shapes of Kent-Moore tools may differ from those of special service tools illustrated here.

Tool number (Kent-Moore No.) Tool name	Description	
ST29020001 (J24319-01) Gear arm puller	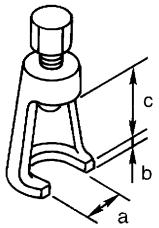 NT694	Removing ball joint for knuckle spindle **a: 34 mm (1.34 in)** **b: 6.5 mm (0.256 in)** **c: 61.5 mm (2.421 in)**
HT72520000 (J25730-B) Ball joint remover	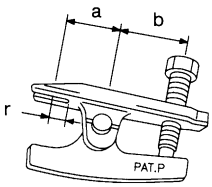 NT546	Removing tie-rod outer end **a: 33 mm (1.30 in)** **b: 50 mm (1.97 in)** **r: 11.5 mm (0.453 in)**
KV40106800 (—) Lower link bushing puller	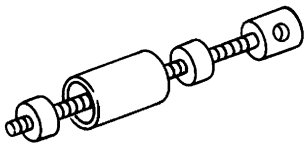 NT685	Removing and installing lower link bushing

COMMERCIAL SERVICE TOOLS

NGSU0003

Tool name	Description	
1 Flare nut crowfoot 2 Torque wrench	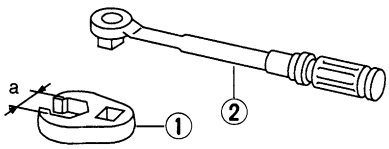 NT360	Removing and installing each brake piping **a: 10 mm (0.39 in)**

Noise, Vibration and Harshness (NVH) Troubleshooting

=NGSU0004

NVH TROUBLESHOOTING CHART

NGSU0004S01

Use the chart below to help you find the cause of the symptom. Repair or replace parts as necessary.

		Reference page	SU-4, 22	SU-13, 25	SU-12, 25	—	SU-12, 25	SU-12, 25	SU-6	SU-15	SU-6	—	—	—	—	—	—	***PD-4***, NVH	***PD-15***, ***PD-64***, ***PD-41***, NVH	***AX-4***, NVH	***AX-4***, NVH	Refer to SUSPENSION in this chart.	Refer to TIRES in this chart.	Refer to ROAD WHEEL in this chart.	***BR-5***, NVH	***ST-5***, NVH
		Possible Cause and SUSPECTED PARTS	Improper installation, looseness	Shock absorber deformation, damage or deflection	Bushing or mounting deterioration	Parts interference	Spring fatigue	Suspension looseness	Incorrect wheel alignment	Stabilizer bar fatigue	Out-of-round	Imbalance	Incorrect air pressure	Uneven tire wear	Deformation or damage	Non-uniformity	Incorrect tire size	PROPELLER SHAFT	DIFFERENTIAL	DRIVE SHAFT	AXLE	SUSPENSION	TIRES	ROAD WHEEL	BRAKES	STEERING
Symptom	SUSPENSION	Noise	×	×	×	×	×	×										×	×	×	×		×	×	×	×
		Shake	×	×	×	×		×										×		×	×		×	×	×	×
		Vibration	×	×	×	×	×											×		×	×		×			×
		Shimmy	×	×	×	×			×												×		×	×	×	×
		Judder	×	×	×																×		×	×	×	×
		Poor quality ride or handling	×	×	×	×	×		×	×											×		×	×		
	TIRES	Noise	×								×	×	×	×	×	×		×	×	×	×	×		×	×	×
		Shake	×								×	×	×	×	×		×	×		×	×	×		×	×	×
		Vibration											×				×	×		×	×	×				×
		Shimmy	×								×	×	×	×	×	×	×				×	×		×	×	×
		Judder	×								×	×	×	×	×		×				×	×		×	×	×
		Poor quality ride or handling	×								×	×	×	×	×		×				×	×		×		
	ROAD WHEEL	Noise	×								×	×			×			×	×	×	×	×	×		×	×
		Shake	×								×	×			×			×		×	×	×	×		×	×
		Shimmy, Judder	×								×	×			×						×	×	×		×	×
		Poor quality ride or handling	×								×	×			×						×	×	×			

x: Applicable

Components

NGSU0005

2WD MODELS

NGSU0005S01

SEC. 391•400•401

When installing rubber parts, final tightening must be carried out under unladen condition* with tires on ground.

*** Fuel, radiator coolant and engine oil full. Spare tire, jack, hand tools and mats in designated positions.**

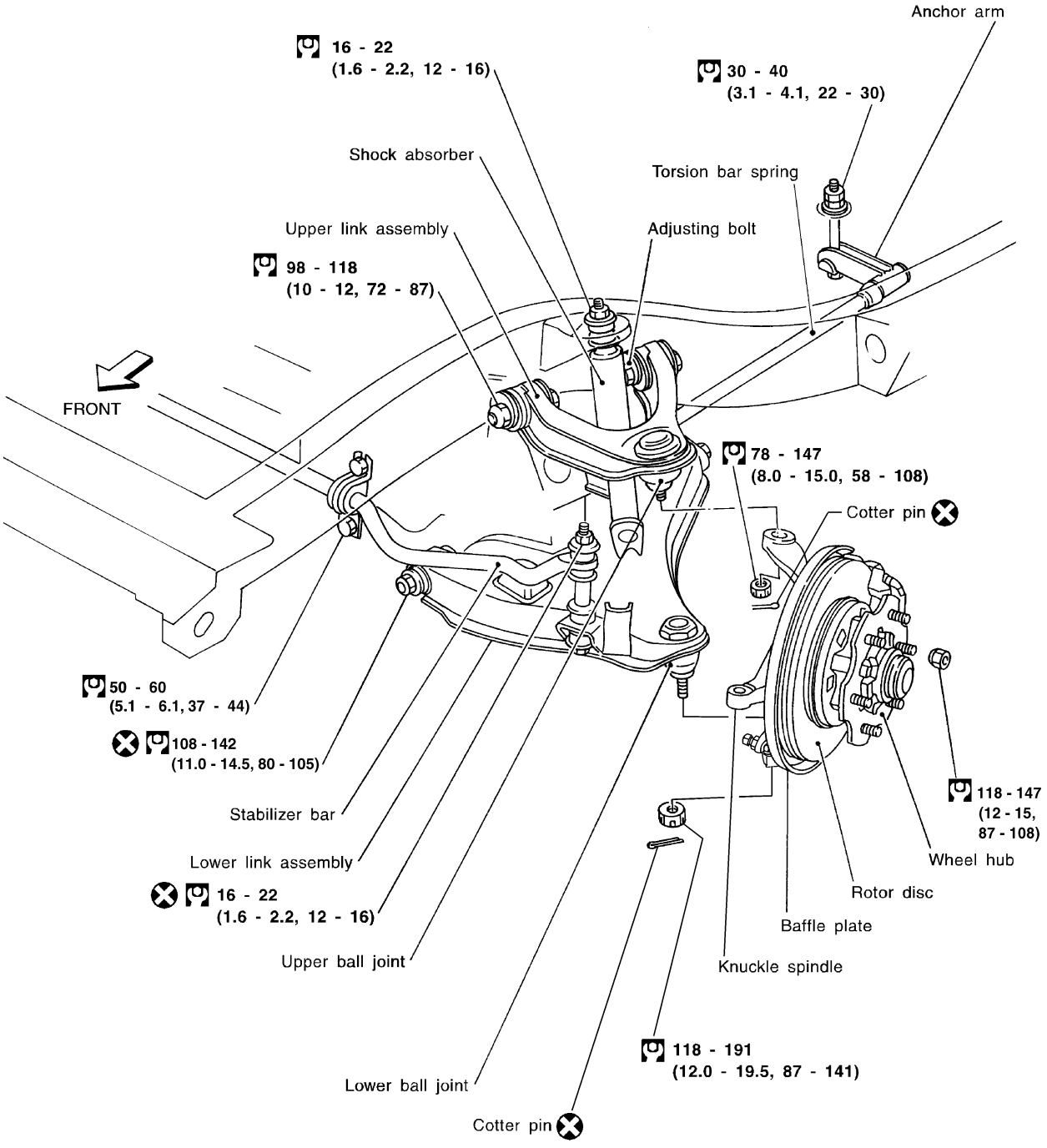

: N•m (kg-m, ft-lb)

WSU013

4WD MODELS

NGSU0005S02

SEC. 391•400•401

When installing rubber parts, final tightening must be carried out under unladen condition* with tires on ground.

*** Fuel, radiator coolant and engine oil full. Spare tire, jack, hand tools and mats in designated positions.**

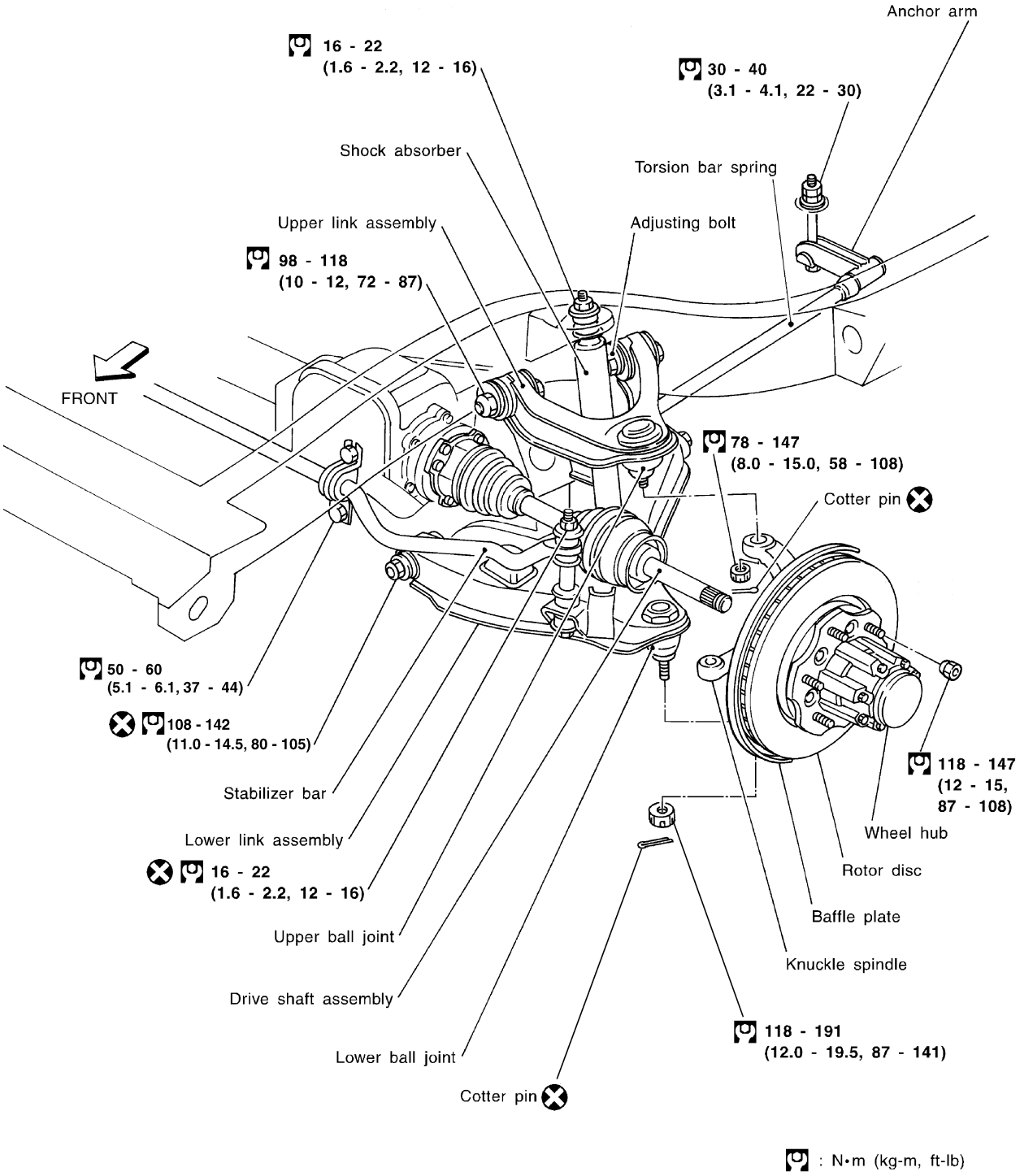

WSU014

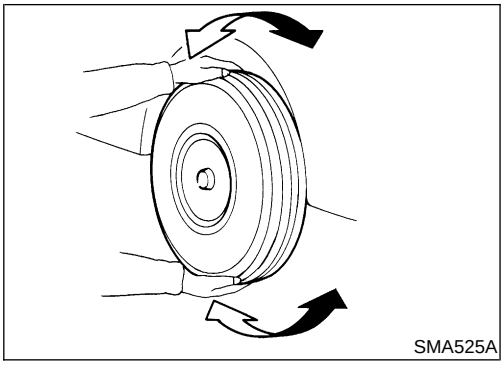
SMA525A

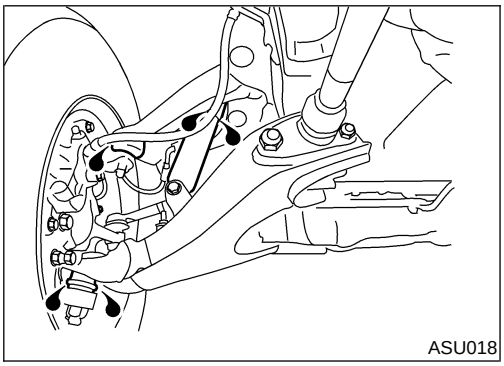
ASU018

On-vehicle Service

FRONT SUSPENSION PARTS

NGSU0006

Check front suspension parts for excessive play, cracks, wear and other damage.

- Shake each front wheel to check for excessive play.
  If looseness is noted, adjust wheel bearing end play, then check ball joint end play. Refer to “INSPECTION”, SU-18.
- Make sure that the cotter pin is inserted.
- Retighten all nuts and bolts to the specified torque.
  : Refer to “FRONT SUSPENSION”, SU-12.
- Check shock absorber for oil leakage and other damage.
- Check suspension ball joint for grease leakage and ball joint dust cover for cracks and other damage.

FRONT WHEEL ALIGNMENT

NGSU0007

Before checking front wheel alignment, make a preliminary inspection (Unladen*).
*: Fuel, radiator coolant and engine oil full. Spare tire, jack, hand tools and mats in designated positions.

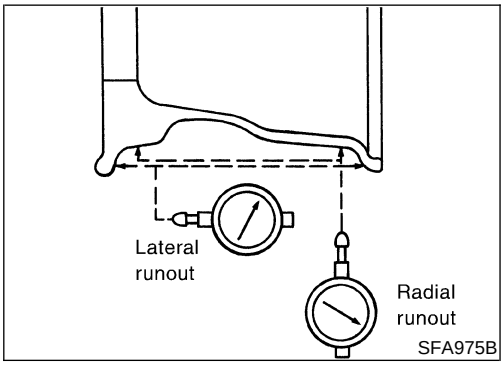

SFA975B

Preliminary Inspection

NGSU0007S01

Aluminum Wheel

NGSU0007S0101

1. Check tires for wear and proper inflation.
2. Check wheels for deformation, cracks and other damage.
   If deformed, remove wheel and check wheel runout.
   1) Remove tire from aluminum wheel and mount wheel on a tire balance machine.
   2) Set dial indicator as shown in the illustration.
      Wheel runout (Dial indicator value):
      Refer to “WHEEL RUNOUT AVERAGE”, SU-18.
3. Check front wheel bearings for looseness.
4. Check front suspension for looseness.
5. Check steering linkage for looseness.
6. Check that front shock absorbers work properly by using the standard bounce test.

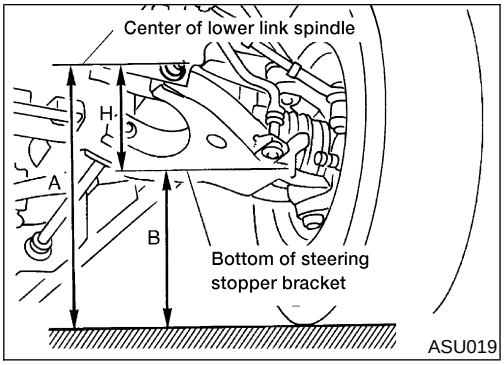

7. Check vehicle posture (Unladen): H = A − B mm (in)

   Refer to "2WD Models", SU-19 or "4WD Models", SU-20.

a. Exercise the front suspension by bouncing the front of the vehicle 4 or 5 times to ensure that the vehicle is in a neutral height attitude.

b. Measure wheel alignment.

   Refer to "2WD Models", SU-19 or "4WD Models", SU-20.

c. If wheel alignment is not as specified, adjust vehicle posture.

   Refer to "2WD Models", SU-19 or "4WD Models", SU-20.

d. Adjust wheel alignment.

   Refer to "2WD Models", SU-19 or "4WD Models", SU-20.

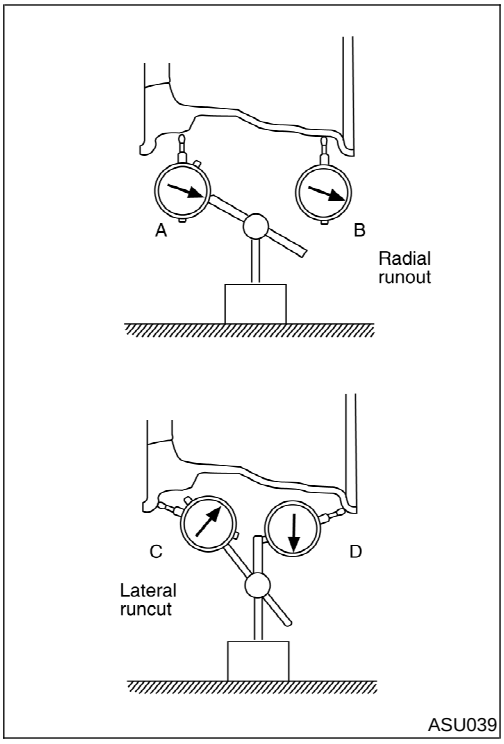

Steel Wheel

NGSU0007S0102

1. Check tires for wear and proper inflation.
2. Check wheels for deformation, cracks and other damage.
   If deformed, remove wheel and check wheel runout.

1) Remove tire from steel wheel and mount wheel on a tire balance machine.
2) Set two dial indicator as shown in the illustrations.
3) Set each dial indicator to 0.
4) Rotate wheel, and check dial indicators at several points around the circumference of the wheel.
5) Calculate runout at each point as shown below.
   Radial runout = (A+B)/2
   Lateral runout = (C+D)/2
6) Select maximum positive runout value and the maximum negative value.
   Add the two values to determine total runout.
   In case a positive or negative value is not available, use the maximum value (negative or positive) for total runout.
   If the total runout value exceeds the limit, replace steel wheel.

- Refer to "WHEEL RUNOUT AVERAGE", SU-18.

3. Check front wheel bearings for looseness.
4. Check front suspension for looseness.
5. Check steering linkage for looseness.
6. Check that front shock absorbers work properly by using the standard bounce test.

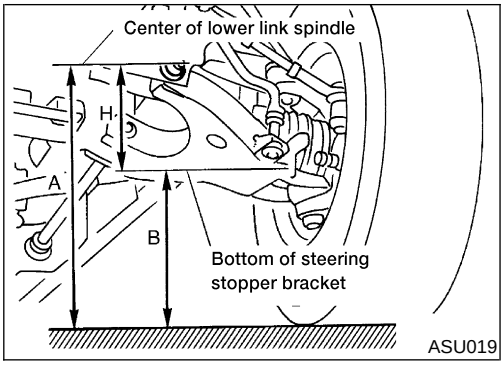

7. Check vehicle posture (Unladen): H = A − B mm (in)

   Refer to "2WD Models", SU-19 or "4WD Models", SU-20.

a. Exercise the front suspension by bouncing the front of the vehicle 4 or 5 times to ensure that the vehicle is in a neutral height attitude.

b. Measure wheel alignment.

   Refer to "2WD Models", SU-19 or "4WD Models", SU-20.

c. If wheel alignment is not as specified, adjust vehicle posture.

   Refer to "2WD Models", SU-19 or "4WD Models", SU-20.

d. Adjust wheel alignment.

   Refer to "2WD Models", SU-19 or "4WD Models", SU-20.

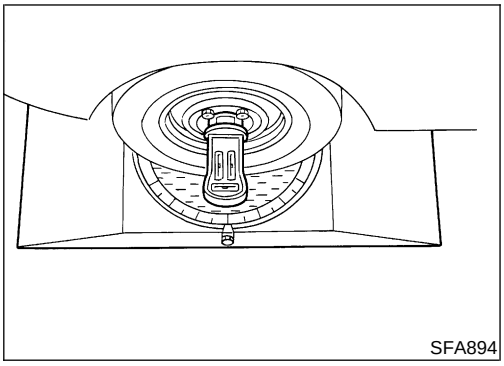

Camber, Caster and Kingpin Inclination

NGSU0007S02

Before checking camber, caster or kingpin inclination, move vehicle up and down on turning radius gauge to minimize friction. Ensure that the vehicle is in correct posture.

- Measure camber, caster and kingpin inclination of both right and left wheels with a suitable alignment gauge and adjust in accordance with the following procedures.

  Camber, Caster and Kingpin inclination:

  Refer to "2WD Models", SU-19 or "4WD Models", SU-20.

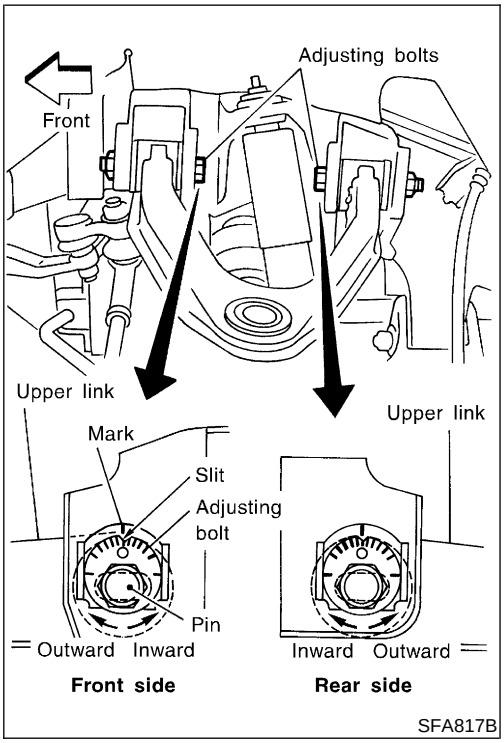

- In the following two cases, temporarily tighten the adjusting bolts while aligning the matching marks with the slits as shown in the figure at the left and measure the camber, caster and kingpin inclination:

a) When replacing the upper link or other suspension parts with new ones

b) When matching marks were not painted on adjusting bolts before suspension disassembly procedures

- If matching marks were already painted during suspension disassembly, align the matching marks with the slits, then temporarily tighten the adjusting bolts. Measure the camber, caster and kingpin inclination.

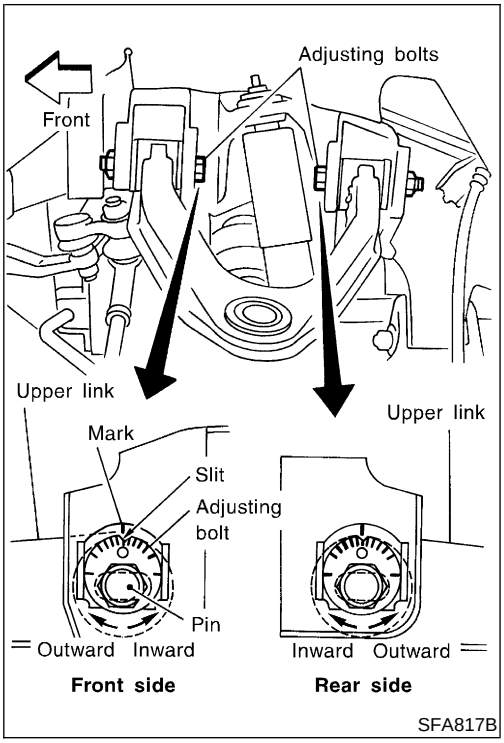

Adjustment

NGSU0007S03

1. Both camber and caster angles are adjusted by adjusting bolts.

- If the kingpin inclination is outside specifications, check the front suspension parts for wear or damage. Replace faulty parts with new ones.

2. From the measured value, read the coordinate (or: graduation) at the intersecting point in the graph.

a. If the coordinate (or: graduation) at the intersecting point is positive, move the pin outward by turning the corresponding adjusting bolt by the indicated graduation.

b. If the coordinate (or: graduation) at the intersecting point is negative, move the pin inward by turning the corresponding adjusting bolt by the indicated graduation.
After properly moving the pin(s), tighten the front and rear adjusting bolts to specifications.

3. Re-measure to ensure that the camber and caster are within specified tolerances.
[Example]

a. Measured values corresponding with the two values indicated below: (See chart for 4WD model.)
Camber angle: −0°06′ (−0.10°)
Caster angle: 2°10′ (2.17°)

b. Apply the above two values to the graph and determine point "A".

c. The coordinate (or: graduation) indicates that both the front and rear adjusting bolts must be turned outward by 3 graduations.
Turn the adjusting bolts by the amount corresponding with the 3 graduations.

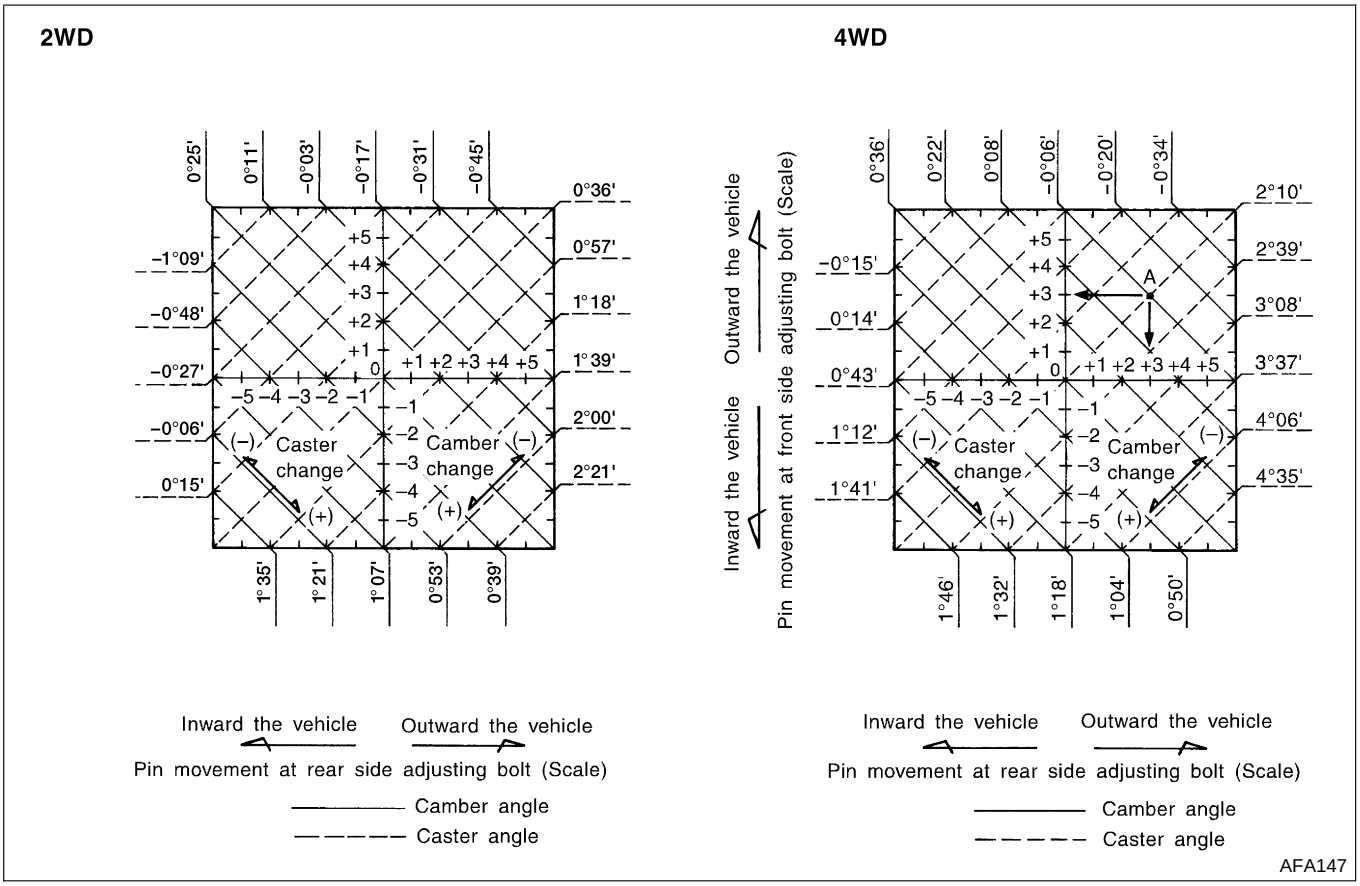

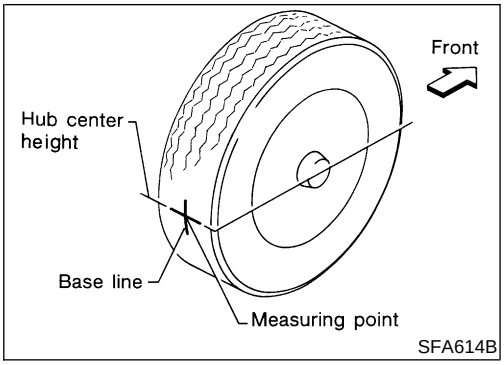

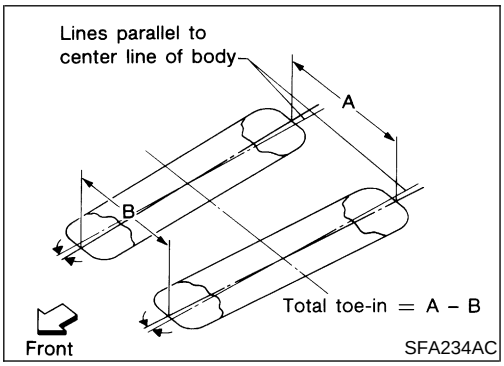

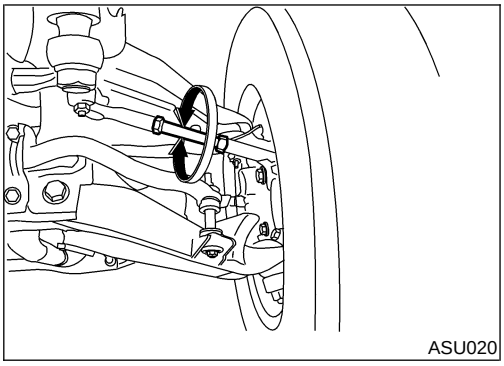

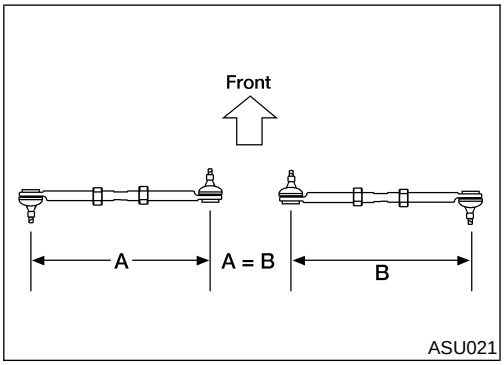

Toe-in

NGSU0007S04

Measure toe-in using the following procedure.

WARNING:

- **Always perform the following procedure on a flat surface.**
- **Make sure that no one is in front of the vehicle before pushing it.**

1. Bounce front of vehicle up and down to stabilize the posture.
2. Push the vehicle straight ahead about 5 m (16 ft).
3. Put a mark on base line of the tread (rear side) of both tires at the same height of hub center. This mark is a measuring point.
4. Measure distance "A" (rear side).
5. Push the vehicle slowly ahead to rotate the wheels 180 degrees (1/2 turn).

- **If the wheels have rotated more than 180 degrees (1/2 turn), try the above procedure again from the beginning. Never push vehicle backward.**

6. Measure distance "B" (front side).

Total toe-in:

Refer to "2WD Models", SU-19 or "4WD Models", SU-20.

7. Adjust toe-in by varying the length of both steering tie-rods.

a. Loosen lock nuts.

b. Adjust toe-in by turning both the left and right tie-rod tubes equal amounts.

Make sure that the tie-rod bars are screwed into the tie-rod tube more than 35 mm (1.38 in).
Make sure that the tie-rods are the same length.

Standard length (A = B):

2WD KA24DE models

343.9 mm (13.54 in)

2WD and 4WD VG33E models

297.6 mm (11.72 in)

c. Tighten clamp bolts or lock nuts, then torque them.

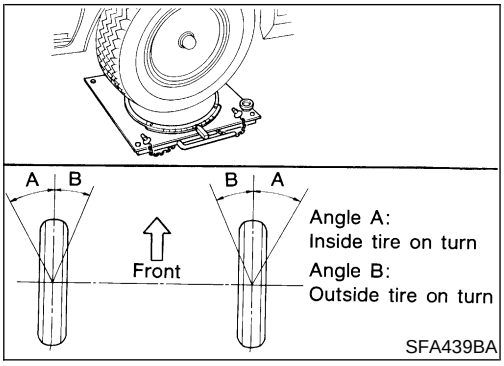

Front Wheel Turning Angle

=NGSU0007S05

1. Set wheels in straight-ahead position. Then move vehicle forward until front wheels rest properly on turning radius gauge.
2. Rotate steering wheel all the way right and left; measure turning angle.

- On power steering models, turn steering wheel to full lock and apply force (at circumference of steering wheel) of 98 to 147 N (10 to 15 kg, 22 to 33 lb) with engine at idle.
- **Do not hold the steering wheel at full lock for more than 15 seconds.**

Wheel turning angle (Full turn):

Refer to "2WD Models", SU-19 or "4WD Models", SU-20.

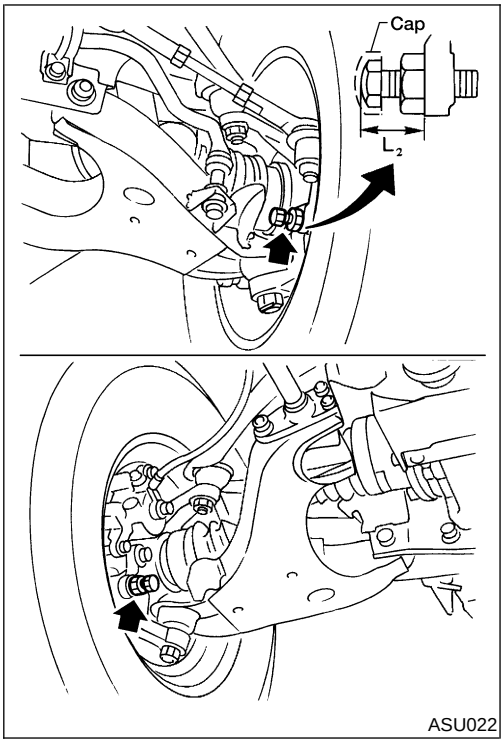

3. Adjust stopper bolt if necessary.

Standard length "L_1" (2WD KA24DE models):

20 mm (0.79 in)

(Length before cap is mounted)

Standard length "L_2" (2WD & 4WD VG33E models):

Except P265/70R15 tire:

26.5 mm (1.043 in)

(Length before cap is mounted)

P265/70R15 tire:

30.0 mm (1.2 in)

(Length before cap is mounted)

Components

NGSU0008

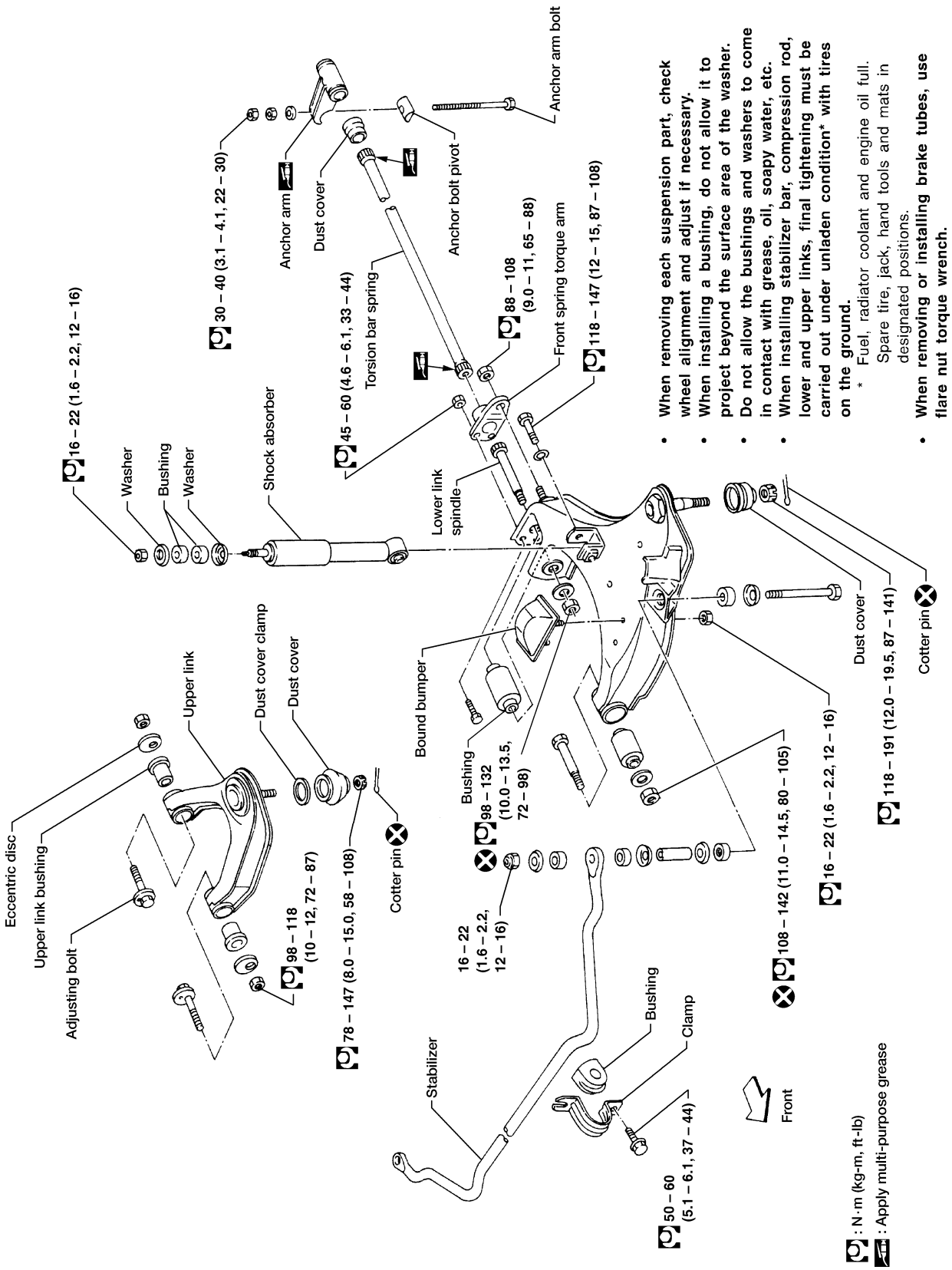

- **When removing each suspension part, check wheel alignment and adjust if necessary.**
- **When installing a bushing, do not allow it to project beyond the surface area of the washer.**
- **Do not allow the bushings and washers to come in contact with grease, oil, soapy water, etc.**
- **When installing stabilizer bar, compression rod, lower and upper links, final tightening must be carried out under unladen condition* with tires on the ground.**
  - * Fuel, radiator coolant and engine oil full. Spare tire, jack, hand tools and mats in designated positions.
- **When removing or installing brake tubes, use flare nut torque wrench.**

SEC. 401

WSU010

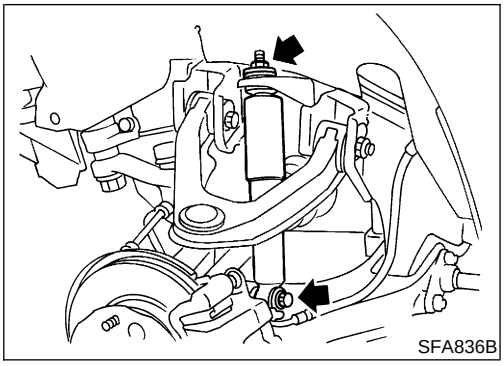
SFA836B

Shock Absorber

REMOVAL AND INSTALLATION

NGSU0009

1. Support lower link with jack.
2. Remove bolt and nut that hold shock absorber.
3. Tighten upper nut and lower bolt to specification. Refer to “Components”, SU-12.

INSPECTION

NGSU0010

Except for nonmetallic parts, clean all parts with suitable solvent and dry with compressed air.
Use compressed air to blow dirt and dust off of nonmetallic parts.

- Check for oil leakage and cracks. Replace if necessary.
- Check piston rod for cracks, deformation and other damage. Replace if necessary.
- Check rubber parts for wear, cracks, damage and deformation. Replace if necessary.

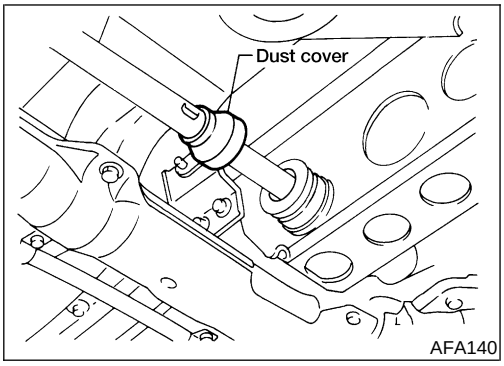

AFA140

Torsion Bar Spring

REMOVAL

NGSU0011

1. Move dust cover.

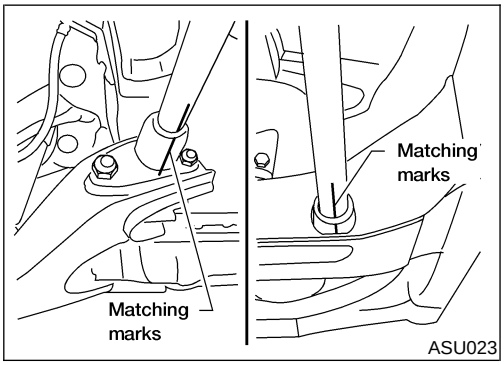

ASU023

2. Paint matching marks on the torsion bar spring and the corresponding arm.

Always use paint to place the matching mark; do not scribe the affected parts.

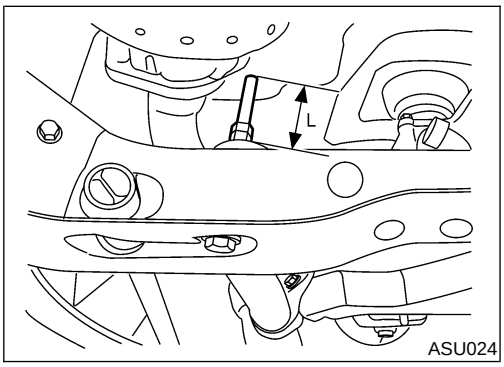

ASU024

3. Measure anchor bolt protrusion “L” and remove the lock nut and adjusting nut.

   Standard length “L” = 68 mm (2.68 in)

Before removing the nuts, ensure that twisting force is eliminated from the torsion bar springs.

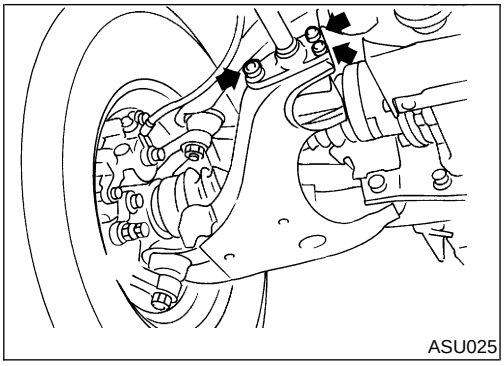
ASU025

4. Remove torsion bar spring.
- Remove torque arm fixing nuts, then withdraw torsion bar spring forward with torque arm.

INSPECTION

NGSU0012

- Check torsion bar spring for wear, twist, bend and other damage.
- Check serrations of each part for cracks, wear, twist and other damage.
- Check dust cover for cracks.

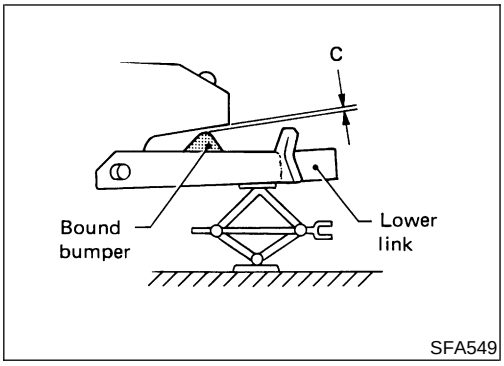

SFA549

INSTALLATION AND ADJUSTMENT

NGSU0013

Adjustment of anchor arm adjusting nut is in tightening direction only.
Do not adjust by loosening anchor arm adjusting nut.

1. Coat multi-purpose grease on the serration of torsion bar spring.
2. Place lower link in the position where bound bumper clearance "C" is 0.

   Clearance "C": 0 mm (0 in)

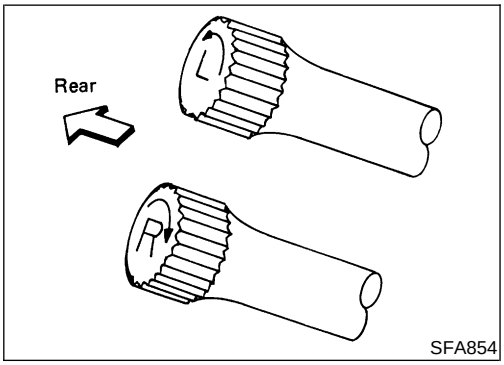

SFA854

3. Install torsion bar spring with torque arm.

Be sure to install right and left torsion bar springs correctly.

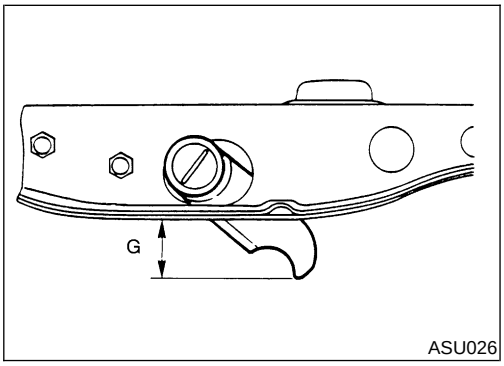

ASU026

4. While aligning the anchor arm with the matching mark, install the anchor arm to the torsion bar spring.
   If a new torsion bar spring or anchor arm is installed, adjust anchor arm length to the dimension indicated in the figure at the left.

   Standard length "G":
   2WD KA24DE models
   6 - 18 mm (0.24 - 0.71 in)
   2WD and 4WD VG33E models
   25 - 39 mm (0.98 - 1.54 in)

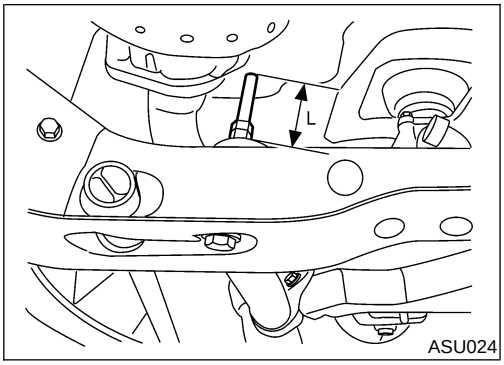

5. Tighten the adjusting nut so the torsion bar length corresponds with dimension "L" previously measured during torsion bar removal. Tighten the lock nut to specifications.
   If a new torsion bar spring or anchor arm is installed, tighten the adjusting nut to the dimension indicated in the figure at the left, then tighten the lock nut to specifications.
   Standard length "L": 68 mm (2.68 in)

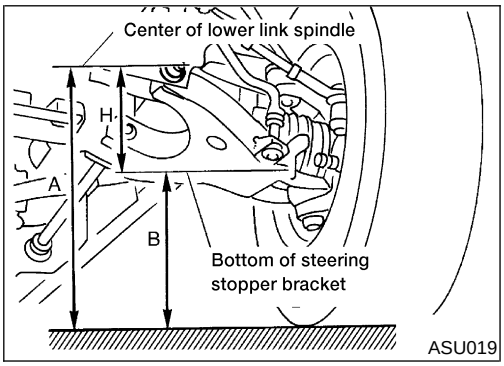

6. Bounce vehicle with tires on ground (Unladen) to eliminate friction of suspension.
7. Measure vehicle posture "H".
a. Exercise the front suspension by bouncing the front of the vehicle 4 or 5 times to ensure that the vehicle is in a neutral height attitude.
b. Measure vehicle posture ... Dimension "H".
   H = A − B mm (in) "Unladen"
   Refer to "WHEEL ALIGNMENT (UNLADEN)", SU-19.
8. If height of the vehicle is not within allowable limit, adjust vehicle posture.
   Refer to "WHEEL ALIGNMENT (UNLADEN)", SU-19.
9. Check wheel alignment if necessary.
   Refer to "WHEEL ALIGNMENT (UNLADEN)", SU-19.

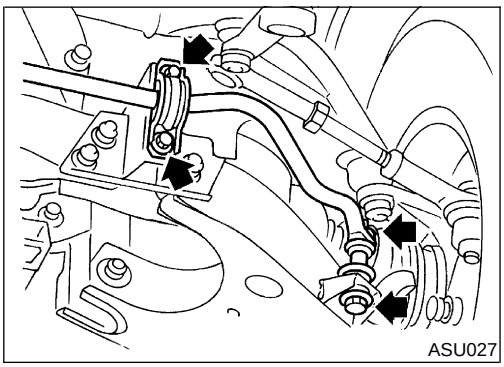

Stabilizer Bar

REMOVAL

NGSU0014

- Remove stabilizer bar connecting bolts and clamp bolts.

INSPECTION

NGSU0015

- Check stabilizer bar for twist and deformation.
  Replace if necessary.
- Check rubber bushing for cracks, wear and deterioration.
  Replace if necessary.

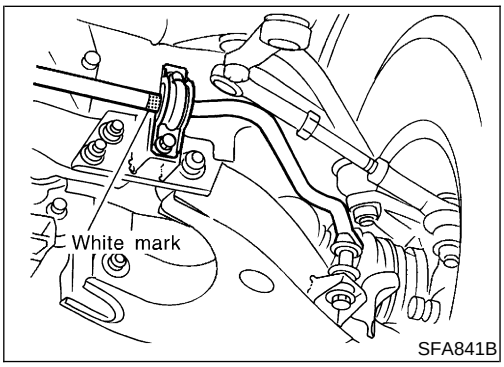

INSTALLATION

NGSU0016

- Install bushing outside of white mark painted on stabilizer.
- Refer to "Components", SU-12.

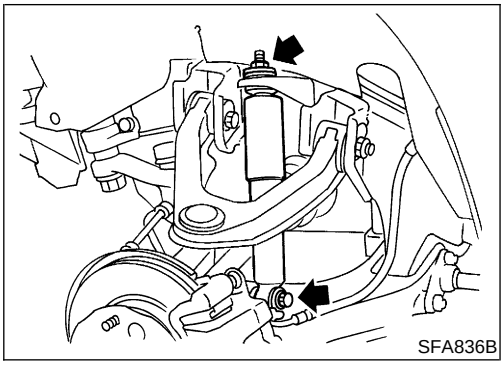

Upper Link

REMOVAL

NGSU0017

1. Remove shock absorber. Refer to “Shock Absorber”, SU-13.
2. Separate upper ball joint stud from knuckle spindle.
   Support lower link with jack.
   Refer to ***AX-14***, “Knuckle Spindle”.

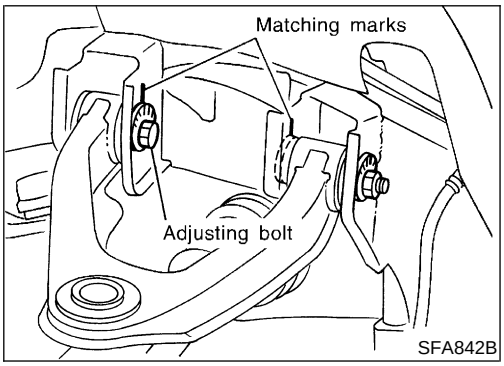

3. Put matching marks on adjusting bolts and remove adjusting bolts.

INSTALLATION

NGSU0018

1. While aligning the adjusting bolts with the matching marks, install the upper link.
   If a new upper link or any other suspension part is installed, align the matching mark with the slit as indicated in the figure at the left, then install the upper link.
   Refer to “FRONT WHEEL ALIGNMENT”, SU-6.
2. Install shock absorber.
3. Tighten adjusting bolts under unladen condition (fuel, radiator coolant, and engine oil full; spare tire, jack, hand tools, and mats in designated positions) with tires on ground.
4. After installing, check wheel alignment. Adjust if necessary. Refer to “FRONT WHEEL ALIGNMENT”, SU-6.

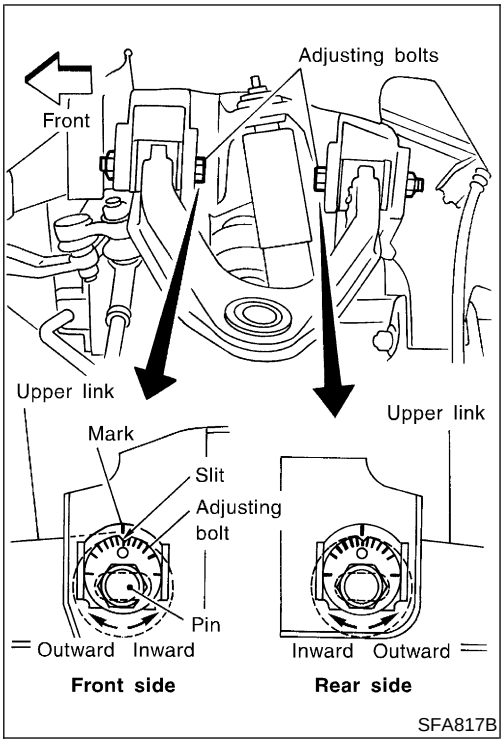

DISASSEMBLY

NGSU0019

- Press out upper link bushings.

INSPECTION

NGSU0020

- Check adjusting bolts and rubber bushings for damage. Replace if necessary.
- Check upper link for deformation and cracks. Replace if necessary.

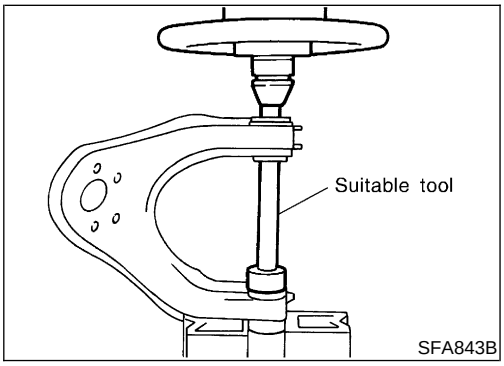

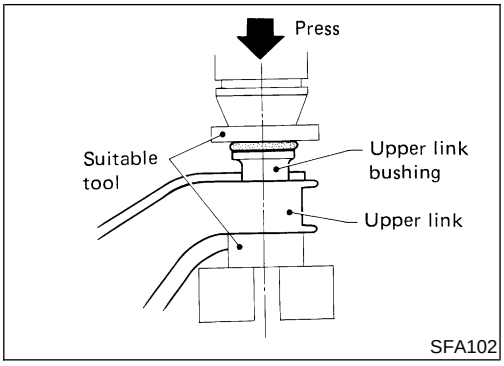

ASSEMBLY

NGSU0021

1. Apply soapsuds to rubber bushing.
2. Press upper link bushing.

Press bushing so that the flange of bushing securely contacts the end surface of the upper link collar.

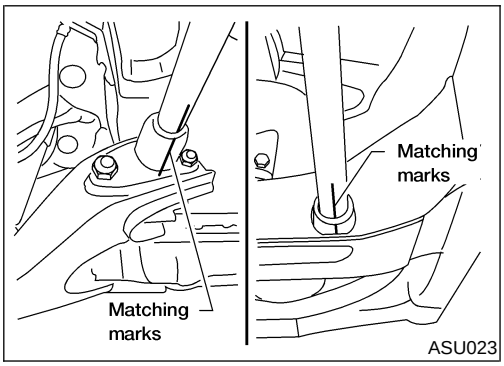

Lower Link

REMOVAL AND INSTALLATION

NGSU0024

1. Remove torsion bar spring. Refer to "REMOVAL", SU-13.

Make matching marks and measure dimension "L" when loosening adjusting nut until there is no tension on torsion bar spring.

Standard length "L": 68 mm (2.68 in)

2. Remove shock absorber lower fixing bolt.
3. Remove stabilizer bar connecting bolt.
4. Separate drive shaft from front final drive (4WD models). Refer to ***AX-17***, "Drive Shaft".
5. Separate lower link ball joint from knuckle spindle. Refer to ***AX-14***, "Knuckle Spindle".

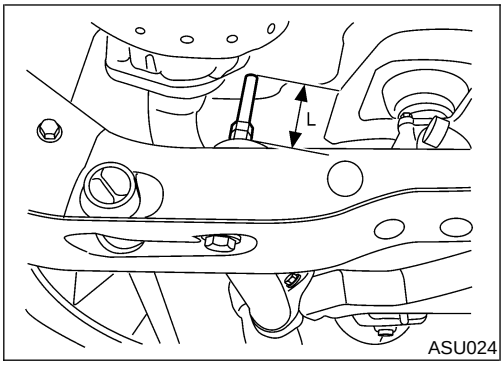

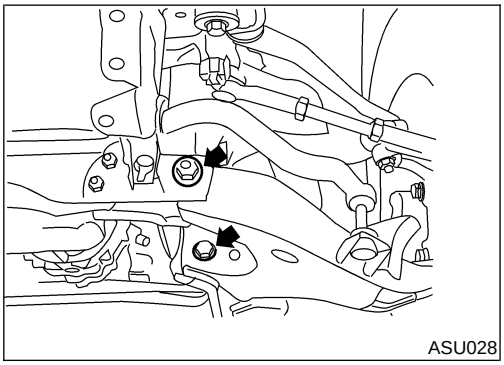

6. Remove front lower link fixing bolts.

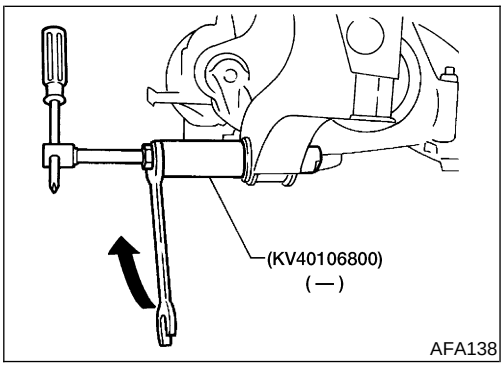

7. Remove bushing of lower link spindle from frame with Tool.
8. After installing lower link, adjust wheel alignment and vehicle height. Refer to "FRONT WHEEL ALIGNMENT", SU-6.

INSPECTION

NGSU0025

Lower Link and Lower Link Spindle

NGSU0025S01

- Check for deformation and cracks. Replace if necessary.

Lower Link Bushing

NGSU0025S02

- Check for distortion and damage. Replace if necessary.

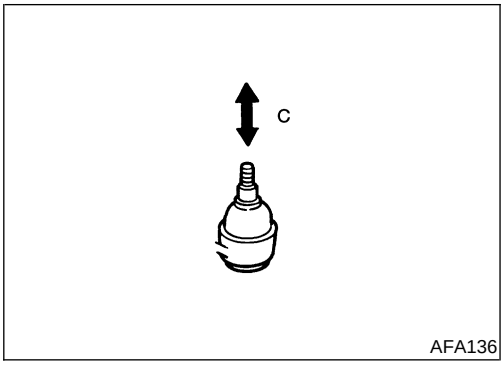

Upper Ball Joint and Lower Ball Joint

REMOVAL AND INSTALLATION

NGSU0026

- Separate knuckle spindle from upper and lower links. Refer to ***AX-14***, “Knuckle Spindle”.

INSPECTION

NGSU0027

- Check joints for play. If ball is worn and play in axial direction is excessive or joint is hard to swing, replace as a upper link or lower link.

  Axial end play “C”:

  Upper link

  0 mm (0 in)

  Lower link

  2WD KA24DE models 1.3 mm (0.051 in) or less

  2WD & 4WD VG33E models 0.2 mm (0.008 in) or less

- Check dust cover for damage.
  Replace dust cover and dust cover clamp if necessary.

Service Data and Specifications (SDS)

GENERAL SPECIFICATIONS (FRONT)

NGSU0028

Suspension type	Independent double wishbone torsion bar spring
Shock absorber type	Double-acting hydraulic
Stabilizer	Standard equipment

WHEEL RUNOUT AVERAGE

NGSU0029

Wheel type	Aluminum		Steel
	16 inches	15 inches	
Radial runout limit mm (in)	0.5 (0.020)	0.3 (0.012)	0.5 (0.020)
Lateral runout limit mm (in)	0.5 (0.020)	0.3 (0.012)	0.8 (0.031)

UPPER BALL JOINT

NGSU0030

Vertical end play “C” mm (in)	0 (0)

LOWER BALL JOINT

NGSU0031

Applied model	2WD	4WD
Vertical end play “C” mm (in)	1.3 (0.051) or less	0.2 (0.008) or less

WHEEL ALIGNMENT (UNLADEN*1)
2WD Models

=NGSU0032

NGSU0032S01

Camber Degree minute (Decimal degree)			Minimum		0°03′ (0.05°)
			Nominal		0°33′ (0.55°)
			Maximum		1°03′ (1.05°)
			Left and right difference		45′ (0.75°) or less
Caster Degree minute (Decimal degree)			Minimum		2°04′ (2.07°)
			Nominal		2°34′ (2.57°)
			Maximum		3°04′ (3.07°)
			Left and right difference		45′ (0.75°) or less
Kingpin inclination Degree minute (Decimal degree)			Minimum		10°23′ (10.38°)
			Nominal		10°53′ (10.88°)
			Maximum		11°23′ (11.38°)
Total toe-in	Distance (A − B) mm (in)		Radial tire	Minimum	3 (0.12)
				Nominal	4 (0.16)
				Maximum	5 (0.20)
	Angle (left plus right) Degree minute (Decimal degree)		Radial tire	Minimum	15′ (0.25°)
				Nominal	20′ (0.33°)
				Maximum	25′ (0.42°)
Wheel turning angle	Full turn*2	Inside Degree minute (Decimal degree)			Except P265/70R15 / P265/70R15
			Minimum		32°48′ (32.80°) / 30°48′ (30.80°)
			Nominal		34°48′ (34.80°) / 32°48′ (32.80°)
			Maximum		34°48′ (34.80°) / 32°48′ (32.80°)
		Outside Degree minute (Decimal degree)	Minimum		31°00′ (31.00°) / 28°42′ (28.70°)
			Nominal		33°00′ (33.00°) / 30°42′ (30.70°)
			Maximum		33°00′ (33.00°) / 30°42′ (30.70°)
Vehicle posture	Lower arm pivot height (H) mm (in)				37.7 - 41.7 (1.484 - 1.642)

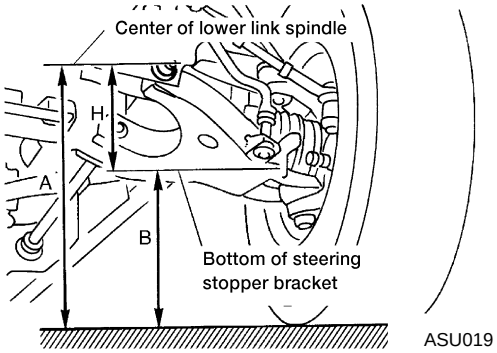

*1: Fuel, radiator coolant and engine oil full. Spare tire, jack, hand tools and mats in designated positions.

*2: On power steering models, wheel turning force (at circumference of steering wheel) of 98 to 147 N (10 to 15 kg, 22 to 33 lb) with engine idle.

4WD Models

=NGSU0032S02

Camber Degree minute (Decimal degree)			Minimum		0°06′ (0.10°)
			Nominal		0°36′ (0.60°)
			Maximum		1°06′ (1.10°)
			Left and right difference		45′ (0.75°) or less
Caster Degree minute (Decimal degree)			Minimum		1°40′ (1.67°)
			Nominal		2°10′ (2.17°)
			Maximum		2°40′ (2.67°)
			Left and right difference		45′ (0.75°) or less
Kingpin inclination Degree minute (Decimal degree)			Minimum		10°18′ (10.30°)
			Nominal		10°48′ (10.80°)
			Maximum		11°18′ (11.30°)
Total toe-in	Distance (A − B) mm (in)		Radial tire	Minimum	3 (0.12)
				Nominal	4 (0.16)
				Maximum	5 (0.20)
	Angle (left plus right) Degree minute (Decimal degree)		Radial tire	Minimum	15′ (0.25°)
				Nominal	20′ (0.33°)
				Maximum	25′ (0.42°)
Wheel turning angle	Full turn*2	Inside Degree minute (Decimal degree)			Except P265/70R15 / P265/70R15
			Minimum		33°06′ (33.10°) / 31°00′ (31.00°)
			Nominal		35°06′ (35.10°) / 33°00′ (33.00°)
			Maximum		35°06′ (35.10°) / 33°00′ (33.00°)
		Outside Degree minute (Decimal degree)	Minimum		31°12′ (31.20°) / 29°00′ (29.00°)
			Nominal		33°12′ (33.20°) / 31°00′ (31.00°)
			Maximum		33°12′ (33.20°) / 31°00′ (31.00°)
Vehicle posture	Lower arm pivot height (H) mm (in)				45.5 - 49.5 (1.791 - 1.949)

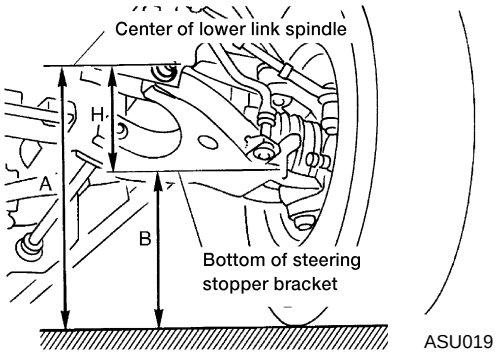

*1: Fuel, radiator coolant and engine oil full. Spare tire, jack, hand tools and mats in designated positions.

*2: On power steering models, wheel turning force (at circumference of steering wheel) of 98 to 147 N (10 to 15 kg, 22 to 33 lb) with engine idle.

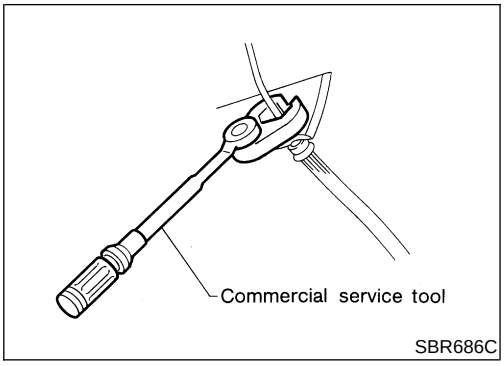

Precautions

PRECAUTIONS

NGSU0033

- **When installing rubber parts, final tightening must be carried out under unladen condition* with tires on ground.**
  ***: Fuel, radiator coolant and engine oil full. Spare tire, jack, hand tools and mats in designated positions.**
- **Use flare nut wrench when removing and installing brake tubes.**
- **After installing removed suspension parts, check wheel alignment and adjust if necessary.**
- **Always torque brake lines when installing.**

Preparation

COMMERCIAL SERVICE TOOLS

NGSU0035

Tool name	Description	
1 Flare nut crowfoot 2 Torque wrench	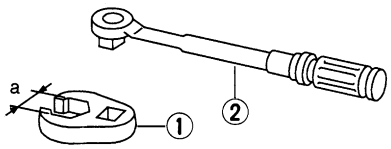 NT360	Removing and installing each brake piping **a: 10 mm (0.39 in)**

Noise, Vibration and Harshness (NVH) Troubleshooting

=NGSU0036

Refer to “Noise, Vibration and Harshness (NVH) Troubleshooting”, SU-3.

Components

NGSU0037

2WD KA24DE MODELS

NGSU0037S03

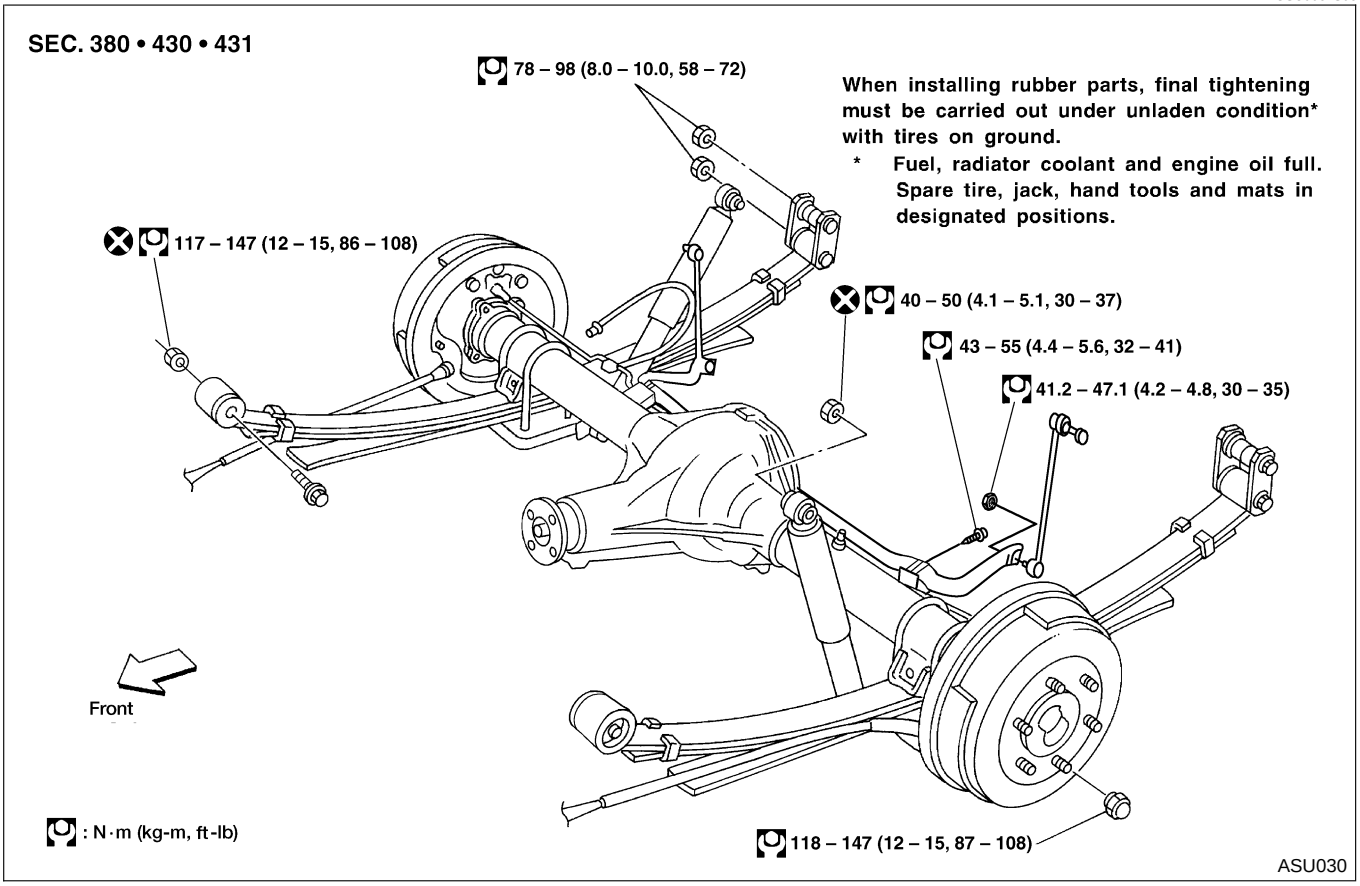

2WD VG33E MODELS

NGSU0037S04

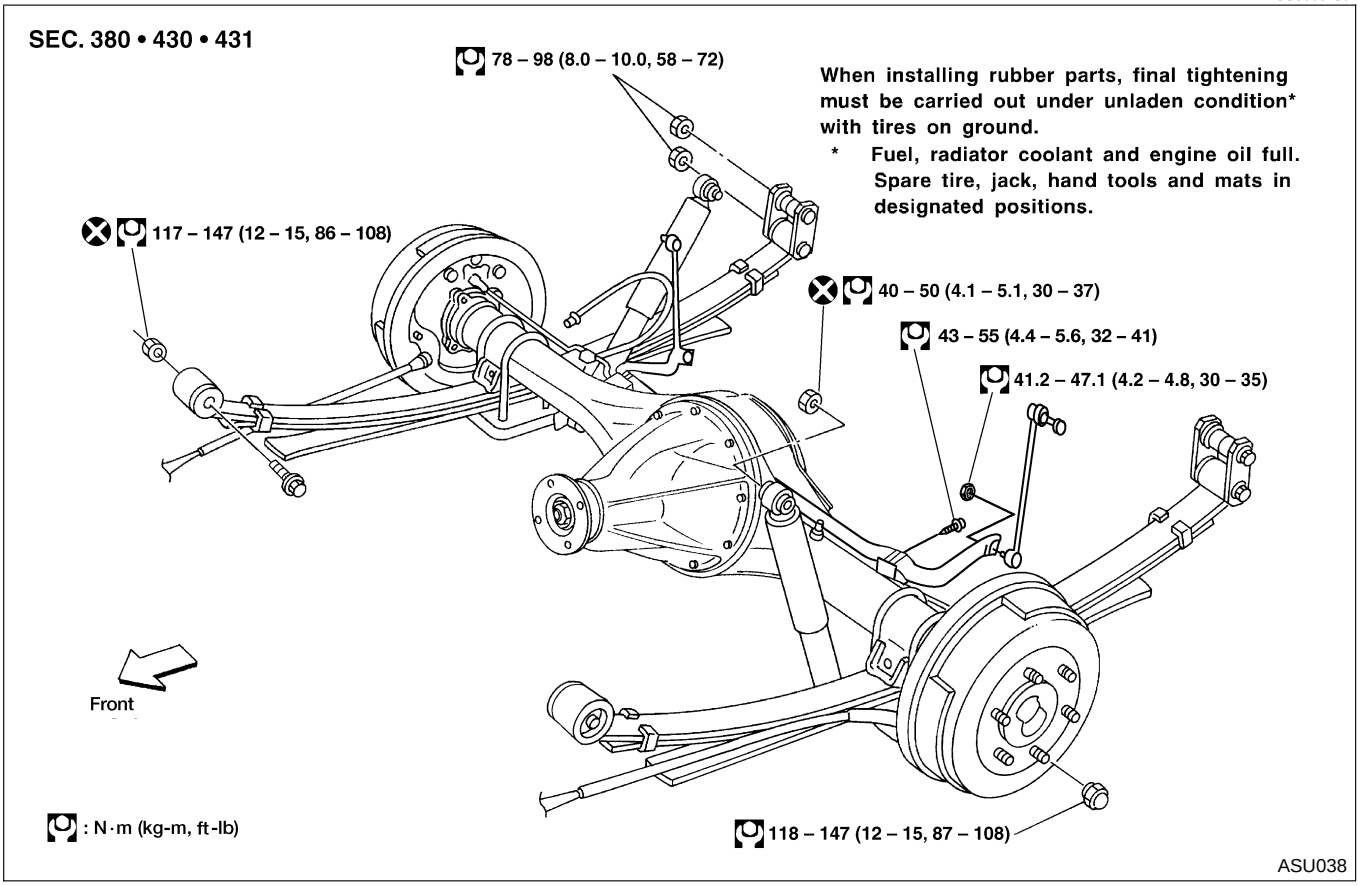

4WD VG33E MODELS

NGSU0037S05

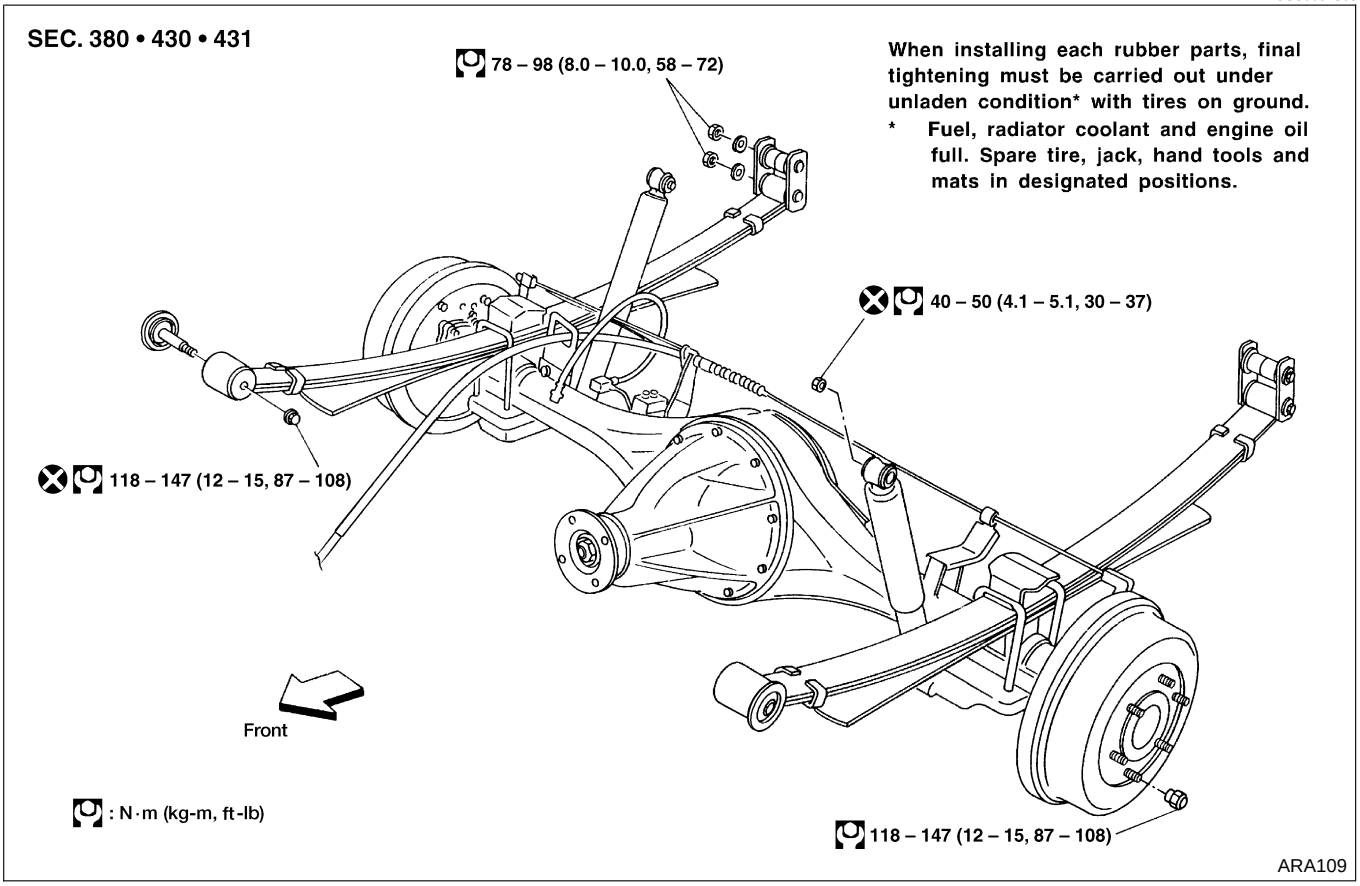

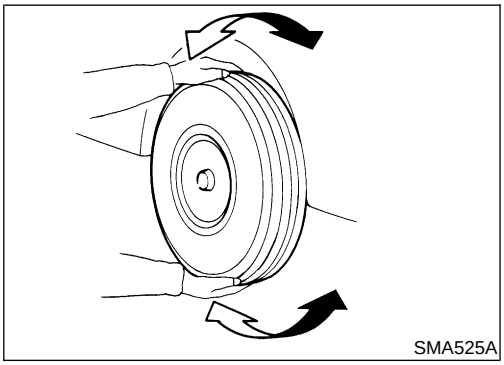

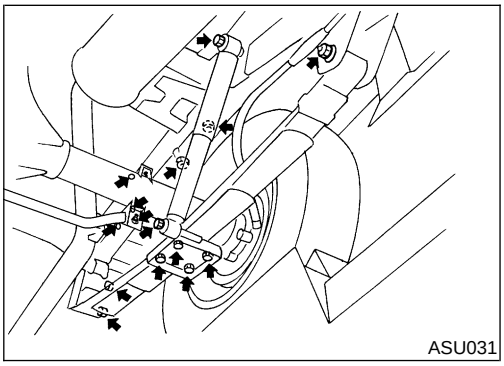

On-vehicle Service

REAR SUSPENSION PARTS

NGSU0038

Check rear suspension parts for excessive play, wear and damage.

- Shake each rear wheel to check for excessive play.

- Retighten all nuts and bolts to the specified torque.

  : Refer to "REMOVAL AND INSTALLATION", SU-25.

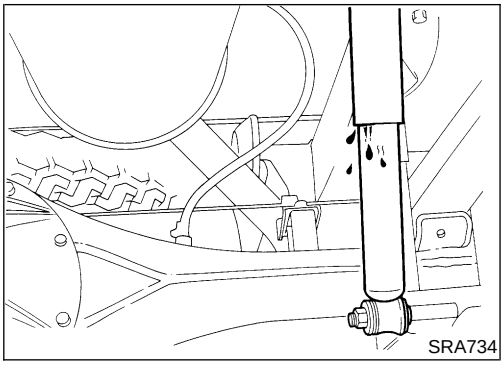

- Check shock absorber for oil leakage and other damage.
- Check shock absorber bushing for excessive wear and other damage.

Removal and Installation

NGSU0039

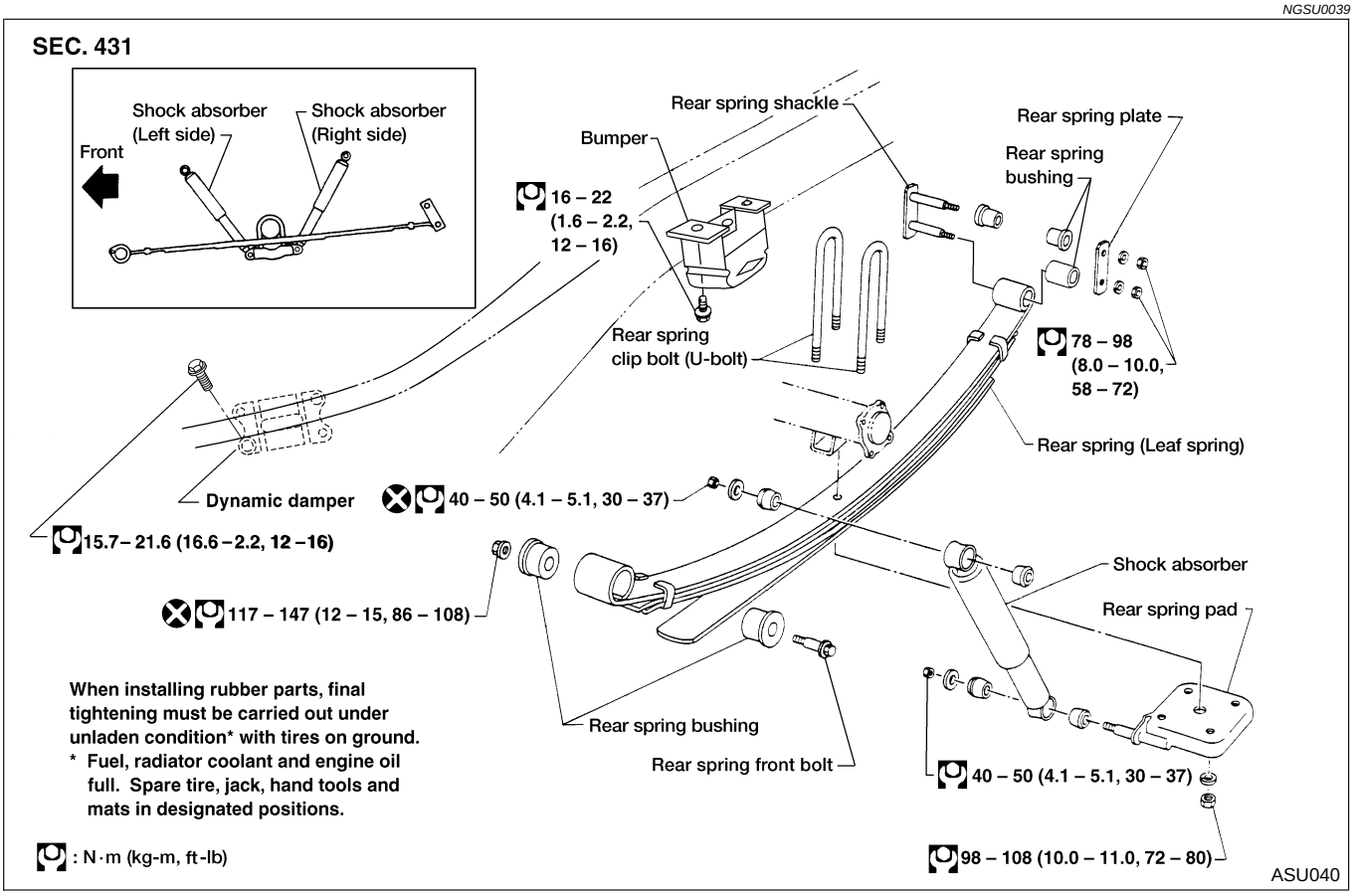

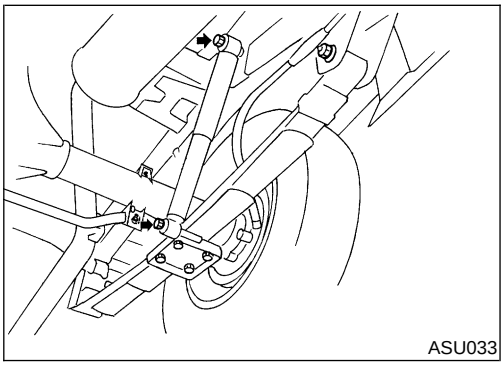

Shock Absorber

REMOVAL AND INSTALLATION

NGSU0040

- Remove shock absorber by disconnecting upper and lower end.

INSPECTION

NGSU0041

- If oil leakage, cracks and deformation occurs, replace shock absorber assembly.
- If rubber bushings are cracked and deformed, replace rubber bushings.

Leaf Spring

REMOVAL

NGSU0042

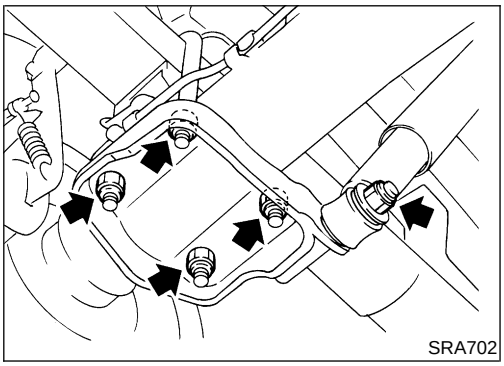
SRA702

1. Disconnect shock absorber lower end, and remove U-bolts.

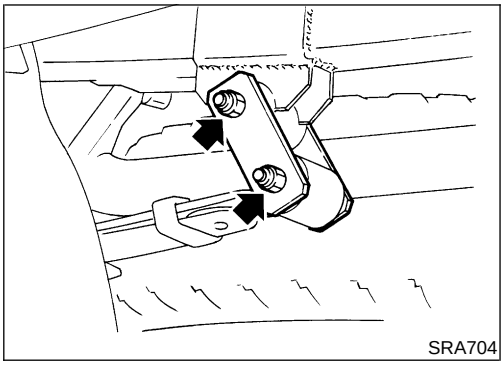
SRA704

2. Disconnect spring shackle.

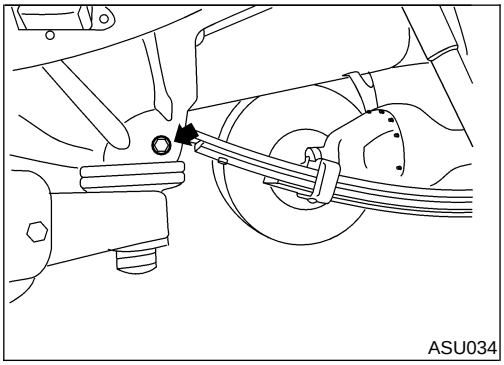
ASU034

3. Disconnect front pin.

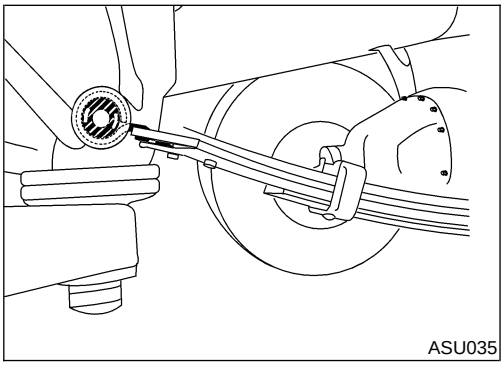
ASU035

INSPECTION

NGSU0043

- Check leaf spring for cracks. Replace if necessary.
- Check front bracket and pin, shackle, U-bolts and spring pad for wear, cracks, straightness and damaged threads. Replace if necessary.
- Check all bushings for deformation and cracks. Replace if necessary.
  (4WD models: Rear spring front bushing)
  Make sure that front bushing is properly installed.

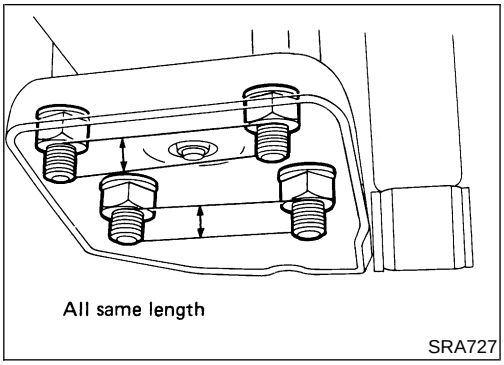

SRA727

INSTALLATION

NGSU0044

1. Apply soapsuds to rubber bushing.
2. Install spring shackle and front pin, and finger tighten the nuts.
3. Install spring pad and nuts under leaf spring or axle case.
4. Tighten U-bolt mounting nuts diagonally.

Tighten U-bolts so that the lengths of all U-bolts under spring pad are the same.

5. Install shock absorber, and finger tighten the nuts.

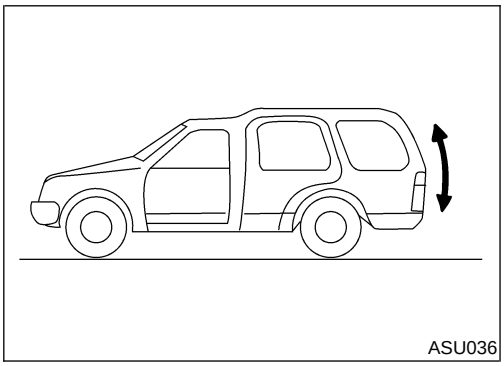
ASU036

6. Remove stands and bounce the vehicle to stabilize suspension. (Unladen)

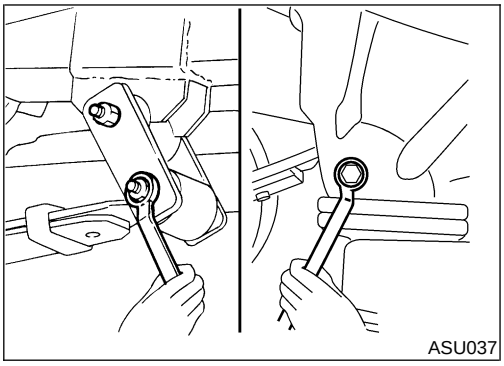
ASU037

7. Tighten spring shackle nuts, front pin nuts and shock absorber nuts.

When installing rubber parts, final tightening must be carried out under unladen condition* with tires on the ground.
*** Fuel, radiator coolant and engine oil full. Spare tire, jack, hand tools and mats in designated positions.**

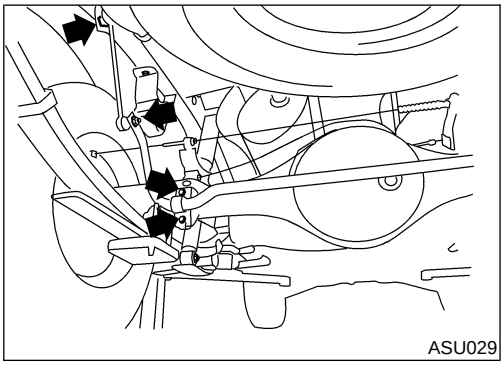
ASU029

Stabilizer Bar

REMOVAL

NGSU0046

- Remove stabilizer bar connecting bolts and clamp bolts.

INSPECTION

NGSU0047

- Check stabilizer bar for twist and deformation.
- Check rubber bushing for cracks, wear and deterioration. Replace if necessary.

INSTALLATION

NGSU0048

- Install bushing outside of white mark painted on stabilizer.
- Refer to "Components", SU-22.

Service Data and Specifications (SDS)

GENERAL SPECIFICATIONS (REAR)

NGSU0045

Suspension type	Rigid axle with semi-elliptic leaf spring
Shock absorber type	Double-acting hydraulic