ENGINE LUBRICATION & COOLING SYSTEMS

SECTION LC

CONTENTS

Special Service Tools

The actual shapes of Kent-Moore tools may differ from those of special service tools illustrated here.

Tool number (Kent-Moore No.) Tool name	Description	
ST25051001 (J25695-1) Oil pressure gauge	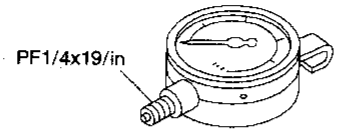 NT558	Measuring oil pressure **Maximum measuring range:** **2,452 kPa (25 kg/cm^2, 356 psi)**
ST25052000 (J25695-2) Hose	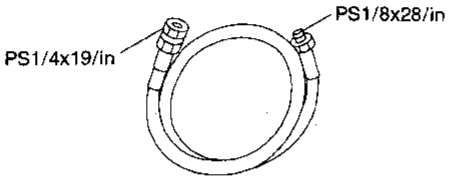 NT559	Adapting oil pressure gauge to cylinder block
KV10115801 (J38956) Oil filter wrench	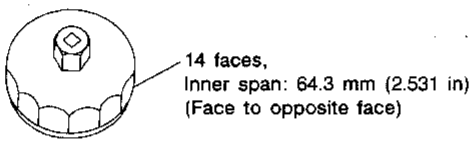 NT362	Removing oil filter
EG17650301 (J33984-A) Radiator cap tester adapter	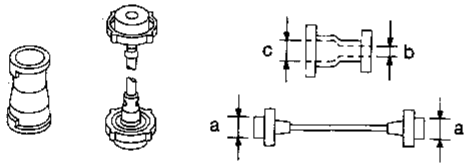 NT564	Adapting radiator cap tester to radiator filler neck **a: 28 (1.10) dia.** **b: 31.4 (1.236) dia.** **c: 41.3 (1.626) dia.** Unit: mm (in)
WS39930000 (—) Tube presser	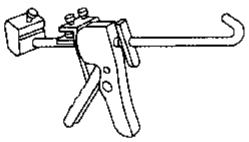 NT052	Pressing the tube of liquid gasket
KV99103510 (—) Radiator plate pliers A	 NT224	Installing radiator upper and lower tanks
KV99103520 (—) Radiator plate pliers B	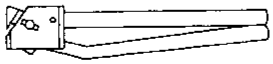 NT225	Removing radiator upper and lower tanks

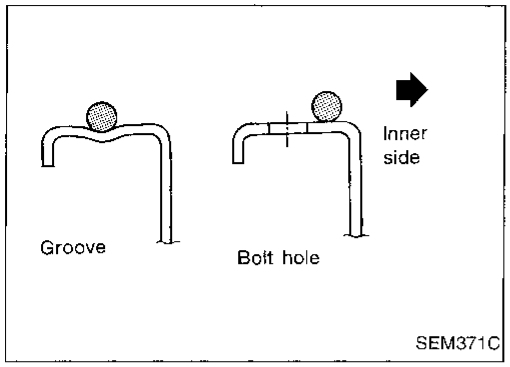

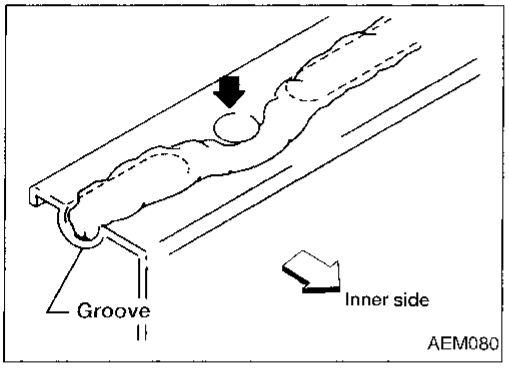

Liquid Gasket Application Procedure

a. Use a scraper to remove all traces of old liquid gasket from mating surface and grooves. Also, completely clean any oil from these areas.
b. Apply a continuous bead of liquid gasket to mating surfaces. (Use Genuine Liquid Gasket or equivalent.)
   - Be sure liquid gasket is 3.5 to 4.5 mm (0.138 to 0.177 in) dia. (for oil pan).
   - Be sure liquid gasket is 2.0 to 3.0 mm (0.079 to 0.118 in) dia. (in areas except oil pan).
c. Apply liquid gasket around the inner side of bolt holes (unless otherwise specified).
d. Assembly should be done within 5 minutes after coating.
e. Wait at least 30 minutes before refilling engine oil and engine coolant.

Lubrication Circuit

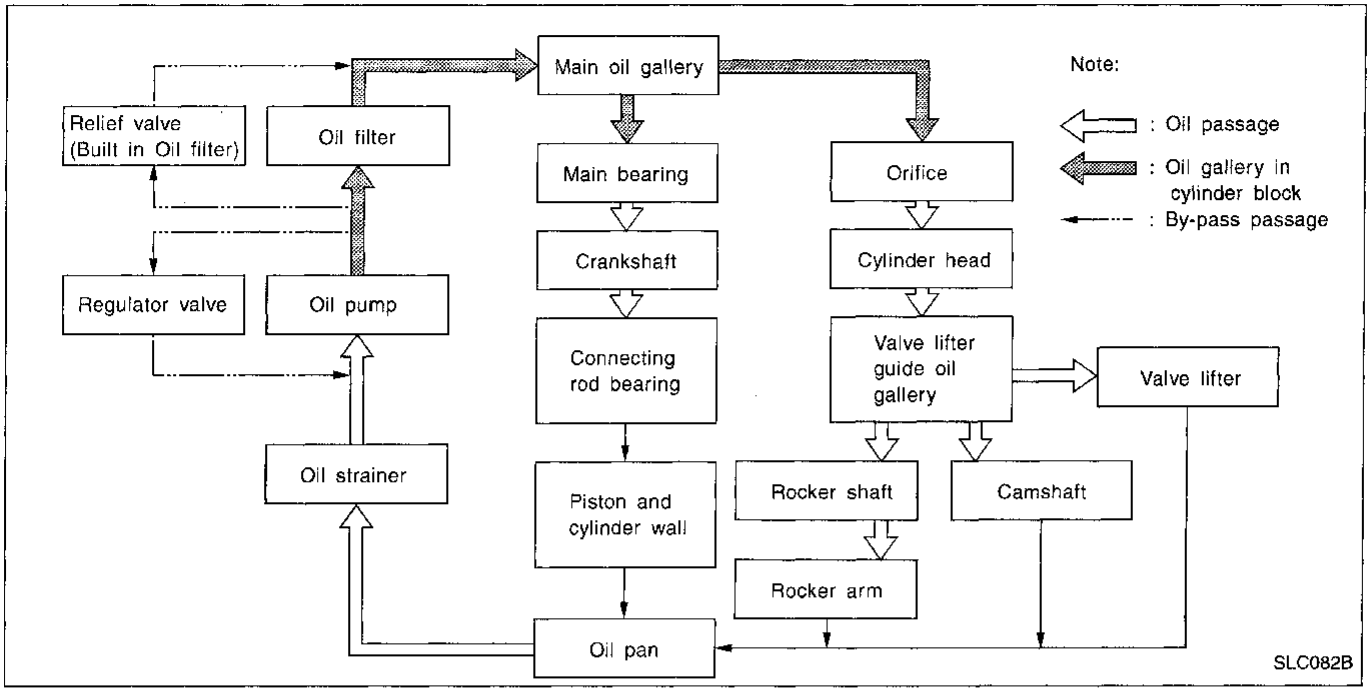

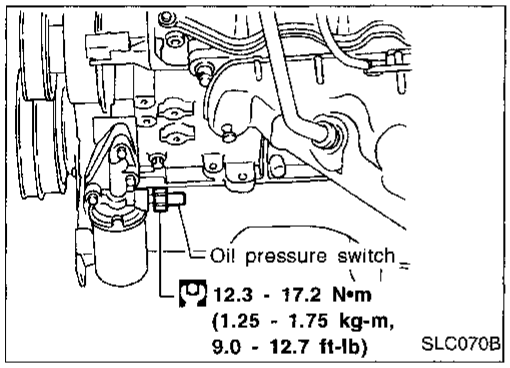

Oil Pressure Check

WARNING:

- **Be careful not to burn yourself, as the engine and oil may be hot.**
- **Oil pressure check should be done in "Neutral position" (M/T) or "Parking position" (A/T).**

1. Check oil level.
2. Remove oil pressure switch.

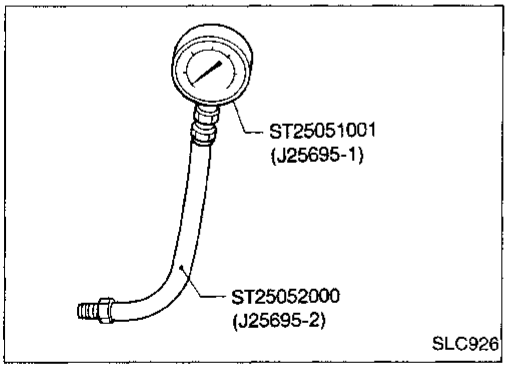

3. Install pressure gauge.
4. Start engine and warm it up to normal operating temperature.
5. Check oil pressure with engine running under no-load.

Engine speed rpm	Approximate discharge pressure kPa (kg/cm^2, psi)
Idle speed	More than 59 (0.6, 9)
2,000	412 - 451 (4.2 - 4.6, 60 - 65)

If difference is extreme, check oil passage and oil pump for oil leaks.

6. Install oil pressure switch with sealant.

Oil Pump

REMOVAL AND INSTALLATION

1. Drain engine oil.
2. Drain engine coolant from drain plug on radiator.
3. Remove air duct (from mass air flow sensor to throttle body).
4. Remove cooling fan.
5. Remove radiator hoses (upper and lower) and fan shroud. Refer to "Radiator".
6. Remove drive belts. Refer to MA section ("Checking Drive Belts").
7. Remove crankshaft pulley and front upper and lower belt covers. Refer to EM section ("TIMING BELT").
8. Remove oil pan. Refer to EM section ("OIL PAN").
9. Remove oil strainer.
10. Remove oil pump assembly.

DISASSEMBLY AND ASSEMBLY

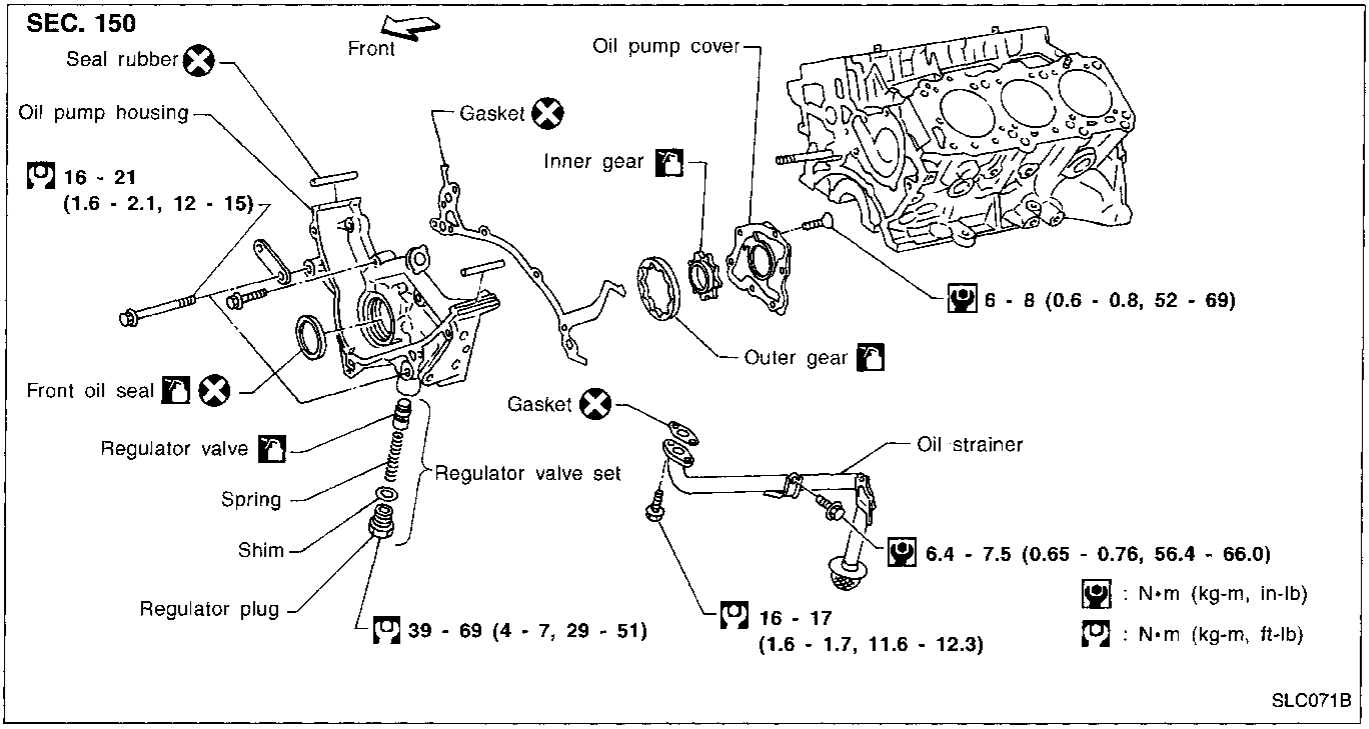

- **Always replace with new oil seal and gasket.**
- **When installing oil pump, apply engine oil to inner and outer gears.**
- **Be sure that O-ring is properly installed.**

Oil Pump (Cont'd)

INSPECTION

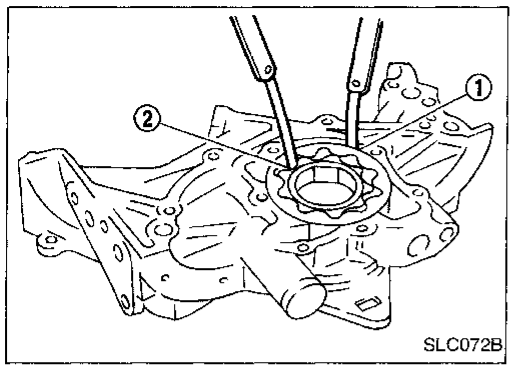

Using a feeler gauge, straightedge and micrometers, check the following clearances:

Unit: mm (in)

Body to outer gear radial clearance ①	0.114 - 0.200 (0.0045 - 0.0079)
Inner gear to outer gear tip clearance ②	Below 0.18 (0.0071)
Body to inner gear axial clearance ③	0.05 - 0.09 (0.0020 - 0.0035)
Body to outer gear axial clearance ④	0.050 - 0.110 (0.0020 - 0.0043)
Inner gear to brazed portion of housing clearance ⑤	0.045 - 0.091 (0.0018 - 0.0036)

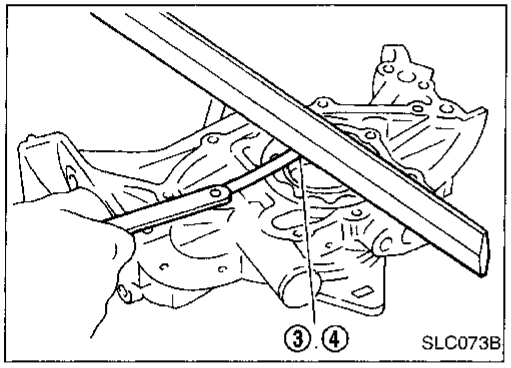

- **If the tip clearance (②) exceeds the limit, replace gear set.**
- **If body to gear clearances (①, ③, ④, ⑤) exceed the limit, replace oil pump body assembly.**

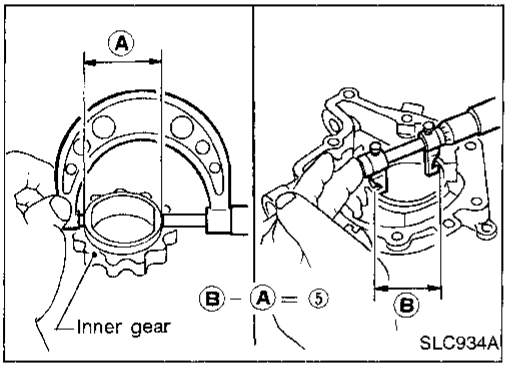

REGULATOR VALVE INSPECTION

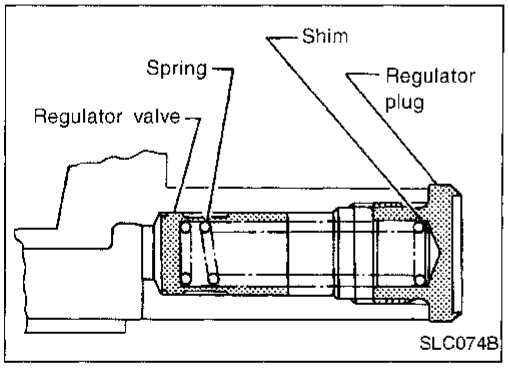

1. Visually inspect components for wear and damage.
2. Check oil pressure regulator valve sliding surface and valve spring.
3. Coat regulator valve with engine oil. Check that it falls smoothly into the valve hole by its own weight.

If damaged, replace regulator valve set or oil pump assembly.

OIL FILTER

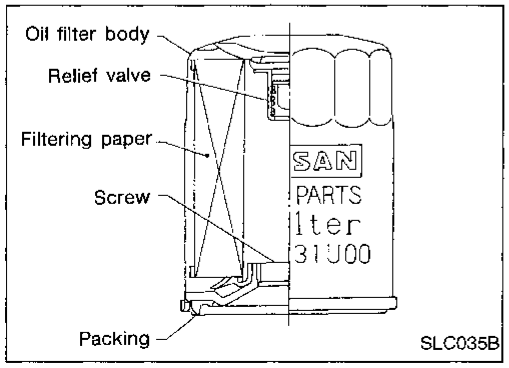

The oil filter is a small, full-flow cartridge type and is provided with a relief valve.

- **The new and previous oil filter designs differ from each other and are not interchangeable.**
- **Use Tool KV10115801 (J38956) for removing oil filter.**

Oil Pump (Cont'd)

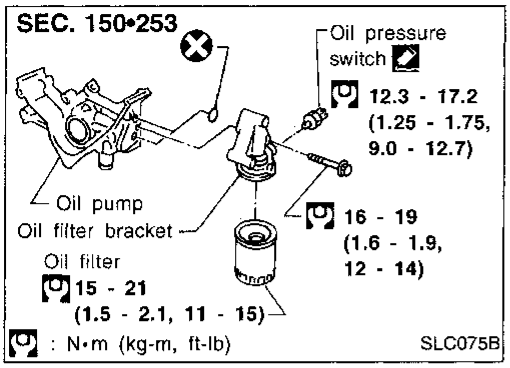

OIL FILTER BRACKET

1. Remove oil filter.
2. Disconnect oil pressure switch and connector.
3. Remove oil filter bracket.

Cooling Circuit

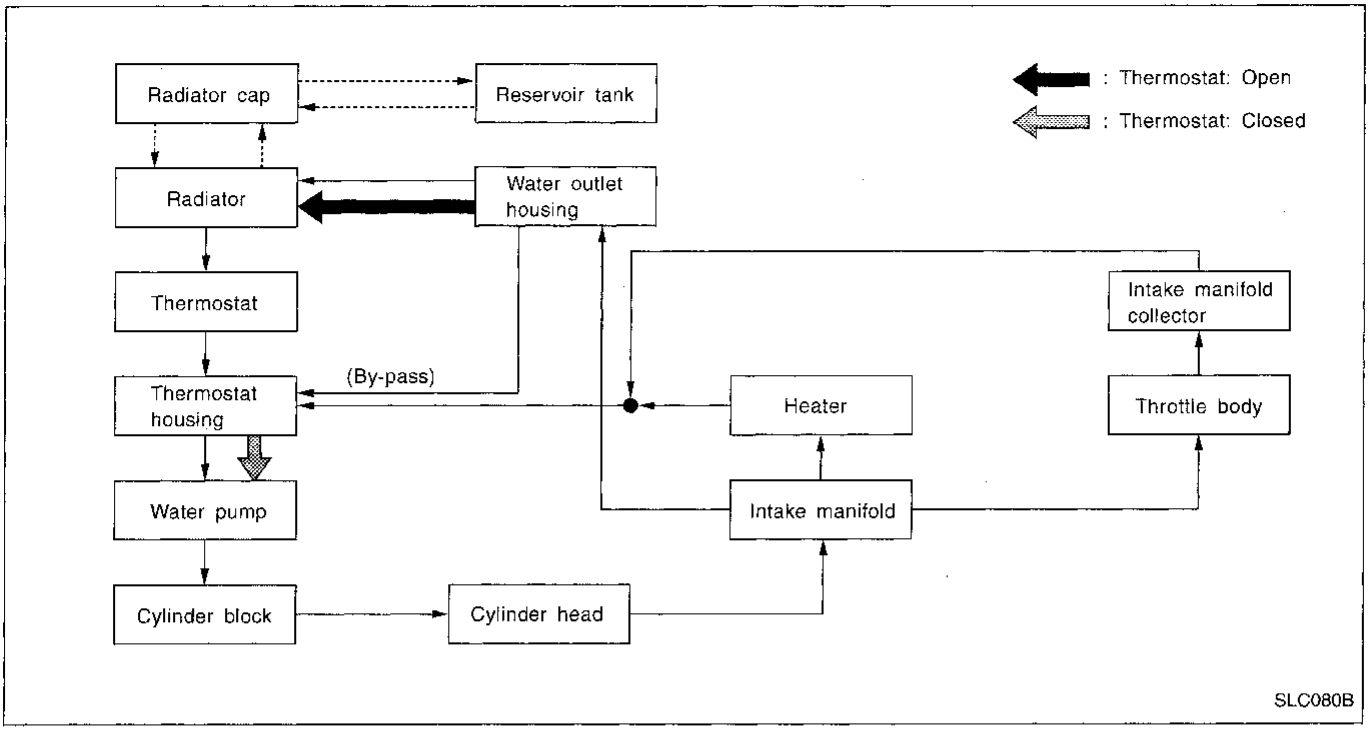

System Check

WARNING:
Never remove the radiator cap when the engine is hot. Serious burns could occur from high pressure coolant escaping from the radiator.
Wrap a thick cloth around the cap. Slowly turn it a quarter turn to allow built-up pressure to escape. Carefully remove the cap by turning it all the way.

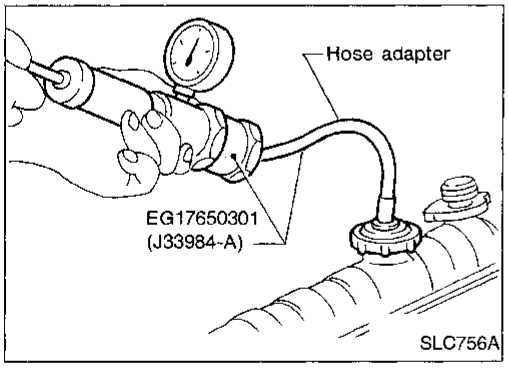

CHECKING COOLING SYSTEM HOSES

Check hoses for improper attachment, leaks, cracks, damage, loose connections, chafing and deterioration.

CHECKING COOLING SYSTEM FOR LEAKS

To check for leakage, apply pressure to the cooling system with a tester.

Testing pressure: 157 kPa (1.6 kg/cm^2, 23 psi)

CAUTION:
Higher pressure than specified may cause radiator damage.

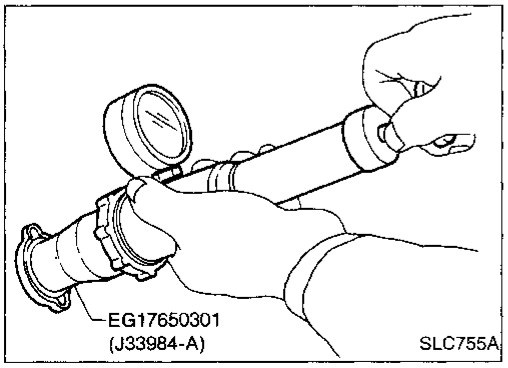

CHECKING RADIATOR CAP

To check radiator cap, apply pressure to cap with a tester.

Radiator cap relief pressure:
Standard
78 - 98 kPa (0.8 - 1.0 kg/cm^2, 11 - 14 psi)
Limit
59 - 98 kPa (0.6 - 1.0 kg/cm^2, 9 - 14 psi)

Water Pump

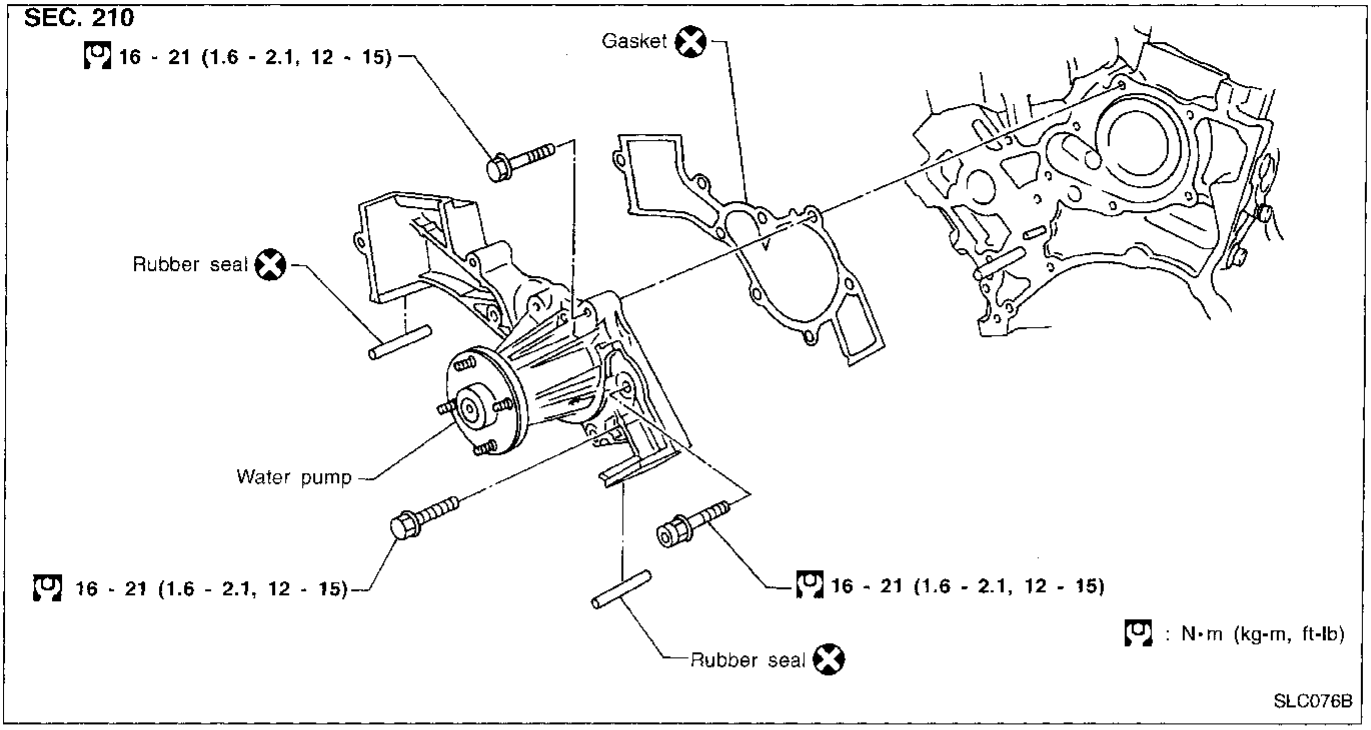

CAUTION:

- **When removing water pump assembly, be careful not to get coolant on timing belt.**
- **Water pump cannot be disassembled and should be replaced as a unit.**
- **After installing water pump, connect hose and clamp securely, then check for leaks using radiator cap tester.**
- **To avoid deforming timing cover, make sure there is adequate clearance between it and the hose clamp.**

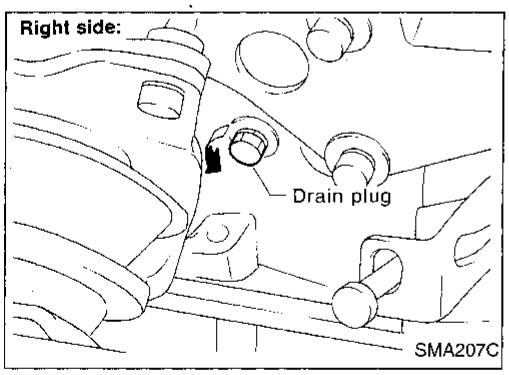

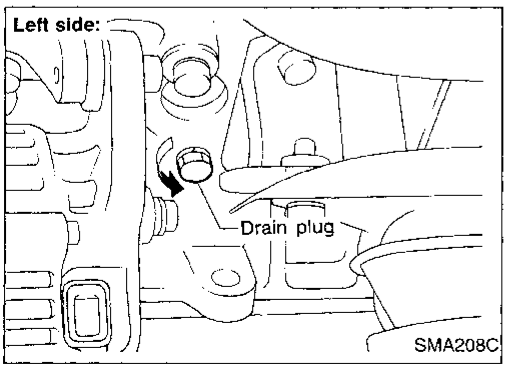

REMOVAL AND INSTALLATION

1. Drain coolant from drain plugs on both sides of cylinder block and radiator. Refer to MA section ("Changing Engine Coolant").

Water Pump (Cont'd)

2. Remove radiator hoses (upper and lower) and fan shroud. Refer to "Radiator".
3. Remove drive belts. Refer to MA section ("Checking Drive Belts").
4. Remove water pump pulley.
5. Remove crankshaft pulley and front (upper and lower) belt cover. Refer to EM section ("TIMING BELT").
6. Remove water pump.

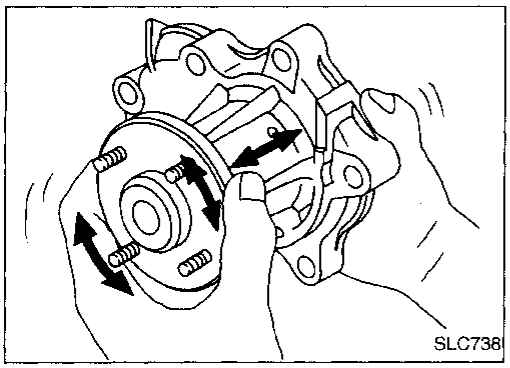

INSPECTION

1. Check for badly rusted or corroded body assembly and vanes.
2. Check for rough operation due to excessive end play.

Thermostat

REMOVAL

1. Drain engine coolant from drain plugs on radiator.
2. Remove radiator hoses (upper and lower) and fan shroud.
3. Remove drive belts.
4. Remove pulley bracket.
5. Remove water inlet and thermostat assembly.

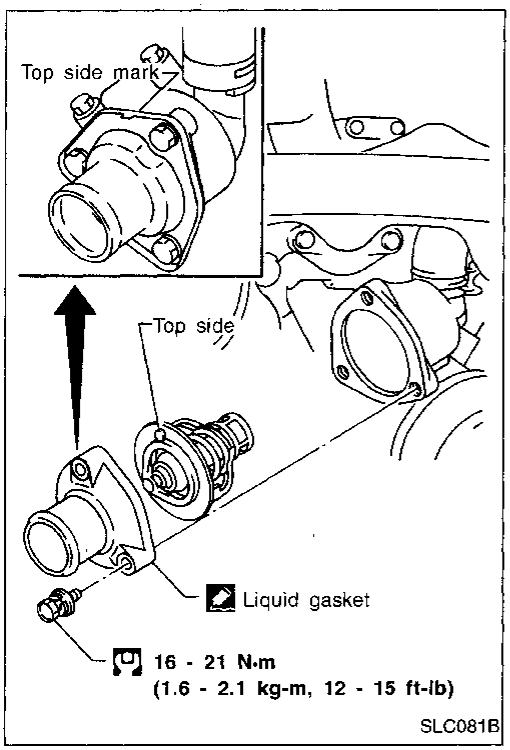

INSPECTION

1. Check valve seating condition at ordinary temperatures. It should seat tightly.

Thermostat (Cont'd)

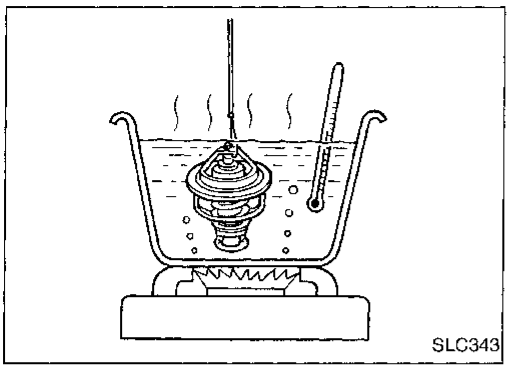

2. Check valve opening temperature and valve lift.

Valve opening temperature	°C (°F)	82 (180)
Valve lift	mm/°C (in/°F)	More than 10/95 (0.39/203)

3. Then check if valve is closed at 5°C (9°F) below valve opening temperature.

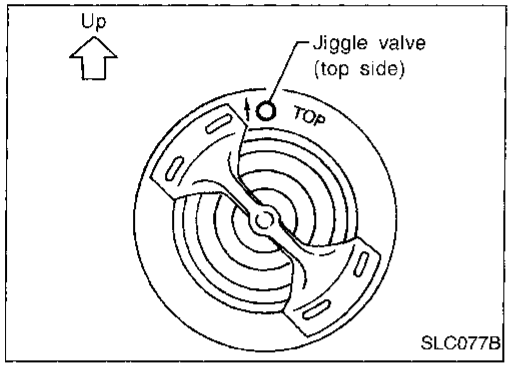

INSTALLATION

1. Install thermostat with jiggle valve or air bleeder at upper side.

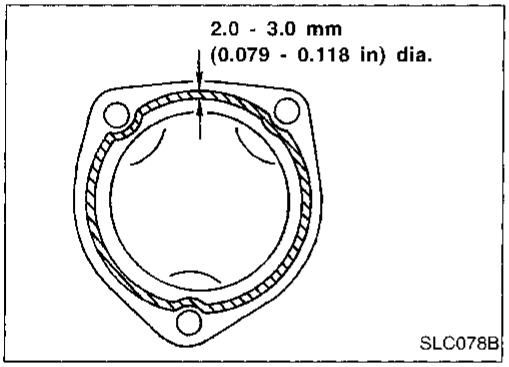

2. When installing water inlet apply liquid gasket as shown.
- **After installation, run engine for a few minutes, and check for leaks.**
- **Be careful not to spill coolant over engine compartment. Use a rag to absorb coolant.**

Radiator

REMOVAL AND INSTALLATION

1. Remove under cover.
2. Drain coolant from radiator drain plug.
3. Remove air duct. (From mass air flow sensor to throttle body)
4. Disconnect radiator upper and lower hoses.
5. Remove A/T oil cooler hoses. (A/T model only)
6. Remove radiator lower shroud.
7. Disconnect reservoir tank hose.
8. Remove radiator.
9. After repairing or replacing radiator, install any part removed in reverse order of removal.

Radiator (Cont'd)

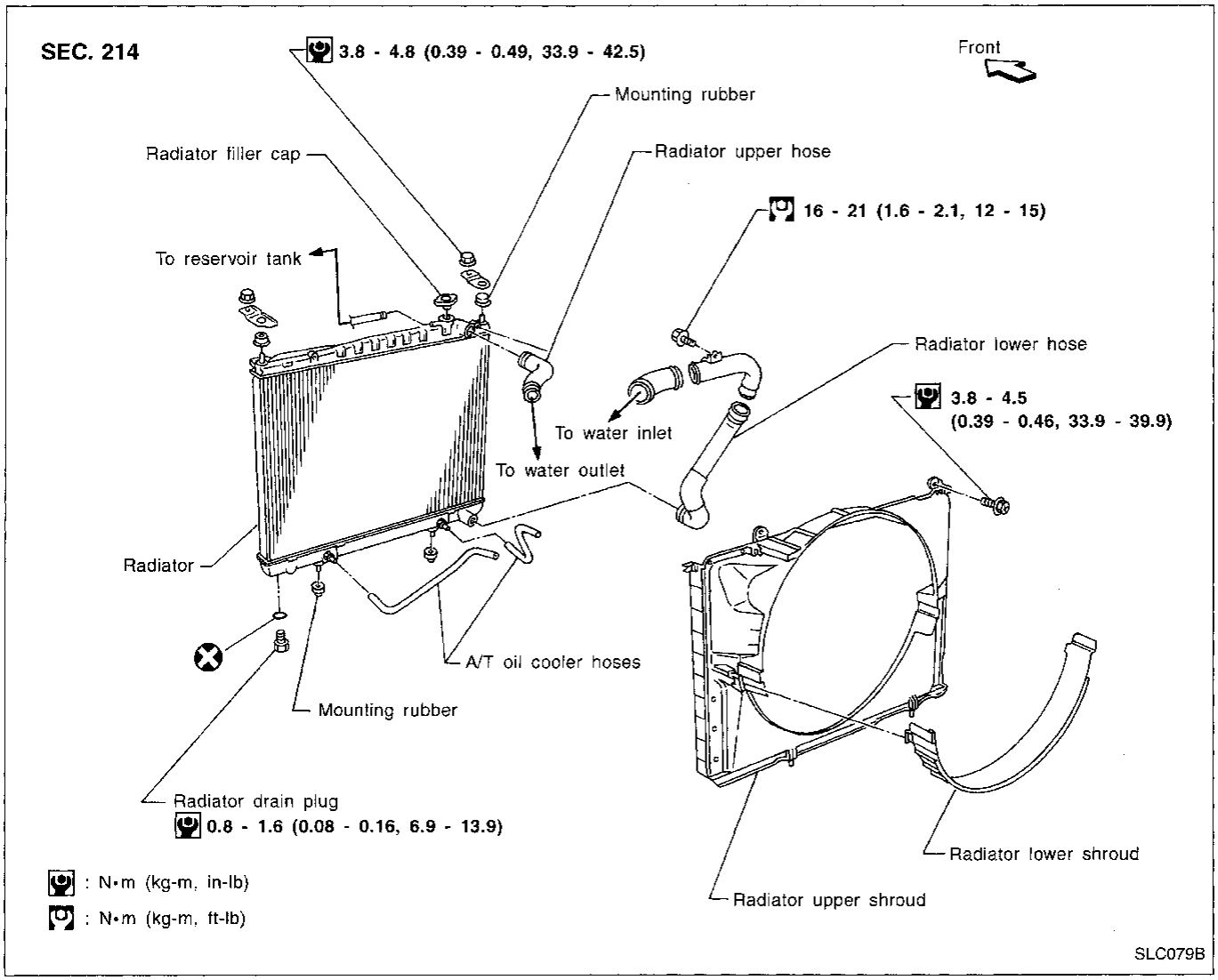

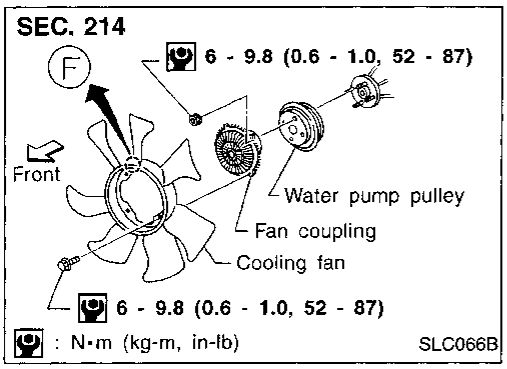

Cooling Fan (Crankshaft driven)

DISASSEMBLY AND ASSEMBLY

CAUTION:

- **Fan coupling cannot be disassembled and should be replaced as a unit.**

For adjustment of drive belt, refer to MA section ("Checking Drive Belts").

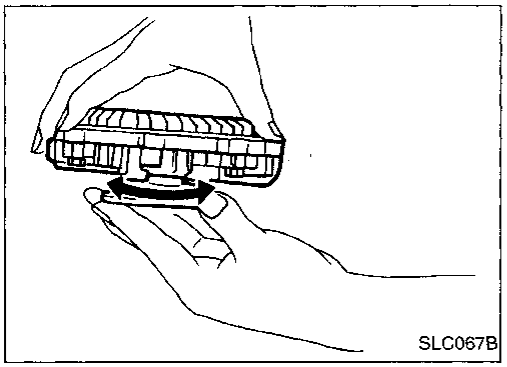

INSPECTION

Check fan coupling for rough operation, silicon oil leakage or bent bimetal.

Refilling Engine Coolant

For details on refilling engine coolant, refer to MA section ("REFILLING ENGINE COOLANT", "Changing Engine Coolant").

Radiator (Aluminum type)

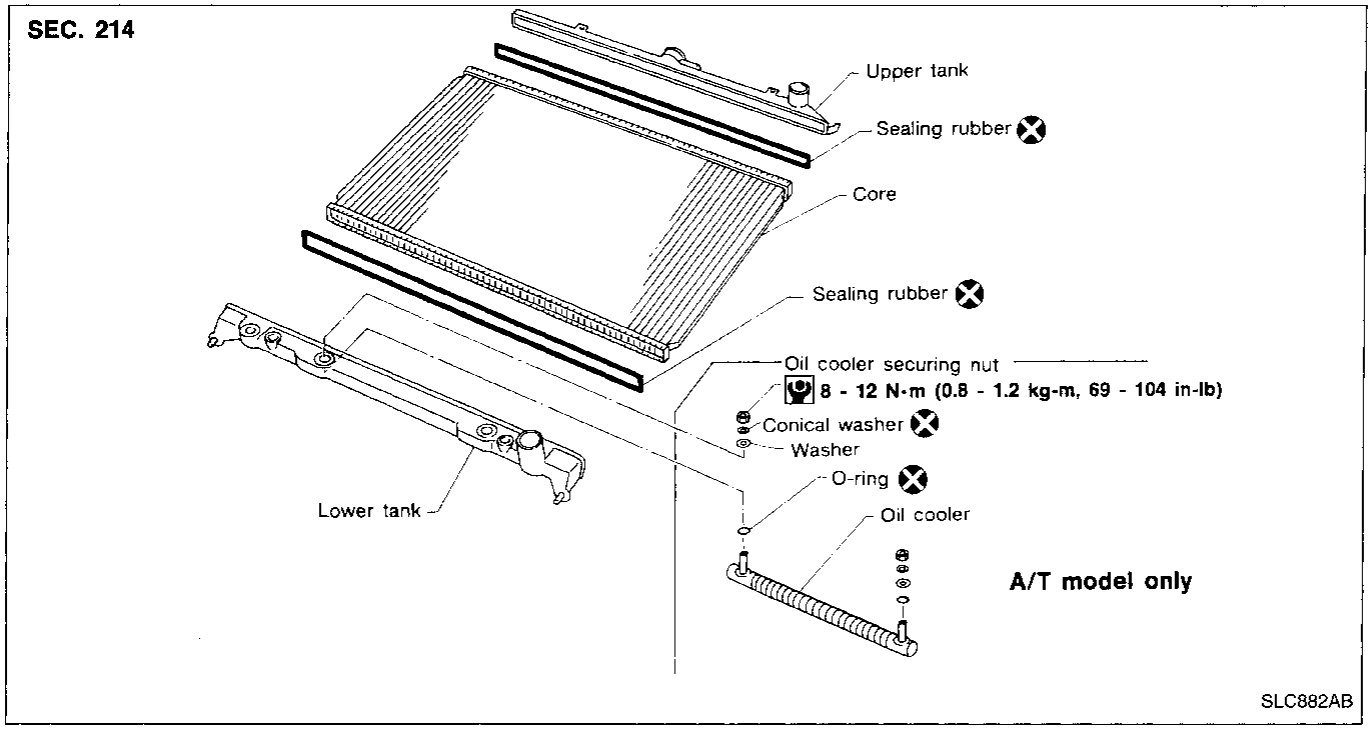

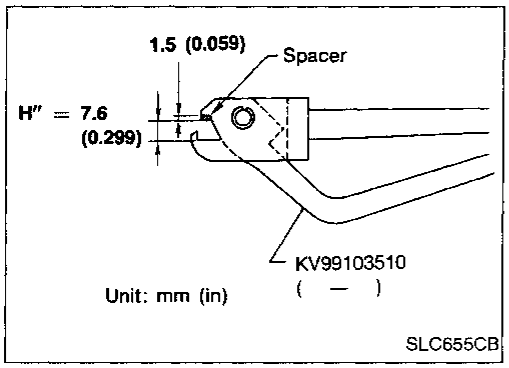

PREPARATION

1. Attach the spacer to the tip of the radiator plate pliers A. Spacer specification: 1.5 mm (0.059 in) thick x 18 mm (0.71 in) wide x 8.5 mm (0.335 in) long.
2. Make sure that when radiator plate pliers A are closed dimension H'' is approx. 7.6 mm (0.299 in).
3. Adjust dimension H'' with the spacer, if necessary.

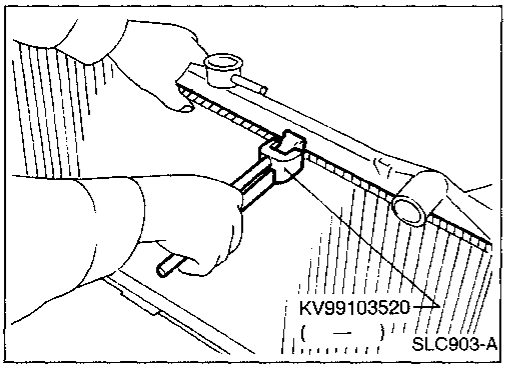

DISASSEMBLY

1. Remove tank with Tool.

Radiator (Aluminum type) (Cont'd)

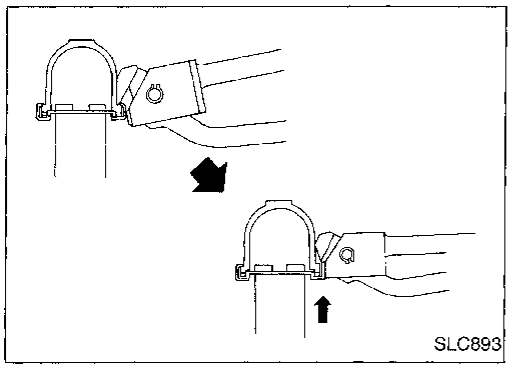

- Grip the crimped edge and bend it upwards so that Tool slips off.

Do not bend excessively.

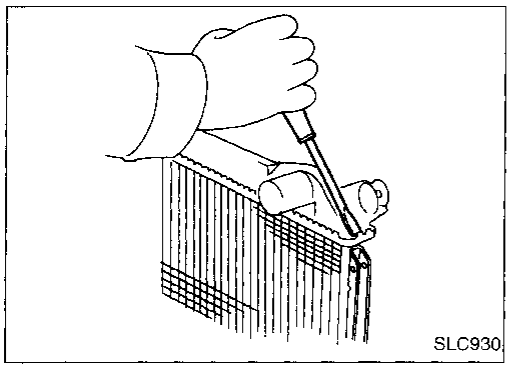

- In areas where Tool cannot be used, use a screwdriver to bend the edge up.

Be careful not to damage tank.

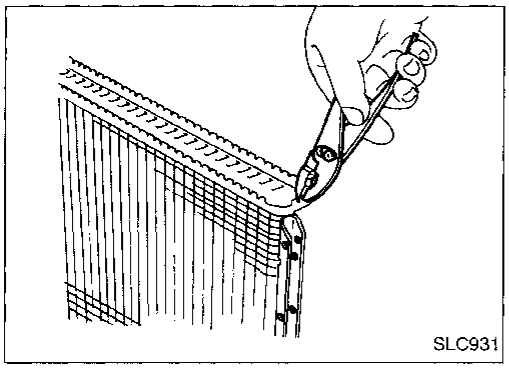

2. Make sure the edge stands straight up.
3. Remove oil cooler from tank. (A/T model only)

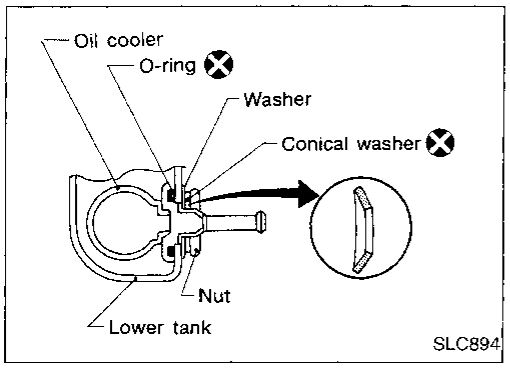

ASSEMBLY

1. Install oil cooler. (A/T model only)

Pay attention to direction of conical washer.

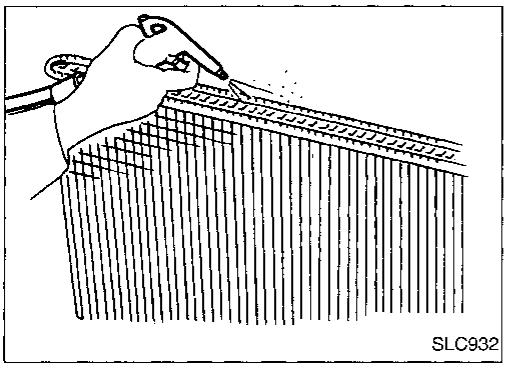

2. Clean contact portion of tank.

Radiator (Aluminum type) (Cont'd)

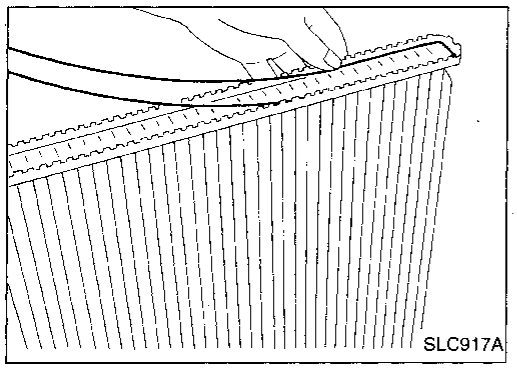

3. Install sealing rubber.

Push it in with fingers.
Be careful not to twist sealing rubber.

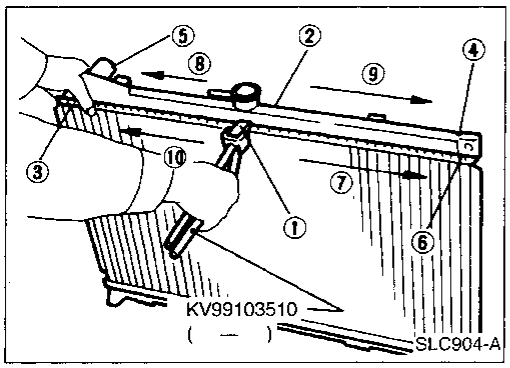

4. Caulk tank in specified sequence with Tool.

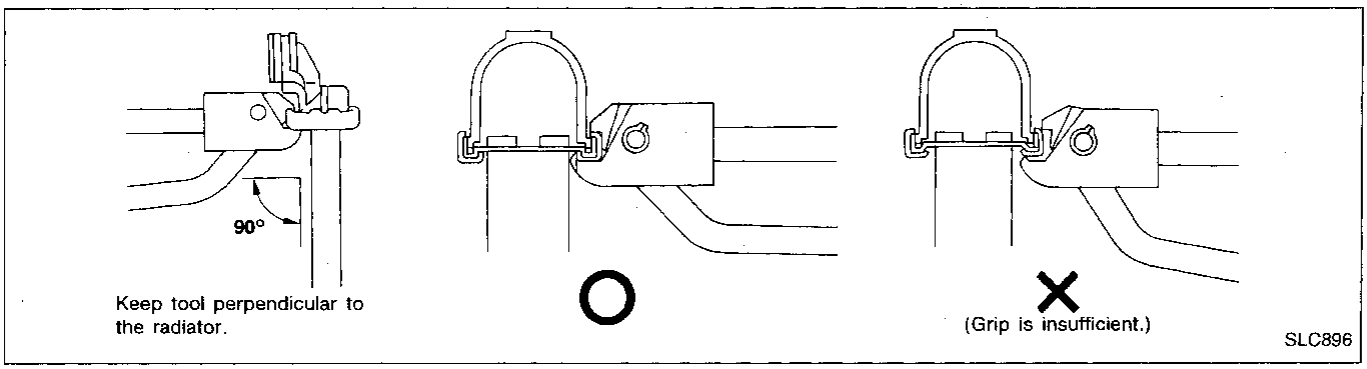

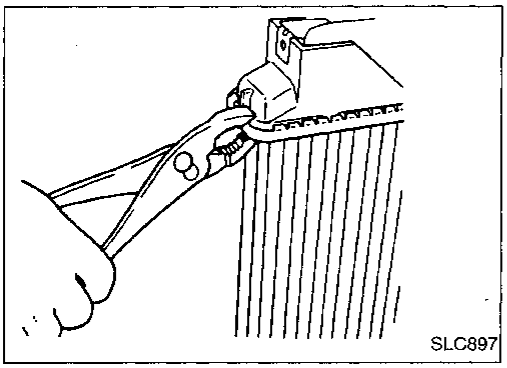

- Use pliers in the locations where Tool cannot be used.

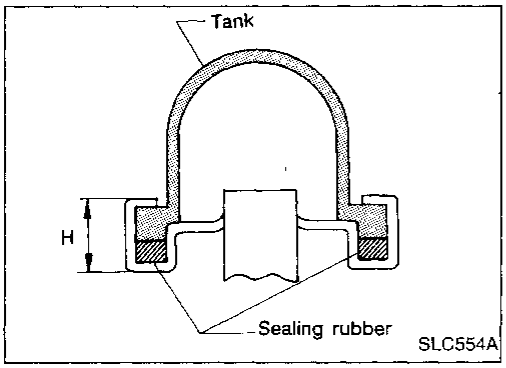

5. Make sure that the rim is completely crimped down.
   Standard height "H":
   8.0 - 8.4 mm (0.315 - 0.331 in)
6. Confirm that there is no leakage.

Refer to Inspection.

Radiator (Aluminum type) (Cont'd)

INSPECTION

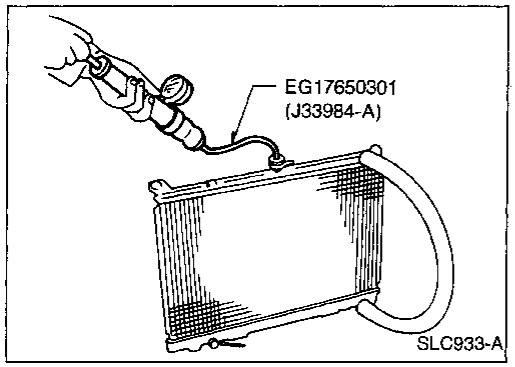

1. Apply pressure with Tool.
   Specified pressure value:
   157 kPa (1.6 kg/cm^2, 23 psi)

WARNING:
To prevent the risk of the hose coming undone while under pressure, securely fasten it down with a hose clamp.
Attach a hose to the oil cooler as well. (A/T model only)

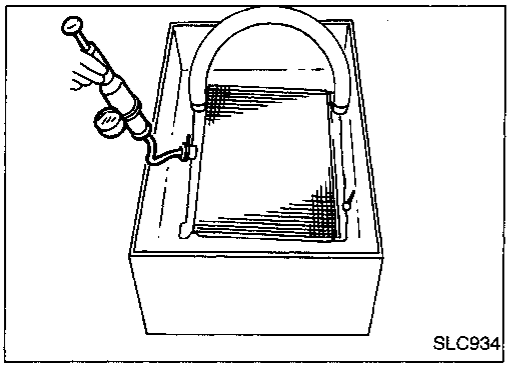

2. Check for leakage.

Overheating Cause Analysis

	Symptom		Check items	
Cooling system parts malfunction	Poor heat transfer	Water pump malfunction	—	—
		Thermostat stuck closed	—	
		Water control valve stuck closed	—	
		Damaged fins	Dust contamination or paper clogging	
			Mechanical damage	
		Clogged radiator cooling tube	Excess foreign material (rust, dirt, sand, etc.)	
	Reduced air flow	High resistance to fan rotation	—	—
		Damaged fan blades		
	Damaged radiator shroud	—	—	
	Improper coolant mixture ratio	—	—	—
	Poor coolant quality	—	—	—
	Insufficient coolant	Coolant leaks	Cooling hose	Loose clamp
				Cracked hose
			Water pump	Poor sealing
			Radiator cap	Loose
				Poor sealing
			Radiator	O-ring for damage, deterioration or improper fitting
				Cracked radiator tank
				Cracked radiator core
			Reservoir tank	Cracked reservoir tank
		Overflowing reservoir tank	Exhaust gas leaks into cooling system	Cylinder head deterioration
				Cylinder head gasket deterioration
Except cooling system parts malfunction	—	Overload on engine	Abusive driving	High engine rpm under no load
				Driving in low gear for extended time
				Driving at extremely high speed
			Powertrain system malfunction	—
			Installed improper size wheels and tires	
			Dragging brakes	
			Improper ignition timing.	
	Blocked or restricted air flow	Blocked bumper	—	—
		Blocked radiator grille	installed car brassiere	
			Mud contamination or paper clogging	
		Blocked radiator	—	
		Blocked condenser	—	
		Installed large fog lamp		

Engine Lubrication System

Oil pressure

Engine speed rpm	Approximate discharge pressure kPa (kg/cm², psi)
Idle speed	More than 59 (0.6, 9)
2,000	412 - 451 (4.2 - 4.6, 60 - 65)

Regulator valve

Unit: mm (in)

Regulator valve to oil pump cover clearance	0.040 - 0.097 (0.0016 - 0.0038)

Oil pump

Unit: mm (in)

Body to outer gear radial clearance	0.114 - 0.200 (0.0045 - 0.0079)
Inner gear to outer gear tip clearance	Below 0.18 (0.0071)
Body to inner gear axial clearance	0.05 - 0.09 (0.0020 - 0.0035)
Body to outer gear axial clearance	0.050 - 0.110 (0.0020 - 0.0043)
Inner gear to brazed portion of housing clearance	0.045 - 0.091 (0.0018 - 0.0036)

Engine Cooling System

Thermostat

Valve opening temperature	°C (°F)	82 (180)
Valve lift	mm/°C (in/°F)	More than 10/95 (0.39/203)

Radiator

Unit: kPa (kg/cm², psi)

Cap relief pressure	Standard	78 - 98 (0.8 - 1.0, 11 - 14)
	Limit	59 - 98 (0.6 - 1.0, 9 - 14)
Leakage test pressure		157 (1.6, 23)