SECTION MA

CONTENTS

CONTENTS (Cont'd)

Precautions for Supplemental Restraint System (SRS) “AIR BAG” and “SEAT BELT PRE-TENSIONER”

NAMA0001

The Supplemental Restraint System such as “AIR BAG” and “SEAT BELT PRE-TENSIONER” used along with a seat belt, helps to reduce the risk or severity of injury to the driver and front passenger for certain types of collision. The SRS composition which is available to NISSAN MODEL R50 is as follows:

- For a frontal collision
  The Supplemental Restraint System consists of driver air bag module (located in the center of the steering wheel), front passenger air bag module (located on the instrument panel on passenger side), seat belt pre-tensioners, a diagnosis sensor unit, warning lamp, wiring harness and spiral cable.
- For a side collision
  The Supplemental Restraint System consists of side air bag module (located in the outer side of front seat), side curtain air bag module (locating in the headlining side of front and rear seat), satellite sensor, diagnosis sensor unit (one of components of air bags for a frontal collision), wiring harness, warning lamp (one of components of air bags for a frontal collision).

WARNING:

- **To avoid rendering the SRS inoperative, which could increase the risk of personal injury or death in the event of a collision which would result in air bag inflation, all maintenance must be performed by an authorized NISSAN dealer.**
- **Improper maintenance, including incorrect removal and installation of the SRS, can lead to personal injury caused by unintentional activation of the system.**
- **Do not use electrical test equipment on any circuit related to the SRS unless instructed to in this Service Manual. SRS wiring harnesses can be identified by yellow and/or orange harness connector (and by yellow harness protector or yellow insulation tape before the harness connectors).**

Special Service Tool

NAMA0002

The actual shapes of Kent-Moore tools may differ from those of special service tools illustrated here.

Tool number (Kent-Moore No.) Tool name	Description
KV10115801 (J38956) Oil filter cap wrench	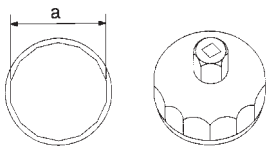 NT375 Removing oil filter **a: 64.3 mm (2.531 in)**

Commercial Service Tool

NAMA0045

Tool name (Kent-Moore No.)	Description
Belt tension gauge (BT3373-F)	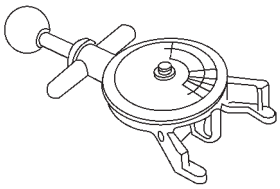 AMA126 Checking drive belt tension

GENERAL MAINTENANCE

General maintenance includes those items which should be checked during the normal day-to-day operation of the vehicle. They are essential if the vehicle is to continue operating properly. The owners can perform checks and inspections themselves or they can have their NISSAN dealers do them.

OUTSIDE THE VEHICLE

The maintenance items listed here should be performed from time to time, unless otherwise specified.

Item		Reference page
Tires	Check the pressure with a gauge, including the spare, at least once a month and always prior to a long distance trips. Adjust to the specified pressure if necessary. Check carefully for damage, cuts or excessive wear.	—
Wheel nuts	When checking the tires, make sure no nuts are missing, and check for any loose nuts. Tighten if necessary.	—
Tire rotation	Tires should be rotated every 12,000 km (7,500 miles).	MA-26
Wheel alignment and balance	If the vehicle pulls to either side while driving on a straight and level road, or if you detect uneven or abnormal tire wear, there may be a need for wheel alignment. If the steering wheel or seat vibrates at normal highway speeds, wheel balancing may be needed.	MA-26, SU-8, “Front Wheel Alignment”
Windshield wiper blades	Check for cracks or wear if they do not wipe properly.	—
Doors and engine hood	Check that all doors and the engine hood operate smoothly as well as the trunk lid and back hatch. Also make sure that all latches lock securely. Lubricate if necessary. Make sure that the secondary latch keeps the hood from opening when the primary latch is released. When driving in areas using road salt or other corrosive materials, check lubrication frequently.	MA-30

INSIDE THE VEHICLE

The maintenance items listed here should be checked on a regular basis, such as when performing periodic maintenance, cleaning the vehicle, etc.

Item		Reference page
Lamps	Make sure that the headlamps, stop lamps, tail lamps, turn signal lamps, and other lamps are all operating properly and installed securely. Also check headlamp aim.	—
Warning lamps and buzzers/chimes	Make sure that all warning lamps and buzzers/chimes are operating properly.	—
Windshield wiper and washer	Check that the wipers and washer operate properly and that the wipers do not streak.	—
Windshield defroster	Check that the air comes out of the defroster outlets properly and in sufficient quantity when operating the heater or air conditioning.	—
Steering wheel	Check that it has the specified play. Be sure to check for changes in the steering condition, such as excessive play, hard steering or strange noises. **Free play: Less than 35 mm (1.38 in)**	—
Seats	Check seat position controls such as seat adjusters, seatback recliner, etc. to make sure they operate smoothly and that all latches lock securely in every position. Check that the head restrains move up and down smoothly and that the locks (if equipped) hold securely in all latched positions. Check that the latches lock securely for folding-down rear seatbacks.	—
Seat belts	Check that all parts of the seat belt system (e.g. buckles, anchors, adjusters and retractors) operate properly and smoothly and are installed securely. Check the belt webbing for cuts, fraying, wear or damage.	MA-31
Clutch pedal	Make sure the pedal operates smoothly and check that it has the proper free play.	CL-6, “Adjusting Clutch Pedal”
Brakes	Check that the brake does not pull the vehicle to one side when applied.	—

Item		Reference page
Brake pedal and booster	Check the pedal for smooth operation and make sure it has the proper distance under it when depressed fully. Check the brake booster function. Be sure to keep floor mats away from the pedal.	Refer to BR-13, “Brake Pedal and Bracket” and “Brake Booster”
Parking brake	Check that the lever has the proper travel and make sure that the vehicle is held securely on a fairly steep hill when only the parking brake is applied.	Refer to BR-31, “Parking Brake Control”
Automatic transmission “Park” mechanism	Check that the lock release button on the selector lever operates properly and smoothly. On a fairly steep hill check that the vehicle is held securely with the selector lever in the “P” position without applying any brakes.	—

UNDER THE HOOD AND VEHICLE

The maintenance items listed here should be checked periodically (e.g. each time you check the engine oil or refuel).

Item		Reference page
Windshield washer fluid	Check that there is adequate fluid in the tank.	—
Engine coolant level	Check the coolant level when the engine is cold.	MA-15
Radiator and hoses	Check the front of the radiator and clean off any dirt, insects, leaves, etc., that may have accumulated. Make sure the hoses have no cracks, deformation, deterioration or loose connections.	—
Brake and clutch fluid levels	Make sure that the brake and clutch fluid levels are between the “MAX” and “MIN” lines on the reservoir.	MA-22, 27
Battery	Check the fluid level in each cell. It should be between the “MAX” and “MIN” lines. Vehicles operated in high temperatures or under severe conditions require frequent checks of the battery fluid level.	—
Engine drive belts	Make sure that no belt is frayed, worn, cracked or oily.	MA-14
Engine oil level	Check the level on the dipstick after parking the vehicle on a level spot and turning off the engine.	MA-18
Power steering fluid level and lines	Check the level on the dipstick with the engine off. Check the lines for improper attachment, leaks, cracks, etc.	MA-29
Automatic transmission fluid level	Check the level on the dipstick after putting the selector lever in “P” with the engine idling.	MA-23
Exhaust system	Make sure there are no loose supports, cracks or holes. If the sound of the exhaust seems unusual or there is a smell of exhaust fumes, immediately locate the trouble and correct it.	MA-22
Underbody	The underbody is frequently exposed to corrosive substances such as those used on icy roads or to control dust. It is very important to remove these substances, otherwise rust will form on the floor pan, frame, fuel lines and around the exhaust system. At the end of winter, the underbody should be thoroughly flushed with plain water, being careful to clean those areas where mud and dirt can easily accumulate.	—
Fluid leaks	Check under the vehicle for fuel, oil, water or other fluid leaks after the vehicle has been parked for a while. Water dripping from the air conditioner after use is normal. If you should notice any leaks or gasoline fumes are evident, check for the cause and correct it immediately.	—

PERIODIC MAINTENANCE

Two different maintenance schedules are provided, and should be used, depending upon the conditions in which the vehicle is mainly operated. **After 60,000 miles (96,000 km) or 48 months, continue the periodic maintenance at the same mileage/time intervals.**

Schedule 1	Follow Periodic Maintenance Schedule 1 if your driving habits frequently includes one or more of the following driving conditions: ● Repeated short trips of less than 5 miles (8 km). ● Repeated short trips of less than 10 miles (16 km) with outside temperatures remaining below freezing. ● Operating in hot weather in stop-and-go “rush hour” traffic. ● Extensive idling and/or low speed driving for long distances, such as police, taxi or door-to-door delivery use. ● Driving in dusty conditions. ● Driving on rough, muddy, or salt spread roads. ● Towing a trailer, using a camper or a car-top carrier.	Emission Control System Maintenance	MA-8
		Chassis and Body Maintenance	MA-9
Schedule 2	Follow Periodic Maintenance Schedule 2 if none of the driving conditions shown in Schedule 1 apply to your driving habits.	Emission Control System Maintenance	MA-10
		Chassis and Body Maintenance	MA-11

Maintenance for off-road driving (4x4 only)

Whenever you drive off-road through sand, mud or water, more frequent maintenance may be required of the following items:

▲ Brake pads and discs
▲ Brake lining and drums
▲ Brake lines and hoses
▲ Wheel bearing grease
▲ Differential, transmission and transfer oil
▲ Steering linkage
▲ Propeller shaft and drive shafts
▲ Air cleaner filter
▲ Clutch housing

EMISSION CONTROL SYSTEM MAINTENANCE

Schedule 1

Abbreviations: R = Replace. I = Inspect. Correct or replace if necessary. [ ]: At the mileage intervals only

MAINTENANCE OPERATION		MAINTENANCE INTERVAL																Reference Section - Page or - Content Title
Perform at number of miles, kilometers or months, whichever comes first.	Miles x 1,000 (km x 1,000) Months	3.75 (6) 3	7.5 (12) 6	11.25 (18) 9	15 (24) 12	18.75 (30) 15	22.5 (36) 18	26.25 (42) 21	30 (48) 24	33.75 (54) 27	37.5 (60) 30	41.25 (66) 33	45 (72) 36	48.75 (78) 39	52.5 (84) 42	56.25 (90) 45	60 (96) 48	
Drive belts									I*								I*	MA-14
Air cleaner filter	NOTE (1)								[R]								[R]	MA-18
EVAP vapor lines									I*								I*	MA-21
Fuel lines									I*								I*	MA-17
Fuel filter*	NOTE (2)																	MA-17
Engine coolant	NOTE (3)																R*	MA-15
Engine oil		R	R	R	R	R	R	R	R	R	R	R	R	R	R	R	R	MA-18
Engine oil filter (Use part No. 15208-31U00 or equivalent.)		R	R	R	R	R	R	R	R	R	R	R	R	R	R	R	R	MA-19
Spark plugs (PLATINUM-TIPPED type)		Replace every 105,000 miles (169,000 km)																MA-20
Intake & exhaust valve clearance*	NOTE (4)																	EM-58

NOTE:

(1) If operating mainly in dusty conditions, more frequent maintenance may be required.

(2) When the filter becomes clogged, the vehicle speed cannot be increased as the driver wishes. In such an event, replace the filter.

(3) After 60,000 miles (96,000 km) or 48 months, replace every 30,000 miles (48,000 km) or 24 months.

(4) If valve noise increases, inspect valve clearance.

★ Maintenance items and intervals with "*" are recommended by NISSAN for reliable vehicle operation. The owner need not perform such maintenance in order to maintain the emission warranty or manufacturer recall liability. Other maintenance items and intervals are required.

NAMA0004S01
NAMA0004S0101

Schedule 1 (Cont'd)

Abbreviations: R = Replace. I = Inspect. Correct or replace if necessary. L = Lubricate.

MAINTENANCE OPERATION		MAINTENANCE INTERVAL																Reference Section - Page or - Content Title
Perform at number of miles, kilometers or months, whichever comes first.	Miles x 1,000 (km x 1,000) Months	3.75 (6) 3	7.5 (12) 6	11.25 (18) 9	15 (24) 12	18.75 (30) 15	22.5 (36) 18	26.25 (42) 21	30 (48) 24	33.75 (54) 27	37.5 (60) 30	41.25 (66) 33	45 (72) 36	48.75 (78) 39	52.5 (84) 42	56.25 (90) 45	60 (96) 48	
Brake lines & cables					I				I				I				I	MA-27
Brake pads, rotors, drums & linings			I		I		I		I		I		I		I		I	MA-27, 28
Automatic transmission fluid, (all-mode 4WD) transfer fluid, manual transmission oil & differential gear oil (exc. LSD)	NOTE (1)				I				I				I				I	MA-22, 23, 24, 25
LSD gear oil	NOTE (1)				I				R				I				R	MA-26
Steering gear, linkage & transfer gear, axle & suspension parts			I		I		I		I		I		I		I		I	MA-28 MA-29
Tire rotation	NOTE (2)																	MA-5 MA-26
Drive shaft boots & propeller shaft (4x4)			I		I		I		I		I		I		I		I	MA-30 MA-25
Propeller shaft	NOTE (3)		L		L		L		L		L		L		L		L	MA-25
"Front wheel bearing grease"	4x2								I								I	MA-30
Front wheel bearing grease	4x4				I				R				I				R	MA-30
Exhaust system			I		I		I		I		I		I		I		I	MA-22

NOTE:

(1) If towing a trailer, using a camper or a car-top carrier, or driving on rough or muddy roads, change (not just inspect) oil (exc. LSD) at every 30,000 miles (48,000 km) or 24 months, and change LSD gear oil every 15,000 miles (24,000 km) or 12 months.

(2) Refer to "Tire rotation" under the "GENERAL MAINTENANCE" heading earlier in this section.

(3) The propeller shaft should be re-greased after being immersed in water.

NAMA0004S0102

EMISSION CONTROL SYSTEM MAINTENANCE

Schedule 2

Abbreviations: R = Replace. I = Inspect. Correct or replace if necessary. [ ]: At the mileage intervals only

MAINTENANCE OPERATION		MAINTENANCE INTERVAL								Reference Section - Page or - Content Title
Perform at number of miles, kilometers or months, whichever comes first.	Miles x 1,000 (km x 1,000) Months	7.5 (12) 6	15 (24) 12	22.5 (36) 18	30 (48) 24	37.5 (60) 30	45 (72) 36	52.5 (84) 42	60 (96) 48	
Drive belts					I*				I*	MA-14
Air cleaner filter					[R]				[R]	MA-18
EVAP vapor lines					I*				I*	MA-21
Fuel lines					I*				I*	MA-17
Fuel filter*	NOTE (1)									MA-17
Engine coolant	NOTE (2)								R*	MA-15
Engine oil		R	R	R	R	R	R	R	R	MA-18
Engine oil filter (Use part No. 15208-31U00 or equivalent.)		R	R	R	R	R	R	R	R	MA-19
Spark plugs (PLATINUM-TIPPED type)		Replace every 105,000 miles (169,000 km)								MA-20
Intake & exhaust valve clearance*	NOTE (3)									EM-58

NOTE:

(1) When the filter becomes clogged, the vehicle speed cannot be increased as the driver wishes. In such an event, replace the filter.

(2) After 60,000 miles (96,000 km) or 48 months, replace every 30,000 miles (48,000 km) or 24 months.

(3) If valve noise increases, inspect valve clearance.

★ Maintenance items and intervals with "*" are recommended by NISSAN for reliable vehicle operation. The owner need not perform such maintenance in order to maintain the emission warranty or manufacturer recall liability. Other maintenance items and intervals are required.

NAMA0004S02
NAMA0004S0201

Schedule 2 (Cont'd)

Abbreviations: R = Replace. I = Inspect. Correct or replace if necessary. L = Lubricate.

MAINTENANCE OPERATION		MAINTENANCE INTERVAL								Reference Section - Page or - Content Title
Perform at number of miles, kilometers or months, whichever comes first.	Miles x 1,000 (km x 1,000) Months	7.5 (12) 6	15 (24) 12	22.5 (36) 18	30 (48) 24	37.5 (60) 30	45 (72) 36	52.5 (84) 42	60 (96) 48	
Brake lines & cables			I		I		I		I	MA-27
Brake pads, rotors, drums & linings			I		I		I		I	MA-27, 28
Automatic transmission fluid, (all-mode 4WD) transfer fluid, manual transmission oil & differential gear oil (exc. LSD)			I		I		I		I	MA-22, 23, 24, 25
LSD gear oil			I		R		I		R	MA-26
Steering gear, linkage & transfer gear, axle & suspension parts					I				I	MA-28 MA-29
Tire rotation	NOTE (1)									MA-5 MA-26
Drive shaft boots & propeller shaft (4x4)			I		I		I		I	MA-30 MA-25
Propeller shaft	NOTE (2)		L		L		L		L	MA-25
Front wheel bearing grease (4x2)					I				I	MA-30
Front wheel bearing grease (4x4)			I		R		I		R	MA-30
Exhaust system					I				I	MA-22

NOTE:

(1) Refer to "Tire rotation" under the "GENERAL MAINTENANCE" heading earlier in this section.

(2) The propeller shaft should be re-greased after being immersed in water.

NAMA0004S0202

Fluids and Lubricants

NAMA0005S01

			Capacity (Approximate)			Recommended Fluids/Lubricants
			US measure	Imp measure	Liter	
Engine oil	Drain and refill	With oil filter	5-1/4 qt	4-3/8 qt	5.0	● API Certification Mark*1 ● API grade SG/SH, Energy Conserving I & II or API grade SJ or SL, Energy Conserving*1 ● ILSAC grade GF-I, GF-II & GF-III*1
		Without oil filter	5-1/8 qt	4-1/4 qt	4.8	
	Dry engine (Engine overhaul)		7-1/4 qt	6 qt	6.8	
Cooling system (With reservoir)			9-3/4 qt	8-1/8 qt	9.2	Genuine NISSAN Long Life Antifreeze/ Coolant or equivalent
Manual transmission gear oil			10-3/4 pt	9 pt	5.1	API GL-4, Viscosity SAE 75W-85
Transfer fluid	Part time 4WD model		2-3/8 qt	2 qt	2.2	API GL-4, viscosity SAE 75W-90 or Genuine NISSAN MATIC D ATF or Canada NISSAN Automatic Transmission Fluid*2
	All-mode 4WD model		3-1/8 qt	2-5/8 qt	3.0	Genuine NISSAN Matic D ATF (Continental U.S. and Alaska) or Canada NISSAN Automatic Transmission Fluid*2
Differential carrier gear oil	Front (4WD)		4 pt	3-3/8 pt	1.9	Standard differential gear: API GL-5, viscosity SAE 80W-90*4 Limited-slip differential (LSD) gear: Use only LSD gear oil API GL-5 and SAE 80W-90*4 approved for NISSAN LSD*5.
	Rear		5-1/8 pt	4-1/4 pt	2.4	
Automatic transmission fluid	2WD		9 qt	7-1/2 qt	8.5	Genuine NISSAN Matic D ATF (Continental U.S. and Alaska) or Canada NISSAN Automatic Transmission Fluid*2
	4WD					
Power steering fluid (PSF)			—	—	—	Genuine NISSAN PSF or equivalent*6
Brake and clutch fluid			—	—	—	Genuine NISSAN Super Heavy Duty Brake Fluid*3 or equivalent DOT 3 (U.S. FMVSS No. 116)
Propeller shaft grease			—	—	—	NLGI No. 2 (Lithium soap base)
Multi-purpose grease			—	—	—	NLGI No. 2 (Lithium soap base)
Windshield washer fluid			—	—	—	Genuine NISSAN Windshield Washer Concentrate Cleaner & Antifreeze Fluid or equivalent

*1: For further details, see “SAE Viscosity Number”.

*2: DEXRON™ III/MERCON™ or equivalent may also be used. Outside the continental United States and Alaska contact a NISSAN dealership for more information regarding suitable fluids, including recommended brand(s) of DEXRON™ III/MERCON™ Automatic Transmission Fluid.

*3: Available in mainland USA through your NISSAN dealer.

*4: For hot areas, viscosity SAE 90 is suitable for ambient temperatures above 0°C (32°F).

*5: Contact a NISSAN dealer for a list of approved oils.

*6: For Canada, NISSAN Automatic Transmission Fluid (ATF), DEXRON™ III/MERCON™ or equivalent ATF may also be used.

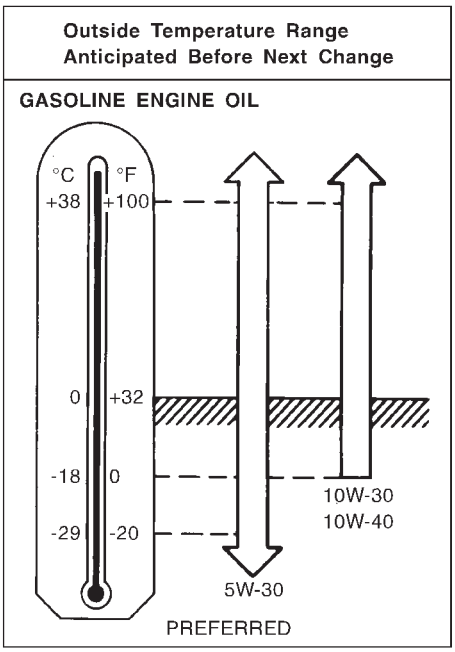

MMA117AA

SAE Viscosity Number

NAMA0005S02

GASOLINE ENGINE OIL

NAMA0005S0201

SAE 5W-30 viscosity oil is preferred for all ambient temperatures. SAE 10W-30, 10W-40 viscosity oil may be used if the ambient temperature is above −18°C (0°F).

Outside temperature down to		Anti-freeze	Demineralized water or distilled water
°C	°F		
–35	–30	50%	50%

SMA947CA

Anti-freeze Coolant Mixture Ratio

NAMA0005S03

The engine cooling system is filled at the factory with a high-quality, year-round, anti-freeze coolant solution. The anti-freeze solution contains rust and corrosion inhibitors. Therefore, additional cooling system additives are not necessary.

CAUTION:

When adding or replacing coolant, be sure to use only a Genuine NISSAN Long Life Antifreeze/Coolant or equivalent with the proper mixture ratio of 50% anti-freeze and 50% demineralized water/distilled water. Other types of coolant solutions may damage your engine cooling system.

Checking Drive Belts

NAMA0049

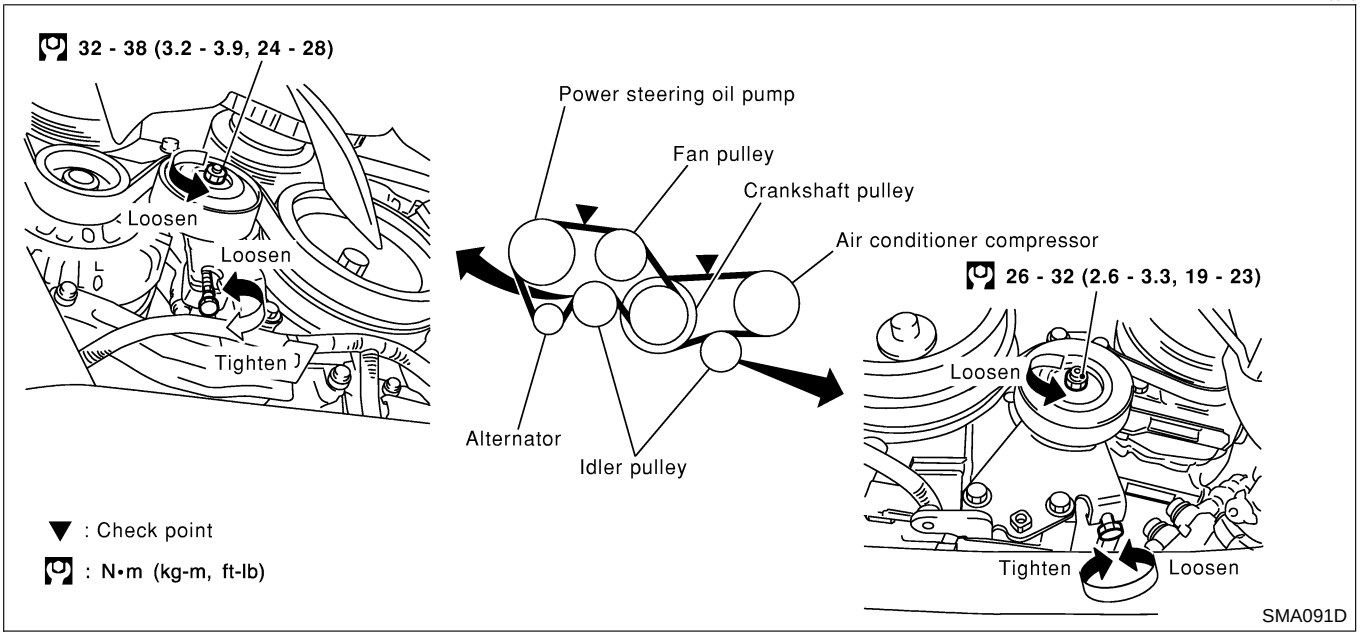

1. Inspect belt for cracks, fraying, wear and oil. If necessary, replace.
2. Inspect drive belt deflection or tension at a point on the belt midway between pulleys.
3. Check belt tension using belt tension gauge (BT3373-F or equivalent).

Inspect drive belt deflection or tension when engine is cold. Adjust if belt deflections exceed the limit or if belt tension is not within specifications.

Belt deflection and tension

	Deflection adjustment		Unit: mm (in)	Tension adjustment *1		Unit: N (kg, lb)
	Used belt		New belt	Used belt		New belt
	Limit	After adjustment		Limit	After adjustment	
Alternator Power steering oil pump Fan	7 (0.28)	4 - 5 (0.16 - 0.20)	3.5 - 4.5 (0.138 - 0.177)	294 (30, 66)	730 - 818 (74.4 - 83.5, 164 - 184)	838 - 926 (85.4 - 94.5, 188 - 208)
Air conditioner compressor	12 (0.47)	9 - 10 (0.35 - 0.39)	8 - 9 (0.31 - 0.35)	196 (20, 44)	348 - 436 (35.5 - 44.5, 78 - 98)	470 - 559 (47.9 - 57.0, 106 - 126)
Applied pushing force	98 N (10 kg, 22 lb)			—		

*1 If belt tension gauge cannot be installed at check points shown, check drive belt tension at a different location on the belt.

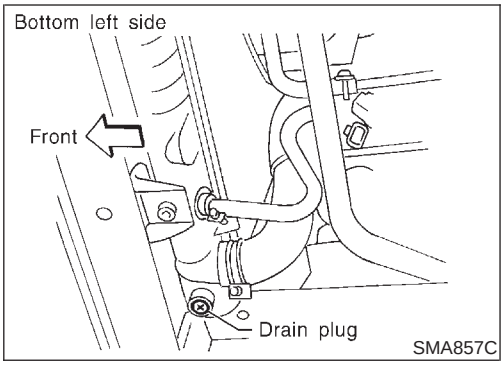

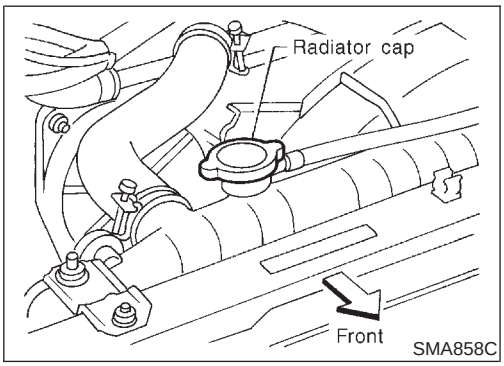

Changing Engine Coolant

NAMA0050

WARNING:

To avoid the danger of being scalded, never change the engine coolant when the engine is hot.

—DRAINING ENGINE COOLANT—

NAMA0050S01

1. Set air conditioning system as follows to prevent engine coolant from remaining in the system.
   a. Turn ignition switch “ON” and set temperature controller to maximum hot position.
   b. Wait 10 seconds before turning ignition switch “OFF”.
2. Open radiator drain plug at the bottom of radiator.
3. Remove radiator cap.

- **Be careful not to allow engine coolant to contact drive belts.**

When draining all the engine coolant in the system, also perform the following two steps.

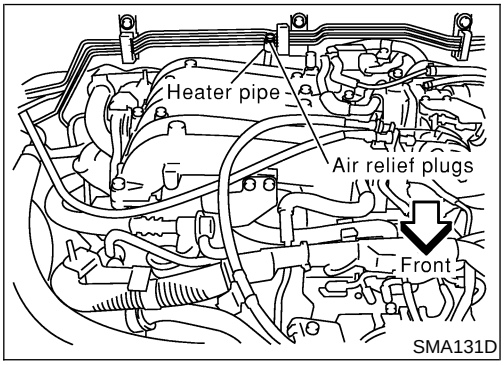

1) Open drain plugs on cylinder block. Refer to “Disassembly”, EM-67.
2) Open air relief plugs to drain engine coolant.

4. Remove reservoir tank, drain engine coolant and clean tank before installing.
5. Check drained engine coolant for contaminants such as rust, corrosion or discoloration. If contaminated flush engine cooling system, refer to “FLUSHING COOLING SYSTEM”, MA-16.

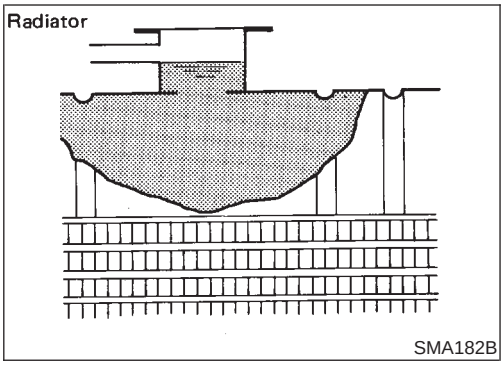

SMA182B

—REFILLING ENGINE COOLANT—

NAMA0050S02

1. Install reservoir tank and radiator drain plug.
2. Close and tighten cylinder block drain plugs securely if removed. Refer to "Assembly", EM-76.
3. Fill radiator slowly with engine coolant.
   If air relief plug was removed, fill until engine coolant spills from the air relief plug, then install air relief plug.

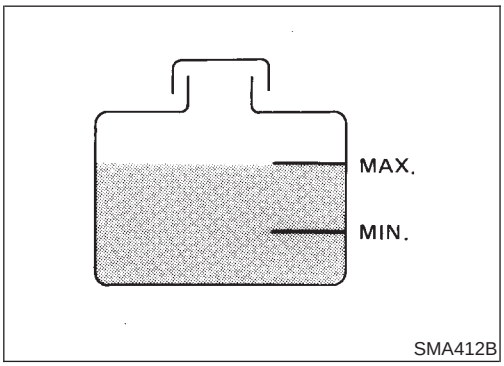

SMA412B

4. Fill reservoir tank if removed with engine coolant up to the MAX level and install radiator cap.

Use Genuine NISSAN Long Life Antifreeze/Coolant or equivalent mixed with demineralized water/distilled water.
For engine coolant mixture ratio, refer to "RECOMMENDED FLUIDS AND LUBRICANTS", MA-13.

Coolant capacity (Without reservoir tank):
8.6 ℓ (9-1/8 US qt, 7-5/8 Imp qt)
Reservoir tank capacity (for MAX level):
0.6 ℓ (5/8 US qt, 1/2 Imp qt)

Pour engine coolant through engine coolant filler neck slowly to allow air in system to escape.

5. Warm up engine to normal operating temperature with radiator cap installed.
6. Run engine at 2,500 rpm for 10 seconds and return to idle speed.

- Repeat 2 or 3 times.

Watch engine coolant temperature gauge so as not to overheat the engine.

7. Stop engine and cool it down.

- Cool down using a fan to reduce the time.

8. Refill reservoir tank to Max line with engine coolant.
9. Repeat steps 5 through step 8 two or more times until coolant level no longer drops.
10. Check cooling system for leaks with engine running.
11. Warm up engine, and check for sound of engine coolant flow while running engine from idle up to 3,000 rpm with heater temperature control set at several positions between COOL and HOT.

- Sound may be noticeable at heater water cock.

12. If sound is heard, bleed air from cooling system by repeating steps 5 through 8 until engine coolant level no longer drops.

- **Clean excess engine coolant from engine.**

—FLUSHING COOLING SYSTEM—

NAMA0050S03

1. Open air relief plug.
2. Fill radiator with water until water spills from the air relief holes, then close air relief plugs. Fill radiator and reservoir tank with water and reinstall radiator cap.
3. Run engine and warm it up to normal operating temperature.
4. Rev engine two or three times under no-load.
5. Stop engine and wait until it cools down.
6. Drain water.

7. Repeat steps 1 through 6 until clear water begins to drain from radiator.

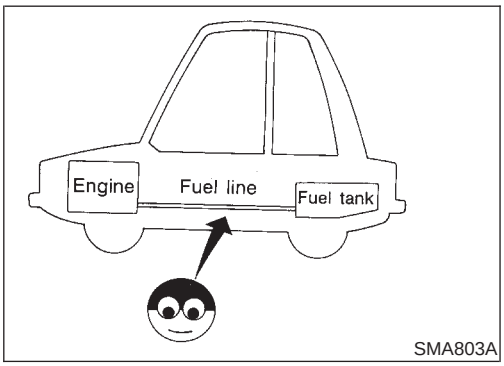

Checking Fuel Lines

NAMA0051

Inspect fuel lines and tank for improper attachment, leaks, cracks, damage, loose connections, chafing or deterioration.
If necessary, repair or replace faulty parts.

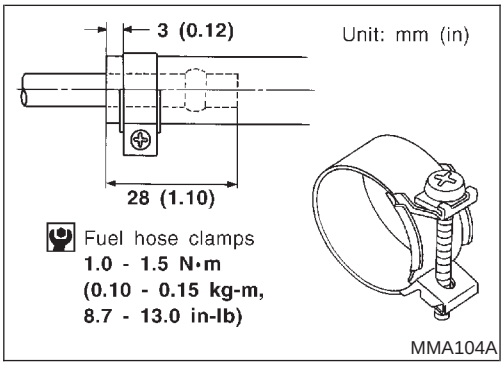

CAUTION:
Tighten high-pressure rubber hose clamp so that clamp end is 3 mm (0.12 in) from hose end.
Tightening torque specifications are the same for all rubber hose clamps.
Ensure that screw does not contact adjacent parts.

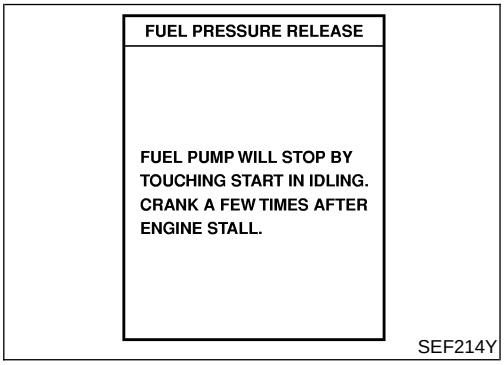

Changing Fuel Filter

NAMA0052

WARNING:
Before removing fuel filter, release fuel pressure from fuel line.

WITH CONSULT-II

NAMA0052S01

1. Turn ignition switch "ON".
2. Perform "FUEL PRESSURE RELEASE" in "WORK SUPPORT" mode with CONSULT-II.
3. Start engine.
4. After engine stalls, crank engine two or three times to release all fuel pressure.
5. Turn ignition switch "OFF".

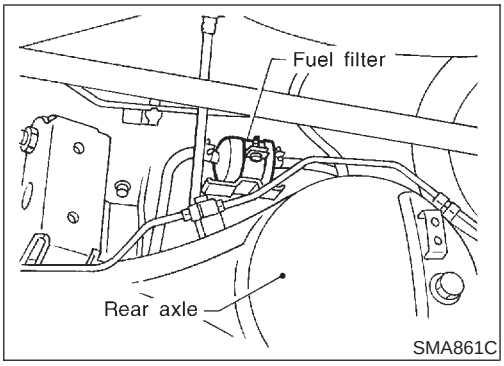

6. Loosen fuel hose clamps.
7. Replace fuel filter.

- **Be careful not to spill fuel over engine compartment. Place a shop towel to absorb fuel.**
- **Use a high-pressure type fuel filter. Do not use a synthetic resinous fuel filter.**
- **When tightening fuel hose clamps, refer to "Checking Fuel Lines".**

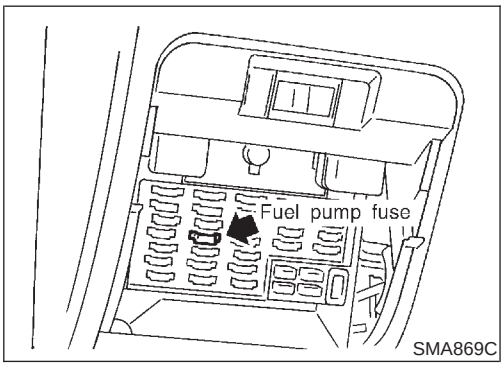

WITHOUT CONSULT-II

NAMA0052S02

1. Remove fuel pump fuse located in fuse box.
2. Start engine.
3. After engine stalls, crank it two or three times to release all fuel pressure.
4. Turn ignition switch "OFF" and install fuel pump fuse.

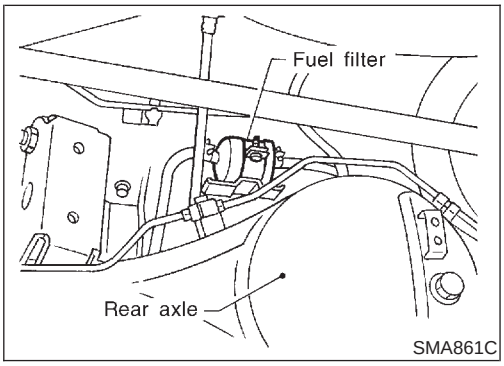

5. Loosen fuel hose clamps.
6. Replace fuel filter.

- **Be careful not to spill fuel over engine compartment. Place a shop towel to absorb fuel.**
- **Use a high-pressure type fuel filter. Do not use a synthetic resinous fuel filter.**
- **When tightening fuel hose clamps, refer to "Checking Fuel Lines".**

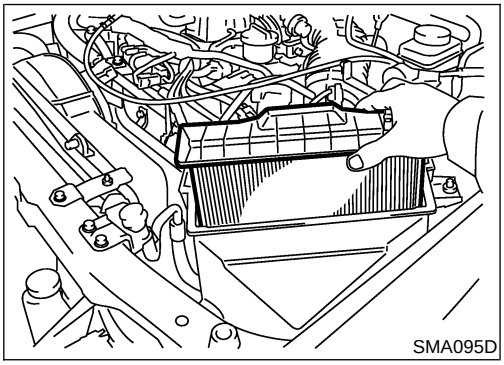

Changing Air Cleaner Filter

NAMA0053

VISCOUS PAPER TYPE

NAMA0053S01

The viscous paper type filter does not need cleaning between replacement intervals.

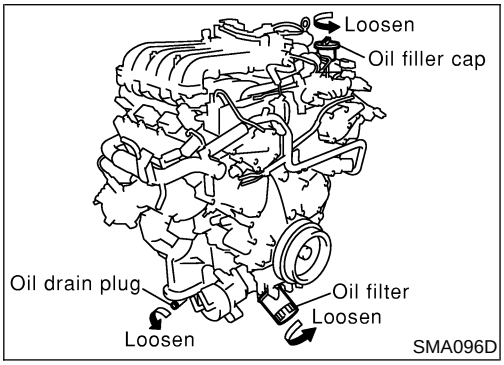

Changing Engine Oil

NAMA0054

WARNING:

- **Be careful not to burn yourself, as the engine oil is hot.**
- **Prolonged and repeated contact with used engine oil may cause skin cancer; try to avoid direct skin contact with used oil. If skin contact is made, wash thoroughly with soap or hand cleaner as soon as possible.**

1. Warm up engine, and check for oil leakage from engine components.
2. Stop engine and wait for more than 10 minutes.
3. Remove drain plug and oil filler cap.

4. Drain oil and refill with new engine oil.

Oil specification and viscosity

- Refer to MA-12, "RECOMMENDED FLUIDS AND LUBRICANTS".

Oil capacity (Approximately):

Unit: ℓ (US qt, Imp qt)

Drain and refill	With oil filter change	5.0 (5-1/4, 4-3/8)
	Without oil filter change	4.8 (5-1/8, 4-1/4)
Dry engine (engine overhaul)		6.8 (7-1/4, 6)

CAUTION:

- **Be sure to clean drain plug and install with new washer.**
  Oil pan drain plug:
  : 29.4 - 39.2 N·m (3.0 - 4.0 kg-m, 22 - 29 ft-lb)
- **The refill capacity depends on the oil temperature and drain time. Use these specifications for reference only. Always use the dipstick to determine when the proper amount of oil is in the engine.**

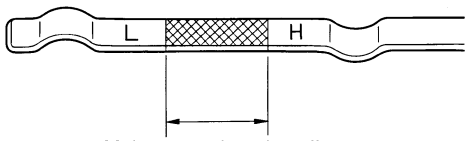

Make sure that the oil level is between "L" and "H".

JMA122D

5. Warm up engine and check area around drain plug and oil filter for oil leakage.
6. Stop engine and wait for more than 10 minutes.
7. Check oil level.

Changing Oil Filter

NAMA0055

1. Remove oil filter with Tool.

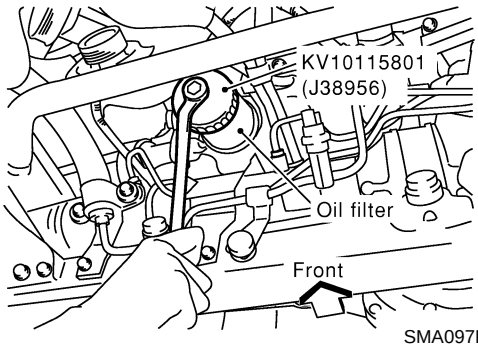

SMA097D

WARNING:

Be careful not to burn yourself, as the engine and engine oil are hot.

The filter is a full-flow cartridge type and is provided with a relief valve.

Refer to LC-8, "Oil Filter".

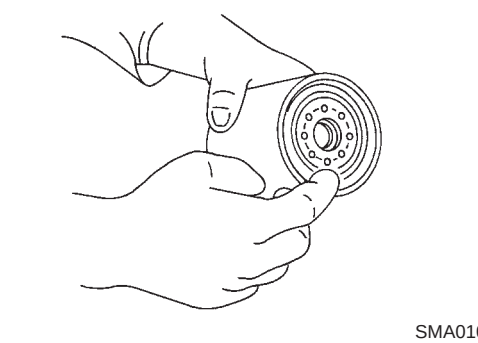

SMA010

2. Clean oil filter mounting surface on cylinder block. Coat rubber seal of new oil filter with engine oil.

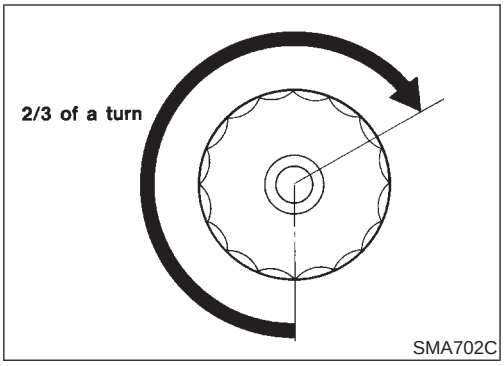

3. Screw in the oil filter until a slight resistance is felt, then tighten an additional 2/3 turn.
4. Add engine oil.

Refer to MA-18, "Changing Engine Oil".

- **Clean excess oil from engine.**

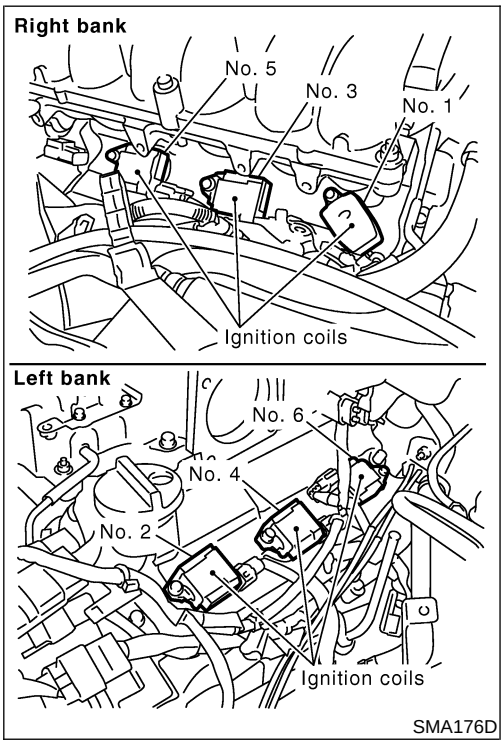

Changing Spark Plugs

NAMA0056

1. Remove engine cover.
2. Remove air duct with air cleaner assembly.
3. Disconnect harness connectors and harness brackets around ignition coil sides.
4. Remove electric throttle control actuator. (Only when removing the No. 4 cylinder spark plug)
5. Disconnect ignition coil harness connectors.
6. Loosen ignition coil fixing bolts and pull out coil from rocker cover.

Ignition coil:

: 8.5 - 10.8 N·m (0.87 - 1.1 kg-m, 76 - 95 in-lb)

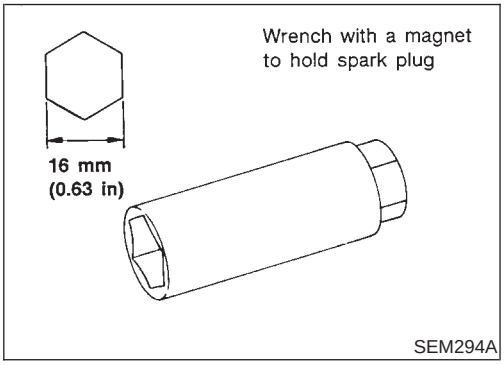

7. Check type and gap of new spark plug.

Spark plug type (Platinum-tipped type):

	Symbol	Make
Standard type	PLFR5A-11	NGK
Cold type	PLFR6A-11	NGK
Hot type	PLFR4A-11	NGK

Gap (Nominal): 1.1 mm (0.043 in)

Spark plug:

: 19.6 - 29.4 N·m (2.0 - 2.9 kg-m, 15 - 22 ft-lb)

Use standard type spark plug for normal condition.

The hot type spark plug is suitable when fouling may occur with the standard type spark plug such as:

- frequent engine starts
- low ambient temperatures

The cold type spark plug is suitable when spark knock may occur with the standard type spark plug such as:

- extended highway driving
- frequent high engine revolution

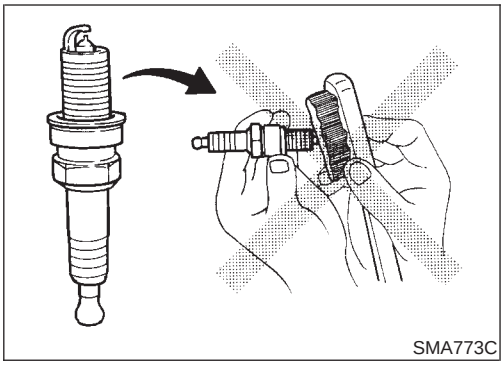
SMA773C

- **Do not use a wire brush for cleaning.**
- **If plug tip is covered with carbon, spark plug cleaner may be used.**

  Cleaner air pressure:

  Less than 588 kPa (6 kg/cm^2, 85 psi)

  Cleaning time:

  Less than 20 seconds

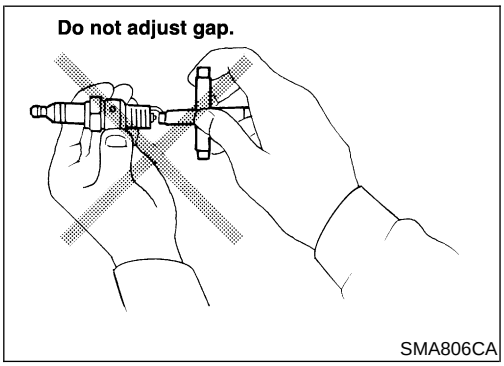

SMA806CA

- **Checking and adjusting plug gap is not required between change intervals.**

Checking EVAP Vapor Lines

NAMA0057

1. Visually inspect EVAP vapor lines for improper attachment, cracks, damage, loose connections, chafing or deterioration.
2. Inspect vacuum relief valve of fuel tank filler cap for clogging, sticking, etc.

Refer to EC-38, "EVAPORATIVE EMISSION SYSTEM".

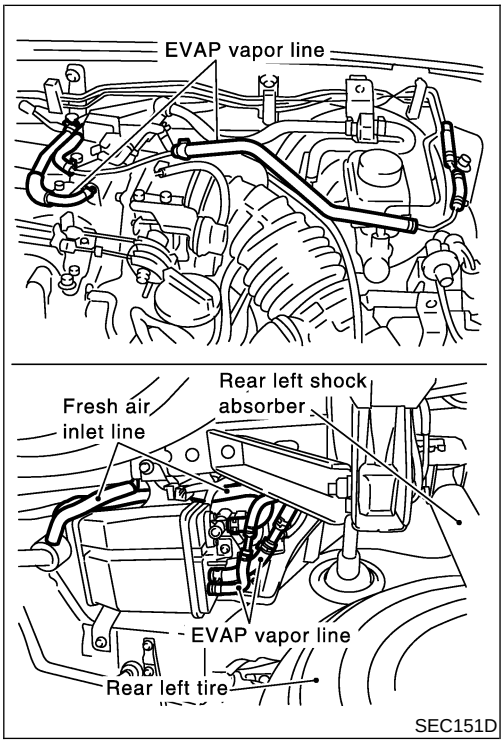

SEC151D

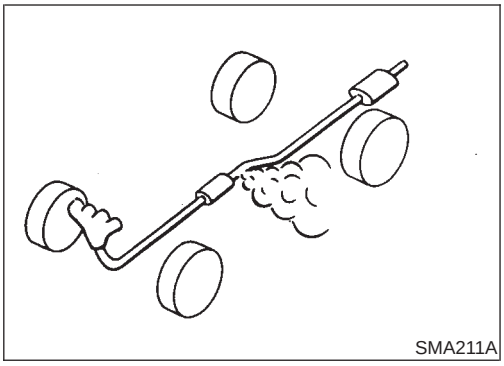
SMA211A

Checking Exhaust System

NAMA0019

Check exhaust pipes, muffler and mounting for improper attachment, leaks, cracks, damage, loose connections, chafing or deterioration.

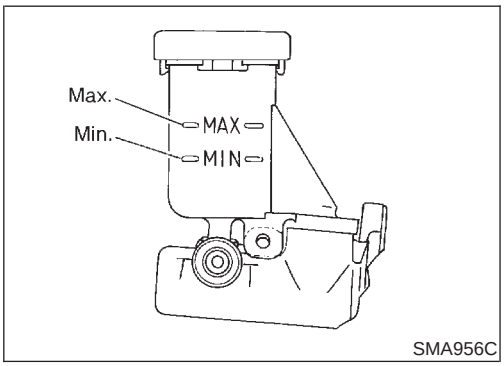

SMA956C

Checking Clutch Fluid Level and Leaks

NAMA0020

If fluid level is extremely low, check clutch system for leaks.

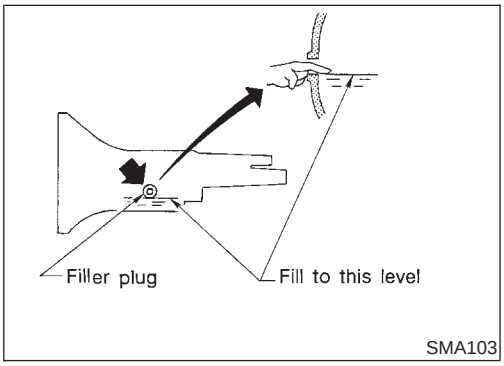

SMA103

Checking M/T Oil

NAMA0021

Check if oil is leaking from transmission or around it.

Changing M/T Oil

NAMA0022

1. Drain oil from drain plug and refill with new gear oil.
2. Check oil level from filler hole as shown in the figure.

Oil grade: API GL-4

Viscosity: Refer to "RECOMMENDED FLUIDS AND LUBRICANTS", MA-12.

Oil capacity: 5.1 ℓ (10-3/4 US pt, 9 Imp pt)

Filler plug and drain plug:
: 25 - 34 N·m (2.5 - 3.5 kg-m, 18 - 25 ft-lb)

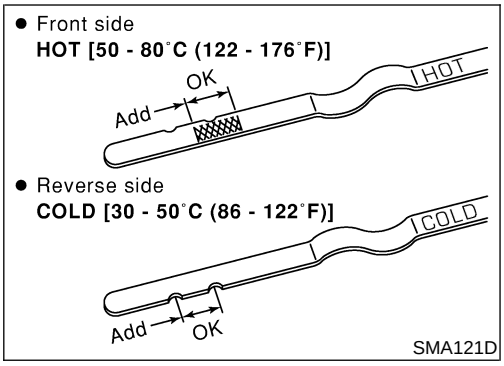

SMA121D

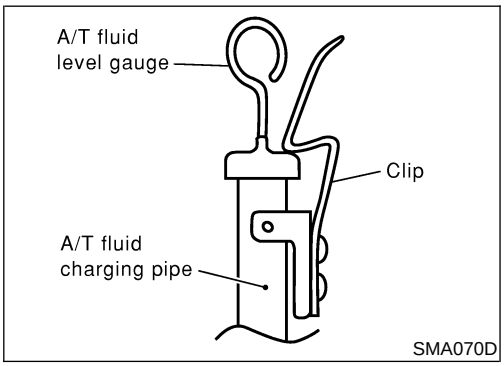

SMA070D

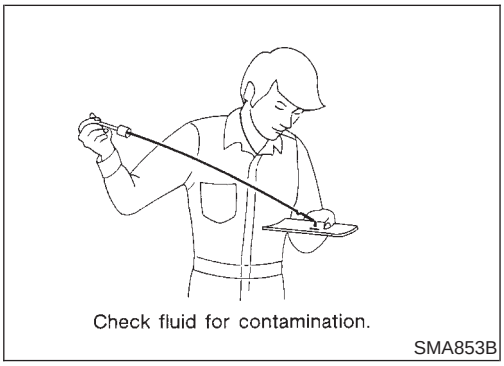

SMA853B

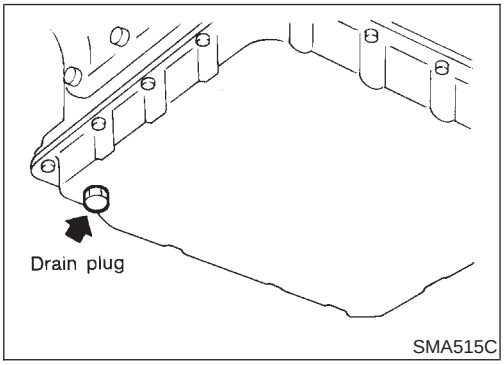

SMA515C

Checking A/T Fluid

NAMA0024

1. Warm up engine.
2. Check for fluid leakage.
3. Before driving, fluid level can be checked at fluid temperatures of 30 to 50°C (86 to 122°F) using “COLD” range on dipstick.

a. Park vehicle on level surface and set parking brake.
b. Start engine and move selector lever through each gear position. Leave selector lever in “P” position.
c. Check fluid level with engine idling.
d. Remove dipstick and note reading. If level is at low side of either range, and fluid to the charging pipe.
e. Re-insert dipstick into charging pipe as far as it will go.
f. Remove dipstick and note reading. If reading is at low side of range, add fluid to the charging pipe.

Do not overfill.

4. Drive vehicle for approximately 5 minutes in urban areas.
5. Re-check fluid level at fluid temperatures of 50 to 80°C (122 to 176°F) using “HOT” range on dipstick.

CAUTION:
Securely install A/T fluid level gauge.

6. Check fluid condition.

- If fluid is very dark or smells burned, refer to AT section for checking operation of A/T. Flush cooling system after repair of A/T.
- If A/T fluid contains frictional material (clutches, bands, etc.), replace radiator and flush cooler line using cleaning solvent and compressed air after repair of A/T. Refer to LC-22, “Radiator”.

Changing A/T Fluid

NAMA0025

1. Warm up A/T fluid.
2. Stop engine.
3. Drain A/T fluid from drain plug and refill with new A/T fluid. Always refill same volume with drained fluid.

Fluid grade:

Genuine NISSAN Matic D ATF (Continental U.S. and Alaska) or Canada NISSAN Automatic Transmission Fluid. Refer to “RECOMMENDED FLUIDS AND LUBRICANTS”, MA-12.

Fluid capacity (With torque converter):

2WD, 4WD 8.5 ℓ (9 US qt, 7-1/2 Imp qt)

Drain plug:

: 29 - 39 N·m (3.0 - 4.0 kg-m, 22 - 29 ft-lb)

4. Run engine at idle speed for five minutes.
5. Check fluid level and condition. Refer to MA-23, “ Checking A/T Fluid”. If fluid is still dirty, repeat steps 2 through 5.

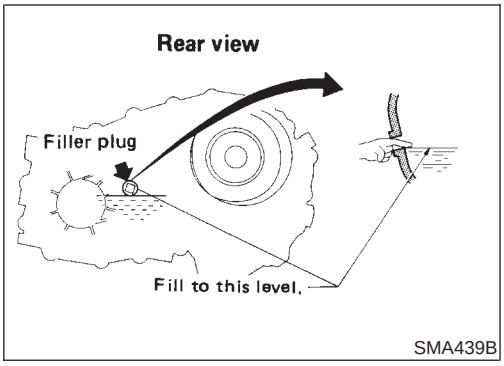

Checking Part Time 4WD Transfer Fluid

NAMA0026

Check for fluid leakage and fluid level.

A/T fluid is used for the transfer in the factory.
Never start engine while checking fluid level.

Filler plug:

: 25 - 34 N·m (2.5 - 3.5 kg-m, 18 - 25 ft-lb)

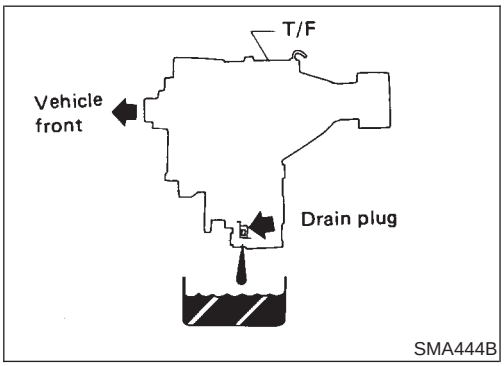

Changing Part Time 4WD Transfer Fluid

NAMA0027

When changing transfer fluid completely, A/T fluid may be used.

Fluid grade:

API GL-4 or Genuine NISSAN Matic D ATF (Continental U.S. and Alaska) or Canada NISSAN Automatic Transmission Fluid

Refer to "RECOMMENDED FLUIDS AND LUBRICANTS", MA-12.

Fluid capacity:

2.2 ℓ (2-3/8 US qt, 2 Imp qt)

Drain plug:

: 25 - 34 N·m (2.5 - 3.5 kg-m, 18 - 25 ft-lb)

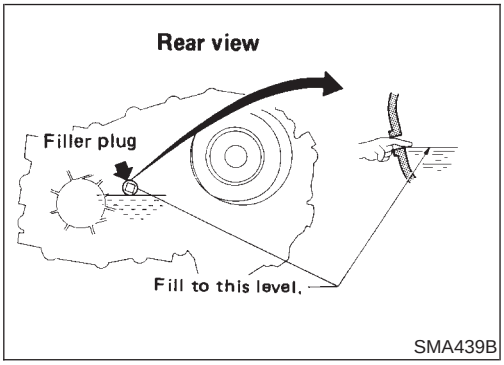

Checking All-mode 4WD Transfer Fluid

NAMA0047

Check for oil leakage and fluid level.

A/T fluid is used for the all-mode 4WD transfer in the factory.
Never start engine while checking fluid level.

Filler plug:

: 10 - 20 N·m (1.0 - 2.0 kg-m, 87 - 174 in-lb)

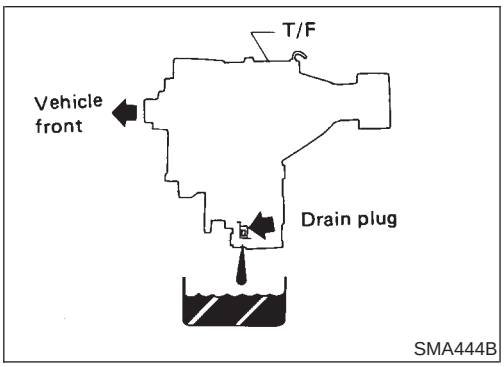

Changing All-mode 4WD Transfer Fluid

NAMA0048

When changing all-mode 4WD transfer fluid completely, A/T fluid may be used.

Fluid grade:

Genuine NISSAN Matic D ATF (Continental U.S. and Alaska) or Canada NISSAN Automatic Transmission Fluid

Refer to "RECOMMENDED FLUIDS AND LUBRICANTS", MA-12.

Fluid capacity:

3.0 ℓ (3-1/8 US qt, 2-5/8 Imp qt)

Drain plug:
: 10 - 20 N·m (1.0 - 2.0 kg-m, 87 - 174 in-lb)

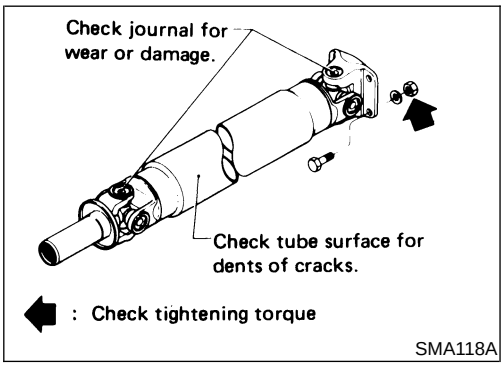

SMA118A

Checking Propeller Shaft

NAMA0028

Check propeller shaft for damage, looseness or grease leakage.

Tightening torque:
Refer to "REAR PROPELLER SHAFT", PD-6.

Greasing Propeller Shaft

NAMA0029

Apply specified grease to nipples provided on propeller shaft.

Grease grade:
Refer to "RECOMMENDED FLUIDS AND LUBRICANTS", MA-12.

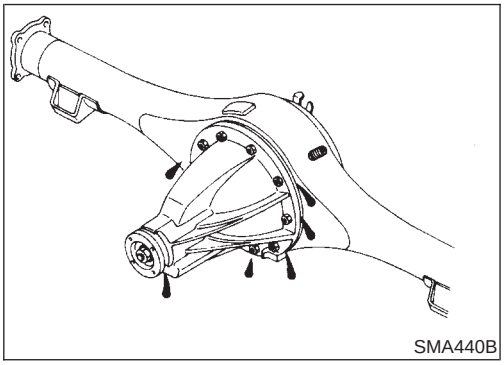
SMA440B

Checking Differential Gear Oil

NAMA0030

Check for oil leakage and oil level.

Filler plug:
Front
: 39 - 59 N·m (4 - 6 kg-m, 29 - 43 ft-lb)
Rear
: 59 - 118 N·m (6 - 12 kg-m, 43 - 87 ft-lb)

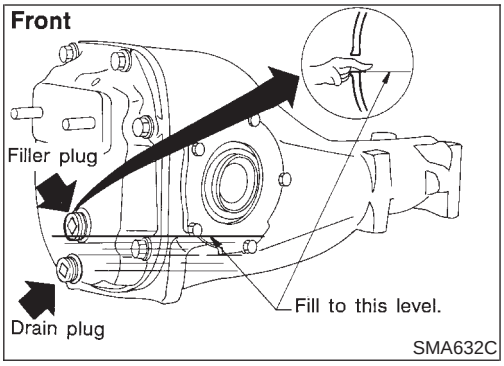

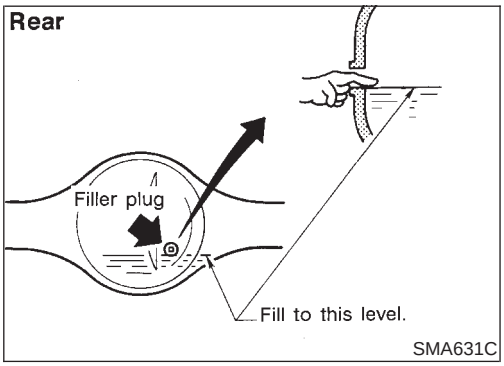

Changing Differential Gear Oil

NAMA0031

1. Drain oil from drain plug and refill with new gear oil.
2. Check oil level.

Oil grade and viscosity:
See "RECOMMENDED FLUIDS AND LUBRICATNS", MA-12.
Oil capacity:
Front
1.9ℓ (4 US pt, 3-3/8 Imp pt)
Rear
2.4ℓ (5-1/8 US pt, 4-1/4 Imp pt)
Filler plug:
Front
: 39 - 59 N·m (4 - 6 kg-m, 29 - 43 ft-lb)
Rear
: 59 - 118 N·m (6 - 12 kg-m, 43 - 87 ft-lb)
Drain plug:
Front
: 59 - 98 N·m (6 - 10 kg-m, 43 - 72 ft-lb)
Rear
: 59 - 118 N·m (6 - 12 kg-m, 43 - 87 ft-lb)

LIMITED-SLIP DIFFERENTIAL GEAR

NAMA0031S01

- Use only approved limited-slip differential gear oil.
- Limited-slip differential identification.

1. Lift both rear wheels off the ground.
2. Turn one rear wheel by hand.
3. If both rear wheels turn in the same direction simultaneously, vehicle is equipped with limited-slip differential.

Balancing Wheels

NAMA0032

Adjust wheel balance using the road wheel center.

Wheel balance (Maximum allowable unbalance):
Refer to SDS, MA-32.

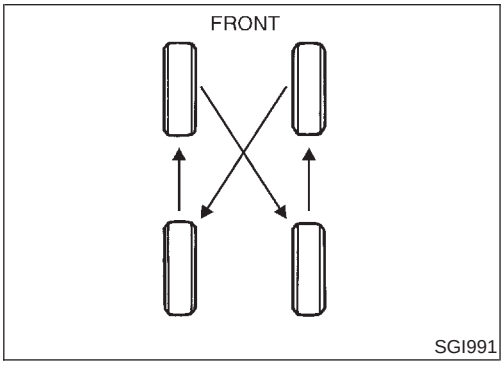

Tire Rotation

NAMA0033

- **After rotating the tires, adjust the tire pressure.**
- **Retighten the wheel nuts after the vehicle has been driven for the 1,000 km (600 miles). (also in cases of a flat tire, etc.)**

Wheel nuts:
: 118 - 147 N·m (12 - 15 kg-m, 87 - 108 ft-lb)

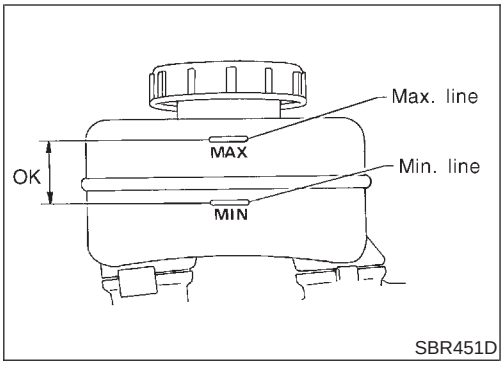

SBR451D

Checking Brake Fluid Level and Leaks

NAMA0034

If fluid level is extremely low, check brake system for leaks.

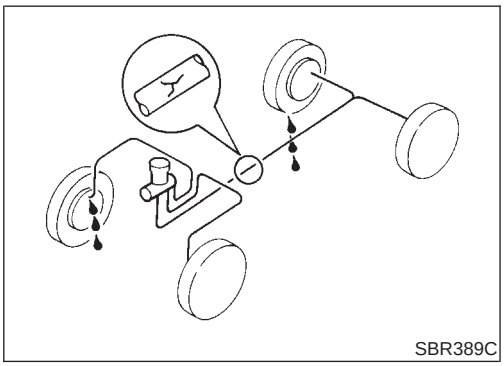
SBR389C

Checking Brake Lines and Cables

NAMA0035

Check brake fluid lines and parking brake cables for improper attachment, leaks, chafing, abrasions and deterioration.

Checking Disc Brake

NAMA0036

ROTOR

NAMA0036S01

Check condition, wear and damage.

Standard thickness:
28 mm (1.10 in)
Minimum thickness:
26 mm (1.02 in)

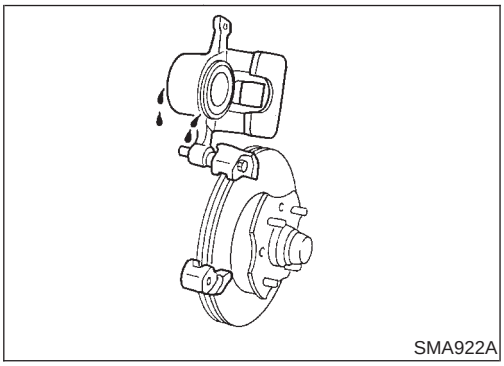
SMA922A

CALIPER

NAMA0036S02

Check for leakage.

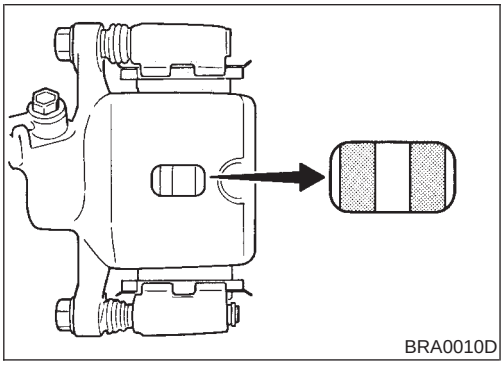
BRA0010D

PAD

NAMA0036S03

Check wear or damage.

Standard thickness:
11 mm (0.43 in)
Minimum thickness: 2 mm (0.08 in)

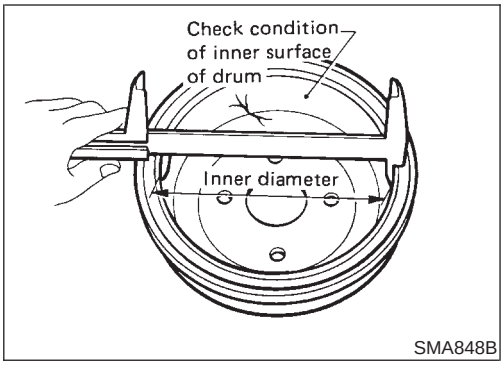

SMA848B

Checking Drum Brake

NAMA0037

WHEEL CYLINDER

NAMA0037S01

Check for leakage.

DRUM

NAMA0037S02

Check condition and inner surface.

Standard inner diameter:
295 mm (11.61 in)
Drum repair limit (Inner diameter):
296.5 mm (11.67 in)

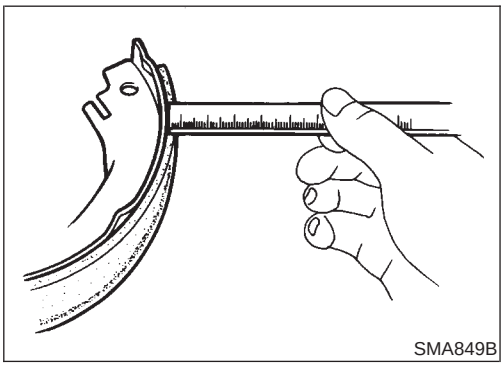
SMA849B

LINING

NAMA0037S03

Check wear or damage.

Standard thickness:
6.1 mm (0.240 in)
Lining wear limit (Minimum thickness):
1.5 mm (0.059 in)

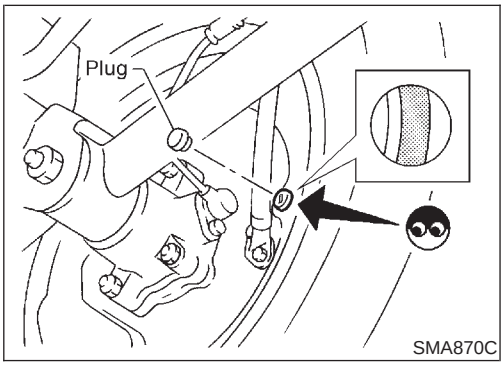

SMA870C

TEMPORARY METHOD FOR CHECKING LINING WEAR

NAMA0037S04

Remove inspection hole plug and check for lining wear.

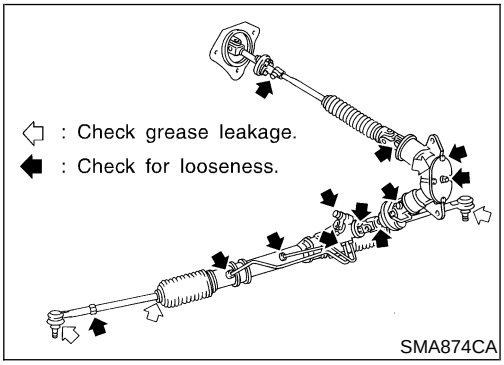

SMA874CA

Checking Steering Gear, Linkage and Transfer Gear

NAMA0038

STEERING GEAR

NAMA0038S01

- Check gear housing and boots for looseness, damage and grease leakage.
- Check connection with steering column for looseness.

STEERING LINKAGE

NAMA0038S02

- Check ball joint, dust cover and other component parts for looseness, wear, damage and grease leakage.

STEERING TRANSFER GEAR

NAMA0038S03

- Check gear box for looseness, damage and grease leakage.

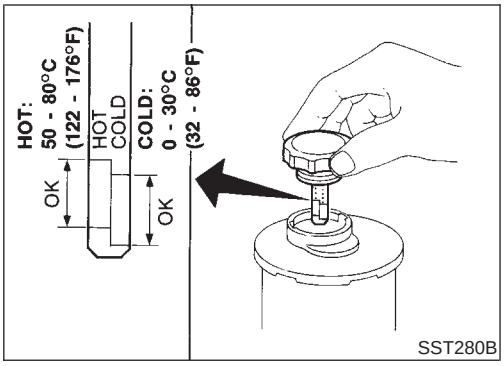

SST280B

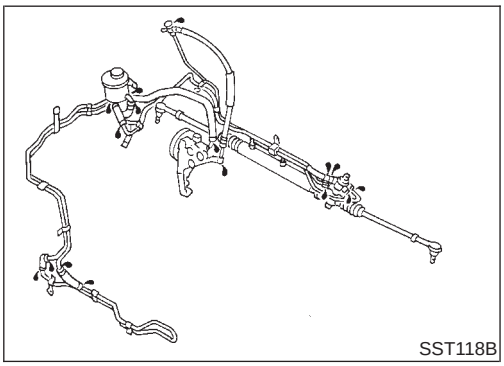
SST118B

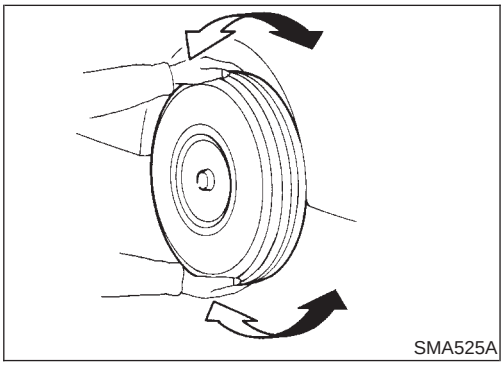
SMA525A

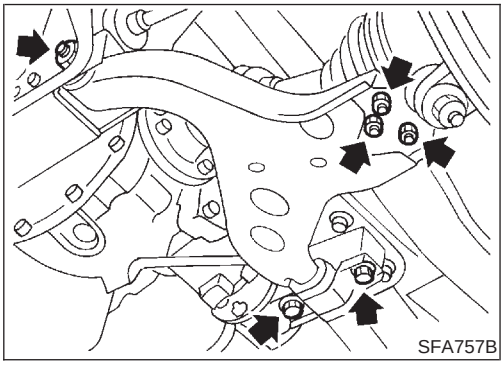
SFA757B

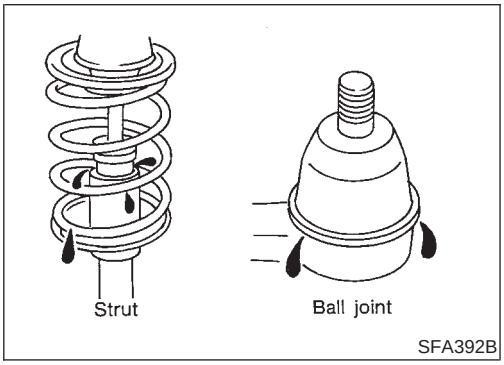

SFA392B

Checking Power Steering Fluid and Lines

NAMA0039

CHECKING FLUID LEVEL

NAMA0039S01

- Check fluid level with engine off.
- Check fluid level with dipstick on reservoir cap. Use “HOT” range at fluid temperatures of 50 to 80°C (122 to 176°F). Use “COLD” range at fluid temperatures of 0 to 30°C (32 to 86°F).

CAUTION:

- **Do not overfill.**
- **Recommended fluid is Genuine NISSAN PSF or equivalent. Refer to “RECOMMENDED FLUIDS AND LUBRICANTS”, MA-12.**

CHECKING LINES

NAMA0039S02

- Check lines for improper attachment, leaks, cracks, damage, loose connections, chafing and deterioration.
- Check rack boots for accumulation of power steering fluid.

Axle and Suspension Parts

NAMA0061

Check front and rear axle and suspension parts for excessive play, cracks, wear, or other damage.

- Shake each wheel to check for excessive play.
- Rotate each wheel to check for abnormal noise.
- Check axle and suspension nuts and bolts for looseness.
- Check strut (shock absorber) for oil leakage or other damage.
- Check suspension ball joint for grease leakage and ball joint dust cover for cracks or other damage.

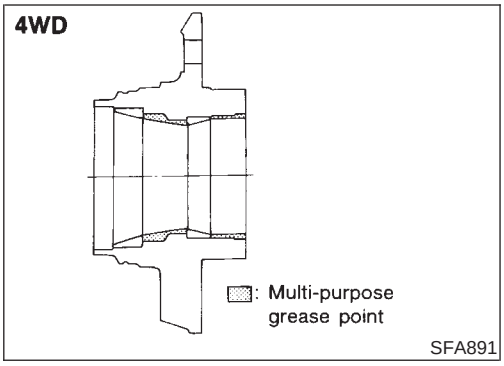

SFA891

FRONT WHEEL BEARING

NAMA0061S01

Apply multi-purpose grease sparingly to the following parts:

- Threaded portion of spindle
- Contact surface between wheel bearing lock washer (chamfered side) and outer wheel bearing
- Grease seal lip
- Wheel hub (as shown at left) — 4WD —

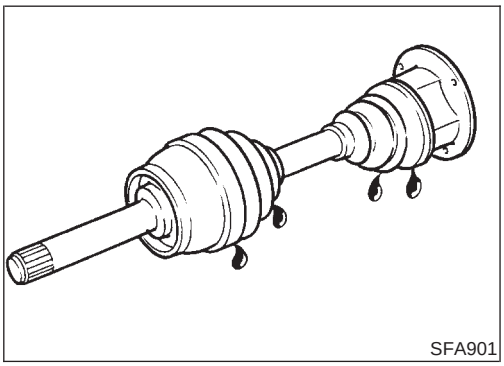
SFA901

Drive Shaft

NAMA0062

Check boot and drive shaft for cracks, wear, damage and grease leakage.

Lubricating Locks, Hinges and Hood Latches

NAMA0040

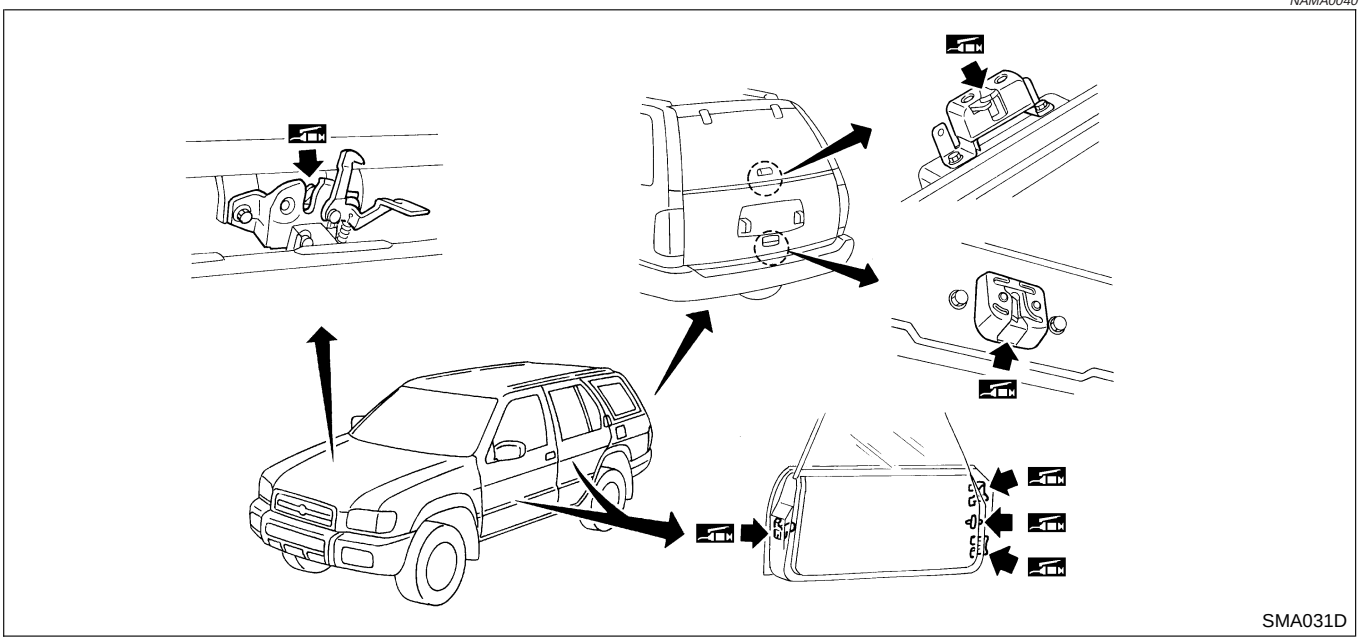
SMA031D

Checking Seat Belts, Buckles, Retractors, Anchors and Adjusters

NAMA0041

CAUTION:

- **After any collision, inspect all seat belt assemblies, including retractors and other attached hardwares (i.e. anchor bolt, guide rail set). Nissan recommends to replace all seat belt assemblies in use during a collision, unless not damaged and properly operating after minor collision.**
  Also inspect seat belt assemblies not in use during a collision, and replace if damaged or improperly operating.
  Seat belt pre-tensioner should be replaced even if the seat belts are not in use during a frontal collision where the driver and passenger air bags are deployed.
- **If any component of seat belt assembly is questionable, do not repair. Replace as seat belt assembly.**
- **If webbing is cut, frayed, or damaged, replace belt assembly.**
- **Never oil tongue and buckle.**
- **Use a genuine seat belt assembly.**

For details, refer to "Seat Belt Inspection", "SEAT BELTS" in RS section.

Anchor bolt

43.1 - 54.9 N·m (4.4 - 5.6 kg-m, 32 - 40 ft-lb)

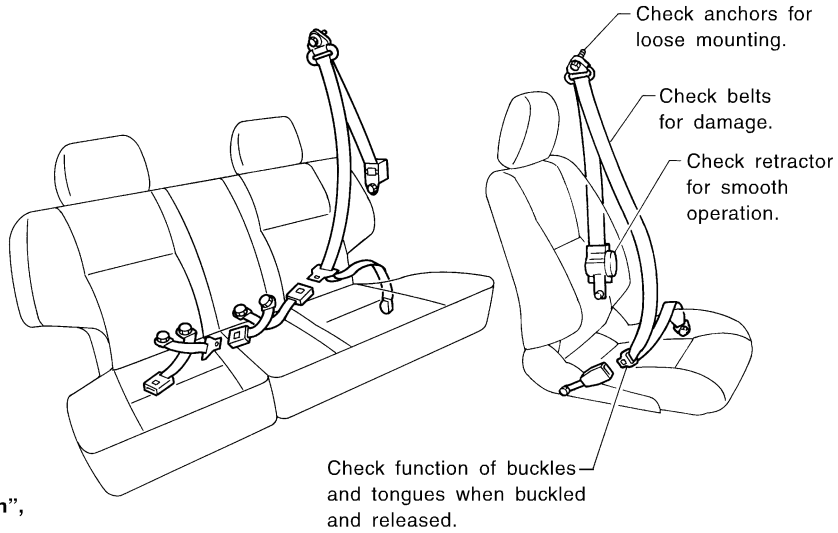

SMA854CD

Engine Maintenance

DRIVE BELT DEFLECTION

NAMA0058

Unit: mm (in)

	Used belt deflection		Deflection of new belt
	Limit	Deflection after adjustment	
Alternator Power steering oil pump Fan	7 (0.28)	4 - 5 (0.16 - 0.20)	3.5 - 4.5 (0.138 - 0.177)
Air conditioner compressor	12 (0.47)	9 - 10 (0.35 - 0.39)	8 - 9 (0.31 - 0.35)
Applied pushing force	98 N (10 kg, 22 lb)		

DRIVE BELT TENSION

NAMA0059

Unit: N (kg, lb)

	Used belt		New belt
	Limit	After adjustment	
Generator Power steering oil pump Fan	294 (30, 66)	730 - 818 (74.4 - 83.5, 164 - 184)	838 - 926 (85.4 - 94.5, 188 - 208)
Air conditioner compressor	196 (20, 44)	348 - 436 (35.5 - 44.5, 78 - 98)	470 - 559 (47.9 - 57.0, 106 - 126)

SPARK PLUG (PLATINUM-TIPPED TYPE)

NAMA0060

	Symbol	Make
Standard type	PLFR5A-11	NGK
Cold type	PLFR6A-11	NGK
Hot type	PLFR4A-11	NGK
Plug gap (Nominal)	1.1 mm (0.043 in)	

Chassis and Body Maintenance

WHEEL BALANCE

NAMA0044

Maximum allowable unbalance	Dynamic (At rim flange) g (oz)	10 (0.35) (one side)
	Static g (oz)	20 (0.71)