FRONT AXLE & FRONT SUSPENSION

SECTION FA

CONTENTS

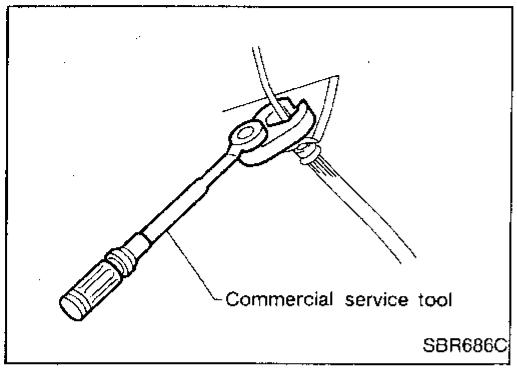

Precautions

- **When installing rubber parts, final tightening must be carried out under unladen condition* with tires on ground.**
  ***: Fuel, radiator coolant and engine oil full. Spare tire, jack, hand tools and mats in designated positions.**
- **After installing removed suspension parts, check wheel alignment and adjust if necessary.**
- **Use flare nut wrench when removing and installing brake tubes.**
- **Always torque brake lines when installing.**

Special Service Tools

The actual shapes of Kent-Moore tools may differ from those of special service tools illustrated here.

Tool number (Kent-Moore No.) Tool name	Description	
HT72520000 (J25730-B) Ball joint remover	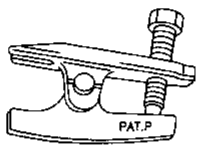 NT146	Removing tie-rod outer end and lower ball joint
ST35652000 (—) Strut attachment	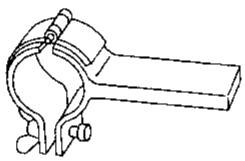 NT145	Fixing strut assembly

Commercial Service Tools

Tool name	Description	
① Flare nut crowfoot ② Torque wrench	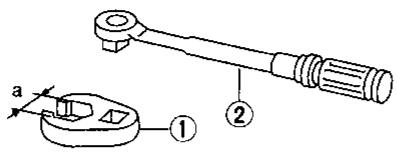 NT360	Removing and installing each brake piping **a: 10 mm (0.39 in)**
Baffle plate drift	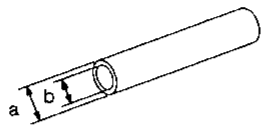 NT065	Installing baffle plate **a: 88 mm (3.46 in) dia.** **b: 68 mm (2.68 in) dia.**
Tension rod bushing drift	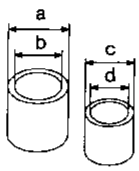 NT155	Removing and installing tension rod bushing **a: 75 mm (2.95 in) dia.** **b: 66 mm (2.60 in) dia.** **c: 62 mm (2.44 in) dia.** **d: 25 - 55 mm (0.98 - 2.17 in) dia.**
Attachment Wheel alignment	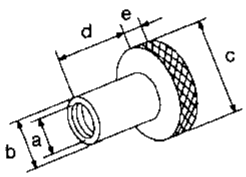 NT148	Measure wheel alignment **a: Screw M22 x 1.5 pitch** **b: 35 mm (1.38 in) dia.** **c: 65 mm (2.56 in) dia.** **d: 56 mm (2.20 in)** **e: 12 mm (0.47 in)**
Cap drift	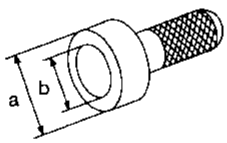 NT115	Installing hub cap **a: 70 mm (2.76 in) dia.** **b: 59 mm (2.32 in) dia.**
Spring compressor	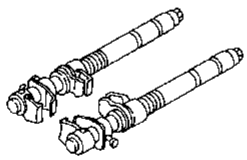 NT717	Removing and installing coil spring

NVH Troubleshooting Chart

Use the chart below to help you find the cause of the symptom. If necessary, repair or replace these parts.

		Reference page	FA-6	FA-14	—	—	—	FA-13	FA-7	FA-15	FA-6	FA-7	—	—	—	—	—	—	—	NVH in PD section	NVH in PD section	Refer to FRONT AXLE AND FRONT SUSPENSION in this chart.	NVH in RA section	Refer to TIRES in this chart.	Refer to ROAD WHEEL in this chart.	NVH in RA section	NVH in BR section	NVH in ST section
		Possible cause and SUSPECTED PARTS	Improper installation, looseness	Shock absorber deformation, damage or deflection	Bushing or mounting deterioration	Parts interference	Spring fatigue	Suspension looseness	Incorrect wheel alignment	Stabilizer bar fatigue	Wheel bearing damage	Out-of-round	Imbalance	Incorrect air pressure	Uneven tire wear	Deformation or damage	Non-uniformity	Incorrect tire size	PROPELLER SHAFT	DIFFERENTIAL	FRONT AXLE AND FRONT SUSPENSION	REAR AXLE AND REAR SUSPENSION	TIRES	ROAD WHEEL	DRIVE SHAFT	BRAKES	STEERING
Symptom	FRONT AXLE AND FRONT SUSPEN-SION	Noise	X	X	X	X	X	X											X	X		X	X	X	X	X	X
		Shake	X	X	X	X		X											X			X	X	X	X	X	X
		Vibration	X	X	X	X	X												X			X	X		X		X
		Shimmy	X	X	X	X			X													X	X	X		X	X
		Judder	X	X	X																	X	X	X		X	X
		Poor quality ride or handling	X	X	X	X	X		X	X	X											X	X	X			
	TIRES	Noise	X									X	X	X	X	X	X		X	X	X	X		X	X	X	X
		Shake	X									X	X	X	X	X		X	X		X	X		X	X	X	X
		Vibration												X				X	X		X	X			X		X
		Shimmy	X									X	X	X	X	X	X	X			X	X		X		X	X
		Judder	X									X	X	X	X	X		X			X	X		X		X	X
		Poor quality ride or handling	X									X	X	X	X	X		X			X	X		X			
	ROAD WHEEL	Noise	X									X	X			X			X	X	X	X	X		X	X	X
		Shake	X									X	X			X			X		X	X	X		X	X	X
		Shimmy, Judder	X									X	X			X					X	X	X			X	X
		Poor quality ride or handling	X									X	X			X					X	X	X				

X: Applicable

SEC. 400•401

When installing rubber parts, final tightening must be carried out under unladen condition* with tires on ground.
* Fuel, radiator coolant and engine oil full.
Spare tire, jack, hand tools and mats in designated positions.

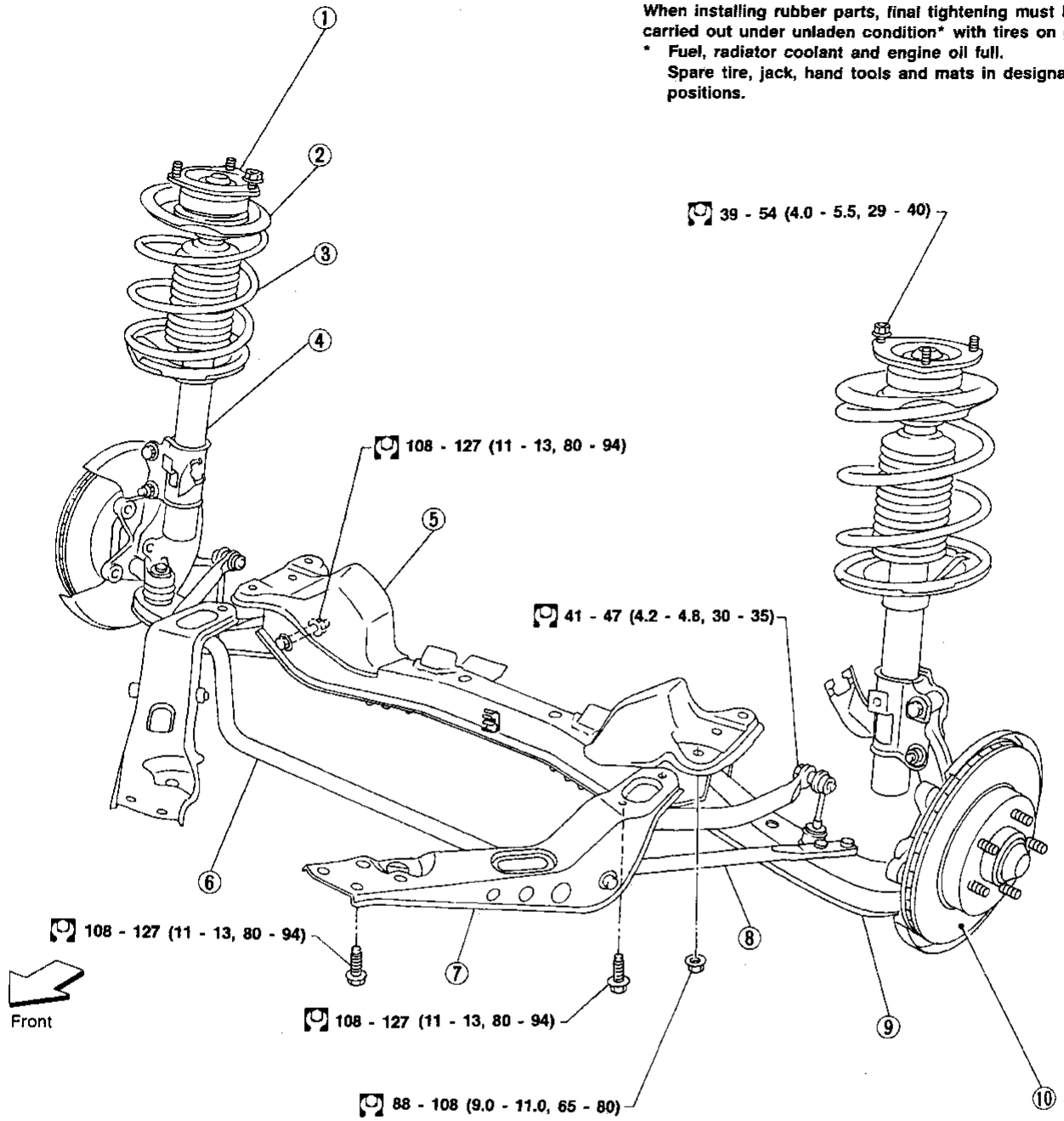

① Strut mounting insulator
② Spring upper seat
③ Coil spring
④ Strut assembly
⑤ Front suspension member
⑥ Front stabilizer bar
⑦ Tension rod bracket
⑧ Tension rod
⑨ Transverse link assembly
⑩ Brake rotor

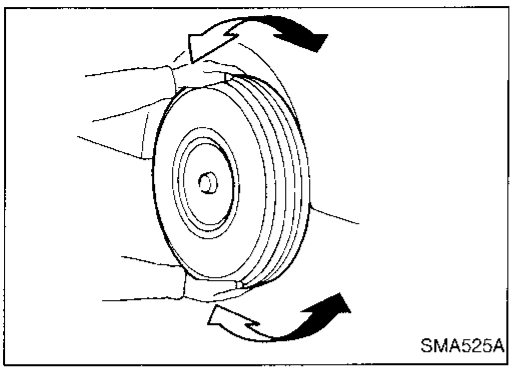

Front Axle and Front Suspension Parts

Check front axle and front suspension parts for excessive play, cracks, wear and other damage.

- Shake each front wheel to check for excessive play.
- Retighten all axle and suspensions nuts and bolts to the specified torque.
  Tightening torque:
  Refer to FRONT SUSPENSION (FA-13).
- Make sure that cotter pins are inserted.

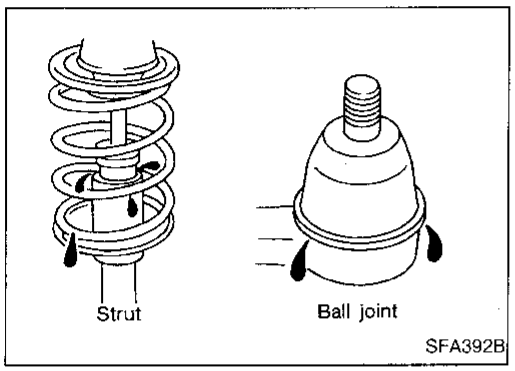

- Check strut (shock absorber) for oil leakage and other damage.
- Check suspension ball joint for grease leakage and ball joint dust cover for cracks and other damage.
  If ball joint dust cover is cracked or damaged, replace transverse link.

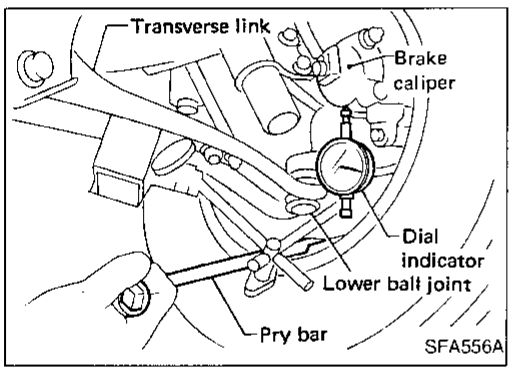

- Check suspension ball joint end play.

(1) Jack up front of vehicle and set the stands.
(2) Clamp dial indicator onto transverse link and place indicator tip on lower edge of brake caliper.
(3) Make sure front wheels are straight and brake pedal is depressed.
(4) Place a pry bar between transverse link and inner rim of road wheel.
(5) While raising and releasing pry bar, observe maximum dial indicator value.
  Vertical end play:
  0 mm (0 in)
  If ball joint vertical end play exists, remove transverse link and recheck the ball joint. Refer to FA-16.

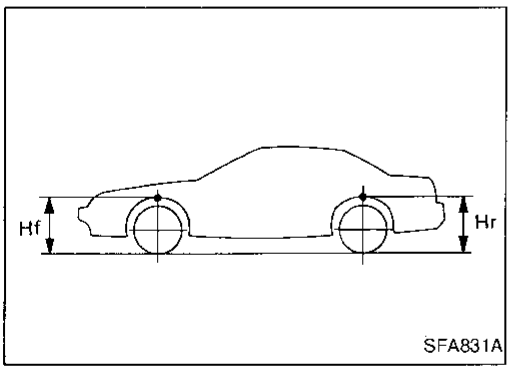

- Check spring height from top of wheelarch to ground using the following procedure.

(1) Park vehicle on a level surface with vehicle unladen*.
  *: Fuel, radiator coolant and engine oil full. Spare tire, jack, hand tools and mats in designated positions.
(2) Check tires for proper inflation and wear (tread wear indicator must not be showing).
(3) Bounce vehicle up and down several times and measure dimensions Hf and Hr. Refer to SDS (FA-17).
  Spring height is not adjustable. If out of specification, check for worn springs and suspension parts.

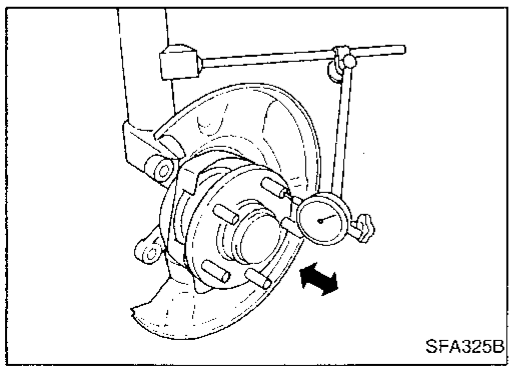

Front Wheel Bearing

- Check that wheel bearings operate smoothly.
- Check axial end play.
  Axial end play:
  0.05 mm (0.0020 in) or less
- If out of specification or wheel bearing does not turn smoothly, replace wheel bearing assembly.
  Refer to FRONT AXLE — Wheel Hub and Knuckle (FA-9).

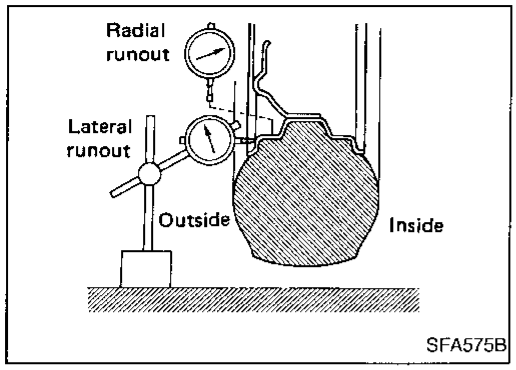

Front Wheel Alignment

Before checking front wheel alignment, be sure to make a preliminary inspection (Unladen*).

*: Fuel, radiator coolant and engine oil full. Spare tire, jack, hand tools and mats in designated positions.

PRELIMINARY INSPECTION

1. Check tires for wear and improper inflation.
2. Check wheel runout.
   Wheel runout:
   Refer to SDS (FA-18).
3. Check front wheel bearings for looseness.
4. Check front suspension for looseness.
5. Check steering linkage for looseness.
6. Check that struts work properly.
7. Check vehicle posture (Unladen).

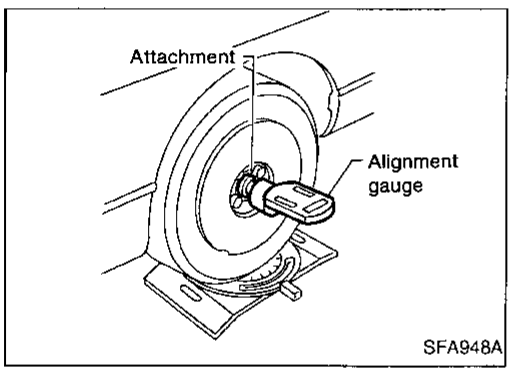

CAMBER, CASTER AND KINGPIN INCLINATION

Camber, caster and kingpin inclination are preset at factory and cannot be adjusted.

1. Measure camber, caster and kingpin inclination of both right and left wheels with a suitable alignment gauge.
   Camber, Caster and Kingpin inclination:
   Refer to SDS (FA-18).
2. If camber, caster or kingpin inclination is not within specification, inspect front suspension parts. Replace damaged or worn out parts.

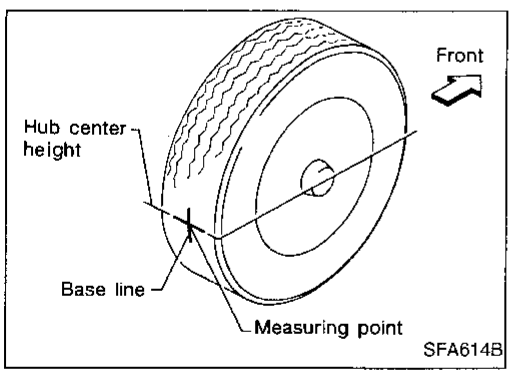

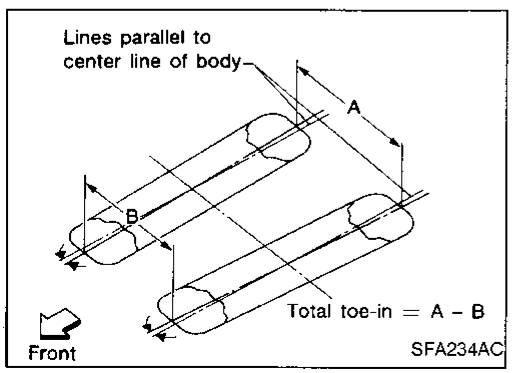

TOE-IN

Measure toe-in using the following procedure.

WARNING:

- **Always perform the following procedure on a flat surface.**
- **Make sure that no person is in front of the vehicle before pushing it.**

1. Bounce front of vehicle up and down to stabilize the posture.
2. Push the vehicle straight ahead about 5 m (16 ft).
3. Put a mark on base line of the tread (rear side) of both tires at the same height of hub center. This mark is a measuring point.
4. Measure distance "A" (rear side).
5. Push the vehicle slowly ahead to rotate the wheels 180 degrees (1/2 turn).

If the wheels have rotated more than 180 degrees (1/2 turn), try the above procedure again from the beginning. Never push vehicle backward.

6. Measure distance "B" (front side).
   Total toe-in
   Refer to SDS (FA-18).

Front Wheel Alignment (Cont'd)

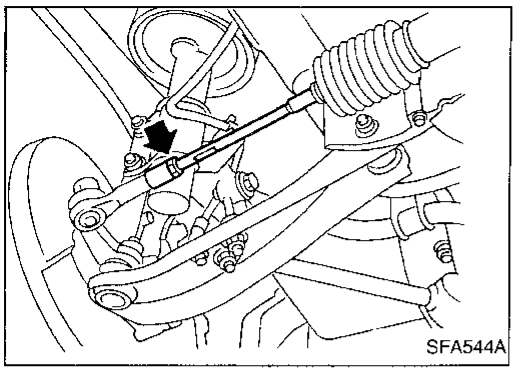

7. Adjust toe-in by varying the length of steering tie-rods.
(1) Loosen lock nuts.
(2) Adjust toe-in by screwing tie-rods in and out.

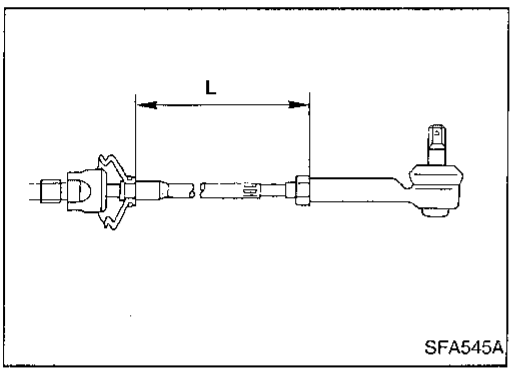

Make sure both tie-rods are the same length.

Standard length "L":

Refer to ST section ("Inspection and Adjustment", "SDS").

(3) Tighten lock nuts to specified torque.

Lock nut tightening torque:

Refer to ST section ("POWER STEERING GEAR AND LINKAGE").

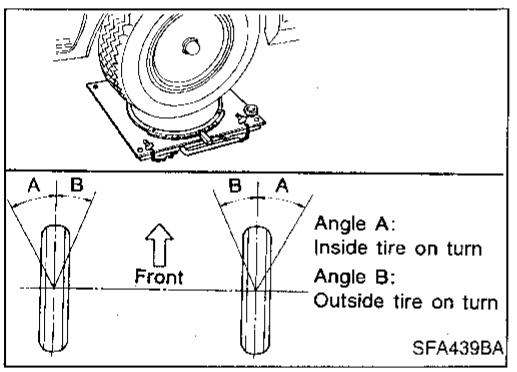

FRONT WHEEL TURNING ANGLE

Turning angle is set by stroke length of steering gear rack and cannot be adjusted.

1. Set wheels in straight-ahead position. Then move vehicle forward until front wheels rest on turning radius gauge properly.
2. Rotate steering wheel all the way right and left; measure turning angle.

Do not hold the steering wheel on full lock for more than 15 seconds.

Wheel turning angle (Full turn):

Refer to SDS (FA-18).

Wheel Hub and Knuckle

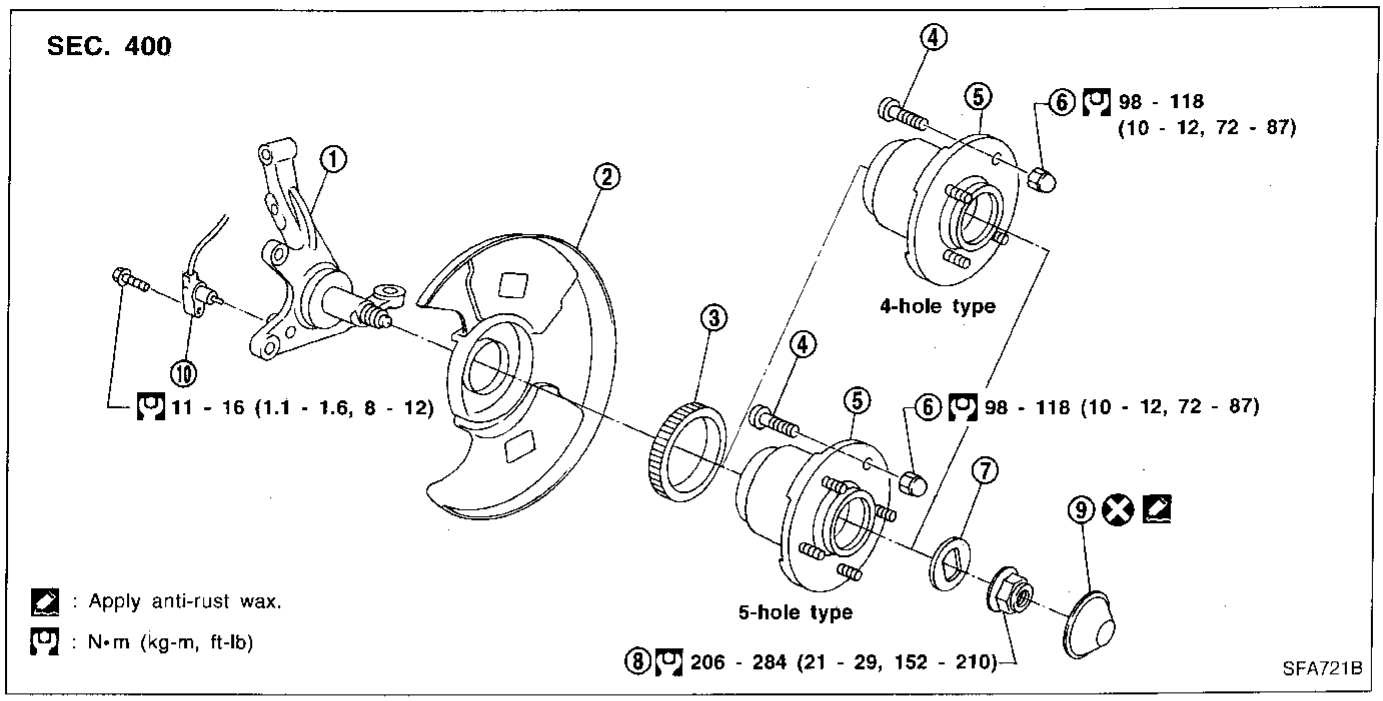

① Knuckle spindle
② Baffle plate
③ ABS ring
④ Hub bolt
⑤ Wheel hub bearing
⑥ Wheel nut
⑦ Lock washer
⑧ Wheel bearing lock nut
⑨ Hub cap
⑩ ABS sensor

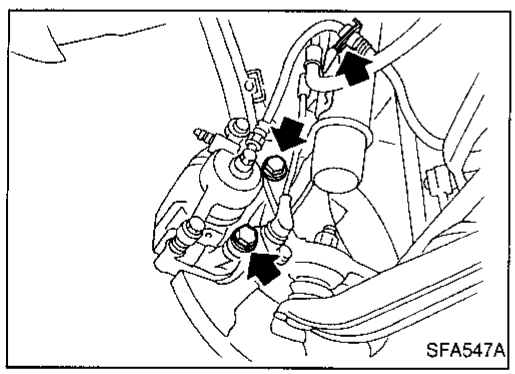

REMOVAL

CAUTION:

- **Before removing the front axle assembly, disconnect the ABS wheel sensor from the assembly. Then move it away from the front axle assembly area.**
  Failure to do so may result in damage to the sensor wires and the sensor becoming inoperative.
- **Wheel hub bearing does not require maintenance. If any of the following symptoms are noted, replace wheel hub bearing assembly.**
- Growling noise is emitted from wheel hub bearing during operation.
- Wheel hub bearing drags or turns roughly. This occurs when turning hub by hand after bearing lock nut is tightened to specified torque.
- If the wheel hub bearing assembly is removed, it must be renewed. The old assembly must not be re-used.

1. Remove brake caliper assembly and rotor.

Brake hose need not be disconnected from brake caliper. In this case, suspend caliper assembly with wire so as not to stretch brake hose. Be careful not to depress brake pedal, or caliper piston will pop out.
Make sure brake hose is not twisted.

Wheel Hub and Knuckle (Cont'd)

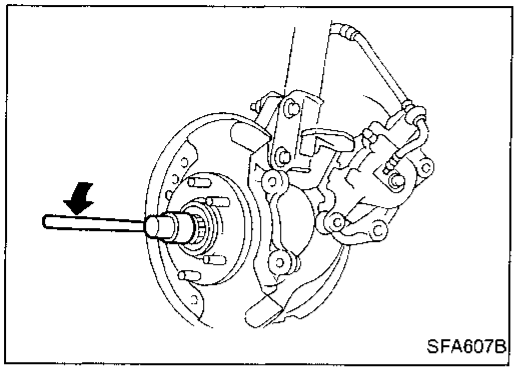

2. Remove wheel bearing lock nut. Remove wheel hub from spindle.

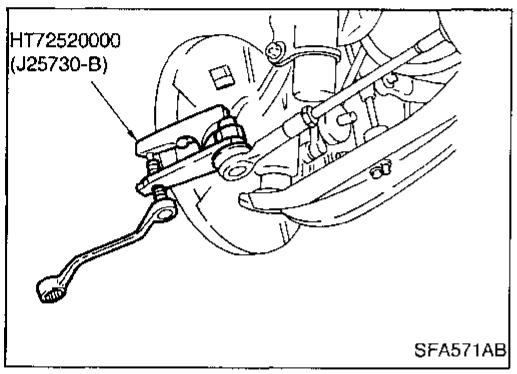

3. Remove tie-rod ball joint and lower ball joint with Tool.

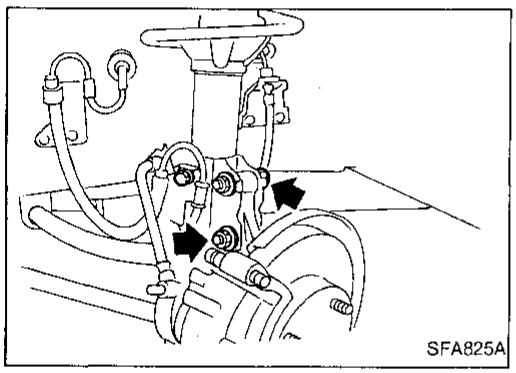

4. Disconnect knuckle from strut.

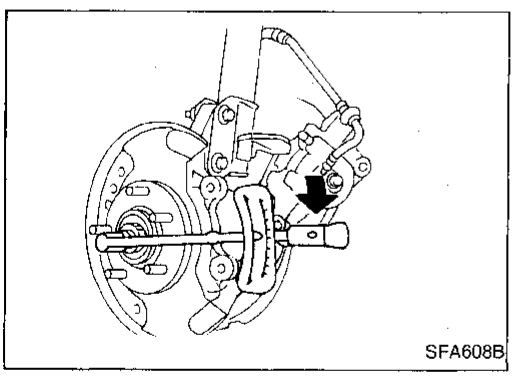

INSTALLATION

1. Install knuckle with wheel hub.
- Replace strut lower mounting nuts.
2. Tighten wheel bearing lock nut.
   : 206 - 284 N·m
   (21 - 29 kg-m, 152 - 210 ft-lb)

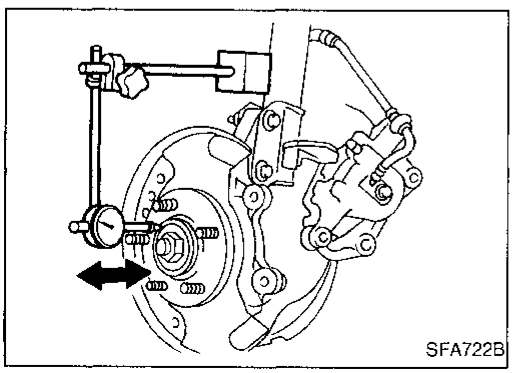

3. Check wheel bearing axial end play.
   Axial end play:
   0.05 mm (0.0020 in) or less

Wheel Hub and Knuckle (Cont'd)

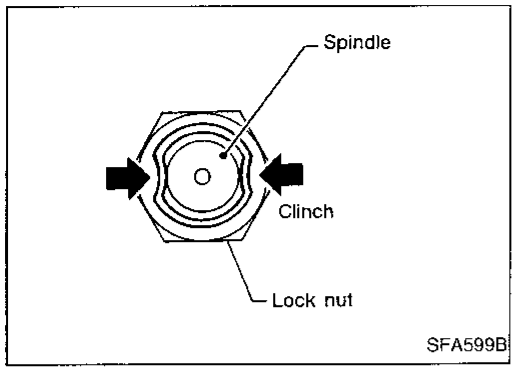

4. Clinch two places of lock nut.

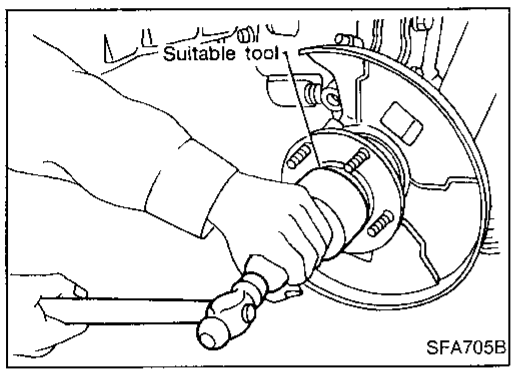

5. Install hub cap using a suitable tool.

Do not reuse hub cap. When installing, replace it with a new one.

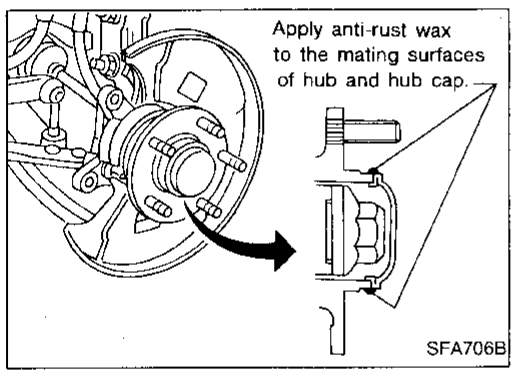

6. Apply anti-rust wax to the mating surfaces of hub and hub cap.

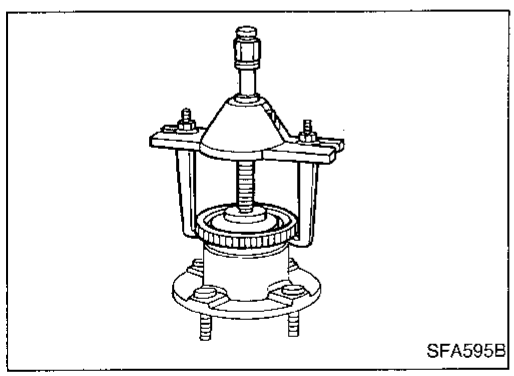

ABS Sensor Rotor

REMOVAL

Remove ABS sensor rotor (models equipped with ABS) or labyrinth plate (models without ABS) with suitable tool.

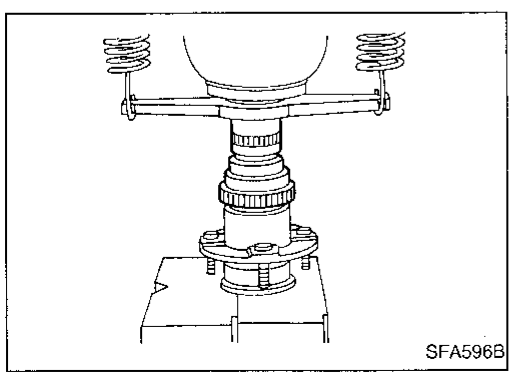

INSTALLATION

Press-fit ABS sensor rotor or labyrinth plate.

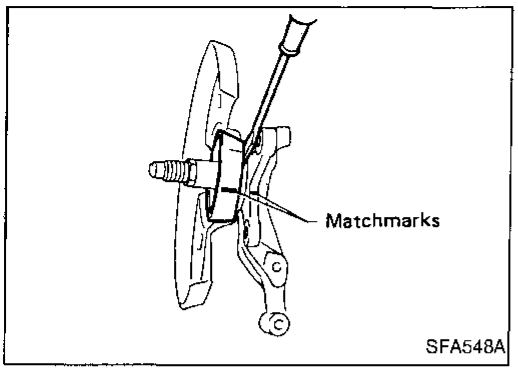

Baffle Plate

REMOVAL

- Mark matchmarks on baffle plate before removing.
- If baffle plate replacement requires removal of knuckle spindle, separate it equally using a screwdriver.

Be careful not to scratch knuckle spindle.

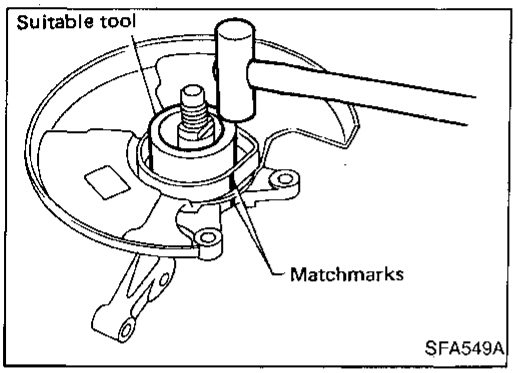

INSTALLATION

With matchmarks aligned, install baffle plate by tapping it with a copper hammer and a suitable tool.

SEC. 400•401

When installing rubber parts, final tightening must be carried out under unladen condition* with tires on ground.

*** Fuel, radiator coolant and engine oil full. Spare tire, jack, hand tools and mats in designated positions.**

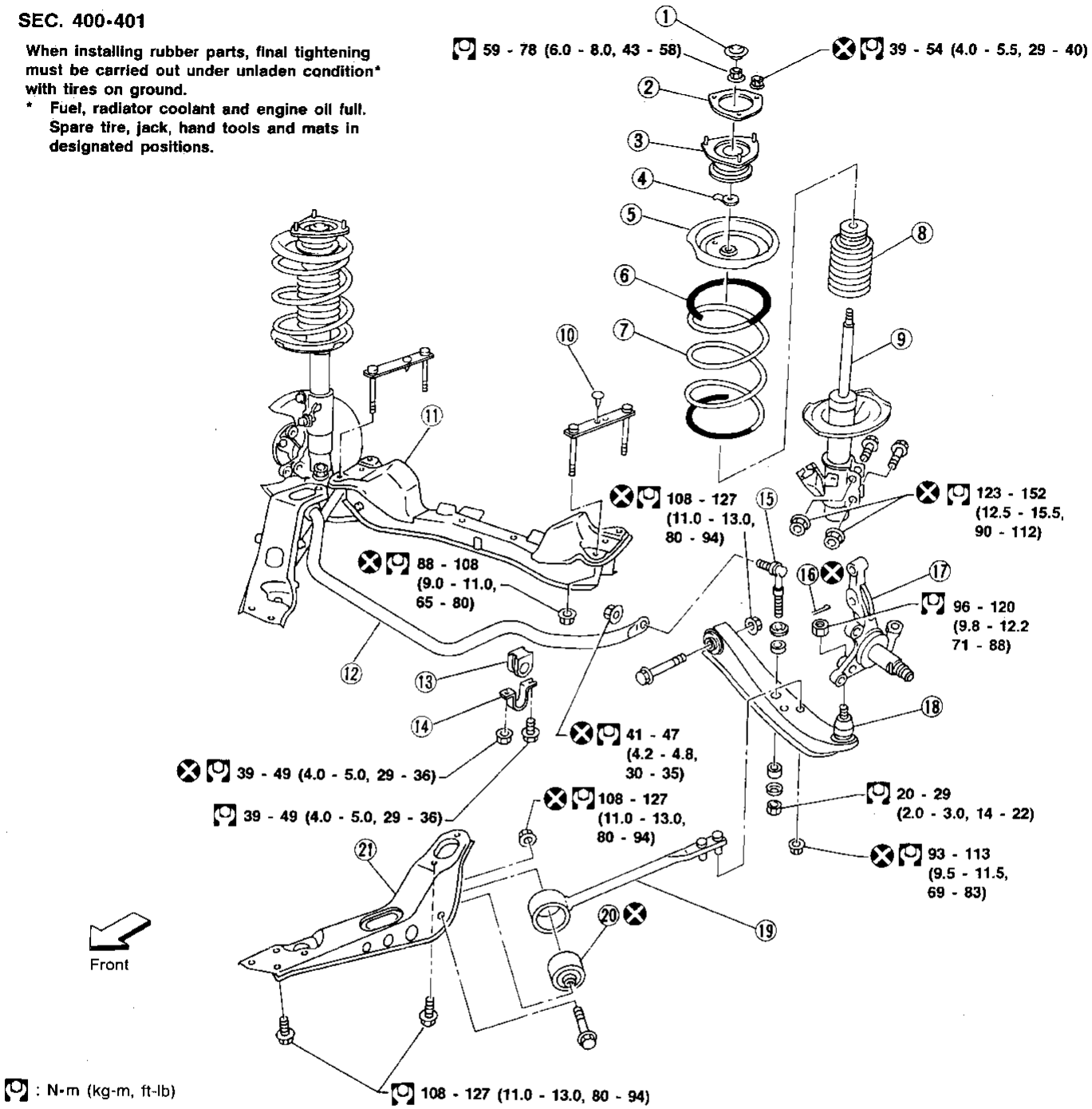

① Cap
② Gasket
③ Strut mounting insulator
④ Lock washer
⑤ Upper seat
⑥ (Polyurethane tube)
⑦ Coil spring
⑧ Bound bumper
⑨ Strut assembly
⑩ Plastic clip
⑪ Front suspension member
⑫ Stabilizer bar
⑬ Bushing
⑭ Clamp
⑮ Stabilizer connecting rod
⑯ Cotter pin
⑰ Knuckle spindle
⑱ Transverse link with ball joint
⑲ Tension rod
⑳ Tension rod bushing
㉑ Tension rod bracket

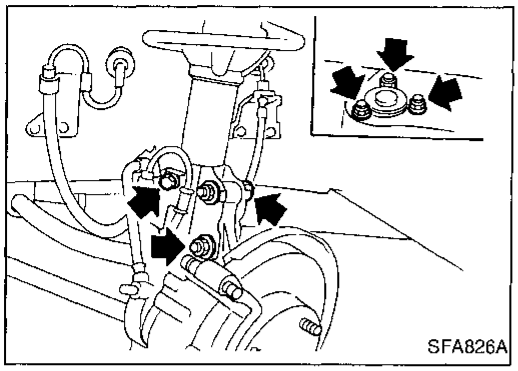

Coil Spring and Strut Assembly

REMOVAL

Remove strut assembly fixing bolts and nuts (to hoodledge).

Do not remove piston rod lock nut on vehicle.

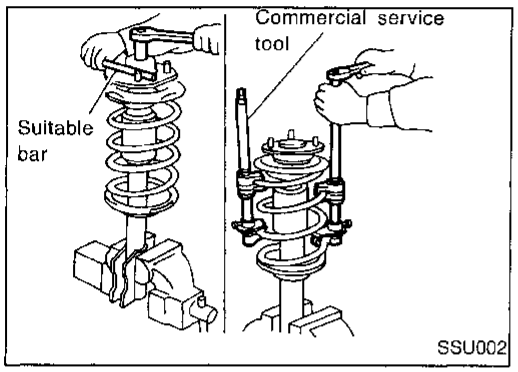

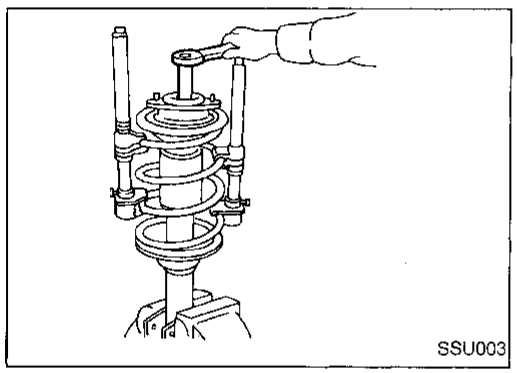

DISASSEMBLY

1. Set strut assembly on vise with attachment, then **loosen** piston rod lock nut.

WARNING:
Do not remove piston rod lock nut at this time.

2. Compress spring with tool so as to permit turning of strut mounting insulator by hand.

WARNING:
Make sure that the pawls of the two spring compressors are firmly hooked on the spring. The spring compressors must be tightened alternately so as not to tilt the spring.

3. Remove piston rod lock nut. Then remove coil spring.

INSPECTION

Strut assembly

- Check for smooth operation through a full stroke, both compression and extension.
- Check for oil leakage on welded and gland packing portion.
- Check piston rod for cracks, deformation and other damage. Replace if necessary.

Strut mounting insulator

Check cemented rubber-to-metal portion for separation and cracks. Check rubber parts for deterioration. Replace if necessary.

Lock washer

Check for cracks, deformation and other damage. Replace if necessary.

Coil spring

Check for cracks, deformation and other damage. Replace if necessary.

Coil Spring and Strut Assembly (Cont'd)

ASSEMBLY

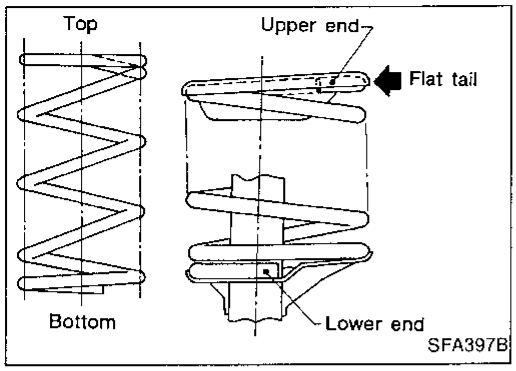

- When installing coil spring on strut, it must be positioned as shown in figure at left.

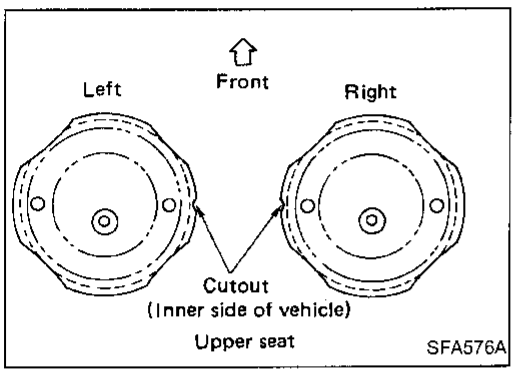

- Install upper spring seat with its cutout facing the inner side of vehicle.

Tension Rod and Stabilizer Bar

REMOVAL AND INSTALLATION

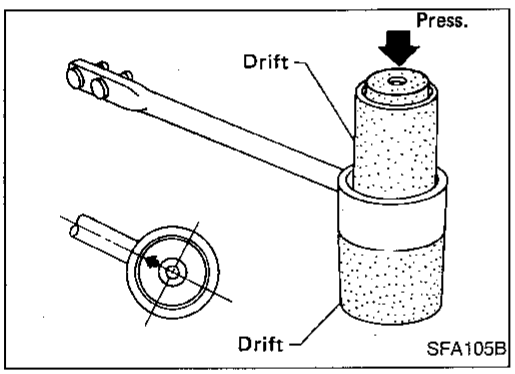

- Remove tension rod and stabilizer bar.
- Place one drift on lower side of tension rod bushing and another on upper side, as shown. Remove tension rod bushing by pressing it out.
- Place arrow mark on bushing facing tension rod before installing bushing.

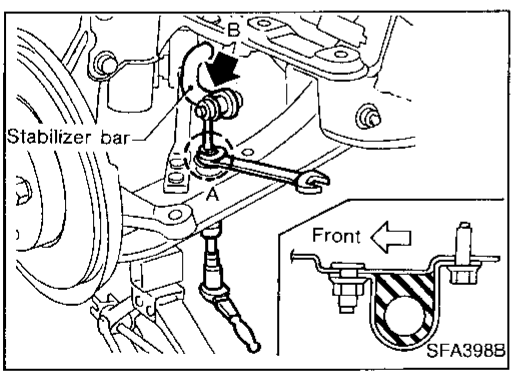

- Install stabilizer rear side bushings, then install front side bushings.
  When installing stabilizer bar clamp, make sure direction is correct (as shown at left).
- When removing and installing stabilizer bar, fix portion A.

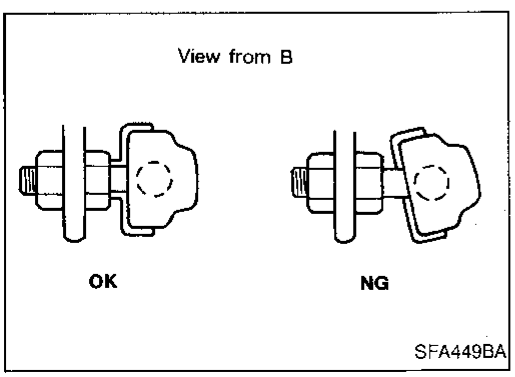

- Install stabilizer bar with ball joint socket properly placed.

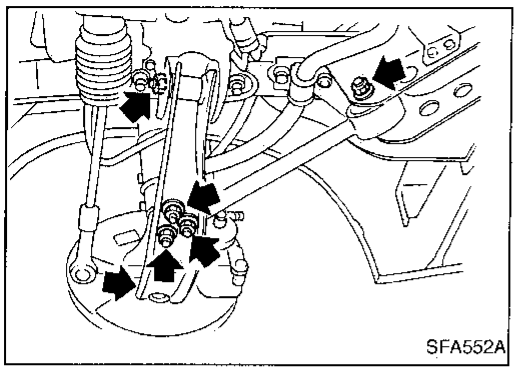

Transverse Link and Lower Ball Joint

REMOVAL AND INSTALLATION

- Remove stabilizer, tension rod, ball joint and transverse link assembly.
- During installation, final tightening must be carried out at curb weight with tires on ground.
- After installation, check wheel alignment.
  Refer to "Front Wheel Alignment" of ON-VEHICLE SERVICE (FA-7).

INSPECTION

Transverse link

- Check transverse link for damage, cracks and deformation. Replace it if necessary.
- Check rubber bushing for damage, cracks and deformation. Replace transverse link if necessary.

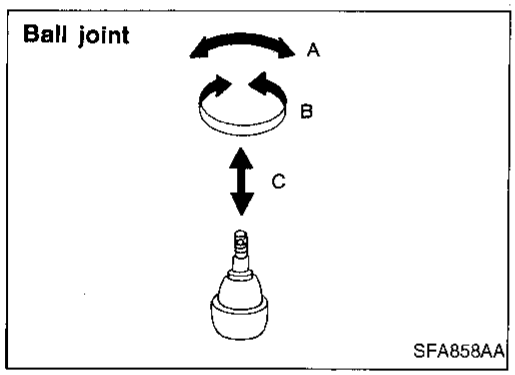

Lower ball joint

- Check ball joint for excessive play. Replace transverse link assembly if any of the following exists:
  - Ball stud is worn.
  - Joint is hard to swing.
  - Play in axial direction is excessive.

  Before checking, turn ball joint at least 10 revolutions so that ball joint is properly broken in.

  Swinging force "A":
  (measuring point: cotter pin hole of ball stud)
  Refer to SDS (FA-18).
  Turning torque "B":
  Refer to SDS (FA-18).
  Vertical end play "C":
  Refer to SDS (FA-18).
- Check dust cover for damage. Replace it and cover clamp if necessary.

General Specifications

COIL SPRING

Unit: mm (in)

Applied model	M/T	A/T
Wire diameter	13.1 (0.516)	13.2 (0.520)
Coil outer diameter	183.2 (7.21)	183.4 (7.22)
Free length	310 (12.20)	320 (12.60)
Identification color	White x 1, White x 2	White x 1, Purple x 2

STRUT

Applied model	195/60 R15 tire	205/55 R16 tire
Piston rod diameter mm (in)	20 (0.79)	22 (0.87)

FRONT STABILIZER BAR

Unit: mm (in)

Applied model	All
Stabilizer diameter	27.2 (1.071)
Identification color	Light green

WHEELARCH HEIGHT (Unladen*)

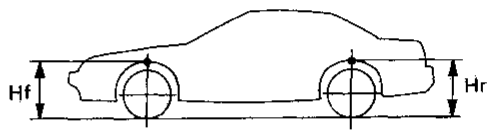

SFA831A

Unit: mm (in)

Applied model	195/60R15 tire	205/55R16 tire
Front (Hf)	687 (27.05)	694 (27.32)
Rear (Hr)	663 (26.10)	670 (26.38)

*: Fuel, radiator coolant and engine oil full.
Spare tire, jack, hand tools and mats in designated positions.

Inspection and Adjustment

WHEEL ALIGNMENT (Unladen*1)

Camber	Degree minute (Decimal degree)	Minimum	−1°30′ (−1.50°)
		Nominal	−0°45′ (−0.75°)
		Maximum	0°00′ (0.00°)
		Left and right difference	45′ (0.75°) or less
Caster	Degree minute (Decimal degree)	Minimum	6°00′ (6.00°)
		Nominal	6°45′ (6.75°)
		Maximum	7°30′ (7.50°)
		Left and right difference	45′ (0.75°) or less
Kingpin inclination	Degree minute (Decimal degree)	Minimum	12°55′ (12.92°)
		Nominal	13°40′ (13.67°)
		Maximum	14°25′ (14.42°)
Total toe-in			
Distance (A − B)	mm (in)	Minimum	1.5 (0.059)
		Nominal	2.5 (0.098)
		Maximum	3.5 (0.138)
Angle (left plus right)	Degree minute (Decimal degree)	Minimum	8′ (0.13°)
		Nominal	14′ (0.23°)
		Maximum	20′ (0.33°)
Wheel turning angle			
Full turn*2 — Inside	Degree minute (Decimal degree)	Minimum	39°00′ (39.00°)
		Nominal	42°00′ (42.00°)
		Maximum	43°00′ (43.00°)
Full turn*2 — Outside	Degree minute (Decimal degree)	Nominal	33°10′ (33.17°)

*1: Fuel, radiator coolant and engine oil full. Spare tire, jack, hand tools and mats in designated positions.
*2: On power steering models, wheel turning force (at circumference of steering wheel) of 98 to 147 N (10 to 15 kg, 22 to 33 lb) with engine idle.

WHEEL BEARING

Wheel bearing axial end play mm (in)	0.05 (0.0020) or less
Wheel bearing lock nut	
Tightening torque N·m (kg-m, ft-lb)	206 - 284 (21 - 29, 152 - 210)

WHEEL RUNOUT (Radial and lateral)

Wheel type	Radial runout	Lateral runout
Aluminum wheel mm (in)	0.3 (0.012) or less	
Steel wheel mm (in)	0.5 (0.020) or less	

LOWER BALL JOINT

Swinging force "A" (Measuring point: cotter pin hole of ball stud) N (kg, lb)	7.8 - 54.9 (0.8 - 5.6, 1.8 - 12.3)
Turning torque "B" N·m (kg-cm, in-lb)	0.49 - 3.43 (5.0 - 35.0, 4.3 - 30.4)
Vertical end play "C" mm (in)	0 (0)