SECTION INL
INTERIOR LIGHTING SYSTEM

CONTENTS

BASIC INSPECTION

DIAGNOSIS AND REPAIR WORKFLOW

Work Flow

INFOID:0000000004232600

OVERALL SEQUENCE

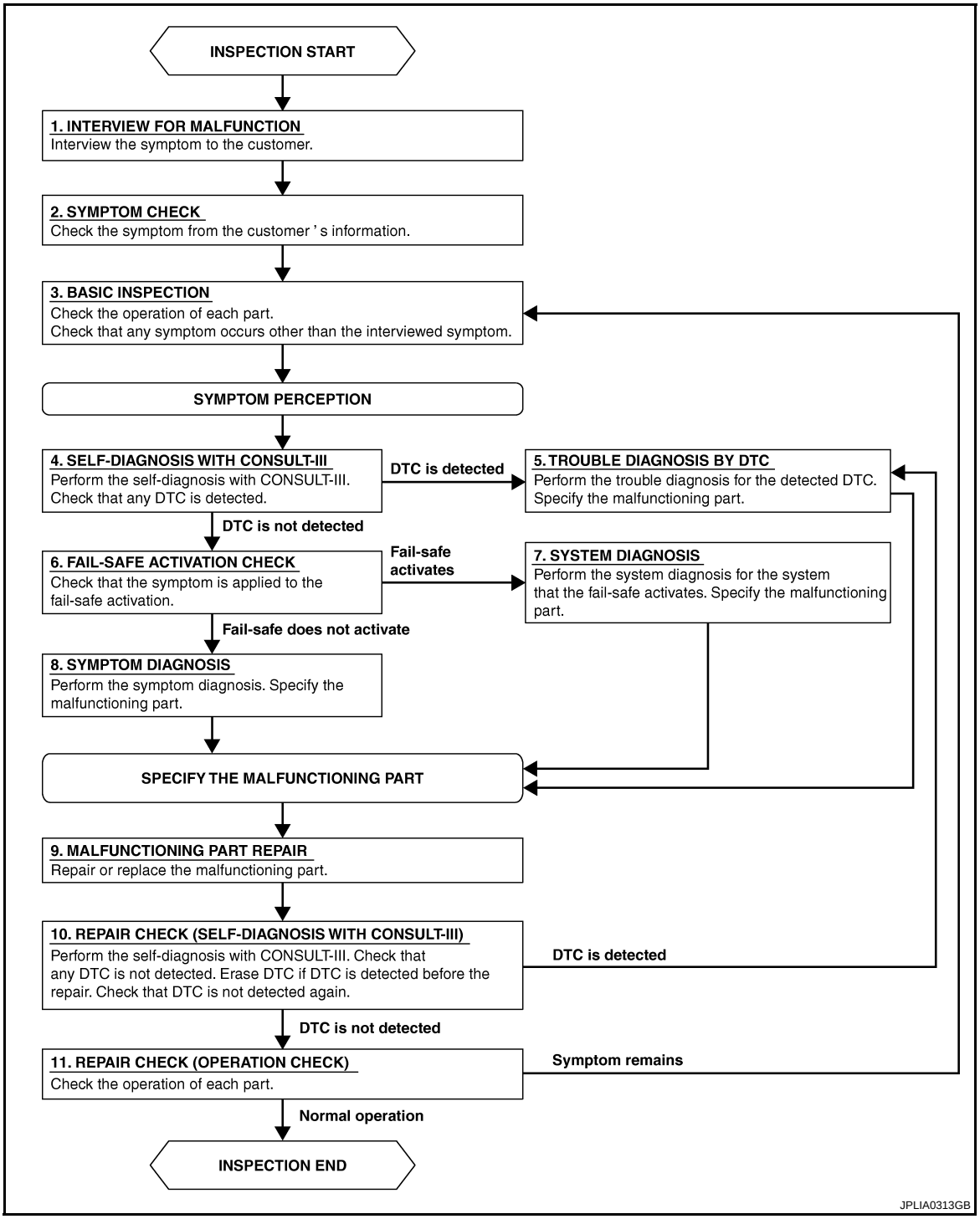

DETAILED FLOW

1. INTERVIEW FOR MALFUNCTION

Interview the symptom to the customer.

>> GO TO 2.

2. SYMPTOM CHECK

Check the symptom from the customer's information.

>> GO TO 3.

3. BASIC INSPECTION

Check the operation of each part. Check that any symptom occurs other than the interviewed symptom.

>> GO TO 4.

4. SELF-DIAGNOSIS WITH CONSULT-III

Perform the self-diagnosis with CONSULT-III. Check that any DTC is detected.

Is any DTC detected?

YES >> GO TO 5.
NO >> GO TO 6.

5. TROUBLE DIAGNOSIS BY DTC

Perform the trouble diagnosis for the detected DTC. Specify the malfunctioning part.

>> GO TO 9.

6. FAIL-SAFE ACTIVATION CHECK

Check that the symptom is applied to the fail-safe activation.

Does the fail-safe activate?

YES >> GO TO 7.
NO >> GO TO 8.

7. SYSTEM DIAGNOSIS

Perform the system diagnosis for the system that the fail-safe activates. Specify the malfunctioning part.

>> GO TO 9.

8. SYMPTOM DIAGNOSIS

Perform the symptom diagnosis. Specify the malfunctioning part.

>> GO TO 9.

9. MALFUNCTION PART REPAIR

Repair or replace the malfunctioning part.

>> GO TO 10.

10. REPAIR CHECK (SELF-DIAGNOSIS WITH CONSULT-III)

Perform the self-diagnosis with CONSULT-III. Check that any DTC is not detected. Erase DTC if DTC is detected before the repair. Check that DTC is not detected again.

Is any DTC detected?

YES >> GO TO 5.
NO >> GO TO 11.

11. REPAIR CHECK (OPERATION CHECK)

Check the operation of each part.

Does it operate normally?

YES >> INSPECTION END
NO >> GO TO 3.

FUNCTION DIAGNOSIS

INTERIOR ROOM LAMP CONTROL SYSTEM

System Diagram

INFOID:0000000004232601

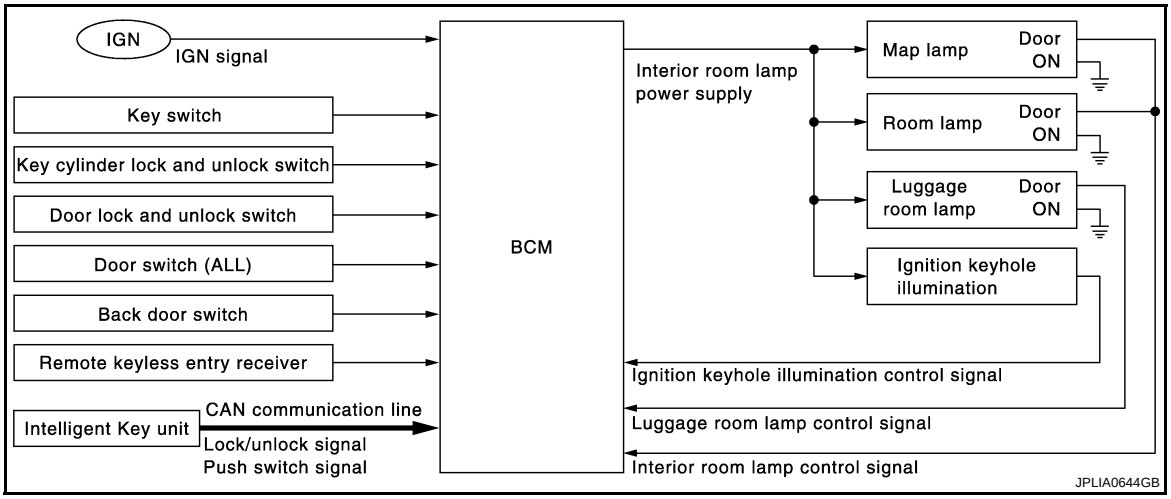

System Description

INFOID:0000000004232602

OUTLINE

- Interior room lamps* are controlled by interior room lamp timer control function of BCM.
  *: Map lamp, room lamp and ignition keyhole illumination (when map lamp and room lamp switch is in DOOR position).
- Luggage room lamp is controlled by luggage room lamp control function of BCM.

INTERIOR ROOM LAMP TIMER CONTROL

Interior Room Lamp Timer Basic Operation

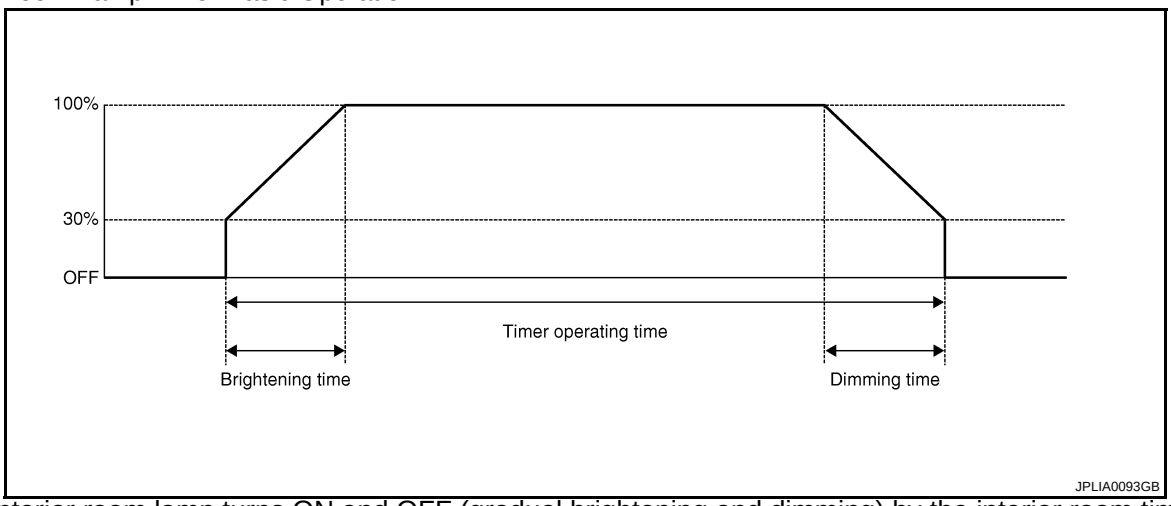

- The interior room lamp turns ON and OFF (gradual brightening and dimming) by the interior room timer.
- BCM judges the vehicle condition with the following items. It activates the interior room lamp timer.
- Ignition switch status
- Door switch signal (ALL)
- Door lock/unlock signal (Remote keyless entry receiver, Intelligent Key unit, key cylinder door lock and unlock switch, door lock and unlock switch)
- Key switch signal
- Push switch signal

NOTE:
Each function of interior room lamp timer can be set by CONSULT-III. Refer to INL-15, "INT LAMP : CONSULT-III Function (BCM - INT LAMP)".

Interior Room Lamp ON Operation

- BCM always turns the interior room lamp ON when any door opens.
- BCM activates the interior room lamp timer in any of the following conditions to turn the interior room lamp ON for a period of time.
  - Any door opened and all doors closed.
  - Key switch is turned ON → OFF.
  - All door unlock signal is detected when all doors close with ignition switch OFF.
  - Push switch is turned ON → OFF.

NOTE:
Restart the timer if new condition is input during the timer operating time.

Interior Room Lamp OFF Operation

BCM stops the timer in any of the following conditions to turns the interior room lamp OFF.

- The timer operating time is expired.
- Ignition switch position is ON with all doors close.
- All door lock operation is detected with all doors close (when locked with the door lock and unlock switch, ignition keyhole illumination to be turned OFF when the time up).

LUGGAGE ROOM LAMP CONTROL

BCM controls the luggage room lamp (ground-side) to turn ON with the back door switch ON (when luggage room lamp switch is in DOOR position).

Component Parts Location

INFOID:0000000004232603

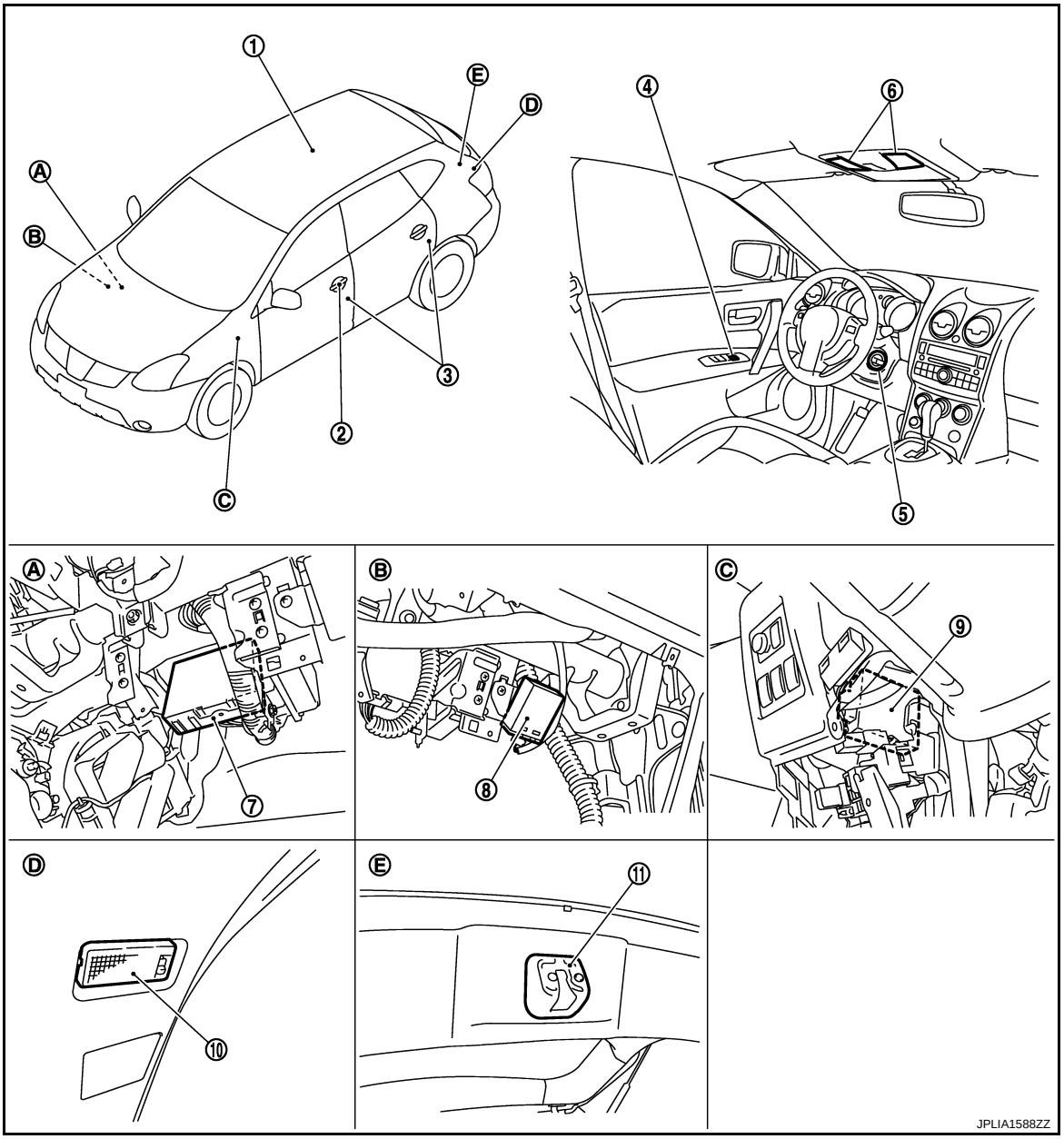

1. Room lamp	2. Key cylinder door lock and unlock switch	3. Door switch
4. Door lock and unlock switch	5. • Key switch • Push switch (With Intelligent Key system) • Ignition keyhole illumination	6. Map lamp
7. BCM	8. Remote keyless entry receiver (Without Intelligent Key system)	9. Intelligent Key unit (With Intelligent Key ststem)
10. Luggage room lamp	9. Back door switch	
A. Over the glove box	B. Over the glove box	C. Over the instrument lower panel (driver side)
D. Back door trim finisher lower	E. Back door lock assembly	

Component Description

INFOID:0000000004232604

Part	Description
BCM	Activates the interior room lamp timer depending on the vehicle condition to turn the interior room lamps ON/OFF.
Remote keyless entry receiver	• Receives the lock/unlock signal from Keyfob. • Transmits the lock/unlock signal to BCM.
Intelligent Key unit	Transmits the lock/unlock signal and push switch signal to BCM with CAN communication.
• Door lock and unlock switch • Key cylinder door lock and unlock switch	Inputs the lock/unlock signal to BCM.
• Door switch • Back door switch	Inputs the door switch signal to BCM.
Key switch	Inputs the key switch signal to BCM.

INTERIOR ROOM LAMP BATTERY SAVER SYSTEM

System Diagram

INFOID:0000000004232605

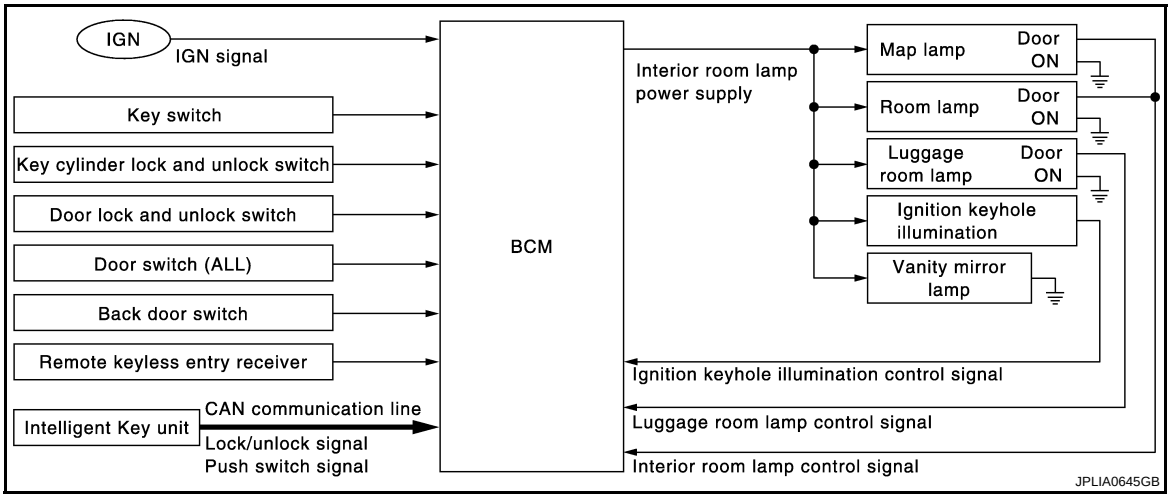

System Description

INFOID:0000000004232606

OUTLINE

- Interior room lamp battery saver is controlled by BCM.
- BCM turns applicable lamps OFF depending on the vehicle condition. This function prevents the battery from over-discharging if the driver neglect turning OFF the any lamps.

Applicable lamps

- Map lamp
- Room lamp
- Ignition keyhole illumination
- Luggage room lamp
- Vanity mirror lamp

INTERIOR ROOM LAMP BATTERY SAVER FUNCTION

- When the ignition switch is turned OFF, BCM operates the timer for a period of time to cut the interior room lamp power supply.
- BCM restart the timer when any of the following signals changes while operating the timer.
- Ignition switch status
- Door switch signal (ALL)
- Door lock/unlock signal (Remote keyless entry receiver, Intelligent Key unit, key cylinder door lock and unlock switch, door lock and unlock switch)
- Key switch signal
- Push switch signal
- BCM provides the interior room lamp power supply continuously when the ignition switch position is ON.

NOTE:
Each function of interior room lamp battery saver can be set by CONSULT-III. Refer to INL-16, "BATTERY SAVER : CONSULT-III Function (BCM - BATTERY SAVER)".

Component Parts Location

INFOID:0000000004232607

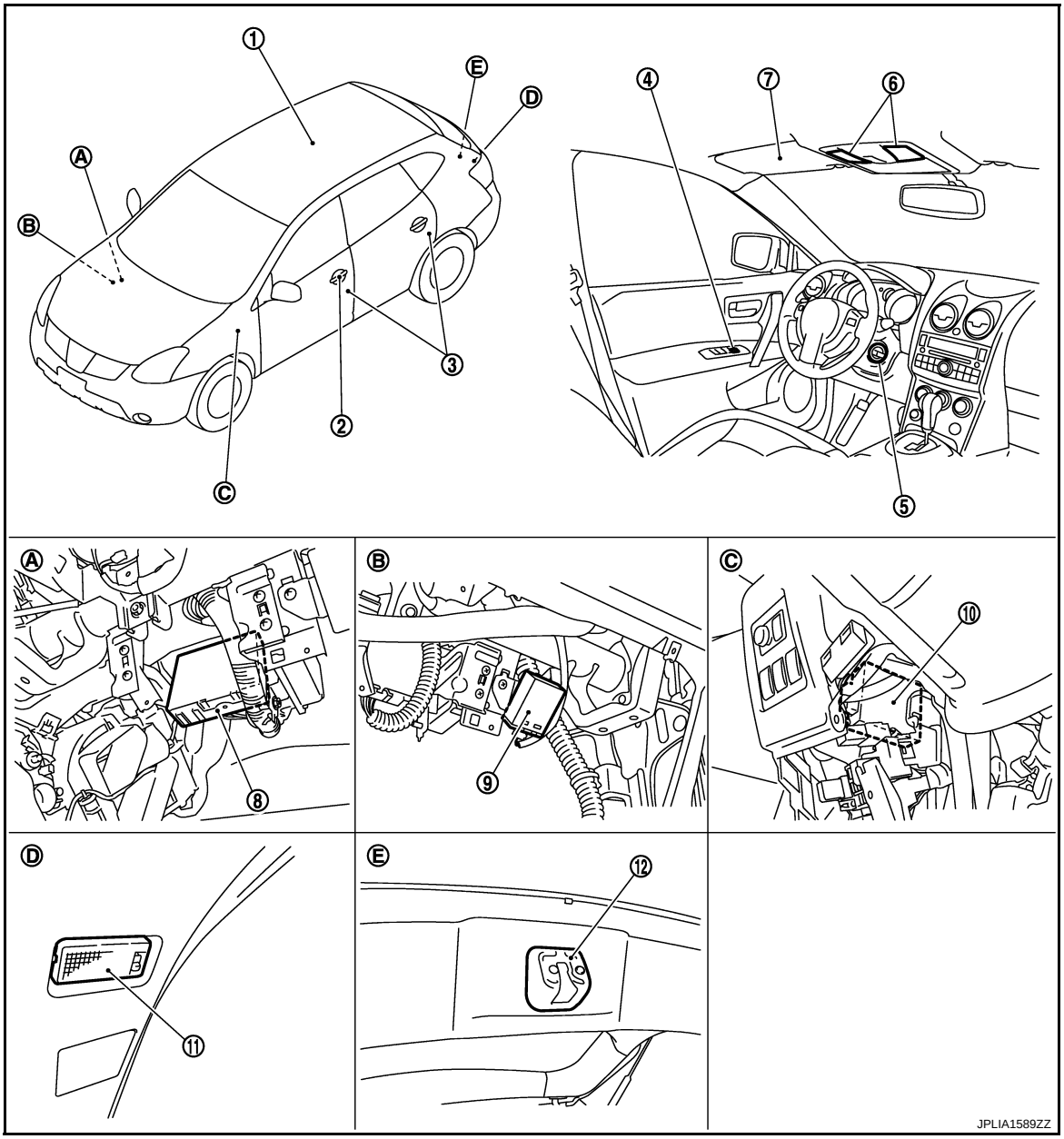

1.	Room lamp	2.	Key cylinder door lock and unlock switch	3.	Door switch
4.	Door lock and unlock switch	5.	• Key switch • Push switch (With Intelligent Key system) • Ignition keyhole illumination	6.	Map lamp
7.	Vanity mirror lamp	8.	BCM	9.	Remote keyless entry receiver (Without Intelligent Key system)
10.	Intelligent Key unit (With Intelligent Key system)	11.	Luggage room lamp	12.	Back door switch
A.	Over the glove box	B.	Over the glove box	C.	Over the instrument lower panel (driver side)
D.	Back door trim finisher lower		Back door lock assembly		

Component Description

INFOID:0000000004232608

Part	Description
BCM	Operates the interior room lamp battery saver depending on the vehicle condition to cut the interior room lamp power supply.
Remote keyless entry receiver	• Receives the lock/unlock signal from Keyfob. • Transmits the lock/unlock signal to BCM.
Intelligent Key unit	Transmits the lock/unlock signal and push switch signal to BCM with CAN communication.
• Door lock and unlock switch • Key cylinder door lock and unlock switch	Inputs the lock/unlock signal to BCM.
• Door switch • Back door switch	Inputs the door switch signal to BCM.
Key switch	Inputs the key switch signal to BCM.

ILLUMINATION CONTROL SYSTEM

System Diagram

INFOID:0000000004232609

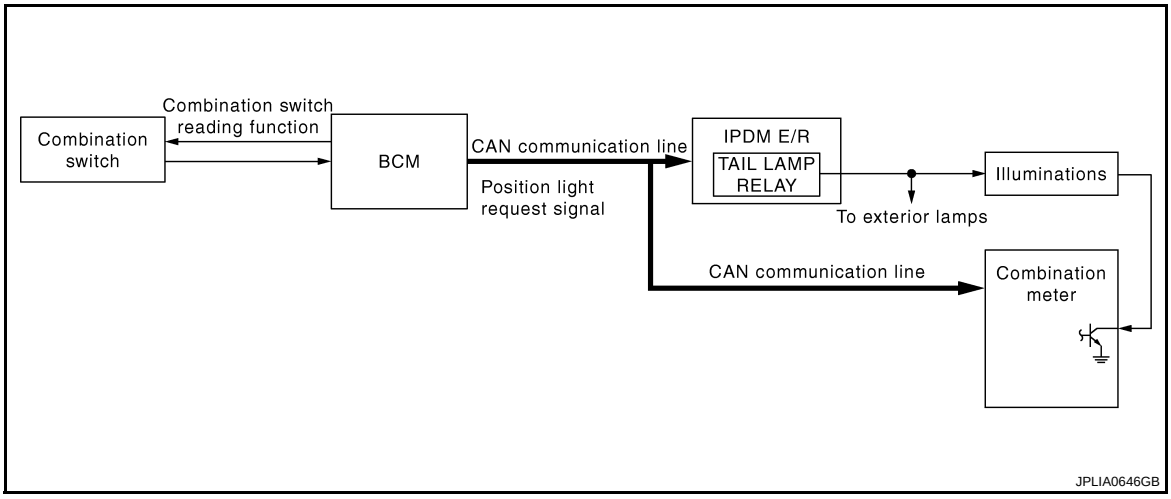

System Description

INFOID:0000000004232610

OUTLINE

Each illumination lamp is controlled by each function of BCM and IPDM E/R and combination meter.

Control by BCM
- Combination switch reading function
- Headlamp control function

Control by IPDM E/R
- Relay control function

Control by combination meter
- Meter illumination control function (Refer to MWI-24, "METER ILLUMINATION CONTROL : System Diagram")

ILLUMINATION CONTROL

- BCM detects the combination switch condition by the combination switch reading function.
- BCM transmits position light request signal to IPDM E/R and combination meter according to tail lamp ON condition.

Tail lamp ON condition
- Lighting switch 1ST
- Lighting switch 2ND
- IPDM E/R turns the integrated tail lamp relay ON according to position light request signal. It provides the power supply to each illumination lamp.
- Combination meter enters in the nighttime mode according to position light request signal. Under the nighttime mode the combination meter controls the illuminance by controlling the each illumination lamp (ground-side).

Component Parts Location

INFOID:0000000004232611

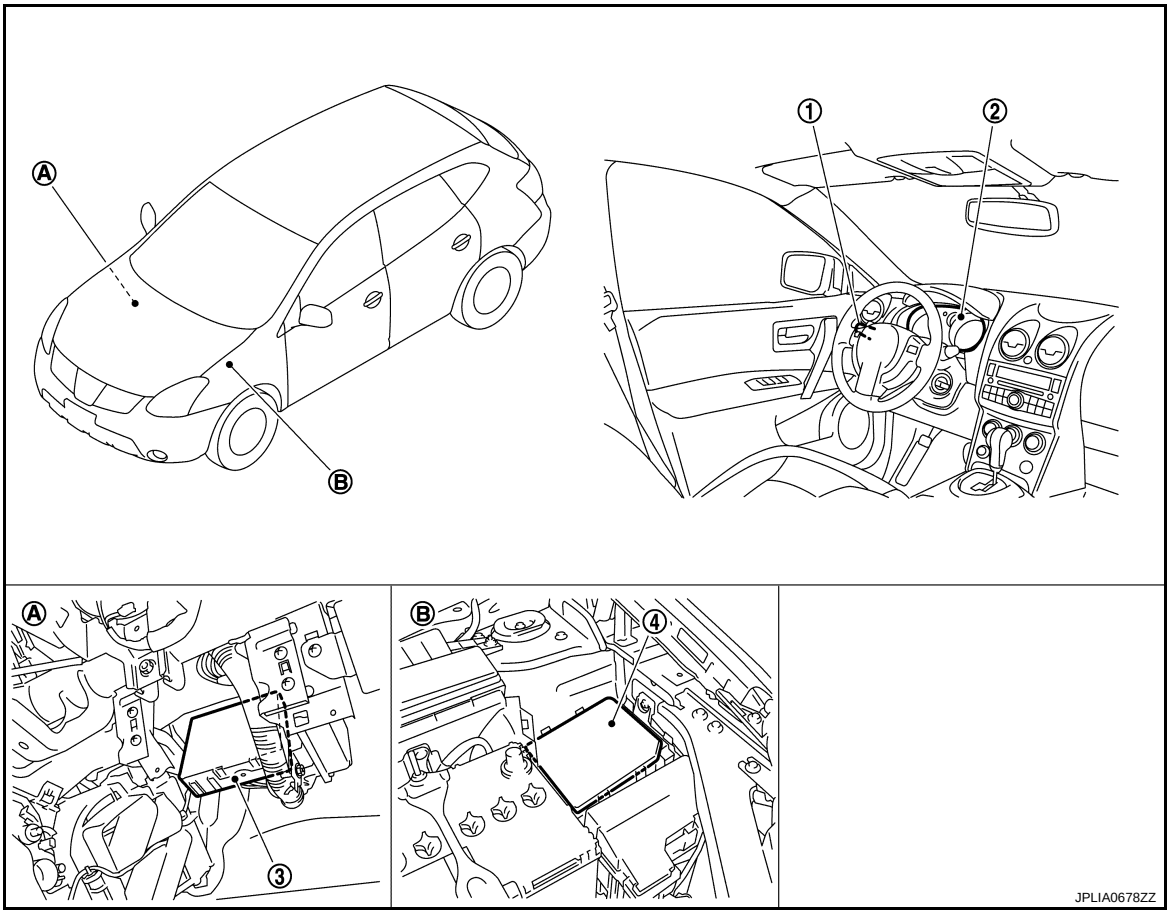

1. Combination switch
2. Combination meter
3. BCM
4. IPDM E/R

A Over the glove box
B. Engine room (LH)

Component Description

INFOID:0000000004232612

Part	Description
BCM	• Judges each switch condition by the combination switch reading function. • Judges the illumination lamp ON/OFF status depending on the vehicle condition. And then it transmits position light request signal to IPDM E/R and combination meter (with CAN communication).
IPDM E/R	Controls the integrated relay according to the request signal from BCM (with CAN communication).
Combination meter	• Enters in nighttime mode according to the request from BCM (with CAN communication). • Controls each illumination in the nighttime mode. Refer to MWI-24, "METER ILLUMINATION CONTROL : System Diagram".
Combination switch (Lighting & turn signal switch)	Refer to BCS-9, "System Diagram".

DIAGNOSIS SYSTEM (BCM)

COMMON ITEM

COMMON ITEM : CONSULT-III Function (BCM - COMMON ITEM)

INFOID:0000000004539461

APPLICATION ITEM

CONSULT-III can display each diagnostic item using the diagnostic test modes shown following.

Diagnosis mode	Function description
ECU Identification	BCM part number is displayed.
Self-Diagnostic Result	Displays the diagnosis results judged by BCM. Refer to INL-61, "DTC Index".
Data Monitor	BCM input/output signals are displayed.
Active Test	The signals used to activate each device are forcibly supplied from BCM.
Work Support	Changes the setting for each system function.
Configuration	• Read and save the vehicle specification. • Write the vehicle specification when replacing BCM.
CAN Diag Support Monitor	Monitors the reception status of CAN communication viewed from BCM.

SYSTEM APPLICATION

BCM can perform the following functions for each system.

NOTE:

It can perform the diagnosis modes except the following for all sub system selection items.

×: Applicable item

System	CONSULT-III sub system selection item	Diagnosis mode		
		Work Support	Data Monitor	Active Test
Door lock	DOOR LOCK	×	×	×
Rear window defogger	REAR DEFOGGER		×	×
Warning chime	BUZZER		×	×
Interior room lamp control	INT LAMP	×	×	×
Remote keyless entry system	MULTI REMOTE ENT	×	×	×
Exterior lamp	HEAD LAMP	×	×	×
Wiper and washer	WIPER	×	×	×
Turn signal and hazard warning lamps	FLASHER		×	×
Air conditioner	AIR CONDITONER		×	
Intelligent Key system	INTELLIGENT KEY		×	
Combination switch	COMB SW		×	
—	BCM	×		
Immobilizer	IMMU		×	×
Interior room lamp battery saver	BATTERY SAVER	×	×	×
Back door open	TRUNK		×	×
Vehicle security system	THEFT ALM	×	×	×
RAP system	RETAINED PWR	×	×	×
Signal buffer system	SIGNAL BUFFER		×	×
—	FUEL LID*			
TPMS	TPMS (AIR PRESSURE MONITOR)	×	×	×
Panic alarm system	PANIC ALARM			×

*: This item is displayed, but is not function.

INT LAMP

INT LAMP : CONSULT-III Function (BCM - INT LAMP)

INFOID:0000000004232614

WORK SUPPORT

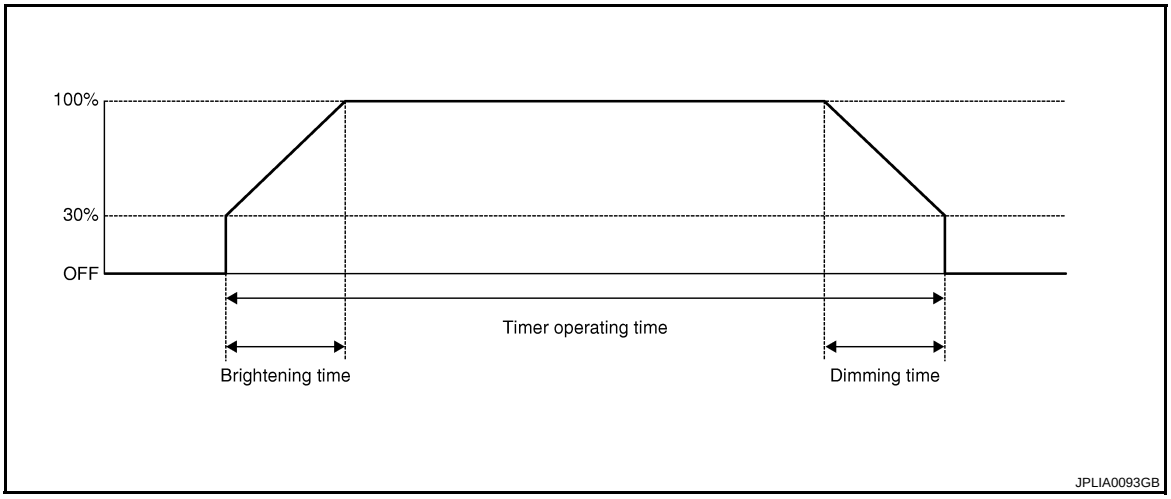

Service item	Setting item	Setting	
SET I/L D-UNLCK INTCON	On*	With the interior room lamp timer function	
	Off	Without the interior room lamp timer function	
ROOM LAMP ON TIME SET	MODE 1	0.5 sec.	Sets the interior room lamp gradual brightening time.
	MODE 2*	1 sec.	
	MODE 3	2 sec.	
	MODE 4	3 sec.	
	MODE 5	4 sec.	
	MODE 6	5 sec.	
	MODE 7	0 sec.	
ROOM LAMP OFF TIME SET	MODE 1	0.5 sec.	Sets the interior room lamp gradual dimming time.
	MODE 2*	1 sec.	
	MODE 3	2 sec.	
	MODE 4	3 sec.	
	MODE 5	4 sec.	
	MODE 6	5 sec.	
	MODE 7	0 sec.	

*: Factory setting

DATA MONITOR

Monitor item [Unit]	Description
IGN ON SW [On/Off]	Ignition switch (ON) status judges from IGN signal (ignition power supply)
KEY ON SW [On/Off]	The switch status input from key switch
DOOR SW-DR [On/Off]	The switch status input from front door switch (driver side)
DOOR SW-AS [On/Off]	The switch status input from front door switch (passenger side)
DOOR SW-RR [On/Off]	The switch status input from rear door switch RH

Monitor item [Unit]	Description
DOOR SW- RL [On/Off]	The switch status input from rear door switch LH
BACK DOOR SW [On/Off]	The switch status input from back door switch
KEY CYL LK-SW [On/Off]	Lock switch status input from key cylinder switch
KEY CYL UN-SW [On/Off]	Unlock switch status input from key cylinder switch
CDL LOCK SW [On/Off]	Lock switch status input from door lock and unlock switch
CDL UNLOCK SW [On/Off]	Unlock switch status input from door lock and unlock switch
I-KEY LOCK [On/Off]	Lock signal status received from Intelligent Key unit by CAN communication
I-KEY UNLOCK [On/Off]	Unlock signal status received from Intelligent Key unit by CAN communication
KEYLESS LOCK [On/Off]	Lock signal status received from remote keyless entry receiver
KEYLESS UNLOCK [On/Off]	Unlock signal status received from remote keyless entry receiver

ACTIVE TEST

Test item	Operation	Description
INT LAMP	On	Outputs the interior room lamp control signal to turn the interior room lamps ON. [Map lamp, room lamp (when applicable lamps switch is in DOOR position.)]
	Off	Stops the interior room lamp control signal to turn the interior room lamps OFF.
IGN ILLUM	On	Outputs the ignition keyhole illumination control signal to turn ignition keyhole illumination ON.
	Off	Stops the ignition keyhole illumination control signal to turn ignition keyhole illumination OFF.
STEP LAMP TEST	On	**NOTE:** The item is indicated, but not operate.
	Off	
LUGGAGE LAMP TEST	On	Outputs the luggage room lamp control signal to turn luggage room lamp ON.
	Off	Stops the luggage room lamp control signal to turn luggage room lamp OFF.

BATTERY SAVER

BATTERY SAVER : CONSULT-III Function (BCM - BATTERY SAVER)

INFOID:0000000004232615

WORK SUPPORT

Service item	Setting item	Setting	
ROOM LAMP TIMER SET	MODE 1*	30 min.	Sets the interior room lamp battery saver timer operating time.
	MODE 2	60 min.	

*: Factory setting

DATA MONITOR

Monitor item [Unit]	Description
IGN ON SW [On/Off]	Ignition switch (ON) status judges from IGN signal (ignition power supply)
KEY ON SW [On/Off]	The switch status input from key switch
DOOR SW-DR [On/Off]	The switch status input from front door switch (driver side)
DOOR SW-AS [On/Off]	The switch status input from front door switch (passenger side)
DOOR SW-RR [On/Off]	The switch status input from rear door switch RH
DOOR SW- RL [On/Off]	The switch status input from rear door switch LH
BACK DOOR SW [On/Off]	The switch status input from back door switch
KEY CYL LK-SW [On/Off]	Lock switch status input from key cylinder switch
KEY CYL UN-SW [On/Off]	Unlock switch status input from key cylinder switch
CDL LOCK SW [On/Off]	Lock switch status input from door lock and unlock switch
CDL UNLOCK SW [On/Off]	Unlock switch status input from door lock and unlock switch
I-KEY LOCK [On/Off]	Lock signal status received from Intelligent Key unit by CAN communication
I-KEY UNLOCK [On/Off]	Unlock signal status received from Intelligent Key unit by CAN communication
KEYLESS LOCK [On/Off]	Lock signal status received from remote keyless entry receiver
KEYLESS UNLOCK [On/Off]	Unlock signal status received from remote keyless entry receiver

ACTIVE TEST

Test item	Operation	Description
BATTERY SAVER	Off	Cuts the interior room lamp power supply to turn interior room lamps OFF.
	On	Outputs the interior room lamp power supply to turn interior room lamps ON.*

*: Each lamp switch is in ON position.

COMPONENT DIAGNOSIS

POWER SUPPLY AND GROUND CIRCUIT

BCM (BODY CONTROL MODULE)

BCM (BODY CONTROL MODULE) : Diagnosis Procedure

INFOID:0000000004539458

1.CHECK FUSES AND FUSIBLE LINK

Check that the following fuses and fusible link are not fusing.

Signal name	Fuses and fusible link No.
Battery power supply	10
	J
ACC power supply	20
Ignition power supply	1

Is the fuse fusing?

YES >> Replace the blown fuse or fusible link after repairing the affected circuit if a fuse or fusible link is blown.
NO >> GO TO 2.

2.CHECK POWER SUPPLY CIRCUIT

1. Turn the ignition switch OFF.
2. Disconnect BCM connectors.
3. Check voltage between BCM harness connector and the ground.

Terminals			Ignition switch position		
(+)		(–)			
BCM			OFF	ACC	ON
Connector	Terminal				
M67	70	Ground	Battery voltage	Battery voltage	Battery voltage
	57				
M65	11		Approx. 0 V	Battery voltage	Battery voltage
	38		Approx. 0 V	Approx. 0 V	Battery voltage

Is the measurement value normal?

YES >> GO TO 3.
NO >> Repair the harness or connector.

3.CHECK GROUND CIRCUIT

Check continuity between BCM harness connector and the ground.

BCM		Ground	Continuity
Connector	Terminal		
M67	67		Existed

Does continuity exist?

YES >> INSPECTION END
NO >> Repair the harness or connector.

INTERIOR ROOM LAMP POWER SUPPLY CIRCUIT

Description

INFOID:0000000004232617

Provides the interior room lamp power supply. Also cuts the power supply when the interior room lamp battery saver activating.

Component Function Check

INFOID:0000000004232618

1. CHECK INTERIOR ROOM LAMP POWER SUPPLY FUNCTION

CONSULT-III ACTIVE TEST
1. Turn ignition switch ON.
2. Turn each interior room lamp ON.
- Map lamp
- Room lamp
- Ignition keyhole illumination
- Vanity mirror lamp
- Luggage room lamp
3. Select “BATTERY SAVER” of BCM (BATTERY SAVER) active test item.
4. With operating the test items, check that each interior room lamp is turned ON/OFF.

Off : Interior room lamp OFF

On : Interior room lamp ON

Is the interior room lamp turned ON/OFF?

YES >> Interior room lamp power supply circuit is normal.
NO >> Refer to INL-19, "Diagnosis Procedure".

Diagnosis Procedure

INFOID:0000000004232619

1. CHECK INTERIOR ROOM LAMP POWER SUPPLY OUTPUT

CONSULT-III ACTIVE TEST
1. Turn ignition switch ON.
2. Select “BATTERY SAVER” of BCM (BATTERY SAVER) active test item.
3. With operating the test item, check voltage between BCM harness connector and ground.

Terminals			Test item	Voltage (Approx.)
(+)		(–)		
BCM		Ground	BATTERY SAVER	
Connector	Terminal			
M67	56		Off	0 V
			On	Battery voltage

Is the measurement value normal?

YES >> GO TO 2.
NO >> Replace BCM. Refer to BCS-67, "Removal and Installation".

2. CHECK INTERIOR ROOM LAMP POWER SUPPLY OPEN CIRCUIT

1. Turn ignition switch OFF.
2. Disconnect the following connectors.
- Map lamp
- Room lamp
- Ignition keyhole illumination
- Vanity mirror lamp (driver side)
- Vanity mirror lamp (passenger side)
- Luggage room lamp
3. Check continuity between BCM harness connector and each interior room lamp harness connector.

BCM		Each interior room lamp			Continu-ity
Connec-tor	Terminal	Connector		Terminal	
M67	56	Map lamp	R4	1	Existed
		Room lamp	R15	2	
		Ignition keyhole illumination	M68	1	
		Vanity mirror lamp (driver side)	R14	1	
		Vanity mirror lamp (passenger side)	R10	1	
		Luggage room lamp	D155	2	

Does continuity exist?

YES >> GO TO 3.
NO >> Repair the harnesses or connectors.

3. CHECK INTERIOR ROOM LAMP POWER SUPPLY SHORT CIRCUIT

Check continuity between BCM harness connector and ground.

BCM		Ground	Continuity
Connector	Terminal		
M67	56		Not existed

Does continuity exist?

YES >> Repair the harnesses or connectors.
NO >> Check that each interior room lamp has no internal short circuit.

INTERIOR ROOM LAMP CONTROL CIRCUIT

Description

INFOID:0000000004232620

Controls each interior room lamp (ground side) by PWM signal.
NOTE:
PWM signal control period is approximately 250 Hz (in the gradual brightening/dimming).

Component Function Check

INFOID:0000000004232621

CAUTION:
Before the diagnosis, check that the following items are normal.
- **Interior room lamp power supply**
- **Map lamp bulb**
- **Room lamp bulb**

1. CHECK INTERIOR ROOM LAMP CONTROL FUNCTION

CONSULT-III ACTIVE TEST
1. Switch the map lamp switch to DOOR.
2. Turn ignition switch ON.
3. Select “INT LAMP” of BCM (INT LAMP) active test item.
4. With operating the test items, check that each interior room lamp turns ON/OFF (gradual brightening/dimming).

On	**: Interior room lamp gradual brightening**
Off	**: Interior room lamp gradual dimming**

Does the interior room lamp turns ON/OFF (gradual brightening/dimming)?

YES >> Interior room lamp control circuit is normal.
NO >> Refer to INL-21, "Diagnosis Procedure".

Diagnosis Procedure

INFOID:0000000004232622

1. CHECK INTERIOR ROOM LAMP CONTROL OUTPUT

CONSULT-III ACTIVE TEST
1. Turn ignition switch OFF.
2. Remove all the bulbs of following lamps.
- Map lamp
- Room lamp
3. Select “INT LAMP” of BCM (INT LAMP) active test item.
4. With operating the test item, check continuity between BCM harness connector and ground.

BCM		Ground	Test item	Continuity
Connector	Terminal		INT LAMP	
M67	63		On	Existed
			Off	Not existed

Is the measurement value normal?

YES >> GO TO 2.
Fixed ON>>GO TO 3.
Fixed OFF>>Replace BCM. Refer to BCS-67, "Removal and Installation".

2. CHECK INTERIOR ROOM LAMP CONTROL OPEN CIRCUIT

1. Turn ignition switch OFF.
2. Disconnect the following connectors.
- Map lamp
- Room lamp

3. Check continuity between BCM harness connector, map lamp harness connector, and room lamp harness connector.

BCM		Map lamp/room lamp			Continuity
Connec-tor	Terminal	Connector		Terminal	
M67	63	Map lamp	R4	2	Existed
		Room lamp	R15	1	

Does continuity exist?

YES >> Replace the map lamp or the room lamp.
NO >> Repair the harnesses or connectors.

3. CHECK INTERIOR ROOM LAMP CONTROL SHORT CIRCUIT

1. Turn ignition switch OFF.
2. Disconnect BCM connector, map lamp connector and room lamp connector.
3. Check continuity between BCM harness connector and ground.

BCM		Ground	Continuity
Connector	Terminal		
M67	63		Not existed

Does continuity exist?

YES >> Repair the harnesses or connectors.
NO >> Replace BCM. Refer to BCS-67, "Removal and Installation".

IGNITION KEYHOLE ILLUMINATION CONTROL CIRCUIT

Description

INFOID:0000000004232623

Controls the ignition keyhole illumination (ground side) by PWM signal.
NOTE:
PWM signal control period is approximately 250 Hz (in the gradual brightening/dimming).

Component Function Check

INFOID:0000000004232624

CAUTION:
Before performing the diagnosis, check that the following is normal.
- **Interior room lamp power supply**
- **Ignition keyhole illumination bulb**

1. CHECK IGNITION KEYHOLE ILLUMINATION OPRATION

CONSULT-III ACTIVE TEST
1. Turn ignition switch ON.
2. Select “IGN ILLUM” of BCM (INT LAMP) active test item.
3. With operating the test items, check that ignition keyhole illumination turns ON/OFF.

On : Ignition keyhole illumination ON
Off : Ignition keyhole illumination OFF

Does the ignition keyhole illumination turn ON/OFF?

YES >> Ignition keyhole illumination circuit is normal.
NO >> Refer to INL-23, "Diagnosis Procedure".

Diagnosis Procedure

INFOID:0000000004232625

1. CHECK IGNITION KEYHOLE ILLUMINATION OUTPUT

CONSULT-III ACTIVE TEST
1. Turn ignition switch OFF.
2. Remove ignition keyhole illumination bulb.
3. Turn ignition switch ON.
4. Select “IGN ILLUM” of BCM (INT LAMP) active test item.
5. With operating the test item, check continuity between BCM harness connector and ground.

BCM		Ground	Test item	Continuity
Connector	Terminal		IGN ILLUM TEST	
M65	1		On	Existed
			Off	Not existed

Is the measurement value normal?

YES >> GO TO 2.
Fixed ON>>GO TO 3.
Fixed OFF>>Replace BCM.

2. CHECK IGNITION KEYHOLE ILLUMINATION OPEN CIRCUIT

1. Turn ignition switch OFF.
2. Disconnect BCM connector and ignition keyhole illumination connector.
3. Check continuity between BCM harness connector and ignition keyhole illumination harness connector.

BCM		Ignition keyhole illumination		Continuity
Connector	Terminal	Connector	Terminal	
M65	1	M68	2	Existed

Does continuity exist?

YES >> Replace ignition keyhole illumination.
NO >> Repair harnesses or connectors.

3. CHECK IGNITION KEYHOLE ILLUMINATION SHORT CIRCUIT

1. Turn ignition switch OFF.
2. Disconnect BCM connector and ignition keyhole illumination connector.
3. Check continuity between BCM harness connector and ground.

BCM		Ground	Continuity
Connector	Terminal		
M65	1		Not existed

Does continuity exist?

YES >> Repair harnesses or connectors.
NO >> Replace BCM.

LUGGAGE ROOM LAMP CIRCUIT

Description

INFOID:0000000004232626

Controls the luggage room lamp (ground side) to turn the luggage room lamp ON and OFF.

Component Function Check

INFOID:0000000004232627

CAUTION:
Before performing the diagnosis, check that the following is normal.
- **Interior room lamp power supply**
- **Luggage room lamp bulb**

1.CHECK LUGGAGE ROOM LAMP OPRATION

CONSULT-III ACTIVE TEST
1. Turn ignition switch ON.
2. Select “LUGGAGE LAMP TEST ” of BCM (INT LAMP) active test item.
3. With operating the test items, check that luggage room lamp turns ON/OFF.

On : Luggage room lamp ON
Off : Luggage room lamp OFF

Does the luggage room lamp turn ON/OFF?

YES >> Luggage room lamp circuit is normal.
NO >> Refer to INL-25, "Diagnosis Procedure".

Diagnosis Procedure

INFOID:0000000004232628

1.CHECK LUGGAGE ROOM LAMP OUTPUT

CONSULT-III ACTIVE TEST
1. Turn ignition switch OFF.
2. Remove luggage room lamp bulb.
3. Turn ignition switch ON.
4. Select “LUGGAGE LAMP TEST” of BCM (INT LAMP) active test item.
5. With operating the test item, check continuity between BCM harness connector and ground.

BCM		Ground	Test item	Continuity
Connector	Terminal		LUGGAGE LAMP TEST	
M66	49		On	Existed
			Off	Not existed

Is the measurement value normal?

YES >> GO TO 2.
Fixed ON>>GO TO 3.
Fixed OFF>>Replace BCM.

2.CHECK LUGGAGE ROOM LAMP OPEN CIRCUIT

1. Turn ignition switch OFF.
2. Disconnect BCM connector and luggage room lamp connector.
3. Check continuity between BCM harness connector and luggage room lamp harness connector.

BCM		Luggage room lamp		Continuity
Connector	Terminal	Connector	Terminal	
M66	49	D155	4	Existed

Does continuity exist?

YES >> Replace luggage room lamp.

NO >> Repair harnesses or connectors.

3. CHECK LUGGAGE ROOM LAMP SHORT CIRCUIT

1. Turn ignition switch OFF.
2. Disconnect BCM connector and luggage room lamp connector.
3. Check continuity between BCM harness connector and ground.

BCM		Ground	Continuity
Connector	Terminal		
M66	49		Not existed

Does continuity exist?

YES >> Repair harnesses or connectors.
NO >> Replace BCM.

INTERIOR ROOM LAMP CONTROL SYSTEM

Wiring Diagram - INTERIOR ROOM LAMP -

INFOID:0000000004232629

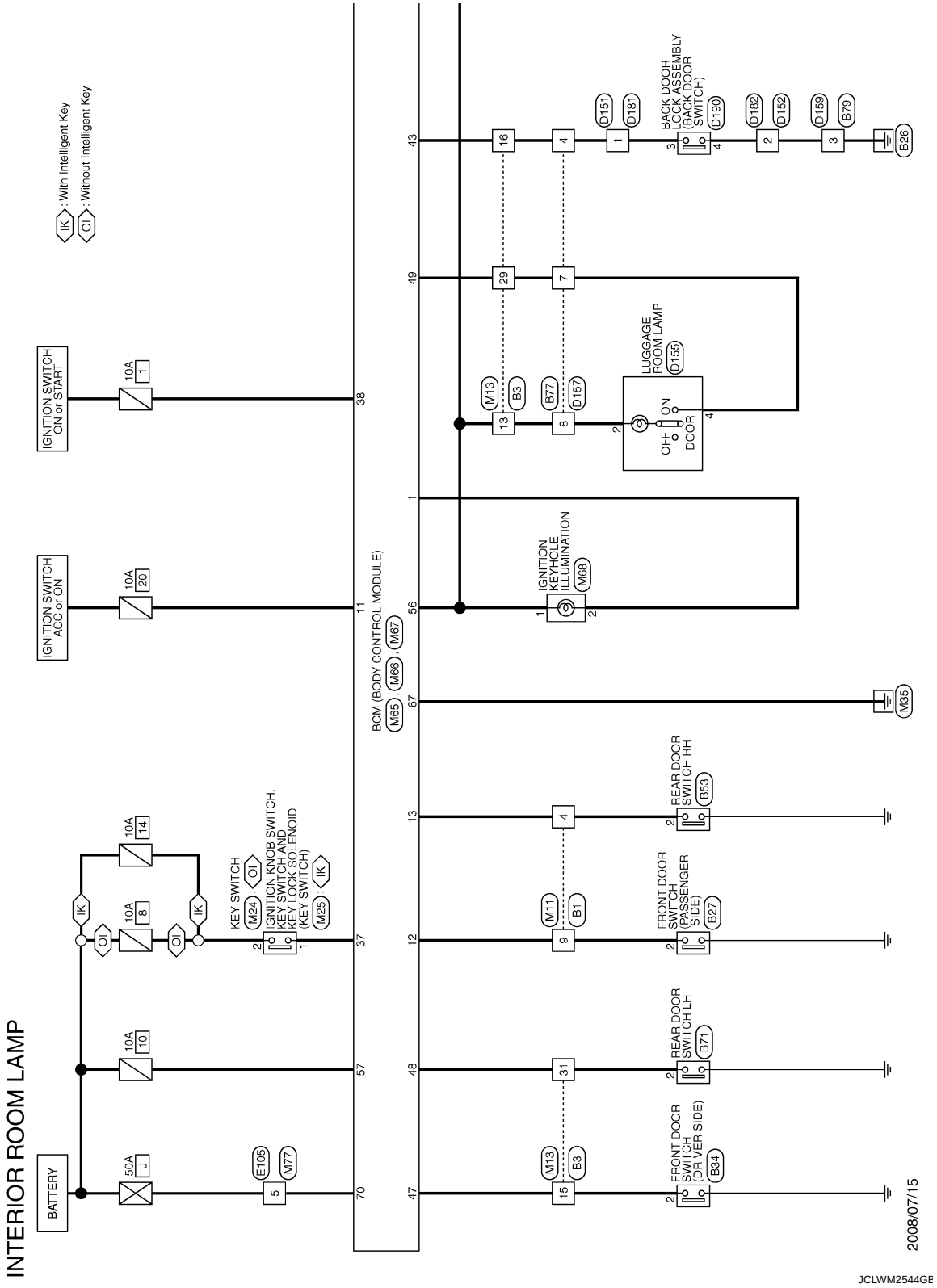

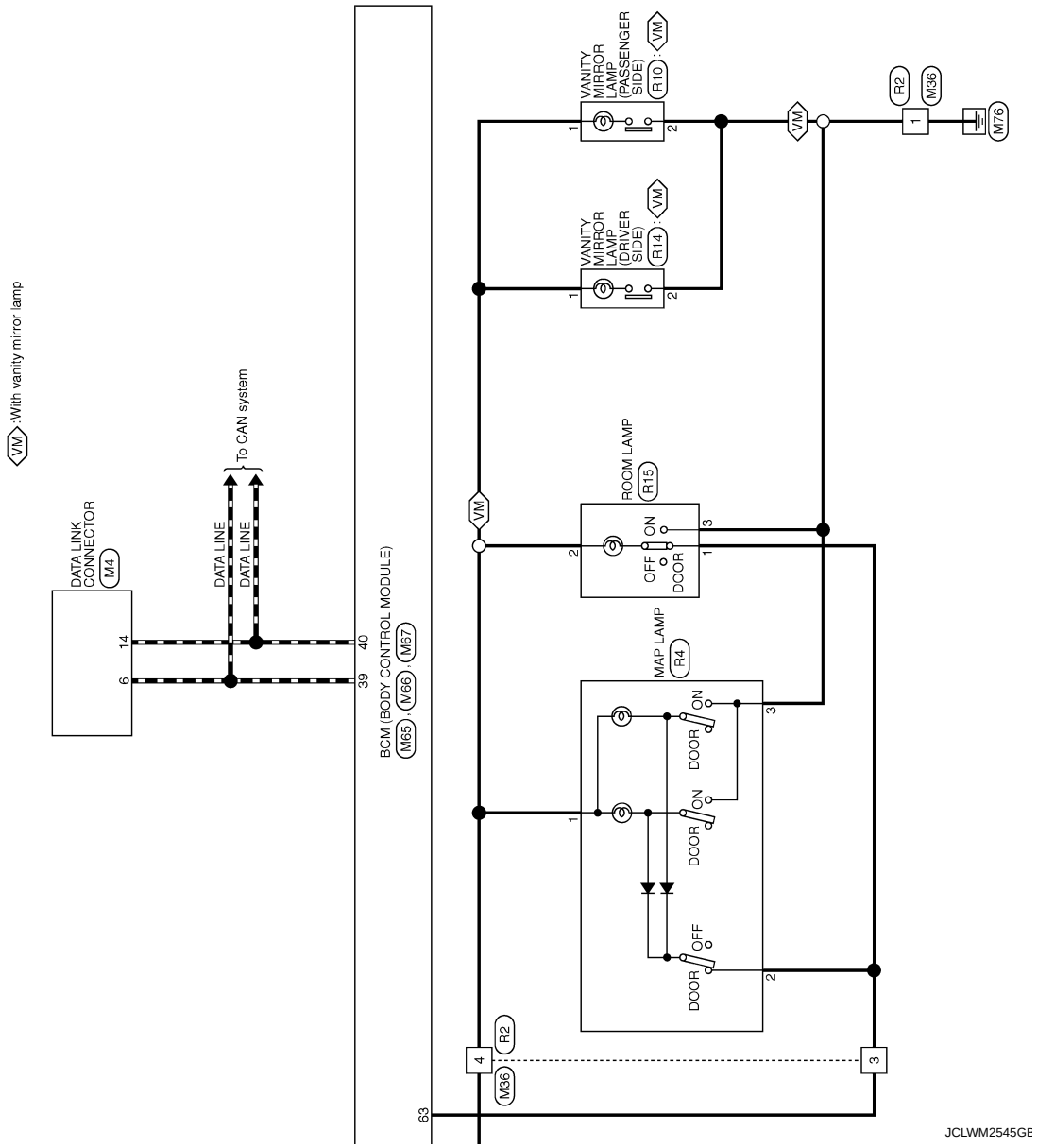
VM :With vanity mirror lamp
DATA LINK CONNECTOR
M4
14
6
DATA LINE
DATA LINE
To CAN system
40
39
BCM (BODY CONTROL MODULE)
M65, M66, M67
63
VANITY MIRROR LAMP (PASSENGER SIDE)
R10
VANITY MIRROR LAMP (DRIVER SIDE)
R14
ROOM LAMP
R15
OFF
ON
DOOR
MAP LAMP
R4
DOOR
ON
DOOR
ON
DOOR
OFF
VM
R2
M36
M76
JCLWM2545GE

INTERIOR ROOM LAMP

Connector No.	B1
Connector Name	WIRE TO WIRE
Connector Type	TH80MW-CS16-TM4

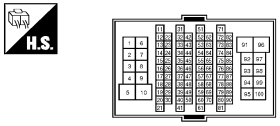

Terminal No.	Color of Wire	Signal Name [Specification]
4	L	–
9	BR	–

Connector No.	B3
Connector Name	WIRE TO WIRE
Connector Type	TH32MW-NH

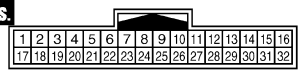

Terminal No.	Color of Wire	Signal Name [Specification]
13	Y	–
15	P	–
16	W	–
29	L	–
31	GR	–

Connector No.	B27
Connector Name	FRONT DOOR SWITCH (PASSENGER SIDE)
Connector Type	A03FW

Terminal No.	Color of Wire	Signal Name [Specification]
2	BR	–

Connector No.	B34
Connector Name	FRONT DOOR SWITCH (DRIVER SIDE)
Connector Type	A03FW

Terminal No.	Color of Wire	Signal Name [Specification]
2	P	–

Connector No.	B53
Connector Name	REAR DOOR SWITCH RH
Connector Type	A03FW

Terminal No.	Color of Wire	Signal Name [Specification]
2	L	–

Connector No.	B71
Connector Name	REAR DOOR SWITCH LH
Connector Type	A03FW

Terminal No.	Color of Wire	Signal Name [Specification]
2	GR	–

Connector No.	B77
Connector Name	WIRE TO WIRE
Connector Type	NS10MW-CS

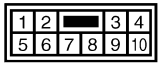

Terminal No.	Color of Wire	Signal Name [Specification]
4	W	–
7	L	–
8	Y	–

Connector No.	B79
Connector Name	WIRE TO WIRE
Connector Type	M04MW-LC

Terminal No.	Color of Wire	Signal Name [Specification]
3	B	–

JCLWM2546GE

INTERIOR ROOM LAMP

Connector No.	D151
Connector Name	WIRE TO WIRE
Connector Type	NS08FBR-CS

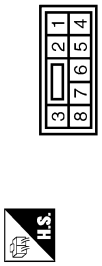

Terminal No.	Color of Wire	Signal Name [Specification]
1	W	–
3	B	–

Connector No.	D152
Connector Name	WIRE TO WIRE
Connector Type	M02FW-GY-LC

Terminal No.	Color of Wire	Signal Name [Specification]
2	B	–

Connector No.	D155
Connector Name	LUGGAGE ROOM LAMP
Connector Type	CJ04FW

Terminal No.	Color of Wire	Signal Name [Specification]
2	Y	–
4	L	–

Connector No.	D157
Connector Name	WIRE TO WIRE
Connector Type	NS10FW-CS

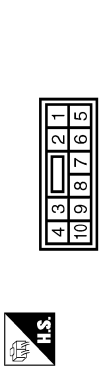

Terminal No.	Color of Wire	Signal Name [Specification]
4	W	–
7	L	–
8	Y	–

Connector No.	D159
Connector Name	WIRE TO WIRE
Connector Type	M04FW-LC

Terminal No.	Color of Wire	Signal Name [Specification]
3	B	–

Connector No.	D181
Connector Name	WIRE TO WIRE
Connector Type	NS08MBR-CS

Terminal No.	Color of Wire	Signal Name [Specification]
1	W	–

Connector No.	D182
Connector Name	WIRE TO WIRE
Connector Type	M02MW-GY-LC

Terminal No.	Color of Wire	Signal Name [Specification]
2	B	–

Connector No.	D190
Connector Name	BACK DOOR LOCK ASSEMBLY
Connector Type	NS04FW-CS

Terminal No.	Color of Wire	Signal Name [Specification]
3	W	–
4	B	–

JCLWM2547GE

INTERIOR ROOM LAMP

Connector No.	E105
Connector Name	WIRE TO WIRE
Connector Type	TH80FW-CS16-TM4

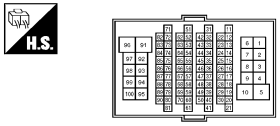

Terminal No.	Color of Wire	Signal Name [Specification]
5	Y	–

Connector No.	M4
Connector Name	DATA LINK CONNECTOR
Connector Type	BD16FW

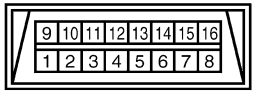

Terminal No.	Color of Wire	Signal Name [Specification]
6	L	–
14	P	–

Connector No.	M11
Connector Name	WIRE TO WIRE
Connector Type	TH80FW-CS16-TM4

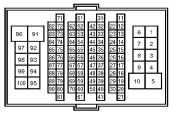

Terminal No.	Color of Wire	Signal Name [Specification]
4	LG	–
9	P	–

Connector No.	M13
Connector Name	WIRE TO WIRE
Connector Type	TH32FW-NH

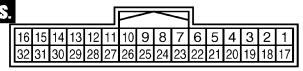

Terminal No.	Color of Wire	Signal Name [Specification]
13	Y	–
15	W	–
16	V	–
29	L	–
31	GR	–

Connector No.	M24
Connector Name	KEY SWITCH
Connector Type	TK02MBR-P

Terminal No.	Color of Wire	Signal Name [Specification]
1	LG	–
2	GR	–

Connector No.	M25
Connector Name	IGNITION KNOB SWITCH, KEY SWITCH AND KEY LOCK SOLENOID
Connector Type	TK06MGY

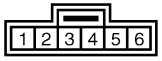

Terminal No.	Color of Wire	Signal Name [Specification]
1	LG	–
2	R	–

Connector No.	M36
Connector Name	WIRE TO WIRE
Connector Type	NS06FBR-CS

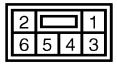

Terminal No.	Color of Wire	Signal Name [Specification]
1	B	–
3	R	–
4	Y	–

Connector No.	M65
Connector Name	BCM (BODY CONTROL MODULE)
Connector Type	TH40FW-NH

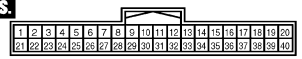

Terminal No.	Color of Wire	Signal Name [Specification]
1	V	KEY RING OUTPUT
11	SB	ACC
12	P	DR SW AS
13	LG	DR SW RR
37	LG	KEY SW
38	G	IGN
39	L	CAN-H
40	P	CAN-L

JCLWM2548GE

INTERIOR ROOM LAMP

Connector No.	M66
Connector Name	BCM (BODY CONTROL MODULE)
Connector Type	FEA09FW-FHA6-SA

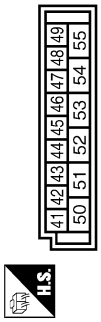

Terminal No.	Color of Wire	Signal Name [Specification]
43	V	BACK DOOR SW
47	W	DR SW DR
48	GR	DR SW RL
49	L	LUGGAGE LAMP OUTPUT

Connector No.	M67
Connector Name	BCM (BODY CONTROL MODULE)
Connector Type	FEA09FB-FHA6-SA

Terminal No.	Color of Wire	Signal Name [Specification]
56	Y	BATTERYSAVEROUTPUT
57	G	BAT FUSE
63	R	ROOMLAMPOUTPUT
67	B	GND
70	Y	BAT FL

Connector No.	M68
Connector Name	IGNITION KEYHOLE ILLUMINATION
Connector Type	A02MW

Terminal No.	Color of Wire	Signal Name [Specification]
1	Y	–
2	V	–

Connector No.	M77
Connector Name	WIRE TO WIRE
Connector Type	TH80MW-CS16-TM4

Terminal No.	Color of Wire	Signal Name [Specification]
5	Y	–

Connector No.	R2
Connector Name	WIRE TO WIRE
Connector Type	NS06MBR-CS

Terminal No.	Color of Wire	Signal Name [Specification]
1	B	–
3	R	–
4	Y	–

Connector No.	R4
Connector Name	MAP LAMP
Connector Type	TK06FGY

Terminal No.	Color of Wire	Signal Name [Specification]
1	Y	–
2	R	–
3	B	–

Connector No.	R10
Connector Name	VANITY MIRROR LAMP (PASSENGER SIDE)
Connector Type	5557-02R

Terminal No.	Color of Wire	Signal Name [Specification]
1	Y	–
2	B	–

Connector No.	R14
Connector Name	VANITY MIRROR LAMP (DRIVER SIDE)
Connector Type	5557-02R

Terminal No.	Color of Wire	Signal Name [Specification]
1	Y	–
2	B	–

JCLWM2549GE

INTERIOR ROOM LAMP

Connector No.	R15
Connector Name	ROOM LAMP
Connector Type	24342 3M10D

Terminal No.	Color of Wire	Signal Name [Specification]
1	R	–
2	Y	–
3	B	–

JCLWM2550GE

ILLUMINATION

Wiring Diagram - ILLUMINATION -

INFOID:0000000004232630

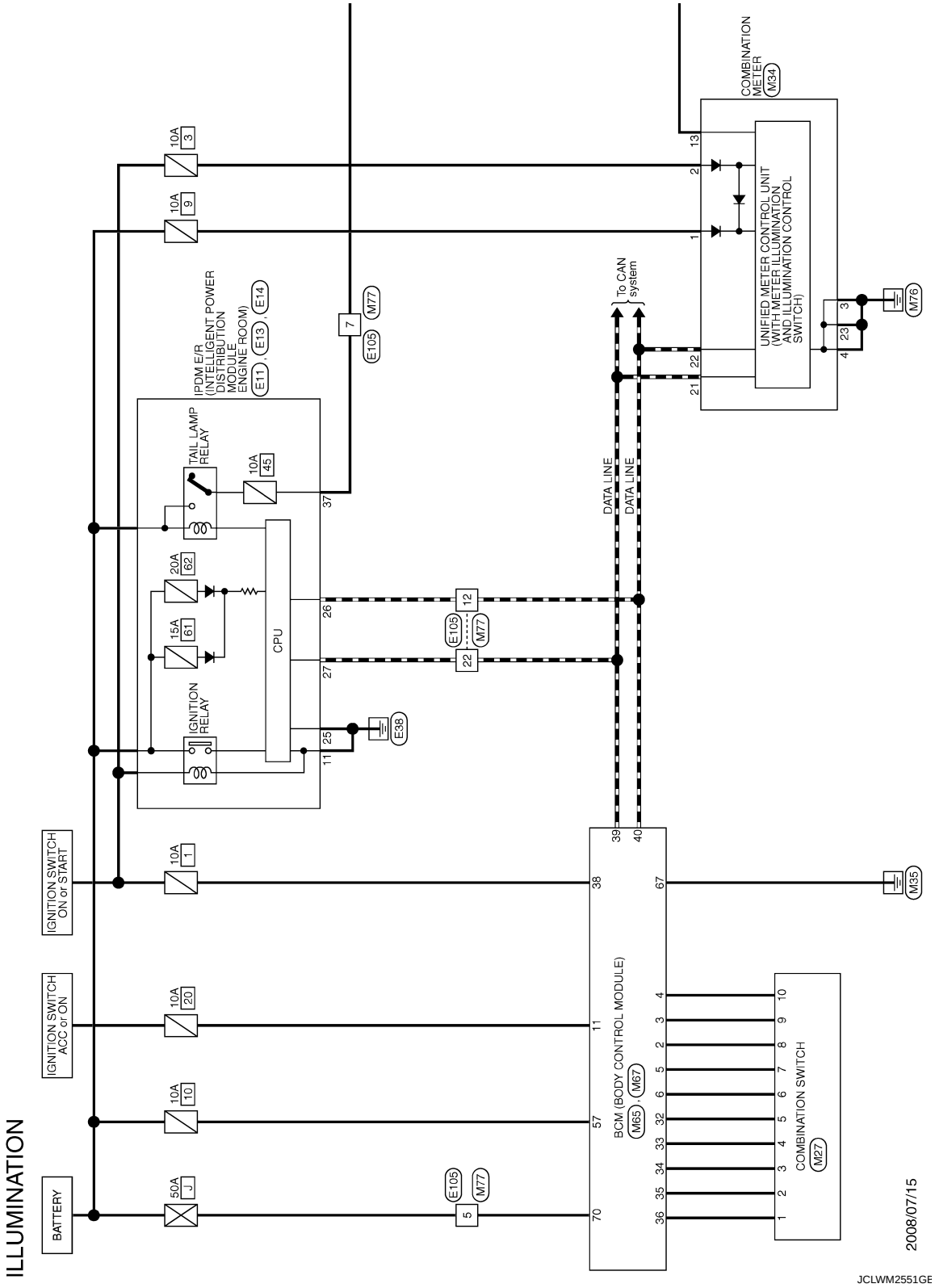

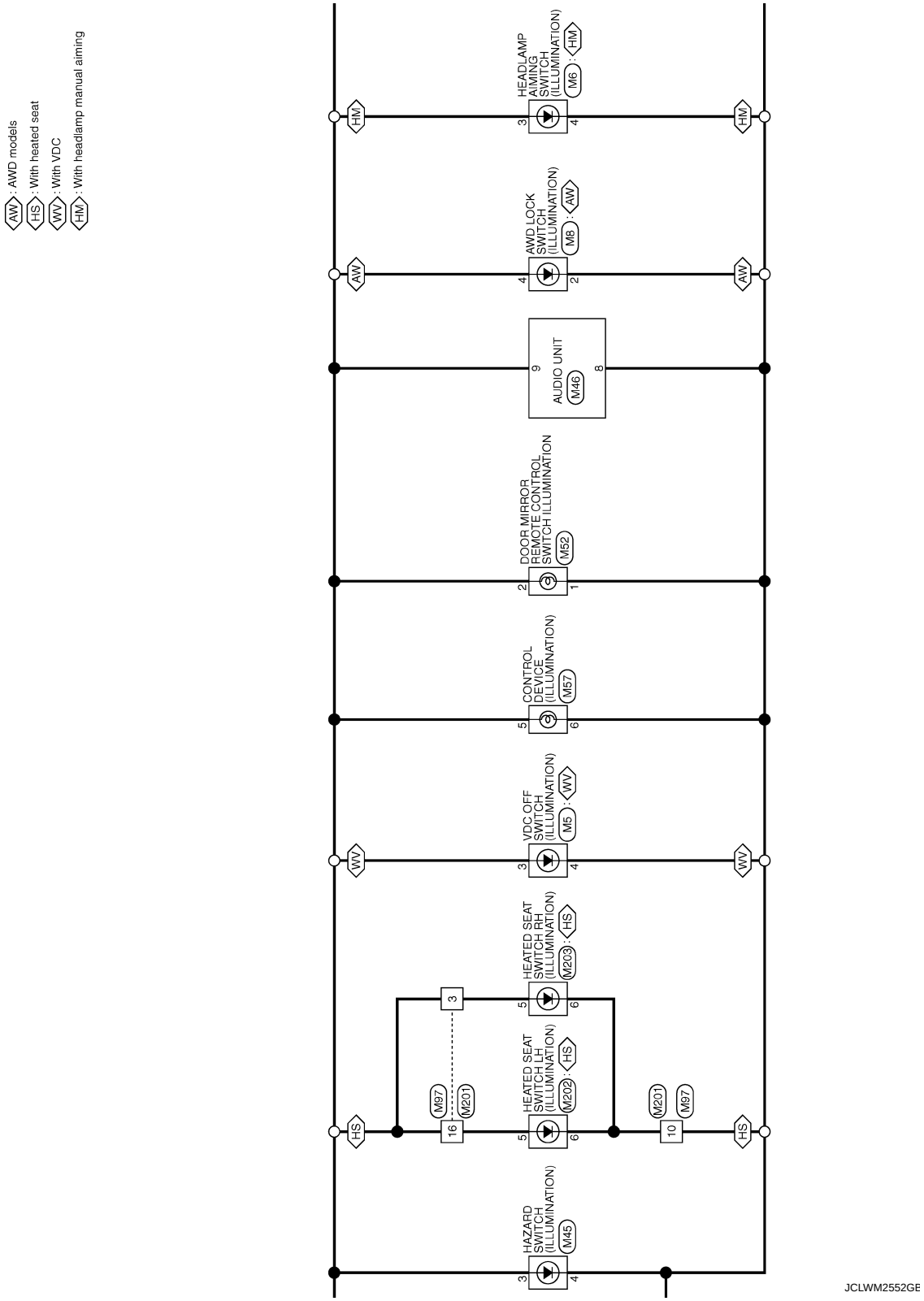
AW : AWD models
HS : With heated seat
WV : With VDC
HM : With headlamp manual aiming
HAZARD SWITCH (ILLUMINATION)
M45
HEATED SEAT SWITCH LH (ILLUMINATION)
M202 : HS
HEATED SEAT SWITCH RH (ILLUMINATION)
M203 : HS
M97
M201
16
3
10
VDC OFF SWITCH (ILLUMINATION)
M5 : WV
CONTROL DEVICE (ILLUMINATION)
M57
DOOR MIRROR REMOTE CONTROL SWITCH ILLUMINATION
M52
AUDIO UNIT
M46
AWD LOCK SWITCH (ILLUMINATION)
M8 : AW
HEADLAMP AIMING SWITCH (ILLUMINATION)
M6 : HM
HS
WV
AW
HM
JCLWM2552GE

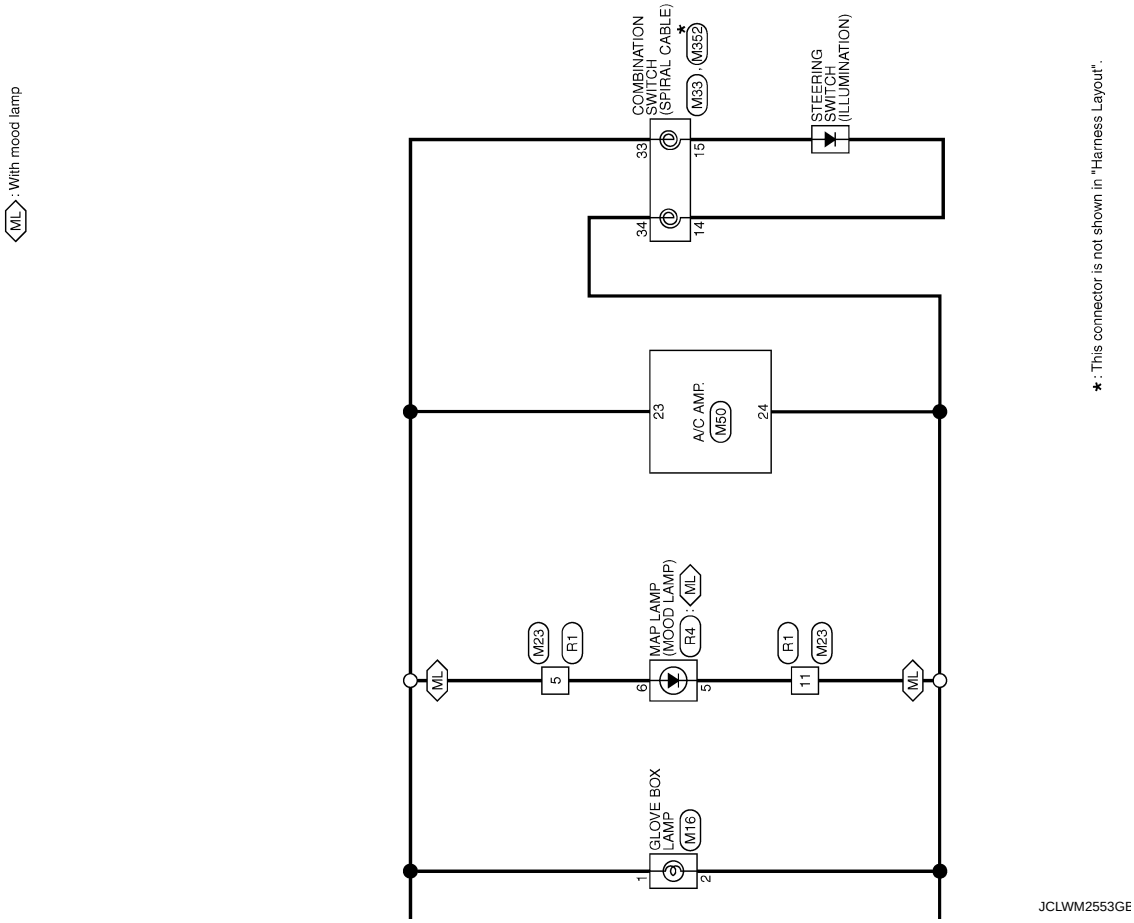

* : This connector is not shown in "Harness Layout".

ILLUMINATION

Connector No.	E11
Connector Name	IPDM E/R (INTELLIGENT POWER DISTRIBUTION MODULE ENGINE ROOM)
Connector Type	M06FB-LC

H.S.

Terminal No.	Color of Wire	Signal Name [Specification]
11	B	–

Connector No.	E13
Connector Name	IPDM E/R (INTELLIGENT POWER DISTRIBUTION MODULE ENGINE ROOM)
Connector Type	TH12FW-NH

H.S.

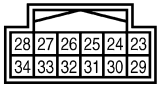

Terminal No.	Color of Wire	Signal Name [Specification]
25	B	–
26	P	–
27	L	–

Connector No.	E14
Connector Name	IPDM E/R (INTELLIGENT POWER DISTRIBUTION MODULE ENGINE ROOM)
Connector Type	NS12FBR-CS

H.S.

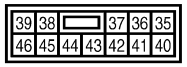

Terminal No.	Color of Wire	Signal Name [Specification]
37	R	–

Connector No.	E105
Connector Name	WIRE TO WIRE
Connector Type	TH80FW-CS16-TM4

H.S.

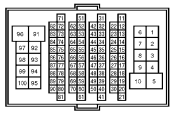

Terminal No.	Color of Wire	Signal Name [Specification]
5	Y	–
7	R	–
12	P	–
22	L	–

Connector No.	M5
Connector Name	VDC OFF SWITCH
Connector Type	TK06FGY

H.S.

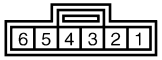

Terminal No.	Color of Wire	Signal Name [Specification]
3	R	–
4	Y	–

Connector No.	M6
Connector Name	HEADLAMP AIMING SWITCH
Connector Type	A04FW

H.S.

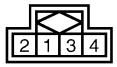

Terminal No.	Color of Wire	Signal Name [Specification]
3	R	–
4	Y	–

Connector No.	M8
Connector Name	AWD LOCK SWITCH
Connector Type	TK06FW-1V

H.S.

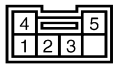

Terminal No.	Color of Wire	Signal Name [Specification]
2	Y	–
4	R	–

Connector No.	M16
Connector Name	GLOVE BOX LAMP
Connector Type	A02FW

H.S.

Terminal No.	Color of Wire	Signal Name [Specification]
1	R	–
2	Y	–

JCLWM2554GE

ILLUMINATION

Connector No.	M23
Connector Name	WIRE TO WIRE
Connector Type	TH12FW-NH

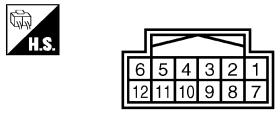

Terminal No.	Color of Wire	Signal Name [Specification]
5	R	–
11	Y	–

Connector No.	M27
Connector Name	COMBINATION SWITCH
Connector Type	TK16FW

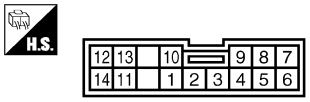

Terminal No.	Color of Wire	Signal Name [Specification]
1	V	INPUT 1
2	B	INPUT 2
3	L	INPUT 3
4	GR	INPUT 4
5	BR	INPUT 5
6	P	OUTPUT 1
7	R	OUTPUT 2
8	G	OUTPUT 5
9	Y	OUTPUT 4
10	W	OUTPUT 3

Connector No.	M33
Connector Name	COMBINATION SWITCH (SPIRAL CABLE)
Connector Type	TK08FGY-1V

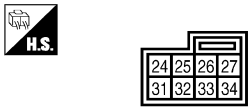

Terminal No.	Color of Wire	Signal Name [Specification]
33	R	–
34	Y	–

Connector No.	M34
Connector Name	COMBINATION METER
Connector Type	SAB40FW

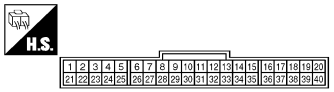

Terminal No.	Color of Wire	Signal Name [Specification]
1	LG	BAT
2	O	IGN
3	B	GND2(POWER)
4	B	GND1(ILL)
13	Y	ILL OUT
21	L	CAN-H
22	P	CAN-L
23	B	GND3(CIRCUIT)

Connector No.	M45
Connector Name	HAZARD SWITCH
Connector Type	TK04FW

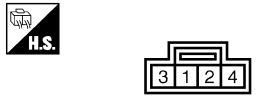

Terminal No.	Color of Wire	Signal Name [Specification]
3	R	–
4	Y	–

Connector No.	M46
Connector Name	AUDIO UNIT
Connector Type	TH18FW-CS2

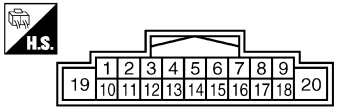

Terminal No.	Color of Wire	Signal Name [Specification]
8	Y	–
9	R	–

Connector No.	M50
Connector Name	A/C AMP.
Connector Type	SAB40FW

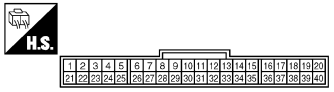

Terminal No.	Color of Wire	Signal Name [Specification]
23	GR	LIGHT+
24	SB	LIGHT-

Connector No.	M52
Connector Name	DOOR MIRROR REMOTE CONTROL SWITCH ILLUMINATION
Connector Type	A02FW

Terminal No.	Color of Wire	Signal Name [Specification]
1	Y	–
2	R	–

JCLWM2555GE

ILLUMINATION

Connector No.	M57
Connector Name	CONTROL DEVICE
Connector Type	TH16FW-NH

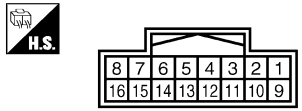

Terminal No.	Color of Wire	Signal Name [Specification]
5	R	–
6	Y	–

Connector No.	M65
Connector Name	BCM (BODY CONTROL MODULE)
Connector Type	TH40FW-NH

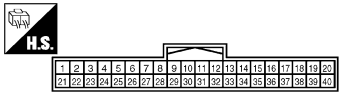

Terminal No.	Color of Wire	Signal Name [Specification]
2	G	INPUT 5
3	Y	INPUT 4
4	W	INPUT 3
5	R	INPUT 2
6	P	INPUT 1
11	SB	ACC
32	BR	OUTPUT 5
33	GR	OUTPUT 4
34	L	OUTPUT 3
35	B	OUTPUT 2
36	V	OUTPUT 1

38	G	IGN
39	L	CAN-H
40	P	CAN-L

Connector No.	M67
Connector Name	BCM (BODY CONTROL MODULE)
Connector Type	FEA09FB-FHA6-SA

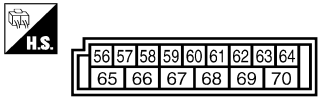

Terminal No.	Color of Wire	Signal Name [Specification]
57	G	BAT FUSE
67	B	GND
70	Y	BAT FL

Connector No.	M77
Connector Name	WIRE TO WIRE
Connector Type	TH80MW-CS16-TM4

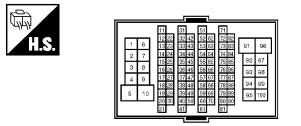

Terminal No.	Color of Wire	Signal Name [Specification]
5	Y	–
7	R	–
12	P	–
22	L	–

Connector No.	M97
Connector Name	WIRE TO WIRE
Connector Type	NS16FW-CS

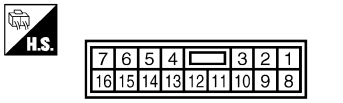

Terminal No.	Color of Wire	Signal Name [Specification]
3	V	–
10	Y	–
16	R	–

Connector No.	M201
Connector Name	WIRE TO WIRE
Connector Type	NS16MW-CS

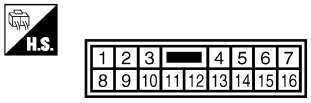

Terminal No.	Color of Wire	Signal Name [Specification]
3	R	–
10	Y	–
16	R	–

Connector No.	M202
Connector Name	HEATED SEAT SWITCH LH
Connector Type	NS06FW-CS

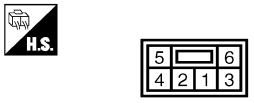

Terminal No.	Color of Wire	Signal Name [Specification]
5	R	–
6	Y	–

JCLWM2556GE

ILLUMINATION

Connector No.	M203
Connector Name	HEATED SEAT SWITCH RH
Connector Type	NS06FBR-CS

H.S.

Terminal No.	Color of Wire	Signal Name [Specification]
5	R	–
6	Y	–

Connector No.	M352
Connector Name	COMBINATION SWITCH (SPIRAL CABLE)
Connector Type	TK08FGY

H.S.

Terminal No.	Color of Wire	Signal Name [Specification]
14	–	–
15	–	–

Connector No.	R1
Connector Name	WIRE TO WIRE
Connector Type	TH12MW-NH

H.S.

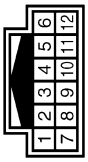

Terminal No.	Color of Wire	Signal Name [Specification]
5	GR	–
11	Y	–

Connector No.	R4
Connector Name	MAP LAMP
Connector Type	TK06FGY

H.S.

Terminal No.	Color of Wire	Signal Name [Specification]
5	Y	–
6	GR	–

JCLWM2557GE

ECU DIAGNOSIS

BCM (BODY CONTROL MODULE)

Reference Value

INFOID:0000000004539453

VALUES ON THE DIAGNOSIS TOOL

Monitor Item	Condition	Value/Status
IGN ON SW	Ignition switch OFF or ACC	Off
	Ignition switch ON	On
KEY ON SW	Mechanical key is removed from key cylinder	Off
	Mechanical key is inserted to key cylinder	On
CDL LOCK SW	Door lock/unlock switch does not operate	Off
	Press door lock/unlock switch to the lock side	On
CDL UNLOCK SW	Door lock/unlock switch does not operate	Off
	Press door lock/unlock switch to the unlock side	On
DOOR SW-DR	Driver's door closed	Off
	Driver's door opened	On
DOOR SW-AS	Passenger door closed	Off
	Passenger door opened	On
DOOR SW-RR	Rear RH door closed	Off
	Rear RH door opened	On
DOOR SW-RL	Rear LH door closed	Off
	Rear LH door opened	On
BACK DOOR SW	Back door closed	Off
	Back door opened	On
KEY CYL LK-SW	Other than driver door key cylinder LOCK position	Off
	Driver door key cylinder LOCK position	On
KEY CYL UN-SW	Other than driver door key cylinder UNLOCK position	Off
	Driver door key cylinder UNLOCK position	On
KEYLESS LOCK	“LOCK” button of key fob is not pressed	Off
	“LOCK” button of key fob is pressed	On
KEYLESS UNLOCK	“UNLOCK” button of key fob is not pressed	Off
	“UNLOCK” button of key fob is pressed	On
I-KEY LOCK	“LOCK” button of Intelligent Key or door request switch are not pressed	Off
	“LOCK” button of Intelligent Key or door request switch are pressed	On
I-KEY UNLOCK	“UNLOCK” button of Intelligent Key or door request switch are not pressed	Off
	“UNLOCK” button of Intelligent Key or door request switch are pressed	On
ACC ON SW	Ignition switch OFF	Off
	Ignition switch ACC or ON	On
REAR DEF SW	Rear window defogger switch OFF	Off
	Rear window defogger switch ON	On
LIGHT SW 1ST	Lighting switch OFF	Off
	Lighting switch 1ST	On

Monitor Item	Condition	Value/Status
BUCKLE SW	The seat belt (driver side) is unfastened. [Seat belt switch (driver side) OFF]	Off
	The seat belt (driver side) is fastened. [Seat belt switch (driver side) ON]	On
KEYLESS PANIC	PANIC button of key fob is not pressed	Off
	PANIC button of key fob is pressed	On
KEYLESS TRUNK	**NOTE:** The item is indicated, but not monitored.	Off
TRNK OPN MNTR	**NOTE:** The item is indicated, but not monitored.	Off
RKE LCK-UNLCK	LOCK/UNLOCK button of key fob is not pressed and held simultaneously	Off
	LOCK/UNLOCK button of key fob is pressed and held simultaneously	On
RKE KEEP UNLK	UNLOCK button of key fob is not pressed	Off
	UNLOCK button of key fob is pressed and held	On
HI BEAM SW	Lighting switch OFF	Off
	Lighting switch HI	On
HEAD LAMP SW 1	Lighting switch OFF	Off
	Lighting switch 2ND	On
HEAD LAMP SW 2	Lighting switch OFF	Off
	Lighting switch 2ND	On
AUTO LIGHT SW	**NOTE:** The item is indicated, but not monitored.	Off
PASSING SW	Other than lighting switch PASS	Off
	Lighting switch PASS	On
FR FOG SW	Front fog lamp switch OFF	Off
	Front fog lamp switch ON	On
RR FOG SW	**NOTE:** The item is indicated, but not monitored.	Off
TURN SIGNAL R	Turn signal switch OFF	Off
	Turn signal switch RH	On
TURN SIGNAL L	Turn signal switch OFF	Off
	Turn signal switch LH	On
ENGINE RUN	Engine stopped	Off
	Engine running	On
PKB SW	Parking brake switch is OFF	Off
	Parking brake switch is ON	On
CARGO LAMP SW	**NOTE:** The item is indicated, but not monitored.	Off
OPTICAL SENSOR	**NOTE:** The item is indicated, but not monitored.	0 V
IGN SW CAN	Ignition switch OFF or ACC	Off
	Ignition switch ON	On
FR WIPER HI	Front wiper switch OFF	Off
	Front wiper switch HI	On
FR WIPER LOW	Front wiper switch OFF	Off
	Front wiper switch LO	On

Monitor Item	Condition	Value/Status
FR WIPER INT	Front wiper switch OFF	Off
	Front wiper switch INT	On
FR WASHER SW	Front washer switch OFF	Off
	Front washer switch ON	On
INT VOLUME	Wiper intermittent dial is in a dial position 1 - 7	1 - 7
FR WIPER STOP	Any position other than front wiper stop position	Off
	Front wiper stop position	On
VEHICLE SPEED	While driving	Equivalent to speedometer reading
RR WIPER ON	Rear wiper switch OFF	Off
	Rear wiper switch ON	On
RR WIPER INT	Rear wiper switch OFF	Off
	Rear wiper switch INT	On
RR WASHER SW	Rear washer switch OFF	Off
	Rear washer switch ON	On
RR WIPER STOP	Rear wiper stop position	Off
	Other than rear wiper stop position	On
RR WIPER STP2	**NOTE:** The item is indicated, but not monitored.	Off
H/L WASH SW	**NOTE:** The item is indicated, but not monitored.	Off
HAZARD SW	Hazard switch OFF	Off
	Hazard switch ON	On
BRAKE SW	Brake pedal is not depressed	Off
	Brake pedal is depressed	On
FAN ON SIG	Blower fan motor switch OFF	Off
	Blower fan motor switch ON (other than OFF)	On
AIR COND SW	Compressor ON is not requested from auto amp. (A/C indicator OFF, blower fan motor switch OFF or etc.)	Off
	Compressor ON is requested from auto amp. (A/C indicator ON and blower fan motor switch ON).	On
I-KEY TRUNK	**NOTE:** The item is indicated, but not monitored.	Off
I-KEY PW DWN	UNLOCK button of Intelligent Key is not pressed	Off
	UNLOCK button of Intelligent Key is pressed and held	On
I-KEY PANIC	PANIC button of Intelligent Key is not pressed	Off
	PANIC button of Intelligent Key is pressed	On
PUSH SW	Return to ignition switch to “LOCK” position	Off
	Press ignition switch	On
TRNK OPNR SW	When back door opener switch is not pressed	Off
	When back door opener switch is pressed	On
TRUNK CYL SW	**NOTE:** The item is indicated, but not monitored.	Off
HOOD SW	Close the hood **NOTE:** Vehicles of except for Mexico are OFF-fixed	Off
	Open the hood	On

Monitor Item	Condition	Value/Status
OIL PRESS SW	• Ignition switch OFF or ACC • Engine running	Off
	Ignition switch ON	On
AIR PRESS FL	Ignition switch ON (Only when the signal from the transmitter is received)	Air pressure of front LH tire
AIR PRESS FR	Ignition switch ON (Only when the signal from the transmitter is received)	Air pressure of front RH tire
AIR PRESS RR	Ignition switch ON (Only when the signal from the transmitter is received)	Air pressure of rear RH tire
AIR PRESS RL	Ignition switch ON (Only when the signal from the transmitter is received)	Air pressure of rear LH tire
ID REGST FL1	ID of front LH tire transmitter is registered	Done
	ID of front LH tire transmitter is not registered	Yet
ID REGST FR1	ID of front RH tire transmitter is registered	Done
	ID of front RH tire transmitter is not registered	Yet
ID REGST RR1	ID of rear RH tire transmitter is registered	Done
	ID of rear RH tire transmitter is not registered	Yet
ID REGST RL1	ID of rear LH tire transmitter is registered	Done
	ID of rear LH tire transmitter is not registered	Yet
WARNING LAMP	Tire pressure indicator OFF	Off
	Tire pressure indicator ON	On
BUZZER	Tire pressure warning alarm is not sounding	Off
	Tire pressure warning alarm is sounding	On

TERMINAL LAYOUT

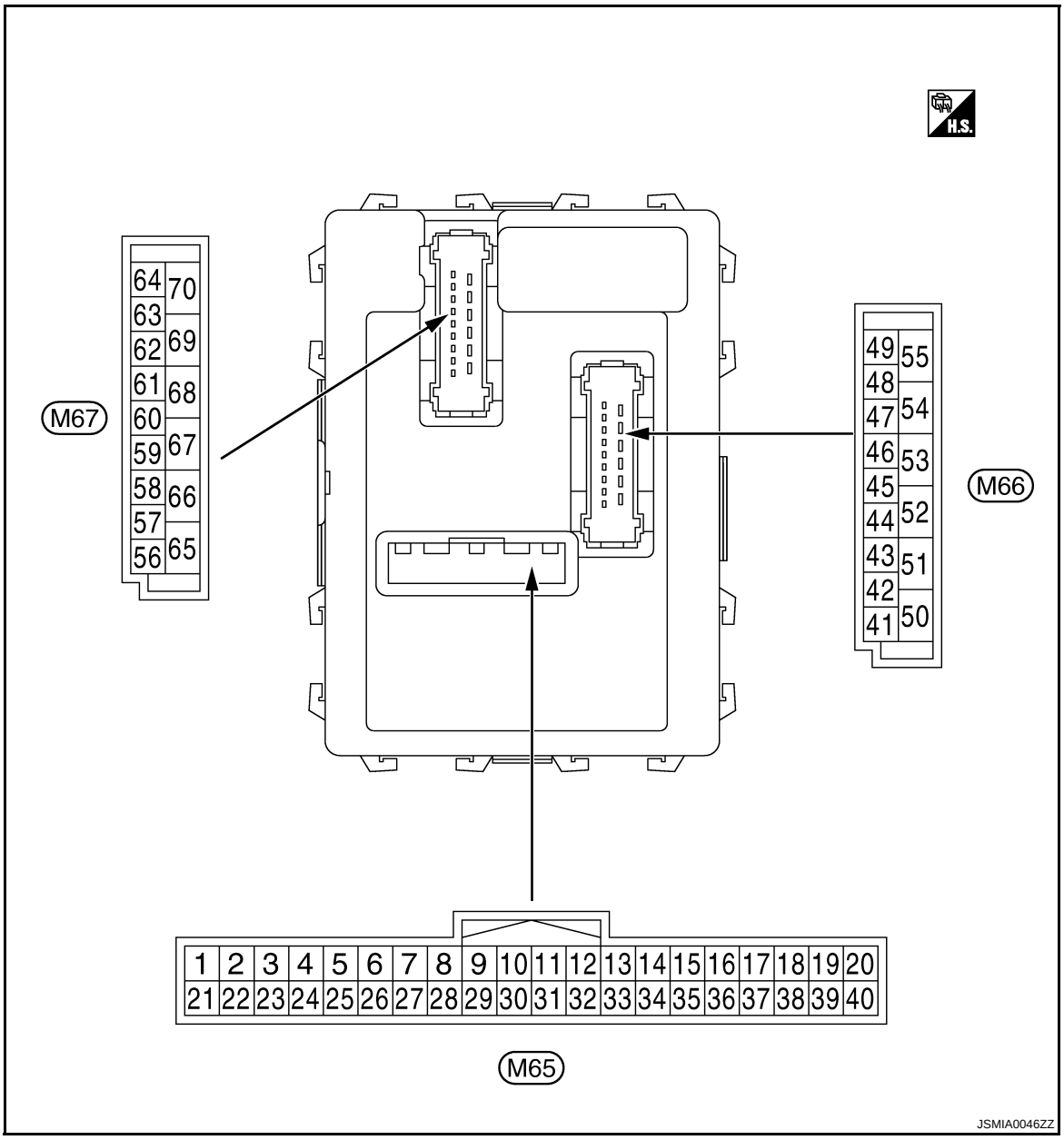

PHYSICAL VALUES

CAUTION:

- **Check combination switch system terminal waveform under the loaded condition with lighting switch, turn signal switch and wiper switch OFF is not to be fluctuated by being overloaded.**
- **Turn wiper intermittent dial position to 4 except when checking waveform or voltage of wiper intermittent dial position. Wiper intermittent dial position can be confirmed on CONSULT-III. Refer to BCS-27, "COMB SW : CONSULT-III Function (BCM - COMB SW)".**
- **BCM reads the status of the combination switch at 10 ms internal normally. Refer to BCS-9, "System Diagram".**

Terminal No. (Wire color)		Description		Condition		Value (Approx.)
+	–	Signal name	Input/ Output			
1 (V)	Ground	Ignition key hole illumination control	Output	Ignition key hole illumination	OFF	Battery voltage
					ON	0 V

Terminal No. (Wire color)		Description		Condition		Value (Approx.)
+	–	Signal name	Input/ Output			
2 (G)	Ground	Combination switch INPUT 5	Input	Combination switch (Wiper intermittent dial 4)	All switch OFF	0 V
					Turn signal switch RH Lighting switch HI Lighting switch 1ST	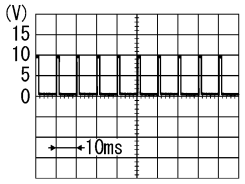 PKIB4959J 1.0 V
					Lighting switch 2ND	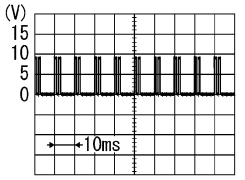 PKIB4953J 2.0 V
3 (Y)	Ground	Combination switch INPUT 4	Input	Combination switch (Wiper intermittent dial 4)	All switch OFF	0 V
					Turn signal switch LH Lighting switch PASS Lighting switch 2ND	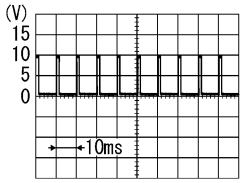 PKIB4959J 1.0 V
					Front fog lamp switch ON	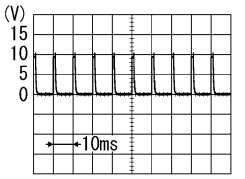 PKIB4955J 0.8 V
4 (W)	Ground	Combination switch INPUT 3	Input	Combination switch (Wiper intermittent dial 4)	All switch OFF	0 V
					Front wiper switch LO Front wiper switch MIST Front wiper switch INT	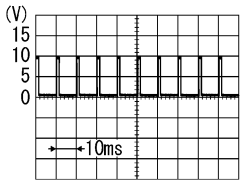 PKIB4959J 1.0 V

Terminal No. (Wire color)		Description		Condition		Value (Approx.)
+	–	Signal name	Input/ Output			
5 (R)	Ground	Combination switch INPUT 2	Input	Combination switch	All switch OFF (Wiper intermittent dial 4)	0 V
					Front washer switch (Wiper intermittent dial 4) Rear washer ON (Wiper intermittent dial 4) Any of the condition below with all switch OFF • Wiper intermittent dial 1 • Wiper intermittent dial 5 • Wiper intermittent dial 6	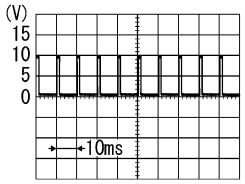 PKIB4959J 1.0 V
					Rear wiper switch ON (Wiper intermittent dial 4)	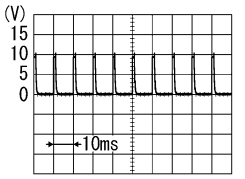 PKIB4955J 0.8 V
6 (P)	Ground	Combination switch INPUT 1	Input	Combination switch	All switch OFF (Wiper intermittent dial 4)	0 V
					Front wiper switch HI (Wiper intermittent dial 4) Rear wiper switch INT (Wiper intermittent dial 4) Wiper intermittent dial 3 (All switch OFF)	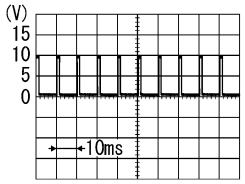 PKIB4959J 1.0 V
					Any of the condition below with all switch OFF • Wiper intermittent dial 1 • Wiper intermittent dial 2	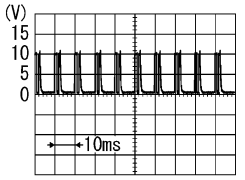 PKIB4952J 1.7 V
					Any of the condition below with all switch OFF • Wiper intermittent dial 6 • Wiper intermittent dial 7	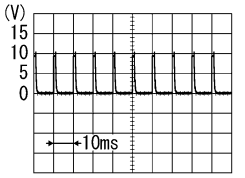 PKIB4955J 0.8 V

Terminal No. (Wire color)		Description		Condition		Value (Approx.)
+	–	Signal name	Input/ Output			
7 (L)	Ground	Door key cylinder switch UNLOCK signal	Input	Door key cylinder switch	NEUTRAL position	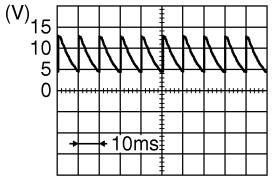 JPMIA0587GB 8.0 - 8.5 V
					UNLOCK position	0 V
8 (R)	Ground	Door key cylinder switch LOCK signal	Input	Door key cylinder switch	NEUTRAL position	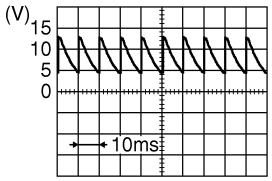 JPMIA0587GB 8.0 - 8.5 V
					LOCK position	0 V
9 (R)	Ground	Stop lamp switch	Input	Stop lamp switch	OFF (Brake pedal is not depressed)	0 V
					ON (Brake pedal is depressed)	Battery voltage
10 (SB)	Ground	Rear window defogger switch	Input	Rear window defogger switch	Not pressed	Battery voltage
					Pressed	0 V
11 (SB)	Ground	Ignition switch ACC	Input	Ignition switch OFF		0 V
				Ignition switch ACC or ON		Battery voltage
12 (P)	Ground	Passenger door switch	Input	Passenger door switch	OFF (When passenger door closed)	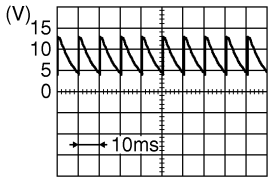 JPMIA0586GB 7.5 - 8.0 V
					ON (When passenger door opened)	0 V
13 (LG)	Ground	Rear door switch RH	Input	Rear door switch RH	OFF (When rear door RH closed)	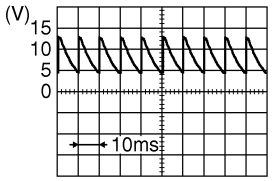 JPMIA0587GB 8.0 - 8.5 V
					ON (When rear door RH opened)	0 V

Terminal No. (Wire color)		Description		Condition		Value (Approx.)
+	–	Signal name	Input/ Output			
15* (O)	Ground	Tire pressure warning check switch	Input	Ignition switch OFF		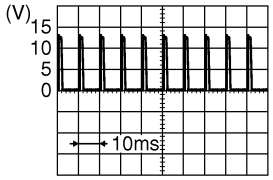 JPMIA0588GB 1.5 V
18* (O)	Ground	Remote keyless entry receiver ground	Input	Ignition switch ON		0 V
19* (V)	Ground	Remote keyless entry receiver power supply	Input	Without Intelligent Key system	At any condition	5 V
				With Intelligent Key system	• Ignition switch OFF • For 3 seconds after ignition switch OFF to ON	0 V
					3 seconds or later after ignition switch OFF to ON	5 V
20* (GR)	Ground	Remote keyless entry receiver signal	Input	Without Intelligent Key system	At any condition	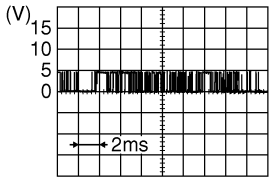 JPMIA0589GB **NOTE:** The wave form changes according to signal-receiving condition.
				With Intelligent Key system	• Ignition switch OFF • For 3 seconds after ignition switch OFF to ON	0 V
					3 seconds or later after ignition switch OFF to ON	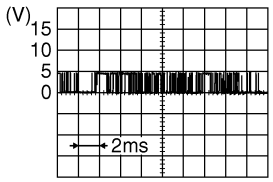 JPMIA0589GB **NOTE:** The wave form changes according to signal-receiving condition.
21 (G)	Ground	Immobilizer antenna signal (Clock)	Input/ Output	Ignition switch OFF		Battery voltage

Terminal No. (Wire color)		Description		Condition		Value (Approx.)
+	–	Signal name	Input/ Output			
23 (B)	Ground	Security indicator signal	Input	Security indicator	ON	0 V
					Blinking (Ignition switch OFF)	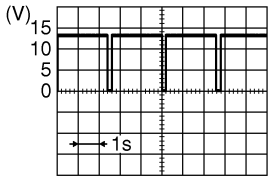 JPMIA0590GB 12.0 V
					OFF	Battery voltage
25 (BR)	Ground	Immobilizer antenna signal (Rx, Tx)	Input/ Output	Ignition switch OFF		Battery voltage
27 (Y)	Ground	A/C switch	Input	Ignition switch OFF		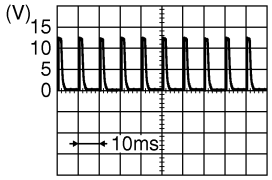 JPMIA0591GB 1.6 V
				Ignition switch ON	A/C switch OFF	
					A/C switch ON	0 V
28 (LG)	Ground	Blower fan switch	Input	Ignition switch OFF		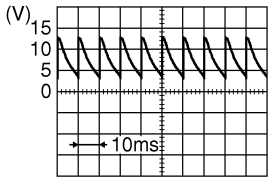 JPMIA0592GB 7.0 - 7.5 V
				Ignition switch ON	Blower fan switch OFF	
					Blower fan switch ON	0 V
29 (W)	Ground	Hazard switch	Input	Hazard switch	OFF	Battery voltage
					ON	0 V
30 (G)	Ground	Back door opener switch	Input	Back door opener switch	Not pressed	Battery voltage
					Pressed	0 V

Terminal No. (Wire color)		Description		Condition		Value (Approx.)
+	–	Signal name	Input/ Output			
32 (BR)	Ground	Combination switch OUTPUT 5	Output	Combination switch	All switch OFF (Wiper intermittent dial 4)	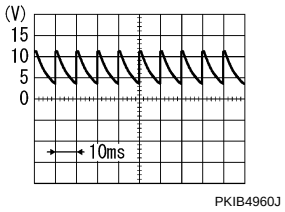 7.2 V
					Front fog lamp switch ON (Wiper intermittent dial 4)	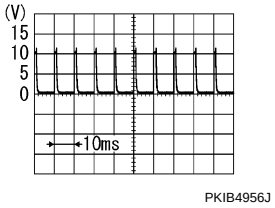 1.0 V
					Rear wiper switch ON (Wiper intermittent dial 4)	
					Any of the condition below with all switch OFF • Wiper intermittent dial 1 • Wiper intermittent dial 2 • Wiper intermittent dial 6 • Wiper intermittent dial 7	
33 (GR)	Ground	Combination switch OUTPUT 4	Output	Combination switch	All switch OFF (Wiper intermittent dial 4)	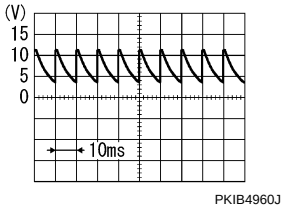 7.2 V
					Lighting switch 1ST (Wiper intermittent dial 4)	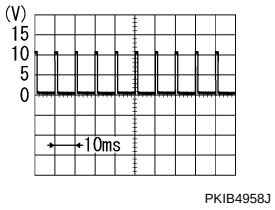 1.2 V
					Rear wiper switch INT (Wiper intermittent dial 4)	
					Any of the condition below with all switch OFF • Wiper intermittent dial 1 • Wiper intermittent dial 5 • Wiper intermittent dial 6	

Terminal No. (Wire color)		Description		Condition		Value (Approx.)
+	–	Signal name	Input/ Output			
34 (L)	Ground	Combination switch OUTPUT 3	Output	Combination switch	All switch OFF (Wiper intermittent dial 4)	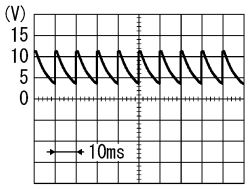 PKIB4960J 7.2 V
					Lighting switch 2ND (Wiper intermittent dial 4)	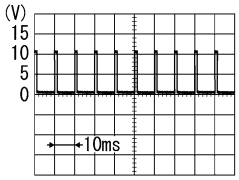 PKIB4958J 1.2 V
					Lighting switch HI (Wiper intermittent dial 4)	
					Rear washer switch ON (Wiper intermittent dial 4)	
					Any of the condition below with all switch OFF • Wiper intermittent dial 1 • Wiper intermittent dial 2 • Wiper intermittent dial 3	
35 (B)	Ground	Combination switch OUTPUT 2	Output	Combination switch (Wiper intermittent dial 4)	All switch OFF	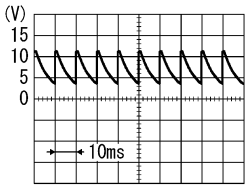 PKIB4960J 7.2 V
					Lighting switch 2ND	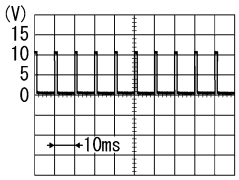 PKIB4958J 1.2 V
					Lighting switch PASS	
					Front wiper switch INT	
					Front wiper switch HI	
36 (V)	Ground	Combination switch OUTPUT 1	Output	Combination switch (Wiper intermittent dial 4)	All switch OFF	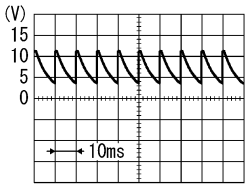 PKIB4960J 7.2 V
					Turn signal switch RH	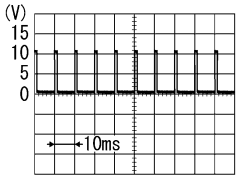 PKIB4958J 1.2 V
					Turn signal switch LH	
					Front wiper switch LO (Front wiper switch MIST)	
					Front washer switch ON	

Terminal No. (Wire color)		Description		Condition		Value (Approx.)
+	–	Signal name	Input/ Output			
37 (LG)	Ground	Key switch	Input	Insert mechanical key into ignition key cylinder		Battery voltage
				Remove mechanical key from ignition key cylinder		0 V
38 (G)	Ground	Ignition switch ON	Input	Ignition switch OFF or ACC		0 V
				Ignition switch ON or START		Battery voltage
39 (L)	Ground	CAN-H	Input/ Output	—		—
40 (P)	Ground	CAN-L	Input/ Output	—		—
43 (V)	Ground	Back door switch	Input	Back door switch	OFF (When back door closed)	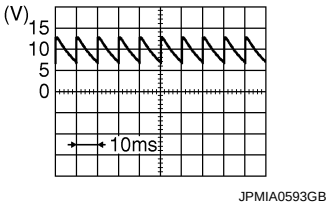 9.5 - 10.0 V
					ON (When back door opened)	0 V
44 (B)	Ground	Rear wiper auto stop	Input	Ignition switch ON	Rear wiper stop position	0 V
					Any position other than rear wiper stop position	Battery voltage
45 (P)	Ground	Door lock and unlock switch LOCK signal	Input	Door lock and unlock switch	NEUTRAL position	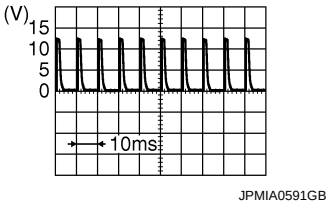 1.6 V
					LOCK position	0 V
46 (BR)	Ground	Door lock and unlock switch UNLOCK signal	Input	Door lock and unlock switch	NEUTRAL position	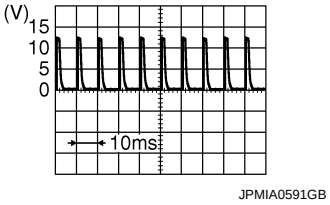 1.6 V
					UNLOCK position	0 V

Terminal No. (Wire color)		Description		Condition		Value (Approx.)
+	–	Signal name	Input/ Output			
47 (W)	Ground	Driver door switch	Input	Driver door switch	OFF (When driver door closed)	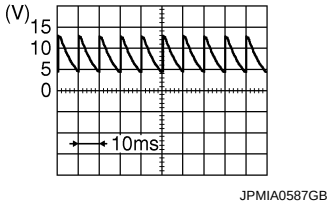 8.0 - 8.5 V
					ON (When driver door opened)	0 V
48 (GR)	Ground	Rear door switch LH	Input	Rear door switch LH	OFF (When rear door LH closed)	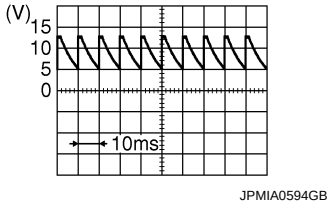 8.5 - 9.0 V
					ON (When rear door LH opened)	0 V
49 (L)	Ground	Back door lamp control	Output	Back door lamp switch DOOR position	Back door is closed (Back door lamp turns OFF)	Battery voltage
					Back door is opened (Back door lamp turns ON)	0 V
53 (V)	Ground	Back door open	Output	Back door opener switch	Not pressed (Back door actuator is activated)	0 V
					Pressed (Back door actuator is activated)	Battery voltage
55 (SB)	Ground	Rear wiper motor	Output	Ignition switch ON	Rear wiper switch OFF	0 V
					Rear wiper switch ON	Battery voltage
56 (Y)	Ground	Interior room lamp power supply	Output	After passing the interior room lamp battery saver operation time		0 V
				Any other time after passing the interior room lamp battery saver operation time		Battery voltage
57 (G)	Ground	Battery power supply	Input	Ignition switch OFF		Battery voltage
59 (L)	Ground	Driver door UNLOCK	Output	Driver door	UNLOCK (Actuator is activated)	Battery voltage
					Other then UNLOCK (Actuator is not activated)	0 V

Terminal No. (Wire color)		Description		Condition		Value (Approx.)
+	–	Signal name	Input/ Output			
60 (BR)	Ground	Turn signal LH	Output	Ignition switch ON	Turn signal switch OFF	0 V
					Turn signal switch LH	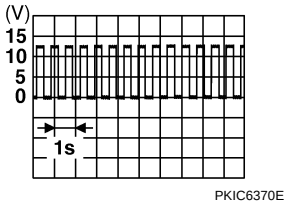 6.0 V
61 (GR)	Ground	Turn signal RH	Output	Ignition switch ON	Turn signal switch OFF	0 V
					Turn signal switch RH	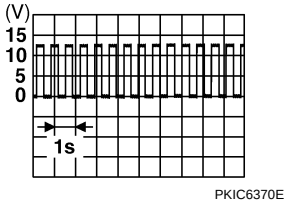 6.0 V
63 (R)	Ground	Interior room lamp timer control	Output	Interior room lamp	OFF	Battery voltage
					ON	0 V
65 (V)	Ground	All doors LOCK	Output	All doors	LOCK (Actuator is activated)	Battery voltage
					Other then LOCK (Actuator is not activated)	0 V
66 (G)	Ground	Passenger door and rear door UNLOCK	Output	Passenger door and rear door	UNLOCK (Actuator is activated)	Battery voltage
					Other then UNLOCK (Actuator is not activated)	0 V
67 (B)	Ground	Ground	Output	Ignition switch ON		0 V
68 (L)	Ground	P/W power supply (RAP)	Output	Ignition switch ON		Battery voltage
69 (P)	Ground	P/W power supply (BAT)	Output	Ignition switch OFF		Battery voltage
70 (Y)	Ground	Battery power supply	Input	Ignition switch OFF		Battery voltage

*: Except for Mexico

Wiring Diagram - BCM -

INFOID:0000000004539454

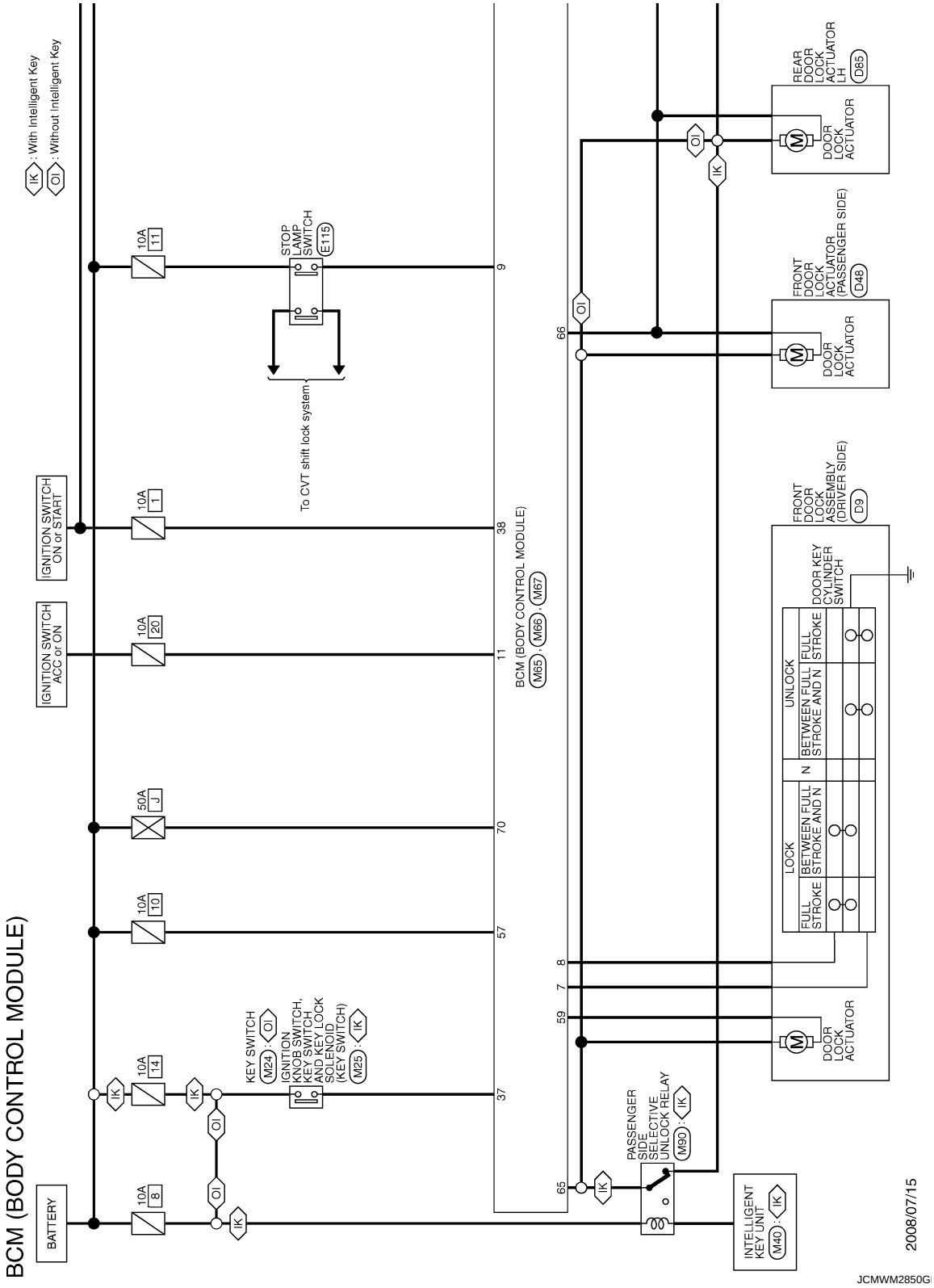

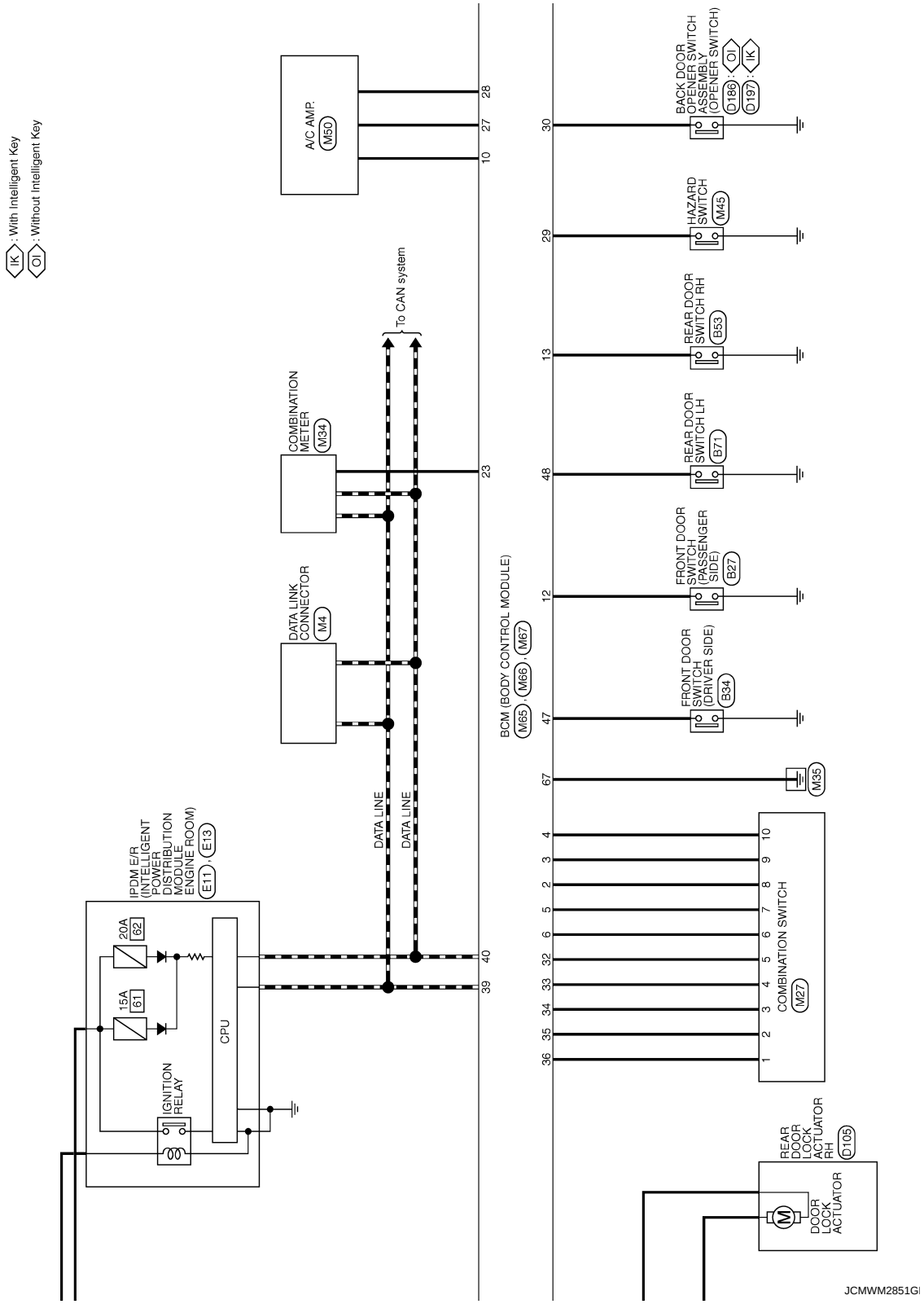
IK : With Intelligent Key
OI : Without Intelligent Key
A/C AMP.
M50
28
27
10
COMBINATION METER
M34
23
To CAN system
DATA LINK CONNECTOR
M4
DATA LINE
DATA LINE
40
39
IPDM E/R (INTELLIGENT POWER DISTRIBUTION MODULE ENGINE ROOM)
E11 , E13
20A
62
15A
61
IGNITION RELAY
CPU
BCM (BODY CONTROL MODULE)
M65 , M66 , M67
30
BACK DOOR OPENER SWITCH ASSEMBLY (OPENER SWITCH)
D186 : OI
D197 : IK
29
HAZARD SWITCH
M45
13
REAR DOOR SWITCH RH
B53
48
REAR DOOR SWITCH LH
B71
12
FRONT DOOR SWITCH (PASSENGER SIDE)
B27
47
FRONT DOOR SWITCH (DRIVER SIDE)
B34
67
M35
4
3
2
5
6
32
33
34
35
36
1
10
9
8
7
6
5
4
3
2
1
COMBINATION SWITCH
M27
REAR DOOR LOCK ACTUATOR RH
D105
DOOR LOCK ACTUATOR
JCMWM2851GI

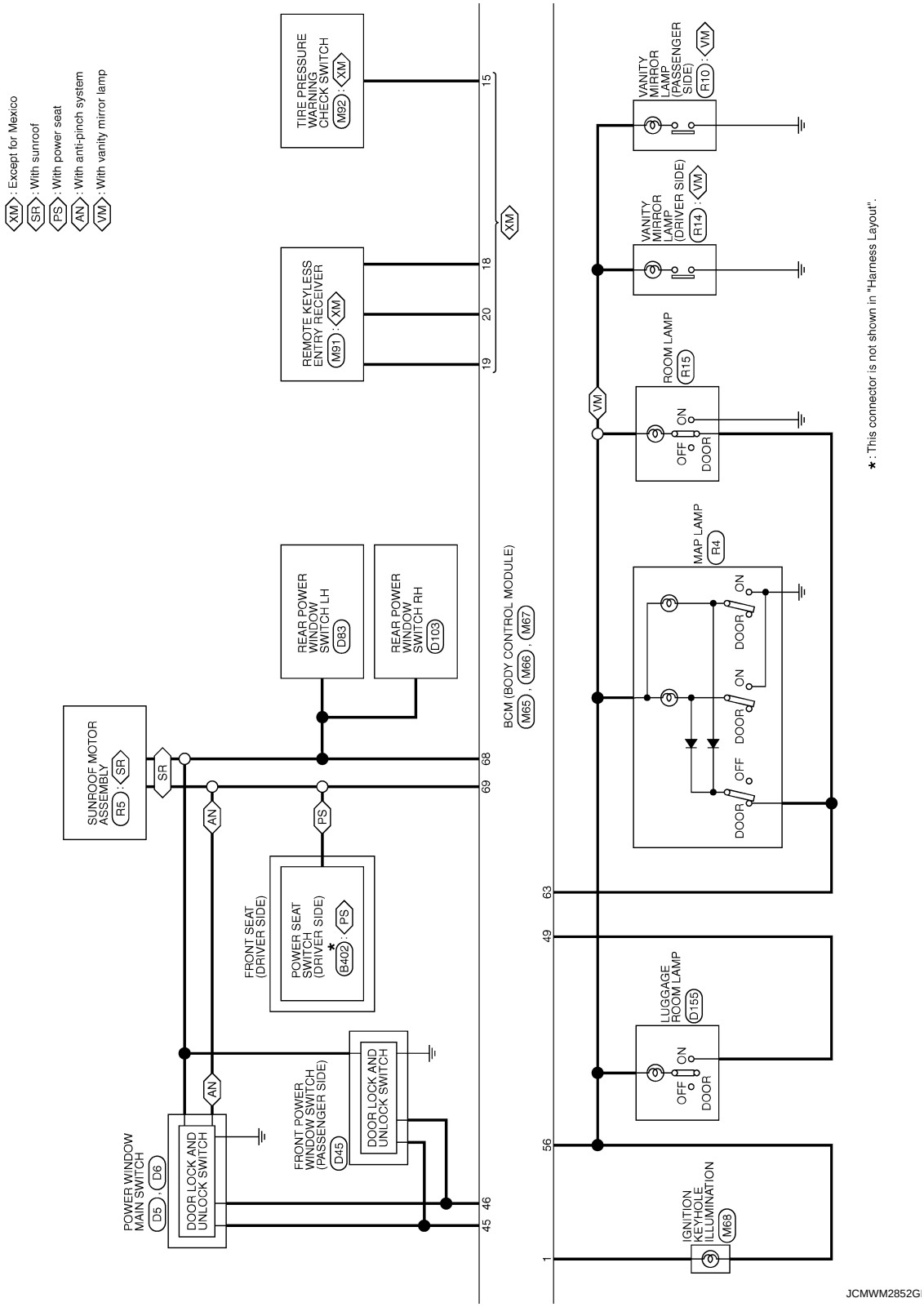

* : This connector is not shown in "Harness Layout".

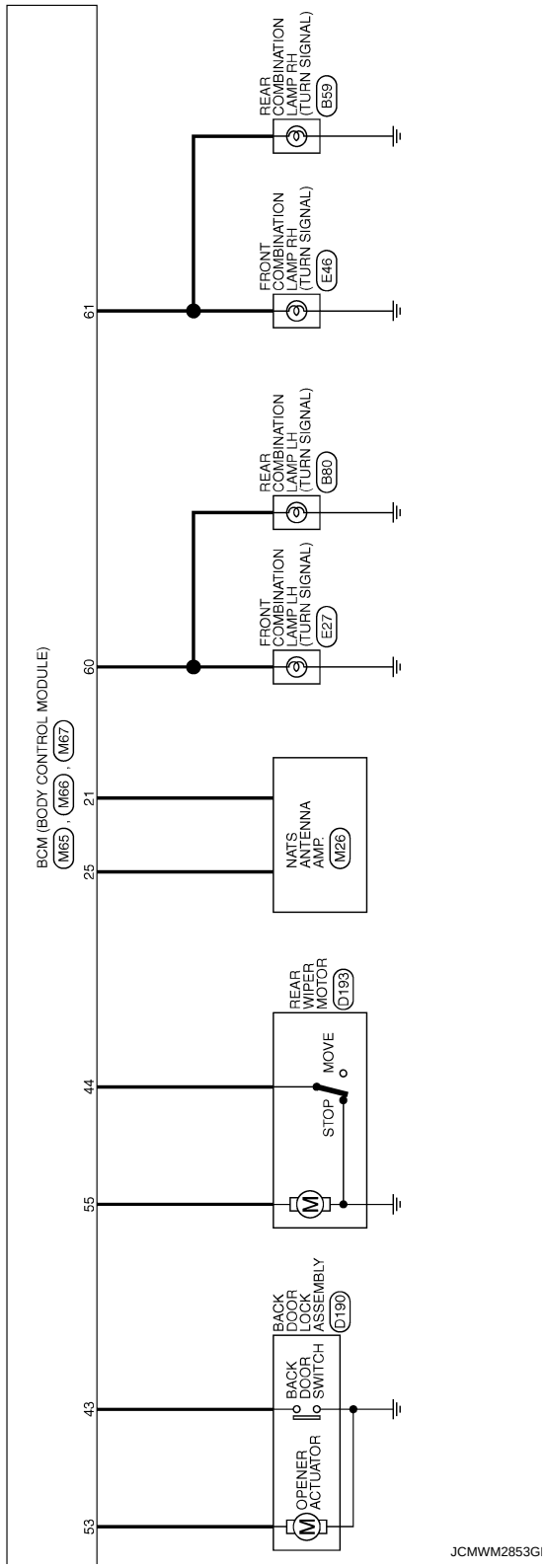
BCM (BODY CONTROL MODULE)
M65 , M66 , M67
53
43
55
44
25
21
60
61
OPENER ACTUATOR
BACK DOOR SWITCH
BACK DOOR LOCK ASSEMBLY
D190
STOP
MOVE
REAR WIPER MOTOR
D193
NATS ANTENNA AMP
M26
FRONT COMBINATION LAMP LH (TURN SIGNAL)
E27
REAR COMBINATION LAMP LH (TURN SIGNAL)
B80
FRONT COMBINATION LAMP RH (TURN SIGNAL)
E46
REAR COMBINATION LAMP RH (TURN SIGNAL)
B59
JCMWM2853GI

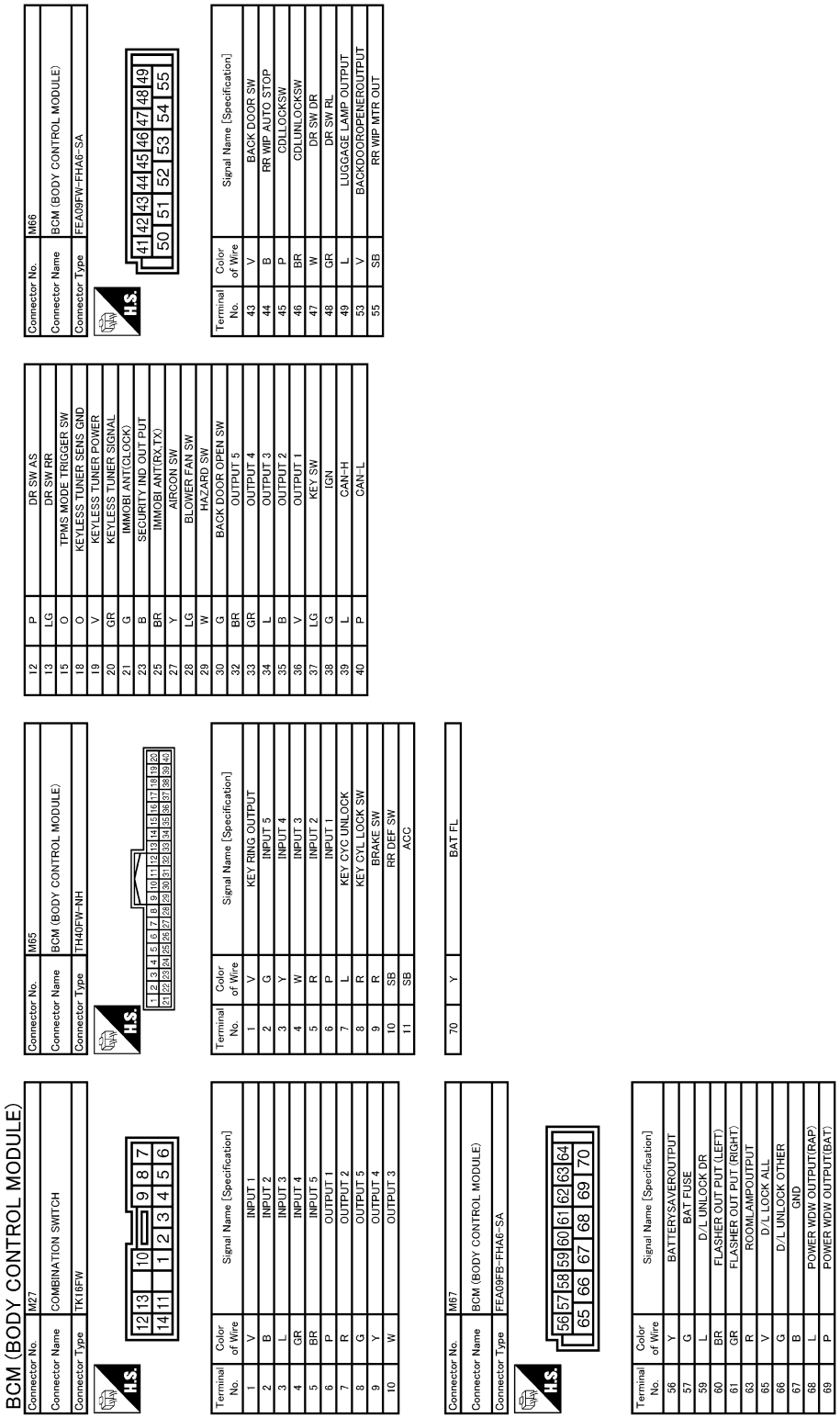

JCMWM2854G

Fail-safe

INFOID:0000000004539455

REAR WIPER MOTOR PROTECTION

BCM detects the rear wiper stopping position according to the rear wiper stop position signal.
When the rear wiper stop position signal does not change more than 5 seconds while driving the rear wiper, BCM stops power supply to protect the rear wiper motor.

Condition of cancellation

1. Pass more than 1 minute after the rear wiper stop.
2. Turn the rear wiper switch OFF.
3. Operate the rear wiper switch or rear washer switch.

HIGH FLASHER OPERATION

BCM detects the turn signal lamp circuit status by the current value.
BCM increases the turn signal lamp blinking speed if the bulb or harness open is detected with the turn signal lamp operating.

NOTE:
The blinking speed is normal while activating the hazard warning lamp.

DTC Inspection Priority Chart

INFOID:0000000004539456

If some DTCs are displayed at the same time, perform inspections one by one based on the following priority chart.

Priority	DTC
1	U1000: CAN COMM CIRCUIT
2	C1735: IGN CIRCUIT OPEN
3	• C1704: LOW PRESSURE FL • C1705: LOW PRESSURE FR • C1706: LOW PRESSURE RR • C1707: LOW PRESSURE RL • C1708: [NO DATA] FL • C1709: [NO DATA] FR • C1710: [NO DATA] RR • C1711: [NO DATA] RL • C1712: [CHECKSUM ERR] FL • C1713: [CHECKSUM ERR] FR • C1714: [CHECKSUM ERR] RR • C1715: [CHECKSUM ERR] RL • C1716: [PRESS DATA ERR] FL • C1717: [PRESS DATA ERR] FR • C1718: [PRESS DATA ERR] RR • C1719: [PRESS DATA ERR] RL • C1720: [CODE ERR] FL • C1721: [CODE ERR] FR • C1722: [CODE ERR] RR • C1723: [CODE ERR] RL • C1724: [BATT VOLT LOW] FL • C1725: [BATT VOLT LOW] FR • C1726: [BATT VOLT LOW] RR • C1727: [BATT VOLT LOW] RL • C1729: VHCL SPEED SIG ERR

DTC Index

INFOID:0000000004539457

NOTE:
Details of time display
- CRNT: Displays when there is a malfunction now or after returning to the normal condition until turning ignition switch OFF → ON again.
- 1 - 39: Displayed if any previous malfunction is present when current condition is normal. It increases like 1 → 2 → 3...38 → 39 after returning to the normal condition whenever ignition switch OFF → ON. The counter remains at 39 even if the number of cycles exceeds it. It is counted from 1 again when turning ignition switch OFF → ON after returning to the normal condition if the malfunction is detected again.

CONSULT display	Tire pressure monitor warning lamp ON	Reference
U1000: CAN COMM CIRCUIT	—	BCS-35

CONSULT display	Tire pressure monitor warning lamp ON	Reference
C1704: LOW PRESSURE FL	×	WT-15
C1705: LOW PRESSURE FR	×	
C1706: LOW PRESSURE RR	×	
C1707: LOW PRESSURE RL	×	
C1708: [NO DATA] FL	×	WT-17
C1709: [NO DATA] FR	×	
C1710: [NO DATA] RR	×	
C1711: [NO DATA] RL	×	
C1712: [CHECKSUM ERR] FL	×	WT-20
C1713: [CHECKSUM ERR] FR	×	
C1714: [CHECKSUM ERR] RR	×	
C1715: [CHECKSUM ERR] RL	×	
C1716: [PRESS DATA ERR] FL	×	WT-23
C1717: [PRESS DATA ERR] FR	×	
C1718: [PRESS DATA ERR] RR	×	
C1719: [PRESS DATA ERR] RL	×	
C1720: [CODE ERR] FL	×	WT-25
C1721: [CODE ERR] FR	×	
C1722: [CODE ERR] RR	×	
C1723: [CODE ERR] RL	×	
C1724: [BATT VOLT LOW] FL	—	WT-28
C1725: [BATT VOLT LOW] FR	—	
C1726: [BATT VOLT LOW] RR	—	
C1727: [BATT VOLT LOW] RL	—	
C1729: VHCL SPEED SIG ERR	×	WT-31
C1735: IGN CIRCUIT OPEN	—	BCS-36

SYMPTOM DIAGNOSIS

INTERIOR LIGHTING SYSTEM SYMPTOMS

Symptom Table

INFOID:0000000004232636

CAUTION:
Perform the self-diagnosis with CONSULT-III before the symptom diagnosis. Perform the trouble diagnosis if any DTC is detected.

Symptom	Possible cause	Inspection item
All the following lamps do not turn ON. • Map lamp • Room lamp • Ignition keyhole illumination • Vanity mirror lamp • Luggage room lamp	• Harness between BCM and each interior room lamp • BCM	Interior room lamp power supply circuit Refer to INL-19.
• Interior room lamp does not turn ON even though the door is open. (It turns ON when turning the interior room lamp ON.) • Interior room lamp does not turn OFF even though the door is closed.	• Harness between BCM and each door switch • Harness between BCM and each interior room lamp • BCM	Each door switch circuit Refer to DLK-299.
		Interior room lamp control circuit Refer to INL-21.
Interior room lamp timer does not activate. (It turns ON/ OFF when the door opens/closes.)	—	Check the interior room lamp setting. Refer to INL-15.
• Luggage room lamp does not turn ON. (The bulb is normal.) • Luggage room lamp does not turn OFF.	• Harness between BCM and back door switch • Harness between BCM and luggage room lamp • BCM	Back door switch circuit Refer to DLK-299
		Luggage room lamp circuit Refer to INL-25
Ignition keyhole illumination does not illuminate.	• Harness between BCM and ignition keyhole illumination • BCM	Ignition keyhole illumination circuit Refer to INL-23
Interior room lamp battery saver does not activate.	—	Check the interior room lamp battery saver setting. Refer to INL-16.

PRECAUTION

PRECAUTIONS

FOR USA AND CANADA

FOR USA AND CANADA : Precaution for Supplemental Restraint System (SRS) "AIR BAG" and "SEAT BELT PRE-TENSIONER"

INFOID:0000000004539462

The Supplemental Restraint System such as “AIR BAG” and “SEAT BELT PRE-TENSIONER”, used along with a front seat belt, helps to reduce the risk or severity of injury to the driver and front passenger for certain types of collision. This system includes seat belt switch inputs and dual stage front air bag modules. The SRS system uses the seat belt switches to determine the front air bag deployment, and may only deploy one front air bag, depending on the severity of a collision and whether the front occupants are belted or unbelted.
Information necessary to service the system safely is included in the “SRS AIRBAG” and “SEAT BELT” of this Service Manual.

WARNING:

- **To avoid rendering the SRS inoperative, which could increase the risk of personal injury or death in the event of a collision which would result in air bag inflation, all maintenance must be performed by an authorized NISSAN/INFINITI dealer.**
- **Improper maintenance, including incorrect removal and installation of the SRS, can lead to personal injury caused by unintentional activation of the system. For removal of Spiral Cable and Air Bag Module, see the “SRS AIRBAG”.**
- **Never use electrical test equipment on any circuit related to the SRS unless instructed to in this Service Manual. SRS wiring harnesses can be identified by yellow and/or orange harnesses or harness connectors.**

FOR MEXICO

FOR MEXICO : Precaution for Supplemental Restraint System (SRS) "AIR BAG" and "SEAT BELT PRE-TENSIONER"

INFOID:0000000004539464

The Supplemental Restraint System such as “AIR BAG” and “SEAT BELT PRE-TENSIONER”, used along with a front seat belt, helps to reduce the risk or severity of injury to the driver and front passenger for certain types of collision. Information necessary to service the system safely is included in the “SRS AIRBAG” and “SEAT BELT” of this Service Manual.

WARNING:

- **To avoid rendering the SRS inoperative, which could increase the risk of personal injury or death in the event of a collision which would result in air bag inflation, all maintenance must be performed by an authorized NISSAN/INFINITI dealer.**
- **Improper maintenance, including incorrect removal and installation of the SRS, can lead to personal injury caused by unintentional activation of the system. For removal of Spiral Cable and Air Bag Module, see the “SRS AIRBAG”.**
- **Do not use electrical test equipment on any circuit related to the SRS unless instructed to in this Service Manual. SRS wiring harnesses can be identified by yellow and/or orange harnesses or harness connectors.**

ON-VEHICLE REPAIR

MAP LAMP

Exploded View

INFOID:0000000004232639

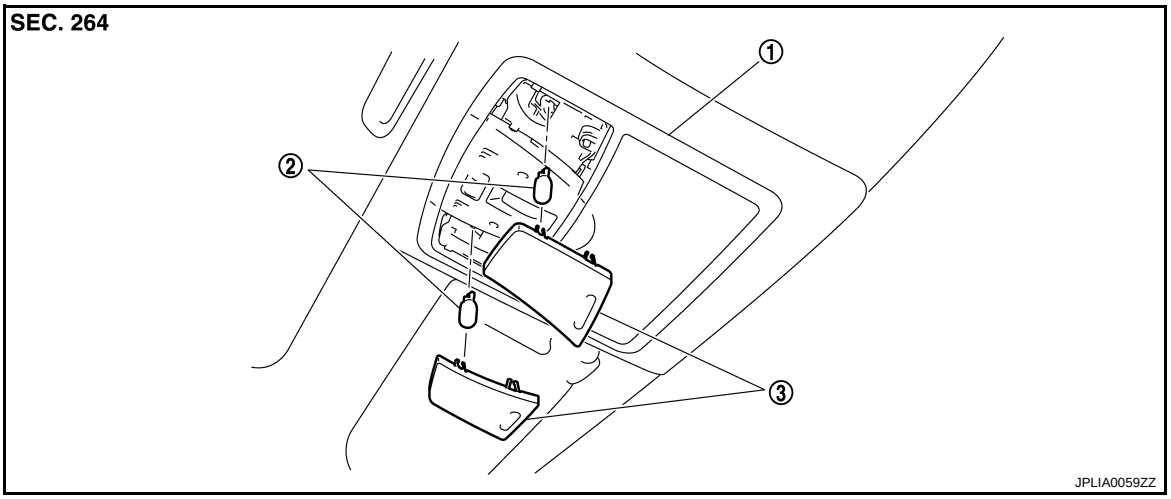

1. Map lamp assembly
2. Bulb
3. Lens

Removal and Installation

INFOID:0000000004232640

Normal roof

Refer to INT-23, "NORMAL ROOF : Exploded View" for the map lamp assembly installation/removal.

Sun roof

Refer to INT-26, "SUNROOF : Exploded View" for the map lamp assembly installation/removal.

Replacement

INFOID:0000000004232641

CAUTION:

Disconnect the battery negative terminal or the fuse.

MAP LAMP BULB

1. Insert any appropriate tool into the gap between the lens. Remove the lens.
2. Remove the bulb.

VANITY MIRROR LAMP

Exploded View

INFOID:0000000004232642

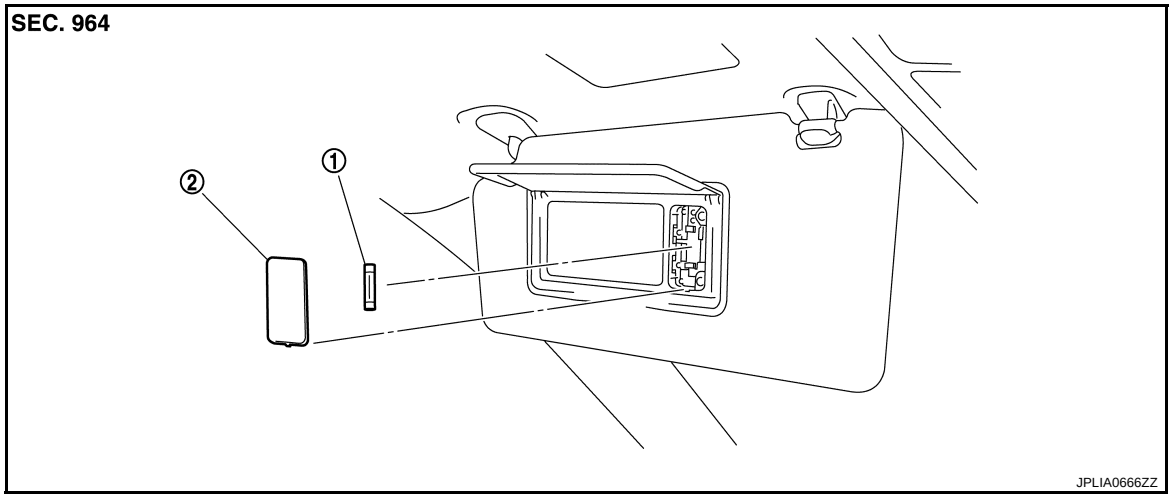

1. Bulb
2. Lens

Replacement

INFOID:0000000004232643

CAUTION:
Disconnect the battery negative terminal or the fuse.

VANITY MIRROR LAMP BULB

1. Insert any appropriate tool into the gap between the lens. Remove the lens.
2. Remove the bulb.

GLOVE BOX LAMP

Exploded View

INFOID:0000000004232644

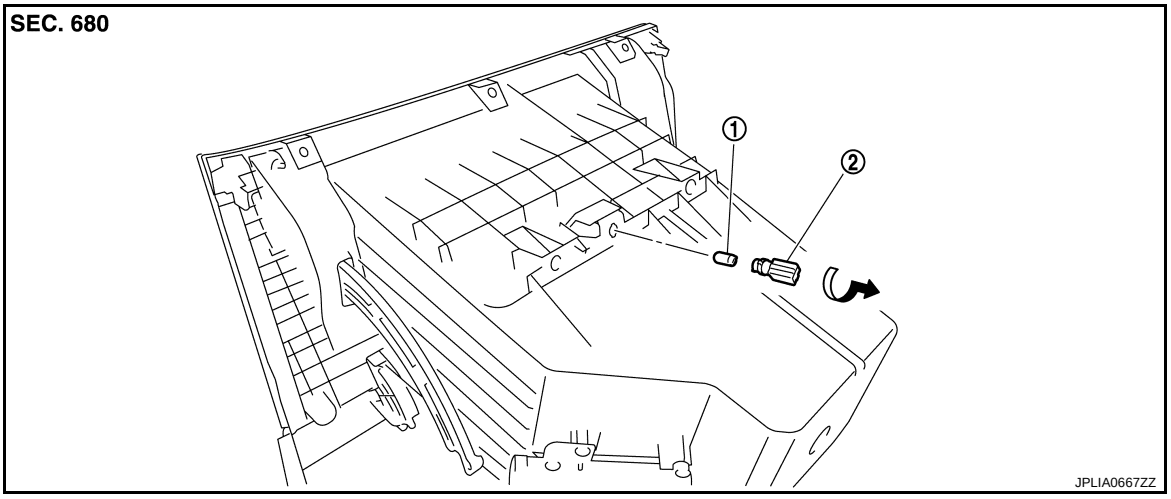

1. Bulb
2. Bulb socket

Replacement

INFOID:0000000004232645

CAUTION:
Disconnect the battery negative terminal or the fuse.

GLOVE BOX LAMP BULB

1. Remove the glove box assembly. Refer to IP-12, "Exploded View".
2. Rotate the bulb socket counterclockwise and unlock it.
3. Remove the bulb.

ROOM LAMP

Exploded View

INFOID:0000000004232646

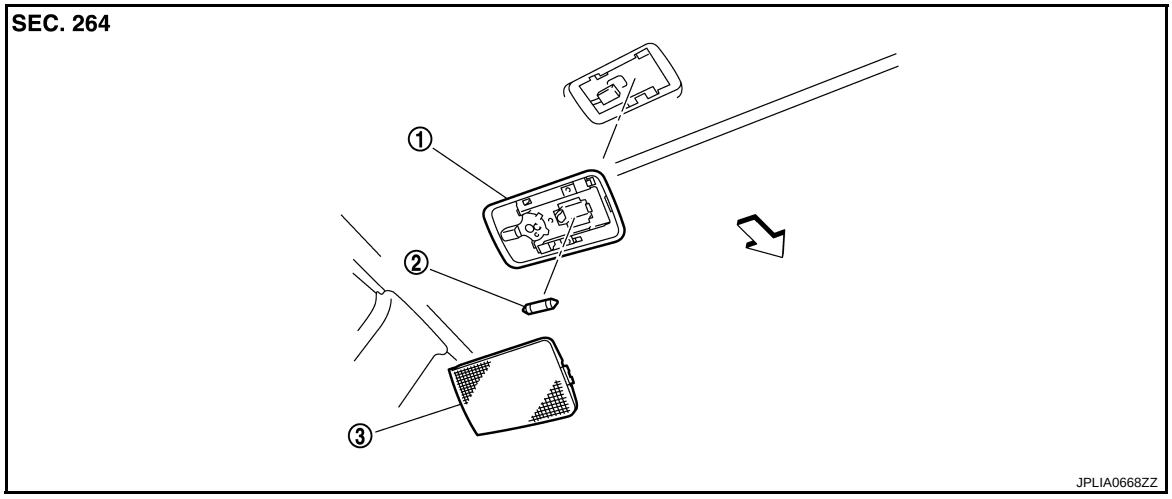

1. Room lamp bulb housing
2. Bulb
3. Lens

⇦ : Vehicle front

Removal and Installation

INFOID:0000000004232647

CAUTION:
Disconnect the battery negative terminal or the fuse.

REMOVAL

1. Insert any appropriate tool into the gap between the lens. And then remove the lens.
2. Insert any appropriate tool into the gap between the room lamp bulb housing and headlining. And then remove the room lamp bulb housing.
3. Disconnect the connector.

INSTALLATION

Install in the reverse order of removal.

Replacement

INFOID:0000000004232648

CAUTION:
Disconnect the battery negative terminal or the fuse.

ROOM LAMP BULB

1. Insert any appropriate tool into the gap between the lens. And then remove the lens.
2. Remove the bulb.

IGNITION KEYHOLE ILLUMINATION

Exploded View

INFOID:0000000004232649

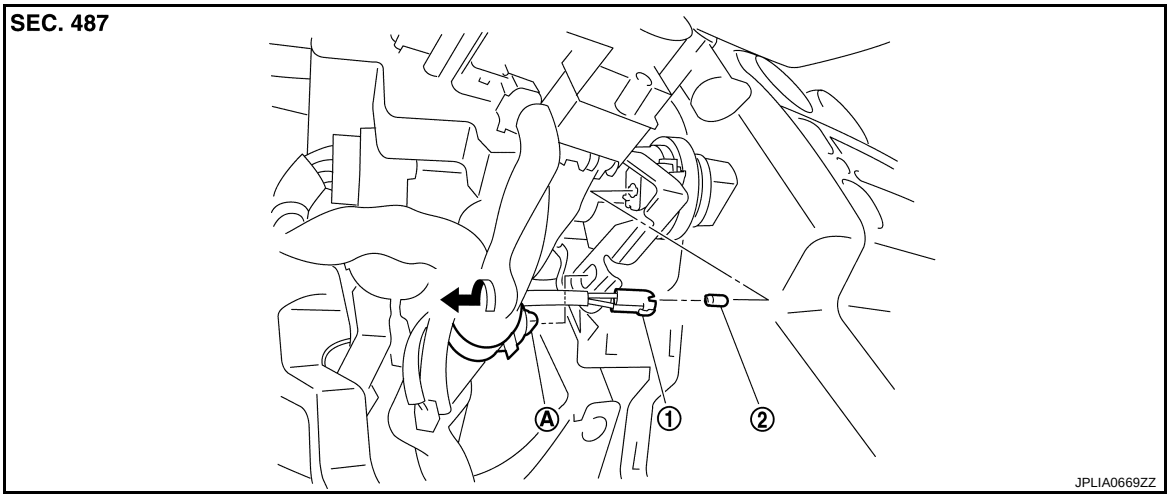

1. Bulb socket
2. Bulb

A. Harness clip

Replacement

INFOID:0000000004232650

CAUTION:
Disconnect the battery negative terminal or the fuse.

IGNITION KEYHOLE ILLUMINATION BULB

1. Remove steering column cover. Refer to IP-12, "Exploded View".
2. Remove the harness clip.
3. Rotate the bulb socket counterclockwise and unlock it.
4. Remove the bulb.

LUGGAGE ROOM LAMP

Exploded View

INFOID:0000000004232651

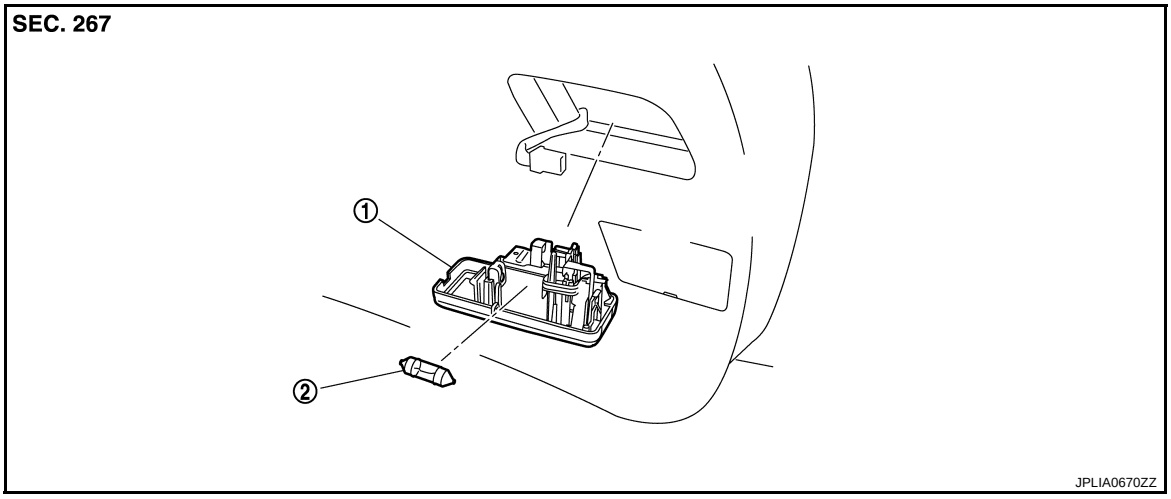

1. Luggage room lamp assembly
2. Bulb

Removal and Installation

INFOID:0000000004232652

CAUTION:
Disconnect the battery negative terminal or the fuse.

REMOVAL

1. Insert any appropriate tool into the gap between the luggage room lamp assembly and back door trim finisher lower. Remove the luggage room lamp assembly.
2. Disconnect the connector.

INSTALLATION

Install in the reverse order of removal.

Replacement

INFOID:0000000004232653

CAUTION:
Disconnect the battery negative terminal or the fuse.

LUGGAGE ROOM LAMP BULB

1. Remove the luggage room lamp assembly.
2. Remove the bulb.

SERVICE DATA AND SPECIFICATIONS (SDS)

SERVICE DATA AND SPECIFICATIONS (SDS)

Bulb Specifications

INFOID:0000000004232654

Item	Type	Wattage (W)
Map lamp	Wedge	8
Room lamp	—	8
Ignition keyhole illumination	—	1.4
Vanity mirror lamp	—	2
Grove box lamp	—	1.4
Luggage room lamp	—	8