SECTION PG

POWER SUPPLY, GROUND & CIRCUIT ELEMENTS

CONTENTS

POWER SUPPLY ROUTING CIRCUIT

PFP:24110

Schematic

AKS007VU

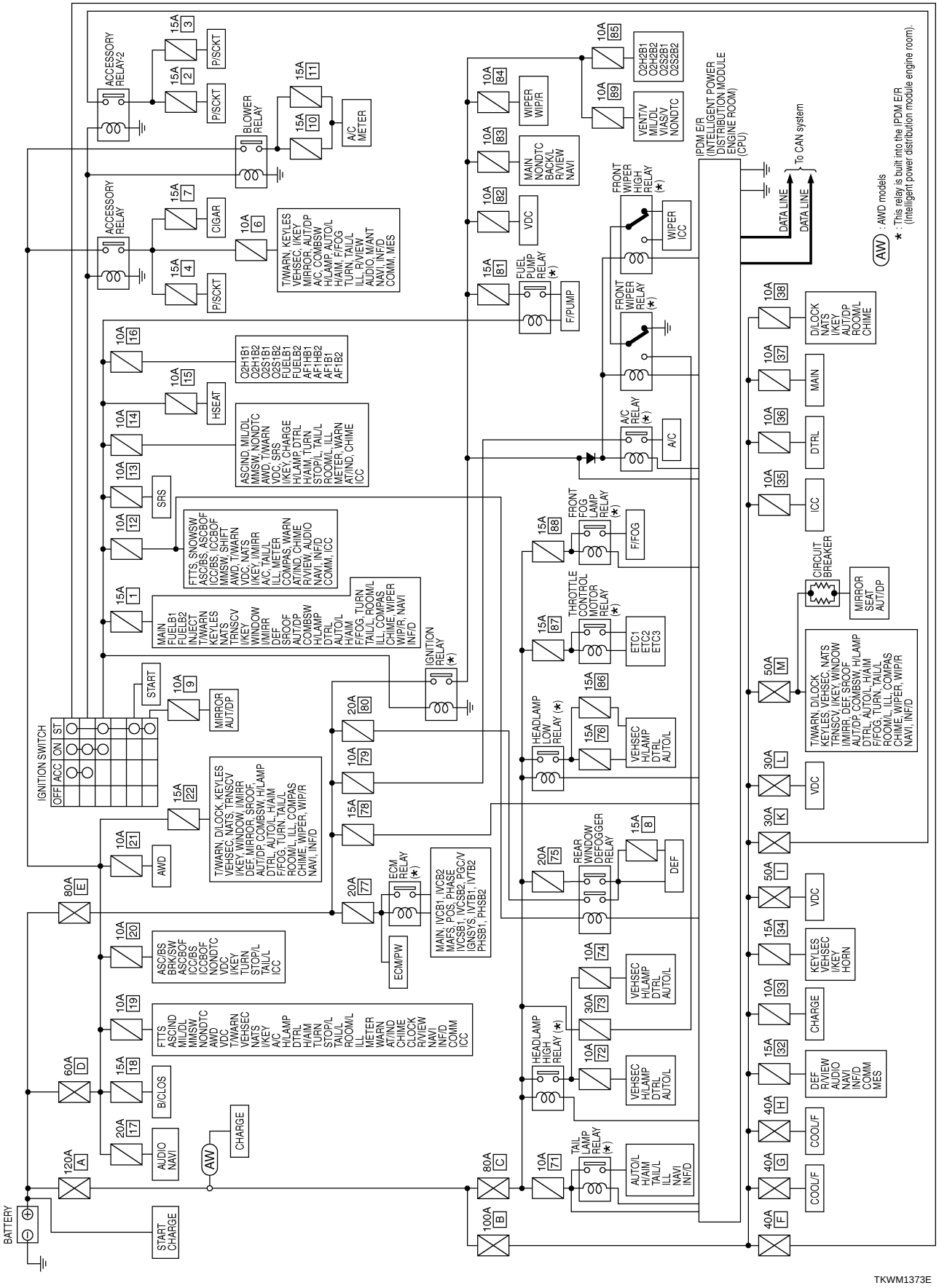

Wiring Diagram - POWER -

AKS007VV

BATTERY POWER SUPPLY - IGNITION SW. IN ANY POSITION

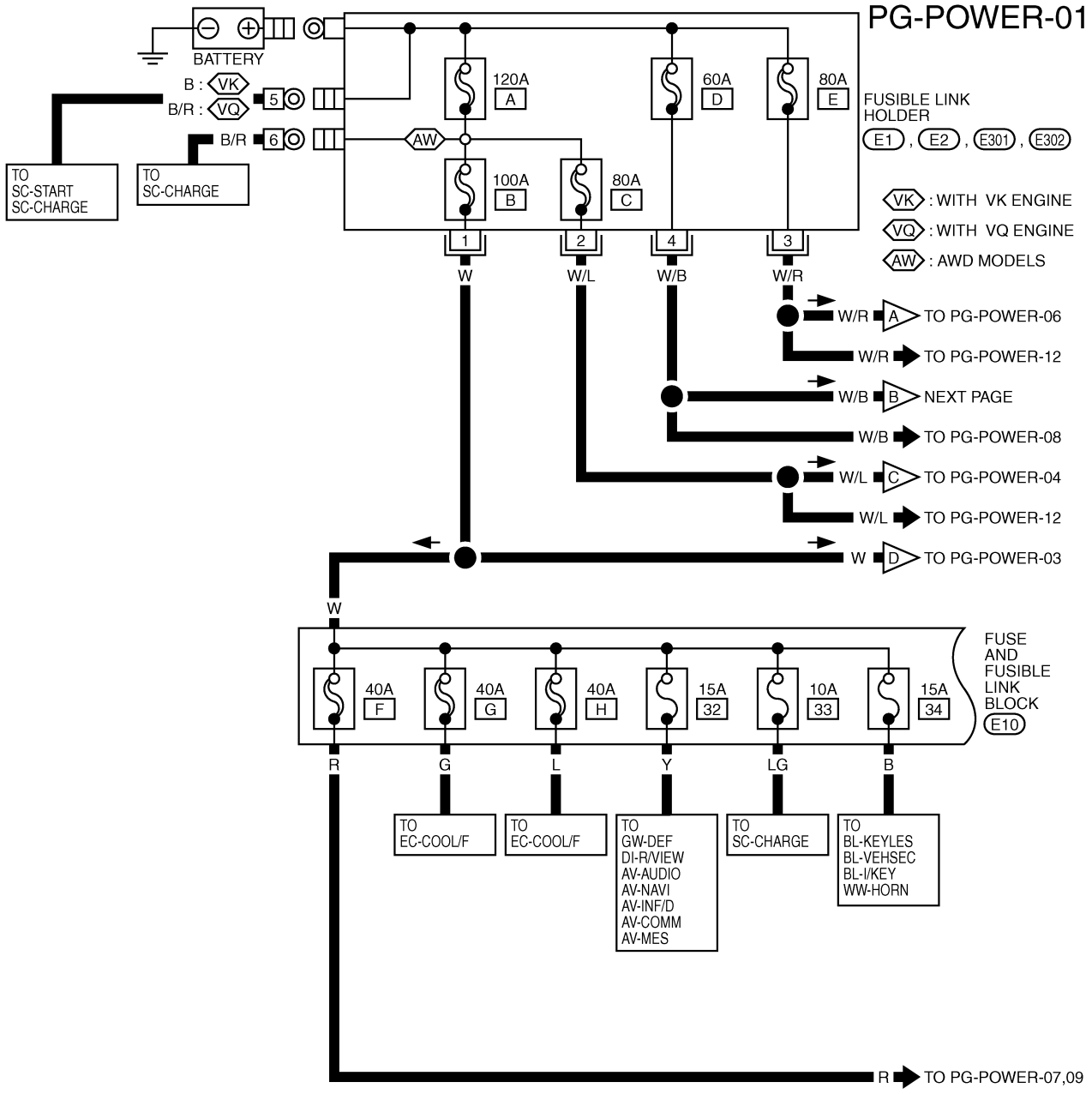

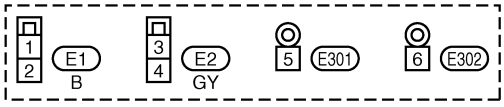

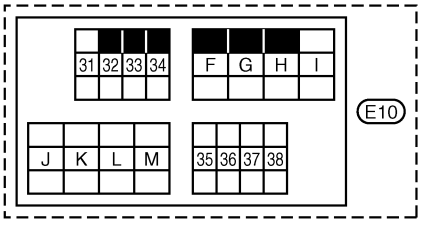

TKWM0708E

PG-POWER-02

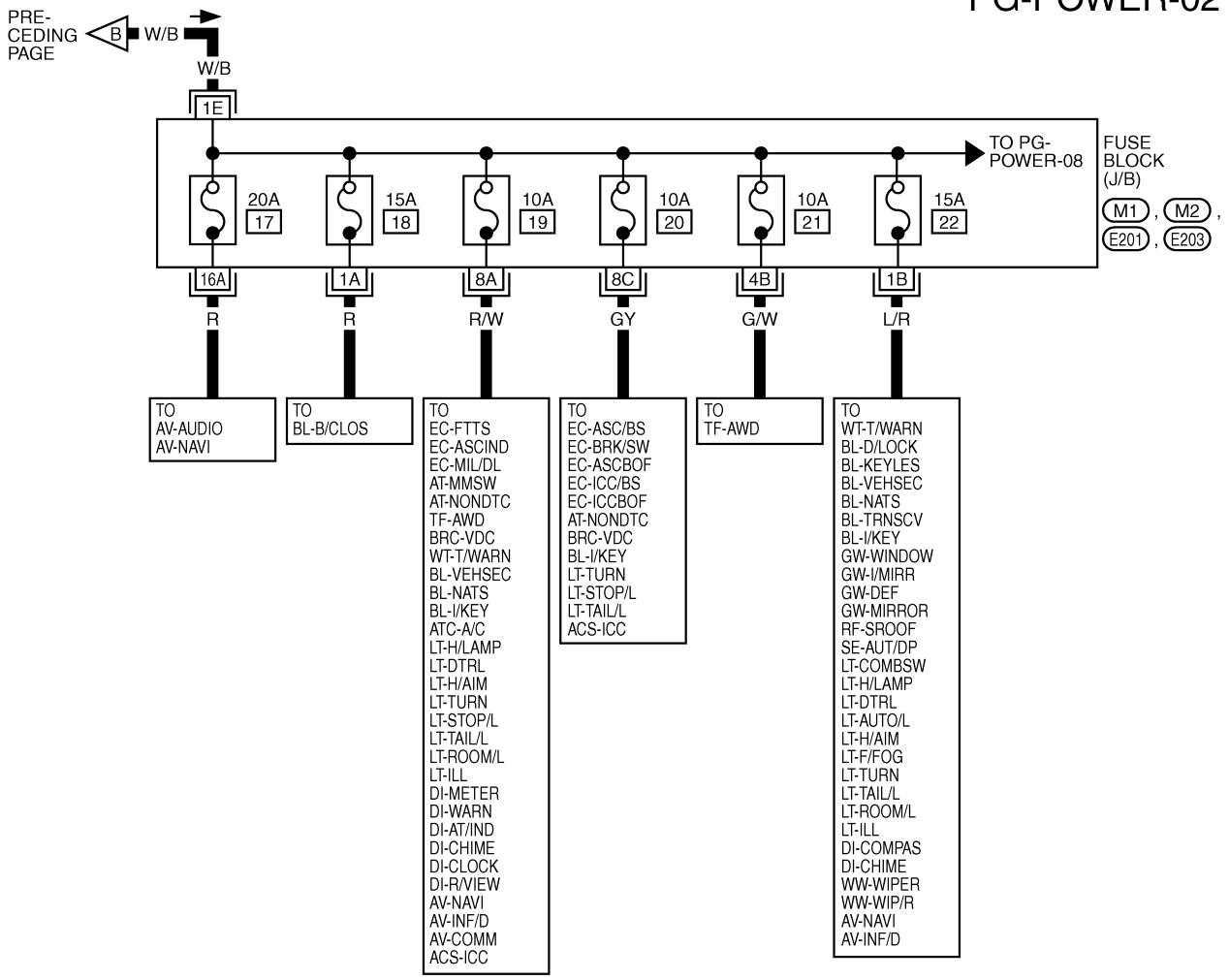

REFER TO THE FOLLOWING.

M1, M2, E201, E203
-FUSE BLOCK-JUNCTION BOX (J/B)

1	2	3	4	5	6	7		8	9	10	11
12	13	14	15	16	17	18	19	20	21	22	

TKWM1306E

PG-POWER-03

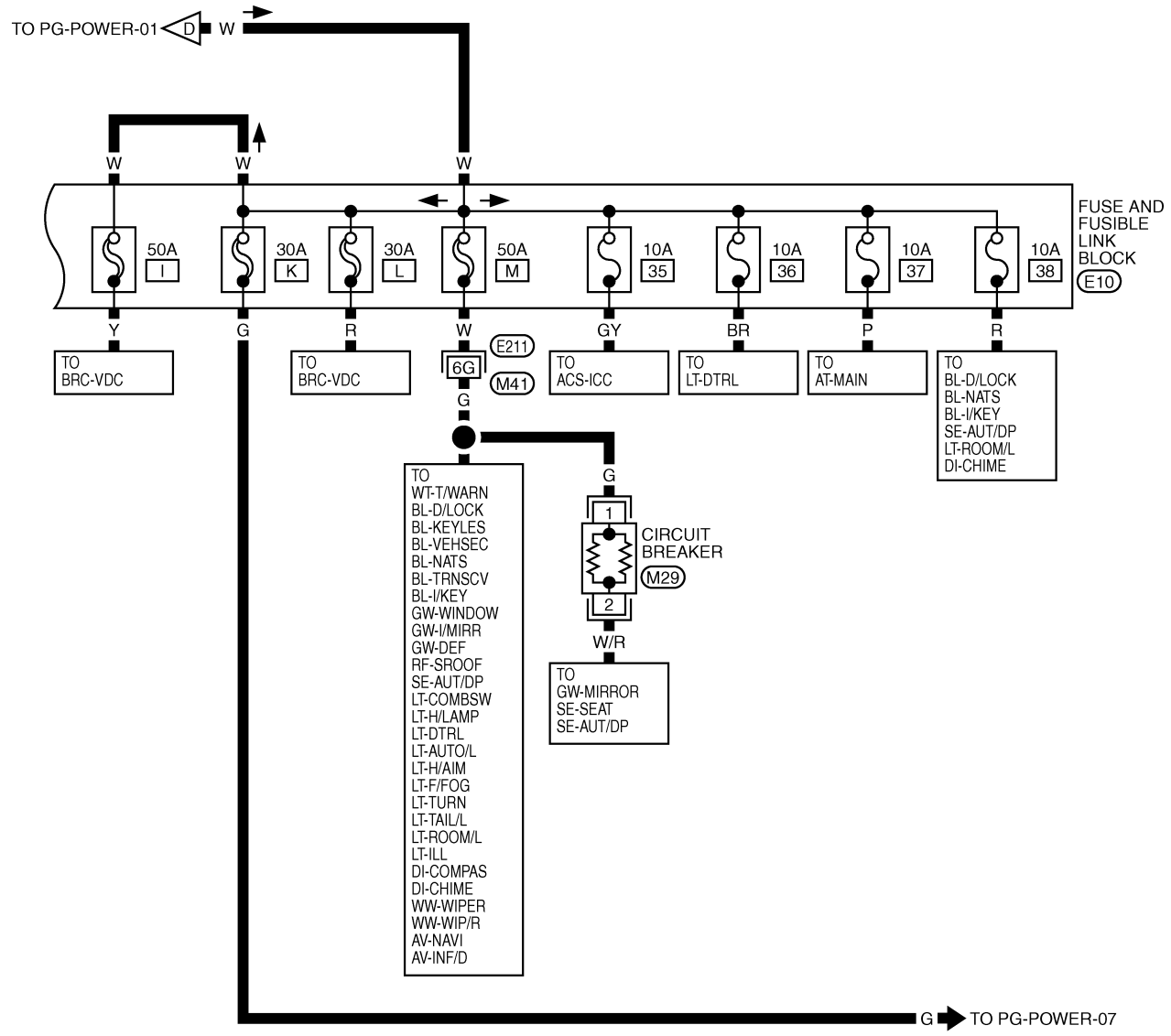

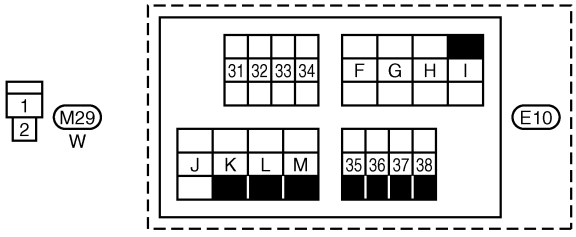

REFER TO THE FOLLOWING.
E211 -SUPER MULTIPLE JUNCTION (SMJ)

TKWB0264E

PG-POWER-04

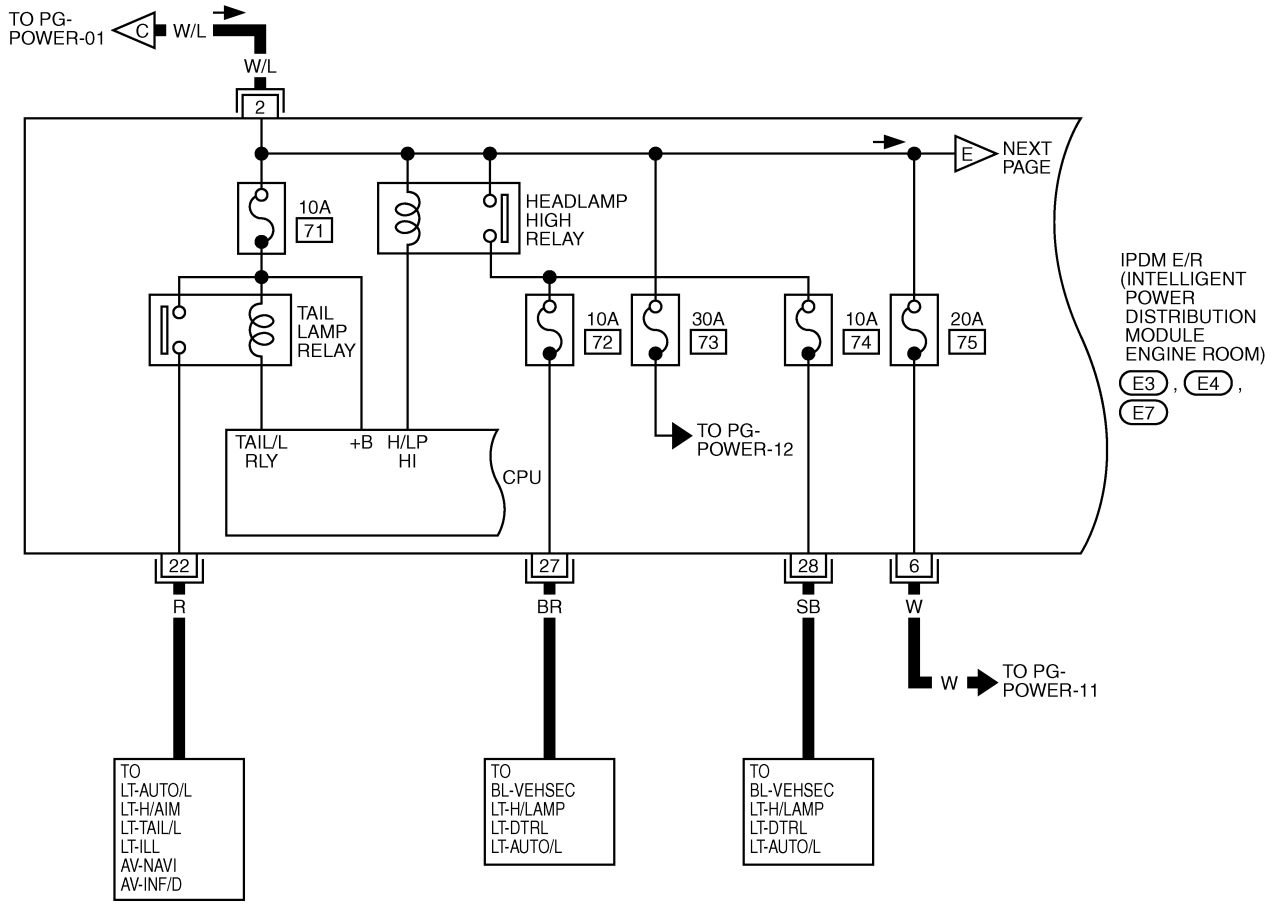

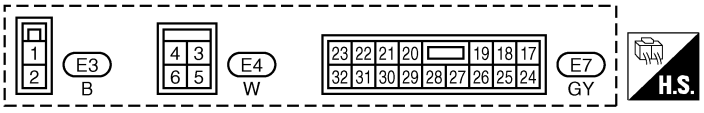

TKWM0711E

PG-POWER-05

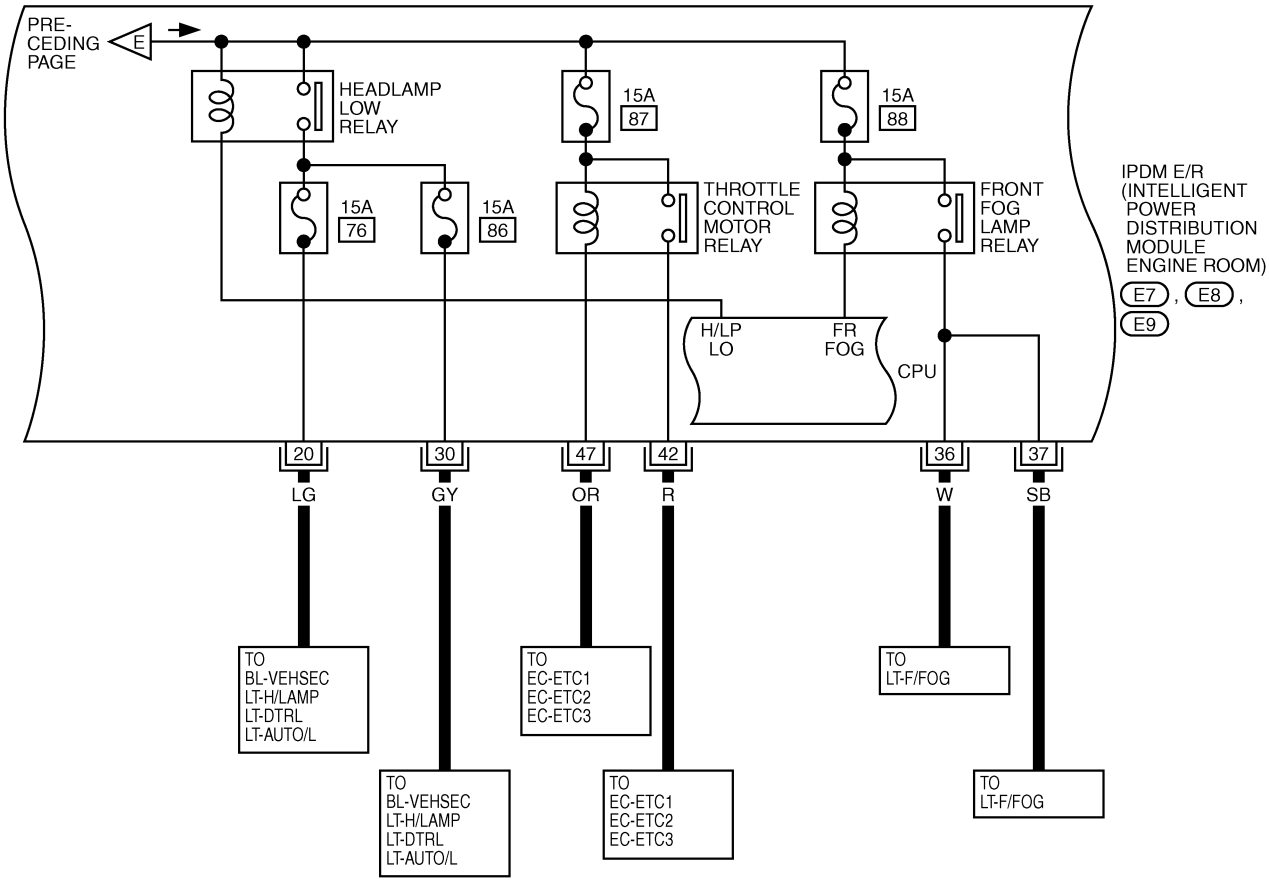

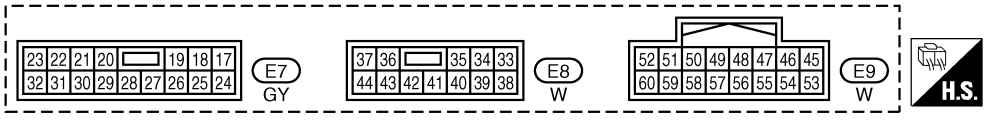

TKWM0712E

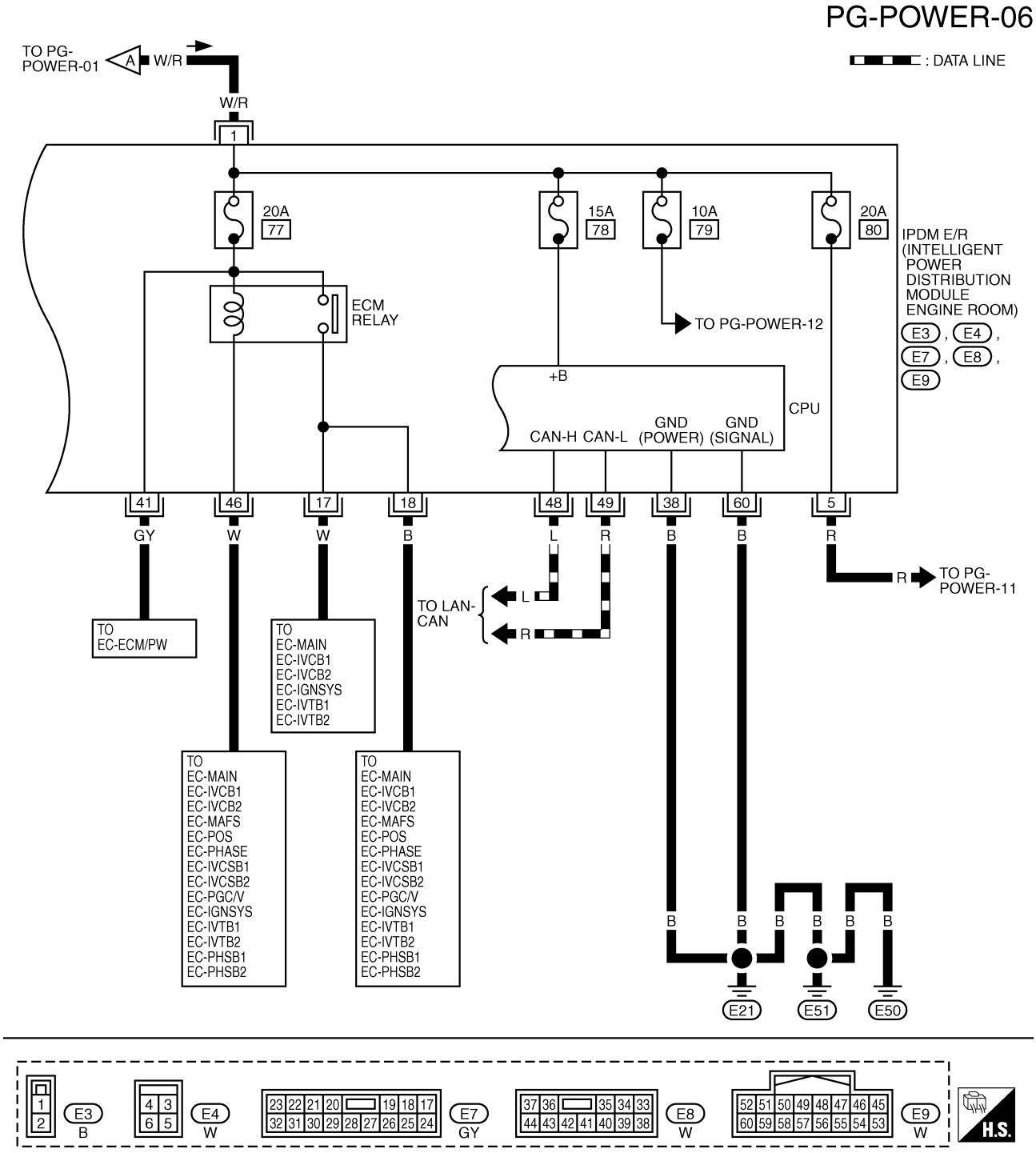
PG-POWER-06
TO PG-POWER-01
A
W/R
: DATA LINE
W/R
1
20A
77
15A
78
10A
79
20A
80
IPDM E/R
(INTELLIGENT POWER DISTRIBUTION MODULE ENGINE ROOM)
E3, E4, E7, E8, E9
ECM RELAY
TO PG-POWER-12
+B
CPU
CAN-H CAN-L
GND (POWER)
GND (SIGNAL)
41
46
17
18
48
49
38
60
5
GY
W
W
B
L
R
B
B
R
R
TO PG-POWER-11
TO LAN-CAN
L
R
TO EC-ECM/PW
TO EC-MAIN EC-IVCB1 EC-IVCB2 EC-IGNSYS EC-IVTB1 EC-IVTB2
TO EC-MAIN EC-IVCB1 EC-IVCB2 EC-MAFS EC-POS EC-PHASE EC-IVCSB1 EC-IVCSB2 EC-PGC/V EC-IGNSYS EC-IVTB1 EC-IVTB2 EC-PHSB1 EC-PHSB2
TO EC-MAIN EC-IVCB1 EC-IVCB2 EC-MAFS EC-POS EC-PHASE EC-IVCSB1 EC-IVCSB2 EC-PGC/V EC-IGNSYS EC-IVTB1 EC-IVTB2 EC-PHSB1 EC-PHSB2
B B B B B B
E21
E51
E50
E3 B
E4 W
E7 GY
E8 W
E9 W
H.S.

TKWM0713E

ACCESSORY POWER SUPPLY - IGNITION SW. IN “ACC” OR “ON”

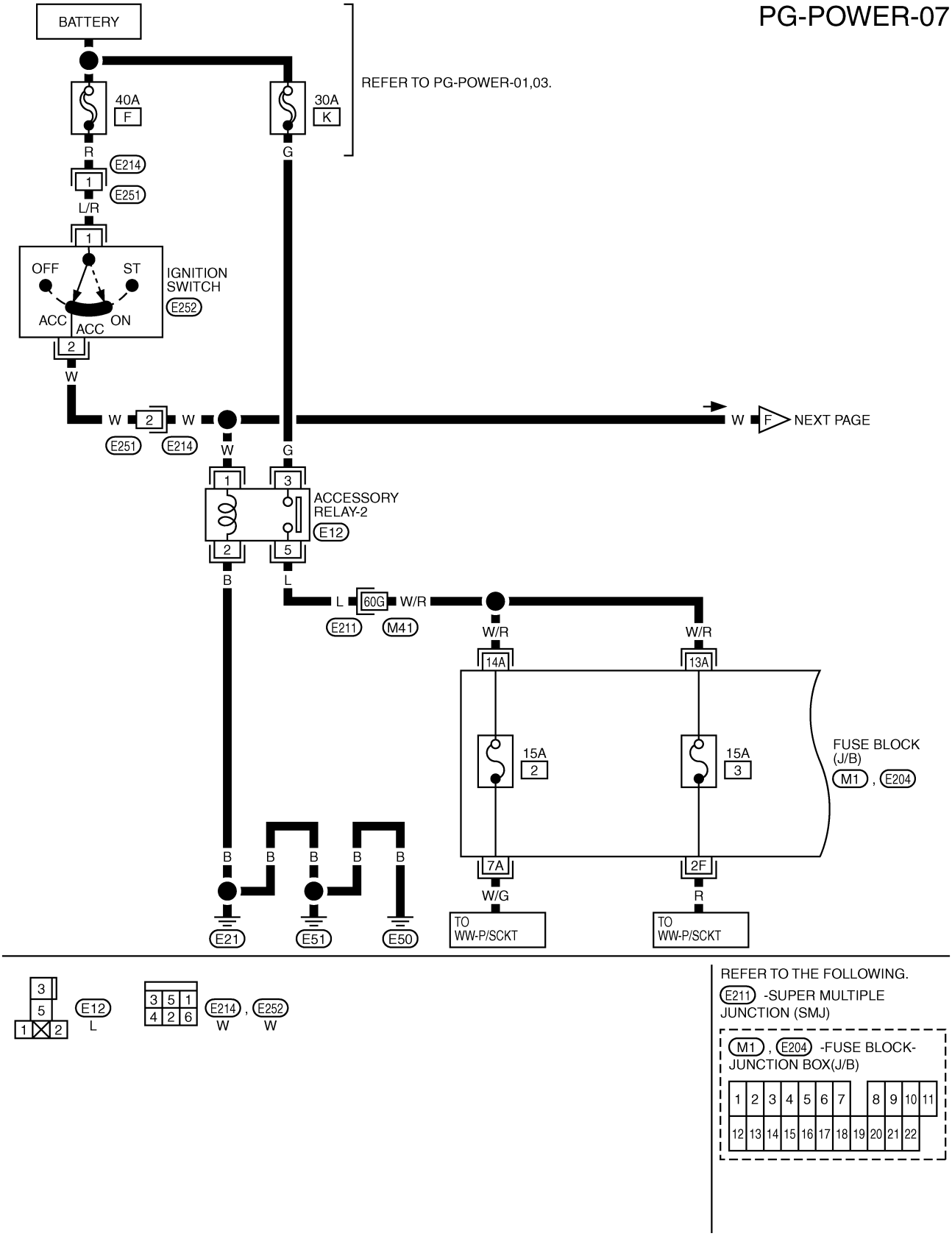

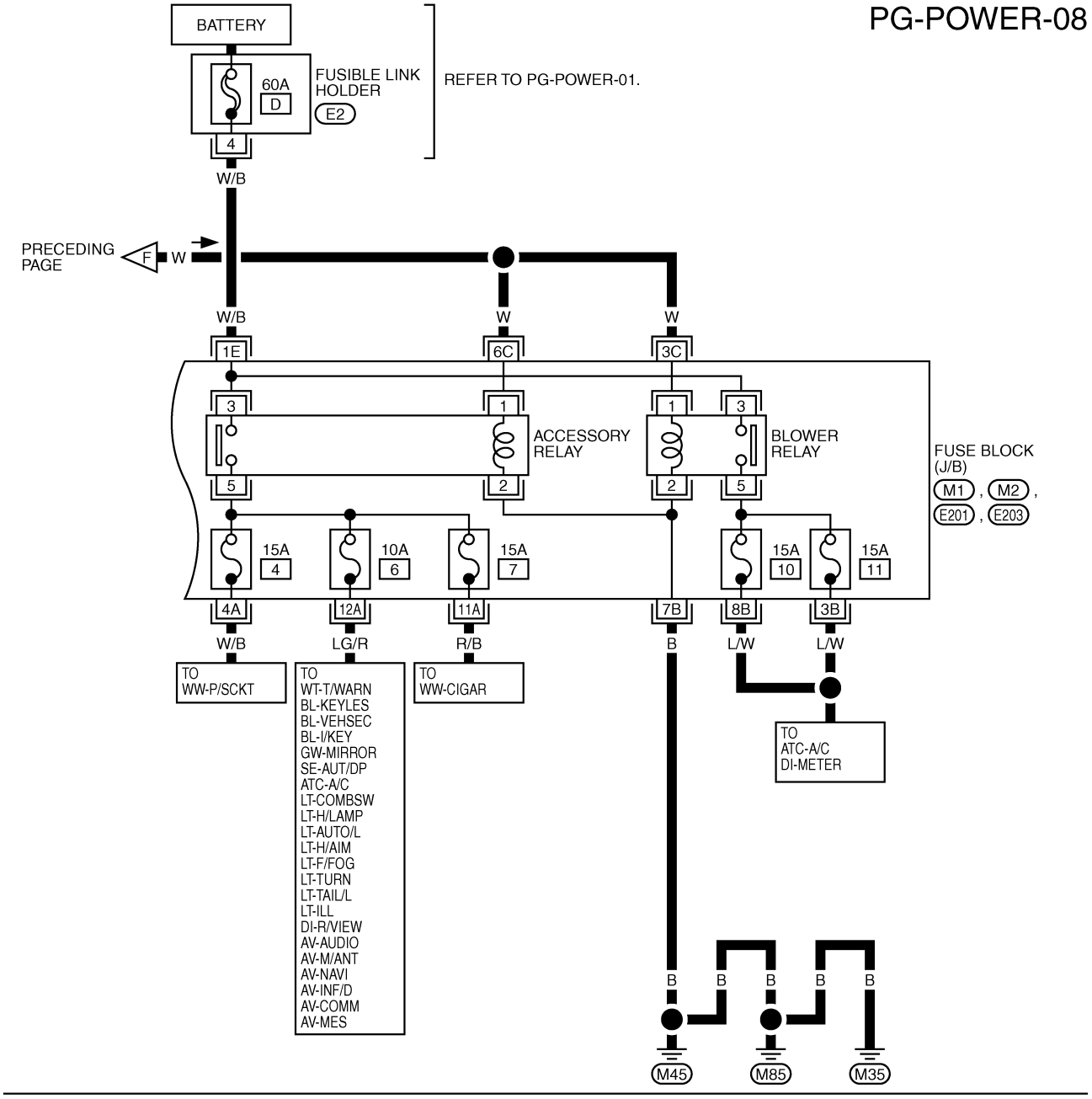
PG-POWER-08
BATTERY
60A
D
FUSIBLE LINK HOLDER
E2
REFER TO PG-POWER-01.
4
W/B
PRECEDING PAGE
F
W
W/B
W
W
1E
6C
3C
3
1
1
3
ACCESSORY RELAY
BLOWER RELAY
5
2
2
5
FUSE BLOCK (J/B)
M1 , M2 ,
E201 , E203
15A
4
10A
6
15A
7
15A
10
15A
11
4A
12A
11A
7B
8B
3B
W/B
LG/R
R/B
B
L/W
L/W
TO WW-P/SCKT
TO WT-T/WARN BL-KEYLES BL-VEHSEC BL-I/KEY GW-MIRROR SE-AUT/DP ATC-A/C LT-COMBSW LT-H/LAMP LT-AUTO/L LT-H/AIM LT-F/FOG LT-TURN LT-TAIL/L LT-ILL DI-R/VIEW AV-AUDIO AV-M/ANT AV-NAVI AV-INF/D AV-COMM AV-MES
TO WW-CIGAR
TO ATC-A/C DI-METER
B
B
B
B
B
M45
M85
M35
3
4
E2
GY
REFER TO THE FOLLOWING.
M1 , M2 , E201 , E203
-FUSE BLOCK-JUNCTION BOX (J/B)
1 2 3 4 5 6 7 8 9 10 11
12 13 14 15 16 17 18 19 20 21 22
TKWM0715E

IGNITION POWER SUPPLY - IGNITION SW. IN “ON” AND/OR “START”

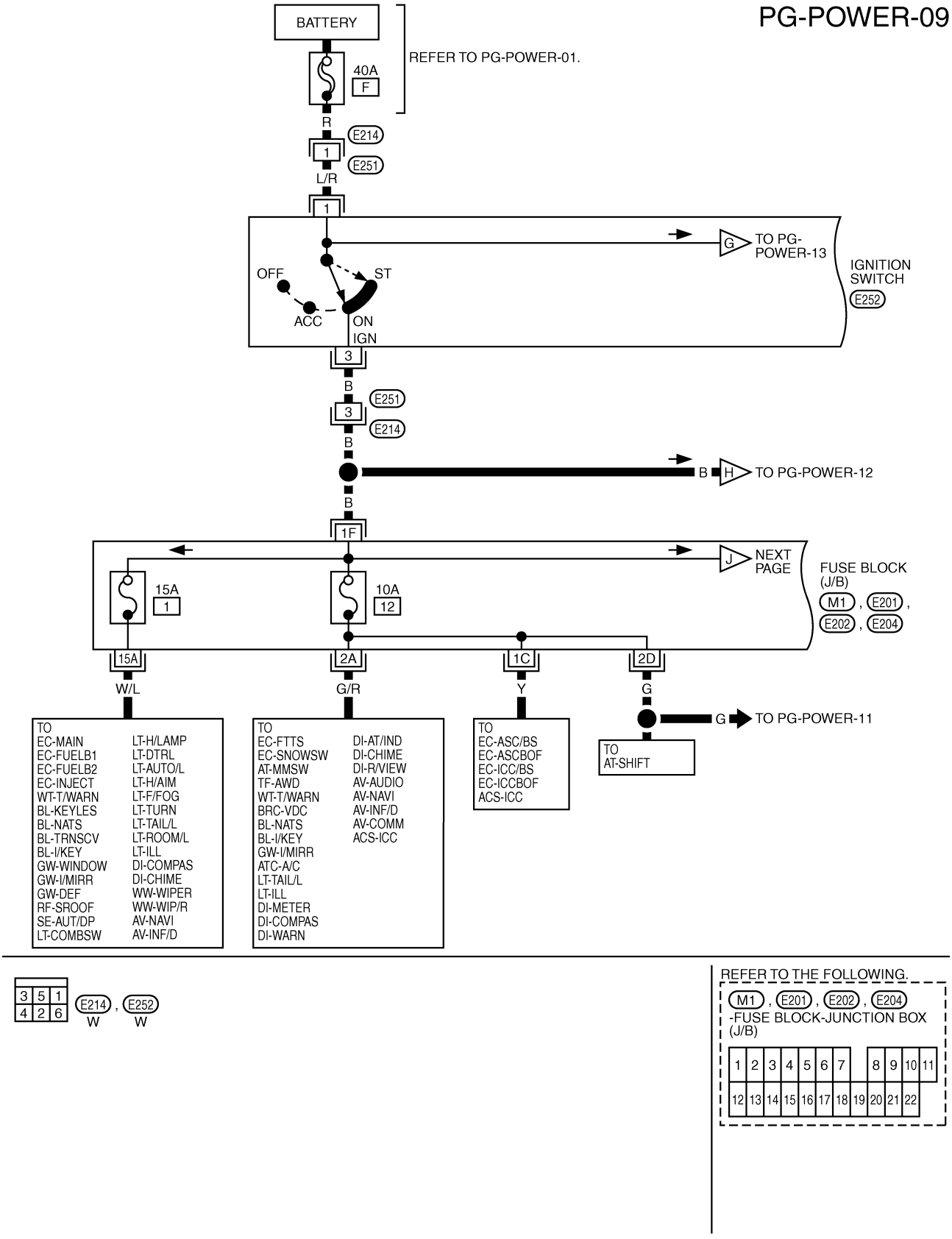

PG-POWER-10

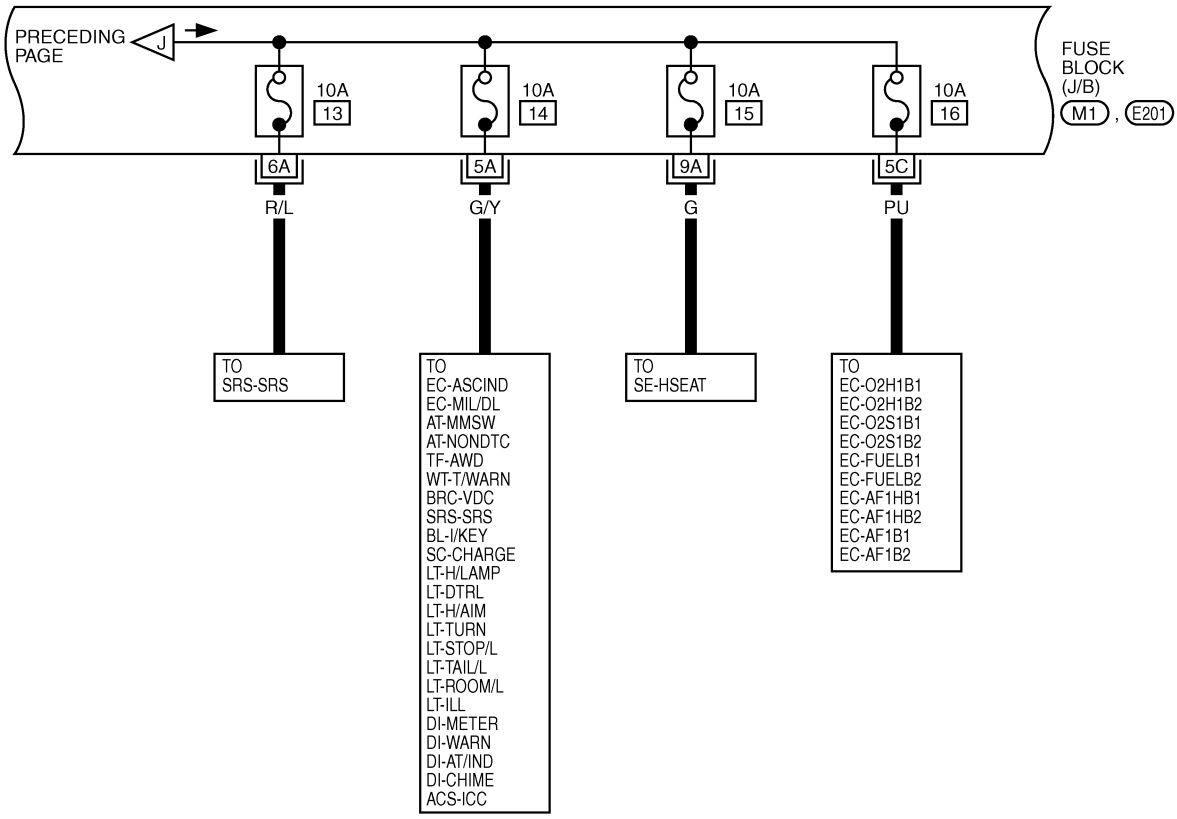

REFER TO THE FOLLOWING.

M1 , E201 -FUSE BLOCK-JUNCTION BOX (J/B)

1	2	3	4	5	6	7		8	9	10	11
12	13	14	15	16	17	18	19	20	21	22	

TKWM1374E

PG-POWER-11

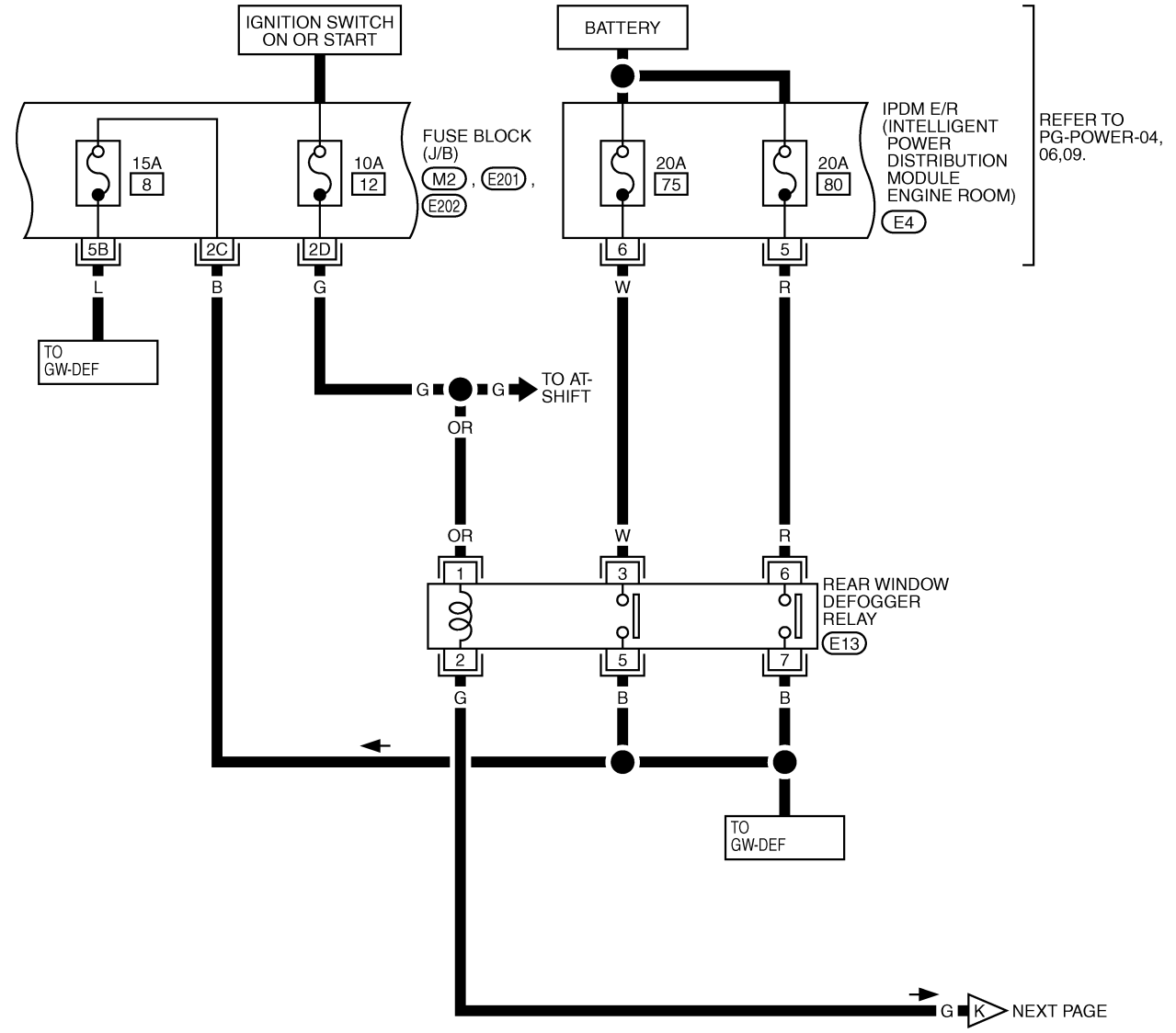

REFER TO THE FOLLOWING.

M2 , E201 , E202 -FUSE BLOCK-JUNCTION BOX (J/B)

1	2	3	4	5	6	7	8	9	10	11
12	13	14	15	16	17	18	19	20	21	22

TKWM1096E

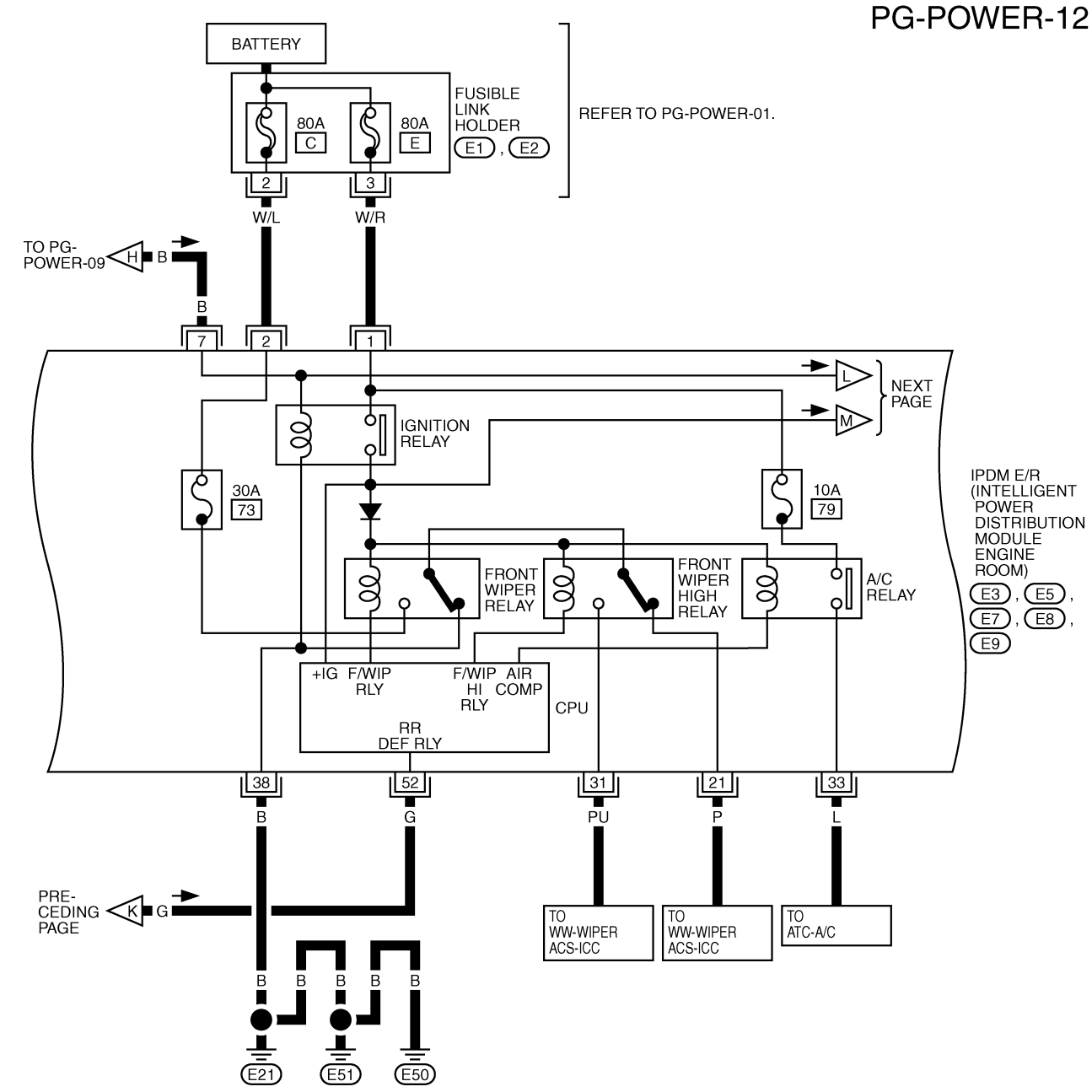
PG-POWER-12
BATTERY
FUSIBLE LINK HOLDER
E1 , E2
80A C
80A E
REFER TO PG-POWER-01.
2
3
W/L
W/R
TO PG-POWER-09
H
B
7
2
1
L
M
NEXT PAGE
IGNITION RELAY
30A 73
10A 79
IPDM E/R (INTELLIGENT POWER DISTRIBUTION MODULE ENGINE ROOM)
E3 , E5 , E7 , E8 , E9
FRONT WIPER RELAY
FRONT WIPER HIGH RELAY
A/C RELAY
+IG F/WIP RLY
F/WIP HI RLY
AIR COMP
CPU
RR DEF RLY
38
52
31
21
33
B
G
PU
P
L
PRE-CEDING PAGE
K
G
TO WW-WIPER ACS-ICC
TO WW-WIPER ACS-ICC
TO ATC-A/C
E21
E51
E50

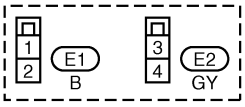
E1
B
E2
GY

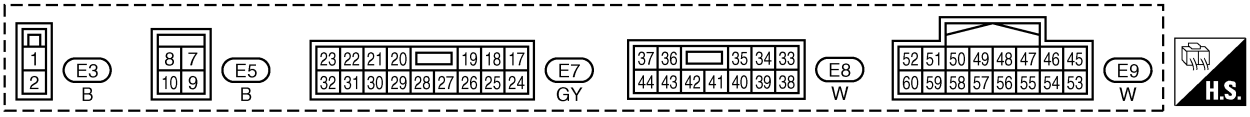
E3
B
E5
B
E7
GY
E8
W
E9
W
H.S.

TKWM0719E

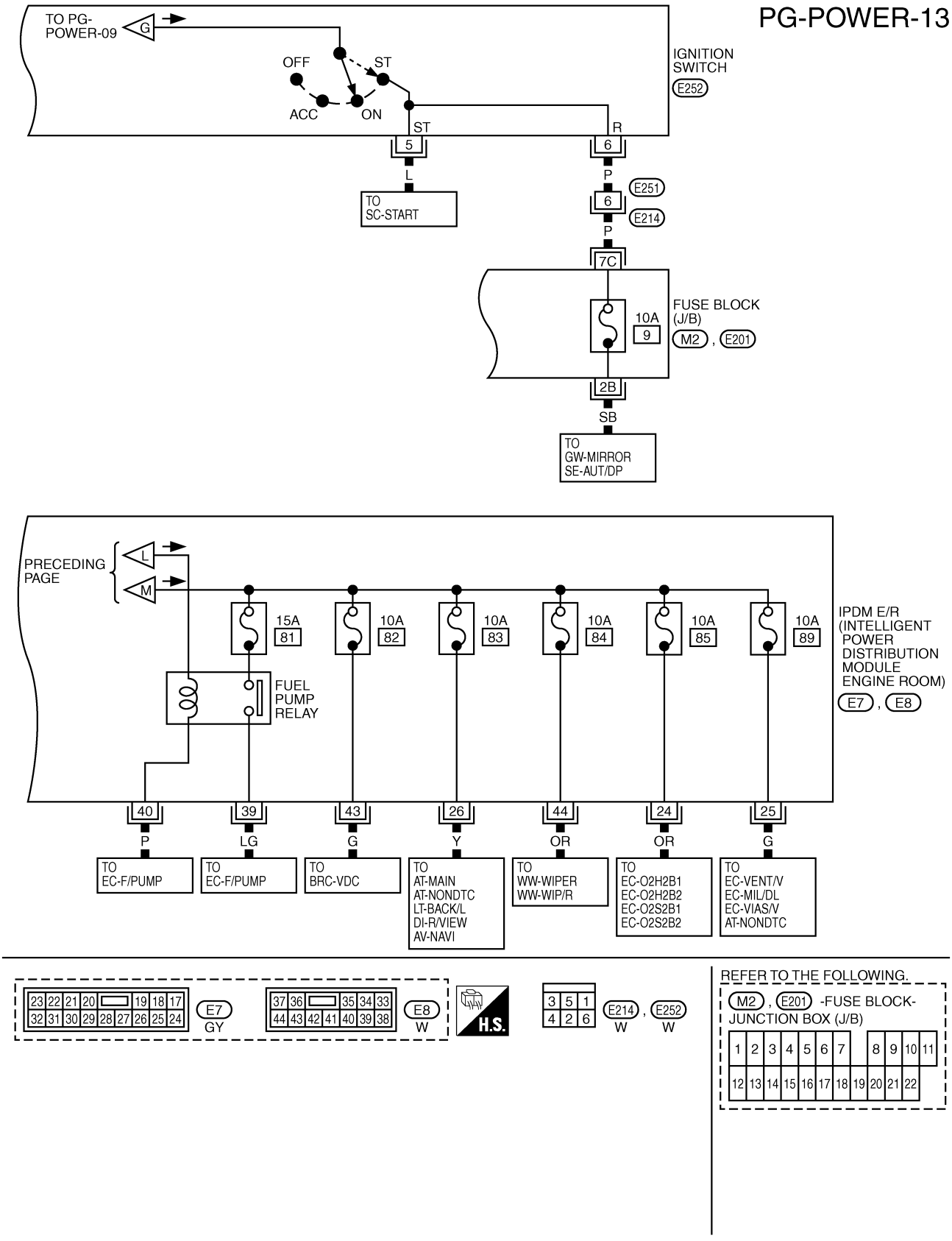
PG-POWER-13
TO PG-POWER-09
G
OFF
ST
ACC
ON
IGNITION SWITCH
E252
ST
R
5
6
L
P
TO SC-START
E251
6
E214
P
7C
FUSE BLOCK (J/B)
10A
9
M2 , E201
2B
SB
TO GW-MIRROR SE-AUT/DP
PRECEDING PAGE
L
M
15A
81
10A
82
10A
83
10A
84
10A
85
10A
89
IPDM E/R (INTELLIGENT POWER DISTRIBUTION MODULE ENGINE ROOM)
E7 , E8
FUEL PUMP RELAY
40
39
43
26
44
24
25
P
LG
G
Y
OR
OR
G
TO EC-F/PUMP
TO EC-F/PUMP
TO BRC-VDC
TO AT-MAIN AT-NONDTC LT-BACK/L DI-R/VIEW AV-NAVI
TO WW-WIPER WW-WIP/R
TO EC-O2H2B1 EC-O2H2B2 EC-O2S2B1 EC-O2S2B2
TO EC-VENT/V EC-MIL/DL EC-VIAS/V AT-NONDTC
23 22 21 20 19 18 17
32 31 30 29 28 27 26 25 24
E7
GY
37 36 35 34 33
44 43 42 41 40 39 38
E8
W
H.S.
3 5 1
4 2 6
E214 , E252
W W
REFER TO THE FOLLOWING.
M2 , E201 -FUSE BLOCK-JUNCTION BOX (J/B)
1 2 3 4 5 6 7 8 9 10 11
12 13 14 15 16 17 18 19 20 21 22
TKWB0265E

Fuse

AKS007VW

- If fuse is blown, be sure to eliminate cause of incident before installing new fuse.
- Use fuse of specified rating. Never use fuse of more than specified rating.
- Do not partially install fuse; always insert it into fuse holder properly.
- Remove fuse for “ELECTRICAL PARTS (BAT)” if vehicle is not used for a long period of time.

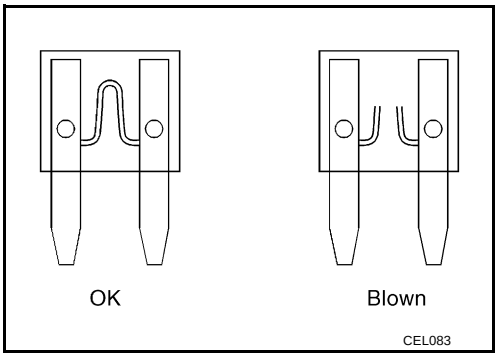

Fusible Link

AKS007VX

A melted fusible link can be detected either by visual inspection or by feeling with finger tip. If its condition is questionable, use circuit tester or test lamp.

CAUTION:

- **If fusible link should melt, it is possible that critical circuit (power supply or large current carrying circuit) is shorted. In such a case, carefully check and eliminate cause of incident.**
- **Never wrap outside of fusible link with vinyl tape. Important: Never let fusible link touch any other wiring harness, vinyl or rubber parts.**

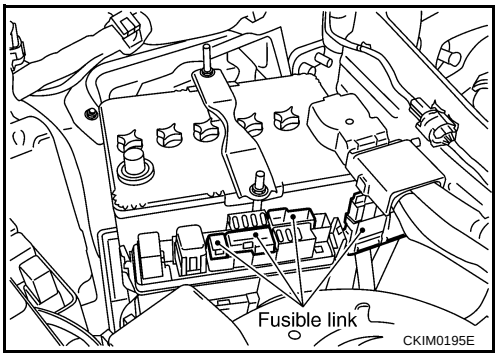

Circuit Breaker

AKS007VY

The PTC thermistor generates heat in response to current flow. The temperature (and resistance) of the thermistor element varies with current flow. Excessive current flow will cause the element's temperature to rise. When the temperature reaches a specified level, the electrical resistance will rise sharply to control the circuit current. Reduced current flow will cause the element to cool. Resistance falls accordingly and normal circuit current flow is allowed to resume.

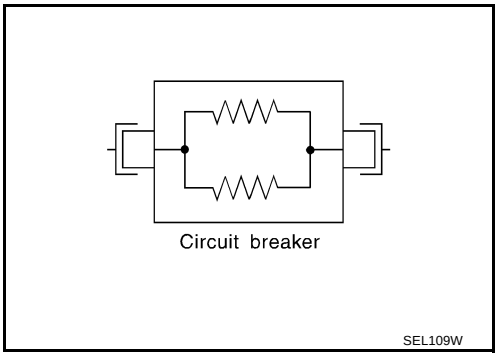

IPDM E/R (INTELLIGENT POWER DISTRIBUTION MODULE ENGINE ROOM)

PFP:284B7

System Description

AKS005S9

- IPDM E/R (Intelligent Power Distribution Module Engine Room) integrates the relay box and fuse block which were originally placed in engine room. It controls integrated relay via IPDM E/R control circuit.
- IPDM E/R-integrated control circuit performs ON-OFF operation of relay, CAN communication control, oil pressure switch signal, hood switch signal reception, etc.
- It controls operation of each electrical part via ECM, BCM and CAN communication lines.

CAUTION:
None of the IPDM E/R-integrated relays can be removed.

SYSTEMS CONTROLLED BY IPDM E/R

1. Lamp control
   Using CAN communication line, it receives signal from BCM and controls the following lamps:
   - Headlamps (Hi, Lo)
   - Parking lamps
   - Tail lamps
   - Front fog lamps
2. Wiper control
   Using CAN communication line, it receives signals from BCM and controls the front wipers.
3. Rear window defogger relay control
   Using CAN communication line, it receives signals from BCM and controls the rear window defogger relay.
4. A/C compressor control
   Using CAN communication line, it receives signals from ECM and controls the A/C relay.
5. Cooling fan control
   Using CAN communication line, it receives signals from ECM and controls cooling fan relay.
6. Horn control
   Using CAN communication line, it receives signals from BCM and controls horn relay.

CAN COMMUNICATION LINE CONTROL

With CAN communication, by connecting each control unit using two communication lines (CAN L line, CAN H line), it is possible to transmit maximum amount of information with minimum wiring. Each control unit can transmit and receive data, and reads necessary information only.

1. Fail-safe control
   - When CAN communication with other control units is impossible, IPDM E/R performs fail-safe control. After CAN communication recovers normally, it also returns to normal control.
   - Operation of control parts by IPDM E/R during fail-safe mode is as follows:

Controlled system	Fail-safe mode
Headlamp	● With the ignition switch ON, the headlamp (low) is ON. ● With the ignition switch OFF, the headlamp (low) is OFF.
Tail and parking lamps	● With the ignition switch ON, the tail and parking lamps is ON. ● With the ignition switch OFF, the tail and parking lamps is OFF.
Cooling fan	● With the ignition switch ON, the cooling fan HI operates. ● With the ignition switch OFF, the cooling fan stops.
Front wiper	Until the ignition switch is turned off, the front wiper LO and HI remains in the same status it was in just before fail–safe control was initiated.
Rear window defogger	Rear window defogger relay OFF
A/C compressor	A/C compressor OFF
Front fog lamps	Front fog lamp relay OFF

IPDM E/R STATUS CONTROL

In order to save power, IPDM E/R switches status by itself based on each operating condition.

1. CAN communication status
   - CAN communication is normally performed with other control units.
   - Individual unit control by IPDM E/R is normally performed.
   - When sleep request signal is received from BCM, mode is switched to sleep waiting status.
2. Sleep waiting status
   - Process to stop CAN communication is activated.
   - All systems controlled by IPDM E/R are stopped. When 1 seconds have elapsed after CAN communication with other control units is stopped, mode switches to sleep status.
3. Sleep status
   - IPDM E/R operates in low current-consumption mode.
   - CAN communication is stopped.
   - When a change in CAN communication line is detected, mode switches to CAN communication status.
   - When a change hood switch or ignition switch signal is detected, mode switches to CAN communication status.

CAN Communication System Description

AKS005SA

CAN (Controller Area Network) is a serial communication line for real time application. It is an on-vehicle multiplex communication line with high data communication speed and excellent error detection ability. Modern vehicles are equipped with many electronic control units and each control unit shares information and links with other control units during operation (not independent). In CAN communication, control units are connected with 2 communication lines (CAN H line, CAN L line) allowing a high rate of information transmission with less wiring. Each control unit transmits/receives data but selectively reads required data only.

CAN Communication Unit

AKS00AOF

Refer to LAN-6, "CAN Communication Unit" .

Function of Detecting Ignition Relay Malfunction

AKS005SB

- When contact point of integrated ignition relay is stuck and cannot be turned OFF, IPDM E/R turns ON tail and parking lamps for 10 minutes to indicate IPDM E/R malfunction.
- When a state of ignition relay having built-in does not agree with a state of Ignition switch signal input by a CAN communication from BCM, IPDM E/R lets tail lamp relay operate.

Ignition switch signal	Ignition relay status	Tail lamp relay
ON	ON	—
OFF	OFF	—
ON	OFF	—
OFF	ON	ON (10 minutes)

NOTE:
When the ignition switch is turned ON, the tail lamp is OFF.

CONSULT-II

AKS005SC

CONSULT-II performs the following functions with combination of data receiving, command and transmission using the CAN communication line from the IPDM E/R.

Inspection Item, Diagnosis Mode	Description
SELF-DIAG RESULTS	The IPDM E/R performs diagnosis of the CAN communication and self-diagnosis.
DATA MONITOR	The input/output data of the IPDM E/R is displayed in real time.
CAN DIAG SUPPORT MNTR	The rsult of transmit/receive diagnosis of CAN communication can be read.
ACTIVE TEST	The IPDM E/R sends a drive signal to electronic components to check their operation.

CONSULT-II INSPECTION PROCEDURE

CAUTION:

If CONSULT-II is used with no connection of CONSULT-II CONVERTER, malfunctions might be detected in self-diagnosis depending on control unit which carry out CAN communication.

1. With the ignition switch OFF, connect CONSULT-II and CONSULT-II CONVERTER to the data link connector, then turn the ignition switch ON.

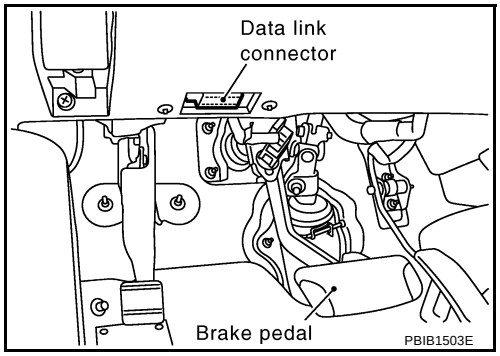

2. Touch “START (NISSAN BASED VHCL)”.

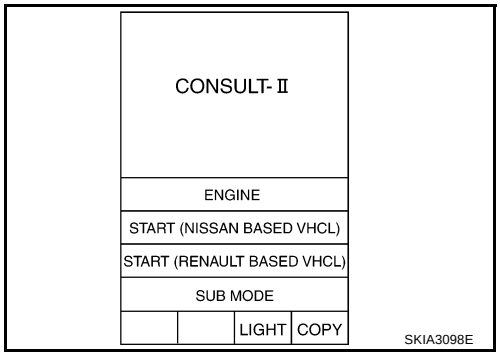

3. Touch “IPDM E/R” on “SELECT SYSTEM” screen.
   - If “IPDM E/R” is not displayed, print “SELECT SYSTEM” screen, then refer to GI-40, "CONSULT-II Data Link Connector (DLC) Circuit" .

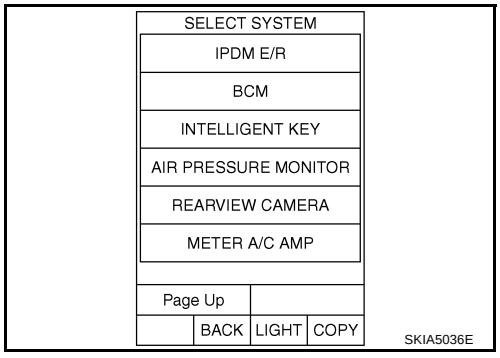

4. Select the desired part to be diagnosed on the “SELECT DIAG MODE” screen.

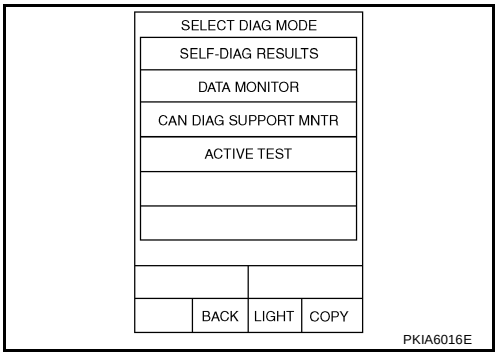

SELF-DIAG RESULTS

Operation Procedure

1. Touch “SELF-DIAG RESULTS” on “SELECT DIAG MODE” screen.
2. Check display content in self-diagnostic results.

Display Item List

Display Items	CONSULT-II display code	Malfunction detecting condition	TIME		Possible causes
			CRNT	PAST	
NO DTC IS DETECTED.FURTHER TESTING MAY BE REQUIRED.	-	-	-	-	-
CAN COMM CIRC	U1000	● If CAN communication reception/transmission data has a malfunction, or if any of the control units malfunction, data reception/transmission cannot be confirmed. ● When the data in CAN communication is not received before the specified time	×	×	Any of or several items below have errors. ● TRANSMIT DIAG ● ECM ● BCM/SEC

NOTE:
The details for display of the period are as follows:

- CRNT: Error currently detected with IPDM E/R.
- PAST: Error detected in the past and memorized with IPDM E/R.

DATA MONITOR

Operation Procedure

1. Touch “DATA MONITOR” on “SELECT MONITOR ITEM ” screen.
2. Touch “ALL SIGNALS”, “MAIN SIGNALS” or “SELECTION FROM MENU” on the “DATA MONITOR” screen.

ALL SIGNALS	All items will be monitored.
MAIN SIGNALS	Monitor the predetermined item.
SELECTION FROM MENU	Select any item for monitoring.

3. Touch “START”.
4. Touch the required monitoring item on “SELECTION FROM MENU”. In “ALL SIGNALS”, all items are monitored. In “MAIN SIGNALS”, predetermined items are monitored.
5. Touch “RECORD” while monitoring to record the status of the item being monitored. To stop recording, touch “STOP”.

All Signals, Main Signals, Selection From Menu

Item name	CONSULT-II screen display	Display or unit	Monitor item selection			Description
			ALL SIGNALS	MAIN SIGNALS	SELECTION FROM MENU	
Motor fan request	MOTOR FAN REQ	1/2/3/4	×	×	×	Signal status input from ECM
Compressor request	AC COMP REQ	ON/OFF	×	×	×	Signal status input from ECM
Tail & clear request	TAIL&CLR REQ	ON/OFF	×	×	×	Signal status input from BCM
H/L LO request	HL LO REQ	ON/OFF	×	×	×	Signal status input from BCM
H/L HI request	HL HI REQ	ON/OFF	×	×	×	Signal status input from BCM
FR fog request	FR FOG REQ	ON/OFF	×	×	×	Signal status input from BCM
FR wiper request	FR WIP REQ	STOP/1LO/LO/HI	×	×	×	Signal status input from BCM
Wiper auto stop	WIP AUTO STOP	ACT P/STOP P	×	×	×	Output status of IPDM E/R
Wiper protection	WIP PROT	OFF/LS/HS/Block	×	×	×	Control status of IPDM E/R
Starter request	ST RLY REQ	ON/OFF	×		×	Status of input signal NOTE
Ignition relay status	IGN RLY	ON/OFF	×	×	×	Ignition relay status monitored with IPDM E/R
Rear window defogger request	RR DEF REQ	ON/OFF	×	×	×	Signal status input from BCM
Oil pressure switch	OIL P SW	OPEN/CLOSE	×		×	Signal status input in IPDM E/R
Hood switch	HOOD SW	ON/OFF	×		×	Input signal status
Theft warning horn request	THFT HRN REQ	ON/OFF	×		×	Signal status input from BCM
Horn chirp	HORN CHIRP	ON/OFF	×		×	Output status of IPDM E/R
Cornering lamp request NOTE	CRNRNG LMP REQ	OFF/LEFT/RIGHT	×		×	Signal status input from BCM

NOTE:

- Perform monitoring of IPDM E/R data with the ignition switch ON. When the ignition switch is at ACC, the display may not be correct.
- The vehicle without the Intelligent Key system displays only ON without change.
- The cornering lamp items are displayed, but they cannot be monitored.

ACTIVE TEST

Operation Procedure

1. Touch “ACTIVE TEST” on “SELECT DIAG MODE” screen.
2. Touch item to be tested, and check operation.
3. Touch “START”.
4. Touch “STOP” while testing to stop the operation.

Test item	CONSULT-II screen display	Description
Tail lamp output	TAIL LAMP	With a certain ON-OFF operation, the tail lamp relay can be operated.
Rear window defogger output	REAR DEFOGGER	With a certain ON-OFF operation, the rear window defogger relay can be operated.
Front wiper (HI, LO) output	FRONT WIPER	With a certain operation (OFF, HI ON, LO ON), the front wiper relay (Lo, Hi) can be operated.
Cooling fan output	MOTOR FAN	With a certain operation (1,2,3,4), the cooling fan can be operated.
Lamp (HI, LO,FOG) output	LAMPS	With a certain operation (OFF, HI ON, LO ON, FOG ON), the lamp relay (Lo, Hi, Fog) can be operated.
Cornering lamp output	CORNERING LAMP[NOTE]	—
Horn output	HORN	With a certain ON-OFF operation, the horn relay can be operated.

NOTE:
The cornering lamp items are displayed, but they cannot be tested.

Auto Active Test

AKS005SD

DESCRIPTION

- In auto active test mode, operation inspection can be performed when IPDM E/R sends a drive signal to the following systems:
  - Rear window defogger
  - Front wipers
  - Tail and parking lamps
  - Front fog lamps
  - Headlamps (Hi, Lo)
  - A/C compressor (magnetic clutch)
  - Cooling fan

OPERATION PROCEDURE

1. Close hood front door RH and lift wiper arms away from windshield (to prevent glass damage by wiper operation).

   NOTE:
   When auto active test is performed with hood opened, sprinkle water on windshield beforehand.
2. Turn ignition switch OFF.
3. Turn ignition switch ON and, within 20 seconds, press front door switch LH 10 times. Then turn ignition switch OFF.
4. Turn ignition switch ON within 10 seconds after ignition switch OFF.
5. When auto active test mode is actuated, horn chirps once.
6. After a series of operations is repeated three times, auto active test is completed.

   NOTE:
   When auto active test mode has to be cancelled halfway, turn ignition switch OFF.

   CAUTION:
   Be sure to inspect BL-43, "Check Door Switch" when the auto active test cannot be performed.

INSPECTION IN AUTO ACTIVE TEST MODE

- When auto active test mode is actuated, the following eight steps are repeated three times.

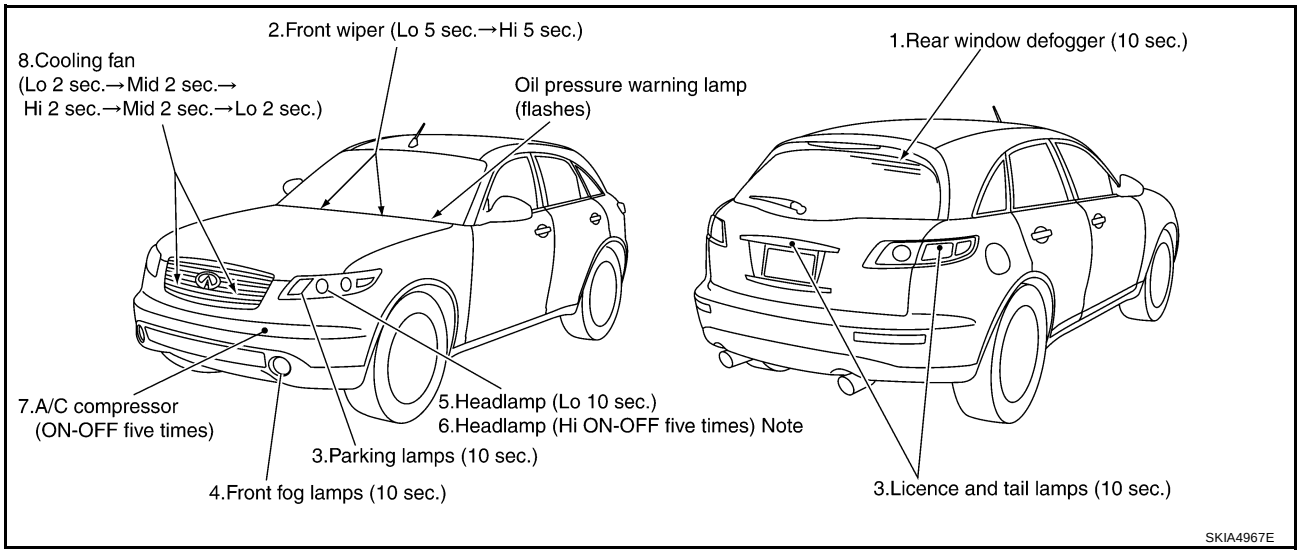

NOTE:
Turns ON-OFF the solenoid to switch Hi/Lo. In this case, the bulb does not illuminate.

Concept of Auto Active Test

- IPDM E/R actuates auto active test mode when it receives door switch signal from BCM via CAN communication line. Therefore, when auto active test mode is activated successfully, CAN communication between IPDM E/R and BCM is normal.
- If any of systems controlled by IPDM E/R cannot be operated, possible cause can be easily diagnosed using auto active test.

Diagnosis chart in auto active test mode

Symptom	Inspection contents		Possible cause
Any of front wipers, tail and parking lamps, front fog lamps, and head lamps (Hi, Lo) do not operate.	Perform auto active test. Does system in question operate?	YES	● BCM signal input system
		NO	● Lamp/wiper motor malfunction ● Lamp/wiper motor ground circuit malfunction ● Harness/connector malfunction between IPDM E/R and system in question ● IPDM E/R (integrated relay) malfunction
Rear window defogger does not operate.	Perform auto active test. Does rear window defogger operate?	YES	● BCM signal input circuit
		NO	● Rear window defogger relay circuit ● Open circuit of rear window defogger ● IPDM E/R malfunction
A/C compressor does not operate.	Perform auto active test. Does magnetic clutch operate?	YES	● BCM signal input circuit ● CAN communication signal between BCM and ECM. ● CAN communication signal between ECM and IPDM E/R
		NO	● Magnetic clutch malfunction ● Harness/connector malfunction between IPDM E/R and magnetic clutch ● IPDM E/R (integrated relay) malfunction
Cooling fan does not operate.	Perform auto active test. Does cooling fan operate?	YES	● ECM signal input circuit ● CAN communication signal between ECM and IPDM E/R
		NO	● Cooling fan motor malfunction ● Harness/connector malfunction between IPDM E/R and cooling fan motor ● IPDM E/R (integrated relay) malfunction
Oil pressure warning lamp does not operate.	Perform auto active test. Does oil pressure warning lamp blink?	YES	● Harness/connector malfunction between IPDM E/R and oil pressure switch ● Oil pressure switch malfunction ● IPDM E/R malfunction
		NO	● CAN communication signal between BCM and Unified Meter and A/C Amp ● Combination meter

Schematic

AKS005SE

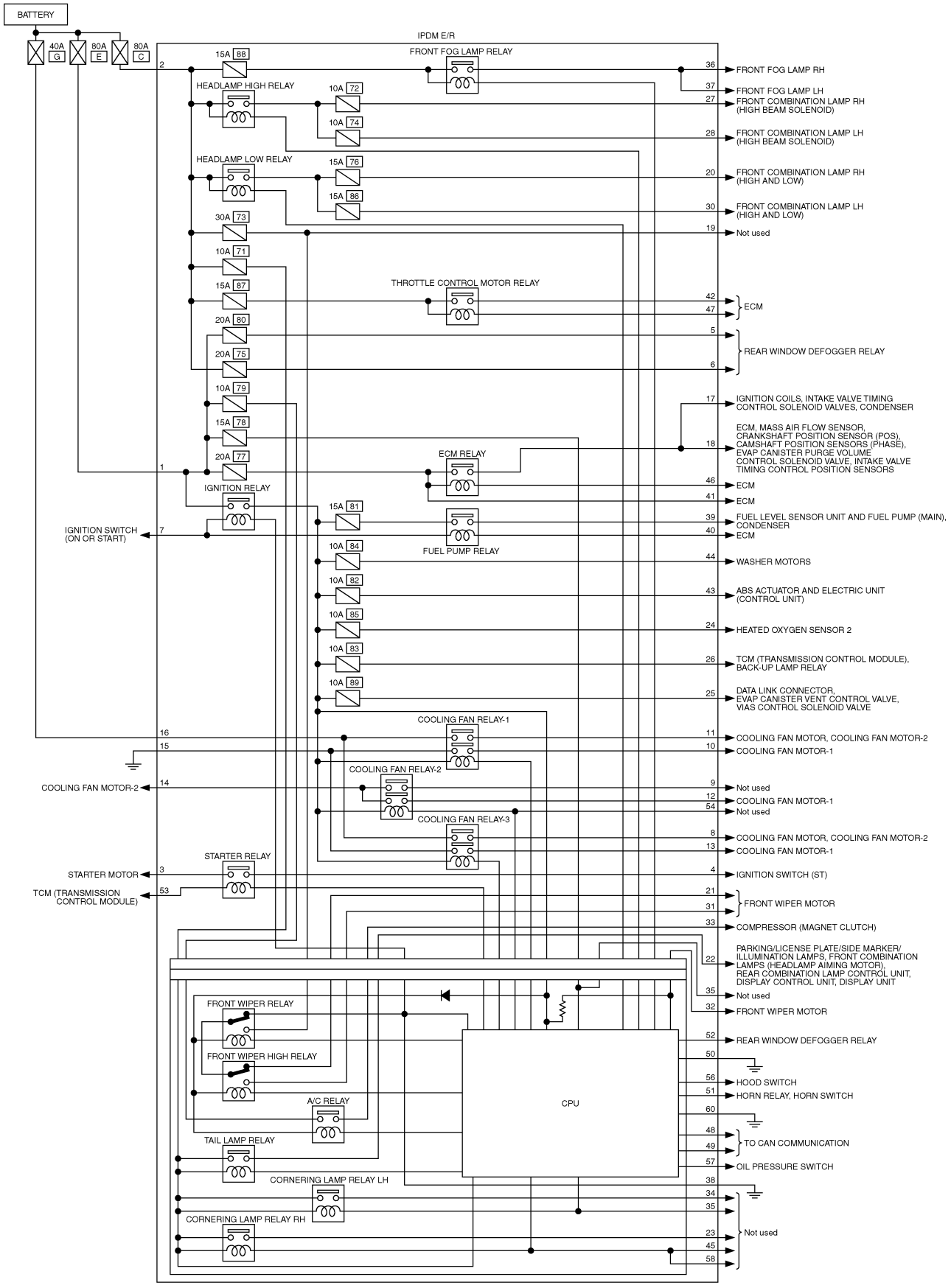

IPDM E/R Terminal Arrangement

AKS005SF

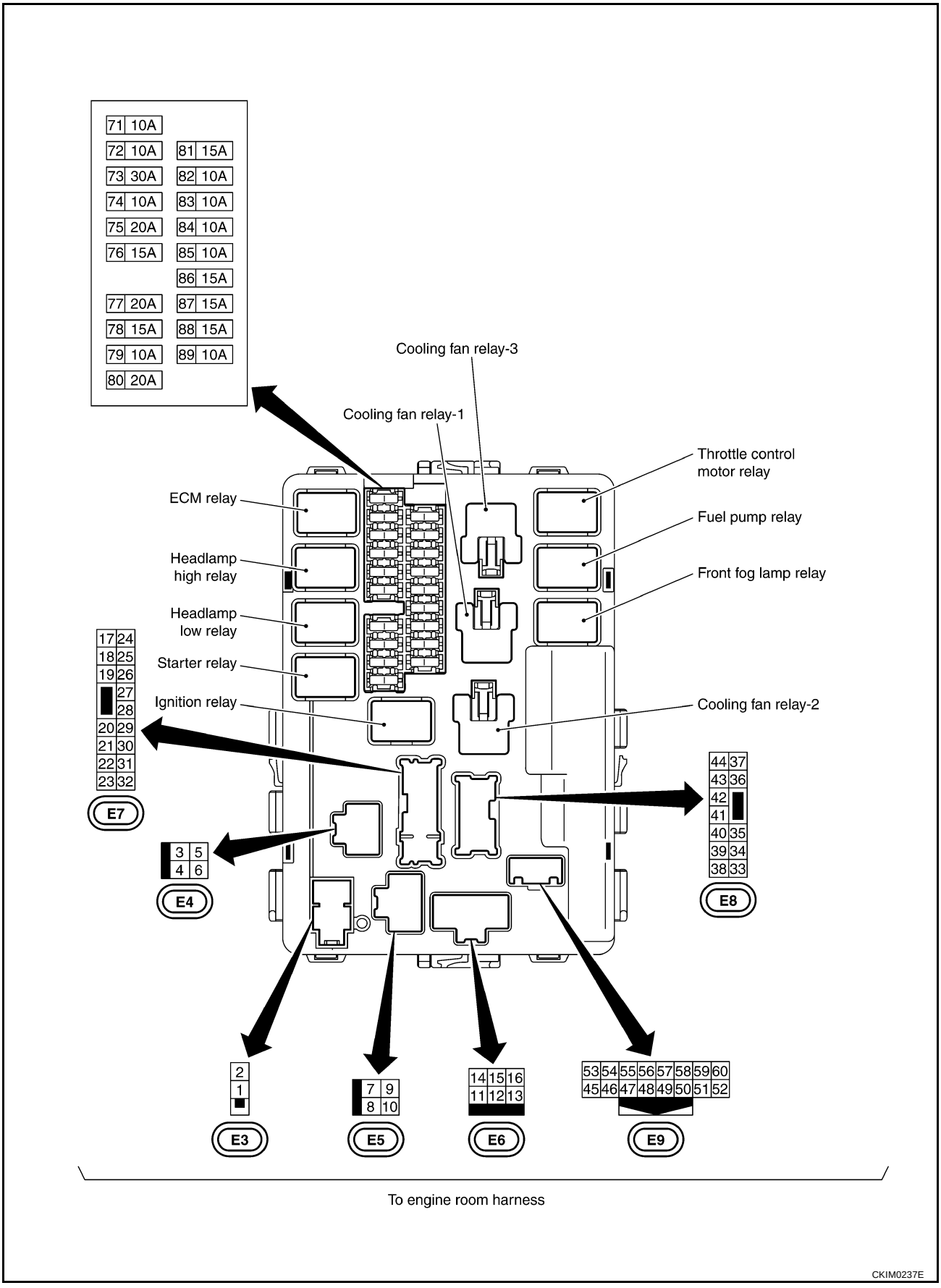

IPDM E/R Power/Ground Circuit Inspection

AKS007NW

1. CHECK FUSE AND FUSIBLE LINK

- Make sure the following fusible links or IPDM E/R fuses are not blown.

Terminal No.	Signal name	Fuse, fusible link No.
1, 2, 16	Battery power	F/L–C, F/L–E, F/L–G, Fuse No. 82, 90

OK or NG

OK >> GO TO 2.
NG >> Replace fuse or fusible link.

2. CHECK POWER SUPPLY CIRCUIT

1. Turn ignition switch OFF.
2. Disconnect IPDM E/R harness connector E3.
3. Check voltage between IPDM E/R harness connector E3 terminals 1 (W/R), 2 (W/L) and ground.

Battery voltage should exist

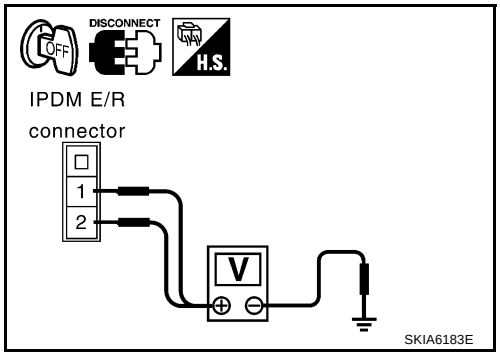

OK or NG

OK >> GO TO 3.
NG >> Replace IPDM E/R power supply circuit harness.

3. CHECK GROUND CIRCUIT

1. Disconnect IPDM E/R harness connectors E8 and E9.
2. Check continuity between IPDM E/R harness connectors E8 terminal 38 (B), E9 terminal 50 (B), 60 (B) and ground.

Continuity should exist

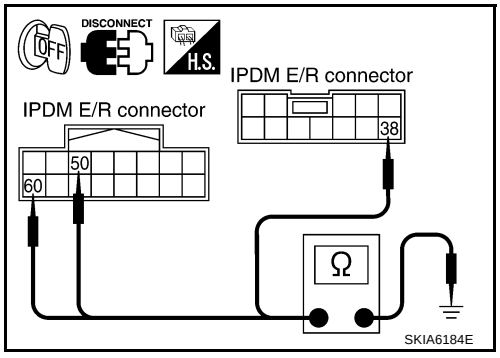

OK or NG

OK >> INSPECTION END
NG >> Replace ground circuit harness of IPDM E/R.

Inspection With CONSULT-II (Self-Diagnosis)

AKS005SG

CAUTION:

If CONSULT-II is used with no connection of CONSULT-II CONVERTER, malfunctions might be detected in self-diagnosis depending on control unit which carry out CAN communication.

1. CHECK SELF DIAGNOSTIC RESULT

1. Connect CONSULT-II and select “IPDM E/R” on the Diagnosis System Selection screen.
2. Select “SELF-DIAG RESULTS” on the “SELECT DIAG MODE” screen.
3. Check display content in self diagnostic results.

CONSULT-II display	CONSULT-II display code	TIME		Details of diagnosis result
		CRNT	PAST	
NO DTC IS DETECTED. FURTHER TESTING MAY BE REQUIRED.	-	-	-	No malfunction
CAN COMM CIRC	U1000	×	×	Any of or several items below have errors. ● TRANSMIT DIAG ● ECM ● BCM/SEC

NOTE:

The Details for Display of the Period Are as Follows:

- CRNT: Error currently detected with IPDM E/R.
- PAST: Error detected in the past and memorized with IPDM E/R.

Contents displayed

NO DTC IS DETECTED.FURTHER TESTING MAY BE REQUIRED.>>INSPECTION END
CAN COMM CIRC>>LAN-4, "Precautions When Using CONSULT-II".

Removal and Installation of IPDM E/R

AKS005SM

REMOVAL

1. Remove battery. Refer to SC-9, "Removal and Installation" in “Starting and Charging System (SC)” section.
2. Remove IPDM E/R cover A. While pressing pawl on backside of IPDM E/R cover B toward vehicle front to unlock, lift up IPDM E/R.

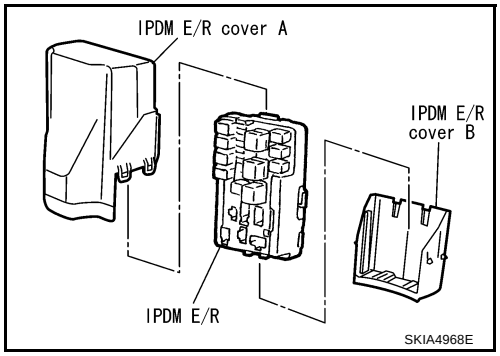

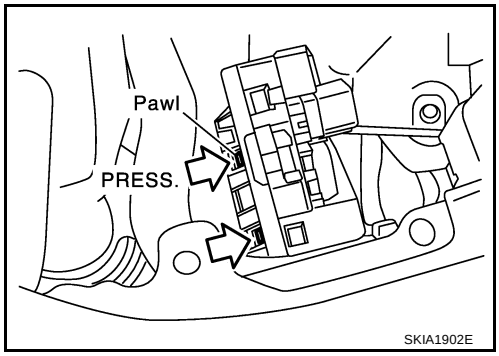

3. While pressing pawls on right and left side of IPDM E/R, remove IPDM E/R cover B from IPDM E/R.
4. Remove harness connector from IPDM E/R.

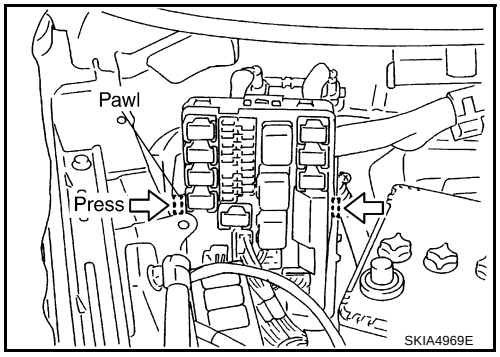

INSTALLATION

Install in the reverse order of removal.

GROUND

PFP:00011

Ground Distribution

AKS007VZ

MAIN HARNESS

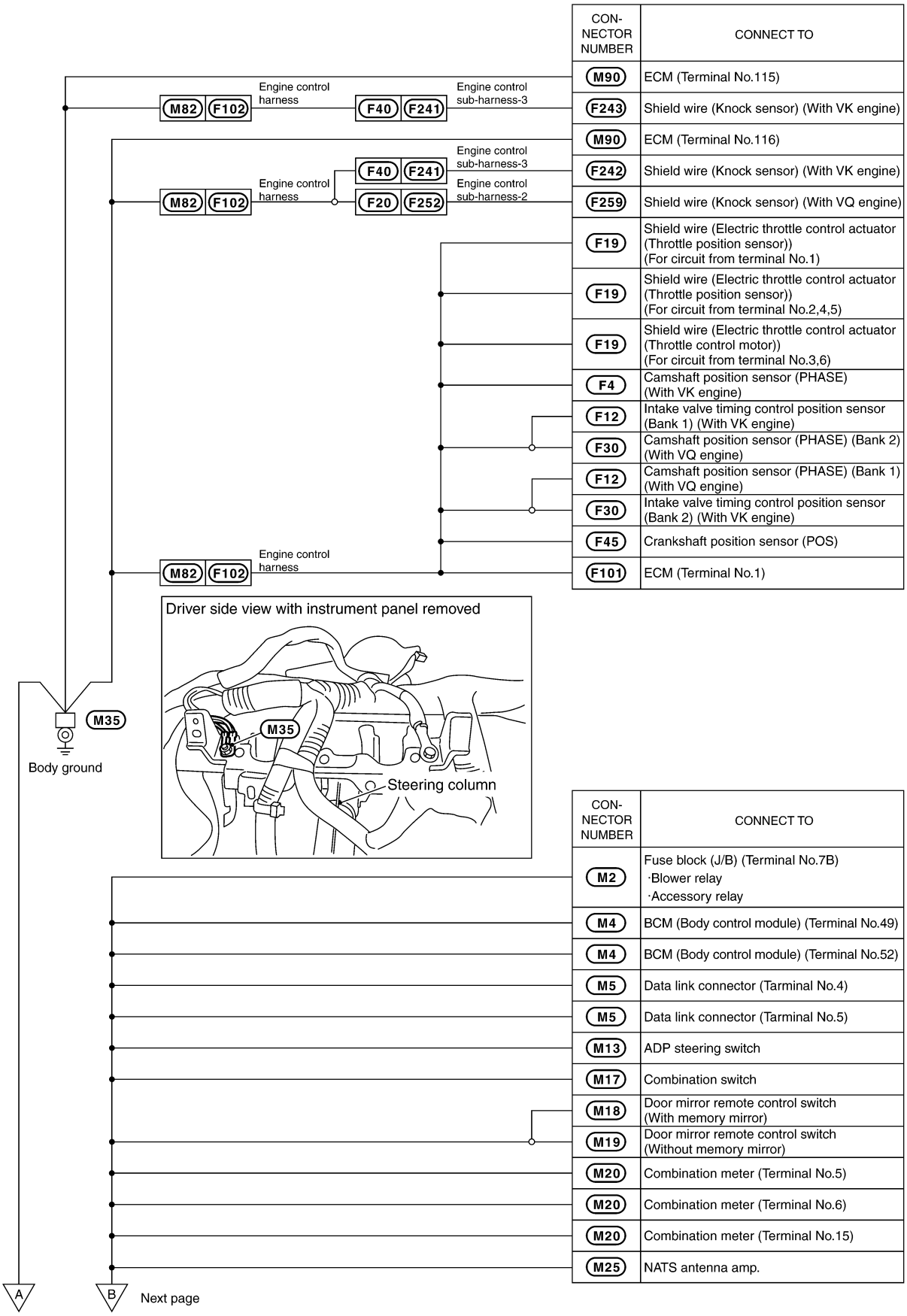

CON-NECTOR NUMBER	CONNECT TO
M90	ECM (Terminal No.115)
F243	Shield wire (Knock sensor) (With VK engine)
M90	ECM (Terminal No.116)
F242	Shield wire (Knock sensor) (With VK engine)
F259	Shield wire (Knock sensor) (With VQ engine)
F19	Shield wire (Electric throttle control actuator (Throttle position sensor)) (For circuit from terminal No.1)
F19	Shield wire (Electric throttle control actuator (Throttle position sensor)) (For circuit from terminal No.2,4,5)
F19	Shield wire (Electric throttle control actuator (Throttle control motor)) (For circuit from terminal No.3,6)
F4	Camshaft position sensor (PHASE) (With VK engine)
F12	Intake valve timing control position sensor (Bank 1) (With VK engine)
F30	Camshaft position sensor (PHASE) (Bank 2) (With VQ engine)
F12	Camshaft position sensor (PHASE) (Bank 1) (With VQ engine)
F30	Intake valve timing control position sensor (Bank 2) (With VK engine)
F45	Crankshaft position sensor (POS)
F101	ECM (Terminal No.1)

CON-NECTOR NUMBER	CONNECT TO
M2	Fuse block (J/B) (Terminal No.7B) ·Blower relay ·Accessory relay
M4	BCM (Body control module) (Terminal No.49)
M4	BCM (Body control module) (Terminal No.52)
M5	Data link connector (Tarminal No.4)
M5	Data link connector (Tarminal No.5)
M13	ADP steering switch
M17	Combination switch
M18	Door mirror remote control switch (With memory mirror)
M19	Door mirror remote control switch (Without memory mirror)
M20	Combination meter (Terminal No.5)
M20	Combination meter (Terminal No.6)
M20	Combination meter (Terminal No.15)
M25	NATS antenna amp.

CKIM0291E

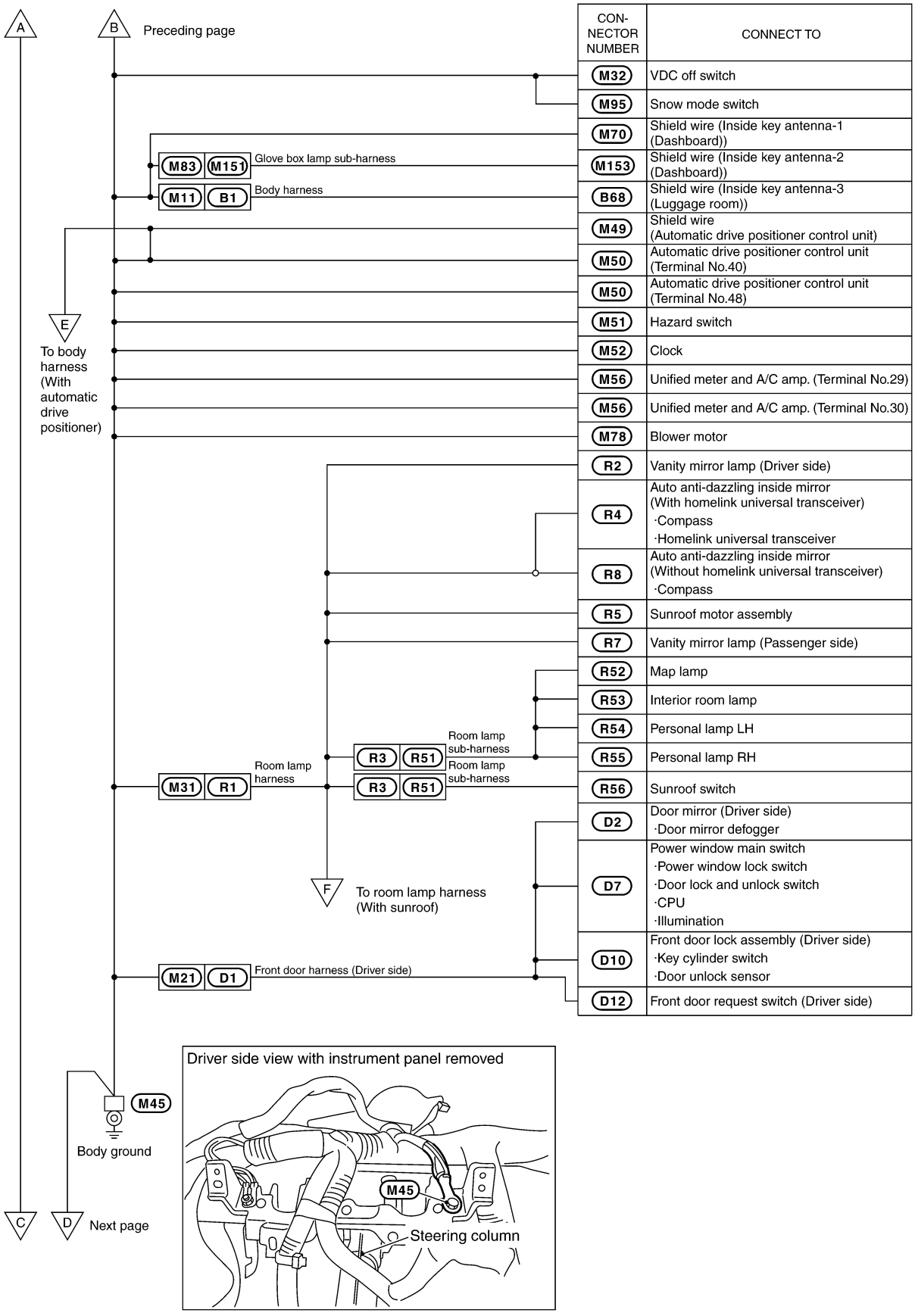
A
B
Preceding page
CON-NECTOR NUMBER
CONNECT TO
M32
VDC off switch
M95
Snow mode switch
M70
Shield wire (Inside key antenna-1 (Dashboard))
M83
M151
Glove box lamp sub-harness
M153
Shield wire (Inside key antenna-2 (Dashboard))
M11
B1
Body harness
B68
Shield wire (Inside key antenna-3 (Luggage room))
M49
Shield wire (Automatic drive positioner control unit)
M50
Automatic drive positioner control unit (Terminal No.40)
M50
Automatic drive positioner control unit (Terminal No.48)
E
To body harness (With automatic drive positioner)
M51
Hazard switch
M52
Clock
M56
Unified meter and A/C amp. (Terminal No.29)
M56
Unified meter and A/C amp. (Terminal No.30)
M78
Blower motor
R2
Vanity mirror lamp (Driver side)
R4
Auto anti-dazzling inside mirror (With homelink universal transceiver)
·Compass
·Homelink universal transceiver
R8
Auto anti-dazzling inside mirror (Without homelink universal transceiver)
·Compass
R5
Sunroof motor assembly
R7
Vanity mirror lamp (Passenger side)
R52
Map lamp
R53
Interior room lamp
R54
Personal lamp LH
R55
Personal lamp RH
R56
Sunroof switch
Room lamp sub-harness
R3
R51
Room lamp sub-harness
Room lamp harness
M31
R1
R3
R51
D2
Door mirror (Driver side)
·Door mirror defogger
D7
Power window main switch
·Power window lock switch
·Door lock and unlock switch
·CPU
·Illumination
F
To room lamp harness (With sunroof)
D10
Front door lock assembly (Driver side)
·Key cylinder switch
·Door unlock sensor
M21
D1
Front door harness (Driver side)
D12
Front door request switch (Driver side)
M45
Body ground
C
D
Next page
Driver side view with instrument panel removed
M45
Steering column

CKIH0249E

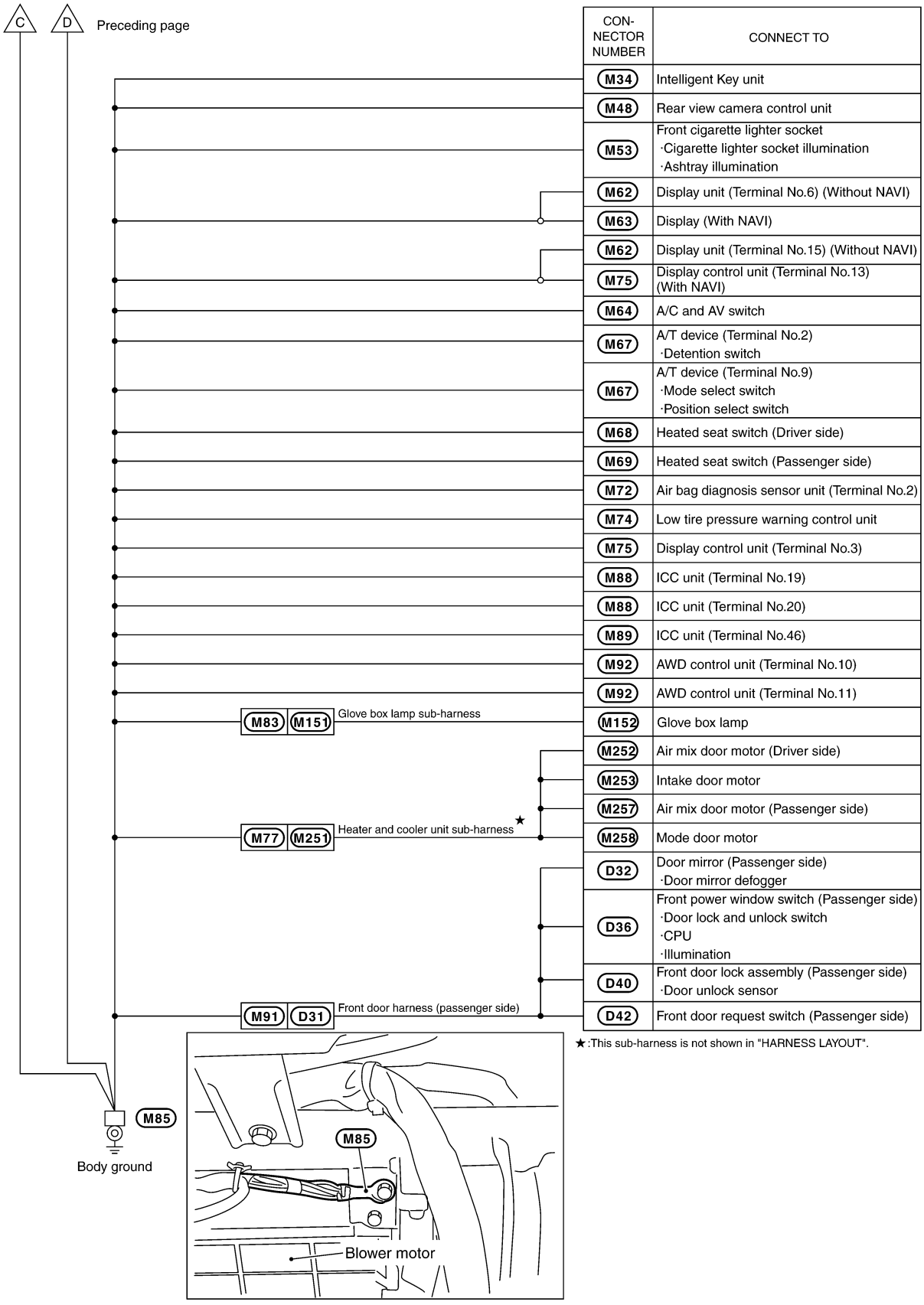

CON-NECTOR NUMBER	CONNECT TO
M34	Intelligent Key unit
M48	Rear view camera control unit
M53	Front cigarette lighter socket ·Cigarette lighter socket illumination ·Ashtray illumination
M62	Display unit (Terminal No.6) (Without NAVI)
M63	Display (With NAVI)
M62	Display unit (Terminal No.15) (Without NAVI)
M75	Display control unit (Terminal No.13) (With NAVI)
M64	A/C and AV switch
M67	A/T device (Terminal No.2) ·Detention switch
M67	A/T device (Terminal No.9) ·Mode select switch ·Position select switch
M68	Heated seat switch (Driver side)
M69	Heated seat switch (Passenger side)
M72	Air bag diagnosis sensor unit (Terminal No.2)
M74	Low tire pressure warning control unit
M75	Display control unit (Terminal No.3)
M88	ICC unit (Terminal No.19)
M88	ICC unit (Terminal No.20)
M89	ICC unit (Terminal No.46)
M92	AWD control unit (Terminal No.10)
M92	AWD control unit (Terminal No.11)
M152	Glove box lamp
M252	Air mix door motor (Driver side)
M253	Intake door motor
M257	Air mix door motor (Passenger side)
M258	Mode door motor
D32	Door mirror (Passenger side) ·Door mirror defogger
D36	Front power window switch (Passenger side) ·Door lock and unlock switch ·CPU ·Illumination
D40	Front door lock assembly (Passenger side) ·Door unlock sensor
D42	Front door request switch (Passenger side)

★:This sub-harness is not shown in "HARNESS LAYOUT".

CKIH0250E

ENGINE ROOM HARNESS

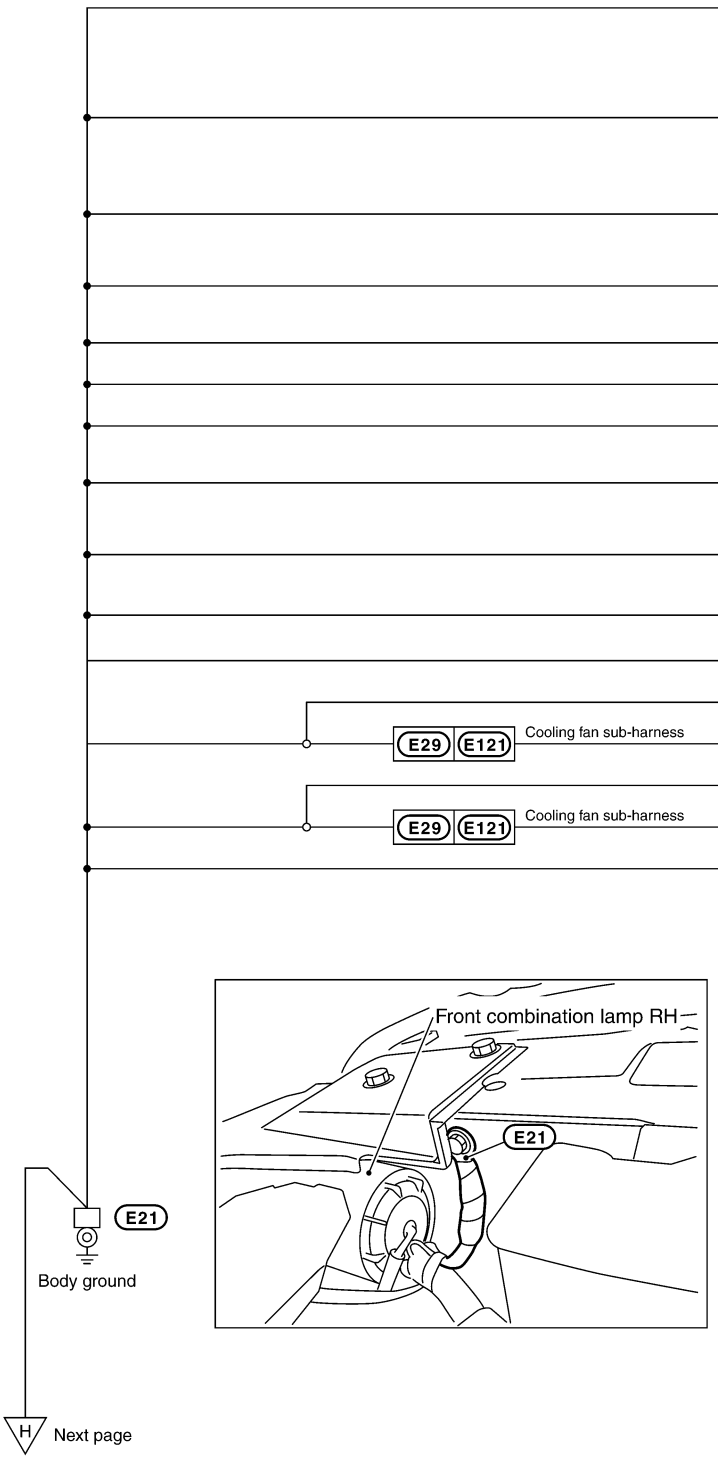

CON-NECTOR NUMBER	CONNECT TO
E6	IPDM E/R (Intelligent power distribution module engine room) (Terminal No.15) (With VQ engine) ·Cooling fan relay-1 ·Cooling fan relay-3
E8	IPDM E/R (Intelligent power distribution module engine room) (Terminal No.38) ·CPU ·Ignition relay ·Front wiper relay
E9	IPDM E/R (Intelligent power distribution module engine room) (Terminal No.50) ·CPU
E9	IPDM E/R (Intelligent power distribution module engine room) (Terminal No.60) ·CPU
E12	Accessory relay-2
E14	ICC brake hold relay
E22	Front side marker lamp RH
E23	Clearance lamp RH ·Parking ·Daytime
E24	Front combination lamp RH (Terminal No.7) ·Headlamp ·High beam solenoid
E24	Front combination lamp RH (Terminal No.8) ·Turn signal
E39	ICC sensor
E41	Cooling fan motor (Terminal No.3) (With VK engine)
E123	Cooling fan motor-2 (Terminal No.4) (With VQ engine)
E41	Cooling fan motor (Terminal No.4) (With VK engine)
E123	Cooling fan motor-2 (Terminal No.3) (With VQ engine)
E45	Front fog lamp LH

CKIM0200E

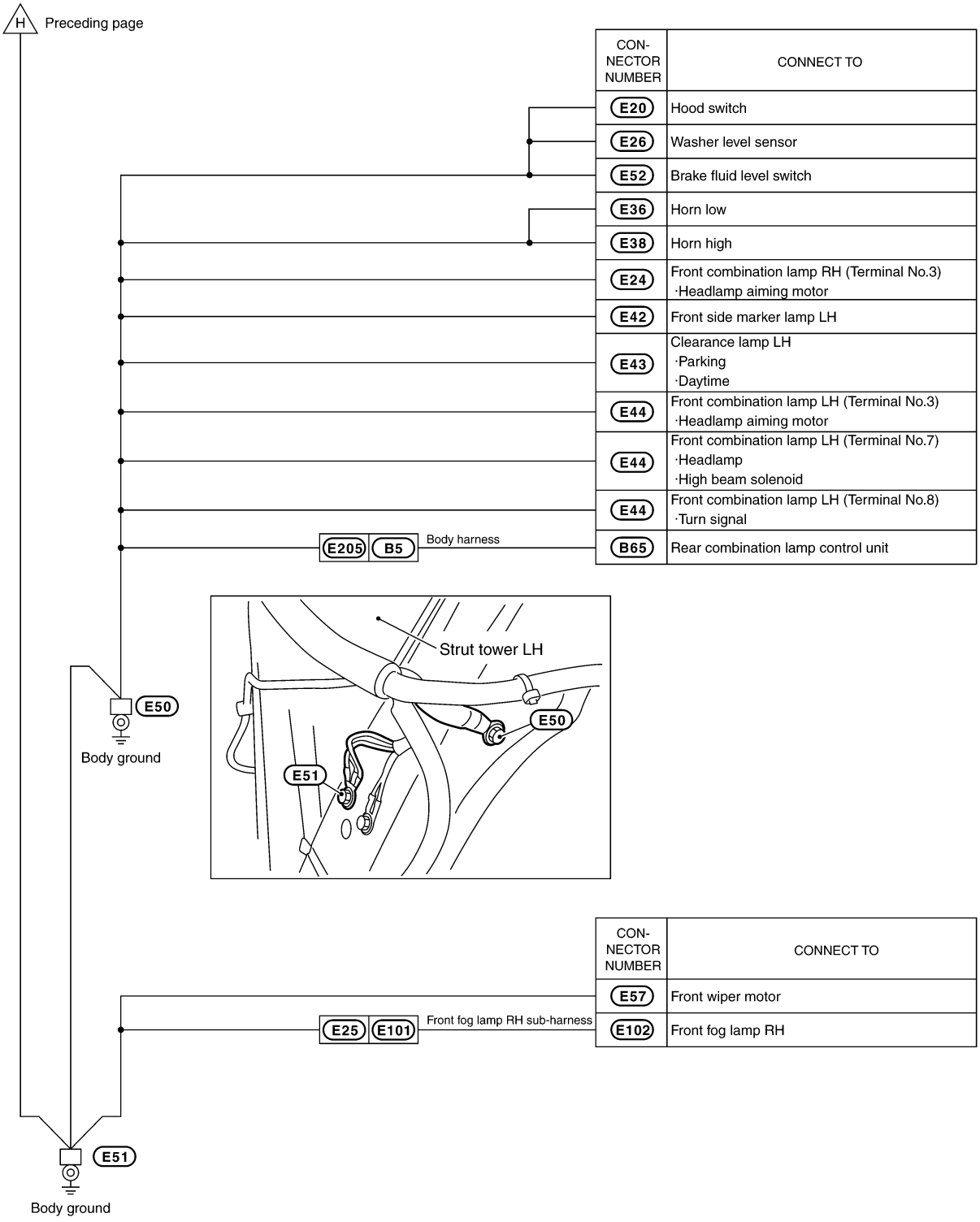
H
Preceding page
CON-NECTOR NUMBER
CONNECT TO
E20
Hood switch
E26
Washer level sensor
E52
Brake fluid level switch
E36
Horn low
E38
Horn high
E24
Front combination lamp RH (Terminal No.3)
·Headlamp aiming motor
E42
Front side marker lamp LH
E43
Clearance lamp LH
·Parking
·Daytime
E44
Front combination lamp LH (Terminal No.3)
·Headlamp aiming motor
E44
Front combination lamp LH (Terminal No.7)
·Headlamp
·High beam solenoid
E44
Front combination lamp LH (Terminal No.8)
·Turn signal
E205
B5
Body harness
B65
Rear combination lamp control unit
E50
Body ground
Strut tower LH
E50
E51
CON-NECTOR NUMBER
CONNECT TO
E57
Front wiper motor
E25
E101
Front fog lamp RH sub-harness
E102
Front fog lamp RH
E51
Body ground

CKIM0292E

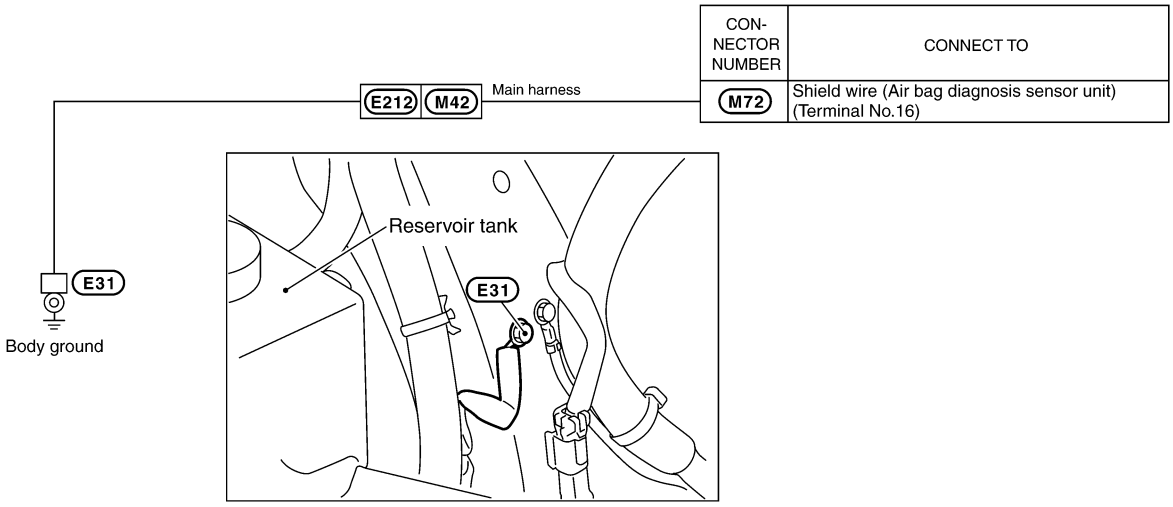

CON-NECTOR NUMBER	CONNECT TO
M72	Shield wire (Air bag diagnosis sensor unit) (Terminal No.16)

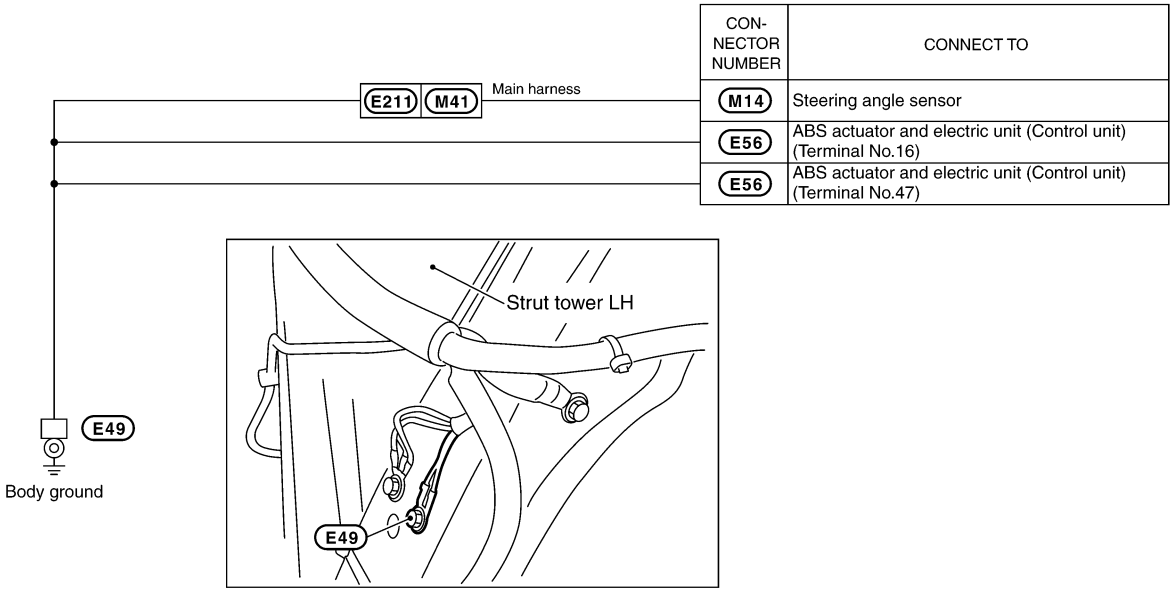

CON-NECTOR NUMBER	CONNECT TO
M14	Steering angle sensor
E56	ABS actuator and electric unit (Control unit) (Terminal No.16)
E56	ABS actuator and electric unit (Control unit) (Terminal No.47)

CKIM0202E

ENGINE HARNESS/VK ENGINE MODELS

CON-NECTOR NUMBER	CONNECT TO
E309	Alternator

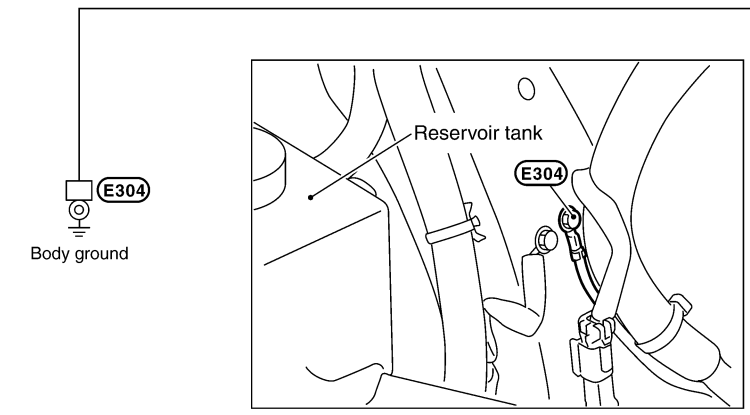

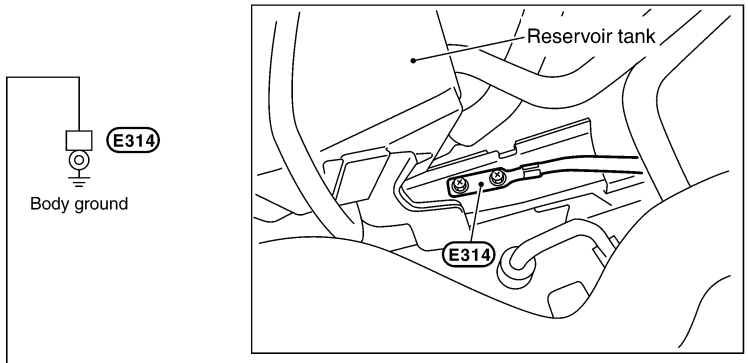

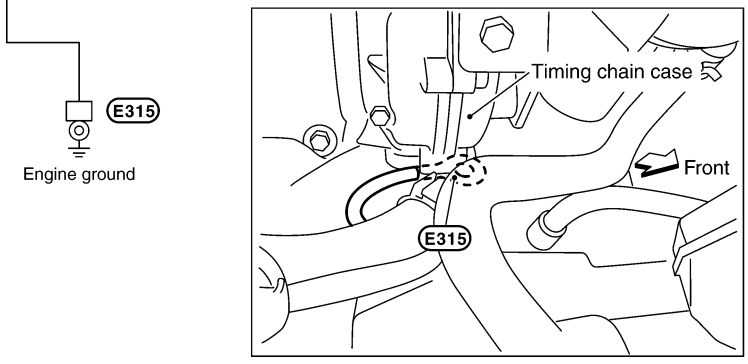

CKIM0203E

ENGINE HARNESS/VQ ENGINE MODELS

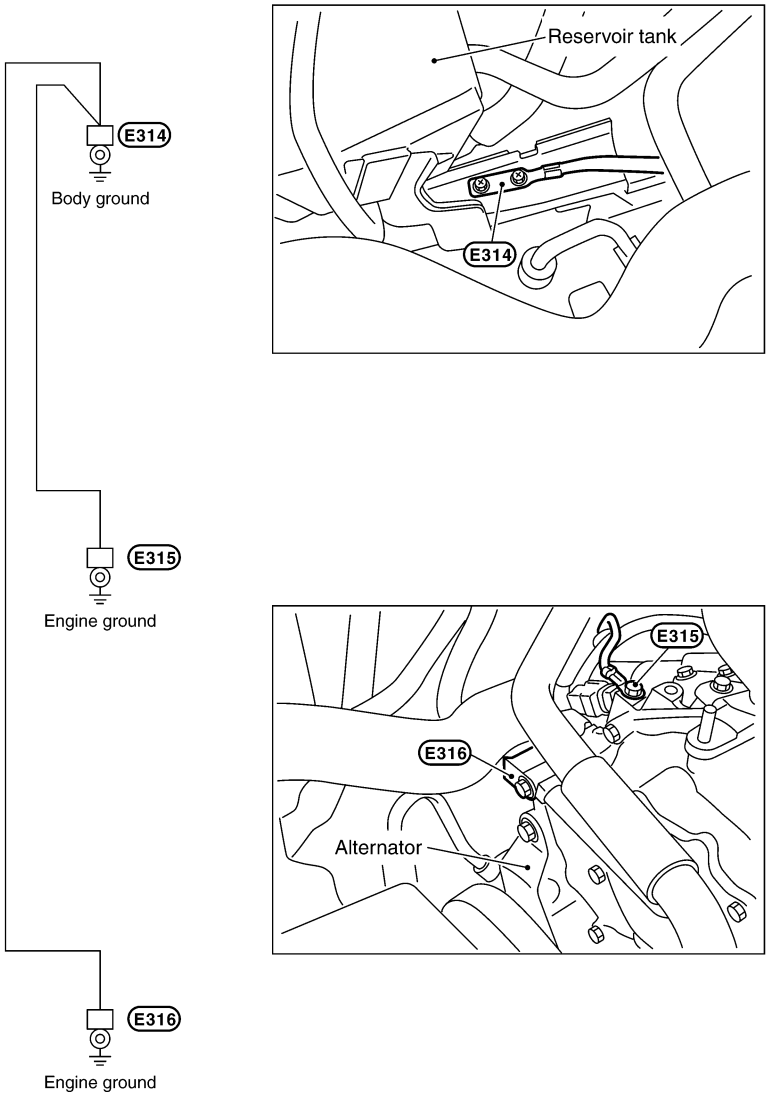

CKIM0204E

ENGINE CONTROL HARNESS/VK ENGINE MODELS

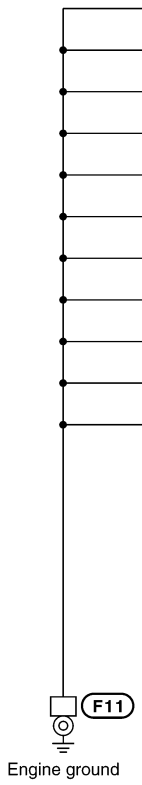

CONNECTOR NUMBER	CONNECT TO
F15	Ignition coil No.1 (With power transistor)
F16	Ignition coil No.3 (With power transistor)
F17	Ignition coil No.5 (With power transistor)
F18	Ignition coil No.7 (With power transistor)
F35	Ignition coil No.2 (With power transistor)
F36	Ignition coil No.4 (With power transistor)
F37	Ignition coil No.6 (With power transistor)
F38	Ignition coil No.8 (With power transistor)
F23	Condenser
F44	A/T Assembly (Terminal No.5)
F44	A/T Assembly (Terminal No.10)

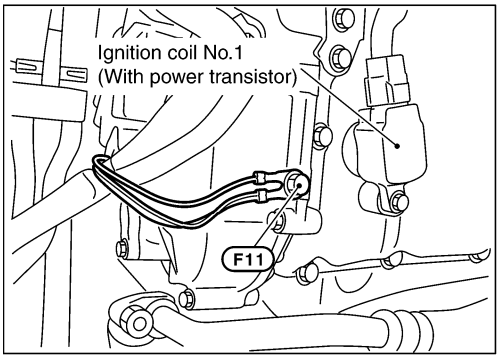

CKIM0205E

ENGINE CONTROL HARNESS/VQ ENGINE MODELS

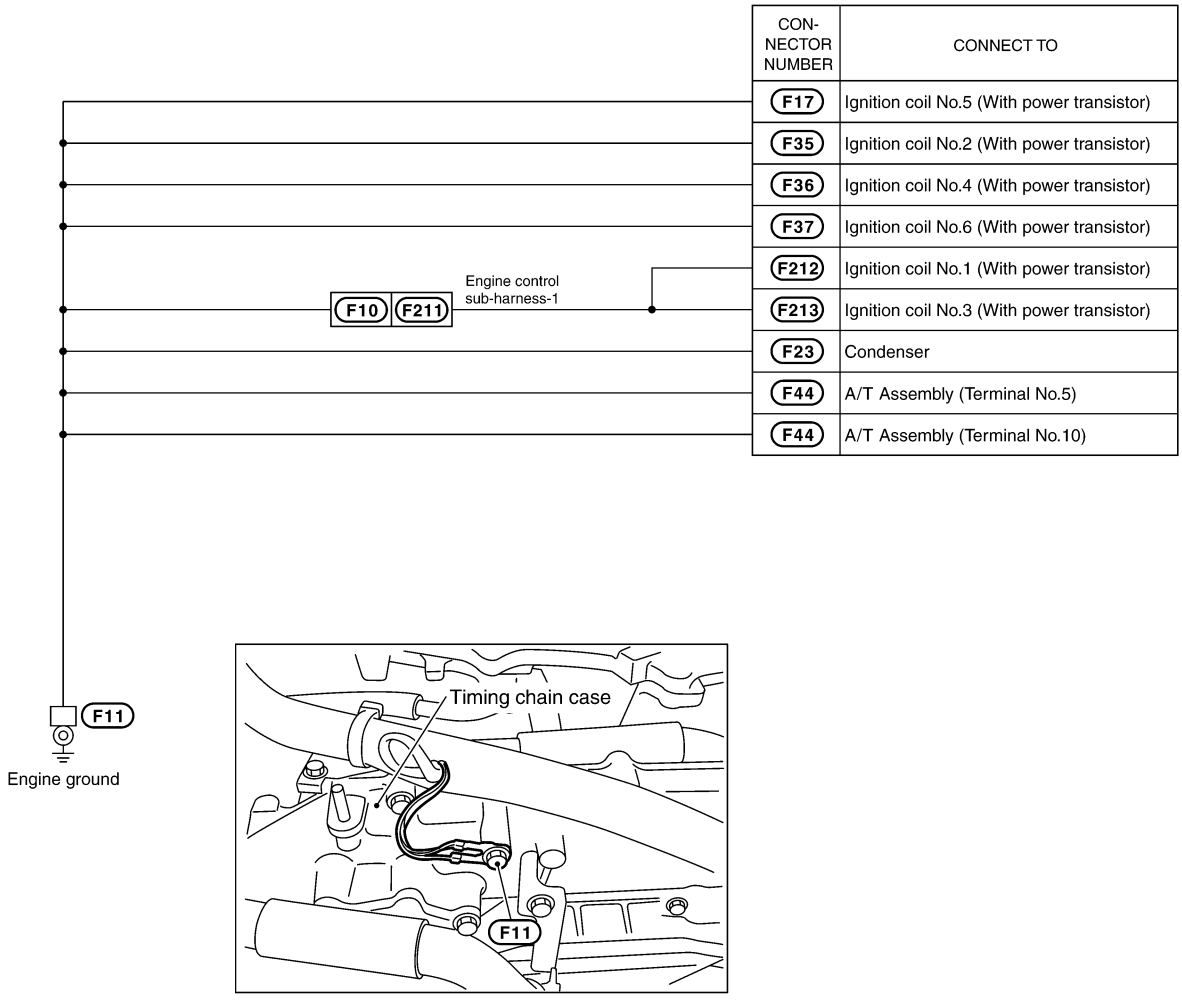

CON-NECTOR NUMBER	CONNECT TO
F17	Ignition coil No.5 (With power transistor)
F35	Ignition coil No.2 (With power transistor)
F36	Ignition coil No.4 (With power transistor)
F37	Ignition coil No.6 (With power transistor)
F212	Ignition coil No.1 (With power transistor)
F213	Ignition coil No.3 (With power transistor)
F23	Condenser
F44	A/T Assembly (Terminal No.5)
F44	A/T Assembly (Terminal No.10)

CKIM0206E

BODY HARNESS

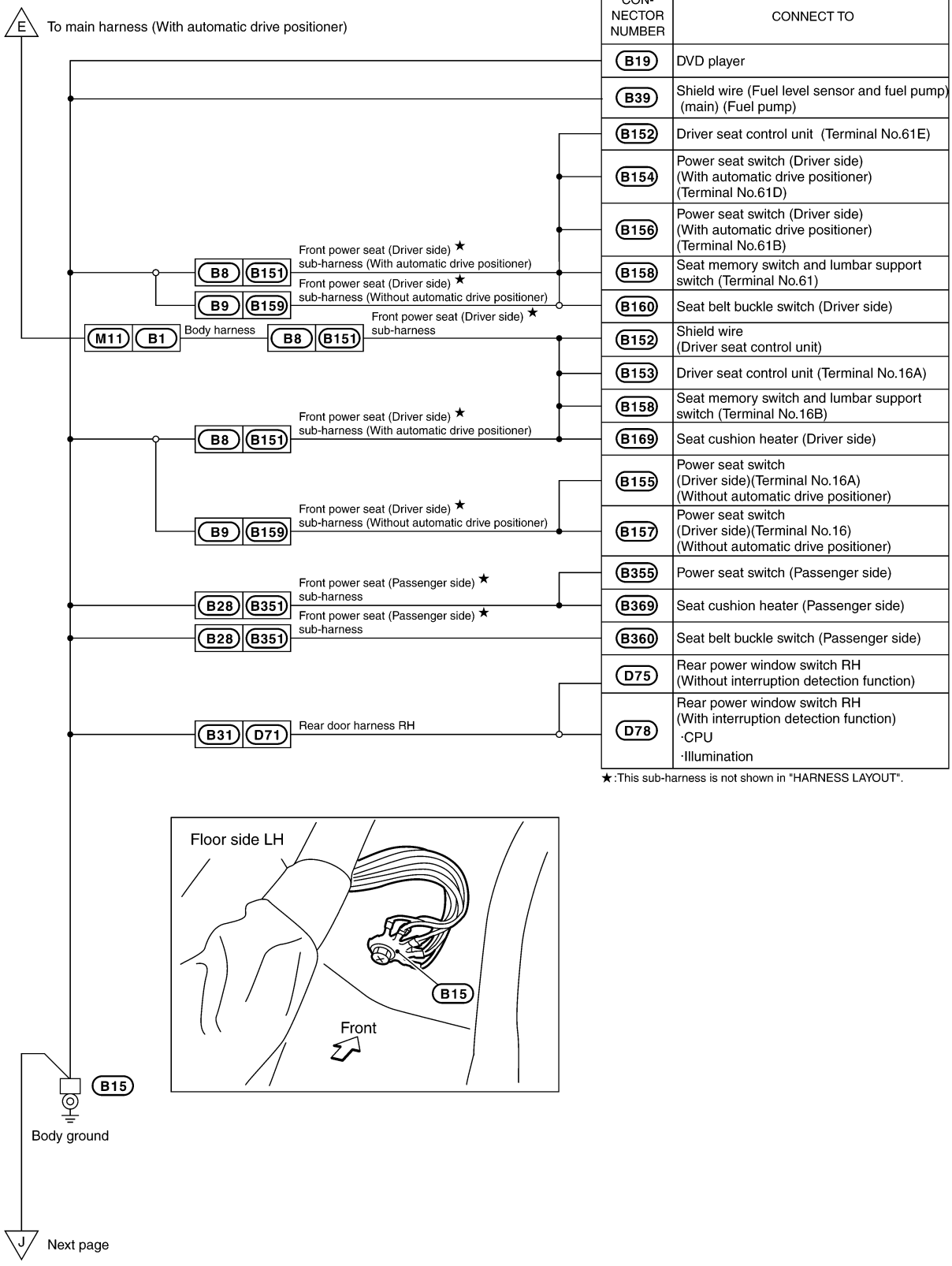

CON-NECTOR NUMBER	CONNECT TO
B19	DVD player
B39	Shield wire (Fuel level sensor and fuel pump) (main) (Fuel pump)
B152	Driver seat control unit (Terminal No.61E)
B154	Power seat switch (Driver side) (With automatic drive positioner) (Terminal No.61D)
B156	Power seat switch (Driver side) (With automatic drive positioner) (Terminal No.61B)
B158	Seat memory switch and lumbar support switch (Terminal No.61)
B160	Seat belt buckle switch (Driver side)
B152	Shield wire (Driver seat control unit)
B153	Driver seat control unit (Terminal No.16A)
B158	Seat memory switch and lumbar support switch (Terminal No.16B)
B169	Seat cushion heater (Driver side)
B155	Power seat switch (Driver side)(Terminal No.16A) (Without automatic drive positioner)
B157	Power seat switch (Driver side)(Terminal No.16) (Without automatic drive positioner)
B355	Power seat switch (Passenger side)
B369	Seat cushion heater (Passenger side)
B360	Seat belt buckle switch (Passenger side)
D75	Rear power window switch RH (Without interruption detection function)
D78	Rear power window switch RH (With interruption detection function) ·CPU ·Illumination

★:This sub-harness is not shown in "HARNESS LAYOUT".

CKIH0251E

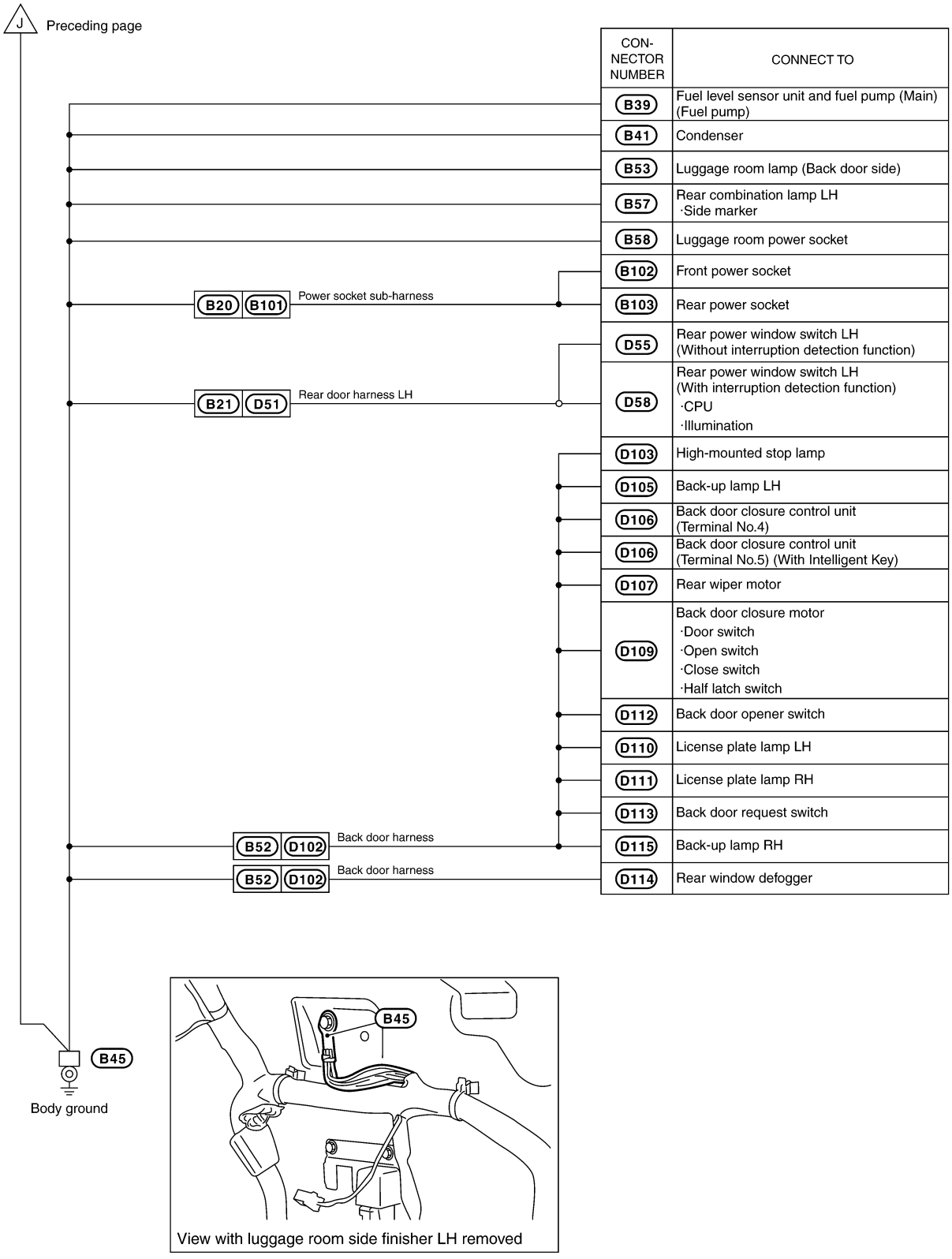

CON-NECTOR NUMBER	CONNECT TO
B39	Fuel level sensor unit and fuel pump (Main) (Fuel pump)
B41	Condenser
B53	Luggage room lamp (Back door side)
B57	Rear combination lamp LH ·Side marker
B58	Luggage room power socket
B102	Front power socket
B103	Rear power socket
D55	Rear power window switch LH (Without interruption detection function)
D58	Rear power window switch LH (With interruption detection function) ·CPU ·Illumination
D103	High-mounted stop lamp
D105	Back-up lamp LH
D106	Back door closure control unit (Terminal No.4)
D106	Back door closure control unit (Terminal No.5) (With Intelligent Key)
D107	Rear wiper motor
D109	Back door closure motor ·Door switch ·Open switch ·Close switch ·Half latch switch
D112	Back door opener switch
D110	License plate lamp LH
D111	License plate lamp RH
D113	Back door request switch
D115	Back-up lamp RH
D114	Rear window defogger

CKIH0252E

CON-NECTOR NUMBER	CONNECT TO
B17	Shield wire (Air bag diagnosis sensor unit) (Terminal No.44)

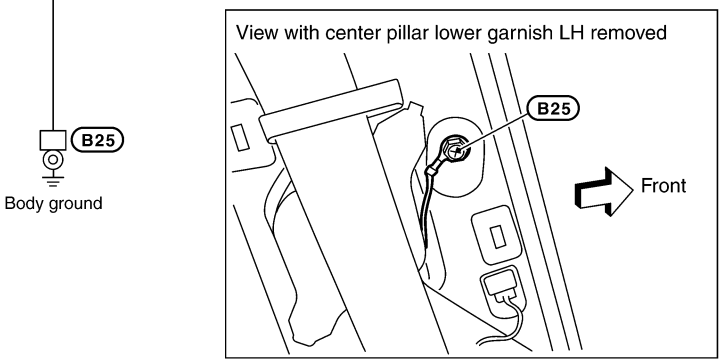

CON-NECTOR NUMBER	CONNECT TO
B18	Shield wire (Air bag diagnosis sensor unit) (Terminal No.40)

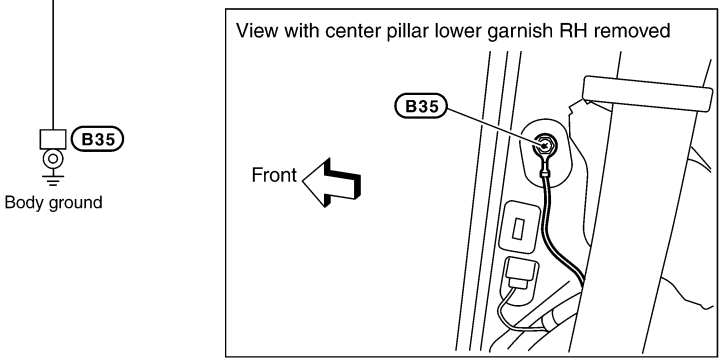

CKIM0209E

BODY NO.2 HARNESS

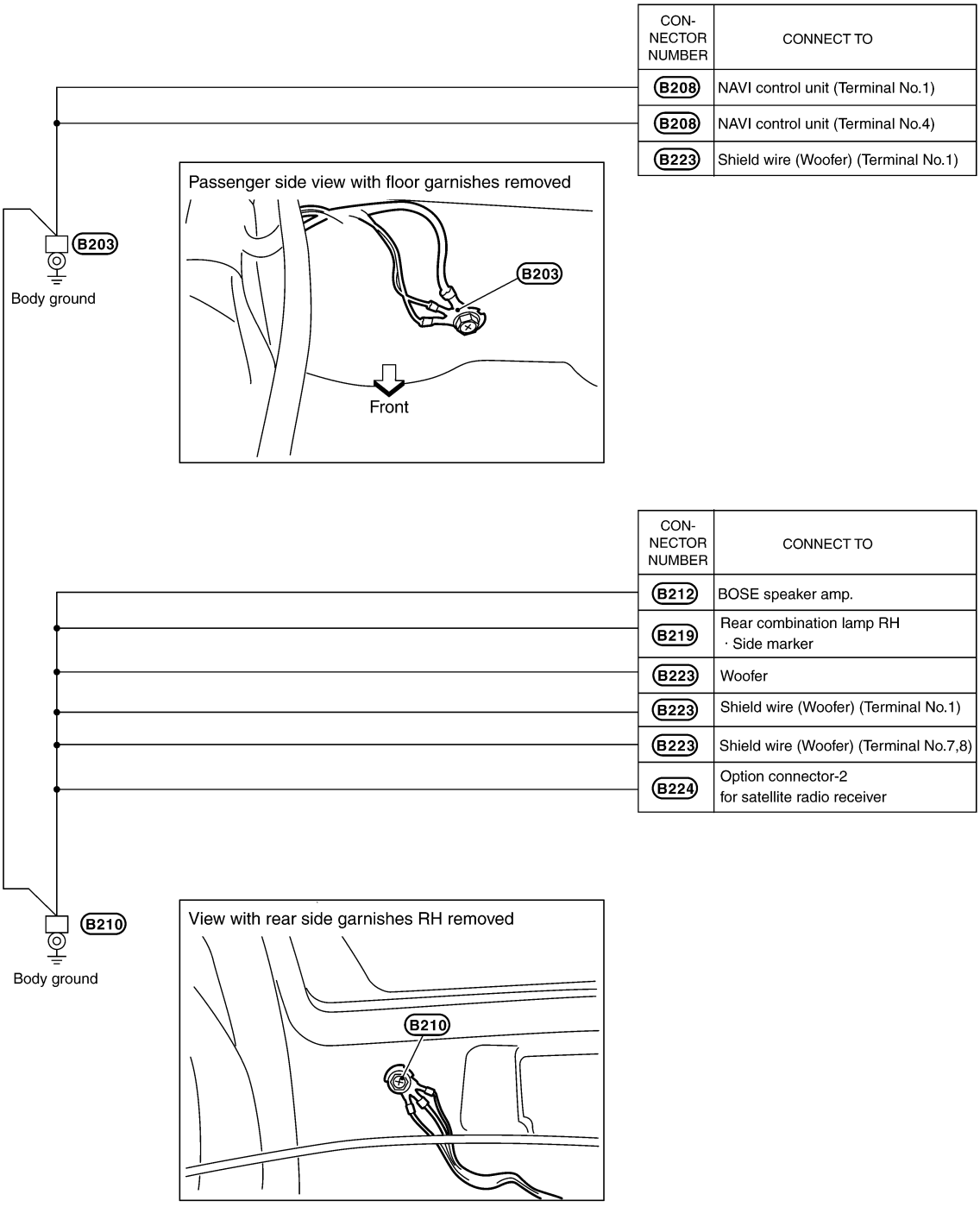

CON-NECTOR NUMBER	CONNECT TO
B208	NAVI control unit (Terminal No.1)
B208	NAVI control unit (Terminal No.4)
B223	Shield wire (Woofer) (Terminal No.1)

CON-NECTOR NUMBER	CONNECT TO
B212	BOSE speaker amp.
B219	Rear combination lamp RH · Side marker
B223	Woofer
B223	Shield wire (Woofer) (Terminal No.1)
B223	Shield wire (Woofer) (Terminal No.7,8)
B224	Option connector-2 for satellite radio receiver

CKIH0253E

ROOM LAMP HARNESS

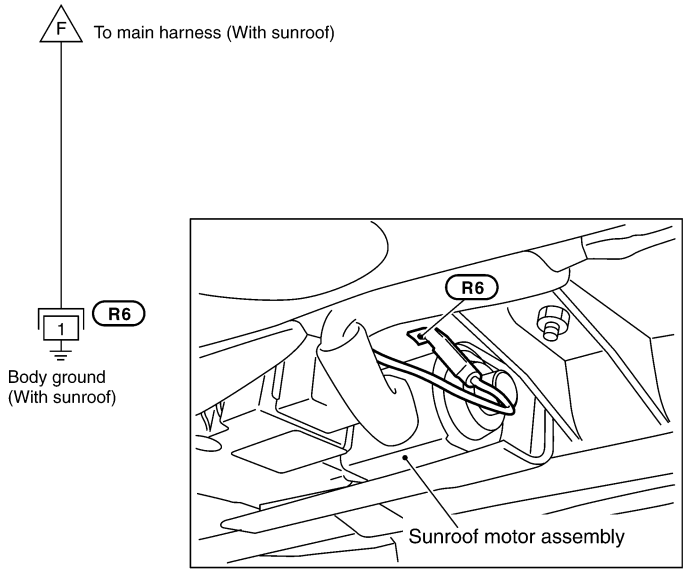

CKIM0211E

HARNESS

PFP:00011

Harness Layout

AKS007W0

HOW TO READ HARNESS LAYOUT

The following Harness Layouts use a map style grid to help locate connectors on the drawings:

- Main Harness
- Engine Room Harness (Engine Compartment)
- Engine Control Harness
- Body Harness

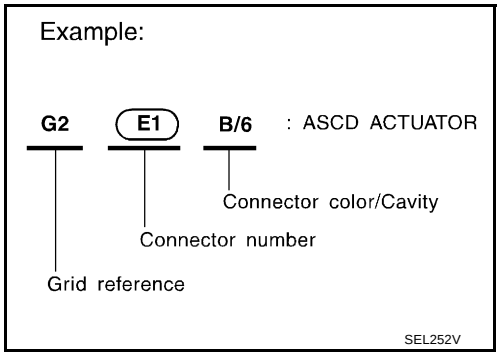

To use the grid reference

1. Find the desired connector number on the connector list.
2. Find the grid reference.
3. On the drawing, find the crossing of the grid reference letter column and number row.
4. Find the connector number in the crossing zone.
5. Follow the line (if used) to the connector.

CONNECTOR SYMBOL

Main symbols of connector (in Harness Layout) are indicated in the below.

Connector type	Water proof type		Standard type	
	Male	Female	Male	Female
• Cavity: Less than 4 • Relay connector				
• Cavity: From 5 to 8				
• Cavity: More than 9				
• Ground terminal etc.	—			

CKIT0108E

OUTLINE

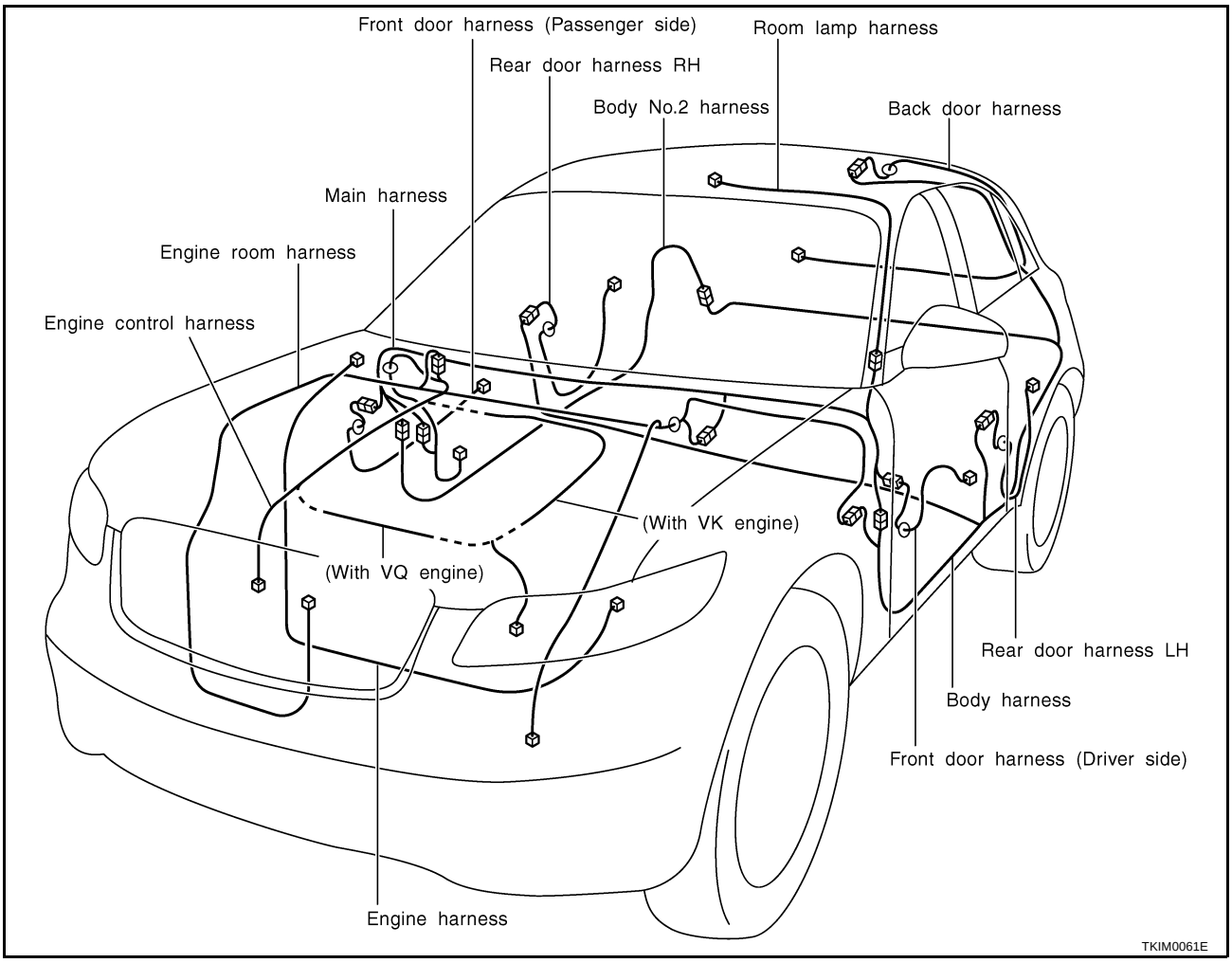
Front door harness (Passenger side)
Room lamp harness
Rear door harness RH
Body No.2 harness
Back door harness
Main harness
Engine room harness
Engine control harness
(With VK engine)
(With VQ engine)
Rear door harness LH
Body harness
Front door harness (Driver side)
Engine harness
TKIM0061E

MAIN HARNESS

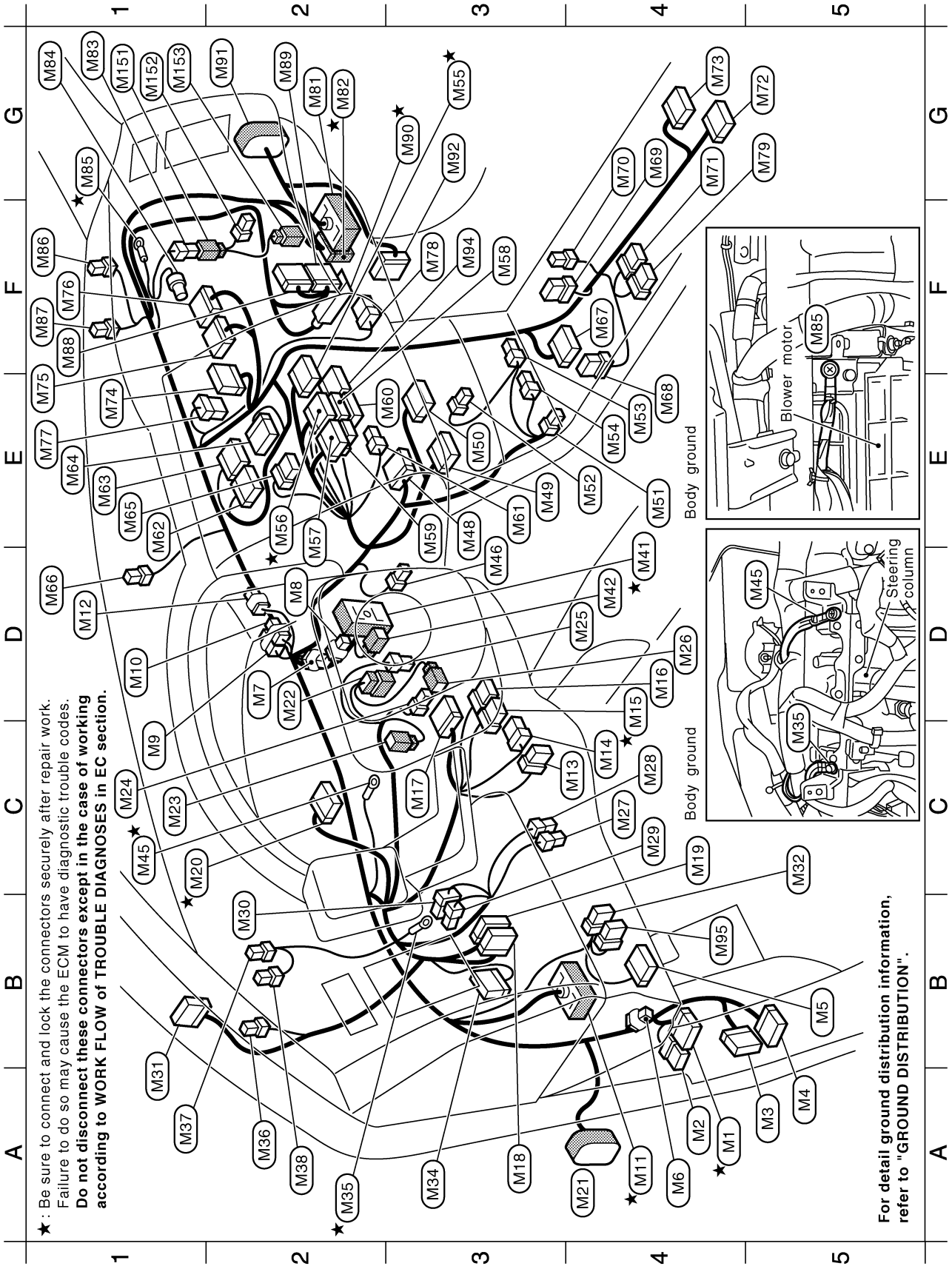

TKIH0001E

A4 ★	M1	W/16	:	Fuse block (J/B)
A4	M2	W/8	:	Fuse block (J/B)
A5	M3	W/40	:	BCM (Body control module)
A5	M4	B/15	:	BCM (Body control module)
B5	M5	W/16	:	Data link connector
A4	M6	W/2	:	Low tire pressure warning check switch
D2	M7	W/2	:	Diode
D2	M8	W/2	:	Diode
C1	M9	W/2	:	Diode
D1	M10	W/2	:	Diode
A4 ★	M11	SMJ	:	To B1
D1	M12	W/2	:	Diode
C4	M13	GY/6	:	ADP steering switch
C4	M14	W/8	:	Steering angle sensor
D4 ★	M15	GY/8	:	Combination switch (Spiral cable)
D4	M16	Y/6	:	Combination switch (Spiral cable)
C3	M17	W/16	:	Combination switch
A3	M18	W/12	:	Door mirror remote control switch (With automatic drive positioner)
C4	M19	W/10	:	Door mirror remote control switch (Without automatic drive positioner)
C1 ★	M20	W/24	:	Combination meter
A4	M21	SMJ	:	To D1
D2	M22	GY/6	:	Key switch and ignition knob switch (With Intelligent Key)
C1	M23	BR/2	:	Key switch (Without Intelligent Key)
C1	M24	W/2	:	Ignition keyhole illumination
D4	M25	W/4	:	NATS antenna amp.
D4	M26	W/4	:	Steering lock unit
C4	M27	W/4	:	Tilt motor and telescopic motor
C4	M28	W/4	:	Tilt sensor and telescopic sensor
C4	M29	W/2	:	Circuit breaker
B2	M30	B/5	:	Passenger side select unlock relay
A1	M31	W/10	:	To R1
C5	M32	GY/6	:	VDC off switch
A3	M34	W/40	:	Intelligent Key unit
A2 ★	M35	—	:	Body ground
A2	M36	BR/2	:	Instrument speaker LH
A1	M37	W/3	:	Optical sensor
A2	M38	BR/2	:	Security indicator lamp
D4 ★	M41	SMJ	:	To E211
D4	M42	Y/4	:	To E212
C1 ★	M45	—	:	Body ground
D3	M46	W/2	:	In vehicle sensor
E3	M48	W/16	:	Rear view camera control unit
E3	M49	W/32	:	Automatic drive positioner control unit
E3	M50	W/16	:	Automatic drive positioner control unit
E4	M51	W/4	:	Hazard switch
E4	M52	W/4	:	Clock
E4	M53	W/3	:	Front cigarette lighter socket
E4	M54	BR/2	:	A/T device (Illumination)
G3 ★	M55	GY/20	:	Unified meter and A/C amp.
E2 ★	M56	GY/16	:	Unified meter and A/C amp.
E2	M57	W/24	:	Unified meter and A/C amp.
F3	M58	W/10	:	Audio unit
E3	M59	W/6	:	Audio unit
E3	M60	W/16	:	Audio unit
E3	M61	BR/2	:	Antenna amp.
E1	M62	W/24	:	Display unit (Without NAVI)
E1	M63	W/24	:	Display (With NAVI)
E1	M64	W/16	:	A/C and AV switch
E1	M65	BR/8	:	Audio unit
D1	M66	BR/2	:	Instrument speaker center
F4	M67	W/10	:	A/T device
E4	M68	W/6	:	Heated seat switch (Driver side)
G4	M69	BR/6	:	Heated seat switch (Passenger side)
G4	M70	W/2	:	Inside key antenna-1 (Dashboard)
G4	M71	B/6	:	Yaw rate / Side / Decel G sensor (AWD models)
G5	M72	Y/28	:	Air bag diagnosis sensor unit
G4	M73	-/16	:	DVD player
E1	M74	W/24	:	Low tire pressure warning control unit
E1	M75	W/24	:	Display control unit (With NAVI)
F1	M76	W/32	:	Display control unit (With NAVI)
E1	M77	W/6	:	Heater and cooling unit (Via sub-harness)
F3	M78	W/6	:	Blower motor
G5	M79	B/6	:	Yaw rate / Side G sensor (2WD models)
G2	M81	SMJ	:	To B201
G2 ★	M82	SMJ	:	To F102

★: Be sure to connect and lock the connectors securely after repair work. Failure to do so may cause the ECM to have diagnostic trouble codes. **Do not disconnect these connectors except in the case of working according to WORK FLOW of TROUBLE DIAGNOSES in EC section.**

TKIH0002E

G1	M83	W/4	:	To M151
G1	M84	Y/4	:	Front passenger air bag module
G1★	M85	—	:	Body ground
F1	M86	BR/2	:	Instrument speaker RH
F1	M87	B/2	:	Sunload sensor
F1	M88	W/24	:	ICC unit
G2	M89	GY/24	:	ICC unit
G3★	M90	SMJ	:	ECM
G2	M91	SMJ	:	To D31
G3	M92	W/16	:	AWD control unit
F3	M94	W/12	:	Option connector-1 for audio unit
B4	M95	W/8	:	Snow mode switch

Glove box lamp sub-harness

G1	M151	W/4	:	To M83
G1	M152	W/2	:	Glove box lamp
G1	M153	W/2	:	Inside key antenna-2 (Dashboard)

★: Be sure to connect and lock the connectors securely after repair work. Failure to do so may cause the ECM to have diagnostic trouble codes. **Do not disconnect these connectors except in the case of working according to WORK FLOW of TROUBLE DIAGNOSES in EC section.**

Diode M7

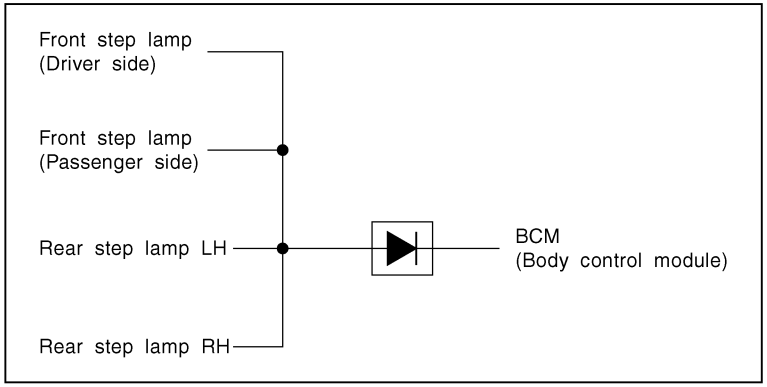

Diode M8

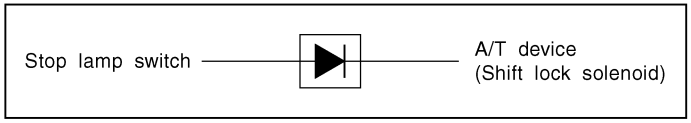

Diode M9, M10, M12

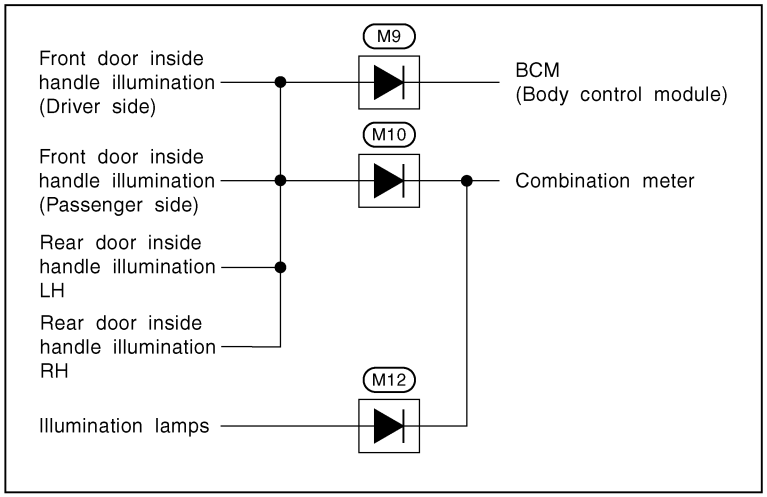

TKIH0003E

ENGINE ROOM HARNESS

Engine Compartment

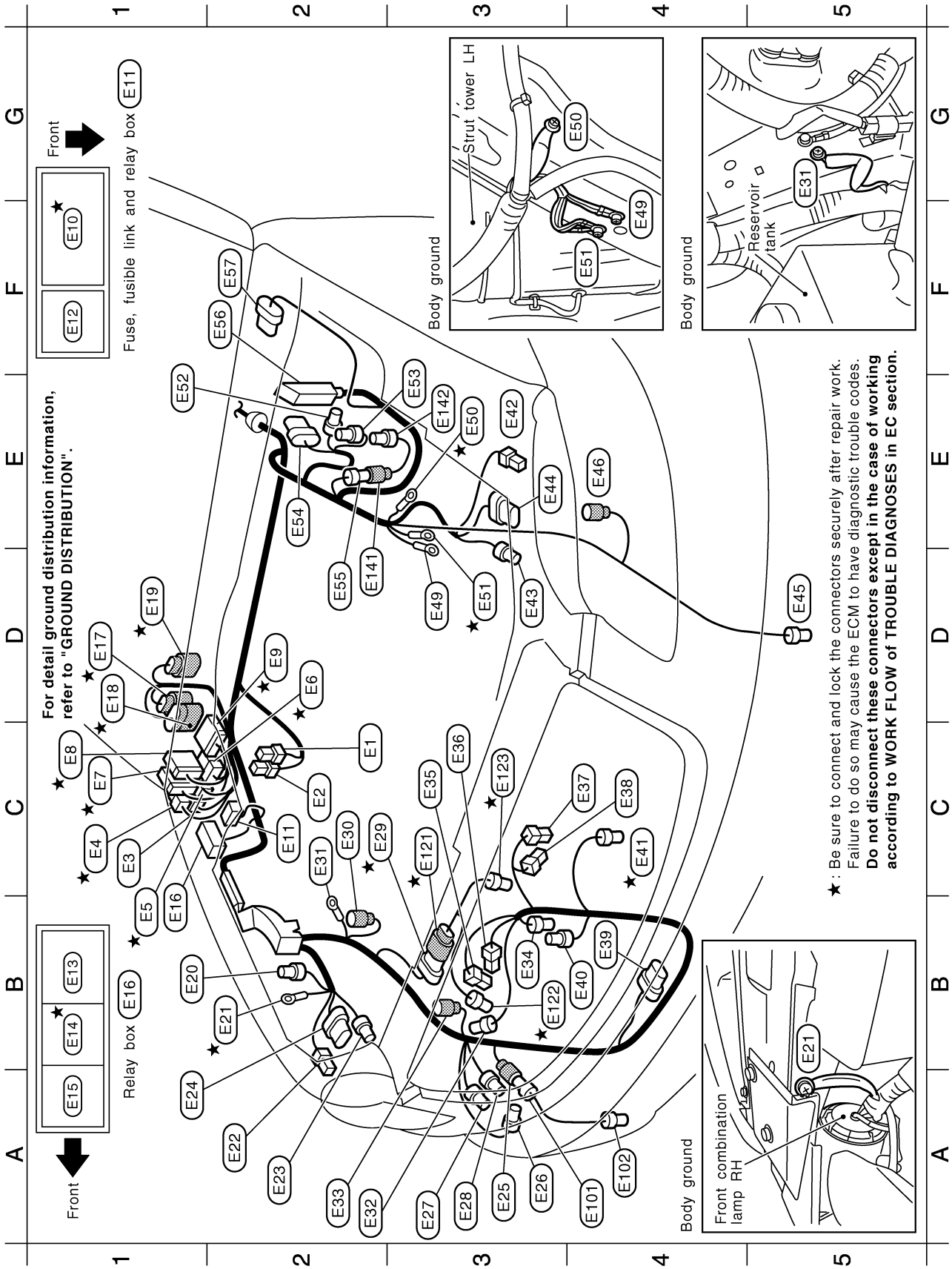

Engine room harness

C2	E1	B/2	:	Fusible link holder
C2	E2	GY/2	:	Fusible link holder
C1	E3	B/2	:	IPDM E/R (Intelligent power distribution module engine room)
C1 ★	E4	W/4	:	IPDM E/R (Intelligent power distribution module engine room)
B1 ★	E5	B/4	:	IPDM E/R (Intelligent power distribution module engine room)
D2 ★	E6	W/6	:	IPDM E/R (Intelligent power distribution module engine room)
C1 ★	E7	GY/16	:	IPDM E/R (Intelligent power distribution module engine room)
C1 ★	E8	W/12	:	IPDM E/R (Intelligent power distribution module engine room)
D2 ★	E9	W/16	:	IPDM E/R (Intelligent power distribution module engine room)
F1 ★	E10	—	:	Fuse and fusible link block
C2	E11	—	:	Fuse, fusible link and relay box
F1	E12	L/4	:	Accessory relay-2
B1	E13	BR/6	:	Rear window defogger relay
B1 ★	E14	GY/6	:	ICC brake hold relay
A1	E15	L/4	:	Daytime light relay
B1	E16	—	:	Relay box
D1 ★	E17	GY/6	:	To F47 (With VK engine)
D1 ★	E18	GY/9	:	To F48 (With VQ engine)
D1 ★	E19	B/8	:	To F49
B1	E20	GY/2	:	Hood switch
B2 ★	E21	—	:	Body ground
A2	E22	B/2	:	Front side marker lamp RH
A2	E23	GY/3	:	Clearance lamp RH
A1	E24	B/8	:	Front combination lamp RH
A3	E25	B/2	:	To E101
A3	E26	GY/2	:	Washer level sensor
A3	E27	BR/2	:	Rear washer motor
A3	E28	GY/2	:	Front washer motor
C2 ★	E29	B/8	:	To E121 (With VQ engine)
C2	E30	GY/1	:	To E303
C2	E31	—	:	Body ground
A2	E32	B/3	:	Refrigerant pressure sensor
A2	E33	GY/2	:	Front wheel sensor RH
B3	E34	B/2	:	Ambient sensor
C3	E35	B/1	:	Horn low
C3	E36	B/1	:	Horn low
C4	E37	B/1	:	Horn high
C4	E38	B/1	:	Horn high
B4	E39	GY/6	:	ICC sensor
B4	E40	Y/2	:	Crash zone sensor
C4 ★	E41	GY/4	:	Cooling fan motor (With VK engine)
E3	E42	B/2	:	Front side marker lamp LH
D3	E43	GY/3	:	Clearance lamp LH
E3	E44	B/8	:	Front combination lamp LH
D5	E45	BR/2	:	Front fog lamp LH
E4	E46	GY/2	:	Front wheel sensor LH
D3	E49	—	:	Body ground
E3 ★	E50	—	:	Body ground
D3 ★	E51	—	:	Body ground
E1	E52	GY/2	:	Brake fluid level switch
E3	E53	B/3	:	Pressure sensor
E2	E54	GY/6	:	Brake booster
D2	E55	BR/3	:	To E141
F2	E56	SMJ	:	ABS actuator and electric unit (Control unit)
F2	E57	GY/5	:	Front wiper motor

Front fog lamp RH sub-harness

A4	E101	B/2	:	To E25
A4	E102	BR/2	:	Front fog lamp RH

Cooling fan sub-harness (With VQ engine)

C3 ★	E121	DGY/8	:	To E29
B3 ★	E122	GY/4	:	Cooling fan motor-1
C3 ★	E123	GY/4	:	Cooling fan motor-2

ICC sub-harness

D2	E141	BR/3	:	To E55
E3	E142	B/3	:	Brake pressure sensor

★: Be sure to connect and lock the connectors securely after repair work. Failure to do so may cause the ECM to have diagnostic trouble codes. **Do not disconnect these connectors except in the case of working according to WORK FLOW of TROUBLE DIAGNOSES in EC section.**

TKIH0005E

Passenger Compartment

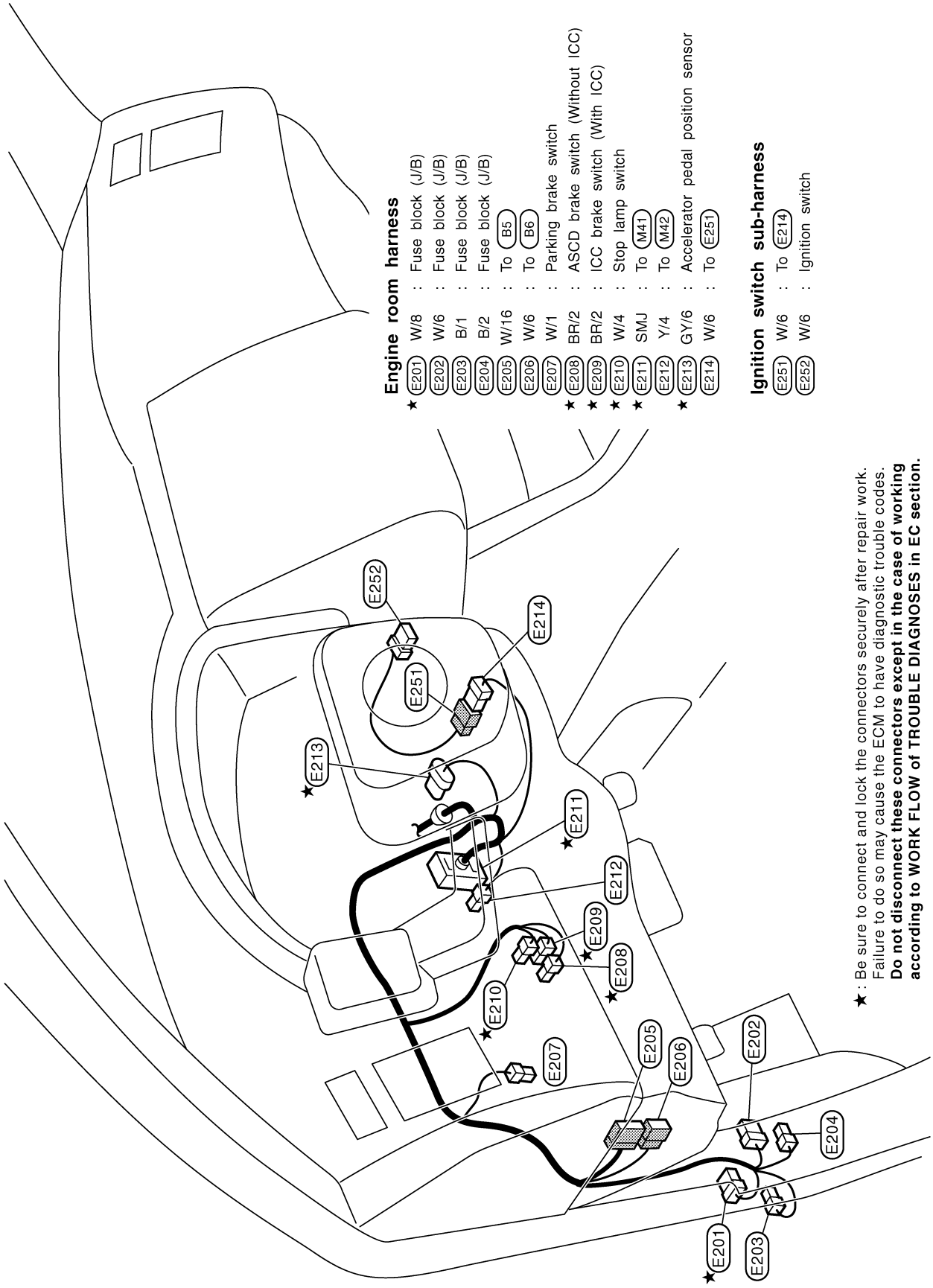

TKIM0162E

ENGINE HARNESS/VK ENGINE MODELS

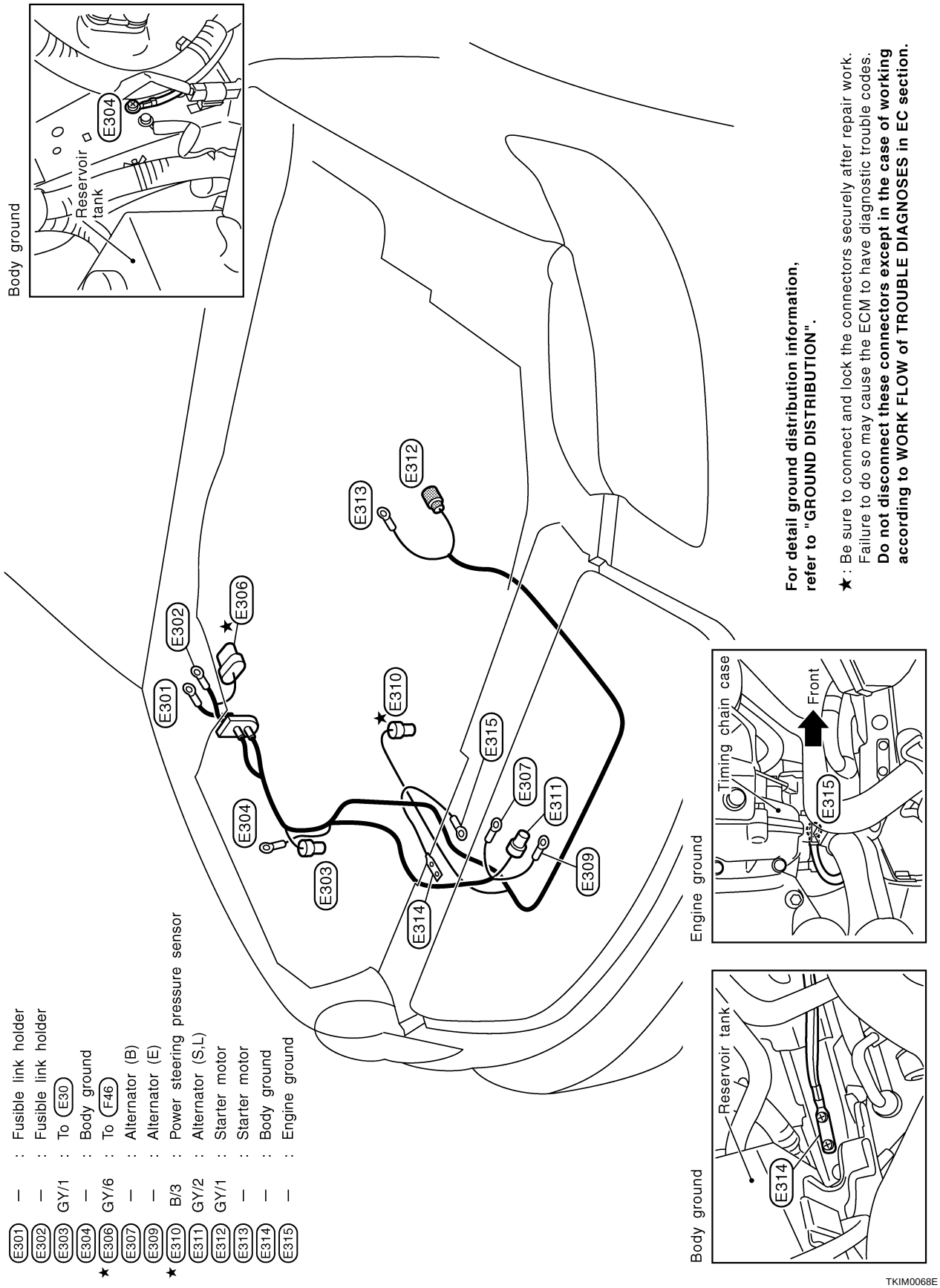

ENGINE HARNESS/VQ ENGINE MODELS

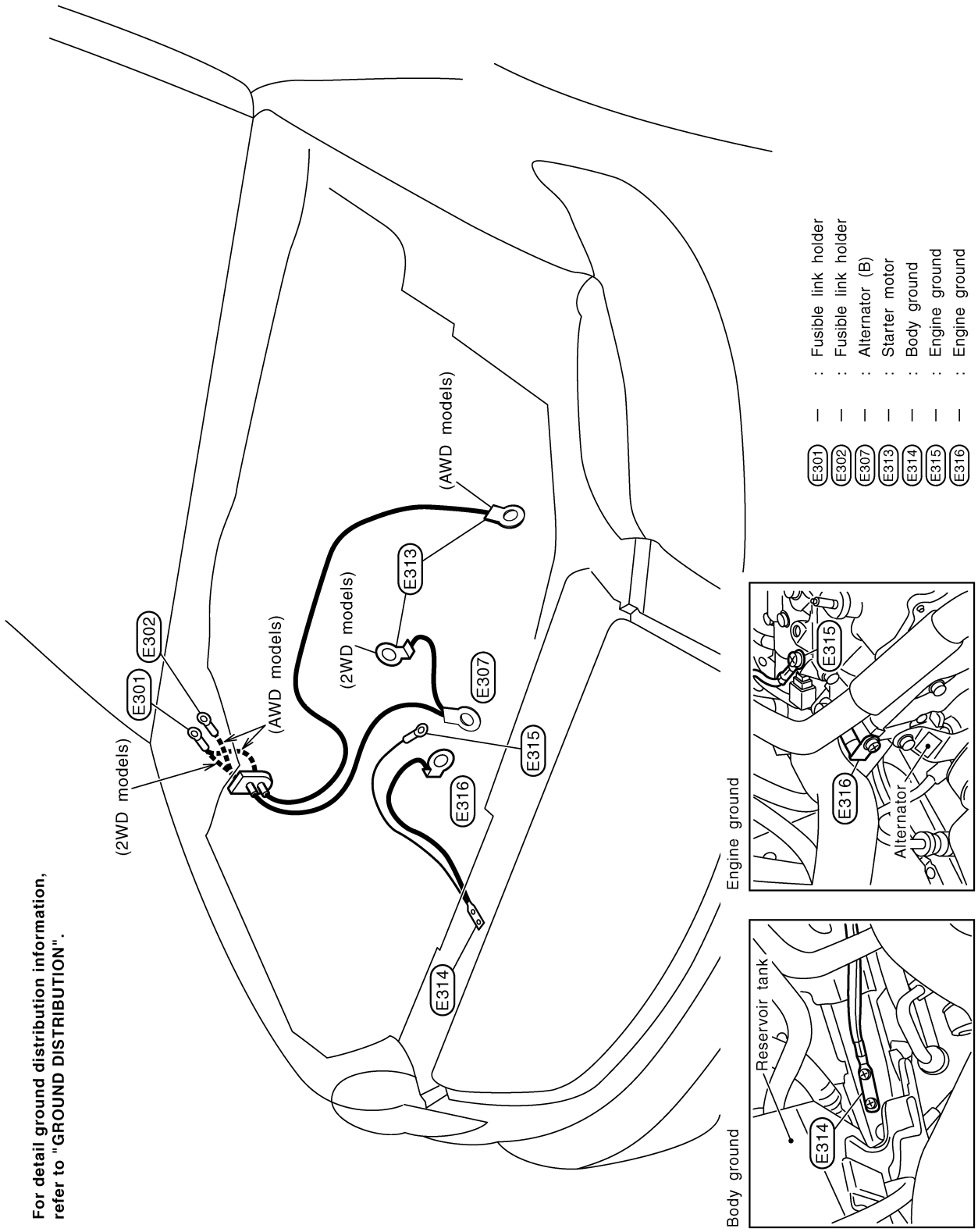

TKIM0069E

ENGINE CONTROL HARNESS/VK ENGINE MODELS

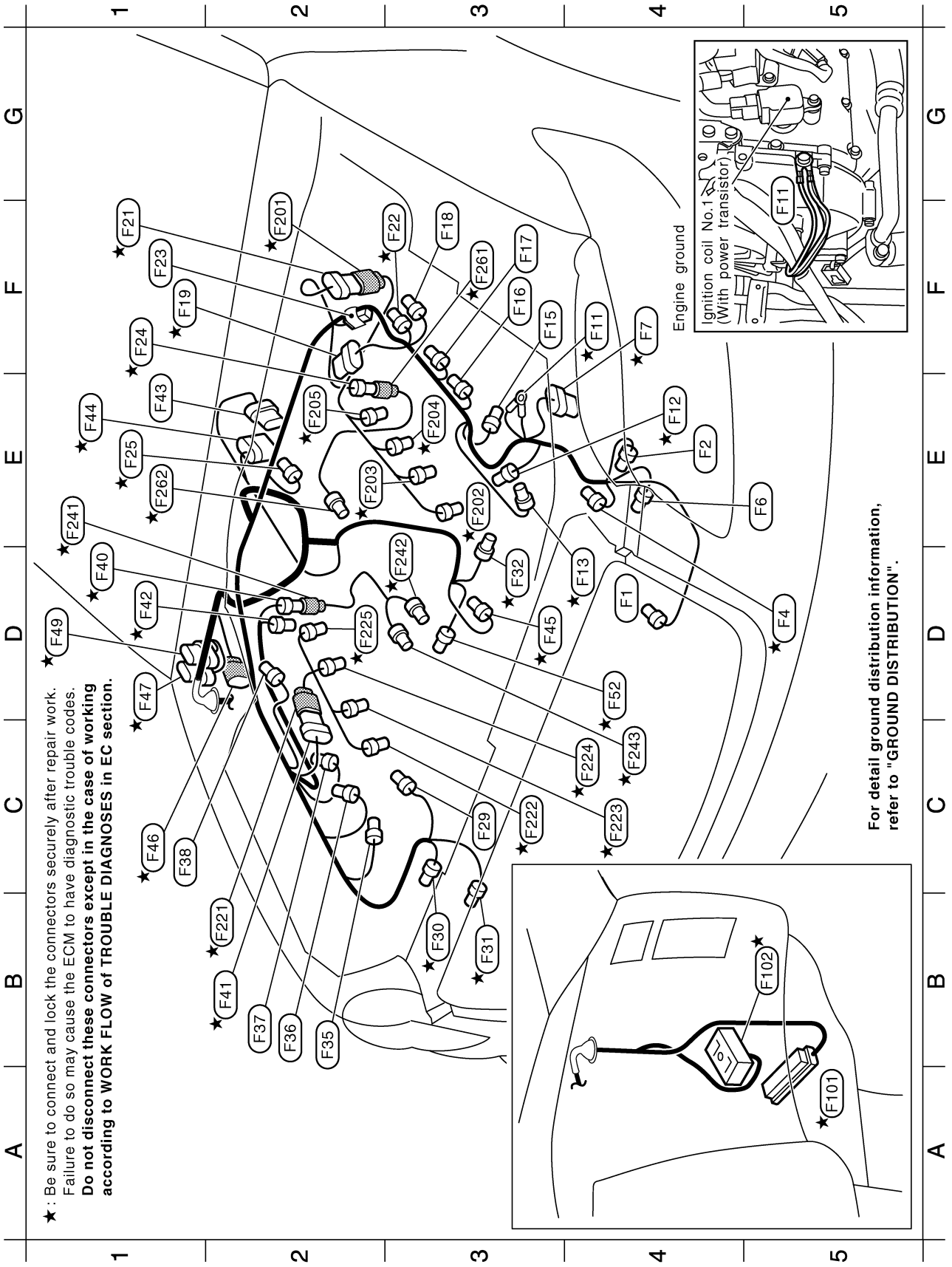

TKIM0163E

Engine control harness

D4	F1	GY/1	:	Oil pressure switch
E4	F2	B/1	:	Compressor (Magnet clutch)
D5 ★	F4	B/3	:	Camshaft position sensor (PHASE)
E5	F6	B/2	:	Compressor (ECV solenoid valve)
F4 ★	F7	GY/5	:	Mass air flow sensor
F4 ★	F11	—	:	Engine ground
E4 ★	F12	B/3	:	Intake valve timing control position sensor (Bank 1)
D4 ★	F13	LGY/2	:	Intake valve timing control solenoid valve (Bank 1)
F3	F15	GY/3	:	Ignition coil No.1 (With power transistor)
F3	F16	GY/3	:	Ignition coil No.3 (With power transistor)
F3	F17	GY/3	:	Ignition coil No.5 (With power transistor)
F3	F18	GY/3	:	Ignition coil No.7 (With power transistor)
F1 ★	F19	DGY/6	:	Electric throttle control actuator
F1 ★	F21	DGY/6	:	To F201
F3 ★	F22	GY/4	:	Heated oxygen sensor 1 (Bank 1)
F1	F23	W/2	:	Condenser
F1 ★	F24	B/2	:	To F261
E1 ★	F25	LGY/2	:	EVAP canister purge volume control solenoid valve
C3	F29	B/2	:	VIAS control solenoid valve
B3 ★	F30	B/3	:	Intake valve timing control position sensor (Bank 2)
B3 ★	F31	LGY/2	:	Intake valve timing control solenoid valve (Bank 2)
D3 ★	F32	GY/4	:	Heated oxygen sensor 2 (Bank 1)
B2	F35	GY/3	:	Ignition coil No.2 (With power transistor)
B2	F36	GY/3	:	Ignition coil No.4 (With power transistor)
B2	F37	GY/3	:	Ignition coil No.6 (With power transistor)
C1	F38	GY/3	:	Ignition coil No.8 (With power transistor)
D1 ★	F40	B/4	:	To F241
B2 ★	F41	DGY/6	:	To F221
D1 ★	F42	GY/4	:	Heated oxygen sensor 1 (Bank 2)
E1	F43	B/8	:	Transfer assembly
E1 ★	F44	DGY/10	:	A/T assembly
D3 ★	F45	B/3	:	Crankshaft position sensor (POS)
C1 ★	F46	GY/6	:	To E306
D1 ★	F47	GY/6	:	To E17
D1 ★	F49	B/8	:	To E19
D4 ★	F52	B/4	:	Heated oxygen sensor 2 (Bank 2)
A5 ★	F101	SMJ	:	ECM
B5 ★	F102	SMJ	:	To M82

Engine control sub-harness-1

F2 ★	F201	G/6	:	To F21
E3 ★	F202	GY/2	:	Injector No.1
E2 ★	F203	GY/2	:	Injector No.3
E3 ★	F204	GY/2	:	Injector No.5
E2 ★	F205	GY/2	:	Injector No.7

Engine control sub-harness-2

B2 ★	F221	G/6	:	To F41
C3 ★	F222	GY/2	:	Injector No.2
C4 ★	F223	GY/2	:	Injector No.4
C4 ★	F224	GY/2	:	Injector No.6
D2 ★	F225	GY/2	:	Injector No.8

Engine control sub-harness-3

E1 ★	F241	B/4	:	To F40
D3 ★	F242	L/2	:	Knock sensor (Bank 1)
C4 ★	F243	L/2	:	Knock sensor (Bank 2)

Engine control sub-harness-4

F3 ★	F261	SB/2	:	To F24
E1 ★	F262	GY/2	:	Engine coolant temperature sensor

★: Be sure to connect and lock the connectors securely after repair work. Failure to do so may cause the ECM to have diagnostic trouble codes. **Do not disconnect these connectors except in the case of working according to WORK FLOW of TROUBLE DIAGNOSES in EC section.**

TKIM0164E

ENGINE CONTROL HARNESS/VQ ENGINE MODELS

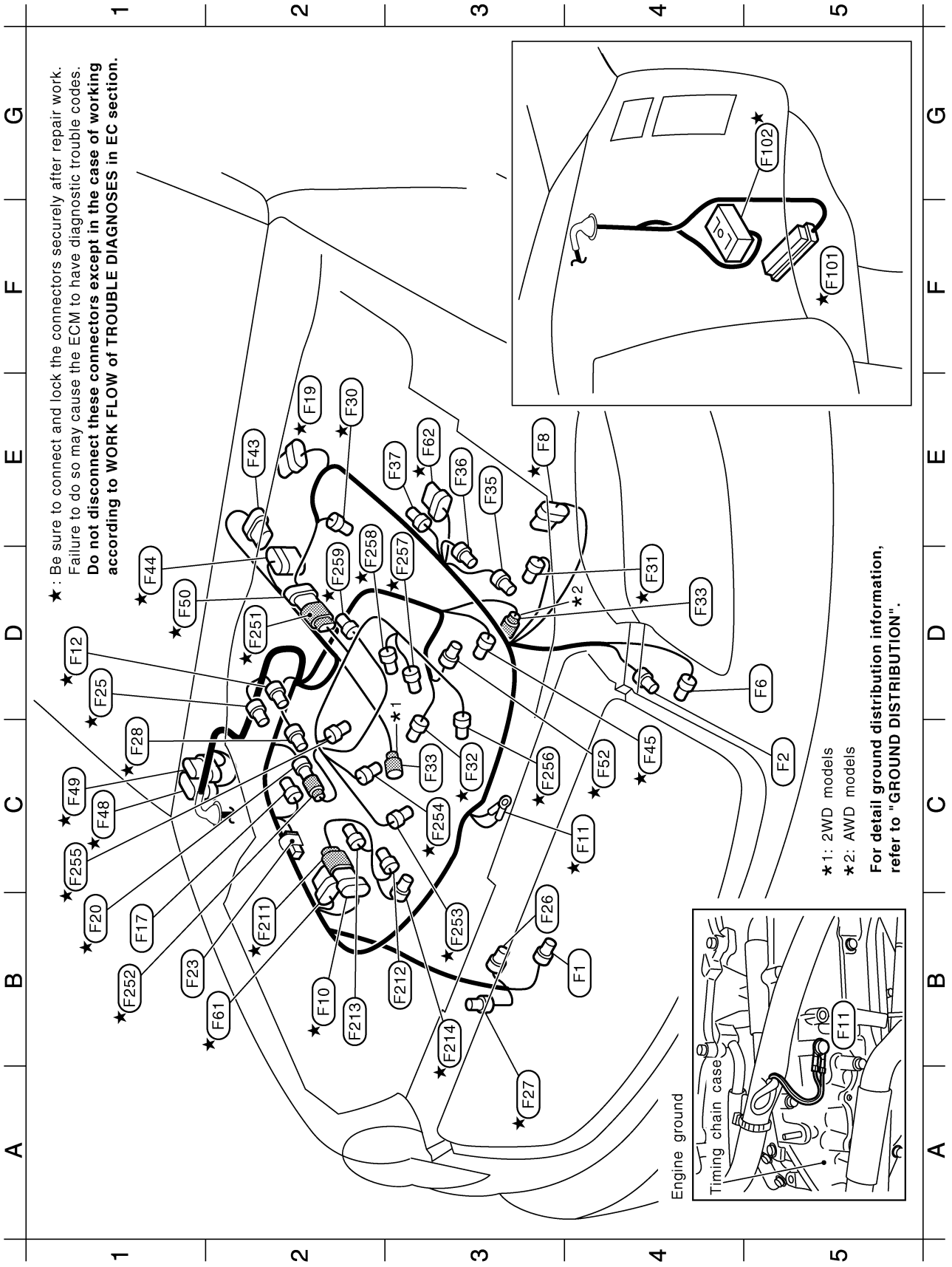

Engine control harness

B4	F1	GY/1	:	Oil pressure switch
C5	F2	B/1	:	Compressor (Magnet clutch)
D5	F6	B/2	:	Compressor (ECV solenoid valve)
E3 ★	F8	B/6	:	Mass air flow sensor
B2 ★	F10	B/6	:	To F211
C4 ★	F11	—	:	Engine ground
D1 ★	F12	GY/3	:	Camshaft position sensor (PHASE) (Bank 1)
B1	F17	GY/3	:	Ignition coil No.5 (With power transistor)
E2 ★	F19	DGY/6	:	Electric throttle control actuator
B1 ★	F20	B/2	:	To F252
B1	F23	W/2	:	Condenser
D1 ★	F25	LGY/2	:	EVAP canister purge volume control solenoid valve
B3	F26	GY/2	:	Alternator
A3 ★	F27	B/3	:	Power steering pressure sensor
C1 ★	F28	GY/2	:	Engine coolant temperature sensor
E2 ★	F30	B/3	:	Camshaft position sensor (PHASE) (Bank 2)
D4 ★	F31	LGY/2	:	Intake valve timing control solenoid valve (Bank 2)
C3 ★	F32	B/4	:	Heated oxygen sensor 2 (Bank 1)
C3,D4	F33	GY/1	:	Starter motor
E3	F35	GY/3	:	Ignition coil No.2 (With power transistor)
E3	F36	GY/3	:	Ignition coil No.4 (With power transistor)
E3	F37	GY/3	:	Ignition coil No.6 (With power transistor)
E2	F43	B/8	:	Transfer assembly
D1 ★	F44	DGY/10	:	A/T assembly
C4 ★	F45	B/3	:	Crankshaft position sensor (POS)
C1 ★	F48	GY/9	:	To E18
C1 ★	F49	B/8	:	To E19
D1 ★	F50	G/8	:	To F251
C4 ★	F52	GY/4	:	Heated oxygen sensor 2 (Bank 2)
B2 ★	F61	B/6	:	Air fuel ratio (A/F) sensor 1 (Bank 1)
E3 ★	F62	B/6	:	Air fuel ratio (A/F) sensor 1 (Bank 2)
F5 ★	F101	SMJ	:	ECM
G5 ★	F102	SMJ	:	To M82

Engine control sub-harness-1

B2 ★	F211	L/6	:	To F10
B3	F212	GY/3	:	Ignition coil No.1 (With power transistor)
B2	F213	GY/3	:	Ignition coil No.3 (With power transistor)
B3 ★	F214	G/2	:	Intake valve timing control solenoid valve (Bank 1)

Engine control sub-harness-2

D2 ★	F251	G/8	:	To F50
B1 ★	F252	SB/2	:	To F20
B3 ★	F253	GY/2	:	Injector No.1
C3 ★	F254	GY/2	:	Injector No.3
C1 ★	F255	GY/2	:	Injector No.5
C3 ★	F256	GY/2	:	Injector No.2
D3 ★	F257	GY/2	:	Injector No.4
D2 ★	F258	GY/2	:	Injector No.6
D2 ★	F259	L/2	:	Knock sensor

★: Be sure to connect and lock the connectors securely after repair work. Failure to do so may cause the ECM to have diagnostic trouble codes. **Do not disconnect these connectors except in the case of working according to WORK FLOW of TROUBLE DIAGNOSES in EC section.**

TKIM0166E

BODY HARNESS

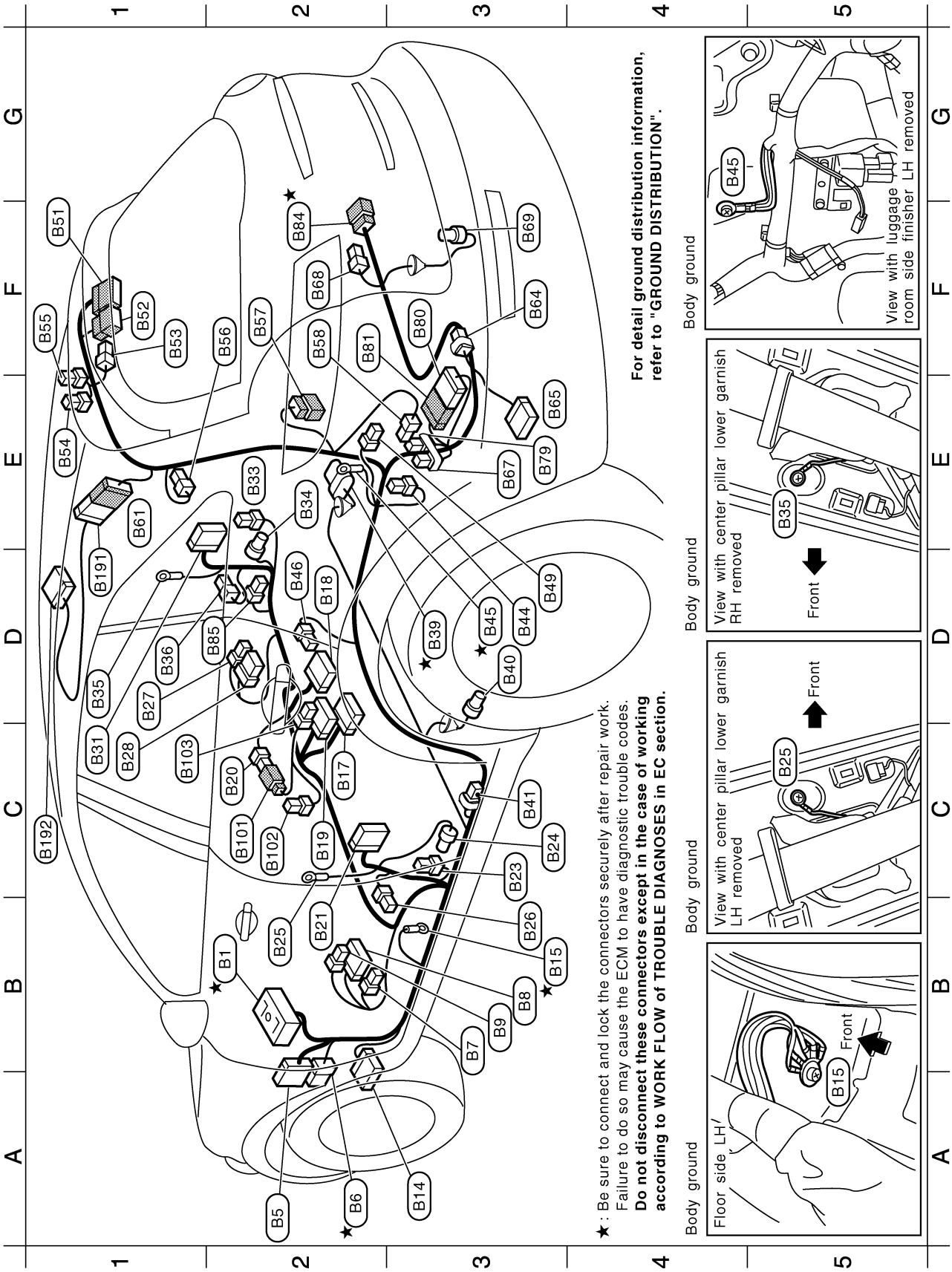

Body harness

B2 ★	B1	SMJ	:	To M11
A2	B5	W/16	:	To E205
A2 ★	B6	W/6	:	To E206
B3	B7	Y/2	:	Front LH side air bag module
B3	B8	W/16	:	Front power seat (Driver side) (With automatic drive positioner)
B3	B9	W/4	:	Front power seat (Driver side) (Without automatic drive positioner)
A3	B14	W/15	:	BCM (Body control module)
B3 ★	B15	—	:	Body ground
C2	B17	Y/12	:	Air bag diagnosis sensor unit
D2	B18	Y/12	:	Air bag diagnosis sensor unit
C2	B19	-/16	:	DVD player
C2	B20	W/3	:	To B101
B2	B21	W/18	:	To D51
C3	B23	Y/2	:	Front LH seat belt pre-tensioner
C3	B24	Y/2	:	LH side air bag (Satellite) sensor
B2	B25	—	:	Body ground
B3	B26	W/3	:	Front door switch (Driver side)
D1	B27	Y/2	:	Front RH side air bag module
C1	B28	W/6	:	Front power seat (Passenger side)
C1	B31	W/18	:	To D71
E2	B33	Y/2	:	Front RH seat belt pre-tensioner
E2	B34	Y/2	:	RH side air bag (Satellite) sensor
D1	B35	—	:	Body ground
D1	B36	W/3	:	Front door switch (Passenger side)
D3 ★	B39	GY/5	:	Fuel level sensor unit and fuel pump (Main)
D3	B40	GY/2	:	Fuel level sensor unit (Sub)
C3	B41	W/2	:	Condenser
D3	B44	W/4	:	Back-up lamp relay
D3 ★	B45	—	:	Body ground
D2	B46	W/3	:	Rear door switch LH
D3	B49	W/3	:	Luggage room lamp (Body side)
F1	B51	W/16	:	To D101
F1	B52	W/6	:	To D102
F1	B53	W/3	:	Luggage room lamp (Back door side)
E1	B54	OR/2	:	LH side curtain air bag module
F1	B55	Y/2	:	RH side curtain air bag module
F2	B56	BR/2	:	Tweeter LH
F2	B57	W/4	:	Rear combination lamp LH
F2	B58	B/2	:	Luggage room power socket
E1	B61	W/16	:	To B191 (With DVD player)
F3	B64	GY/1	:	Not used
E3	B65	W/12	:	Rear combination lamp control unit
E3	B67	W/2	:	Diode
F2	B68	BR/2	:	Inside key antenna-3 (Luggage room)
F3	B69	SB/4	:	Rear wheel sensor
E3	B79	W/2	:	Diode
F3	B80	W/12	:	To B81
F2	B81	W/12	:	To B80
F2 ★	B84	GY/6	:	To B216
D2	B85	W/4	:	To B217

Diode B67 , B79

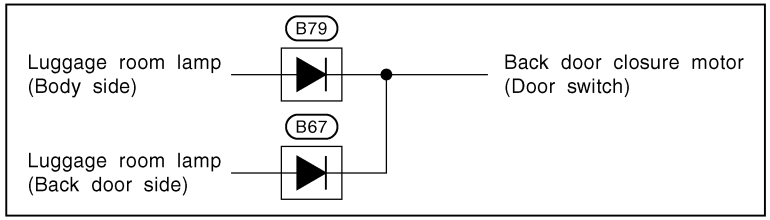

Power socket sub-harness

C2	B101	W/3	:	To B20
C2	B102	B/2	:	Front power socket
C1	B103	B/2	:	Rear power socket

DVD display sub-harness (With DVD player)

D1	B191	W/16	:	To B61
C1	B192	-/16	:	DVD display

★ : Be sure to connect and lock the connectors securely after repair work. Failure to do so may cause the ECM to have diagnostic trouble codes. **Do not disconnect these connectors except in the case of working according to WORK FLOW of TROUBLE DIAGNOSES in EC section.**

TKIM0168E

BODY NO.2 HARNESS

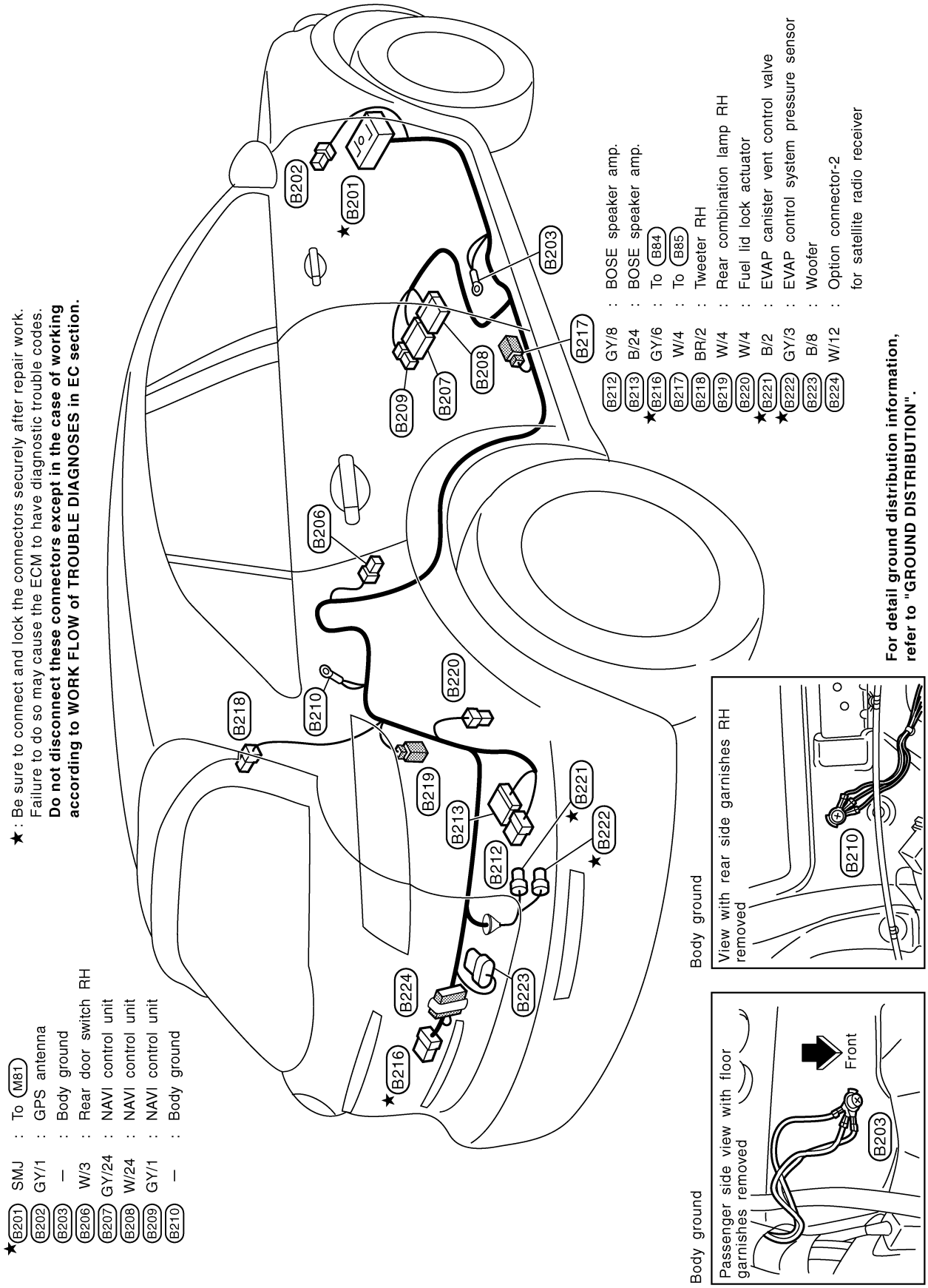

TKIM0169E

ROOM LAMP HARNESS

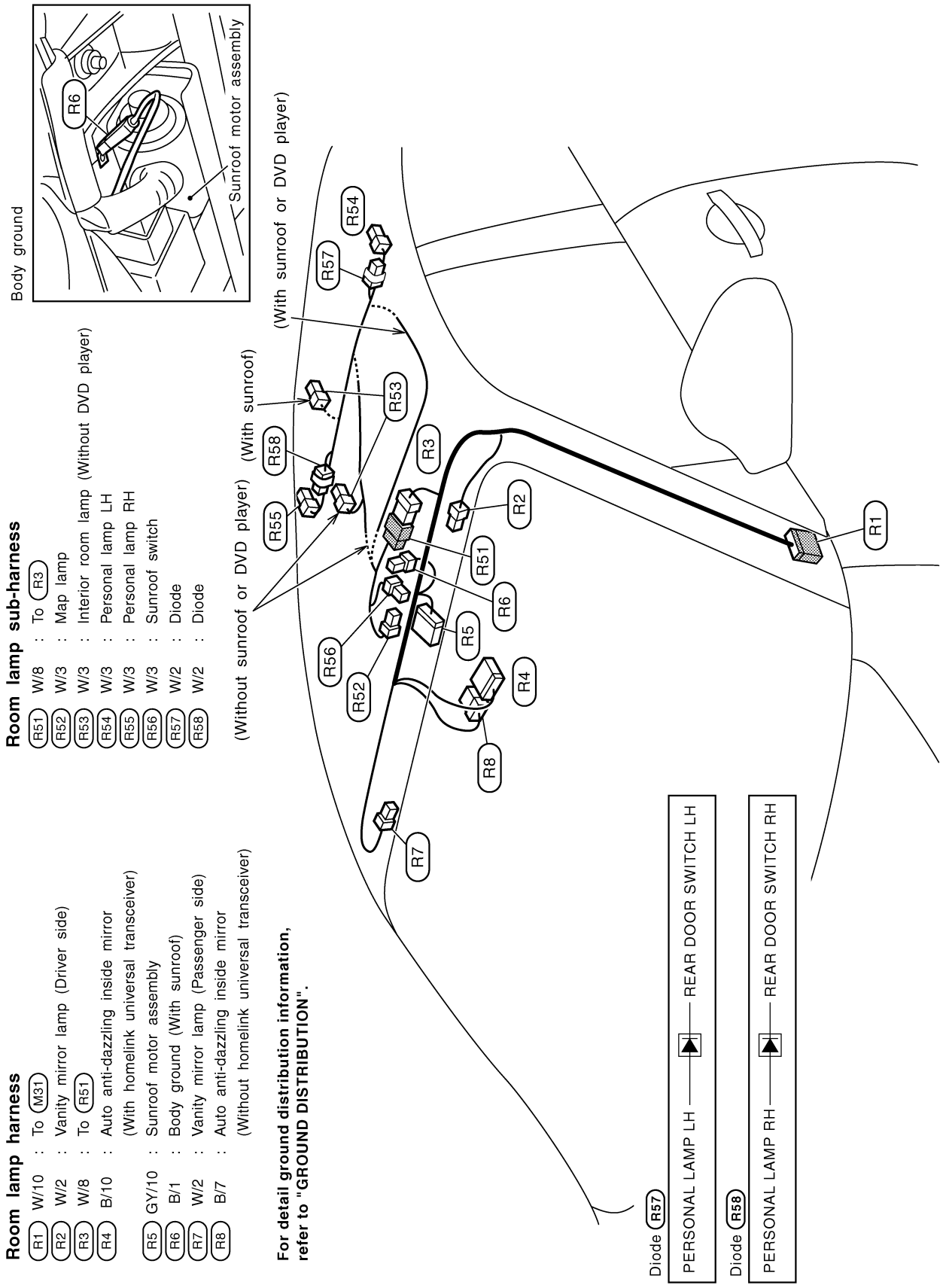

Room lamp harness

R1	W/10	:	To M31
R2	W/2	:	Vanity mirror lamp (Driver side)
R3	W/8	:	To R51
R4	B/10	:	Auto anti-dazzling inside mirror (With homelink universal transceiver)
R5	GY/10	:	Sunroof motor assembly
R6	B/1	:	Body ground (With sunroof)
R7	W/2	:	Vanity mirror lamp (Passenger side)
R8	B/7	:	Auto anti-dazzling inside mirror (Without homelink universal transceiver)

Room lamp sub-harness

R51	W/8	:	To R3
R52	W/3	:	Map lamp
R53	W/3	:	Interior room lamp (Without DVD player)
R54	W/3	:	Personal lamp LH
R55	W/3	:	Personal lamp RH
R56	W/3	:	Sunroof switch
R57	W/2	:	Diode
R58	W/2	:	Diode

For detail ground distribution information, refer to "GROUND DISTRIBUTION".

TKIM0108E

FRONT DOOR HARNESS

LH Side

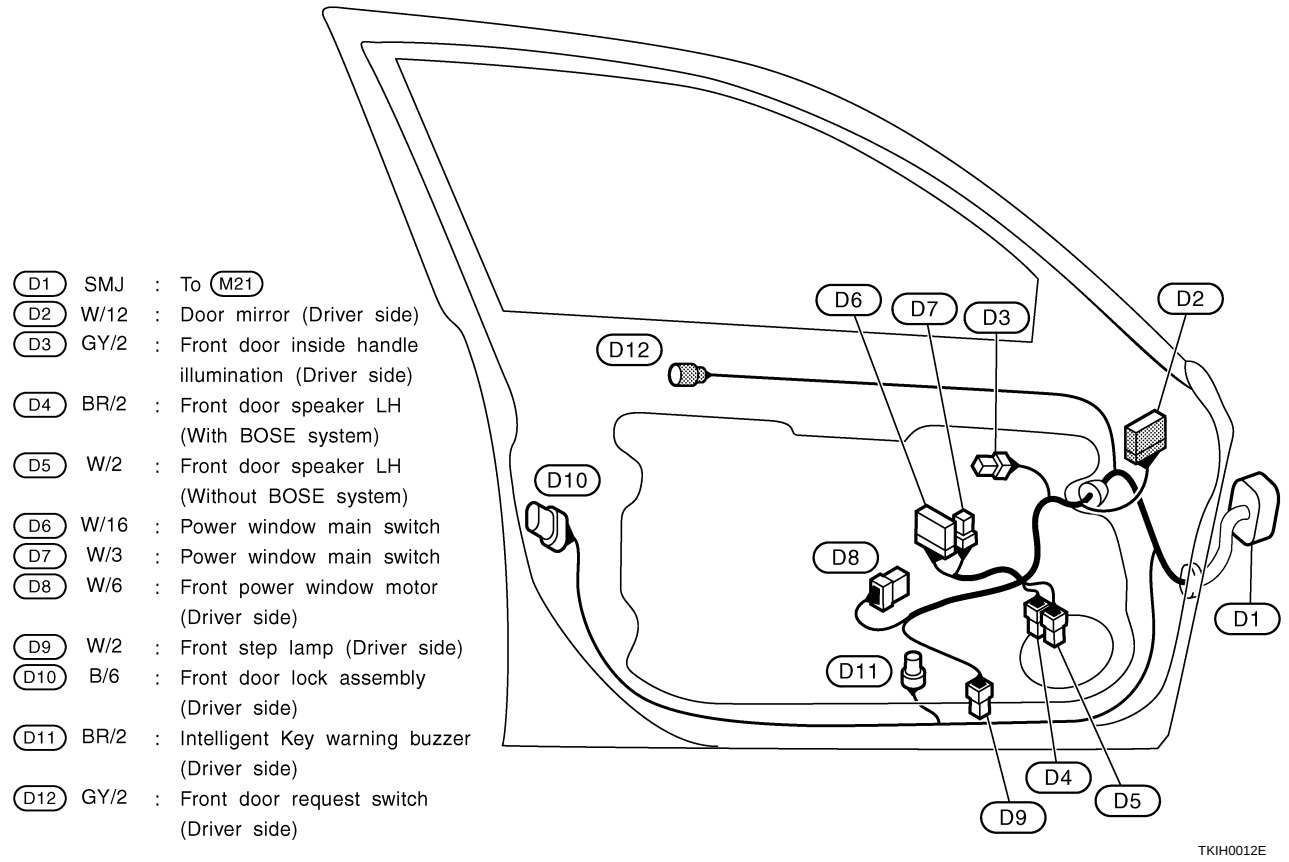

RH Side

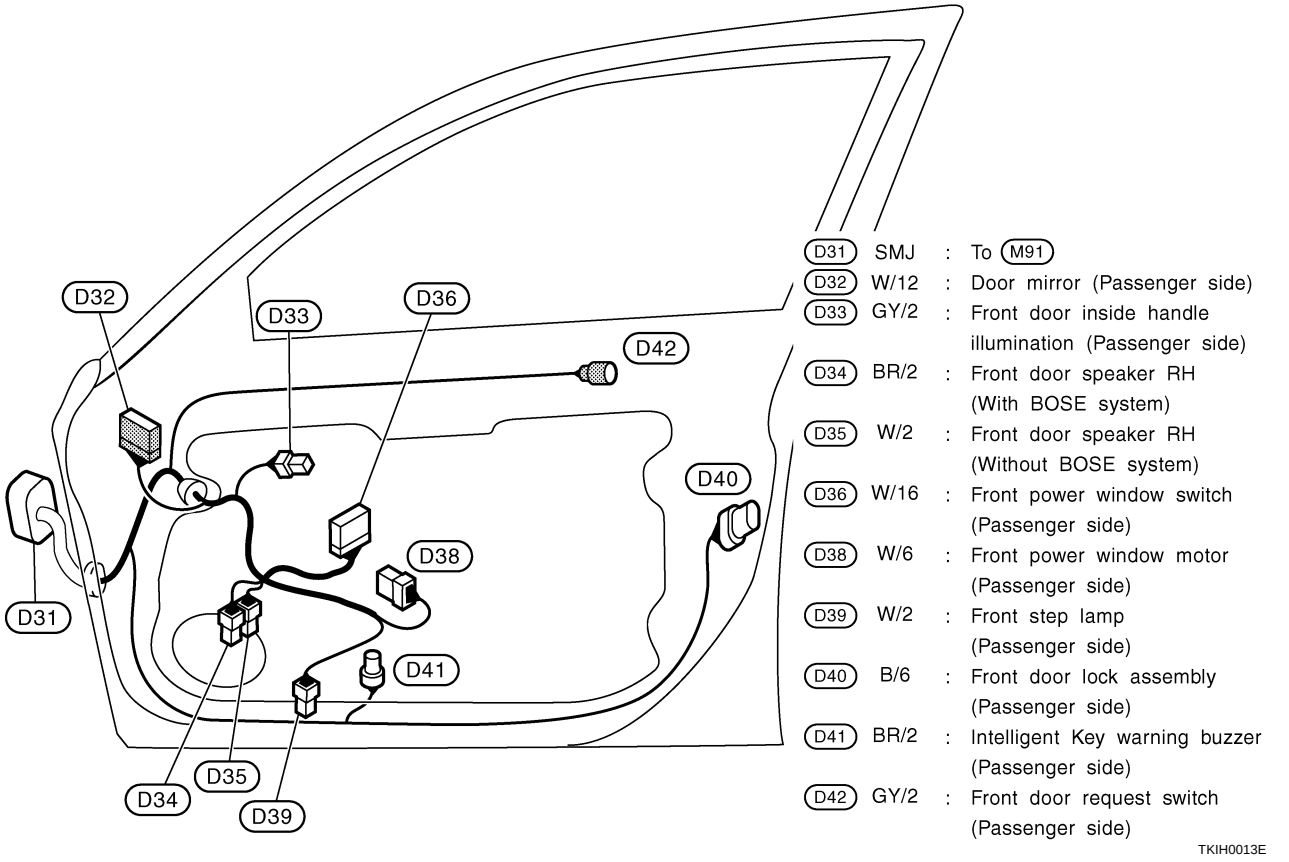

REAR DOOR HARNESS

LH Side

D51 W/18 : To B21
D52 B/6 : Rear door lock actuator LH
D53 BR/2 : Rear door speaker LH (With BOSE system)
D54 W/2 : Rear door speaker LH (Without BOSE system)
D55 W/8 : Rear power window switch LH (Without interruption detection function)

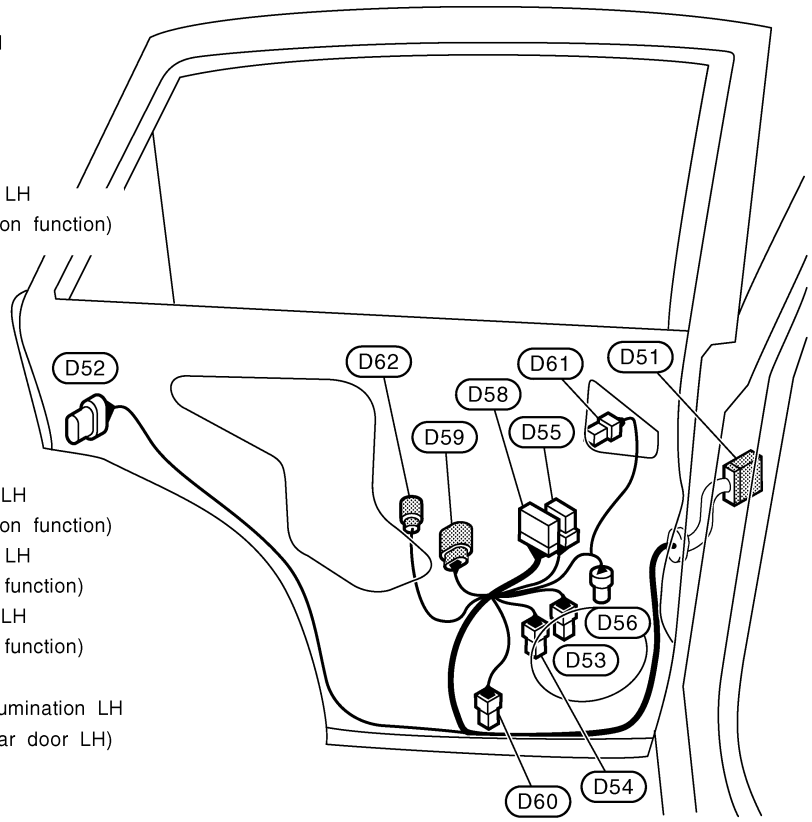

D56 BR/2 : Rear power window motor LH (Without interruption detection function)
D58 W/16 : Rear power window switch LH (With interruption detection function)
D59 GY/6 : Rear power window motor LH (With interruption detection function)
D60 W/2 : Rear step lamp LH
D61 GY/2 : Rear door inside handle illumination LH
D62 GY/2 : Outside key antenna-1 (Rear door LH)

TKIH0014E

RH Side

D71 W/18 : To B31
D72 B/6 : Rear door lock actuator RH
D73 BR/2 : Rear door speaker RH (With BOSE system)
D74 W/2 : Rear door speaker RH (Without BOSE system)

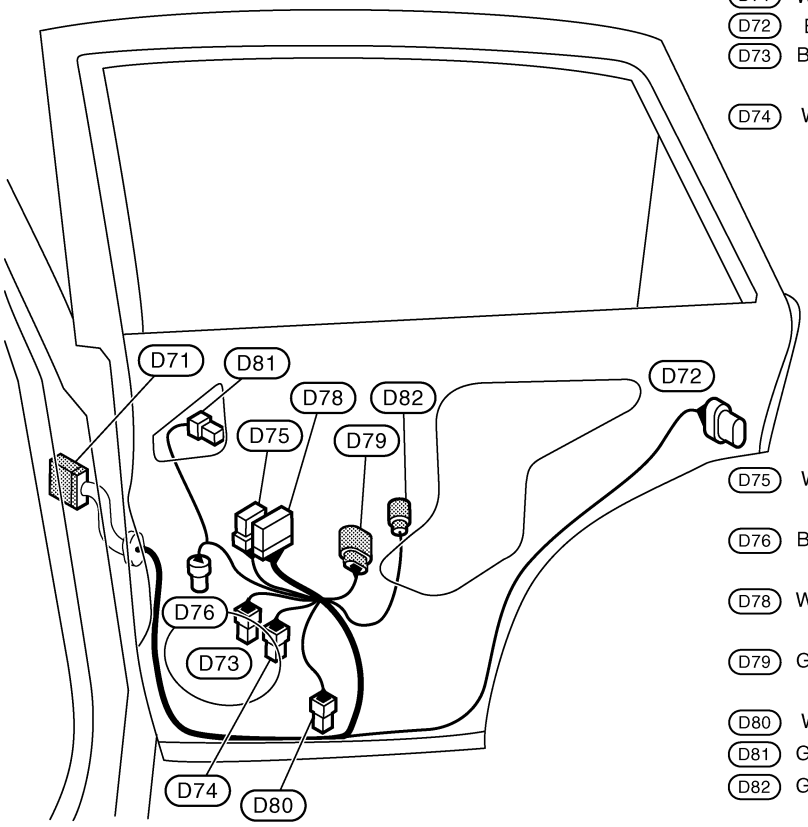

D75 W/8 : Rear power window switch RH (Without interruption detection function)
D76 BR/2 : Rear power window motor RH (Without interruption detection function)
D78 W/16 : Rear power window switch RH (With interruption detection function)
D79 GY/6 : Rear power window motor RH (With interruption detection function)
D80 W/2 : Rear step lamp RH
D81 GY/2 : Rear door inside handle illumination RH
D82 GY/2 : Outside key antenna-2 (Rear door RH)

TKIH0015E

BACK DOOR HARNESS

D101	W/16	:	To B51
D102	W/6	:	To B52
D103	GY/2	:	High-mounted stop lamp
D104	GY/1	:	Rear window defogger (+)
D105	W/2	:	Back-up lamp LH
D106	W/10	:	Back door closure control unit
D107	W/4	:	Rear wiper motor
D108	W/4	:	Rear view camera
D109	W/8	:	Back door closure motor
D110	W/2	:	License plate lamp LH
D111	W/2	:	License plate lamp RH
D112	W/2	:	Back door opener switch
D113	BR/2	:	Back door request switch
D114	GY/1	:	Rear window defogger (-)
D115	W/2	:	Back-up lamp RH
D116	BR/2	:	Outside key antenna-3 (Back door)

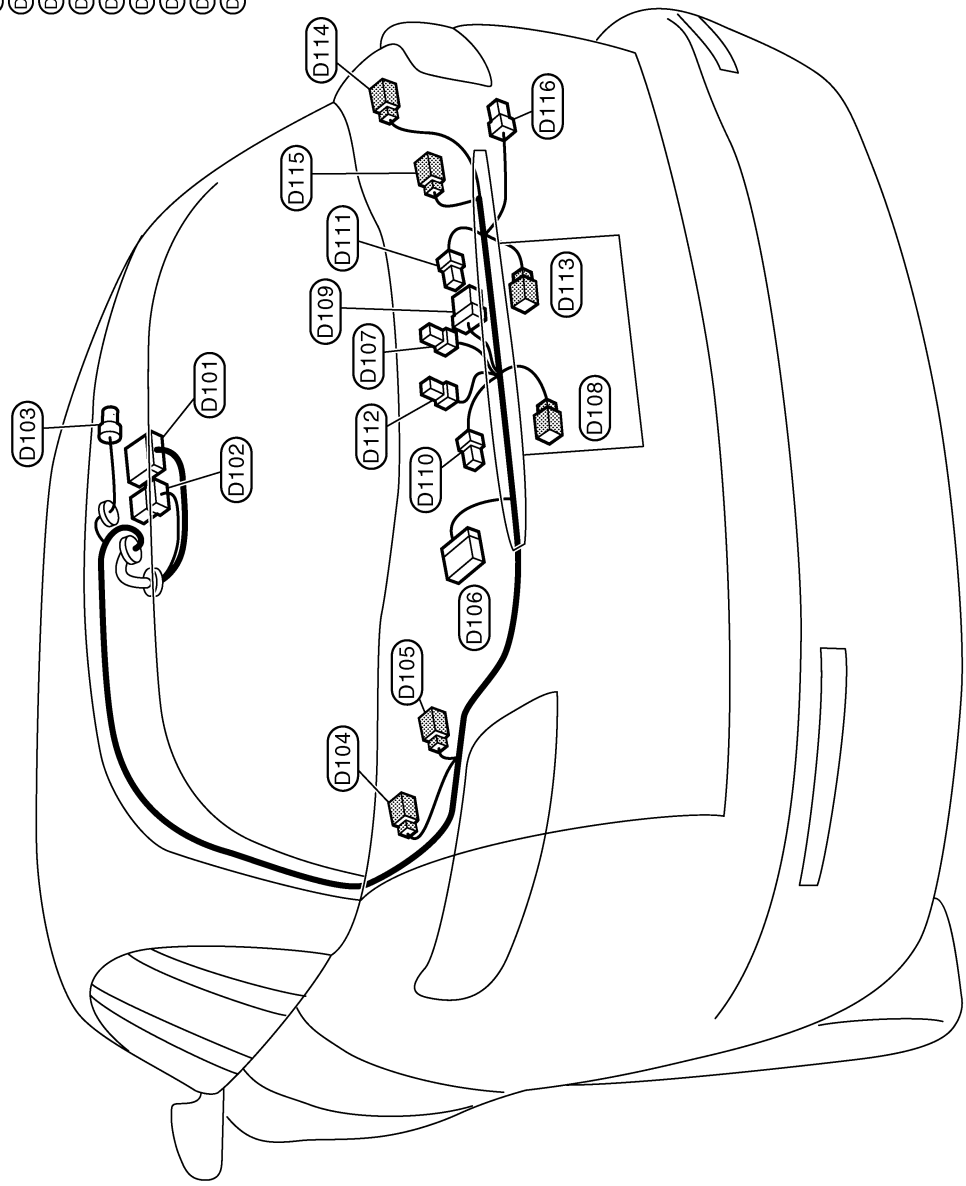

TKIH0016E

Wiring Diagram Codes (Cell Codes)

AKS007X0

Use the chart below to find out what each wiring diagram code stands for.
Refer to the wiring diagram code in the alphabetical index to find the location (page number) of each wiring diagram.

Code	Section	Wiring Diagram Name
A/C	ATC	Air Conditioner
AF1B1	EC	Air Fuel Ratio Sensor 1 Bank 1
AF1B2	EC	Air Fuel Ratio Sensor 1 Bank 2
AF1HB1	EC	Air Fuel Ratio Sensor 1 Heater Bank 1
AF1HB2	EC	Air Fuel Ratio Sensor 1 Heater Bank 2
APPS1	EC	Accelerator Pedal Position Sensor
APPS2	EC	Accelerator Pedal Position Sensor
APPS3	EC	Accelerator Pedal Position Sensor
ASC/BS	EC	Automatic Speed Control Device (ASCD) Brake Switch
ASC/SW	EC	Automatic Speed Control Device (ASCD) Steering Switch
ASCBOF	EC	Automatic Speed Control Device (ASCD) Brake Switch
ASCIND	EC	Automatic Speed Control Device (ASCD) Indicator
AT/IND	DI	A/T Indicator Lamp
AUDIO	AV	Audio
AUT/DP	SE	Automatic Drive Positioner
AUTO/L	LT	Automatic Light System
AWD	TF	AWD Control System
B/CLOS	BL	Back Door Closure System
BACK/L	LT	Back-Up Lamp
BRK/SW	EC	Brake Switch
CAN	AT	CAN Communication Line
CAN	EC	CAN Communication Line
CAN	LAN	CAN System
CHARGE	SC	Charging System
CHIME	DI	Warning Chime
CIGAR	WW	Cigarette Lighter
CLOCK	DI	Clock
COMBSW	LT	Combination Switch
COMM	AV	Audio Visual Communication Line
COMPAS	DI	Compass
COOL/F	EC	Cooling Fan Control
D/LOCK	BL	Power Door Lock
DEF	GW	Rear Window Defogger
DTRL	LT	Headlamp - With Daytime Light System
ECM/PW	EC	ECM Power Supply for Back-Up
ECTS	EC	Engine Coolant Temperature Sensor
ETC1	EC	Electric Throttle Control Function
ETC2	EC	Electric Throttle Control Motor Relay
ETC3	EC	Electric Throttle Control Motor
F/FOG	LT	Front Fog Lamp
F/PUMP	EC	Fuel Pump

Code	Section	Wiring Diagram Name
FTS	AT	A/T Fluid Temperature Sensor Circuit
FTTS	EC	Fuel Tank Temperature Sensor
FUELB1	EC	Fuel Injection System Function (Bank 1)
FUELB2	EC	Fuel Injection System Function (Bank 2)
H/AIM	LT	Headlamp Aiming Control System
H/LAMP	LT	Headlamp
HORN	WW	Horn
HSEAT	SE	Heated Seat
I/KEY	BL	Intelligent Key System
I/MIRR	GW	Inside Mirror (Auto Anti-Dazzling Mirror)
IATS	EC	Intake Air Temperature Sensor
ICC	ACS	Intelligent Cruise Control System
ICC/BS	EC	ICC Brake Switch
ICC/SW	EC	ICC Steering Switch
ICCBOF	EC	ICC Brake Switch
IGNSYS	EC	Ignition System
ILL	LT	Illumination
INF/D	AV	Vehicle Information and Integrated Switch System
INJECT	EC	Injector
IVCB1	EC	Intake Valve Timing Control Solenoid Valve Bank 1
IVCB2	EC	Intake Valve Timing Control Solenoid Valve Bank 2
IVCSB1	EC	Intake Valve Timing Control Position Sensor Bank 1
IVCSB2	EC	Intake Valve Timing Control Position Sensor Bank 2
IVTB1	EC	Intake Valve Timing Control System (Bank 1)
IVTB2	EC	Intake Valve Timing Control System (Bank 2)
KEYLES	BL	Remote Keyless Entry System
KS	EC	Knock Sensor
M/ANT	AV	Manual Antenna
MAFS	EC	Mass Air Flow Sensor
MAIN	AT	Main Power Supply and Ground Circuit
MAIN	EC	Main Power Supply and Ground Circuit
MES	AV	Mobile Entertainment System
METER	DI	Speedometer, Tachometer, Temp. and Fuel Gauges
MIL/DL	EC	MIL & Data Link Connectors
MIRROR	GW	Power Door Mirror
MMSW	AT	Manual Mode Switch
NATS	BL	Nissan Anti-Theft System
NAVI	AV	Navigation System
NONDTC	AT	Non-Detective Items
O2H1B1	EC	Heated Oxygen Sensor 1 Heater Bank 1
O2H1B2	EC	Heated Oxygen Sensor 1 Heater Bank 2
O2H2B1	EC	Heated Oxygen Sensor 2 Heater Bank 1
O2H2B2	EC	Heated Oxygen Sensor 2 Heater Bank 2
O2S1B1	EC	Heated Oxygen Sensor 1 Bank 1

Code	Section	Wiring Diagram Name
O2S1B2	EC	Heated Oxygen Sensor 1 Bank 2
O2S2B1	EC	Heated Oxygen Sensor 2 Bank 1
O2S2B2	EC	Heated Oxygen Sensor 2 Bank 2
P/SCKT	WW	Power Socket
PGC/V	EC	EVAP Canister Purge Volume Control Solenoid Valve
PHASE	EC	Camshaft Position Sensor (PHASE)
PHSB1	EC	Camshaft Position Sensor (PHASE) (Bank 1)
PHSB2	EC	Camshaft Position Sensor (PHASE) (Bank 2)
PNP/SW	AT	Park/Neutral Position Switch
PNP/SW	EC	Park/Neutral Position Switch
POS	EC	Crankshaft Position Sensor (CKPS) (POS)
POWER	PG	Power Supply Routing
PRE/SE	EC	EVAP Control System Pressure Sensor
PS/SEN	EC	Power Steering Pressure Sensor
R/VIEW	DI	Rear View Camera Control System
ROOM/L	LT	Interior Room Lamp
RP/SEN	EC	Refrigerant Pressure Sensor
SEAT	SE	Power Seat
SEN/PW	EC	Sensor Power Supply
SHIFT	AT	A/T Shift Lock System
SNOWSW	EC	Snow Mode Switch
SROOF	RF	Sunroof
SRS	SRS	Supplemental Restraint System
START	SC	Starting System
STOP/L	LT	Stop Lamp
STSIG	AT	Start Signal Circuit
T/WARN	WT	Low Tire Pressure Warning System
TAIL/L	LT	Parking, License and Tail Lamps
TPS1	EC	Throttle Position Sensor (Sensor 1)
TPS2	EC	Throttle Position Sensor (Sensor 2)
TPS3	EC	Throttle Position Sensor
TRNSCV	BL	Homelink Universal Transceiver
TURN	LT	Turn Signal and Hazard Warning Lamp
VDC	BRC	Vehicle Dynamics Control System
VEHSEC	BL	Vehicle Security System
VENT/V	EC	EVAP Canister Vent Control Valve
VIAS/V	EC	VIAS Control Solenoid Valve
VSSA/T	AT	Vehicle Speed Sensor A/T (Revolution Sensor)
WARN	DI	Warning Lamps
WINDOW	GW	Power Window
WIP/R	WW	Rear Wiper and Washer
WIPER	WW	Front Wiper and Washer

ELECTRICAL UNITS LOCATION

PFP:25230

Electrical Units Location

AKS007W2

ENGINE COMPARTMENT

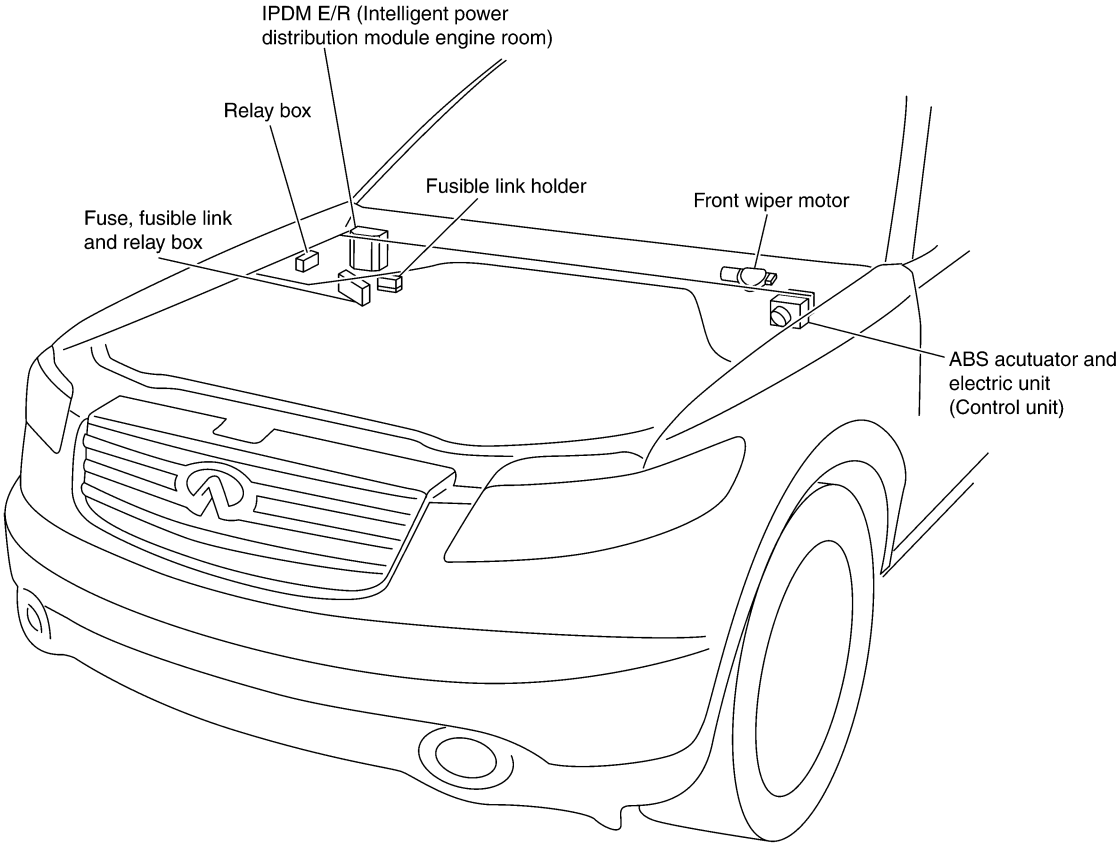

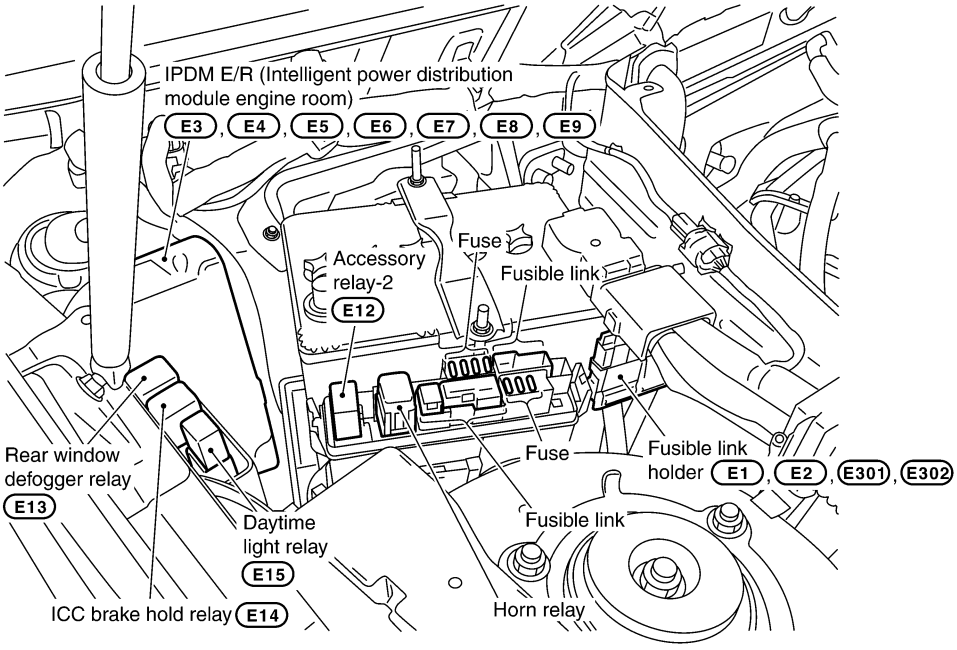

CKIM0212E

PASSENGER COMPARTMENT

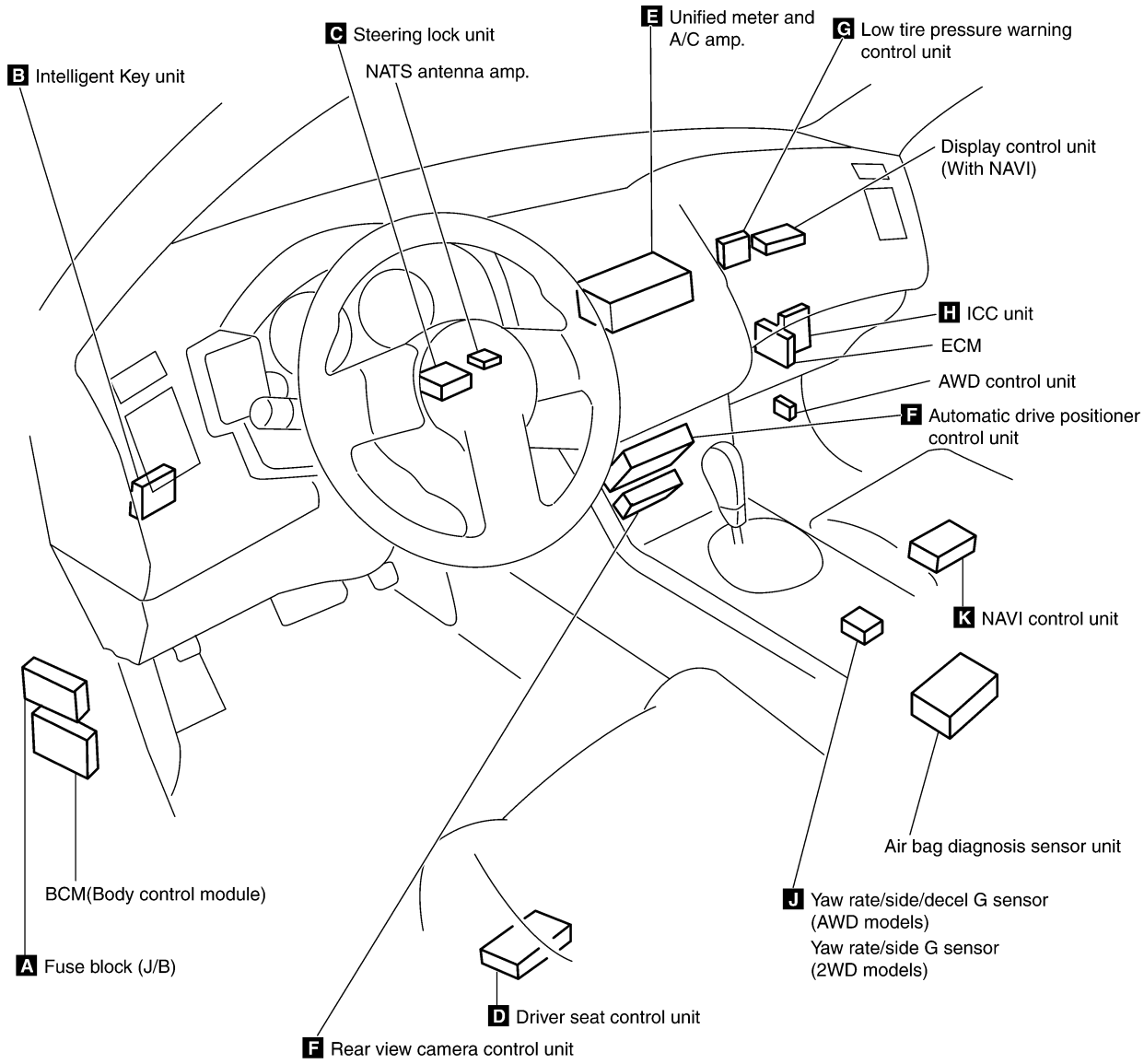

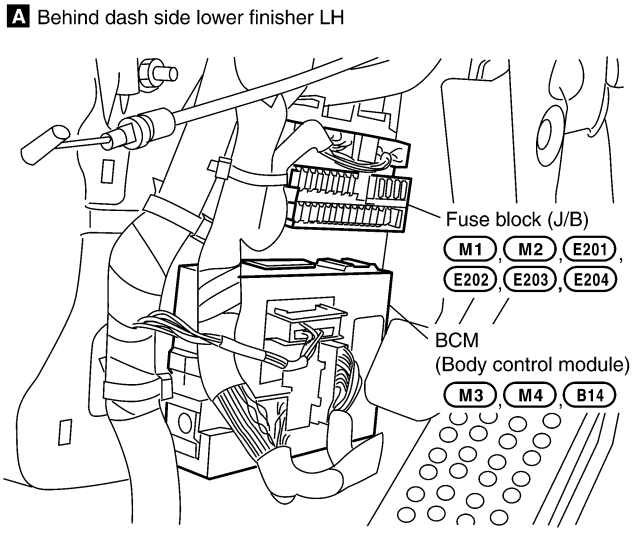

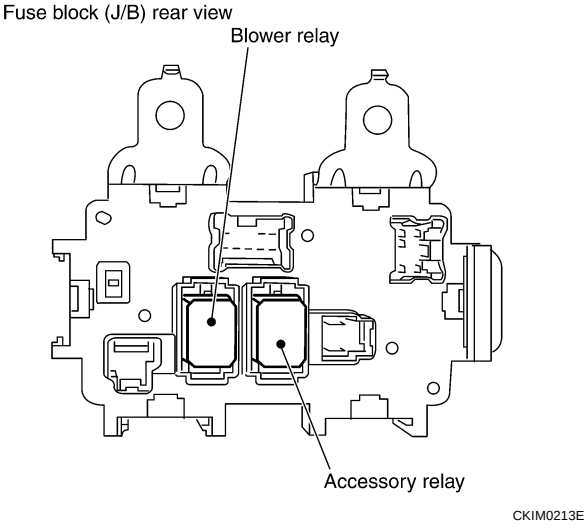

B Driver side view with lower instrument panel removed

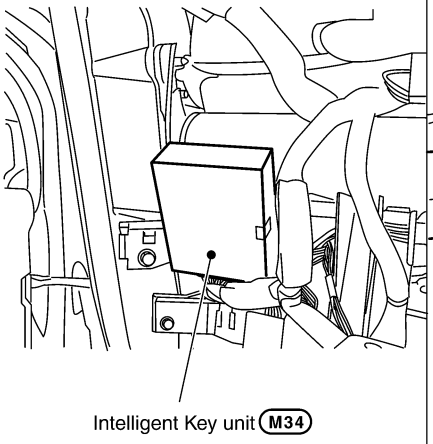

C Driver side view with cluster lid A removed

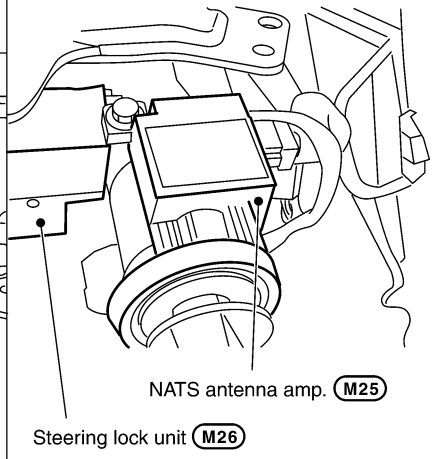

D Under driver seat

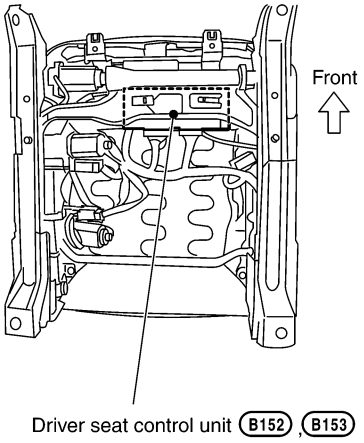

E View with cluster lid C removed

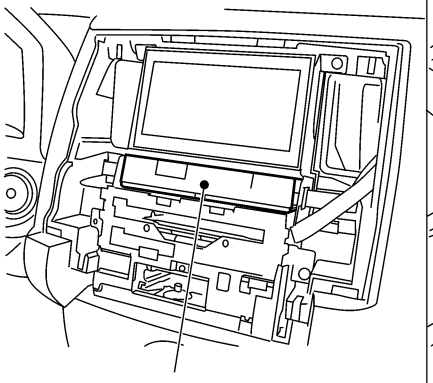

F View with instrument panel center removed

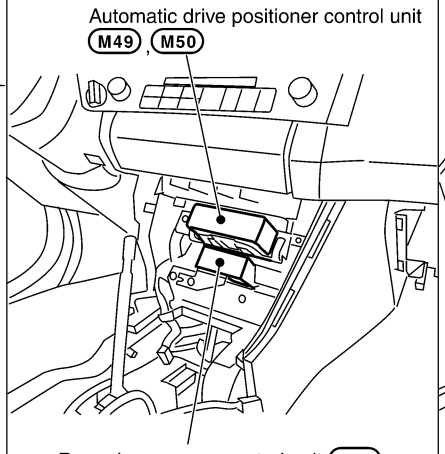

G Behind lower instrument panel on passenger side

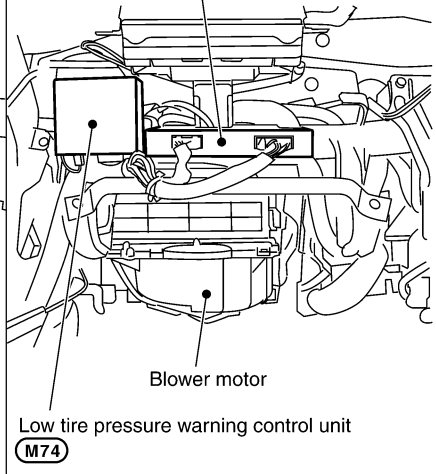

H Behind lower instrument panel on passenger side

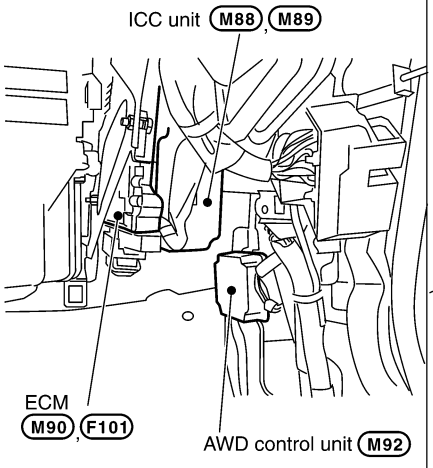

J View with floor console box removed

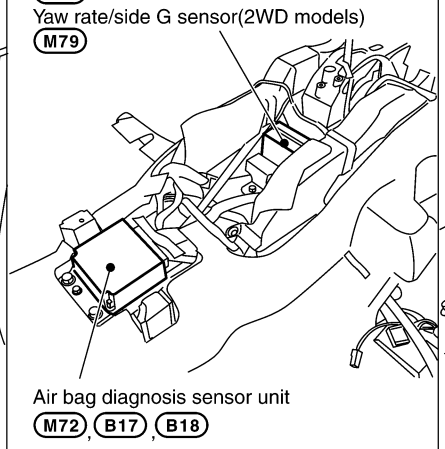

K View with passenger seat removed

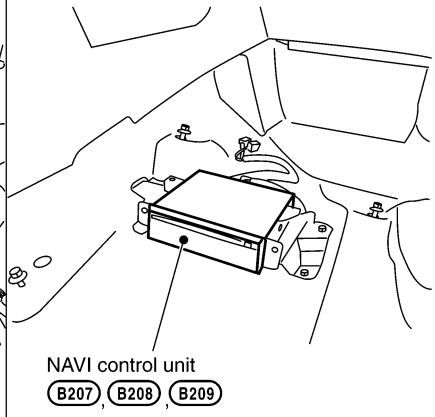

CKIM0214E

LUGGAGE COMPARTMENT

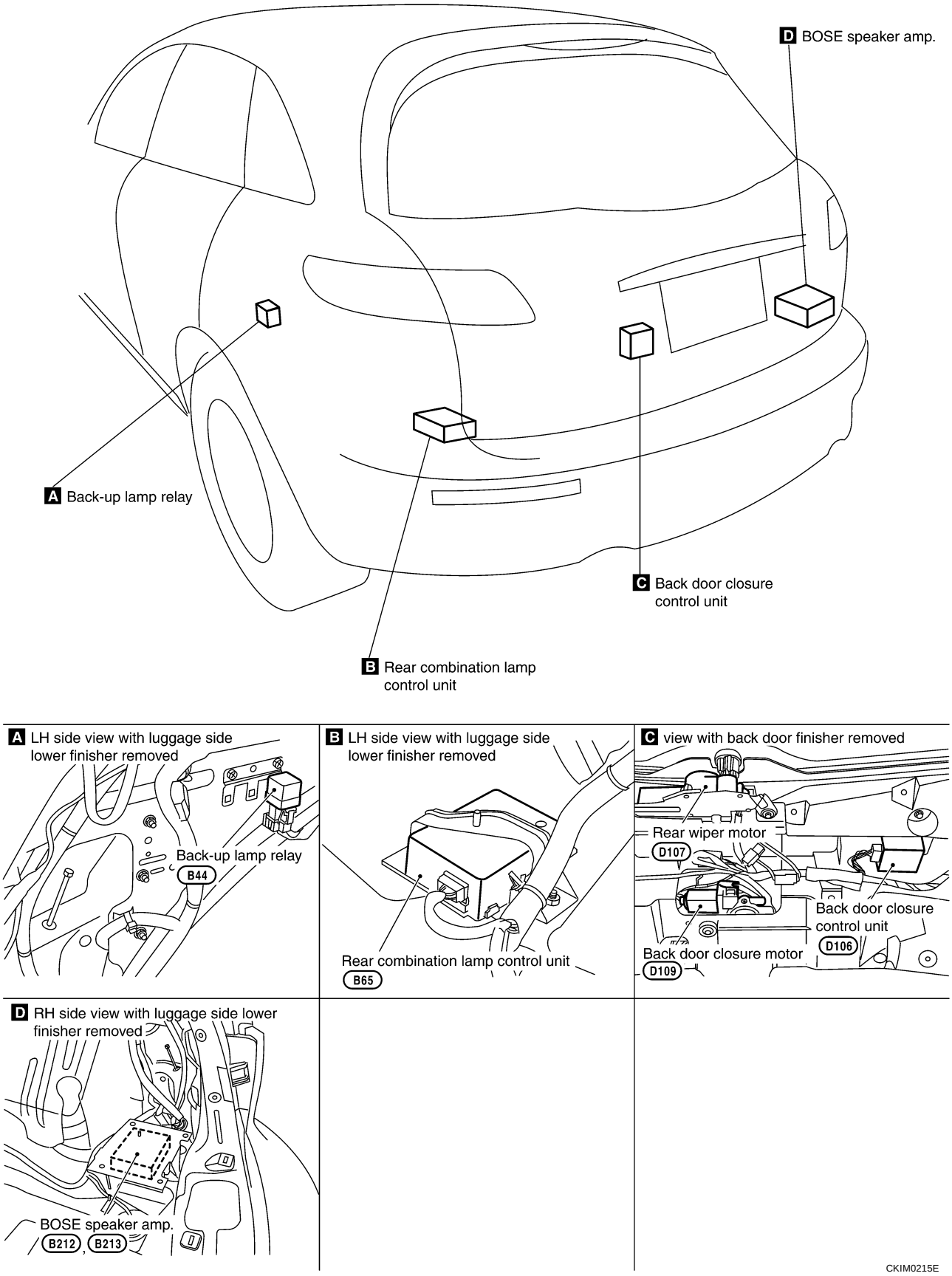

HARNESS CONNECTOR

PFP:00011

Description

AKS007W3

HERNESS CONNECTOR (TAB-LOCKING TYPE)

- The tab-locking type connectors help prevent accidental looseness or disconnection.
- The tab-locking type connectors are disconnected by pushing or lifting the locking tab(s). Refer to the illustration below.

Refer to the next page for description of the slide-locking type connector.

CAUTION:

Do not pull the harness or wires when disconnecting the connector.

[Example]

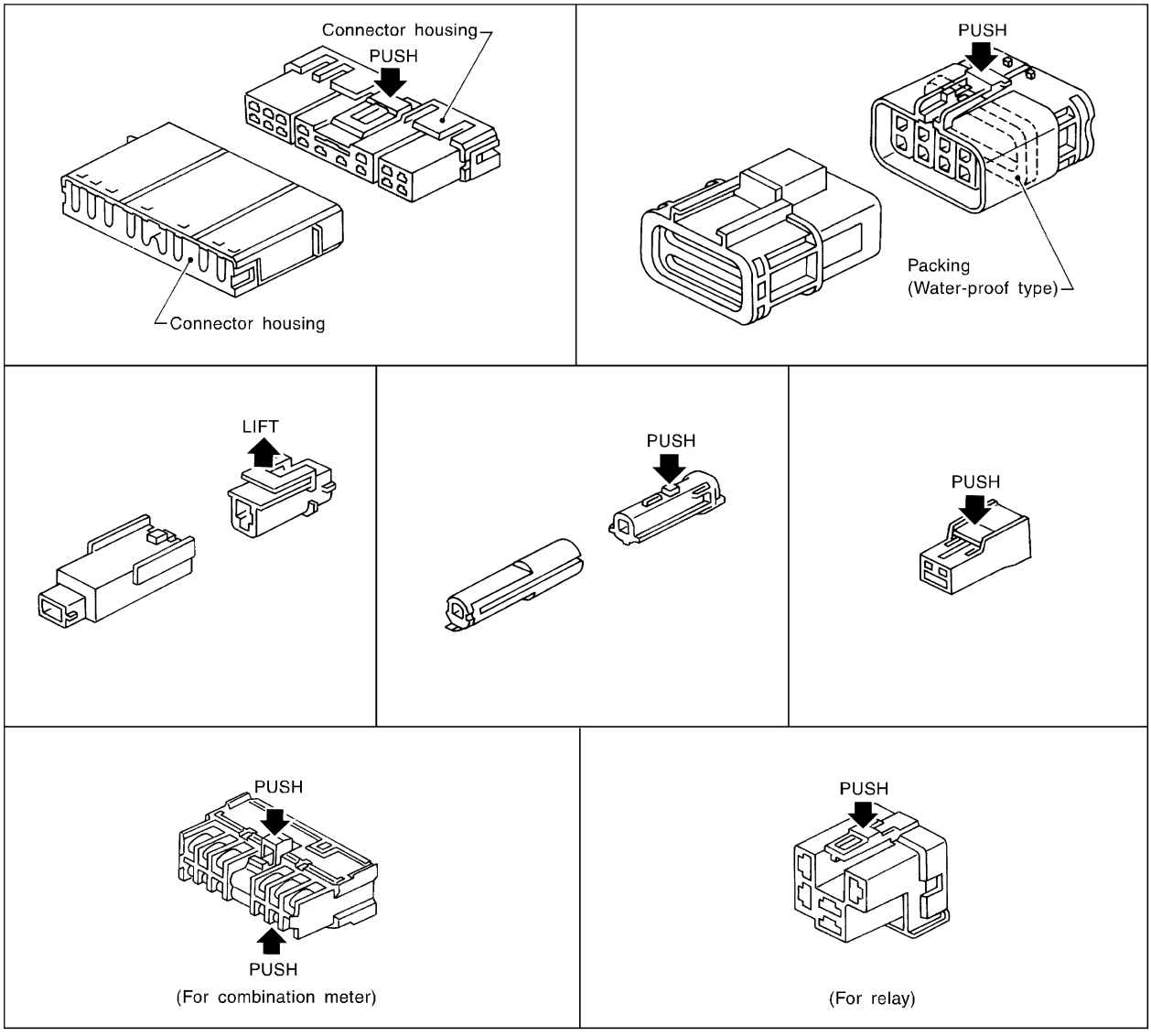

SEL769DA

HARNESS CONNECTOR (SLIDE-LOCKING TYPE)

- A new style slide-locking type connector is used on certain systems and components, especially those related to OBD.
- The slide-locking type connectors help prevent incomplete locking and accidental looseness or disconnection.
- The slide-locking type connectors are disconnected by pushing or pulling the slider. Refer to the illustration below.

CAUTION:

- **Do not pull the harness or wires when disconnecting the connector.**
- **Be careful not to damage the connector support bracket when disconnecting the connector.**

[Example]

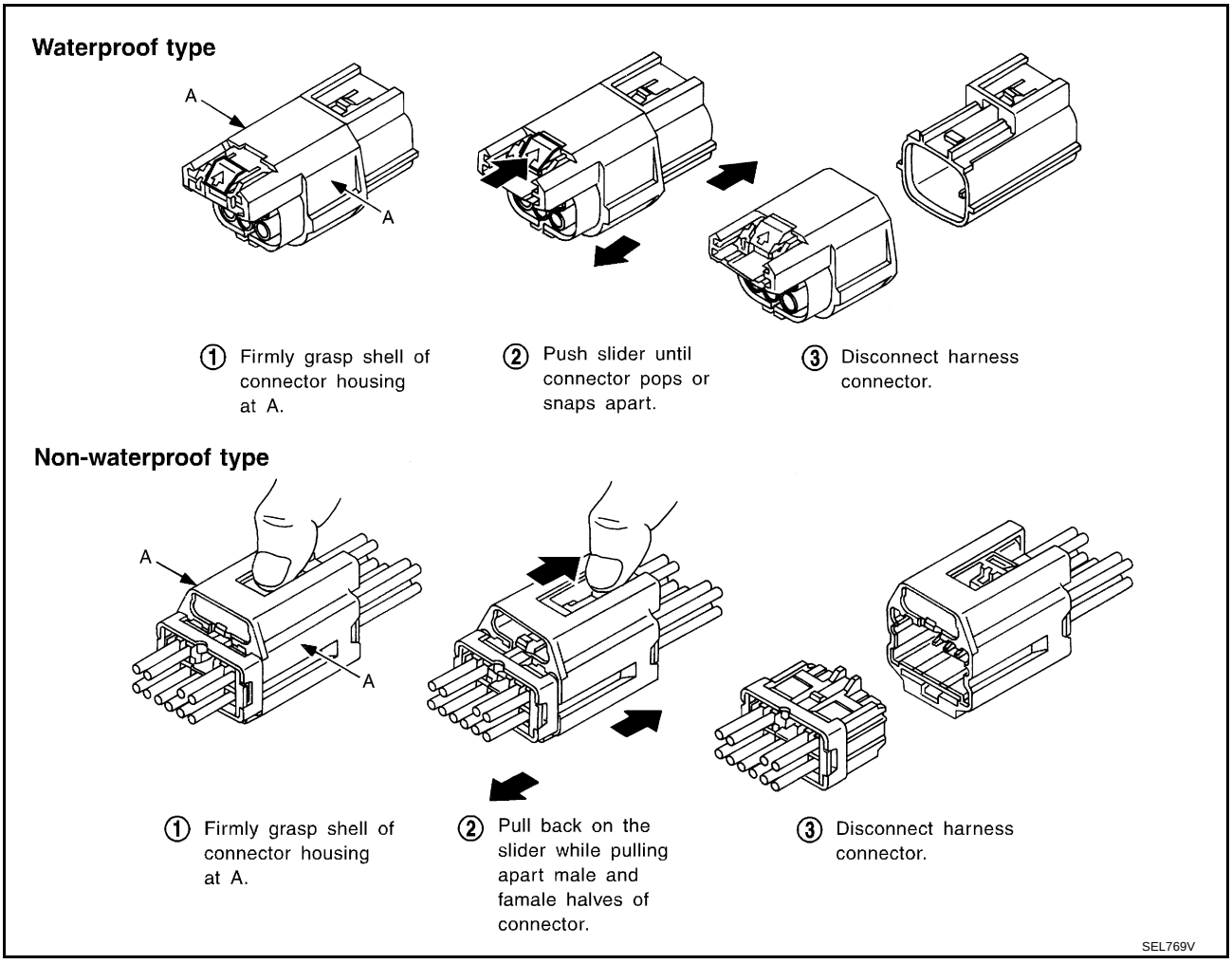

ELECTRICAL UNITS

PFP:00011

Terminal Arrangement

AKS007W5

ECM

F101

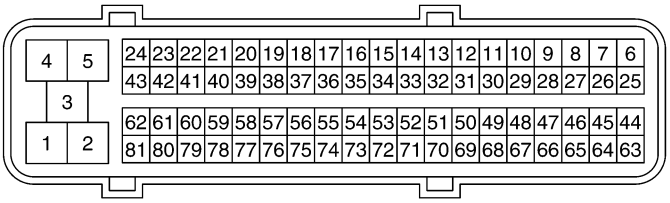

(Black)

M90

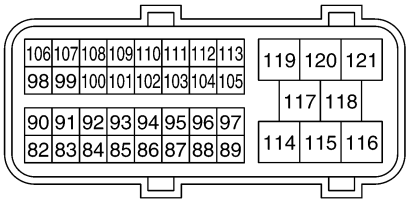

(Black)

ABS ACTUATOR AND ELECTRIC UNIT (CONTROL UNIT)

E56

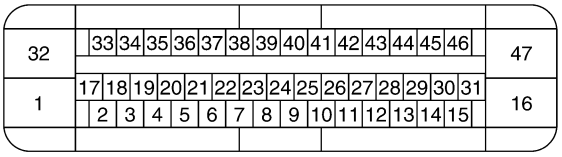

(Black)

UNIFIED METER AND A/C AMP.

M55

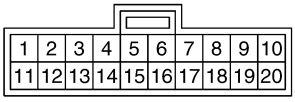

(Gray)

M56

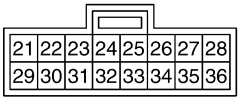

(Gray)

M57

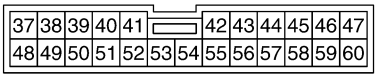

(White)

BCM (BODY CONTROL MODULE)

M3

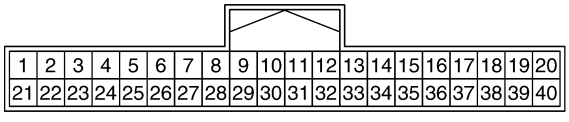

(White)

M4

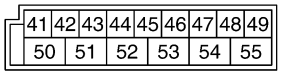

(Black)

B14

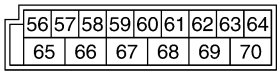

(White)

CKIM0217E

INTELLIGENT KEY UNIT

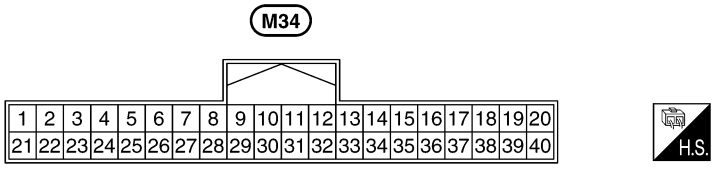

(White)

ICC UNIT

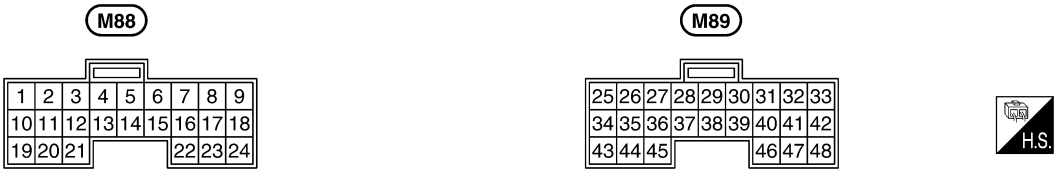

(White) (Gray)

CKIM0218E

SMJ (SUPER MULTIPLE JUNCTION)

PFP:B4341

Terminal Arrangement

AKS007W6

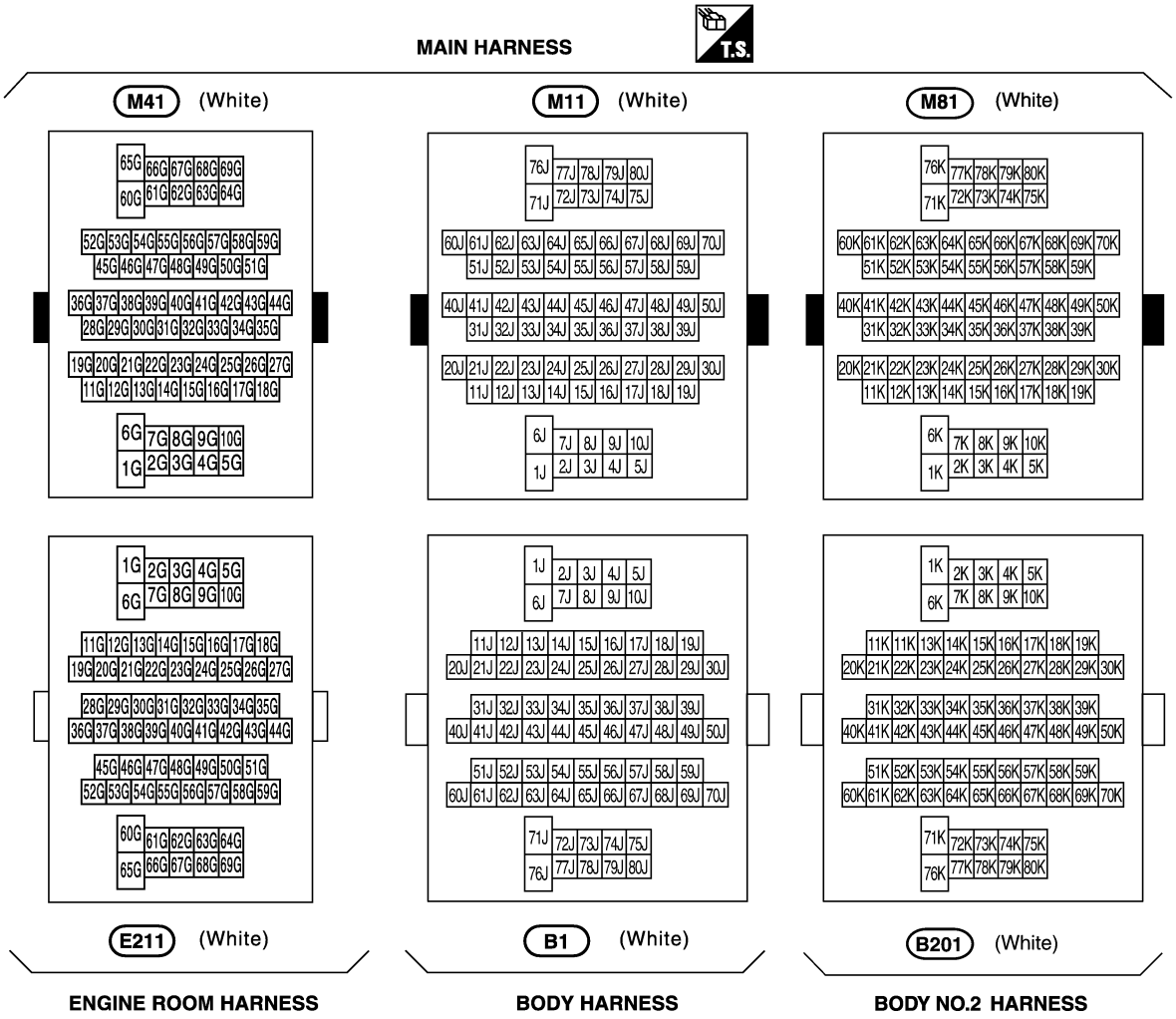

CKIH0255E

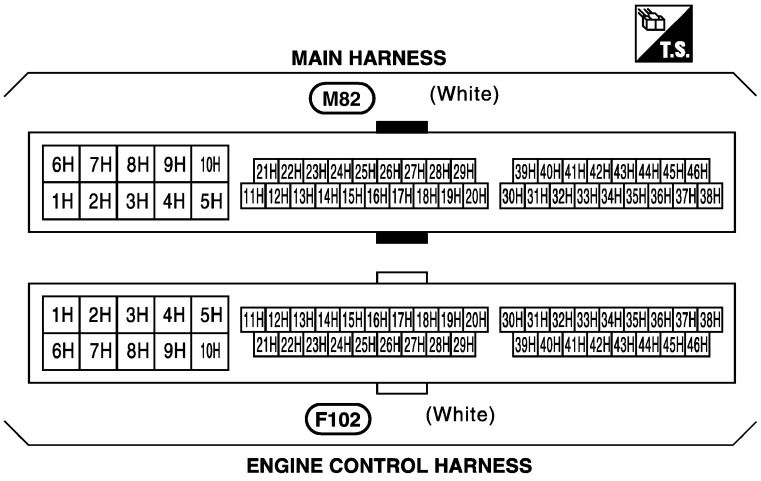
MAIN HARNESS
T.S.
M82
(White)
6H 7H 8H 9H 10H
1H 2H 3H 4H 5H
21H 22H 23H 24H 25H 26H 27H 28H 29H
11H 12H 13H 14H 15H 16H 17H 18H 19H 20H
39H 40H 41H 42H 43H 44H 45H 46H
30H 31H 32H 33H 34H 35H 36H 37H 38H
1H 2H 3H 4H 5H
6H 7H 8H 9H 10H
11H 12H 13H 14H 15H 16H 17H 18H 19H 20H
21H 22H 23H 24H 25H 26H 27H 28H 29H
30H 31H 32H 33H 34H 35H 36H 37H 38H
39H 40H 41H 42H 43H 44H 45H 46H
F102
(White)
ENGINE CONTROL HARNESS

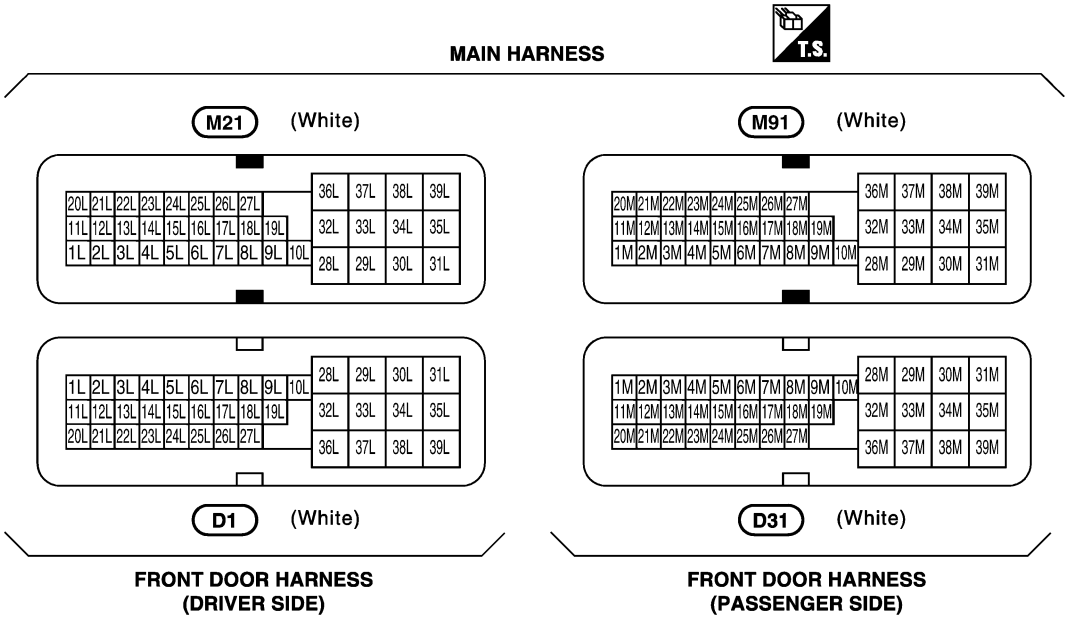
MAIN HARNESS
T.S.
M21
(White)
20L 21L 22L 23L 24L 25L 26L 27L
11L 12L 13L 14L 15L 16L 17L 18L 19L
1L 2L 3L 4L 5L 6L 7L 8L 9L 10L
36L 37L 38L 39L
32L 33L 34L 35L
28L 29L 30L 31L
M91
(White)
20M 21M 22M 23M 24M 25M 26M 27M
11M 12M 13M 14M 15M 16M 17M 18M 19M
1M 2M 3M 4M 5M 6M 7M 8M 9M 10M
36M 37M 38M 39M
32M 33M 34M 35M
28M 29M 30M 31M
1L 2L 3L 4L 5L 6L 7L 8L 9L 10L
11L 12L 13L 14L 15L 16L 17L 18L 19L
20L 21L 22L 23L 24L 25L 26L 27L
28L 29L 30L 31L
32L 33L 34L 35L
36L 37L 38L 39L
1M 2M 3M 4M 5M 6M 7M 8M 9M 10M
11M 12M 13M 14M 15M 16M 17M 18M 19M
20M 21M 22M 23M 24M 25M 26M 27M
28M 29M 30M 31M
32M 33M 34M 35M
36M 37M 38M 39M
D1
(White)
FRONT DOOR HARNESS
(DRIVER SIDE)
D31
(White)
FRONT DOOR HARNESS
(PASSENGER SIDE)

CKIM0220E

STANDARDIZED RELAY

PFP:00011

Description

AKS007W7

NORMAL OPEN, NORMAL CLOSED AND MIXED TYPE RELAYS

Relays can mainly be divided into three types: normal open, normal closed and mixed type relays.

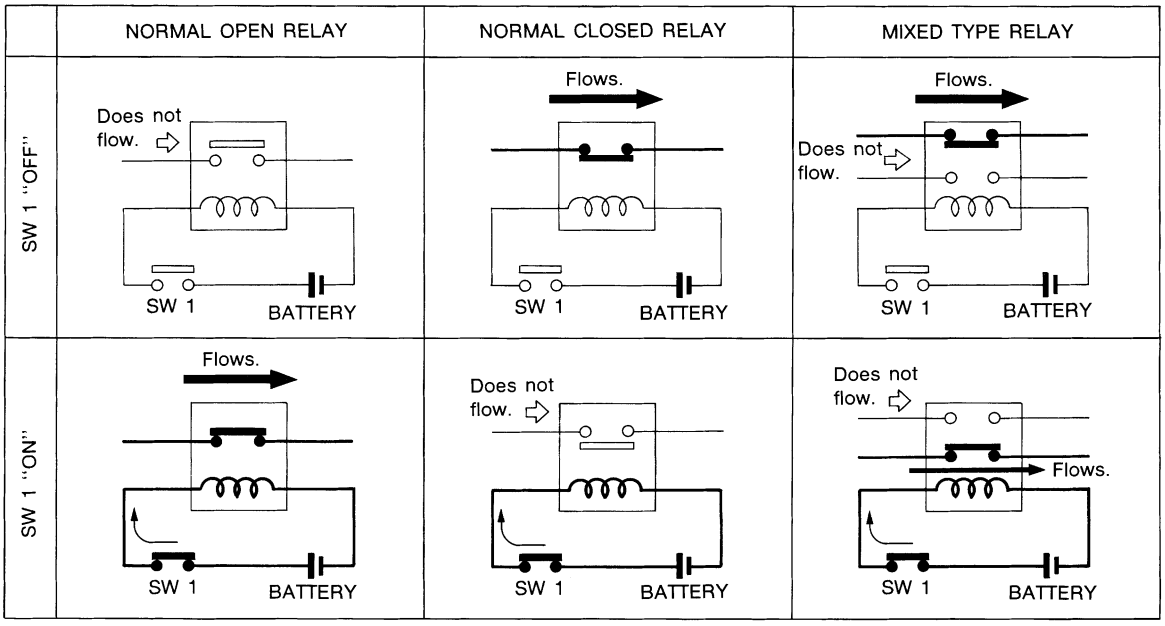

SEL881H

TYPE OF STANDARDIZED RELAYS

1M ..... 1 Make
2M ..... 2 Make
1T ..... 1 Transfer
1M·1B ..... 1 Make 1 Break

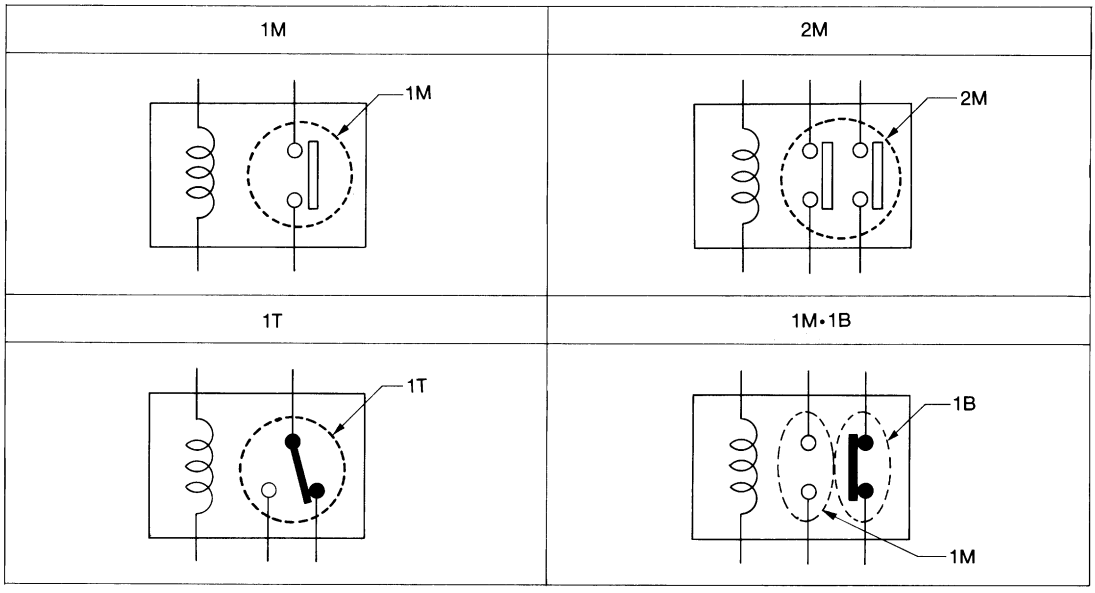

SEL882H

Type	Outer view	Circuit	Connector symbol and connection	Case color
1T	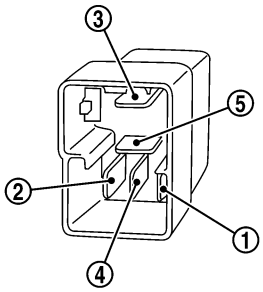	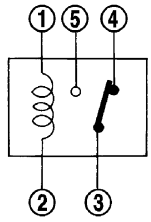	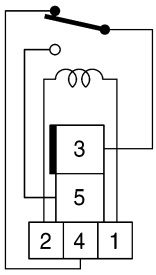	BLACK
2M	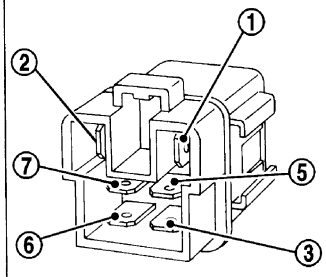	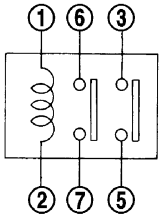	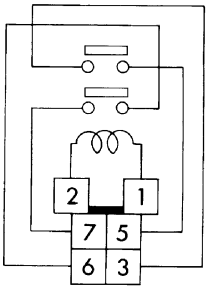	BROWN
1M•1B	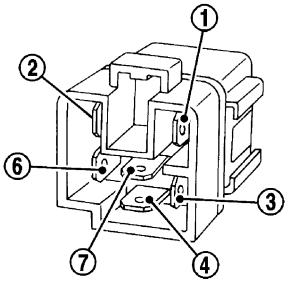	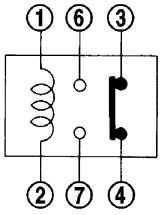	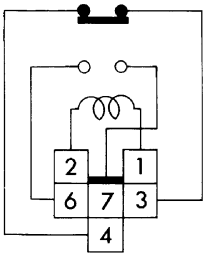	GRAY
1M	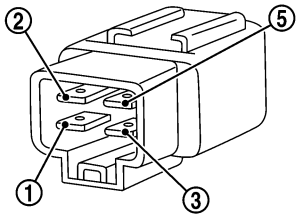	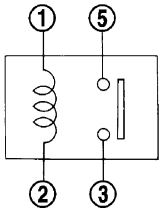	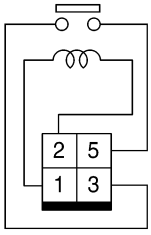	BLUE
	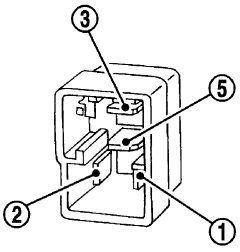		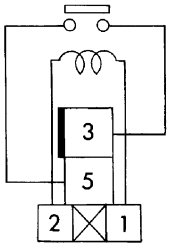	

The arrangement of terminal numbers on the actual relays may differ from those shown above.

CKIM0221E

FUSE BLOCK - JUNCTION BOX (J/B)

PFP:24350

Terminal Arrangement

AKS007W8

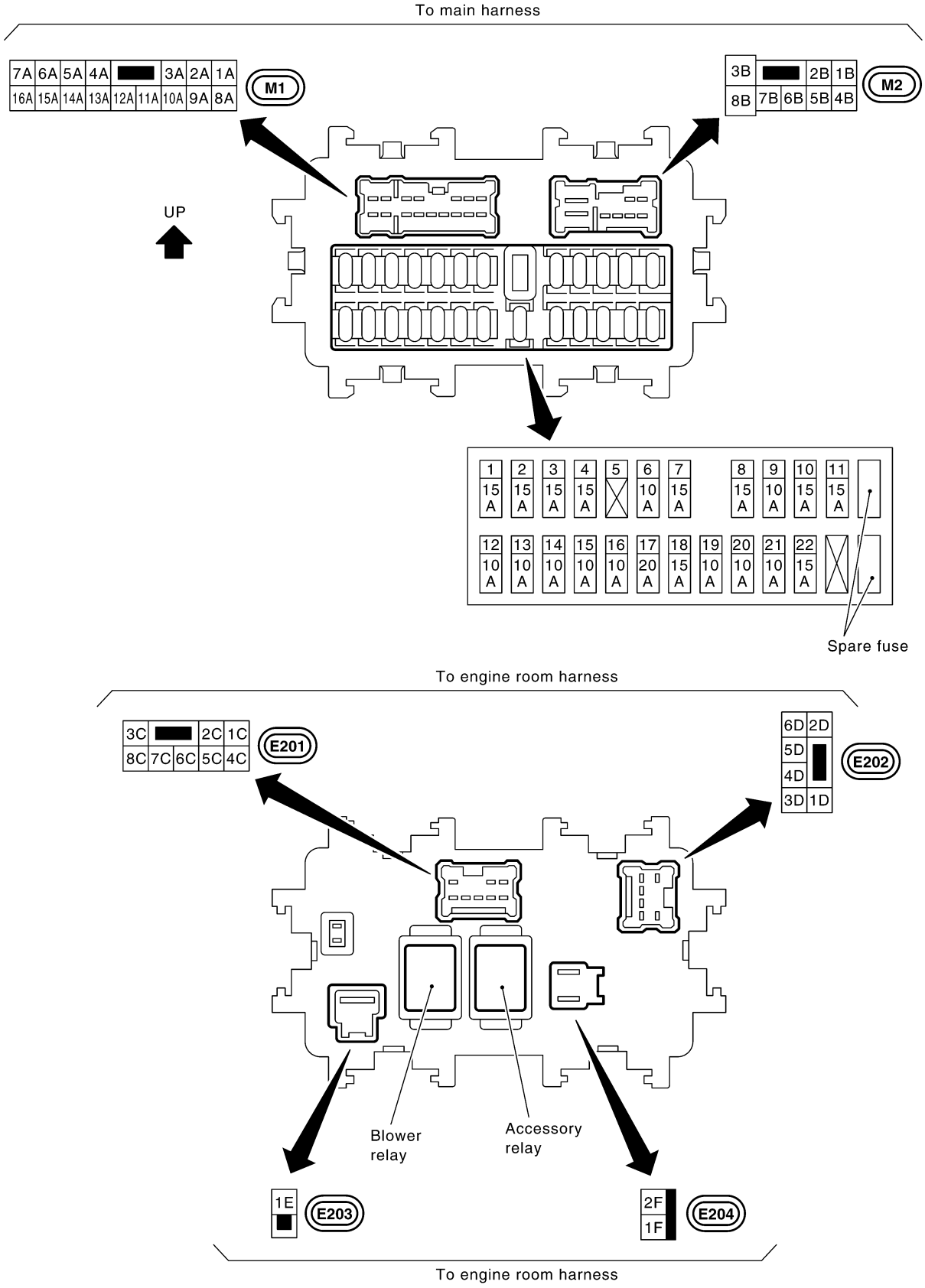

CKIM0222E

FUSE, FUSIBLE LINK AND RELAY BOX

PFP:24382

Terminal Arrangement

AKS007W9

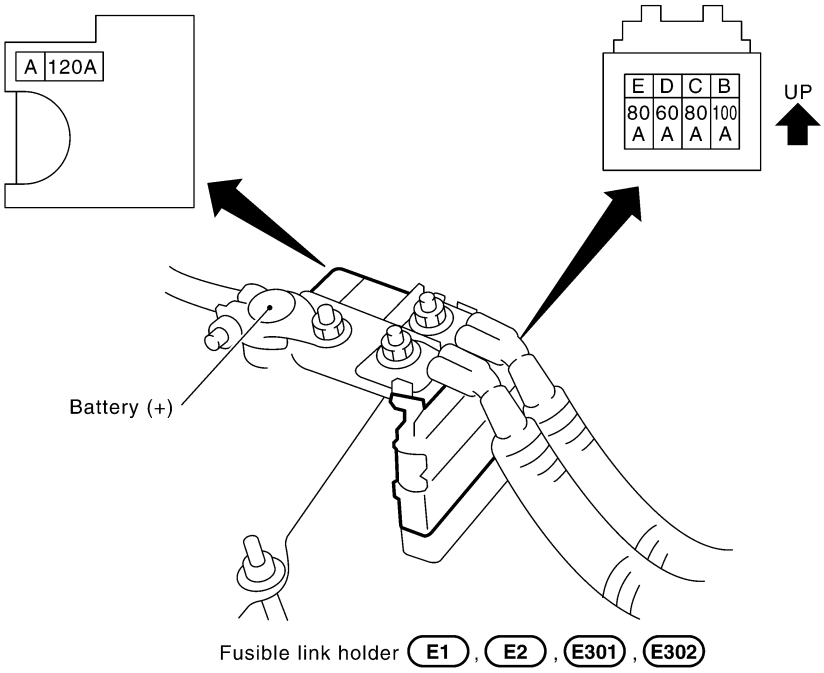

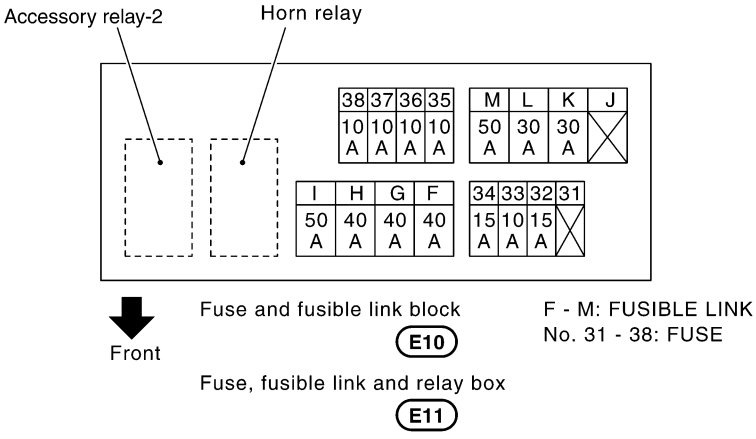

CKIM0223E