SECTION BR
BRAKE SYSTEM

CONTENTS

PRECAUTIONS

PFP:00001

Precautions for Supplemental Restraint System (SRS) “AIR BAG” and “SEAT BELT PRE-TENSIONER”

NFS000LN

The Supplemental Restraint System such as “AIR BAG” and “SEAT BELT PRE-TENSIONER”, used along with a front seat belt, helps to reduce the risk or severity of injury to the driver and front passenger for certain types of collision. This system includes seat belt switch inputs and dual stage front air bag modules. The SRS system uses the seat belt switches to determine the front air bag deployment, and may only deploy one front air bag, depending on the severity of a collision and whether the front occupants are belted or unbelted.
Information necessary to service the system safely is included in the SRS and SB section of this Service Manual.

WARNING:

- **To avoid rendering the SRS inoperative, which could increase the risk of personal injury or death in the event of a collision which would result in air bag inflation, all maintenance must be performed by an authorized NISSAN/INFINITI dealer.**
- **Improper maintenance, including incorrect removal and installation of the SRS, can lead to personal injury caused by unintentional activation of the system. For removal of Spiral Cable and Air Bag Module, see the SRS section.**
- **Do not use electrical test equipment on any circuit related to the SRS unless instructed to in this Service Manual. SRS wiring harnesses can be identified by yellow and/or orange harnesses or harness connectors.**

Precautions for Procedures without Cowl Top Cover

NFS000LO

When performing the procedure after removing cowl top cover, cover the lower end of windshield with urethane, etc.

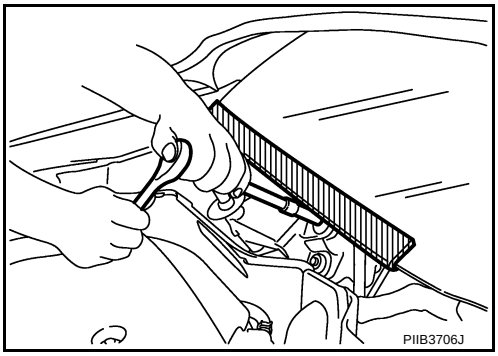

Precautions for Brake System

NFS000LP

- Clean dust on front brake and rear brake with a vacuum dust collector. Do not blow with compressed air.
- Recommended fluid is brake fluid “DOT 3”. MA-12, "Fluids and Lubricants" .
- Do not reuse drained brake fluid.
- Be careful not to splash brake fluid on painted areas.
- To clean or wash all parts of master cylinder, disc brake caliper and wheel cylinder, use new brake fluid.
- Do not use mineral oils such as gasoline or kerosene. They will ruin rubber parts of the hydraulic system.
- Use a flare nut torque wrench when installing brake tube.
- When installing brake piping, be sure to check torque.
- Before working, turn ignition switch OFF and disconnect connectors for ABS actuator and electric unit (control unit) or battery cables.
- Burnish the brake contact surfaces after refinishing or replacing drums or rotors, after replacing pads or linings, or if a soft pedal occurs at very low mileage.
  Refer to BR-24, "Brake Burnishing Procedure" (Front disc brake), BR-31, "Brake Burnishing Procedure" (Rear disc brake).

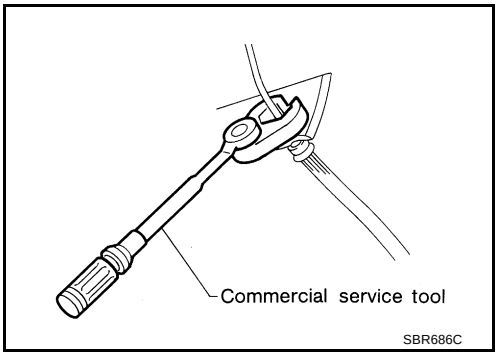

WARNING:

- **Clean brake pads and shoes with a waste cloth, then clean with a dust collector.**

PREPARATION

PFP:00002

Commercial Service Tools

NFS000LQ

Tool name		Description
1.Flare nut crowfoot a: 10 mm (0.39 in) / 12 mm (0.47 in) 2.Torque wrench	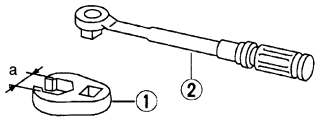 S-NT360	Installing each brake piping
Pin punch Tip diameter: ϕ 4 mm (0.16 in) dia.	 ZZA0515D	Removing and installing reservoir tank pin
Power tool	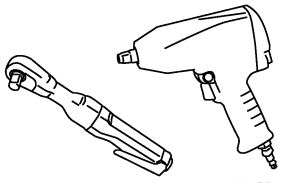 PBIC0190E	Removing front and rear caliper assembly, tires

NOISE, VIBRATION AND HARSHNESS (NVH) TROUBLESHOOTING

PFP:00003

NVH Troubleshooting Chart

NFS000LR

Use the chart below to help you find the cause of the symptom. If necessary, repair or replace these parts.

Reference page			BR-19, BR-25	BR-19, BR-25	BR-19, BR-25	—	—	BR-24, BR-31	—	—	—	BR-24, BR-31	—	NVH in PR section	NVH in FFD and RFD section	NVH in FAX, RAX and FSU, RSU section	NVH in WT section	NVH in WT section	NVH in FAX and RAX section	NVH in PS section
Possible cause and SUSPECTED PARTS			Pads - damaged	Pads - uneven wear	Shims damaged	Rotor imbalance	Rotor damage	Rotor runout	Rotor deformation	Rotor deflection	Rotor rust	Rotor thickness variation	Drum out of round	PROPELLER SHAFT	DIFFERENTIAL	AXLE AND SUSPENSION	TIRES	ROAD WHEEL	DRIVE SHAFT	STEERING
Symptom	BRAKE	Noise	×	×	×									×	×	×	×	×	×	×
		Shake				×								×		×	×	×	×	×
		Shimmy, Judder				×	×	×	×	×	×	×				×	×	×		×

×: Applicable

BRAKE PEDAL

PFP:46501

Inspection and Adjustment

NFS000LS

PLAY AND CLEARANCE BETWEEN BRAKE PEDAL AND FLOOR PANEL WITH PEDAL DEPRESSED

1. Check brake pedal height from dash lower panel.
2. Adjust height referring to the following specifications.

H	Brake pedal height (from dash lower panel top surface)	161.5 – 171.5 mm (6.358 – 6.752 in)
D	Depressed pedal height [under a force of 490 N (50 kg, 110 lb) with engine running]	More than 95 mm (3.74 in)
C	Clearance between stopper rubber and the threaded end of stop lamp switch and ASCD cancel switch (or brake switch)	0.74 – 1.96 mm (0.0291 – 0.0772 in)
A	Pedal play	3 – 11 mm (0.12 – 0.43 in)

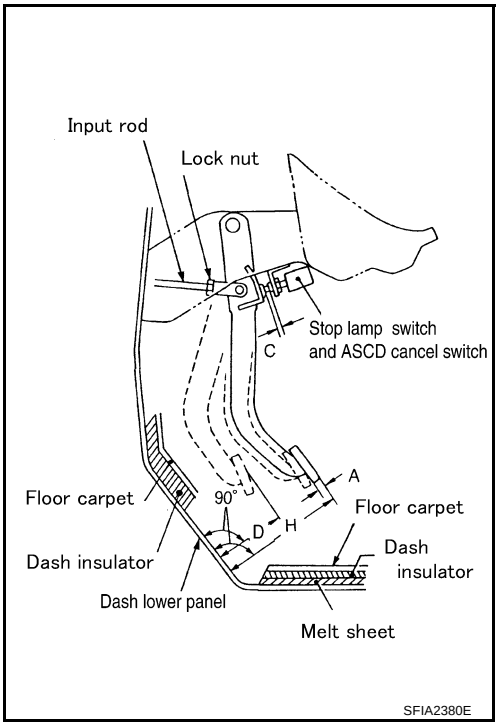

ADJUSTMENT

1. Loosen stop lamp switch and ASCD cancel switch (or brake switch) by rotating it counterclockwise by 45°.
2. Loosen lock nut “A” on input rod, then rotate input rod to set pedal to the specified height, and tighten lock nut “A”. Refer to BR-15, "Components" .

   CAUTION:
   Make sure the threaded end of input rod stays inside clevis.
3. With pedal pulled and held by hand, press stop lamp switch and ASCD cancel switch (or brake switch) until its threaded end contacts stopper rubber.
4. With the threaded end of stop lamp switch and ASCD cancel switch (or brake switch) contacting stopper rubber, rotate switch clockwise by 45° to secure.

   CAUTION:
   Make sure that the clearance “C” between stopper rubber and threaded end of stop lamp switch and ASCD cancel switch (or brake switch) is within the standard.
5. Check pedal play.

   CAUTION:
   Make sure that stop lamps go off when pedal is released.
6. Start engine to check brake pedal depressed height.

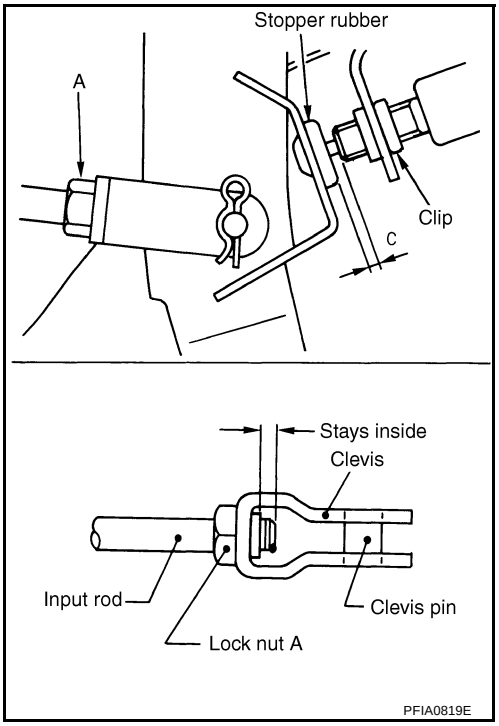

Components

NFS000OA

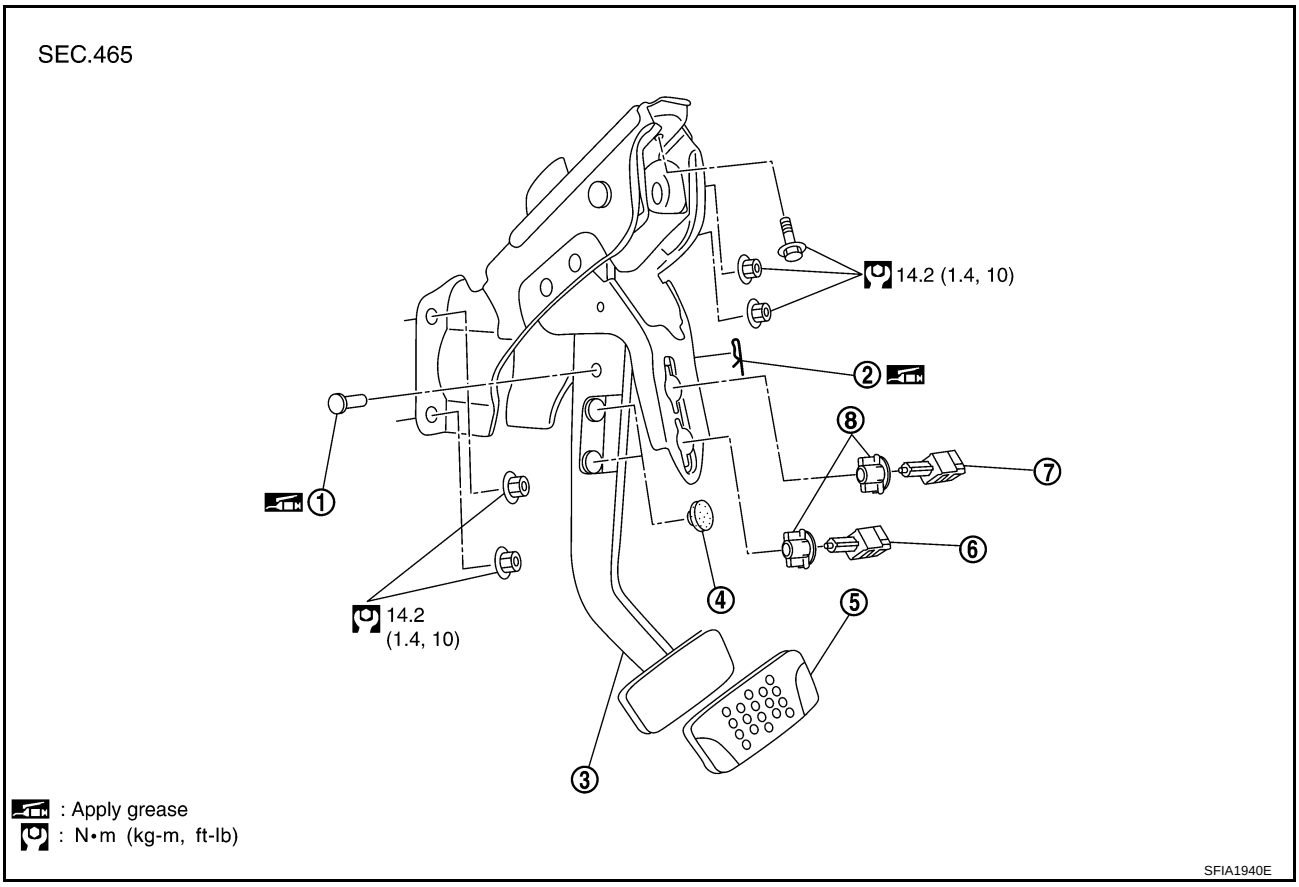

1.	Clevis pin	2.	Snap pin	3.	Brake pedal assembly
4.	Stopper rubber	5.	Pedal pad	6.	ASCD cancel switch (Models with ASCD) Brake switch (Models with ICC)
7.	Stop lamp switch	8.	Clip		

Removal and Installation

NFS000LT

REMOVAL

1. Remove front kicking plate (driver side). Refer to EI-39, "KICKING PLATE" .
2. Remove dash side finisher (driver side). Refer to EI-38, "DASH SIDE FINISHER" .
3. Remove instrument lower panel (driver side). Refer to IP-13, "(K) Instrument Driver Lower Panel" .
4. Remove steering column assembly. Refer to PS-12, "Removal and Installation" .
5. Remove stop lamp switch and ASCD cancel switch (or brake switch) from pedal assembly.
6. Remove snap pin and clevis pin from brake booster clevis.
7. Remove mounting nuts and bolt from bracket, and remove brake pedal assembly from vehicle.

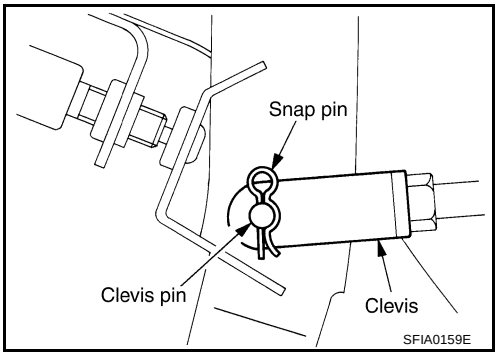

INSPECTION AFTER REMOVAL

- Make sure the rivets in the upper part of brake pedal are not deformed.
- Make sure that joint length “L” of sub-bracket and sliding plate is 5.5 mm (0.217 in) or more.
- Replace brake pedal assembly if any non-standard condition is detected.

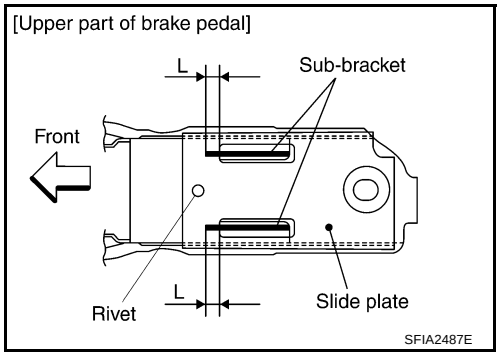

- Check clevis pin and plastic stopper for damage and deformation. Replace clevis pin if there are.

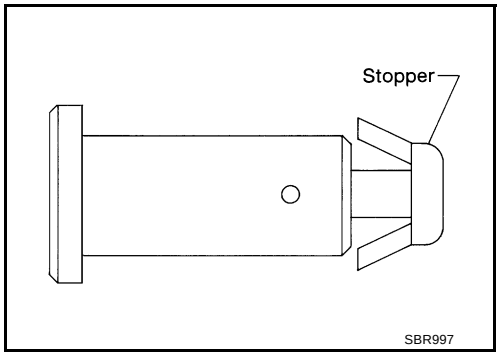

INSTALLATION

Installation in the reverse order of removal.

- After installing brake pedal assembly to the vehicle, adjust brake pedal height. Refer to BR-6, "Inspection and Adjustment" .

BRAKE FLUID

PFP:KN100

On-Board Inspection

NFS000LU

LEVEL CHECK

- Make sure the fluid level in reservoir tank is within the standard (between MAX and MIN lines).
- Visually check around reservoir tank for fluid leakage.
- If fluid level is excessively low, check brake system for leakage.
- Release parking brake pedal and see if brake warning lamp goes off. If not, check brake system for fluid leakage.

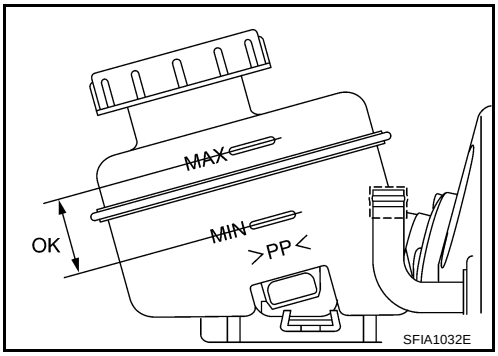

Drain and Refill

NFS000LV

CAUTION:

- **Refill with new brake fluid “DOT3”.**
- **Do not reuse drained brake fluid.**
- **Be careful not to splash brake fluid on painted areas; it way cause paint damage. If brake fluid is splashed on painted surfaces of body, immediately wipe it off and them wash it away with water immediately.**
- **Before servicing, disconnect actuator connector or battery cables.**

1. Connect a vinyl tube to each bleed valve.
2. Depress brake pedal, loosen each bleed valve, and gradually remove brake fluid.

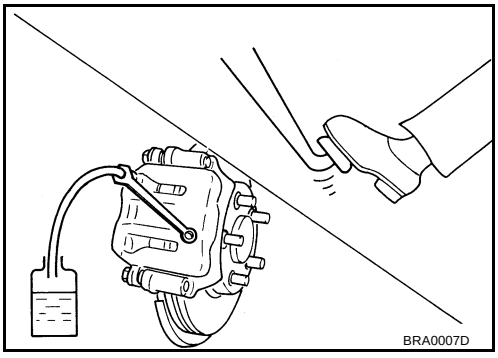

3. Make sure there is no foreign material in reservoir tank, and refill with new brake fluid.
4. Rest foot on brake pedal. Loosen bleed valve. Slowly depress pedal until it stops. Tighten bleed valve. Release brake pedal. Repeat this process a few times, then pause to add new brake fluid to master cylinder. Continue until new brake fluid flows out.
5. Bleed Air. Refer to BR-10, "Bleeding Brake System" .

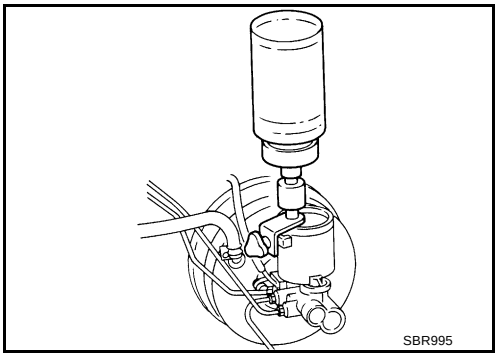

Bleeding Brake System

NFS000LW

CAUTION:

- **Carefully monitor brake fluid level in reservoir tank during bleeding operation.**
- **Refill with new brake fluid "DOT 3". Make sure it is at least half way at all times while bleeding air out of system.**
- **Place a container under master cylinder not to spill brake fluid.**
- **Turn ignition switch OFF and disconnect VDC actuator connectors or battery cables.**

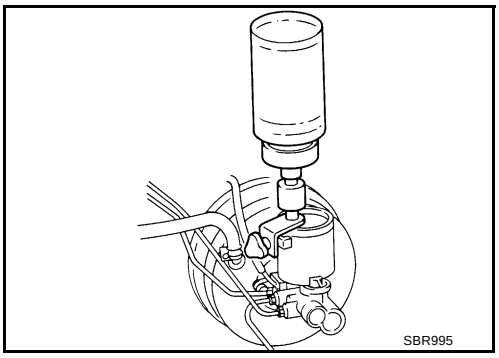

- **Bleed air in the following order. Right rear brake → Left front brake → Left rear brake → Right front brake**

1. Connect a transparent vinyl tube to bleed valve.
2. Fully depress brake pedal several times.
3. With brake pedal depressed, open bleed valve to release air.
4. Close bleed valve.
5. Release brake pedal slowly.
6. Repeat steps 2, through 5, until clear brake fluid comes out of bleed valve.

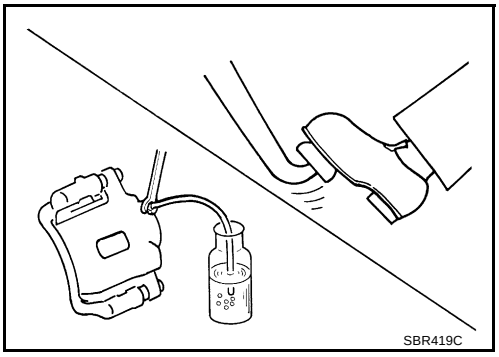

BRAKE TUBE AND HOSE

PFP:46210

Hydraulic Circuit

NFS000LX

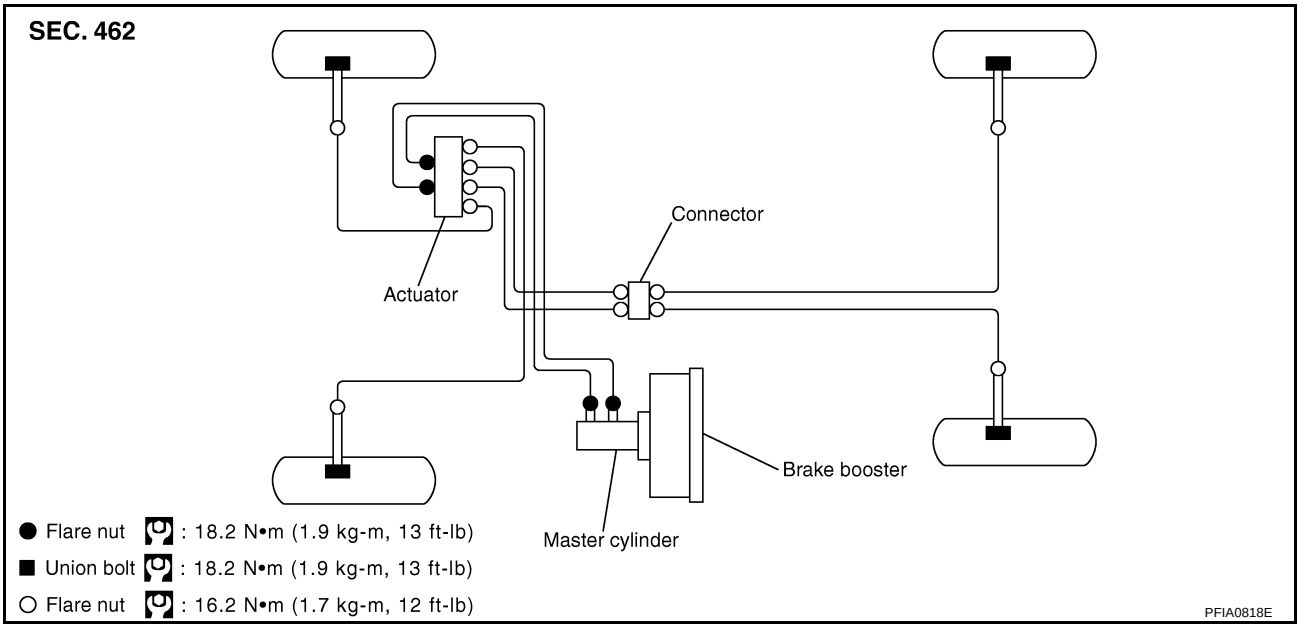

CAUTION:

- **All brake hoses and tubes must be free from excessive bending, twisting and pulling.**
- **Make sure there is no interference with other parts when turning steering both clockwise and counterclockwise.**
- **The brake tubes and hoses is an important safety part. If a brake fluid leak is detected, always disassemble the parts. Replace applicable part with a new one, if necessary.**
- **Be careful not to splash brake fluid on painted areas; it way cause paint damage. If brake fluid is splashed on painted surfaces of body, immediately wipe it off and them wash it away with water immediately.**
- **Do not bend or twist brake hose sharply, or strongly pull it.**
- **When removing components, cover brake line connections so that no dirt, no dust, or other foreign matter gets in.**
- **Refill with new brake fluid " DOT 3 ".**
- **Do not reuse drained brake fluid.**

Removal and Installation of Front Brake Tube and Brake Hose

NFS000LY

REMOVAL

1. Drain brake fluid. Refer to BR-9, "Drain and Refill" .
2. Using a flare nut wrench, remove brake tube from brake hose.
3. Remove union bolt and remove brake hose from caliper assembly.
4. Remove lock plate and remove brake hose from vehicle.

INSTALLATION

1. Position brake hose by aligning with the protrusion on caliper assembly, and them tighten union bolt to the specified torque.

CAUTION:

Do not reuse copper washer.

2. Install brake hose to brake tube. Temporarily tighten flare nut by hand as much as possible. Secure them it to bracket with lock plate.
3. Using a flare nut torque wrench, tighten flare nut to the specified torque.
4. Refill brake fluid and bleed air. Refer to BR-10, "Bleeding Brake System" .

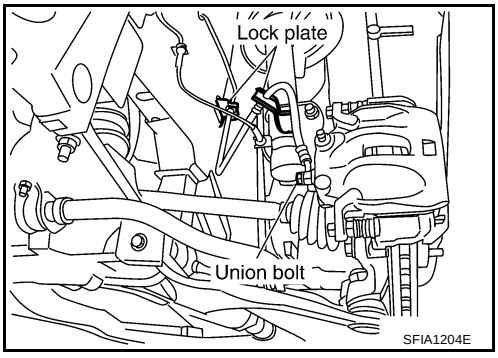

Removal and Installation of Rear Brake Piping and Brake Hose

NFS000LZ

REMOVAL

1. Drain brake fluid. Refer to BR-9, "Drain and Refill" .
2. Using a flare nut wrench, remove brake tube from brake hose.
3. Remove union bolt, and then remove brake hose from caliper assembly.
4. Remove lock nut plate and remove brake hose from vehicle.

INSTALLATION

1. Install brake hose to caliper assembly positioning hole and then tighten union bolt to the specified torque. Refer to BR-11, "Hydraulic Circuit" .

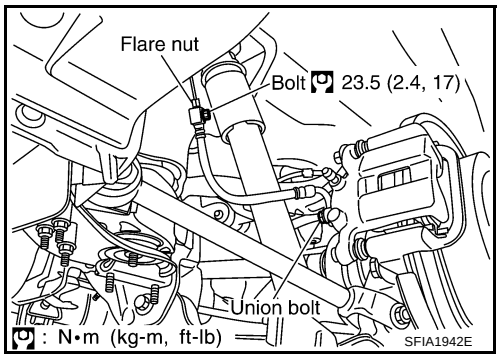

CAUTION:

Do not reuse copper washer.

2. Connect brake hose to brake tube. Temporarily tighten flare nut by hand as much as possible. Tighten it to the specified torque.

   : 23.5 N·m (2.4 kg-m, 17 ft-lb)

3. Using a flare nut torque wrench, tighten flare nut to the specified torque. Refer to BR-11, "Hydraulic Circuit" .
4. After installation, bleed air. Refer to BR-10, "Bleeding Brake System" .

Inspection After Installation

NFS000M0

CAUTION:

If a leak is detected at the connections, retighten it or replace damaged part if necessary.

1. Check brake lines (tubes and hoses), and connections for fluid leakage, damage, twist, deformation, contact with other parts, and loose connections.
2. While depressing brake pedal under a force of 785 N (80 kg, 177 lb) with engine running for approximately 5 seconds, check for fluid leak from each part.

BRAKE MASTER CYLINDER

PFP:46010

On-Board Inspection

NFS000M1

LEAK INSPECTION

- Check for leaking in a master cylinder installation surface, a reservoir tank installation surface, and brake tube connections.

Components

NFS000M3

SEC. 460

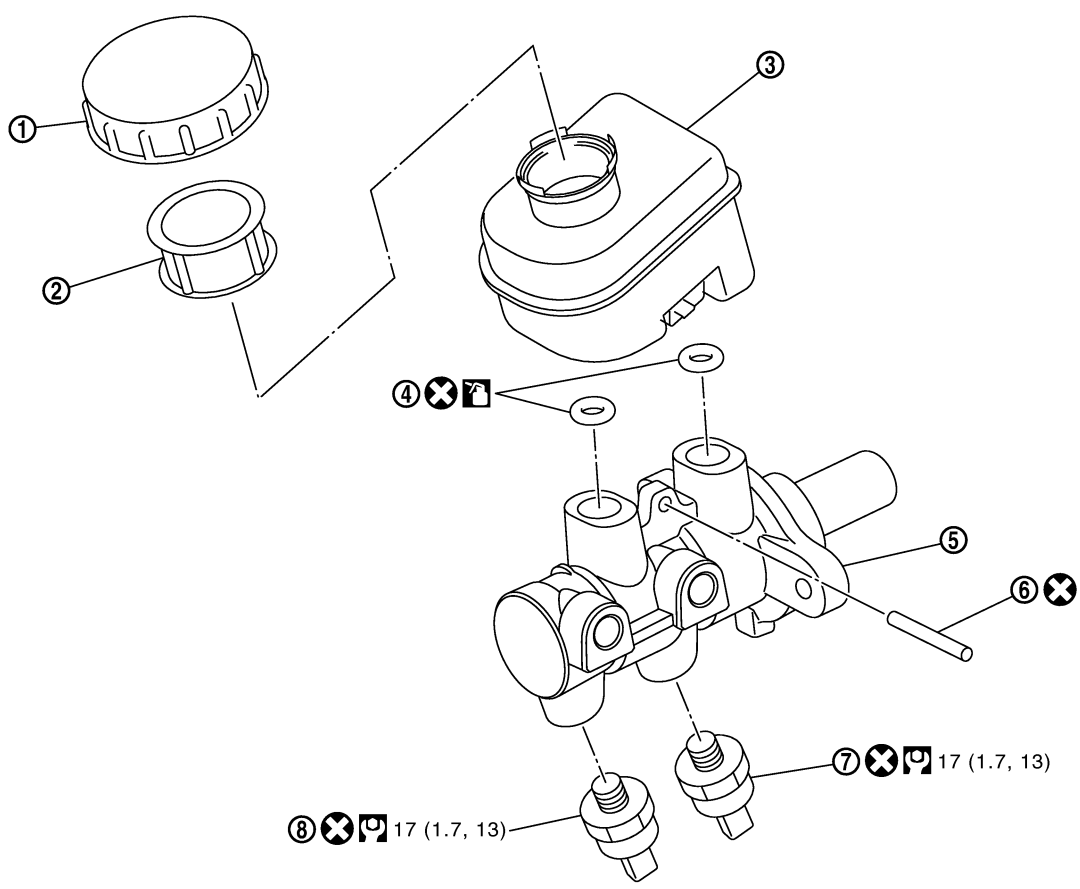

1.	Reservoir cap	2.	Strainer	3.	Reservoir tank
4.	Grommet	5.	Cylinder body	6.	Pin
7.	Pressure sensor	8.	Pressure sensor (Only ICC models)		

Refer to GI-11, "Components" and the followings for the symbols in the figure.

: Apply brake fluid.

Removal and Installation

NFS000M2

CAUTION:

Be careful not to splash brake fluid on painted areas; it way cause paint damage. If brake fluid is splashed on painted surfaces of body, immediately wipe it off and them wash it away with water immediately.

REMOVAL

1. Remove cowl top cover. Refer to EI-23, "COWL TOP" .
2. Drain brake fluid. Refer to BR-9, "Drain and Refill" .
3. Remove harness connectors for fluid level sensor and pressure sensor.
4. Using a flare nut wrench, remove brake tube from master cylinder assembly.

5. Remove master cylinder assembly mounting nut, remove master cylinder assembly from the vehicle. Refer to BR-16, "Removal and Installation" .

INSTALLATION

CAUTION:

- **Refill with new brake fluid “DOT3”.**
- **Do not reuse drained brake fluid.**

1. Install in the reverse order of removal, and tighten mounting nuts to the specified torque. Refer to BR-15, "Components" .
2. Refill brake fluid and bleed air. Refer to BR-10, "Bleeding Brake System" .

Disassembly and Assembly

NFS000M4

DISASSEMBLY

CAUTION:

- **Master cylinder can not be disassembled.**
- **Remove reservoir tank only when absolutely necessary.**

1. Remove pin (1).
2. Remove reservoir tank and grommet from master cylinder assembly.

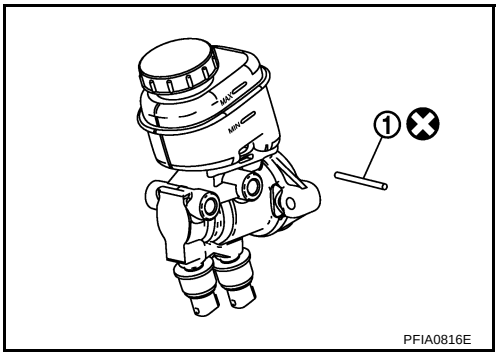

PFIA0816E

ASSEMBLY

CAUTION:

- **Do not use mineral oil such as kerosene, gasoline during the cleaning and assembly process.**
- **Do not drop parts. If a part is dropped, do not use it.**

1. Apply brake fluid grommet and attach to master cylinder assembly.

   CAUTION:
   Do not reuse grommet.
   Do not reuse pin.
2. Install reservoir tank onto master cylinder assembly.
3. Install pin (1).

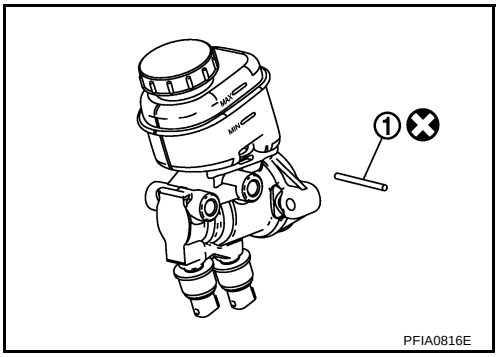

PFIA0816E

BRAKE BOOSTER

PFP:47200

On-Vehicle Service

NFS000M5

OPERATING CHECK

With engine stopped, change the vacuum to the atmospheric pressure by depressing brake pedal several times. Then with brake pedal fully depressed, start engine and when the vacuum pressure reaches the standard, make sure the clearance between brake pedal and floor panel decreases.

CAUTION:

Depressing pedal interval is approximately 5 seconds.

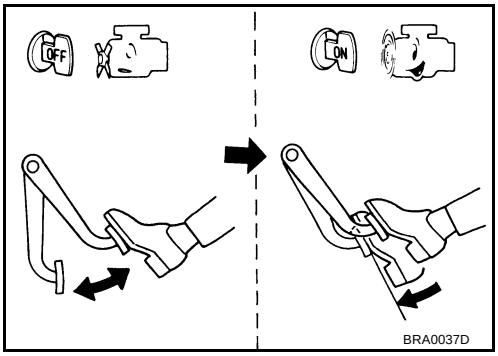

AIRTIGHT CHECK

- Run engine at idle for approximately 1 minute, and stop it after applying vacuum to booster. Depress brake pedal normally to change the vacuum to the atmospheric pressure. Make sure distance between brake pedal and floor panel gradually increases.
- Depress brake pedal while engine is running, and stop engine with pedal depressed. The pedal stroke should not change after holding pedal down for 30 seconds.

CAUTION:

Depressing brake pedal is interval is approximately at intervals 5 seconds.

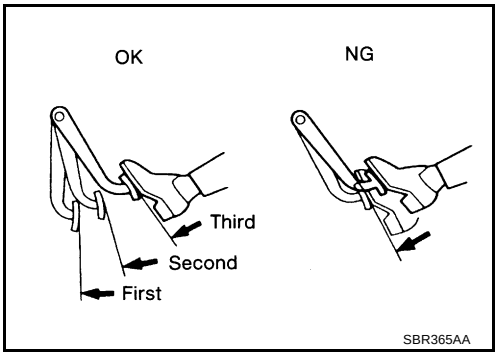

Components

NFS000OB

SEC. 460•465•470

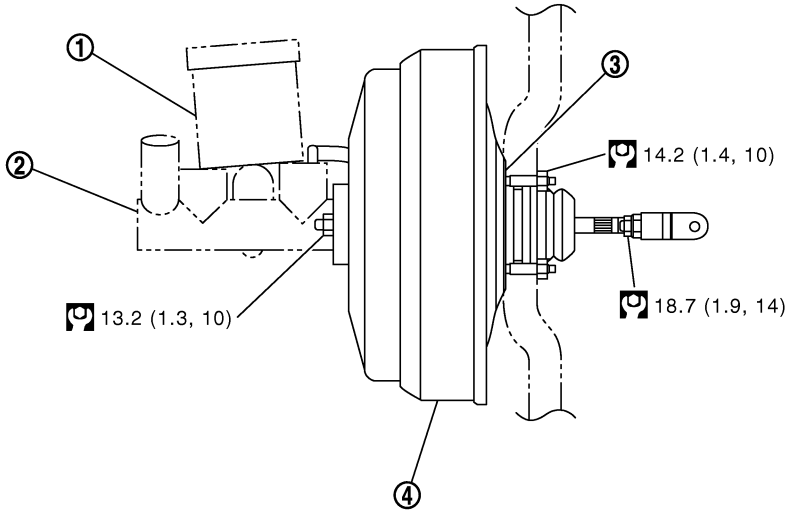

1. Reservoir tank
2. Master cylinder
3. Gasket
4. Brake booster

Refer to GI-11, "Components" , for the symbols in the figure.

Removal and Installation

NFS000M6

REMOVAL

CAUTION:

- **Be careful not to splash brake fluid on painted areas; it may cause paint damage. If brake fluid is splashed on painted surfaces of body, immediately wipe it off and them wash it away with water immediately.**
- **Be careful not to deform or bend brake tube while removing and installing brake booster.**
- **Replace clevis pin if it is damaged.**
- **Be careful not to damage brake booster stud bolt threads. If brake booster is tilted or inclined during installation, dash panel may damage the threads.**
- **Install the check valve in the correct direction.**

1. Remove vacuum hose from brake booster. Refer to BR-17, "VACUUM LINES" .
2. Remove brake master cylinder. Refer to BR-13, "Removal and Installation" .
3. Disconnect harness connector from brake booster assembly. (ICC model)
4. Remove snap pin and clevis pin from inside the vehicle. Refer to BR-7, "Components" .
5. Remove nuts from brake booster and brake pedal bracket.
6. Remove brake booster assembly from engine room.

INSPECTION AFTER REMOVAL

Output Rod Length Inspection

1. Using a handy vacuum pump, apply a vacuum of –66.7 kPa (–500 mmHg, –19.69 inHg) to brake booster.
2. Check output rod length.

Standard dimension when applying a vacuum of –66.7 kPa (–500 mmHg, –19.69 inHg):

15.6 – 15.9 mm (0.614 – 0.626 in)

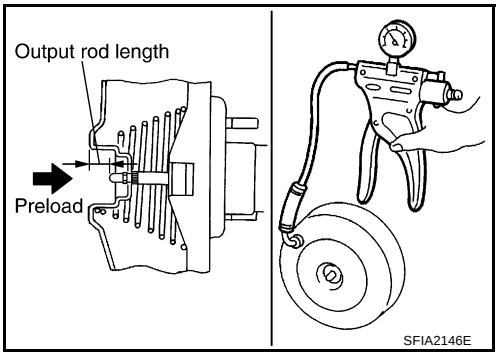

INSTALLATION

1. Loosen lock nut to adjust input rod length so that the length “B” (shown in the figure) satisfies the specified value.

Length “B” : 126.5 mm (4.98 in)

2. After adjusting “B”, temporarily tighten lock nut to install brake booster assembly to the vehicle. At this time, make sure to install a gasket between brake booster assembly and the engine room.
3. Connect brake pedal with clevis of input rod.
4. Install brake pedal bracket mounting nuts and bolt and tighten them to the specified torque.BR-7, "Components" .

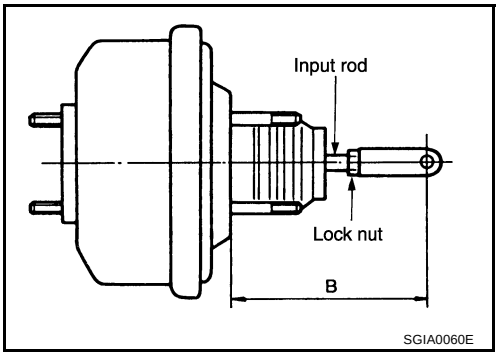

5. Install brake tube from brake master cylinder to ABS actuator. Refer to BR-11, "Hydraulic Circuit" .
6. Install master cylinder to booster assembly. Refer to BR-13, "Removal and Installation" .
7. Adjust the height and play of brake pedal. BR-6, "Inspection and Adjustment" .
8. Tighten lock nut of input rod to the specified torque. Refer to BR-15, "Components" .
9. Bleed air. Refer to BR-10, "Bleeding Brake System" .

VACUUM LINES

PFP:41920

Components

NFS000OC

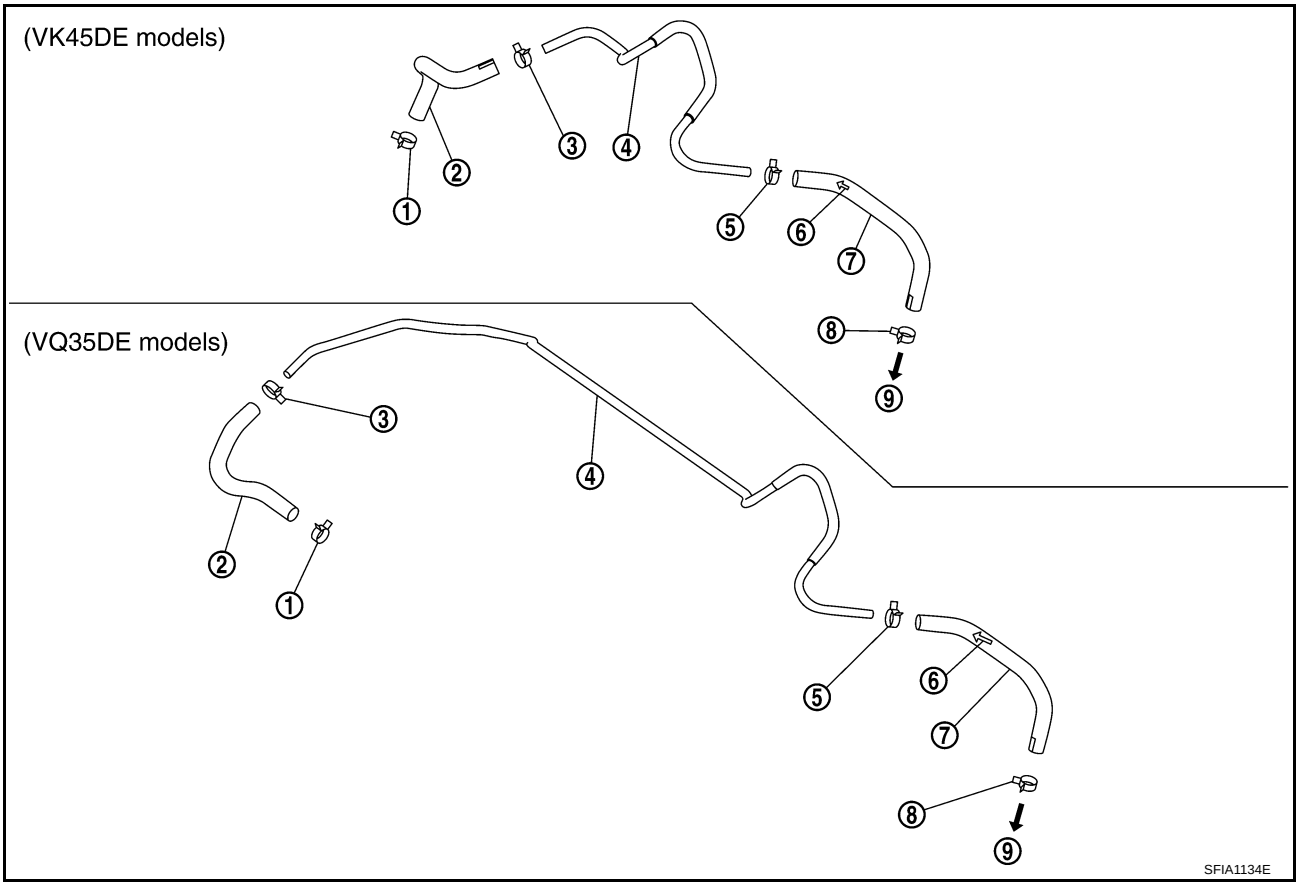

1. Clamp	2. Vacuum hose	3. Clamp
4. Vacuum piping	5. Clamp	6. Engine direction indicator
7. Vacuum hose (Build in check valve)	8. Clamp	9. Brake booster

Removal and Installation

NFS000M7

CAUTION:

- **Because vacuum hose contains a check valve, it must be installed in the correct direction. Refer to the stamp or label to confirm correct installation. The brake booster will not operate normally if hose is installed in the wrong direction.**
- **Insert vacuum hose for at least 24 mm (0.94 in).**
- **Do not use lubricating oil during assembly.**

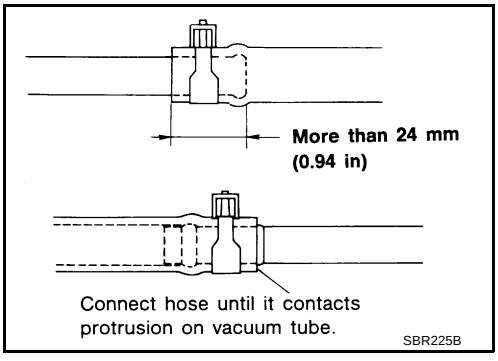

Inspection

NFS000M8

VISUAL INSPECTION

Check for improper assembly, damage and deterioration.

CHECK VALVE INSPECTION

Airtightness Inspection

Use a handy vacuum pump to check.

When connected to booster side (1):

Vacuum decrease should be within 1.3 kPa (10 mmHg, 0.39 inHg) for 15 seconds under a vacuum of –66.7 kPa (–500 mmHg, –19.69 inHg)

When connected to engine side (2):

No vacuum will be applied

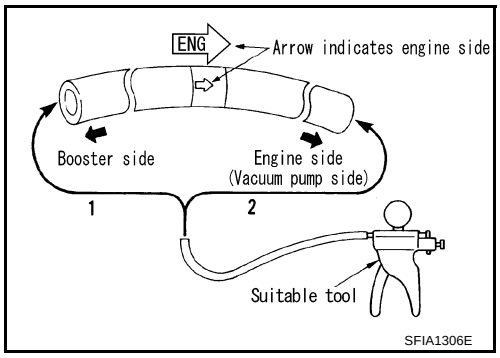

FRONT DISC BRAKE

PFP:41000

On-Vehicle Inspection

NFS000M9

PAD WEAR INSPECTION

- Check the thickness from check hole on cylinder body. Use a scale for inspection if necessary.

Standard thickness : 11.0 mm (0.433 in)

Repair limit thickness : 2.0 mm (0.079 in)

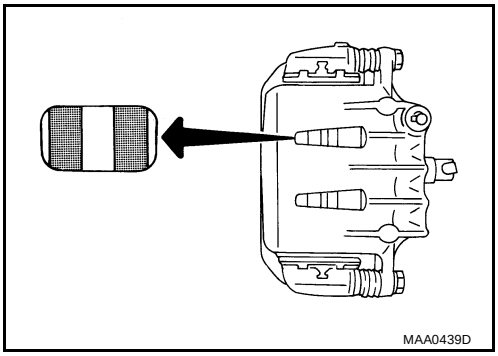

Components

NFS000MA

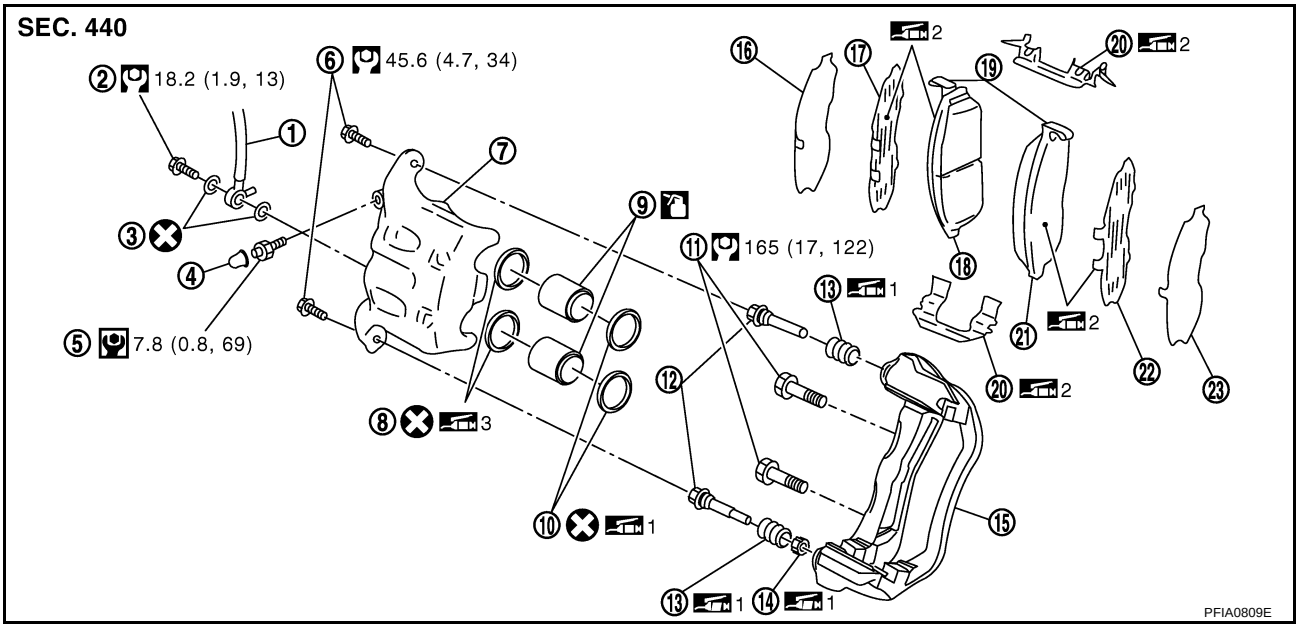

1.	Brake hose	2.	Union bolt	3.	Copper washer
4.	Cap	5.	Bleed valve	6.	Sliding pin bolt
7.	Cylinder body	8.	Piston seal	9.	Piston
10.	Piston boot	11.	Torque member mounting bolt	12.	Sliding pin
13.	Sliding pin boot	14.	Bushing	15.	Torque member
16.	Inner shim cover	17.	Inner shim	18.	Inner pad
19.	Pad wear sensor	20.	Pad retainer	21.	Outer pad
22.	Outer shim	23.	Outer shim cover		

Refer to GI-11, "Components" and the followings for the symbols in the figure.

1: Apply rubber grease.

2: Apply PBC (Poly Butyl Cuprysil) grease or silicone-based grease.

3: Apply polyglycol ether based lubricant.

: Apply brake fluid.

WARNING:

Clean dust on caliper and brake pad with a vacuum dust collector to minimize the hazard of airborne particles or other materials.

CAUTION:

- **While removing cylinder body, never depress brake pedal because piston will pop out.**

- **It is not necessary to remove bolts on torque member and brake hose except for disassembly or replacement of caliper assembly. In this case, suspend cylinder body with wire so as not to stretch brake hose.**
- **Do not damage piston boot.**
- **If any shim is subject to serious corrosion, replace it with a new one.**
- **Always replace shims and shim covers as a set when replacing brake pads.**
- **Keep rotor clean, from brake fluid.**
- **Burnish brake contact surface after refinishing or replacing rotors, after replacing pads, or it a soft pedal occurs at very low mileage. Refer to** **BR-24, "Brake Burnishing Procedure"** **.**

Removal and Installation of Brake Pad

NFS000MB

REMOVAL

1. Remove tires from vehicle with power tool.
2. Remove lower sliding pin bolt.
3. Hang cylinder body with a wire, and remove pads, pad retainers, shims from torque member.

   CAUTION:
   When removing pad retainer from torque member, lift pad retainer in the direction shown by arrow (shown in the figure) so as not to deform it.

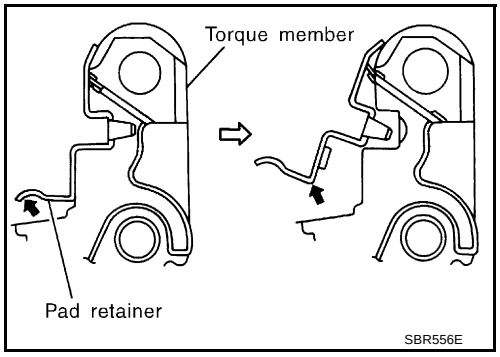

INSTALLATION

1. Apply PBC (Poly Butyl Cuprysil) or equivalent to the both sides of inner shim and outer shim, install inner shim to inner pad, and outer shim and outer shim cover to outer pad.
2. Apply PBC (Poly Butyl Cuprysil) or equivalent to pad contact surface on pad retainer, and install pad retainers and pads to torque member.

   CAUTION:
   Inner pad and outer pad have pad-return mechanism on upper side of pad retainer. When installing pad to torque member, be sure to install pad return lever to pad wear sensor securely.

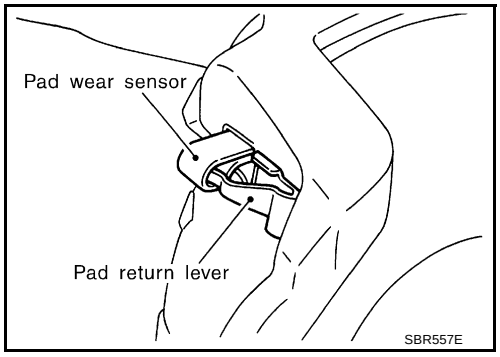

3. Install cylinder body to torque member.

   CAUTION:
   When replacing pads with new ones, press in piston until pads can be installed. In this case, carefully monitor brake fluid level in reservoir tank because brake fluid will return to master cylinder reservoir tank.
4. Install lower sliding pin bolt, and tighten it to the specified torque. Refer to BR-19, "Components" .
5. Secure disc rotor with wheel nuts. Depress brake pedal a few times until it gets a responsive touch.
6. Check brake for drag.
7. Install tires to vehicle.

Removal and Installation of Brake Caliper Assembly

NFS000MC

REMOVAL

1. Remove tires from vehicle with power tool.
2. Fasten disc rotor using wheel nut.
3. Drain brake fluid. Refer to BR-9, "Drain and Refill" .

4. Remove union bolts and torque member bolts, and remove brake caliper assembly from the vehicle.
5. Remove disc rotor.

   CAUTION:
   Put matching marks on both disc rotor and wheel hub when removing disc rotor.

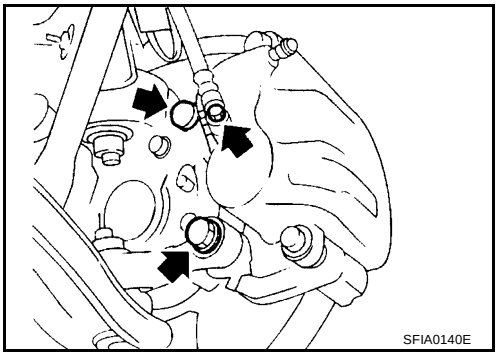

INSTALLATION

CAUTION:
- **Refill with new brake fluid "DOT3".**
- **Do not reuse drained brake fluid.**

1. Install disc rotor.

   CAUTION:
   Align the matching marks of disc rotor and wheel hub, which were marked at the time of removal when reusing disc rotor.
2. Install caliper assembly to vehicle, and tighten mounting bolts to the specified torque. Refer to BR-19, "Components" .

   CAUTION:
   Before installing torque member to vehicle, wipe oil and grease on washer seats on steering knuckle and mounting surface of torque member.
3. Install a projection of brake hose metal fitting by aligning with protrusions on cylinder body, and tighten union bolts to the specified torque. Refer to BR-19, "Components" .

   CAUTION:
   - **Do not reuse copper washer for union bolts.**
   - **Assemble brake hose securely on caliper assembly.**
4. After installing caliper assembly, refill with new brake fluid and bleed air. Refer to BR-10, "Bleeding Brake System" .
5. Install tires to vehicle.

Disassembly and Assembly of Brake Caliper Assembly

NFS000MD

NOTE:
Do not remove torque member, brake pads, shims, shim cover and pad retainer, when disassembling or assembling cylinder body.

DISASSEMBLY

1. Remove caliper assembly from vehicle. Refer to BR-20, "Removal and Installation of Brake Caliper Assembly" .
2. Remove sliding pin bolts from cylinder body, and remove pad, shim, shim cover and pad retainer from torque member.

   CAUTION:
   When removing pad retainer from torque member, lift the pad retainer in the direction shown by arrow (shown in the figure) so as not to deform it.

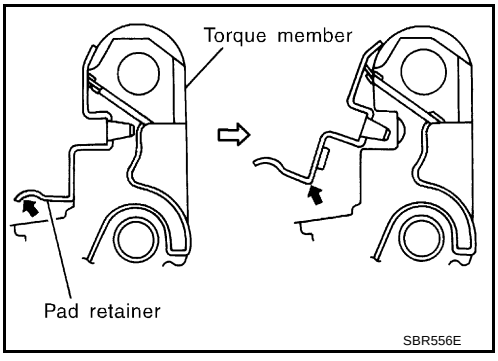

3. Remove sliding pins and sliding pin boots from torque member.
4. Place a wooden block as shown in the figure, and blow air from union bolt mounting hole to remove pistons and piston boots.

   CAUTION:
   Do not get your fingers caught in piston.

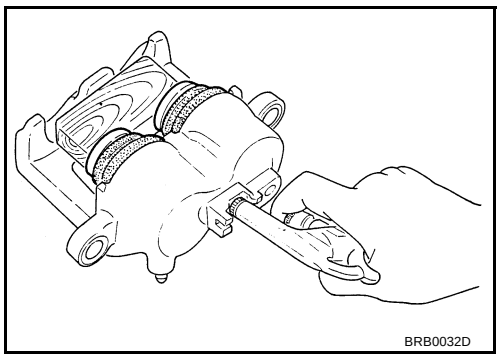

5. Using a flat-bladed screwdriver, remove piston seal from cylinder body.

   CAUTION:
   Be careful not to damage cylinder inner wall.

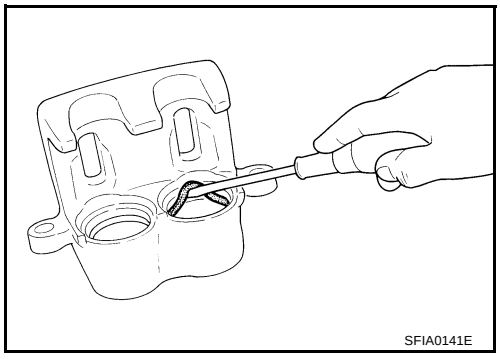

INSPECTION AFTER DISASSEMBLY

Cylinder Body

CAUTION:
Use new brake fluid to clean. Do not use mineral oils such as gasoline or kerosene.

- Check the inner wall of cylinder for corrosion, wear, and damage. If a malfunction is detected, replace cylinder body.
- Minor flaws caused by corrosion or a foreign material can be removed by polishing a surface of the inner wall with a fine sandpaper. Replace cylinder body, if necessary.

Torque Member

Check for wear, cracks, and damage. If a malfunction is detected, replace the torque member.

Piston

CAUTION:
The piston sliding surface is plated. Do not polish with sandpaper.
Check piston surface for corrosion, wear, and damage. If a malfunction is detected, replace applicable part.

Sliding Pin, Sliding Pin Bolt, and Sliding Pin Boot

Check sliding pins and sliding pin boots for wear, damage, and cracks. If a malfunction is detected, replace applicable part.

ASSEMBLY

1. Apply polyglycol ether based lubricant to the piston seal, and install them to the cylinder body.

   CAUTION:
   Do not reuse piston seal.

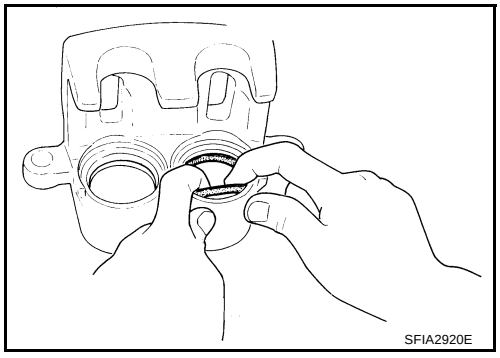

2. Apply rubber grease to piston boot. Cover the piston end with piston boot, and install cylinder side lip on piston boot properly into groove on cylinder body.

   CAUTION:
   Do not reuse piston boot.

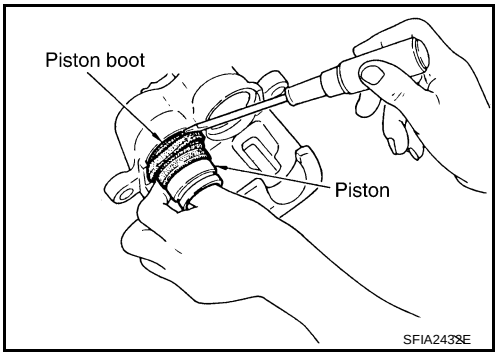

3. Apply brake fluid to piston, and press piston into cylinder body by hand to assemble piston side lip on piston boot properly into groove on piston.

   CAUTION:
   Press piston evenly and vary the pressing point to prevent cylinder inner wall from being rubbed.

4. Install sliding pins and sliding pin boots to torque member.

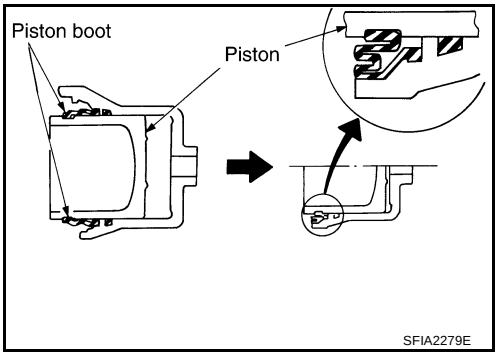

5. Install the torque member to the knuckle spindle and tighten the mounting bolts to the specified torque. Refer to BR-19, "Components" .

   CAUTION:
   Before installing torque member to vehicle, wipe oil and grease on the washer seats on steering knuckle and the mounting surface of the torque member.

6. Install pad retainers to torque member.
7. After assembling shims and shim covers to pad, install it to torque member.

   CAUTION:
   Inner pad and outer pad have pad-return mechanism on the upper side of the pad retainer. When installing pad, be sure to install pad return lever to pad wear sensor securely as shown in the figure.

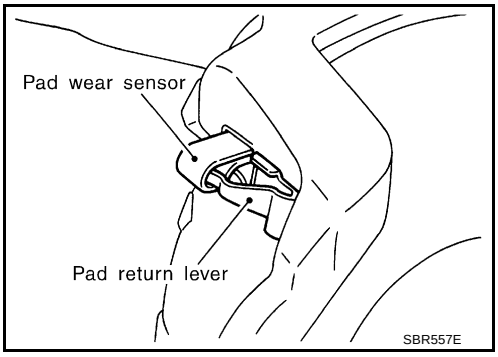

8. Install cylinder body, and tighten sliding pin bolt to specified torque. Refer to BR-19, "Components" .
9. Install a projection of brake hose metal fitting by aligning with protrusions on cylinder body, and then tighten union bolts to specified torque. Refer to BR-11, "Hydraulic Circuit" .

   CAUTION:
   - **Assemble brake hose securely to protrusions on cylinder body.**
   - **Do not reuse copper washer for union bolts.**

10. After installing caliper assembly, refill with new brake fluid and bleed air. Refer to BR-10, "Bleeding Brake System" .

DISC ROTOR INSPECTION

Visual Inspection

Check surface of disc rotor for uneven wear, cracks, and serious damage. If any of them is detected, replace applicable part.

Runout Inspection

1. Using wheel nuts, fix disc rotor to wheels hub. (2 or more positions)
2. Using a dial indicator, check runout.

Measurement point	**: At a point 10.0 mm (0.394 in) from outer edge of disc.**
Runout limit	**: 0.04 mm (0.0016 in) or less**

CAUTION:
Before measuring, make sure that axle end play is 0.05 mm (0.002 in) or less.

3. If runout is outside the limit, find the minimum runout point by shifting the mounting positions of disc rotor and wheel hub by one hole.
4. If runout is still out of specification, turn rotor with on-car brake lathe (“MAD, DL-8700”, “AMMCO 700 and 705” or equivalent).

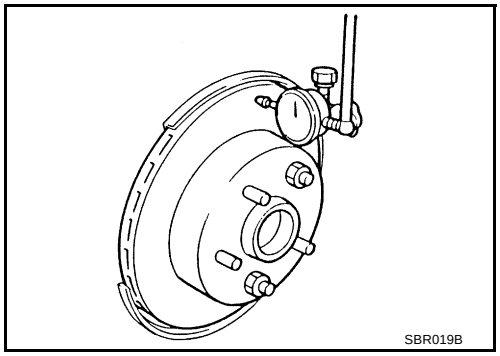
SBR019B

Thickness Inspection

Using a micrometer, check thickness of disc rotor. If thickness is outside the specification, replace disc rotor.

Standard thickness	**: 34.0 mm (1.339 in)**
Wear limit	**: 32.0 mm (1.260 in)**
Maximum uneven wear (measured at 8 positions)	**: 0.015 mm (0.0006 in) or less**

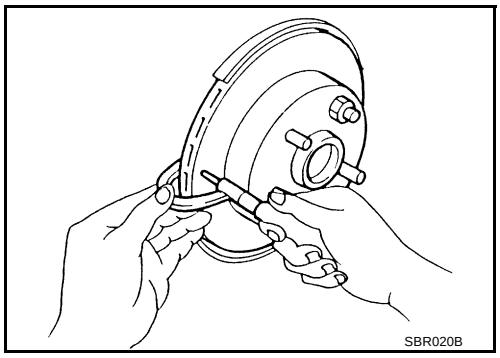
SBR020B

Brake Burnishing Procedure

NFS000OD

Burnish brake pad contact surfaces of disc rotor according to following procedure after refinishing or replacing drums or rotors, after replacing pads or linings, or if a soft pedal occurs at very low mileage.

CAUTION:

- **Be careful of vehicle speed because brake does not operate easily until pad and disc rotor are securely fitted.**
- **Only perform this procedure under safe road and traffic conditions. Use extreme caution.**

1. Drive vehicle on straight, flat road.
2. Depress brake pedal with the power to stop vehicle within 3 to 5 seconds until the vehicle stops.
3. Drive without depressing brake for a few minutes to cool brake.
4. Repeat steps 1 to 3 until pad and disc rotor are securely fitted.

REAR DISC BRAKE

PFP:44000

On-Vehicle Inspection

NFS000ME

PAD WEAR INSPECTION

- Check the thickness from check hole on cylinder body. Use a scale for inspection if necessary.

Standard thickness : 8.5 mm (0.335 in)

Repair limit thickness : 2.0 mm (0.079 in)

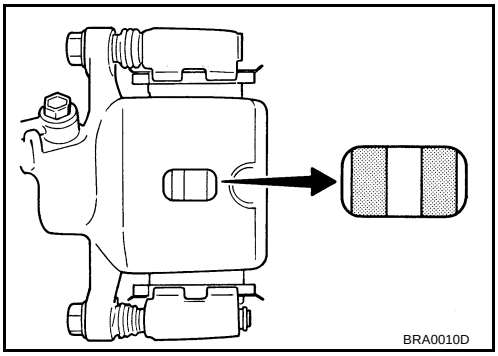

Components

NFS000MF

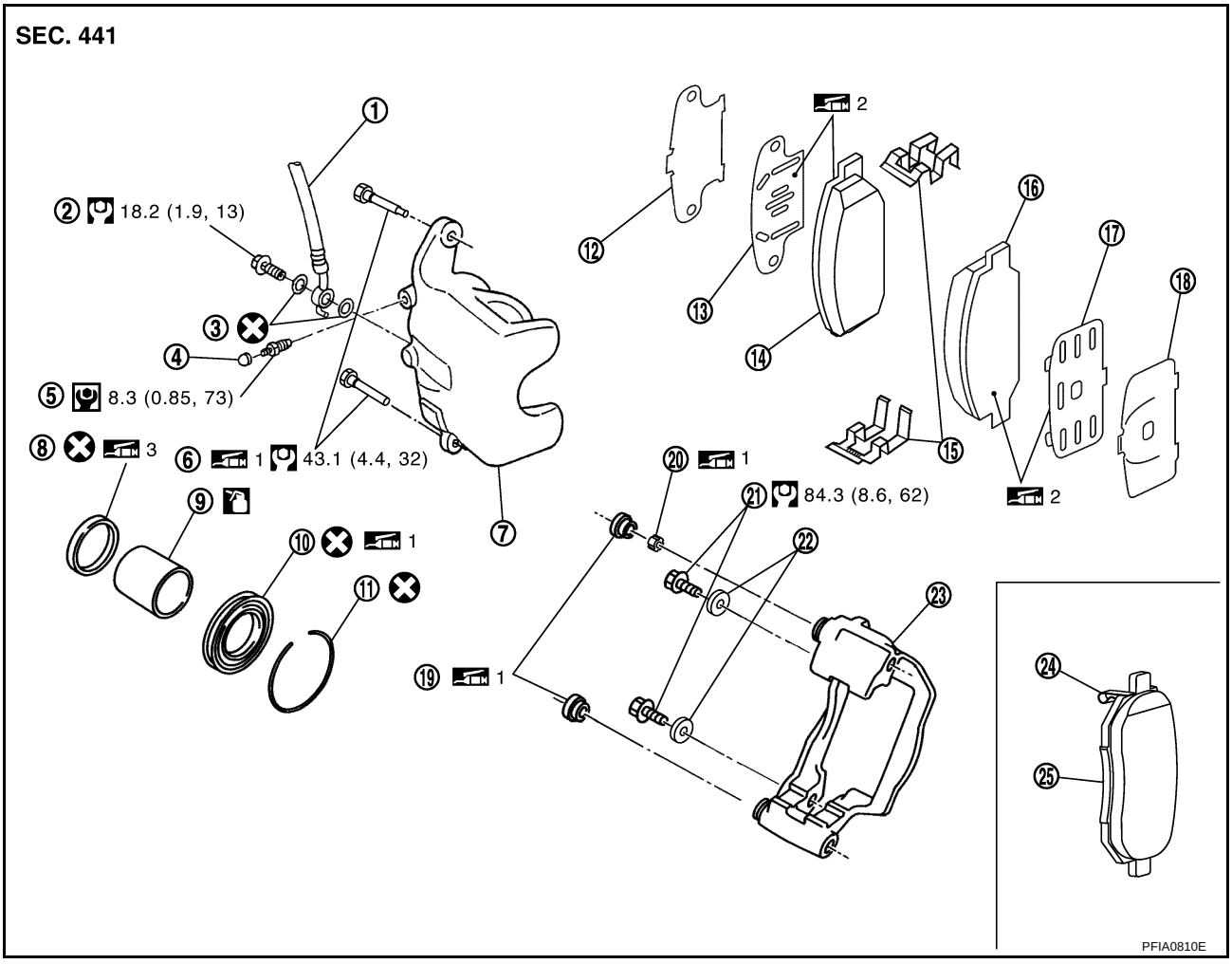

1.	Brake hose	2.	Union bolt	3.	Copper washer
4.	Cap	5.	Bleed valve	6.	Sliding pin bolt
7.	Cylinder body	8.	Piston seal	9.	Piston
10.	Piston boot	11.	Retaining ring	12.	Inner shim cover
13.	Inner shim	14.	Inner pad	15.	Pad retainer
16.	Outer pad	17.	Outer shim*1	18.	Outer shim cover or outer shim*2
19.	Sliding pin boot	20.	Bushing	21.	Torque member mounting bolt
22.	Washer	23.	Torque member	24.	Pad wear sensor
25.	Inner pad (RH)				

*1: Some model have not outer shim.

*2: For models with one shim. (Refer to the latest parts information.)

Refer to GI-11, "Components" and the followings for the symbols in the figure.

1: Apply rubber grease.

2: Apply PBC (Poly Butyl Cuprysil) grease or silicone-based grease.

3: Apply polyglycol ether based lubricant.

: Apply brake fluid.

WARNING:

Clean dust on caliper and brake pad with a vacuum dust collector to minimize the hazard of airborne particles or other materials.

CAUTION:

- **While removing cylinder body, never depress brake pedal because piston will pop out.**
- **It is not necessary to remove bolts on torque member and brake hose except for disassembly or replacement of caliper assembly. In this case, hang cylinder body with a wire so as not to stretch brake hose.**
- **Do not damage piston boot.**
- **If any shim is subject to serious corrosion, replace it with a new one.**
- **Always replace shims and shim covers as a set when replacing brake pads.**
- **Keep rotor clean, from brake fluid.**
- **Burnish brake contact surface after refinishing or replacing rotors, after replacing pads, or if a soft pedal occurs at very low mileage. Refer to BR-31, "Brake Burnishing Procedure" .**

Removal and Installation of Brake Pad

NFS000MG

REMOVAL

1. Remove tires from vehicle with power tool.
2. Remove sliding pin bolt (one on top).
3. Suspend cylinder body with a wire, and remove pads, pad retainers, shim from torque member.

INSTALLATION

1. Apply PBC (Poly Butyl Cuprysil) grease or silicon-based grease to the backside of pad and to both sides of shim, and install inner shim and shim cover to inner pad, and install the outer shim and outer shim cover to outer pad.
2. Install pad retainer and mount pad assemblies to torque member.
3. Push piston in so that pad is firmly installed and mount cylinder body to torque member.

   CAUTION:

   When replacing pads with new ones, press in piston until pads can be installed. In this case, carefully monitor brake fluid level in reservoir tank because brake fluid will return to master cylinder reservoir tank.
4. Install sliding pin bolt (one on top) and tighten to the specified torque. Refer to BR-25, "Components" .
5. Check brake for drag.
6. Install tires to the vehicle.

Removal and Installation of Brake Caliper Assembly

NFS000MH

REMOVAL

1. Remove tires from vehicle with power tool.
2. Fasten disc rotor using wheel nut.
3. Drain brake fluid. Refer to BR-9, "Drain and Refill" .
4. Remove union bolt and torque member bolts, and remove brake caliper assembly from the vehicle.

   CAUTION:
   Put matching marks on both disc rotor and wheel hub when removing disc rotor.
5. Remove disc rotor.

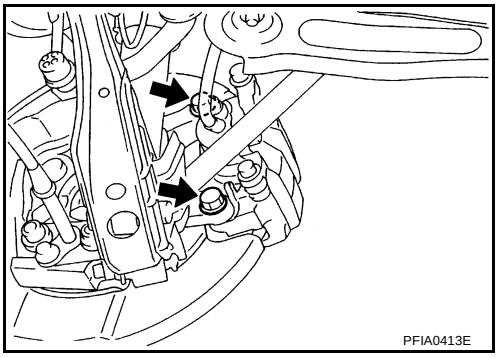

INSTALLATION

CAUTION:
- **Refill with new brake fluid “DOT 3”.**
- **Do not reuse drained brake fluid.**

1. Install disc rotor.

   CAUTION:
   Align the matching marks of disc rotor and wheel hub, which were marked at the time of removal when reusing disc rotor.
2. Install caliper assembly to the vehicle, and tighten bolts to the specified torque. Refer to BR-25, "Components" .

   CAUTION:
   Before installing caliper assembly to the vehicle, wipe off oil and grease on washer seats on axle assembly and mounting surface of caliper assembly.
3. Install brake hose to caliper assembly and tighten union bolt to the specified torque. Refer to BR-25, "Components" .

   CAUTION:
   - **Do not reuse copper washer for union bolts.**
   - **Securely install brake hose to protrusion on caliper assembly.**
4. After installing caliper assembly, refill with new brake fluid and bleed air. Refer to BR-10, "Bleeding Brake System" .
5. Install tires to the vehicle.

Disassembly and Assembly of Brake Caliper Assembly

NFS000MI

NOTE:
Do not remove torque member, brake pads, shims, shim covers and pad retainers, when disassembling or assembling cylinder body.

DISASSEMBLY

1. Remove sliding pin bolts, and then remove brake pads, shims, shim covers, and pad retainer from torque member and cylinder.

   CAUTION:
   Do not drop brake pads, shims, shim cover and pad retainer from torque member.
2. Remove sliding pin boot from torque member.

3. As shown in the figure, using a flat-bladed screwdriver, remove retaining ring from cylinder body.

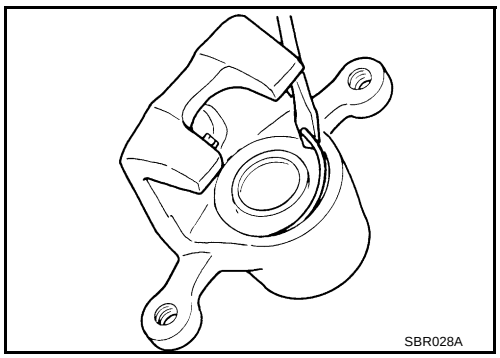

4. Place a wooden block as shown in the figure, and blow air from union bolt mounting hole to remove pistons and piston boots.

   CAUTION:
   Do not get your fingers caught in piston.

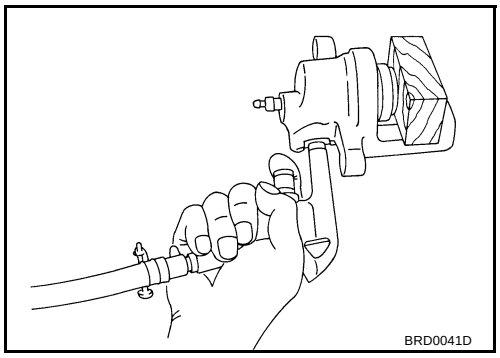

5. Using a flat-bladed screwdriver, remove piston seals from cylinder body.

   CAUTION:
   Be careful not to damage cylinder inner wall.

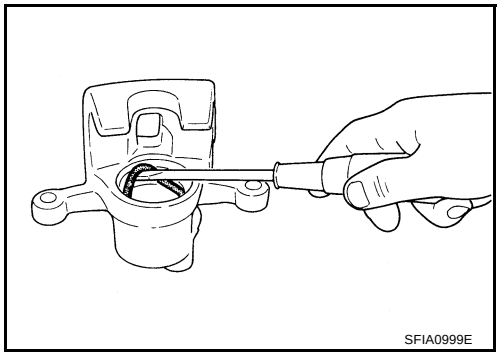

INSPECTION AFTER DISASSEMBLY

Cylinder Body

CAUTION:

- **Use new brake fluid to clean. Do not use mineral oils such as gasoline or kerosene.**
- **Check inside surface of cylinder for score, rust wear, damage or foreign materials. If any of the above conditions are observed, replace cylinder body.**
- **Minor damage from rust or foreign materials may be eliminated by polishing surface with a fine emery paper. Replace cylinder body if necessary.**

Torque Member

Check for wear, cracks, and damage. If damage or deformation is present, replace the torque member.

Piston

CAUTION:

- **Piston sliding surface is plated, do not polish with emery paper even if rust of foreign materials are stuck to sliding surface.**
- **Check piston for score, rust, wear, damage or presence of foreign materials. Replace if any of the above condition are observed.**

Sliding Pin Bolts and Sliding Pin Boots

Check sliding pin bolts and sliding pin boots, for wear, damage and cracks. If damage or deformation is present, replace the applicable part.

ASSEMBLY

1. Apply polyglycol ether based lubricant to the piston seal, and install them to the cylinder body.

   CAUTION:
   Do not reuse piston seal.

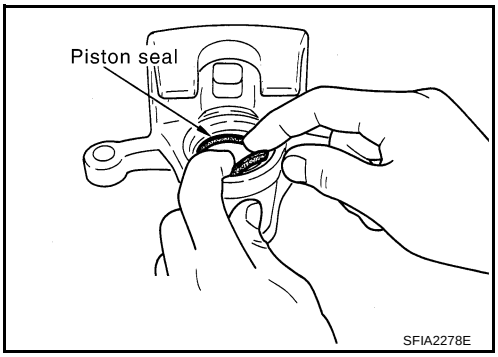

2. Apply rubber grease to piston boots. Cover the piston end with piston boot, and install cylinder side lip on piston boots properly into groove on cylinder body.

   CAUTION:
   Do not reuse piston boot.

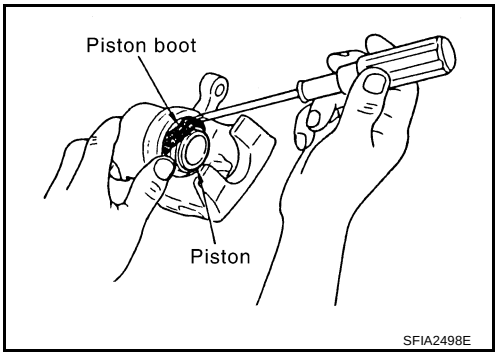

3. Apply brake fluid to piston, and press piston into cylinder body by hand to assemble piston side lip on piston boot properly into groove on piston.

   CAUTION:
   Press piston evenly and change the pressing point to prevent the inner wall of cylinder from being rubbed.

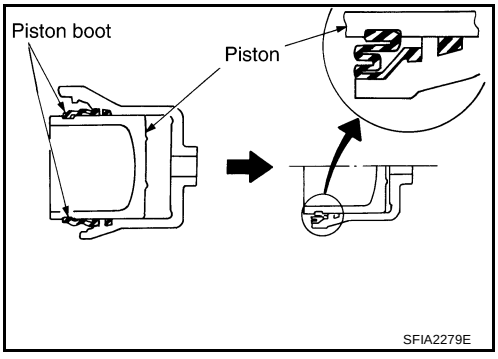

4. Fix piston boot with retaining ring.

   CAUTION:
   - **Make sure boot is firmly in cylinder body groove.**
   - **Do not reuse retaining ring.**

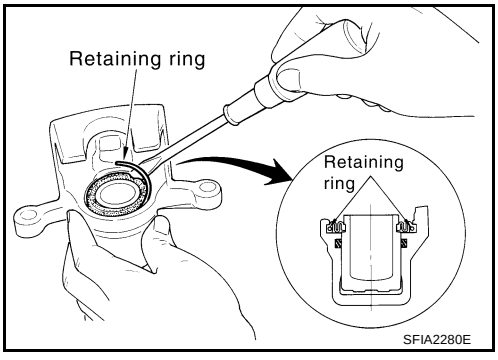

5. Install sliding pin bolts and sliding pin boots to torque member.
6. Apply PBC (Poly Butyl Cuprysil) grease or silicon-based grease to the backside of brake pad and to both sides of shim, and attach inner shim and shim cover to inner pad, and the outer shim and outer shim cover to outer pad.

7. Assembling shims and shim covers to pad.

   CAUTION:
   When attaching pad retainer, install it firmly so that it does not float up higher than torque member, as shown in the figure.

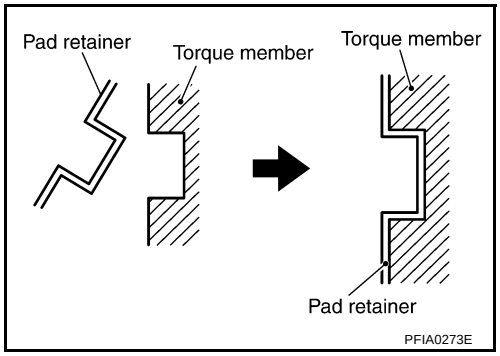

8. Install brake pad retainer and pad to torque member.
9. Install cylinder body. Tighten sliding pin bolts to the specified torque. Refer to BR-25, "Components" .
10. After installing caliper assembly, refill with new brake fluid and bleed air. Refer to BR-10, "Bleeding Brake System" .

DISC ROTOR INSPECTION

Visual Inspection

Check surfaces of disc rotor for uneven wear, cracks, and serious damage. If a malfunction is detected, replace applicable part.

Runout Inspection

1. Using wheel nuts, fix the disc rotor to wheels hub. (2 or more positions)
2. Using a dial indicator, check runout.

Measurement point	**: At a point 10 mm (0.394 in) from outer edge of disc.**
Runout limit	**: 0.05 mm (0.0020 in) or less**

CAUTION:
Before measuring, make sure that axle end play is 0 mm (0 in).

3. If runout is outside the limit, find minimum runout point by shifting mounting positions of disc rotor and wheel hub by one hole.

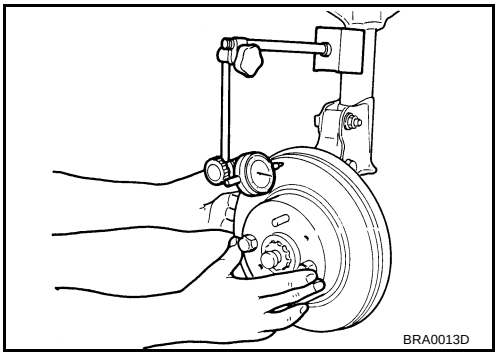
BRA0013D

Thickness Inspection

Using a micrometer, check thickness of disc rotor. If thickness is outside the specification, replace disc rotor.

Standard thickness	**: 16.0 mm (0.630 in)**
Wear limit	**: 14.0 mm (0.551 in)**
Maximum uneven wear (measured at 8 positions)	**: 0.015 mm (0.0006 in) or less**

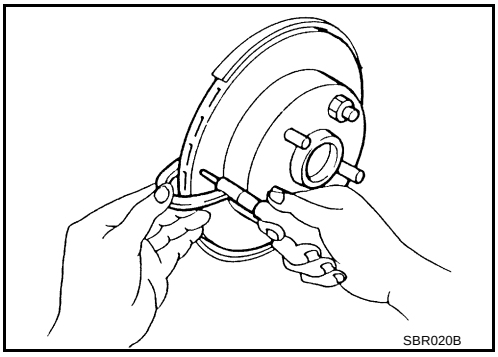
SBR020B

Brake Burnishing Procedure

NFS000OE

Burnish the brake pad or lining contact surfaces of rotor according to following procedure after refinishing or replacing drums or rotors, after replacing pads or linings, or if a soft pedal occurs at very low mileage.

CAUTION:

- **Be careful of vehicle speed because brake does not operate easily until pad and disc rotor are securely fitted.**
- **Only perform this procedure under safe road and traffic conditions. Use extreme caution.**

1. Drive vehicle on straight, flat road.
2. Depress brake pedal with the power to stop vehicle within 3 to 5 seconds until the vehicle stops.
3. Drive without depressing brake for a few minutes to cool brake.
4. Repeat steps 1 to 3 until pad and disc rotor are securely fitted.

SERVICE DATA AND SPECIFICATIONS (SDS)

PFP:00030

General Specifications

NFS000MJ

Unit: mm (in)

Front brake	Rotor outer diameter × thickness		320 × 34 (12.598 × 1.339)
	Pad length × width × thickness		130.0 × 50.0 × 11.0 (5.118 × 1.969 × 0.433)
	Cylinder bore diameter		45.0 (1.772) × 2
Rear brake	Rotor outer diameter × thickness		308 × 16 (12.13 × 0.63)
	Pad length × width × thickness		83.0 × 33.0 × 8.5 (3.268 × 1.299 × 0.335)
	Cylinder bore diameter		42.86 (1.6874)
Master cylinder	Cylinder bore diameter		25.4 (1.00)
Control valve	Valve model		Electric brake force distribution
Brake booster	Diaphragm diameter	Primary	228.5 (9.0)
		Secondary	203.0 (8.0)
Recommended brake fluid			DOT 3

Brake Pedal

NFS000MK

Brake pedal height (from dash lower panel top surface)	161.5 – 171.5 mm (6.358 – 6.752 in)
Depressed pedal height [under a force of 490 N (50 kg, 110 lb) with engine running]	More than 95 mm (3.74 in)
Clearance between stopper rubber and the threaded end of stop lamp switch and ASCD cancel switch (or brake switch)	0.74 – 1.96 mm (0.0291 – 0.0772 in)
Pedal play	3 – 11 mm (0.12 – 0.43 in)

Brake Booster

NFS000ML

Vacuum type

Input rod installation standard dimension	126.5 mm (4.98 in)

Check Valve

NFS000MM

Vacuum leakage [at a vacuum of –66.7 kPa (–500 mmHg, –19.69 inHg)]	Within a vacuum of 1.3 kPa (10 mmHg, 0.39 inHg) for 15 seconds

Front Disc Brake

NFS000MN

Brake pad	Standard thickness	11.0 mm (0.433 in)
	Repair limit thickness	2.0 mm (0.079 in)
Disc rotor	Standard thickness	34.0 mm (1.339 in)
	Wear limit	32.0 mm (1.260 in)
	Maximum uneven wear (measured at 8 positions)	0.015mm (0.0006 in) or less
	Runout limit (with the disc rotor attached to the vehicle)	0.04 mm (0.0016 in) or less

Rear Disc Brake

NFS000MO

Brake pad	Standard thickness	8.5 mm (0.335 in)
	Repair limit thickness	2.0 mm (0.079 in)
Disc rotor	Standard thickness	16.0 mm (0.630 in)
	Wear limit	14.0 mm (0.551 in)
	Maximum uneven wear (measured at 8 positions)	0.015 mm (0.0006 in) or less
	Runout limit (with the disc rotor attached to the vehicle)	0.05 mm (0.0020 in) or less