# SECTION AV

# AUDIO VISUAL, NAVIGATION & TELEPHONE SYSTEM

## CONTENTS

# PRECAUTIONS

PFP:00001

## Precautions for Supplemental Restraint System (SRS) “AIR BAG” and “SEAT BELT PRE-TENSIONER”

NKS003AF

The Supplemental Restraint System such as “AIR BAG” and “SEAT BELT PRE-TENSIONER”, used along with a front seat belt, helps to reduce the risk or severity of injury to the driver and front passenger for certain types of collision. This system includes seat belt switch inputs and dual stage front air bag modules. The SRS system uses the seat belt switches to determine the front air bag deployment, and may only deploy one front air bag, depending on the severity of a collision and whether the front occupants are belted or unbelted.
Information necessary to service the system safely is included in the SRS and SB section of this Service Manual.

**WARNING:**

- **To avoid rendering the SRS inoperative, which could increase the risk of personal injury or death in the event of a collision which would result in air bag inflation, all maintenance must be performed by an authorized NISSAN/INFINITI dealer.**
- **Improper maintenance, including incorrect removal and installation of the SRS, can lead to personal injury caused by unintentional activation of the system. For removal of Spiral Cable and Air Bag Module, see the SRS section.**
- **Do not use electrical test equipment on any circuit related to the SRS unless instructed to in this Service Manual. SRS wiring harnesses can be identified by yellow and/or orange harnesses or harness connectors.**

# PREPARATION

PFP:00002

## Commercial Service Tools

NKS003AG

| Tool name | Description |
|---|---|
| Power tool 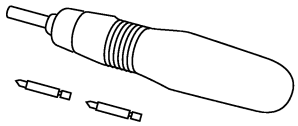 PBIC0191E | Loosening bolts and nuts |

# AUDIO

PFP:28111

## System Description

NKS003AI

### AUDIO SYSTEM

Refer to Owner's Manual for audio system operating instructions.
Power is supplied at all times

- through 15A fuse (No. 32, located in the fuse and fusible link block)
- to audio unit terminal 6
- to A/C and AV switch terminal 1
- to display control unit terminal 1
- to woofer terminal 1
- to satellite radio tuner terminal 12 (With satellite radio) and
- to option connector–2 for satellite radio tuner terminal 12 (Without satellite radio),
- through 20A fuse [No.17, located in the fuse block (J/B)]
- to BOSE speaker amp. terminal 1.

With the ignition switch in the ACC or ON position, power is supplied

- through 10A fuse [No. 6, located in the fuse block (J/B)]
- to audio unit terminal 10
- to A/C and AV switch terminal 2
- to display control unit terminal 10
- to satellite radio tuner terminal 16 (With satellite radio) and
- to option connector–2 for satellite radio tuner terminal 11 (Without satellite radio).

Ground is supplied through the case of the audio unit.
Ground is also supplied

- to BOSE speaker amp. terminal 17
- to woofer terminal 2
- to satellite radio tuner terminal 15 (With satellite radio) and
- to option connector–2 for satellite radio receiver terminal 10 (Without satellite radio)
- through body ground B203 and B210,
- to A/C and AV switch terminal 5
- to display control unit terminals 3,13 and
- to display terminal 1
- through body ground M35, M45 and M85.

Audio unit, A/C and audio controller are connected by FPC (Flexible Print Circuit).
A/C and audio controller integrates A/C switches and audio switches.
When A/C and audio controller is pressed to audio switch, it sends audio signal to audio unit. Then audio signals are supplied

- through audio unit terminals 1, 2, 3, 4, 13, 14, 15, and 16
- to BOSE speaker amp. terminals 23, 24, 25, 26, 27, 28, 29, and 30.

Audio signals are amplified by the BOSE speaker amp.
The amplified audio signals are supplied

- through BOSE speaker amp. terminals 2, 3, 4, 9,10,11,12, 13, 14, 15, 16, 18, 19 and 20
- to terminals 1 and 2 of front door speaker LH and RH
- to terminals 1 and 2 of rear door speaker LH and RH
- to terminals 1 and 2 of tweeter LH and RH
- to terminals 1 and 2 of instrument speaker LH, RH, and CENTER, and
- to terminals 7 and 8 of woofer.

When one of audio steering wheel switch is pressed to ON (With telephone system), mode ON (Without telephone system), seek up, or volume up, resistance in steering switch circuit changes depending on which button is pressed.

When one of audio steering wheel switch is pressed to mode ON (With telephone system), power ON (Without telephone system), seek down, or volume down, resistance in audio steering wheel switch circuit changes depending on which button is pressed.

### SPEED SENSITIVE VOLUME SYSTEM

Volume level of this system gone up and down automatically in proportion to the vehicle speed. And the control level can be selected by the customer.

## Component Parts Location

NKS003AH

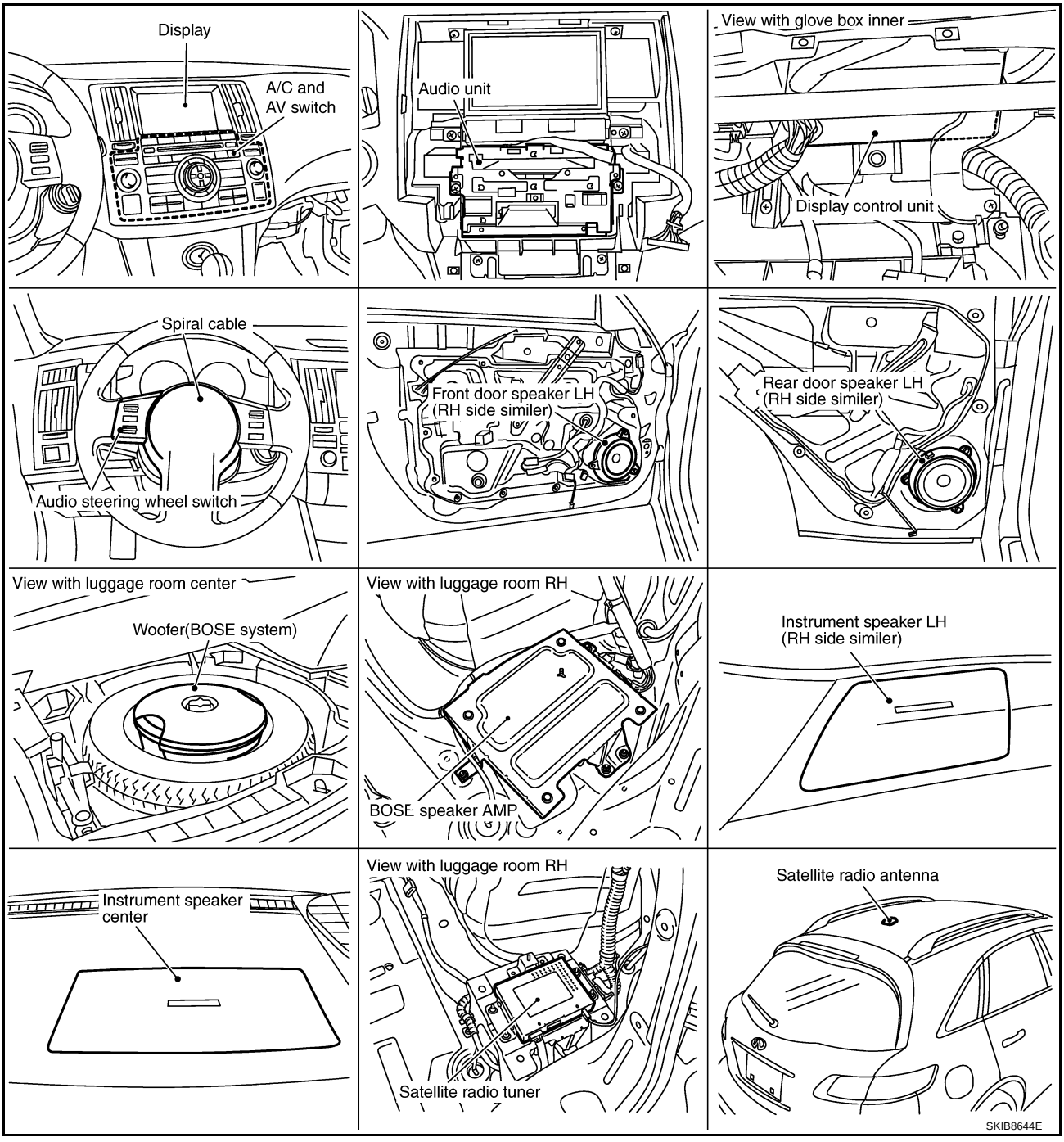

## Schematic — AUDIO — / With Navigation System

NKS003AL

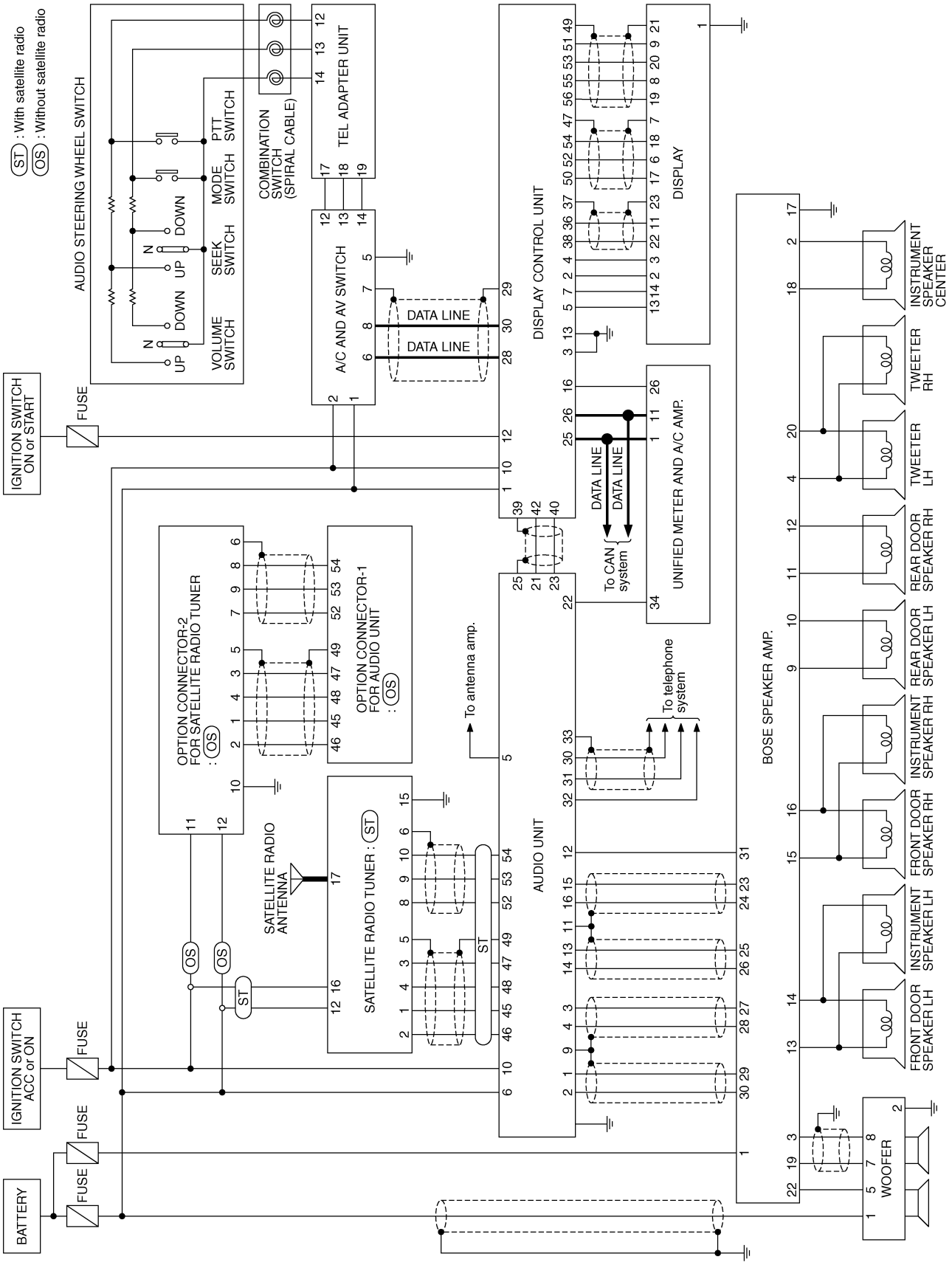


TKWM4382E

## Wiring Diagram — AUDIO — / With Navigation System

NKS003AM

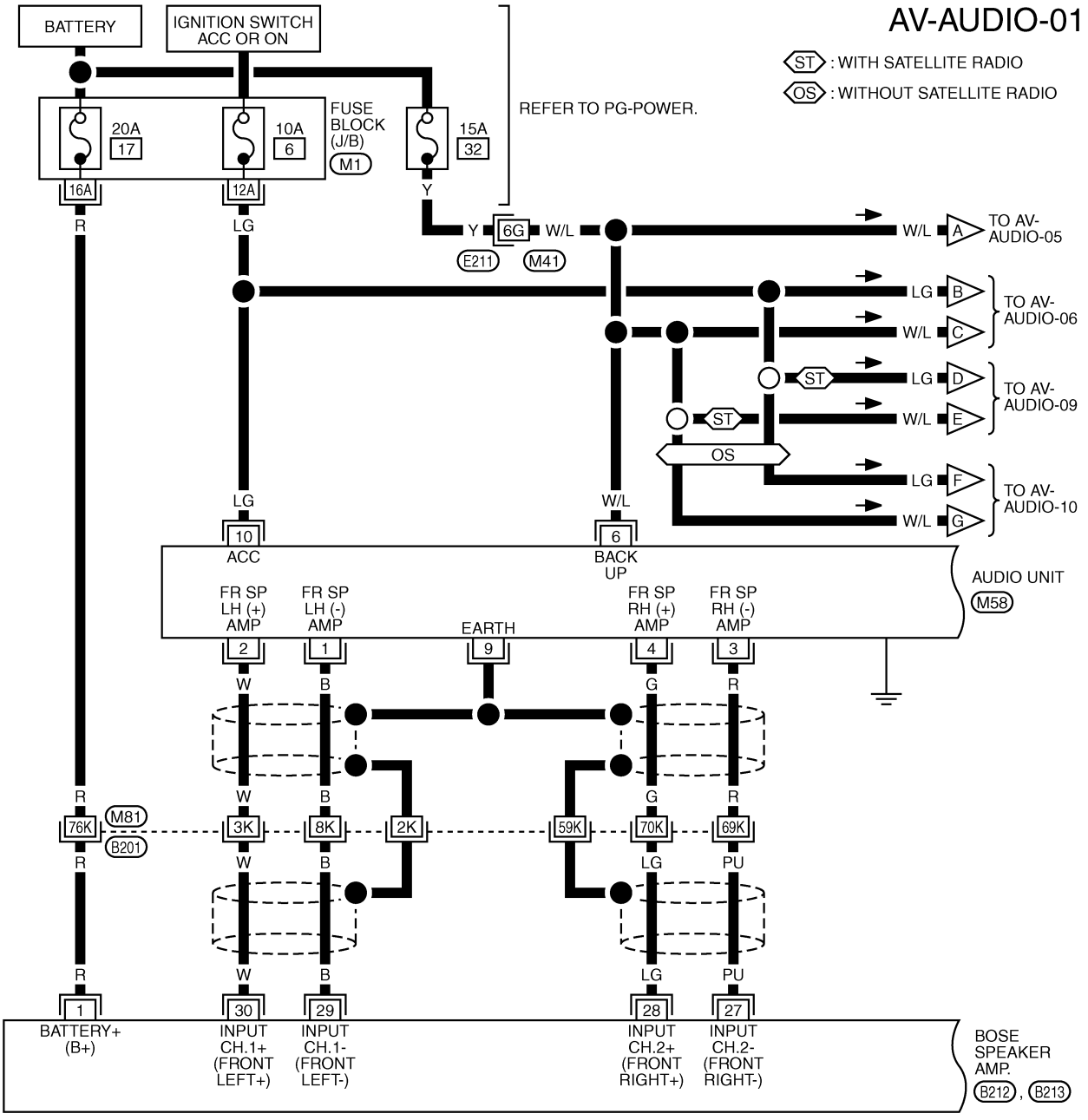


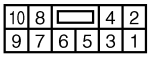


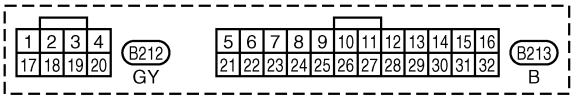


REFER TO THE FOLLOWING.

E211 , B201 -SUPER MULTIPLE JUNCTION (SMJ)

M1 -FUSE BLOCK-JUNCTION BOX (J/B)

TKWM4383E

AV-AUDIO-02

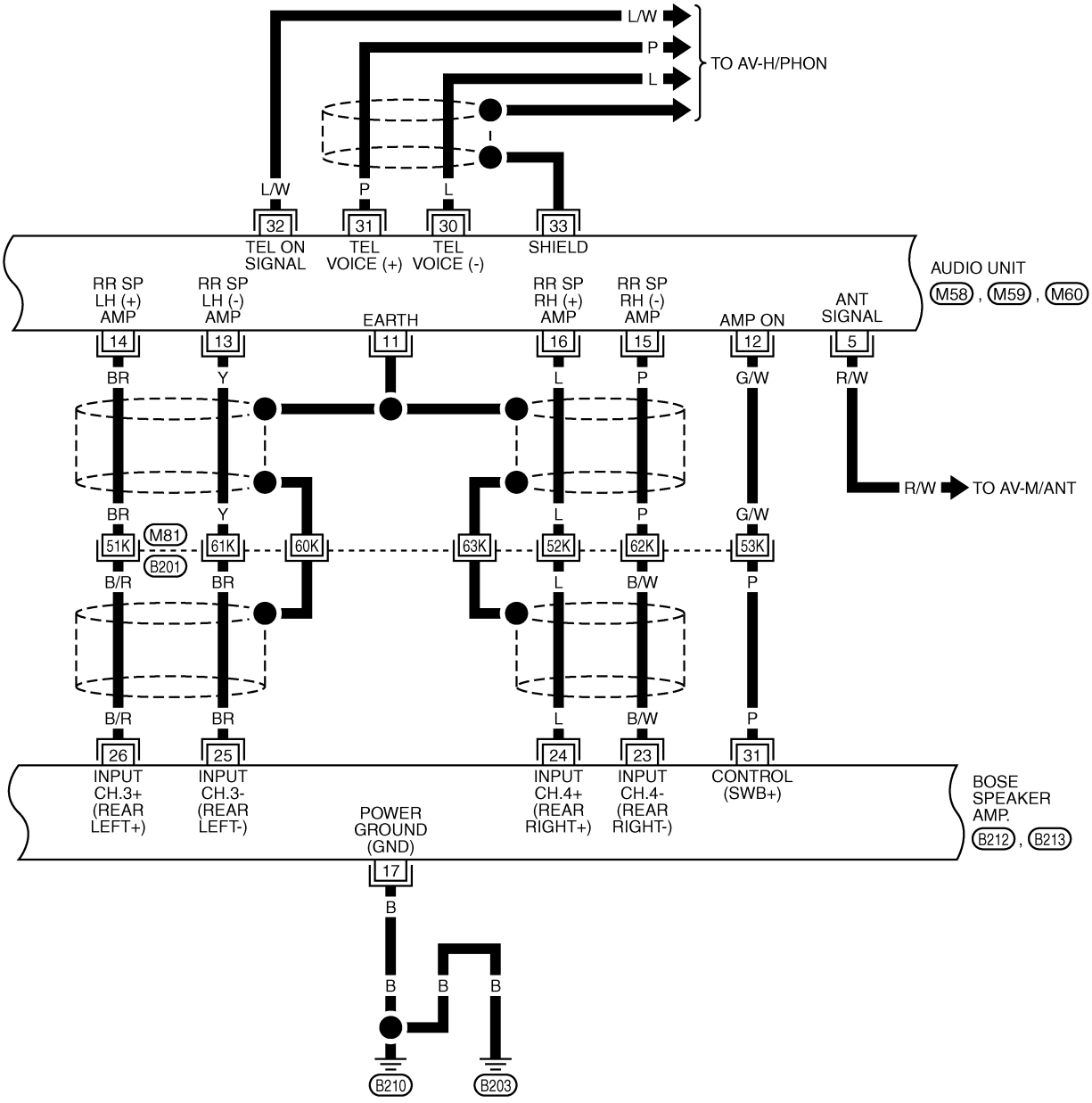


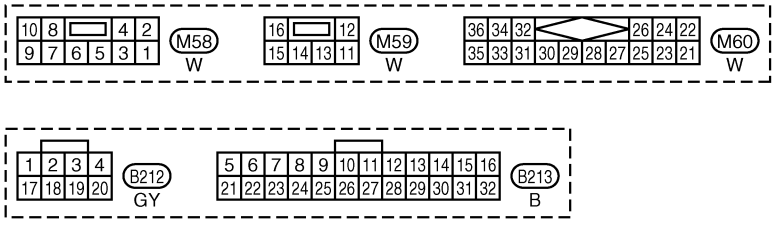


REFER TO THE FOLLOWING.

B201 -SUPER MULTIPLE JUNCTION (SMJ)

TKWM4384E

## AV-AUDIO-03

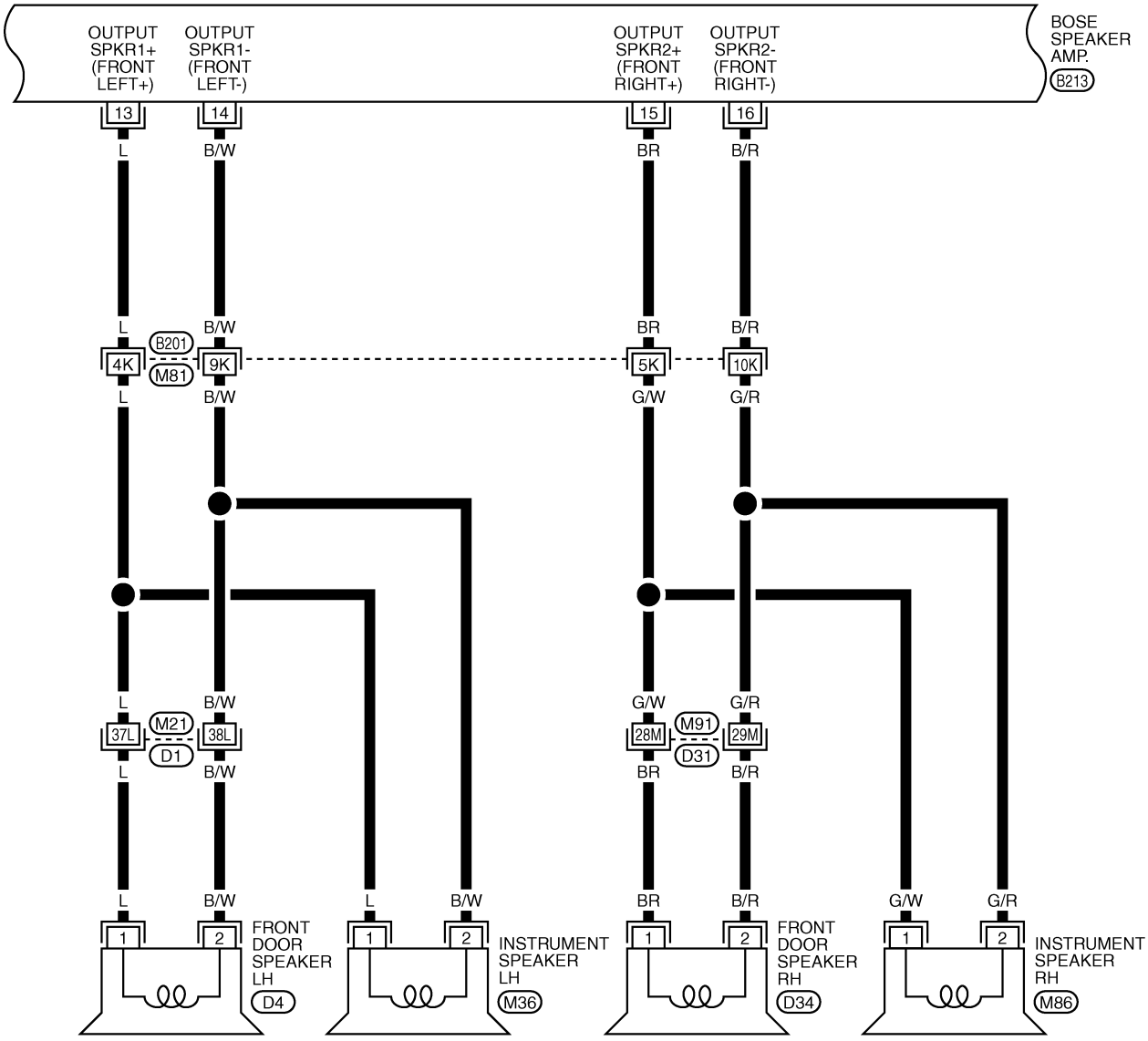


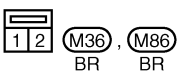


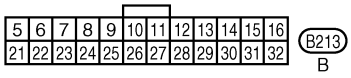


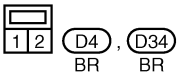


REFER TO THE FOLLOWING.
B201 , D1 , D31 -SUPER MULTIPLE JUNCTION (SMJ)

TKWM4385E

AV-AUDIO-04

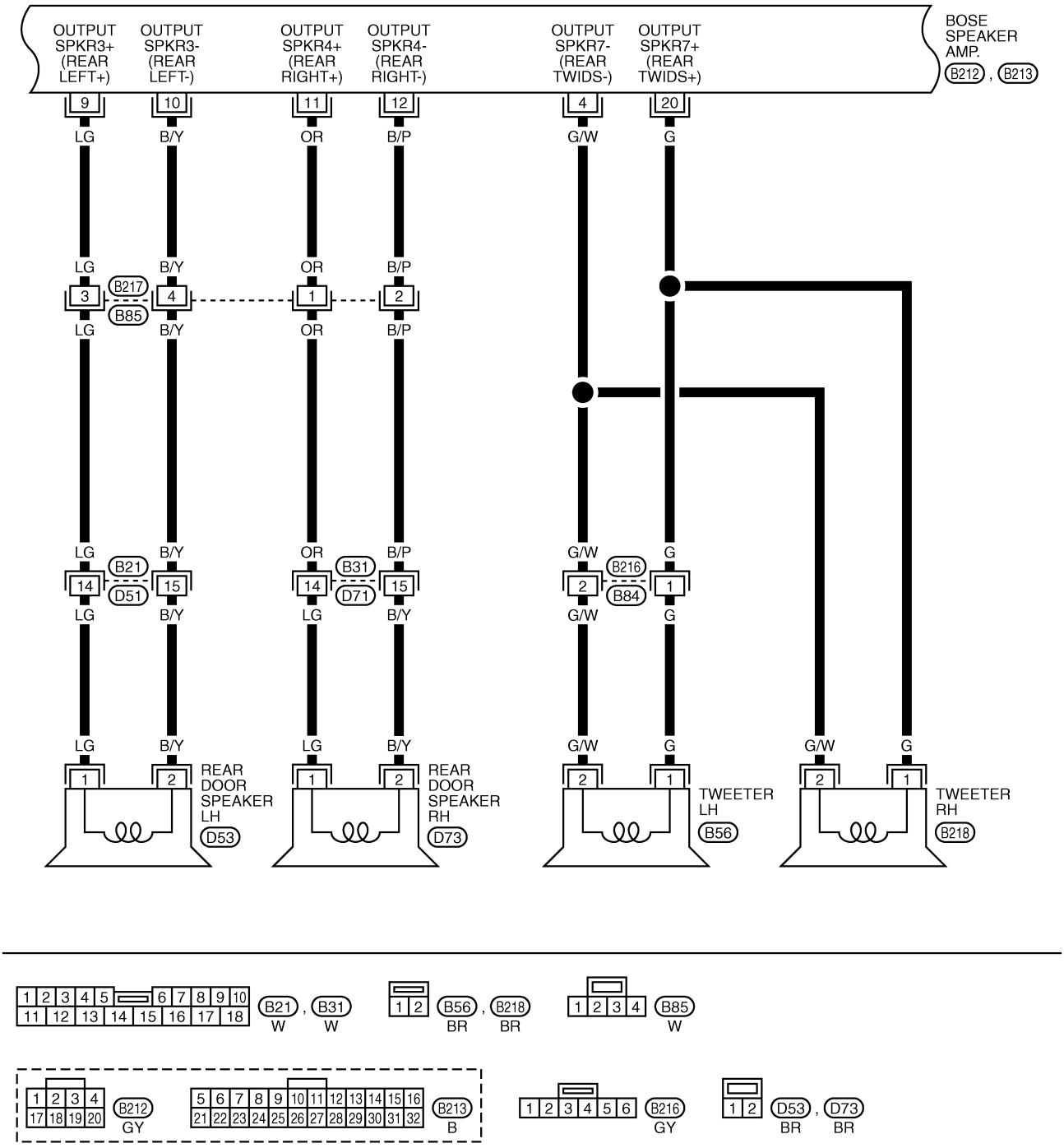
OUTPUT SPKR3+ (REAR LEFT+)
OUTPUT SPKR3- (REAR LEFT-)
OUTPUT SPKR4+ (REAR RIGHT+)
OUTPUT SPKR4- (REAR RIGHT-)
OUTPUT SPKR7- (REAR TWIDS-)
OUTPUT SPKR7+ (REAR TWIDS+)
BOSE SPEAKER AMP.
B212 , B213
9 10 11 12 4 20
LG B/Y OR B/P G/W G
B217
B85
B21
D51
B31
D71
B216
B84
REAR DOOR SPEAKER LH
D53
REAR DOOR SPEAKER RH
D73
TWEETER LH
B56
TWEETER RH
B218
B21 , B31
W W
B56 , B218
BR BR
B85
W
B212
GY
B213
B
B216
GY
D53 , D73
BR BR
TKWM4386E

AV-AUDIO-05

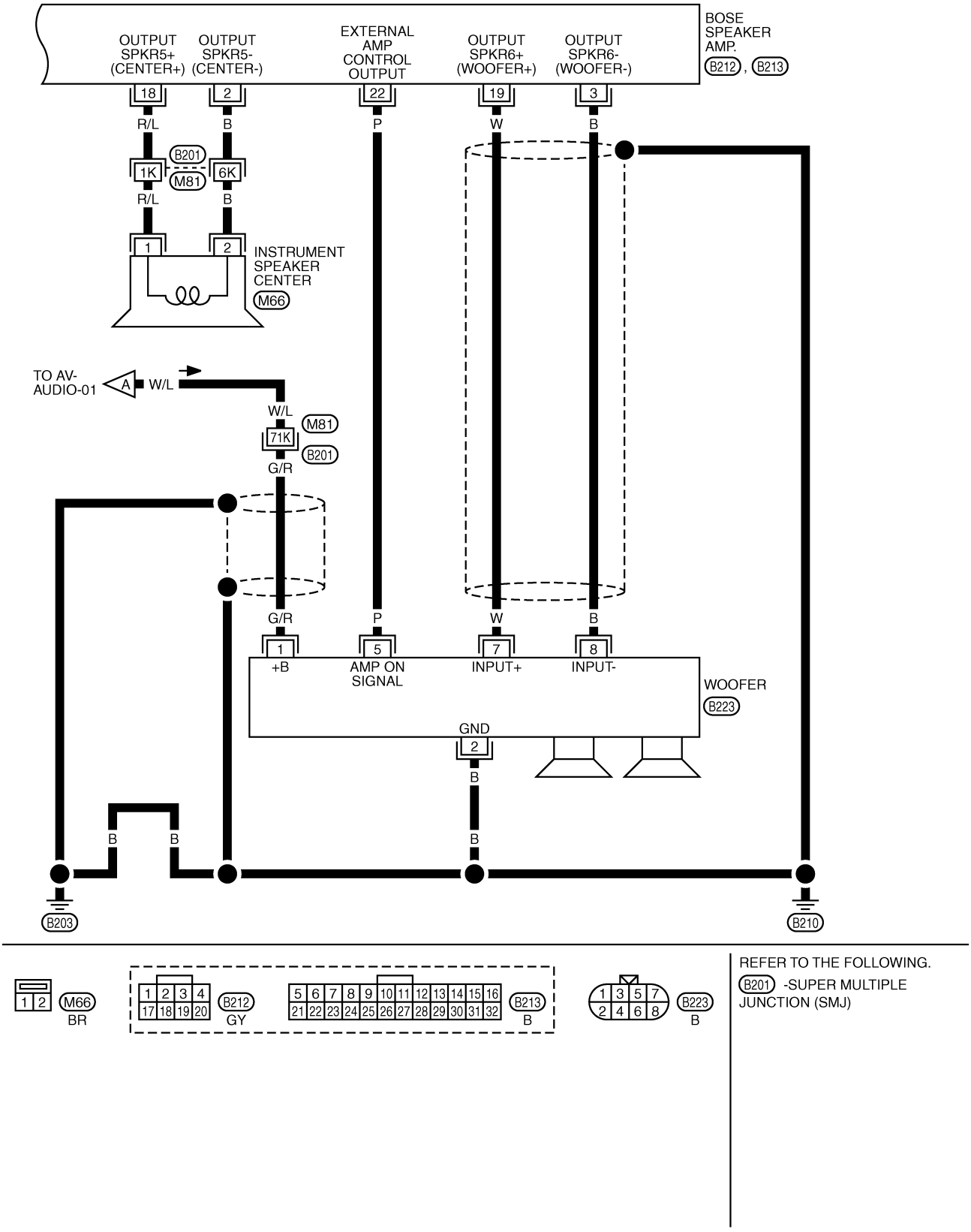


REFER TO THE FOLLOWING.
B201 -SUPER MULTIPLE JUNCTION (SMJ)

TKWM4387E

## AV-AUDIO-06

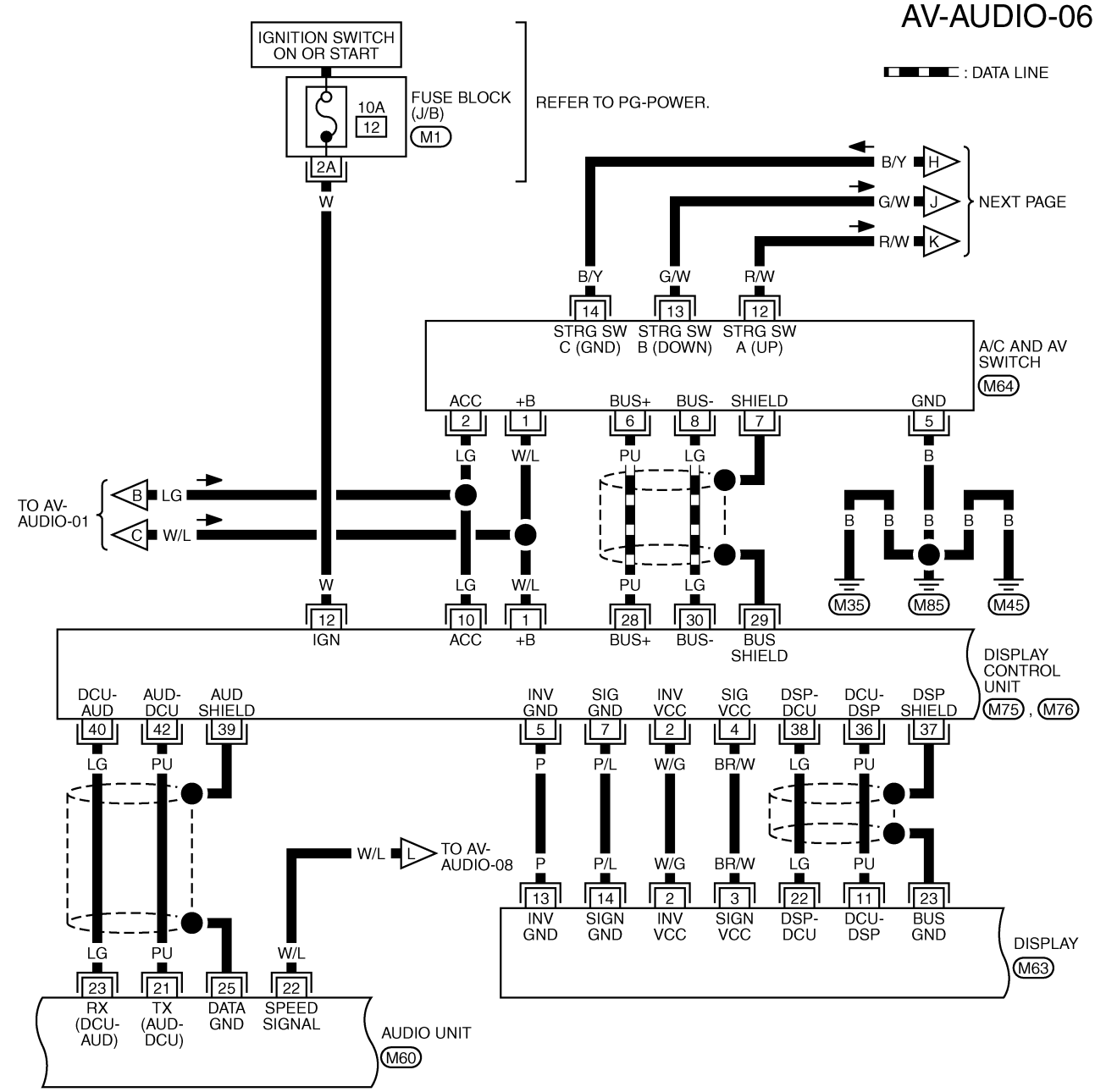


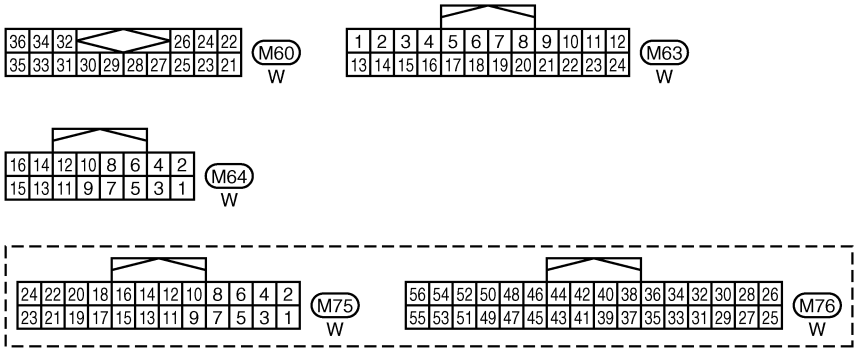


REFER TO THE FOLLOWING.

M1 -FUSE BLOCK-JUNCTION BOX (J/B)

TKWM4388E

AV-AUDIO-07

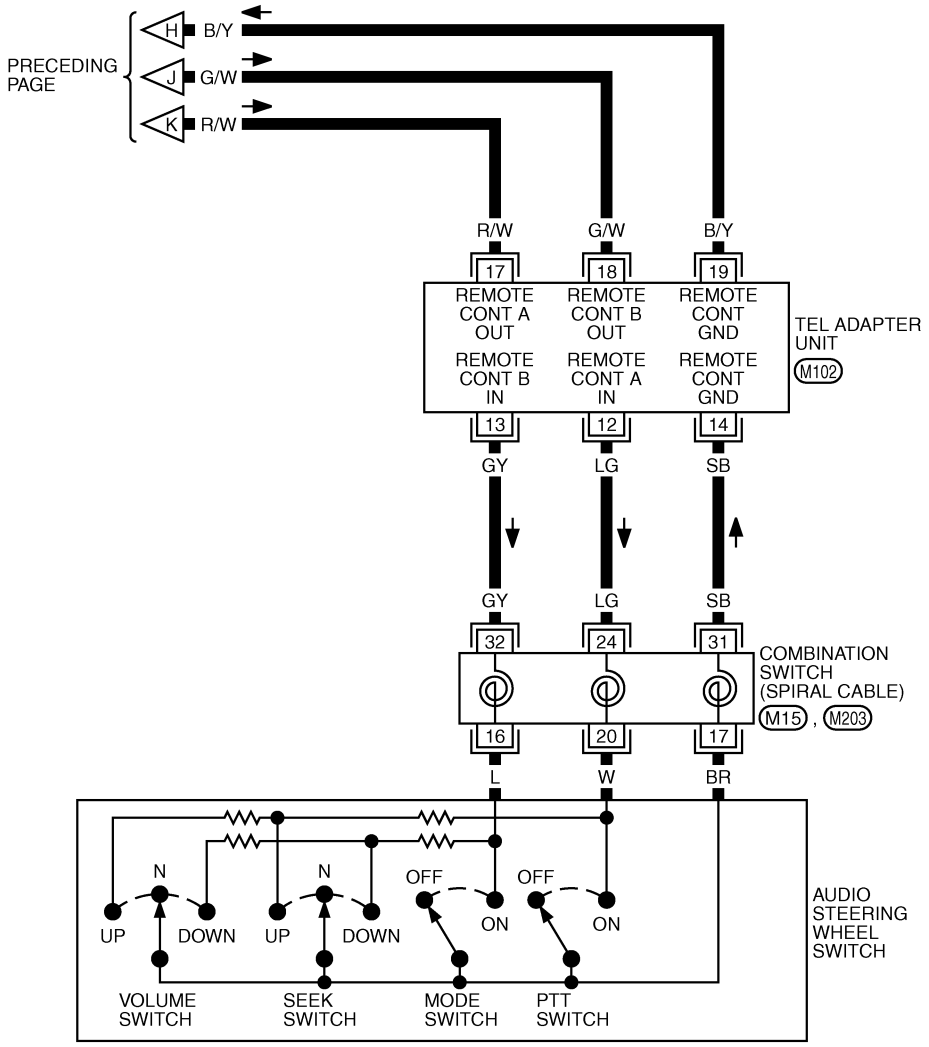


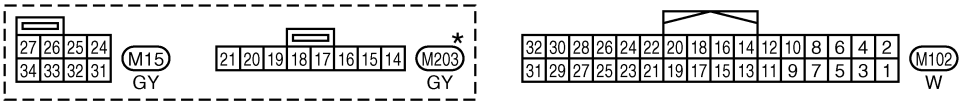


*: THIS CONNECTOR IS NOT SHOWN IN "HARNESS LAYOUT", PG SECTION.

TKWM4389E

AV-AUDIO-08

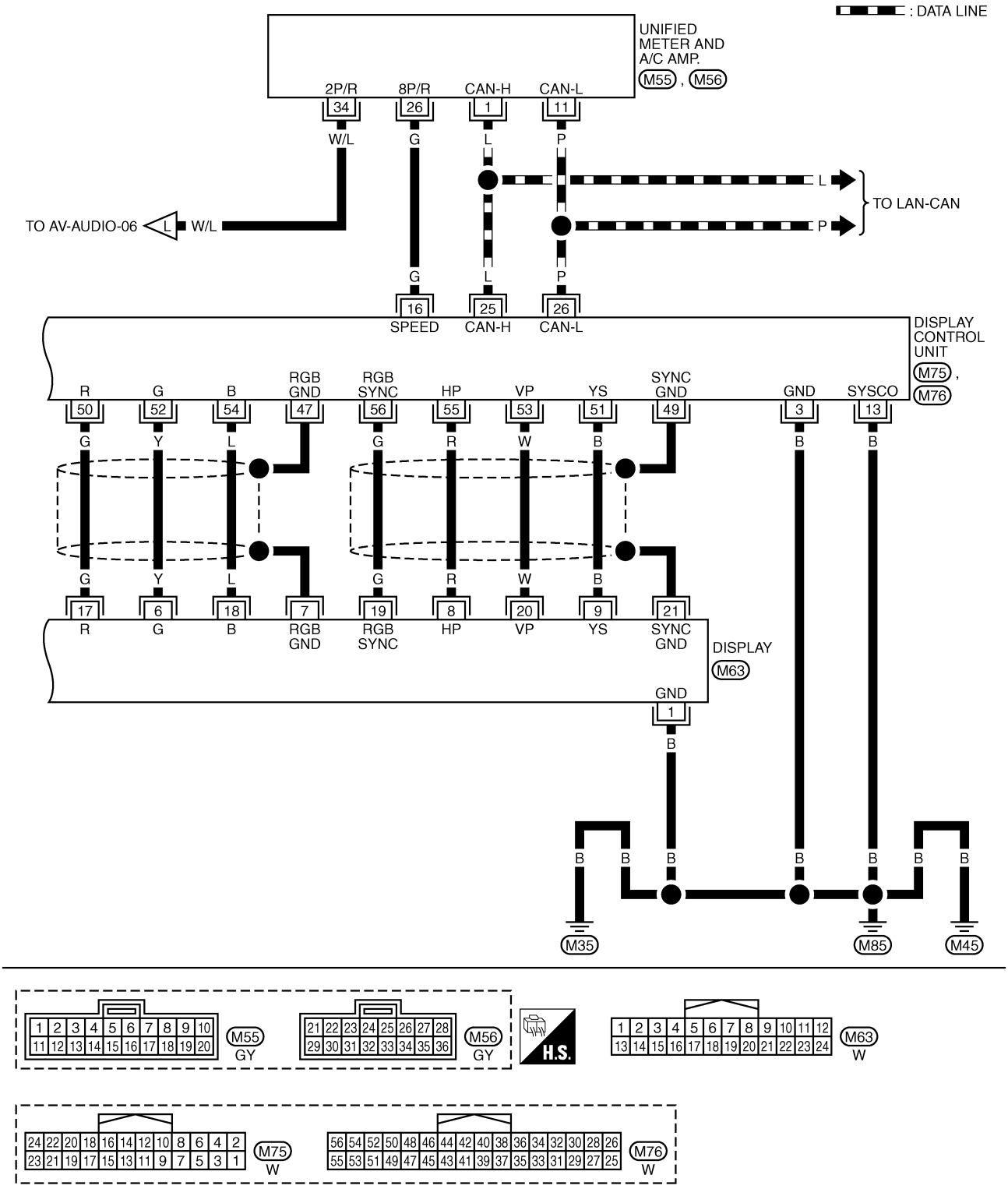


TKWM4390E

## AV-AUDIO-09

ST : WITH SATELLITE RADIO

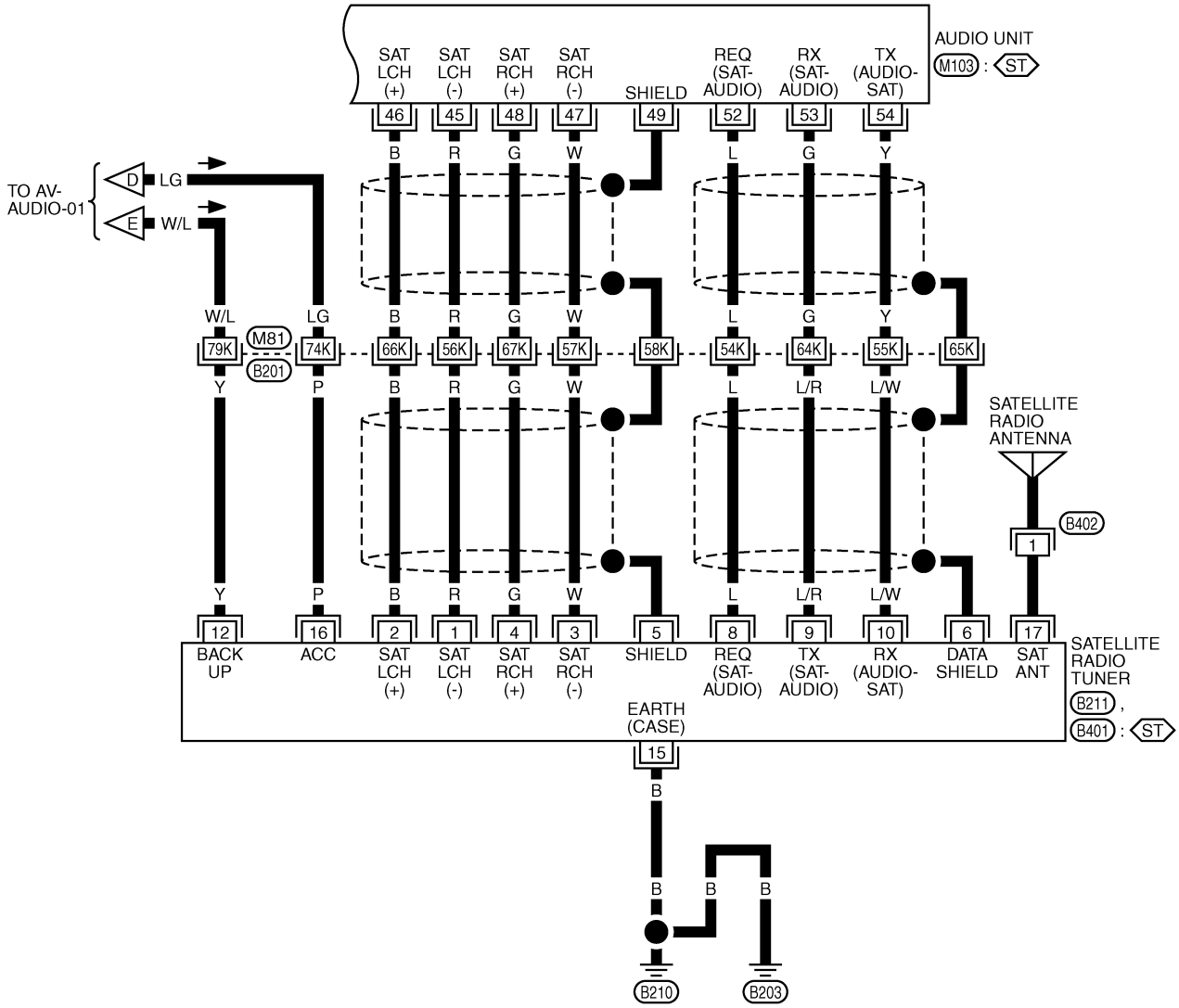


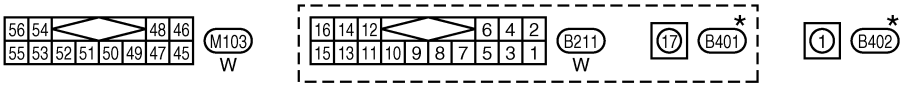


REFER TO THE FOLLOWING.
B201 -SUPER MULTIPLE JUNCTION (SMJ)

*: THIS CONNECTOR IS NOT SHOWN IN "HARNESS LAYOUT", PG SECTION.

TKWM4391E

## AV-AUDIO-10

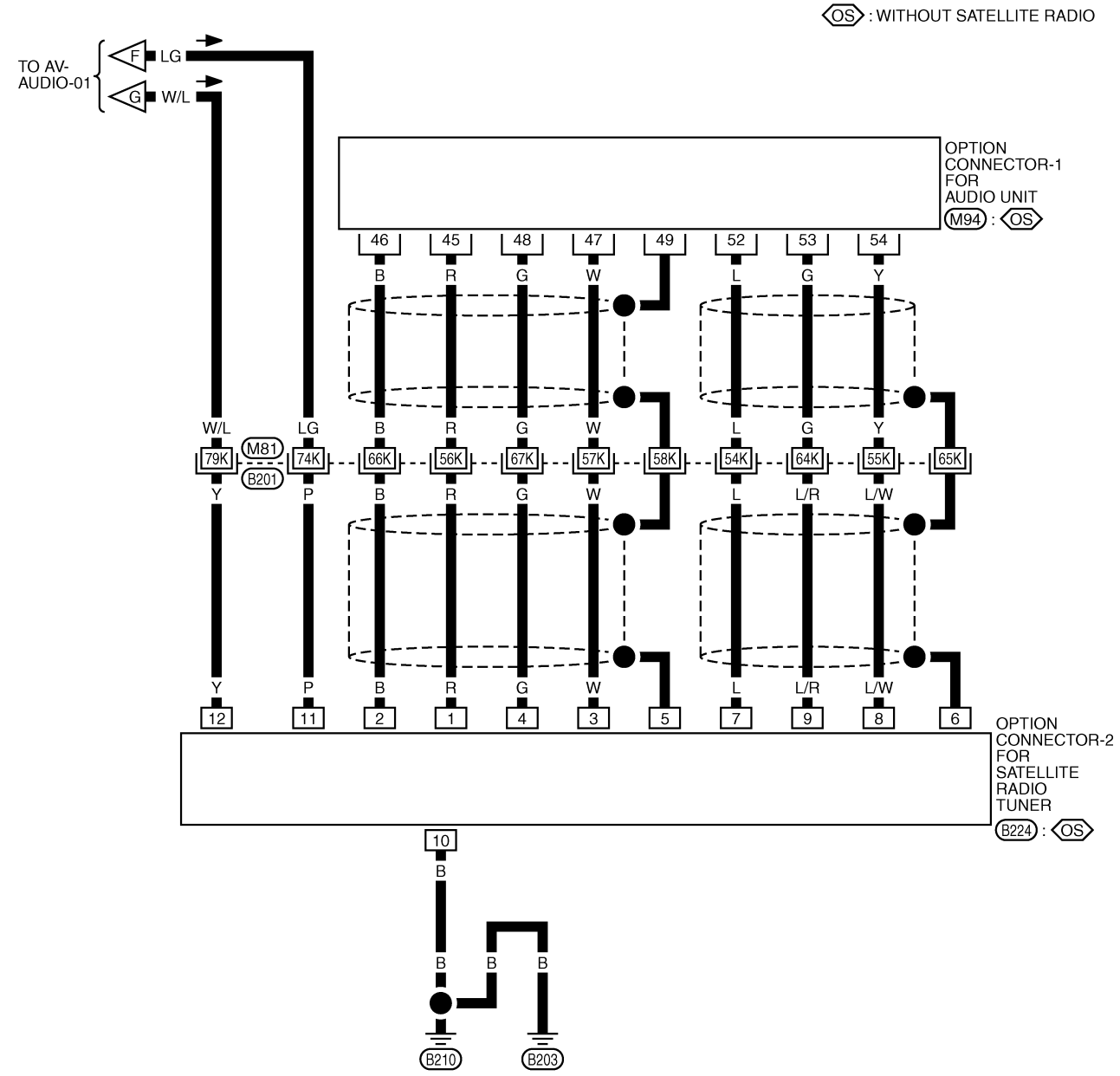


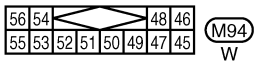


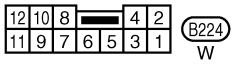


REFER TO THE FOLLOWING.
B201 -SUPER MULTIPLE JUNCTION (SMJ)

TKWM4392E

## Schematic — AUDIO — Without Navigation System

NKS003AN

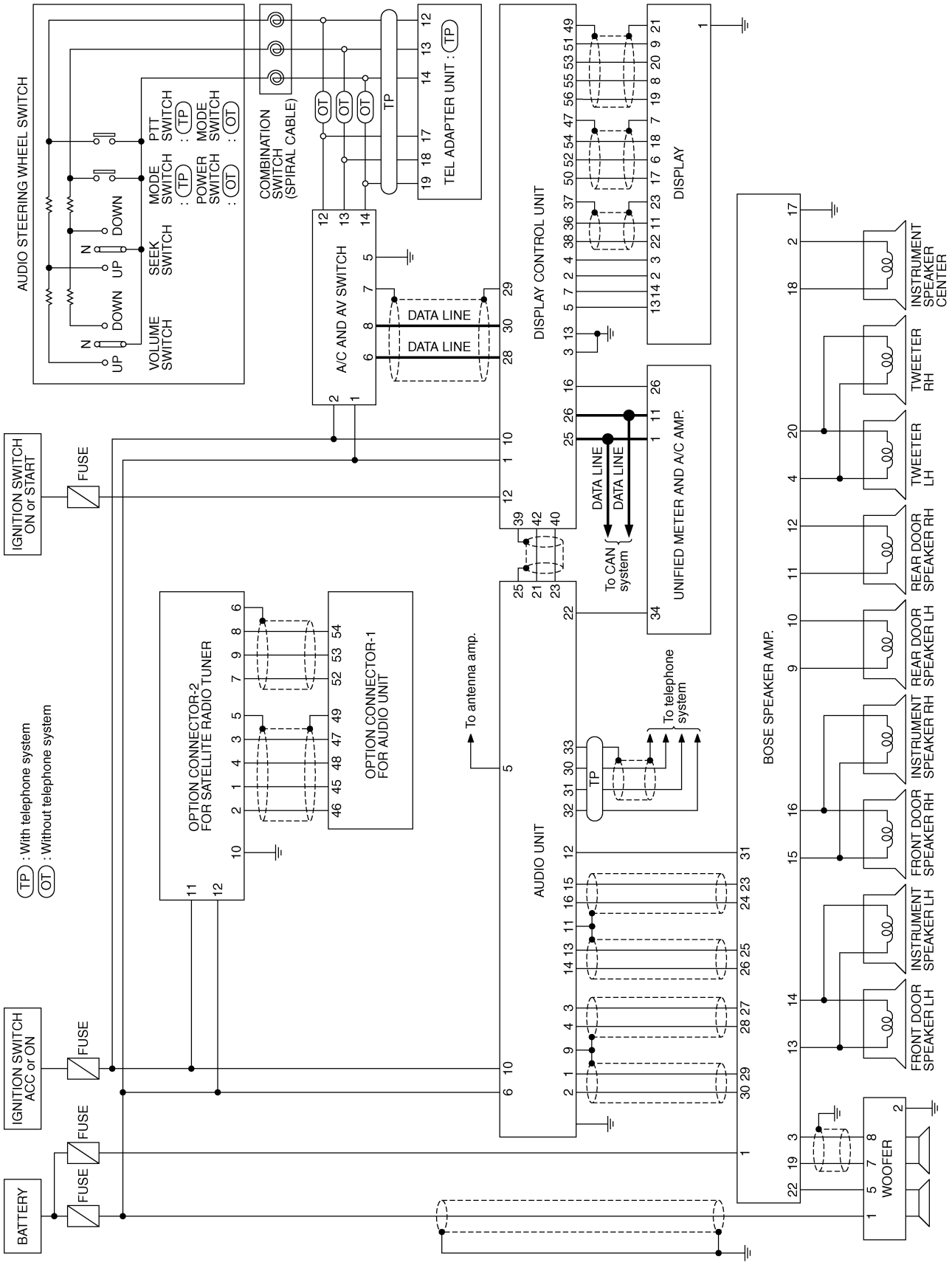

## Wiring Diagram — AUDIO — / Without Navigation System

NKS003AO

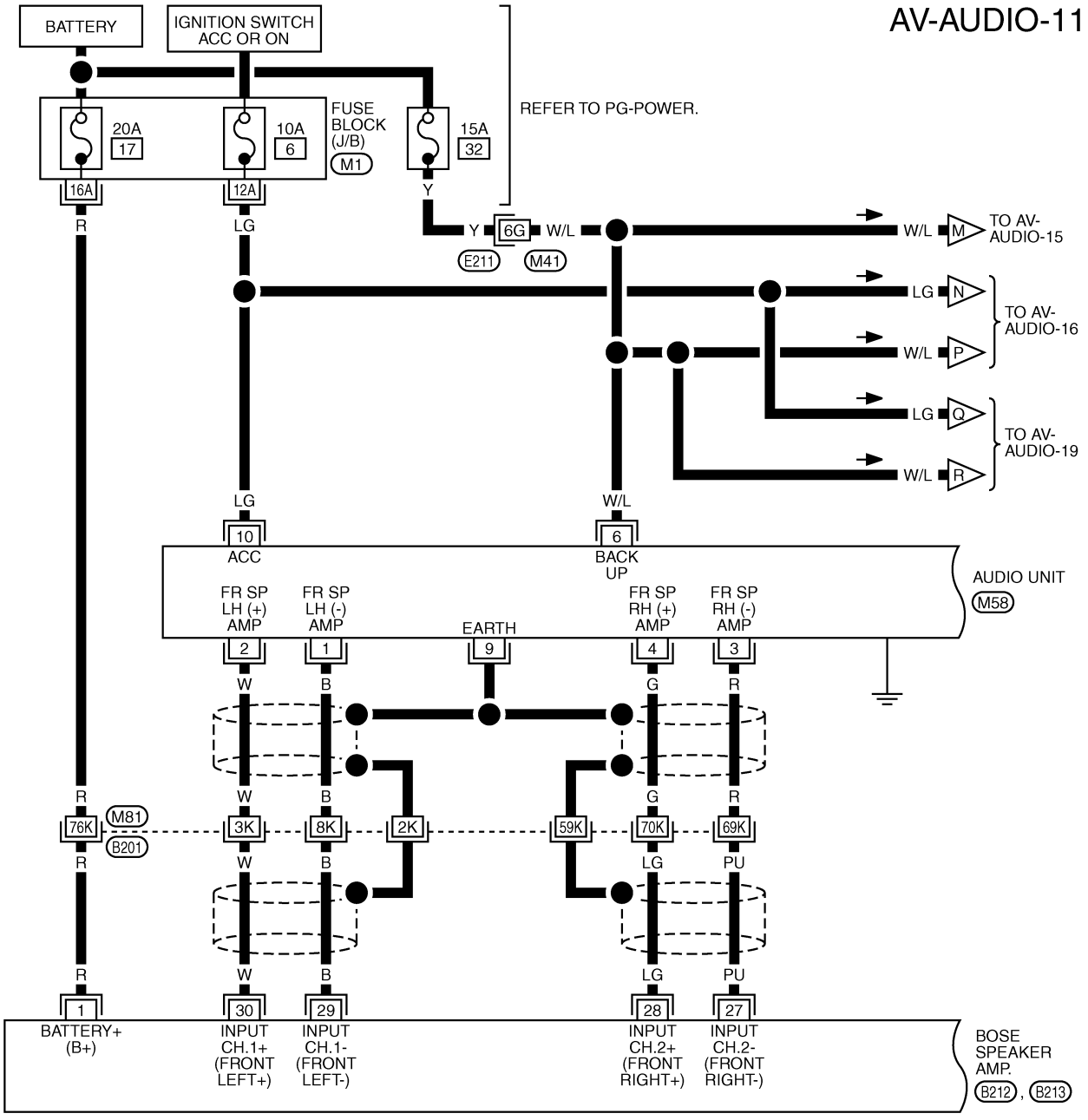


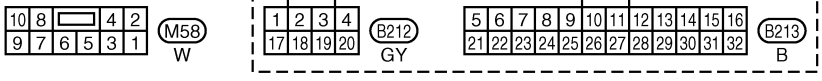


REFER TO THE FOLLOWING.

E211 , B201 -SUPER MULTIPLE JUNCTION (SMJ)

M1 -FUSE BLOCK-JUNCTION BOX (J/B)

TKWM4394E

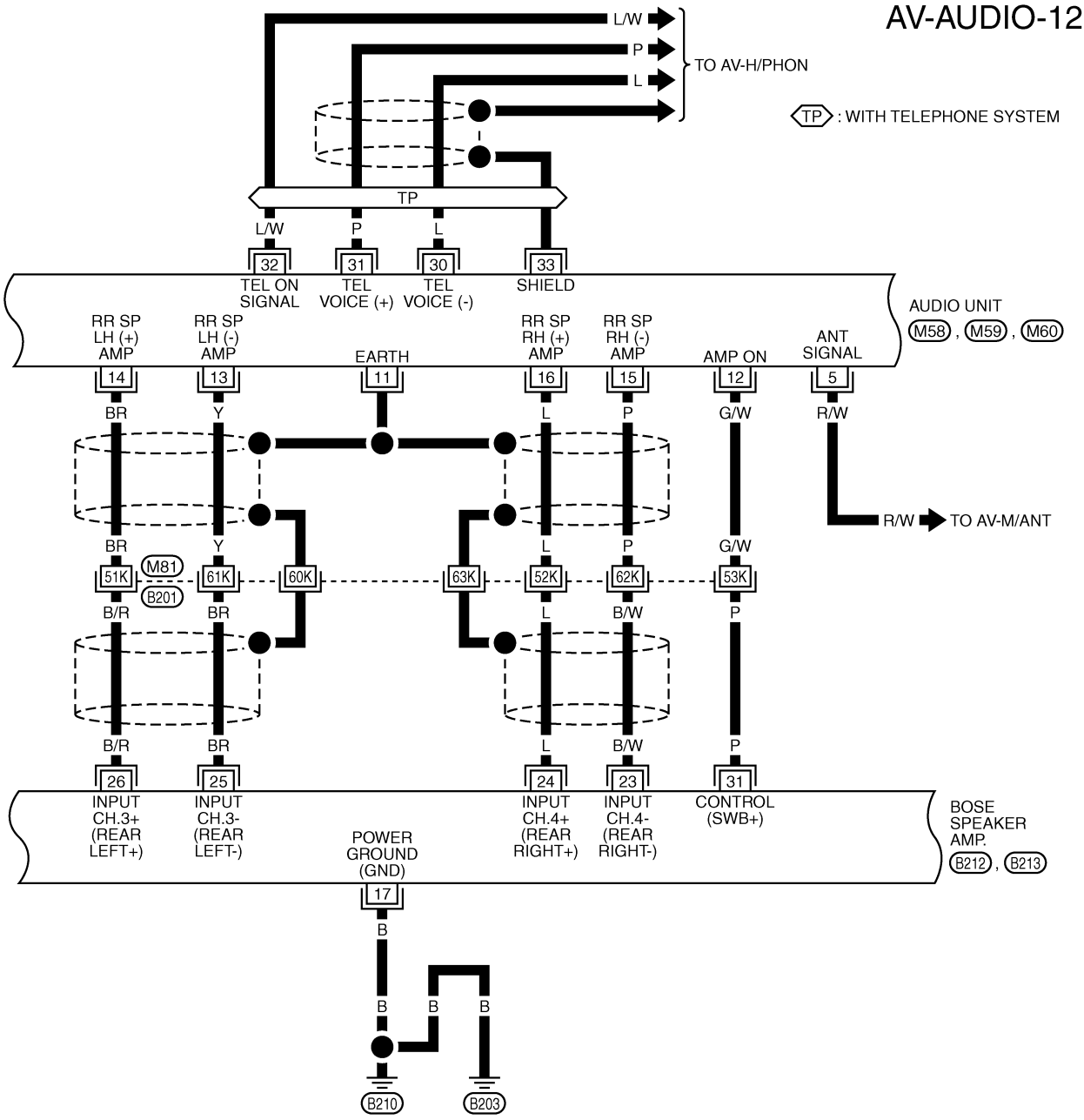


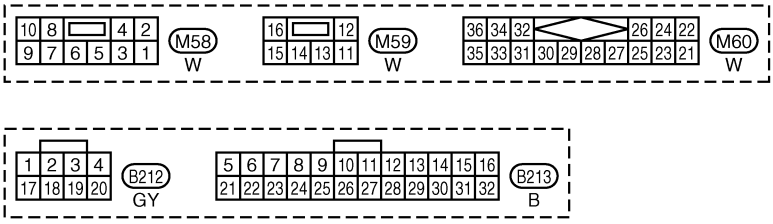


REFER TO THE FOLLOWING.

B201 -SUPER MULTIPLE JUNCTION (SMJ)

TKWM4395E

AV-AUDIO-13

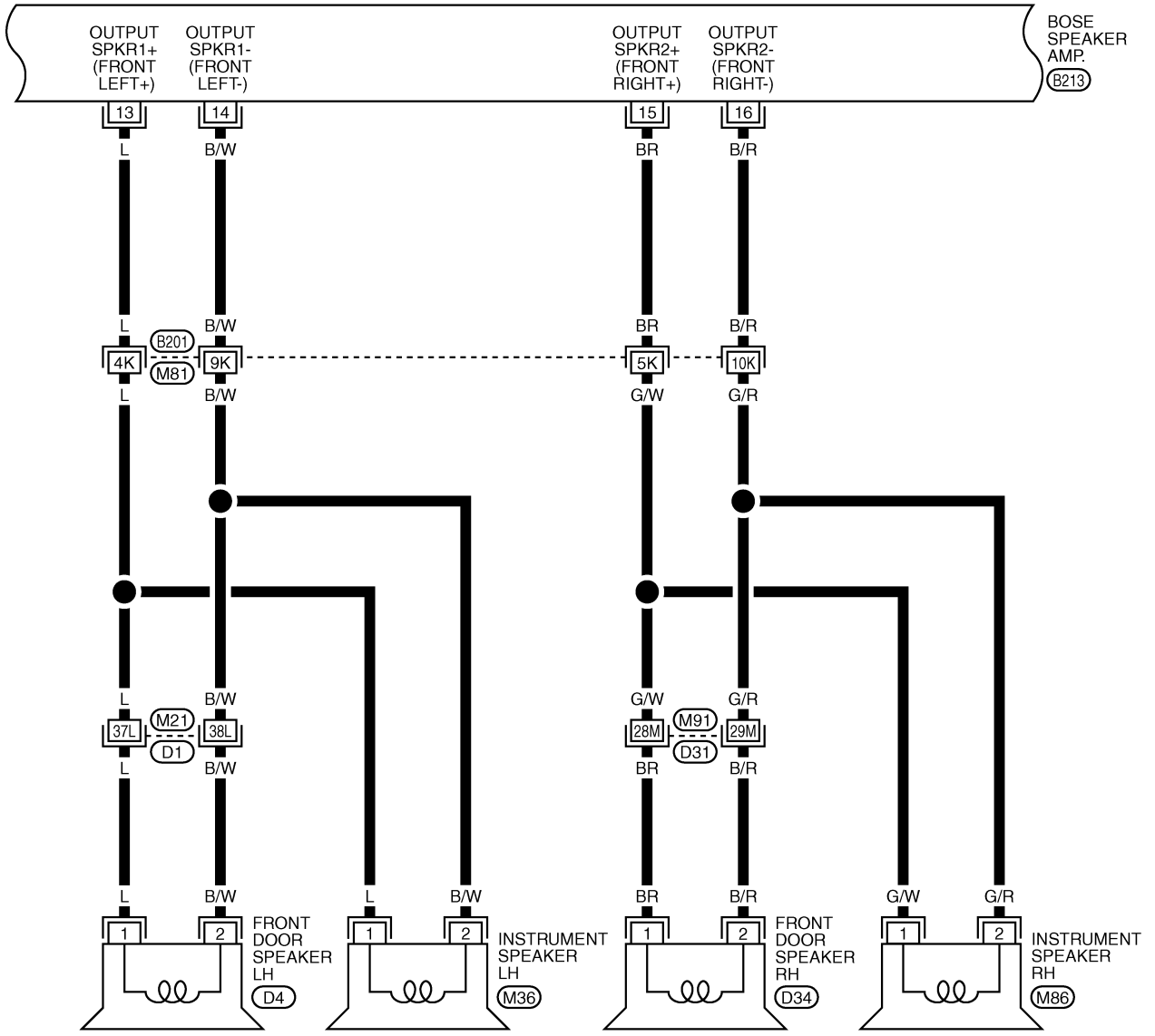


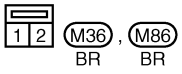


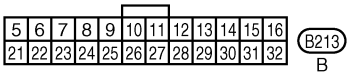


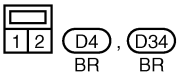


REFER TO THE FOLLOWING.
B201 , D1 , D31 -SUPER MULTIPLE JUNCTION (SMJ)

TKWM4396E

AV-AUDIO-14

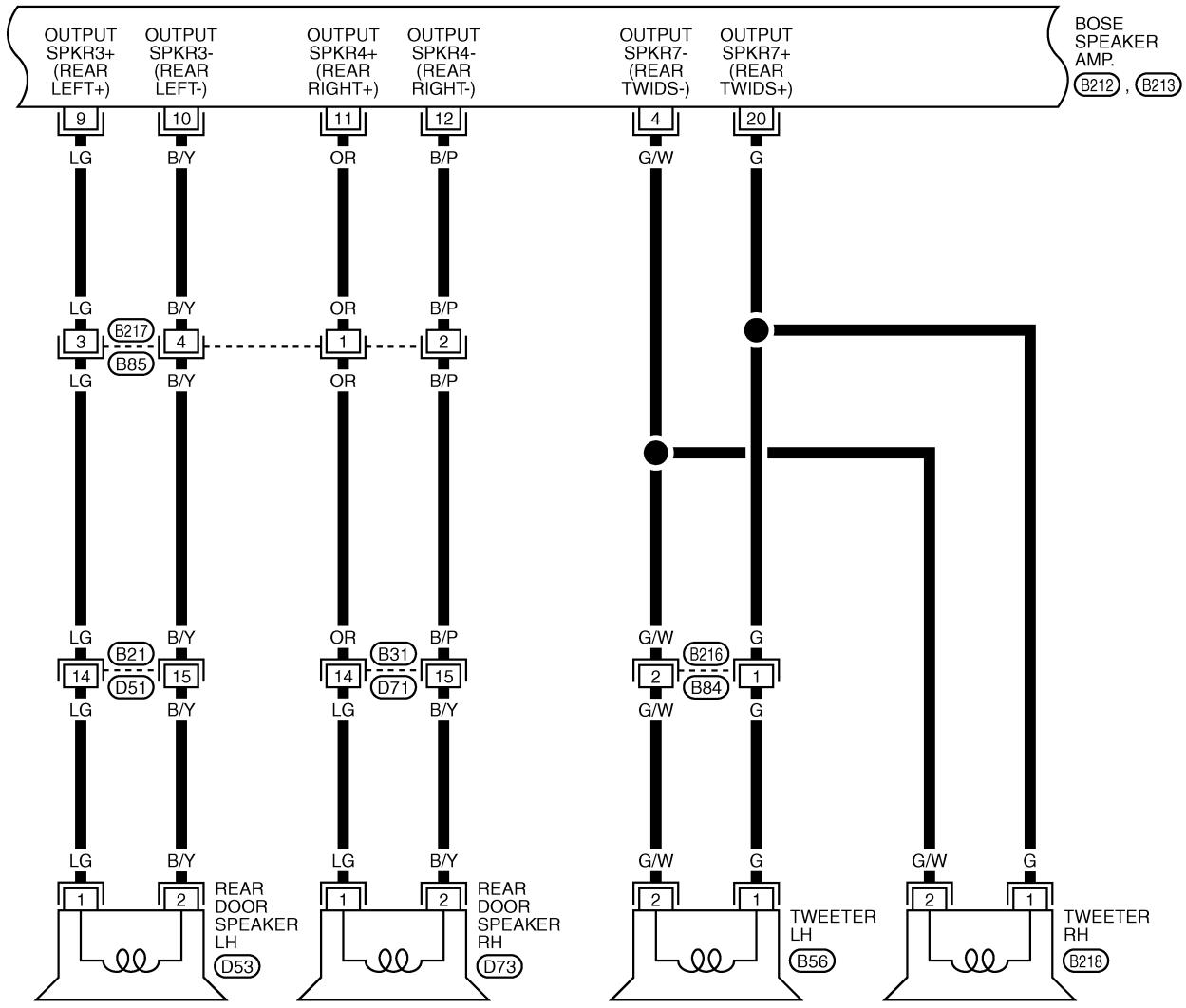


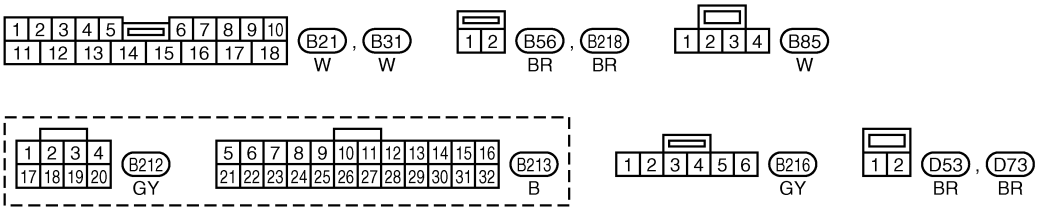


TKWM4397E

AV-AUDIO-15

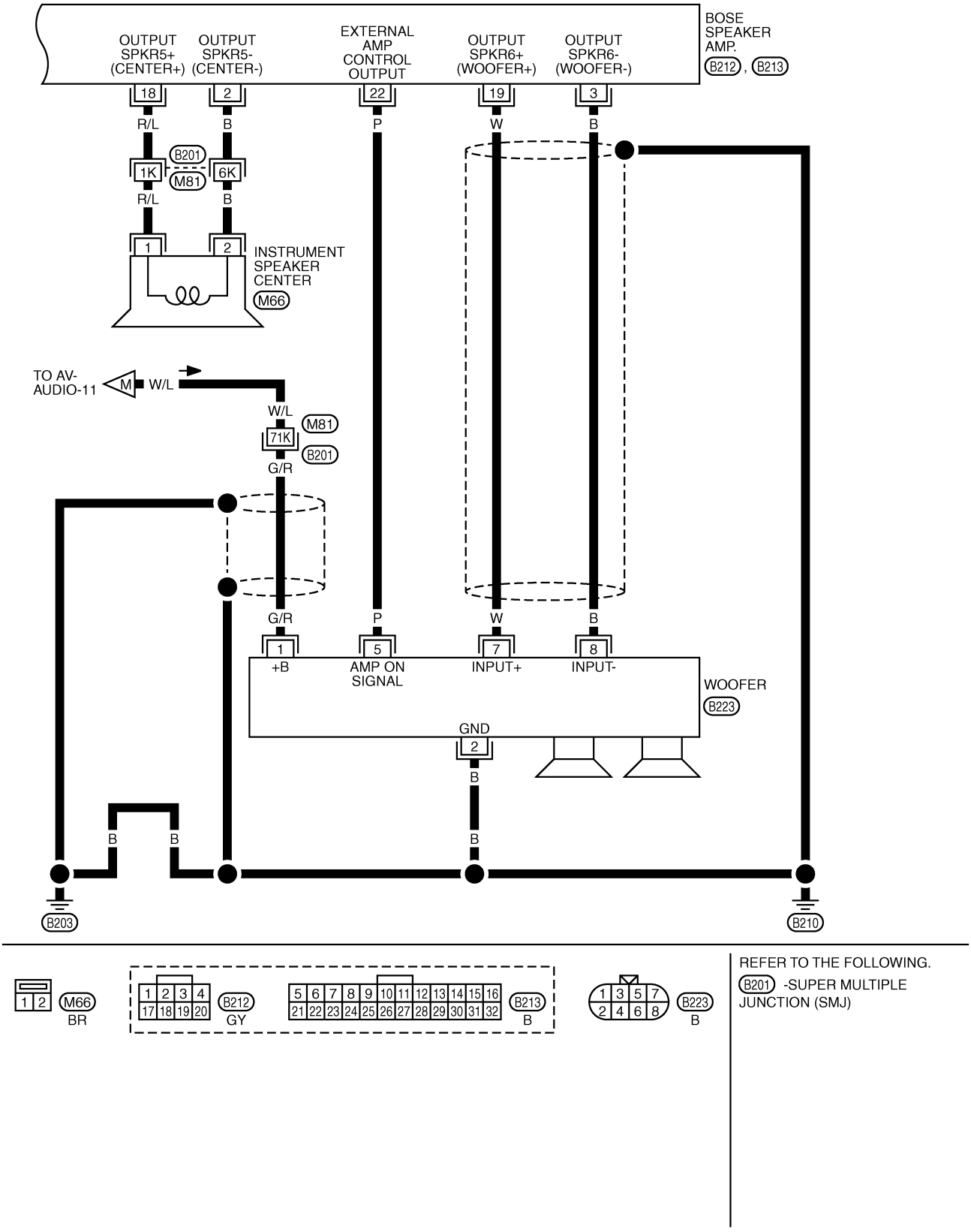


TKWM4398E

AV-AUDIO-16

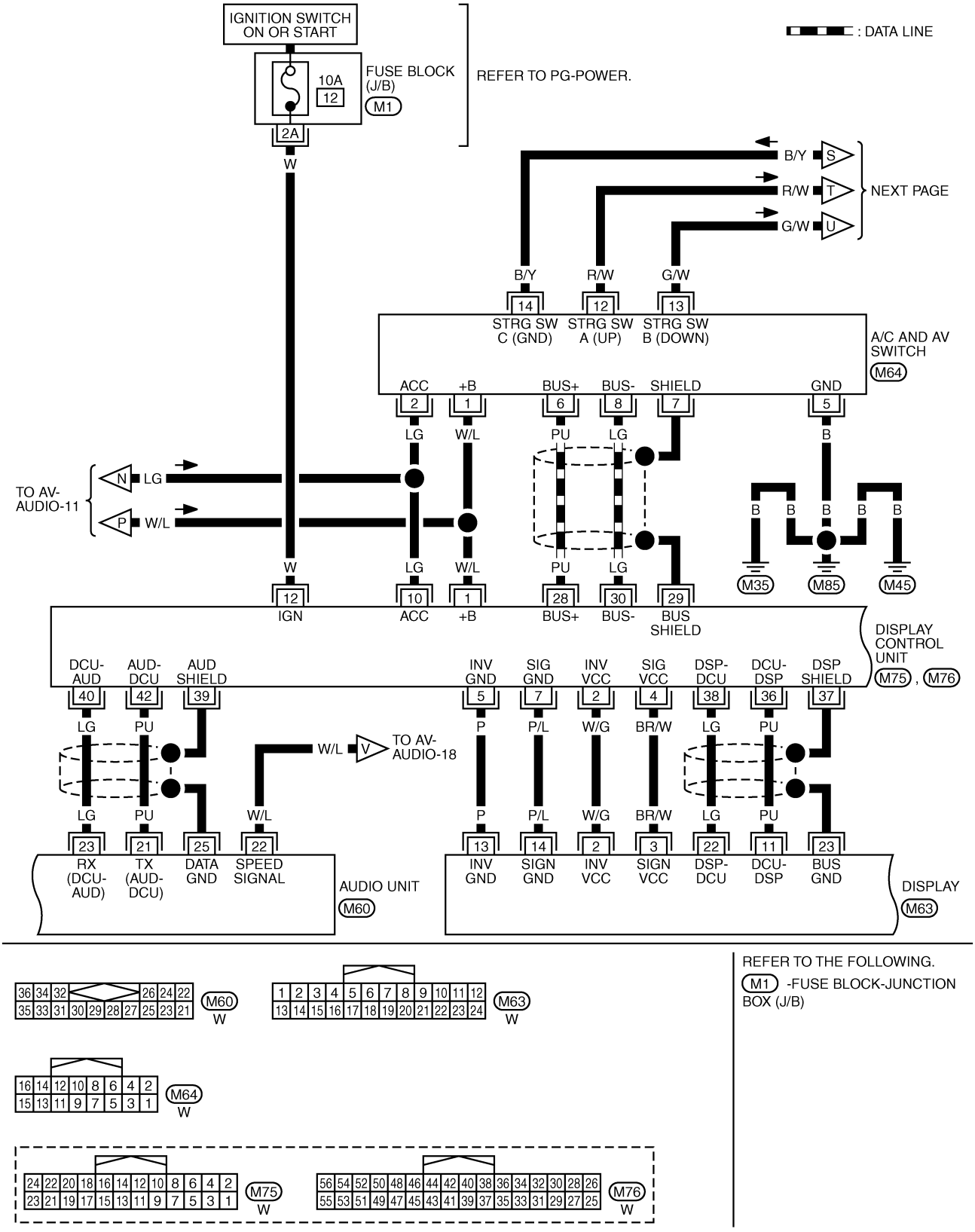


REFER TO THE FOLLOWING.

M1 -FUSE BLOCK-JUNCTION BOX (J/B)

TKWM4399E

AV-AUDIO-17

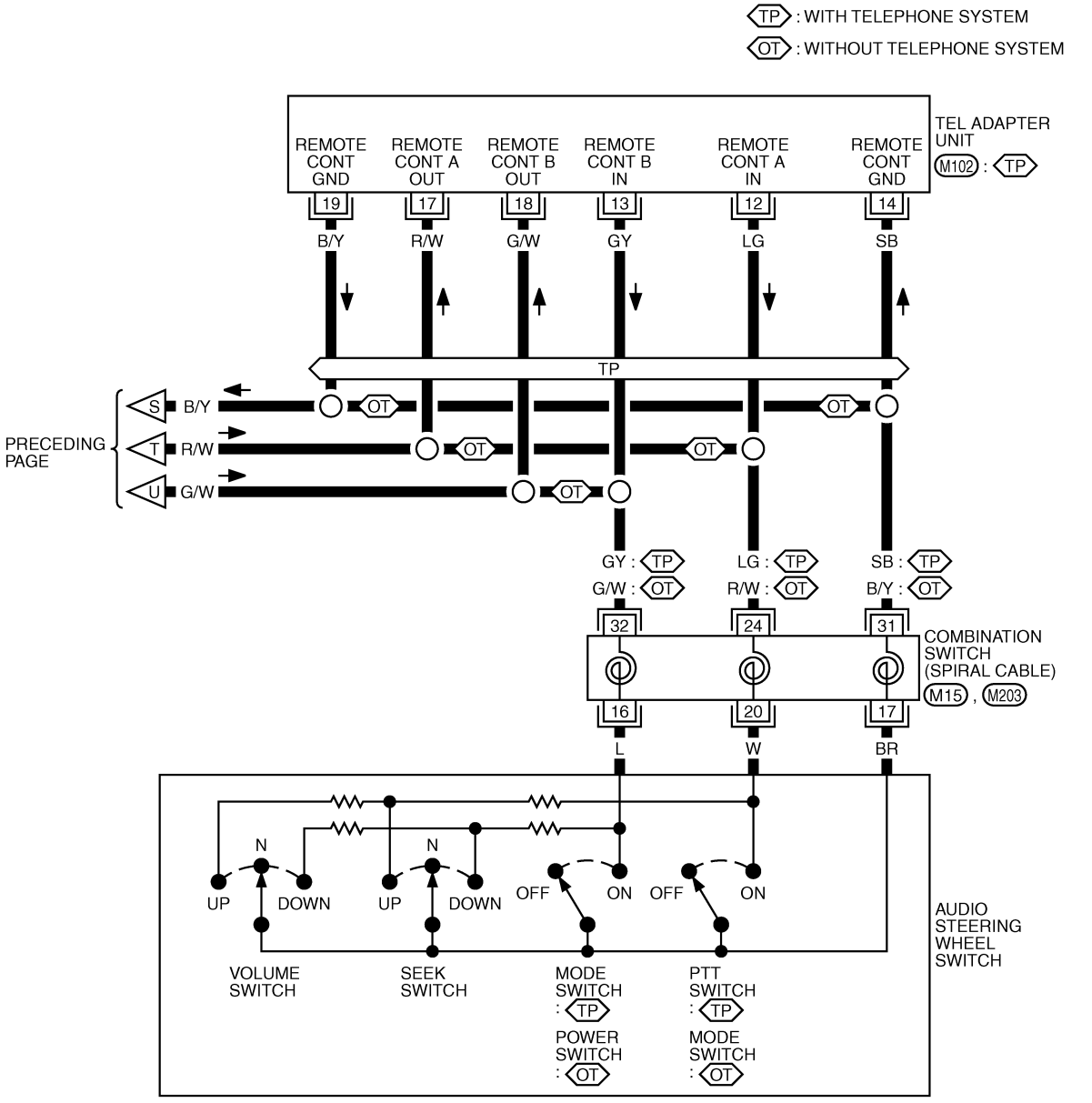


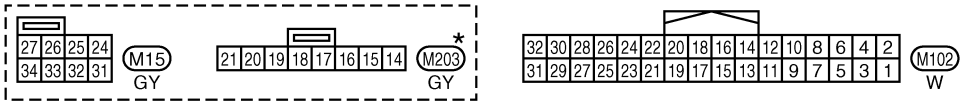


*: THIS CONNECTOR IS NOT SHOWN IN "HARNESS LAYOUT", PG SECTION.

TKWM4400E

AV-AUDIO-18

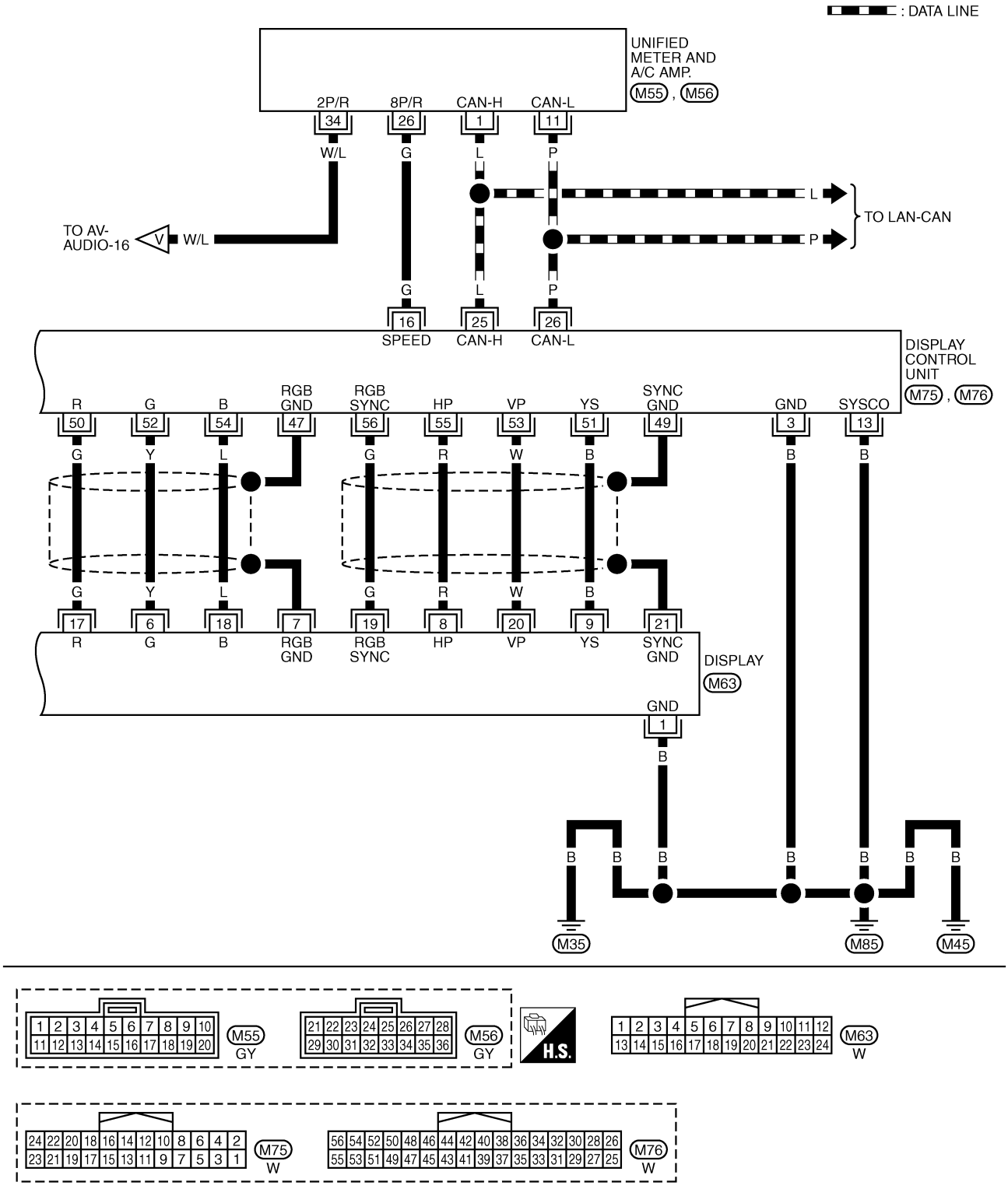





TKWM4401E

AV-AUDIO-19

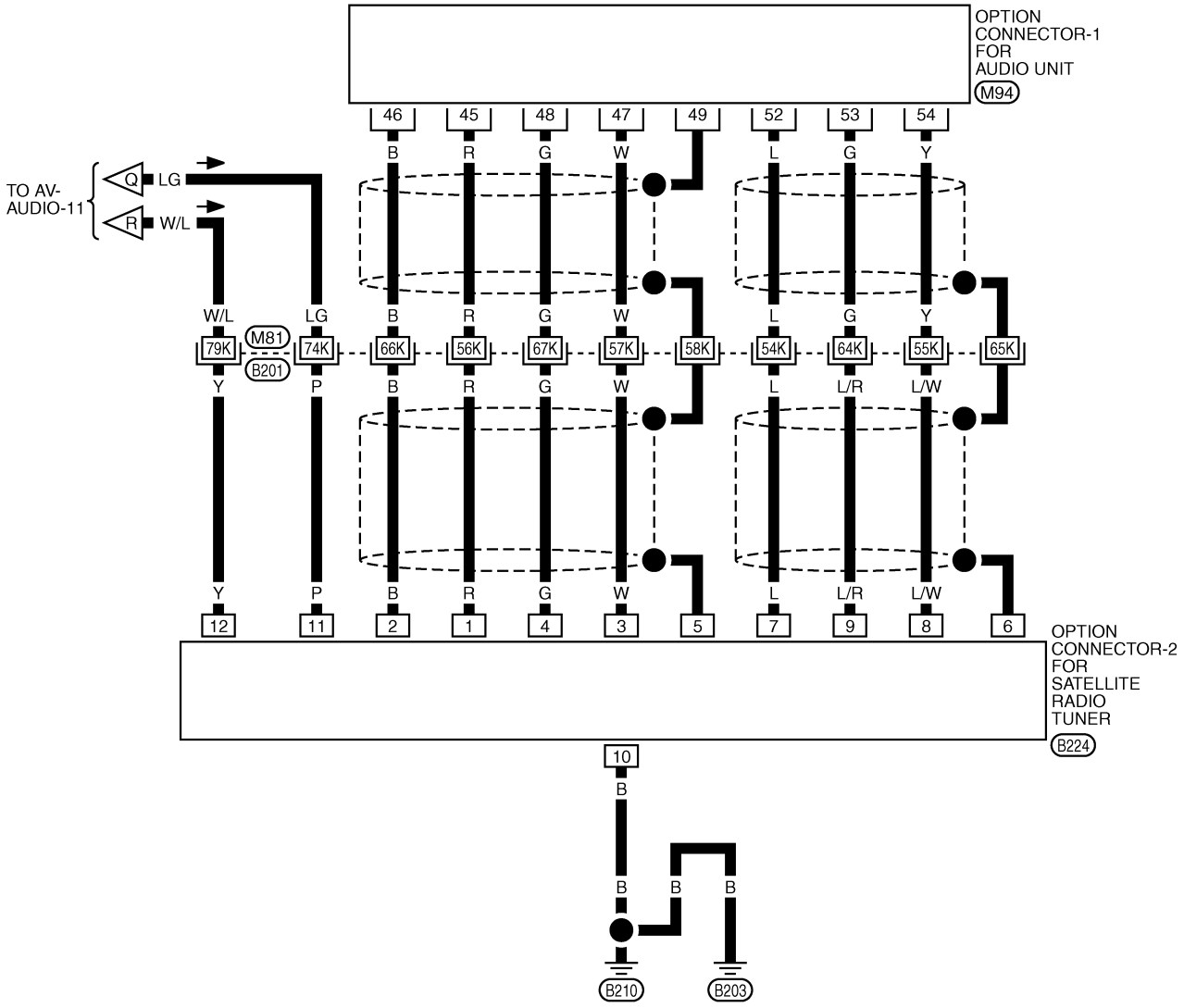


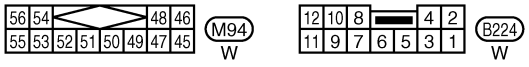


REFER TO THE FOLLOWING.

B201 -SUPER MULTIPLE JUNCTION (SMJ)

TKWM4402E

## Terminals and Reference Value for Audio Unit

NKS003L8

| Terminal (Wire color) + | Terminal (Wire color) – | Item | Signal input/ output | Condition: Ignition switch | Condition: Operation | Reference value |
|---|---|---|---|---|---|---|
| 2 (W) | 1 (B) | Audio signal front LH | Output | ACC | Receive audio signal | 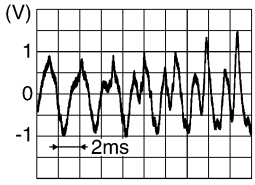  SKIB3609E |
| 4 (G) | 3 (R) | Audio signal front RH | Output | ACC | Receive audio signal | 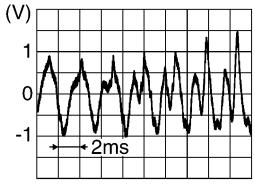  SKIB3609E |
| 5 (R/W) | Ground | Antenna amp. ON signal | Output | ACC | — | Approx. 12 V |
| 6 (W/L) | Ground | Battery power supply | Input | OFF | — | Battery voltage |
| 9 | — | Shield | — | — | — | — |
| 10 (LG) | Ground | ACC power supply | Input | ACC | — | Battery voltage |
| 11 | — | Shield | — | — | — | — |
| 12 (G/W) | Ground | BOSE speaker amp. ON signal | Output | ACC | — | Approx. 12 V |
| 14 (BR) | 13 (Y) | Audio signal rear LH | Output | ACC | Receive audio signal | 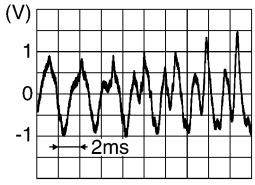  SKIB3609E |
| 16 (L) | 15 (P) | Audio signal rear RH | Output | ACC | Receive audio signal | 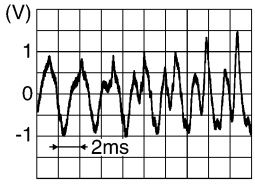  SKIB3609E |
| 21 (PU) | Ground | Communication signal (AUDIO-DCU) | Output | ACC | Operate audio volume switch | 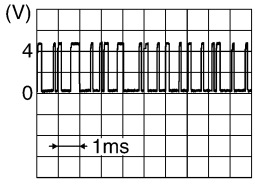  SKIB3606E |

| Terminal (Wire color) | | Item | Signal input/ output | Condition | | Reference value |
|---|---|---|---|---|---|---|
| + | – | | | Ignition switch | Operation | |
| 22 (W/L) | Ground | Vehicle speed signal (2 pulse) | Input | ON | When vehicle speed is approx. 40 km/h (25 MPH) | 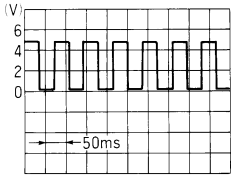  ELF1080D |
| 23 (LG) | Ground | Communication signal (DCU-AUDIO) | Input | ACC | Operate audio volume switch | 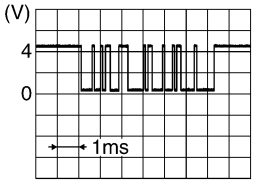  SKIB3607E |
| 25 | — | Shield | — | — | — | — |
| 46 (B)* | 45 (R)* | Satellite radio audio signal LH | Input | ON | Receive satellite radio audio signal | 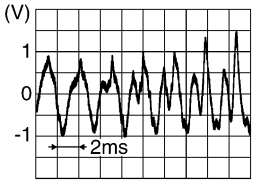  SKIB3609E |
| 48 (G)* | 47 (W)* | Satellite radio audio signal RH | Input | ON | Receive satellite radio audio signal | 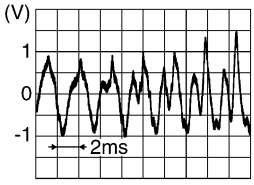  SKIB3609E |
| 49* | — | Shield | — | — | — | — |
| 52 (L)* | Ground | Communication signal REQ (SAT-AUDIO) | Input | ON | When setting to satellite radio mode | 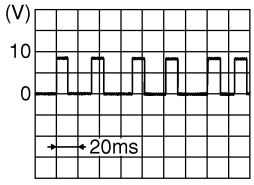  SKIB7338E |
| 53 (G)* | Ground | Communication signal Rx (SAT-AUDIO) | Input | ON | When setting to satellite radio mode | 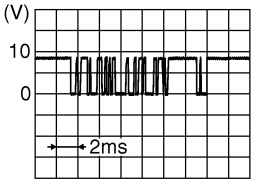  SKIB7337E |
| 54 (Y)* | Ground | Communication signal Tx (AUDIO-SAT) | Output | ON | When setting to satellite radio mode | 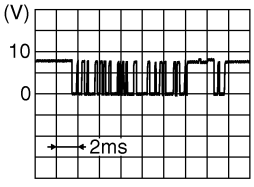  SKIB7336E |

*: With satellite radio

## Terminals and Reference Value for BOSE Speaker Amp.

NKS003L9

| Terminal (Wire color) | | Item | Signal input/ output | Condition | | Reference value |
|---|---|---|---|---|---|---|
| + | – | | | Ignition switch | Operation | |
| 1 (R) | Ground | Battery power supply | Input | OFF | — | Battery voltage |
| 9 (LG) | 10 (B/Y) | Audio signal rear door speaker LH | Output | ACC | Receive audio signal | 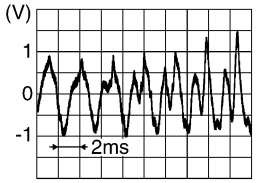  SKIB3609E |
| 11 (OR) | 12 (B/P) | Audio signal rear door speaker RH | Output | ACC | Receive audio signal | 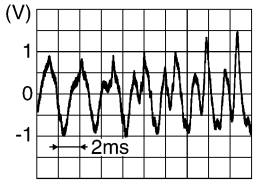  SKIB3609E |
| 13 (L) | 14 (B/W) | Audio signal front door speaker LH | Output | ACC | Receive audio signal | 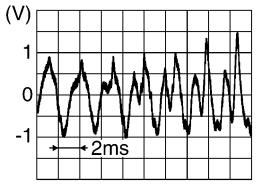  SKIB3609E |
| 15 (BR) | 16 (B/R) | Audio signal front door speaker RH | Output | ACC | Receive audio signal | 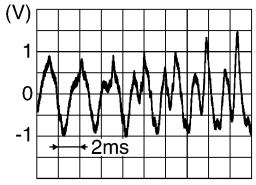  SKIB3609E |
| 17 (B) | Ground | Ground | — | ON | — | Approx. 0 V |
| 18 (R/L) | 2 (B) | Audio signal instrument speaker center | Output | ACC | Receive audio signal | 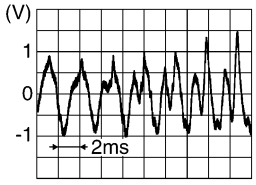  SKIB3609E |
| 19 (W) | 3 (B) | Audio signal woofer | Output | ACC | Receive audio signal | 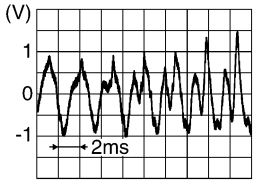  SKIB3609E |

| Terminal (Wire color) | | Item | Signal input/ output | Condition | | Reference value |
|---|---|---|---|---|---|---|
| + | – | | | Ignition switch | Operation | |
| 20 (G) | 4 (G/W) | Audio signal tweeter | Output | ACC | Receive audio signal | 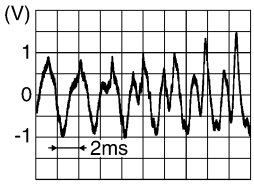  SKIB3609E |
| 22 (P) | Ground | Amp ON signal (woofer) | Output | ACC | Receive audio signal | Approx. 12 V |
| 24 (L) | 23 (B/W) | Audio signal rear RH | Input | ACC | Receive audio signal | 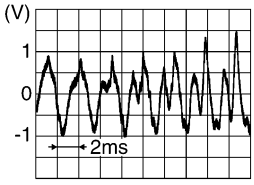  SKIB3609E |
| 26 (B/R) | 25 (BR) | Audio signal rear LH | Input | ACC | Receive audio signal | 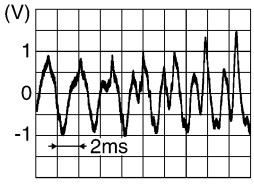  SKIB3609E |
| 28 (LG) | 27 (PU) | Audio signal front RH | Input | ACC | Receive audio signal | 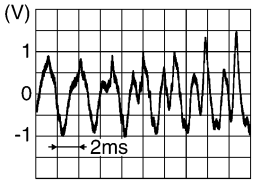  SKIB3609E |
| 30 (W) | 29 (B) | Audio signal front LH | Input | ACC | Receive audio signal | 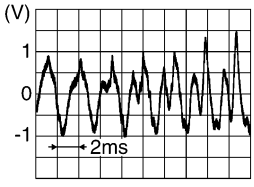  SKIB3609E |
| 31 (P) | Ground | BOSE speaker amp. ON signal | Input | ACC | — | Approx. 12 V |

## Terminals and Reference Value for A/C and AV Switch

NKS003LA

| Terminal (Wire color) | | Item | Signal input/ output | Condition | | Reference value |
|---|---|---|---|---|---|---|
| + | – | | | Ignition switch | Operation | |
| 1 (W/L) | Ground | Battery power supply | Input | OFF | — | Battery voltage |
| 2 (LG) | Ground | ACC power supply | Input | ACC | — | Battery voltage |
| 5 (B) | Ground | Ground | — | ON | — | Approx. 0 V |
| 6 (PU) | Ground | Communication signal (+) | Input/ Output | ON | — | 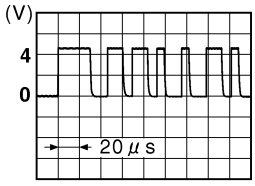  SKIB7378E |
| 7 | — | Shield | — | — | — | — |
| 8 (LG) | Ground | Communication signal (–) | Input/ Output | ON | — | 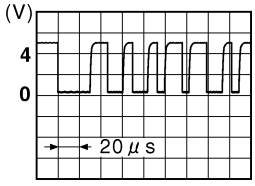  SKIB7379E |
| 12 (R/W) | Ground | Steering SW A | Input | ON | Press and hold PTT*1 switch | Approx. 0 V |
| | | | | | Press and hold MODE*2 switch | Approx. 0 V |
| | | | | | Press and hold SEEK UP switch | Approx. 1.7 V |
| | | | | | Press and hold VOL UP switch | Approx. 3.3 V |
| | | | | | Except for above | Approx. 5 V |
| 13 (G/W) | Ground | Steering SW B | Input | ON | Press and hold MODE*1 switch | Approx. 0 V |
| | | | | | Press and hold POWER*2 switch | Approx. 0 V |
| | | | | | Press and hold SEEK DOWN switch | Approx. 1.7 V |
| | | | | | Press and hold VOL DOWN switch | Approx. 3.3 V |
| | | | | | Except for above | Approx. 5 V |
| 14 (B/Y) | Ground | Steering SW ground | — | ON | — | Approx. 0 V |

- *1: With telephone system
- *2: Without telephone system

## Terminals and Reference Value for Woofer

NKS003AS

| Terminal (Wire color) | | Item | Signal input/ output | Condition | | Voltage |
|---|---|---|---|---|---|---|
| + | – | | | Ignition switch | Operation | |
| 1 (G/R) | Ground | Battery power supply | Input | OFF | — | Battery voltage |
| 2 (B) | Ground | Ground | — | ON | — | Approx. 0 V |
| 5 (P) | Ground | Amp ON signal | Input | ACC | — | Approx. 12 V |
| 7 (W) | 8 (B) | Audio signal woofer | Input | ACC | Receive audio signal | 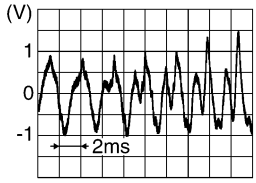  SKIB3609E |

## Terminals and Reference Value for Satellite Radio Tuner

NKS003LB

| Terminal (Wire color) | | Item | Signal input/ output | Condition | | Reference value |
|---|---|---|---|---|---|---|
| + | – | | | Ignition switch | Operation | |
| 2 (B) | 1 (R) | Satellite radio audio signal LH | Output | ON | Receive satellite radio audio signal | 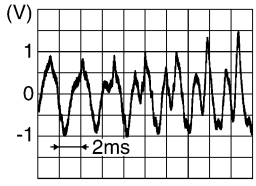  SKIB3609E |
| 4 (G) | 3 (W) | Satellite radio audio signal RH | Output | ON | Receive satellite radio audio signal | 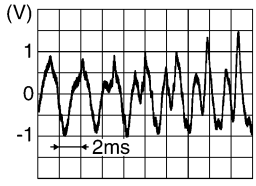  SKIB3609E |
| 5 | — | Shield | — | — | — | — |
| 6 | — | Shield | — | — | — | — |
| 8 (L) | Ground | Communication signal REQ (SAT-AUDIO) | Output | ON | When setting to satellite radio mode | 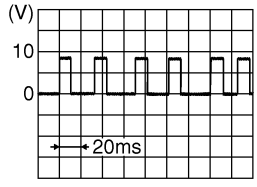  SKIB7338E |
| 9 (L/R) | Ground | Communication signal Tx (SAT-AUDIO) | Output | ON | When setting to satellite radio mode | 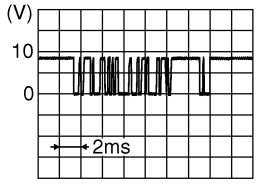  SKIB7337E |

| Terminal (Wire color) | | Item | Signal input/ output | Condition | | Reference value |
|---|---|---|---|---|---|---|
| + | – | | | Ignition switch | Operation | |
| 10 (L/W) | Ground | Communication signal Rx (AUDIO-SAT) | Input | ON | When setting to satellite radio mode | 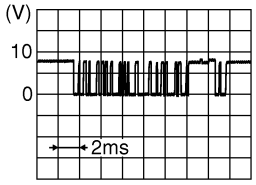  SKIB7336E |
| 12 (Y) | Ground | Battery power supply | Input | OFF | — | Battery voltage |
| 15 (B) | Ground | Ground | — | ON | — | Approx. 0 V |
| 16 (P) | Ground | ACC power supply | Input | ACC | — | Battery voltage |
| 17 | — | Satellite radio antenna | — | — | — | — |

## A/C and AV Switch Self-Diagnosis Function

NKS003AT

It can check ON/OFF operation of each switch in the A/C and AV switch and diagnose the input signals to the audio steering wheel switch.

### STARTING THE SELF-DIAGNOSIS MODE

1. Turn ignition switch from OFF to ACC.
2. Within 10 seconds press and hold the switches “1” and “6” simultaneously for 3 seconds.

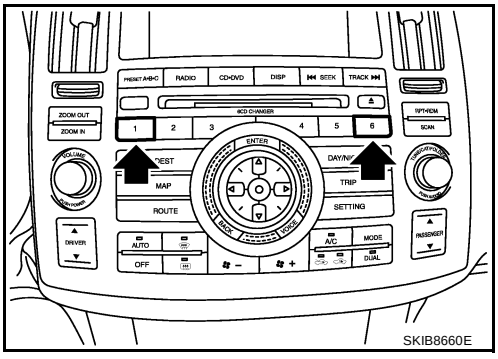

SKIB8660E

### DIAGNOSIS FUNCTION

The following are checked:

- All the indicators (LED) in the A/C and AV switch.
- Continuity of the switches by sounding the buzzer when the A/C and AV switch and audio steering wheel switch is pressed.
- Continuity of harness between A/C and AV switch and audio steering switch.

**NOTE:**
Rear window defogger switch operation is not checked. (No beep sound even under normal status)

### EXITING THE SELF-DIAGNOSIS MODE

- Turn ignition switch OFF.

## Trouble Diagnosis

NKS003LC

- The majority of the audio malfunctions are the result of outside causes (bad CD, electromagnetic interference, etc.). Check the symptoms below to diagnose the malfunction.
- The vehicle itself can be a source of noise if noise prevention parts or electrical equipment is malfunctioning. Check if noise is caused and/or changed by engine speed, ignition switch turned to each position, and operation of each piece of electrical equipment, and then determine the cause.
- Make sure that other operation except audio system can be performed with A/C and AV switch. If these operations are inoperative with A/C and AV switch, refer to AV-84, "Unable to Operate System with A/C and AV Switch" (Without navigation system), or AV-139, "Unable to Operate System with A/C and AV Switch" (With navigation system).
- Refer to "SERVICE BULLETIN ITB04-055" for the diagnosis of satellite radio.

| Symptom | Possible malfunction location |
|---|---|
| Audio system does not work properly. | ● Audio unit power supply circuit<br>● Communication signal circuit between audio unit and display control unit<br>● A/C and AV switch<br>● Audio unit |
| No sound can be heard from all speakers. | ● BOSE speaker amp. power supply and ground circuit<br>● BOSE speaker amp. ON signal circuit<br>● Audio unit<br>● BOSE speaker amp. |
| No sound can be heard from one or several speakers. | ● Audio signal circuit between audio unit and BOSE speaker amp.<br>● Audio signal circuit between BOSE speaker amp. and speaker<br>● Speaker<br>● Tweeter<br>● Audio unit<br>● BOSE speaker amp. |
| No sound can be heard from woofer. | ● Audio signal circuit between BOSE speaker amp. and woofer<br>● Woofer<br>● BOSE speaker amp. |
| No sound can be heard from radio or noise is caught. | ● Antenna amp. ON signal circuit<br>● Antenna feeder<br>● Roof antenna<br>● Antenna amp.<br>● Audio unit |
| Audio steering switch does not operate properly. | ● Remote control signal circuit between audio steering switch and A/C and AV switch<br>● Audio steering switch<br>● Spiral cable<br>● TEL adapter unit (With telephone system)<br>● A/C and AV switch |

**NOTE:**
Noise resulting from variations in field strength, such as fading noise and multi-path noise, or external noise from trains and other sources. It is not a malfunction.

- Fading noise: This noise occurs because of variations in the field strength in a narrow range due to mountains or buildings blocking the signal.
- Multi-path noise: This noise results from a time difference between the broadcast waves directly from the station arriving at the antenna and the waves reflected by mountains or buildings.

## Power Supply Circuit Inspection

NKS003AW

### 1. CHECK FUSE

Make sure that the following fuses of the BOSE speaker amp., woofer, and audio unit are not blown.

| Unit | Terminal | Signal name | Fuse No. |
|---|---|---|---|
| Audio unit | 6 | Battery power supply | 32 |
| | 10 | ACC power supply | 6 |
| BOSE speaker amp. | 1 | Battery power supply | 17 |
| Woofer | 1 | Battery power supply | 32 |

OK or NG

OK >> GO TO 2.

NG >> If fuse is blown, be sure to eliminate cause of malfunction before installing new fuse. Refer to PG-3, "POWER SUPPLY ROUTING CIRCUIT" .

### 2. CHECK POWER SUPPLY CIRCUIT

1. Check voltage between audio unit harness connector terminals and ground.

| Terminals | | | Ignition switch | Voltage |
|---|---|---|---|---|
| (+) | | (–) | | |
| Connector | Terminal | | | |
| M58 | 6 | Ground | OFF | Battery voltage |
| | 10 | Ground | ACC | Battery voltage |

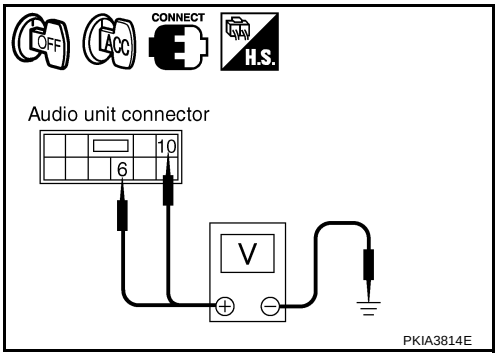


2. Check voltage between BOSE speaker amp. harness connector terminal or woofer harness connector terminal and ground.

| Terminals | | | Ignition switch | Voltage |
|---|---|---|---|---|
| (+) | | (–) | | |
| Connector | Terminal | | | |
| B212 | 1 | Ground | OFF | Battery voltage |
| B223 | 1 | Ground | OFF | Battery voltage |

OK or NG

OK >> ● INSPECTION END (Audio unit is OK.)
● GO TO 3. (BOSE speaker amp. and woofer)

NG >> Repair harness or connector between each unit and fuse.

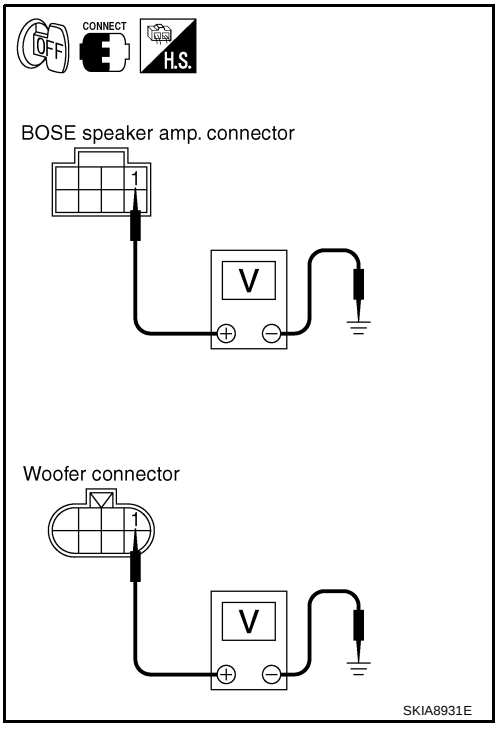

## 3. CHECK GROUND CIRCUIT

1. Turn ignition switch OFF.
2. Disconnect BOSE speaker amp. and woofer connectors.
3. Check continuity between BOSE speaker amp. harness connector B212 terminal 17 and ground.

**17 – Ground : Continuity should exist.**

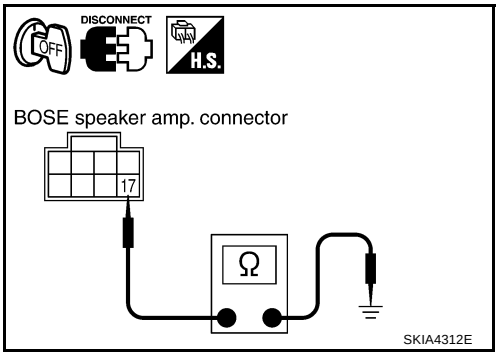


4. Check continuity between woofer harness connector B223 terminal 2 and ground.

**2 – Ground : Continuity should exist.**

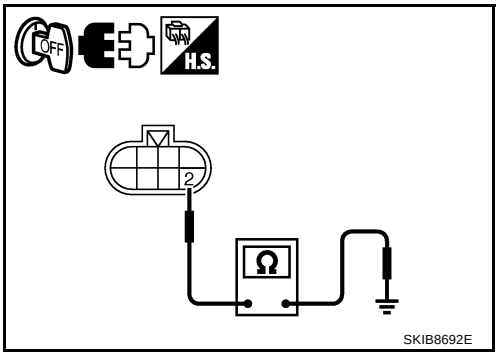


OK or NG

OK >> INSPECTION END (System is OK.)
NG >> Repair harness or connector.

# Audio Steering Wheel Switch Inspection

NKS003AX

## 1. CHECK A/C AND AV SWITCH SELF-DIAGNOSIS FUNCTION

1. Start A/C and AV switch self-diagnosis function. Refer to AV-35, "A/C and AV Switch Self-Diagnosis Function" .
2. Operate audio steering wheel switch.

Does audio steering wheel switch operate normally?

YES >> INSPECTION END
NO >>
- GO TO 2. (Without telephone system)
- GO TO 3. (With telephone system)

## 2. CHECK HARNESS

1. Turn ignition switch OFF.
2. Disconnect A/C and AV switch and spiral cable connectors.
3. Check continuity between A/C and AV switch harness connector M64 terminals 12, 13, 14 and spiral cable harness connector M15 terminals 24, 32, 31.

**12 – 24 : Continuity should exist.**
**13 – 32 : Continuity should exist.**
**14 – 31 : Continuity should exist.**

4. Check continuity between A/C and AV switch and ground.

**12, 13, 14 – ground : Continuity should not exist.**

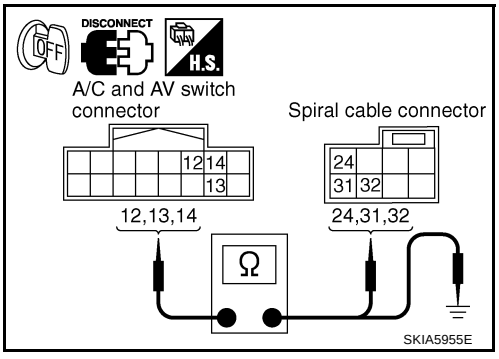


OK or NG

OK >> GO TO 5.
NG >> Repair harness or connector.

## 3. CHECK HARNESS

1. Turn ignition switch OFF.
2. Disconnect A/C and AV switch and TEL adapter unit connectors.
3. Check continuity between A/C and AV switch harness connector (A) M64 terminals 12, 13, 14 and teladapter unit harness connector (B) M102 terminals 17, 18, 19.

| | |
|---|---|
| **12 – 17** | **: Continuity should exist.** |
| **13 – 18** | **: Continuity should exist.** |
| **14 – 19** | **: Continuity should exist.** |

4. Check continuity between A/C and AV switch and ground.

| | |
|---|---|
| **12, 13, 14 – ground** | **: Continuity should not exist.** |

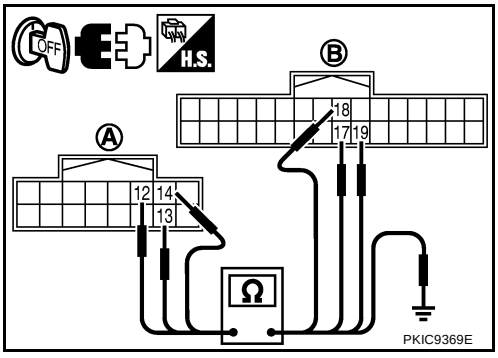


OK or NG

OK >> GO TO 4.
NG >> Repair harness or connector.

## 4. CHECK HARNESS

1. Disconnect spiral cable connector.
2. Check continuity between TEL adapter unit harness connector (A) M102 terminals 12, 13, 14 and spiral cable harness connector (B) M15 terminals 24, 32, 31.

| | |
|---|---|
| **12 – 24** | **: Continuity should exist.** |
| **13 – 32** | **: Continuity should exist.** |
| **14 – 31** | **: Continuity should exist.** |

3. Check continuity between TEL adapter unit and ground.

| | |
|---|---|
| **12, 13, 14 – ground** | **: Continuity should not exist.** |

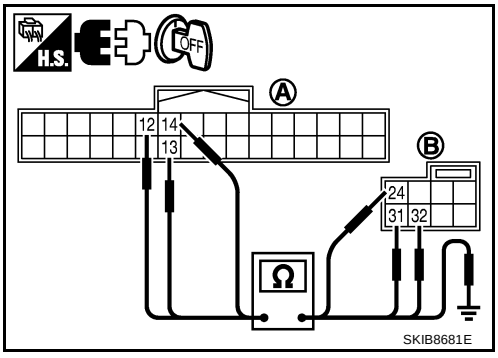


OK or NG

OK >> GO TO 5.
NG >> Repair harness or connector.

## 5. CHECK SPIRAL CABLE

1. Disconnect spiral cable connector (Audio steering wheel switch harness side).
2. Check continuity between spiral cable connector M15 terminals 24, 31, 32 and spiral cable connector M203 terminals 20, 17, 16.

| | |
|---|---|
| **24 – 20** | **: Continuity should exist.** |
| **31 – 17** | **: Continuity should exist.** |
| **32 – 16** | **: Continuity should exist.** |

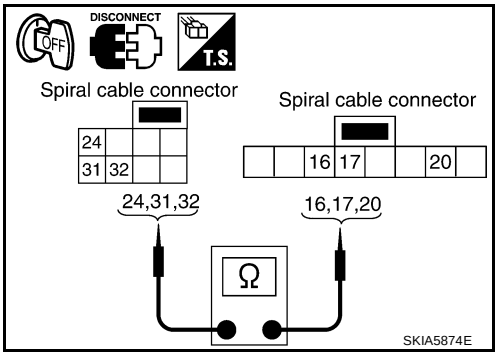


OK or NG

OK >> GO TO 6.
NG >> Replace spiral cable.

## 6. CHECK AUDIO STEERING WHEEL SWITCH RESISTANCE

Check resistance audio steering wheel switch terminals.

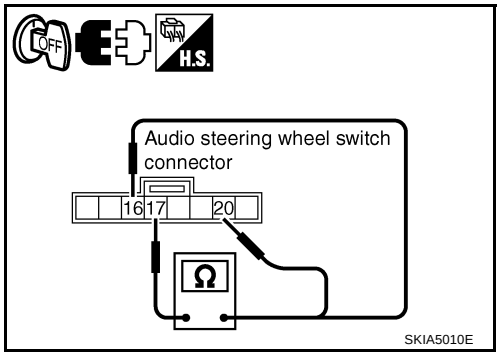


| Terminal | | Signal name | Condition | Resistance (Ω) |
|---|---|---|---|---|
| 16 | 17 | Power*1 | Depress power switch. | Approx. 0 |
| | | Mode*2 | Depress mode switch. | Approx. 0 |
| | | Seek down | Depress (station) down switch. | Approx. 165 |
| | | Volume (down) | Depress volume down switch. | Approx. 652 |
| 20 | | Mode*1 | Depress mode switch. | Approx. 0 |
| | | PTT*2 | Depress PTT switch. | Approx. 0 |
| | | Seek up | Depress (station) up switch. | Approx. 165 |
| | | Volume (up) | Depress volume up switch. | Approx. 652 |

- *1: Without telephone system
- *2: With telephone system

OK or NG

OK >> INSPECTION END
NG >> Replace audio steering wheel switch.

# A/C and AV Switch Inspection

NKS003AY

## 1. A/C AND AV SWITCH SELF-DIAGNOSIS FUNCTION

1. Start A/C and AV switch self-diagnosis function. Refer to AV-35, "A/C and AV Switch Self-Diagnosis Function" .
2. Operate A/C and AV switch.

Does the A/C and AV switch is operated normally?

YES >> INSPECTION END (System is OK)
NO >> Replace A/C and AV switch.

# BOSE Speaker Amp. Inspection

NKS003AZ

## 1. CHECK HARNESS

1. Turn ignition switch OFF.
2. Disconnect audio unit and BOSE speaker amp. connectors.
3. Check continuity between audio unit harness connector M59 terminal 12 and BOSE speaker amp. harness connector B213 terminal 31.

   **12 – 31 : Continuity should exist.**

4. Check continuity between audio unit harness connector M59 terminal 12 and ground.

   **12 – Ground : Continuity should not exist.**

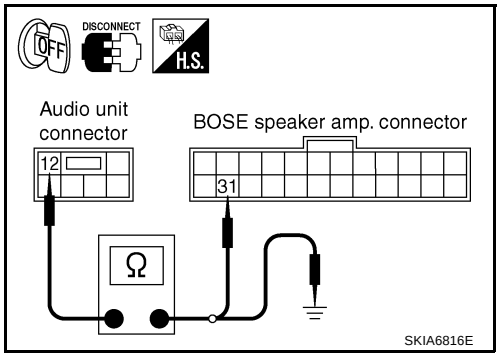


OK or NG

OK >> GO TO 2.
NG >> Repair harness or connector.

## 2. CHECK AMP. ON SIGNAL

1. Connect audio unit connector.
2. Turn ignition switch ACC.
3. Check voltage between audio unit harness connector M59 terminal 12 and ground.

**12 – Ground : Approx. 12 V**

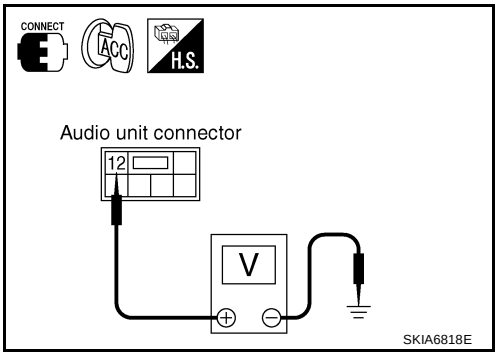


OK or NG

OK >> INSPECTION END (System is OK.)
NG >> Replace audio unit.

# Vehicle Speed Signal Inspection

NKS003B0

## 1. CHECK VEHICLE SPEED OPERATION

Start engine and drive vehicle.

Dose speedometer is operated normally?

YES >> GO TO 2.
NO >> Check combination meter trouble diagnosis. Refer to DI-16, "Trouble Diagnosis" .

## 2. CHECK HARNESS

1. Turn ignition switch OFF.
2. Disconnect audio unit and unified meter and A/C amp. connectors.
3. Check continuity between audio unit harness connector M60 terminal 22 and unified meter and A/C amp. harness connector M56 terminal 34.

**22 – 34 : Continuity should exist.**

4. Check continuity between audio unit harness connector M60 terminal 22 and ground.

**22 – Ground : Continuity should not exist.**

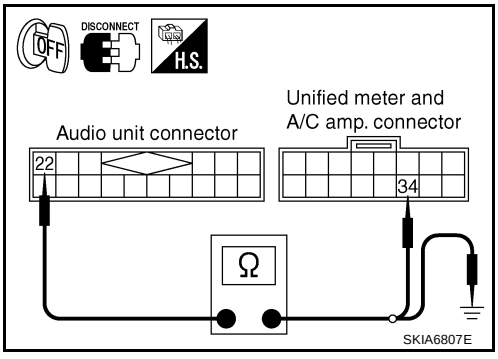


OK or NG

OK >> GO TO 3.
NG >> Repair harness or connector.

## 3. CHECK VEHICLE SPEED SIGNAL

1. Connect audio unit and unified meter and A/C amp. connectors.
2. Start engine and drive vehicle at more than 40 km/h (25 MPH).
3. Check the signal between audio unit harness connector M60 terminal 22 and ground with CONSULT-II or oscilloscope.

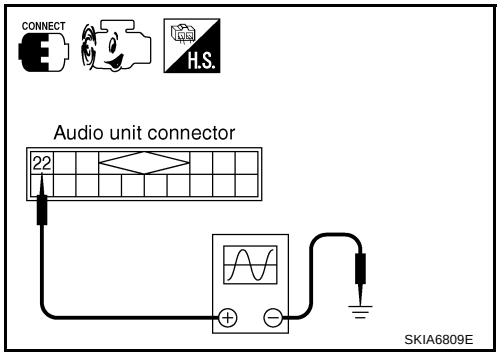


| Terminal | | Condition | Reference signal |
|---|---|---|---|
| (+) | (–) | | |
| 22 | Ground | When vehicle speed is approx. 40 km/h (25 MPH) | 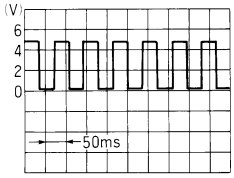  ELF1080D |

OK or NG

OK >> INSPECTION END (System is OK.)
NG >> Replace unified meter and A/C amp.

## Locking CD Auto-Changer Mechanism

NKS003B1

**CAUTION:**

- **Prior to removing a malfunctioning CD auto-changer unit that will be shipped for repair, the changer mechanism MUST BE LOCKED to prevent the mechanism from being damaged during shipping.**
- **If a CD is jammed or unable to be removed from the unit, do NOT lock the changer mechanism. If the unit is to be shipped for repair, carefully package the unit to prevent vibration and shock.**

### DAMPER LOCK PROCEDURE

1. Eject and remove any CDs from the audio unit.
2. Turn ignition switch OFF. Wait until audio unit display is off and mechanism stops moving (mechanism sound stops).
3. Press any one of the disc selection buttons once. When a display shows on the audio unit, press the same disc selection button again within 5 seconds.
   - The changer mechanism will lock itself within 10 seconds.
4. After mechanism stops moving (mechanism sound stops), open the driver and passenger window, and then disconnect negative battery cable.

**NOTE:**
After installing a new or remanufactured audio unit, switching the audio unit ON will automatically unlock the mechanism. A special unlocking procedure is not required.

## Removal and Installation of Audio Unit

NKS003B2

### REMOVAL

1. Perform damper lock operation. Refer to AV-42, "Locking CD Auto-Changer Mechanism" .
2. Remove cluster lid C. Refer to IP-10, "INSTRUMENT PANEL ASSEMBLY" .
3. Remove screws (6) with power tool, and remove audio unit with display and unified meter and A/C amp. from instrument panel.

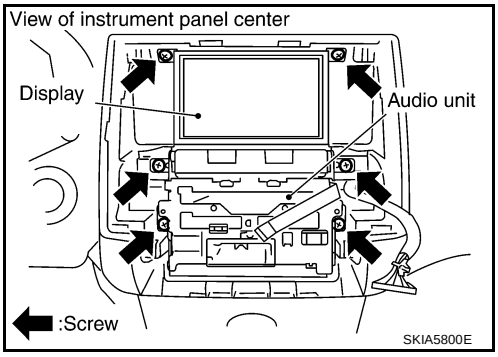


4. Remove screws and remove audio unit.

### INSTALLATION

Installation is the reverse order of removal.

## Disassembly and Assembly for Audio Unit

NKS003M0

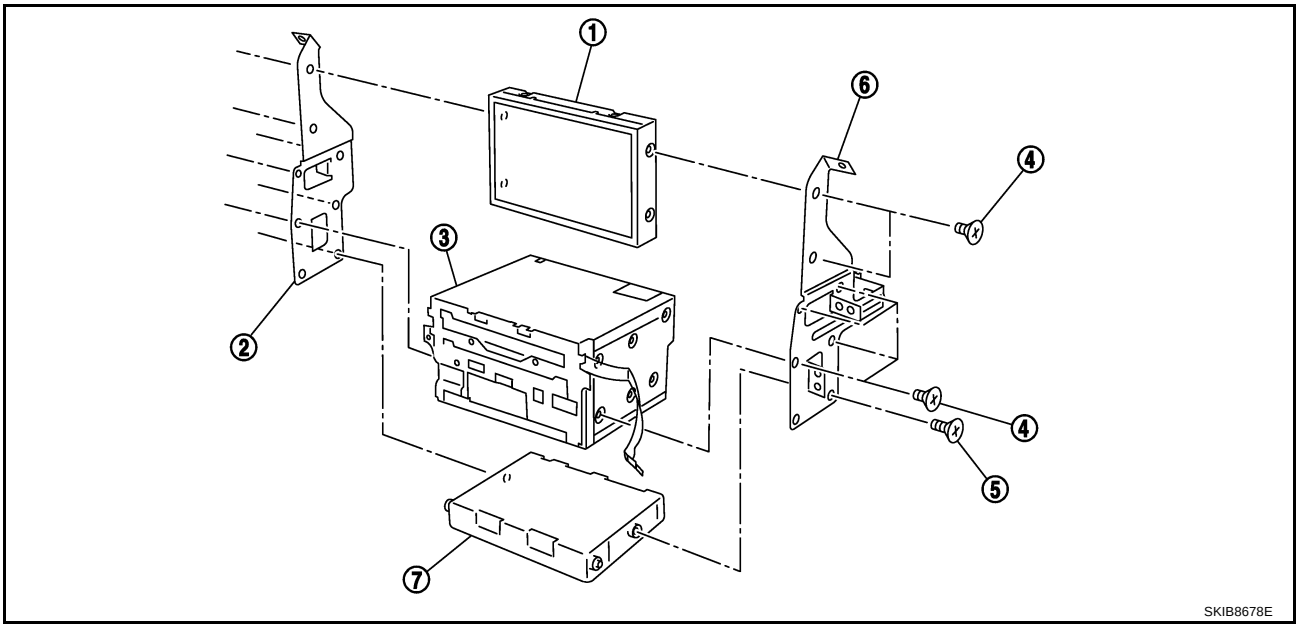


| | | |
|---|---|---|
| 1. Display | 2. Bracket (LH) | 3. Audio unit |
| 4. Screw (For metal) | 5. Screw (For plastic) | 6. Bracket (RH) |
| 7. Unified meter and A/C amp. | | |

### DISASSEMBLY

Remove audio unit screws (8) and display screws (4) and unified meter and A/C amp. screws (2) with power tool and remove brackets.

### ASSEMBLY

Assembly is the reverse order of disassembly.

**NOTE:**

Use appropriate screws for each, as screws for audio unit and display unit are different from that for unified meter and A/C amp.

## Removal and Installation for A/C and AV Switch

NKS003B4

### REMOVAL

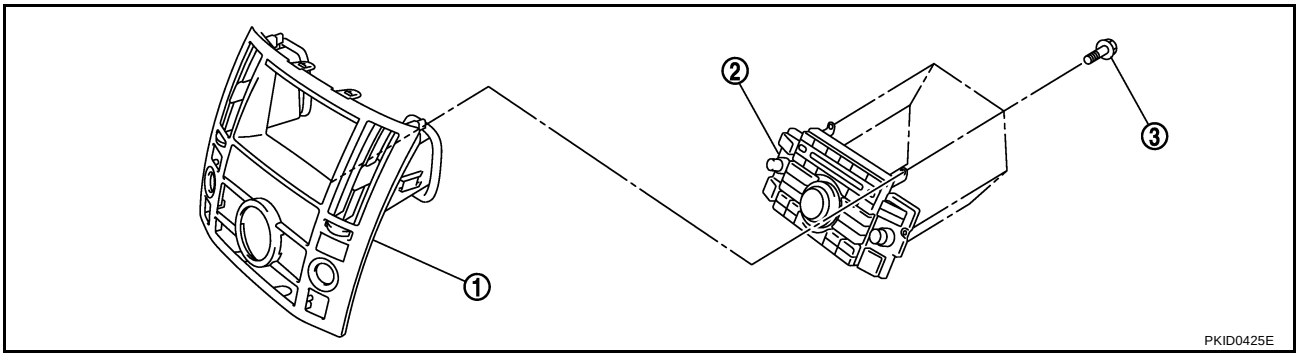


1. Cluster lid C
2. A/C and AV switch
3. Screws

1. Remove cluster lid C (1). Refer to IP-10, "INSTRUMENT PANEL ASSEMBLY" .
2. Remove screws (3) and remove A/C and AV switch (2) from cluster lid C (1).

### INSTALLATION

Installation is the reverse order of removal.

## Removal and Installation for Front Door Speaker

NKS003B5

### REMOVAL

1. Remove front door finisher. Refer to EI-36, "Removal and Installation" .
2. Remove screws (3) and remove front door speaker.

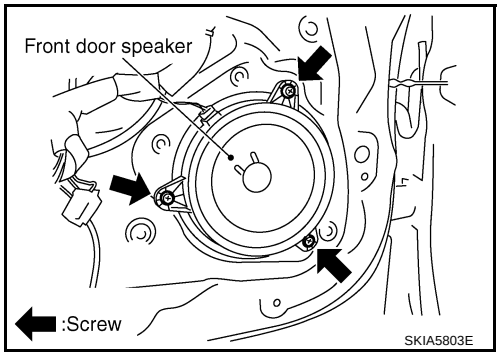


### INSTALLATION

Installation is the reverse order of removal.

## Removal and Installation for Rear Door Speaker

NKS003B6

### REMOVAL

1. Remove rear door finisher. Refer to EI-36, "Removal and Installation" .
2. Remove screws (3) and remove rear door speaker.

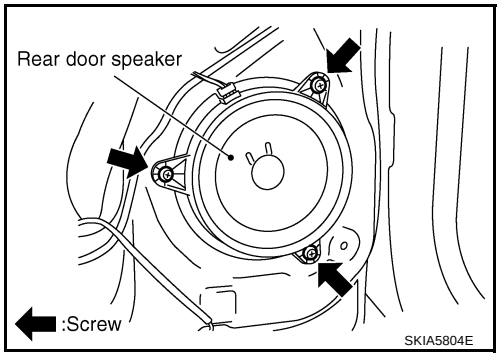


### INSTALLATION

Installation is the reverse order of removal.

## Removal and Installation for Instrument Speaker

NKS003B7

### REMOVAL

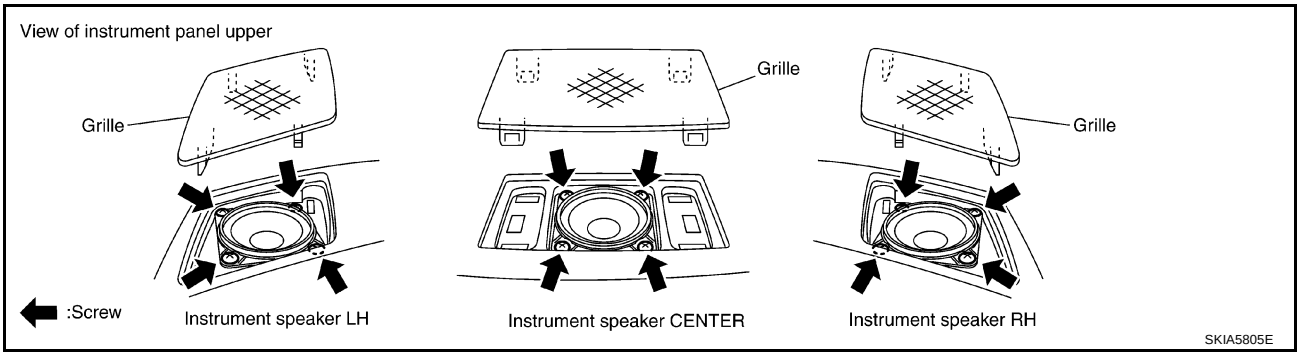


1. Remove grille from instrument panel.
2. Remove screws (4) and disconnect connector.
3. Remove instrument speaker.

### INSTALLATION

Installation is the reverse order of removal.

## Removal and Installation for Tweeter

NKS003B8

### REMOVAL

1. Remove rear pillar upper garnish assembly. Refer to EI-45, "Removal and Installation" .
2. Remove screws (4), and disconnect connector.
3. Remove tweeter.

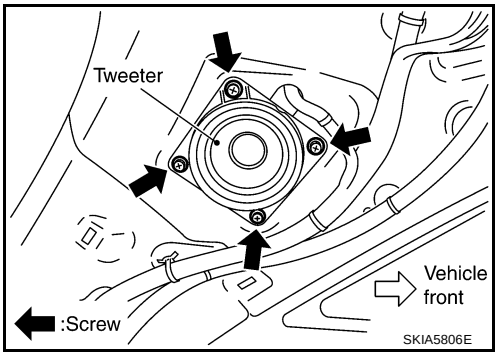


### INSTALLATION

Installation is the reverse order of removal.

## Removal and Installation for Woofer (BOSE System)

NKS003B9

### REMOVAL

1. Open luggage floor board.
2. Remove speaker clamp and harness clip.
3. Disconnect connector.
4. Remove woofer.

**CAUTION:**

**Connectors must be placed in the left side, when installed.**

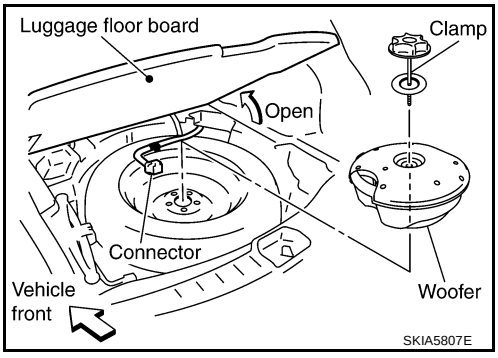


### INSTALLATION

Installation is the reverse order of removal.

## Removal and Installation for BOSE Speaker Amp.

NKS003BA

### REMOVAL

1. Remove luggage side box assembly. Refer to EI-45, "Removal and Installation" .
2. Remove nuts (3) with power tool, and remove BOSE speaker amp. from luggage room floor.

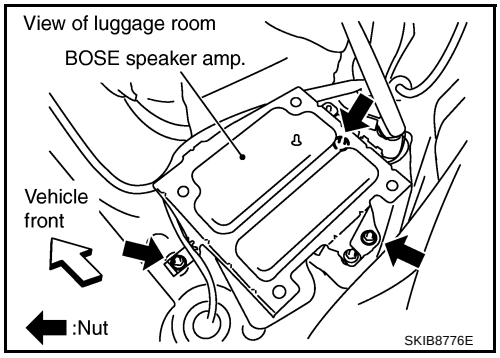


3. Remove nuts (2) with power tool, and remove assist bracket.
4. Remove nuts (4) with power tool, and remove bracket.

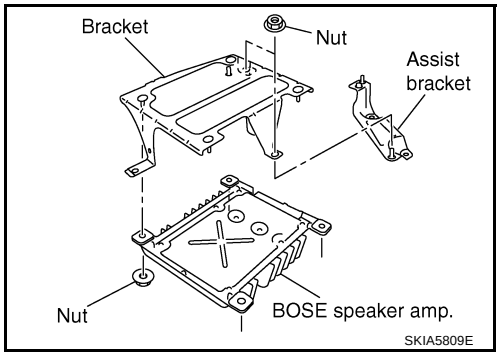


### INSTALLATION

Installation is the reverse order of removal.

## Removal and Installation of Satellite Radio Tuner

NKS003LX

### REMOVAL

1. Remove luggage side box assembly. Refer to EI-45, "Removal and Installation" .
2. Remove nuts (A) and remove satellite radio tuner (1) from luggage room floor.

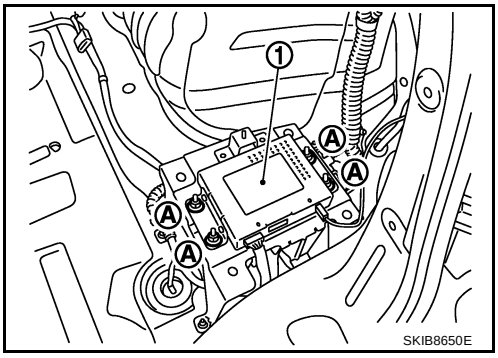


### INSTALLATION

Installation is the reverse order of removal.

## Removal and Installation of Satellite Radio Antenna

NKS003LY

⇦: Vehicle front

### REMOVAL

1. Remove luggage floor trim. Refer to EI-45, "Removal and Installation" .
2. Remove assist grip (rear). Refer to EI-43, "HEADLINING" .
3. Pull down headlining and obtain space for work between vehicle and headlining.
4. Remove nut (A), and then disconnect connector (1).
5. Remove satellite radio antenna.

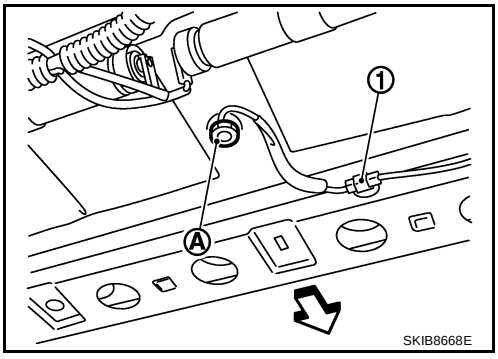


### INSTALLATION

Installation is the reverse order of removal.

**Roof antenna mounting nut** **: 4.5 N·m (0.46 kg-m, 40 in-lb)**

# ANTENNA

PFP:28200

## System Description

NKS003LP

With the ignition switch in ACC or ON, power is supplied

- through 10A fuse [No. 6, located in the fuse block (J/B)]
- to audio unit terminal 10.

Ground is supplied through the case of the antenna amp.
When the radio switch is turned ON, antenna signal is supplied

- through audio unit terminal 5
- to the antenna amp.

Then the antenna amp. is activated.
The amplified radio signals are supplied to the audio unit through the antenna amp.

## Wiring Diagram — M/ANT —

NKS003LQ

AV-M/ANT-01

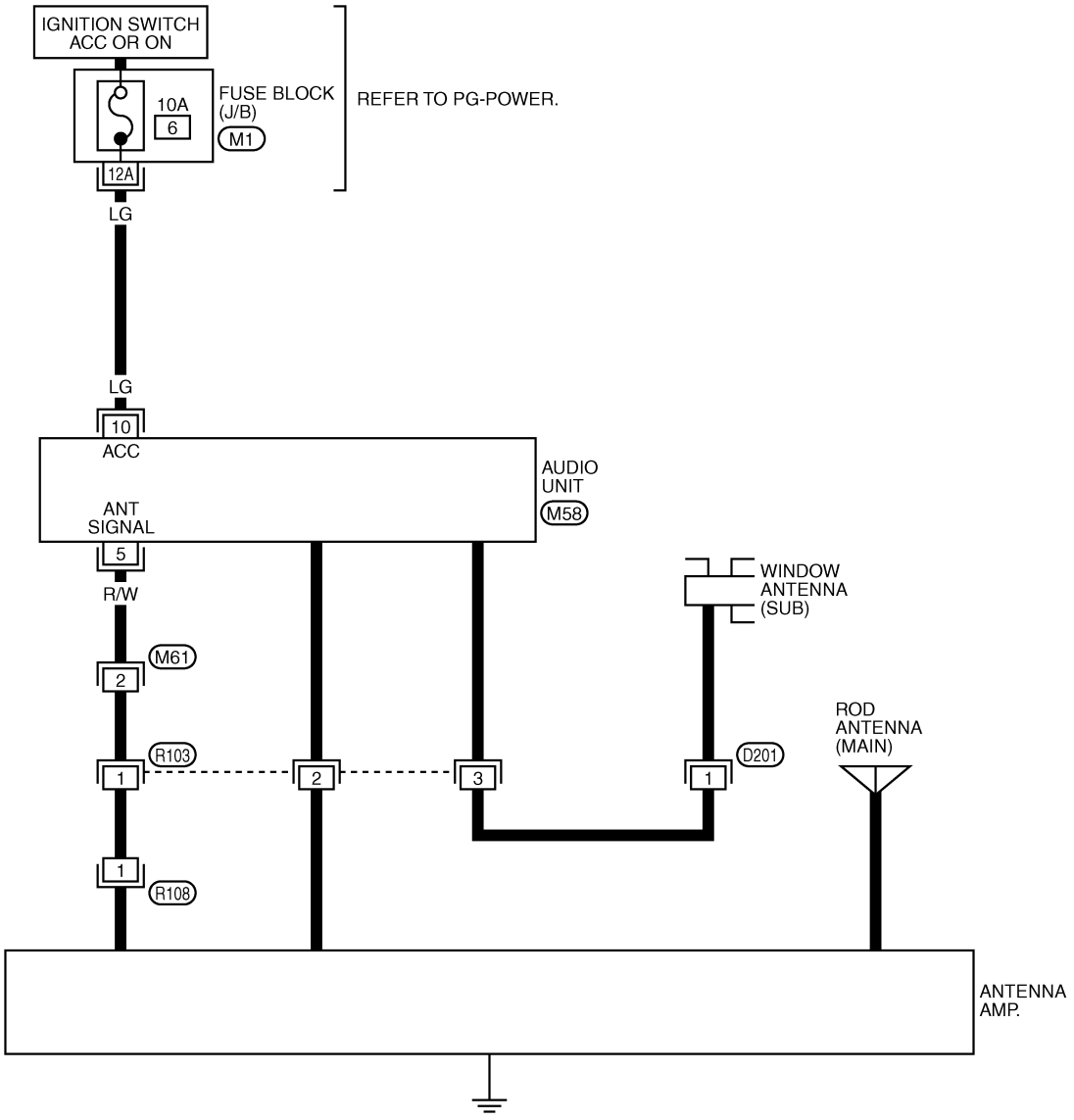


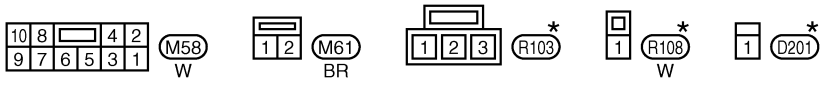


*: THIS CONNECTOR IS NOT SHOWN IN "HARNESS LAYOUT", PG SECTION.

REFER TO THE FOLLOWING.
M1 -FUSE BLOCK-JUNCTION BOX (J/B)

TKWM4403E

## Terminals and Reference Value for Audio Unit

NKS003LR

| Terminal (Wire color) | | Item | Signal input/ output | Condition | | Reference value |
|---|---|---|---|---|---|---|
| + | – | | | Ignition switch | Operation | |
| 5 (R/W) | Ground | Antenna signal | Input | ACC | — | Approx. 12 V |
| 10 (LG) | Ground | ACC power supply | Input | ACC | — | Battery voltage |

## Antenna Amp. Inspection

NKS003LS

### 1. CHECK ANTENNA FEEDER

Check with visual observation if antenna feeder between audio unit and antenna amp. has disconnection or malfunction on the mounting part (engagement, looseness of shield earth, etc.).

OK or NG

OK >> GO TO 2
NG >> Replace antenna feeder.

### 2. CHECK ANTENNA SIGNAL

1. Turn ignition switch ACC.
2. Check voltage between audio unit harness connector M58 terminal 5 and ground.

**5 – Ground : Approx. 12 V**

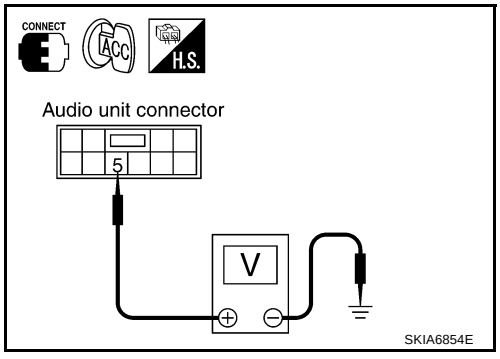


OK or NG

OK >> INSPECTION END (System is OK.)
NG >> Replace audio unit.

## Location of Antenna

NKS003LT

### RADIO ANTENNA AND GPS ANTENNA

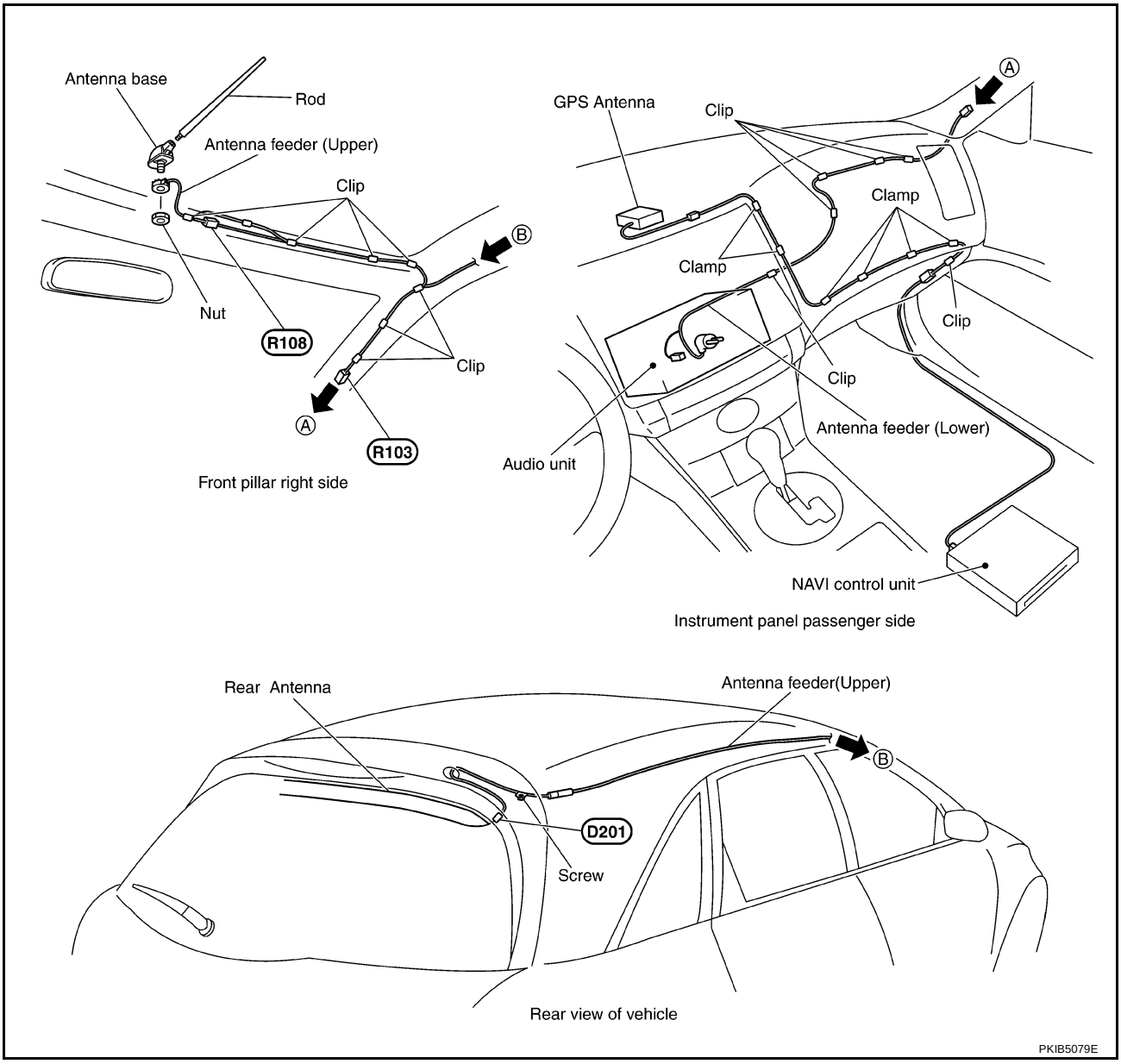


### SATELLITE RADIO ANTENNA

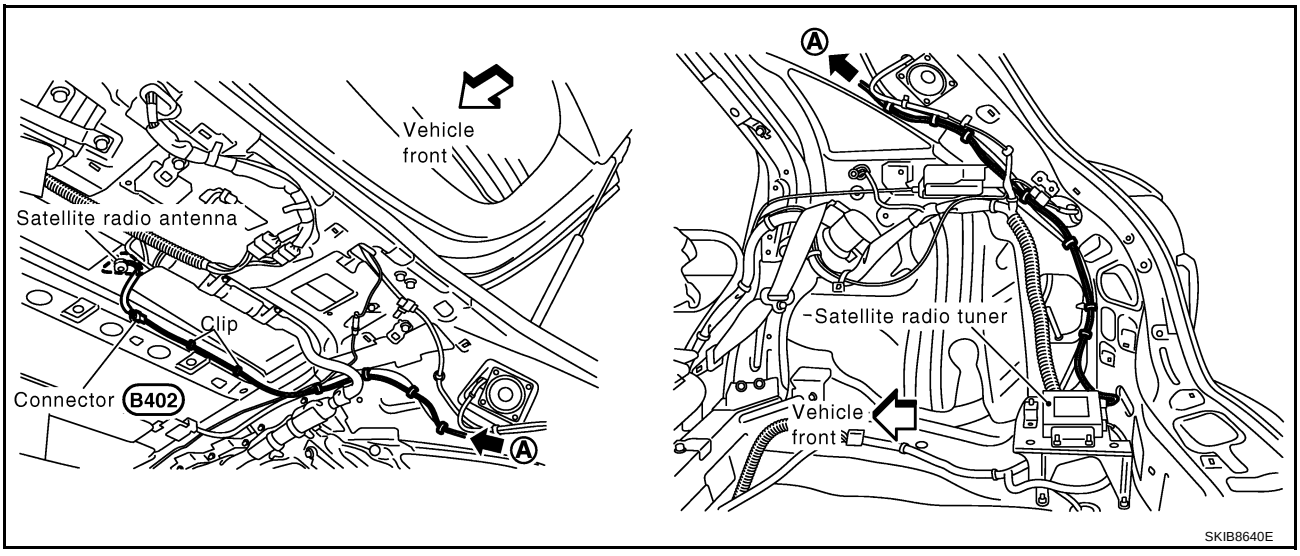

## Window Antenna Repair

NKS003LU

### CHECK ELEMENT

1. Attach probe circuit tester (ohm setting) to antenna terminal on each side.

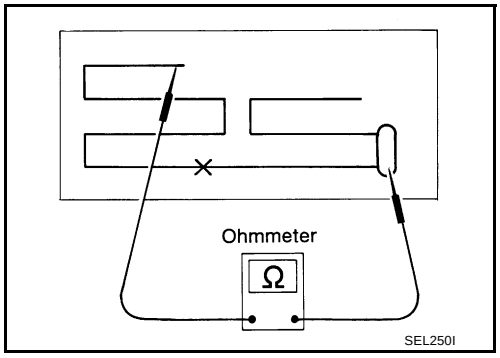


- **When measuring continuity, wrap tin foil around the top of probe. Then, press the foil against the wire with your finger.**

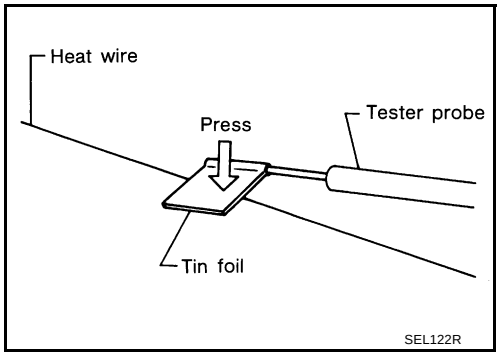


2. If an element is broken, no continuity will exist.

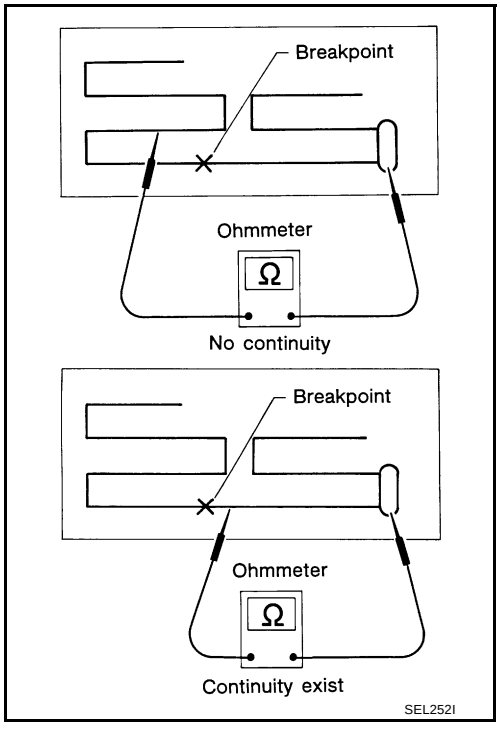

3. To locate a break, move probe along element. Tester needle will swing abruptly when probe passes the broken point.

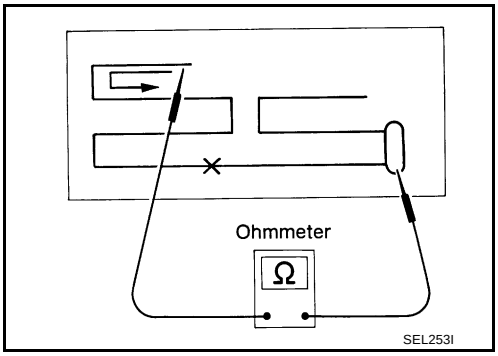


## Removal and Installation of Roof Antenna

NKS003LV

### REMOVAL

1. Remove head lining. Refer to EI-43, "HEADLINING" .
2. Remove nut and remove rod and antenna base.

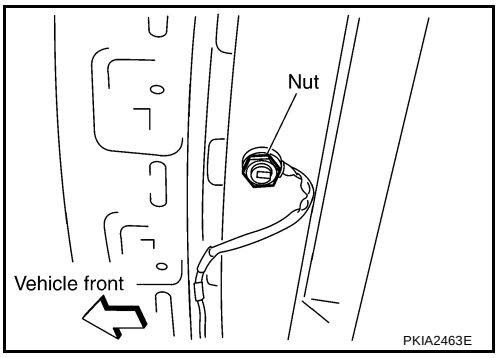


3. Remove instrument panel. Refer to IP-10, "INSTRUMENT PANEL ASSEMBLY" .
4. Disassembly antenna feeder (upper) and antenna feeder (lower).
5. Disengaged the clips (7) to separate antenna feeder (upper) from vehicle.
6. Pull off antenna feeder (lower) from audio unit.
7. Disengaged the clips (5) to separate antenna feeder (lower) from vehicle.

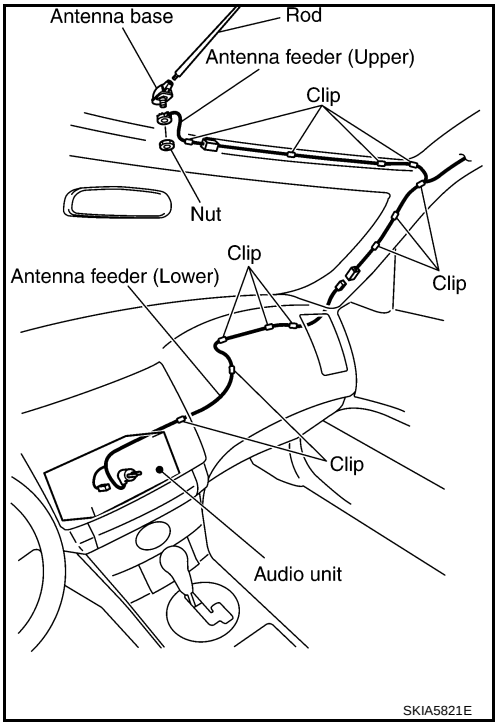


### INSTALLATION

Installation is the reverse order of removal.

## Removal and Installation of Satellite Radio Antenna

NKS003LW

Refer to AV-47, "Removal and Installation of Satellite Radio Antenna" .

# INTEGRATED DISPLAY SYSTEM

PFP:28090

## System Description

NKS003IZ

For system operation information, refer to Owner's Manual.

### INTEGRATED DISPLAY SYSTEM

- Each control unit that comprises the system is connected with a communication circuit. It transmits/receives data signals including request signals and response signals, and controls the system.
- The display control unit transmits/receives data signals to/from each control unit with CAN communication. It performs an arithmetical operation on fuel information values by using data obtained from the control units, and then displays the calculated values on the screen.
- The display control unit receives door switch signals from the BCM with CAN communication, and displays a warning on the screen when driving over the set speed with a door half-shut.
- The display control unit receives vehicle speed signals that are transmitted from the unified meter and A/C amp., performs an arithmetical operation on drive information values, and then displays the calculated values on the screen.
- The images displayed on the monitor screen contain display control unit-generated RGB images.
- The display control unit controls image switching and image quality adjustments by communications with the display.

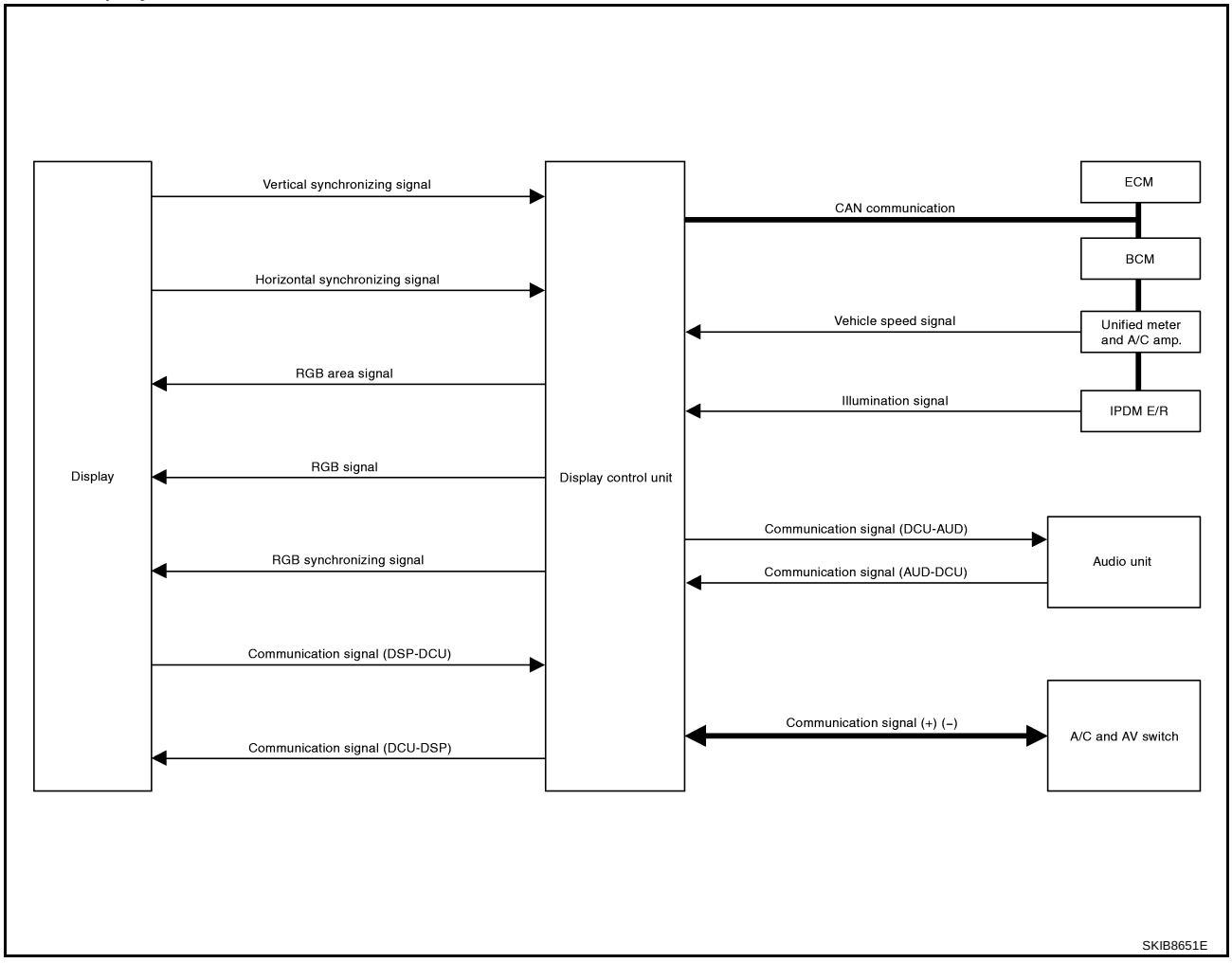

## Component Description

NKS003J0

### DISPLAY CONTROL UNIT

- Display control unit draws a status of the audio and air conditioner, a TRIP screen, a FUEL ECONOMY screen, etc., and transmits the image signals to the display screen.
- It receives operation signals of audio and air conditioner from A/C and AV switch, and transmits the operation signal of audio to the audio unit via the communication line and transmits the operation signal of air conditioner to the meter and A/C amp. via CAN communication.

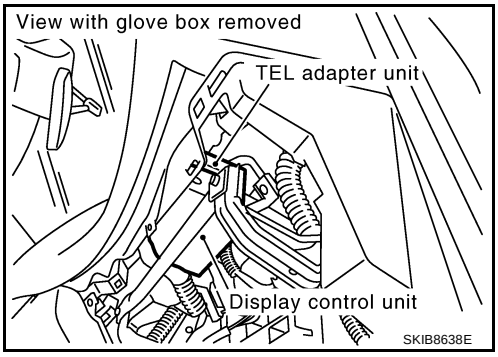


### DISPLAY

- Images on the display include RGB image such as map screen.
- Display control unit controls images on the display.

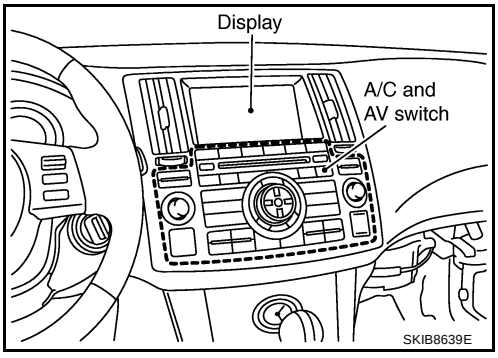


### A/C AND AV SWITCH

- A/C and AV switch, an integrated combination of audio and air conditioner switches, are adopted.
- Operation signal of audio is transmitted to the audio unit through display control unit with the communication line. Operation signal of air conditioner is transmitted to meter and A/C amp. through display control unit with CAN communication.

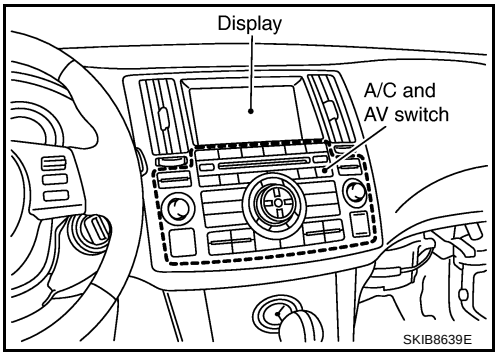


## CAN Communication Unit

NKS003J1

Refer to LAN-49, "CAN System Specification Chart" .

## Component Parts Location

NKS003J2

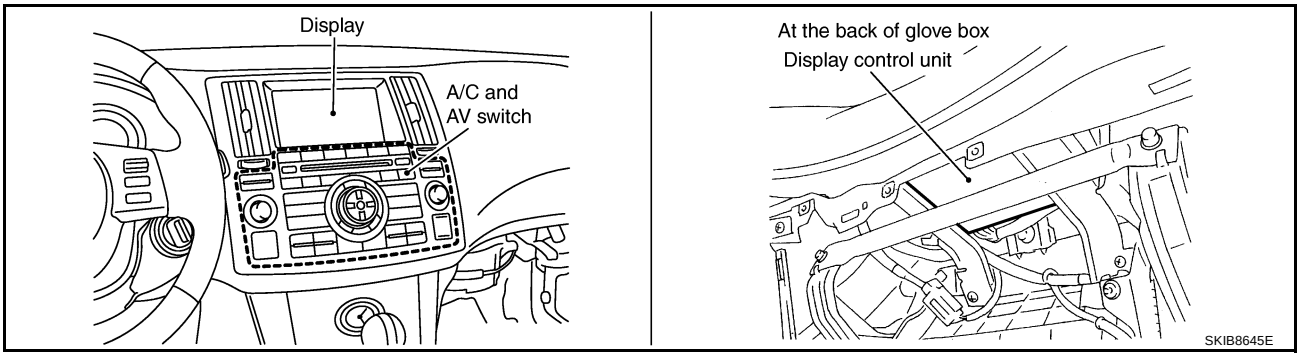

## Schematic — INF/D —

NKS003J3

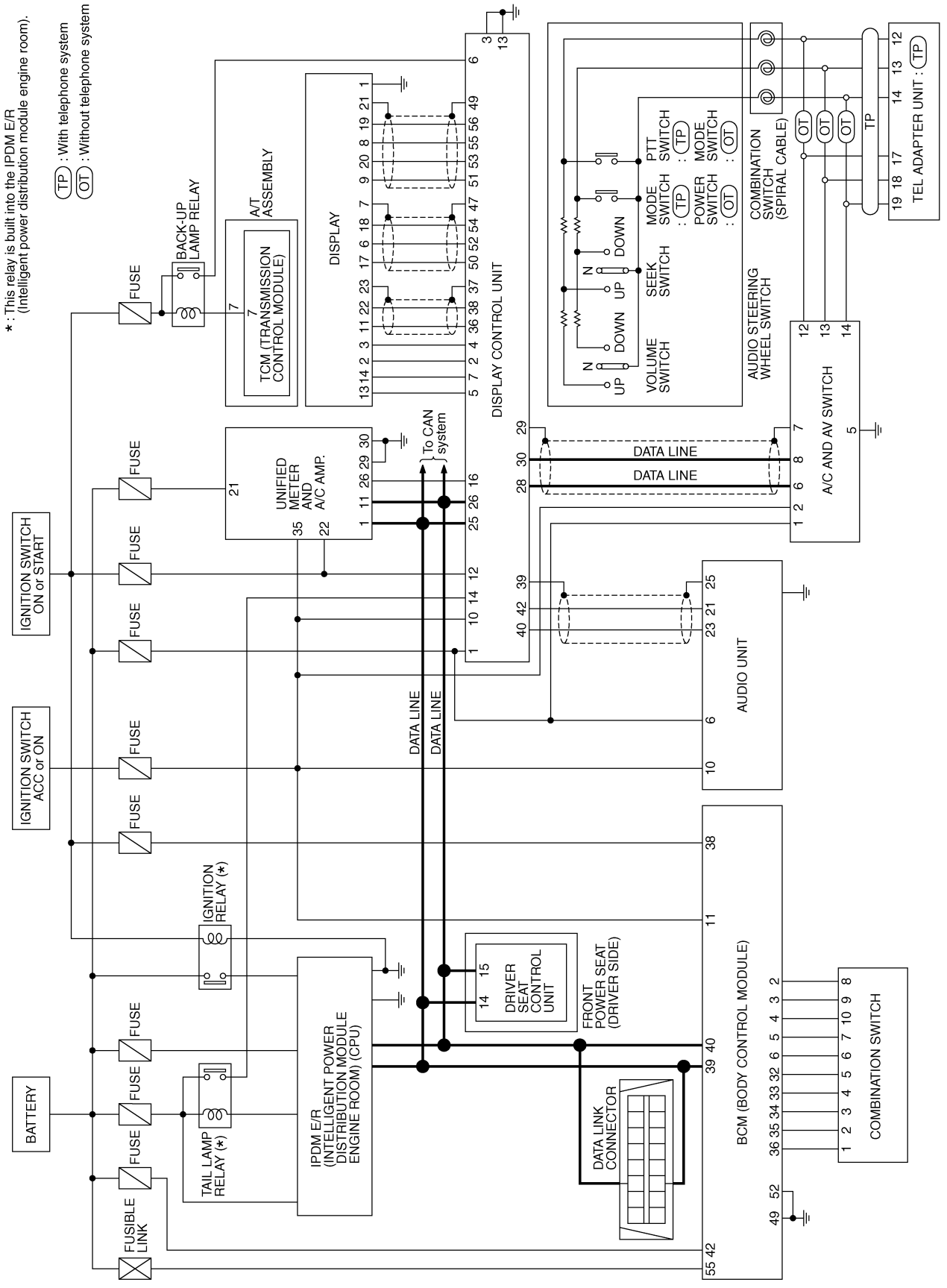


TKWM4411E

## Wiring Diagram — INF/D —

NKS003J4

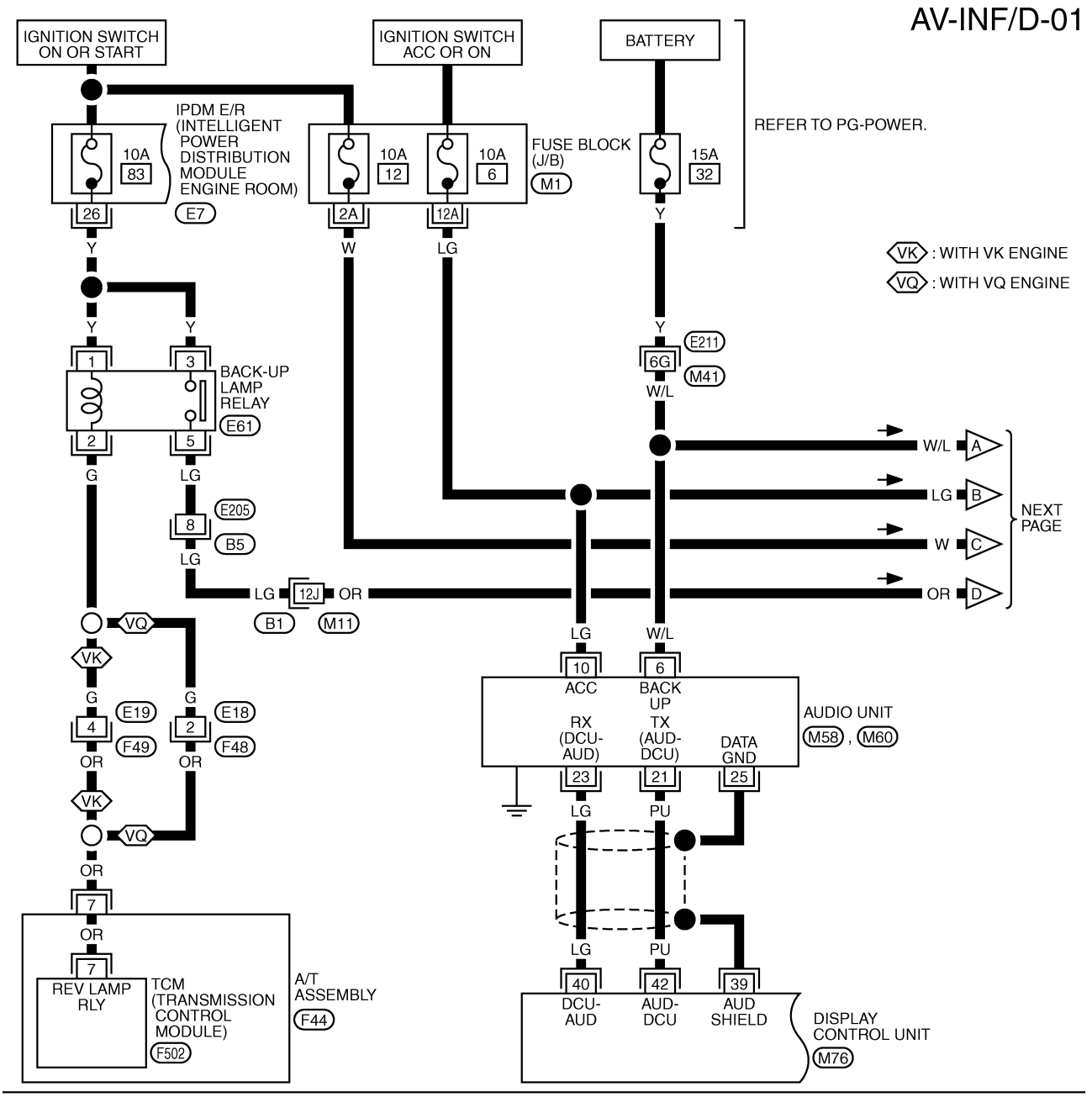


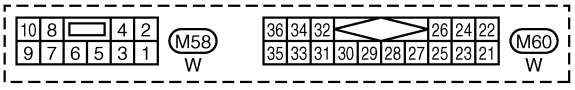


*: THIS CONNECTOR IS NOT SHOWN IN "HARNESS LAYOUT", PG SECTION.

REFER TO THE FOLLOWING.
E211 , B1 -SUPER MULTIPLE JUNCTION (SMJ)
M1 -FUSE BLOCK-JUNCTION BOX (J/B)

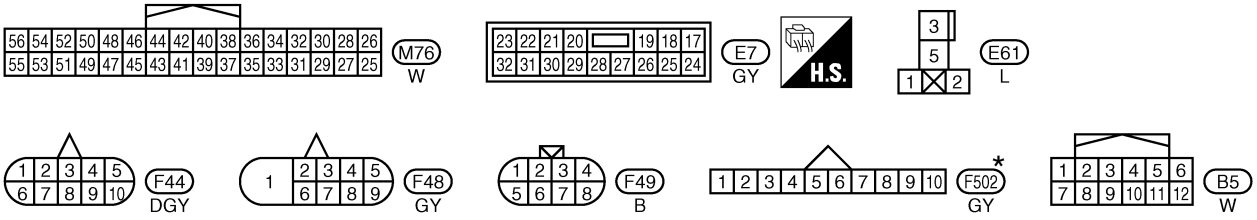


TKWM4412E

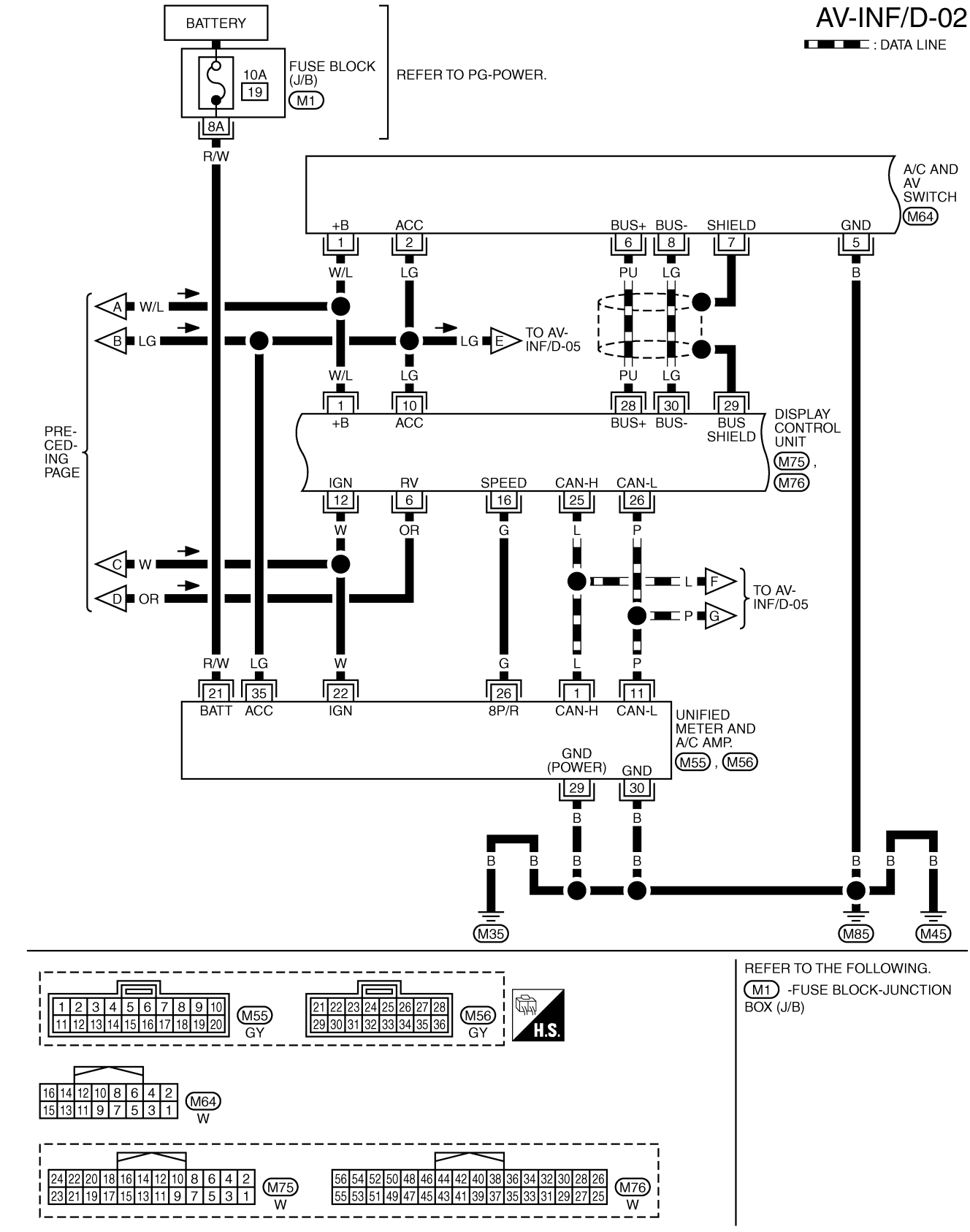
AV-INF/D-02
: DATA LINE
BATTERY
10A
19
FUSE BLOCK
(J/B)
M1
8A
REFER TO PG-POWER.
R/W
A/C AND
AV
SWITCH
M64
+B
ACC
BUS+
BUS-
SHIELD
GND
1
2
6
8
7
5
W/L
LG
PU
LG
B
A
W/L
B
LG
LG
E
TO AV-
INF/D-05
W/L
LG
PU
LG
1
10
28
30
29
+B
ACC
BUS+
BUS-
BUS
SHIELD
DISPLAY
CONTROL
UNIT
M75 ,
M76
PRE-
CED-
ING
PAGE
IGN
RV
SPEED
CAN-H
CAN-L
12
6
16
25
26
W
OR
G
L
P
C
W
D
OR
L
F
P
G
TO AV-
INF/D-05
R/W
LG
W
G
L
P
21
35
22
26
1
11
BATT
ACC
IGN
8P/R
CAN-H
CAN-L
UNIFIED
METER AND
A/C AMP.
M55 , M56
GND
(POWER)
GND
29
30
B
B
B
B
B
B
B
B
B
M35
M85
M45
M55
GY
M56
GY
H.S.
M64
W
M75
W
M76
W
REFER TO THE FOLLOWING.
M1 -FUSE BLOCK-JUNCTION
BOX (J/B)
TKWM4413E

AV-INF/D-03

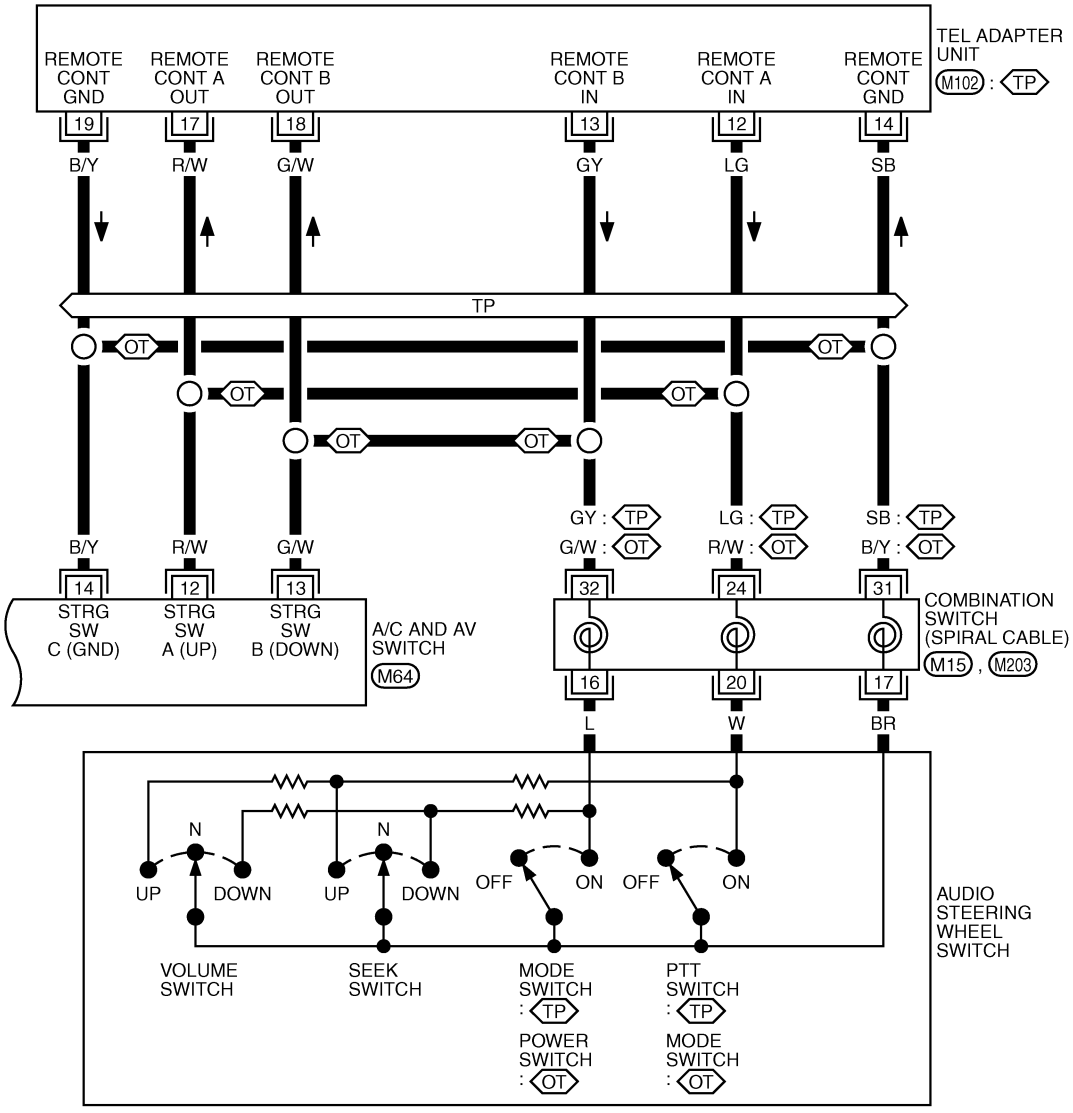


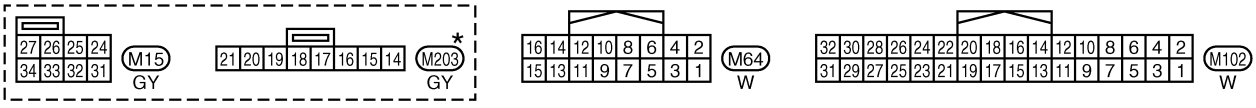


*: THIS CONNECTOR IS NOT SHOWN IN "HARNESS LAYOUT", PG SECTION.

TKWM4414E

AV-INF/D-04

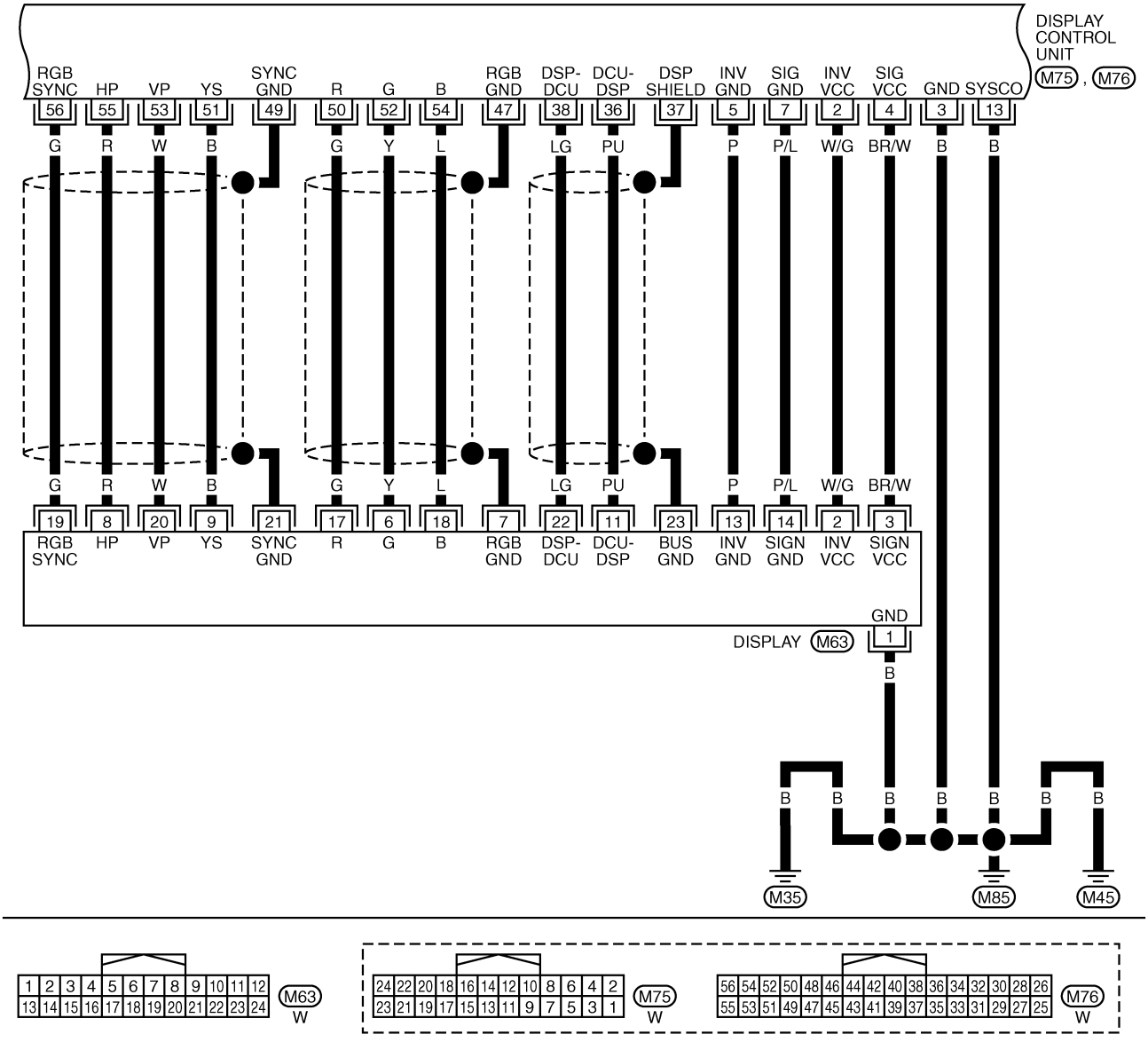


TKWM4415E

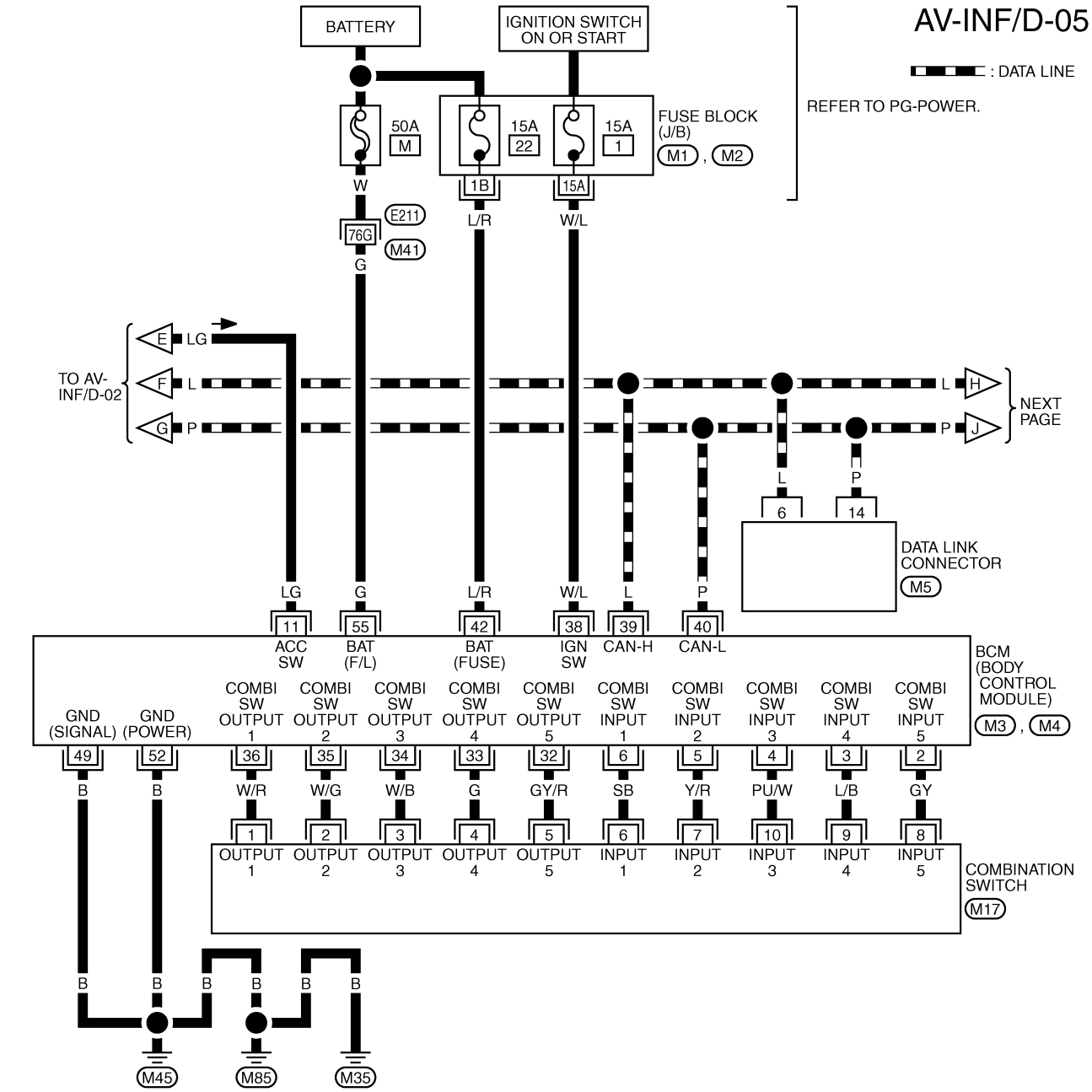


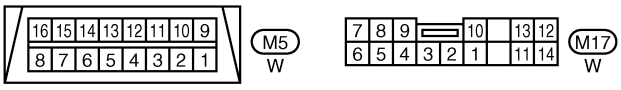


REFER TO THE FOLLOWING.

E211 -SUPER MULTIPLE JUNCTION (SMJ)

M1 , M2 -FUSE BLOCK-JUNCTION BOX (J/B)

M3 , M4 -ELECTRICAL UNITS

TKWM4416E

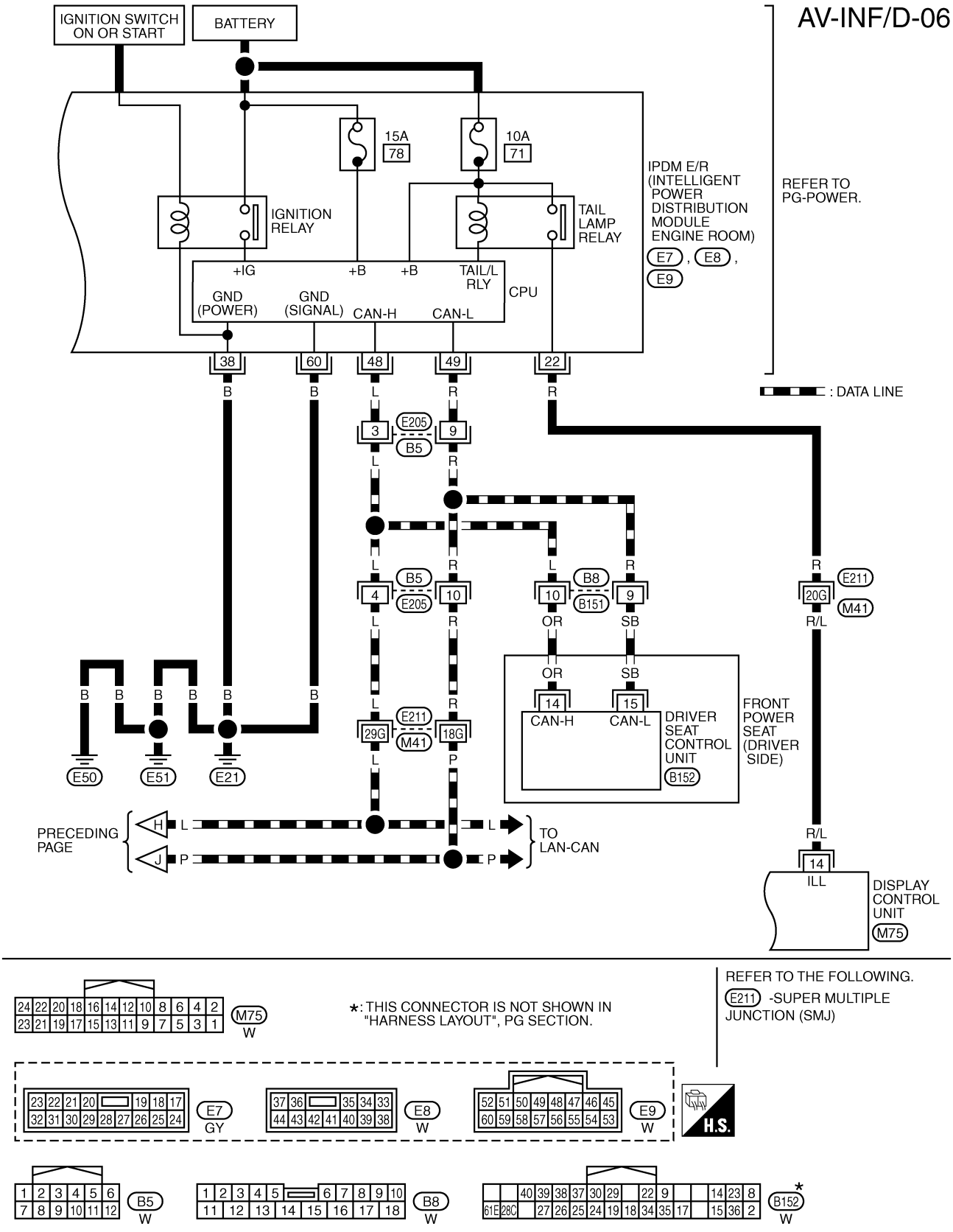
AV-INF/D-06
IGNITION SWITCH ON OR START
BATTERY
15A
78
10A
71
IPDM E/R (INTELLIGENT POWER DISTRIBUTION MODULE ENGINE ROOM)
E7 , E8 , E9
REFER TO PG-POWER.
IGNITION RELAY
TAIL LAMP RELAY
+IG
+B
+B
TAIL/L RLY
CPU
GND (POWER)
GND (SIGNAL)
CAN-H
CAN-L
38
60
48
49
22
: DATA LINE
E205
B5
B8
B151
E211
M41
20G
29G
18G
E50
E51
E21
OR
SB
14
15
CAN-H
CAN-L
DRIVER SEAT CONTROL UNIT
B152
FRONT POWER SEAT (DRIVER SIDE)
PRECEDING PAGE
TO LAN-CAN
ILL
DISPLAY CONTROL UNIT
M75
M75
W
*: THIS CONNECTOR IS NOT SHOWN IN "HARNESS LAYOUT", PG SECTION.
REFER TO THE FOLLOWING.
E211 -SUPER MULTIPLE JUNCTION (SMJ)
E7
GY
E8
W
E9
W
H.S.
B5
W
B8
W
B152
W
TKWM4417E

## Schematic — COMM —

NKS003J5

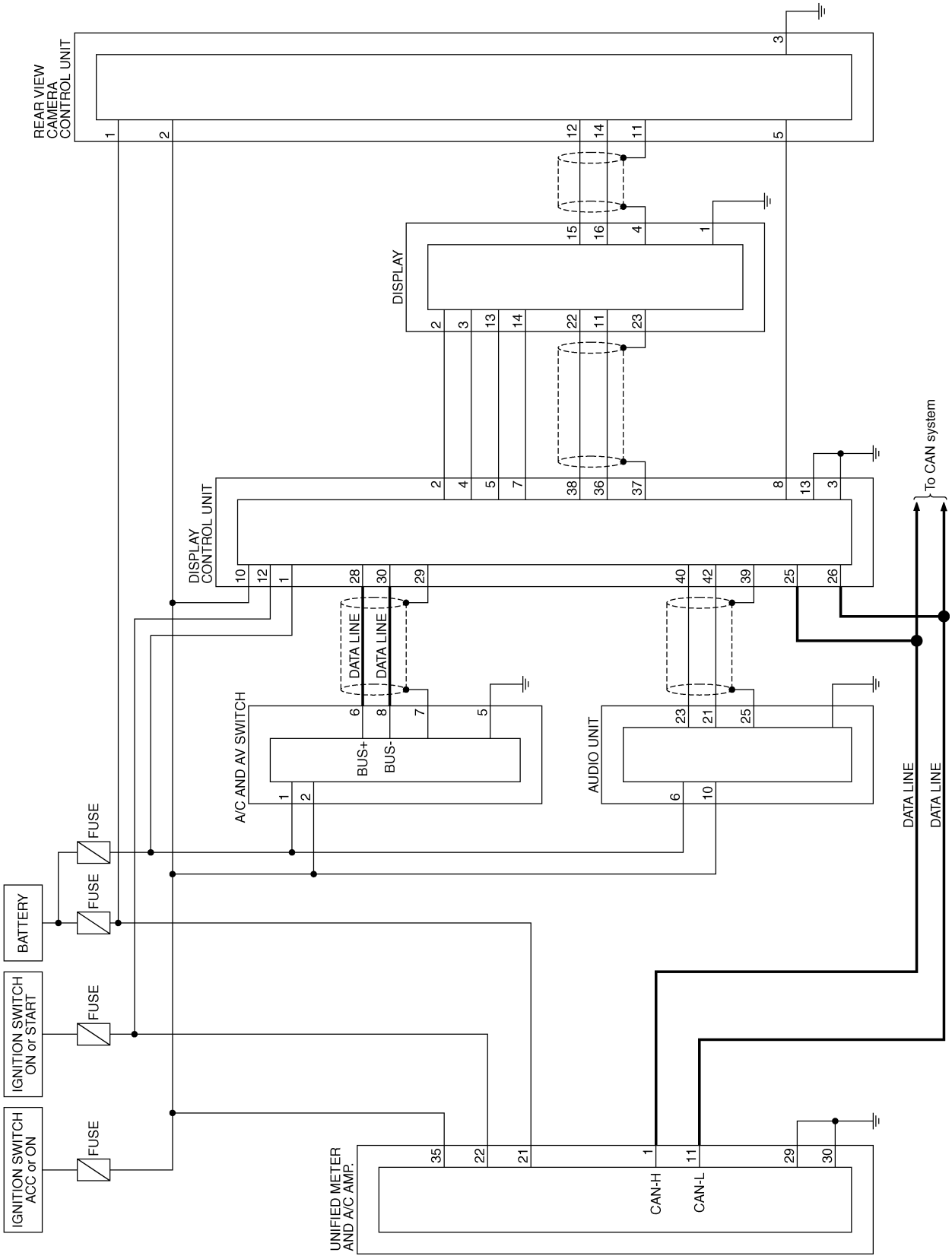


TKWM4424E

## Wiring Diagram — COMM —

NKS003J6

AV-COMM-06

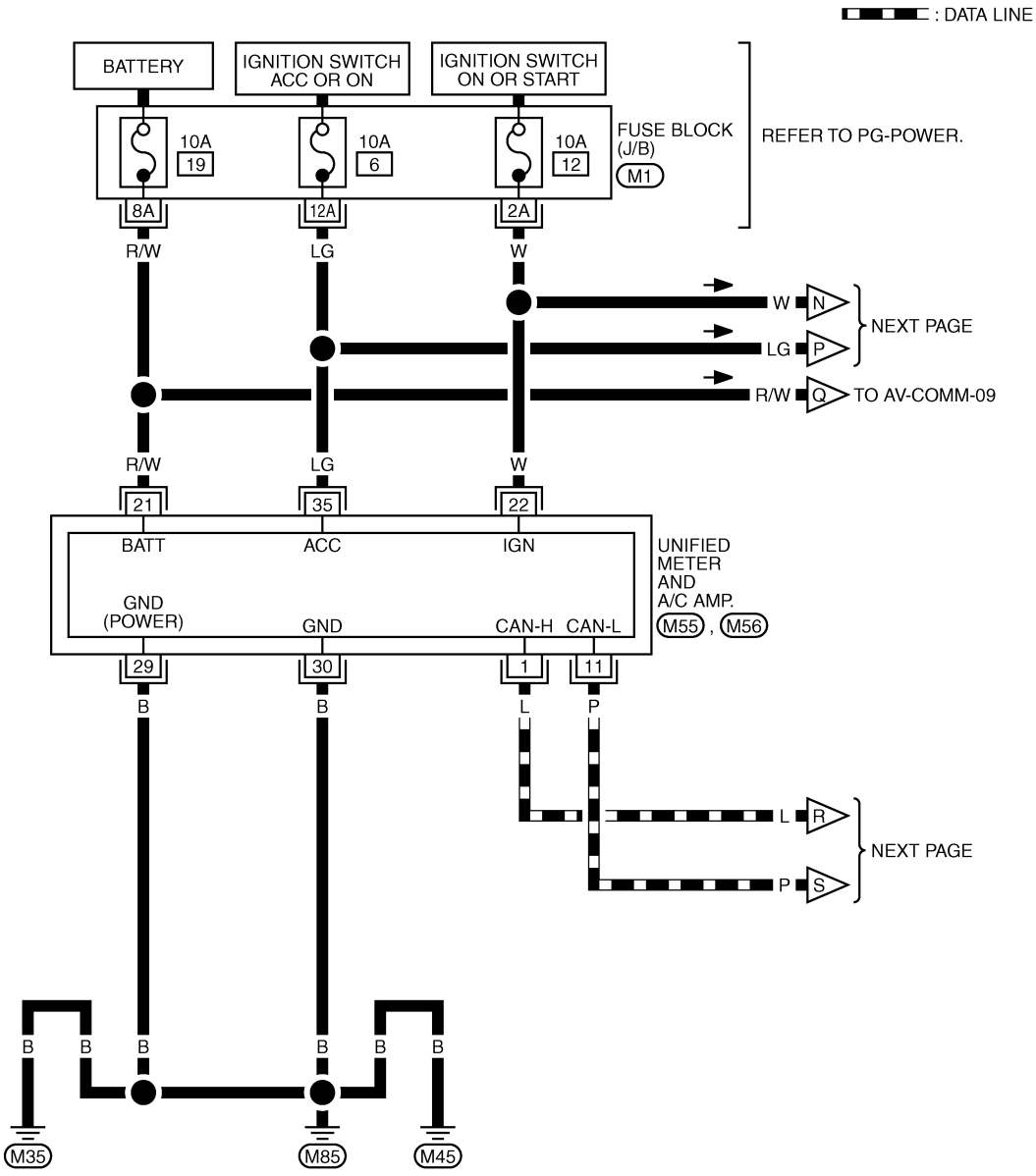


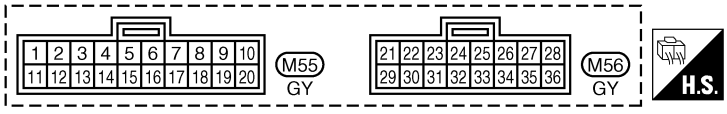


REFER TO THE FOLLOWING.
M1 -FUSE BLOCK-JUNCTION BOX (J/B)

TKWM4425E

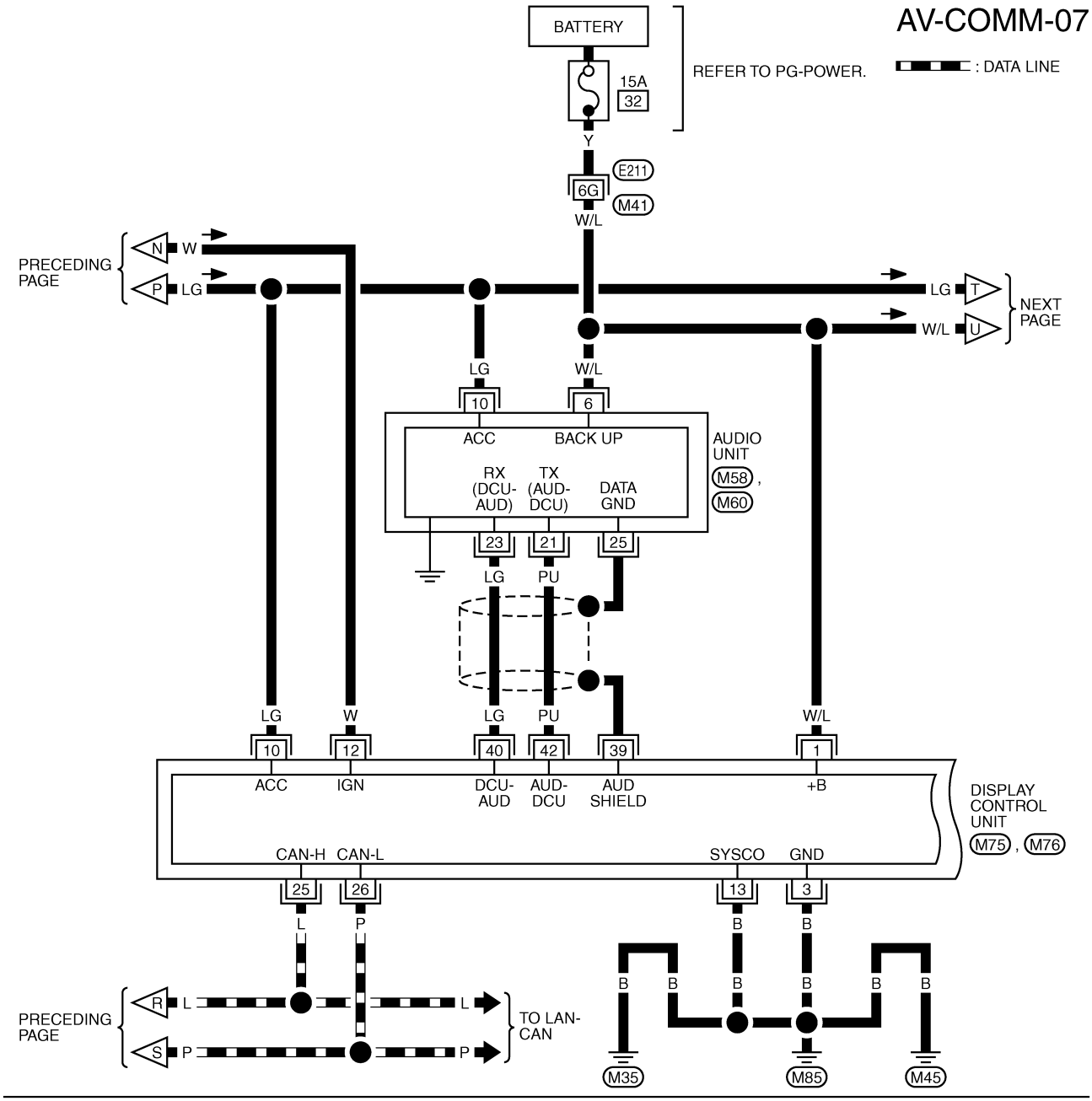


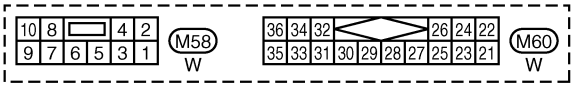


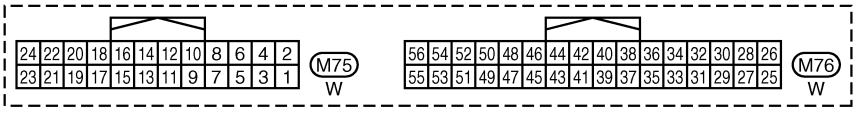


REFER TO THE FOLLOWING.

E211 -SUPER MULTIPLE JUNCTION (SMJ)

TKWM4426E

AV-COMM-08

: DATA LINE

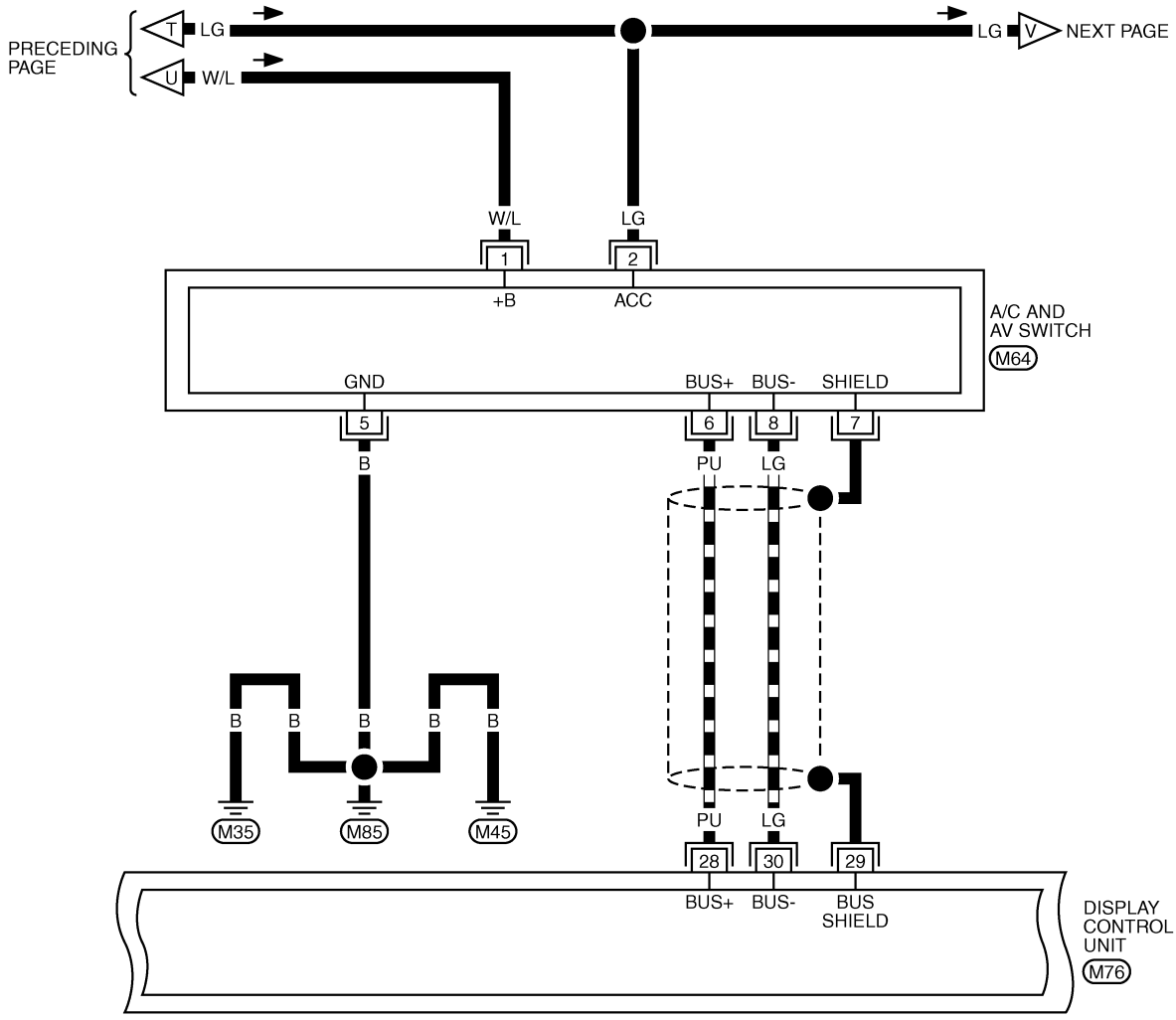


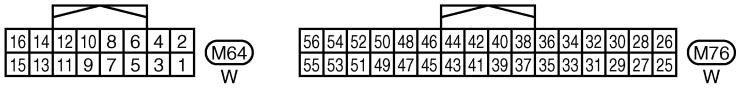


TKWM4427E

AV-COMM-09

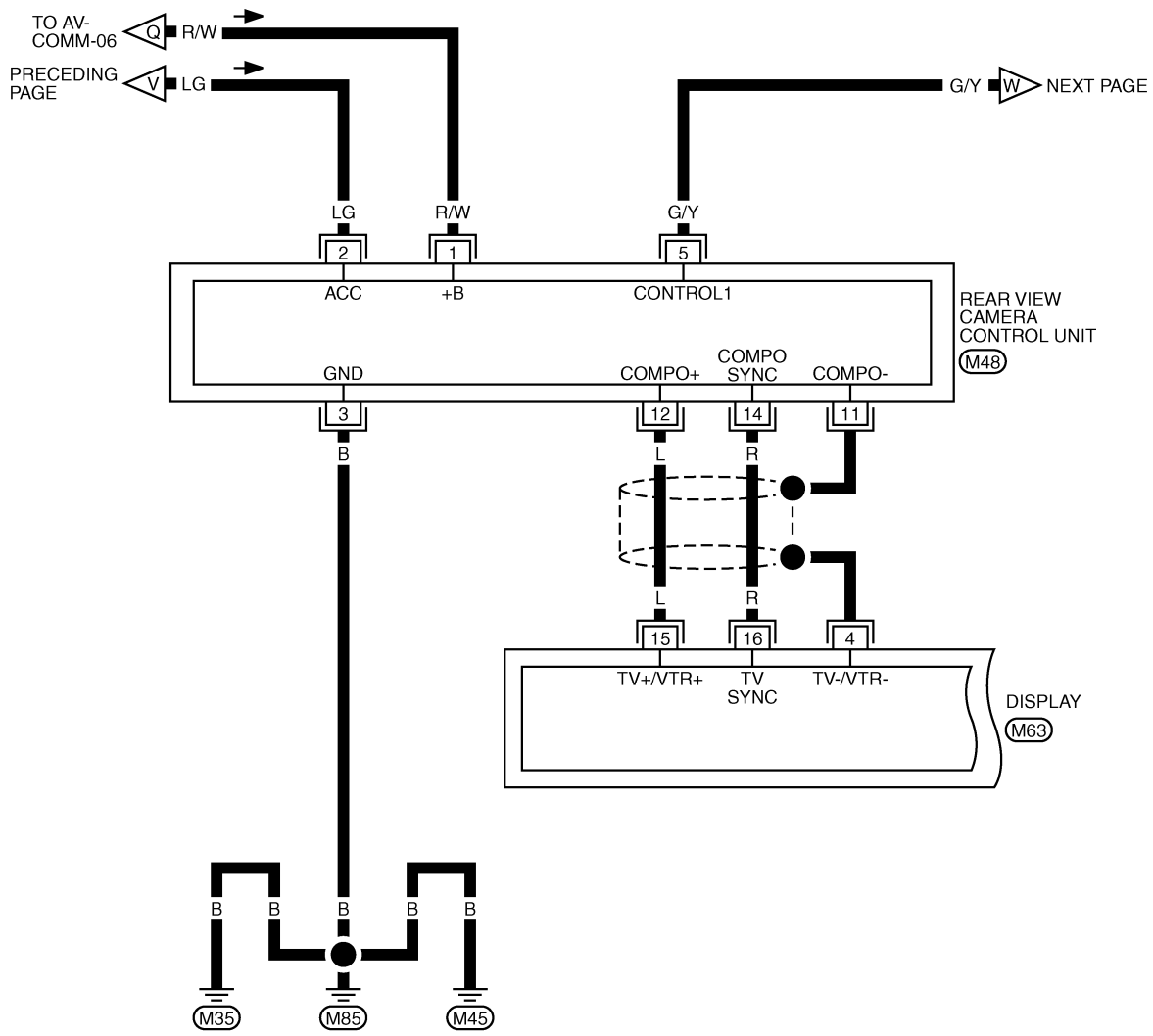


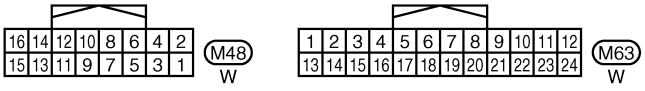


TKWM4428E

AV-COMM-10

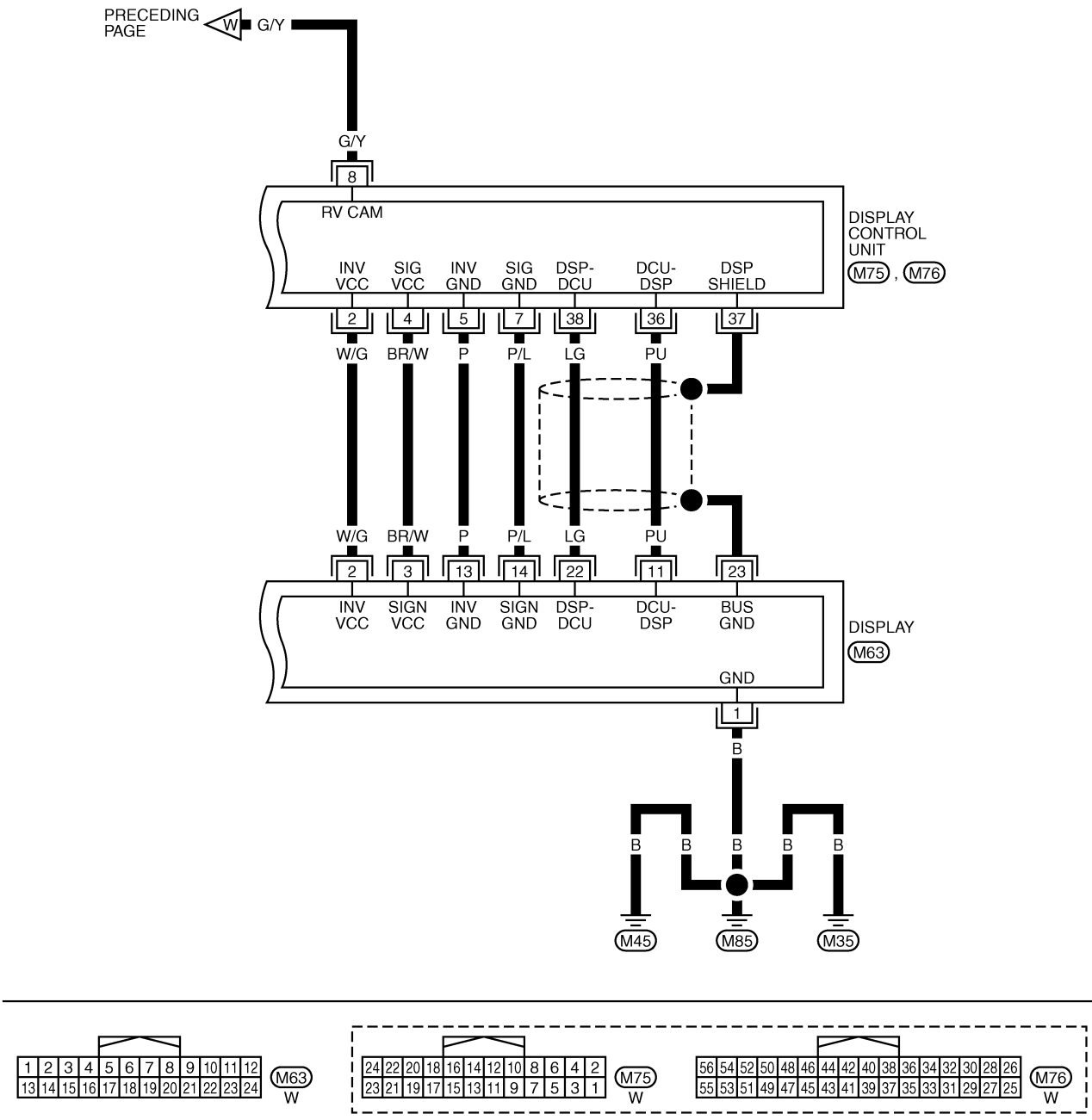


TKWM4429E

## Terminals and Reference Value for Display Control Unit

NKS003J7

| Terminal (Wire color) | | Item | Signal input/ output | Condition | | Reference value |
|---|---|---|---|---|---|---|
| + | – | | | Ignition switch | Operation | |
| 1 (W/L) | Ground | Battery power supply | Input | OFF | — | Battery voltage |
| 2 (W/G) | Ground | Power supply (Inverter) | Output | ON | — | Approx. 9 V |
| 3 (B) | Ground | Ground | — | ON | — | Approx. 0 V |
| 4 (BR/W) | Ground | Power supply (Signal) | Output | ON | — | Approx. 9 V |
| 5 (P) | Ground | Ground (Inverter) | — | ON | — | Approx. 0 V |
| 6 (OR) | Ground | Reverse signal | Input | ON | Selector lever in R position | Approx. 12 V |
| | | | | | Selector lever except in R position | Approx. 0 V |
| 7 (P/L) | Ground | Ground (Signal) | — | ON | — | Approx. 0 V |
| 10 (LG) | Ground | ACC power supply | Input | ACC | — | Battery voltage |
| 12 (W) | Ground | Ignition signal | Input | ON | — | Battery voltage |
| 13 (B) | Ground | Ground | — | ON | — | Approx. 0 V |
| 14 (R/L) | Ground | Illumination signal | Input | OFF | Lighting switch ON | Approx. 12 V |
| | | | | | Lighting switch OFF | Approx. 0 V |
| 16 (G) | Ground | Vehicle speed signal (8-pulse) | Input | ON | When vehicle speed is approx. 25 MPH (40 km/h) | **NOTE:** Maximum voltage may be 5 V due to specifications (connected units). 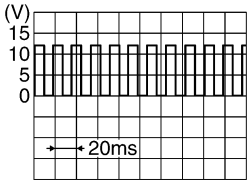  PKIA1935E |
| 25 (L) | — | CAN-H | — | — | — | — |
| 26 (P) | — | CAN-L | — | — | — | — |
| 28 (PU) | Ground | Communication signal (+) | Input/ Output | ON | — | 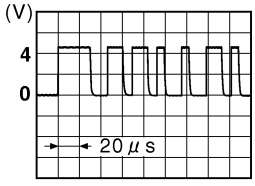  SKIB7378E |
| 29 | — | Shield | — | — | — | — |
| 30 (LG) | Ground | Communication signal (–) | Input/ Output | ON | — | 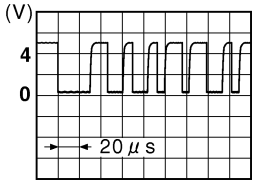  SKIB7379E |

| Terminal (Wire color) | | Item | Signal input/ output | Condition | | Reference value |
|---|---|---|---|---|---|---|
| + | – | | | Ignition switch | Operation | |
| 36 (PU) | Ground | Communication signal (DCU-DSP) | Output | ON | — | 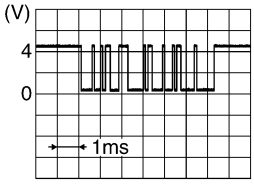  SKIB3607E |
| 37 | — | Shield | — | — | — | — |
| 38 (LG) | Ground | Communication signal (DSP-DCU) | Input | ON | — | 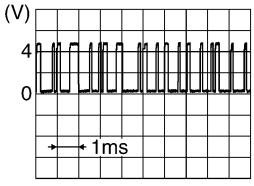  SKIB3606E |
| 39 | — | Shield | — | — | — | — |
| 40 (LG) | Ground | Communication signal (DCU-AUD) | Output | ON | Operate audio volume switch | 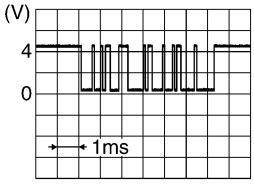  SKIB3607E |
| 42 (PU) | Ground | Communication signal (AUD-DCU) | Input | ON | Operate audio volume switch | 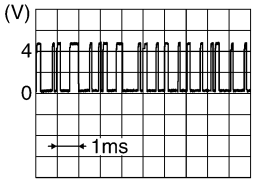  SKIB3606E |
| 47 | — | Shield | — | — | — | — |
| 49 | — | Shield | — | — | — | — |
| 50 (G) | Ground | RGB signal (R: red) | Output | ON | Start Confirmation/Adjustment mode, and then display color bar by selecting “Display Color Spectrum Bar” on Display Diagnosis screen | 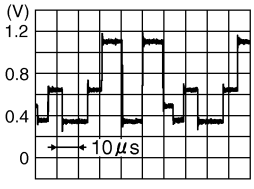  SKIB7769E |
| 51 (B) | Ground | RGB area (YS) signal | Output | ON | Set the selector lever in R position, and then display the rear view image | 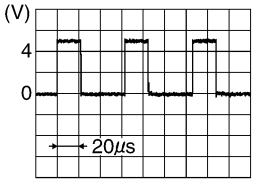  SKIB3599E |

| Terminal (Wire color) | | Item | Signal input/ output | Condition | | Reference value |
|---|---|---|---|---|---|---|
| + | – | | | Ignition switch | Operation | |
| 52 (Y) | Ground | RGB signal (G: green) | Output | ON | Start Confirmation/Adjustment mode, and then display color bar by selecting “Display Color Spectrum Bar” on Display Diagnosis screen | 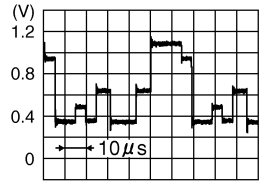  SKIB7770E |
| 53 (W) | Ground | Vertical synchronizing (VP) signal | Input | ON | — | 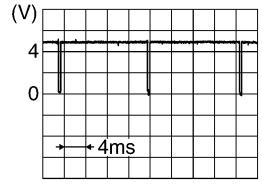  SKIB3598E |
| 54 (L) | Ground | RGB signal (B: blue) | Output | ON | Start Confirmation/Adjustment mode, and then display color bar by selecting “Display Color Spectrum Bar” on Display Diagnosis screen | 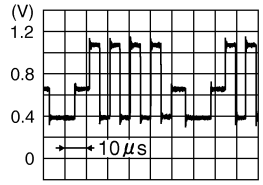  SKIB7771E |
| 55 (R) | Ground | Horizontal synchronizing (HP) signal | Input | ON | — | 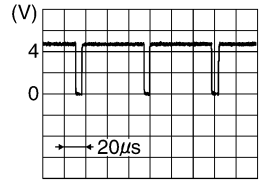  SKIB3601E |
| 56 (G) | Ground | RGB synchronizing signal | Output | ON | When displaying RGB image | 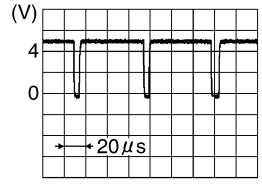  SKIB3603E |

## Terminals and Reference Value for Display

NKS003J8

| Terminal (Wire color) | | Item | Signal input/ output | Condition | | Reference value |
|---|---|---|---|---|---|---|
| + | – | | | Ignition switch | Operation | |
| 1 (B) | Ground | Ground | — | ON | — | Approx. 0 V |
| 2 (W/G) | Ground | Power supply (Inverter) | Input | ON | — | Approx. 9 V |
| 3 (BR/W) | Ground | Power supply (Signal) | Input | ON | — | Approx. 9 V |
| 6 (Y) | Ground | RGB signal (G: green) | Input | ON | Start Confirmation/Adjustment mode, and then display color bar by selecting “Display Color Spectrum Bar” on Display Diagnosis screen | 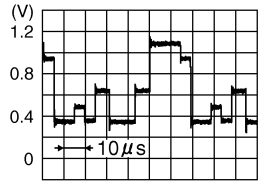  SKIB7770E |
| 7 | — | Shield | — | — | — | — |
| 8 (R) | Ground | Horizontal synchronizing (HP) signal | Output | ON | — | 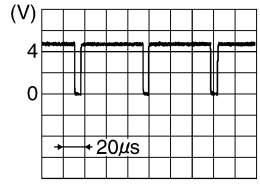  SKIB3601E |
| 9 (B) | Ground | RGB area (YS) signal | Input | ON | Set the selector lever in R position, and then display the rear view image | 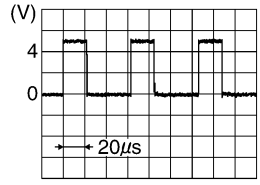  SKIB3599E |
| 11 (PU) | Ground | Communication signal (DCU-DSP) | Input | ON | — | 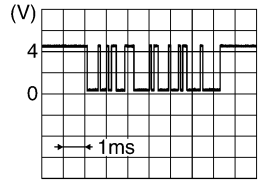  SKIB3607E |
| 13 (P) | Ground | Ground (Inverter) | — | ON | — | Approx. 0 V |
| 14 (P/L) | Ground | Ground (Signal) | — | ON | — | Approx. 0 V |
| 17 (G) | Ground | RGB signal (R: red) | Input | ON | Start Confirmation/Adjustment mode, and then display color bar by selecting “Display Color Spectrum Bar” on Display Diagnosis screen | 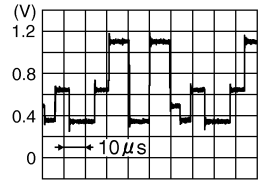  SKIB7769E |
| 18 (L) | Ground | RGB signal (B: blue) | Input | ON | Start Confirmation/Adjustment mode, and then display color bar by selecting “Display Color Spectrum Bar” on Display Diagnosis screen | 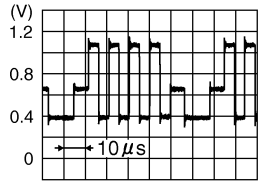  SKIB7771E |

| Terminal (Wire color) | | Item | Signal input/ output | Condition | | Reference value |
|---|---|---|---|---|---|---|
| + | – | | | Ignition switch | Operation | |
| 19 (G) | Ground | RGB synchronizing signal | Input | ON | When displaying RGB image | 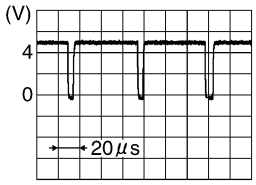  SKIB3603E |
| 20 (W) | Ground | Vertical synchronizing (VP) signal | Output | ON | — | 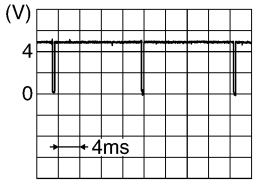  SKIB3598E |
| 21 | — | Shield | — | — | — | — |
| 22 (LG) | Ground | Communication signal (DSP-DCU) | Output | ON | — | 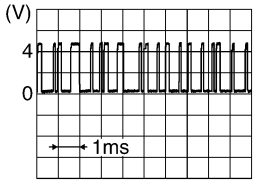  SKIB3606E |
| 23 | — | Shield | — | — | — | — |

## Terminals and Reference Value for A/C and AV Switch

NKS003J9

| Terminal (Wire color) | | Item | Signal input/ output | Condition | | Reference value |
|---|---|---|---|---|---|---|
| + | – | | | Ignition switch | Operation | |
| 1 (W/L) | Ground | Battery power supply | Input | OFF | — | Battery voltage |
| 2 (LG) | Ground | ACC power supply | Input | ACC | — | Battery voltage |
| 5 (B) | Ground | Ground | — | ON | — | Approx. 0 V |
| 6 (PU) | Ground | Communication signal (+) | Input/ Output | ON | — | 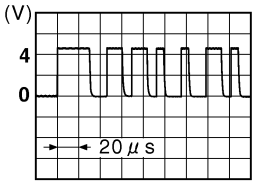  SKIB7378E |
| 7 | — | Shield | — | — | — | — |
| 8 (LG) | Ground | Communication signal (–) | Input/ Output | ON | — | 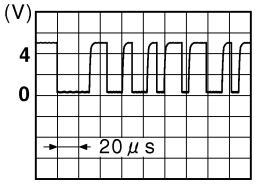  SKIB7379E |
| 12 (R/W) | Ground | Steering SW A | Input | ON | Press and hold PTT*1 switch | Approx. 0 V |
| | | | | | Press and hold MODE*2 switch | Approx. 0 V |
| | | | | | Press and hold SEEK UP switch | Approx. 1.7 V |
| | | | | | Press and hold VOL UP switch | Approx. 3.3 V |
| | | | | | Except for above | Approx. 5 V |
| 13 (G/W) | Ground | Steering SW B | Input | ON | Press and hold MODE*1 switch | Approx. 0 V |
| | | | | | Press and hold POWER*2 switch | Approx. 0 V |
| | | | | | Press and hold SEEK DOWN switch | Approx. 1.7 V |
| | | | | | Press and hold VOL DOWN switch | Approx. 3.3 V |
| | | | | | Except for above | Approx. 5 V |
| 14 (B/Y) | Ground | Steering SW ground | — | ON | — | Approx. 0 V |

- *1: With telephone system
- *2: Without telephone system

## Special Note for Trouble Diagnosis

NKS003JB

Prior to performing trouble diagnosis, make sure there are no corresponding description in the “Example of Symptoms Possible No Malfunction”. Refer to AV-92, "Example of Symptoms Possible No Malfunction" .

## On Board Self-Diagnosis Function

NKS003JC

### DESCRIPTION

- Trouble diagnosis function of navigation system has a Self Diagnosis mode by automatic operation and a Confirmation/Adjustment mode by manual operation.
- Self Diagnosis mode checks for connections between the units constituting this system, analyzes each individual unit at the same time, and displays the results on the display.
- Confirmation/Adjustment mode displays trouble diagnosis that require an operation and a judgment by a human (auto-decision cannot be performed by the system), confirmation of preset value, and an error history.

### DIAGNOSIS ITEM

| Mode | | Description |
|---|---|---|
| Self Diagnosis (DCU) | | ● Display control unit diagnosis<br>● Analyzes connection between the display control unit and each unit, and operation of each unit. |
| Confirmation/ Adjustment | Display Diagnosis | Color tone and shading of the display control unit-generated image can be checked by the display of a color bar and a gray scale. |
| | Vehicle Signals | Diagnosis of signals that are input to display control unit can be performed for Vehicle Speed, IGN, Reverse and Light. |
| | Auto Climate Control | Refer to ATC-52, "Self-diagnosis Function" . |
| CAN DIAG SUPPOPT MONITOR | | The transmitting/receiving of CAN communication can be monitored. |

## Self-Diagnosis Mode (DCU)

NKS003JD

### OPERATION PROCEDURE

1. Start the engine.
2. Turn the audio system OFF.
3. While pressing the “4” button, turn the volume control dial clockwise or counterclockwise for 30 clicks or more. (When the self-diagnosis mode is started, a short beep will be heard.)
   - Shifting from current screen to previous screen is performed by pressing “BACK” button.

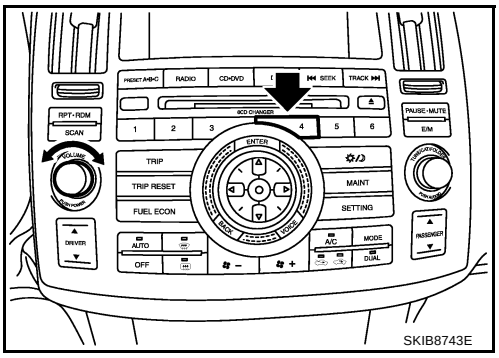


4. The initial trouble diagnosis screen will be shown, and items “Self Diagnosis (DCU)”, “Confirmation/Adjustment” and “CAN DIAG SUPPORT MONITOR” will become selective.

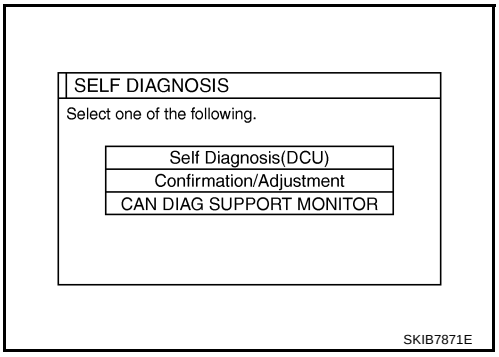


5. Perform self-diagnosis by selecting the “Self Diagnosis (DCU)”.
   - Self-diagnosis screen is displayed, and then self-diagnosis starts.
   - The bar graph visible below self-diagnosis screen displays progress of the diagnosis.

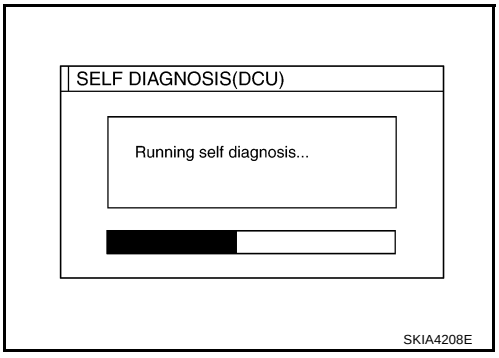


6. When the self-diagnosis completes, optional part confirmation screen will be shown.
   - When connection of an optional part is judged error, a screen to check if the optional part is actually fitted on the vehicle or not will be shown. When fitted, select the switch of the part on the screen and press “End”. Then the “SELF DIAGNOSIS” screen will be shown.
   - When the optional part is connected normally, the switch for the part will not appear on the screen.

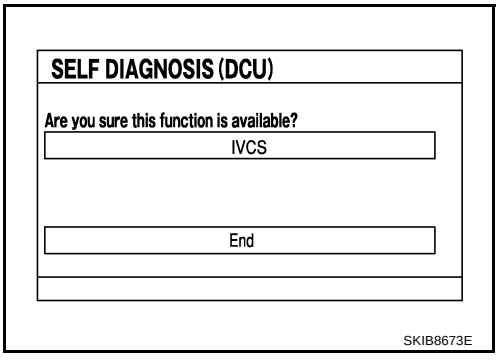

7. On the diagnosis results screen, each unit name and connection line will be colored according to the diagnosis result, as follows.

   **Green : No malfunctioning.**

   **Gray : Cannot be judged by self-diagnosis results.**

   **Red : Unit is malfunctioning.**

   **NOTE:**
   - Satellite = Satellite radio tuner
   - DCU = Display control unit
   - Multifunction switch = A/C and AV switch
   - If multiple malfunctions occur at the same time for a single unit, the screen switch colors are determined according to the following order of priority: red > yellow > gray.

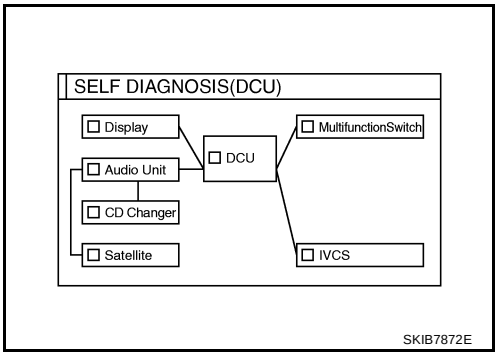


8. Select a switch on the diagnosis results screen, and comments for the diagnosis results will be shown.

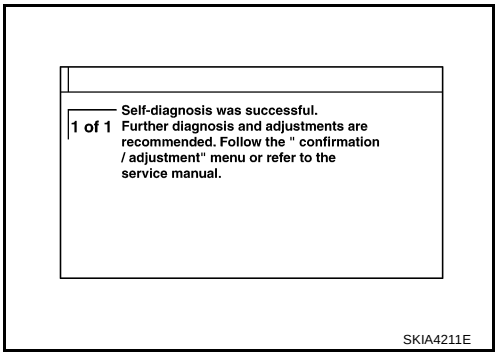


## SELF-DIAGNOSIS RESULT

### Quick Reference Table

1. Select the applicable diagnosis number in the quick reference table of diagnosis result.
2. Confirm the possible malfunction with the diagnosis table, and then perform inspection.
3. Turn ignition switch OFF and perform self-diagnosis again.

| Switch color | Screen switch | | | | Diagnosis No. |
|---|---|---|---|---|---|
| | DCU | Display | Audio Unit | Satellite | |
| Red | × | | | | 1 |
| Gray | | × | | | 2 |
| | | | × | × | 3 |
| | | | | × | 4 |

- When A/C and AV switch has a malfunction, the self-diagnosis cannot be started. Refer to AV-84, "Unable to Operate System with A/C and AV Switch" .
- When display has a malfunction, the self-diagnosis cannot be started. Refer to AV-86, "All Images Are Not Displayed" .

## Self-Diagnosis Codes

| Diagnosis No. | Possible cause | Action to take |
|---|---|---|
| 1 | Display control unit malfunction is detected. | Replace display control unit. |
| 2 | Malfunction is detected on communication signal between display control unit and display. | 1. Check communication circuit between display control unit and display.<br>2. Check communication signal between display control unit and display.<br>3. If the results from the above checkup show no malfunction, replace either display control unit or display, and then start self-diagnosis.<br>4. If self-diagnosis results still show any malfunction, replace the other unit. |
| 3 | ● Audio unit power supply circuit malfunction is detected.<br>● Malfunction is detected on communication signal between display control unit and audio unit. | 1. Check audio unit power supply circuit.<br>2. Check communication circuit between display control unit and audio unit.<br>3. Check communication signal between display control unit and audio unit.<br>4. If the results from the above checkup show no malfunction, replace either display control unit or audio unit, and then start self-diagnosis.<br>5. If self-diagnosis results still show any malfunction, replace the other unit. |
| 4 | ● Satellite radio tuner power supply and ground circuit malfunction is detected.<br>● Malfunction is detected on communication signal between audio unit and satellite radio tuner. | 1. Check satellite radio tuner power supply and ground circuit.<br>2. Check communication circuit between audio unit and satellite radio tuner.<br>3. Check communication signal between audio unit and satellite radio tuner.<br>4. If the results from the above checkup show no malfunction, replace either audio unit or satellite radio tuner, and then start self-diagnosis.<br>5. If self-diagnosis results still show any malfunction, replace the other unit. |

## Confirmation/Adjustment Mode

NKS003JE

### OPERATION PROCEDURE

1. Start the engine.
2. Turn the audio system OFF.
3. While pressing the “4” button, turn the volume control dial clockwise or counterclockwise for 30 clicks or more. (When the self-diagnosis mode is started, a short beep will be heard.)
   - Shifting from current screen to previous screen is performed by pressing “BACK” button.

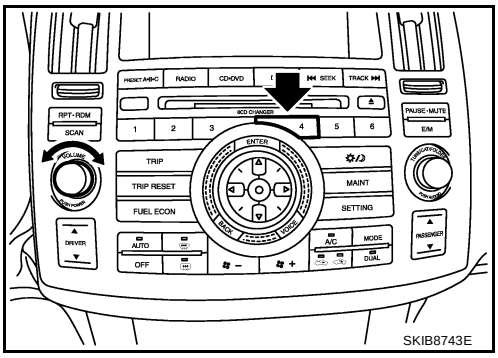


4. The initial trouble diagnosis screen will be shown, and items “Self Diagnosis (DCU)”, “Confirmation/Adjustment” and “CAN DIAG SUPPORT MONITOR” will become selective.
5. Select “Confirmation/Adjustment”.

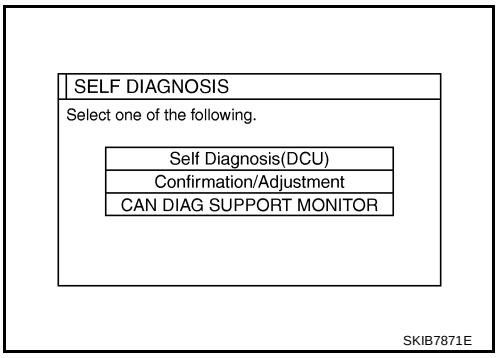


6. Each diagnosis is shown by selecting each screen switch on Confirmation/Adjustment screen.

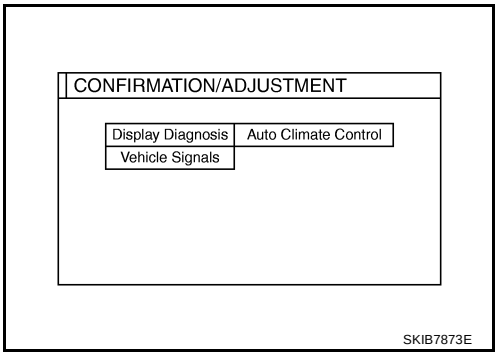

## DISPLAY DIAGNOSIS

Color tone and shading of the display control unit-generated image can be checked by the display of a color bar and a gray scale.

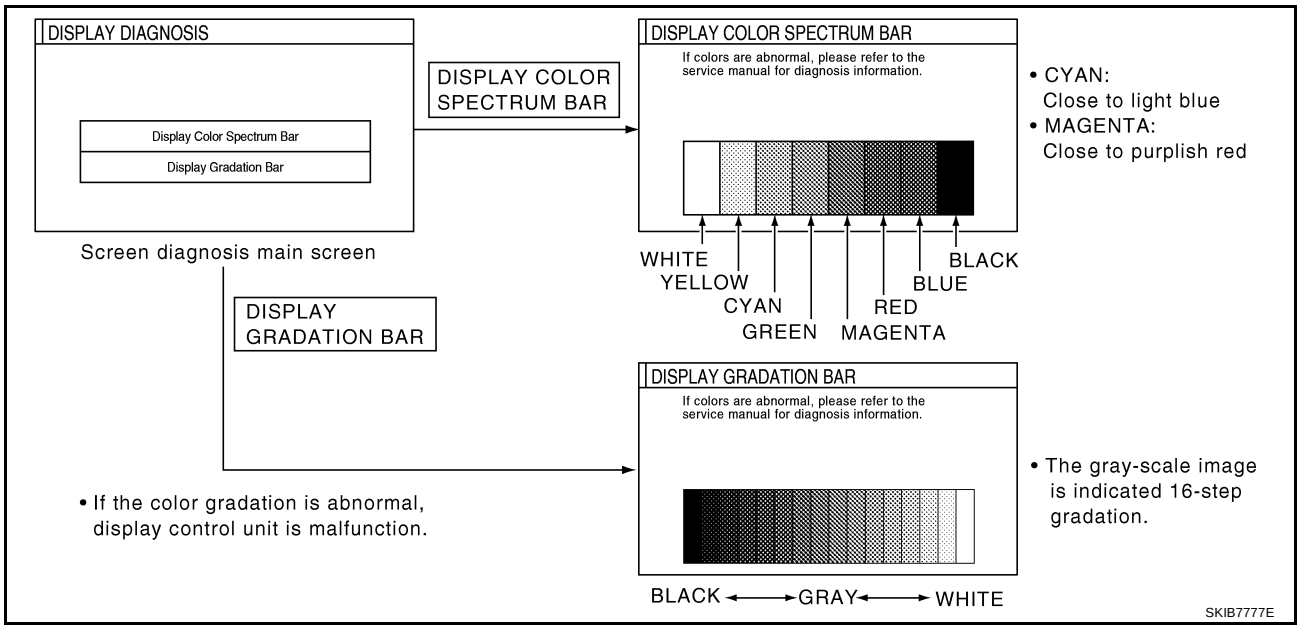


- If RGB signal is malfunctioning, the tint of the color bar display is as follows.

**R (red) signal error : Light blue (Cyan) tint**
**G (green) signal error : Purple (Magenta) tint**
**B (blue) signal error : Yellow tint**

## VEHICLE SIGNALS

A comparison check can be made of each actual vehicle signal and the signals recognized by the display control unit.

**NOTE:**
In case of confirming light signal, set the following D/N mode to ON/OFF of lighting switch (normal setting).

- OFF: D (Day mode)
- ON: N (Night mode)

Unless above setting, light signal (ON/OFF) may not be accurately displayed.

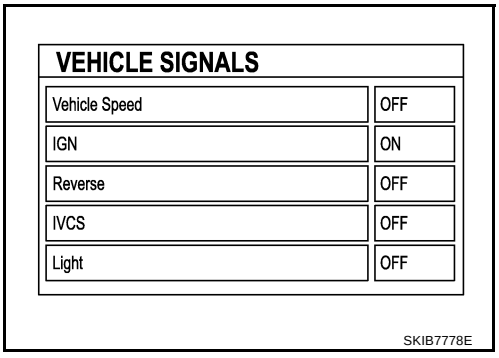


| Diagnosis item | Display | Condition | Remarks |
|---|---|---|---|
| Vehicle Speed | ON | When vehicle speed is more than 0 km/h (0 MPH) | Changes in indication may be delayed. This is normal. |
| | OFF | When vehicle speed is 0 km/h (0 MPH) | |
| | — | Ignition switch in ACC position | |
| IGN | ON | Ignition switch ON | — |
| | OFF | Ignition switch ACC position | |
| Reverse | ON | Selector lever in R position | Changes in indication may be delayed. This is normal. |
| | OFF | Selector lever in any position other than R position | |
| | — | Ignition switch in ACC position | |
| IVCS | OFF | — | This vehicle does not use it. |
| Light | ON | Lighting switch ON | — |
| | OFF | Lighting switch OFF | |

## AUTO CLIMATE CONTROL

Refer to ATC-52, "Self-diagnosis Function" .

# CAN DIAG SUPPORT MONITOR

NKS003JF

## OPERATION PROCEDURE

1. Start the engine.
2. Turn the audio system OFF.
3. While pressing the “4” button, turn the volume control dial clockwise or counterclockwise for 30 clicks or more. (When the self-diagnosis mode is started, a short beep will be heard.)
   - Shifting from current screen to previous screen is performed by pressing “BACK” button.

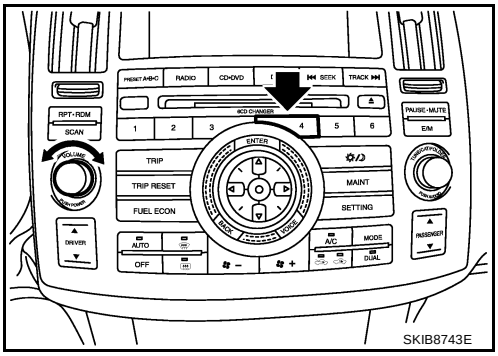

SKIB8743E

4. The initial trouble diagnosis screen will be shown, and items “Self Diagnosis (DCU)”, “Confirmation/Adjustment” and “CAN DIAG SUPPORT MONITOR” will become selective.
5. Select “CAN DIAG SUPPORT MONITOR”.

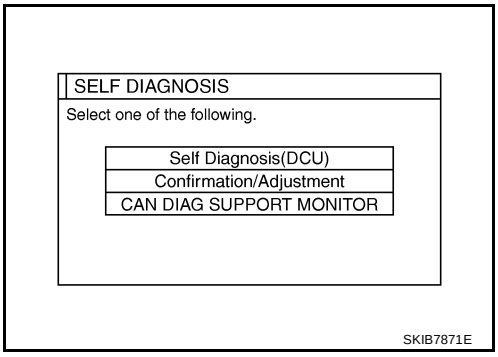

SKIB7871E

6. The transmitting/receiving of CAN communication can be monitored.

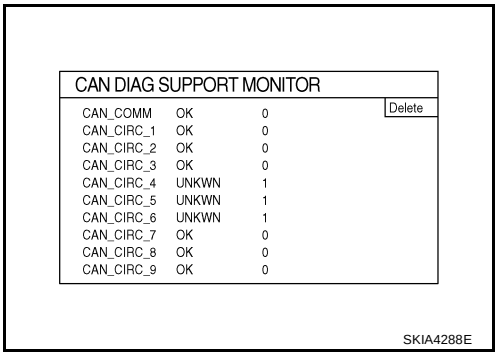

SKIA4288E

| Item | Content | Error counter (Reference value) |
|---|---|---|
| CAN_COMM | OK/NG | 0 - 50 |
| CAN_CIRC_1 | OK/UNKWN | 0 - 50 |
| CAN_CIRC_2 | OK/UNKWN | 0 - 50 |
| CAN_CIRC_3 | OK/UNKWN | 0 - 50 |
| CAN_CIRC_4 | OK/UNKWN | 0 - 50 |
| CAN_CIRC_5 | OK/UNKWN | 0 - 50 |
| CAN_CIRC_6 | OK/UNKWN | 0 - 50 |
| CAN_CIRC_7 | OK/UNKWN | 0 - 50 |
| CAN_CIRC_8 | OK/UNKWN | 0 - 50 |
| CAN_CIRC_9 | OK/UNKWN | 0 - 50 |

**NOTE:**
Counter shows the status of CAN communication.

## A/C and AV Switch Self-Diagnosis Function

NKS003JG

Performing self-diagnosis makes it possible to check operation of A/C and AV switch indicator (LED) and other switch.

### STARTING THE SELF-DIAGNOSIS MODE

1. Turn ignition switch from OFF to ACC.
2. Within 10 seconds press and hold the switches “1” and “6” simultaneously for 3 seconds.

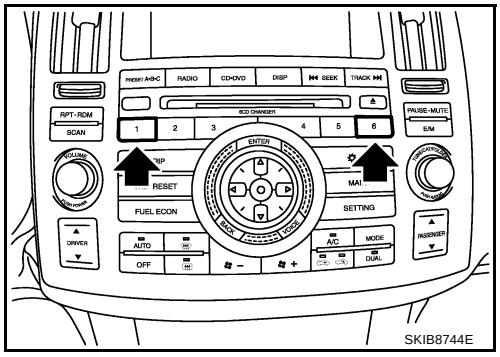


### DIAGNOSIS FUNCTION

The following are checked:

- All the indicators (LED) in the A/C and AV switch.
- Continuity of the switches by sounding the buzzer when the A/C and AV switch and audio steering wheel switch is pressed.
- Continuity of harness between A/C and AV switch and audio steering wheel switch.

**NOTE:**
Rear window defogger switch operation is not checked (No beep sound even under normal status).

### EXITING THE SELF-DIAGNOSIS MODE

- Turn ignition switch OFF.

## CAN Communication Check

NKS003JJ

### 1. CHECK MONITOR DESCRIPTION

1. Start self-diagnosis of DCU. Refer to AV-76, "Self-Diagnosis Mode (DCU)" .
2. Select “CAN DIAG SUPPORT MONITOR”. Refer to AV-81, "CAN DIAG SUPPORT MONITOR" .

| Item | content | | Error counter (Reference value) |
|---|---|---|---|
| | Normal condition | Error (Example) | |
| CAN_COMM | OK | NG | 0 - 50 |
| CAN_CIRC_1 | OK | UNKWN | 0 - 50 |
| CAN_CIRC_2 | OK | UNKWN | 0 - 50 |
| CAN_CIRC_3 | OK | UNKWN | 0 - 50 |
| CAN_CIRC_4 | OK | UNKWN | 0 - 50 |
| CAN_CIRC_5 | OK | UNKWN | 0 - 50 |
| CAN_CIRC_6 | OK | UNKWN | 0 - 50 |
| CAN_CIRC_7 | OK | UNKWN | 0 - 50 |
| CAN_CIRC_8 | OK | UNKWN | 0 - 50 |
| CAN_CIRC_9 | UNKWN | UNKWN | 0 - 50 |

(Example)

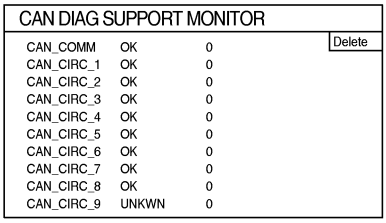


PKIB6080E

3. Record each item display description (OK/NG/UNKWN) displayed on the following CAN DIAG SUPPORT MONITOR Check Sheet.

**CAN DIAG SUPPORT MONITOR Check Sheet**

| Diagnosis item | Screen display | | Diagnosis item | Screen display | |
|---|---|---|---|---|---|
| CAN_COMM | OK | NG | CAN_CIRC_5 | OK | UNKWN |
| CAN_CIRC_1 | OK | UNKWN | CAN_CIRC_6 | OK | UNKWN |
| CAN_CIRC_2 | OK | UNKWN | CAN_CIRC_7 | OK | UNKWN |
| CAN_CIRC_3 | OK | UNKWN | CAN_CIRC_8 | OK | UNKWN |
| CAN_CIRC_4 | OK | UNKWN | CAN_CIRC_9 | OK | UNKWN |

>> After filling in CAN DIAG SUPPORT MONITOR Check Sheet, GO TO LAN-49, "CAN System Specification Chart" .

## Unable to Operate System with A/C and AV Switch

NKS003JK

Symptom: Unable to operate A/C system and audio system with A/C and AV switch. (Unable to start self-diagnosis.)

### 1. CHECK CONDITION

1. Turn ignition switch ON.
2. Check if an image is displayed on the screen.

Is an image displayed on the screen?

YES >> GO TO 2.
NO >> Repair malfunctioning part. Refer to AV-86, "All Images Are Not Displayed" .

### 2. SELF-DIAGNOSIS OF A/C AND AV SWITCH

Start self-diagnosis of A/C and AV switch, and check the self-diagnosis result. Refer to AV-82, "A/C and AV Switch Self-Diagnosis Function" .

OK or NG

OK >> GO TO 4.
NG >> GO TO 3.

### 3. CHECK A/C AND AV SWITCH POWER SUPPLY AND GROUND CIRCUIT

1. Check voltage between A/C and AV switch harness connector terminals and ground.

| Terminals | | | OFF | ACC | ON |
|---|---|---|---|---|---|
| (+) | | (–) | | | |
| Connector | Terminal | | | | |
| M64 | 1 | Ground | Battery voltage | Battery voltage | Battery voltage |
| | 2 | | 0 V | Battery voltage | Battery voltage |

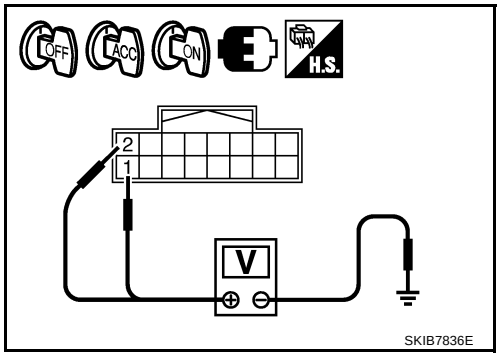


2. Turn ignition switch OFF.
3. Disconnect A/C and AV switch connector.
4. Check continuity between A/C and AV switch harness connector M64 terminal 5 and ground.

**5 – Ground : Continuity should exist.**

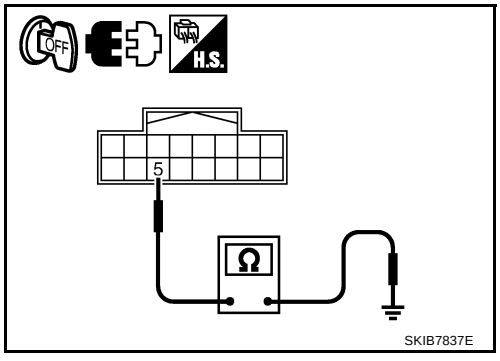


OK or NG

OK >> Replace A/C and AV switch.
NG >> Repair harness or connector.

## 4. CHECK HARNESS

1. Turn ignition switch OFF.
2. Disconnect display control unit and A/C and AV switch connectors.
3. Check continuity between display control unit harness connector (A) M76 terminals 28, 30 and A/C and AV switch harness connector (B) M64 terminals 6, 8.

   **28 – 6 : Continuity should exist.**

   **30 – 8 : Continuity should exist.**

4. Check continuity between display control unit harness connector (A) M76 terminals 28, 30 and ground.

   **28, 30 – Ground : Continuity should not exist.**

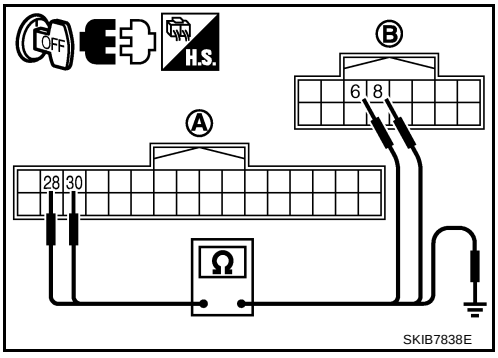


OK or NG

OK >> GO TO 5.
NG >> Repair harness or connector.

## 5. CHECK A/C AND AV SWITCH AND DISPLAY CONTROL UNIT

1. Replace A/C and AV switch or display control unit.
2. Make sure that A/C system and audio system can be operated by A/C and AV switch.

OK or NG

OK >> INSPECTION END
NG >> Replace the other unit.

## All Images Are Not Displayed

NKS003JL

Symptom: RGB image is not displayed.

### 1. CHECK CONDITION

When operating audio and air conditioner, make sure that they operate correctly.

Do audio and air conditioner operate normally?

YES >> GO TO 2.
NO >> GO TO 5.

### 2. CHECK DISPLAY GROUND CIRCUIT

1. Turn ignition switch OFF.
2. Disconnect display connector.
3. Check continuity between display harness connector M63 terminal 1 and ground.

**1 – Ground : Continuity should exist.**

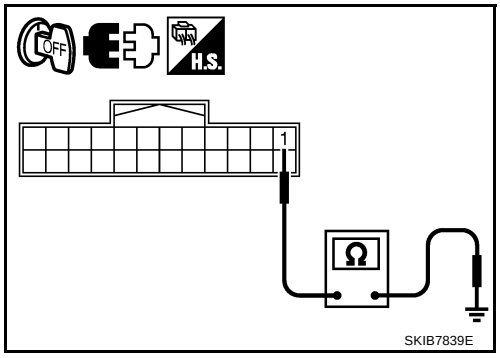


OK or NG

OK >> GO TO 3.
NG >> Repair harness or connector.

### 3. CHECK HARNESS

1. Disconnect display control unit connector.
2. Check continuity between display control unit harness connector (A) M75 terminals 2, 4, 5, 7 and display harness connector (B) M63 terminals 2, 3, 13, 14.

**2 – 2 : Continuity should exist.**
**4 – 3 : Continuity should exist.**
**5 – 13 : Continuity should exist.**
**7 – 14 : Continuity should exist.**

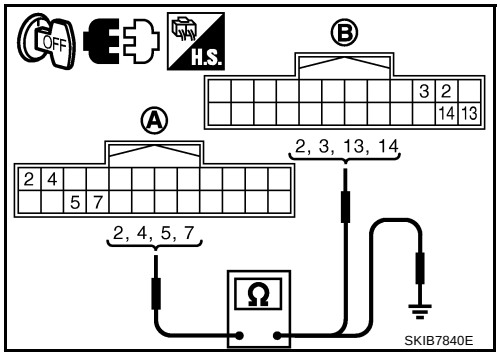


3. Check continuity between display control unit harness connector (A) M75 terminals 2, 4 and ground.

**2, 4 – Ground : Continuity should not exist.**

OK or NG

OK >> GO TO 4.
NG >> Repair harness or connector.

## 4. CHECK DISPLAY POWER SUPPLY AND GROUND CIRCUIT (INVERTER AND SIGNAL)

1. Connect display control unit and display connectors.
2. Turn ignition switch ON.
3. Check voltage between display control unit harness connector M75 terminals 2 and 5.

**2 – 5 : Approx. 9 V**

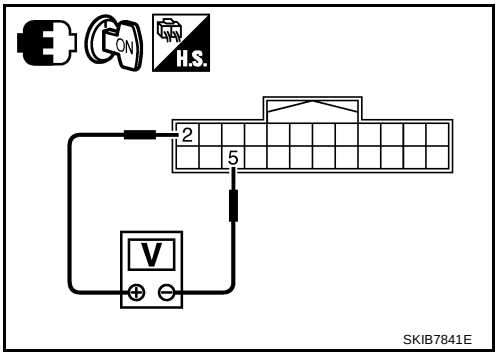


4. Check voltage between display control unit harness connector M75 terminals 4 and 7.

**4 – 7 : Approx. 9 V**

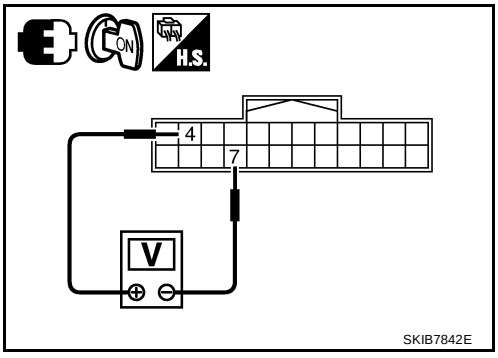


OK or NG

OK >> Replace display.
NG >> Replace display control unit.

## 5. CHECK DISPLAY CONTROL UNIT POWER SUPPLY AND GROUND CIRCUIT

1. Check voltage between display control unit harness connector terminals and ground.

| Terminals | | | OFF | ACC | ON |
|---|---|---|---|---|---|
| (+) | | (–) | | | |
| Connector | Terminal | | | | |
| M75 | 1 | Ground | Battery voltage | Battery voltage | Battery voltage |
| | 10 | | 0 V | Battery voltage | Battery voltage |

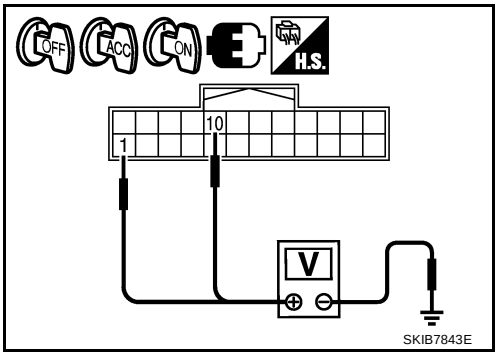


2. Turn ignition switch OFF.
3. Disconnect display control unit connector.
4. Check continuity between display control unit harness connector M75 terminal 3 and ground.

**3 – Ground : Continuity should exist.**

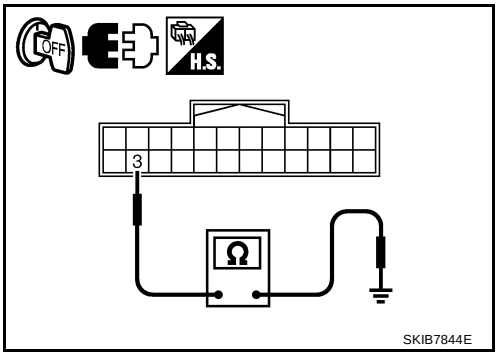


OK or NG

OK >> Replace display control unit.
NG >> Repair harness or connector.

## Tint Is Strange for The RGB Image

NKS003JO

Symptom: Tint of all RGB images is strange.

### 1. CHECK HARNESS

1. Turn ignition switch OFF.
2. Disconnect display control unit and display connectors.
3. Check the malfunctioning circuit according to the symptoms.

- **Light blue (Cyan) tinged screen**
  Check continuity between display control unit harness connector (A) M76 terminal 50 and display harness connector (B) M63 terminal 17.

  **50 – 17 : Continuity should exist.**

  Check continuity between display control unit harness connector (A) M76 terminal 50 and ground.

  **50 – Ground : Continuity should not exist.**

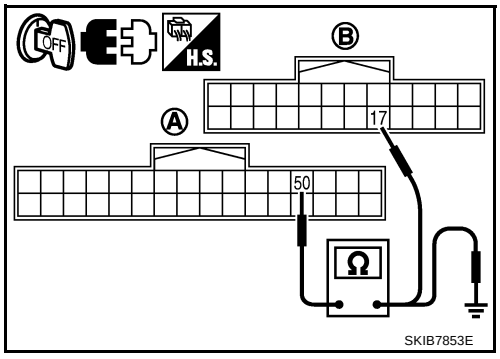


- **Purple (Magenta) tinged screen**
  Check continuity between display control unit harness connector (A) M76 terminal 52 and display harness connector (B) M63 terminal 6.

  **52 – 6 : Continuity should exist.**

  Check continuity between display control unit harness connector (A) M76 terminal 52 and ground.

  **52 – Ground : Continuity should not exist.**

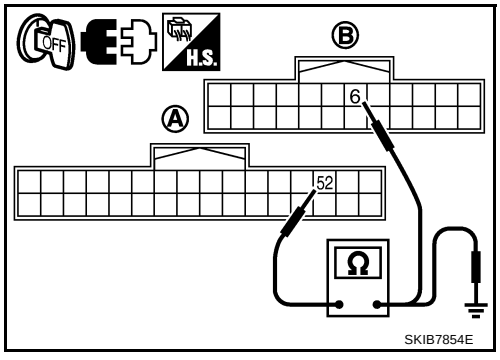


- **Yellow tinged screen**
  Check continuity between display control unit harness connector (A) M76 terminal 54 and display harness connector (B) M63 terminal 18.

  **54 – 18 : Continuity should exist.**

  Check continuity between display control unit harness connector (A) M76 terminal 54 and ground.

  **54 – Ground : Continuity should not exist.**

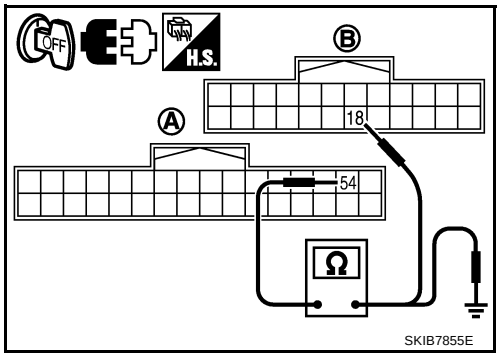


OK or NG

OK >> GO TO 2.
NG >> Repair harness or connector.

## 2. CHECK RGB SIGNAL

1. Connect display control unit and display connectors.
2. Turn ignition switch ON.
3. Start Confirmation/Adjustment mode. Refer toAV-79, "Confirmation/Adjustment Mode" .
4. Display color bar by selecting “Display Color Spectrum Bar” on Display Diagnosis screen. Refer to AV-80, "DISPLAY DIAGNOSIS" .
5. Check the malfunctioning circuit according to the symptoms.

- **Light blue (Cyan) tinged screen**
  Check voltage waveform between display control unit harness connector M76 terminal 50 and ground with CONSULT-II or oscilloscope.

**50 – Ground:**

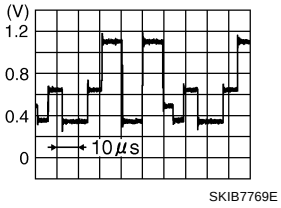


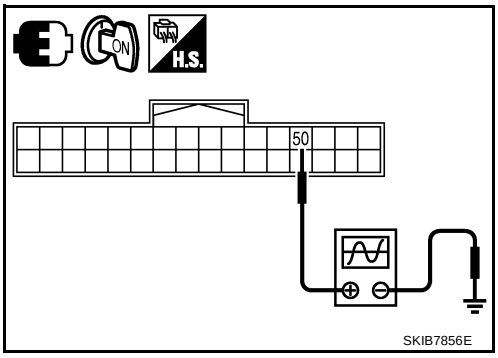


- **Purple (Magenta) tinged screen**
  Check voltage waveform between display control unit harness connector M76 terminal 52 and ground with CONSULT-II or oscilloscope.

**52 – Ground:**

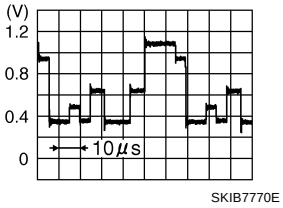


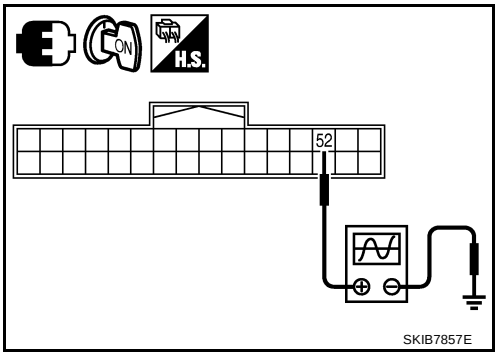


- **Yellow tinged screen**
  Check voltage waveform between display control unit harness connector M76 terminal 54 and ground with CONSULT-II or oscilloscope.

**54 – Ground:**

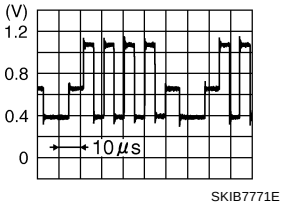


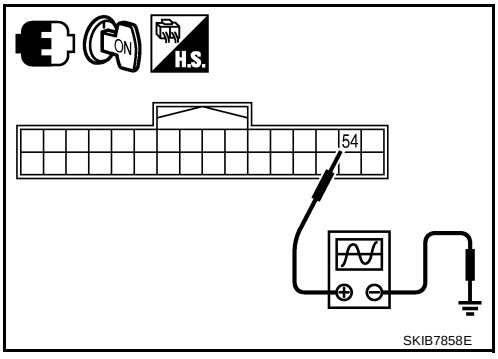


OK or NG

OK >> Replace display.
NG >> Replace display control unit.

## RGB Image Is Rolling

NKS003JP

Symptom: RGB image is rolling.

### 1. CHECK HARNESS

1. Turn ignition switch OFF.
2. Disconnect display control unit and display connectors.
3. Check continuity between display control unit harness connector (A) M76 terminal 56 and display harness connector (B) M63 terminal 19.

   **56 – 19 : Continuity should exist.**

4. Check continuity between display control unit harness connector (A) M76 terminal 56 and ground.

   **56 – Ground : Continuity should not exist.**

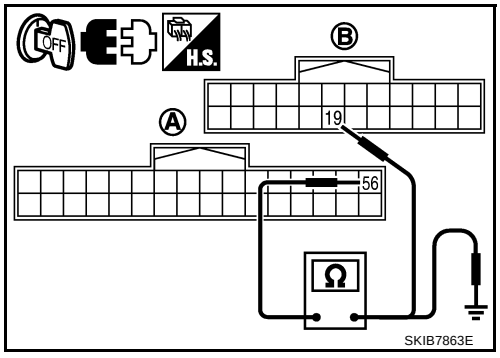


OK or NG

OK >> GO TO 2.
NG >> Repair harness or connector.

### 2. CHECK RGB SYNCHRONIZING SIGNAL

1. Connect display control unit and display connectors.
2. Turn ignition switch ON.
3. When displaying RGB image, check voltage waveform between display control unit harness connector M76 terminal 56 and ground with CONSULT-II or oscilloscope.

   **56 – Ground:**

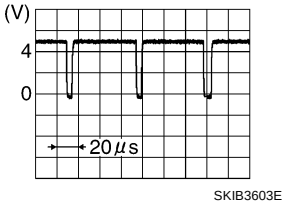


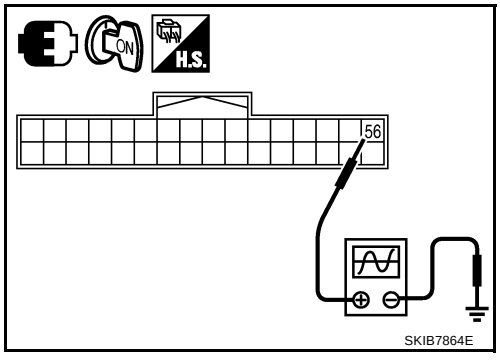


OK or NG

OK >> Replace display.
NG >> Replace display control unit.

## Values for All Items in The TRIP Screen Do Not Change

NKS003JQ

Symptom: Values for items, “Elapsed Time”, “Driving Distance” and “Average Speed” in the TRIP screen do not change. FUEL ECONOMY screen is not displayed when pressing “TRIP” button.

### 1. CHECK DISPLAY CONTROL UNIT IGNITION SIGNAL

Select “Vehicle Signals” in Confirmation/Adjustment mode, and check the ignition signal inputting to display control unit. Refer to AV-80, "VEHICLE SIGNALS" .

OK or NG

OK >> Replace display control unit.
NG >> Check display control unit ignition signal circuit, and repair malfunctioning part.

## Values for Items, “Driving Distance” and “Average Speed” Do Not Change

NKS003JR

Symptom: Values for Items, "Driving Distance" and "Average Speed" do not change. (The Value for "Elapsed Time" Changes.)

### 1. CHECK DISPLAY CONTROL UNIT VEHICLE SPEED SIGNAL

Select “Vehicle Signals” in Confirmation/Adjustment mode, and check the vehicle speed signal inputting to display control unit. Refer to AV-80, "VEHICLE SIGNALS" .

OK or NG

OK >> Replace display control unit.
NG >> Check display control unit vehicle speed signal circuit, and repair malfunctioning part.

## Values for All Items in The FUEL ECONOMY Screen Do Not Change

NKS003JS

Symptom: Values for items, “Average Fuel Economy” and “Distance to Empty” in the FUEL ECONOMY screen do not change.

### 1. CHECK CONDITION

Check if values for all items in the TRIP screen change properly.

OK or NG

OK >> GO TO 2.
NG >> Repair malfunctioning part. Refer to AV-91, "Values for All Items in The TRIP Screen Do Not Change" or AV-91, "Values for Items, “Driving Distance” and “Average Speed” Do Not Change" .

### 2. CHECK CAN COMMUNICATION

Check CAN communication. Refer to AV-83, "CAN Communication Check" .

OK or NG

OK >> Replace display control unit.
NG >> After filling out CAN DIAG SUPPORT MONITOR check sheet, GO TO LAN-49, "CAN System Specification Chart" .

## Example of Symptoms Possible No Malfunction

NKS003JT

For system operation information, refer to Owner's Manual.

### DISPLAY

| Symptom | Possible cause | Possible solution |
|---|---|---|
| No image is displayed. | The brightness is at the lowest setting. | Adjust the brightness of the display. |
| | The display is turned off. | Press and hold the ☀/☽ button to turn on the display. |
| The screen is too dim.<br>The movement is slow. | The temperature in the interior of the vehicle is low. | Wait until the interior of the vehicle has warmed up. |
| Some pixels in the display are darker or brighter than others. | This condition is an inherent characteristic of liquid crystal displays. | This is not a malfunction. |
| Some menu items cannot be selected. | Some menu items become unavailable while the vehicle is driven. | Park the vehicle in a safe location, then operate the navigation system. |
| The screen does not switch to the night screen even after turning on the headlights. | The daytime screen was set the last time the headlights were turned on. | Set the screen to the night screen mode using ☀/☽ button when turning on the headlights. |

## Removal and Installation of Display

NKS003LI

Refer to AV-43, "Disassembly and Assembly for Audio Unit" .

## Removal and Installation of Display Control Unit

NKS003LZ

### REMOVAL

1. Remove instrument passenger lower panel. Refer to IP-10, "INSTRUMENT PANEL ASSEMBLY" .
2. Remove screws (A) with power tool and remove display control unit (1).

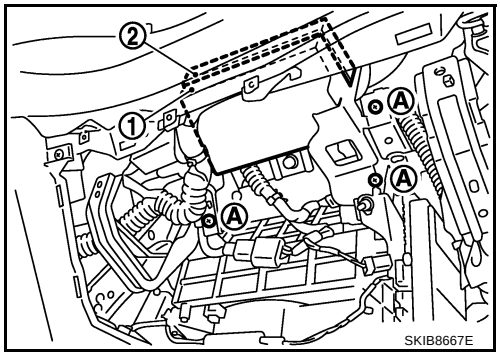


3. Remove screws (4) with power tool and remove brackets.

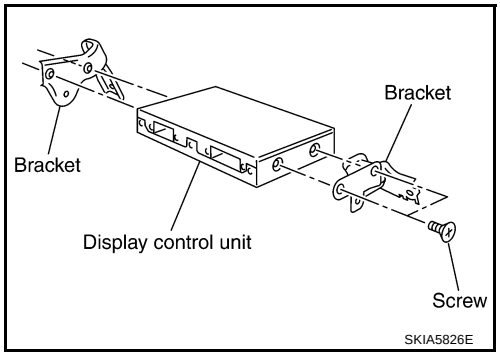


### INSTALLATION

Installation is the reverse order of removal.

## Removal and Installation of A/C and AV Switch

NKS003LJ

Refer to AV-44, "Removal and Installation for A/C and AV Switch" .

# NAVIGATION SYSTEM

PFP:25915

## System Description

NKS003K0

- For Navigation System operation information, refer to Navigation System Owner's Manual.
- Each control unit that comprises the system is connected with a communication circuit. It transmits/receives data signals including request signals and response signals, and controls the system.
- The display control unit transmits/receives data signals to/from each control unit with CAN communication. It performs an arithmetical operation on fuel information values by using data obtained from the control units, and then displays the calculated values on the screen.
- The display control unit receives door switch signals from the BCM with CAN communication, and displays a warning on the screen when driving over the set speed with a door half-shut.
- The display control unit receives vehicle speed signals that are transmitted from the unified meter and A/C amp., performs an arithmetical operation on drive information values, and then displays the calculated values on the screen.
- The images displayed on the monitor screen contain NAVI control unit-generated RGB images.
- The display control unit controls image switching and image quality adjustments by communications with the display.

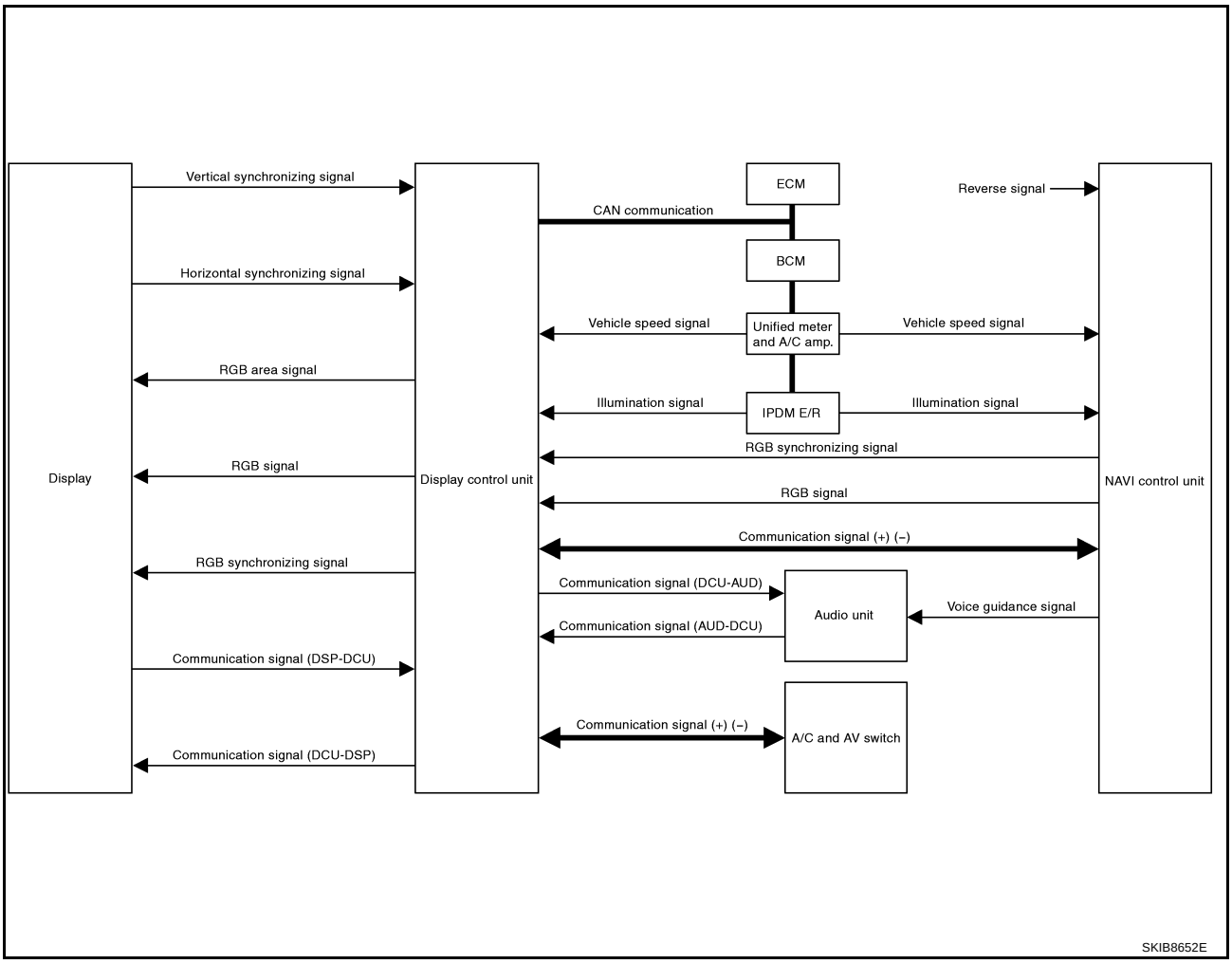

## NAVIGATION SYSTEM

### Location Detection Principle

The navigation system periodically calculates the vehicle's current position according to the following three signals:

- Travel distance of the vehicle as determined by the vehicle speed sensor
- Turning angle of the vehicle as determined by the gyroscope (angular velocity sensor)
- Direction of vehicle travel as determined by the GPS antenna (GPS information)

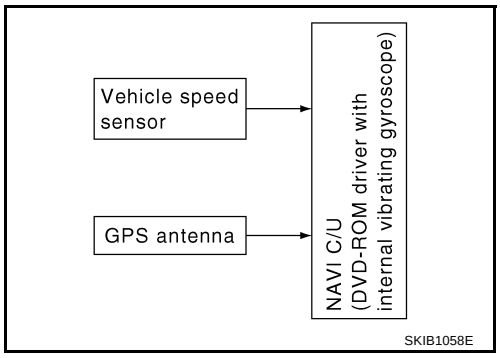


The current position of the vehicle is then identified by comparing the calculated vehicle position with map data read from the DVD-ROM, which is stored in the DVD-ROM drive (map-matching), and indicated on the screen as a current-location mark. More accurate data is judged and used by comparing vehicle position detection results found by the GPS with the result by map-matching.

The current vehicle position will be calculated by detecting the distance the vehicle moved from the previous calculation point and its direction.

- Travel distance
  Travel distance calculations are based on the vehicle speed sensor input signal. Therefore, the calculation may become incorrect as the tires wear down. To prevent this, an automatic distance correction function has been adopted.
- Travel direction
  Change in the travel direction of the vehicle is calculated by a gyroscope (angular velocity sensor) and a GPS antenna (GPS information). They have both advantages and disadvantages.

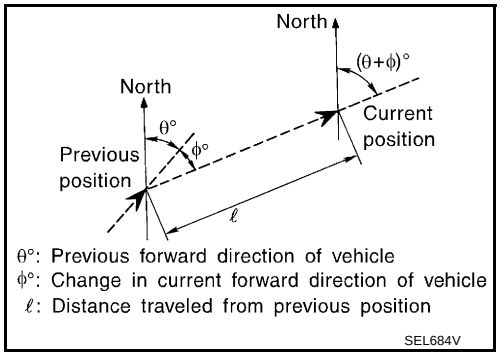


| Type | Advantage | Disadvantage |
|---|---|---|
| Gyroscope (angular velocity sensor) | Can detect the vehicle's turning angle quite accurately. | Direction errors may accumulate when vehicle is driven for long distances without stopping. |
| GPS antenna (GPS information) | Can detect the vehicle's travel direction (North/South/East/West). | Correct direction cannot be detected when vehicle speed is low. |

More accurate traveling direction is selected because priorities are set for the signals from these two devices according to the situation.

## Map-Matching

Map-matching compares a current location detected by the method in the “Location Detection Principle” with a road map data from DVD-ROM stored in DVD-ROM drive.

**NOTE:**
The road map data is based on data stored in the DVD-ROM.

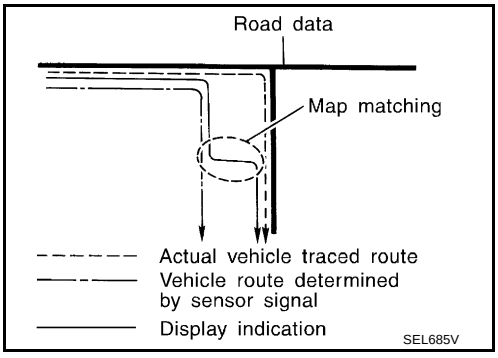


The vehicle position may not be corrected under the following circumstances and after driving for a certain time when GPS information is difficult to receive. In this case, the current-location mark on the display must be corrected manually.

- In map-matching, alternative routes are prepared and prioritized in addition to the road judged currently driven. Due to the distance and/or direction error, the incorrect road may be prioritized and current-location mark may be repositioned to the wrong road.
  When two roads are running in parallel, they are judged to the same priority. Therefore, the current-location mark may appear on either of them alternately, depending on maneuvering of the steering wheel and configuration of the road.

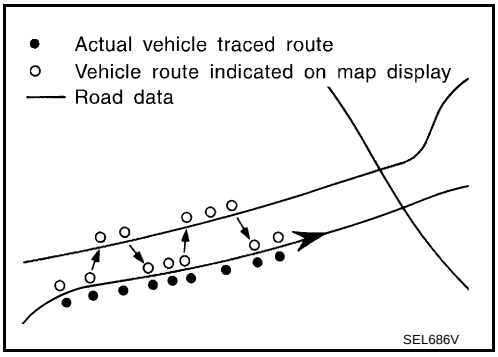


- Map-matching does not function correctly when a road on which the vehicle is driving is new and not recorded in the DVD-ROM, or when road pattern stored in the map data and the actual road pattern are different due to repair.
  When driving on a road not present in the map, the map-matching function may find another road and position the current-location mark on it. Then, when the correct road is detected, the current-location mark may change to it.
- Effective range for comparing the vehicle position and travel direction calculated by the distance and direction with the road data read from the DVD-ROM is limited. Therefore, when there is an excessive gap between current vehicle position and the position on the map, correction by map-matching is not possible.

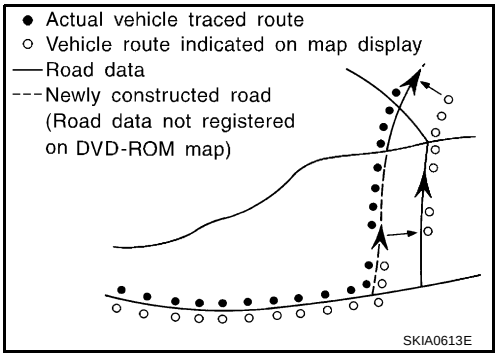

## GPS (Global Positioning System)

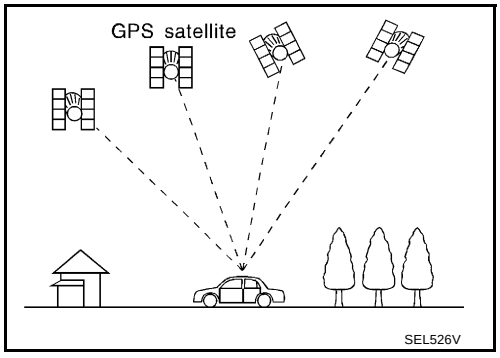


GPS (Global Positioning System) was developed for and is controlled by the US Department of Defense. The system utilizes GPS satellites (NAVSTAR), sending out radio waves while flying on an orbit around the earth at an altitude of approximately 21,000 km (13,100 miles).

The GPS receiver calculates the vehicle's position in three dimensions (latitude/longitude/altitude) according to the time lag of the radio waves received from four or more GPS satellites (three-dimensional positioning). If radio waves were received only from three GPS satellites, the GPS receiver calculates the vehicle's position in two dimensions (latitude/longitude), and utilize the altitude data calculated previously with radio waves from four or more GPS satellites (two-dimensional positioning).

Position correction by GPS is not available while the vehicle is stopped.

Accuracy of GPS will deteriorate under the following conditions:

- In two-dimensional positioning, GPS accuracy will deteriorate when altitude of the vehicle position changes.
- The accuracy can be even lower depending on the arrangement of the GPS satellites utilized for the positioning.
- Position detection is not possible when vehicle is in an area where radio waves from the GPS satellite do not reach, such as in a tunnel, parking lot in a building, and under an elevated highway. Radio waves from the GPS satellites may not be received when some object is located over the GPS antenna.

**NOTE:**

- Even a high-precision three dimensional positioning, the detection result has an error about 10 m (30ft).
- Because the signals of GPS satellite is controlled by the Tracking and Control Center in the United States, the accuracy may be degraded lower intentionally or the radio waves may stop.

## Component Description

NKS003K1

### NAVI CONTROL UNIT

- The gyro (angular speed sensor) and the DVD-ROM drive are built-in units that control the navigation functions.
- Signals are received from the gyro, the vehicle speed sensor, and the GPS antenna. Vehicle location is determined by combining this data with the data contained in the DVD-ROM map. Locational information is shown on liquid crystal display panel.

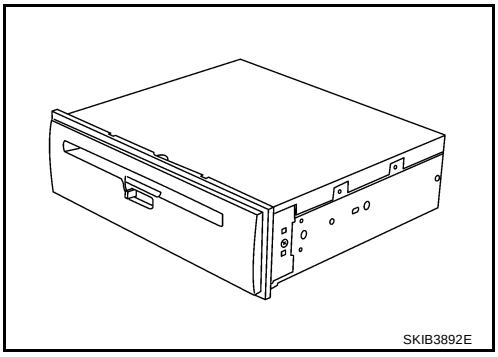


### DVD-ROM Drive

Maps, traffic control regulations, and other pertinent information can be easily read from the DVD-ROM.

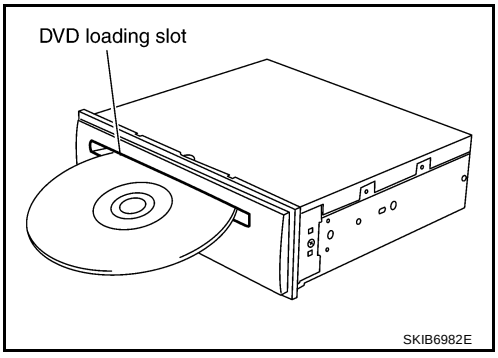


### DVD-ROM

- The DVD-ROM has maps, traffic control regulations, and other pertinent information.
- To improve DVD-ROM map matching and route determination functions, the DVD-ROM uses an exclusive Nissan format. Therefore, the use of a DVD-ROM provided by other manufacturers cannot be used.

### Gyro (Angular Speed Sensor)

- The oscillator gyro sensor is used to detect changes in vehicle steering angle.
- The gyro is built into the navigation (NAVI) control unit.

### GPS ANTENNA

The GPS antenna receives and amplifies the radio waves from the GPS satellites, and then transmits the GPS signal to NAVI control unit.

### DISPLAY CONTROL UNIT

- Display control unit draws a status of the audio and air conditioner, a TRIP screen, a FUEL ECONOMY screen, etc., and transmits the image signals to the display screen.
- It receives operation signals of audio and air conditioner from A/C and AV switch, and transmits the operation signal of audio to the audio unit via the communication line and transmits the operation signal of air conditioner to the meter and A/C amp. via CAN communication.

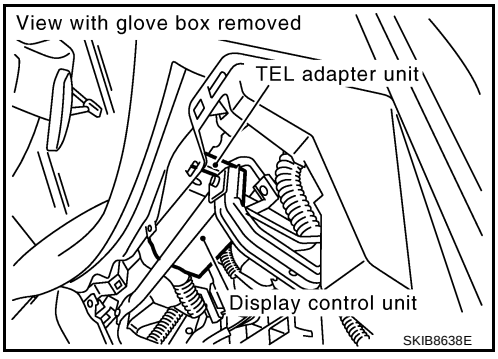

### DISPLAY

- Images on the display include RGB image such as map screen.
- Display control unit controls images on the display.

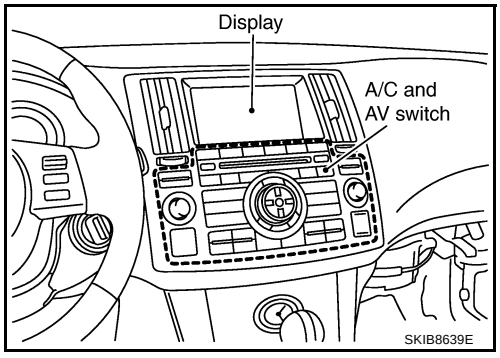


### A/C AND AV SWITCH

- A/C and AV switch, an integrated combination of audio and air conditioner switches, are adopted.
- Operation signal of audio is transmitted to the audio unit through display control unit with the communication line. Operation signal of air conditioner is transmitted to meter and A/C amp. through display control unit with CAN communication.

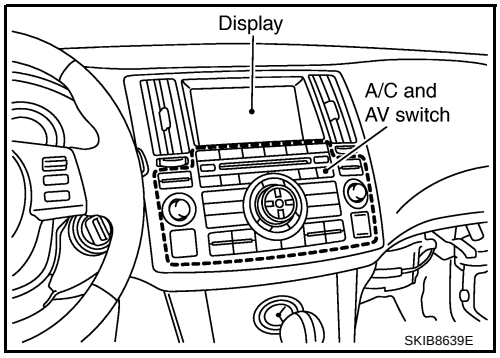


## CAN Communication Unit

NKS003K2

Refer to LAN-49, "CAN System Specification Chart" .

## Component Parts Location

NKS003K3

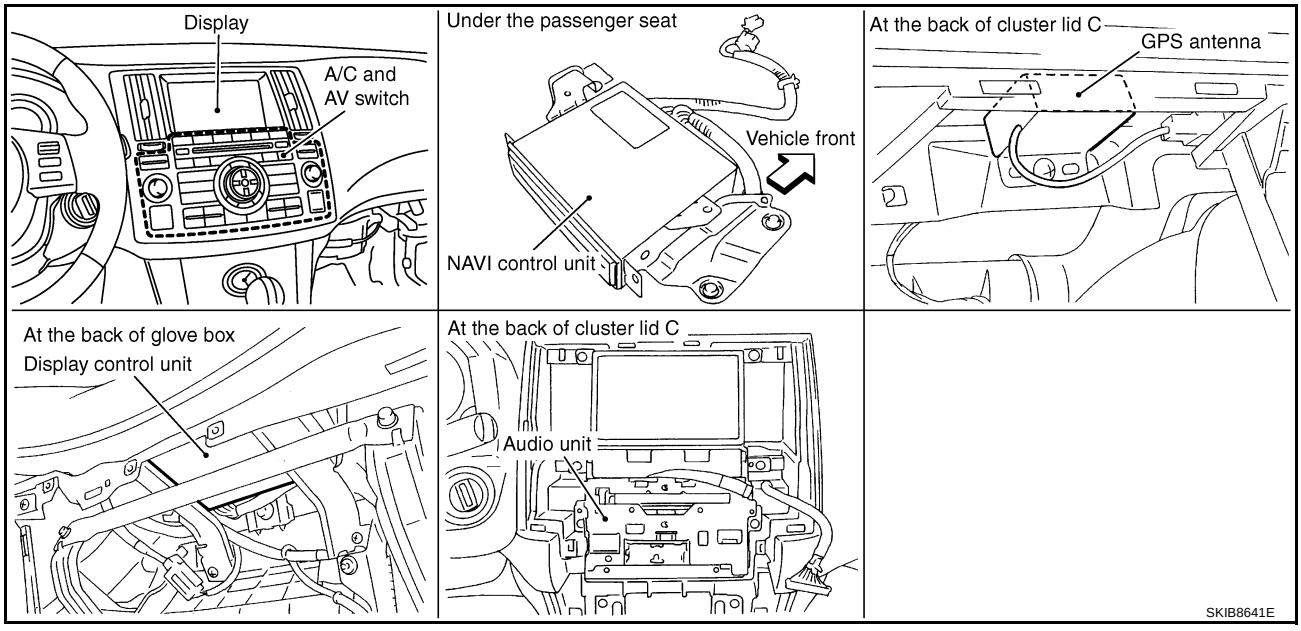

## Schematic — NAVI —

NKS003K4

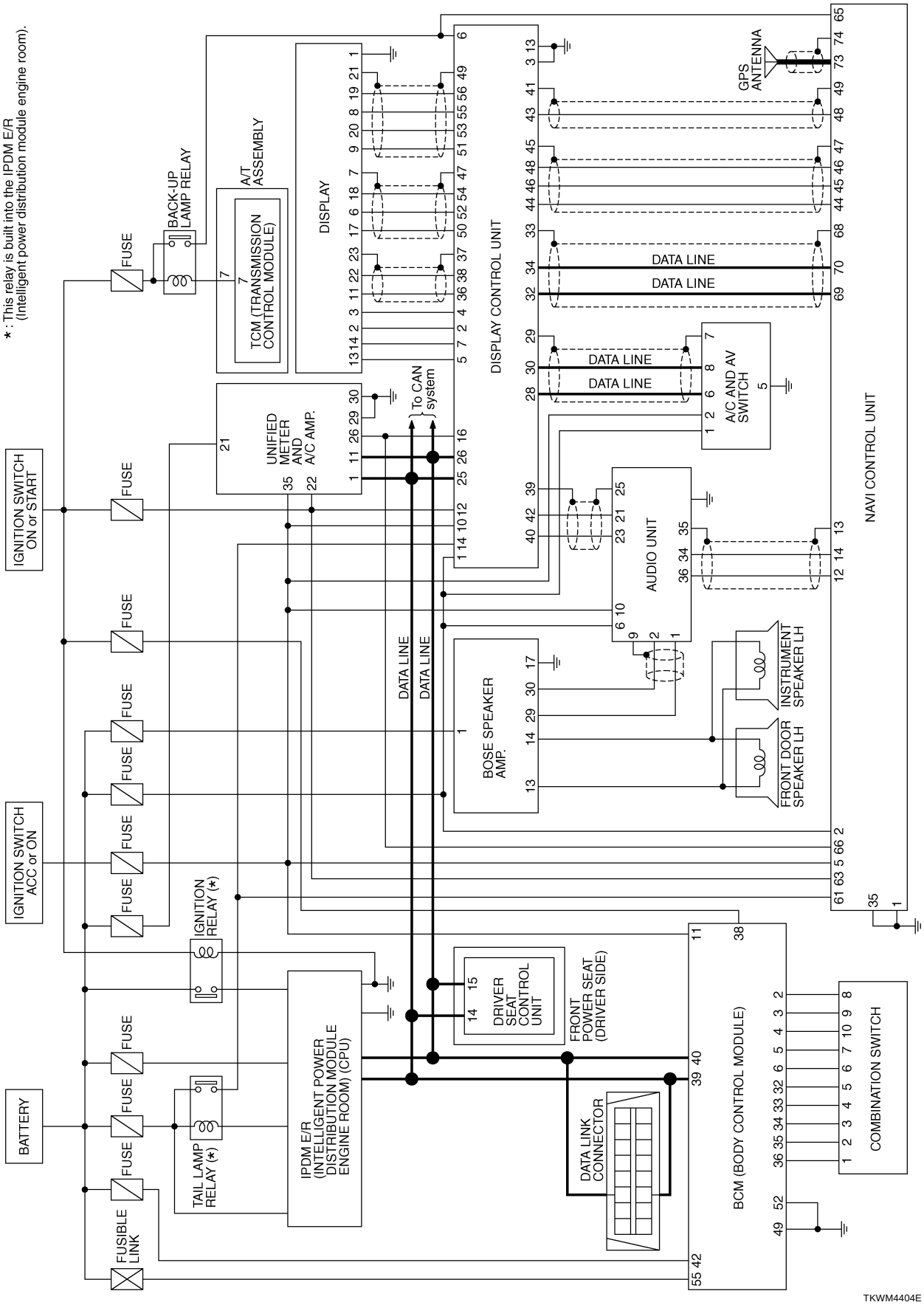

## Wiring Diagram — NAVI —

NKS003K5

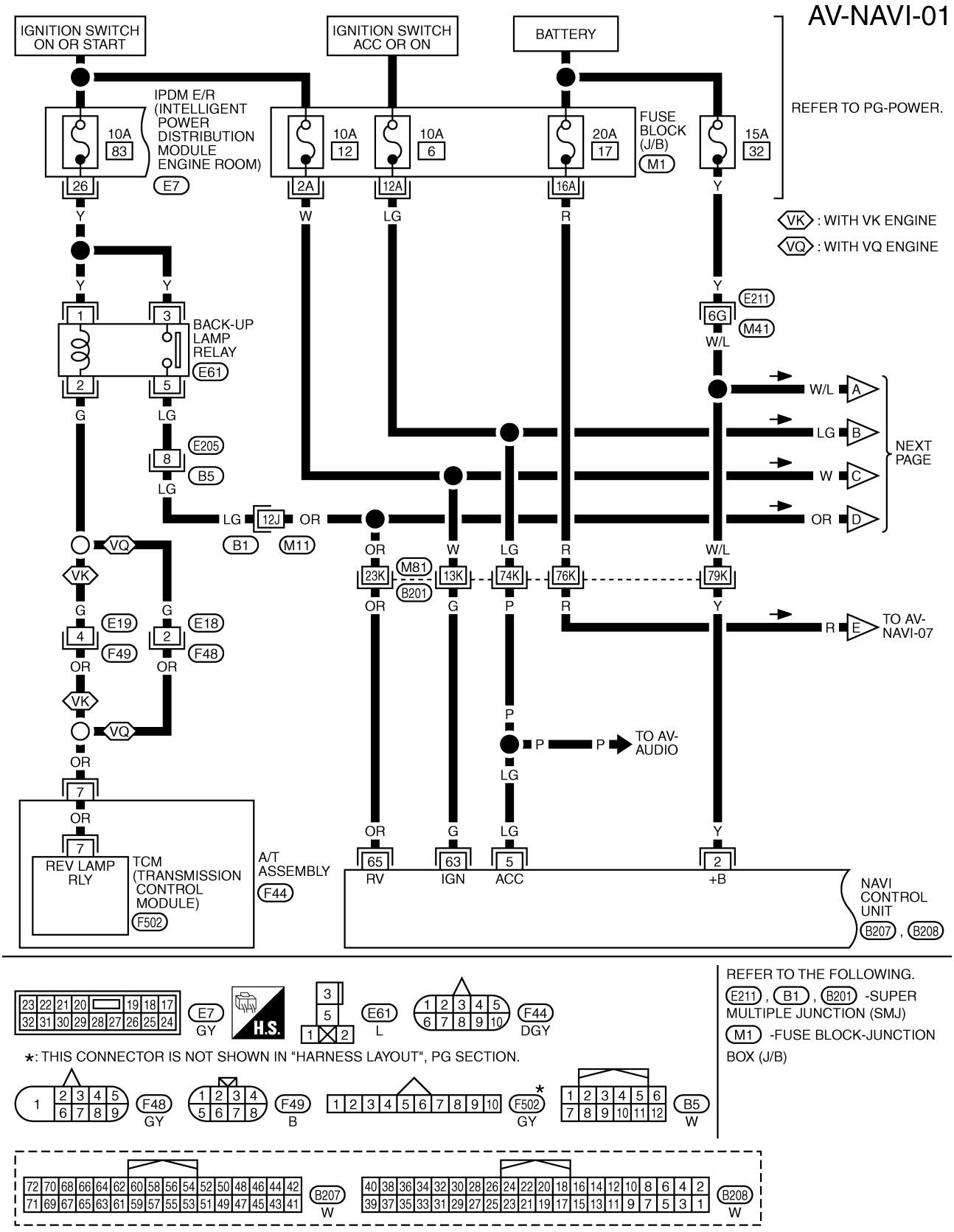

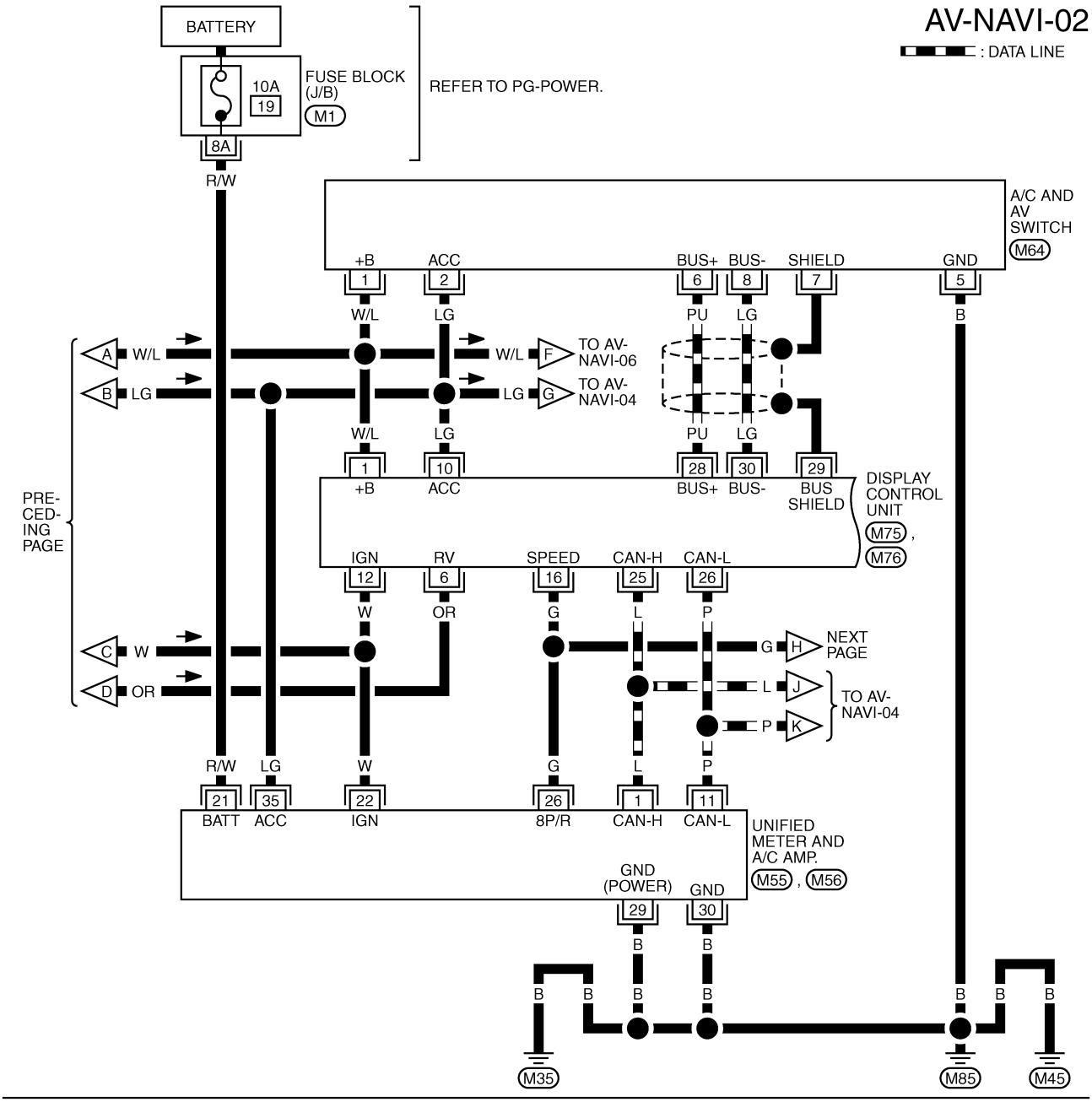


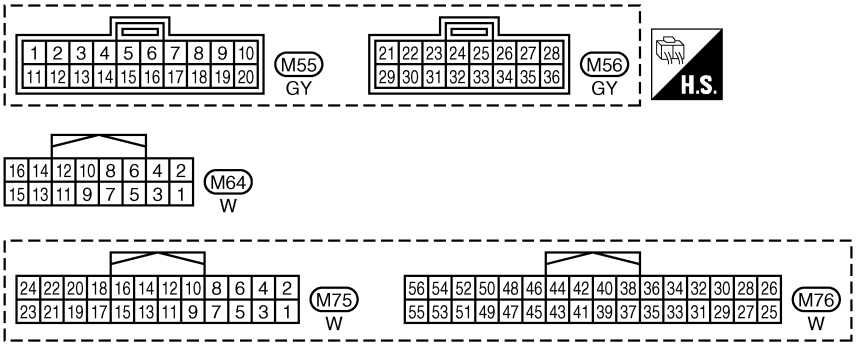


REFER TO THE FOLLOWING.

M1 -FUSE BLOCK-JUNCTION BOX (J/B)

TKWM4406E

AV-NAVI-03

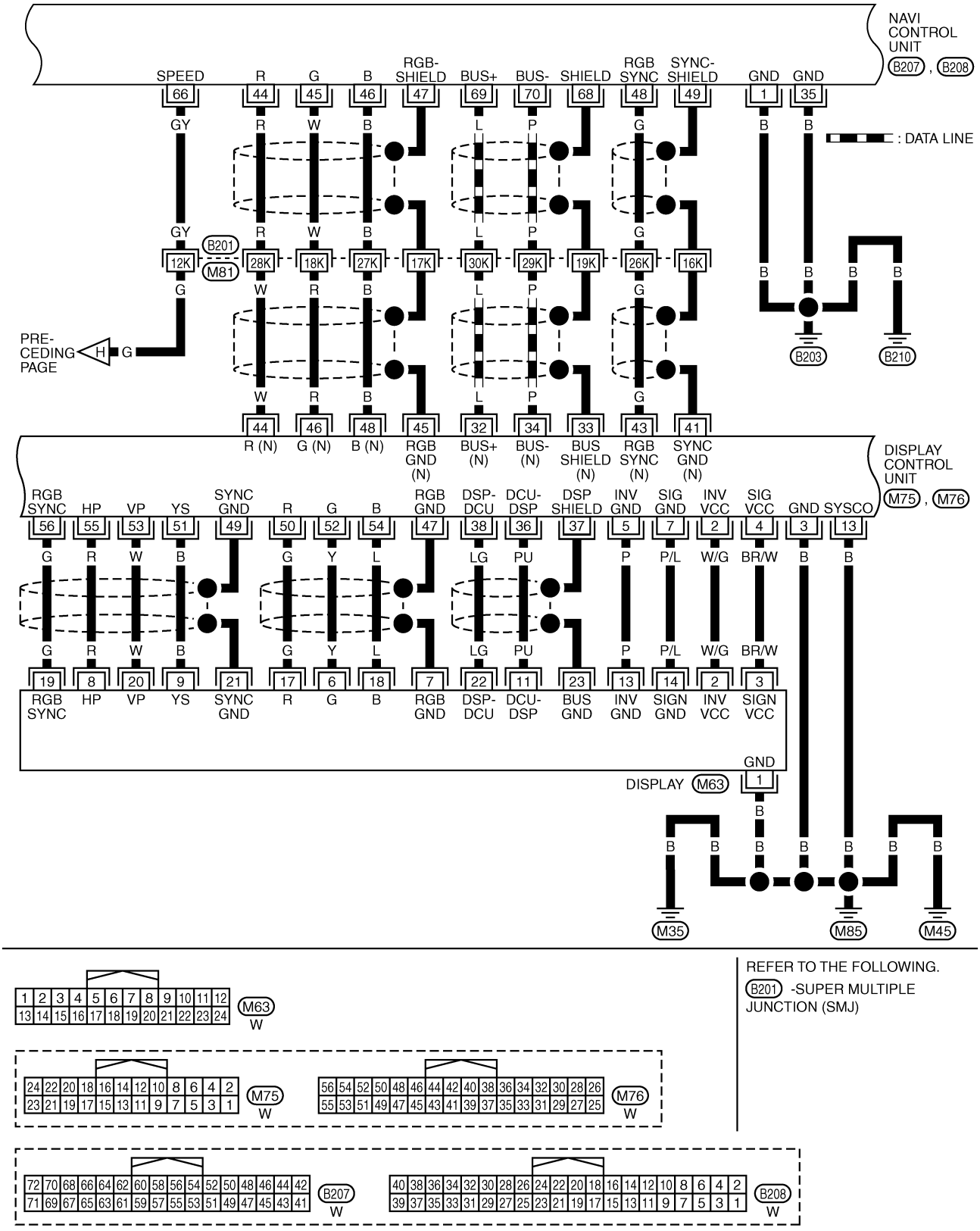


REFER TO THE FOLLOWING.
B201 -SUPER MULTIPLE JUNCTION (SMJ)

TKWM4407E

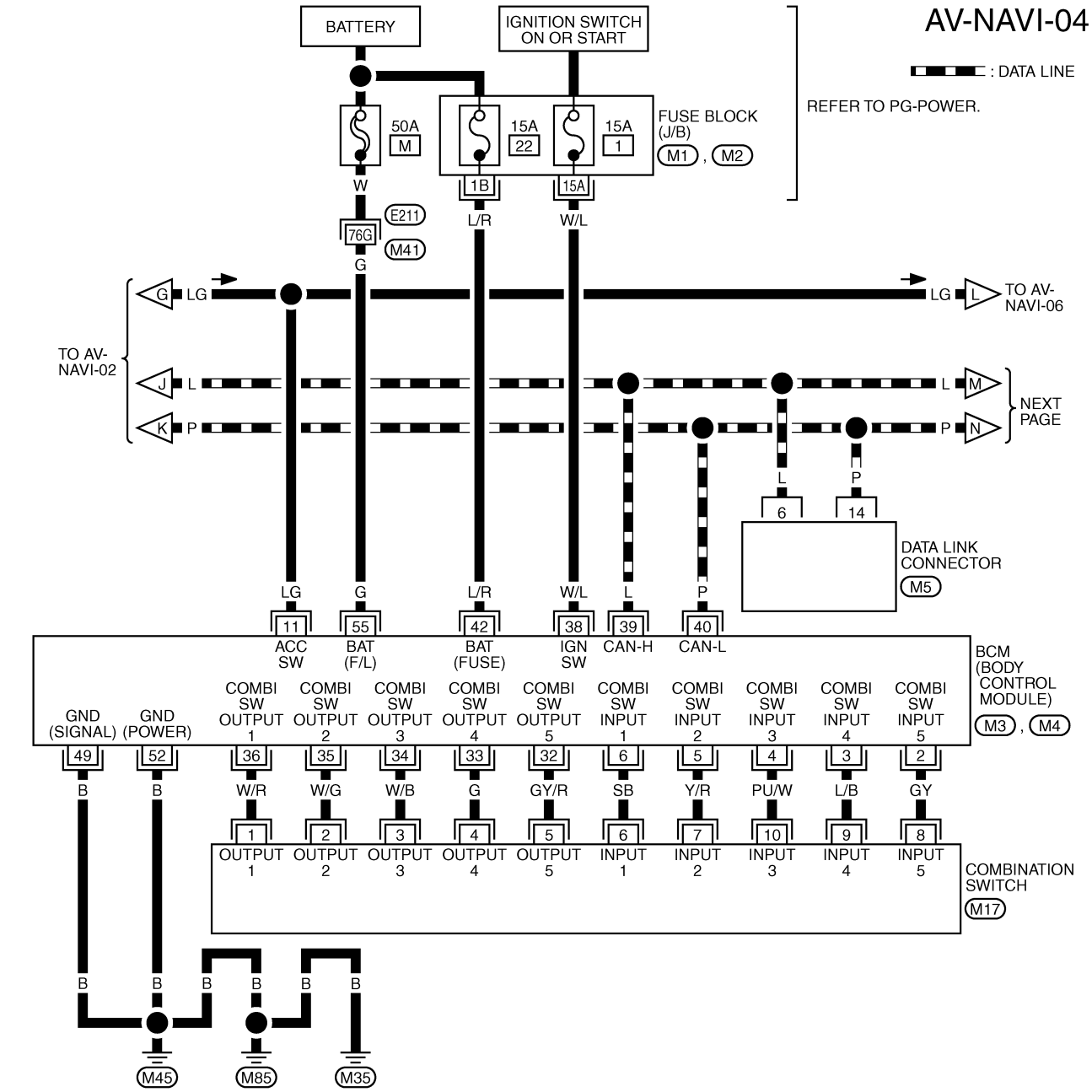


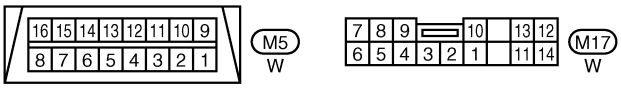


REFER TO THE FOLLOWING.

E211 -SUPER MULTIPLE JUNCTION (SMJ)

M1 , M2 -FUSE BLOCK-JUNCTION BOX (J/B)

M3 , M4 -ELECTRICAL UNITS

TKWM4408E

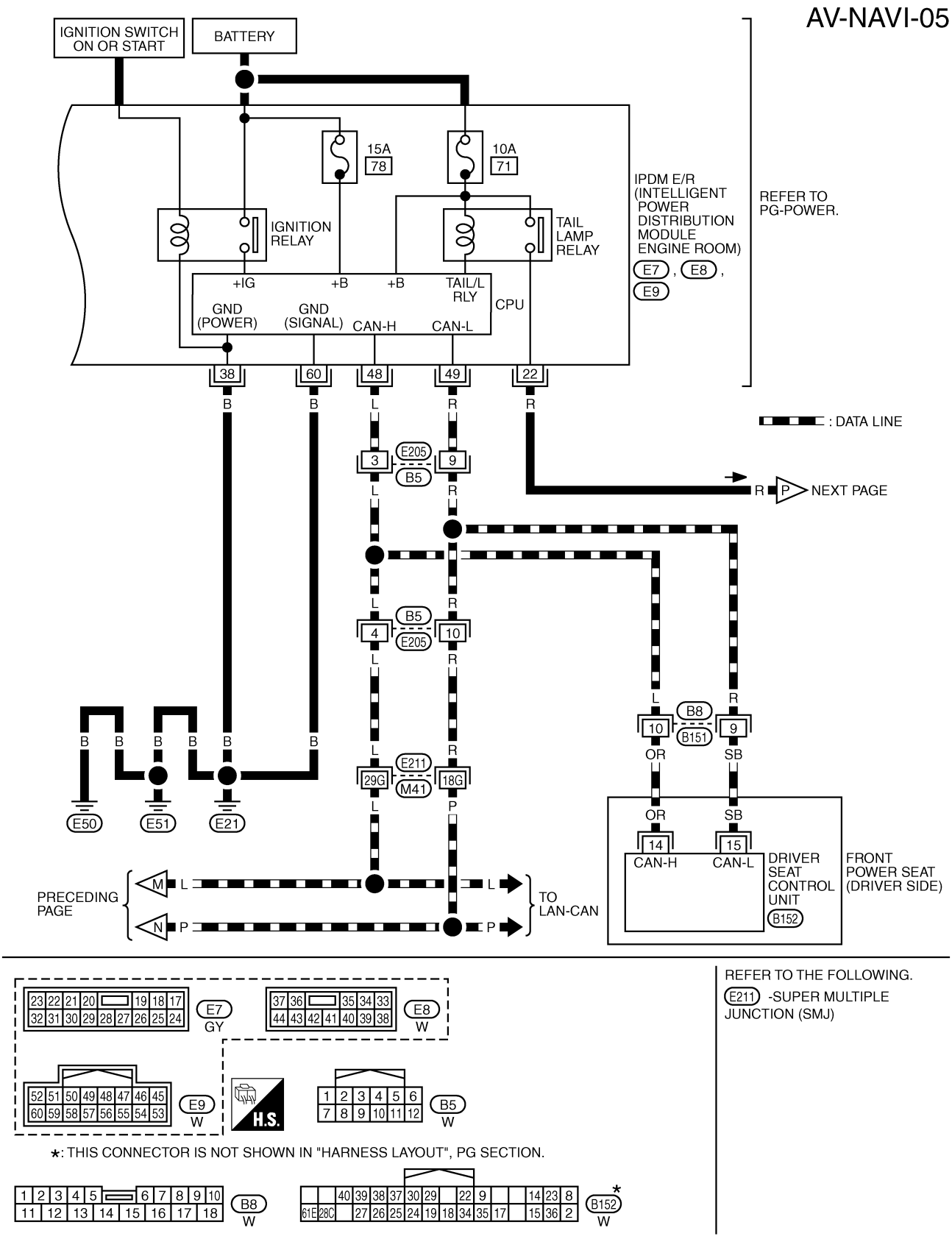
AV-NAVI-05
IGNITION SWITCH ON OR START
BATTERY
15A 78
10A 71
IPDM E/R (INTELLIGENT POWER DISTRIBUTION MODULE ENGINE ROOM)
E7, E8, E9
REFER TO PG-POWER.
IGNITION RELAY
TAIL LAMP RELAY
+IG
+B
+B
TAIL/L RLY
CPU
GND (POWER)
GND (SIGNAL)
CAN-H
CAN-L
38
60
48
49
22
: DATA LINE
E205
B5
NEXT PAGE
B5
E205
E211
M41
29G
18G
B8
B151
10
9
OR
SB
E50
E51
E21
PRECEDING PAGE
TO LAN-CAN
14
15
CAN-H
CAN-L
DRIVER SEAT CONTROL UNIT
B152
FRONT POWER SEAT (DRIVER SIDE)
REFER TO THE FOLLOWING.
E211 -SUPER MULTIPLE JUNCTION (SMJ)
E7 GY
E8 W
E9 W
H.S.
B5 W
*: THIS CONNECTOR IS NOT SHOWN IN "HARNESS LAYOUT", PG SECTION.
B8 W
B152 W
TKWM4409E

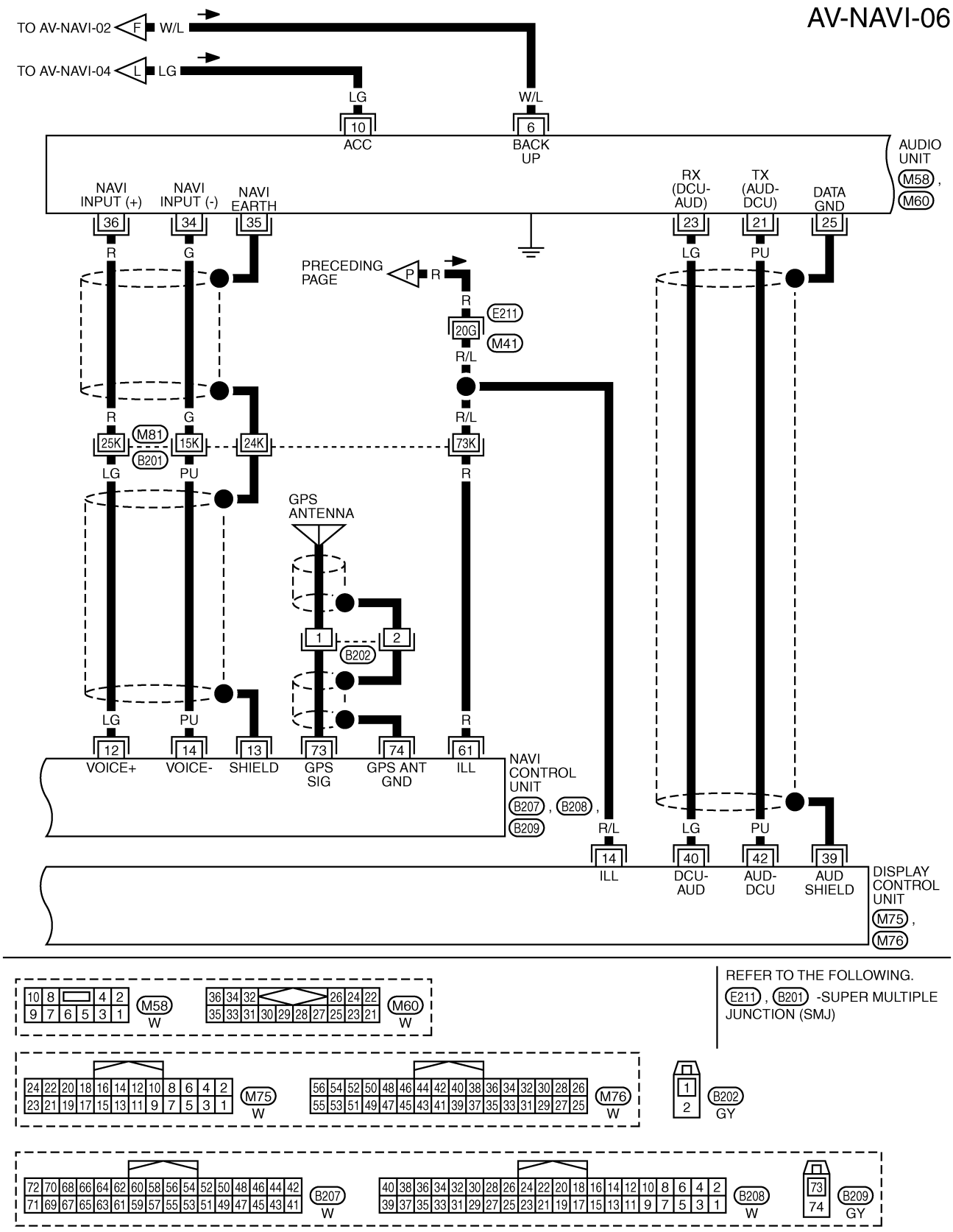
AV-NAVI-06
TO AV-NAVI-02
F
W/L
TO AV-NAVI-04
L
LG
LG
W/L
10
ACC
6
BACK UP
AUDIO UNIT
M58
M60
NAVI INPUT (+)
NAVI INPUT (-)
NAVI EARTH
RX (DCU-AUD)
TX (AUD-DCU)
DATA GND
36
34
35
23
21
25
R
G
LG
PU
PRECEDING PAGE
P
R
E211
20G
M41
R/L
25K
M81
B201
15K
24K
73K
GPS ANTENNA
1
2
B202
12
14
13
73
74
61
VOICE+
VOICE-
SHIELD
GPS SIG
GPS ANT GND
ILL
NAVI CONTROL UNIT
B207
B208
B209
14
40
42
39
ILL
DCU-AUD
AUD-DCU
AUD SHIELD
DISPLAY CONTROL UNIT
M75
M76
REFER TO THE FOLLOWING.
E211 , B201 -SUPER MULTIPLE JUNCTION (SMJ)
M58 W
M60 W
M75 W
M76 W
B202 GY
B207 W
B208 W
B209 GY
TKWM4410E

AV-NAVI-07

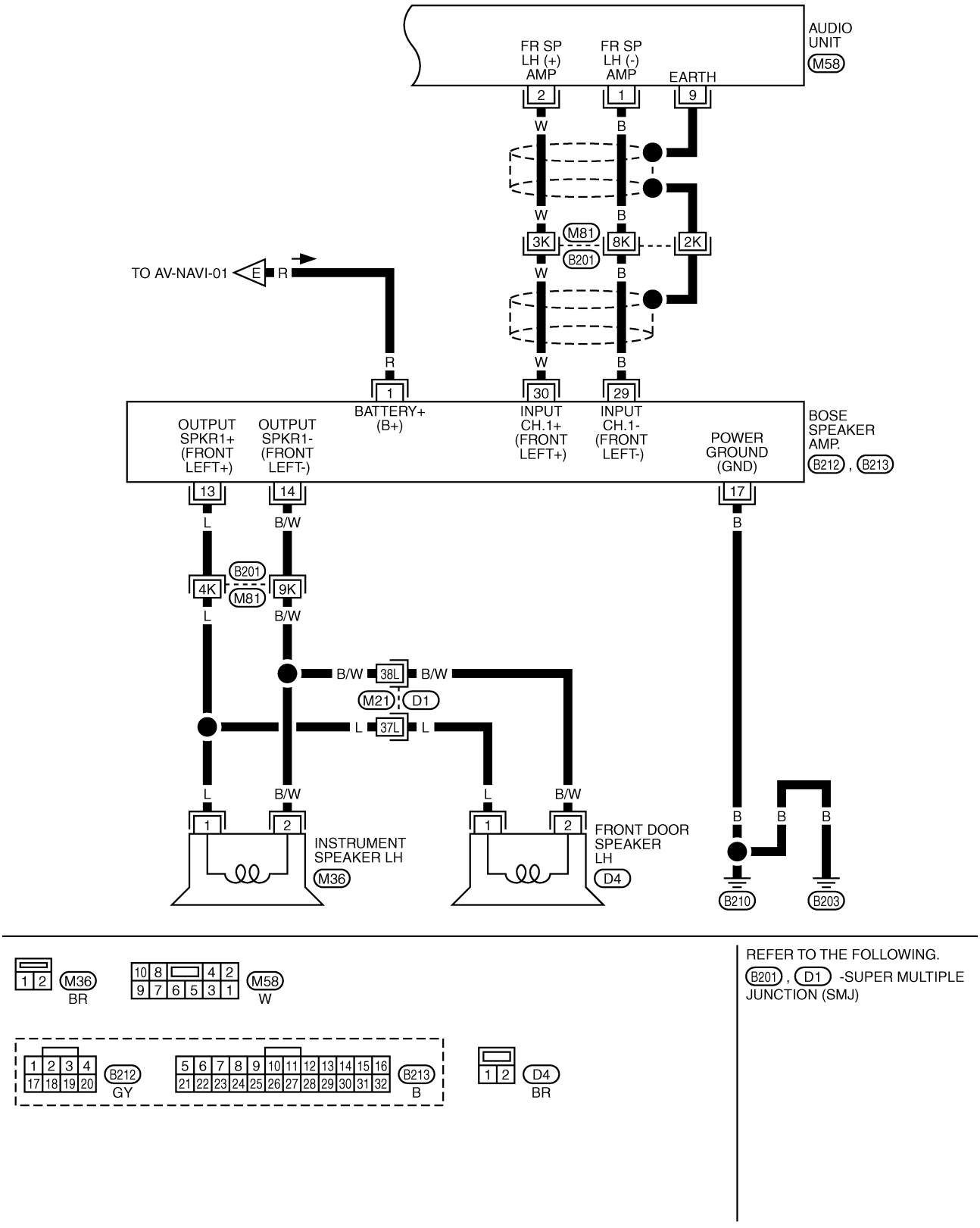
AUDIO UNIT
M58
FR SP LH (+) AMP
FR SP LH (-) AMP
EARTH
2
1
9
W
B
3K
M81
8K
2K
B201
TO AV-NAVI-01
E
R
1
30
29
BATTERY+ (B+)
INPUT CH.1+ (FRONT LEFT+)
INPUT CH.1- (FRONT LEFT-)
OUTPUT SPKR1+ (FRONT LEFT+)
OUTPUT SPKR1- (FRONT LEFT-)
POWER GROUND (GND)
BOSE SPEAKER AMP.
B212 , B213
13
14
17
L
B/W
4K
9K
38L
37L
M21
D1
INSTRUMENT SPEAKER LH
M36
FRONT DOOR SPEAKER LH
D4
B210
B203
M36
BR
M58
W
B212
GY
B213
B
D4
BR
REFER TO THE FOLLOWING.
B201 , D1 -SUPER MULTIPLE JUNCTION (SMJ)
TKWM2086E

## Schematic — COMM —

NKS003K6

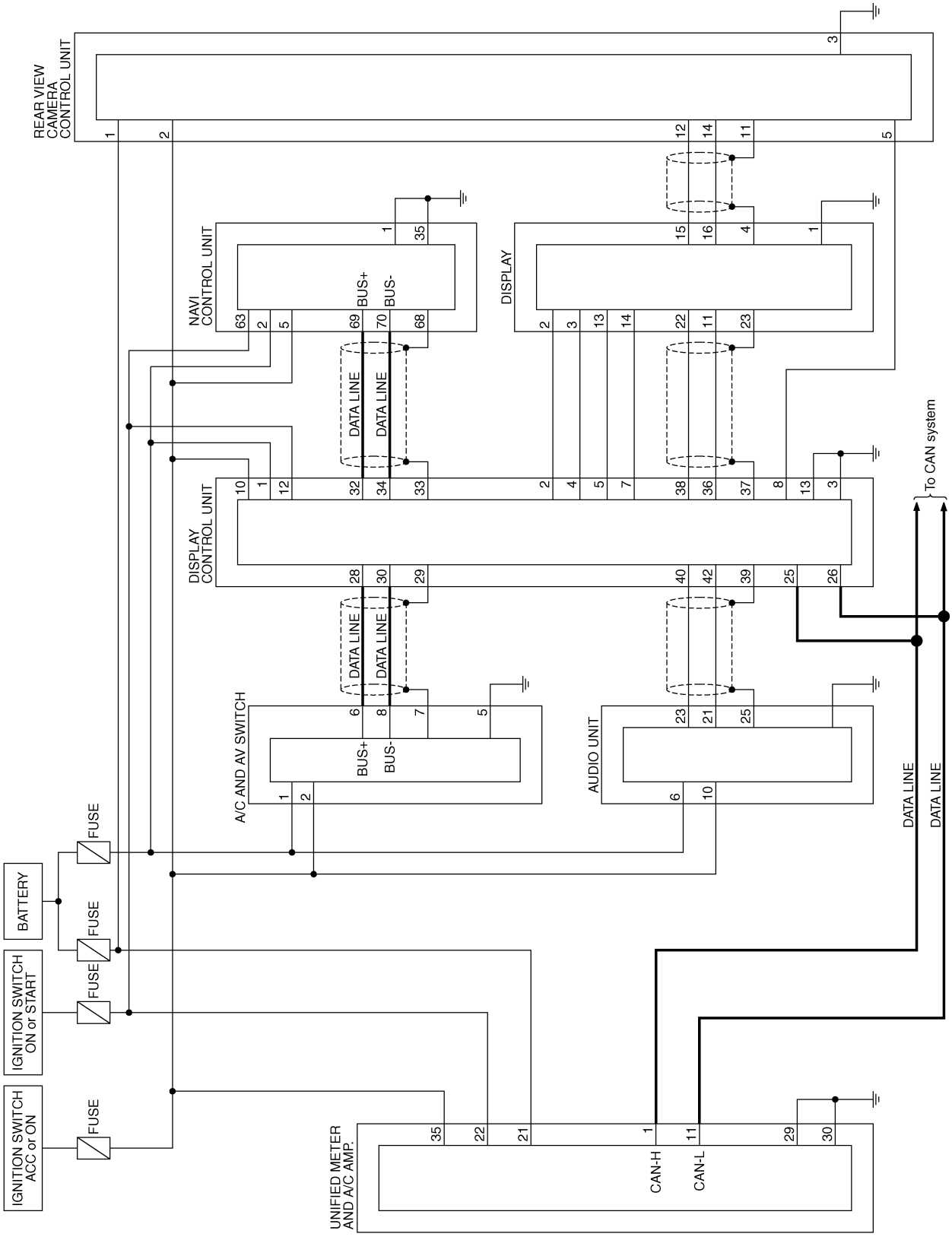


TKWM4418E

## Wiring Diagram — COMM —

NKS003K7

AV-COMM-01

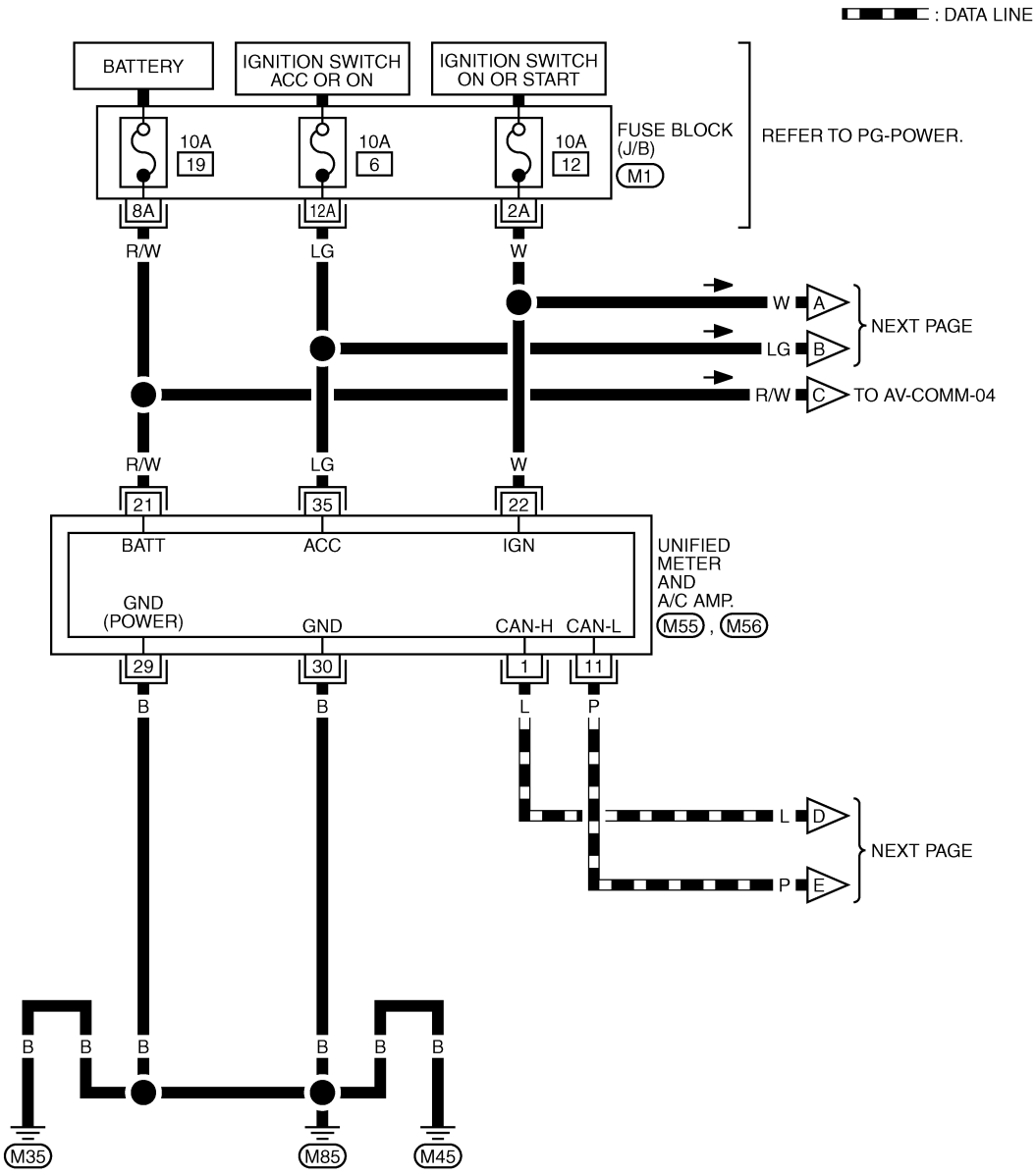


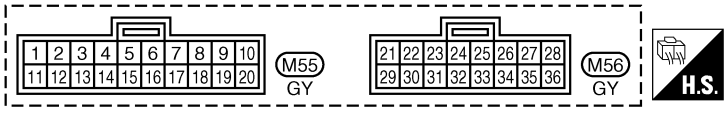


REFER TO THE FOLLOWING.
M1 -FUSE BLOCK-JUNCTION BOX (J/B)

TKWM4419E

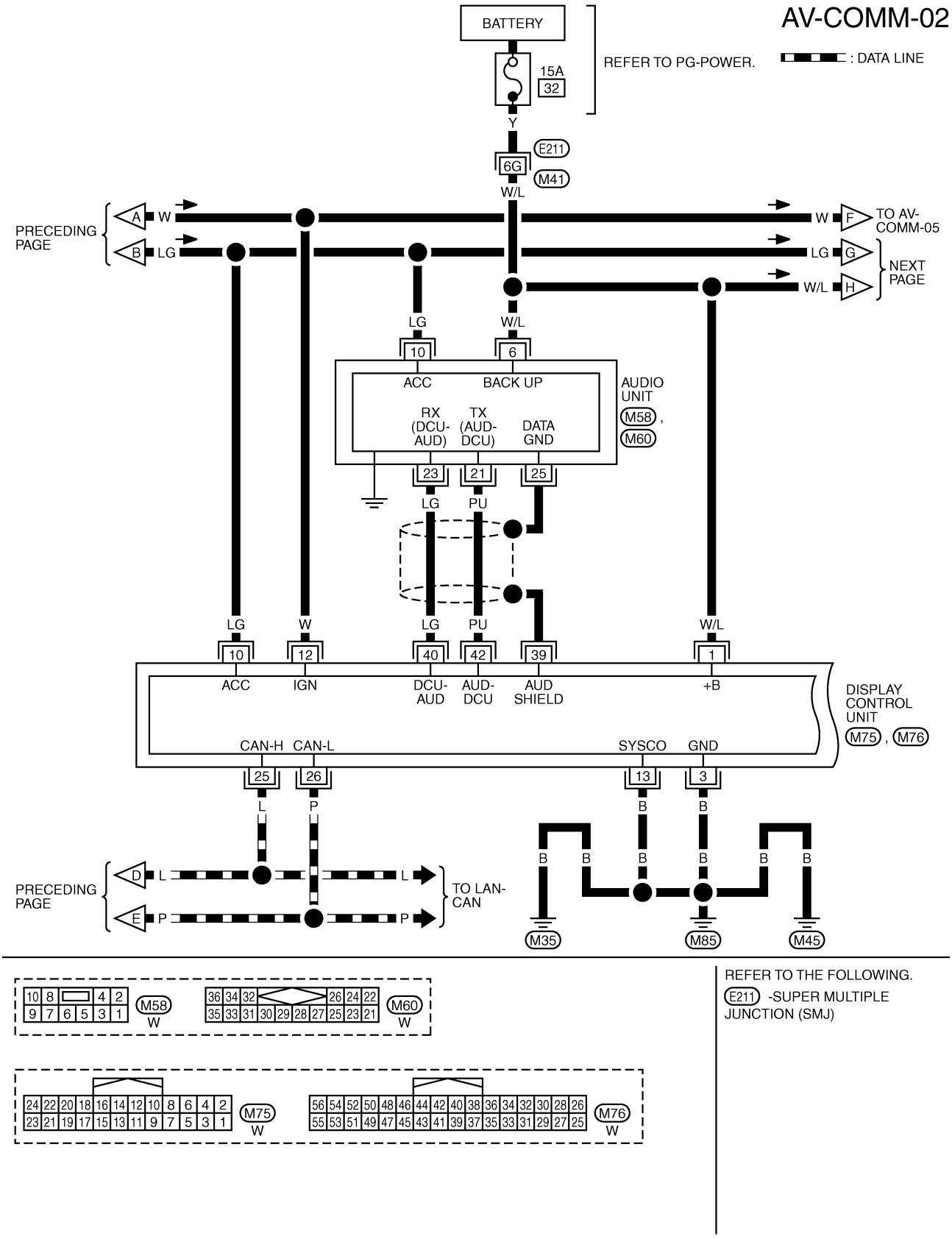
AV-COMM-02
: DATA LINE
BATTERY
REFER TO PG-POWER.
15A
32
Y
E211
6G
M41
W/L
PRECEDING PAGE
A
W
B
LG
W
F
TO AV-COMM-05
LG
G
W/L
H
NEXT PAGE
LG
W/L
10
6
ACC
BACK UP
RX (DCU-AUD)
TX (AUD-DCU)
DATA GND
AUDIO UNIT
M58 , M60
23
21
25
LG
PU
LG
W
LG
PU
W/L
10
12
40
42
39
1
ACC
IGN
DCU-AUD
AUD-DCU
AUD SHIELD
+B
DISPLAY CONTROL UNIT
M75 , M76
CAN-H
CAN-L
SYSCO
GND
25
26
13
3
L
P
B
B
PRECEDING PAGE
D
L
E
P
TO LAN-CAN
M35
M85
M45
M58
W
M60
W
M75
W
M76
W
REFER TO THE FOLLOWING.
E211 -SUPER MULTIPLE JUNCTION (SMJ)
TKWM4420E

AV-COMM-03

: DATA LINE

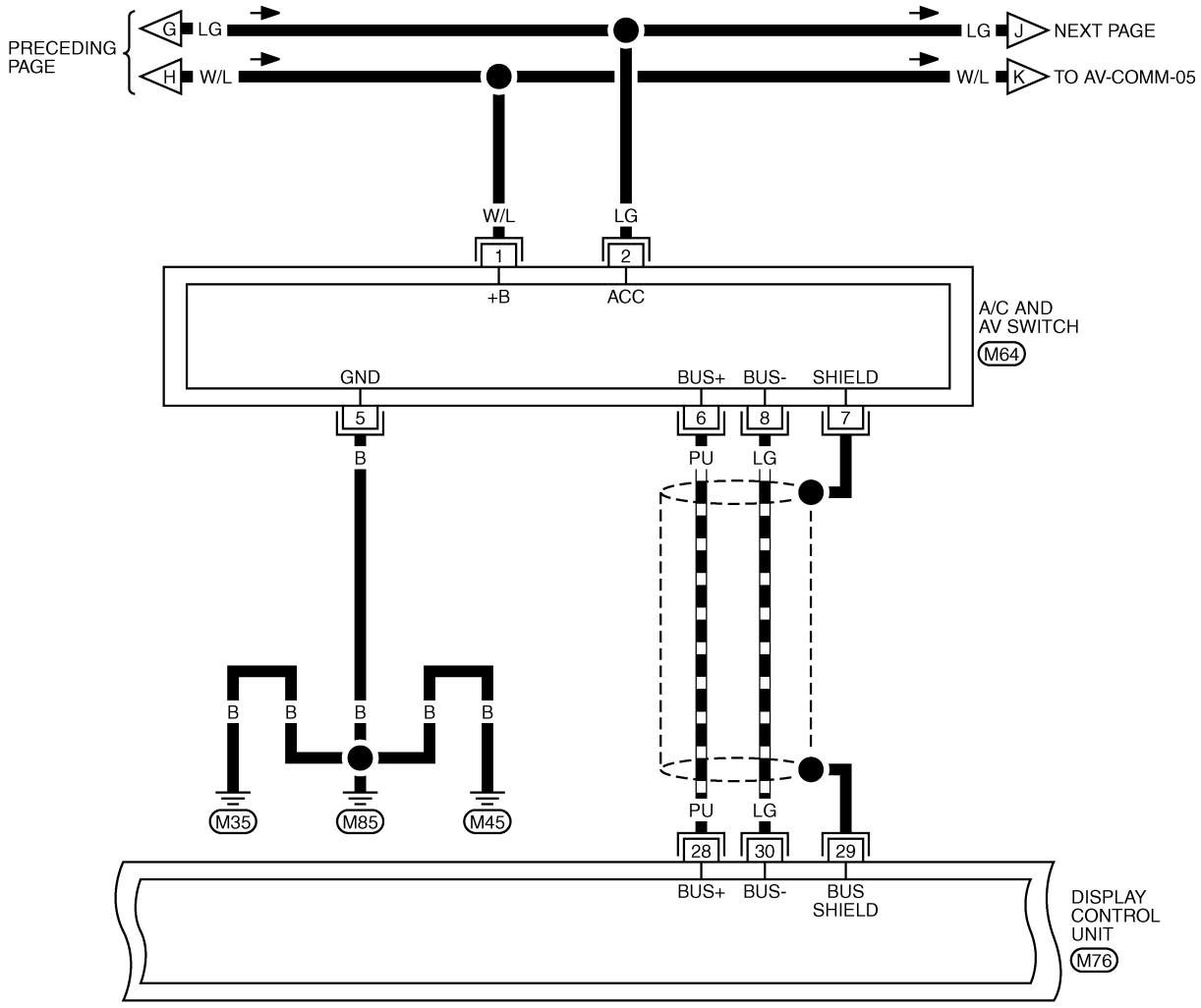


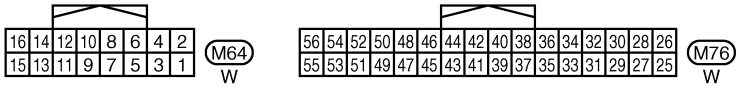


TKWM4421E

AV-COMM-04

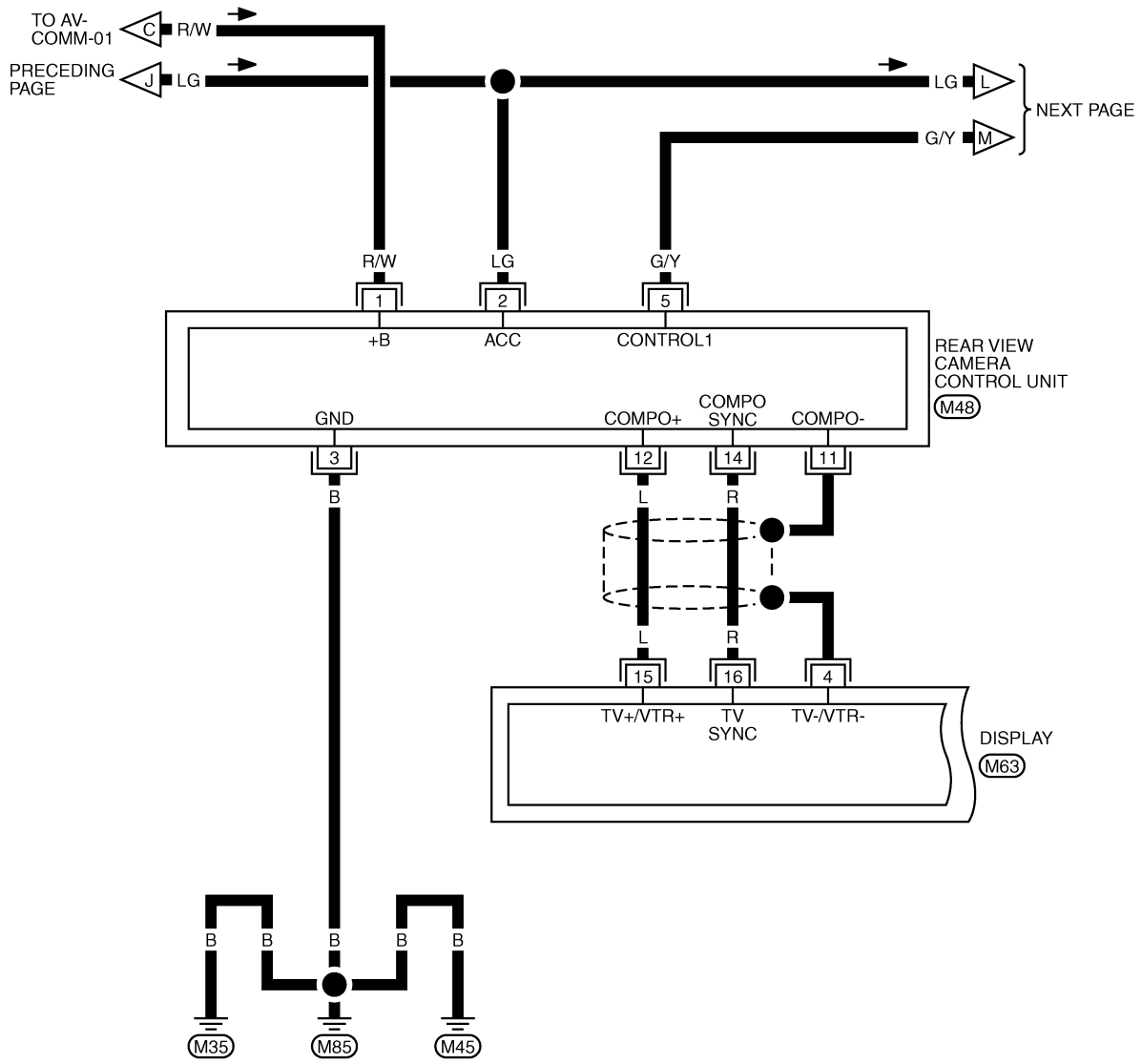


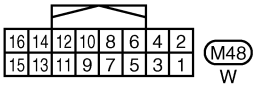


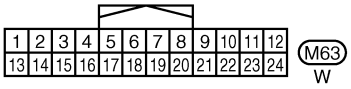


TKWM4422E

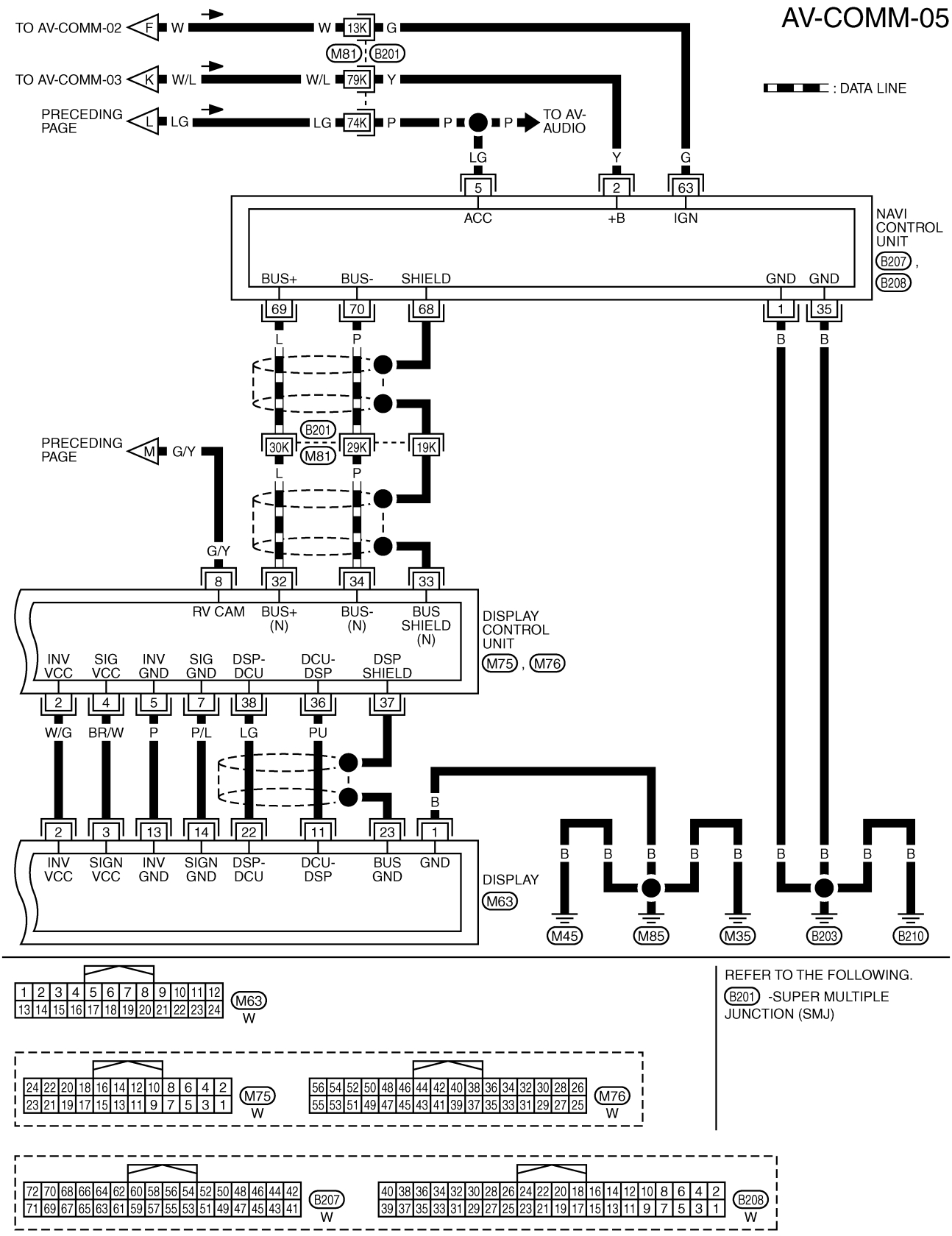
AV-COMM-05
TO AV-COMM-02
F
W
W
13K
G
M81
B201
TO AV-COMM-03
K
W/L
W/L
79K
Y
: DATA LINE
PRECEDING PAGE
L
LG
LG
74K
P
P
P
TO AV-AUDIO
LG
Y
G
5
2
63
ACC
+B
IGN
NAVI CONTROL UNIT
B207 , B208
BUS+
BUS-
SHIELD
GND
GND
69
70
68
1
35
L
P
B
B
PRECEDING PAGE
M
G/Y
B201
30K
M81
29K
19K
L
P
G/Y
8
32
34
33
RV CAM
BUS+ (N)
BUS- (N)
BUS SHIELD (N)
DISPLAY CONTROL UNIT
M75 , M76
INV VCC
SIG VCC
INV GND
SIG GND
DSP-DCU
DCU-DSP
DSP SHIELD
2
4
5
7
38
36
37
W/G
BR/W
P
P/L
LG
PU
B
2
3
13
14
22
11
23
1
INV VCC
SIGN VCC
INV GND
SIGN GND
DSP-DCU
DCU-DSP
BUS GND
GND
DISPLAY
M63
B
B
B
B
B
B
B
B
B
M45
M85
M35
B203
B210
1 2 3 4 5 6 7 8 9 10 11 12
13 14 15 16 17 18 19 20 21 22 23 24
M63
W
24 22 20 18 16 14 12 10 8 6 4 2
23 21 19 17 15 13 11 9 7 5 3 1
M75
W
56 54 52 50 48 46 44 42 40 38 36 34 32 30 28 26
55 53 51 49 47 45 43 41 39 37 35 33 31 29 27 25
M76
W
72 70 68 66 64 62 60 58 56 54 52 50 48 46 44 42
71 69 67 65 63 61 59 57 55 53 51 49 47 45 43 41
B207
W
40 38 36 34 32 30 28 26 24 22 20 18 16 14 12 10 8 6 4 2
39 37 35 33 31 29 27 25 23 21 19 17 15 13 11 9 7 5 3 1
B208
W
REFER TO THE FOLLOWING.
B201 -SUPER MULTIPLE JUNCTION (SMJ)

TKWM4423E

## Terminals and Reference Value for NAVI Control Unit

NKS003K8

| Terminal (Wire color) | | Item | Signal input/ output | Condition | | Reference value |
|---|---|---|---|---|---|---|
| + | – | | | Ignition switch | Operation | |
| 1 (B) | Ground | Ground | — | ON | — | Approx. 0 V |
| 2 (Y) | Ground | Battery power supply | Input | OFF | — | Battery voltage |
| 5 (LG) | Ground | ACC power supply | Input | ACC | — | Battery voltage |
| 12 (LG) | 14 (PU) | Voice guidance signal | Output | ON | Press “GUIDE/VOICE” button | 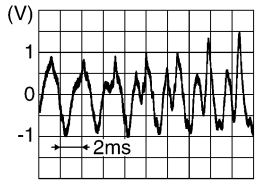  SKIB3609E |
| 13 | — | Shield | — | — | — | — |
| 35 (B) | Ground | Ground | — | ON | — | Approx. 0 V |
| 44 (R) | Ground | RGB signal (R: red) | Output | ON | Start Confirmation/Adjustment (Navigation) mode, and then display color bar by selecting “Color Spectrum bar” on Display Diagnosis screen | 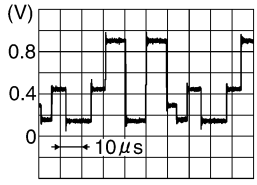  SKIB7360E |
| 45 (W) | Ground | RGB signal (G: green) | Output | ON | Start Confirmation/Adjustment (Navigation) mode, and then display color bar by selecting “Color Spectrum bar” on Display Diagnosis screen | 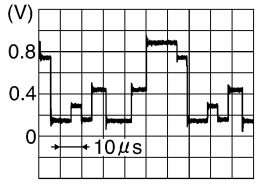  SKIB7361E |
| 46 (B) | Ground | RGB signal (B: blue) | Output | ON | Start Confirmation/Adjustment (Navigation) mode, and then display color bar by selecting “Color Spectrum bar” on Display Diagnosis screen | 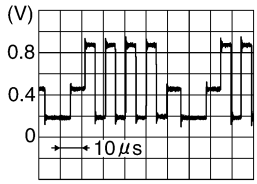  SKIB7362E |
| 47 | — | Shield | — | — | — | — |
| 48 (G) | Ground | RGB synchronizing signal | Output | ON | When displaying RGB image | 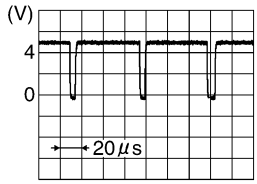  SKIB3603E |
| 49 | — | Shield | — | — | — | — |
| 61 (R) | Ground | Illumination signal | Input | OFF | Lighting switch ON | Approx. 12 V |
| | | | | | Lighting switch OFF | Approx. 0 V |
| 63 (G) | Ground | Ignition signal | Input | ON | — | Battery voltage |
| 65 (OR) | Ground | Reverse signal | Input | ON | Selector lever in R position | Approx. 12 V |
| | | | | | Selector lever except in R position | Approx. 0 V |

| Terminal (Wire color) | | Item | Signal input/ output | Condition | | Reference value |
|---|---|---|---|---|---|---|
| + | – | | | Ignition switch | Operation | |
| 66 (GY) | Ground | Vehicle speed signal (8-pulse) | Input | ON | When vehicle speed is approx. 25 MPH (40 km/h) | **NOTE:** Maximum voltage may be 5 V due to specifications (connected units). 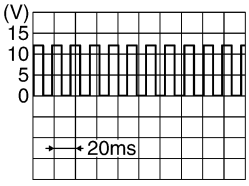  PKIA1935E |
| 68 | — | Shield | — | — | — | — |
| 69 (L) | Ground | Communication signal (+) | Input/ Output | ON | — | 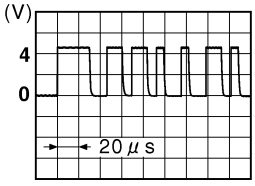  SKIB7378E |
| 70 (P) | Ground | Communication signal (–) | Input/ Output | ON | — | 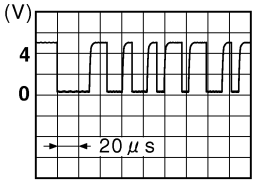  SKIB7379E |
| 73 | Ground | GPS signal | Input | ON | Connector is not connected | Approx. 5 V |
| 74 | — | Shield | — | — | — | — |

## Terminals and Reference Value for Display Control Unit

NKS003K9

| Terminal (Wire color) | | Item | Signal input/ output | Condition | | Reference value |
|---|---|---|---|---|---|---|
| + | – | | | Ignition switch | Operation | |
| 1 (W/L) | Ground | Battery power supply | Input | OFF | — | Battery voltage |
| 2 (W/G) | Ground | Power supply (Inverter) | Output | ON | — | Approx. 9 V |
| 3 (B) | Ground | Ground | — | ON | — | Approx. 0 V |
| 4 (BR/W) | Ground | Power supply (Signal) | Output | ON | — | Approx. 9 V |
| 5 (P) | Ground | Ground (Inverter) | — | ON | — | Approx. 0 V |
| 6 (OR) | Ground | Reverse signal | Input | ON | Selector lever in R position | Approx. 12 V |
| | | | | | Selector lever except in R position | Approx. 0 V |
| 7 (P/L) | Ground | Ground (Signal) | — | ON | — | Approx. 0 V |
| 10 (LG) | Ground | ACC power supply | Input | ACC | — | Battery voltage |
| 12 (W) | Ground | Ignition signal | Input | ON | — | Battery voltage |
| 13 (B) | Ground | Ground | — | ON | — | Approx. 0 V |
| 14 (R/L) | Ground | Illumination signal | Input | OFF | Lighting switch ON | Approx. 12 V |
| | | | | | Lighting switch OFF | Approx. 0 V |
| 16 (G) | Ground | Vehicle speed signal (8-pulse) | Input | ON | When vehicle speed is approx. 25 MPH (40 km/h) | **NOTE:** Maximum voltage may be 5 V due to specifications (connected units). 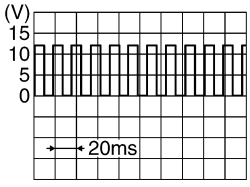  PKIA1935E |
| 25 (L) | — | CAN-H | — | — | — | — |
| 26 (P) | — | CAN-L | — | — | — | — |
| 28 (PU) | Ground | Communication signal (+) | Input/ Output | ON | — | 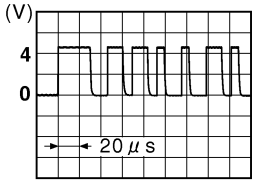  SKIB7378E |
| 29 | — | Shield | — | — | — | — |
| 30 (LG) | Ground | Communication signal (–) | Input/ Output | ON | — | 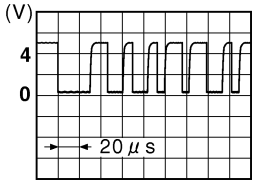  SKIB7379E |

| Terminal (Wire color) | | Item | Signal input/ output | Condition | | Reference value |
|---|---|---|---|---|---|---|
| + | – | | | Ignition switch | Operation | |
| 32 (L) | Ground | Communication signal (+) | Input/ Output | ON | — | 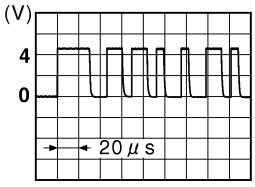  SKIB7378E |
| 33 | — | Shield | — | — | — | — |
| 34 (P) | Ground | Communication signal (–) | Input/ Output | ON | — | 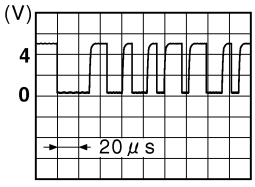  SKIB7379E |
| 36 (PU) | Ground | Communication signal (DCU-DSP) | Output | ON | — | 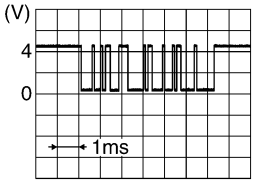  SKIB3607E |
| 37 | — | Shield | — | — | — | — |
| 38 (LG) | Ground | Communication signal (DSP-DCU) | Input | ON | — | 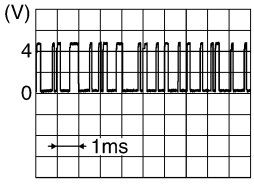  SKIB3606E |
| 39 | — | Shield | — | — | — | — |
| 40 (LG) | Ground | Communication signal (DCU-AUD) | Output | ON | Operate audio volume switch | 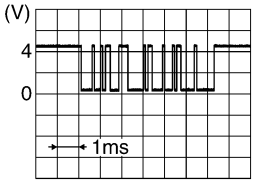  SKIB3607E |
| 41 | — | Shield | — | — | — | — |
| 42 (PU) | Ground | Communication signal (AUD-DCU) | Input | ON | Operate audio volume switch | 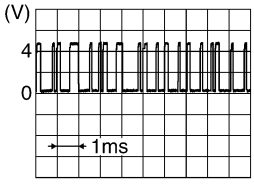  SKIB3606E |

| Terminal (Wire color) | | Item | Signal input/ output | Condition | | Reference value |
|---|---|---|---|---|---|---|
| + | – | | | Ignition switch | Operation | |
| 43 (G) | Ground | RGB synchronizing signal | Input | ON | When displaying RGB image | 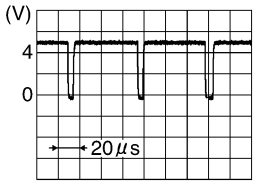  SKIB3603E |
| 44 (W) | Ground | RGB signal (R: red) | Input | ON | Start Confirmation/Adjustment (Navigation) mode, and then display color bar by selecting “Color Spectrum bar” on Display Diagnosis screen | 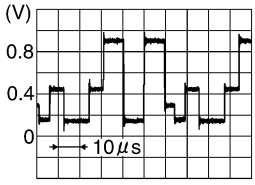  SKIB7360E |
| 45 | — | Shield | — | — | — | — |
| 46 (R) | Ground | RGB signal (G: green) | Input | ON | Start Confirmation/Adjustment (Navigation) mode, and then display color bar by selecting “Color Spectrum bar” on Display Diagnosis screen | 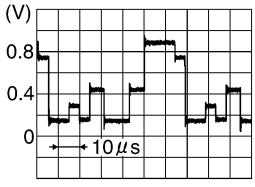  SKIB7361E |
| 47 | — | Shield | — | — | — | — |
| 48 (B) | Ground | RGB signal (B: blue) | Input | ON | Start Confirmation/Adjustment (Navigation) mode, and then display color bar by selecting “Color Spectrum bar” on Display Diagnosis screen | 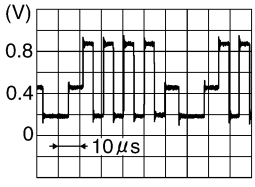  SKIB7362E |
| 49 | — | Shield | — | — | — | — |
| 50 (G) | Ground | RGB signal (R: red) | Output | ON | Start Confirmation/Adjustment mode, and then display color bar by selecting “Display Color Spectrum Bar” on Display Diagnosis screen | 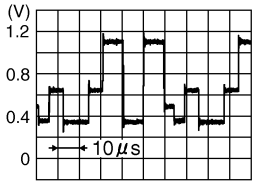  SKIB7769E |
| 51 (B) | Ground | RGB area (YS) signal | Output | ON | Set the selector lever in R position, and then display the rear view image | 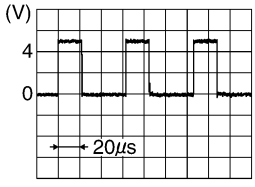  SKIB3599E |

| Terminal (Wire color) | | Item | Signal input/ output | Condition | | Reference value |
|---|---|---|---|---|---|---|
| + | – | | | Ignition switch | Operation | |
| 52 (Y) | Ground | RGB signal (G: green) | Output | ON | Start Confirmation/Adjustment mode, and then display color bar by selecting “Display Color Spectrum Bar” on Display Diagnosis screen | 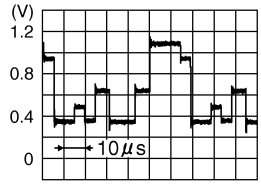  SKIB7770E |
| 53 (W) | Ground | Vertical synchronizing (VP) signal | Input | ON | — | 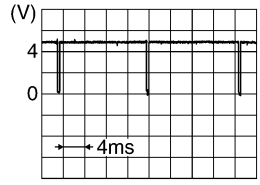  SKIB3598E |
| 54 (L) | Ground | RGB signal (B: blue) | Output | ON | Start Confirmation/Adjustment mode, and then display color bar by selecting “Display Color Spectrum Bar” on Display Diagnosis screen | 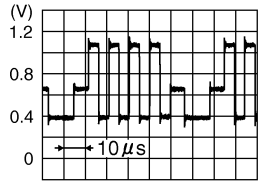  SKIB7771E |
| 55 (R) | Ground | Horizontal synchronizing (HP) signal | Input | ON | — | 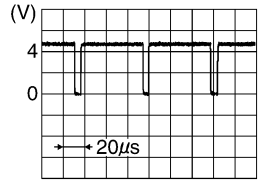  SKIB3601E |
| 56 (G) | Ground | RGB synchronizing signal | Output | ON | When displaying RGB image | 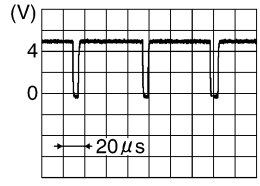  SKIB3603E |

## Terminals and Reference Value for Display

NKS003KA

| Terminal (Wire color) | | Item | Signal input/ output | Condition | | Reference value |
|---|---|---|---|---|---|---|
| + | – | | | Ignition switch | Operation | |
| 1 (B) | Ground | Ground | — | ON | — | Approx. 0 V |
| 2 (W/G) | Ground | Power supply (Inverter) | Input | ON | — | Approx. 9 V |
| 3 (BR/W) | Ground | Power supply (Signal) | Input | ON | — | Approx. 9 V |
| 6 (Y) | Ground | RGB signal (G: green) | Input | ON | Start Confirmation/Adjustment mode, and then display color bar by selecting “Display Color Spectrum Bar” on Display Diagnosis screen | 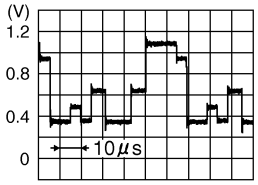  SKIB7770E |
| 7 | — | Shield | — | — | — | — |
| 8 (R) | Ground | Horizontal synchronizing (HP) signal | Output | ON | — | 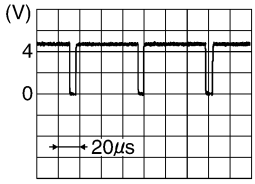  SKIB3601E |
| 9 (B) | Ground | RGB area (YS) signal | Input | ON | Set the selector lever in R position, and then display the rear view image | 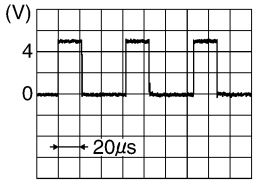  SKIB3599E |
| 11 (PU) | Ground | Communication signal (DCU-DSP) | Input | ON | — | 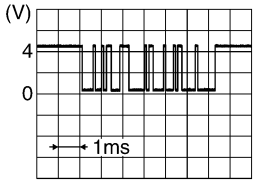  SKIB3607E |
| 13 (P) | Ground | Ground (Inverter) | — | ON | — | Approx. 0 V |
| 14 (P/L) | Ground | Ground (Signal) | — | ON | — | Approx. 0 V |
| 17 (G) | Ground | RGB signal (R: red) | Input | ON | Start Confirmation/Adjustment mode, and then display color bar by selecting “Display Color Spectrum Bar” on Display Diagnosis screen | 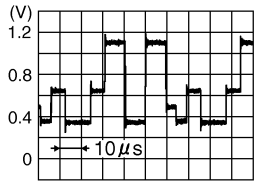  SKIB7769E |
| 18 (L) | Ground | RGB signal (B: blue) | Input | ON | Start Confirmation/Adjustment mode, and then display color bar by selecting “Display Color Spectrum Bar” on Display Diagnosis screen | 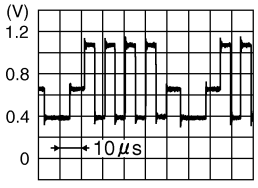  SKIB7771E |

| Terminal (Wire color) | | Item | Signal input/ output | Condition | | Reference value |
|---|---|---|---|---|---|---|
| + | – | | | Ignition switch | Operation | |
| 19 (G) | Ground | RGB synchronizing signal | Input | ON | When displaying RGB image | 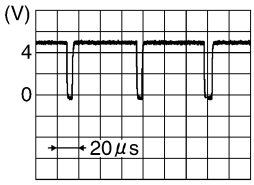  SKIB3603E |
| 20 (W) | Ground | Vertical synchronizing (VP) signal | Output | ON | — | 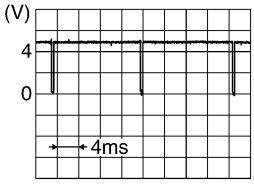  SKIB3598E |
| 21 | — | Shield | — | — | — | — |
| 22 (LG) | Ground | Communication signal (DSP-DCU) | Output | ON | — | 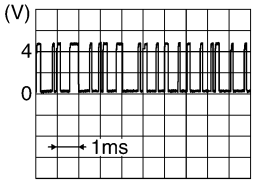  SKIB3606E |
| 23 | — | Shield | — | — | — | — |

## Terminals and Reference Value for A/C and AV Switch

NKS003KB

| Terminal (Wire color) | | Item | Signal input/ output | Condition | | Reference value |
|---|---|---|---|---|---|---|
| + | – | | | Ignition switch | Operation | |
| 1 (W/L) | Ground | Battery power supply | Input | OFF | — | Battery voltage |
| 2 (LG) | Ground | ACC power supply | Input | ACC | — | Battery voltage |
| 5 (B) | Ground | Ground | — | ON | — | Approx. 0 V |
| 6 (PU) | Ground | Communication signal (+) | Input/ Output | ON | — | 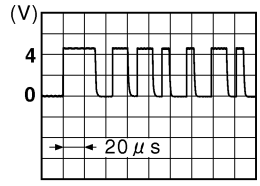  SKIB7378E |
| 7 | — | Shield | — | — | — | — |
| 8 (LG) | Ground | Communication signal (–) | Input/ Output | ON | — | 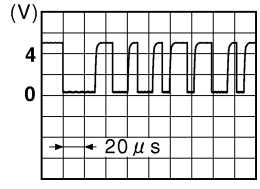  SKIB7379E |

## Special Note for Trouble Diagnosis

NKS003KD

Prior to performing trouble diagnosis, make sure there are no corresponding description in the “Example of Symptoms Possible No Malfunction”. Refer to AV-152, "Example of Symptoms Possible No Malfunction" .

## On Board Self-Diagnosis Function

NKS003KE

### DESCRIPTION

- Trouble diagnosis function of navigation system has a Self Diagnosis mode by automatic operation and a Confirmation/Adjustment mode by manual operation.
- Self Diagnosis mode checks for connections between the units constituting this system, analyzes each individual unit at the same time, and displays the results on the display.
- Confirmation/Adjustment mode displays trouble diagnosis that require an operation and a judgment by a human (auto-decision cannot be performed by the system), confirmation of preset value, and an error history.

### DIAGNOSIS ITEM

| Mode | | | | Description |
|---|---|---|---|---|
| Self Diagnosis (DCU) | | | | ● Display control unit diagnosis<br>● Analyzes connection between the display control unit and each unit, and operation of each unit. |
| Self Diagnosis (NAVI) | | | | ● NAVI control unit diagnosis (DVD-ROM drive will not be diagnosed when no DVD-ROM is in it.).<br>● Analyzes connection between the NAVI control unit and the GPS antenna. |
| Confirmation/ Adjustment | Display Diagnosis | | | Color tone and shading of the display control unit-generated image can be checked by the display of a color bar and a gray scale. |
| | Vehicle Signals | | | Diagnosis of signals that are input to display control unit can be performed for Vehicle Speed, IGN, Reverse and Light. |
| | Auto Climate Control | | | Refer to ATC-52, "Self-diagnosis Function" . |
| | Navigation | Display Diagnosis | | Color tone and shading of the NAVI control unit-generated image can be checked by the display of a color bar and a gray scale. |
| | | Vehicle Signals | | Diagnosis of signals that are input to NAVI control unit can be performed for Vehicle speed, Lights, Ignition and Reverse. |
| | | Navigation | Steering Angle Adjustment | This mode is used to correct difference between actual turning angle of a vehicle and turning angle of the vehicle mark on the display. |
| | | | Speed Calibration | Under ordinary conditions, the navigation system distance measuring function will automatically compensate for minute decreases in wheel and tire diameter caused by tire wear or low-pressure. Speed Calibration can immediately restore system accuracy in cases such as when distance calibration is needed because of the use of tire chains. |
| | | Error History | | Malfunctions that occurred in the past are displayed, along with the number of times each has occurred. Time and location when/where the errors occurred are also displayed. |
| | | Delete Unit Connection Log | | Erase the connection history of unit and error history. |
| CAN DIAG SUPPOPT MONITOR | | | | The transmitting/receiving of CAN communication can be monitored. |

## Self-Diagnosis Mode (DCU)

NKS003KF

### OPERATION PROCEDURE

1. Start the engine.
2. Turn the audio system OFF.
3. While pressing the “4” button, turn the volume control dial clockwise or counterclockwise for 30 clicks or more. (When the self-diagnosis mode is started, a short beep will be heard.)
   - Shifting from current screen to previous screen is performed by pressing “BACK” button.

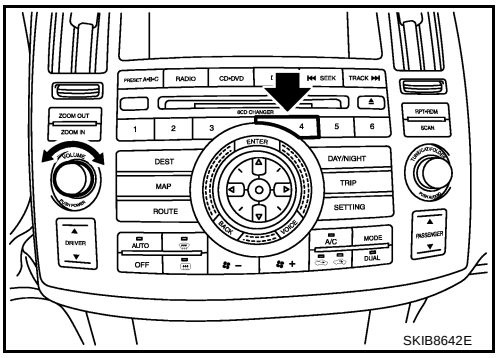

SKIB8642E

4. The initial trouble diagnosis screen will be shown, and items “Self Diagnosis (DCU)”, “Self Diagnosis (NAVI)”, “Confirmation/Adjustment” and “CAN DIAG SUPPORT MONITOR” will become selective.

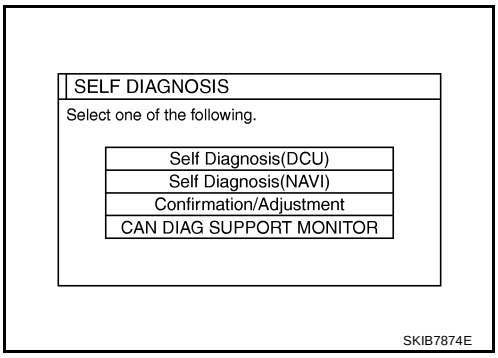

SKIB7874E

5. Perform self-diagnosis by selecting the “Self Diagnosis (DCU)”.
   - Self-diagnosis screen is displayed, and then self-diagnosis starts.
   - The bar graph visible below self-diagnosis screen displays progress of the diagnosis.

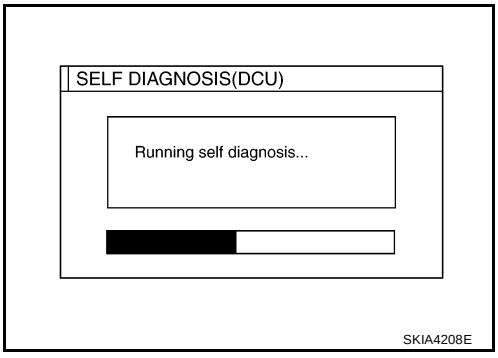

SKIA4208E

6. When the self-diagnosis completes, optional part confirmation screen will be shown.
   - When connection of an optional part is judged error, a screen to check if the optional part is actually fitted on the vehicle or not will be shown. When fitted, select the switch of the part on the screen and press “End”. Then the “SELF DIAGNOSIS” screen will be shown.
   - When the optional part is connected normally, the switch for the part will not appear on the screen.

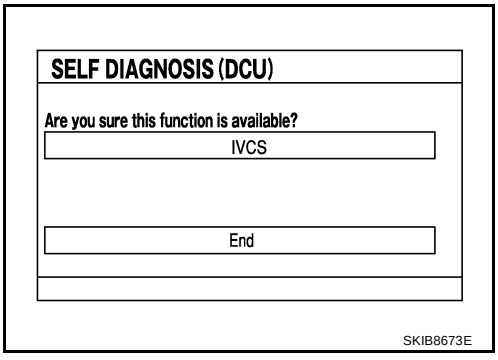

SKIB8673E

7. On the diagnosis results screen, each unit name and connection line will be colored according to the diagnosis result, as follows.

   **Green : No malfunctioning.**

   **Gray : Cannot be judged by self-diagnosis results.**

   **Red : Unit is malfunctioning.**

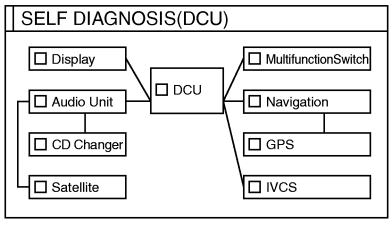

SKIB7875E

**NOTE:**
- Satellite = Satellite radio tuner
- DCU = Display control unit
- Multifunction switch = A/C and AV switch
- Navigation = NAVI control unit
- GPS = GPS antenna
- If multiple malfunctions occur at the same time for a single unit, the screen switch colors are determined according to the following order of priority: red > yellow > gray.

8. Select a switch on the diagnosis results screen, and comments for the diagnosis results will be shown.

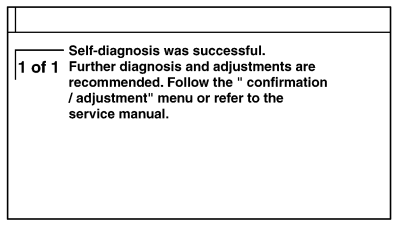

SKIA4211E

## SELF-DIAGNOSIS RESULT

### Quick Reference Table

1. Select the applicable diagnosis number in the quick reference table of diagnosis result.
2. Confirm the possible malfunction with the diagnosis table, and then perform inspection.
3. Turn ignition switch OFF and perform self-diagnosis again.

| Switch color | Screen switch | | | | | | Diagnosis No. |
|---|---|---|---|---|---|---|---|
| | DCU | Display | Audio Unit | Navigation | GPS | Satellite | |
| Red | × | | | | | | 1 |
| Gray | | × | | | | | 2 |
| | | | × | | | × | 3 |
| | | | | × | × | | 4 |
| | | | | | × | | 5 |
| | | | | | | × | 6 |

- When A/C and AV switch has a malfunction, the self-diagnosis cannot be started. Refer to AV-137, "A/C and AV Switch Self-Diagnosis Function" .
- When display has a malfunction, the self-diagnosis cannot be started. Refer to AV-141, "All Images Are Not Displayed" .

## Self-Diagnosis Codes

| Diagnosis No. | Possible cause | Action to take |
|---|---|---|
| 1 | Display control unit malfunction is detected. | Replace display control unit. |
| 2 | Malfunction is detected on communication signal between display control unit and display. | 1. Check communication circuit between display control unit and display.<br>2. Check communication signal between display control unit and display.<br>3. If the results from the above checkup show no malfunction, replace either display control unit or display, and then start self-diagnosis.<br>4. If self-diagnosis results still show any malfunction, replace the other unit. |
| 3 | ● Audio unit power supply circuit malfunction is detected.<br>● Malfunction is detected on communication signal between display control unit and audio unit. | 1. Check audio unit power supply circuit.<br>2. Check communication circuit between display control unit and audio unit.<br>3. Check communication signal between display control unit and audio unit.<br>4. If the results from the above checkup show no malfunction, replace either display control unit or audio unit, and then start self-diagnosis.<br>5. If self-diagnosis results still show any malfunction, replace the other unit. |
| 4 | ● NAVI control unit power supply and ground circuit malfunction is detected.<br>● Malfunction is detected on communication signal between display control unit and NAVI control unit. | 1. Check NAVI control unit power supply and ground circuit.<br>2. Check communication circuit between display control unit and NAVI control unit.<br>3. If the results from the above checkup show no malfunction, replace either display control unit or NAVI control unit, and then start self-diagnosis.<br>4. If self-diagnosis results still show any malfunction, replace the other unit. |
| 5 | GPS antenna connection malfunction is detected. | 1. Check if GPS antenna feeder line is snapped or pinched.<br>2. If the results from the above checkup show no malfunction, replace GPS antenna, and then restart self-diagnosis.<br>3. If self-diagnosis results still show any malfunction, replace NAVI control unit. |
| 6 | ● Satellite radio tuner power supply and ground circuit malfunction is detected.<br>● Malfunction is detected on communication signal between audio unit and satellite radio tuner. | 1. Check satellite radio tuner power supply and ground circuit.<br>2. Check communication circuit between audio unit and satellite radio tuner.<br>3. Check communication signal between audio unit and satellite radio tuner.<br>4. If the results from the above checkup show no malfunction, replace either audio unit or satellite radio tuner, and then start self-diagnosis.<br>5. If self-diagnosis results still show any malfunction, replace the other unit. |

## Self-Diagnosis Mode (NAVI)

NKS003KG

### OPERATION PROCEDURE

1. Start the engine.
2. Turn the audio system OFF.
3. While pressing the “4” button, turn the volume control dial clockwise or counterclockwise for 30 clicks or more. (When the self-diagnosis mode is started, a short beep will be heard.)
   - Shifting from current screen to previous screen is performed by pressing “BACK” button.

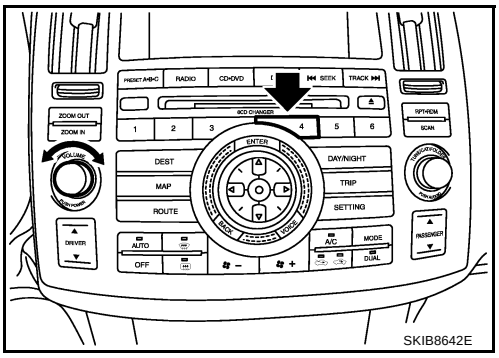


SKIB8642E

4. The initial trouble diagnosis screen will be shown, and items “Self Diagnosis (DCU)”, “Self Diagnosis (NAVI)”, “Confirmation/Adjustment” and “CAN DIAG SUPPORT MONITOR” will become selective.

   **NOTE:**
   Select “Self Diagnosis (DCU)” when “Self Diagnosis (NAVI)” is not available. Repair malfunctioning part.

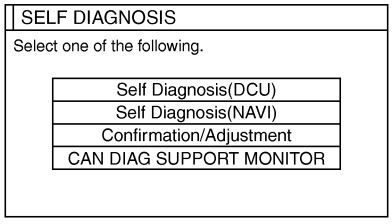


SKIB7874E

5. Perform self-diagnosis by selecting the “Self Diagnosis (NAVI)”.
   - Self-diagnosis screen is displayed, and then self-diagnosis starts.
   - The bar graph visible below self-diagnosis screen displays progress of the diagnosis.

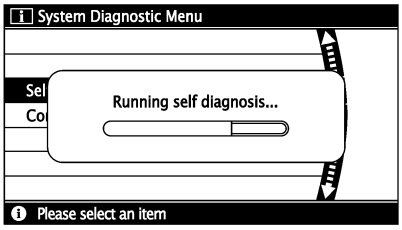


SKIB6972E

6. On the diagnosis results screen, each unit name and connection line will be colored according to the diagnosis result, as follows.

| Diagnosis results | Unit | Connection line |
|---|---|---|
| Normal | Green | Green |
| Connection malfunction | Gray | Yellow |
| DVD-ROM drive undiagnosed | Gray | Green |
| DVD-ROM and DVD-ROM drive malfunction | Yellow | Green |
| Unit returned an error | Red | Green |

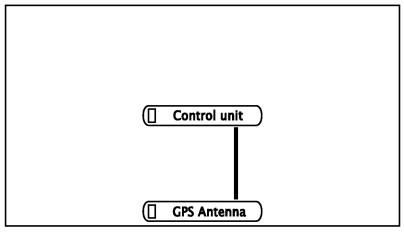


SKIB7772E

**NOTE:**
- Control unit = NAVI control unit
- Only Control unit (NAVI control unit) is displayed in red.
- If multiple malfunctions occur at the same time for a single unit, the screen switch colors are determined according to the following order of priority: red > yellow > gray.

7. Select a switch on the diagnosis results screen, and comments for the diagnosis results will be shown.

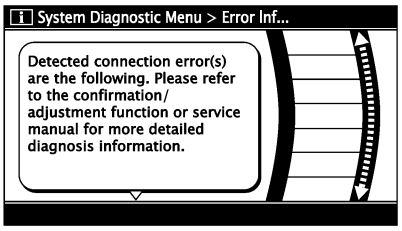


SKIB3659E

## SELF-DIAGNOSIS RESULT

Check the applicable display in the following table, and then repair the malfunctioning parts.

### Quick Reference Table

| Self-diagnosis result screen | Possible cause | Action to take |
|---|---|---|
| 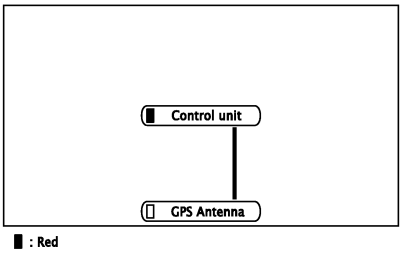  | NAVI control unit malfunction is detected. | Replace NAVI control unit.<br>Refer to AV-155, "Removal and Installation of NAVI Control Unit" . |
| 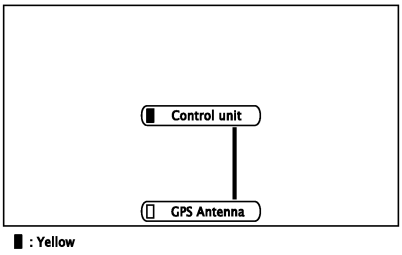  | ● Malfunction is detected on DVD-ROM drive pickup lens in NAVI control unit.<br>● There is dirt and damage on the DVD-ROM. | 1. Check if the inserted DVD-ROM is specified for this navigation system, and the DVD-ROM is dirty, scratched or warped.<br>2. If the results from the above checkup show no malfunction, insert the same DVD-ROM, and then restart self-diagnosis.<br>3. If self-diagnosis results still show any malfunction, replace NAVI control unit. |
| 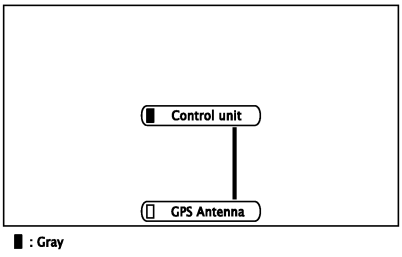  | DVD-ROM not inserted is detected. | Insert DVD-ROM. |
| 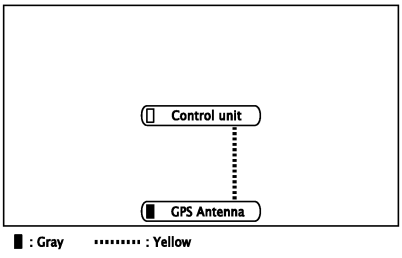  | GPS antenna connection malfunction is detected. | 1. Check if GPS antenna feeder line is snapped or pinched.<br>2. If the results from the above checkup show no malfunction, replace GPS antenna, and then restart self-diagnosis.<br>3. If self-diagnosis results still show any malfunction, replace NAVI control unit. |

## Confirmation/Adjustment Mode

NKS003KH

### OPERATION PROCEDURE

1. Start the engine.
2. Turn the audio system OFF.
3. While pressing the “4” button, turn the volume control dial clockwise or counterclockwise for 30 clicks or more. (When the self-diagnosis mode is started, a short beep will be heard.)
   - Shifting from current screen to previous screen is performed by pressing “BACK” button.

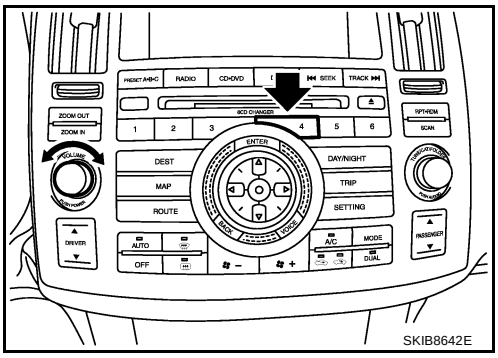

SKIB8642E

4. The initial trouble diagnosis screen will be shown, and items “Self Diagnosis (DCU)”, “Self Diagnosis (NAVI)”, “Confirmation/Adjustment” and “CAN DIAG SUPPORT MONITOR” will become selective.
5. Select “Confirmation/Adjustment”.

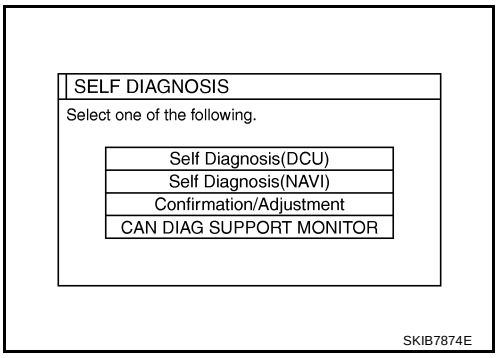

SKIB7874E

6. Each diagnosis is shown by selecting each screen switch on Confirmation/Adjustment screen.

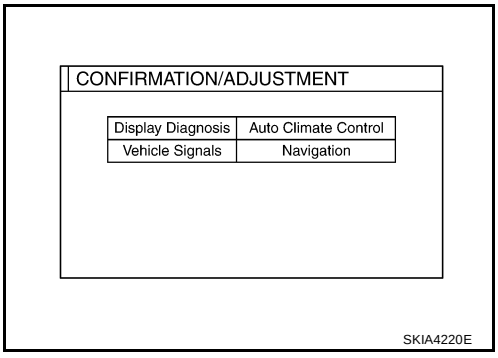

SKIA4220E

## DISPLAY DIAGNOSIS

Color tone and shading of the display control unit-generated image can be checked by the display of a color bar and a gray scale.

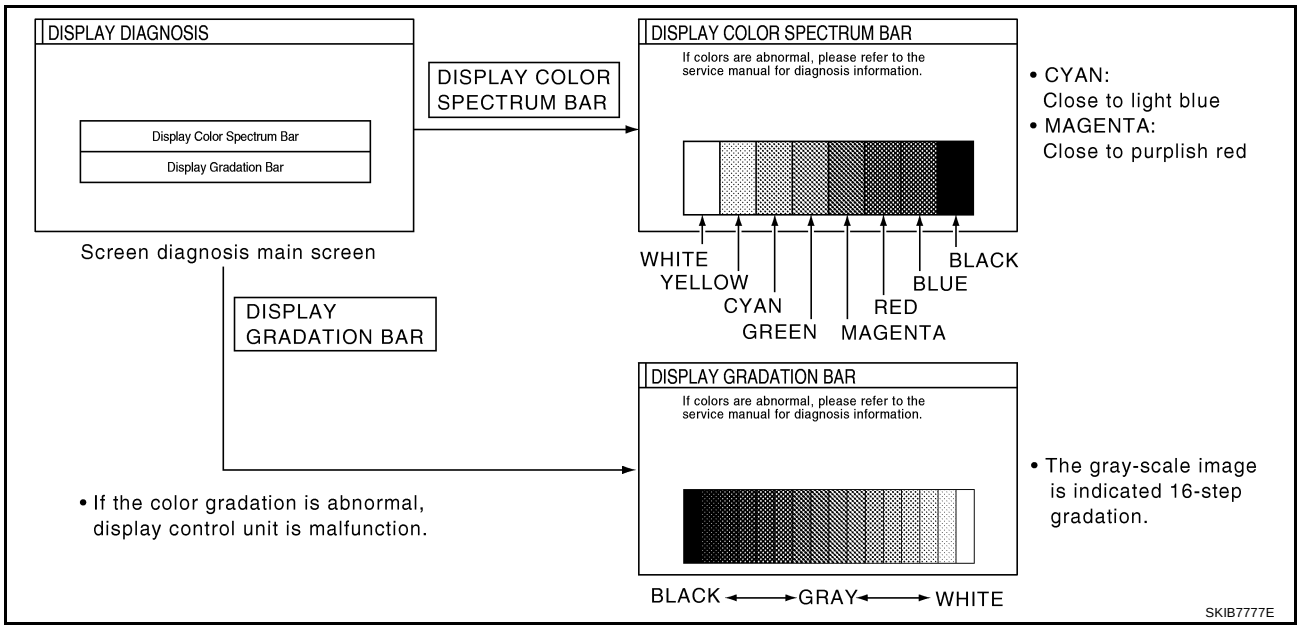


- If RGB signal is malfunctioning, the tint of the color bar display is as follows.

**R (red) signal error : Light blue (Cyan) tint**
**G (green) signal error : Purple (Magenta) tint**
**B (blue) signal error : Yellow tint**

## VEHICLE SIGNALS

A comparison check can be made of each actual vehicle signal and the signals recognized by the display control unit.

**NOTE:**
In case of confirming light signal, set the following D/N mode to ON/OFF of lighting switch (normal setting).

- OFF: D (Day mode)
- ON: N (Night mode)

Unless above setting, light signal (ON/OFF) may not be accurately displayed.

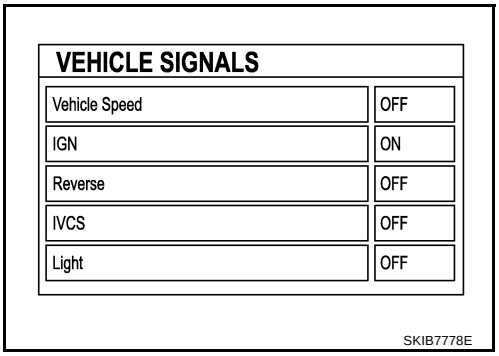


| Diagnosis item | Display | Condition | Remarks |
|---|---|---|---|
| Vehicle Speed | ON | When vehicle speed is more than 0 km/h (0 MPH) | Changes in indication may be delayed. This is normal. |
| | OFF | When vehicle speed is 0 km/h (0 MPH) | |
| | — | Ignition switch in ACC position | |
| IGN | ON | Ignition switch ON | — |
| | OFF | Ignition switch ACC position | |
| Reverse | ON | Selector lever in R position | Changes in indication may be delayed. This is normal. |
| | OFF | Selector lever in any position other than R position | |
| | — | Ignition switch in ACC position | |
| IVCS | OFF | — | This vehicle does not use it. |
| Light | ON | Lighting switch ON | — |
| | OFF | Lighting switch OFF | |

## AUTO CLIMATE CONTROL

Refer to ATC-52, "Self-diagnosis Function" .

## NAVIGATION

Each diagnosis is shown by selecting each screen switch on Confirmation/Adjustment screen.

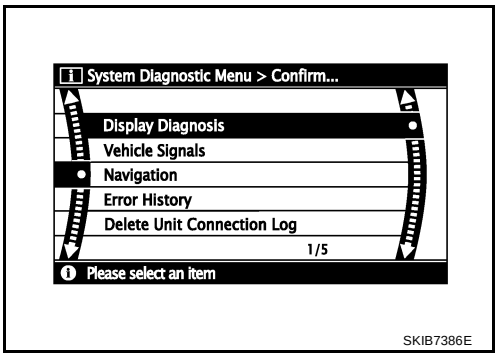


### Display Diagnosis

Color tone and shading of the NAVI control unit-generated image can be checked by the display of a color bar and a gray scale.

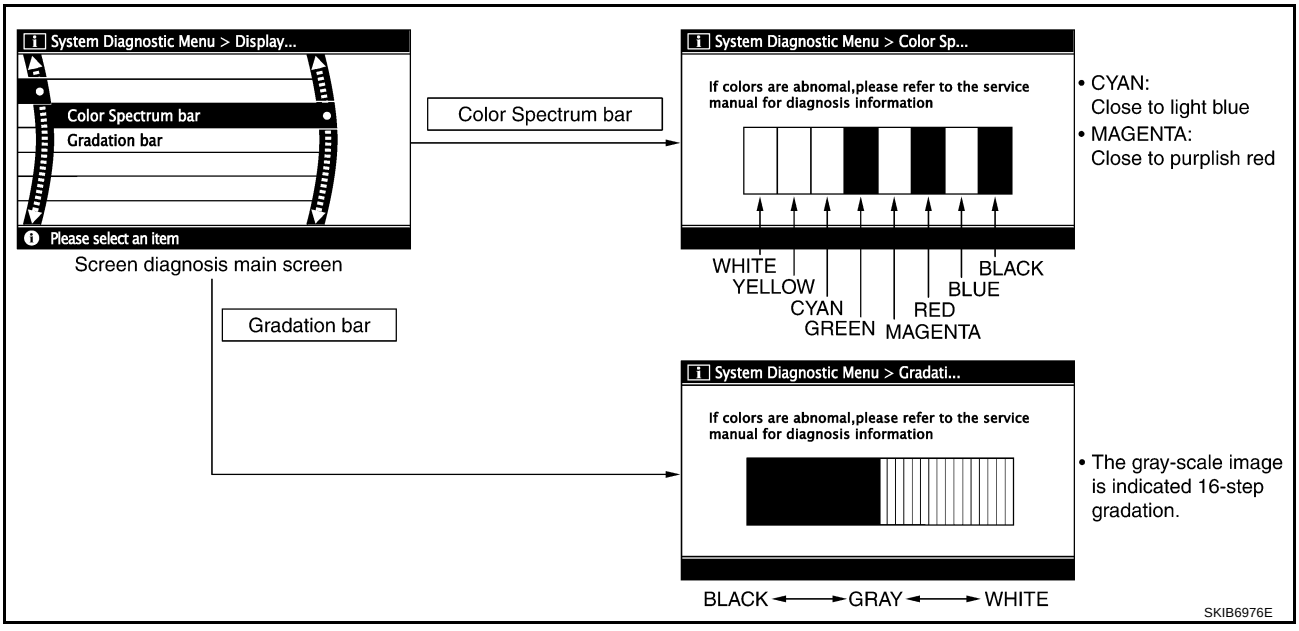


- If RGB signal is malfunctioning, the tint of the color bar display is as follows.

| | |
|---|---|
| **R (red) signal error** | **: Light blue (Cyan) tint** |
| **G (green) signal error** | **: Purple (Magenta) tint** |
| **B (blue) signal error** | **: Yellow tint** |

## Vehicle Signals

A comparison check can be made of each actual vehicle signal and the signals recognized by the NAVI control unit.

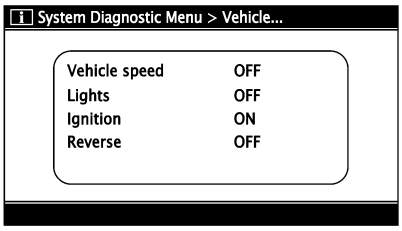


SKIB6977E

| Diagnosis item | Display | Condition | Remarks |
|---|---|---|---|
| Vehicle speed | ON | When vehicle speed is more than 0 km/h (0 MPH) | Changes in indication may be delayed. This is normal. |
| | OFF | When vehicle speed is 0 km/h (0 MPH) | |
| | — | Ignition switch in ACC position | |
| Lights | ON | Lighting switch ON | — |
| | OFF | Lighting switch OFF | |
| Ignition | ON | Ignition switch ON | — |
| | OFF | Ignition switch ACC position | |
| Reverse | ON | Selector lever in R position | Changes in indication may be delayed. This is normal. |
| | OFF | Selector lever in any position other than R position | |
| | — | Ignition switch in ACC position | |

## Navigation

### Steering Angle Adjustment

The steering angle output value detected by the gyroscope can be adjusted.

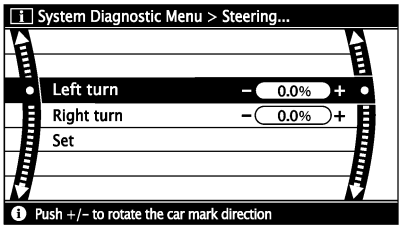


SKIB3684E

### Speed Calibration

Usually the automatic distance correction function adjusts the malfunction in distance caused by the tires wearing down or the tire pressure change. If prompt adjustment is necessary when the tire chains are installed, etc., perform this procedure.

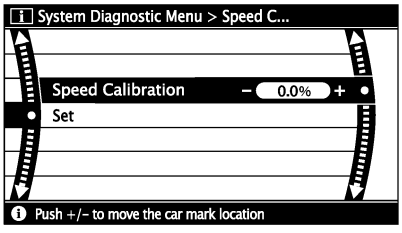


SKIB3685E

## Error History

Diagnosis results of self-diagnosis depend on if any error occurred during the time after selecting “Self Diagnosis” until self-diagnosis results is displayed.
Meanwhile, when an error occurs before selecting “Self Diagnosis”, and if an error does not occur until self-diagnosis results is displayed, a diagnosis result is judged as normal.
Consequently, a diagnosis needs to be performed with “Error History” for the past error that is not available with self-diagnosis.
“Error History” displays the time and place of the most recent occurrence of that error. However, take note of the following points.

- Correct time of the error occurrence may not be displayed when the GPS antenna substrate within the NAVI control unit has malfunctioned.
- Place of the error occurrence is represented by the position of the vehicle mark at the time when the error occurred. If the vehicle mark has deviated from the correct position, then the place of the error occurrence may not be located correctly.
- When the ignition switch is turned ON if the error is detected, the counter increases 1. Even if it is normal when the ignition switch is turned ON the next time, the counter does not decrease.
- The upper limit of the counter is 50. 51 or more is displayed as 50. It can be reset to 0 by “Delete log” switch.

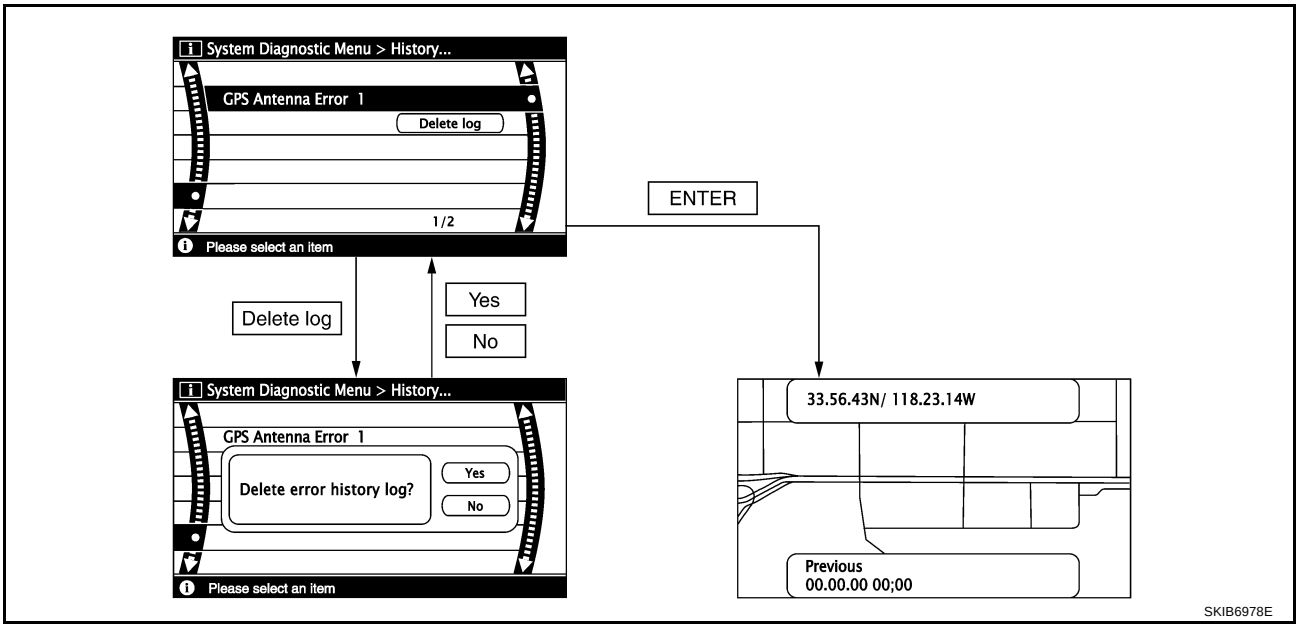

## Diagnosis by Error History

- When having a difficulty on the investigation of cause due to multiple errors with a reproducible malfunction, turn ON the ignition switch from OFF mode after making a memo of the item and number of time (or delete “Error History”). Check “Error History” again after the malfunction was reproduced, and then perform diagnosis focusing on the item of which number of time increased.
- DVD-ROM error history may be restored because DVD-ROM cannot be temporarily read. (Driving on rough road etc.) Then, erase the error history. (This is not a malfunction.) Perform service in “Action to take” if error history are repeatedly indicated again.

| Error item | Possible cause | Action to take |
|---|---|---|
| GPS Antenna Error | GPS antenna connection malfunction is detected. | 1. Start self-diagnosis, and make sure of the result.<br>2. If any error is found, GO TO 3. If any error is not found, delete the error history and end the diagnosis. (This is not a malfunction.)<br>3. Check if GPS antenna feeder line is snapped or pinched.<br>4. If the results from the above checkup show no malfunction, replace GPS antenna, and then restart self-diagnosis.<br>5. If self-diagnosis results still show any malfunction, replace NAVI control unit. |
| FLASH-ROM Error Of Control Unit | NAVI control unit malfunction is detected. | 1. Start self-diagnosis, and make sure of the result.<br>2. If any error is found, replace NAVI control unit. Refer to AV-155, "Removal and Installation of NAVI Control Unit" . If any error is not found, delete the error history and end the diagnosis. (This is not a malfunction.) |
| Connection Of Gyro | | |
| GPS Communication Error | GPS malfunction is detected. | If the symptoms such as the GPS receipt malfunction occur, intermittent malfunction caused by strong radio interference may be detected.<br>If the malfunction always occurs, replace NAVI control unit. |
| GPS ROM Error | | |
| GPS RAM Error | | |
| GPS RTC Error | | |
| DVD-ROM Mechanism not Detected | ● Malfunction is detected on DVD-ROM drive pickup lens in NAVI control unit.<br>● There is dirt and damage on the DVD-ROM. | 1. Check if the inserted DVD-ROM is specified for this navigation system, and the DVD-ROM is dirty, scratched or warped.<br>2. If the results from the above checkup show no malfunction, insert the same DVD-ROM, and then restart self-diagnosis.<br>3. If self-diagnosis results still show any malfunction, replace NAVI control unit. |
| DVD-ROM Communication Error | | |
| DVD-ROM Mechanism Error | | |
| DVD-ROM Focus Error | | |
| DVD-ROM TOC Error | | |
| DVD-ROM Disc Error | | |
| DVD-ROM Seek Error | | |
| DVD-ROM Error Correction Error | | |
| DVD-ROM Read Error | | |
| DVD-ROM Data Transfer Error | | |
| DVD-ROM Data Error | | |
| DVD-ROM Loading / Eject Error | | |
| DVD-ROM Time-out | | |

## Delete Unit Connection Log

Erase the connection history of unit and error history that is recorded in NAVI control unit (clear the connection history of the removed unit).

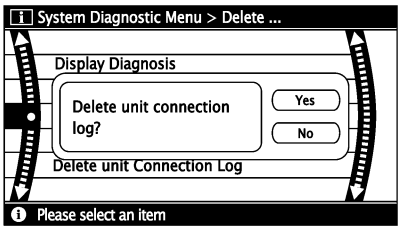


SKIB6979E

## CAN DIAG SUPPORT MONITOR

NKS003KI

### OPERATION PROCEDURE

1. Start the engine.
2. Turn the audio system OFF.
3. While pressing the “4” button, turn the volume control dial clockwise or counterclockwise for 30 clicks or more. (When the self-diagnosis mode is started, a short beep will be heard.)
   - Shifting from current screen to previous screen is performed by pressing “BACK” button.

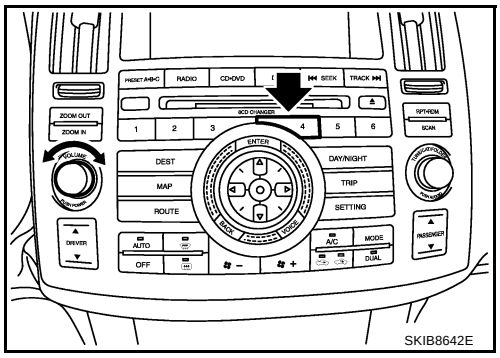


4. The initial trouble diagnosis screen will be shown, and items “Self Diagnosis (DCU)”, “Self Diagnosis (NAVI)”, “Confirmation/Adjustment” and “CAN DIAG SUPPORT MONITOR” will become selective.
5. Select “CAN DIAG SUPPORT MONITOR”.

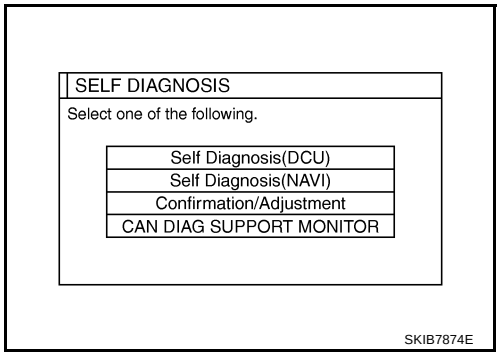


6. The transmitting/receiving of CAN communication can be monitored.

| Item | Content | Error counter (Reference value) |
|---|---|---|
| CAN_COMM | OK/NG | 0 - 50 |
| CAN_CIRC_1 | OK/UNKWN | 0 - 50 |
| CAN_CIRC_2 | OK/UNKWN | 0 - 50 |
| CAN_CIRC_3 | OK/UNKWN | 0 - 50 |
| CAN_CIRC_4 | OK/UNKWN | 0 - 50 |
| CAN_CIRC_5 | OK/UNKWN | 0 - 50 |
| CAN_CIRC_6 | OK/UNKWN | 0 - 50 |
| CAN_CIRC_7 | OK/UNKWN | 0 - 50 |
| CAN_CIRC_8 | OK/UNKWN | 0 - 50 |
| CAN_CIRC_9 | OK/UNKWN | 0 - 50 |

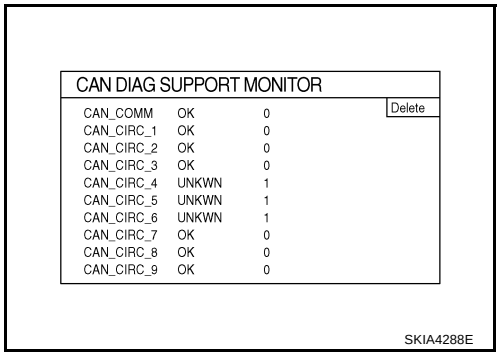


**NOTE:**
Counter shows the status of CAN communication.

## A/C and AV Switch Self-Diagnosis Function

NKS003KJ

Performing self-diagnosis makes it possible to check operation of A/C and AV switch indicator (LED) and other switch.

### STARTING THE SELF-DIAGNOSIS MODE

1. Turn ignition switch from OFF to ACC.
2. Within 10 seconds press and hold the switches “1” and “6” simultaneously for 3 seconds.

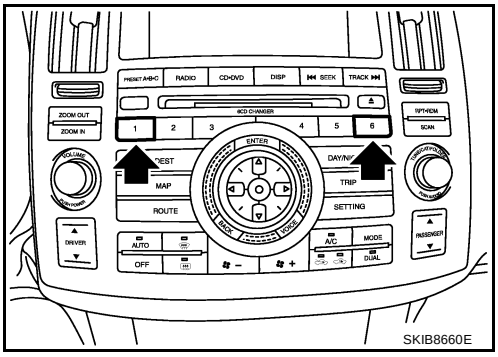


### DIAGNOSIS FUNCTION

The following are checked:

- All the indicators (LED) in the A/C and AV switch.
- Continuity of the switches by sounding the buzzer when the A/C and AV switch and audio steering wheel switch is pressed.
- Continuity of harness between A/C and AV switch and audio steering wheel switch.

**NOTE:**
Rear window defogger switch operation is not checked (No beep sound even under normal status).

### EXITING THE SELF-DIAGNOSIS MODE

- Turn ignition switch OFF.

## CAN Communication Check

NKS003KM

### 1. CHECK MONITOR DESCRIPTION

1. Start self-diagnosis of DCU. Refer to AV-123, "Self-Diagnosis Mode (DCU)" .
2. Select “CAN DIAG SUPPORT MONITOR”. Refer to AV-136, "CAN DIAG SUPPORT MONITOR" .

| Item | content | | Error counter (Reference value) |
|---|---|---|---|
| | Normal condition | Error (Example) | |
| CAN_COMM | OK | NG | 0 - 50 |
| CAN_CIRC_1 | OK | UNKWN | 0 - 50 |
| CAN_CIRC_2 | OK | UNKWN | 0 - 50 |
| CAN_CIRC_3 | OK | UNKWN | 0 - 50 |
| CAN_CIRC_4 | OK | UNKWN | 0 - 50 |
| CAN_CIRC_5 | OK | UNKWN | 0 - 50 |
| CAN_CIRC_6 | OK | UNKWN | 0 - 50 |
| CAN_CIRC_7 | OK | UNKWN | 0 - 50 |
| CAN_CIRC_8 | OK | UNKWN | 0 - 50 |
| CAN_CIRC_9 | UNKWN | UNKWN | 0 - 50 |

(Example)

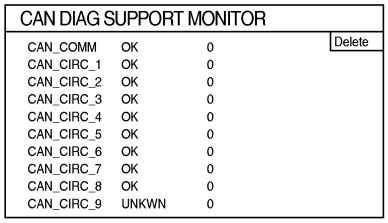


PKIB6080E

3. Record each item display description (OK/NG/UNKWN) displayed on the following CAN DIAG SUPPORT MONITOR Check Sheet.

**CAN DIAG SUPPORT MONITOR Check Sheet**

| Diagnosis item | Screen display | | Diagnosis item | Screen display | |
|---|---|---|---|---|---|
| CAN_COMM | OK | NG | CAN_CIRC_5 | OK | UNKWN |
| CAN_CIRC_1 | OK | UNKWN | CAN_CIRC_6 | OK | UNKWN |
| CAN_CIRC_2 | OK | UNKWN | CAN_CIRC_7 | OK | UNKWN |
| CAN_CIRC_3 | OK | UNKWN | CAN_CIRC_8 | OK | UNKWN |
| CAN_CIRC_4 | OK | UNKWN | CAN_CIRC_9 | OK | UNKWN |

>> After filling in CAN DIAG SUPPORT MONITOR Check Sheet, GO TO LAN-49, "CAN System Specification Chart" .

## Unable to Operate System with A/C and AV Switch

NKS003KN

Symptom: Unable to operate A/C system, audio system and navigation system with A/C and AV switch. (Unable to start self-diagnosis.)

### 1. CHECK CONDITION

1. Turn ignition switch ON.
2. Check if an image is displayed on the screen.

Is an image displayed on the screen?

YES >> GO TO 2.
NO >> Repair malfunctioning part. Refer to AV-141, "All Images Are Not Displayed" .

### 2. SELF-DIAGNOSIS OF A/C AND AV SWITCH

Start self-diagnosis of A/C and AV switch, and check the self-diagnosis result. Refer to AV-137, "A/C and AV Switch Self-Diagnosis Function" .

OK or NG

OK >> GO TO 4.
NG >> GO TO 3.

### 3. CHECK A/C AND AV SWITCH POWER SUPPLY AND GROUND CIRCUIT

1. Check voltage between A/C and AV switch harness connector terminals and ground.

| Terminals | | | OFF | ACC | ON |
|---|---|---|---|---|---|
| (+) | | (–) | | | |
| Connector | Terminal | | | | |
| M64 | 1 | Ground | Battery voltage | Battery voltage | Battery voltage |
| | 2 | | 0 V | Battery voltage | Battery voltage |

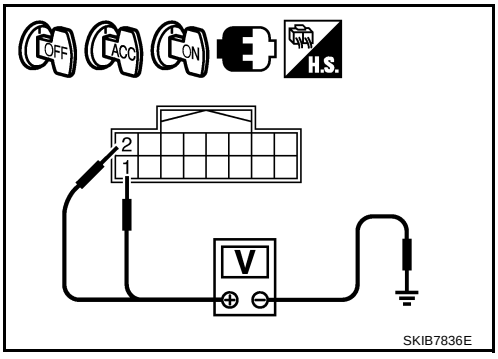


2. Turn ignition switch OFF.
3. Disconnect A/C and AV switch connector.
4. Check continuity between A/C and AV switch harness connector M64 terminal 5 and ground.

**5 – Ground : Continuity should exist.**

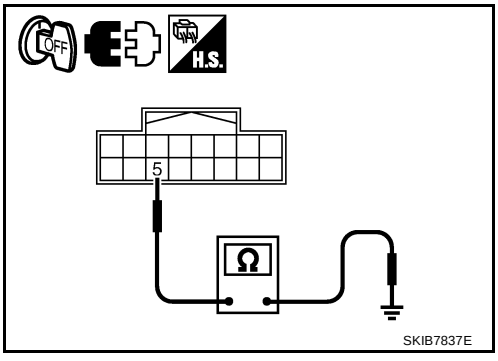


OK or NG

OK >> Replace A/C and AV switch.
NG >> Repair harness or connector.

## 4. CHECK HARNESS

1. Turn ignition switch OFF.
2. Disconnect display control unit and A/C and AV switch connectors.
3. Check continuity between display control unit harness connector (A) M76 terminals 28, 30 and A/C and AV switch harness connector (B) M64 terminals 6, 8.

   **28 – 6 : Continuity should exist.**

   **30 – 8 : Continuity should exist.**

4. Check continuity between display control unit harness connector (A) M76 terminals 28, 30 and ground.

   **28, 30 – Ground : Continuity should not exist.**

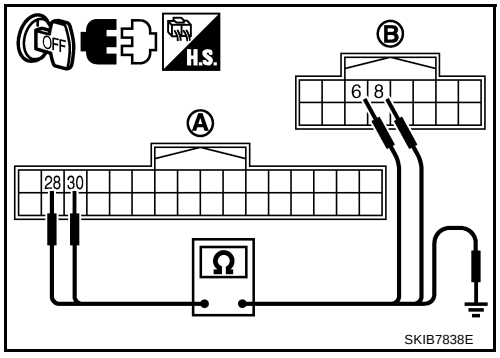


OK or NG

OK >> GO TO 5.
NG >> Repair harness or connector.

## 5. CHECK A/C AND AV SWITCH AND DISPLAY CONTROL UNIT

1. Replace A/C and AV switch or display control unit.
2. Make sure that A/C system, audio system and navigation system can be operated by A/C and AV switch.

OK or NG

OK >> INSPECTION END
NG >> Replace the other unit.

## All Images Are Not Displayed

NKS003KO

Symptom: RGB image is not displayed.

### 1. CHECK CONDITION

When operating audio and air conditioner, make sure that they operate correctly.

Do audio and air conditioner operate normally?

YES >> GO TO 2.
NO >> GO TO 5.

### 2. CHECK DISPLAY GROUND CIRCUIT

1. Turn ignition switch OFF.
2. Disconnect display connector.
3. Check continuity between display harness connector M63 terminal 1 and ground.

**1 – Ground : Continuity should exist.**

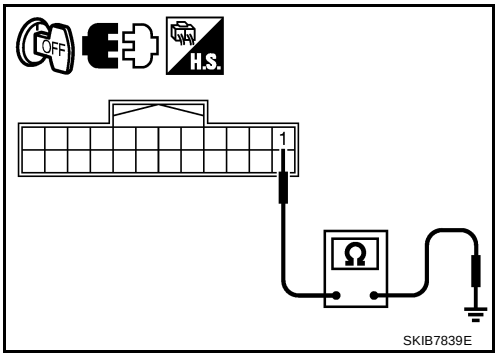


OK or NG

OK >> GO TO 3.
NG >> Repair harness or connector.

### 3. CHECK HARNESS

1. Disconnect display control unit connector.
2. Check continuity between display control unit harness connector (A) M75 terminals 2, 4, 5, 7 and display harness connector (B) M63 terminals 2, 3, 13, 14.

**2 – 2 : Continuity should exist.**
**4 – 3 : Continuity should exist.**
**5 – 13 : Continuity should exist.**
**7 – 14 : Continuity should exist.**

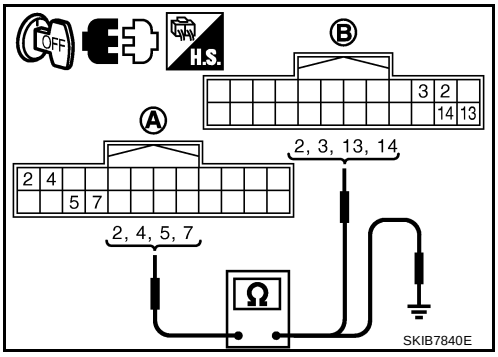


3. Check continuity between display control unit harness connector (A) M75 terminals 2, 4 and ground.

**2, 4 – Ground : Continuity should not exist.**

OK or NG

OK >> GO TO 4.
NG >> Repair harness or connector.

## 4. CHECK DISPLAY POWER SUPPLY AND GROUND CIRCUIT (INVERTER AND SIGNAL)

1. Connect display control unit and display connectors.
2. Turn ignition switch ON.
3. Check voltage between display control unit harness connector M75 terminals 2 and 5.

**2 – 5 : Approx. 9 V**

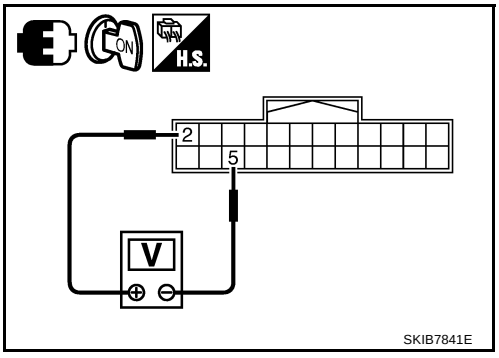


4. Check voltage between display control unit harness connector M75 terminals 4 and 7.

**4 – 7 : Approx. 9 V**

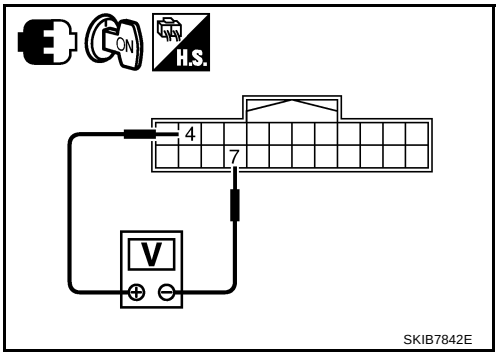


OK or NG

OK >> Replace display.
NG >> Replace display control unit.

## 5. CHECK DISPLAY CONTROL UNIT POWER SUPPLY AND GROUND CIRCUIT

1. Check voltage between display control unit harness connector terminals and ground.

| Terminals | | | OFF | ACC | ON |
|---|---|---|---|---|---|
| (+) | | (–) | | | |
| Connector | Terminal | | | | |
| M75 | 1 | Ground | Battery voltage | Battery voltage | Battery voltage |
| | 10 | | 0 V | Battery voltage | Battery voltage |

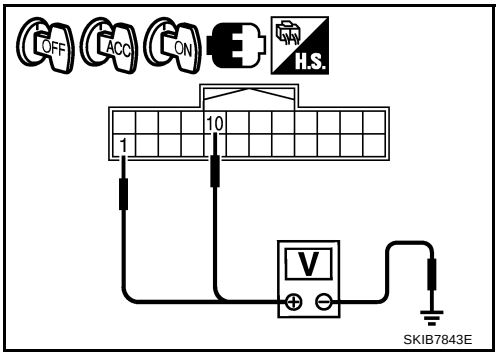


2. Turn ignition switch OFF.
3. Disconnect display control unit connector.
4. Check continuity between display control unit harness connector M75 terminal 3 and ground.

**3 – Ground : Continuity should exist.**

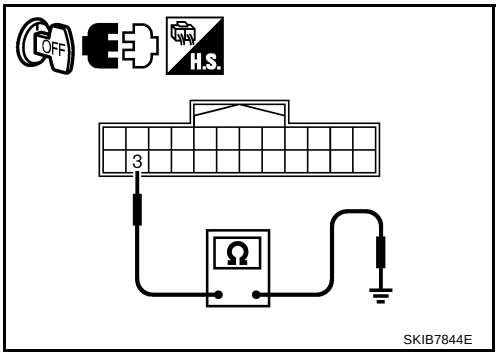


OK or NG

OK >> Replace display control unit.
NG >> Repair harness or connector.

## Status Screen for Audio and A/C Is Not Displayed When Showing Map Screen

NKS003KQ

Symptom: Status screen is not displayed in the lower portion of map screen when operating audio system and A/C system.

### 1. CHECK HARNESS

1. Turn ignition switch OFF.
2. Disconnect display control unit and display connectors.
3. Check continuity between display control unit harness connector (A) M76 terminals 53, 55 and display harness connector (B) M63 terminals 20, 8.

   **53 – 20 : Continuity should exist.**

   **55 – 8 : Continuity should exist.**

4. Check continuity between display control unit harness connector (A) M76 terminals 53, 55 and ground.

   **53, 55 – Ground : Continuity should not exist.**

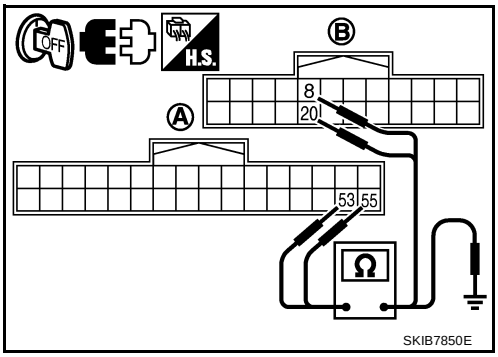


OK or NG

OK >> GO TO 2.
NG >> Repair harness or connector.

### 2. CHECK VERTICAL SYNCHRONIZING (VP) SIGNAL

1. Connect display control unit and display connectors.
2. Turn ignition switch ON.
3. Check voltage waveform between display control unit harness connector M76 terminal 53 and ground with CONSULT-II or oscilloscope.

**53 – Ground:**

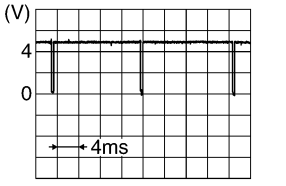


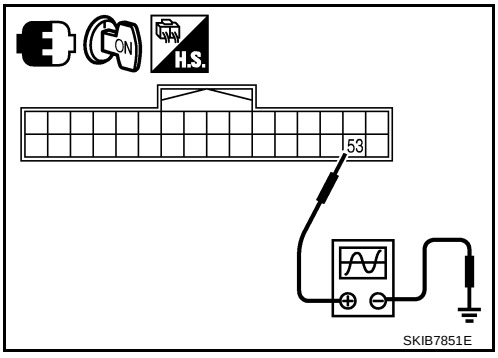


OK or NG

OK >> GO TO 3.
NG >> Replace display.

### 3. CHECK HORIZONTAL SYNCHRONIZING (HP) SIGNAL

Check voltage waveform between display control unit harness connector M76 terminal 55 and ground with CONSULT-II or oscilloscope.

**55 – Ground:**

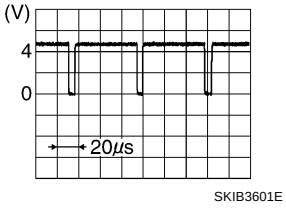


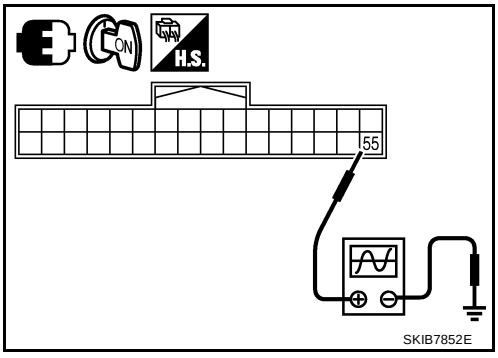


OK or NG

OK >> Replace display control unit.
NG >> Replace display.

## Vehicle Mark Is Not Displayed Properly

NKS003KR

Symptom: Vehicle mark is not displayed at the vehicle driving position properly.

### 1. NAVIGATION SYSTEM ADJUSTMENT

1. Select “Navigation” in Confirmation/Adjustment mode, and adjust items, “Steering Angle Adjustment” and “Speed Calibration”. Refer to AV-132, "Navigation" .
2. Check symptom with driving.

Is any malfunction observed?

YES >> GO TO 2.
NO >> INSPECTION END

### 2. SELF-DIAGNOSIS OF NAVI

Start self-diagnosis of NAVI, and check any malfunction related to GPS. Refer to AV-126, "Self-Diagnosis Mode (NAVI)" .

Is any malfunction related to GPS observed?

YES >> Repair malfunctioning part.
NO >> GO TO 3.

### 3. CHECK VEHICLE SIGNAL

Select “Vehicle Signals” in Confirmation/Adjustment mode, and check the vehicle speed signal and reverse signal inputting to NAVI control unit. Refer to AV-130, "VEHICLE SIGNALS" .

OK or NG

OK >> Limit of position detection capacity.
NG >>
- Check NAVI control unit vehicle speed signal circuit, and repair malfunctioning part.
- Check NAVI control unit reverse signal circuit, and repair malfunctioning part.

## Tint Is Strange for The RGB Image

NKS003KS

Symptom: Tint of all RGB images is strange.

### 1. CHECK HARNESS

1. Turn ignition switch OFF.
2. Disconnect display control unit and display connectors.
3. Check the malfunctioning circuit according to the symptoms.

- **Light blue (Cyan) tinged screen**
  Check continuity between display control unit harness connector (A) M76 terminal 50 and display harness connector (B) M63 terminal 17.

  **50 – 17 : Continuity should exist.**

  Check continuity between display control unit harness connector (A) M76 terminal 50 and ground.

  **50 – Ground : Continuity should not exist.**

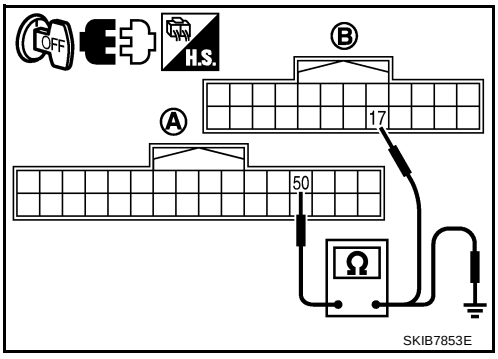


- **Purple (Magenta) tinged screen**
  Check continuity between display control unit harness connector (A) M76 terminal 52 and display harness connector (B) M63 terminal 6.

  **52 – 6 : Continuity should exist.**

  Check continuity between display control unit harness connector (A) M76 terminal 52 and ground.

  **52 – Ground : Continuity should not exist.**

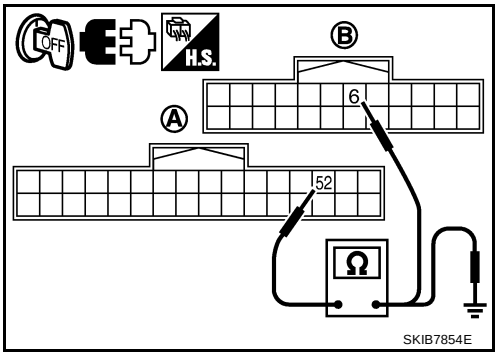


- **Yellow tinged screen**
  Check continuity between display control unit harness connector (A) M76 terminal 54 and display harness connector (B) M63 terminal 18.

  **54 – 18 : Continuity should exist.**

  Check continuity between display control unit harness connector (A) M76 terminal 54 and ground.

  **54 – Ground : Continuity should not exist.**

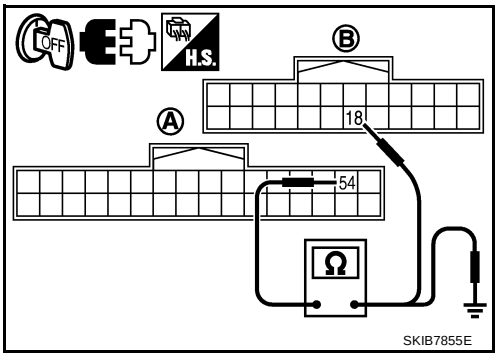


OK or NG

OK >> GO TO 2.
NG >> Repair harness or connector.

## 2. CHECK RGB SIGNAL

1. Connect display control unit and display connectors.
2. Turn ignition switch ON.
3. Start Confirmation/Adjustment mode. Refer to AV-129, "Confirmation/Adjustment Mode" .
4. Display color bar by selecting “Display Color Spectrum Bar” on Display Diagnosis screen. Refer to AV-130, "DISPLAY DIAGNOSIS" .
5. Check the malfunctioning circuit according to the symptoms.

- **Light blue (Cyan) tinged screen**
  Check voltage waveform between display control unit harness connector M76 terminal 50 and ground with CONSULT-II or oscilloscope.

**50 – Ground:**

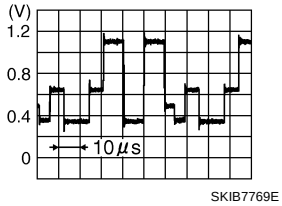


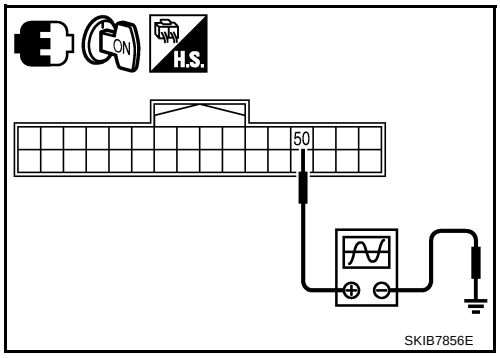


- **Purple (Magenta) tinged screen**
  Check voltage waveform between display control unit harness connector M76 terminal 52 and ground with CONSULT-II or oscilloscope.

**52 – Ground:**

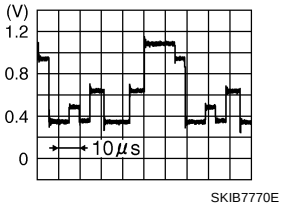


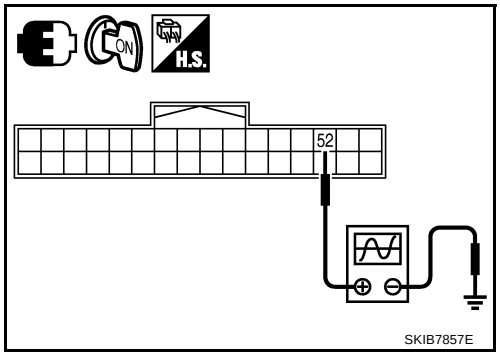


- **Yellow tinged screen**
  Check voltage waveform between display control unit harness connector M76 terminal 54 and ground with CONSULT-II or oscilloscope.

**54 – Ground:**

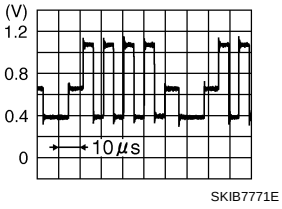


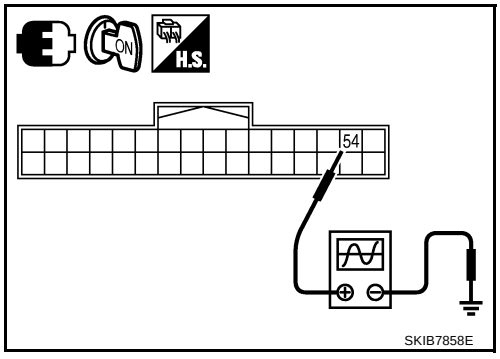


OK or NG

OK >> Replace display.
NG >> Replace display control unit.

## Tint Is Strange for The RGB Image (Only NAVI Screen)

NKS003KT

Symptom: Tint of map screen is strange. (Status screen for audio and A/C, TRIP screen and FUEL ECONOMY screen are normal.)

### 1. CHECK HARNESS

1. Turn ignition switch OFF.
2. Disconnect NAVI control unit and display unit connectors.
3. Check the malfunctioning circuit according to the symptoms.

- **Light blue (Cyan) tinged screen**
  Check continuity between NAVI control unit harness connector (A) B207 terminal 44 and display control unit harness connector (B) M76 terminal 44.

  **44 – 44 : Continuity should exist.**

  Check continuity between NAVI control unit harness connector (A) B207 terminal 44 and ground.

  **44 – Ground : Continuity should not exist.**

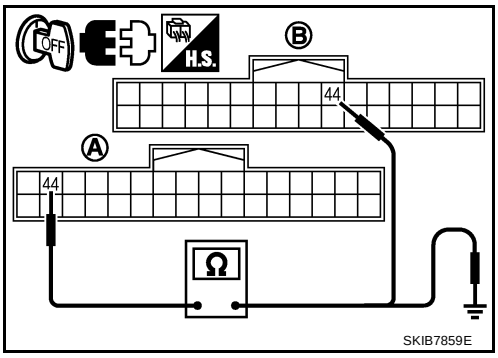


- **Purple (Magenta) tinged screen**
  Check continuity between NAVI control unit harness connector (A) B207 terminal 45 and display control unit harness connector (B) M76 terminal 46.

  **45 – 46 : Continuity should exist.**

  Check continuity between NAVI control unit harness connector (A) B207 terminal 45 and ground.

  **45 – Ground : Continuity should not exist.**

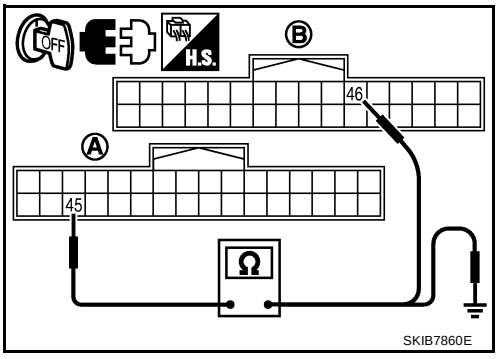


- **Yellow tinged screen**
  Check continuity between NAVI control unit harness connector (A) B207 terminal 46 and display control unit harness connector (B) M76 terminal 48.

  **46 – 48 : Continuity should exist.**

  Check continuity between NAVI control unit harness connector (A) B207 terminal 46 and ground.

  **46 – Ground : Continuity should not exist.**

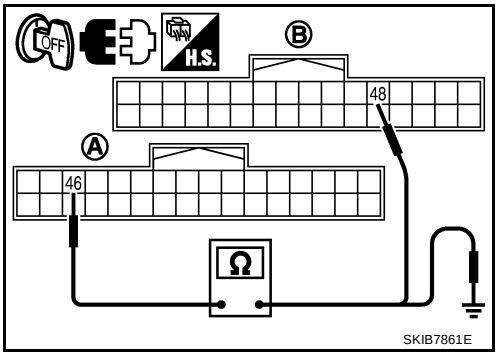


OK or NG

OK >> GO TO 2.
NG >> Repair harness or connector.

## 2. CHECK RGB SIGNAL

1. Connect NAVI control unit and display control unit connectors.
2. Turn ignition switch ON.
3. Start Confirmation/Adjustment (Navigation) mode. Refer to AV-129, "Confirmation/Adjustment Mode" .
4. Display color bar by selecting “Color Spectrum bar” on Display Diagnosis screen. Refer to AV-131, "Display Diagnosis" .
5. Check the malfunctioning circuit according to the symptoms.

- **Light blue (Cyan) tinged screen**
  Check voltage waveform between NAVI control unit harness connector B207 terminal 44 and ground with CONSULT-II or oscilloscope.

**44 – Ground:**

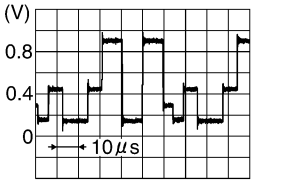

SKIB7360E

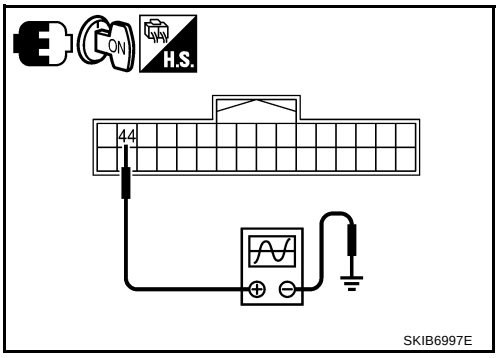

SKIB6997E

- **Purple (Magenta) tinged screen**
  Check voltage waveform between NAVI control unit harness connector B207 terminal 45 and ground with CONSULT-II or oscilloscope.

**45 – Ground:**

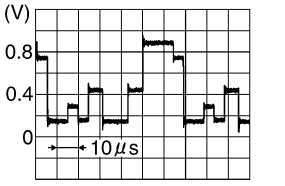

SKIB7361E

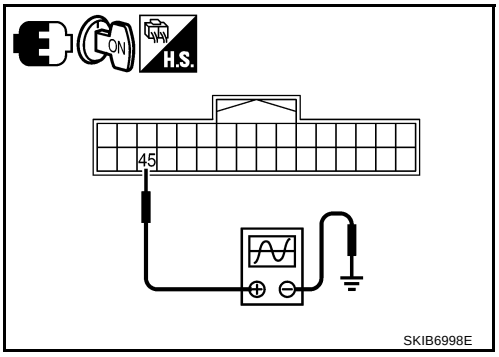

SKIB6998E

- **Yellow tinged screen**
  Check voltage waveform between NAVI control unit harness connector B207 terminal 46 and ground with CONSULT-II or oscilloscope.

**46 – Ground:**

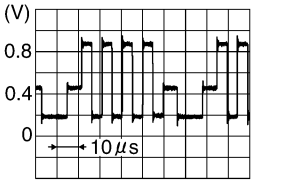

SKIB7362E

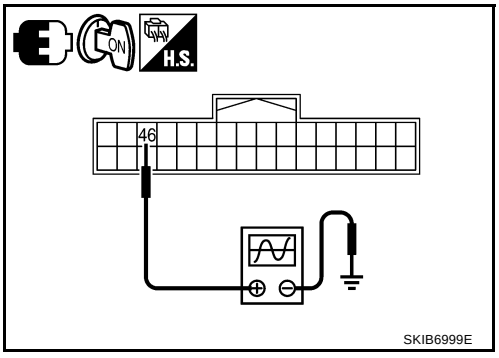

SKIB6999E

OK or NG

OK >> Replace display control unit.
NG >> Replace NAVI control unit.

## RGB Image Is Rolling

NKS003KU

Symptom: Map screen is rolling.

### 1. CHECK HARNESS

1. Turn ignition switch OFF.
2. Disconnect NAVI control unit and display control unit connectors.
3. Check continuity between NAVI control unit harness connector (A) B207 terminal 48 and display control unit harness connector (B) M76 terminal 43.

   **48 – 43 : Continuity should exist.**

4. Check continuity between NAVI control unit harness connector (A) B207 terminal 48 and ground.

   **48 – Ground : Continuity should not exist.**

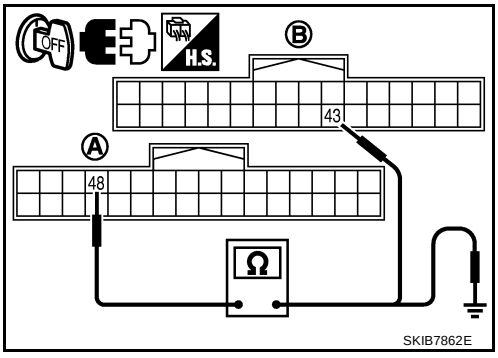


OK or NG

OK >> GO TO 2.
NG >> Repair harness or connector.

### 2. CHECK RGB SYNCHRONIZING SIGNAL

1. Connect NAVI control unit and display control unit connectors.
2. Turn ignition switch ON.
3. When displaying RGB image, check voltage waveform between NAVI control unit harness connector B207 terminal 48 and ground with CONSULT-II or oscilloscope.

**48 – Ground:**

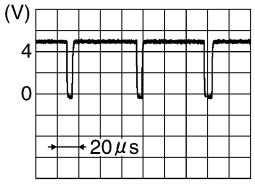


SKIB3603E

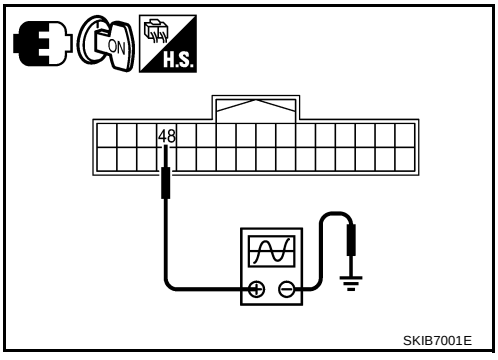


OK or NG

OK >> GO TO 3.
NG >> Replace NAVI control unit.

### 3. CHECK HARNESS

1. Turn ignition switch OFF.
2. Disconnect display control unit and display connectors.
3. Check continuity between display control unit harness connector (A) M76 terminal 56 and display harness connector (B) M63 terminal 19.

   **56 – 19 : Continuity should exist.**

4. Check continuity between display control unit harness connector (A) M76 terminal 56 and ground.

   **56 – Ground : Continuity should not exist.**

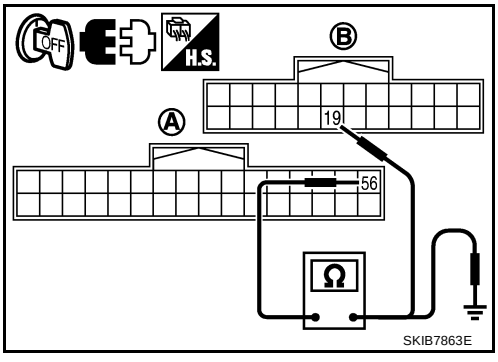


OK or NG

OK >> GO TO 4.
NG >> Repair harness or connector.

## 4. CHECK RGB SYNCHRONIZING SIGNAL

1. Connect display control unit and display connectors.
2. Turn ignition switch ON.
3. When displaying RGB image, check voltage waveform between display control unit harness connector M76 terminal 56 and ground with CONSULT-II or oscilloscope.

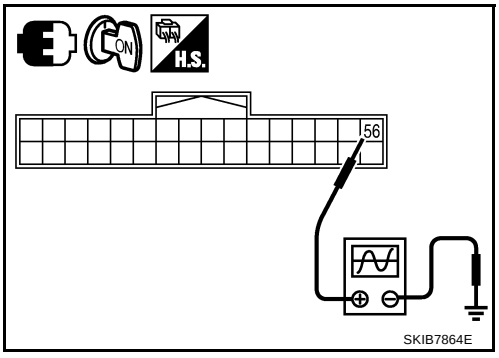


**56 – Ground:**

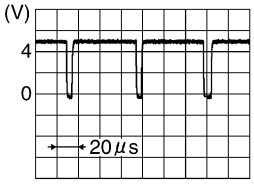


SKIB3603E

OK or NG

OK >> Replace display.
NG >> Replace display control unit.

## Values for All Items in The TRIP Screen Do Not Change

NKS003KV

Symptom: Values for items, “Elapsed Time”, “Driving Distance” and “Average Speed” in the TRIP screen do not change. FUEL ECONOMY screen is not displayed when pressing “TRIP” button.

## 1. CHECK DISPLAY CONTROL UNIT IGNITION SIGNAL

Select “Vehicle Signals” in Confirmation/Adjustment mode, and check the ignition signal inputting to display control unit. Refer to AV-130, "VEHICLE SIGNALS" .

OK or NG

OK >> Replace display control unit.
NG >> Check display control unit ignition signal circuit, and repair malfunctioning part.

## Values for Items, “Driving Distance” and “Average Speed” Do Not Change

NKS003KW

Symptom: Values for Items, "Driving Distance" and "Average Speed" do not change. (The Value for "Elapsed Time" Changes.)

## 1. CHECK DISPLAY CONTROL UNIT VEHICLE SPEED SIGNAL

Select “Vehicle Signals” in Confirmation/Adjustment mode, and check the vehicle speed signal inputting to display control unit. Refer to AV-130, "VEHICLE SIGNALS" .

OK or NG

OK >> Replace display control unit.
NG >> Check display control unit vehicle speed signal circuit, and repair malfunctioning part.

## Values for All Items in The FUEL ECONOMY Screen Do Not Change

NKS003KX

Symptom: Values for items, “Average Fuel Economy” and “Distance to Empty” in the FUEL ECONOMY screen do not change.

## 1. CHECK CONDITION

Check if values for all items in the TRIP screen change properly.

OK or NG

OK >> GO TO 2.
NG >> Repair malfunctioning part. Refer to AV-150, "Values for All Items in The TRIP Screen Do Not Change" or AV-150, "Values for Items, “Driving Distance” and “Average Speed” Do Not Change" .

## 2. CHECK CAN COMMUNICATION

Check CAN communication. Refer to AV-138, "CAN Communication Check" .

OK or NG

OK >> Replace display control unit.
NG >> After filling out CAN DIAG SUPPORT MONITOR check sheet, GO TO LAN-49, "CAN System Specification Chart" .

# Voice Guidance Is Not Heard

NKS003KY

Symptom: Voice guidance does not sound at route guidance.

## 1. CHECK HARNESS

1. Turn ignition switch OFF.
2. Disconnect NAVI control unit and audio unit connectors.
3. Check continuity between NAVI control unit harness connector (A) B208 terminals 12, 14 and audio unit harness connector (B) M60 terminals 36, 34.

   **12 – 36 : Continuity should exist.**
   **14 – 34 : Continuity should exist.**

4. Check continuity between NAVI control unit harness connector (A) B208 terminals 12, 14 and ground.

   **12, 14 – Ground : Continuity should not exist.**

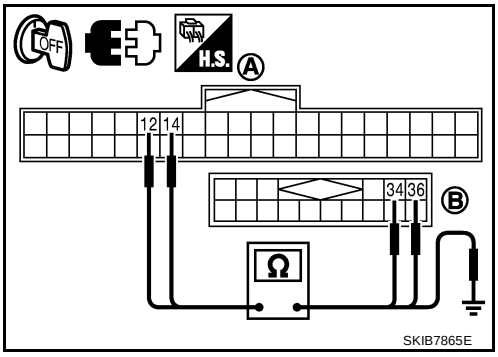


OK or NG

OK >> GO TO 2.
NG >> Repair harness or connector.

## 2. CHECK VOICE GUIDANCE SIGNAL

1. Connect NAVI control unit and audio unit connectors.
2. Turn ignition switch ON.
3. Check voltage waveform between NAVI control unit harness connector B208 terminals 12 and 14 with CONSULT-II or oscilloscope.

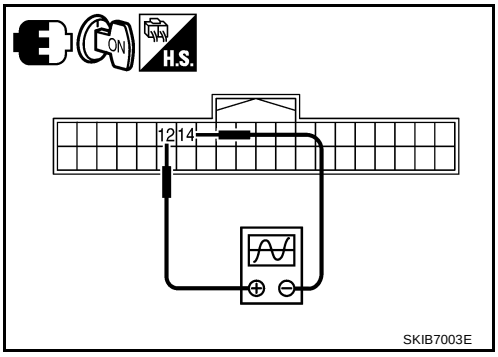


**12 – 14:**

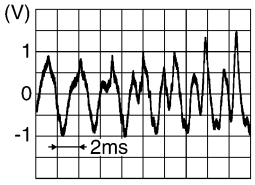


SKIB3609E

OK or NG

OK >> Replace audio unit.
NG >> Replace NAVI control unit.

## Example of Symptoms Possible No Malfunction

NKS003KZ

For Navigation System operation information, refer to Navigation System Owner's Manual.

### BASIC OPERATIONS

| Symptom | Possible cause | Possible solution |
|---|---|---|
| No image is displayed. | The brightness is at the lowest setting. | Adjust the brightness of the display. |
| | The display is turned off. | Press and hold the ☀/☽ button to turn on the display. |
| No voice guidance is available. The volume is too high or too low. | The volume is not set correctly, or it is turned off. | Adjust the volume of voice guidance. |
| No map is displayed on the screen. | The DVD-ROM is not inserted, or it is inserted upside down. | Insert the DVD-ROM correctly. |
| | A screen other than map screen is displayed. | Press the “MAP” button. |
| | The pickup lens of the DVD unit is dirty. | The pickup lens can become dirty depending on the usage of the vehicle. Contact a NISSAN dealer or qualified workshop for pickup lens cleaning. |
| The screen is too dim. The movement is slow. | The temperature in the interior of the vehicle is low. | Wait until the interior of the vehicle has warmed up. |
| Some pixels in the display are darker or brighter than others. | This condition is an inherent characteristic of liquid crystal displays. | This is not a malfunction. |
| Some menu items cannot be selected. | Some menu items become unavailable while the vehicle is driven. | Park the vehicle in a safe location, then operate the navigation system. |

**NOTE:**
Locations stored in the Address Book and other memory functions may be lost if the vehicle's battery is disconnected or is discharged. If this occurs, service the vehicle's battery as necessary and re-enter the information in the Address Book.

### VEHICLE MARKS

| Symptom | Possible cause | Possible solution |
|---|---|---|
| Names of roads and locations differ between plan view and BIRD-VIEW™ . | This is because the quantity of the displayed information is reduced so that the screen does not become difficult to read. There is also a chance that names of the roads or locations may be displayed several times, and the names appearing on the screen may be different because of a processing procedure. | This is not a malfunction. |
| The vehicle mark is not displayed in the correct position. | The vehicle was transported after the ignition switch was turned off, for example, by a ferry or car transporter. | Drive the vehicle for a while on a road where GPS signals can be received. |
| | The position and direction of the vehicle mark may be incorrect depending on the driving environments and the levels of positioning accuracy of the navigation system. | This is not a malfunction. Drive the vehicle for a while to automatically correct the position and direction of the vehicle mark. |
| When the vehicle is travelling on a new road, the vehicle mark is located on another road nearby. | The system automatically places the vehicle mark on the nearest available road, because the new road is not stored in the map data. | Updated road information will be included in the next version of the DVD-ROM. |
| The screen does not switch to the night screen even after turning on the headlights. | The daytime screen was set the last time the headlights were turned on. | Set the screen to the night screen mode using ☀/☽ button when turning on the headlights. |
| The map does not scroll even when the vehicle is moving. | The current location map screen is not displayed. | Press the “MAP” button. |
| The vehicle mark is not displayed. | The current location map screen is not displayed. | Press the “MAP” button. |

| Symptom | Possible cause | Possible solution |
|---|---|---|
| The GPS indicator on the screen remains gray. | GPS signals cannot be received depending on the vehicle location, such as in a parking garage, on a road that has numerous tall buildings, etc. | Drive on an open, straight road for a while. |
| | A sufficient amount of GPS satellites is not available. | Please wait for the satellites to move to locations available for the navigation system. |
| The location of the vehicle mark is misaligned from the actual position. | When using tire chains or replacing the tires, speed calculations based on the speed sensor may be incorrect. | Drive the vehicle for a while [at approximately 30 km/h (19 MPH) for about 30 minutes] to automatically correct the vehicle's mark position. If this does not correct the vehicle mark position, contact a NISSAN dealer or qualified workshop. |
| | The map data has a mistake or is incomplete (the vehicle mark position is always misaligned in the same area). | Updated road information will be included in the next version of the DVD-ROM. |

## DVD-ROM

| Symptom | Possible cause | Possible solution |
|---|---|---|
| The message “Error” appears. | The DVD-ROM is dirty or partially damaged. | Check the DVD-ROM and wipe it clean with a soft cloth. |
| | | If any damage, replace the DVD-ROM. |

## ROUTE CALCULATION AND VISUAL GUIDANCE

| Symptom | Possible cause | Possible solution |
|---|---|---|
| In the auto re-route calculation, waypoints are not included. | Waypoints that you have already passed are not included in the auto re-route calculation. | To go to that waypoint again, it is necessary to edit the route. |
| Route information is not displayed. | Route calculation has not yet been performed. | Set the destination and perform route calculation. |
| | Vehicle is not driving on the suggested route. | Drive on the suggested route. |
| | Route guidance is set to off. | Turn on the route guidance. |
| The auto re-route calculation (or detour calculation) suggests the same route as the one previously suggested. | Route calculations took priority conditions into consideration, but the same route was calculated. | This is not a malfunction. |
| A waypoint cannot be added. | Five waypoints are already set on the route, including the ones that you have already passed. | A maximum of 5 waypoints can be set on the route. If you want to go to 6 or more waypoints, perform route calculations several times, as necessary. |
| The suggested route is not displayed. | Roads near the destination cannot be calculated. | Reset the destination to a main or ordinary road, and recalculate the route. |
| | The starting point and destination are too close. | Set a more distant destination. |
| | The starting point and destination are too far away. | Divide your trip by selecting one or two intermediate destinations, and perform a global route calculation based on multiple route calculations. |
| | There are time restricted roads (day of week, time) near the current vehicle location or destination. | Set [Use Time Restricted Roads] to off. |
| The part of the route already passed is deleted. | A route is managed by sections between waypoints. If passing the first waypoint, the section between the starting point and the waypoint is deleted. (It may not be deleted depending on the area.) | This is not a malfunction. |

| Symptom | Possible cause | Possible solution |
|---|---|---|
| An indirect route is suggested. | If there are restrictions (such as one-way streets) on roads close to the starting point or destination, the system may suggest an indirect route. | Adjust the location of the starting point or destination. |
| | The system may suggest an indirect route because route calculation does not take into consideration some areas such as narrow streets (grey roads). | Reset the destination to a main or ordinary road, and recalculate the route. |
| The landmark information does not correspond to the actual information. | This may be caused by insufficient or incorrect data on the DVD-ROM. | Updated information will be included in the next version of the DVD-ROM. |
| The suggested route does not exactly connect with the starting point, waypoints, or destination. | There is no data for route calculation closer to these locations. | Set the starting point, waypoints and destination on a main road, and perform route calculation. |

## VOICE GUIDANCE

| Symptom | Possible cause | Possible solution |
|---|---|---|
| Voice guidance is not available. | Voice guidance is only available at certain intersections marked with . In some cases, voice guidance is not available even when the vehicle should make a turn. | This is not malfunction. |
| | The vehicle has deviated from the suggested route. | Go back to the suggested route or request route calculation again. |
| | Voice guidance is set to off. | Turn on the voice guidance. |
| | Route guidance is set to off. | Turn on the route guidance. |
| The guidance content does not correspond to the actual condition. | The content of voice guidance may vary, depending on the types of intersections where turns are made. | Follow all traffic rules and regulations. |

## Removal and Installation of NAVI Control Unit

NKS003LK

### REMOVAL

1. Remove passenger side seat. Refer to SE-97, "Removal and Installation" .
2. Remove clips (4), and remove NAVI control unit cover.

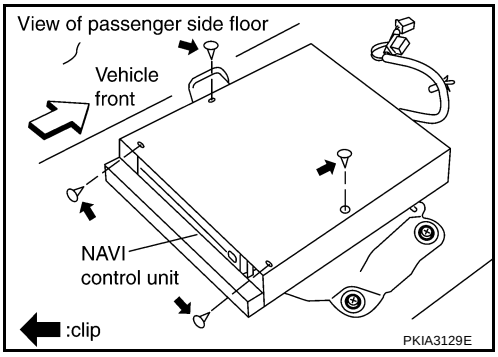


3. Remove screws (2) and nut (1) with power tool, and remove NAVI control unit.

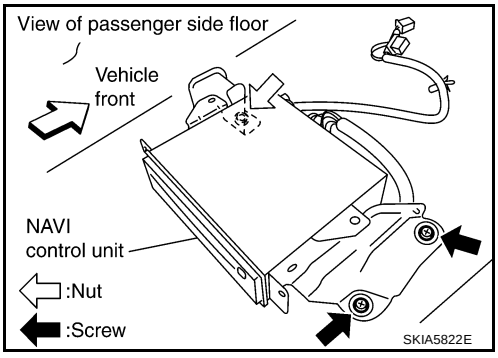


4. Remove screws (4) with power tool and remove brackets.

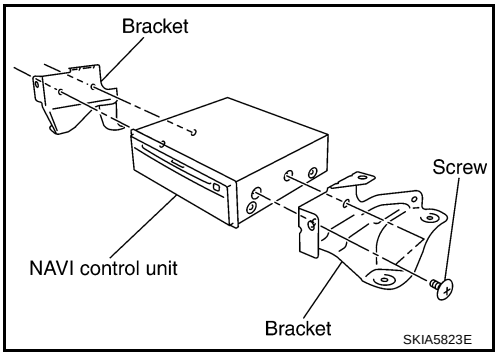


### INSTALLATION

Installation is the reverse order of removal.

## Removal and Installation of GPS Antenna

NKS003LL

### REMOVAL

1. Remove audio unit. Refer toAV-43, "Removal and Installation of Audio Unit" .
2. Remove screw (1) and remove GPS antenna.

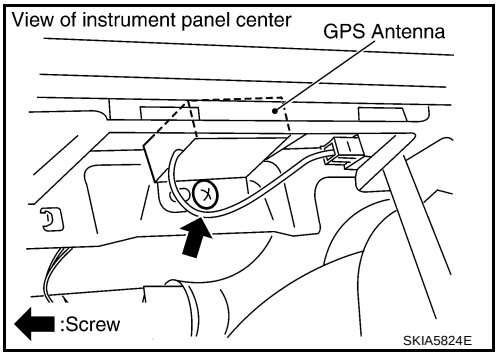


### INSTALLATION

Installation is the reverse order of removal.

## Removal and Installation of A/C and AV Switch

NKS003LM

For A/C and AV switch removal and installation procedures, refer to AV-44, "Removal and Installation for A/C and AV Switch" .

## Removal and Installation of Display Unit

NKS003LN

For display unit removal and installation procedures, refer to AV-43, "Disassembly and Assembly for Audio Unit" .

## Removal and Installation of Display Control Unit

NKS003LO

For display control unit removal and installation procedures, refer to AV-92, "Removal and Installation of Display Control Unit"

# INFINITI MOBILE ENTERTAINMENT SYSTEM

PFP:28184

## System Description

NKS003E2

Refer to Owner's Manual for mobile entertainment system operating instructions.
Power is supplied at all times

- through 15A fuse (No. 32, located in the fuse and fusible link block)
- to DVD player terminal 16
- through DVD player terminals 31 and 32
- to DVD display terminals 15 and 16.

With the ignition switch in the ACC or ON position, power is supplied

- through 10A fuse [No. 6, located in the fuse block (J/B)]
- to DVD player terminal 15
- through DVD player terminal 21
- to DVD display terminal 5.

Ground is supplied

- to DVD player terminal 22
- through body ground B15 and B45
- to DVD player terminals 19, 27
- through DVD display terminals 6, 10 and 12.

When DVD player power switch is ON, power is supplied

- through DVD player terminal 9
- to audio unit terminal 38 and
- through audio unit terminal 40
- to DVD player terminal 11.

When DVD player power switch is ON, DVD sound signals are supplied

- through DVD player terminals 17, 18, and 20
- to DVD display terminals 1, 2 and 4.

DVD sound can be heard by the head phone.
When rear AV switch is ON, audio signals are supplied

- through DVD player terminals 1, 2, 3, and 4
- to audio unit terminals 37, 39, 43, and 42.

DVD sound can be heard from the speaker.
When DVD player power switch is ON, video signals are supplied

- through DVD player terminals 23 and 24
- to DVD display terminals 7 and 8.

When remote controller is operated, operation signals are supplied

- through DVD display terminal 14
- to DVD player terminal 30 and
- through DVD player terminal 29
- to DVD display terminal 13.

## Component Parts Location

NKS003E3

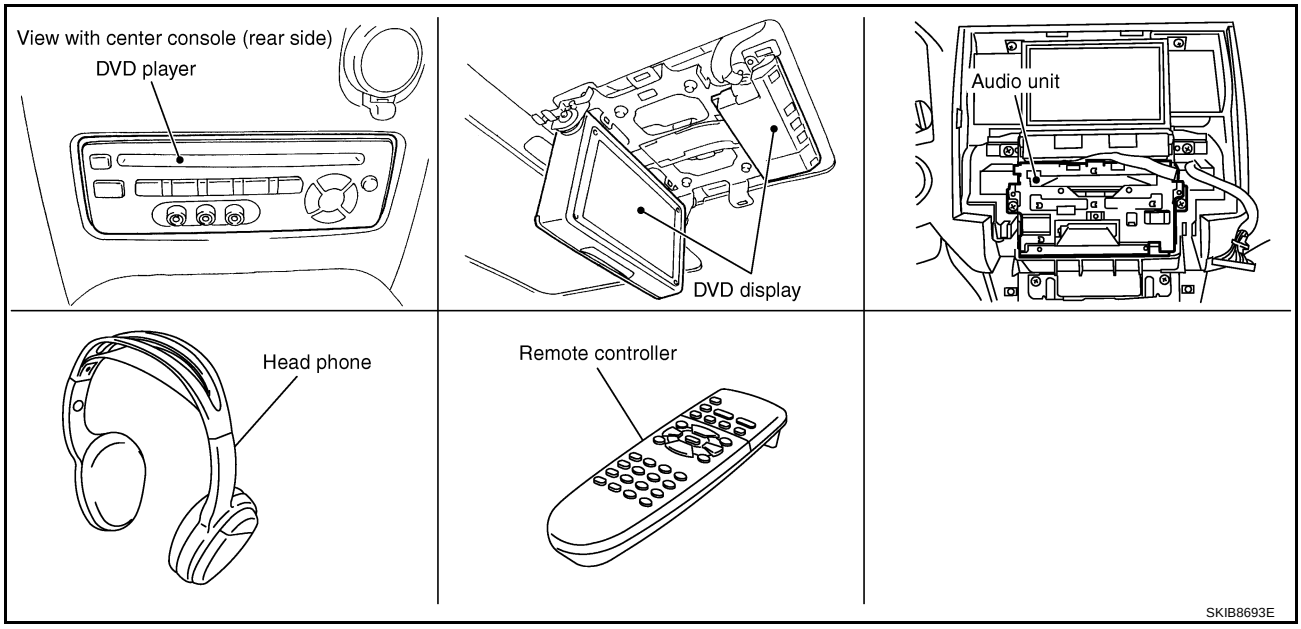

## Wiring Diagram – MES –

NKS003E4

AV-MES-01

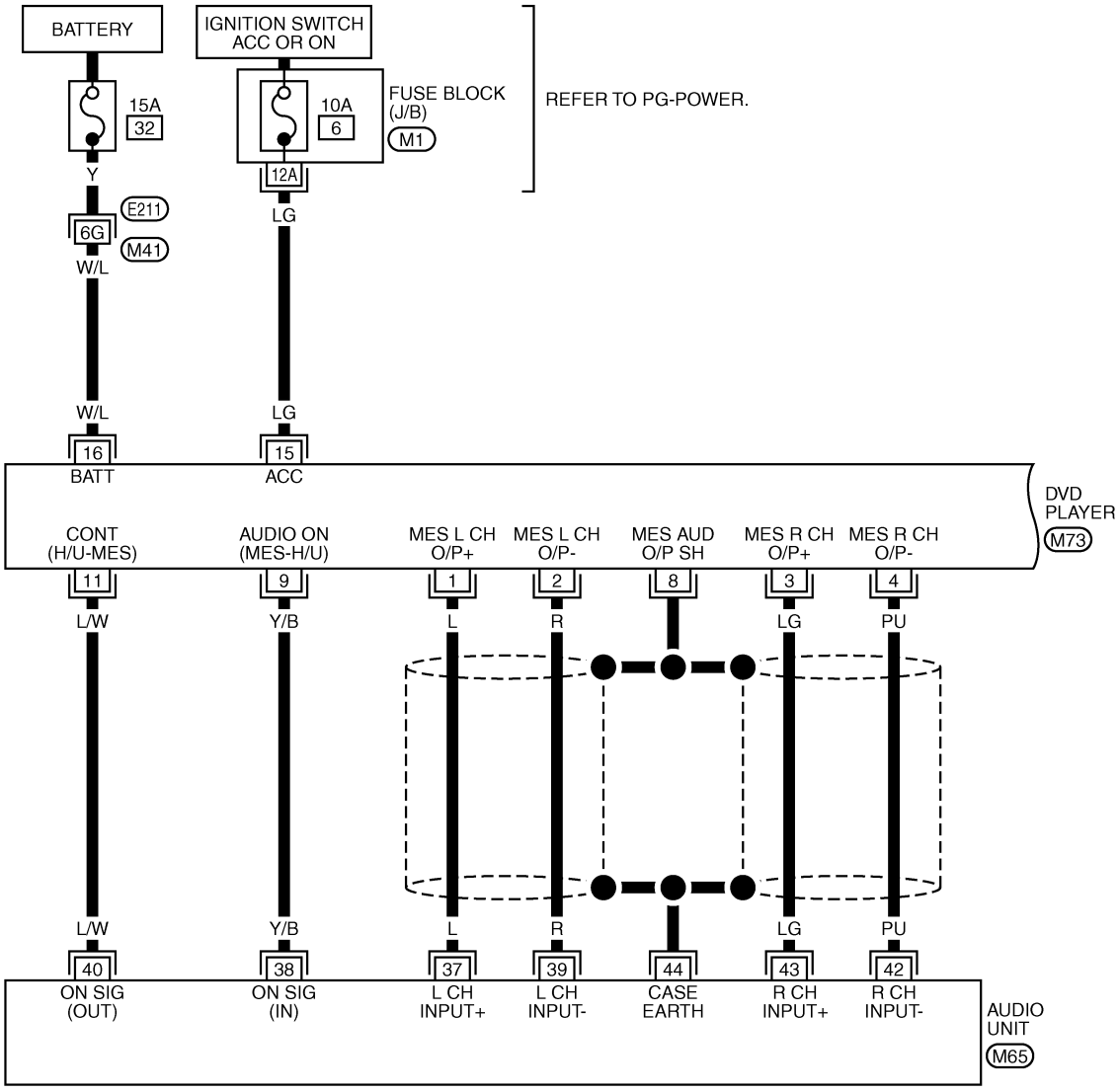


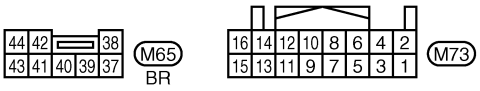


REFER TO THE FOLLOWING.

E211 -SUPER MULTIPLE JUNCTION (SMJ)

M1 -FUSE BLOCK-JUNCTION BOX (J/B)

TKWM4430E

AV-MES-02

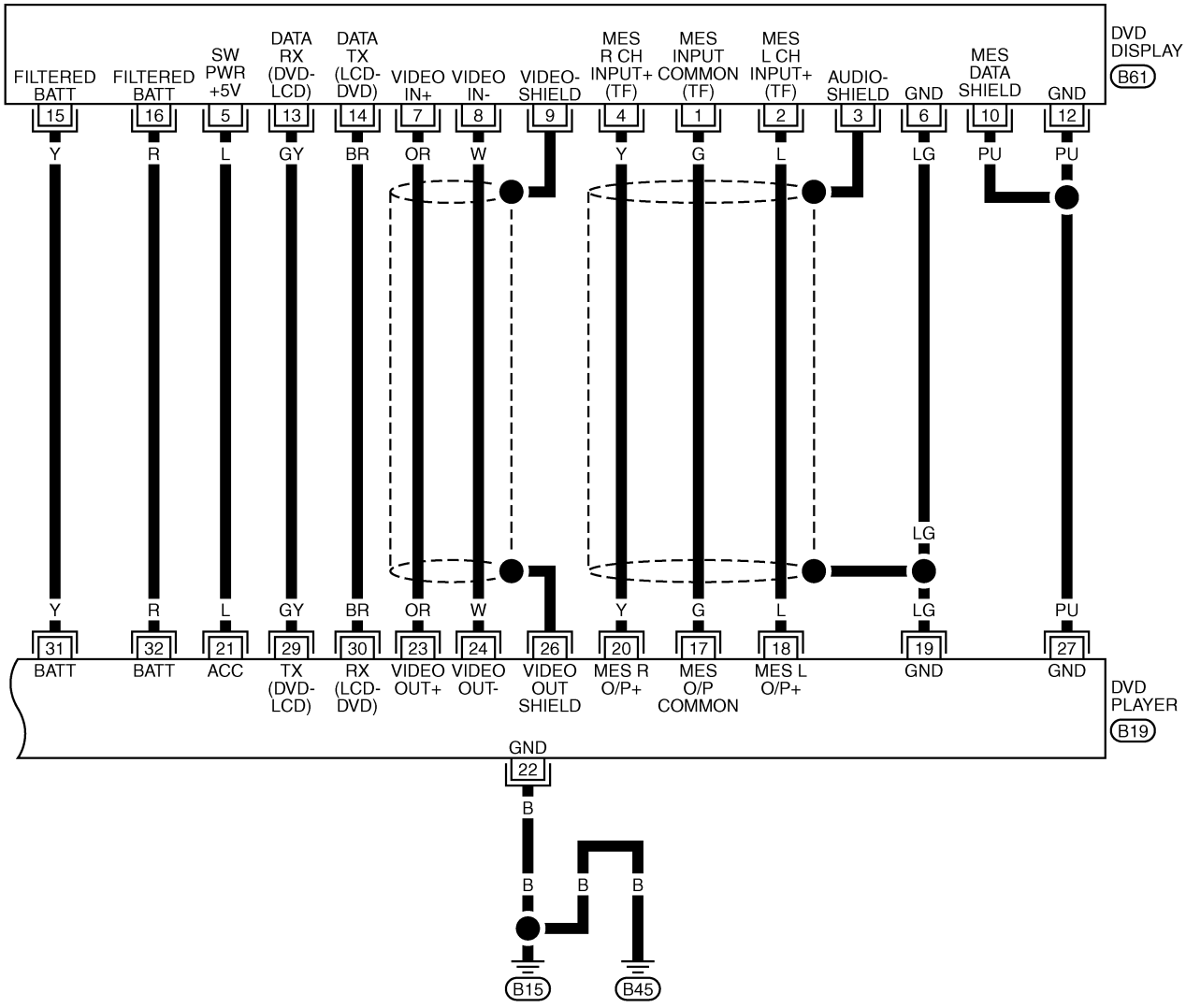


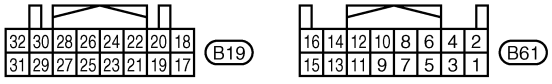


TKWM4431E

## Terminals and Reference Value for DVD Player

NKS003E5

| Terminal (Wire color) (+) | Terminal (Wire color) (–) | Item | Signal input/ output | Condition: Ignition switch | Condition: Operation | Reference value |
|---|---|---|---|---|---|---|
| 1 (L) | 2 (R) | MES output signal (LH) | Output | ACC | Rear AV switch is ON | 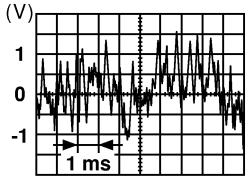  SKIA0177E |
| 3 (LG) | 4 (PU) | MES output signal (RH) | | | | |
| 8 | — | Shield | — | — | — | — |
| 9 (Y/B) | Ground | Audio ON signal (MES - H/U) | Output | ACC | Press “POWER” switch of DVD player | Approx. 5 V |
| 11 (L/W) | Ground | Control signal (H/U - MES) | Input | ACC | Press “POWER” switch of DVD player | Approx. 5 V |
| 15 (LG) | Ground | ACC power supply | Input | ACC | — | Battery voltage |
| 16 (W/L) | Ground | Battery power supply | Input | OFF | — | Battery voltage |
| 17 (G) | 19 (LG) | MES output signal (Common) | Output | ACC | Play CD or DVD video | Approx. 0 V |
| 18 (L) | 19 (LG) | MES output signal (L+) | Output | ACC | Play CD or DVD video | 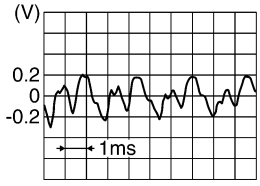  SKIA5828E |
| 19 (LG) | Ground | Ground | — | ON | — | Approx. 0 V |
| 20 (Y) | 19 (LG) | MES output signal (R+) | Output | ACC | Play CD or DVD video | 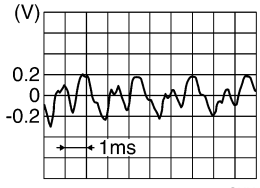  SKIA5828E |
| 21 (L) | Ground | ACC power supply | Output | ACC | — | Approx. 5 V |
| 22 (B) | Ground | Ground | — | ON | — | Approx. 0 V |
| 23 (OR) | 24 (W) | VIDEO output signal | Output | ACC | Play DVD video | 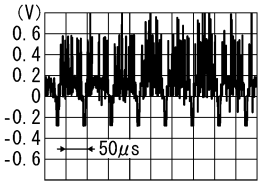  SKIA8863J |
| 26 | — | Shield (Video) | — | — | — | — |
| 27 (PU) | Ground | Ground | — | ON | — | Approx. 0 V |

| Terminal (Wire color) | | Item | Signal input/ output | Condition | | Reference value |
|---|---|---|---|---|---|---|
| (+) | (–) | | | Ignition switch | Operation | |
| 29 (GY) | Ground | DVD communication signal TX (DVD - LCD) | Output | ACC | Press “POWER” switch of DVD player | 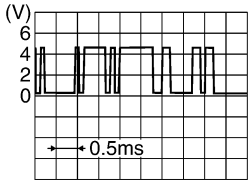  SKIB0322E |
| 30 (BR) | Ground | DVD communication signal RX (LCD - DVD) | Input | ACC | Press “POWER” switch DVD player | 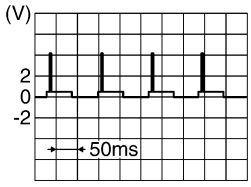  SKIA5832E |
| 31 (Y) | Ground | Battery power supply | Output | — | — | Battery voltage |
| 32 (R) | | | | | | |

## Terminals and Reference Value for DVD Display

NKS003E6

| Terminal (Wire color) | | Item | Signal input/ output | Condition | | Reference value |
|---|---|---|---|---|---|---|
| (+) | (–) | | | Ignition switch | Operation | |
| 1 (G) | 3 | MES input signal (common) | Input | ACC | Play CD or DVD video | Approx. 0 V |
| 2 (L) | 3 | MES input signal (L+) | Input | ACC | Play CD or DVD video | 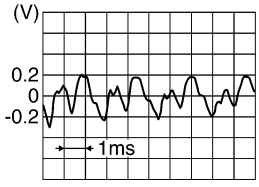  SKIA5828E |
| 3 | — | Shield | — | — | — | — |
| 4 (Y) | 3 | MES input signal (R+) | Input | ACC | Play cd or DVD video | 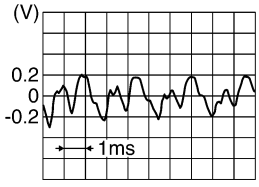  SKIA5828E |
| 5 (L) | Ground | Switch power | Input | ACC | — | Approx. 5 V |
| 6 (LG) | Ground | Ground | — | ON | — | Approx. 0 V |
| 7 (OR) | 8 (W) | VIDEO input signal | Input | ACC | Play DVD video | 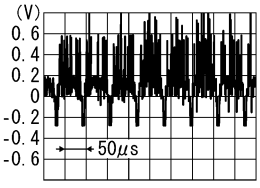  SKIA8863J |
| 9 | — | Shield (Video) | — | — | — | — |

| Terminal (Wire color) | | Item | Signal input/ output | Condition | | Reference value |
|---|---|---|---|---|---|---|
| (+) | (–) | | | Ignition switch | Operation | |
| 10 (PU) | — | Shield (MES data) | — | — | — | — |
| 12 (PU) | Ground | Ground | — | ON | — | Approx. 0 V |
| 13 (GY) | 10 (PU) | DVD communication signal RX (DVD - LCD) | Input | ACC | Press “POWER” switch of DVD player | 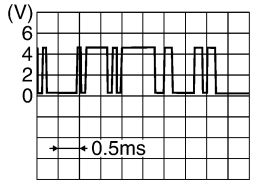  SKIB0322E |
| 14 (BR) | 10 (PU) | DVD communication signal TX (LCD - DVD) | Output | ACC | Press “POWER” switch of DVD player | 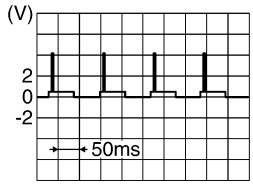  SKIA5832E |
| 15 (Y) | Ground | Battery power supply | Input | OFF | — | Battery voltage |
| 16 (R) | | | | | | |

## DVD Player Does Not Work

NKS003E7

### 1. CHECK FUSE

Check that the following fuse of the DVD player are not blown.

| Unit | Signal | Fuse No. |
|---|---|---|
| DVD player | Battery power supply | 32 |
| | ACC power supply | 6 |

OK or NG

OK >> GO TO 2.

NG >> If fuse is blown be sure to eliminate case of problem before installing new fuse, refer to PG-3, "POWER SUPPLY ROUTING CIRCUIT" .

### 2. CHECK POWER SUPPLY CIRCUIT

Check voltage between DVD player harness connector terminals and ground.

| Terminals | | | Condition | Reference value |
|---|---|---|---|---|
| (+) | | (–) | | |
| Connector | Terminal | | | |
| M73 | 16 | Ground | Ignition switch OFF | Battery voltage |
| | 15 | | Ignition switch ACC | Battery voltage |

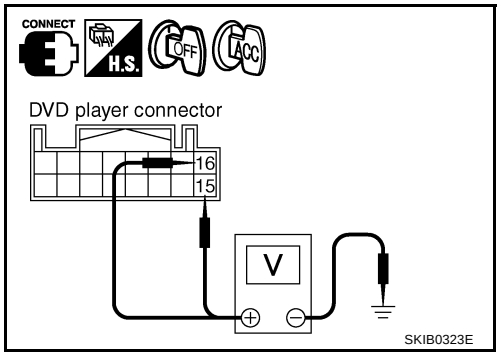


OK or NG

OK >> GO TO 3.

NG >> Repair harness or connector between DVD player and fuse.

### 3. CHECK GROUND CIRCUIT

1. Turn ignition switch OFF.
2. Disconnect DVD player connector.
3. Check continuity between the following DVD player harness connector B19 terminal 22 and ground.

**22 – Ground : Continuity should exist.**

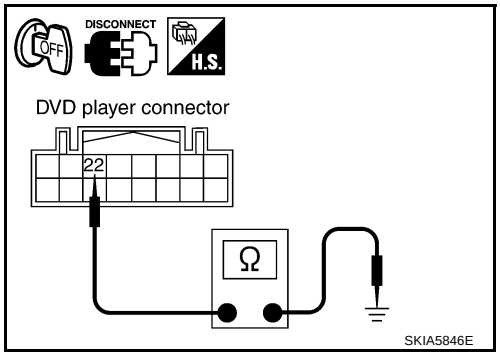


OK or NG

OK >> GO TO 4.

NG >> Repair or harness or connector.

## 4. CHECK HARNESS

1. Disconnect audio unit connector.
2. Check continuity between DVD player harness connector M73 terminals 9 , 11 and audio unit harness connector M65 terminals 38 , 40.

**9 – 38 : Continuity should exist.**
**11 – 40 : Continuity should exist.**

3. Check continuity between DVD player harness connector M73 terminals 9 , 11 and ground.

**9 , 11 – Ground : Continuity should not exist.**

OK or NG

OK >> GO TO 5.
NG >> Repair harness or connector.

## 5. CHECK CONTROL SIGNAL

1. Connect DVD player connector and audio unit connectors.
2. Turn ignition switch ACC.
3. Check voltage between DVD player harness connector M73 terminal 9 and ground.

| Terminals | | | Condition | Reference value |
|---|---|---|---|---|
| (+) | | (–) | | |
| Connector | Terminal | Ground | | |
| M73 | 9 | Ground | Press “power” switch of DVD player | Approx. 5 V |

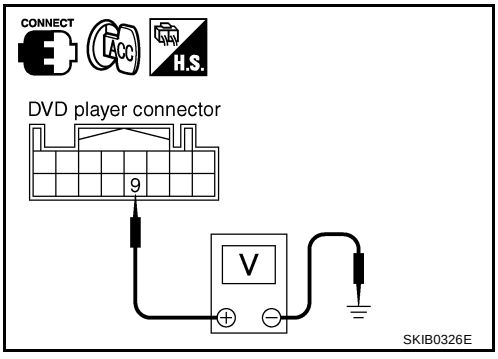


OK or NG

OK >> GO TO 6.
NG >> Replace DVD player.

## 6. CHECK CONTROL SIGNAL

Check voltage between DVD player harness connector M73 terminal 11 and ground.

| Terminals | | | Condition | Reference value |
|---|---|---|---|---|
| (+) | | (–) | | |
| Connector | Terminal | Ground | | |
| M73 | 11 | Ground | Press “power” switch of DVD player | Approx. 5 V |

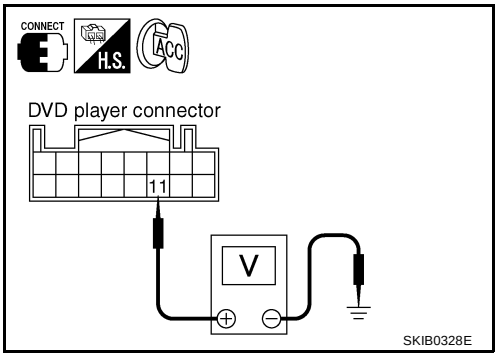


OK or NG

OK >> Replace DVD player.
NG >> Replace audio unit.

## Screen Is Not Shown (While Sounds Come Out of an Audio Speaker, Did Not Do of a Head Phone)

NKS003E8

### 1. CHECK POWER SUPPLY CIRCUIT

1. Check voltage between DVD player harness connector B19 terminals 31, 32 and ground.

   **31 , 32 – Ground : Battery voltage**

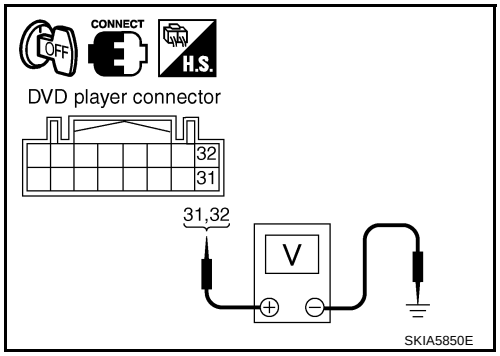


2. Turn ignition switch ACC.
3. Check voltage between DVD player harness connector B19 terminal 21 and ground.

   **21 – Ground : Approx. 5 V**

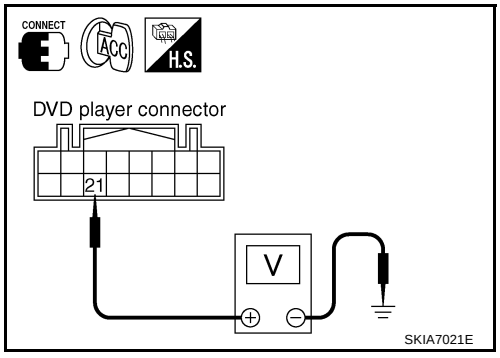


OK or NG

OK >> GO TO 2.
NG >> Replace DVD player.

### 2. CHECK HARNESS

1. Turn ignition switch OFF.
2. Disconnect DVD display connector.
3. Check continuity between DVD player harness connector B19 terminals 21, 31, 32 and DVD display harness connector B61 terminals 5, 15, 16.

   **21 – 5 : Continuity should exist.**
   **31 – 15 : Continuity should exist.**
   **32 – 16 : Continuity should exist.**

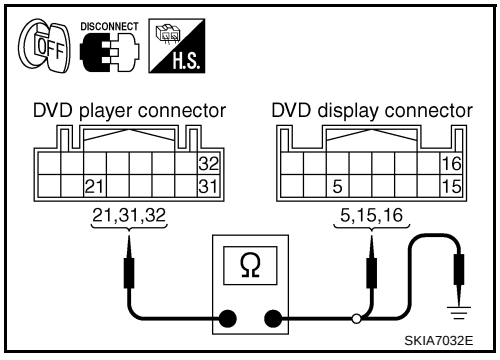


4. Check continuity between DVD player harness connector B19 terminals 21, 31, 32 and ground.

   **21, 31, 32 – Ground : Continuity should not exist.**

5. Check continuity between DVD player harness connector B19 terminals 19, 27 and DVD display harness connector B61 terminals 6, 10, 12.

   **19 – 6 : Continuity should exist.**
   **27 – 10, 12 : Continuity should exist.**

6. Check continuity between DVD player harness connector B19 terminals 19, 27 and ground.

   **19, 27 – Ground : Continuity should not exist.**

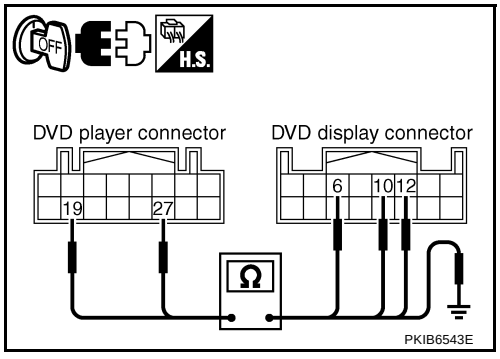


OK or NG

OK >> Replace DVD display.
NG >> Repair harness or connector.

## Screen Is not Shown (Sounds Come Out of Both an Audio Speaker and a Head Phone)

NKS003E9

### 1. CHECK HARNESS

1. Turn ignition switch OFF.
2. Disconnect DVD player and DVD display connectors.
3. Check continuity between DVD player harness connector B19 terminals 23, 24 and DVD display harness connector B61 terminals 7, 8.

   **23 – 7 : Continuity should exist.**

   **24 – 8 : Continuity should exist.**

4. Check continuity between DVD player harness connector B19 terminals 23, 24 and ground.

   **23, 24 – Ground : Continuity should not exist.**

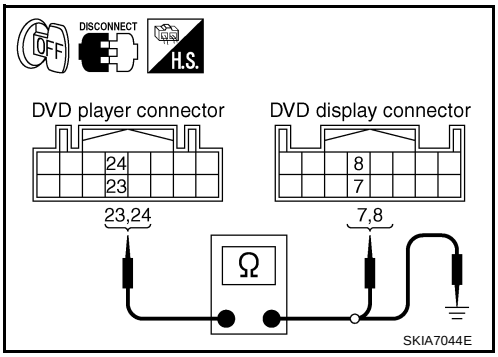


OK or NG

OK >> GO TO 2.
NG >> Repair harness or connector.

### 2. CHECK VIDEO SIGNAL

1. Connect DVD player and DVD display connectors.
2. Turn ignition switch ACC.
3. Check the signal between DVD player harness connector B19 terminal 23 and 24 with CONSULT-II or oscilloscope.

| Terminal (+) | Terminal (–) | Condition | Reference value |
|---|---|---|---|
| 23 | 24 | Play DVD video | 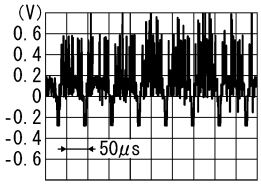  |

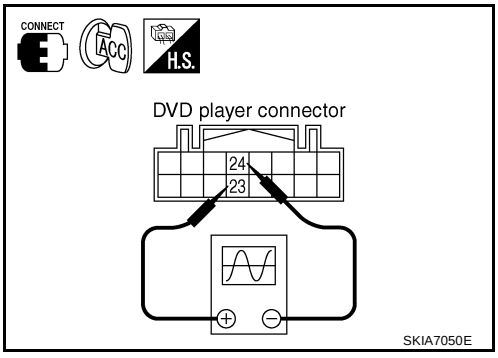


OK or NG

OK >> GO TO 3.
NG >> Replace DVD player.

### 3. CHECK HARNESS

1. Turn ignition switch OFF.
2. Disconnect DVD player and DVD display connectors.
3. Check continuity between DVD player harness connector B19 terminal 29 and DVD display harness connector B61 terminal 13.

   **29 – 13 : Continuity should exist.**

4. Check continuity between DVD player harness connector B19 terminal 29 and ground.

   **29 – Ground : Continuity should not exist.**

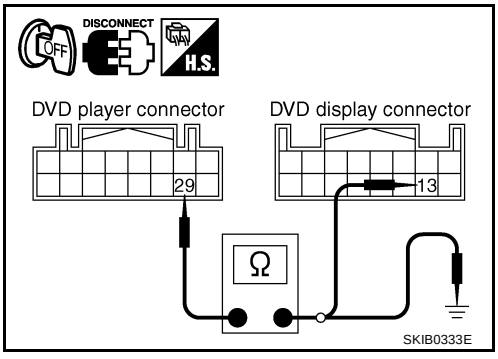


OK or NG

OK >> GO TO 4.
NG >> Repair harness or connector.

## 4. CHECK DATA (DVD – LCD) SIGNAL

1. Connect DVD display and DVD player connectors.
2. Turn ignition switch ACC.
3. Check voltage between DVD display harness connector B61 terminal 13 and ground.

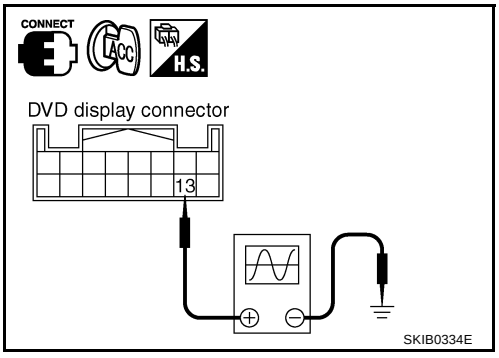


**13 – 10:**

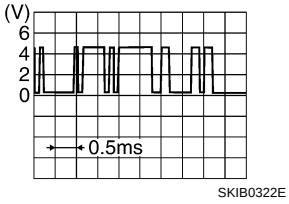


OK or NG

OK >> Replace DVD display.
NG >> Replace DVD player.

## Head Phone Does Not Sound

NKS003EA

## 1. CHECK HEAD PHONE AND SIGNAL

Check the inspection items below to diagnose the malfunction.

- Check that the signal is received at the rear seat.
- Check that transmission part has any seals or dirt that interrupts signal.
- Check that the head phone battery has run down.

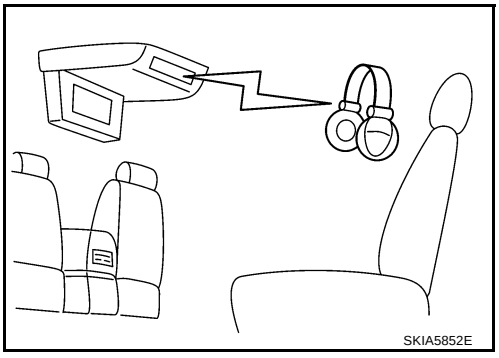


OK or NG

OK >> GO TO 2.
NG >>
- Receive signal with head phone at the rear seat.
- Remove seal or dirt that is interrupting signal.
- If the battery has run down, replace it with new one.

## 2. CHECK HEAD PHONE

Check that sound is heard with another head phone.

OK or NG

OK >> Replace malfunction head phone.
NG >> GO TO 3.

## 3. CHECK HARNESS

1. Turn ignition switch OFF.
2. Disconnect DVD player and DVD display connectors.
3. Check continuity between DVD player harness connector B19 terminals 17, 18, 19, 20 and DVD display harness connector B61 terminals 1, 2, 3, 4.

   **17 – 1 : Continuity should exist.**
   **18 – 2 : Continuity should exist.**
   **19 – 3 : Continuity should exist.**
   **20 – 4 : Continuity should exist.**

4. Check continuity between DVD player harness connector B19 terminals 17, 18, 19, 20 and ground.

   **17, 18, 19, 20 – Ground : Continuity should not exist.**

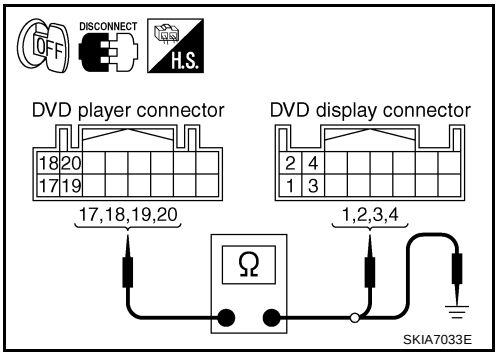


OK or NG

OK >> GO TO 4.
NG >> Repair harness or connector.

## 4. CHECK MES SOUND SIGNAL

1. Connect DVD player and DVD display connectors.
2. Turn the ignition switch ACC and Press “POWER” switch of DVD player.
3. Check the signal between DVD player harness connector B19 terminals 17, 18, 20 and 19 with CONSULT-II or oscilloscope.

| Terminal (+) | Terminal (–) | Condition | Reference value |
|---|---|---|---|
| 17 | 19 | Play CD or DVD video. | Refer to AV-161, "Terminals and Reference Value for DVD Player" . |
| 18 | | | |
| 20 | | | |

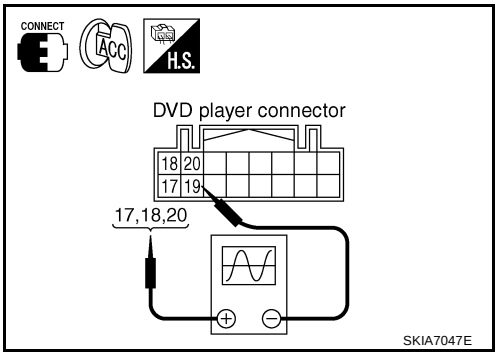


OK or NG

OK >> Replace DVD display.
NG >> Replace DVD player.

# Remote Controller Does Not Work

NKS003EB

## 1. CHECK DVD PLAYER OPERATION SWITCH

1. Turn ignition switch ACC.
2. Press “POWER” switch of DVD player and operate DVD player switch.

Dose the DVD player switches work?

YES >> Replace remote controller.
NO >> GO TO 2.

## 2. CHECK REMOTE CONTROLLER AND SENSOR

Check the inspection items below to diagnose the malfunction.

- Check that remote controller is facing to the sensor.
- Check that sensor does not have any seals or dirt that is interrupting signal.
- Check that the remote controller battery has run down.

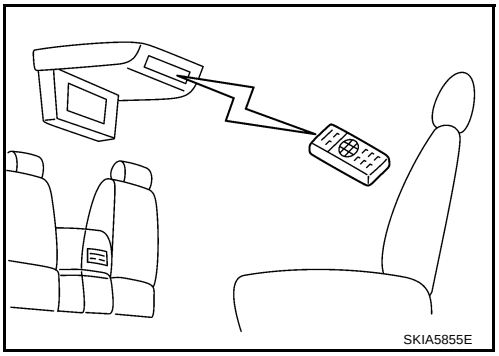


OK or NG

OK >> GO TO 3.
NG >> ● When operating, face remote controller to the sensor.
● Remove seal or dirt that is interrupting signal.
● If the battery has run down, replace it with new one.

## 3. CHECK HARNESS

1. Turn ignition switch OFF.
2. Disconnect DVD player and DVD display connectors.
3. Check continuity between DVD player harness connector B19 terminal 30 and DVD display harness connector B61 terminal 14.

**30 – 14 : Continuity should exist.**

4. Check continuity between DVD player harness connector B19 terminal 30 (BR) and ground.

**30 – Ground : Continuity should not exist.**

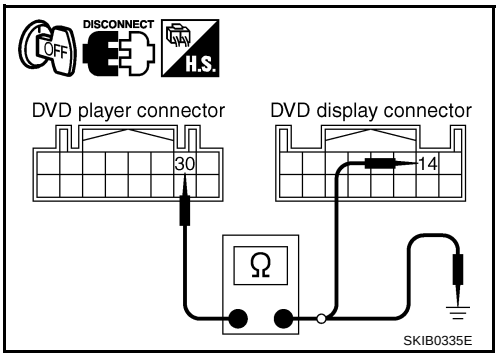


OK or NG

OK >> GO TO 4.
NG >> Repair harness or connector.

## 4. CHECK DATA (LCD – DVD) SIGNAL

1. Connect DVD display connector.
2. Turn ignition switch ACC.
3. Check the signal between DVD player harness connector B19 terminal 30 and ground.

**30 – Ground:**

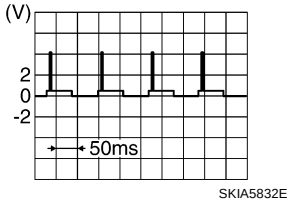


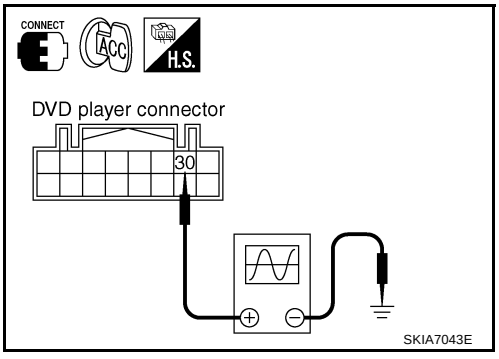


OK or NG

OK >> Replace DVD player.
NG >> Replace DVD display.

# No CD·DVD Sound From All Speakers

NKS003EC

## 1. VERIFY THE PHENOMENON

1. Turn ignition switch ACC.
2. Turn on the radio, receive radio program, check that the sound is heard from all the speakers.

OK or NG

OK >> GO TO 2.
NG >> Replace audio unit.

## 2. CHECK A/C AND AV SWITCH SELF-DIAGNOSIS

A/C and AV switch self-diagnosis. Check “REAR AV” switch. Refer to AV-82, "A/C and AV Switch Self-Diagnosis Function" .

OK or NG

OK >> GO TO 3.
NG >> Replace A/C and AV switch.

## 3. CHECK HARNESS

1. Turn ignition switch OFF.
2. Disconnect DVD player and audio unit connectors.
3. Check continuity between DVD player harness connector M73 terminals 1, 2, 3, 4 and audio unit harness connector M65 terminals 37, 39, 43, 42.

**1 – 37 : Continuity should exist.**
**2 – 39 : Continuity should exist.**
**3 – 43 : Continuity should exist.**
**4 – 42 : Continuity should exist.**

4. Check continuity between DVD player harness connector M73 terminals 1, 2, 3, 4 and ground.

**1, 2, 3, 4 – Ground : Continuity should not exist.**

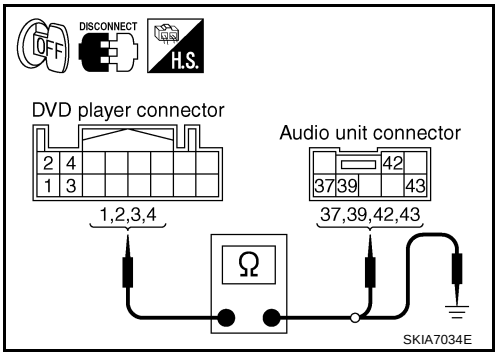


OK or NG

OK >> GO TO 4.
NG >> Repair harness or connector.

## 4. CHECK MES SOUND SIGNAL

1. Connect DVD player and audio unit connectors.
2. Turn ignition switch ACC and Press “POWER” switch of DVD player.
3. Check the signal between DVD player harness connector M73 terminals 1 and 2, 3 and 4 with CONSULT-II or oscilloscope.

| Terminal (+) | Terminal (–) | Condition | Reference value |
|---|---|---|---|
| 1 | 2 | Play CD or DVD video. | 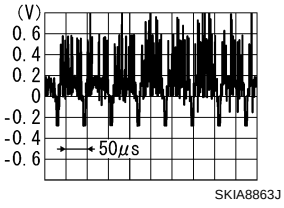 |
| 3 | 4 | | |



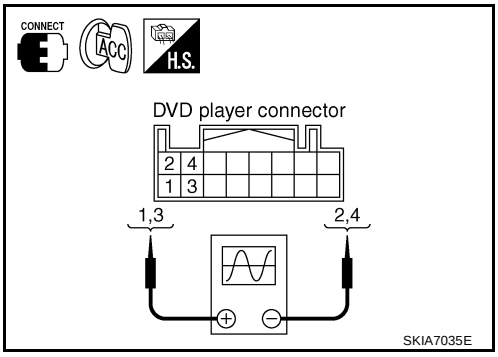


OK or NG

OK >> Replace audio unit.
NG >> Replace DVD player.

## Removal and Installation for DVD Player

NKS003ED

### REMOVAL

1. Remove center console. Refer to IP-10, "INSTRUMENT PANEL ASSEMBLY" .
2. Remove center console rear finisher. Refer to IP-12, "(H) Center Console" .
3. Remove screws (2) with power tool and remove DVD player.

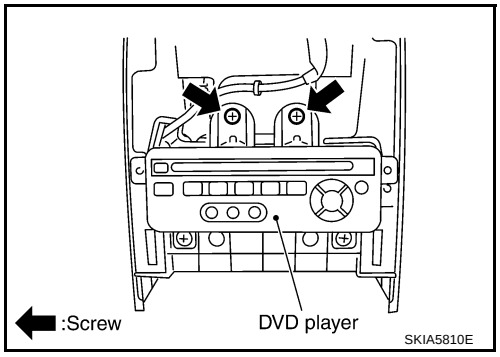


4. Remove screws (4) with power tool and remove brackets.

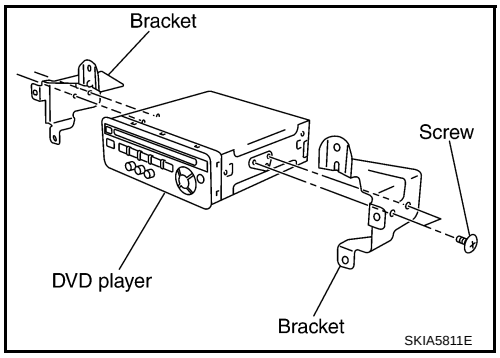


### INSTALLATION

Installation is the reverse order of removal.

## Removal and Installation for DVD Display Unit

NKS003EE

### REMOVAL

1. Insert cloth-covered driver into gaps between rear display cover and head lining, and remove rear display cover.

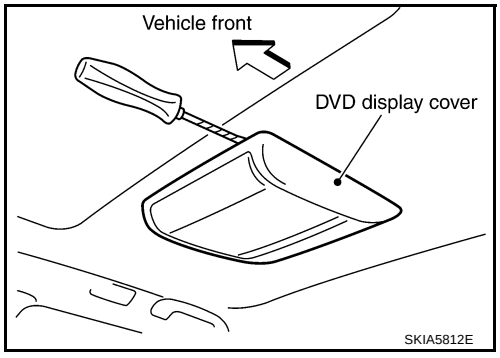


2. Press pawl on rear side and remove inner cover.

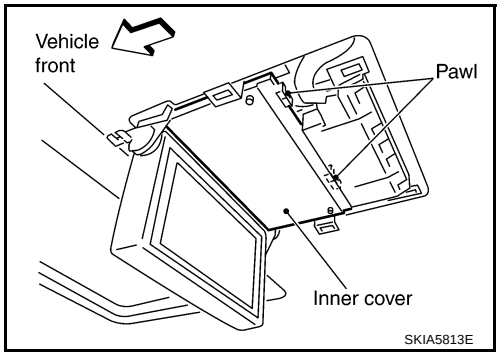

3. Remove screws (4) with power tool.

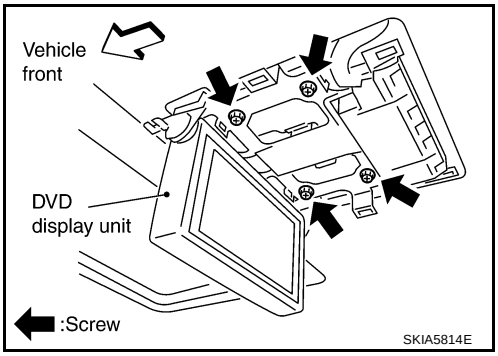


4. Pull DVD display unit to downside, and remove rear display unit from mounting plate.

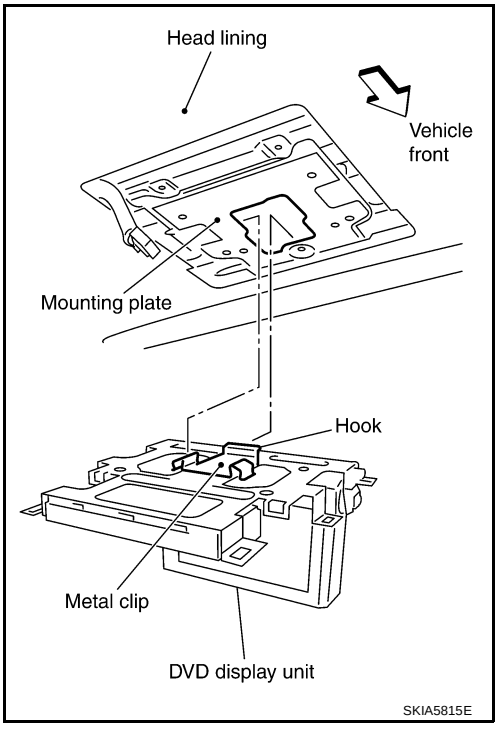


## INSTALLATION

Installation is the reverse order of removal.

**CAUTION:**

**Put metal clip hook in mounting plate, and press it securely.**

# TELEPHONE

PFP:28342

## System Description

NKS003IK

### HANDS-FREE PHONE SYSTEM

- For Hands-free phone system operation information, refer to Owner's Manual.
- TEL adapter unit has Bluetooth module. It can perform wireless hands-free telephone calls using a cellular phone in vehicle compartment.
- 5 or less cellular phones can be registered into the TEL adapter unit.
- Hands-free phone mode starts by transmitting switch signal to TEL adapter unit when pressing button.
- Hands-free phone mode ends by transmitting switch signal to TEL adapter unit when pressing MODE button.
- When uttering to the microphone, microphone signal (audio signal) is transmitted from the microphone to the TEL adapter unit and transmitted to the cellular phone with the Bluetooth® communication.
- Audio sound is muted when turning audio ON while hands-free phone system works.
- Sound signal transmits to receiver's telephone through microphone unit, TEL adapter unit, and TEL antenna when sending voice.
- Sound signal outputs to front RH speakers through TEL antenna, TEL adapter unit, audio unit, and BOSE speaker amp. when receiving voice.

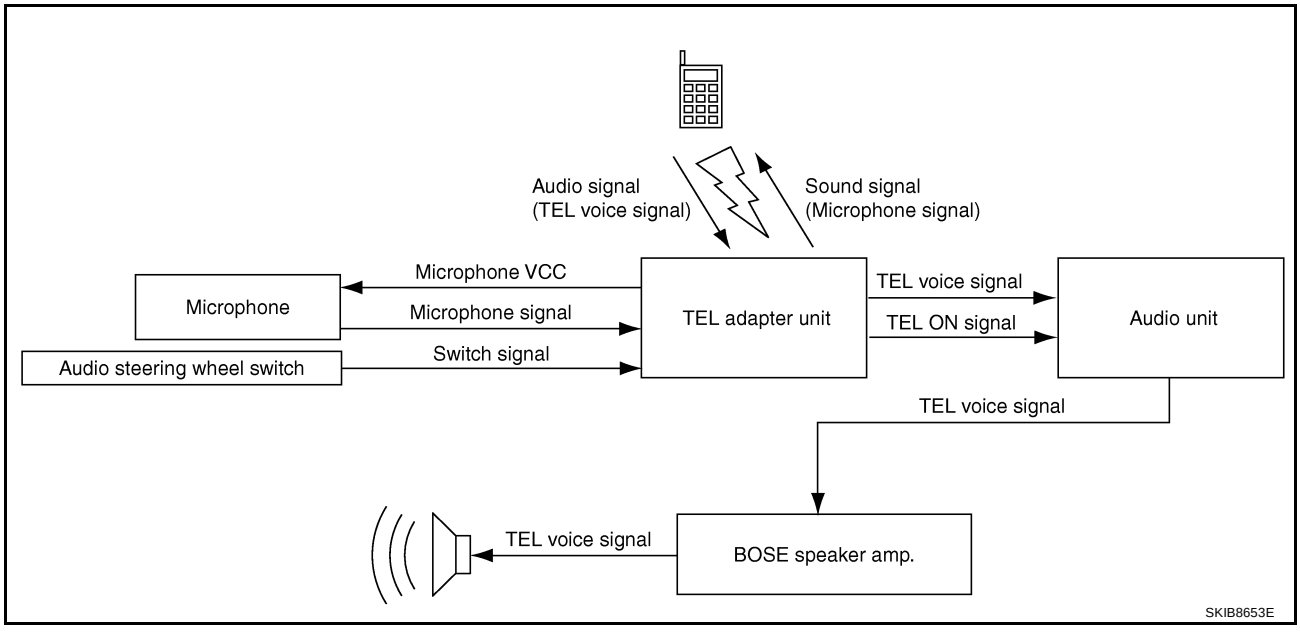

## Component Parts Location

NKS003IL

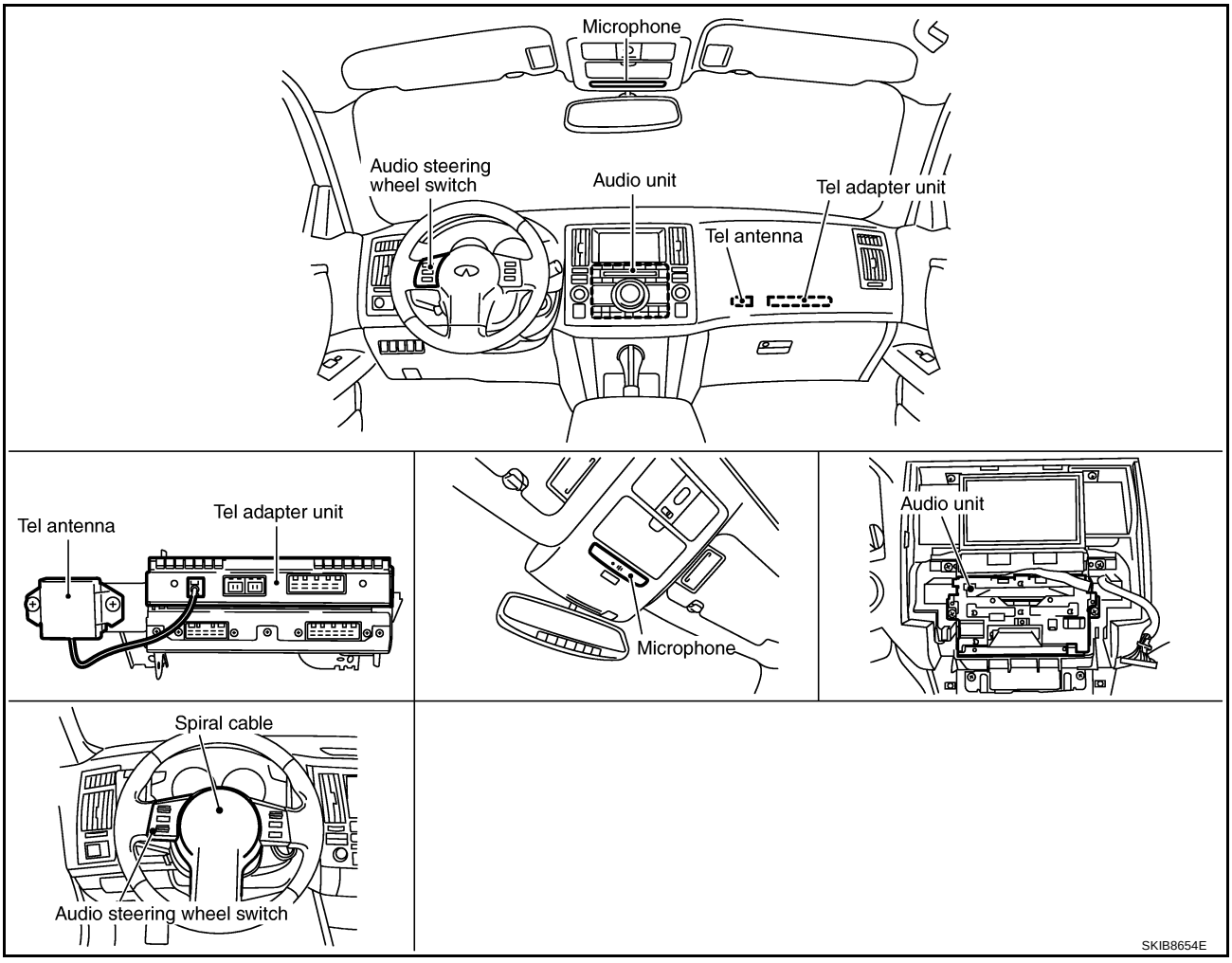

## Schematic

NKS003IM

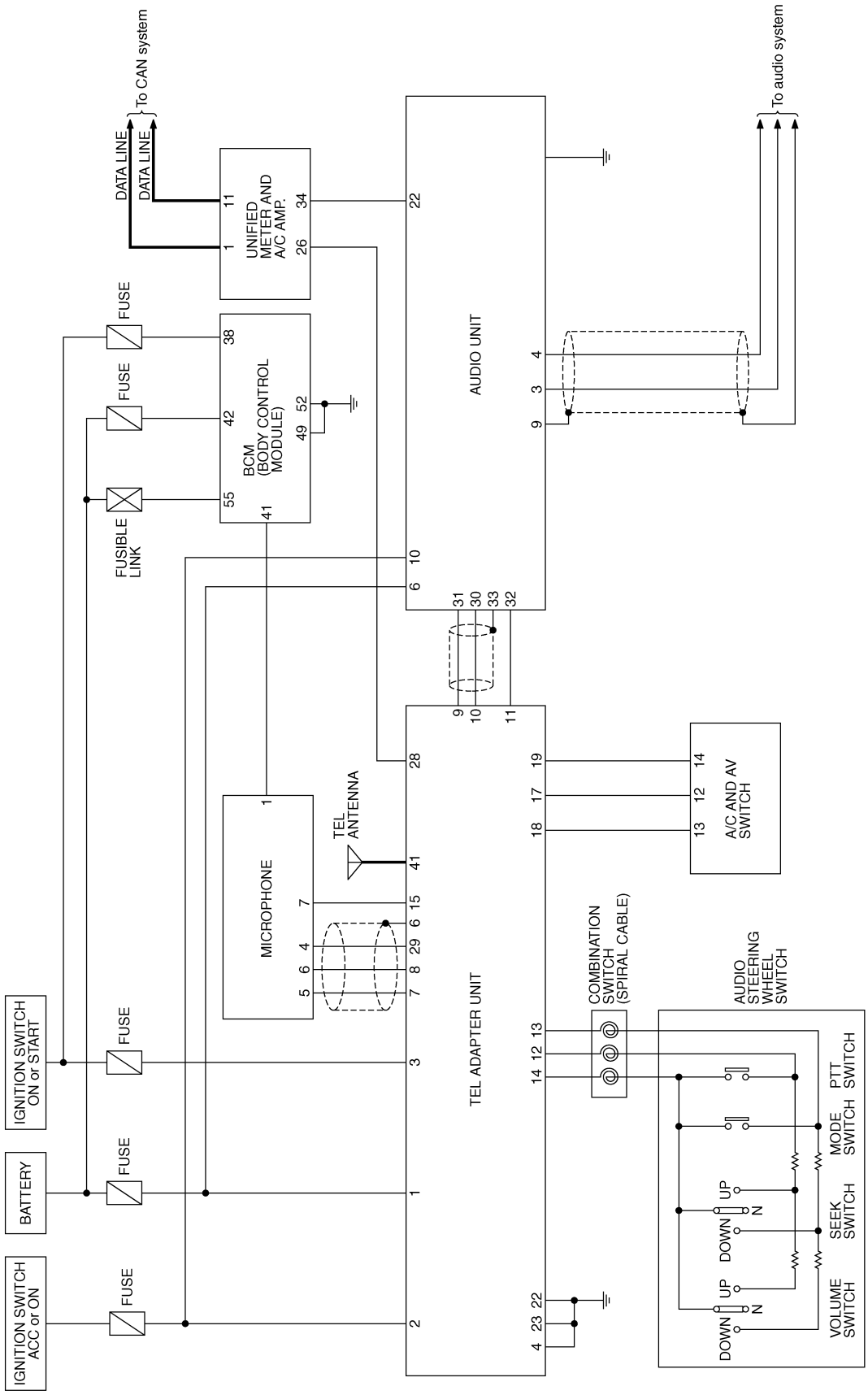


TKWM4432E

## Wiring Diagram — H/PHON —

NKS003IN

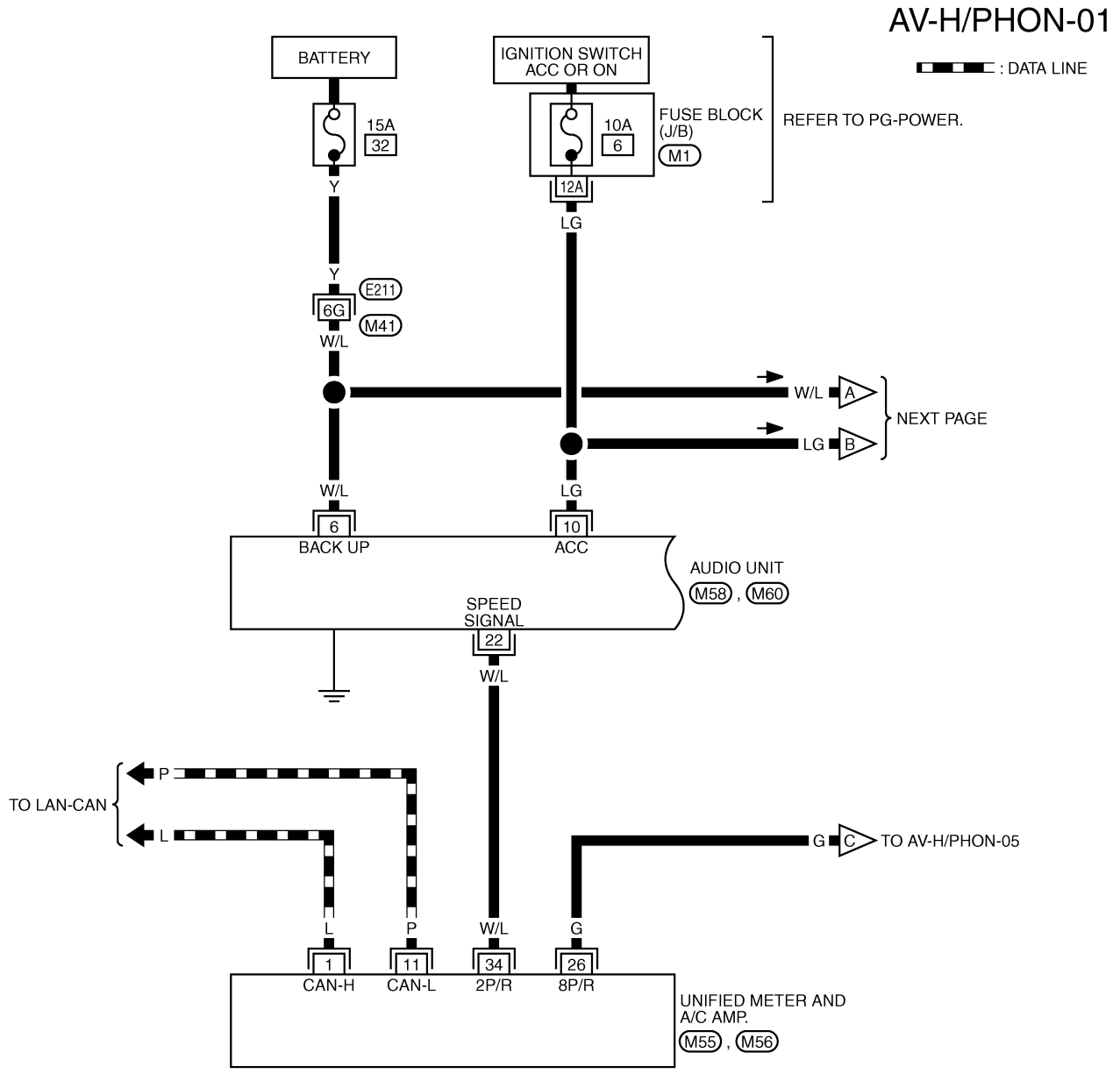


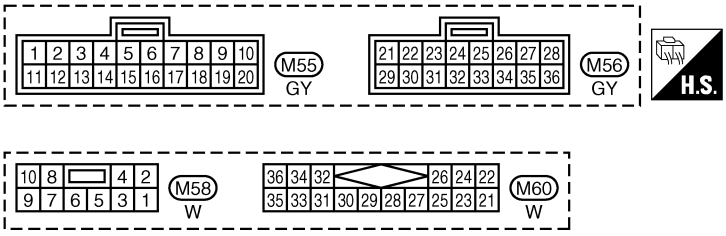


REFER TO THE FOLLOWING.

E211 -SUPER MULTIPLE JUNCTION (SMJ)

M1 -FUSE BLOCK-JUNCTION BOX (J/B)

TKWM4433E

AV-H/PHON-02

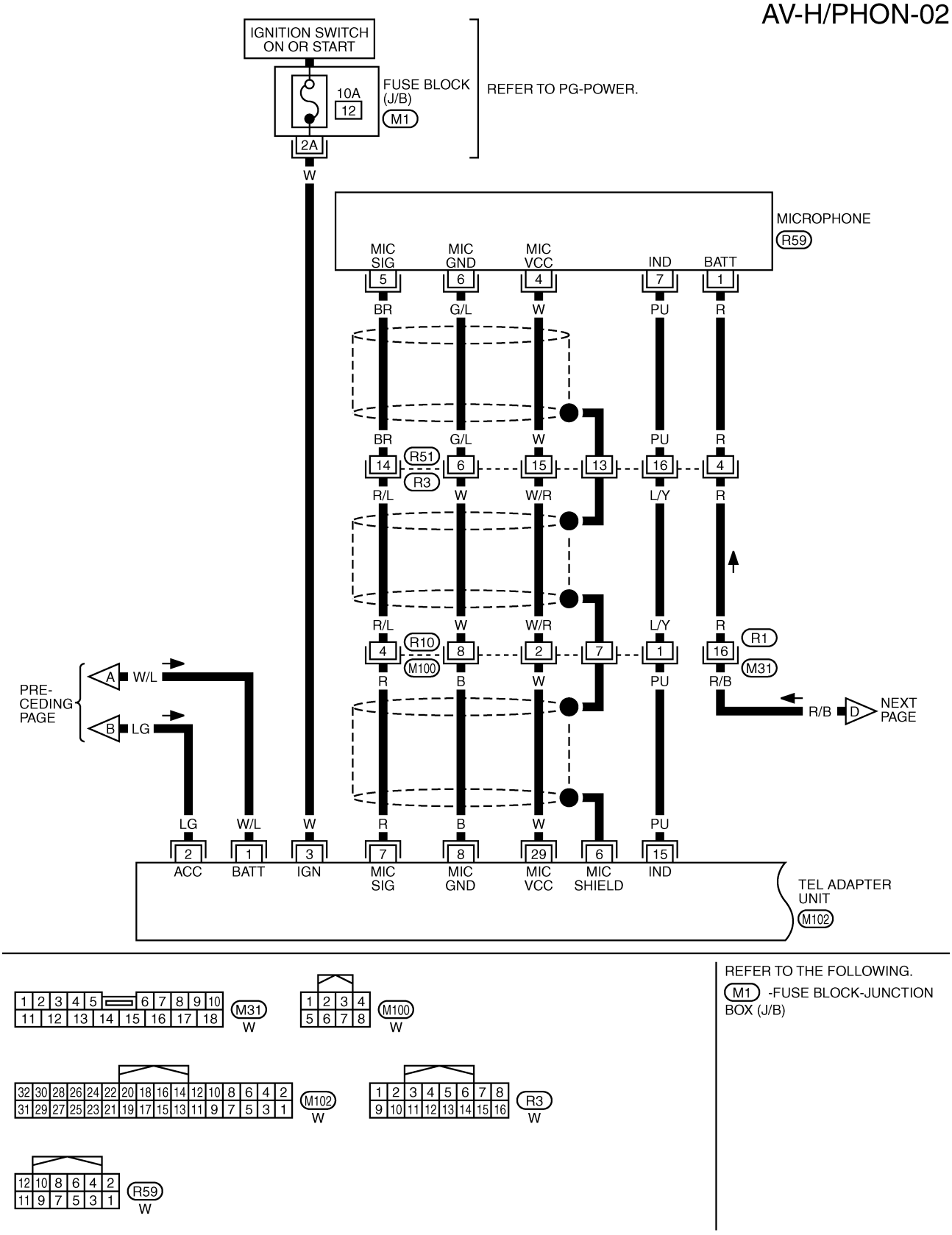











REFER TO THE FOLLOWING.

M1 -FUSE BLOCK-JUNCTION BOX (J/B)

TKWM4434E

AV-H/PHON-03

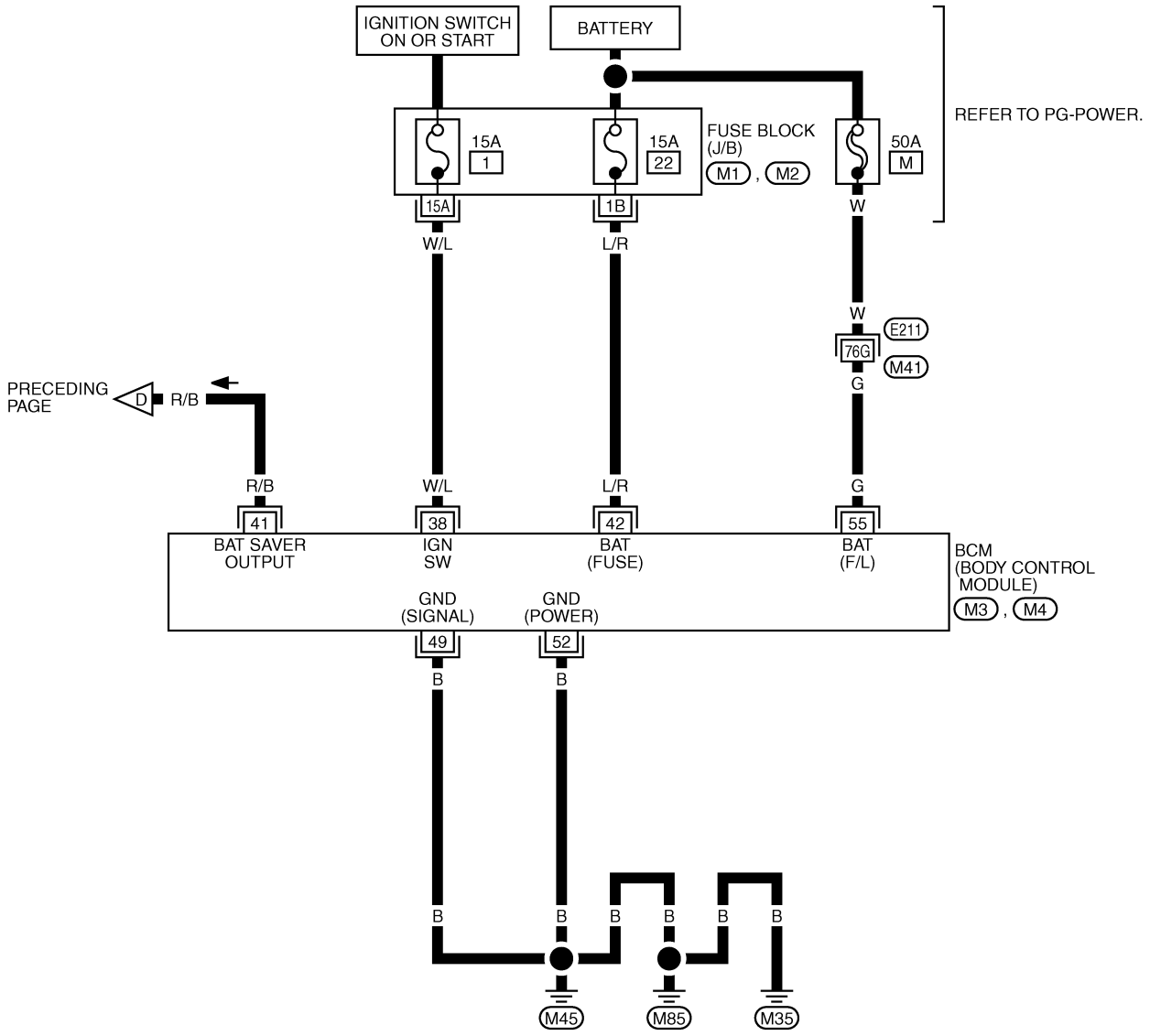


REFER TO THE FOLLOWING.

E211 -SUPER MULTIPLE JUNCTION (SMJ)

M1 , M2 -FUSE BLOCK-JUNCTION BOX (J/B)

M3 , M4 -ELECTRICAL UNITS

TKWM4435E

AV-H/PHON-04

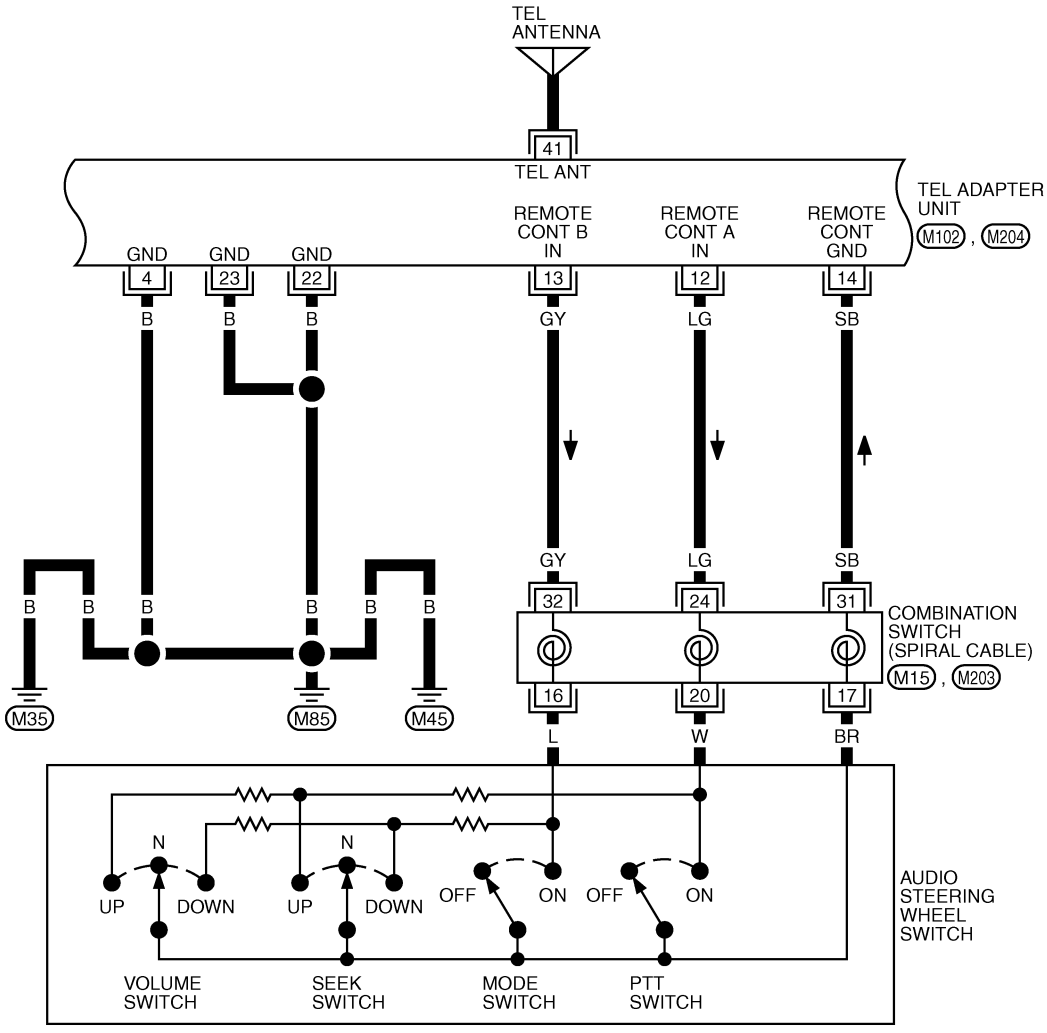


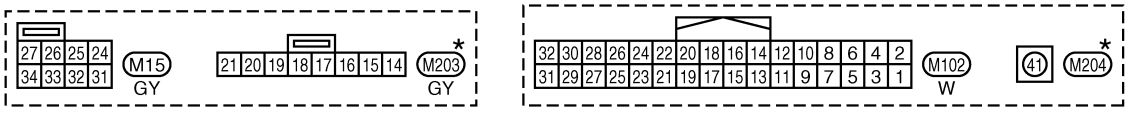


*: THIS CONNECTOR IS NOT SHOWN IN "HARNESS LAYOUT", PG SECTION.

TKWM4436E

AV-H/PHON-05

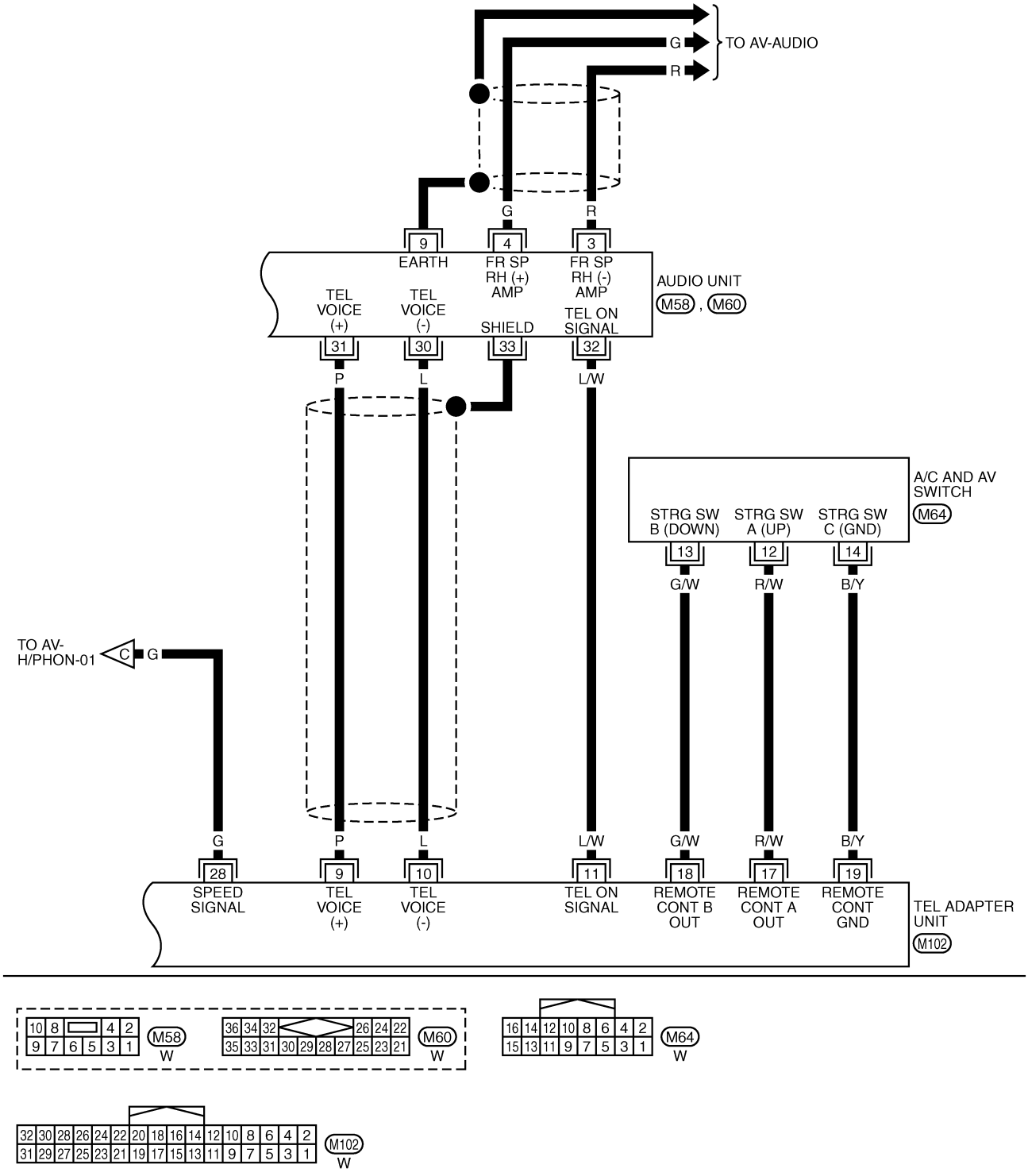


TKWM4437E

## Terminals and Reference Value for TEL Adapter Unit

NKS003IO

| Terminal (Wire color) | | Item | Signal input/ output | Condition | | Reference value |
|---|---|---|---|---|---|---|
| + | – | | | Ignition switch | Operation | |
| 1 (W/L) | Ground | Battery power supply | Input | OFF | — | Battery voltage |
| 2 (LG) | Ground | ACC power supply | Input | ACC | — | Battery voltage |
| 3 (W) | Ground | Ignition signal | Input | ON | — | Battery voltage |
| 4 (B) | Ground | Ground | — | ON | — | Approx. 0 V |
| 6 | — | Shield | — | — | — | — |
| 7 (R) | 8 (B) | MIC. signal | Input | ON | Uttering in front of the microphone while using the hands-free phone system. | 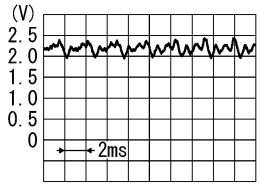  PKIB5037J |
| 9 (P) | 10 (L) | TEL voice signal | Output | ON | Receiving the party's voice while using the hands-free phone system. | 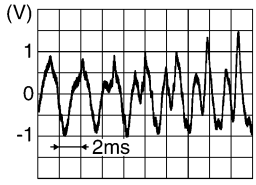  SKIB3609E |
| 11 (L/W) | Ground | TEL ON signal | Output | ON | While using handsfree phone system. | Approx. 0 V |
| | | | | | While not using handsfree phone system. | Approx. 5 V |
| 12 (LG) | Ground | Remote control A | Input | ON | Press switch | Approx. 0 V |
| | | | | | Press SEEK UP switch | Approx. 1.7 V |
| | | | | | Press VOL UP switch | Approx. 3.3 V |
| | | | | | Except for above | Approx. 5 V |
| 13 (GY) | Ground | Remote control B | Input | ON | Press MODE switch | Approx. 0 V |
| | | | | | Press SEEK DOWN switch | Approx. 1.7 V |
| | | | | | Press VOL DOWN switch | Approx. 3.3 V |
| | | | | | Except for above | Approx. 5 V |
| 14 (SB) | Ground | Remote control ground | — | ON | — | Approx. 0 V |
| 15 (PU) | Ground | Indicator signal | Output | ON | Microphone indicator ON, and lighting switch OFF | Approx. 1.3 V |
| | | | | | Microphone indicator ON, and lighting switch ON | Approx. 0.8 V |
| | | | | | Microphone unit indicator OFF | Approx. 12 V |
| 17 (R/W) | Ground | Remote control A | Output | ON | Press switch | Approx. 0 V |
| | | | | | Press SEEK UP switch | Approx. 1.7 V |
| | | | | | Press VOL UP switch | Approx. 3.3 V |
| | | | | | Except for above | Approx. 5 V |

| Terminal (Wire color) | | Item | Signal input/ output | Condition | | Reference value |
|---|---|---|---|---|---|---|
| + | – | | | Ignition switch | Operation | |
| 18 (G/W) | Ground | Remote control B | Output | ON | Press MODE switch | Approx. 0 V |
| | | | | | Press SEEK DOWN switch | Approx. 1.7 V |
| | | | | | Press VOL DOWN switch | Approx. 3.3 V |
| | | | | | Except for above | Approx. 5 V |
| 19 (B/Y) | Ground | Remote control ground | — | ON | — | Approx. 0 V |
| 22 (B) | Ground | Ground | — | ON | — | Approx. 0 V |
| 23 (B) | Ground | Ground | — | ON | — | Approx. 0 V |
| 28 (G) | Ground | Vehicle speed signal (8-pulse) | Input | ON | When vehicle speed is approx. 40 km/h (25 MPH) | 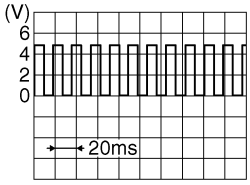  SKIA6649J |
| 29 (W) | Ground | MIC. VCC | Output | ON | — | Approx. 5 V |
| 41 | — | TEL signal | — | — | — | — |

## Self-Diagnosis Function

NKS003IR

The followings are diagnosis functions performed by TEL adapter unit.

- Performs the unit self–diagnosis and antenna diagnosis, and informs results with the indicator and voice guidance.
- Informs vehicle speed pulse count from the time of key switch ON with voice guidance, and enables to check vehicle speed signal.
- Outputs voice giving to microphone with speaker, and enables to check microphone function.

## OPERATION PROCEDURE

1. Start the engine.
2. Press and hold switch for 5 seconds or more.

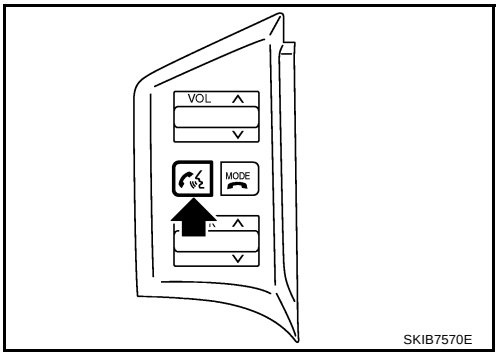


- This allows the indicator to blink concurrently with voice guidance outputs, and determines if there is any current error in the state of blinking.
- When the indicator does not blink, check the microphone power supply circuit, and then repair malfunctioning part.

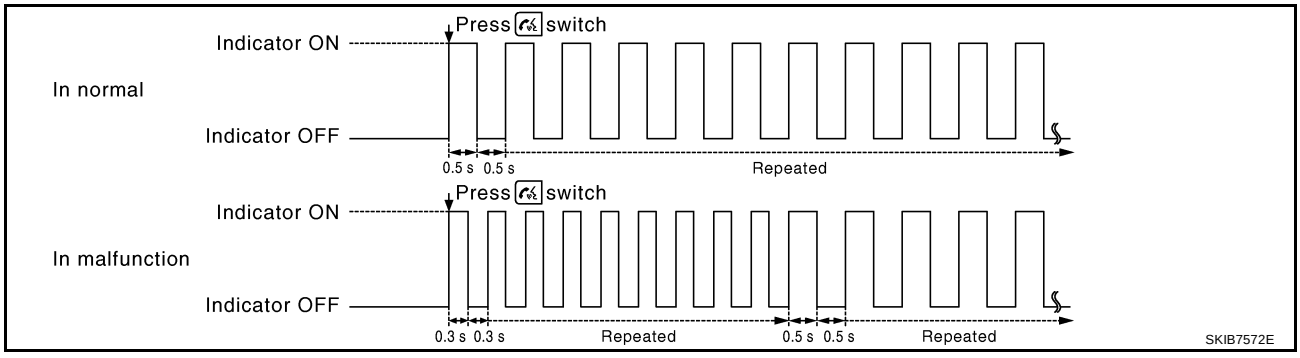


3. Press both and MODE switch simultaneously while voice guidance outputs.

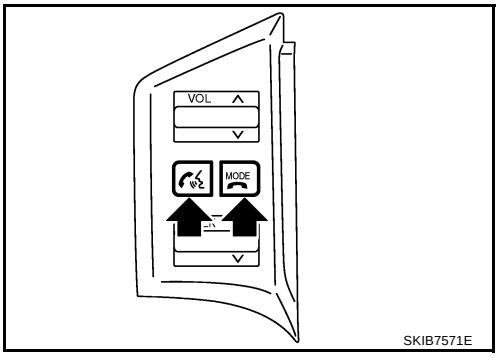


4. Press and MODE switch simultaneously while beep sound outputs.

   **CAUTION:**
   **Turn ignition switch OFF and return to Step 1 again if beep sound does not output. Replace TEL adapter unit if beep sound still does not output.**

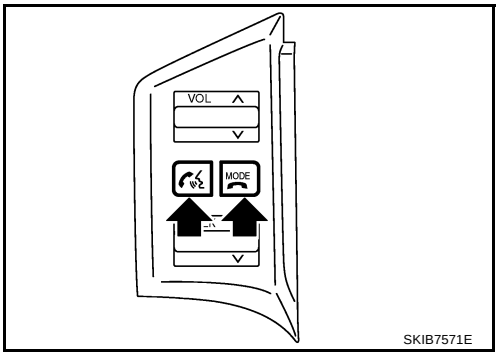


5. Perform the followings.
   - Check how many times indicator flashes within 5 seconds after pressing and MODE switch.
   - Inform the malfunction and vehicle speed pulse from the time of ignition switch ON with voice.

**NOTE:**
Vehicle speed pulse is reset to 0 when turning ignition switch OFF.

| Number of indicator flashes | Voice guidance | Malfunction | Possible solution |
|---|---|---|---|
| 1 | Internal failure | TEL adapter unit is malfunctioning | Replace TEL adapter unit |
| 2 | Bluetooth antenna open | TEL antenna feeder is open | Replace TEL antenna |
| 3 | Bluetooth antenna shorted | TEL antenna feeder is short | |

6. Beep sounds (while 1 second) outputs 3 seconds after voice guidance of microphone check.
7. Voice giving to microphone outputs from speaker. Microphone function can be checked.
8. Diagnosis mode exits after a beep sounds.

## Basic Inspection of Hands-Free Phone

NKS003IS

Check the parts or circuit listed below when the hands-free phone system is inoperative at all or a communication error exists between TEL and TEL adopter unit.

- TEL
- TEL adapter unit power supply circuit

### 1. CHECK INDICATOR OPERATION

1. Turn ignition switch ACC.
2. Check the indicator is blinking.

OK or NG

OK >> GO TO 2
NG >> Check indicator circuit and MIC. circuit.

### 2. CHECK AUDIO STEERING WHEEL SWITCH OPERATION

1. Press the switch.
2. Check the indicator is blinking.

OK or NG

OK >> INSPECTION END
NG >> Check audio steering wheel switch circuit.

## Audio Steering Wheel Switch Does Not Operate

NKS003M1

### 1. CHECK HARNESS

1. Turn ignition switch OFF.
2. Disconnect A/C and AV switch and TEL adapter unit connectors.
3. Check continuity between A/C and AV switch harness connector (A) M64 terminals 12, 13, 14 and teladapter unit harness connector (B) M102 terminals 17, 18, 19.

| | |
|---|---|
| **12 – 17** | **: Continuity should exist.** |
| **13 – 18** | **: Continuity should exist.** |
| **14 – 19** | **: Continuity should exist.** |

4. Check continuity between A/C and AV switch and ground.

| | |
|---|---|
| **12, 13, 14 – ground** | **: Continuity should not exist.** |

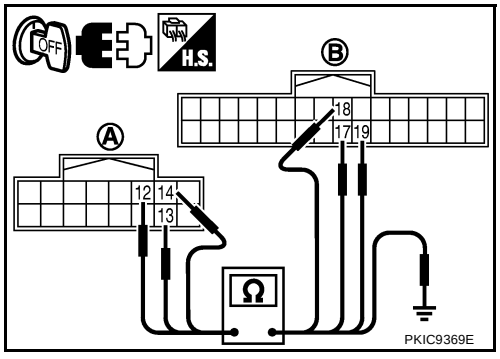


OK or NG

OK >> GO TO 2.
NG >> Repair harness or connector.

## 2. CHECK HARNESS

1. Disconnect spiral cable connector.
2. Check continuity between TEL adapter unit harness connector (A) M102 terminals 12, 13, 14 and spiral cable harness connector (B) M15 terminals 24, 32, 31.

| | |
|---|---|
| **12 – 24** | **: Continuity should exist.** |
| **13 – 32** | **: Continuity should exist.** |
| **14 – 31** | **: Continuity should exist.** |

3. Check continuity between TEL adapter unit and ground.

| | |
|---|---|
| **12, 13, 14 – ground** | **: Continuity should not exist.** |

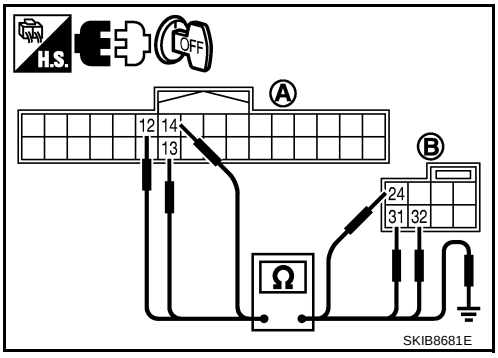


OK or NG

OK >> GO TO 3.
NG >> Repair harness or connector.

## 3. CHECK SPIRAL CABLE

1. Disconnect spiral cable connector (Audio steering wheel switch harness side).
2. Check continuity between spiral cable connector M15 terminals 24, 31, 32 and spiral cable connector M203 terminals 20, 17, 16.

| | |
|---|---|
| **24 – 20** | **: Continuity should exist.** |
| **31 – 17** | **: Continuity should exist.** |
| **32 – 16** | **: Continuity should exist.** |

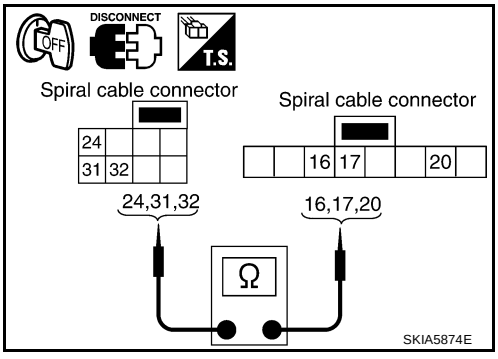


OK or NG

OK >> GO TO 4.
NG >> Replace spiral cable.

## 4. CHECK AUDIO STEERING WHEEL SWITCH RESISTANCE

Check resistance audio steering wheel switch terminals.

| Terminal | | Signal name | Condition | Resistance (Ω) |
|---|---|---|---|---|
| 16 | 17 | Mode | Depress mode switch. | Approx. 0 |
| | | Seek down | Depress (station) down switch. | Approx. 165 |
| | | Volume (down) | Depress volume down switch. | Approx. 652 |
| 20 | | PTT | Depress PTT switch. | Approx. 0 |
| | | Seek up | Depress (station) up switch. | Approx. 165 |
| | | Volume (up) | Depress volume up switch. | Approx. 652 |

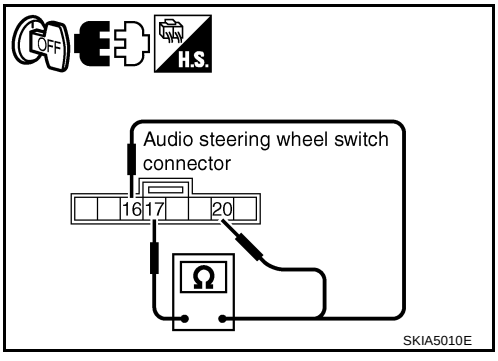


OK or NG

OK >> INSPECTION END
NG >> Replace audio steering wheel switch.

## Voice Activated Control Function Does Not Operate

NKS003IU

**NOTE:**
Even under the normal condition, TEL voice guidance may not occur when pressing audio steering wheel switch.

### TEL VOICE GUIDANCE IS HEARD WHEN PRESSING AUDIO STEERING WHEEL SWITCH

### 1. CHECK HARNESS BETWEEN TEL ADAPTER UNIT AND MICROPHONE UNIT

1. Turn ignition switch OFF.
2. Disconnect TEL adapter unit and microphone unit connectors.
3. Check continuity between TEL adapter unit harness connector (A) M102 terminals 7, 8, 29 and microphone unit harness connector (B) R59 terminals 5, 6, 4.

| | |
|---|---|
| **7 – 5** | **: Continuity should exist.** |
| **8 – 6** | **: Continuity should exist.** |
| **29 – 4** | **: Continuity should exist.** |

4. Check continuity between TEL adapter unit harness connector (A) M102 terminals 7, 8, 29 and ground.

| | |
|---|---|
| **7, 8, 29 – Ground** | **: Continuity should not exist.** |

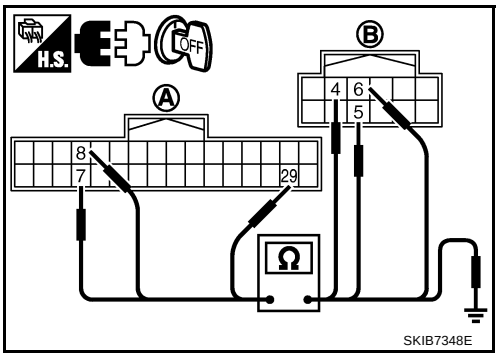


OK or NG

OK >> GO TO 2.
NG >> Repair harness or connector.

### 2. CHECK MIC. POWER SUPPLY

1. Connect TEL adapter unit and microphone unit connectors.
2. Turn ignition switch ON.
3. Check voltage between microphone unit harness connector R59 terminal 4 and ground.

| | |
|---|---|
| **4 – Ground** | **: Approx. 5 V** |

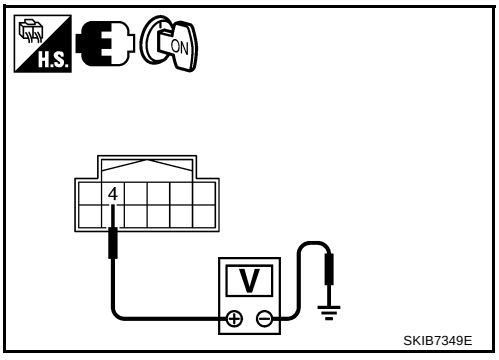


YES or NO

YES >> GO TO 3.
NO >> Replace TEL adapter unit.

### 3. CHECK MIC. SIGNAL

1. Check signal between TEL adapter unit harness connector M102 terminal 7 and 8.

**When giving a voice**

**7 – 8:**

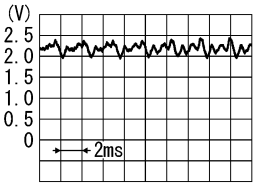


PKIB5037J

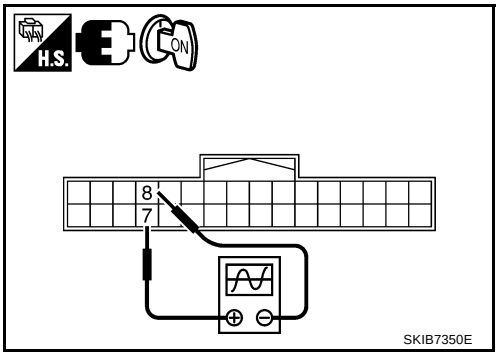


OK or NG

OK >> Replace TEL adapter unit.
NG >> Replace microphone unit.

## TEL VOICE GUIDANCE IS NOT HEARD WHEN PRESSING AUDIO STEERING WHEEL SWITCH

### 1. CHECK AUDIO STEERING WHEEL SWITCH CIRCUIT

Refer to AV-188, "Voice Activated Control Function Does Not Operate" .

OK or NG

OK >> GO TO 2.
NG >> Replace applicable parts.

### 2. CHECK TEL VOICE SIGNAL CIRCUIT

1. Turn ignition switch OFF.
2. Disconnect TEL adapter unit and audio unit connectors.
3. Check continuity between TEL adapter unit harness connector (A) M102 terminals 9, 10, 11 and audio unit harness connector (B) M60 terminals 31, 30, 32.

| | |
|---|---|
| **9 – 31** | **: Continuity should exist.** |
| **10 – 30** | **: Continuity should exist.** |
| **11 – 32** | **: Continuity should exist.** |

4. Check continuity between TEL adapter unit harness connector (A) M102 terminals 9, 10, 11and ground.

| | |
|---|---|
| **9, 10, 11 – Ground** | **: Continuity should not exist.** |

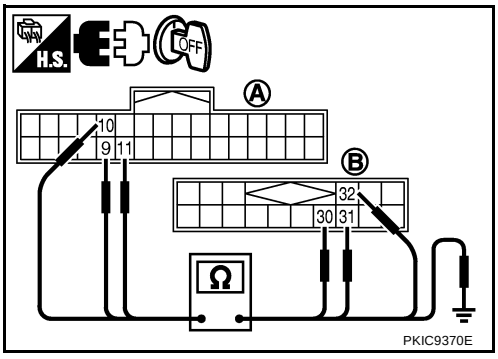


OK or NG

OK >> GO TO 3.
NG >> Repair harness or connector.

### 3. CHECK MUTE SIGNAL

1. Connect TEL adapter unit connector and audio unit connectors.
2. Turn ignition switch ON.
3. Check voltage between TEL adapter unit harness connector M102 terminal 11 and ground.

| | |
|---|---|
| **11 – Ground** | **: Approx. 5 V** |

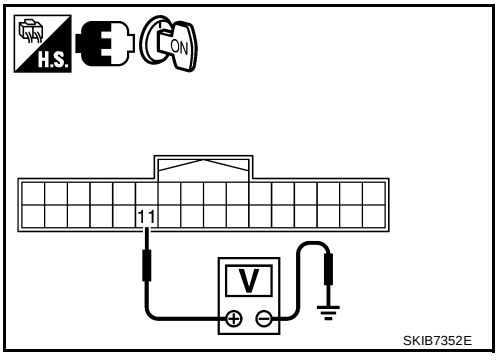


OK or NG

OK >> GO TO 4.
NG >> Replace audio unit.

## 4. CHECK TEL VOICE SIGNAL

1. Check signal between TEL adapter unit harness connector M102 terminals 9 and 10.

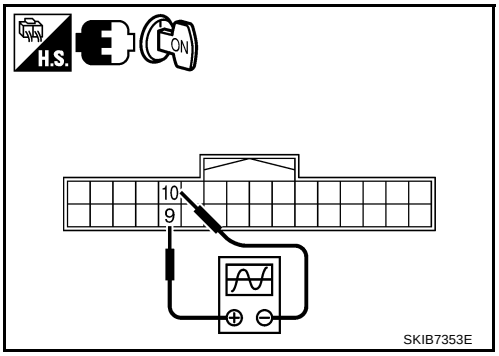


**When giving a voice**

**9 – 10:**

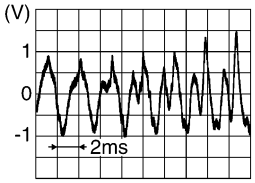


SKIB3609E

OK or NG

OK >> Replace audio unit.
NG >> Replace TEL adapter unit.

## Removal and Installation of TEL Adapter Unit

NKS003IV

### REMOVAL

1. Remove instrument passenger lower panel. Refer to IP-10, "INSTRUMENT PANEL ASSEMBLY" .
2. Remove screws (A) with power tool and remove display control unit (1)and TEL adapter unit (2).

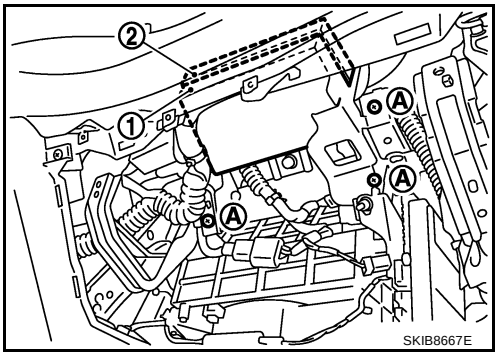


3. Remove TEL adapter unit screws, display control unit screws, and remove brackets.

### INSTALLATION

Installation is the reverse order of removal.

## Removal and Installation for TEL Antenna

NKS003IW

### REMOVAL

1. Remove TEL adapter unit, display control unit. Refer to AV-191, "Removal and Installation of TEL Adapter Unit" .
2. Remove screws (A) and remove TEL antenna (1) from bracket.

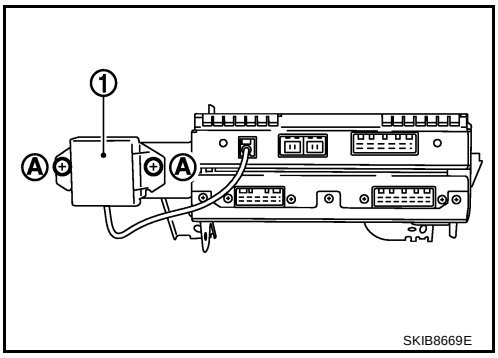


### INSTALLATION

Installation is the reverse order of removal.

## Removal and Installation of Microphone

NKS003IX

### REMOVAL

1. Remove roof console. Refer to EI-43, "HEADLINING" .
2. Remove screws (A) and remove microphone (1) from roof console.

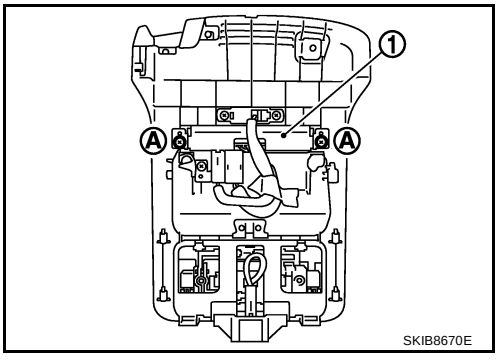


### INSTALLATION

Installation is the reverse order of removal.