SECTION PG

POWER SUPPLY, GROUND & CIRCUIT ELEMENTS

CONTENTS

PRECAUTIONS

PFP:00011

Precautions for Supplemental Restraint System (SRS) “AIR BAG” and “SEAT BELT PRE-TENSIONER”

EKS00B6C

The Supplemental Restraint System such as “AIR BAG” and “SEAT BELT PRE-TENSIONER”, used along with a front seat belt, helps to reduce the risk or severity of injury to the driver and front passenger for certain types of collision. This system includes seat belt switch inputs and dual stage front air bag modules. The SRS system uses the seat belt switches to determine the front air bag deployment, and may only deploy one front air bag, depending on the severity of a collision and whether the front occupants are belted or unbelted.
Information necessary to service the system safely is included in the SRS and SB section of this Service Manual.

WARNING:

- **To avoid rendering the SRS inoperative, which could increase the risk of personal injury or death in the event of a collision which would result in air bag inflation, all maintenance must be performed by an authorized NISSAN/INFINITI dealer.**
- **Improper maintenance, including incorrect removal and installation of the SRS, can lead to personal injury caused by unintentional activation of the system. For removal of Spiral Cable and Air Bag Module, see the SRS section.**
- **Do not use electrical test equipment on any circuit related to the SRS unless instructed to in this Service Manual. SRS wiring harnesses can be identified by yellow and/or orange harnesses or harness connectors.**

POWER SUPPLY ROUTING CIRCUIT

PFP:24110

Schematic

EKS00B6E

For detailed ground distribution, refer to PG-31, "Ground Distribution" .

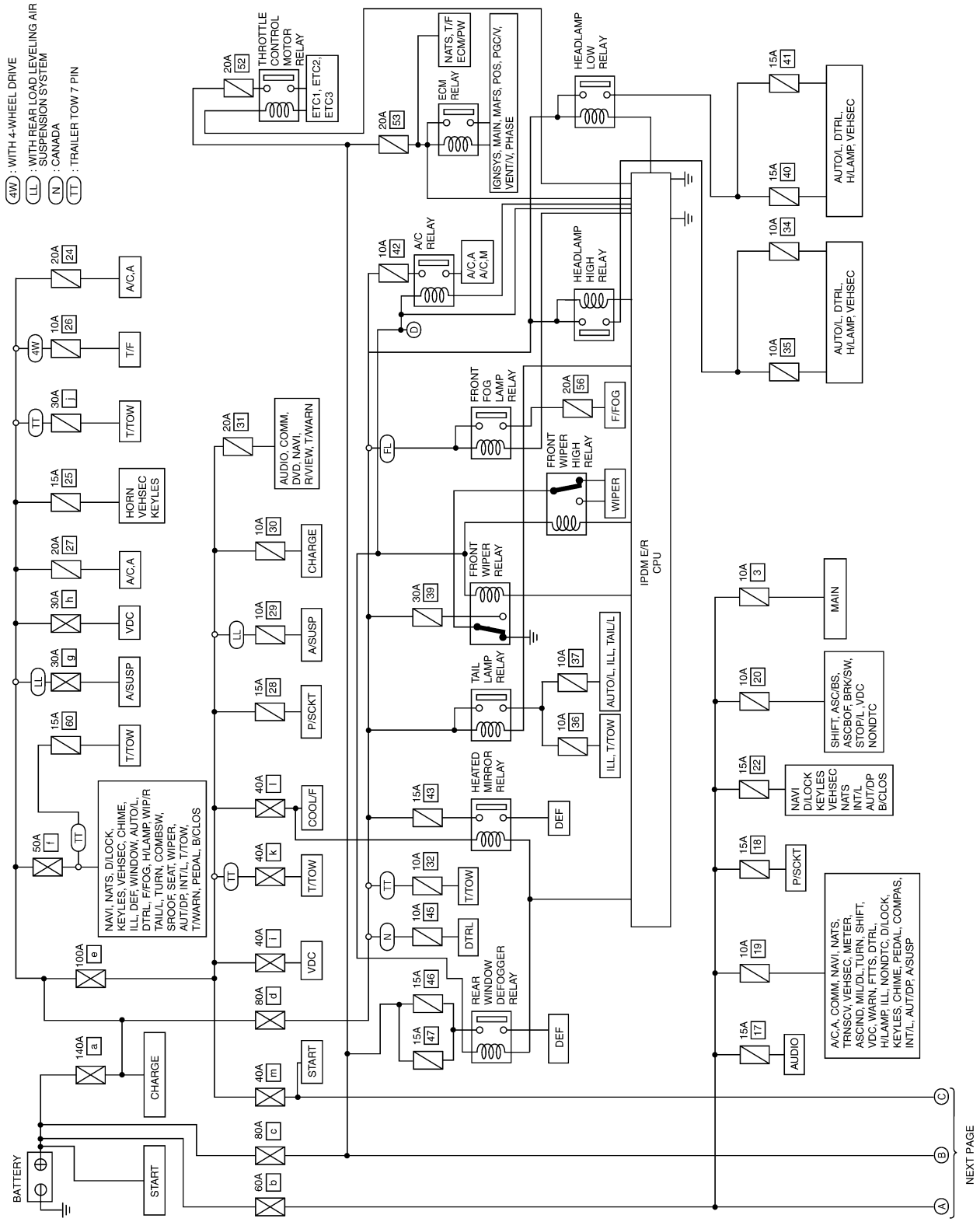

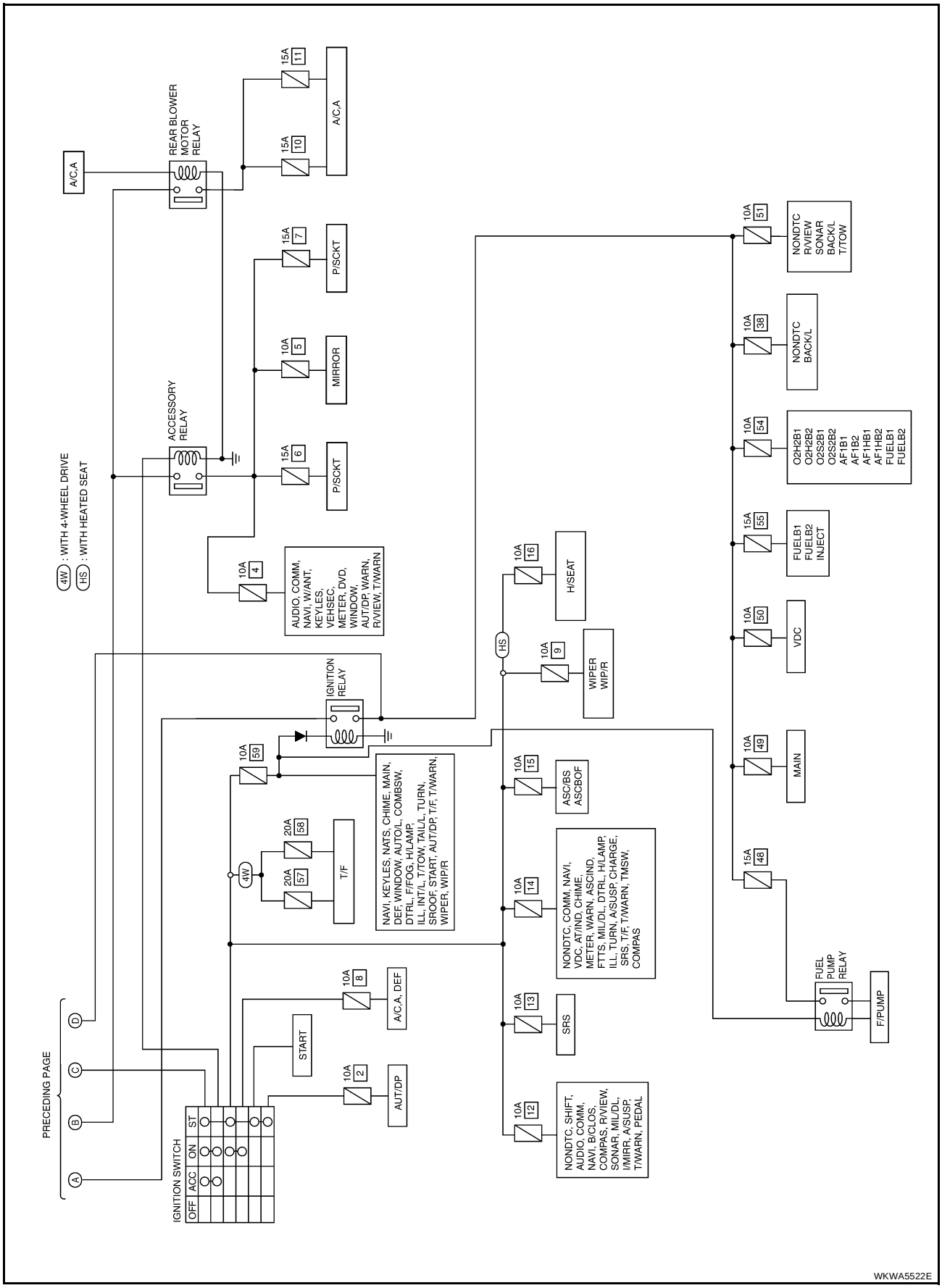
4W : WITH 4-WHEEL DRIVE
HS : WITH HEATED SEAT
PRECEDING PAGE
A
B
C
D
IGNITION SWITCH
OFF
ACC
ON
ST
A/C,A
REAR BLOWER MOTOR RELAY
ACCESSORY RELAY
IGNITION RELAY
15A 11
15A 10
A/C,A
15A 7
P/SCKT
10A 5
MIRROR
15A 6
P/SCKT
10A 4
AUDIO, COMM, NAVI, W/ANT, KEYLES, VEHSEC, METER, DVD, WINDOW, AUT/DP, WARN, R/VIEW, T/WARN
10A 59
NAVI, KEYLES, NATS, CHIME, MAIN, DEF, WINDOW, AUTO/L, COMBSW, DTRL, F/FOG, H/LAMP, ILL, INT/L, T/TOW, TAIL/L, TURN, SROOF, START, AUT/DP, T/F, T/WARN, WIPER, WIP/R
20A 58
20A 57
T/F
START
10A 8
A/C,A, DEF
10A 2
AUT/DP
10A 16
H/SEAT
HS
10A 9
WIPER WIP/R
10A 15
ASC/BS ASCBOF
10A 14
NONDTC, COMM, NAVI, VDC, AT/IND, CHIME, METER, WARN, ASCIND, FTTS, MIL/DL, DTRL, H/LAMP, ILL, TURN, A/SUSP, CHARGE, SRS, T/F, T/WARN, TMSW, COMPAS
10A 13
SRS
10A 12
NONDTC, SHIFT, AUDIO, COMM, NAVI, B/CLOS, COMPAS, R/VIEW, SONAR, MIL/DL, I/MIRR, A/SUSP, T/WARN, PEDAL
10A 51
NONDTC R/VIEW SONAR BACK/L T/TOW
10A 38
NONDTC BACK/L
10A 54
O2H2B1 O2H2B2 O2S2B1 O2S2B2 AF1B1 AF1B2 AF1HB1 AF1HB2 FUELB1 FUELB2
15A 55
FUELB1 FUELB2 INJECT
10A 50
VDC
10A 49
MAIN
15A 48
FUEL PUMP RELAY
F/PUMP
WKWA5522E

Wiring Diagram — POWER —

EKS00B6F

BATTERY POWER SUPPLY — IGNITION SW. IN ANY POSITION

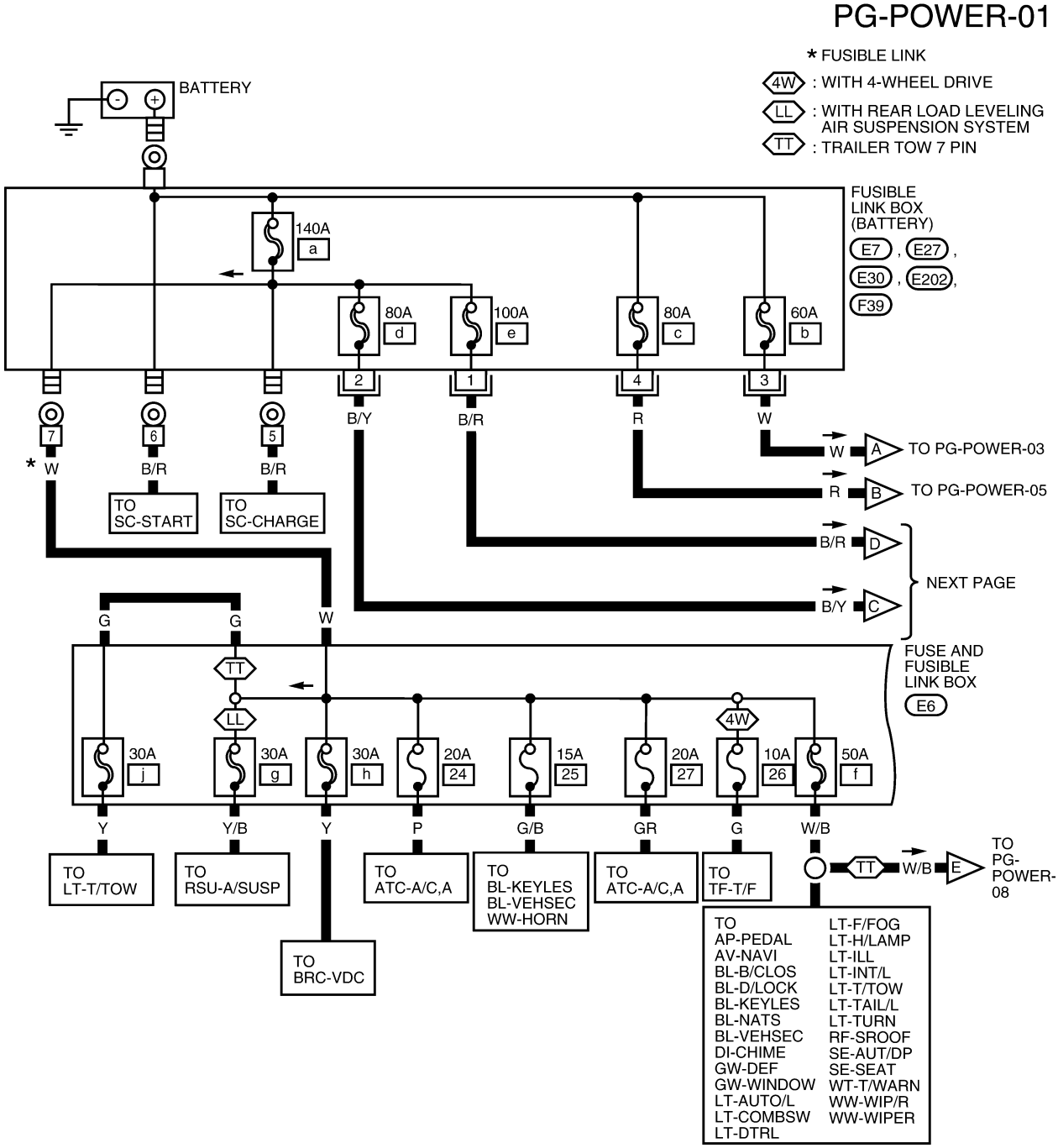

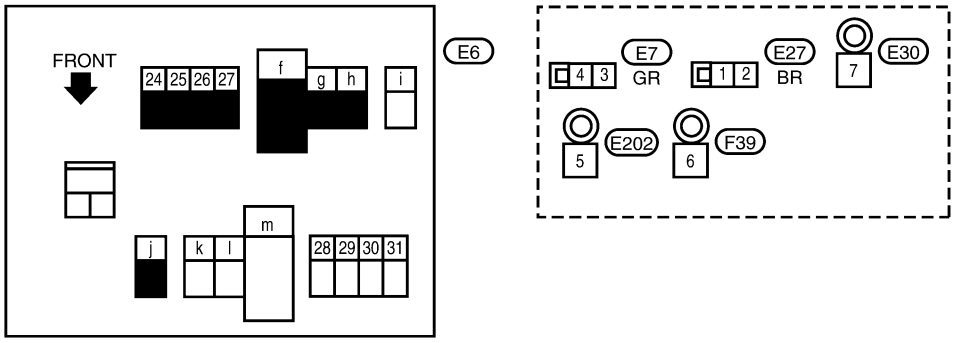

WKWA3855E

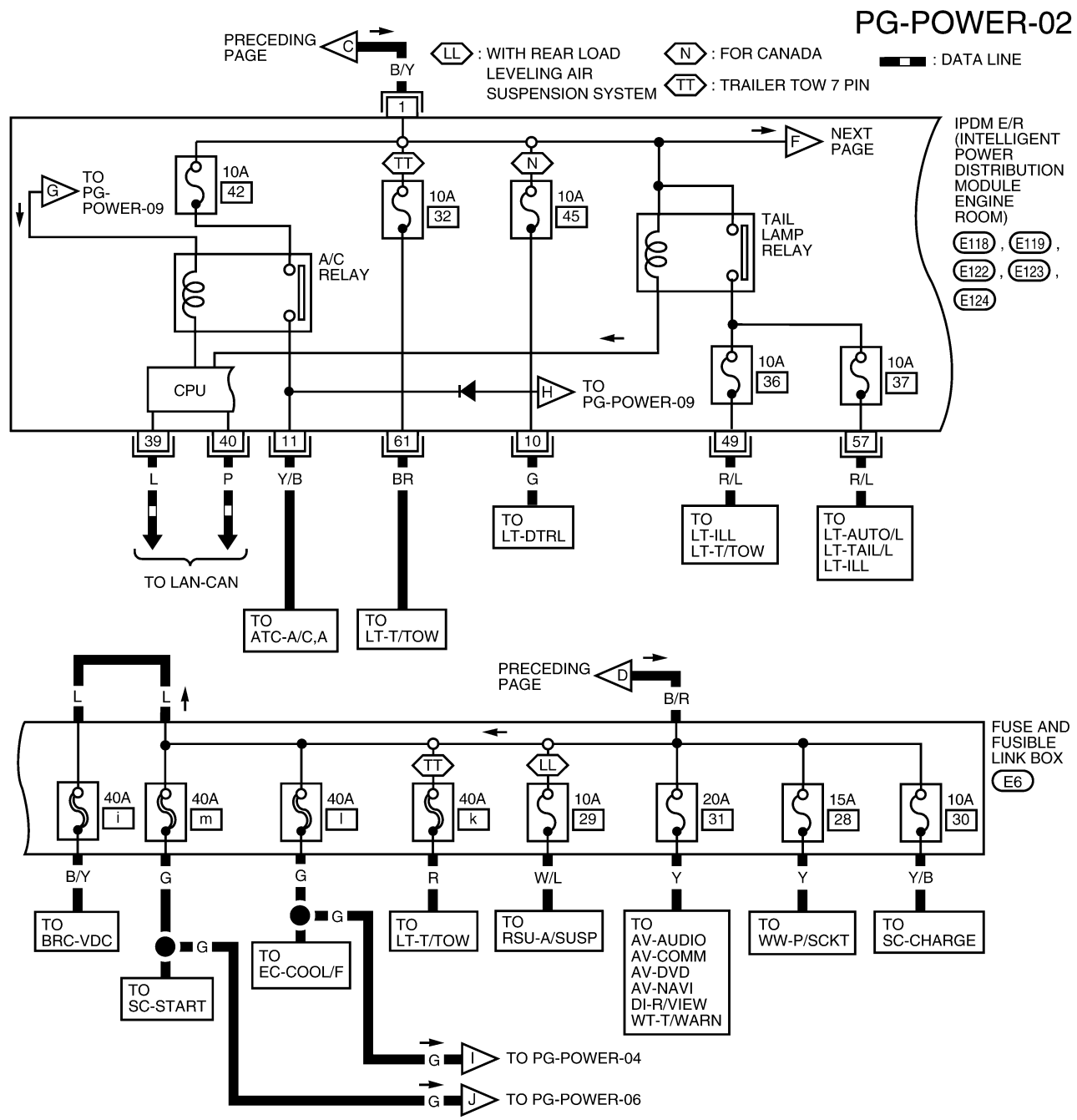
PG-POWER-02
PRECEDING PAGE
C
B/Y
LL : WITH REAR LOAD LEVELING AIR SUSPENSION SYSTEM
N : FOR CANADA
TT : TRAILER TOW 7 PIN
: DATA LINE
1
IPDM E/R (INTELLIGENT POWER DISTRIBUTION MODULE ENGINE ROOM)
E118, E119, E122, E123, E124
NEXT PAGE
F
TO PG-POWER-09
G
10A 42
TT
10A 32
N
10A 45
TAIL LAMP RELAY
A/C RELAY
CPU
H
TO PG-POWER-09
10A 36
10A 37
39
40
11
61
10
49
57
L
P
Y/B
BR
G
R/L
R/L
TO LAN-CAN
TO ATC-A/C,A
TO LT-T/TOW
TO LT-DTRL
TO LT-ILL LT-T/TOW
TO LT-AUTO/L LT-TAIL/L LT-ILL
PRECEDING PAGE
D
B/R
L
L
FUSE AND FUSIBLE LINK BOX
E6
TT
LL
40A i
40A m
40A l
40A k
10A 29
20A 31
15A 28
10A 30
B/Y
G
G
R
W/L
Y
Y
Y/B
TO BRC-VDC
TO SC-START
TO EC-COOL/F
TO LT-T/TOW
TO RSU-A/SUSP
TO AV-AUDIO AV-COMM AV-DVD AV-NAVI DI-R/VIEW WT-T/WARN
TO WW-P/SCKT
TO SC-CHARGE
I
TO PG-POWER-04
J
TO PG-POWER-06

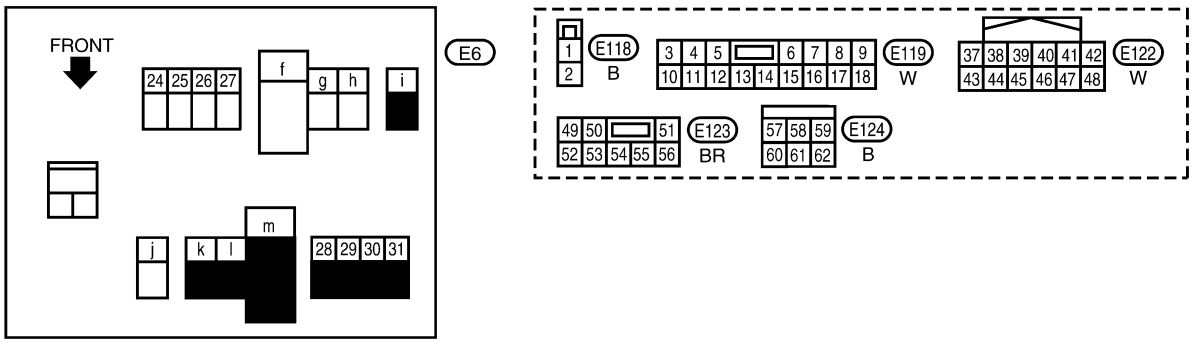
FRONT
E6
24 25 26 27
f
g h
i
j
k l
m
28 29 30 31
1 2
E118
B
3 4 5 6 7 8 9
10 11 12 13 14 15 16 17 18
E119
W
37 38 39 40 41 42
43 44 45 46 47 48
E122
W
49 50 51
52 53 54 55 56
E123
BR
57 58 59
60 61 62
E124
B

WKWA3856E

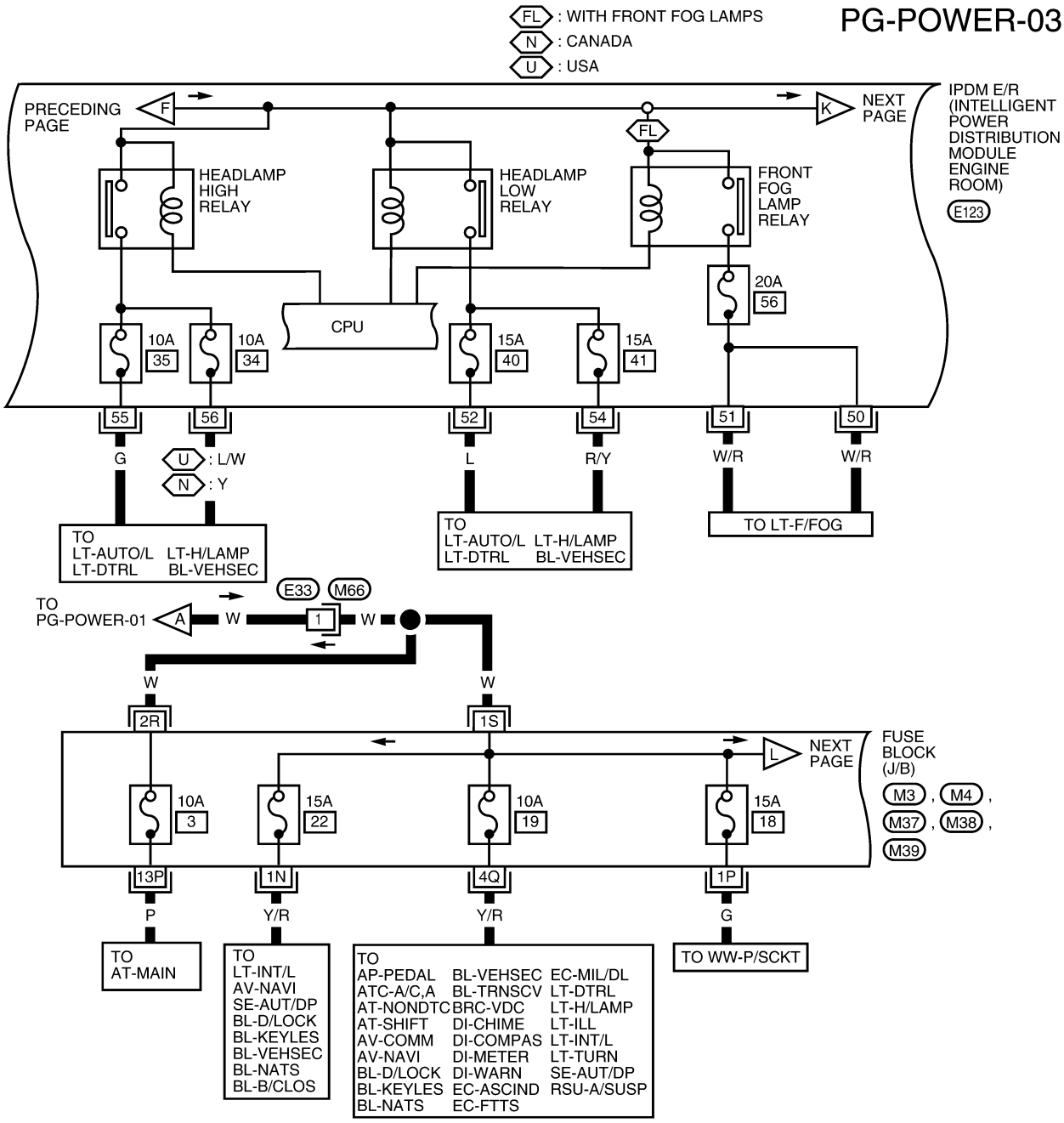
PG-POWER-03
FL : WITH FRONT FOG LAMPS
N : CANADA
U : USA
PRECEDING PAGE
F
K
NEXT PAGE
IPDM E/R (INTELLIGENT POWER DISTRIBUTION MODULE ENGINE ROOM)
E123
FL
HEADLAMP HIGH RELAY
HEADLAMP LOW RELAY
FRONT FOG LAMP RELAY
CPU
10A 35
10A 34
15A 40
15A 41
20A 56
55
56
52
54
51
50
G
U : L/W
N : Y
L
R/Y
W/R
W/R
TO LT-AUTO/L LT-DTRL LT-H/LAMP BL-VEHSEC
TO LT-AUTO/L LT-DTRL LT-H/LAMP BL-VEHSEC
TO LT-F/FOG
TO PG-POWER-01
A
W
E33
M66
1
W
W
W
2R
1S
L
NEXT PAGE
FUSE BLOCK (J/B)
M3 , M4 , M37 , M38 , M39
10A 3
15A 22
10A 19
15A 18
13P
1N
4Q
1P
P
Y/R
Y/R
G
TO AT-MAIN
TO LT-INT/L AV-NAVI SE-AUT/DP BL-D/LOCK BL-KEYLES BL-VEHSEC BL-NATS BL-B/CLOS
TO AP-PEDAL ATC-A/C,A AT-NONDTC AT-SHIFT AV-COMM AV-NAVI BL-D/LOCK BL-KEYLES BL-NATS BL-VEHSEC BL-TRNSCV BRC-VDC DI-CHIME DI-COMPAS DI-METER DI-WARN EC-ASCIND EC-FTTS EC-MIL/DL LT-DTRL LT-H/LAMP LT-ILL LT-INT/L LT-TURN SE-AUT/DP RSU-A/SUSP
TO WW-P/SCKT
1
M66
B
49 50 51
52 53 54 55 56
E123
BR
REFER TO THE FOLLOWING.
M3 , M4 , M37
M38 , M39 ,
- FUSE BLOCK - JUNCTION BOX (J/B)
11 10 9 8
7 6 5 4 3 2 1
22 21 20
19
18 17 16 15 14 13 12
UP
WKWA3857E

PG-POWER-04

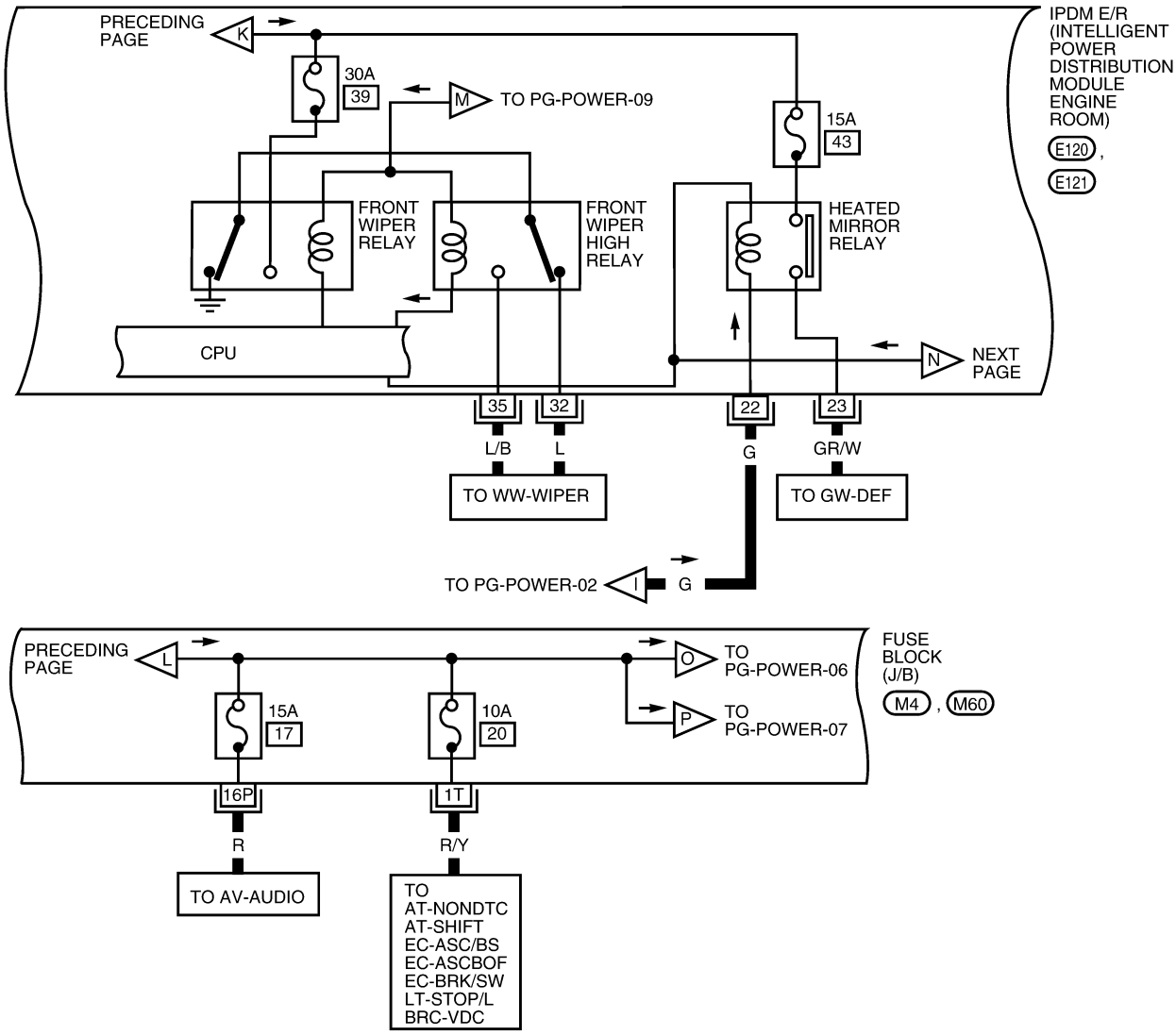

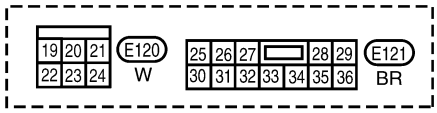

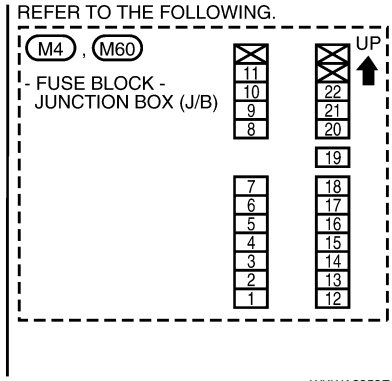

WKWA3858E

PG-POWER-05

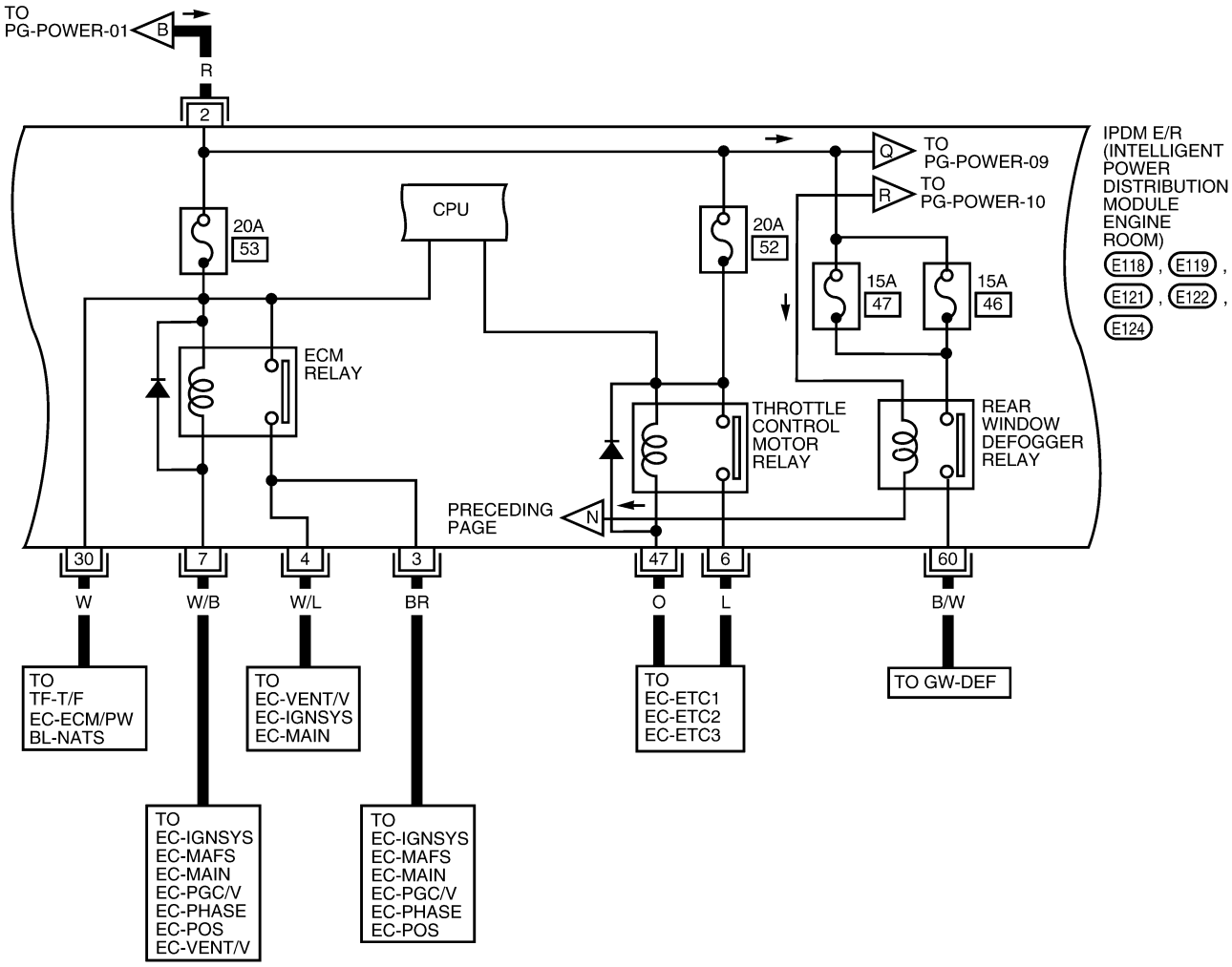

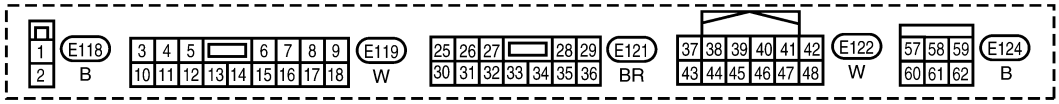

WKWA3859E

ACCESSORY POWER SUPPLY — IGNITION SW. IN ACC OR ON

PG-POWER-06

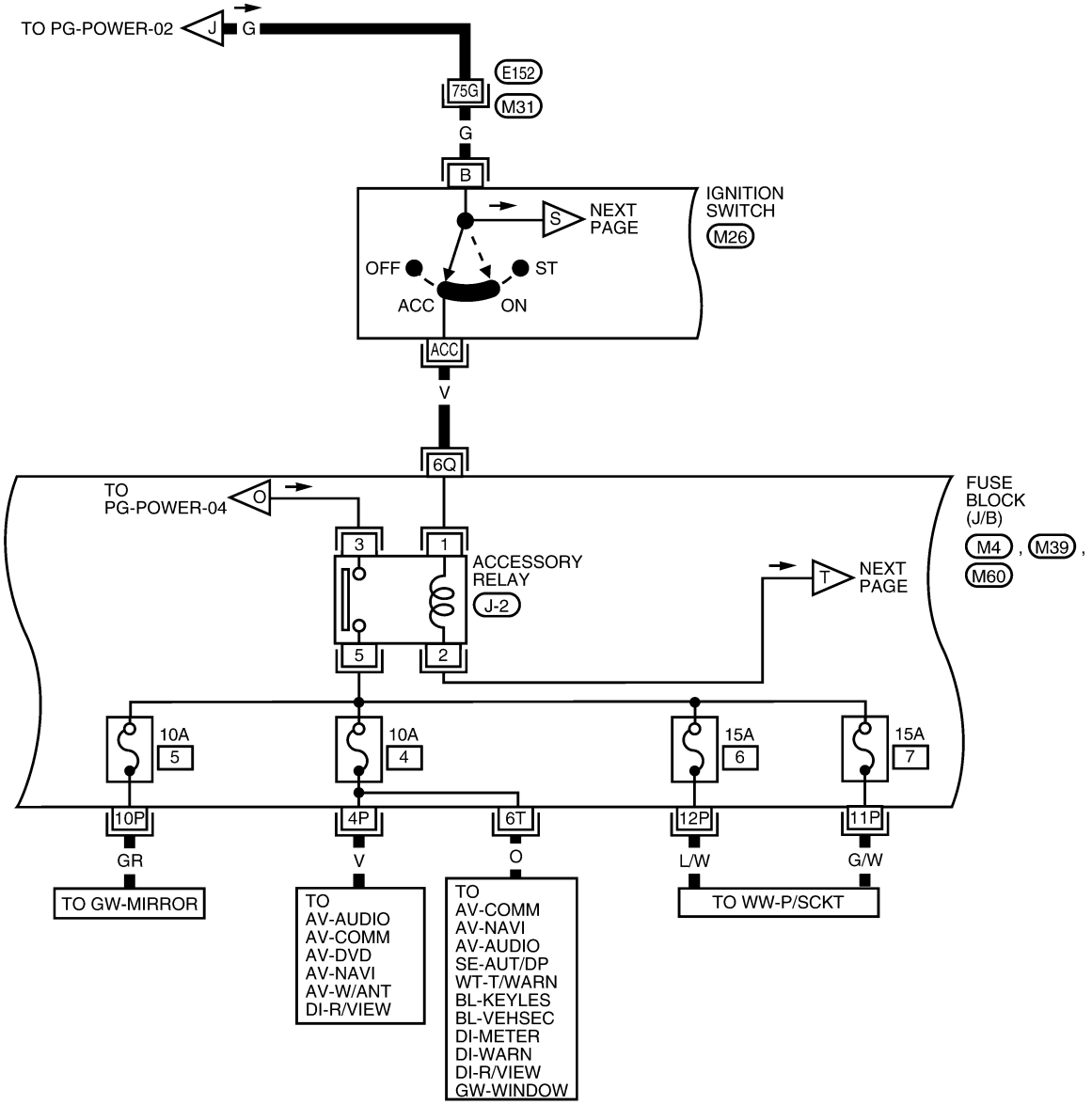

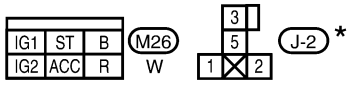

REFER TO THE FOLLOWING.

M31 - SUPER MULTIPLE JUNCTION (SMJ)

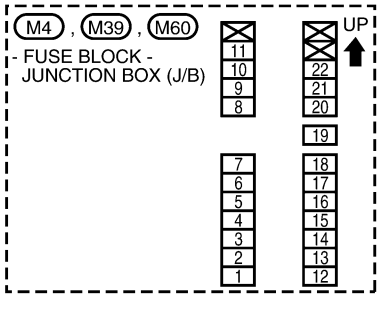

* : THIS CONNECTOR IS NOT SHOWN IN “HARNESS LAYOUT”.

WKWA3860E

IGNITION POWER SUPPLY — IGNITION SW. IN ON

PG-POWER-07

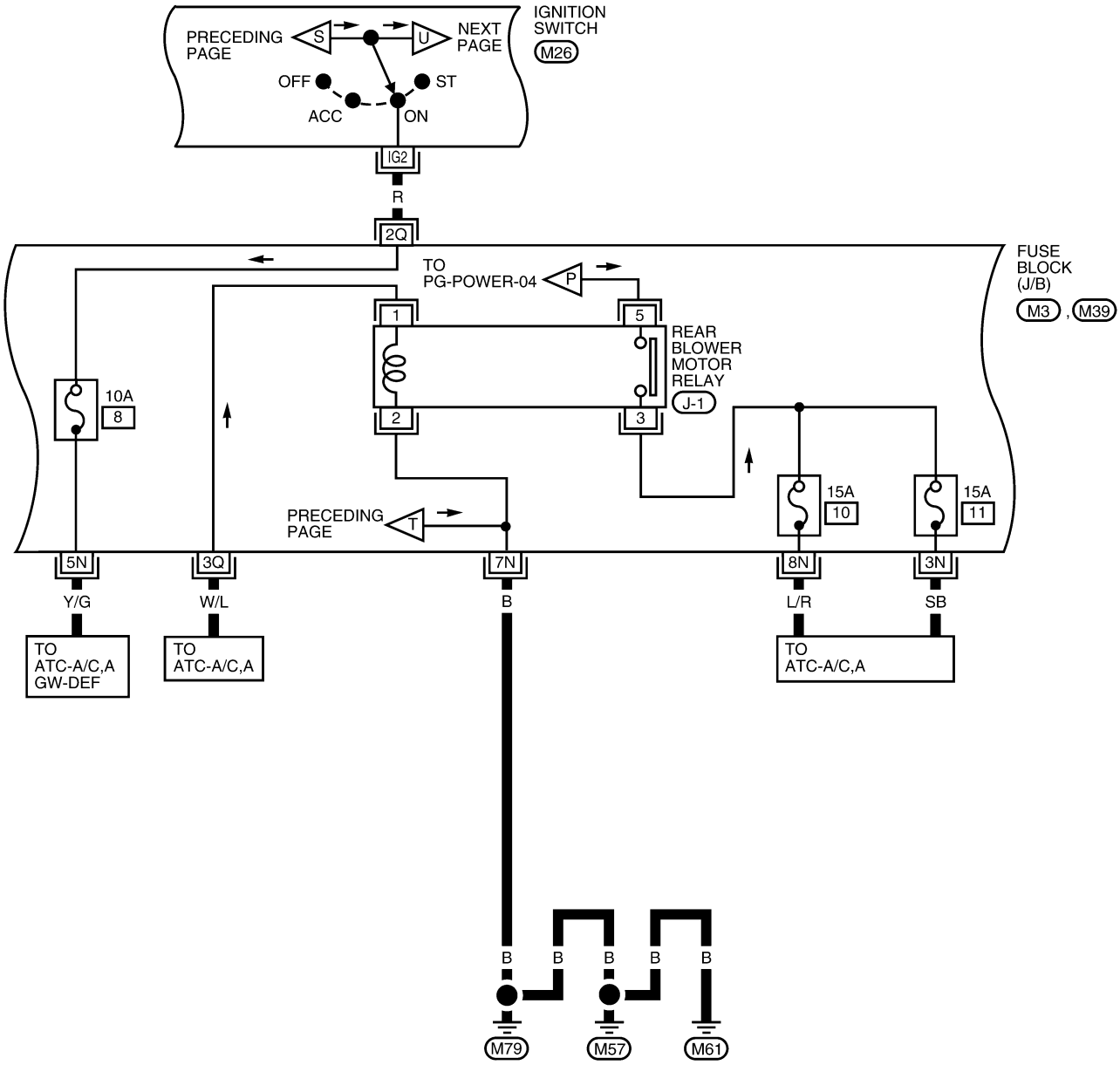

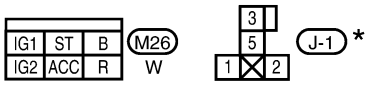

REFER TO THE FOLLOWING.

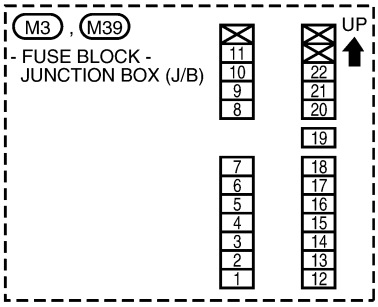

*: THIS CONNECTOR IS NOT SHOWN IN “HARNESS LAYOUT”.

WKWA3861E

IGNITION POWER SUPPLY — IGNITION SW. IN ON AND/OR START

PG-POWER-08

4W : WITH 4-WHEEL DRIVE

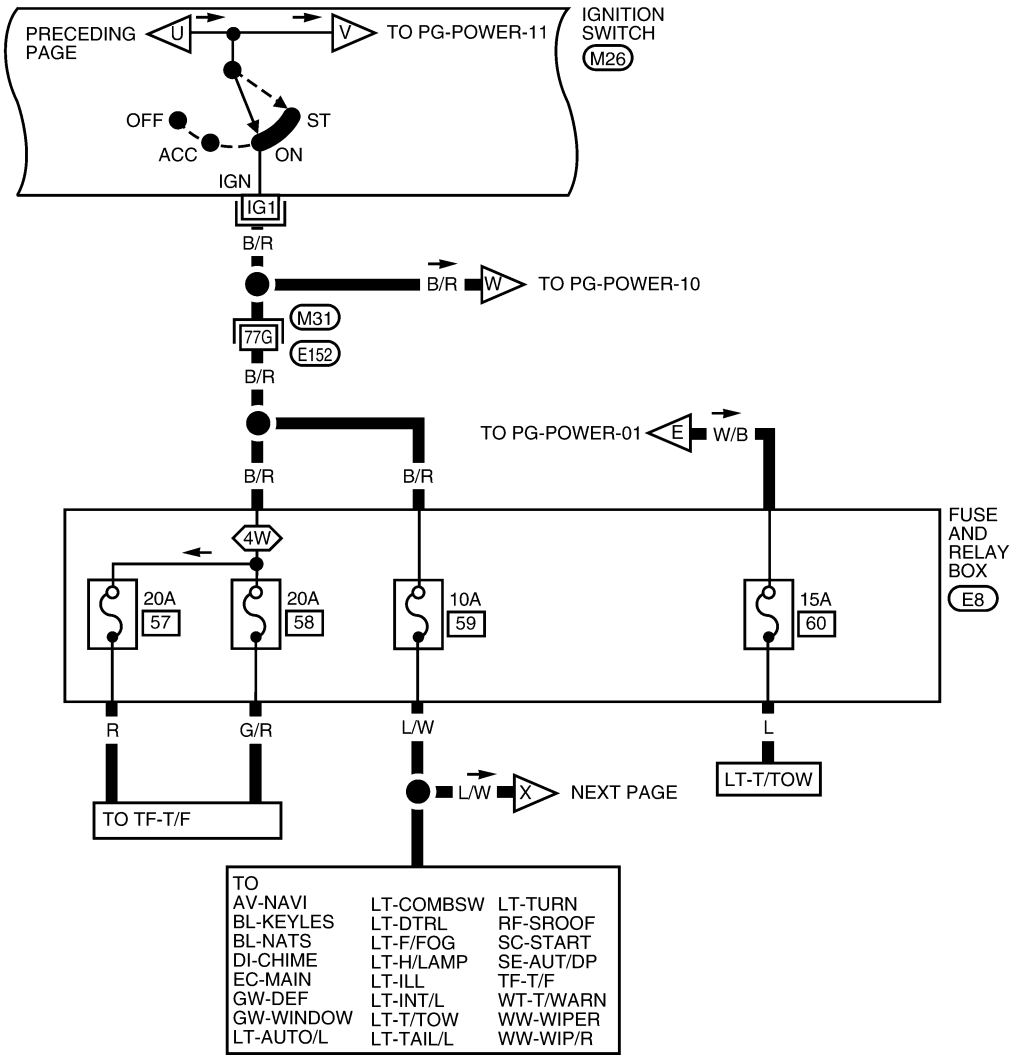

IG1	ST	B	M26
IG2	ACC	R	W

REFER TO THE FOLLOWING.
M31 - SUPER MULTIPLE JUNCTION (SMJ)

WKWA3862E

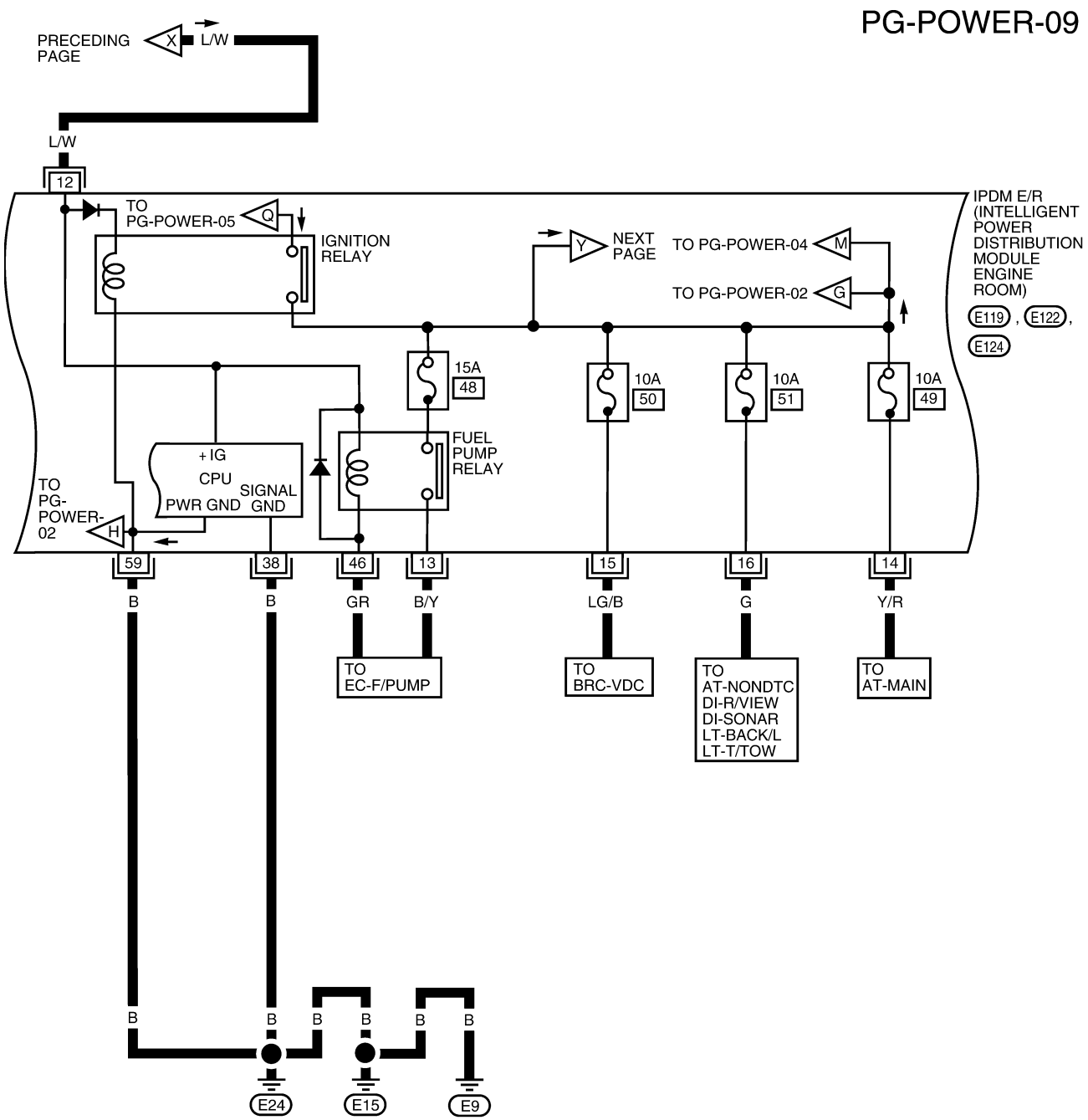
PG-POWER-09
PRECEDING PAGE
X
L/W
L/W
12
TO PG-POWER-05
Q
IGNITION RELAY
Y
NEXT PAGE
TO PG-POWER-04
M
TO PG-POWER-02
G
IPDM E/R (INTELLIGENT POWER DISTRIBUTION MODULE ENGINE ROOM)
E119, E122, E124
15A
48
10A
50
10A
51
10A
49
FUEL PUMP RELAY
+IG
CPU
SIGNAL GND
PWR GND
TO PG-POWER-02
H
59
38
46
13
15
16
14
B
B
GR
B/Y
LG/B
G
Y/R
TO EC-F/PUMP
TO BRC-VDC
TO AT-NONDTC DI-R/VIEW DI-SONAR LT-BACK/L LT-T/TOW
TO AT-MAIN
B
B
B
B
B
B
E24
E15
E9

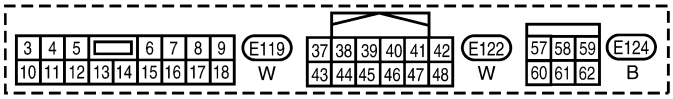
3 4 5 6 7 8 9
10 11 12 13 14 15 16 17 18
E119
W
37 38 39 40 41 42
43 44 45 46 47 48
E122
W
57 58 59
60 61 62
E124
B

WKWA3863E

PG-POWER-10

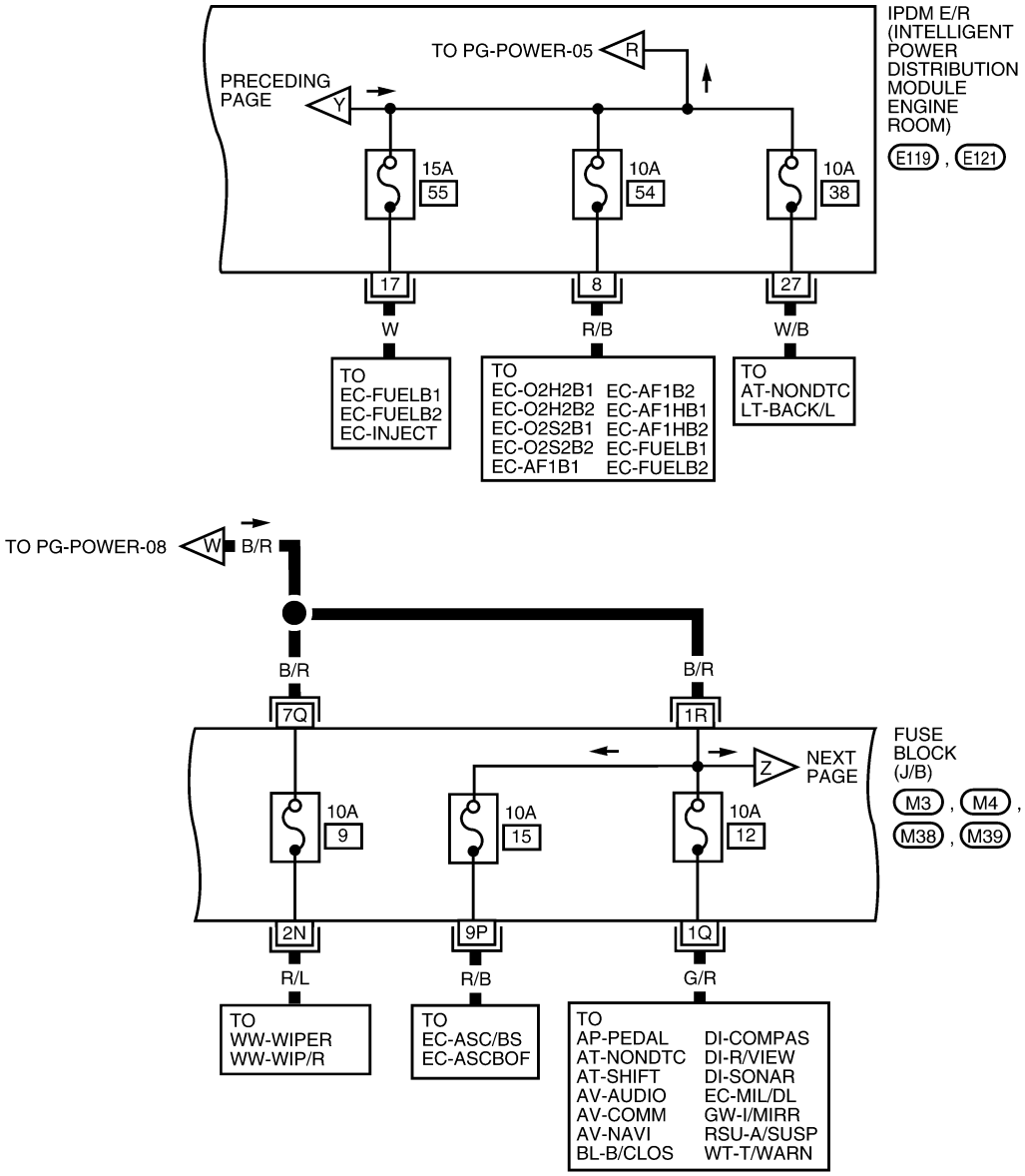

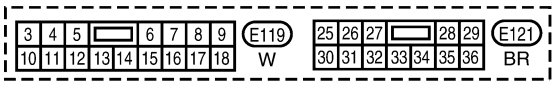

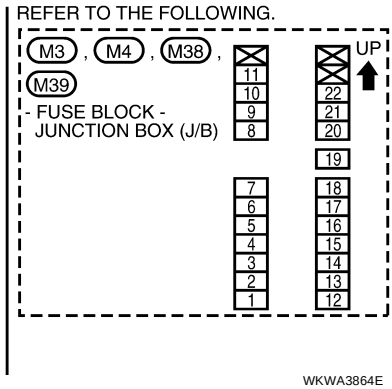

WKWA3864E

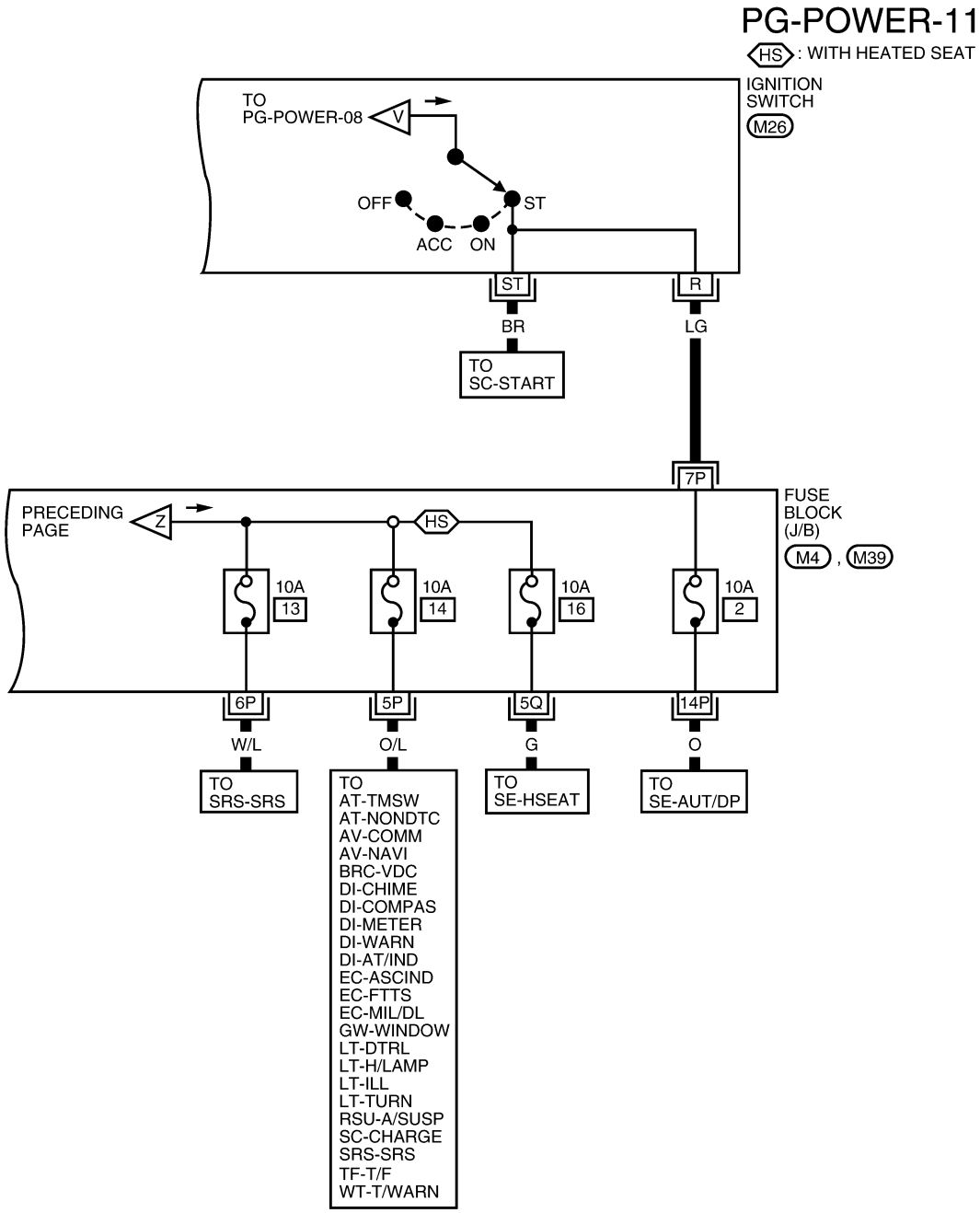
PG-POWER-11
HS : WITH HEATED SEAT
IGNITION SWITCH
M26
TO PG-POWER-08
V
OFF
ACC
ON
ST
ST
R
BR
LG
TO SC-START
7P
FUSE BLOCK (J/B)
M4 , M39
PRECEDING PAGE
Z
HS
10A 13
10A 14
10A 16
10A 2
6P
5P
5Q
14P
W/L
O/L
G
O
TO SRS-SRS
TO AT-TMSW AT-NONDTC AV-COMM AV-NAVI BRC-VDC DI-CHIME DI-COMPAS DI-METER DI-WARN DI-AT/IND EC-ASCIND EC-FTTS EC-MIL/DL GW-WINDOW LT-DTRL LT-H/LAMP LT-ILL LT-TURN RSU-A/SUSP SC-CHARGE SRS-SRS TF-T/F WT-T/WARN
TO SE-HSEAT
TO SE-AUT/DP

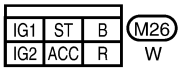
IG1 ST B
IG2 ACC R
M26
W

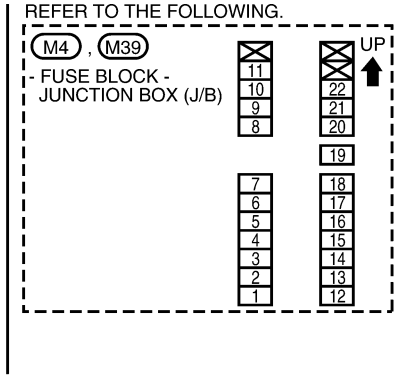
REFER TO THE FOLLOWING.
M4 , M39
- FUSE BLOCK - JUNCTION BOX (J/B)
UP
11 10 9 8
22 21 20
19
7 6 5 4 3 2 1
18 17 16 15 14 13 12

WKWA3865E

Fuse

EKS00GMH

- If fuse is blown, be sure to eliminate cause of incident before installing new fuse.
- Use fuse of specified rating. Never use fuse of more than specified rating.
- Do not partially install fuse; always insert it into fuse holder properly.
- Remove fuse for “ELECTRICAL PARTS (BAT)” if vehicle is not used for a long period of time.

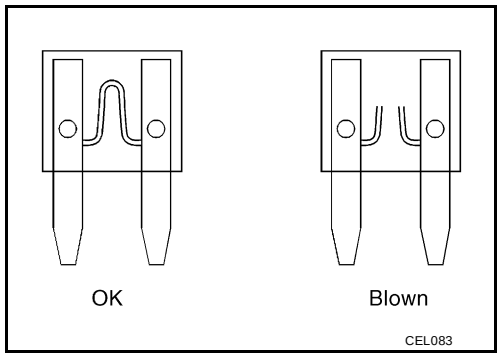

Fusible Link

EKS00GMI

A melted fusible link can be detected either by visual inspection or by feeling with finger tip. If its condition is questionable, use circuit tester or test lamp.

CAUTION:

- **If fusible link should melt, it is possible that critical circuit (power supply or large current carrying circuit) is shorted. In such a case, carefully check and eliminate cause of incident.**
- **Never wrap outside of fusible link with vinyl tape.**
- **Never let fusible link touch any other wiring harness, vinyl or rubber parts.**

Circuit Breaker (Built Into BCM)

EKS00GMJ

For example, when current is 30A, the circuit is broken within 8 to 20 seconds.
A circuit breaker is used for the following systems:

- Power windows
- Power door locks
- Remote keyless entry system
- Power sunroof
- Rear window wiper

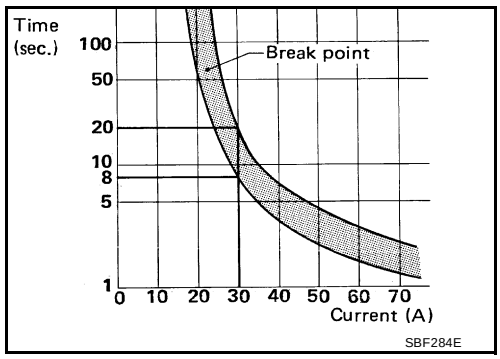

IPDM E/R (INTELLIGENT POWER DISTRIBUTION MODULE ENGINE ROOM)

PFP:284B7

System Description

EKS00B6G

- IPDM E/R (Intelligent Power Distribution Module Engine Room) integrates the relay box and fuse block which were originally placed in engine compartment. It controls integrated relays via IPDM E/R control circuits.
- IPDM E/R-integrated control circuits perform ON-OFF operation of relays, CAN communication control, etc.
- It controls operation of each electrical component via ECM, BCM and CAN communication lines.

CAUTION:

None of the IPDM E/R integrated relays can be removed.

SYSTEMS CONTROLLED BY IPDM E/R

1. Lamp control
   Using CAN communication lines, it receives signals from the BCM and controls the following lamps:
   - Headlamps (Hi, Lo)
   - Parking lamps
   - Tail and license lamps
   - Front fog lamps
2. Wiper control
   Using CAN communication lines, it receives signals from the BCM and controls the front wipers.
3. Rear window defogger relay control
   Using CAN communication lines, it receives signals from the BCM and controls the rear window defogger relay.
4. A/C compressor control
   Using CAN communication lines, it receives signals from the ECM and controls the A/C compressor (magnetic clutch).
5. Starter control
   Using CAN communication lines, it receives signals from the BCM and controls the starter relay.
6. Cooling fan control
   Using CAN communication lines, it receives signals from the ECM and controls the cooling fan relays.
7. Horn control
   Using CAN communication lines, it receives signals from the BCM and controls the horn relay.

CAN COMMUNICATION LINE CONTROL

With CAN communication, by connecting each control unit using two communication lines (CAN L-line, CAN H-line), it is possible to transmit a maximum amount of information with minimum wiring. Each control unit can transmit and receive data, and reads necessary information only.

1. Fail-safe control
   - When CAN communication with other control units is impossible, IPDM E/R performs fail-safe control. After CAN communication returns to normal operation, it also returns to normal control.
   - Operation of control parts by IPDM E/R during fail-safe mode is as follows:

Controlled system	Fail-safe mode
Headlamp	● With the ignition switch ON, the headlamp (low) is ON. ● With the ignition switch OFF, the headlamp (low) is OFF.
Tail and parking lamps	● With the ignition switch ON, the tail and parking lamps are ON. ● With the ignition switch OFF, the tail and parking lamps are OFF.
Cooling fan	● With the ignition switch ON, the cooling fan HI operates. ● With the ignition switch OFF, the cooling fan stops.
Front wiper	Until the ignition switch is turned off, the front wiper LO and HI remains in the same status it was in just before fail–safe control was initiated.
Rear window defogger	Rear window defogger relay OFF

Controlled system	Fail-safe mode
A/C compressor	A/C compressor OFF
Front fog lamps	Front fog lamp relay OFF

IPDM E/R STATUS CONTROL

In order to save power, IPDM E/R switches status by itself based on each operating condition.

1. CAN communication status
   - CAN communication is normally performed with other control units.
   - Individual unit control by IPDM E/R is normally performed.
   - When sleep request signal is received from BCM, mode is switched to sleep waiting status.
2. Sleep waiting status
   - Process to stop CAN communication is activated.
   - All systems controlled by IPDM E/R are stopped. When 1 second has elapsed after CAN communication with other control units is stopped, mode switches to sleep status.
3. Sleep status
   - IPDM E/R operates in low current-consumption mode.
   - CAN communication is stopped.
   - When a change in CAN communication signal is detected, mode switches to CAN communication status.
   - When a change in ignition switch signal is detected, mode switches to CAN communication status.

CAN Communication System Description

EKS00B6H

Refer to LAN-25, "CAN COMMUNICATION" .

Function of Detecting Ignition Relay Malfunction

EKS00B6I

- When the integrated ignition relay is stuck in a "closed contact" position and cannot be turned OFF, IPDM E/R turns ON tail and parking lamps for 10 minutes to indicate IPDM E/R malfunction.
- When the state of the integrated ignition relay does not agree with the state of the ignition switch signal received via CAN communication, the IPDM E/R activates the tail lamp relay.

Ignition switch signal	Ignition relay status	Tail lamp relay
ON	ON	—
OFF	OFF	—
ON	OFF	—
OFF	ON	ON (10 minutes)

NOTE:
When the ignition switch is turned ON, the tail lamps are OFF.

CONSULT-II Function IPDM E/R

EKS00B6J

CONSULT-II can display each diagnostic item using the diagnostic test modes shown following.

IPDM E/R diagnostic Mode	Description
SELF-DIAG RESULTS	Displays IPDM E/R self-diagnosis results.
DATA MONITOR	Displays IPDM E/R input/output data in real time.
CAN DIAG SUPPORT MNTR	The result of transmit/receive diagnosis of CAN communication can be read.
ACTIVE TEST	Operation of electrical loads can be checked by sending drive signal to them.

CONSULT-II BASIC OPERATION

CAUTION:

If CONSULT-II is used with no connection of CONSULT-II CONVERTER, malfunctions might be detected in self-diagnosis depending on control unit which carries out CAN communication.

1. With the ignition switch OFF, connect CONSULT-II and CONSULT-II CONVERTER to the data link connector, then turn ignition switch ON.

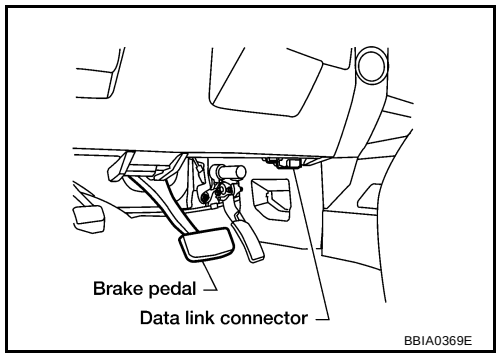

2. Touch “START (NISSAN BASED VHCL)”.

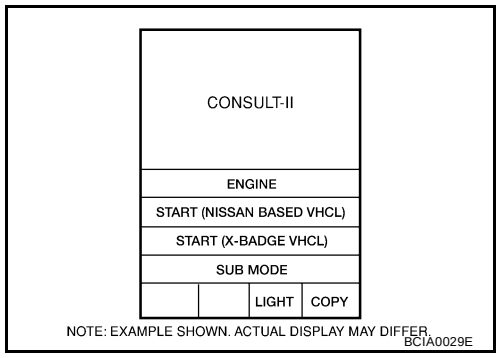

3. Touch “IPDM E/R” on “SELECT SYSTEM” screen.
   - If “IPDM E/R” is not displayed refer to GI-39, "CONSULT-II Data Link Connector (DLC) Circuit" .
   .

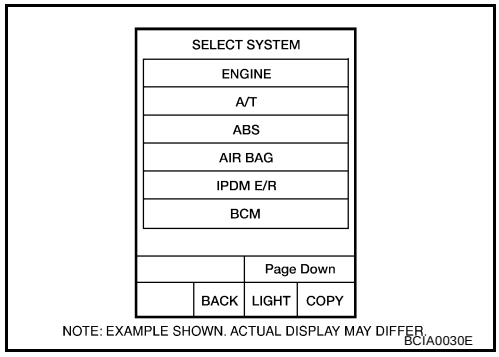

4. Select the desired part to be diagnosed on the "SELECT DIAG MODE" screen.

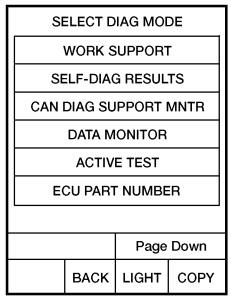

NOTE: EXAMPLE SHOWN. ACTUAL DISPLAY MAY DIFFER.
BCIA0031E

SELF-DIAGNOSTIC RESULTS

Operation Procedure

1. Touch “SELF-DIAG RESULTS” on “SELECT DIAG MODE” screen.
2. Self-diagnosis results are displayed.

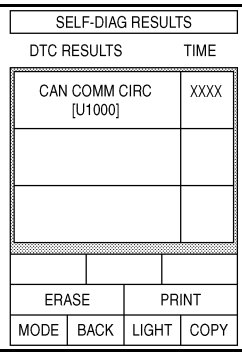

WKIA1264E

Display Item List

Display items	CONSULT-II display code	Malfunction detection	TIME		Possible causes
			CRNT	PAST	
NO DTC IS DETECTED. FURTHER TESTING MAY BE REQUIRED.	—	—	—	—	—
CAN COMM CIRC	U1000	● If CAN communication reception/transmission data has a malfunction, or if any of the control units fail, data reception/transmission cannot be confirmed. ● When the data in CAN communication is not received before the specified time.	X	X	Any of items listed below have errors: ● TRANSMIT DIAG ● ECM ● BCM/SEC

NOTE:
The details for display of the period are as follows:

- CRNT: Error currently detected with IPDM E/R.
- PAST: Error detected in the past and placed in IPDM E/R memory.

DATA MONITOR

Operation Procedure

1. Touch “DATA MONITOR” on “SELECT DIAG MODE” screen.
2. Touch "ALL SIGNALS”, “MAIN SIGNALS” or “SELECTION FROM MENU” on the “DATA MONITOR” screen.

ALL SIGNALS	All signals will be monitored.
MAIN SIGNALS	Monitors the predetermined item(s).
SELECTION FROM MENU	Selects and monitors individual signal(s).

3. Touch “START”.

4. When "SELECTION FROM MENU" is selected, touch items to be monitored. When "ALL SIGNALS" is selected, all the items will be monitored. When "MAIN SIGNALS" is selected, predetermined items are monitored.
5. Touch “RECORD” while monitoring to record the status of the item being monitored. To stop recording, touch “STOP”.

All Signals, Main Signals, Selection From Menu

Item name	CONSULT-II screen display	Display or unit	Monitor item selection			Description
			ALL SIGNALS	MAIN SIGNALS	SELECTION FROM MENU	
Motor fan request	MOTOR FAN REQ	1/2/3/4	X	X	X	Signal status input from ECM
Compressor request	AC COMP REQ	ON/OFF	X	X	X	Signal status input from ECM
Parking, license, and tail lamp request	TAIL & CLR REQ	ON/OFF	X	X	X	Signal status input from BCM
Headlamp low beam request	HL LO REQ	ON/OFF	X	X	X	Signal status input from BCM
Headlamp high beam request	HL HI REQ	ON/OFF	X	X	X	Signal status input from BCM
Front fog request	FR FOG REQ	ON/OFF	X	X	X	Signal status input from BCM
Front wiper request	FR WIP REQ	STOP/1LOW/ LOW/HI	X	X	X	Signal status input from BCM
Wiper auto stop	WIP AUTO STOP	ACT P/STOP P	X	X	X	Output status of IPDM E/R
Wiper protection	WIP PROT	OFF/Block	X	X	X	Control status of IPDM E/R
Starter request	ST RLY REQ	ON/OFF	X		X	Status of input signal NOTE
Ignition relay status	IGN RLY	ON/OFF	X	X	X	Ignition relay status monitored with IPDM E/R
Rear defogger request	RR DEF REQ	ON/OFF	X	X	X	Signal status input from BCM
Oil pressure switch	OIL P SW (*1)	OPEN/CLOSE	X		X	Signal status input from IPDM E/R
Hood switch	HOOD SW (*1)	OFF	X			Signal status input from IPDM E/R
Theft warning horn request	THFT HRN REQ	ON/OFF	X		X	Signal status input from BCM
Horn chirp	HORN CHIRP	ON/OFF	X		X	Output status of IPDM E/R
Daytime running lamp request	DTRL REQ	ON/OFF	X		X	Signal status input from BCM

NOTE:

- Perform monitoring of IPDM E/R data with the ignition switch ON. When the ignition switch is in ACC position, display may not be correct.
- (*1) This item is displayed, but does not function.

ACTIVE TEST

Operation Procedure

1. Touch “ACTIVE TEST” on “SELECT DIAG-MODE” screen.
2. Touch item to be tested, and check operation.
3. Touch “START”.
4. Touch "STOP" while testing to stop the operation.

Test name	CONSULT-II screen display	Description
Rear defogger output	REAR DEFOGGER	With a certain ON-OFF operation, the rear defogger relay can be operated.
Front wiper (HI, LO) output	FRONT WIPER	With a certain operation (OFF, HI ON, LO ON), the front wiper relay (Lo, Hi) can be operated.
Cooling fan output	MOTOR FAN	With a certain operation (1, 2, 3, 4), the cooling fan can be operated.

Test name	CONSULT-II screen display	Description
Lamp (HI, LO, TAIL, FOG) output	EXTERNAL LAMPS	With a certain operation (OFF, HI ON, LO ON, TAIL ON, FOG ON), the lamp relay (Low, High, Tail, Fog) can be operated.
Cornering lamp output	CORNERING LAMP	—
Horn output	HORN	With a certain ON-OFF operation, the horn relay can be operated.

Auto Active Test

EKS00B6K

DESCRIPTION

- In auto active test mode, operation inspection can be performed when IPDM E/R sends a drive signal to the following systems:
  - Rear window defogger
  - Front wipers
  - Tail, license and parking lamps
  - Front fog lamps
  - Headlamps (Hi, Lo)
  - A/C compressor (magnetic clutch)
  - Cooling fan

OPERATION PROCEDURE

1. Close hood and front door RH, and lift wiper arms away from windshield (to prevent glass damage by wiper operation).

   NOTE:
   When auto active test is performed with hood opened, sprinkle water on windshield beforehand.
2. Turn ignition switch OFF.
3. Turn ignition switch ON and, within 20 seconds, press front door switch LH 10 times. Then turn ignition switch OFF.
4. Turn ignition switch ON within 10 seconds after ignition switch OFF.
5. When auto active test mode is actuated, horn chirps once.
6. After a series of operations is repeated three times, auto active test is completed.

   NOTE:
   When auto active test mode has to be cancelled halfway, turn ignition switch OFF.

   CAUTION:
   Be sure to perform BL-28, "Door Switch Check" when the auto active test cannot be performed.

INSPECTION IN AUTO ACTIVE TEST MODE

- When auto active test mode is actuated, the following seven steps are repeated three times.

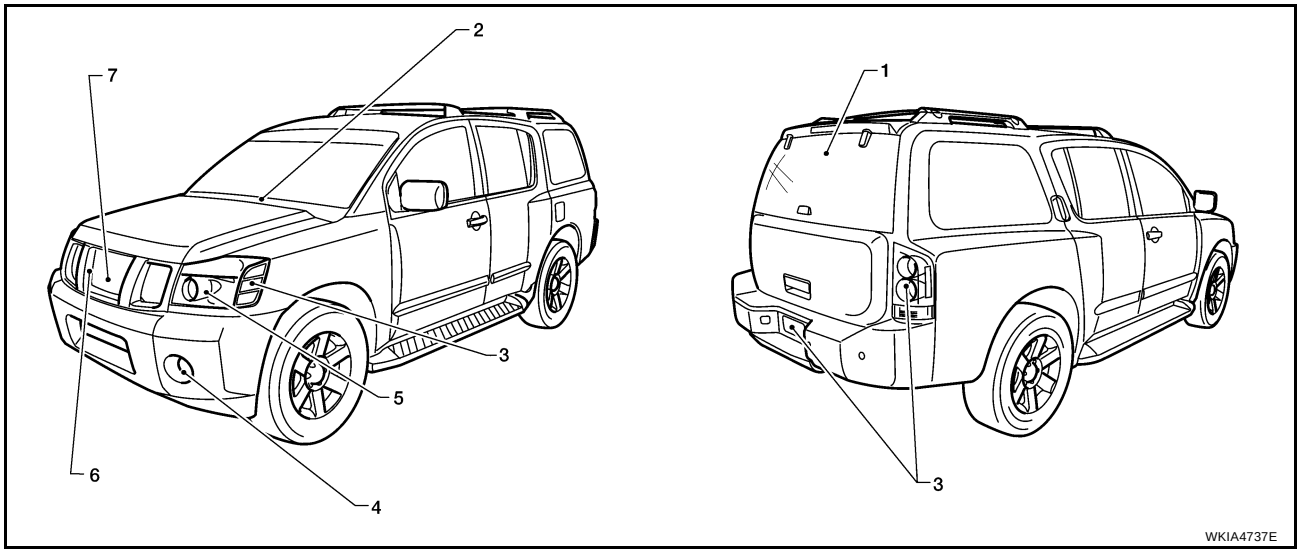

Item Number	Test Item	Operation Time/Frequency
1	Rear window defogger	10 seconds
2	Front wipers	LOW 5 seconds then HIGH 5 seconds
3	Tail, license, and parking lamps	10 seconds
4	Front fog lamps	10 seconds
5	Headlamps	Low on for 10 seconds. High on-off five times.
6	A/C compressor (magnetic clutch)	ON-OFF 5 times
7	Cooling fan	10 seconds

Concept of Auto Active Test

- IPDM E/R actuates auto active test mode when it receives door switch signal from BCM via CAN communication line. Therefore, when auto active test mode is activated successfully, CAN communication between IPDM E/R and BCM is normal.
- If any of the systems controlled by IPDM E/R cannot be operated, possible cause can be easily diagnosed using auto active test.

Diagnosis chart in auto active test mode

Symptom	Inspection contents		Possible cause
Rear window defogger does not operate.	Perform auto active test. Does rear window defogger operate?	YES	● BCM signal input circuit
		NO	● Rear window defogger relay ● Open circuit of rear window defogger ● IPDM E/R malfunction ● Harness or connector malfunction between IPDM E/R and rear window defogger
Any of front wipers, tail and parking lamps, front fog lamps, and headlamps (Hi, Lo) do not operate.	Perform auto active test. Does system in question operate?	YES	● BCM signal input system
		NO	● Lamp/wiper motor malfunction ● Lamp/wiper motor ground circuit malfunction ● Harness/connector malfunction between IPDM E/R and system in question ● IPDM E/R (integrated relay) malfunction
A/C compressor does not operate.	Perform auto active test. Does magnetic clutch operate?	YES	● BCM signal input circuit ● CAN communication signal between BCM and ECM ● CAN communication signal between ECM and IPDM E/R
		NO	● Magnetic clutch malfunction ● Harness/connector malfunction between IPDM E/R and magnetic clutch ● IPDM E/R (integrated relay) malfunction
Cooling fan does not operate.	Perform auto active test. Does cooling fan operate?	YES	● ECM signal input circuit ● CAN communication signal between ECM and IPDM E/R
		NO	● Cooling fan motor malfunction ● Harness/connector malfunction between IPDM E/R and cooling fan motor ● IPDM E/R (integrated relay) malfunction
Oil pressure warning lamp does not operate.	Perform auto active test. Does oil pressure warning lamp blink?	YES	● Harness/connector malfunction between IPDM E/R and oil pressure switch ● Oil pressure switch malfunction ● IPDM E/R
		NO	● CAN communication signal between BCM and combination meter ● Combination meter

Schematic

EKS00B6L

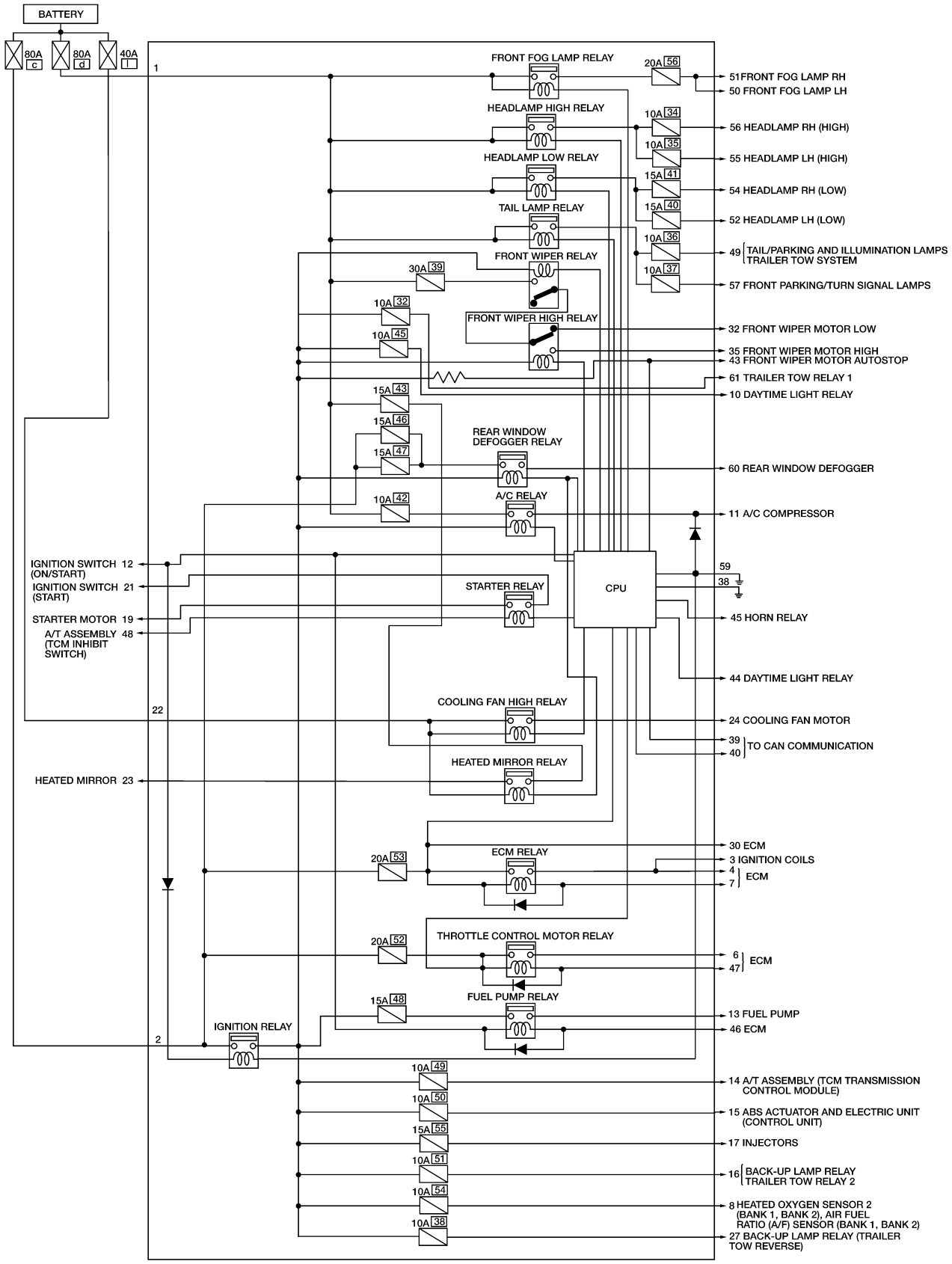

WKWA3866E

IPDM E/R Terminal Arrangement

EKS00B6M

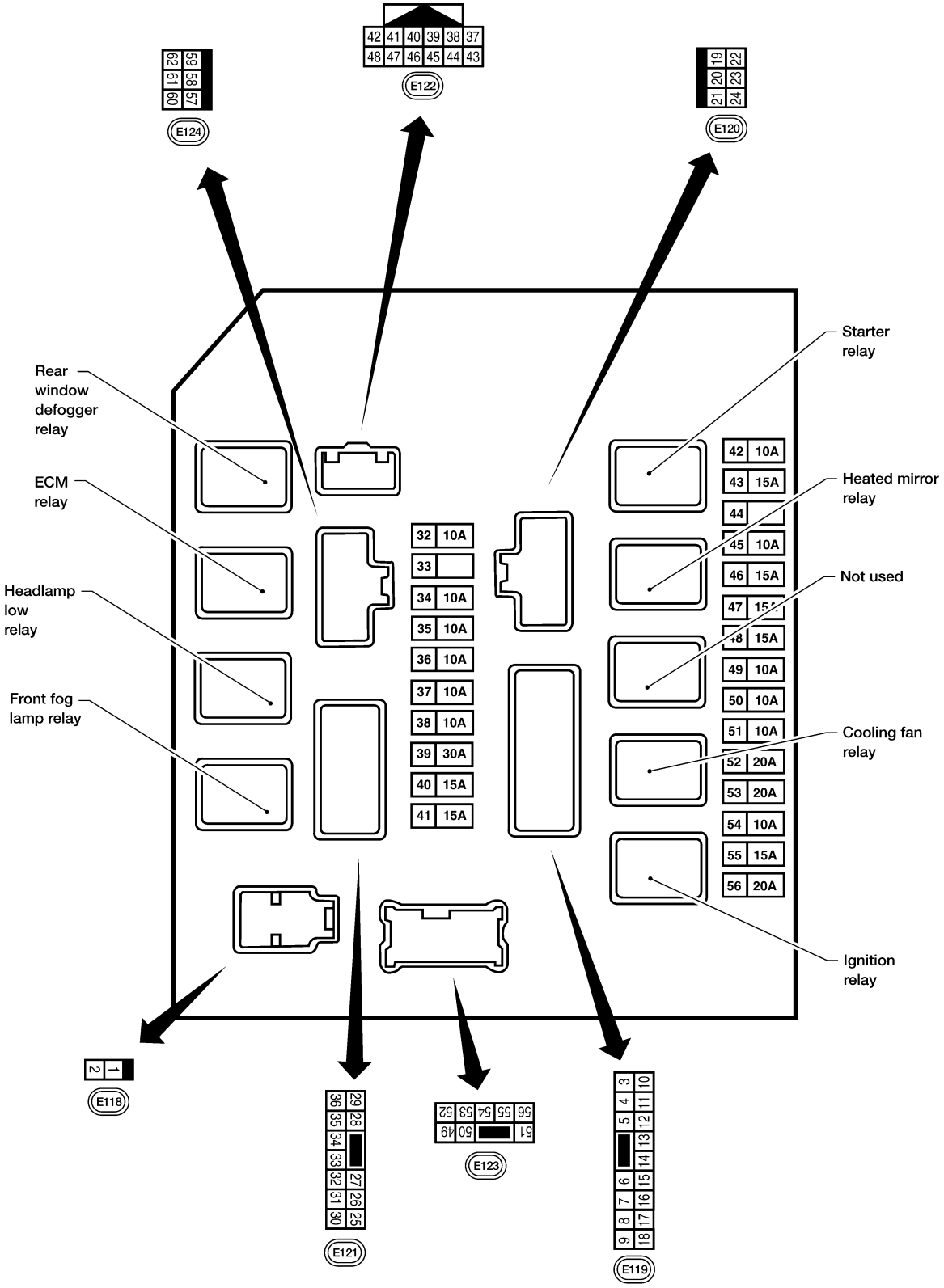

WKIA4738E

IPDM E/R Power/Ground Circuit Inspection

EKS00B6N

1. FUSE AND FUSIBLE LINK INSPECTION

Check that the following fusible links or IPDM E/R fuses are not blown.

Terminal No.	Signal name	Fuse, fusible link No.
1, 2	Battery power	a, c, d

OK or NG

OK >> GO TO 2.
NG >> Replace fuse or fusible link.

2. POWER CIRCUIT INSPECTION

1. Disconnect IPDM E/R harness connector E118.
2. Check voltage between IPDM E/R harness connector E118 terminals 1, 2 and ground.

Battery voltage should exist.

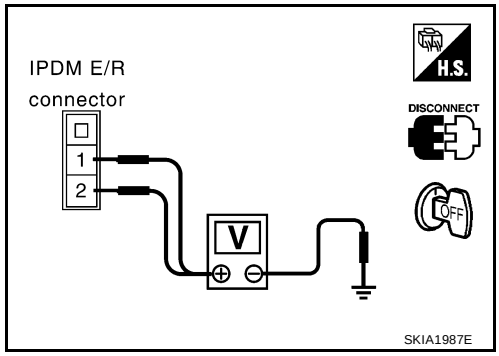

OK or NG

OK >> GO TO 3.
NG >> Repair or replace IPDM E/R power circuit harness.

3. GROUND CIRCUIT INSPECTION

1. Disconnect IPDM E/R harness connectors E122 and E124.
2. Check continuity between IPDM E/R harness connector E122 terminal 38, and E124 terminal 59 and ground.

Continuity should exist.

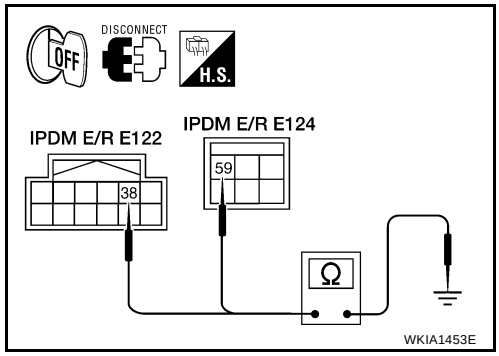

OK or NG

OK >> Inspection End.
NG >> Repair or replace IPDM E/R ground circuit harness.

Inspection with CONSULT-II (Self-Diagnosis)

EKS00B6O

CAUTION:

If a CONSULT-II is used with no connection of CONSULT-II CONVERTER, malfunctions might be detected in self-diagnosis depending on which control unit(s) carry out CAN communication.

1. SELF-DIAGNOSIS RESULT CHECK

1. Connect CONSULT-II and select "IPDM E/R" on the Diagnosis System Selection screen.
2. Select "SELF-DIAG RESULTS" on the diagnosis mode selection screen.
3. Check display content in self-diagnosis results.

CONSULT-II Display	CONSULT-II display code	TIME		Details of diagnosis result
		CRNT	PAST	
NO DTC IS DETECTED. FURTHER TESTING MAY BE REQUIRED.	—	—	—	No malfunction
CAN COMM CIRC	U1000	X	X	Any of items listed below have errors: ● TRANSMIT DIAG ● ECM ● BCM/SEC

NOTE:

The Details for Display for the Period are as follows:

- CRNT: Error currently detected by IPDM E/R.
- PAST: Error detected in the past and stored in IPDM E/R memory.

Contents displayed

NO DTC DETECTED. FURTHER TESTING MAY BE REQUIRED.>>INSPECTION END.
CAN COMM CIRC>>Print out the self-diagnosis result and refer to LAN-25, "CAN COMMUNICATION" .

Removal and Installation of IPDM E/R

EKS00B6P

REMOVAL

1. Disconnect negative battery cable.
2. Remove IPDM E/R upper cover.

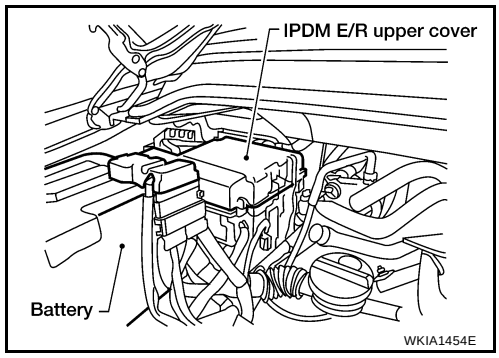

3. Release 2 clips and pull IPDM E/R up from case.
4. Disconnect IPDM E/R connectors and remove the IPDM E/R.

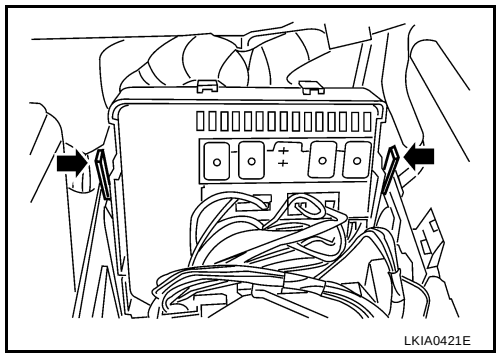

INSTALLATION

Installation is in the reverse order of removal.

GROUND CIRCUIT

PFP:24080

Ground Distribution

EKS00B6Q

MAIN HARNESS

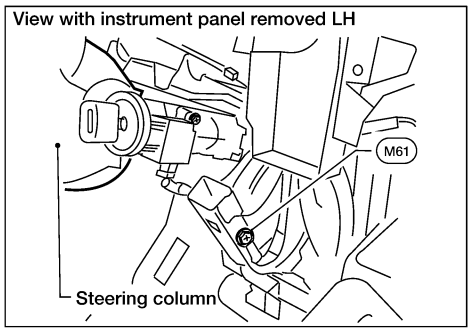

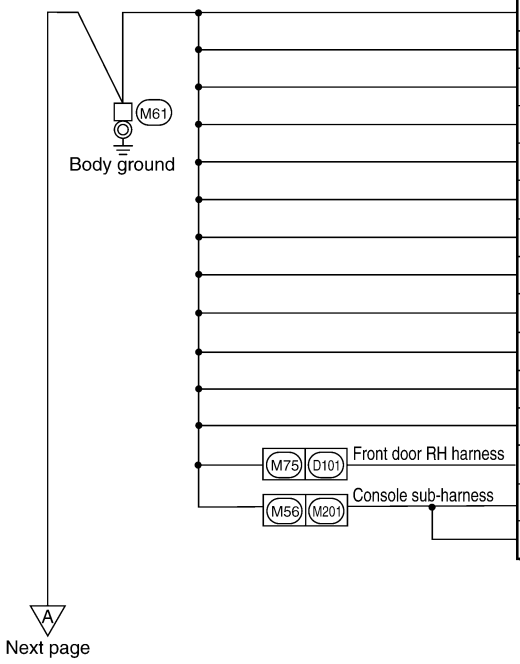

CONNECTOR NUMBER	CONNECT TO
M5	Illumination control switch
M20	BCM (Terminal No. 67)
M21	NATS antenna amp
M22	Data link connector (Terminal No. 4)
M22	Data link connector (Terminal No. 5)
M24	Combination meter (Terminal No. 17)
M28	Combination switch (Terminal No. 12)
M35	Air bag diagnosis sensor unit
M47	Steering angle sensor
M112	BOSE speaker amp (Terminal No. 17)
M122	Variable blower control
M139	Diode-1
D107	Door mirror RH (door mirror defogger)
M203	A/T device (Terminal No. 2)
M203	A/T device (Terminal No. 8)

WKIA4739E

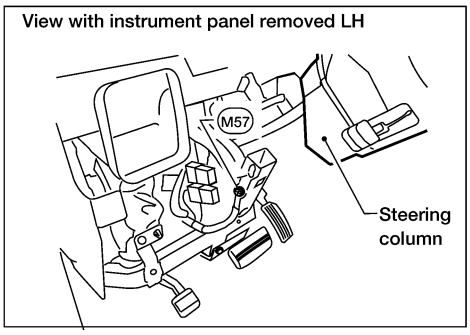

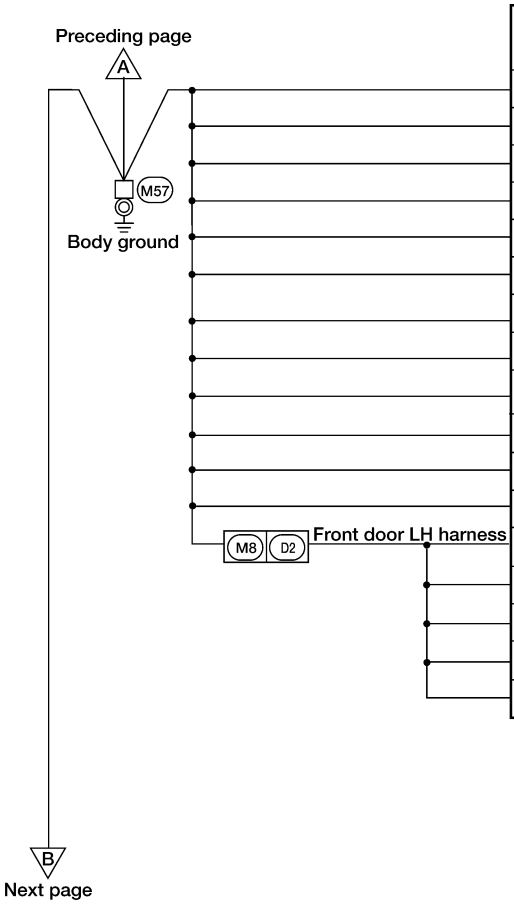

CONNECTOR NUMBER	CONNECT TO
M14	Pedal adjusting control unit
M34	Automatic drive positioner (Terminal No. 40)
M34	Automatic drive positioner (Terminal No. 48)
M76	Electric brake (pre-wiring)
M87	Rear power vent window relay (open)
M89	Rear power vent window relay (close)
M92	Power liftgate switch
M93	Display unit (Terminal No. 1)
M94	Display control unit (Terminal No. 3)
M96	Pedal adjustable switch
M116	Rear sonar system OFF switch (Terminal No. 2)
M116	Rear sonar system OFF switch (Terminal No. 6)
D4	Door mirror LH (door mirror defogger)
D5	Seat memory switch
D8	Main power window and door lock/unlock switch (Terminal No. 17)
D10	Door mirror remote control switch
D14	Front door lock assembly LH

WKIA4740E

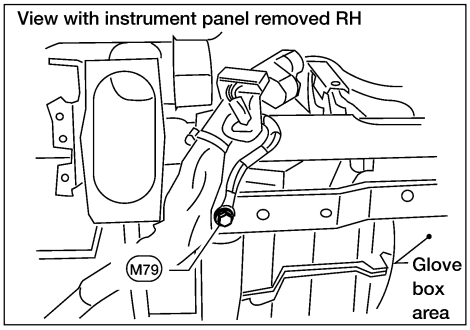

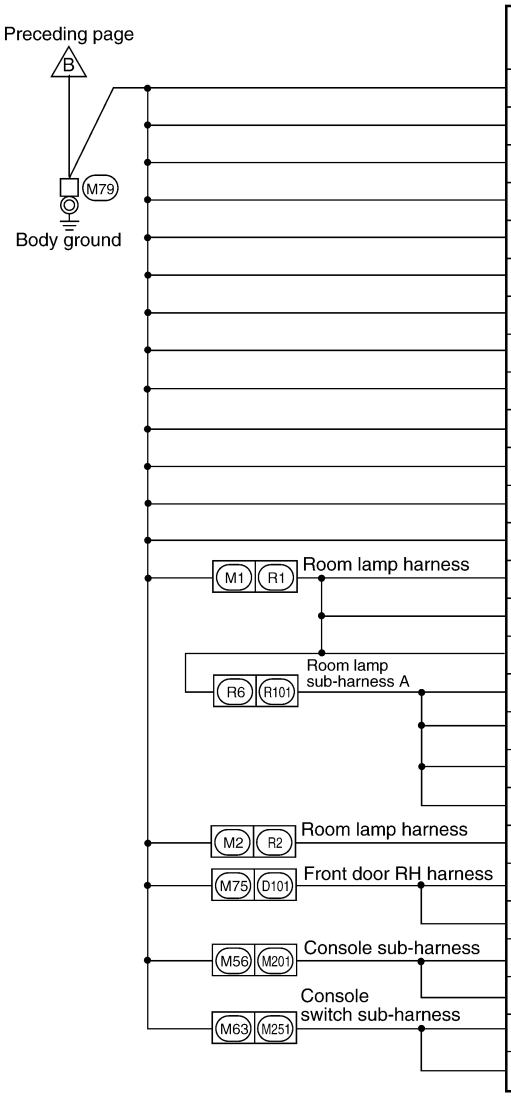

CONNECTOR NUMBER	CONNECT TO
M3	Fuse block J/B (Terminal No. 7N)
M13	Front passenger air bag off indicator
M49	Front air control (Terminal No. 1)
M52	Rear blower switch (front)
M53	Front power socket LH
M54	Front power socket RH (for cigarette lighter)
M55	Hazard switch
M59	Glove box lamp
M67	Tow mode switch (Terminal No. 2)
M67	Tow mode switch (Terminal No. 6)
M81	Shift lock control unit
M98	AV switch
M148	VDC OFF switch
R3	Vanity lamp LH
R7	Auto anti-dazzling inside mirror
R8	Vanity lamp RH
R102	Compass and thermometer
R103	Front room/map lamp assembly
R105	Rear power vent window switch
R106	Homelink universal transciever
R4	Sunroof motor
D105	Power window and door lock/unlock switch RH
D107	Door mirror RH (door mirror defogger)
M206	DVD player (Terminal No. 22)
M207	Console power socket
M252	Front heated seat switch RH
M255	Front heated seat switch LH

WKIA4741E

ENGINE ROOM HARNESS

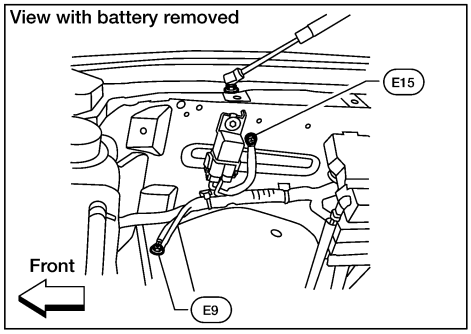

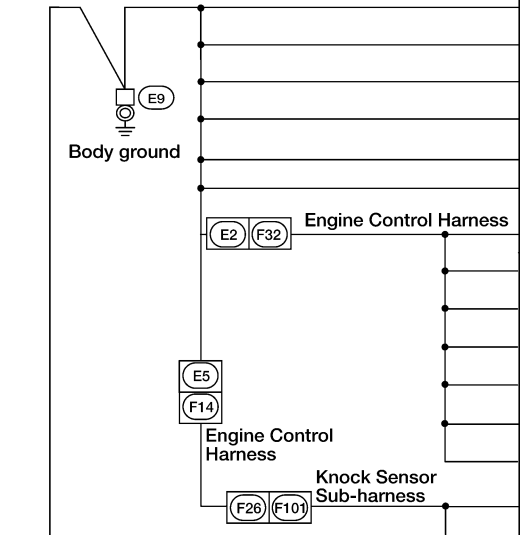

CONNECTOR NUMBER	CONNECT TO
E16	ECM (Terminal No. 115)
E16	ECM (Terminal No. 116)
E142	Transfer control unit
E143	Transfer control unit
E156	Trailer turn relay LH
E157	Trailer turn relay RH
F9	A/T assembly (TCM) (Terminal No. 10)
F9	A/T assembly (TCM) (Terminal No. 5)
F11	Crankshaft position sensor (POS)
F23	Camshaft position sensor (PHASE)
F50	Electric throttle control actuator (throttle position sensor shield)
F54	ECM (Terminal No. 1)
F56	Transfer terminal cord assembly
F102	Knock sensor (bank 1) shield
F104	Knock sensor (bank 2) shield

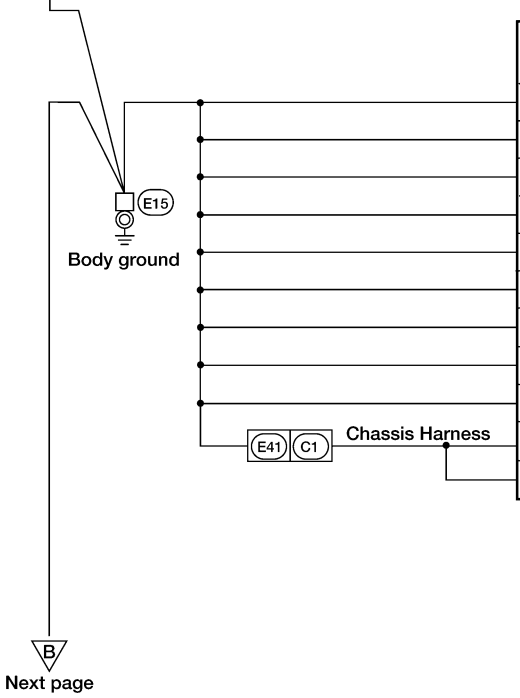

CONNECTOR NUMBER	CONNECT TO
E3	Horn
E11	Front combination lamp LH (headlamp) (Terminal No. 3)
E11	Front combination lamp LH (headlamp) (Terminal No. 4)
E21	Brake fluid level switch
E102	Front fog lamp RH
E103	Daytime light relay
E106	Washer fluid level switch
E113	Cooling fan motor
E116	Condenser 2
C5	Fuel level sensor unit and fuel pump (fuel pump)
C12	License plate lamp

WKIA4742E

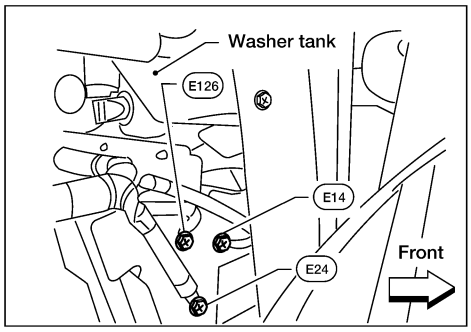

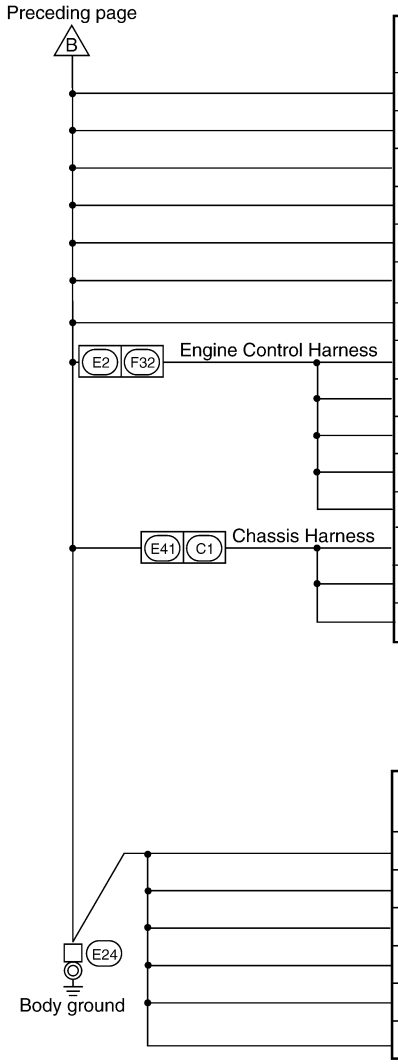

CONNECTOR NUMBER	CONNECT TO
E46	Transfer shift high relay (Terminal No. 1)
E46	Transfer shift high relay (Terminal No. 4)
E47	Transfer shift low relay (Terminal No. 1)
E47	Transfer shift low relay (Terminal No. 4)
E130	Compressor motor relay
E140	Trailer tow relay 2
E142	Transfer control unit (Terminal No. 3)
F55	ATP switch
F57	Transfer motor
F58	Transfer control device (actuator position switch) (Terminal No. 22)
F59	Wait detection switch
F60	Neutral-4LO switch
C2	Trailer
C9	Suspension air compressor (Terminal No. 1)
C9	Suspension air compressor (Terminal No. 3)

CONNECTOR NUMBER	CONNECT TO
E107	Front combination lamp RH (headlamp) (Terminal No. 3)
E107	Front combination lamp RH (headlamp) (Terminal No. 4)
E23	Front wiper motor
E101	Front fog lamp LH
E122	IPDM E/R
E124	IPDM E/R

WKIA4743E

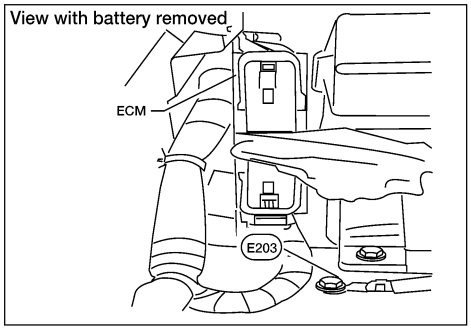

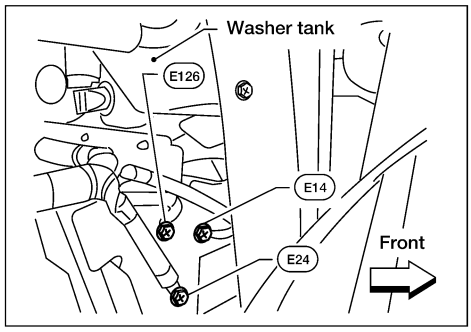

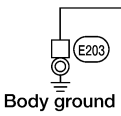

CONNECTOR NUMBER	CONNECT TO
E204	Generator

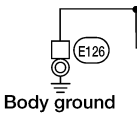

CONNECTOR NUMBER	CONNECT TO
E125	ABS actuator and electric unit (control unit) (Terminal No. 16)
E125	ABS actuator and electric unit (control unit) (Terminal No. 47)

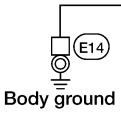

CONNECTOR NUMBER	CONNECT TO
E4	Crash zone sensor (shield wire)

WKIA4744E

ENGINE CONTROL HARNESS

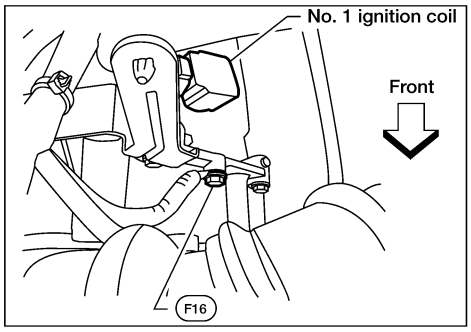

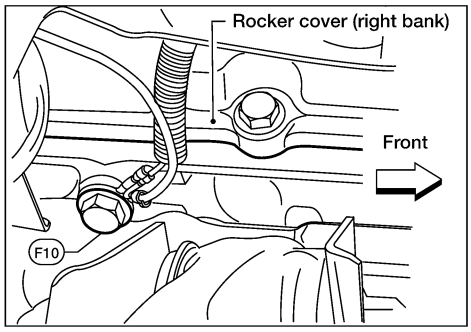

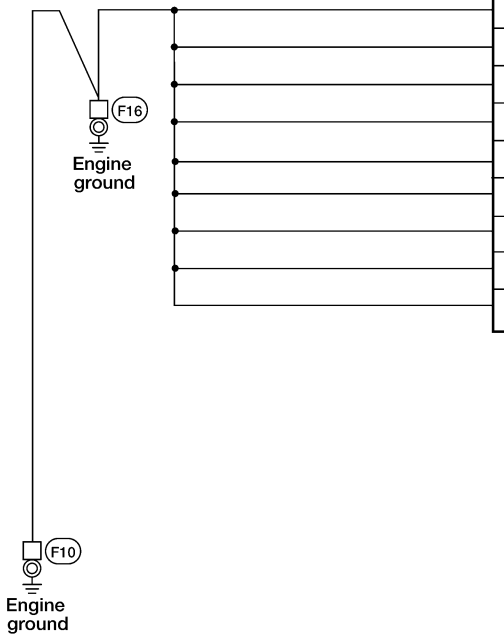

CONNECTOR NUMBER	CONNECT TO
F6	Ignition coil No. 2 (with power transistor)
F7	Ignition coil No. 4 (with power transistor)
F8	Ignition coil No. 6 (with power transistor)
F21	Condenser-1
F47	Ignition coil No. 1 (with power transistor)
F48	Ignition coil No. 3 (with power transistor)
F49	Ignition coil No. 5 (with power transistor)
F51	Ignition coil No. 7 (with power transistor)
F52	Ignition coil No. 8 (with power transistor)

WKIA4663E

BODY HARNESS

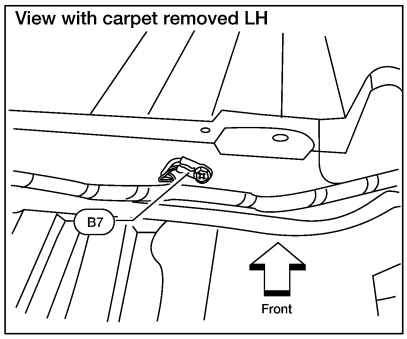

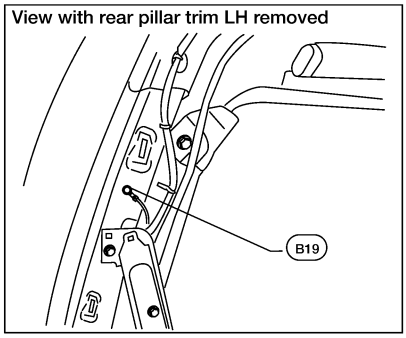

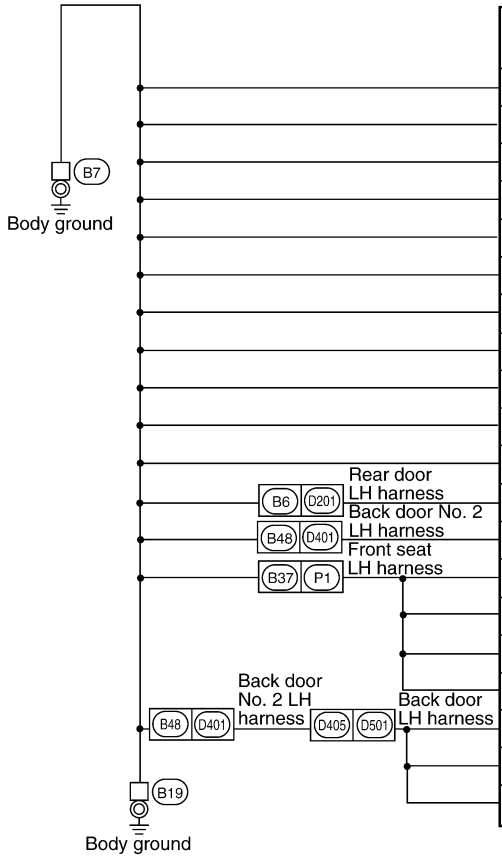

CONNECTOR NUMBER	CONNECT TO
B3	Suspension control unit (Terminal No. 16)
B35	Rear combination lamp LH (turn signal)
B55	Back door control unit (Terminal No. 1)
B55	Back door control unit (Terminal No. 2)
B56	Sonar control unit
B63	Back door close switch
B70	Rear combination lamp LH (stop/tail lamp)
B71	Back-up lamp LH
B72	Subwoofer
B73	Rear view camera control unit
B74	Seat belt buckle pre-tensioner assembly LH
D203	Rear power window switch LH
D403	High mounted stop lamp
P2	Driver seat control unit (signal ground) (Terminal No. 32)
P3	Driver seat control unit (power ground) (Terminal No. 48)
P8	Power seat switch LH (Terminal No. 3)
P9	Front seat heater LH
D502	Back door switch
D503	Back door latch
D504	Rear view camera

WKIA4745E

BODY NO. 2 HARNESS

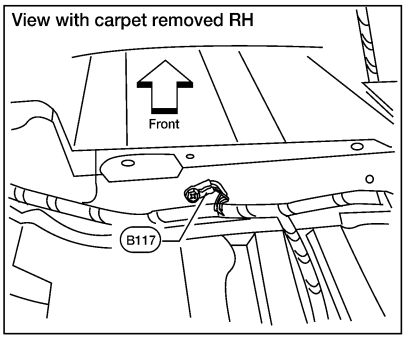

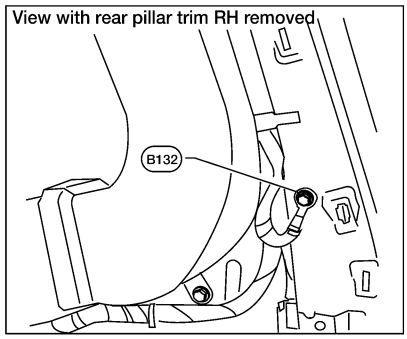

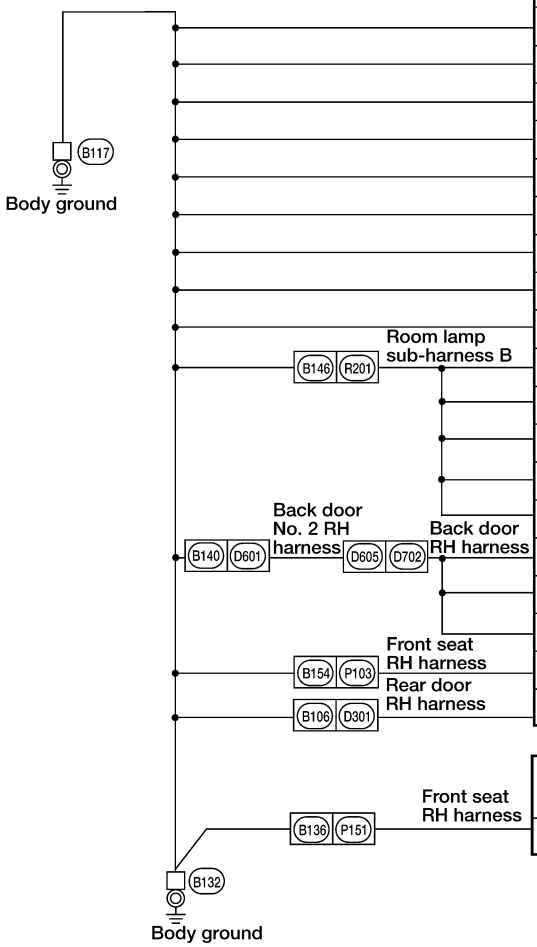

CONNECTOR NUMBER	CONNECT TO
B105	Rear combination lamp RH (turn signal)
B118	Front seat heater RH
B119	Condenser-3
B120	Condenser-4
B130	Rear combination lamp RH (stop/tail lamp)
B135	Back-up lamp RH
B138	Rear cargo power socket
B151	NAVI control unit (Terminal No. 1)
B157	Seatbelt buckle pre-tensioner assembly RH
R202	Video monitor
R203	Personal lamp 2nd row
R204	Rear audio remote control unit (Terminal No. 15)
R205	Personal lamp 3rd row
R209	Rear air control switch
D704	Rear wiper motor (Terminal No. 3)
D704	Rear wiper motor (Terminal No. 5)
D706	Back door handle switch
P108	Power seat switch RH
D303	Rear power window switch RH

CONNECTOR NUMBER	CONNECT TO
P152	Occupant classification system control unit

WKIA4746E

BACK DOOR NO. 2 RH HARNESS

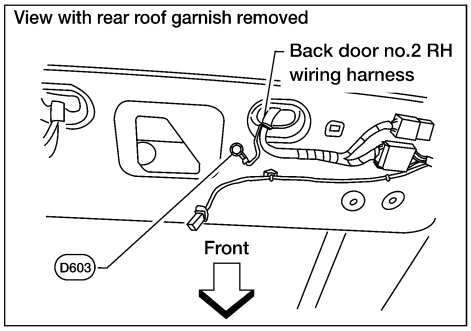

CONNECTOR NUMBER	CONNECT TO
D604	Rear window defogger

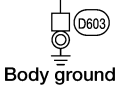

WKIA1461E

HARNESS

PFP:24010

Harness Layout

EKS00B6R

HOW TO READ HARNESS LAYOUT

The following Harness Layouts use a map style grid to help locate connectors on the drawings:

- Main Harness
- Engine Room Harness LH View (Engine Compartment)
- Engine Room Harness RH View (Engine Compartment)
- Engine Control Harness
- Chassis Harness and Rear Sonar Sensor Sub-harness
- Body Harness
- Body No. 2 Harness

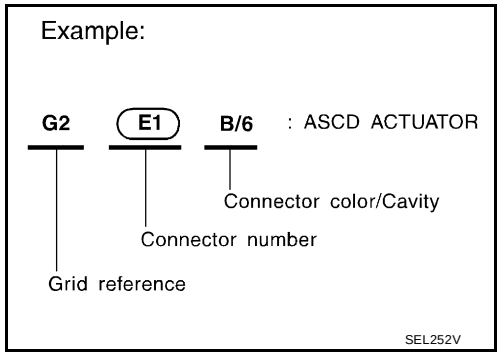

To use the grid reference

1. Find the desired connector number on the connector list.
2. Find the grid reference.
3. On the drawing, find the crossing of the grid reference letter column and number row.
4. Find the connector number in the crossing zone.
5. Follow the line (if used) to the connector.

CONNECTOR SYMBOL

Main symbols of connector (in Harness Layout) are indicated below.

Connector type	Water proof type		Standard type	
	Male	Female	Male	Female
● Cavity: 4 or Less ● Relay connector				
● Cavity: From 5 to 8				
● Cavity: 9 or More				
● Ground terminal etc.	—			

OUTLINE

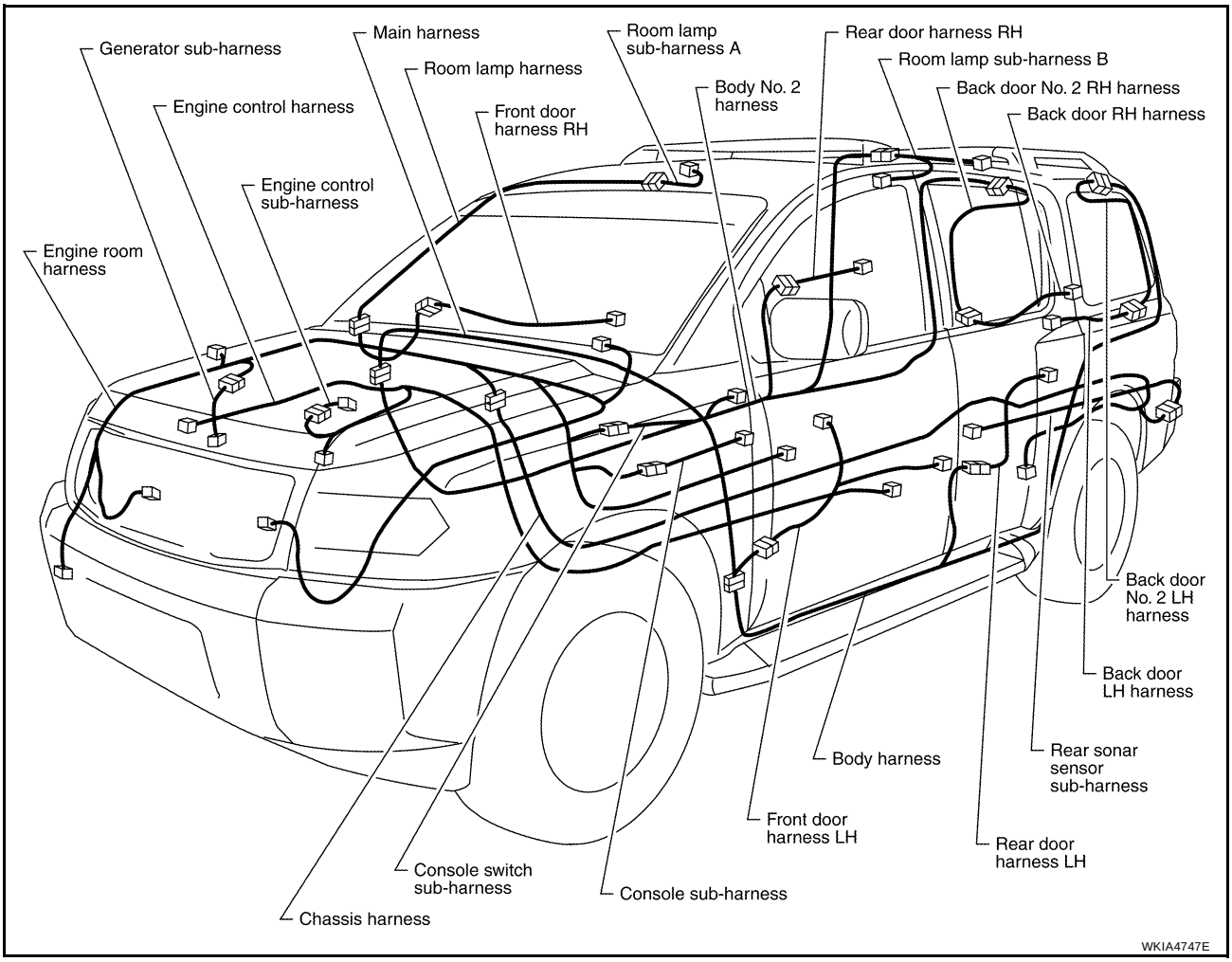
Generator sub-harness
Main harness
Room lamp sub-harness A
Rear door harness RH
Room lamp harness
Room lamp sub-harness B
Body No. 2 harness
Back door No. 2 RH harness
Engine control harness
Front door harness RH
Back door RH harness
Engine control sub-harness
Engine room harness
Back door No. 2 LH harness
Back door LH harness
Body harness
Rear sonar sensor sub-harness
Front door harness LH
Rear door harness LH
Console switch sub-harness
Console sub-harness
Chassis harness
WKIA4747E

MAIN HARNESS

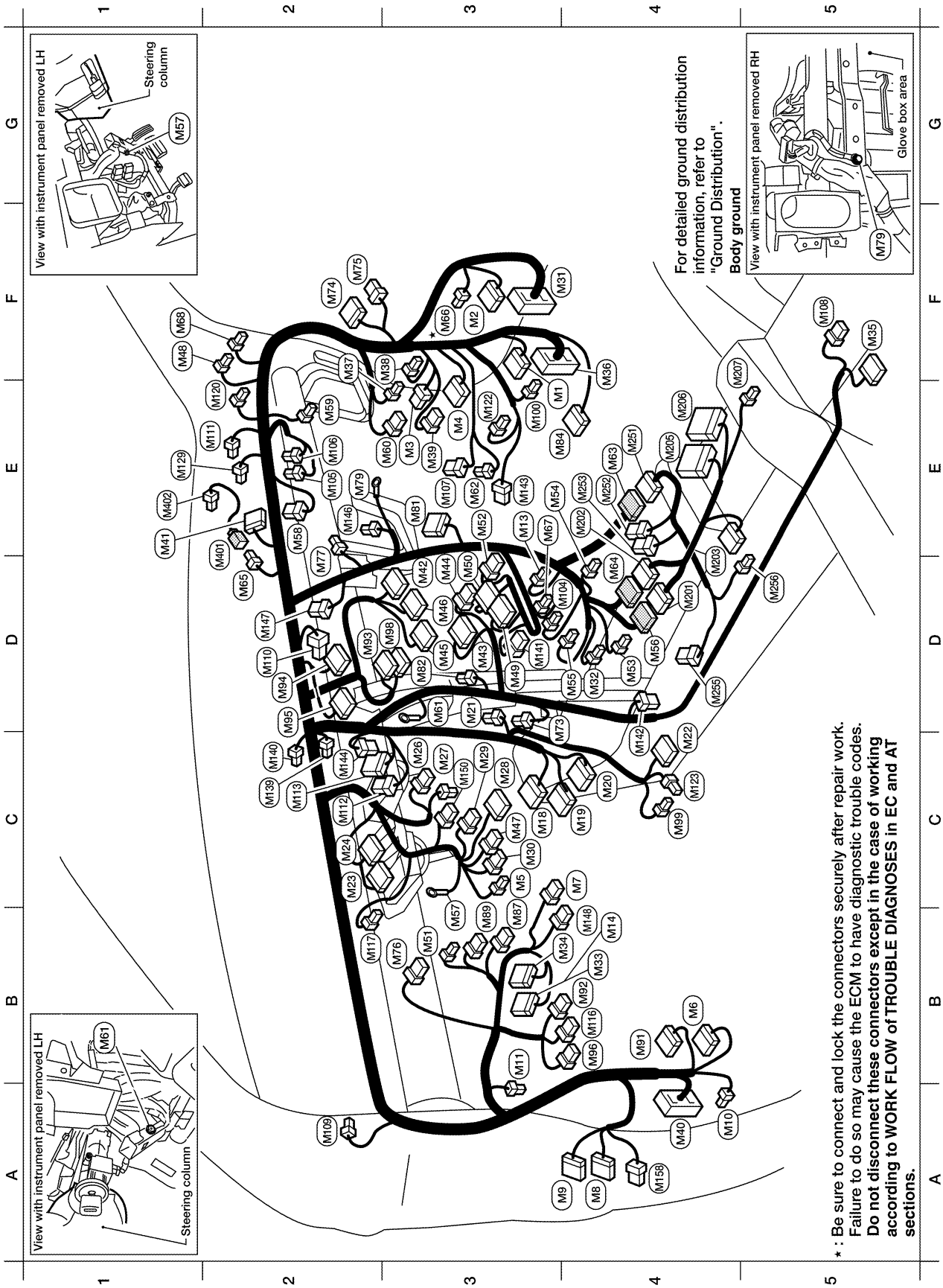

E4	M1	W/16	: To R1
F3	M2	W/12	: To R2
E3	M3	W/8	: Fuse block (J/B)
E3	M4	W/16	: Fuse block (J/B)
C3	M5	W/3	: Illumination control switch
B4	M6	W/10	: To E10
A4	M8	W/16	: To D2
A3	M9	BR/24	: To D1
A4	M10	Y/4	: To E29
B3	M11	B/1	: Parking brake switch
E3	M13	W/3	: Front passenger air bag off indicator
B4	M14	W/16	: Pedal adjusting control unit
C3	M18	W/40	: BCM (body control module)
C4	M19	W/15	: BCM (body control module)
C4	M20	B/15	: BCM (body control module)
D3	M21	W/4	: NATS antenna amplifier
C4	M22	W/16	: Data link connector
B3	M23	W/12	: Combination meter
C2	M24	W/40	: Combination meter
C3	M26	W/6	: Ignition switch
C3	M27	W/4	: Key switch and key lock solenoid
C3	M28	W/16	: Combination switch
C3	M29	Y/6	: Combination switch (spiral cable)
C3	M30	GR/8	: Combination switch (spiral cable)
F4	M31	SMJ	: To E152
D4	M32	W/4	: In-vehicle sensor
B4	M33	W/32	: Automatic drive positioner control unit
B4	M34	W/16	: Automatic drive positioner control unit
F5	M35	Y/28	: Air bag diagnosis sensor unit
F4	M36	SMJ	: To B149
F2	M37	B/1	: Fuse block (J/B)
F2	M38	B/2	: Fuse block (J/B)
E3	M39	W/8	: Fuse block (J/B)
A4	M40	SMJ	: To B69
E1	M41	W/16	: Satellite radio tuner or pre-wiring for satellite radio
D3	M42	W/16	: Audio unit
D3	M43	W/10	: Audio unit
D3	M44	W/6	: Audio unit
D3	M45	W/16	: Audio unit
D3	M46	W/20	: Audio unit
C3	M47	W/8	: Steering angle sensor
F1	M48	BR/2	: To M501
D3	M49	B/26	: Front air control
D3	M50	W/18	: Front air control
B3	M51	L/4	: Trailer tow relay 1
E3	M52	W/8	: Rear blower switch (front)
D4	M53	B/2	: Front power socket LH
E3	M54	B/2	: Front power socket RH (for cigarette lighter)
D4	M55	W/8	: Hazard switch
D4	M56	W/16	: To M201
B3	M57	-	: Body ground
E2	M58	B/6	: Intake door motor
E2	M59	BR/2	: Glove box lamp
E3	M60	W/6	: Fuse block (J/B)
D3	M61	-	: Body ground
E3	M62	B/2	: Front blower motor
E4	M63	BR/20	: To M251
D4	M64	BR/24	: To M202
D2	M65	W/4	: To M401
F3 *	M66	B/1	: To E33
E3	M67	GR/8	: Tow mode switch
F2	M68	BR/1	: To M350 (with Sirius satellite radio)
F2	M68	V/1	: To M350 (with XM satellite radio)
D3	M73	BR/6	: Back-up lamp relay
F2	M74	BR/20	: To D102
F2	M75	W/8	: To D101
B3	M76	W/6	: Electric brake (pre-wiring)
E2	M77	Y/4	: Front passenger air bag module (service replacement)
E2	M79	-	: Body ground
E3	M81	GR/10	: Shift lock control unit
D3	M82	GR/2	: Circuit breaker-2
E4	M84	W/16	: To B101
B3	M87	B/5	: Rear power vent window relay (open)
B3	M89	B/5	: Rear power vent window relay (close)
B4	M91	W/16	: To E26
B4	M92	GR/6	: Power liftgate switch
D2	M93	W/24	: Display unit
D2	M94	W/24	: Display control unit (with NAVI)
C2	M95	W/32	: Display control unit (with NAVI)
B4	M96	BR/6	: Pedal adjusting switch
D3	M98	W/24	: AV switch
C4	M99	BR/2	: Foot lamp LH
E3	M100	BR/2	: Foot lamp RH
D4	M104	W/4	: Auxiliary in jack (audio)
E2	M105	Y/2	: Front passenger air bag module
E2	M106	O/2	: Front passenger air bag module
E3	M107	BR/6	: Front blower motor relay
F5	M108	B/6	: Yaw rate/side decel G-sensor
A2	M109	BR/2	: Front tweeter LH
D2	M110	BR/2	: Center speaker (with BOSE)
E2	M111	BR/2	: Front tweeter RH
C2	M112	W/8	: BOSE speaker amp.
C2	M113	L/24	: BOSE speaker amp.
B4	M116	GR/8	: Rear sonar system OFF switch
B2	M117	B/2	: Sonar buzzer
E2	M120	W/4	: Remote keyless entry receiver
E3	M122	W/4	: Variable blower control (with ATC)
C4	M123	W/2	: Tire pressure warning check connector
E1	M129	BR/1	: Satellite radio tuner (with Sirius satellite radio)
E1	M129	V/1	: Satellite radio tuner (with XM satellite radio)
C2	M139	B/2	: Diode-1
C2	M140	B/2	: Diode-2
D3	M141	W/8	: 4WD shift switch
C4	M142	B/6	: Mode door motor
E3	M143	B/6	: Air mix door motor (passenger)
C2	M144	B/6	: Defroster door motor
E2	M146	GR/2	: Intake sensor
D2	M147	B/6	: Air mix door motor (driver) (with ATC)
D2	M147	B/6	: Air mix door motor (front) (with MTC)
B4	M148	GR/6	: VDC off switch
C3	M150	W/2	: Ignition key hole illumination
A4	M158	W/8	: To D3
Console sub-harness			
D4	M201	W/16	: To M56
E4	M202	BR/24	: To M64
D4	M203	W/12	: A/T device
E4	M205	GR/16	: DVD player
E4	M206	L/16	: DVD player
E5	M207	B/2	: Console power socket
Console switch sub-harness			
E4	M251	BR/20	: To M63
E4	M252	BR/6	: Front heated seat switch RH
E4	M253	GR/6	: VDC OFF switch
D4	M255	BR/6	: Front heated seat switch LH
D5	M256	B/2	: A/T device illumination
Optical sensor sub-harness			
D2	M401	W/4	: To M65
E2	M402	B/4	: Optical sensor

* : Refer to previous page

WKIA4749E

ENGINE ROOM HARNESS (LH VIEW)

Engine Compartment

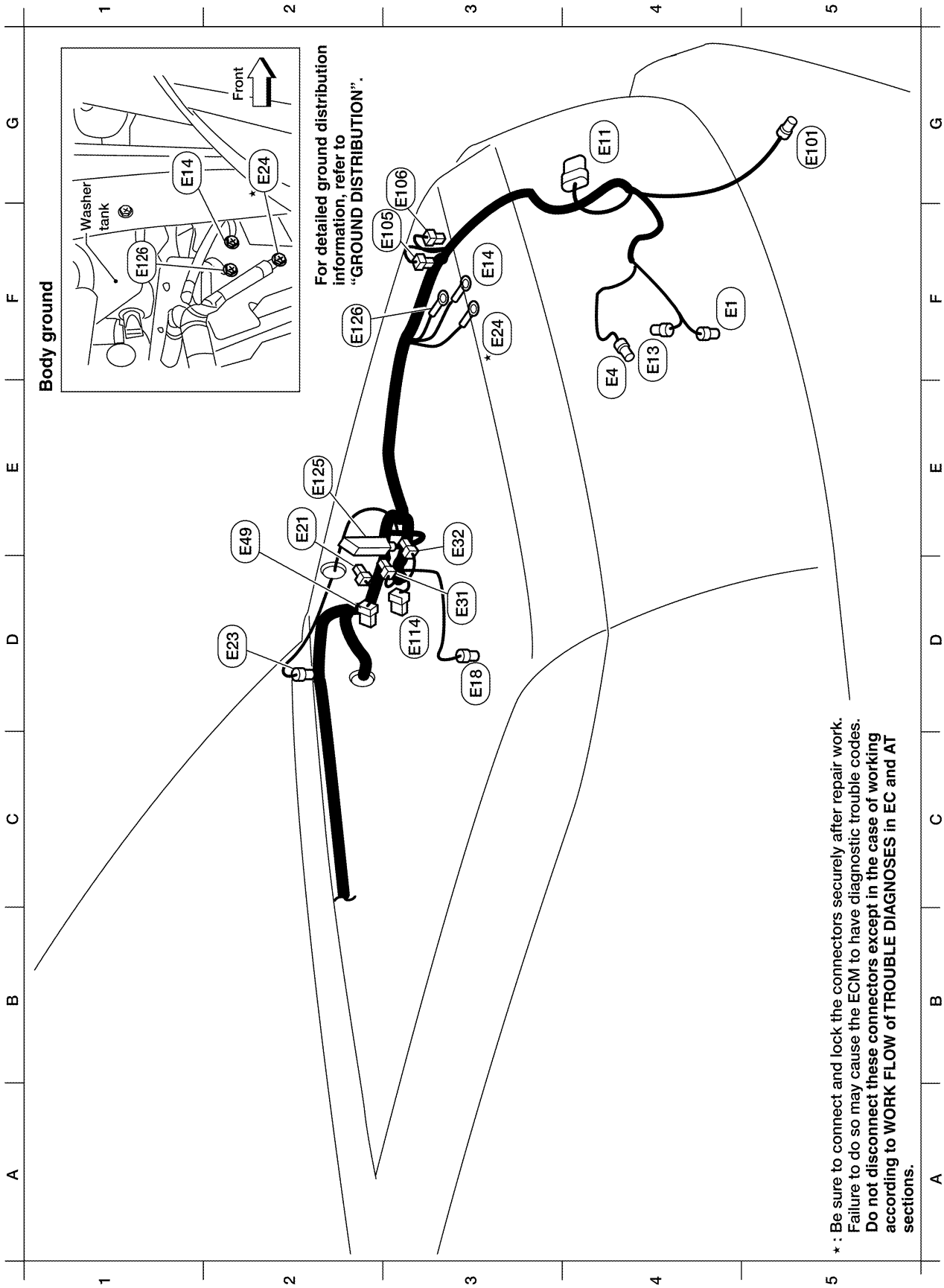

Refer to PG-48, "ENGINE ROOM HARNESS (RH VIEW)" for continuation of engine room harness.

F4	E1	GR/2	: Ambient sensor
E4	E4	Y/2	: Crash zone sensor
G4	E11	B/6	: Front combination lamp LH
F4	E13	GR/2	: Ambient sensor 2
F3	E14	-	: Body ground
D3	E18	GR/2	: Front wheel sensor LH
E2	E21	GR/2	: Brake fluid level switch
D2	E23	GR/6	: Front wiper motor
F3	★E24	-	: Body ground
D3	E31	GR/3	: Front pressure sensor
E3	E32	GR/3	: Rear pressure sensor
E2	E49	B/6	: Active booster
G5	E101	B/2	: Front fog lamp LH
F3	E105	BR/2	: Front and rear washer motor
G3	E106	BR/2	: Washer fluid level switch
D3	E114	B/6	: Delta stroke sensor
E2	E125	B/47	: ABS actuator and electric unit (control unit)
F2	E126	-	: Body ground

★ : Be sure to connect and lock the connectors securely after repair work. Failure to do so may cause the ECM to have diagnostic trouble codes.
Do not disconnect these connectors except in the case of working according to WORK FLOW of TROUBLE DIAGNOSES in EC and AT sections.

WKIA4751E

Passenger Compartment

E10	W/10	: To M6
★ E20	B/8	: Accelerator pedal position (APP) sensor
E26	W/16	: To M91
E29	Y/4	: To M10
E34	W/24	: To B40
E35	W/12	: To B41
E36	W/2	: To B42
★ E37	BR/2	: ASCD brake switch
★ E38	B/2	: Stop lamp switch
E109	GR/2	: Pedal adjusting motor

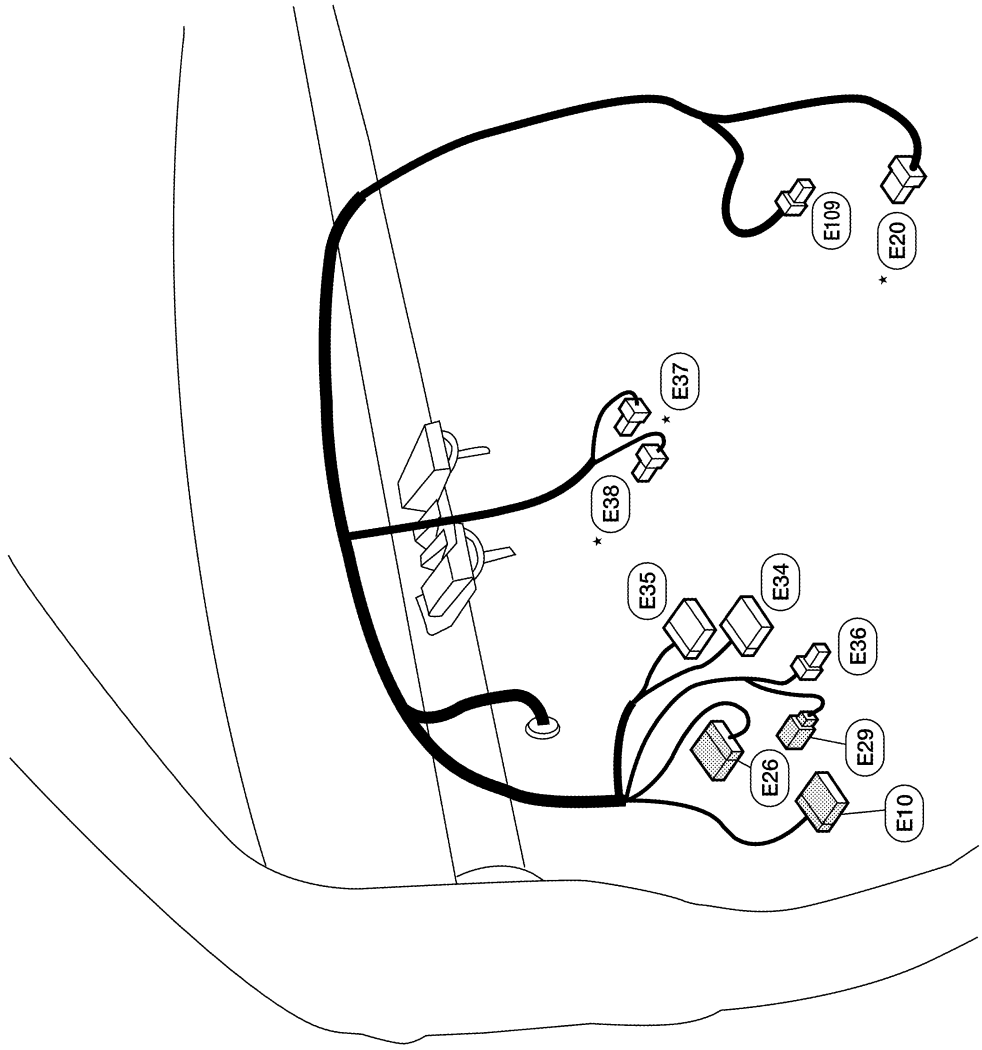

★ : Be sure to connect and lock the connectors securely after repair work. Failure to do so may cause the ECM to have diagnostic trouble codes.
Do not disconnect these connectors except in the case of working according to WORK FLOW of TROUBLE DIAGNOSES in EC and AT sections.

WKIA4752E

ENGINE ROOM HARNESS (RH VIEW)

Engine Compartment

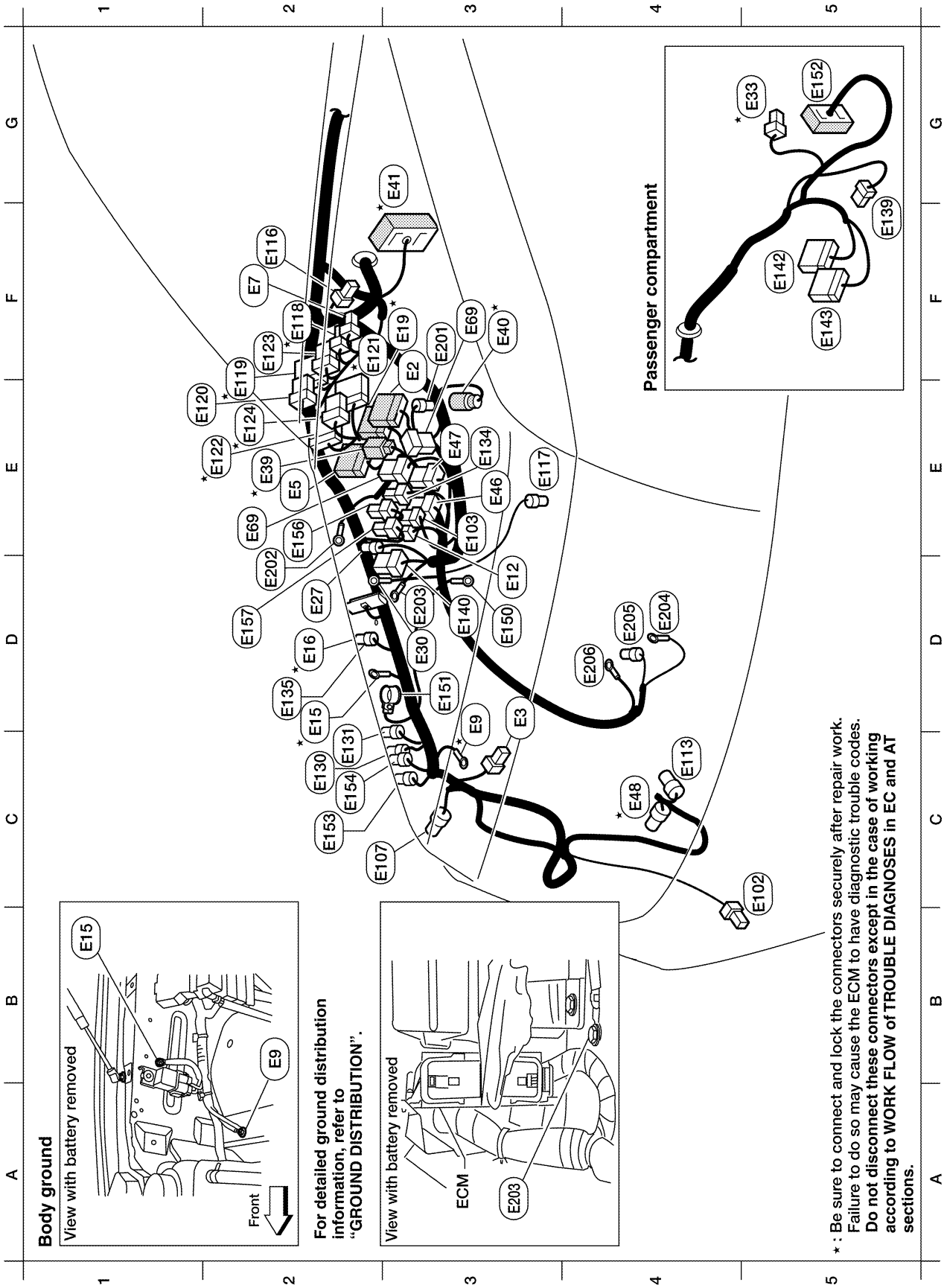

Refer to PG-45, "ENGINE ROOM HARNESS (LH VIEW)" for continuation of engine room harness.

F3	E2	W/16		: To F32
D3	E3	B/2		: Horn
E2	* E5	W/24		: To F14
F2	E7	GR/2		: Fuse and fusible link box
C3	* E9	-		: Body ground
D3	E12	B/5		: Stop lamp relay
C2	* E15	-		: Body ground
D2	* E16	B/32		: ECM
F3	* E19	W/16		: To F33
D2	E27	BR/2		: Fusible link box (battery)
D3	E30	-		: Fusible link box (battery)
G5	* E33	B/1		: To M66
E2	* E39	W/2		: To F34
F3	* E40	GR/2		: To E201
F3	* E41	SMJ		: To C1 (located RH rear of engine compartment)
E3	E46	B/5		: Transfer shift high relay
E3	E47	B/5		: Transfer shift low relay
C4	* E48	B/3		: Refrigerant pressure sensor
E3	E69	L/4		: Transfer shut off relay
C5	E102	B/2		: Front fog lamp RH
E3	E103	B/5		: Daytime light relay
C2	E107	B/6		: Front combination lamp RH
C4	E113	GR/2		: Cooling fan motor
F2	E116	W/2		: Condenser 2
E3	E117	GY/2		: Front wheel sensor RH
F2	* E118	B/2		: IPDM E/R (intelligent power distribution module engine room)
E2	* E119	W/16		: IPDM E/R (intelligent power distribution module engine room)
E2	E120	W/6		: IPDM E/R (intelligent power distribution module engine room)
F3	* E121	BR/12		: IPDM E/R (intelligent power distribution module engine room)
E2	* E122	W/12		: IPDM E/R (intelligent power distribution module engine room)
F2	E123	BR/8		: IPDM E/R (intelligent power distribution module engine room)
E2	* E124	B/6		: IPDM E/R (intelligent power distribution module engine room)
C2	E130	W/2		: Compressor motor relay
C2	E131	W/2		: Compressor motor relay
D2	E135	GR/2		: Transfer dropping resistor
F5	E139	W/8		: To B107
D3	E140	BR/6		: Trailer tow relay 2
F5	E142	L/24		: Transfer control unit
F5	E143	G/24		: Transfer control unit
D3	E150	-		: Engine ground
D3	E151	-		: Negative battery cable
G5	E152	SMJ		: To M31
C2	E153	GR/2		: Transfer motor relay
C2	E154	GR/2		: Transfer motor relay
E2	E156	L/4		: Trailer turn relay LH
D2	E157	L/4		: Trailer turn relay RH

Generator sub-harness

F3	E201	GR/2	: To E40
D2	E202	-	: Fusible link box (battery)
D3	E203	-	: Body ground
D4	E204	-	: Generator
D4	E205	GR/2	: Generator
D4	E206	-	: Generator

WKIA4754E

* : Be sure to connect and lock the connectors securely after repair work. Failure to do so may cause the ECM to have diagnostic trouble codes. **Do not disconnect these connectors except in the case of working according to WORK FLOW of TROUBLE DIAGNOSES in EC and AT sections.**

ENGINE CONTROL HARNESS

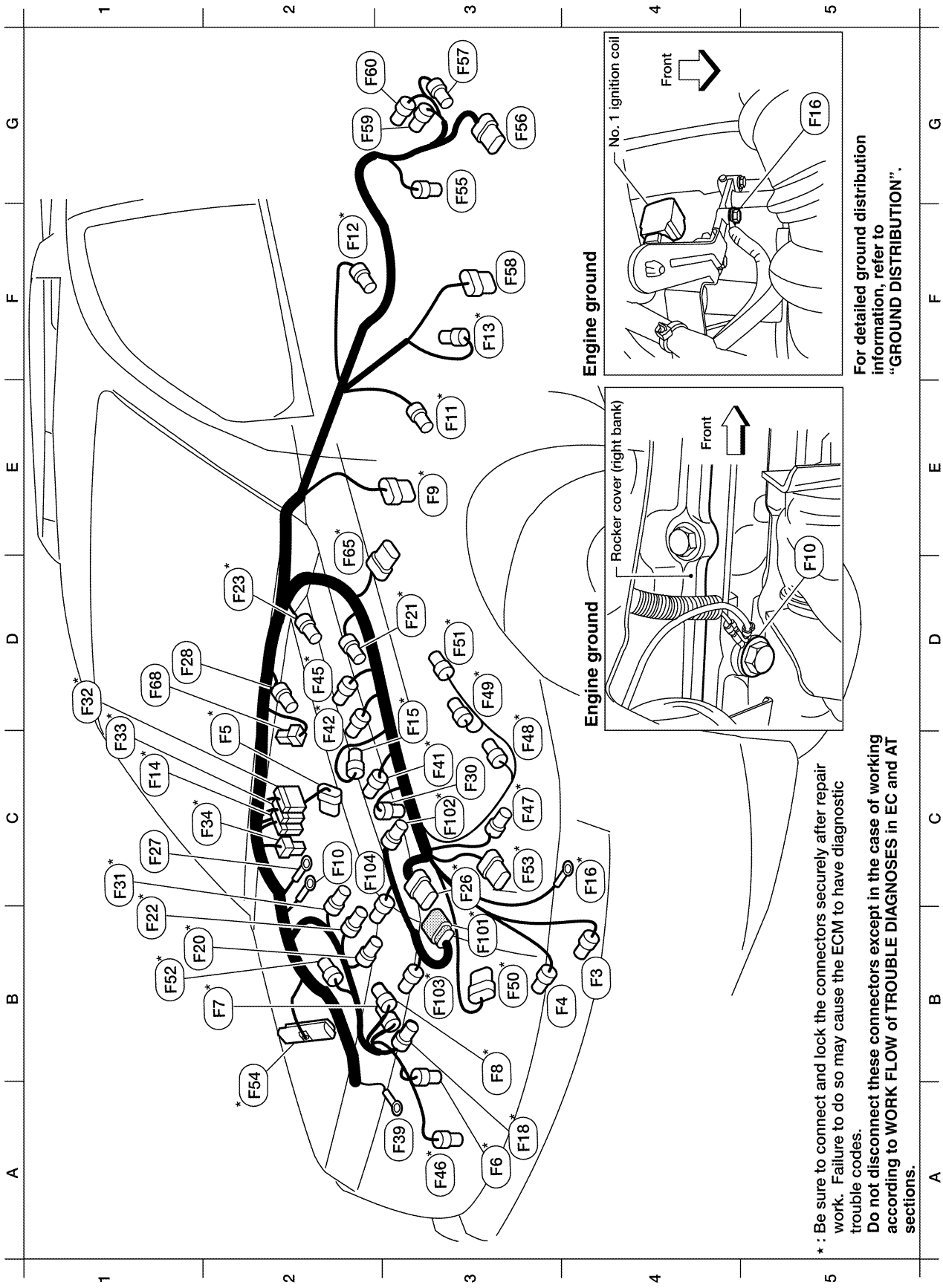

B4		F3	B/1	: A/C compressor
B4		F4	B/3	: Oil pressure sensor
C2	*	F5	B/6	: Air fuel ratio (A/F) sensor 1 (bank 2)
A3	*	F6	GR/3	: Ignition coil No. 2 (with power transistor)
B2	*	F7	GR/3	: Ignition coil No. 4 (with power transistor)
A3	*	F8	GR/3	: Ignition coil No. 6 (with power transistor)
E3		F9	G/10	: A/T assembly
C1	*	F10	-	: Engine ground
E3	*	F11	B/3	: Crankshaft position sensor (POS)
F2	*	F12	G/4	: Heated oxygen sensor 2 (bank 2)
F3	*	F13	G/4	: Heated oxygen sensor 2 (bank 1)
C1		F14	W/24	: To E5
C3	*	F15	L/2	: EVAP canister purge volume control solenoid valve
C4	*	F16	-	: Engine ground
A3	*	F18	GR/2	: Fuel injector No. 2
B1	*	F20	GR/2	: Fuel injector No. 4
D3	*	F21	GR/2	: Condenser-1
B1	*	F22	GR/2	: Fuel injector No. 6
D2	*	F23	B/3	: Camshaft position sensor (PHASE)
C3	*	F26	B/6	: To F101
C1		F27	B/1	: Starter motor
D1		F28	GR/1	: Starter motor
C3	*	F30	GR/2	: Fuel injector No. 1
C1	*	F31	GR/2	: Fuel injector No. 8
D1	*	F32	W/16	: To E2
C1	*	F33	W/16	: To E19
C1	*	F34	W/2	: To E39
A3		F39	-	: Fusible link box (battery)
C3	*	F41	GR/2	: Fuel injector No. 3
C2	*	F42	GR/2	: Fuel injector No. 5
D2	*	F45	GR/2	: Fuel injector No. 7
A3	*	F46	B/3	: Power steering pressure sensor
C3	*	F47	GR/3	: Ignition coil No. 1 (with power transistor)
C3	*	F48	GR/3	: Ignition coil No. 3 (with power transistor)
D3	*	F49	GR/3	: Ignition coil No. 5 (with power transistor)
B3	*	F50	B/6	: Electric throttle control actuator
D3	*	F51	GR/3	: Ignition coil No. 7 (with power transistor)
B1	*	F52	GR/3	: Ignition coil No. 8 (with power transistor)
C3	*	F53	B/6	: Mass air flow sensor
A2	*	F54	B/81	: ECM
G3		F55	B/2	: ATP switch (4WD only)
G3		F56	B/8	: Transfer terminal cord assembly (4WD only)
G3		F57	B/2	: Transfer motor (4WD only)
F3		F58	GR/6	: Transfer control device (4WD only)
G2		F59	B/2	: Wait detection switch (4WD only)
G2		F60	GR/2	: Neutral-4LO switch (4WD only)
D2	*	F65	B/6	: Air fuel ratio (A/F) sensor 1 (bank 1)
D1		F68	B/2	: Water valve

Engine control sub-harness

B3	*	F101	B/6	: To F26
C3	*	F102	B/2	: Knock sensor (bank 1)
B3	*	F103	GR/2	: Engine coolant temperature sensor
C2		F104	B/2	: Knock sensor (bank 2)

WKIA5408E

* : Be sure to connect and lock the connectors securely after repair work. Failure to do so may cause the ECM to have diagnostic trouble codes. **Do not disconnect these connectors except in the case of working according to WORK FLOW of TROUBLE DIAGNOSES in EC and AT sections.**

CHASSIS HARNESS

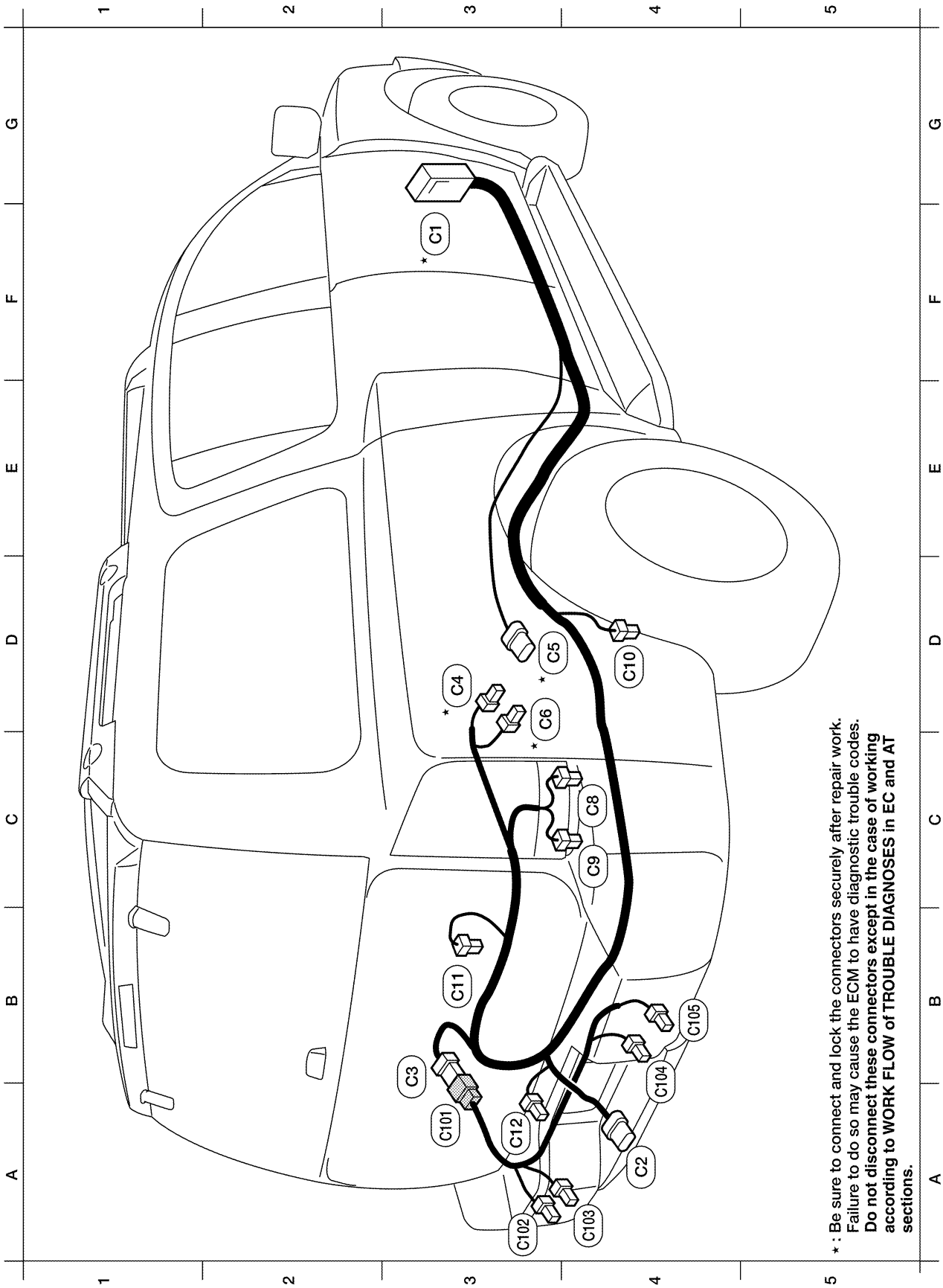

F3	*	C1	SMJ	: To E41 (located RH rear of engine compartment)
A4		C2	B/7	: Trailer
B3		C3	GR/6	: To C101
D3	*	C4	GR/3	: EVAP control system pressure sensor
D4	*	C5	GR/5	: Fuel level sensor unit and fuel pump
C3	*	C6	B/2	: EVAP canister vent control valve
C4		C8	B/3	: Height sensor
C4		C9	B/4	: Suspension air compressor
D4		C10	BR/2	: Rear wheel sensor RH
B3		C11	BR/2	: Rear wheel sensor LH
A3		C12	W/2	: License plate lamps

Rear sonar sensor sub-harness

A3	C101	GR/6	: To C3
A3	C102	B/3	: Rear sonar sensor LH outer
A4	C103	B/3	: Rear sonar sensor LH inner
B4	C104	B/3	: Rear sonar sensor RH inner
B4	C105	B/3	: Rear sonar sensor RH outer

WKIA4758E

* : Be sure to connect and lock the connectors securely after repair work. Failure to do so may cause the ECM to have diagnostic trouble codes. **Do not disconnect these connectors except in the case of working according to WORK FLOW of TROUBLE DIAGNOSES in EC and AT sections.**

BODY HARNESS

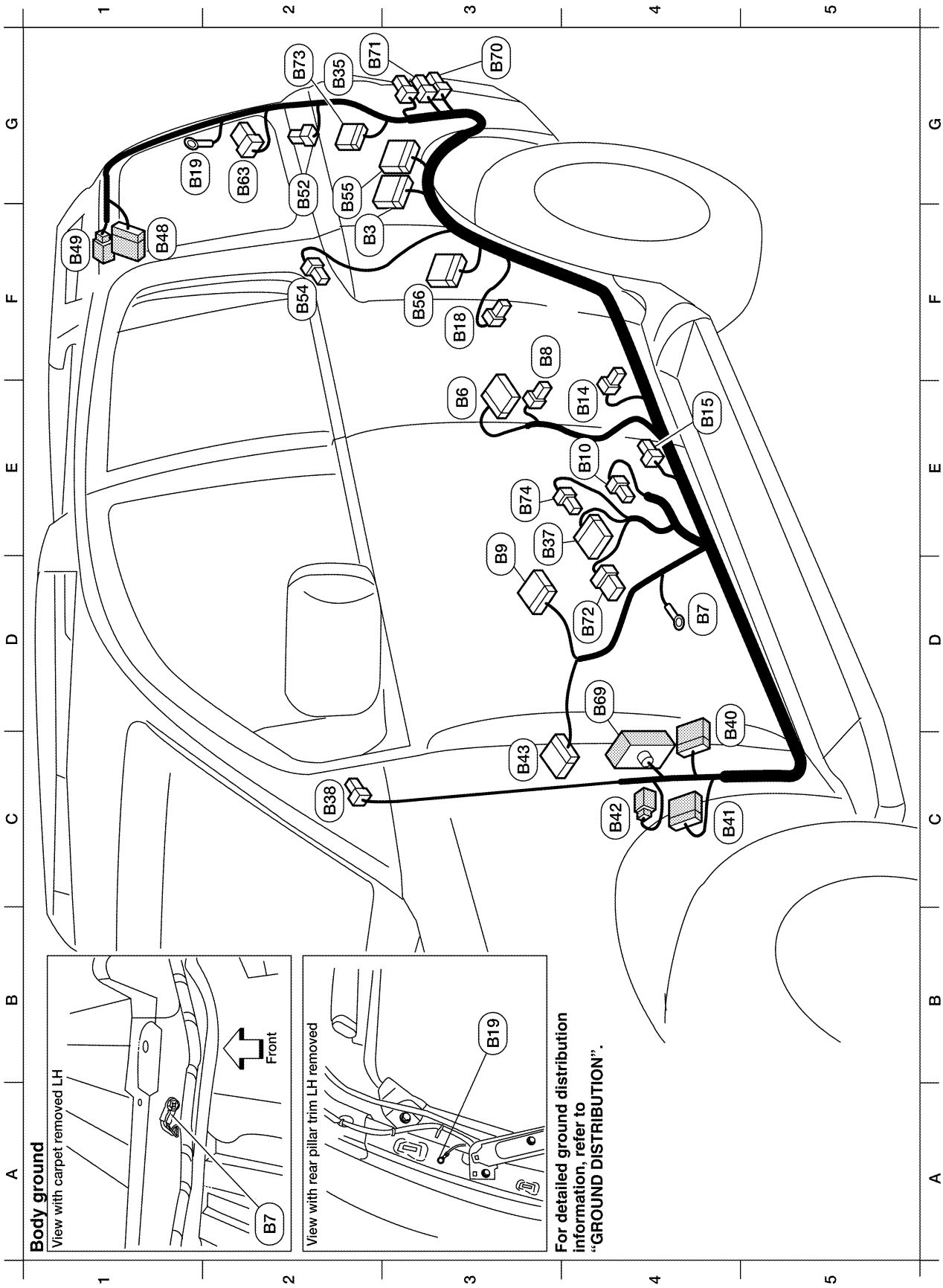

F2	B3	W/16	: Suspension control unit
E3	B6	W/18	: To D201
D4	B7	-	: Body ground
F3	B8	W/3	: Front door switch LH
E3	B9	Y/12	: Air bag diagnosis sensor unit
E4	B10	Y/2	: Front LH side air bag module
E4	B14	Y/2	: Front LH seat belt pre-tensioner
E4	B15	Y/2	: LH side air bag (satellite) sensor
F3	B18	W/3	: Rear door switch LH
G1	B19	-	: Body ground
G2	B35	B/3	: Rear combination lamp LH (turn signal)
D4	B37	W/16	: To P1
C2	B38	Y/2	: LH side front curtain air bag module
C4	B40	W/24	: To E34
C4	B41	W/12	: To E35
C4	B42	W/2	: To E36
C3	B43	W/12	: To B111
F1	B48	W/16	: To D401
F1	B49	W/2	: To D402
G2	B52	W/2	: Rear power vent window motor LH
F2	B54	Y/2	: LH side rear curtain air bag module
G2	B55	W/26	: Back door control unit
F3	B56	W/16	: Sonar control unit
G2	B63	W/6	: Back door close switch
D4	B69	SMJ	: To M40
G3	B70	B/3	: Rear combination lamp LH (stop/tail)
G2	B71	B/2	: Back-up lamp LH
D4	B72	BR/6	: Subwoofer (with BOSE audio system)
G2	B73	W/16	: Rear view camera control unit
D4	B74	Y/4	: Seat belt buckle pre-tensioner assembly LH

WKIA4760E

BODY NO. 2 HARNESS

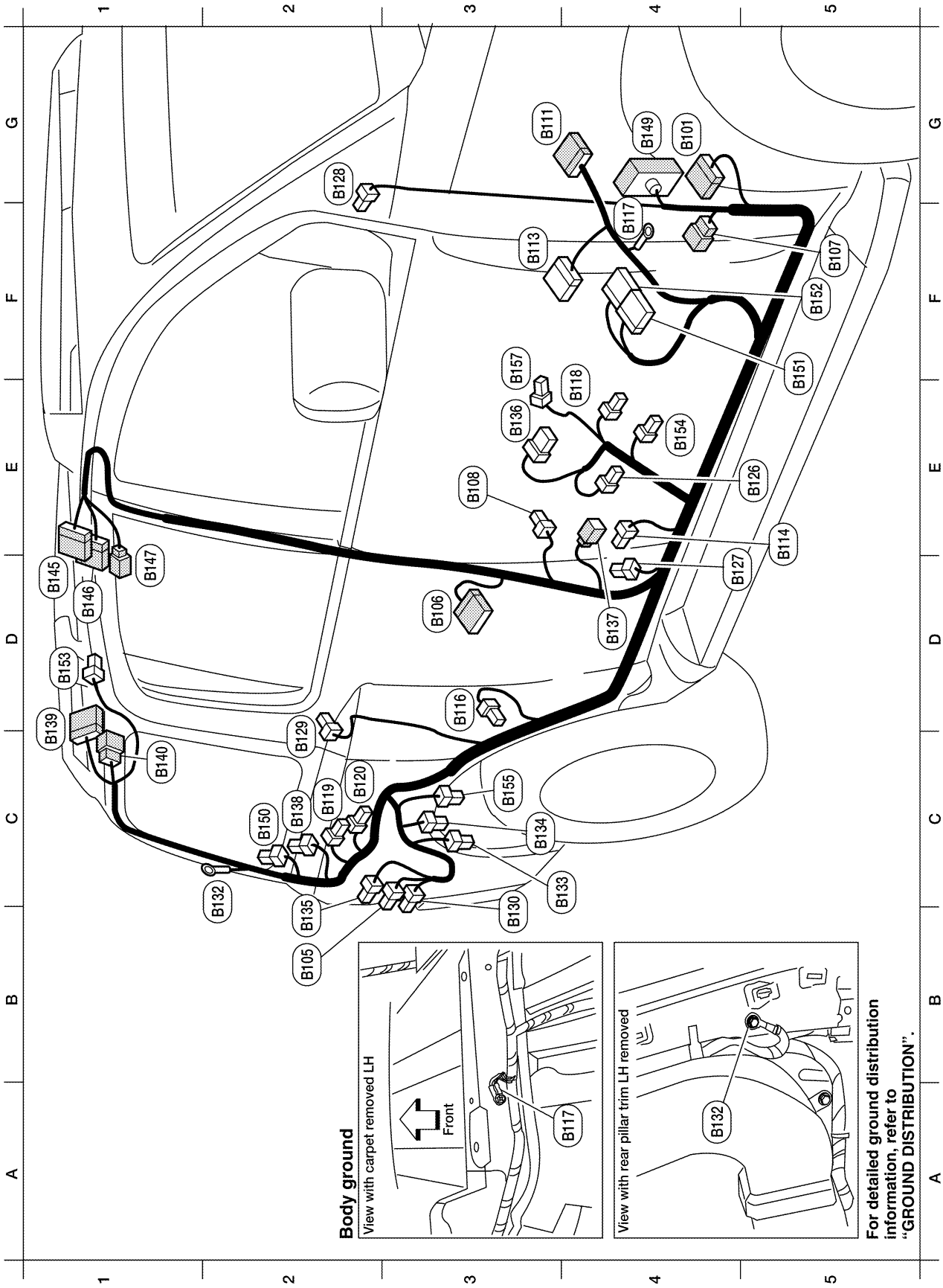

WKIA4761E

G4	B101	W/16	: To M84
B2	B105	B/3	: Rear combination lamp RH (turn signal)
D3	B106	W/18	: To D301
F5	B107	W/8	: To E139
E3	B108	W/3	: Front door switch RH
G3	B111	W/12	: To B43
F3	B113	Y/12	: Air bag diagnosis sensor unit
E5	B114	Y/2	: RH side air bag (satellite) sensor
D3	B116	W/3	: Rear door switch RH
F4	B117	-	: Body ground
E4	B118	W/3	: Front seat heater RH
C2	B119	W/2	: Condensor-3
C2	B120	W/2	: Condensor-4
E5	B126	Y/2	: Front RH side air bag module
D4	B127	Y/2	: Front RH seat belt pre-tensioner
F2	B128	Y/2	: RH side rear curtain air bag module
C2	B129	Y/2	: RH side front curtain air bag module
B3	B130	B/3	: Rear combination lamp RH (stop/tail)
C2	B132	-	: Body ground
C4	B133	W/4	: Rear blower motor resistor
C3	B134	W/2	: Rear blower motor
B2	B135	B/2	: Back-up lamp RH
E3	B136	W/8	: To P151
D4	B137	W/3	: Belt tension sensor
C2	B138	B/2	: Rear cargo power socket
C1	B139	W/16	: To R602
C1	B140	W/6	: To R601
D1	B145	W/16	: To R200
D1	B146	BR/24	: To R201
D1	B147	W/4	: To R207
G4	B149	SMJ	: To M36
C2	B150	W/2	: Rear power vent window motor RH
F5	B151	W/40	: NAVI control unit
F5	B152	W/32	: NAVI control unit
D1	B153	W/2	: Cargo lamp
E4	B154	W/2	: To P103
C3	B155	B/6	: Air mix door motor (rear)
F3	B157	Y/4	: Seat belt buckle pre-tensioner assembly RH

WKIA4762E

ROOM LAMP HARNESS

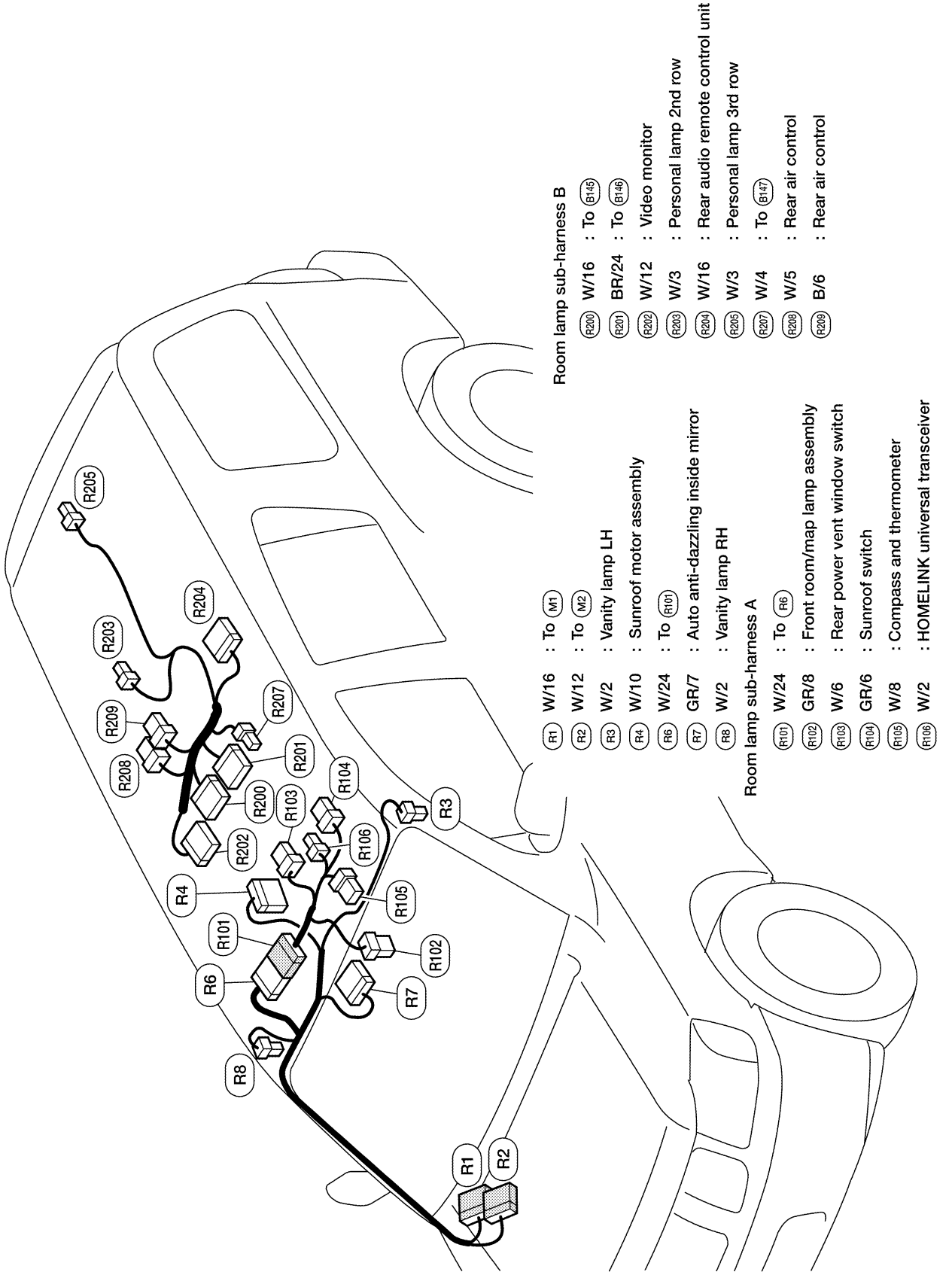

WKIA4763E

FRONT DOOR LH HARNESS

D1 W/24 : To M9
D2 W/16 : To M8
D3 W/8 : To M158
† D4 W/6 : Door mirror LH (without automatic drive positioner)
†† D4 W/16 : Door mirror LH (with automatic drive positioner)
D5 W/8 : Seat memory switch
D7 W/16 : Main power window and door lock/unlock switch
D8 W/3 : Main power window and door lock/unlock switch
D9 GR/6 : Front power window motor LH
D10 W/16 : Door mirror remote control switch
D11 W/2 : Front step lamp LH
D12 W/2 : Front door speaker LH
D14 B/6 : Front door lock assembly LH

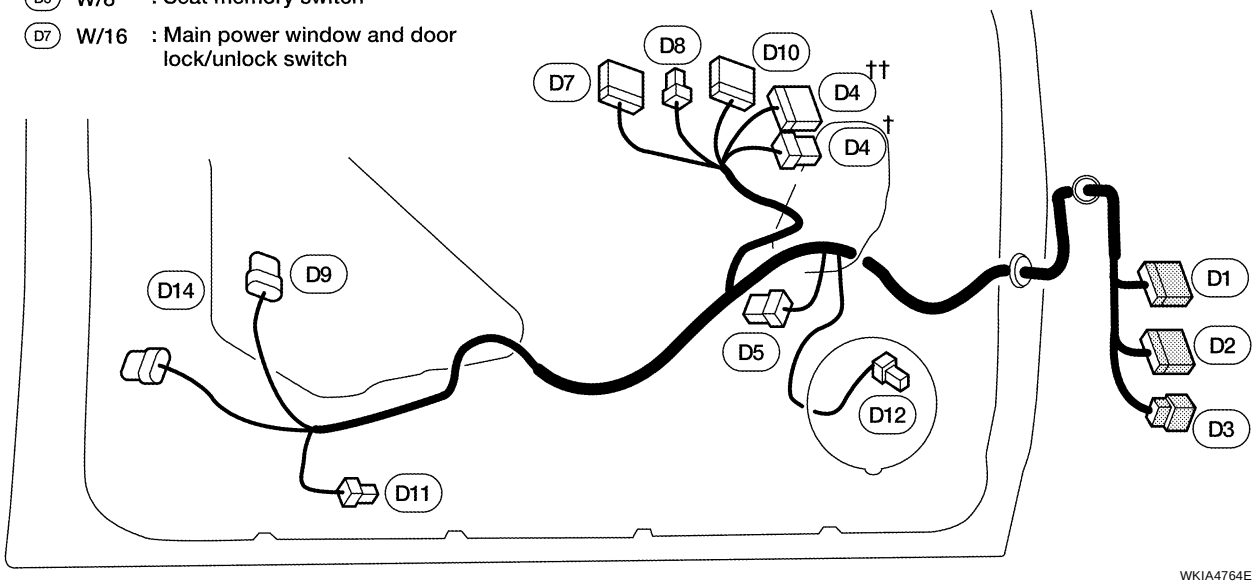

WKIA4764E

FRONT DOOR RH HARNESS

D101 W/8 : To M75
D102 W/20 : To M74
D104 GR/6 : Front power window motor RH
D105 W/16 : Power window and door lock/unlock switch RH
† D107 W/6 : Door mirror RH (without automatic drive positioner)
†† D107 W/16 : Door mirror RH (with automatic drive positioner)
D109 W/2 : Front step lamp RH
D112 W/2 : Front door speaker RH
D114 B/6 : Front door lock actuator RH

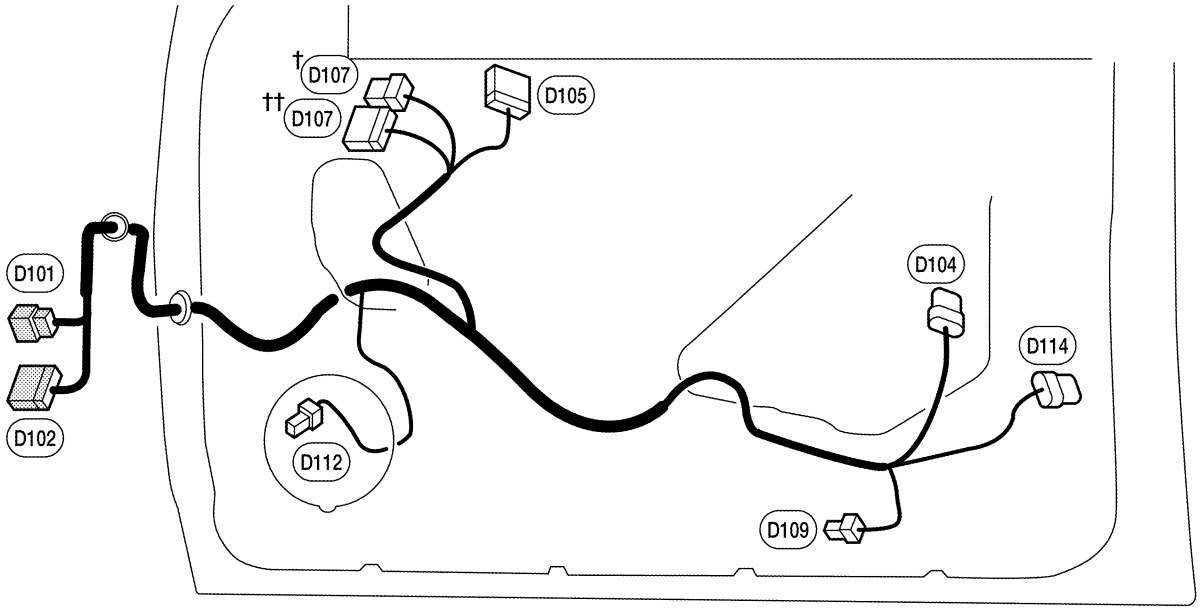

WKIA4765E

REAR DOOR LH HARNESS

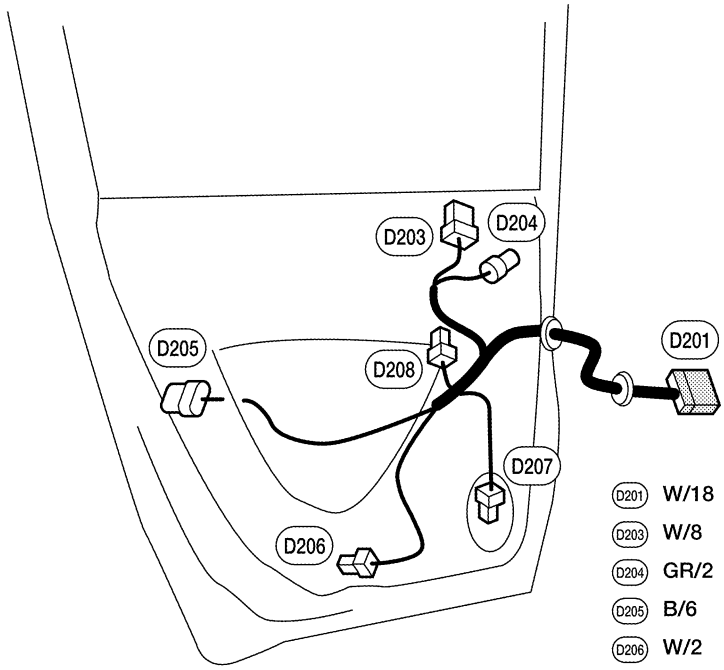

D201	W/18	: To B6
D203	W/8	: Rear power window switch LH
D204	GR/2	: Rear power window motor LH
D205	B/6	: Rear door lock actuator LH
D206	W/2	: Rear step lamp LH
D207	W/2	: Rear door speaker LH
D208	BR/2	: Rear door tweeter LH

LKIA0441E

REAR DOOR RH HARNESS

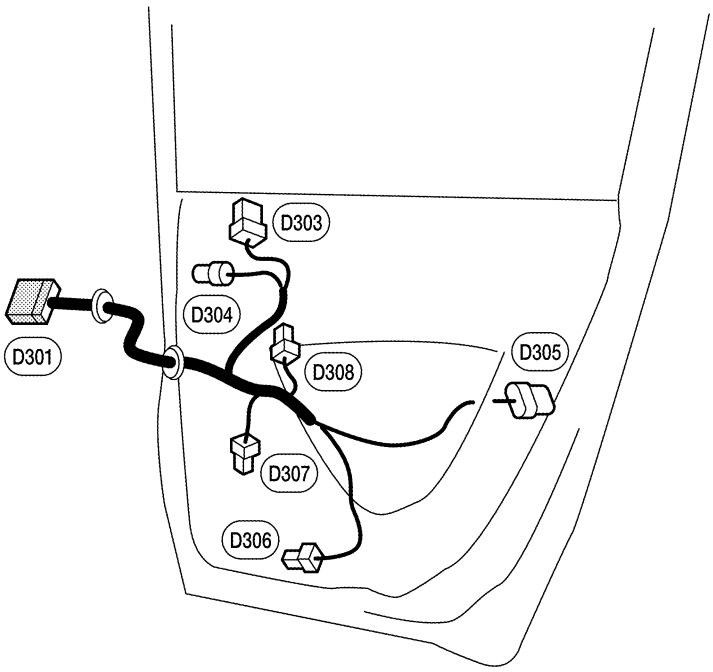

D301	W/18	: To B106
D303	W/8	: Rear power window switch RH
D304	GR/2	: Rear power window motor RH
D305	B/6	: Rear door lock actuator RH
D306	W/2	: Rear step lamp RH
D307	W/2	: Rear door speaker RH
D308	BR/2	: Rear door tweeter RH

WKIA4766E

BACK DOOR HARNESS

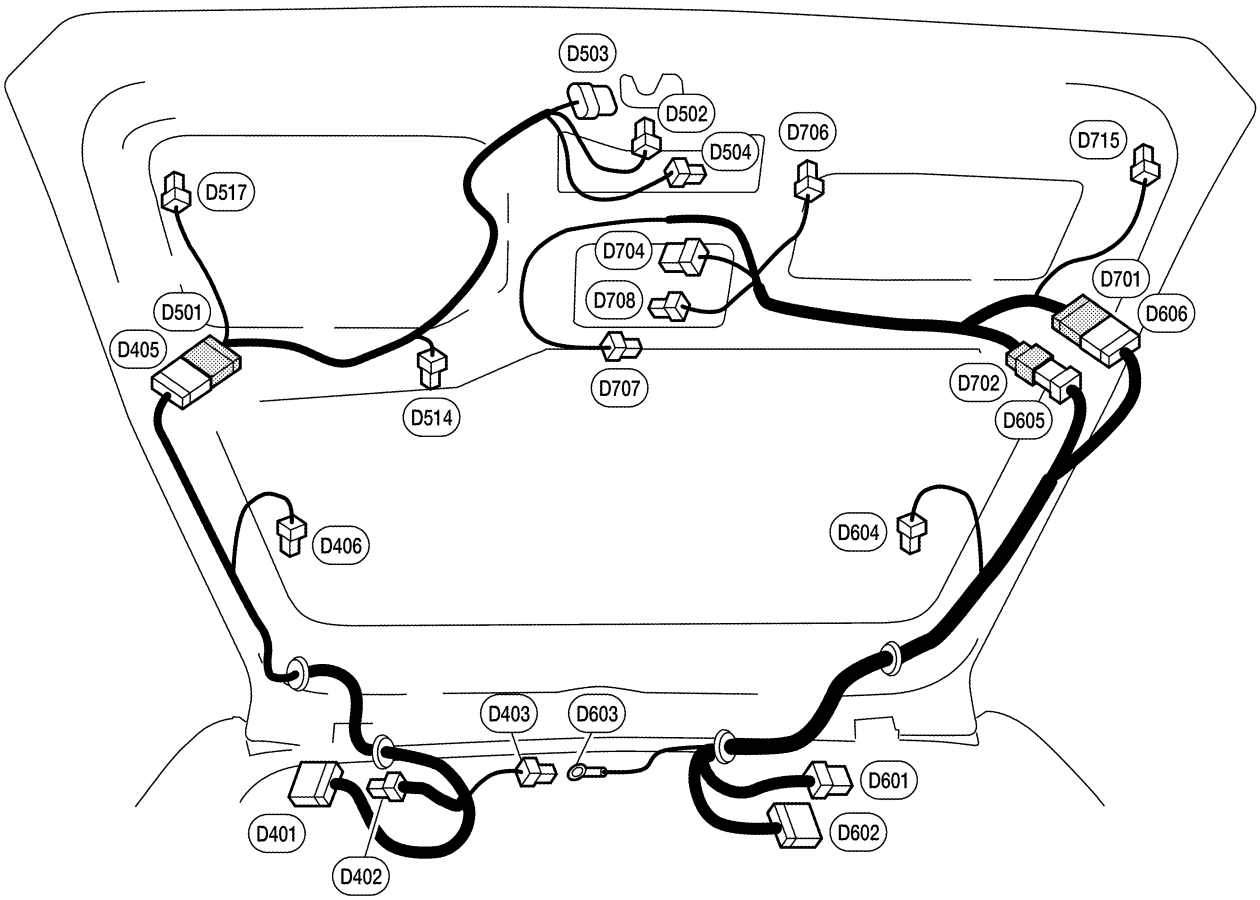

Back door No. 2 LH harness

D401	W/16	: To B48
D402	W/2	: To B49
D403	GR/2	: High-mounted stop lamp
D405	W/16	: To D501
D406	B/1	: Rear window defogger

Back door LH harness

D501	W/16	: To D405
D502	W/3	: Back door switch
D503	W/8	: Back door latch
D504	W/4	: Rear view camera
D514	BR/2	: Back door warning chime
D517	BR/2	: Pinch strip LH

Back door No. 2 RH harness

D601	W/6	: To B140
D602	W/16	: To B139
D603	-	: Body ground
D604	B/1	: Rear defogger ground
D605	W/6	: To D702
D606	W/16	: To D701

Back door RH harness

D701	W/16	: To D606
D702	W/6	: To D605
D704	W/6	: Rear wiper motor
D706	W/2	: Back door handle switch
D707	B/1	: Glass hatch ajar switch
D708	W/4	: Back door lock actuator
D715	BR/2	: Pinch strip RH

For detailed ground distribution information, refer to "Ground Distribution".

Body ground

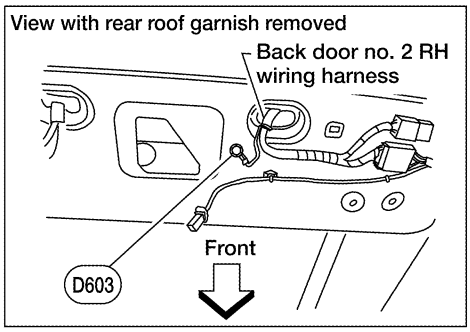

WKIA4767E

Wiring Diagram Codes (Cell Codes)

EKS00B6S

Use the chart below to find out what each wiring diagram code stands for.
Refer to the wiring diagram code in the alphabetical index to find the location (page number) of each wiring diagram.

Code	Section	Wiring Diagram Name
A/C,A	ATC	Auto Air Conditioner
A/SUSP	RSU	Rear Air Suspension
AF1B1	EC	Air Fuel Ratio (A/F) Sensor 1 (Bank 1)
AF1B2	EC	Air Fuel Ratio (A/F) Sensor 1 (Bank 2)
AF1HB1	EC	Air Fuel Ratio (A/F) Sensor 1 (Bank 1)
AF1HB2	EC	Air Fuel Ratio (A/F) Sensor 1 (Bank 2)
APPS1	EC	Accelerator Pedal Position Sensor
APPS2	EC	Accelerator Pedal Position Sensor
APPS3	EC	Accelerator Pedal Position Sensor
ASC/BS	EC	ASCD Brake Switch
ASC/SW	EC	ASCD Steering Switch
ASCBOF	EC	ASCD Brake Switch
ASCIND	EC	ASCD Indicator
A/T	AT	A/T Assembly
AT/IND	DI	A/T Indicator Lamp
AUDIO	AV	Audio
AUTO/DP	SE	Automatic Drive Positioner
AUTO/L	LT	Auto Light Control
B/CLOS	BL	Back Door Auto Closure System
BACK/L	LT	Back-up Lamp
BRK/SW	EC	Brake Switch
CAN	EC	CAN Communication Line
CAN	LAN	CAN System
CHARGE	SC	Charging System
CHIME	DI	Warning Chime
COOL/F	EC	Cooling Fan Control
COMBSW	LT	Combination Switch
COMM	AV	Audio Visual Communication System
COMPAS	DI	Compass and Thermometer
D/LOCK	BL	Power Door Lock
DEF	GW	Rear Window Defogger
DTRL	LT	Headlamp - With Daytime Light System
DVD	AV	DVD Entertainment System
ECM/PW	EC	ECM Power Supply for Back-Up
ECTS	EC	Engine Coolant Temperature Sensor
ETC1	EC	Electric Throttle Control Function
ETC2	EC	Throttle Control Motor Relay
ETC3	EC	Throttle Control Motor
F/FOG	LT	Front Fog Lamp
F/PUMP	EC	Fuel Pump
FTTS	EC	Fuel Tank Temperature Sensor
FUELB1	EC	Fuel Injection System Bank 1
FUELB2	EC	Fuel Injection System Bank 2
H/LAMP	LT	Headlamp
HORN	WW	Horn
HSEAT	SE	Heated Seat
I/MIRR	GW	Inside Mirror (Auto Anti-Dazzling Mirror)

IATS	EC	Intake Air Temperature Sensor
IGNSYS	EC	Ignition System
ILL	LT	Illumination
INJECT	EC	Injectors
INT/L	LT	Room/Map, Vanity, Cargo, Personal, Foot, Step, and Puddle Lamps
KEYLES	BL	Remote Keyless Entry System
KS	EC	Knock Sensor
MAFS	EC	Mass Air Flow Sensor
MAIN	EC	Main Power Supply and Ground Circuit
METER	DI	Speedometer, Tachometer, Temp. and Fuel Gauges
MIL/DL	EC	Malfunction Indicator Lamp
MIRROR	GW	Door Mirror
NATS	BL	Nissan Anti-Theft System
NAVI	AV	Navigation System
NONDTC	AT	Non Detective Item
O2H2B1	EC	Rear Heated Oxygen Sensor 2 Heater Bank 1
O2H2B2	EC	Rear Heated Oxygen Sensor 2 Heater Bank 2
O2S2B1	EC	Heated Oxygen Sensor 2 Bank 1
O2S2B2	EC	Heated Oxygen Sensor 2 Bank 2
P/SCKT	WW	Power Socket
PEDAL	AP	Adjustable Pedal System
PGC/V	EC	EVAP Canister Purge Volume Control Solenoid Valve
PHASE	EC	Camshaft Position Sensor (PHASE) (Bank 1)
PNP/SW	EC	Park/Neutral Position Switch
POS	EC	Crankshaft Position Sensor (POS)
POWER	PG	Power Supply Routing
PRE/SE	EC	EVAP Control System Pressure Sensor
PS/SEN	EC	Power Steering Pressure Sensor
R/VIEW	DI	Rear View Camera
RP/SEN	EC	Refrigerant Pressure Sensor
SEAT	SE	Power Seat
SEN/PW	EC	Sensor Power Supply
SHIFT	AT	A/T Shift Lock System
SONAR	DI	Rear Sonar System
SROOF	RF	Sunroof
SRS	SRS	Supplemental Restraint System
START	SC	Starting System
STOP/L	LT	Stop Lamp
T/TOW	LT	Trailer Tow
T/WARN	WT	Low Tire Pressure Warning System
TAIL/L	LT	Parking, License and Tail Lamps
T/F	TF	Transfer Case
TMSW	AT	Tow Mode Switch
TPS1	EC	Throttle Position Sensor
TPS2	EC	Throttle Position Sensor
TPS3	EC	Throttle Position Sensor
TRNSCV	BL	HOMELINK® Universal Transceiver
TURN	LT	Turn Signal and Hazard Warning Lamps
VDC	BRC	Vehicle Dynamic Control System
VEHSEC	BL	Vehicle security (theft warning) system
VENT/V	EC	EVAP Canister Vent Control Valve
W/ANT	AV	Audio Antenna

WARN	DI	Warning Lamps
WINDOW	GW	Power Window
WIP/R	WW	Rear Wiper and Washer
WIPER	WW	Front Wiper and Washer

ELECTRICAL UNITS LOCATION

PFP:25230

Electrical Units Location

EKS00B6T

ENGINE COMPARTMENT

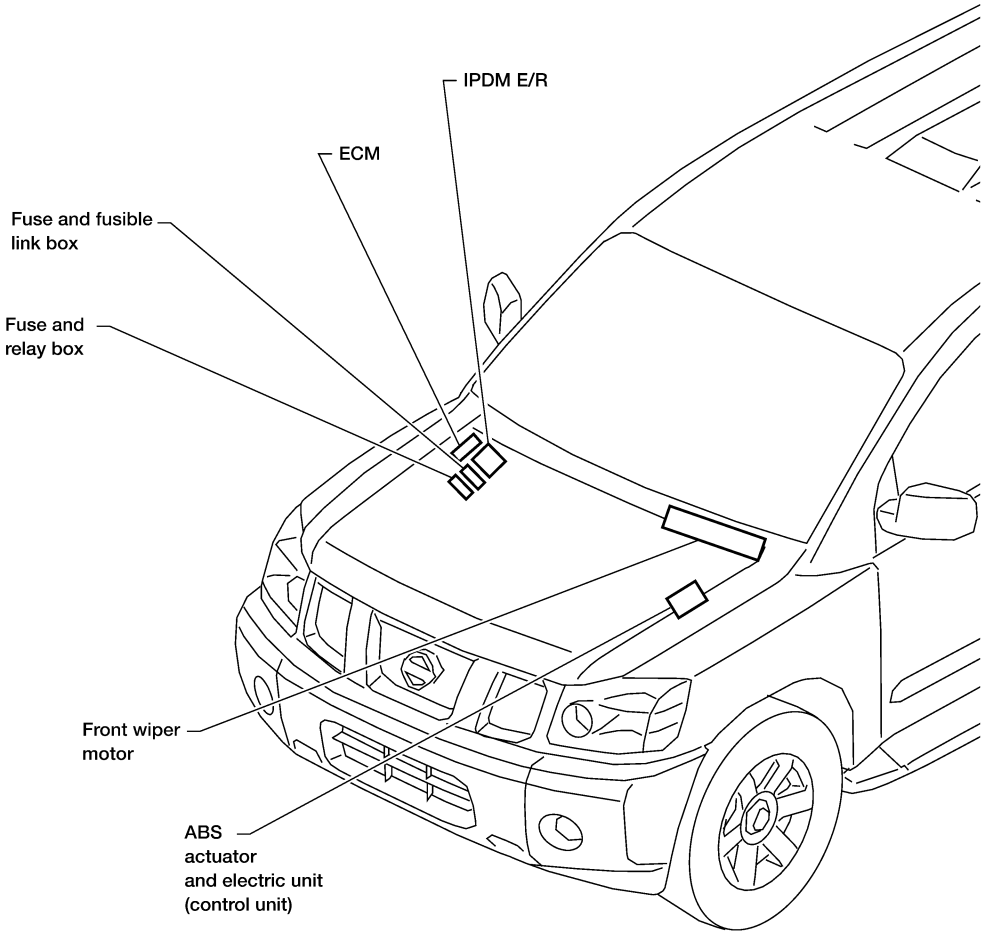

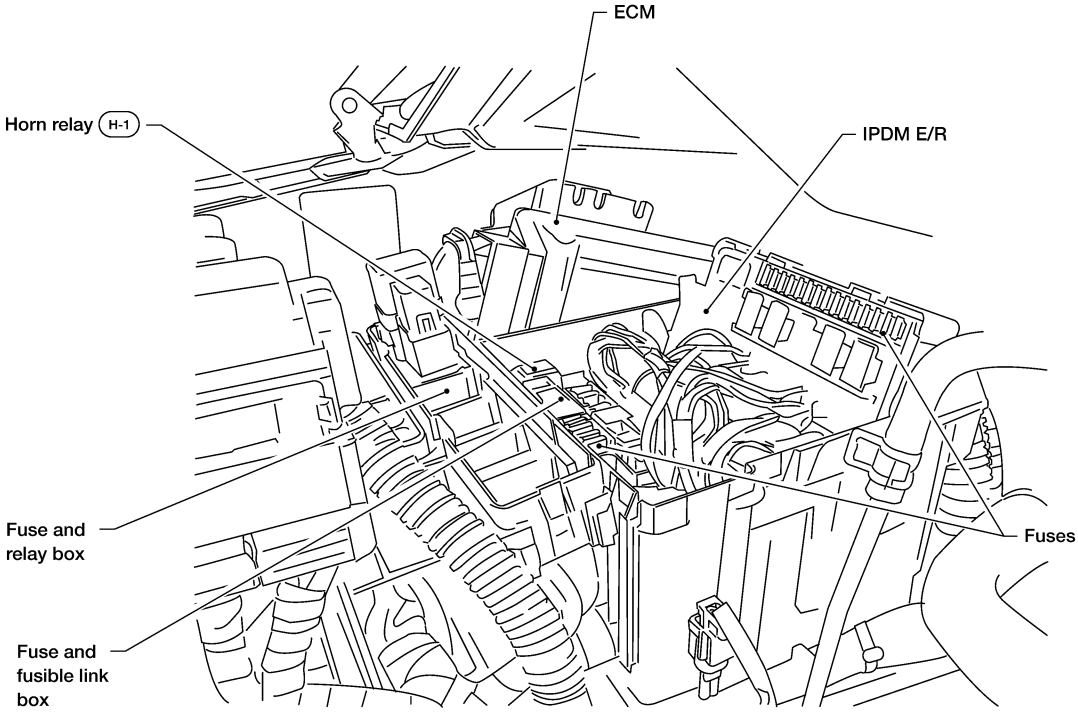

LKIA0444E

PASSENGER COMPARTMENT

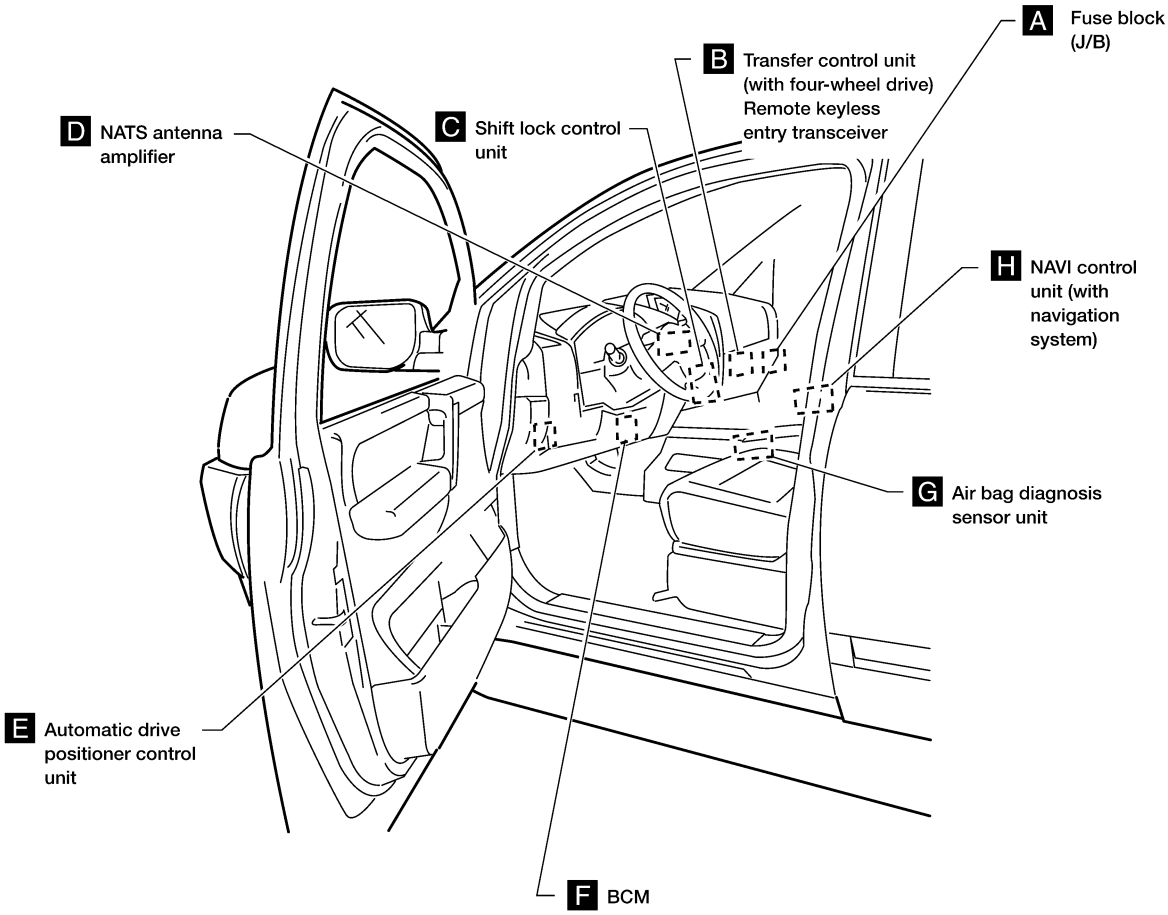

A Instrument panel side RH

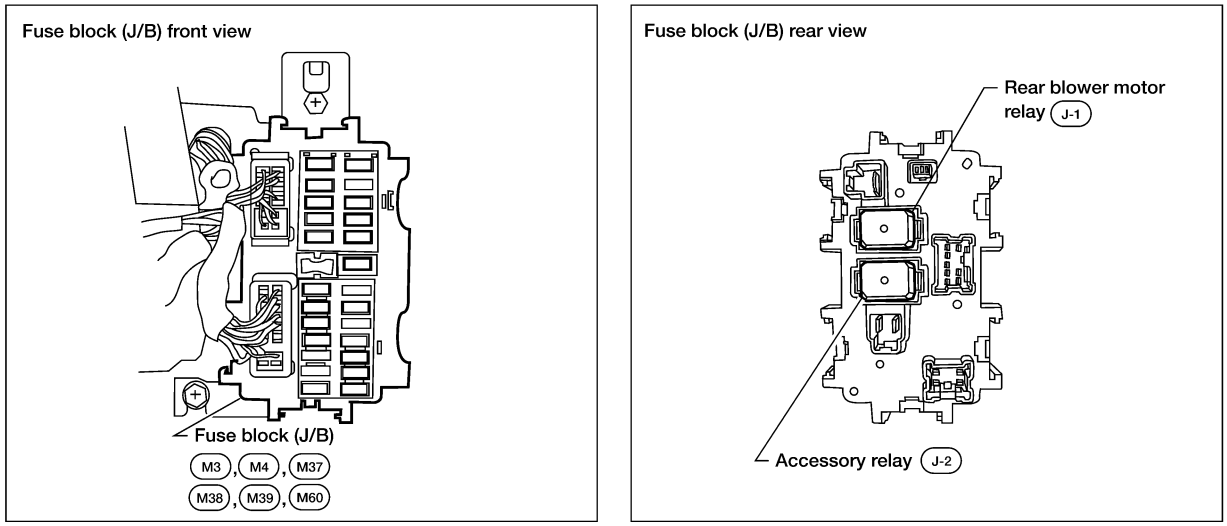

WKIA4768E

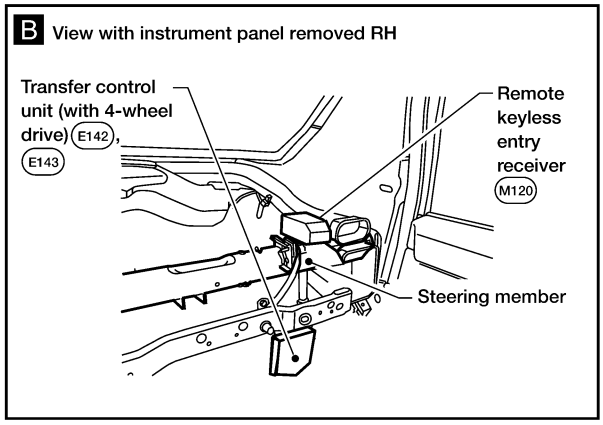
B View with instrument panel removed RH
Transfer control unit (with 4-wheel drive) E142, E143
Remote keyless entry receiver M120
Steering member

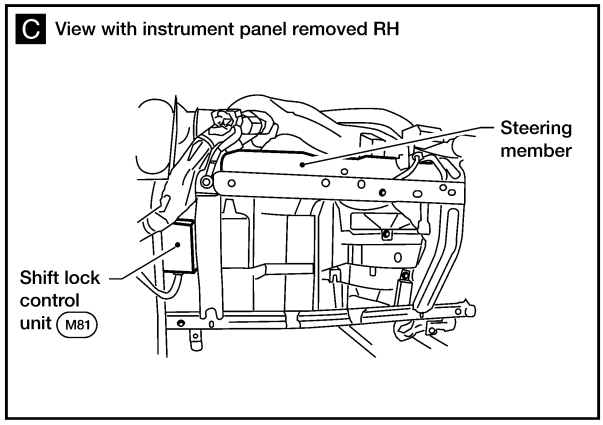
C View with instrument panel removed RH
Steering member
Shift lock control unit M81

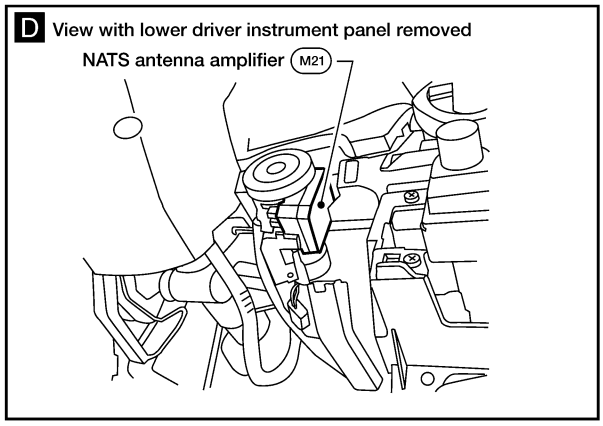
D View with lower driver instrument panel removed
NATS antenna amplifier M21

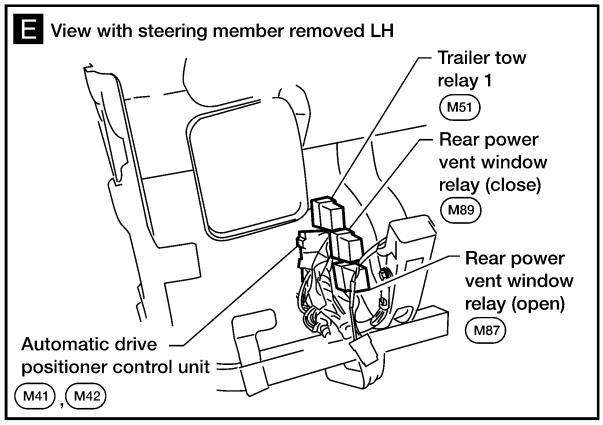
E View with steering member removed LH
Trailer tow relay 1 M51
Rear power vent window relay (close) M89
Rear power vent window relay (open) M87
Automatic drive positioner control unit M41, M42

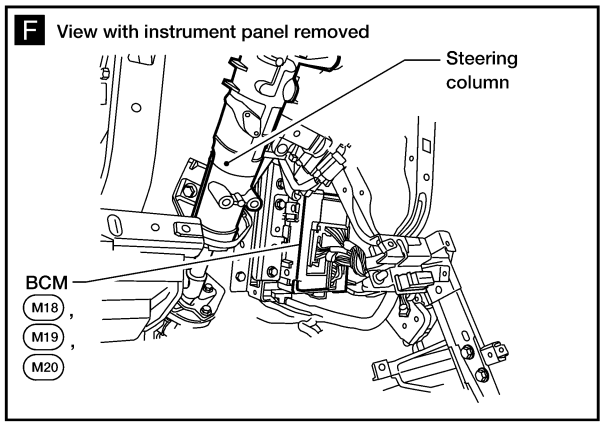
F View with instrument panel removed
Steering column
BCM M18, M19, M20

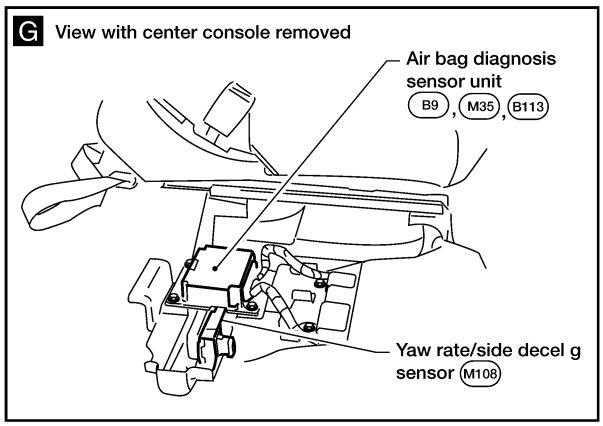
G View with center console removed
Air bag diagnosis sensor unit B9, M35, B113
Yaw rate/side decel g sensor M108

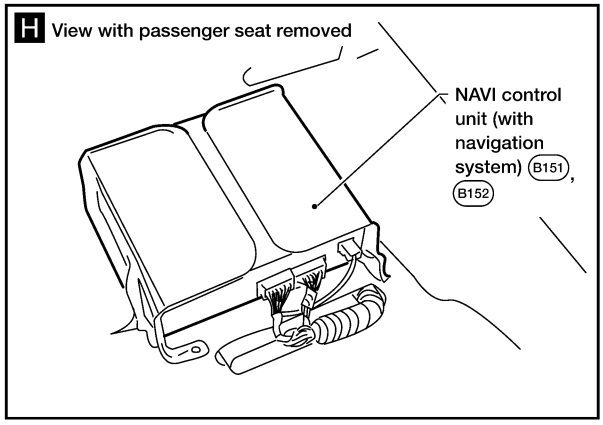
H View with passenger seat removed
NAVI control unit (with navigation system) B151, B152

WKIA4769E

HARNESS CONNECTOR

PFP:B4341

Description

EKS00B6X

HARNESS CONNECTOR (TAB-LOCKING TYPE)

- The tab-locking type connectors help prevent accidental looseness or disconnection.
- The tab-locking type connectors are disconnected by pushing or lifting the locking tab(s). Refer to the illustration below.

Refer to the next page for description of the slide-locking type connector.

CAUTION:

Do not pull the harness or wires when disconnecting the connector.

[Example]

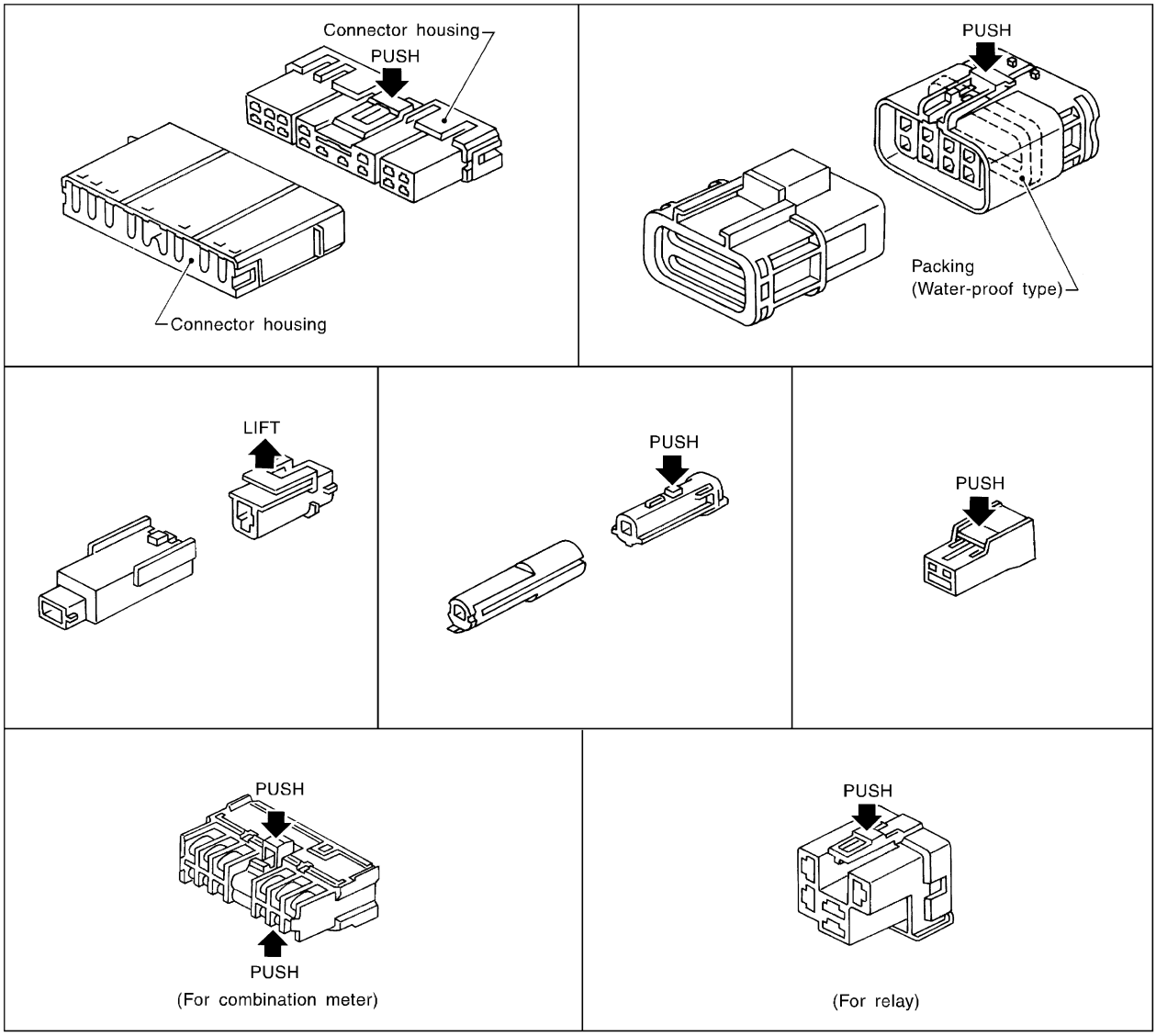

SEL769DA

HARNESS CONNECTOR (SLIDE-LOCKING TYPE)

- A new style slide-locking type connector is used on certain systems and components, especially those related to OBD.
- The slide-locking type connectors help prevent incomplete locking and accidental looseness or disconnection.
- The slide-locking type connectors are disconnected by pushing or pulling the slider. Refer to the illustration below.

CAUTION:

- **Do not pull the harness or wires when disconnecting the connector.**
- **Be careful not to damage the connector support bracket when disconnecting the connector.**

[Example]

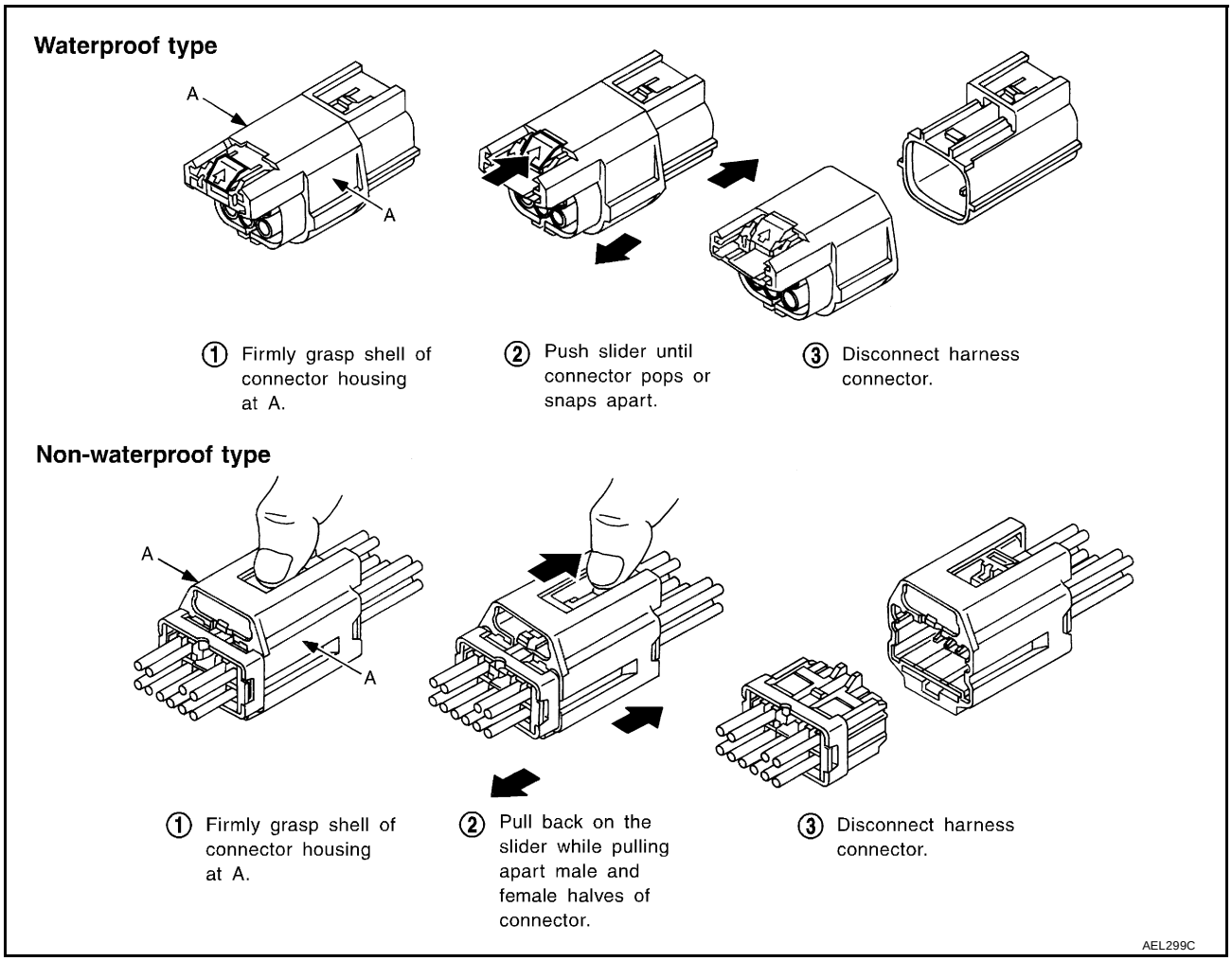

HARNESS CONNECTOR (DIRECT-CONNECT SRS COMPONENT TYPE)

- SRS direct-connect type harness connectors are used on certain SRS components such as air bag modules and seat belt pre-tensioners.
- Always pull up to release black locking tab prior to removing connector from SRS component.
- Always push down to lock black locking tab after installing connector to SRS component. When locked, the black locking tab is level with the connector housing.

CAUTION:

- **Do not pull the harness or wires when removing connectors from SRS components.**

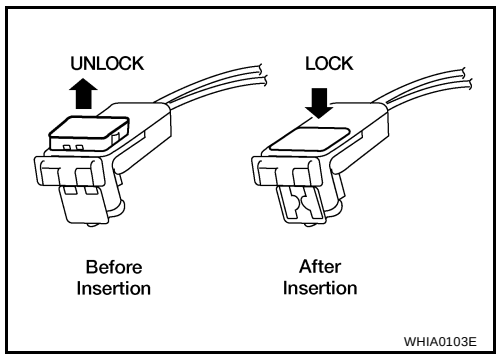

ELECTRICAL UNITS

PFP:23710

Terminal Arrangement

EKS00B6Y

BCM (BODY CONTROL MODULE)

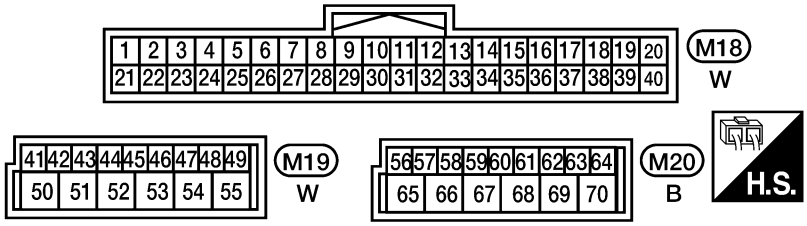

ABS ACTUATOR AND ELECTRIC UNIT (CONTROL UNIT)

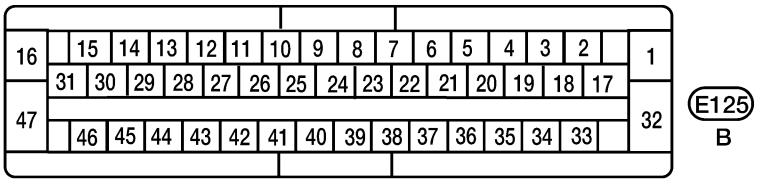

ECM

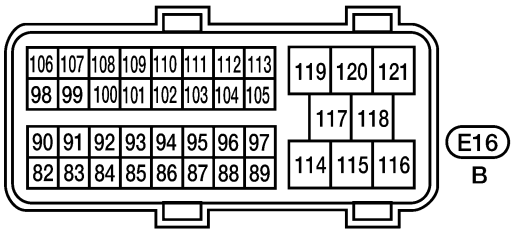

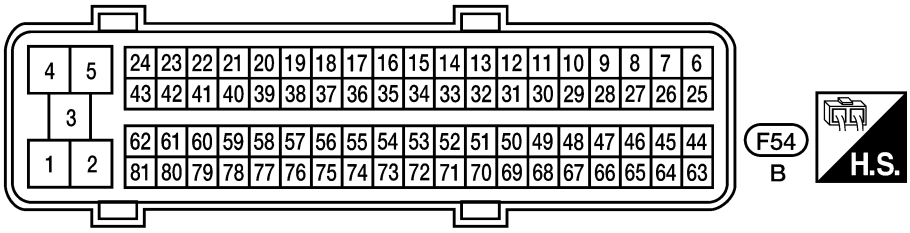

TRANSFER CONTROL UNIT

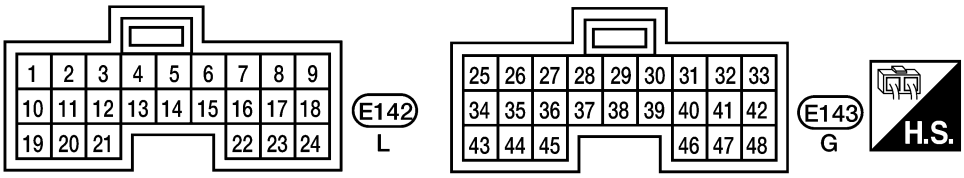

WKIA4770E

STANDARDIZED RELAY

PFP:25230

Description

EKS00B6Z

NORMAL OPEN, NORMAL CLOSED AND MIXED TYPE RELAYS

Relays can mainly be divided into three types: normal open, normal closed and mixed type relays.

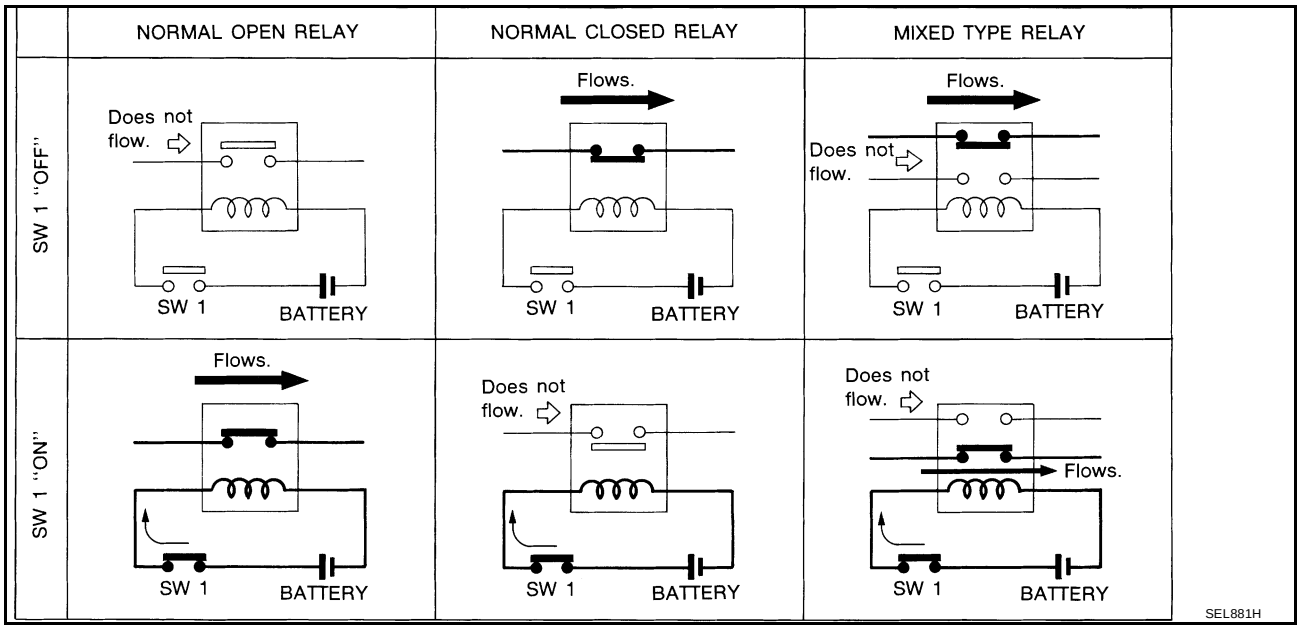

TYPE OF STANDARDIZED RELAYS

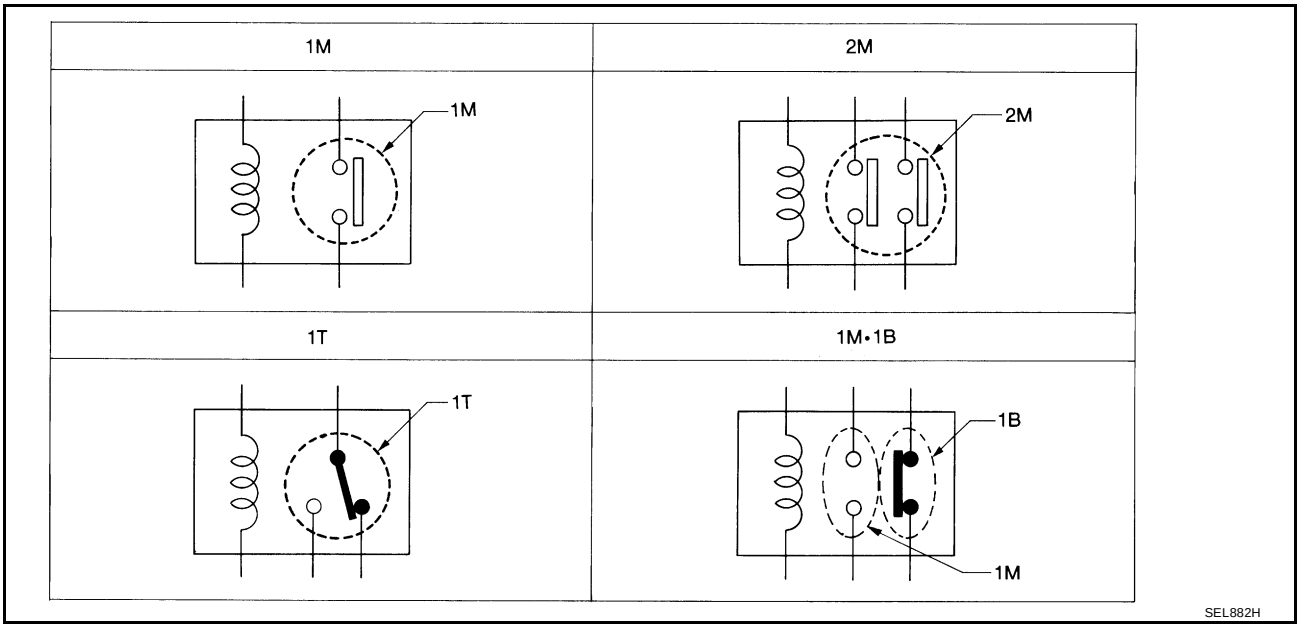

1M	1 Make	2M	2 Make
1T	1 Transfer	1M·1B	1 Make 1 Break

Type	Outer view	Circuit	Connector Symbol and connection	Case color
1T	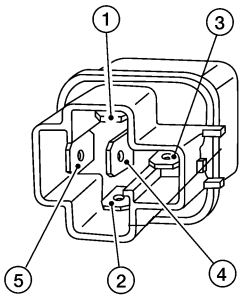	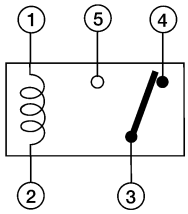	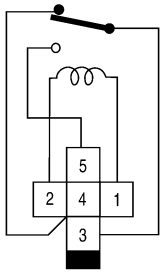	BLACK
2M	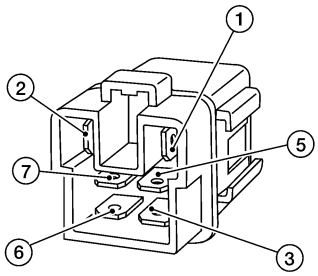	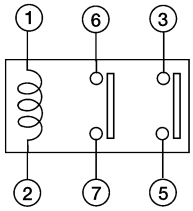	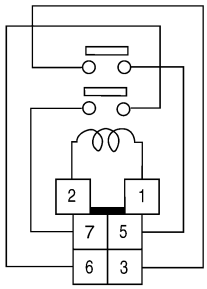	BROWN
1M ·1B	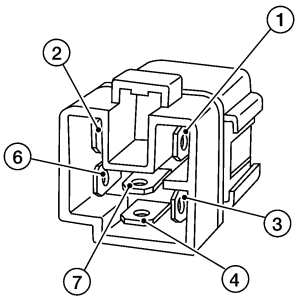	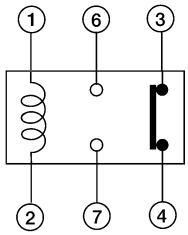	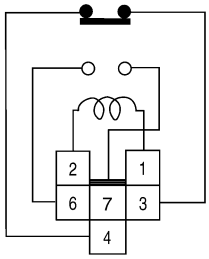	GRAY
1M	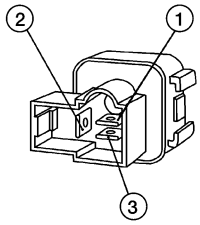	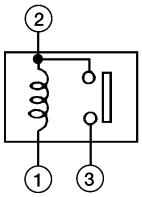	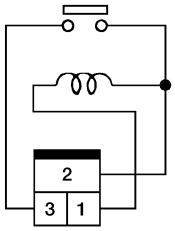	BLACK
	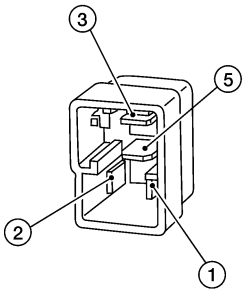	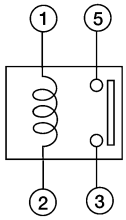	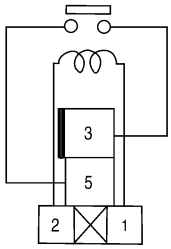	BLUE

The arrangement of terminal numbers on the actual relays may differ from those shown above.

WKIA0253E

SUPER MULTIPLE JUNCTION (SMJ)

PFP:84341

Terminal Arrangement

EKS00B70

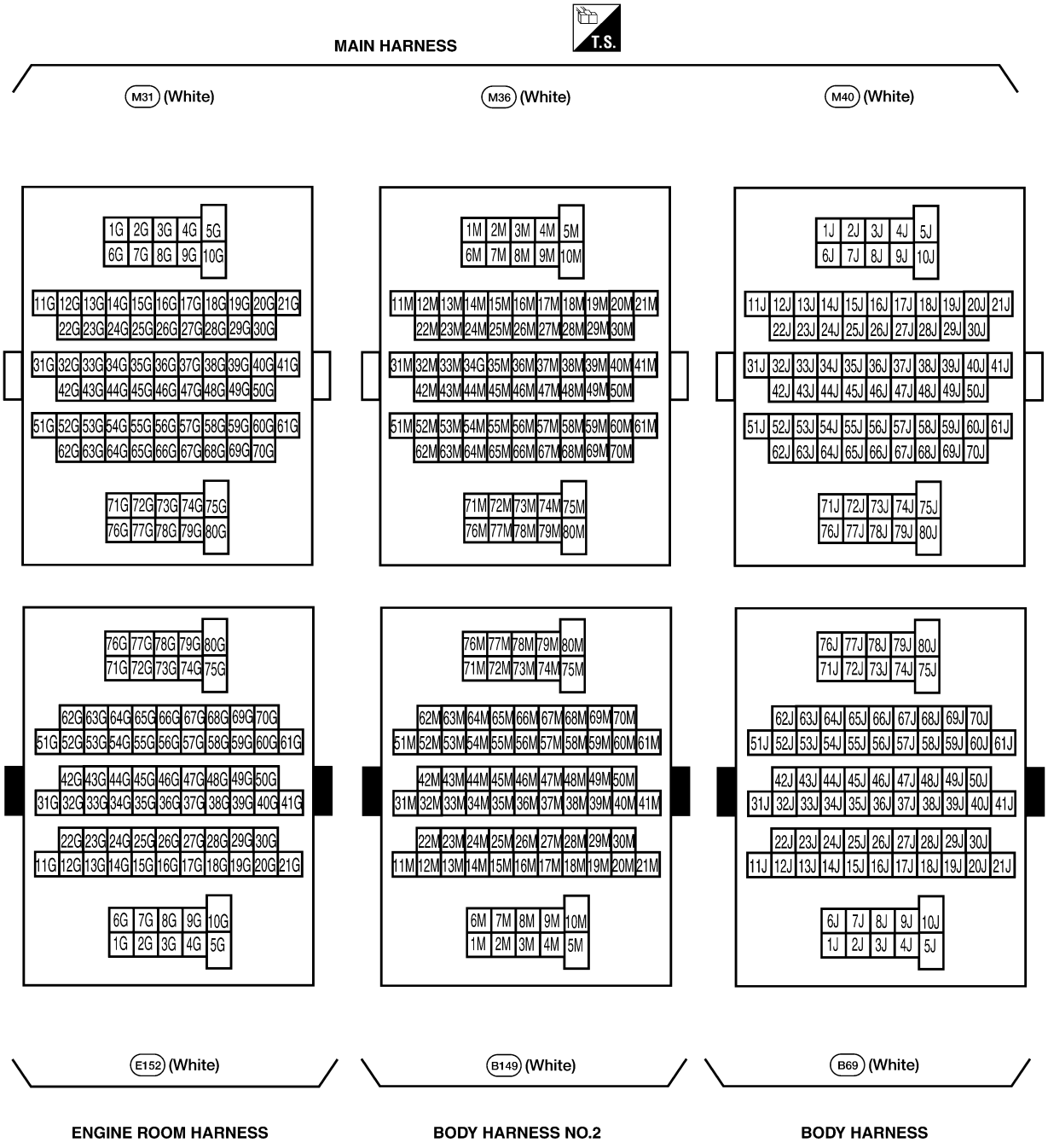

LKIA0385E

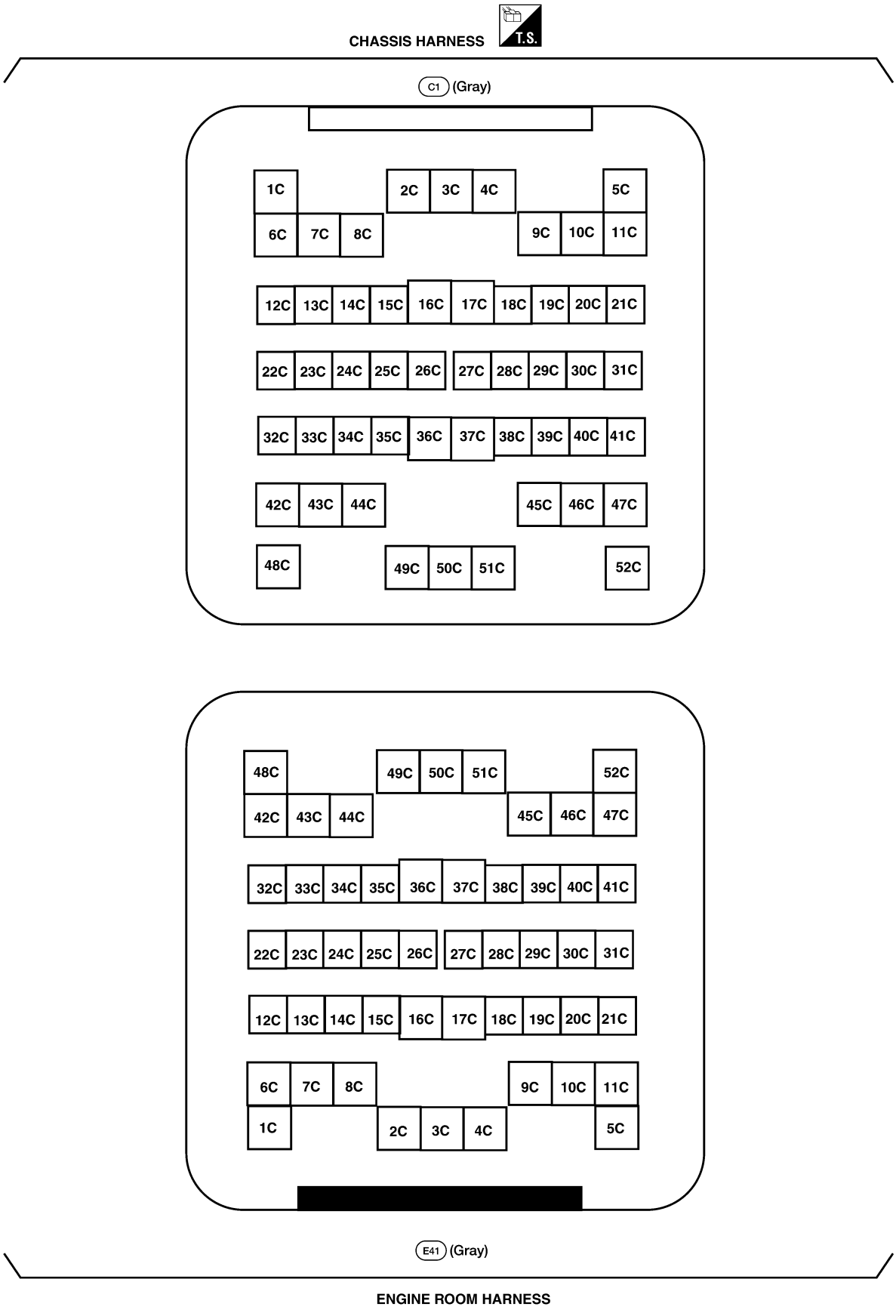
CHASSIS HARNESS
T.S.
C1 (Gray)
1C
2C
3C
4C
5C
6C
7C
8C
9C
10C
11C
12C
13C
14C
15C
16C
17C
18C
19C
20C
21C
22C
23C
24C
25C
26C
27C
28C
29C
30C
31C
32C
33C
34C
35C
36C
37C
38C
39C
40C
41C
42C
43C
44C
45C
46C
47C
48C
49C
50C
51C
52C
48C
49C
50C
51C
52C
42C
43C
44C
45C
46C
47C
32C
33C
34C
35C
36C
37C
38C
39C
40C
41C
22C
23C
24C
25C
26C
27C
28C
29C
30C
31C
12C
13C
14C
15C
16C
17C
18C
19C
20C
21C
6C
7C
8C
9C
10C
11C
1C
2C
3C
4C
5C
E41 (Gray)
ENGINE ROOM HARNESS

WKIA1845E

FUSE BLOCK-JUNCTION BOX (J/B)

PFP:24350

Terminal Arrangement

EKS00B71

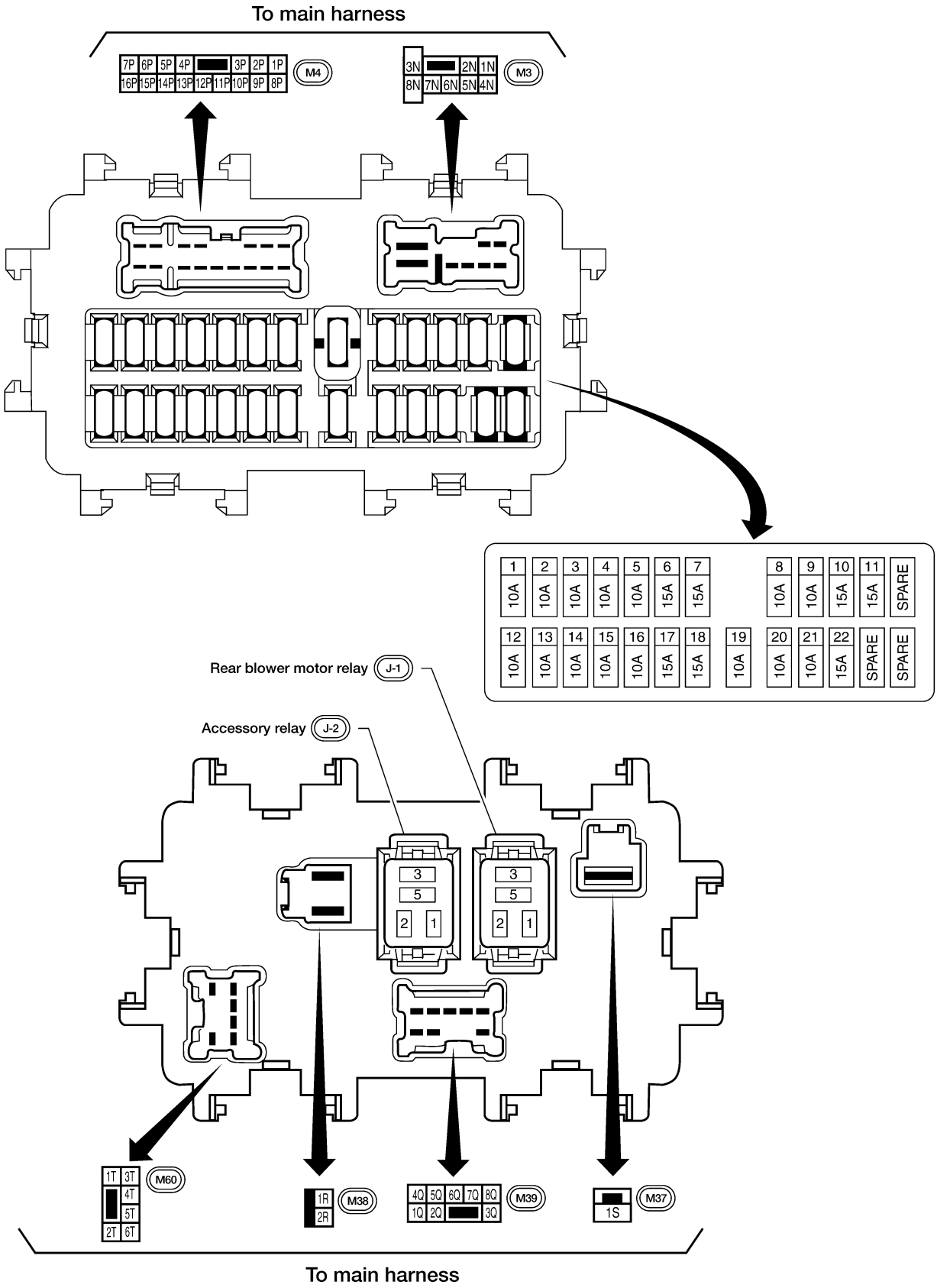

WKIA4771E

FUSE AND FUSIBLE LINK BOX

PFP:24381

Terminal Arrangement

EKS00B72

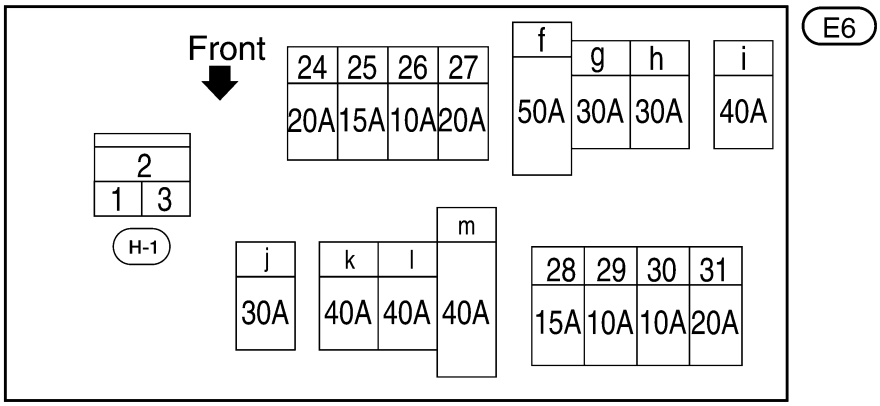

24 - 31: FUSE f - m: FUSIBLE LINK

WKIA4772E

FUSE AND RELAY BOX

PFP:24012

Terminal Arrangement

EKS00B73

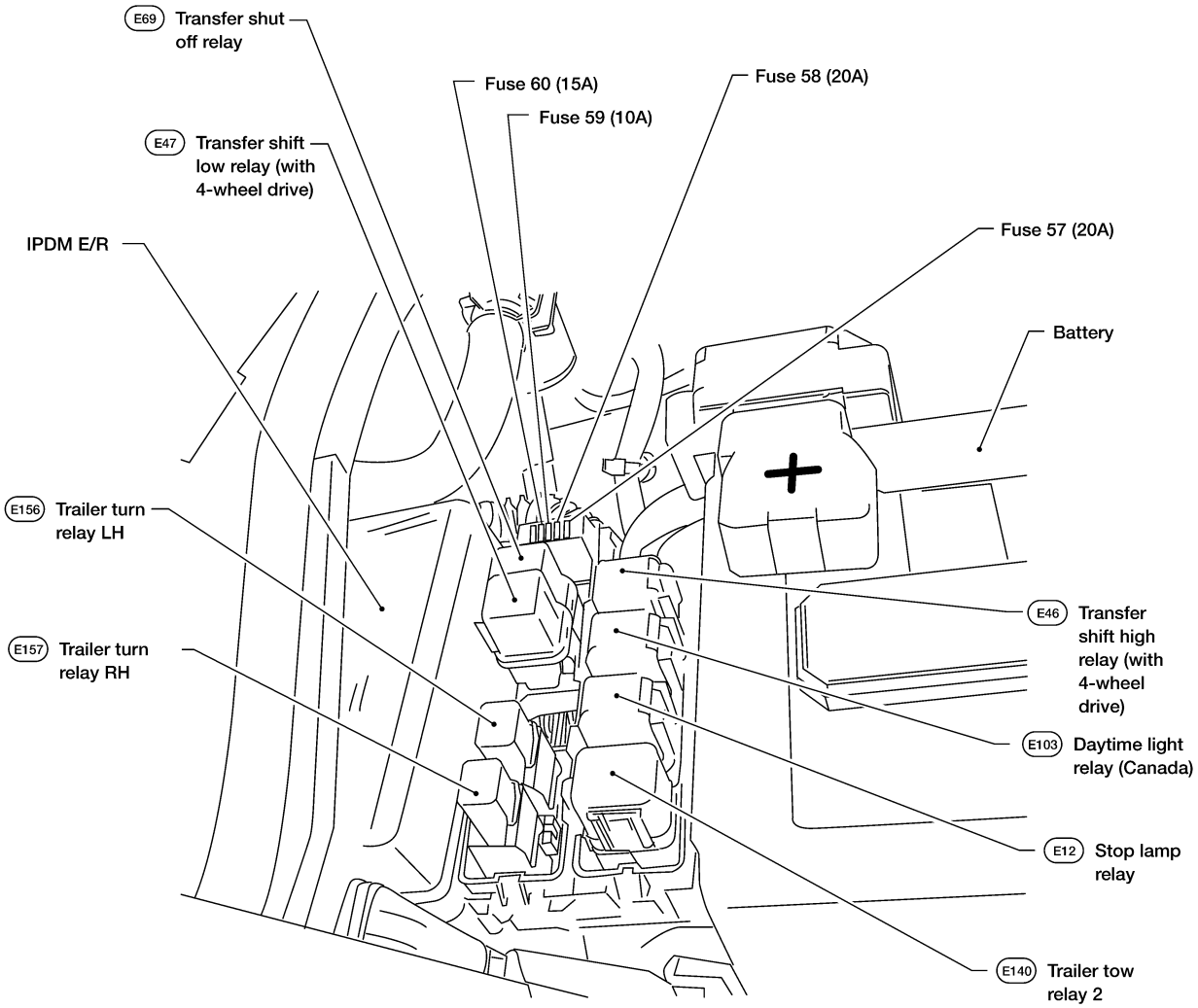

WKIA4773E