SECTION AT
AUTOMATIC TRANSMISSION

CONTENTS

INDEX FOR DTC

PFP:00024

Alphabetical Index

ACS002AD

NOTE:
If DTC U1000 is displayed with other DTCs, first perform the trouble diagnosis for DTC U1000. Refer to AT-104 .

Items (CONSULT-II screen terms)	DTC		Reference page
	OBD-II	Except OBD-II	
	CONSULT-II GST*1	CONSULT-II only “A/T”	
A/T 1ST E/BRAKING	—	P1731	AT-172
ATF PRES SW 1/CIRC	—	P1841	AT-227
ATF PRES SW 3/CIRC	—	P1843	AT-231
ATF PRES SW 5/CIRC	—	P1845	AT-235
ATF PRES SW 6/CIRC	—	P1846	AT-239
A/T INTERLOCK	P1730	P1730	AT-165
A/T TCC S/V FNCTN	P0744	P0744	AT-128
ATF TEMP SEN/CIRC	P0710	P1710	AT-152
CAN COMM CIRCUIT	U1000	U1000	AT-104
D/C SOLENOID/CIRC	P1762	P1762	AT-195
D/C SOLENOID FNCTN	P1764	P1764	AT-200
ENGINE SPEED SIG	P0725	P0725	AT-121
FR/B SOLENOID/CIRC	P1757	P1757	AT-185
FR/B SOLENOID FNCT	P1759	P1759	AT-190
HLR/C SOL/CIRC	P1767	P1767	AT-204
HLR/C SOL FNCTN	P1769	P1769	AT-209
I/C SOLENOID/CIRC	P1752	P1752	AT-176
I/C SOLENOID FNCTN	P1754	P1754	AT-181
L/PRESS SOL/CIRC	P0745	P0745	AT-133
LC/B SOLENOID/CIRC	P1772	P1772	AT-214
LC/B SOLENOID FNCT	P1774	P1774	AT-219
MANU MODE SW/CIR	—	P1815	AT-223
PNP SW/CIRC	P0705	P0705	AT-111
STARTER RELAY/CIRC	—	P0615	AT-107
TCC SOLENOID/CIRC	P0740	P0740	AT-123
TCM·EEPROM	—	P1704	AT-148
TCM-POWER SUPPLY	—	P1701	AT-138
TCM·RAM	—	P1702	AT-144
TCM·ROM	—	P1703	AT-146
TP SEN/CIRC A/T	P1705	P1705	AT-150
TURBINE REV S/CIRC	P1716	P1716	AT-158
VEH SPD SE/CIR·MTR	—	P1721	AT-163
VEH SPD SEN/CIR AT	P0720	P0720	AT-116

*1: These numbers are prescribed by SAE J2012.

DTC No. Index

ACS002AE

NOTE:
If DTC U1000 is displayed with other DTCs, first perform the trouble diagnosis for DTC U1000. Refer to AT-104 .

DTC		Items (CONSULT-II screen terms)	Reference page
OBD-II	Except OBD-II		
CONSULT-II GST*1	CONSULT-II only “A/T”		
—	P0615	STARTER RELAY/CIRC	AT-107
P0705	P0705	PNP SW/CIRC	AT-111
P0710	P1710	ATF TEMP SEN/CIRC	AT-152
P0720	P0720	VEH SPD SEN/CIR AT	AT-116
P0725	P0725	ENGINE SPEED SIG	AT-121
P0740	P0740	TCC SOLENOID/CIRC	AT-123
P0744	P0744	A/T TCC S/V FNCTN	AT-128
P0745	P0745	L/PRESS SOL/CIRC	AT-133
—	P1701	TCM-POWER SUPPLY	AT-138
—	P1702	TCM·RAM	AT-144
—	P1703	TCM·ROM	AT-146
—	P1704	TCM·EEPROM	AT-148
P1705	P1705	TP SEN/CIRC A/T	AT-150
P1716	P1716	TURBINE REV S/CIRC	AT-158
—	P1721	VEH SPD SE/CIR·MTR	AT-163
P1730	P1730	A/T INTERLOCK	AT-165
—	P1731	A/T 1ST E/BRAKING	AT-172
P1752	P1752	I/C SOLENOID/CIRC	AT-176
P1754	P1754	I/C SOLENOID FNCTN	AT-181
P1757	P1757	FR/B SOLENOID/CIRC	AT-185
P1759	P1759	FR/B SOLENOID FNCT	AT-190
P1762	P1762	D/C SOLENOID/CIRC	AT-195
P1764	P1764	D/C SOLENOID FNCTN	AT-200
P1767	P1767	HLR/C SOL/CIRC	AT-204
P1769	P1769	HLR/C SOL FNCTN	AT-209
P1772	P1772	LC/B SOLENOID/CIRC	AT-214
P1774	P1774	LC/B SOLENOID FNCT	AT-219
—	P1815	MANU MODE SW/CIRC	AT-223
—	P1841	ATF PRES SW 1/CIRC	AT-227
—	P1843	ATF PRES SW 3/CIRC	AT-231
—	P1845	ATF PRES SW 5/CIRC	AT-235
—	P1846	ATF PRES SW 6/CIRC	AT-239
U1000	U1000	CAN COMM CIRCUIT	AT-104

*1: These numbers are prescribed by SAE J2012.

PRECAUTIONS

PFP:00001

Precautions for Supplemental Restraint System (SRS) “AIR BAG” and “SEAT BELT PRE-TENSIONER”

ACS002AF

The Supplemental Restraint System such as “AIR BAG” and “SEAT BELT PRE-TENSIONER”, used along with a front seat belt, helps to reduce the risk or severity of injury to the driver and front passenger for certain types of collision. This system includes seat belt switch inputs and dual stage front air bag modules. The SRS system uses the seat belt switches to determine the front air bag deployment, and may only deploy one front air bag, depending on the severity of a collision and whether the front occupants are belted or unbelted.
Information necessary to service the system safely is included in the SRS and SB section of this Service Manual.

WARNING:

- **To avoid rendering the SRS inoperative, which could increase the risk of personal injury or death in the event of a collision which would result in air bag inflation, all maintenance must be performed by an authorized NISSAN/INFINITI dealer.**
- **Improper maintenance, including incorrect removal and installation of the SRS, can lead to personal injury caused by unintentional activation of the system. For removal of Spiral Cable and Air Bag Module, see the SRS section.**
- **Do not use electrical test equipment on any circuit related to the SRS unless instructed to in this Service Manual. SRS wiring harnesses can be identified by yellow and/or orange harnesses or harness connectors.**

Precautions for Battery Service

ACS002SH

Before disconnecting the battery, lower both the driver and passenger windows. This will prevent any interference between the window edge and the vehicle when the door is opened/closed. During normal operation, the window slightly raises and lowers automatically to prevent any window to vehicle interference. The automatic window function will not work with the battery disconnected.

Precautions for On Board Diagnostic (OBD) System of A/T and Engine

ACS002AG

The ECM has an on board diagnostic system. It will light up the malfunction indicator lamp (MIL) to warn the driver of a malfunction causing emission deterioration.

CAUTION:

- **Be sure to turn the ignition switch “OFF” and disconnect the negative battery cable before any repair or inspection work. The open/short circuit of related switches, sensors, solenoid valves, etc. will cause the MIL to light up.**
- **Be sure to connect and lock the connectors securely after work. A loose (unlocked) connector will cause the MIL to light up due to an open circuit. (Be sure the connector is free from water, grease, dirt, bent terminals, etc.)**
- **Be sure to route and secure the harnesses properly after work. Interference of the harness with a bracket, etc. may cause the MIL to light up due to a short circuit.**
- **Be sure to connect rubber tubes properly after work. A misconnected or disconnected rubber tube may cause the MIL to light up due to a malfunction of the EGR system or fuel injection system, etc.**
- **Be sure to erase the unnecessary malfunction information (repairs completed) from the TCM and ECM before returning the vehicle to the customer.**

Precautions for TCM, A/T Assembly and Control Valve Assembly Replacement

ACS002AH

CAUTION:

- **Check data (Unit ID) in TCM with data monitor of CONSULT-II before replacing A/T assembly (control valve assembly).**
- **Check if new data (Unit ID) are entered correctly after replacing A/T assembly (control valve assembly) and erasing data in TCM.**
- When replacing A/T assembly, control valve assembly or TCM, refer to the pattern table below and erase the EEPROM in the TCM if necessary.

EEPROM ERASING PATTERNS

A/T assembly or control valve assembly	TCM	Erasing EEPROM in TCM	Remarks
Replaced	Replaced	Not required	Not required because the EEPROM in the TCM is in the default state.
Not replaced	Replaced	Not required	Not required because the EEPROM in the TCM is in the default state.
Replaced	Not replaced	Required	Required because data has been written in the EEPROM in the TCM and because the TCM cannot write data from the ROM assembly in the transmission.

METHOD FOR ERASING THE EEPROM IN THE TCM

1. Connect CONSULT-II to data link connector.
2. Turn ignition switch “ON”. Confirm that CONSULT-II turn “ON”.
3. Move selector lever in “R” position.
4. Touch “START” on CONSULT-II.
5. Select “SELF-DIAG RESULTS” mode for “A/T” with CONSULT-II.
6. Fully press the accelerator pedal (8/8 throttle), and hold it in the fully open position. (This will set the closed throttle position signal to “OFF”.)
7. Touch “ERASE” on CONSULT-II, and then touch “YES”.
8. Wait 3 seconds and then release the accelerator pedal.
9. Turn ignition switch “OFF” position.

METHOD FOR WRITING DATA FROM THE ROM ASSEMBLY IN THE TRANSMISSION

In the following procedure, the TCM reads data from the ROM assembly and writes it to the EEPROM in the TCM.

1. With the EEPROM in the TCM erased.
2. Move selector lever in “P” position.
3. Turn ignition switch “ON”.

CHECK METHOD

- Normal: About 2 seconds after the ignition switch “ON”, the A/T CHECK indicator lamp lights up for 2 seconds.
- Abnormal: Even after the ignition switch “ON”, the A/T CHECK indicator lamp does not light up after 2 seconds or illuminates immediately.

Cope for abnormal

- Replace the control valve assembly.
- Replace the TCM.

Precautions

ACS002AI

- **Before connecting or disconnecting the TCM harness connector, turn ignition switch “OFF” and disconnect negative battery cable. Because battery voltage is applied to TCM even if ignition switch is turned “OFF”.**

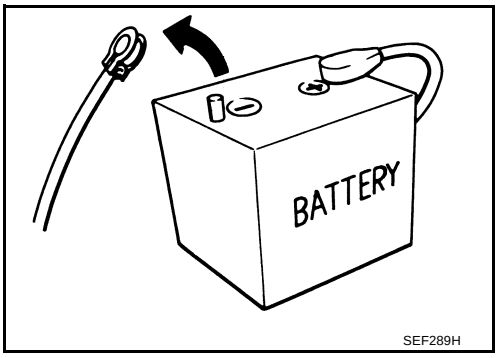

- **When connecting or disconnecting pin connectors into or from TCM, take care not to damage pin terminals (bend or break).**
  Make sure that there are not any bends or breaks on TCM pin terminal, when connecting pin connectors.

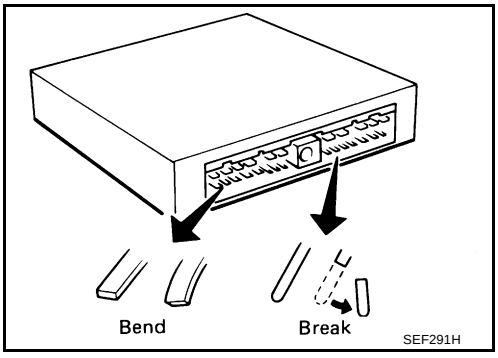

- **Before replacing TCM, perform TCM input/output signal inspection and make sure whether TCM functions properly or not.** **AT-88, "TCM INSPECTION TABLE"**.

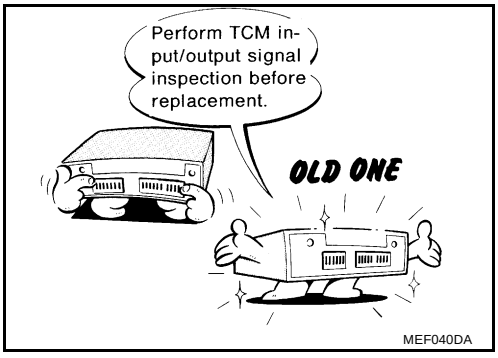

- **After performing each TROUBLE DIAGNOSIS, perform “DTC (Diagnostic Trouble Code) CONFIRMATION PROCEDURE”.**
  If the repair is completed **the DTC should not be displayed in the “DTC CONFIRMATION PROCEDURE”.**

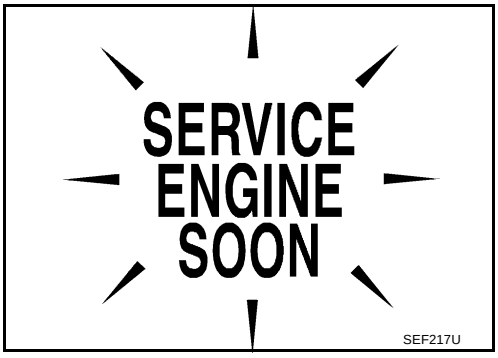

- Always use the specified brand of A/T fluid. Refer to MA-9, "Fluids and Lubricants" .
- Use paper rags not cloth rags during work.
- After replacing the A/T fluid, dispose of the waste oil using the methods prescribed by law, ordinance, etc.
- Before proceeding with disassembly, thoroughly clean the outside of the transaxle. It is important to prevent the internal parts from becoming contaminated by dirt or other foreign matter.
- Disassembly should be done in a clean work area.

- Use lint-free cloth or towels for wiping parts clean. Common shop rags can leave fibers that could interfere with the operation of the transaxle.
- Place disassembled parts in order for easier and proper assembly.
- All parts should be carefully cleaned with a general purpose, non-flammable solvent before inspection or reassembly.
- Gaskets, seals and O-rings should be replaced any time the transaxle is disassembled.
- It is very important to perform functional tests whenever they are indicated.
- The valve body contains precision parts and requires extreme care when parts are removed and serviced. Place disassembled valve body parts in order for easier and proper assembly. Care will also prevent springs and small parts from becoming scattered or lost.
- Properly installed valves, sleeves, plugs, etc. will slide along bores in valve body under their own weight.
- Before assembly, apply a coat of recommended ATF to all parts. Apply petroleum jelly to protect O-rings and seals, or hold bearings and washers in place during assembly. Do not use grease.
- Extreme care should be taken to avoid damage to O-rings, seals and gaskets when assembling.
- After overhaul, refill the transaxle with new ATF.
- When the A/T drain plug is removed, only some of the fluid is drained. Old A/T fluid will remain in torque converter and ATF cooling system.
  Always follow the procedures under “Changing A/T Fluid” in the AT section when changing A/T fluid. Refer to AT-13, "Changing A/T Fluid" ,AT-13, "Checking A/T Fluid" .

Service Notice or Precautions

ACS002AJ

ATF COOLER SERVICE

If A/T fluid contains frictional material (clutches, bands, etc.), or if an A/T is repaired, overhauled, or replaced, inspect and clean the A/T fluid cooler mounted in the radiator or replace the radiator. Flush cooler lines using cleaning solvent and compressed air after repair. For A/T fluid cooler cleaning procedure, refer to AT-15, "A/T Fluid Cooler Cleaning" . For radiator replacement, refer to CO-13, "RADIATOR" , CO-16, "RADIATOR (ALUMINUM TYPE)" .

OBD-II SELF-DIAGNOSIS

- A/T self-diagnosis is performed by the TCM in combination with the ECM. The results can be read through the blinking pattern of the A/T CHECK indicator or the malfunction indicator lamp (MIL). Refer to the table on AT-92, "SELF-DIAGNOSTIC RESULT MODE" for the indicator used to display each self-diagnostic result.
- The self-diagnostic results indicated by the MIL are automatically stored in both the ECM and TCM memories.
  Always perform the procedure on AT-39, "HOW TO ERASE DTC" to complete the repair and avoid unnecessary blinking of the MIL.

For details of OBD-II, refer to EC-46, "ON BOARD DIAGNOSTIC (OBD) SYSTEM" .

- **Certain systems and components, especially those related to OBD, may use the new style slide-locking type harness connector. For description and how to disconnect, refer to PG-64, "HARNESS CONNECTOR" .**

Wiring Diagrams and Trouble Diagnosis

ACS002AK

When you read wiring diagrams, refer to the following:

- GI-15, "How to Read Wiring Diagrams".
- PG-4, "POWER SUPPLY ROUTING CIRCUIT" for power distribution circuit.

When you perform trouble diagnosis, refer to the following:

- GI-11, "How to Follow Trouble Diagnoses".
- GI-27, "How to Perform Efficient Diagnosis for an Electrical Incident".

PREPARATION

PFP:00002

Special Service Tools

ACS002AL

The actual shapes of Kent-Moore tools may differ from those of special service tools illustrated here.

Tool number (Kent-Moore No.) Tool name		Description
ST2505S001 (J-34301-C) Oil pressure gauge set 1 ST25051001 (—) Oil pressure gauge 2 ST25052000 (—) Hose 3 ST25053000 (—) Joint pipe 4 ST25054000 (—) Adapter 5 ST25055000 (—) Adapter	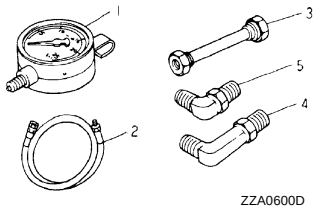 ZZA0600D	Measuring line pressure
KV31103600 (J-45674) Joint pipe adapter (With ST25054000)	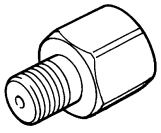 ZZA1227D	Measuring line pressure
ST33400001 (J-26082) Drift a: 60 mm (2.36 in) dia. b: 47 mm (1.85 in) dia.	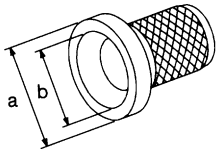 NT086	● Installing rear oil seal ● Installing oil pump housing oil seal
KV31102400 (J-34285 and J-34285-87) Clutch spring compressor a: 320 mm (12.60 in) b: 174 mm (6.85 in)	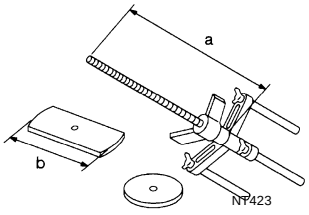 NT423	Installing reverse brake return spring retainer
ST25850000 (J-25721-A) Sliding hammer a: 179 mm (7.05 in) b: 70 mm (2.76 in) c: 40 mm (1.57 in) d: M12X1.75P	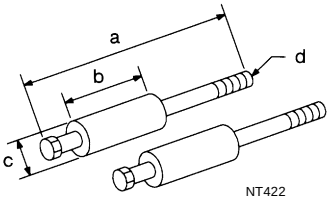 NT422	Remove oil pump assembly

Commercial Service Tools

ACS002AM

Tool name	Description
Power tool 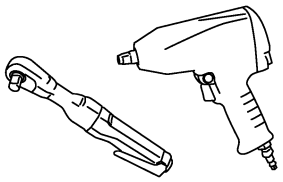 PBIC0190E	Loosening bolts and nuts
Drift a: 22mm (0.87 in) dia. 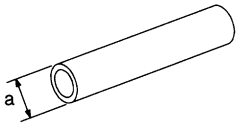 NT083	Installing manual shaft oil seal

A/T FLUID

PFP:KLE40

Changing A/T Fluid

ACS004LA

1. Warm up A/T fluid.
2. Stop engine.
3. Remove the tightening bolt for A/T fluid level gauge.
4. Drain A/T fluid from drain plug and refill with new A/T fluid. Always refill same volume with drained fluid.
   - To replace the A/T fluid, pour in new fluid at the A/T fluid charging pipe with the engine idling and at the same time drain the old fluid from the radiator cooler hose return side.
   - When the color of the fluid coming out is about the same as the color of the new fluid, the replacement is complete. The amount of new transmission fluid to use should be 30 to 50% increase of the stipulated amount.

   A/T fluid: Genuine Nissan Matic J ATF

   Fluid capacity: 10.3 ℓ (10-7/8 US qt, 9-1/8 Imp qt)

   CAUTION:
   - **Use only Genuine Nissan Matic J ATF. Do not mix with other fluid.**
   - **Using automatic transmission fluid other than Genuine Nissan Matic J ATF will cause deterioration in driveability and automatic transmission durability, and may damage the automatic transmission, which is not covered by the warranty.**
   - **When filling A/T fluid, take care not to scatter heat generating parts such as exhaust.**

   Drain plug:

   : 34 N·m (3.5 kg-m, 25 ft-lb)

5. Run engine at idle speed for 5 minutes.
6. Check fluid level and condition. Refer to AT-13, "Checking A/T Fluid" . If fluid is still dirty, repeat step 2. through 5.
7. Install the removed A/T fluid level gauge in A/T fluid charging pipe.

   Level gauge bolt:

   : 5.1 N·m (0.52 kg-m, 45 in-lb)

Checking A/T Fluid

ACS004LB

1. Warm up engine.
2. Check for fluid leakage.
3. Remove the tightening bolt for A/T fluid level gauge.
4. Before driving, fluid level can be checked at fluid temperatures of 30 to 50°C (86 to 122°F) using “COLD” range on A/T fluid level gauge as follows.

a. Park vehicle on level surface and set parking brake.

b. Start engine and move selector lever through each gear position. Leave selector lever in “P” position.

c. Check fluid level with engine idling.

d. Remove A/T fluid level gauge and wipe clean with lint-free paper.

   CAUTION:
   When wiping away the A/T fluid level gauge, always use lint-free paper, not a cloth one.

e. Re-insert A/T fluid level gauge into A/T fluid charging pipe as far as it will go.

   CAUTION:
   To check fluid level, insert the A/T fluid level gauge until the cap contacts the end of the A/T fluid charging pipe, with the gauge reversed from the normal attachment conditions.

f. Remove A/T fluid level gauge and note reading. If reading is at low side of range, add A/T fluid to the A/T fluid charging pipe.

   CAUTION:
   Do not overfill.

5. Drive vehicle for approximately 5 minutes in urban areas.

6. Make the fluid temperature approximately 65°C (149°F).

NOTE:
Fluid level will be greatly affected by temperature as shown in figure. Therefore, be certain to perform operation while checking data with CONSULT-II.

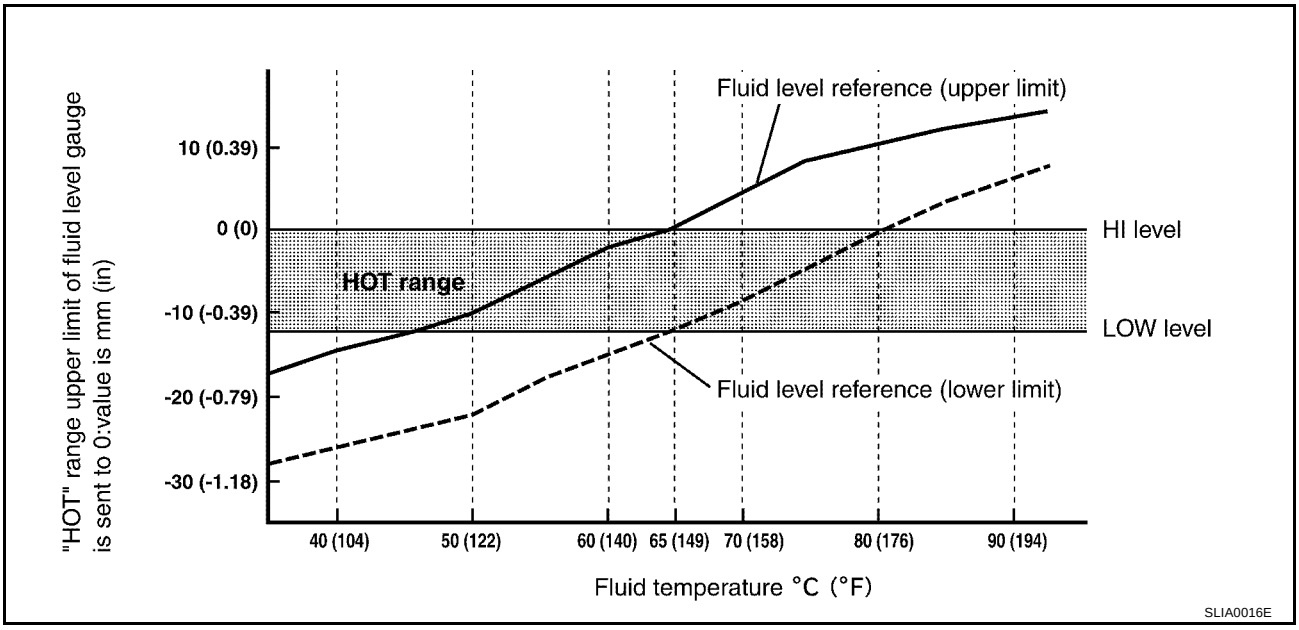

a. Connect CONSULT-II to data link connector.
b. Select “MAIN SIGNALS” in “DATA MONITOR” mode for “A/T” with CONSULT-II.
c. Read out the value of “ATF TEMP 1”.

7. Re-check fluid level at fluid temperatures of approximately 65°C (149°F) using “HOT” range on A/T fluid level gauge.

CAUTION:
- **When wiping away the A/T fluid level gauge, always use lint-free paper, not a cloth one.**
- **To check fluid level, insert the A/T fluid level gauge until the cap contacts the end of the A/T fluid charging pipe, with the gauge reversed from the normal attachment conditions as shown.**

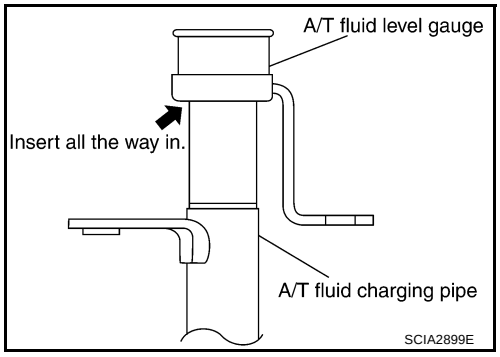

8. Check fluid condition.
   - If fluid is very dark or smells burned, refer to check operation of A/T. Flush cooling system after repair of A/T.
   - If A/T fluid contains frictional material (clutches, bands, etc.), replace radiator and flush cooler line using cleaning solvent and compressed air after repair of A/T.Refer to CO-13, "RADIATOR" , CO-16, "RADIATOR (ALUMINUM TYPE)" and AT-15, "A/T Fluid Cooler Cleaning" .
9. Install the removed A/T fluid level gauge in A/T fluid charging pipe.

Level gauge bolt:

: 5.1 N·m (0.52 kg-m, 45 in-lb)

A/T Fluid Cooler Cleaning

ACS006CT

Whenever an automatic transmission is repaired, overhauled, or replaced, the A/T fluid cooler mounted in the radiator must be inspected and cleaned.
Metal debris and friction material, if present, can become trapped in the A/T fluid cooler. This debris can contaminate the newly serviced A/T or, in severe cases, can block or restrict the flow of A/T fluid. In either case, malfunction of the newly serviced A/T may result.
Debris, if present, may build up as A/T fluid enters the cooler inlet. It will be necessary to back flush the cooler through the cooler outlet in order to flush out any built up debris.

A/T FLUID COOLER CLEANING PROCEDURE

1. Position an oil pan under the automatic transmission's inlet and outlet cooler hoses.
2. Identify the inlet and outlet fluid cooler hoses.
3. Disconnect the fluid cooler inlet and outlet rubber hoses from the steel cooler tubes or bypass valve.

   NOTE:
   Replace the cooler hoses if rubber material from the hose remains on the tube fitting.
4. Allow any A/T fluid that remains in the cooler hoses to drain into the oil pan.

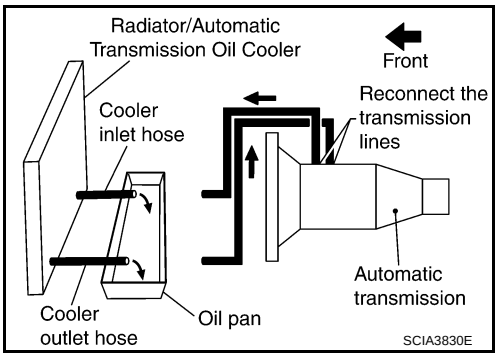

5. Insert the extension adapter hose of a can of Transmission Cooler Cleaner (Nissan P/N 999MP-AM006) into the cooler outlet hose.

   CAUTION:
   - **Wear safety glasses and rubber gloves when spraying the Transmission Cooler Cleaner.**
   - **Spray cooler cleaner only with adequate ventilation.**
   - **Avoid contact with eyes and skin.**
   - **Do not breath vapors or spray mist.**
6. Hold the hose and can as high as possible and spray Transmission Cooler Cleaner in a continuous stream into the cooler outlet hose until fluid flows out of the cooler inlet hose for 5 seconds.

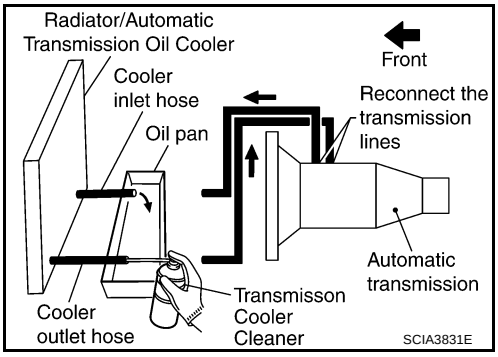

7. Insert the tip of an air gun into the end of the cooler outlet hose.
8. Wrap a shop rag around the air gun tip and of the cooler outlet hose.

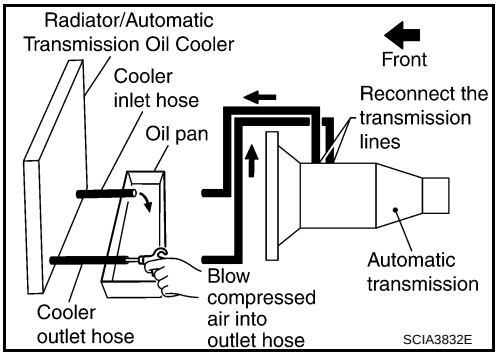

9. Blow compressed air regulated to 5 - 9 kg/cm^2 (70 - 130 psi) through the cooler outlet hose for 10 seconds to force out any remaining fluid.
10. Repeat steps 5 through 9 three additional times.
11. Position an oil pan under the banjo bolts that connect the fluid cooler steel lines to the transmission.
12. Remove the banjo bolts.
13. Flush each steel line from the cooler side back toward the transmission by spraying Transmission Cooler Cleaner in a continuous stream for 5 seconds.

14. Blow compressed air regulated to 5 - 9 kg/cm^2 (70 - 130 psi) through each steel line from the cooler side back toward the transmission for 10 seconds to force out any remaining fluid.
15. Ensure all debris is removed from the steel cooler lines.
16. Ensure all debris is removed from the banjo bolts and fittings.
17. Perform AT-16, "A/T FLUID COOLER DIAGNOSIS PROCEDURE" .

A/T FLUID COOLER DIAGNOSIS PROCEDURE

NOTE:
Insufficient cleaning of the cooler inlet hose exterior may lead to inaccurate debris identification.

1. Position an oil pan under the automatic transmission's inlet and outlet cooler hoses.
2. Clean the exterior and tip of the cooler inlet hose.
3. Insert the extension adapter hose of a can of Transmission Cooler Cleaner (Nissan P/N 999MP-AM006) into the cooler outlet hose.

   CAUTION:
   - **Wear safety glasses and rubber gloves when spraying the Transmission Cooler Cleaner.**
   - **Spray cooler cleaner only with adequate ventilation.**
   - **Avoid contact with eyes and skin.**
   - **Do not breath vapors or spray mist.**

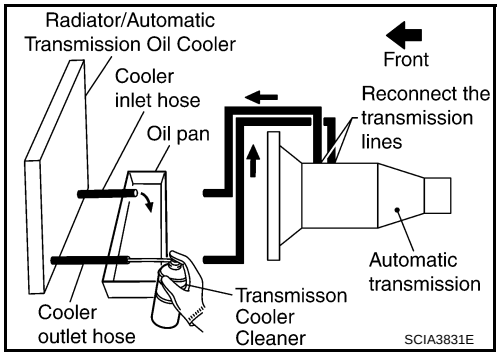

4. Hold the hose and can as high as possible and spray Transmission Cooler Cleaner in a continuous stream into the cooler outlet hose until fluid flows out of the cooler inlet hose for 5 seconds.
5. Tie a common white, basket-type coffee filter to the end of the cooler inlet hose.

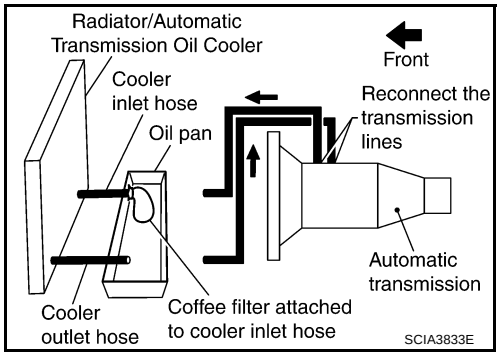

6. Insert the tip of an air gun into the end of the cooler outlet hose.
7. Wrap a shop rag around the air gun tip and end of cooler outlet hose.
8. Blow compressed air regulated to 5 - 9 kg/cm^2 (70 - 130 psi) through the cooler outlet hose to force any remaining A/T fluid into the coffee filter.
9. Remove the coffee filter from the end of the cooler inlet hose.
10. Perform AT-17, "A/T FLUID COOLER INSPECTION PROCEDURE" .

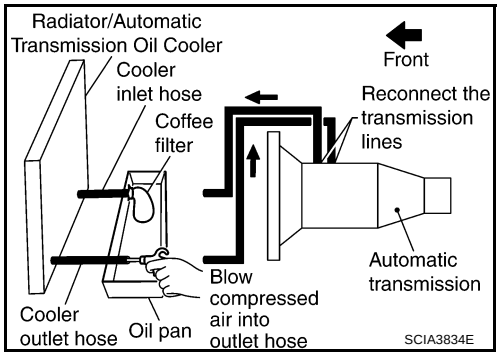

A/T FLUID COOLER INSPECTION PROCEDURE

1. Inspect the coffee filter for debris.

a. If small metal debris less than 1mm (0.040 in) in size or metal powder is found in the coffee filter, this is normal. If normal debris is found, the A/T fluid cooler/radiator can be re-used and the procedure is ended.

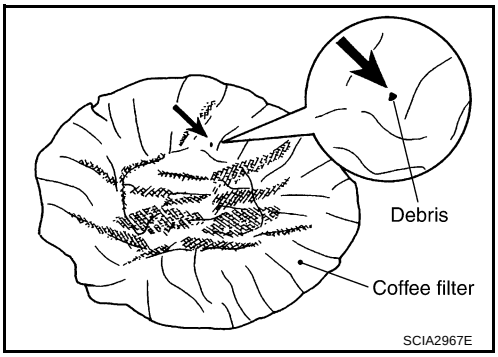

b. If one or more pieces of debris are found that are over 1mm (0.040 in) size and/or peeled clutch facing material is found in the coffee filter, the fluid cooler is not serviceable. The A/T fluid cooler/radiator must be replaced and the inspection procedure is ended.Refer to CO-13, "RADIATOR" and CO-16, "RADIATOR (ALUMINUM TYPE)" .

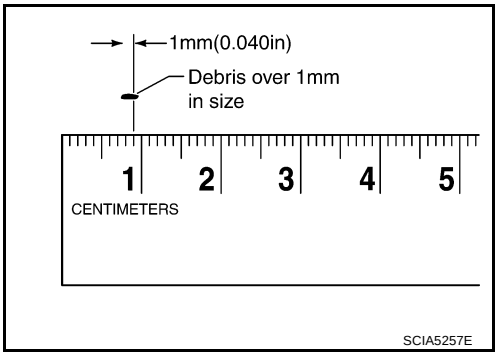

A/T FLUID COOLER FINAL INSPECTION

After performing all procedures, ensure that all remaining oil is cleaned from all components.

A/T CONTROL SYSTEM

PFP:31036

Cross-Sectional View

ACS002AP

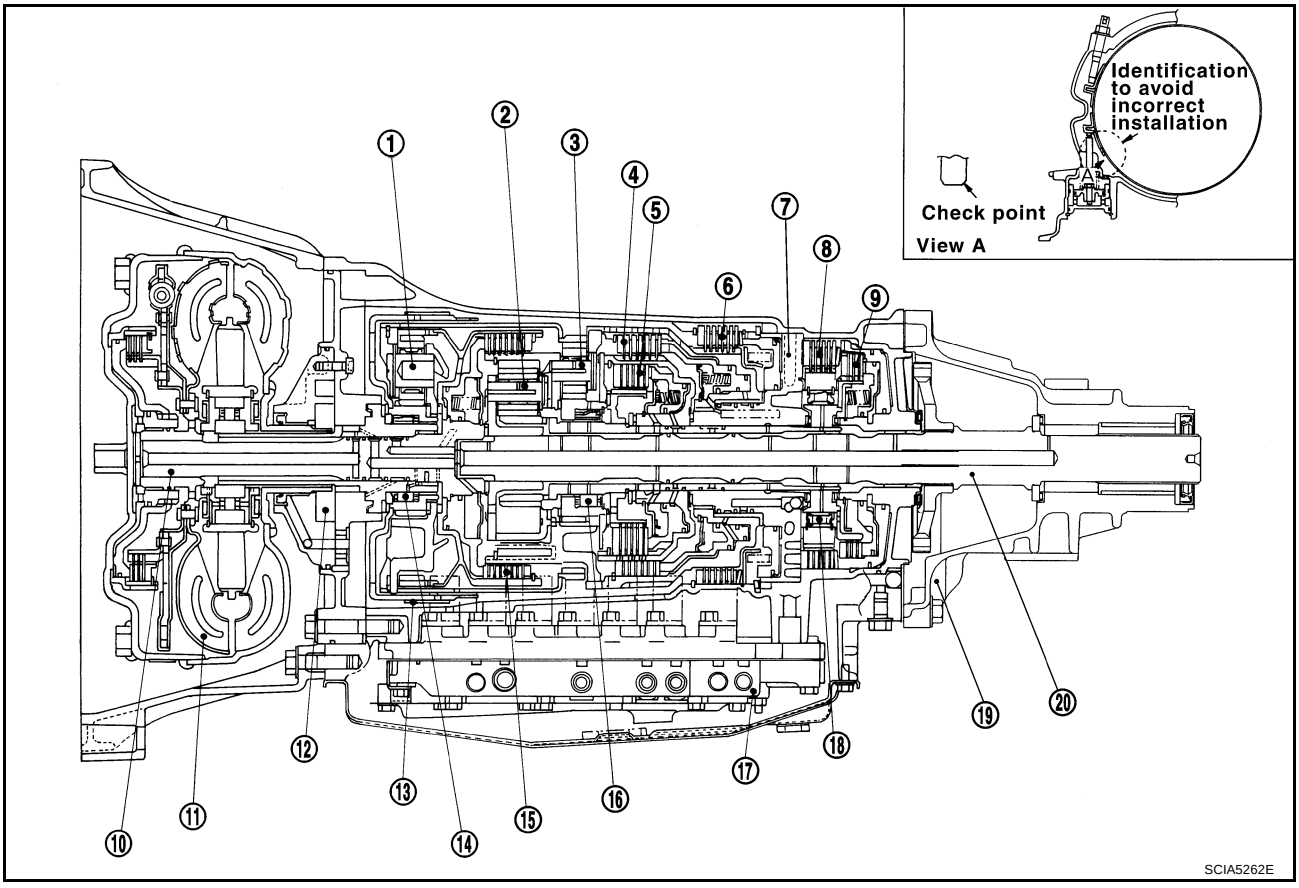

1.	Front planetary gear	2.	Mid planetary gear	3.	Rear planetary gear
4.	Direct clutch	5.	High and low reverse clutch	6.	Reverse brake
7.	Drum support	8.	Forward brake	9.	Low coast brake
10.	Input shaft	11.	Torque converter	12.	Oil pump
13.	Front brake	14.	3rd one-way clutch	15.	Input clutch
16.	1st one-way clutch	17.	Control valve with TCM	18.	Forward one-way clutch
19.	Rear extension	20.	Output shaft		

Shift Mechanism

ACS002AQ

The automatic transmission uses compact dual planetary gear systems to improve power-transmission efficiency, simplify construction and reduce weight.
It also employs an optimum shift control and super wide gear ratios. They improve starting performance and acceleration during medium and high-speed operation.

CONSTRUCTION

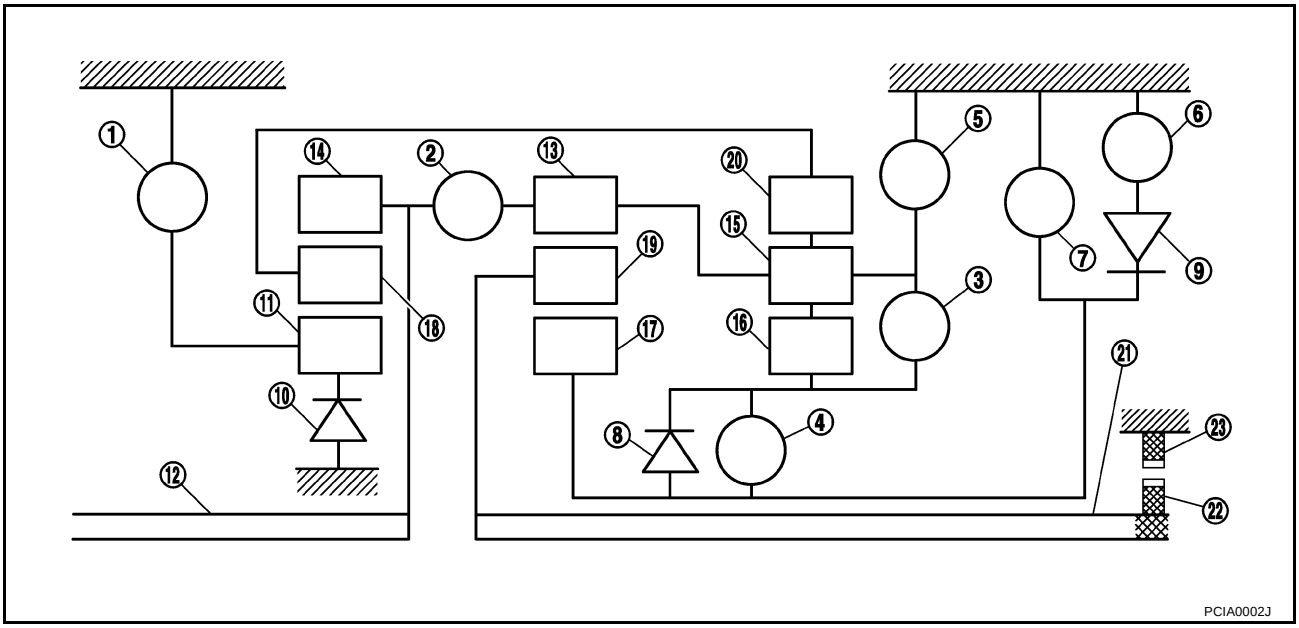

1. Front brake
2. Input clutch
3. Direct clutch
4. High and low reverse clutch
5. Reverse brake
6. Forward brake
7. Low coast brake
8. 1st one-way clutch
9. Forward one-way clutch
10. 3rd one-way clutch
11. Front sun gear
12. Input shaft
13. Mid internal gear
14. Front internal gear
15. Rear carrier
16. Rear sun gear
17. Mid sun gear
18. Front carrier
19. Mid carrier
20. Rear internal gear
21. Output shaft
22. Parking gear
23. Parking pawl

FUNCTION OF CLUTCH AND BRAKE

Name of the Part	Abbreviation	Function
Front brake (1)	Fr/B	Fastens the front sun gear (11).
Input clutch (2)	I/C	Connects the input shaft (12), the front internal gear (14) and the mid internal gear (13).
Direct clutch (3)	D/C	Connects the rear carrier (15) and the rear sun gear (16).
High and low reverse clutch (4)	H&LR/C	Connects the mid sun gear (17) and the rear sun gear (16).
Reverse brake (5)	R/B	Fastens the rear carrier (15).
Forward brake (6)	F/B	Fastens the mid sun gear (17).
Low coast brake (7)	LC/B	Fastens the mid sun gear (17).
1st one-way clutch (8)	1st/OWC	Allows the rear sun gear (16) to turn freely forward relative to the mid sun gear (17) but fastens it for reverse rotation.
Forward one-way clutch (9)	Fwd/OWC	Allows the mid sun gear (17) to turn freely in the forward direction but fastens it for reverse rotation.
3rd one-way clutch (10)	3rd/OWC	Allows the front sun gear (11) to turn freely in the forward direction but fastens it for reverse rotation.

CLUTCH AND BAND CHART

Shift position		I/C	H&LR/C	D/C	R/B	Fr/B	LC/B	Fwd/B	1st OWC	Fwd OWC	3rd OWC	Remarks
P			△			△						PARK POSITION
R			○		○	○			◎		◎	REVERSE POSITION
N			△			△						NEUTRAL POSITION
D	1st		△ *			△	△ **	○	◎	◎	◎	Automatic shift 1↔2↔3↔4↔5
	2nd			○		△		○		◎	◎	
	3rd		○	○		○		△	◇		◎	
	4th	○	○	○				△	◇			
	5th	○	○			○		△	◇		◇	
5^M	5th	○	○			○		△	◇		◇	Locks (held stationary) in 5th gear
4^M	4th	○	○	○				△	◇			Locks (held stationary) in 4th gear
3^M	3rd		○	○		○		△	◇		◎	Locks (held stationary) in 3th gear
2^M	2nd			○		○	○	○		◎	◎	Locks (held stationary) in 2th gear
1^M	1st		○			○	○	○	◎	◎	◎	Locks (held stationary) in 1th gear

○ — Operates
◎ — Operates during "progressive" acceleration.
◇ — Operates and affects power transmission while coasting.
△ — Line pressure is applied but does not affect power transmission.
△ * — Operates under conditions shown in illustration ①.
△ ** — Operates under conditions shown in illustration ②. Delay control is applied during D (4,3,2,1) → N shift.

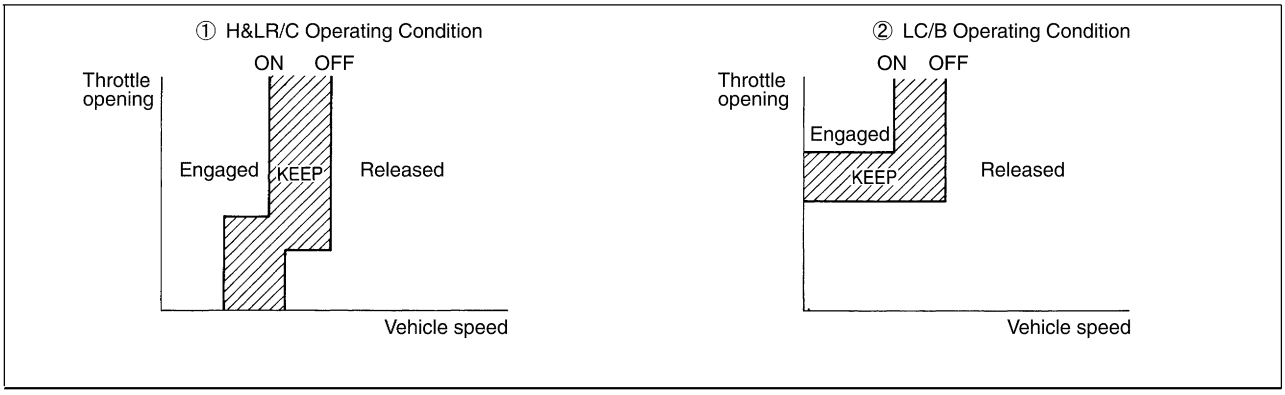

SCIA1801E

POWER TRANSMISSION

"N" Position

Since both the forward brake and the reverse brake are released, torque from the input shaft drive is not transmitted to the output shaft.

"P" Position

- The same as for the "N" position, both the forward brake and the reverse brake are released, so torque from the input shaft drive is not transmitted to the output shaft.
- The parking pawl linked with the select lever meshes with the parking gear and fastens the output shaft mechanically.

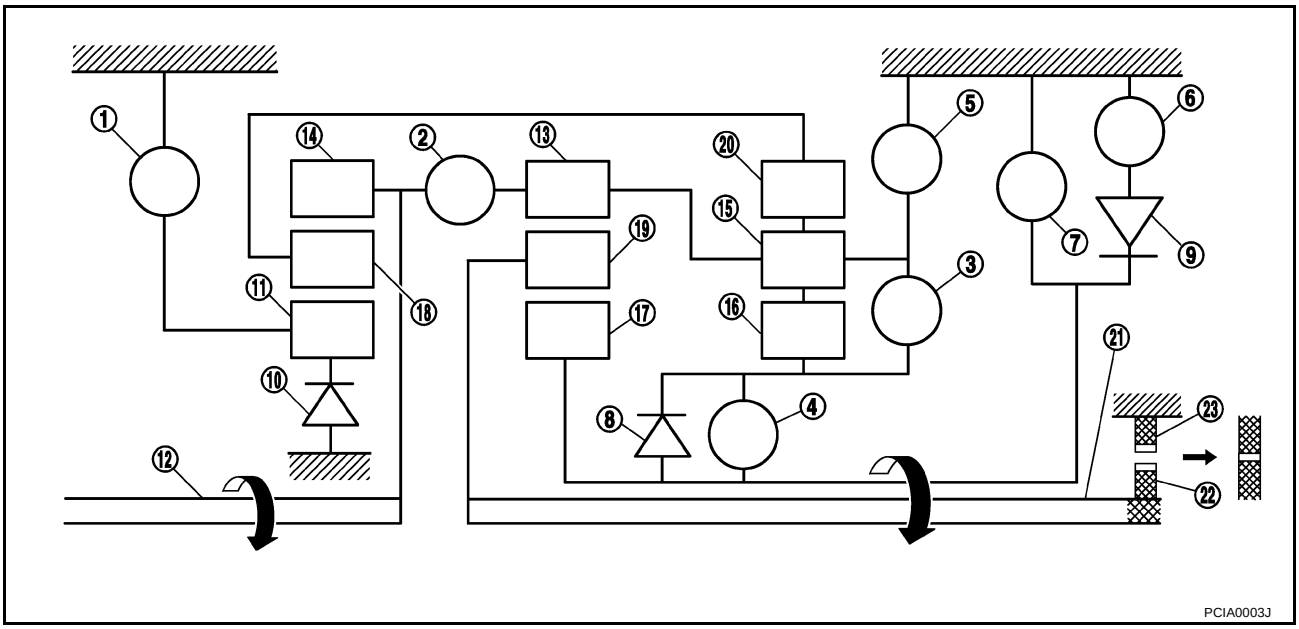

1.	Front brake	2.	Input clutch	3.	Direct clutch
4.	High and low reverse clutch	5.	Reverse brake	6.	Forward brake
7.	Low coast brake	8.	1st one-way clutch	9.	Forward one-way clutch
10.	3rd one-way clutch	11.	Front sun gear	12.	Input shaft
13.	Mid internal gear	14.	Front internal gear	15.	Rear carrier
16.	Rear sun gear	17.	Mid sun gear	18.	Front carrier
19.	Mid carrier	20.	Rear internal gear	21.	Output shaft
22.	Parking gear	23.	Parking pawl		

"D1 " Position

- The forward brake and the forward one-way clutch regulate reverse rotation of the mid sun gear.
- The 1st one-way clutch regulates reverse rotation of the rear sun gear.
- The 3rd one-way clutch regulates reverse rotation of the front sun gear.
- During deceleration, the mid sun gear turns forward, so the forward one-way clutch idles and the engine brake is not activated.

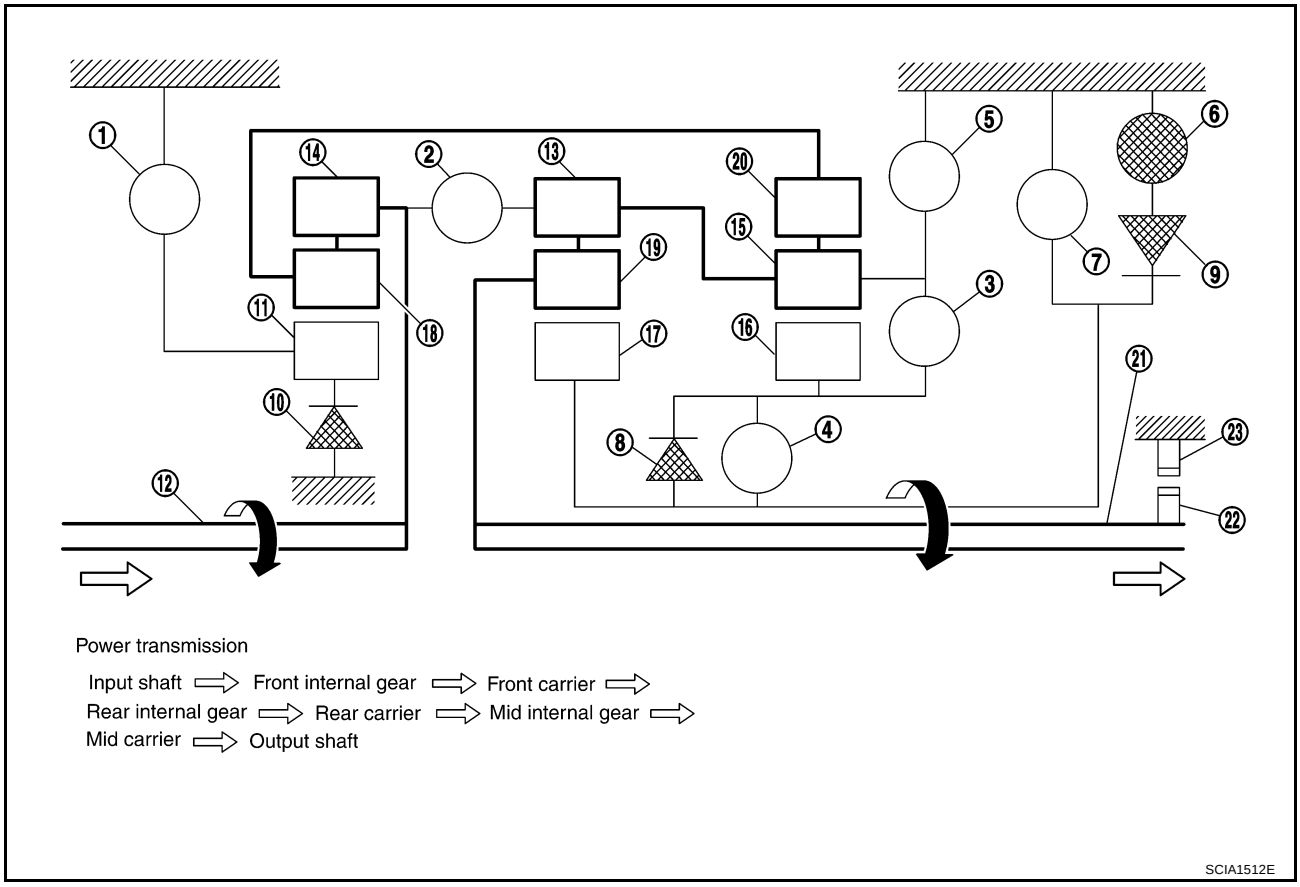

1.	Front brake	2.	Input clutch	3.	Direct clutch
4.	High and low reverse clutch	5.	Reverse brake	6.	Forward brake
7.	Low coast brake	8.	1st one-way clutch	9.	Forward one-way clutch
10.	3rd one-way clutch	11.	Front sun gear	12.	Input shaft
13.	Mid internal gear	14.	Front internal gear	15.	Rear carrier
16.	Rear sun gear	17.	Mid sun gear	18.	Front carrier
19.	Mid carrier	20.	Rear internal gear	21.	Output shaft
22.	Parking gear	23.	Parking pawl		

"M1" Position

- The front brake fastens the front sun gear.
- The forward brake and the forward one-way clutch regulate reverse rotation of the mid sun gear.
- High and low reverse clutch connects the rear sun gear and the mid sun gear.
- The low coast brake fastens the mid sun gear.
- During deceleration, the low coast brake regulates forward rotation of the mid sun gear and the engine brake functions.

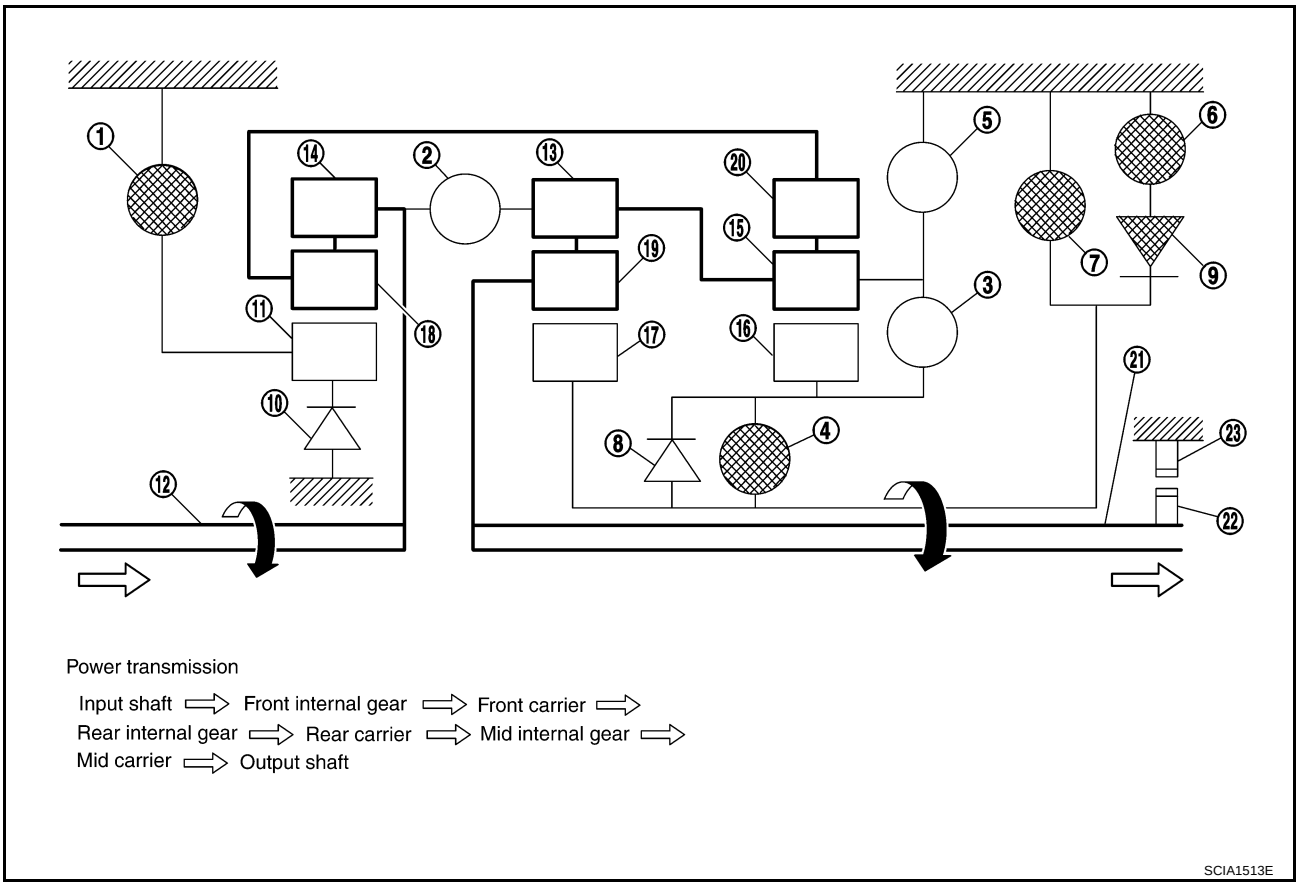

1.	Front brake	2.	Input clutch	3.	Direct clutch
4.	High and low reverse clutch	5.	Reverse brake	6.	Forward brake
7.	Low coast brake	8.	1st one-way clutch	9.	Forward one-way clutch
10.	3rd one-way clutch	11.	Front sun gear	12.	Input shaft
13.	Mid internal gear	14.	Front internal gear	15.	Rear carrier
16.	Rear sun gear	17.	Mid sun gear	18.	Front carrier
19.	Mid carrier	20.	Rear internal gear	21.	Output shaft
22.	Parking gear	23.	Parking pawl		

"D2 " Position

- The forward brake and the forward one-way clutch regulate reverse rotation of the mid sun gear.
- The 3rd one-way clutch regulates reverse rotation of the front sun gear.
- The direct clutch is coupled, and the rear carrier and rear sun gear are connected.
- During deceleration, the mid sun gear turns forward, so the forward one-way clutch idles and engine brake is not activated.

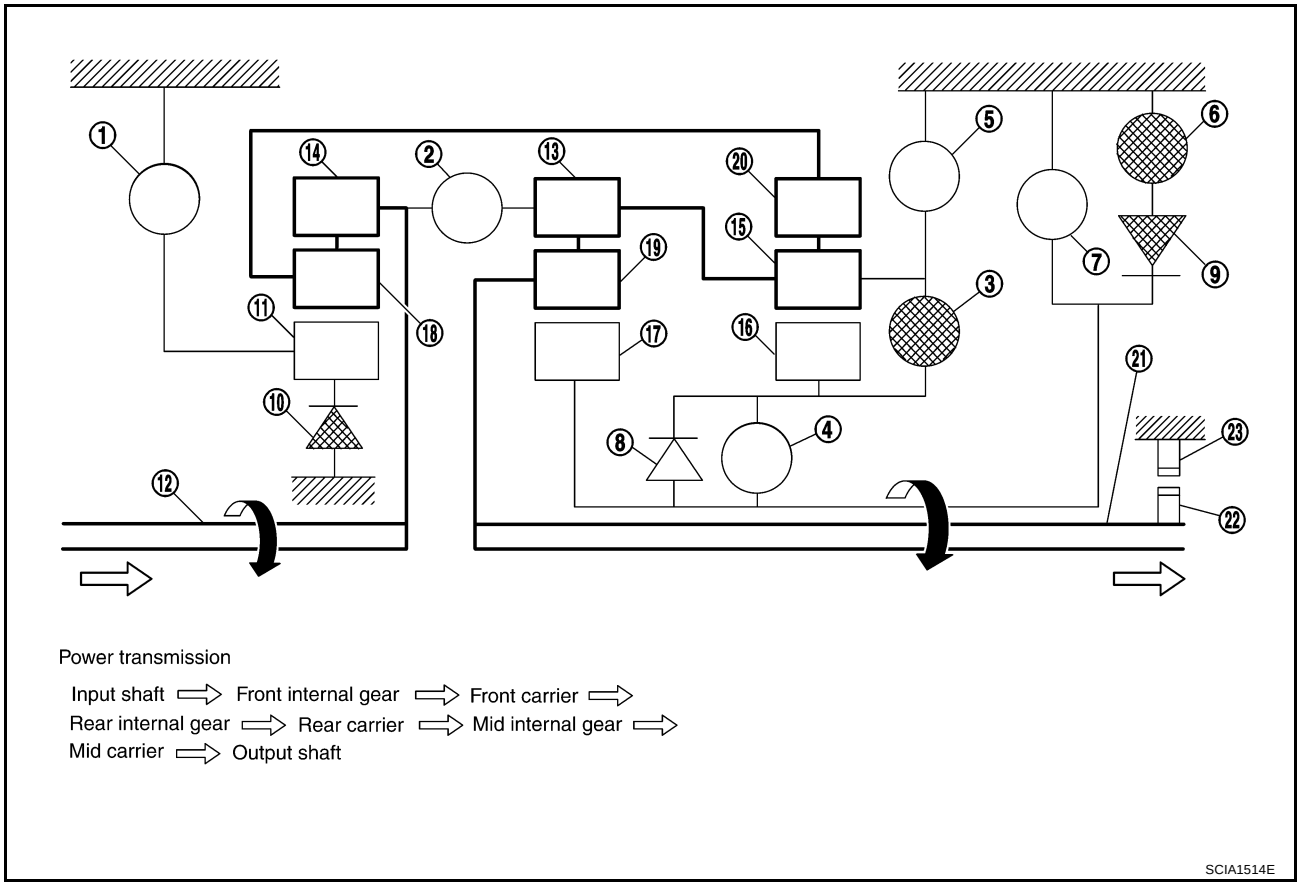

1.	Front brake	2.	Input clutch	3.	Direct clutch
4.	High and low reverse clutch	5.	Reverse brake	6.	Forward brake
7.	Low coast brake	8.	1st one-way clutch	9.	Forward one-way clutch
10.	3rd one-way clutch	11.	Front sun gear	12.	Input shaft
13.	Mid internal gear	14.	Front internal gear	15.	Rear carrier
16.	Rear sun gear	17.	Mid sun gear	18.	Front carrier
19.	Mid carrier	20.	Rear internal gear	21.	Output shaft
22.	Parking gear	23.	Parking pawl		

"M2" Position

- The front brake fastens the front sun gear.
- The forward brake and the forward one-way clutch regulate reverse rotation of the mid sun gear.
- The direct clutch is coupled, and the rear carrier and rear sun gear are connected.
- The low coast brake fastens the mid sun gear.
- During deceleration, the low coast brake regulates forward rotation of the mid sun gear and the engine brake functions.

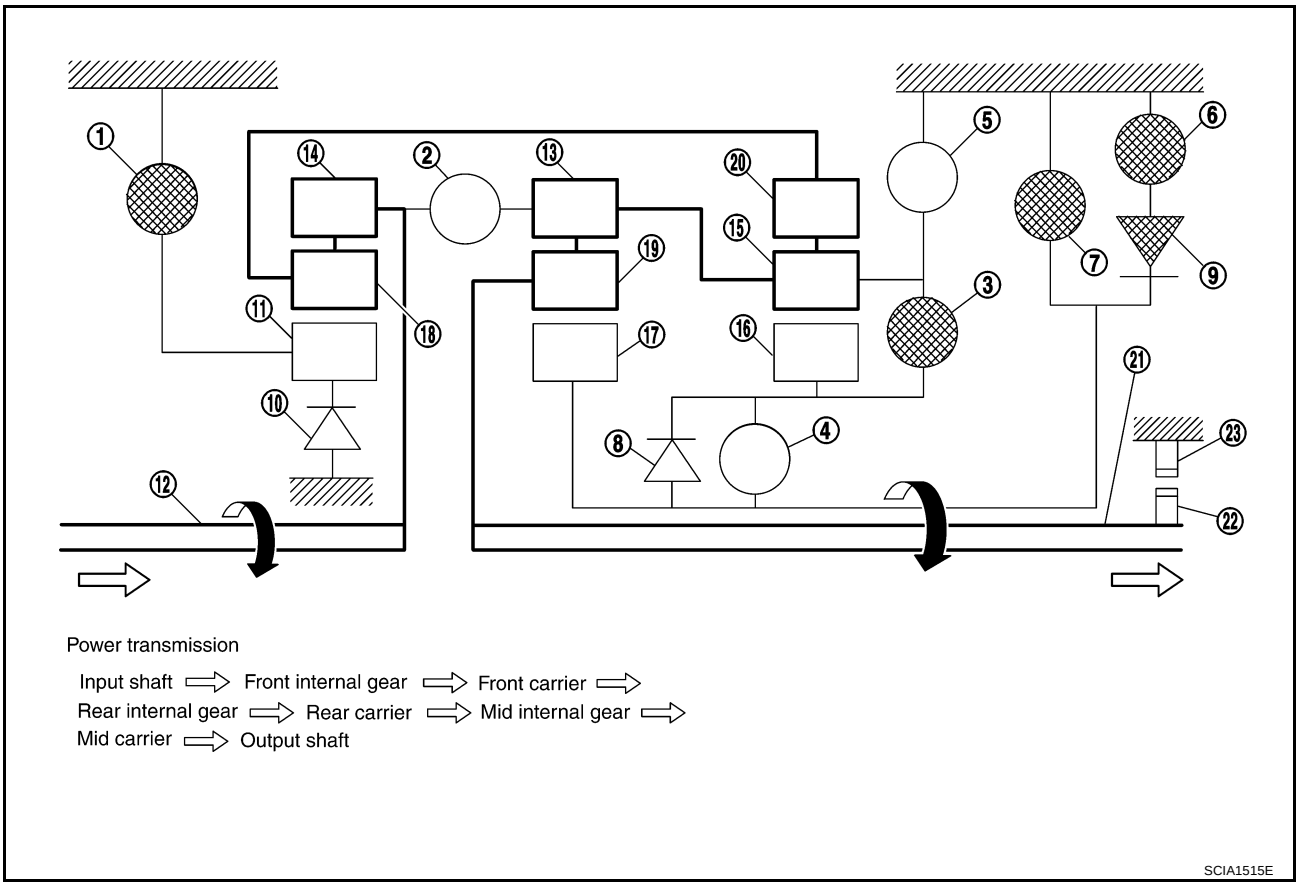

1.	Front brake	2.	Input clutch	3.	Direct clutch
4.	High and low reverse clutch	5.	Reverse brake	6.	Forward brake
7.	Low coast brake	8.	1st one-way clutch	9.	Forward one-way clutch
10.	3rd one-way clutch	11.	Front sun gear	12.	Input shaft
13.	Mid internal gear	14.	Front internal gear	15.	Rear carrier
16.	Rear sun gear	17.	Mid sun gear	18.	Front carrier
19.	Mid carrier	20.	Rear internal gear	21.	Output shaft
22.	Parking gear	23.	Parking pawl		

“D3 ” and “M3” Position

- The front brake fastens the front sun gear.
- The direct clutch is coupled, and the rear carrier and rear sun gear are connected.
- The high and low reverse clutch is coupled, and the mid sun gear and rear sun gear are connected.

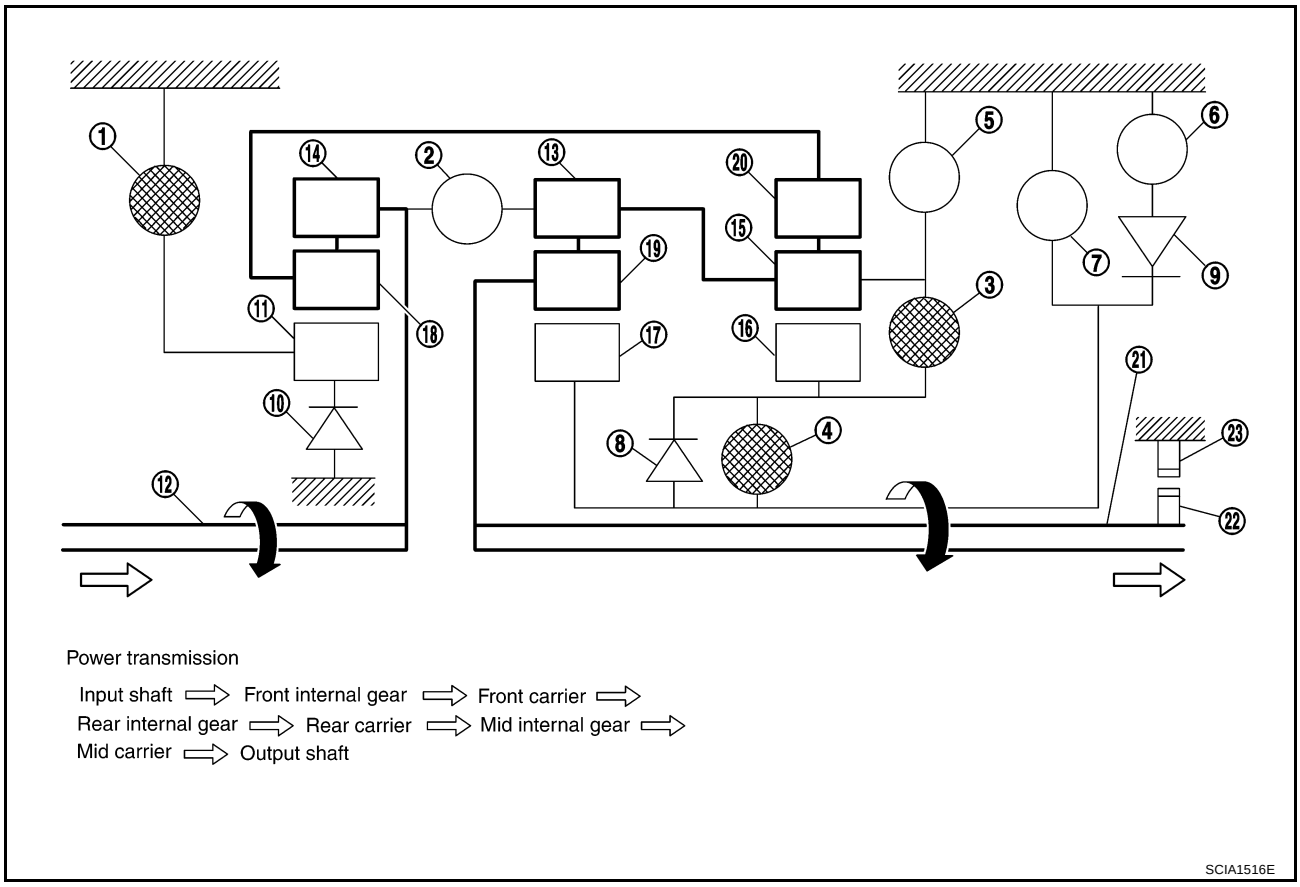

1.	Front brake	2.	Input clutch	3.	Direct clutch
4.	High and low reverse clutch	5.	Reverse brake	6.	Forward brake
7.	Low coast brake	8.	1st one-way clutch	9.	Forward one-way clutch
10.	3rd one-way clutch	11.	Front sun gear	12.	Input shaft
13.	Mid internal gear	14.	Front internal gear	15.	Rear carrier
16.	Rear sun gear	17.	Mid sun gear	18.	Front carrier
19.	Mid carrier	20.	Rear internal gear	21.	Output shaft
22.	Parking gear	23.	Parking pawl		

“D4 ” and “M4” Position

- The direct clutch is coupled, and the rear carrier and rear sun gear are connected.
- The high and low reverse clutch is coupled, and the mid sun gear and rear sun gear are connected.
- The input clutch is coupled, and the front internal gear and mid internal gear are connected.
- The drive power is conveyed to the front internal gear, mid internal gear, and rear carrier and the three planetary gears rotate forward as one unit.

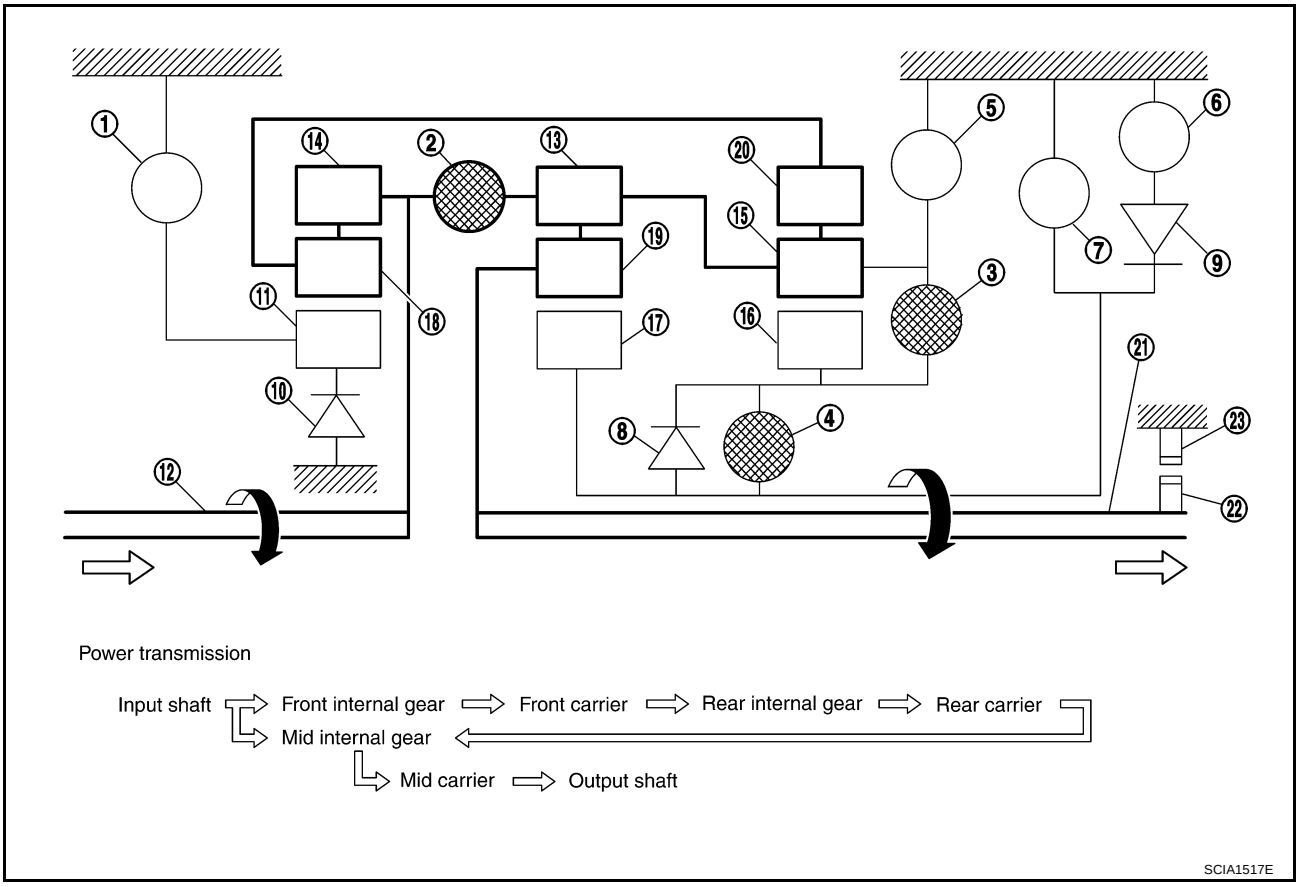

1.	Front brake	2.	Input clutch	3.	Direct clutch
4.	High and low reverse clutch	5.	Reverse brake	6.	Forward brake
7.	Low coast brake	8.	1st one-way clutch	9.	Forward one-way clutch
10.	3rd one-way clutch	11.	Front sun gear	12.	Input shaft
13.	Mid internal gear	14.	Front internal gear	15.	Rear carrier
16.	Rear sun gear	17.	Mid sun gear	18.	Front carrier
19.	Mid carrier	20.	Rear internal gear	21.	Output shaft
22.	Parking gear	23.	Parking pawl		

“D5 ” and “M5” Position

- The front brake fastens the front sun gear.
- The input clutch is coupled, and the front internal gear and mid internal gear are connected.
- The high and low reverse clutch is coupled, and the mid sun gear and rear sun gear are connected.

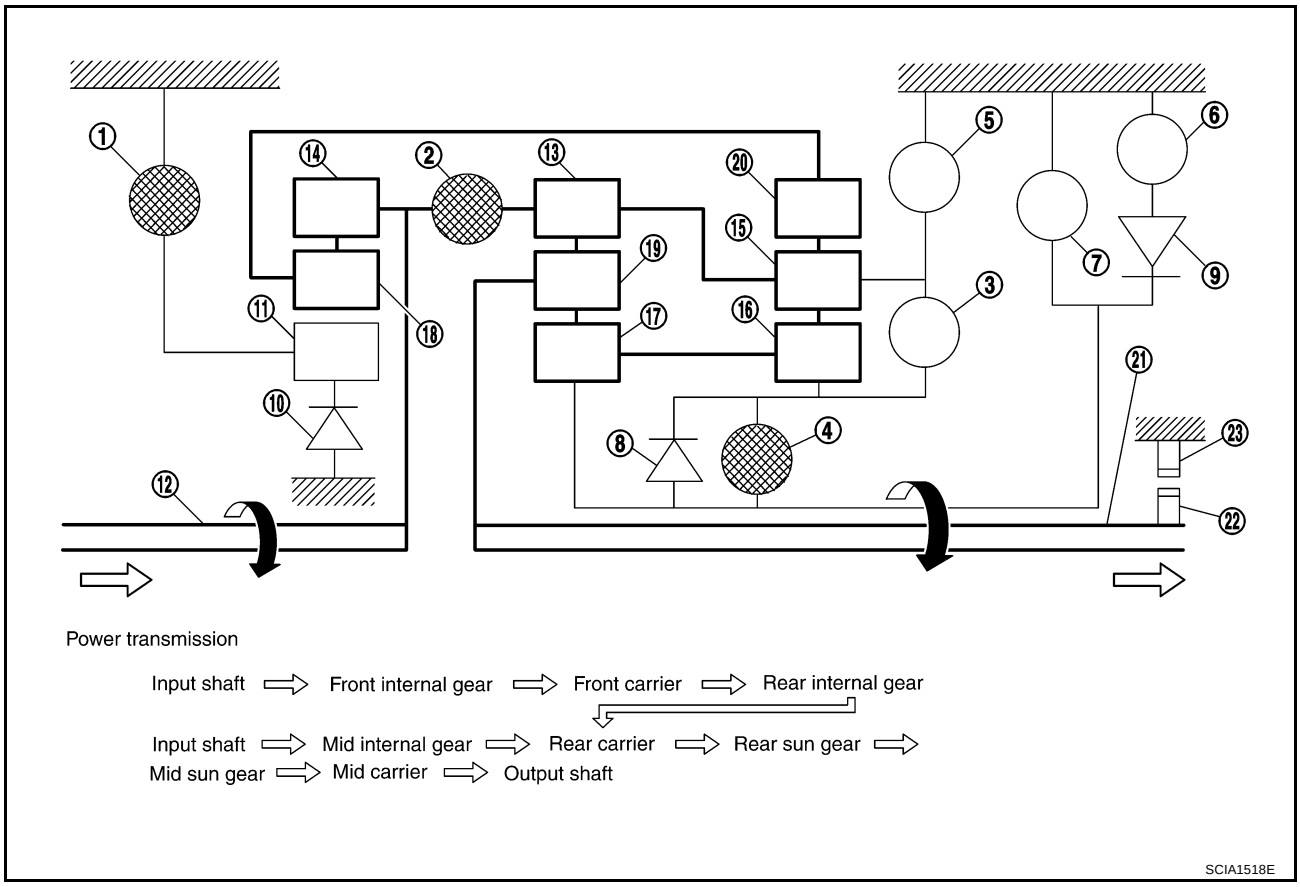

1.	Front brake	2.	Input clutch	3.	Direct clutch
4.	High and low reverse clutch	5.	Reverse brake	6.	Forward brake
7.	Low coast brake	8.	1st one-way clutch	9.	Forward one-way clutch
10.	3rd one-way clutch	11.	Front sun gear	12.	Input shaft
13.	Mid internal gear	14.	Front internal gear	15.	Rear carrier
16.	Rear sun gear	17.	Mid sun gear	18.	Front carrier
19.	Mid carrier	20.	Rear internal gear	21.	Output shaft
22.	Parking gear	23.	Parking pawl		

“R” Position

- The front brake fastens the front sun gear.
- The high and low reverse clutch is coupled, and the mid sun gear and rear sun gear are connected.
- The reverse brake fastens the rear carrier.

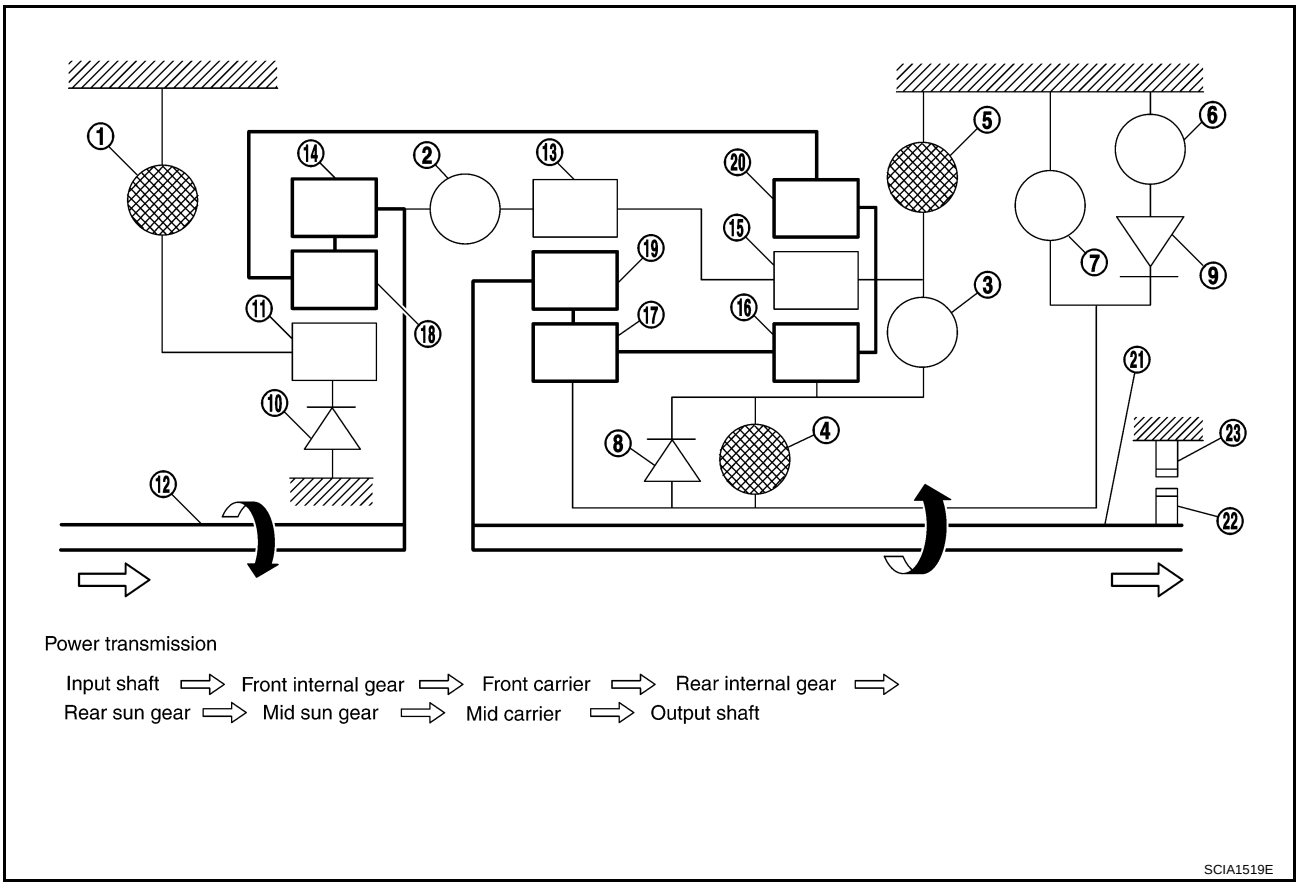

1.	Front brake	2.	Input clutch	3.	Direct clutch
4.	High and low reverse clutch	5.	Reverse brake	6.	Forward brake
7.	Low coast brake	8.	1st one-way clutch	9.	Forward one-way clutch
10.	3rd one-way clutch	11.	Front sun gear	12.	Input shaft
13.	Mid internal gear	14.	Front internal gear	15.	Rear carrier
16.	Rear sun gear	17.	Mid sun gear	18.	Front carrier
19.	Mid carrier	20.	Rear internal gear	21.	Output shaft
22.	Parking gear	23.	Parking pawl		

TCM Function

ACS002AR

The function of the TCM is to:

- Receive input signals sent from various switches and sensors.
- Determine required line pressure, shifting point, lock-up operation, and engine brake operation.
- Send required output signals to the respective solenoids.

CONTROL SYSTEM OUTLINE

The automatic transmission senses vehicle operating conditions through various sensors or signals. It always controls the optimum shift position and reduces shifting and lock-up shocks.

SENSORS		TCM		ACTUATORS
PNP switch Throttle position sensor Accelerator pedal position sensor Closed throttle position signal Wide-open throttle position signal Engine speed signal A/T fluid temperature sensor Revolution sensor Vehicle speed signal Manual mode switch Brake switch signal Turbine revolution sensor	⇒	Shift control Line pressure control Lock-up control Engine brake control Timing control Fail-safe control Self-diagnosis CONSULT-II communication line Duet-EA control CAN system	⇒	Input clutch solenoid valve Direct clutch solenoid valve Front brake solenoid valve High and low reverse clutch solenoid valve Low coast brake solenoid valve Torque converter clutch solenoid valve Line pressure solenoid valve A/T CHECK indicator lamp

CONTROL SYSTEM DIAGRAM

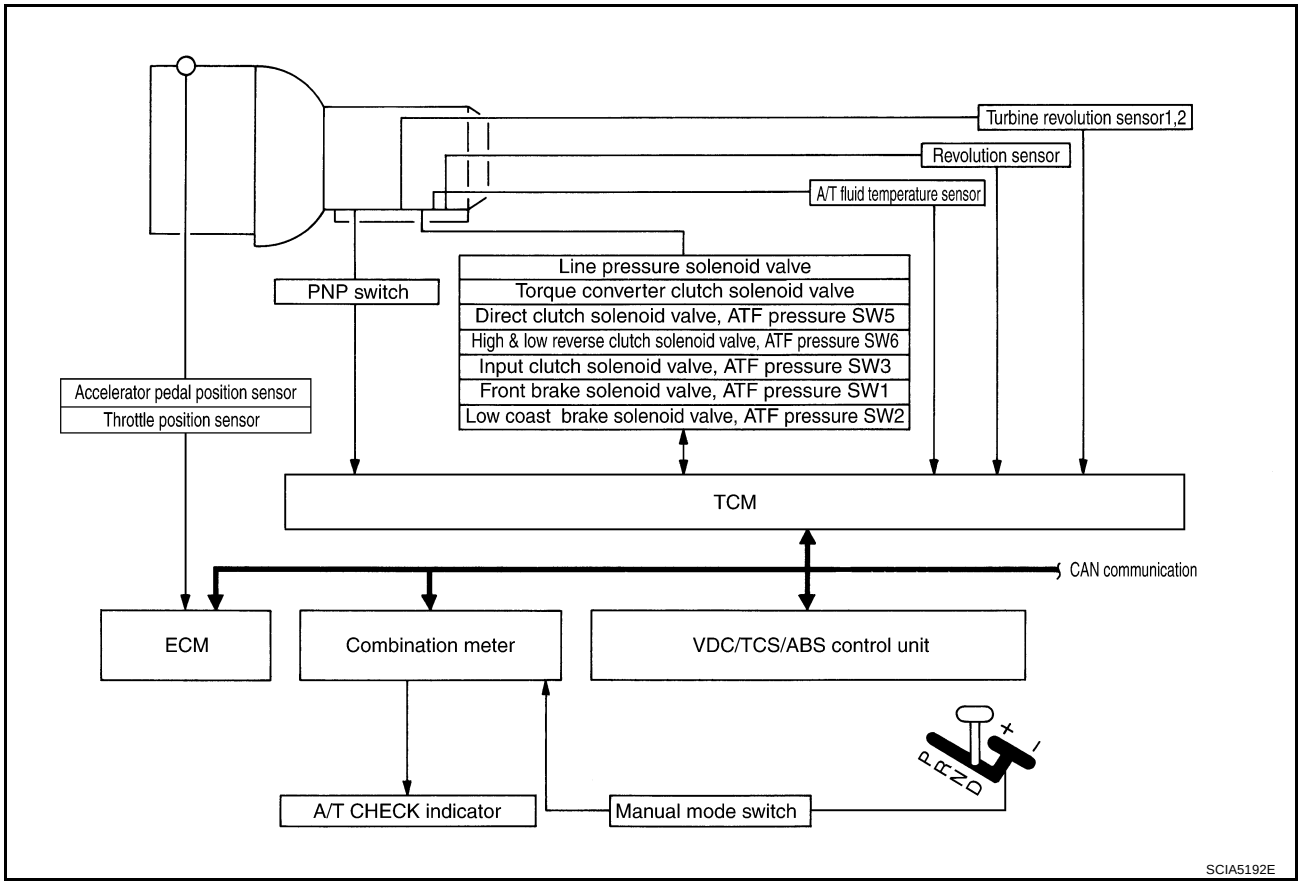

CAN Communication

ACS002AS

SYSTEM DESCRIPTION

CAN (Controller Area Network) is a serial communication line for real time application. It is an on-vehicle multiplex communication line with high data communication speed and excellent error detection ability. Many electronic control units are equipped onto a vehicle, and each control unit shares information and links with other control units during operation (not independent). In CAN communication, control units are connected with 2 communication lines (CAN-H line, CAN-L line) allowing a high rate of information transmission with less wiring. Each control unit transmits/receives data but selectively reads required data only.
For details, refer to LAN-4, "CAN Communication Unit" .

Input/Output Signal of TCM

ACS002AT

Control item			Line pressure control	Vehicle speed control	Shift control	Lock-up control	Engine brake control	Fail-safe function (*3)	Self-diagnostics function
Input	Accelerator pedal position signal (*5)		X	X	X	X	X	X	X
	Vehicle speed sensor A/T (revolution sensor)		X	X	X	X		X	X
	Vehicle speed sensor MTR(*1) (*5)		X	X	X	X			X
	Closed throttle position signal(*5)		(*2) X	(*2) X			(*2) X		(*4) X
	Wide-open throttle position signal(*5)		(*2) X	(*2) X					(*4) X
	Turbine revolution sensor 1		X	X				X	X
	Turbine revolution sensor 2 (for 4th speed only)		X	X				X	X
	Engine speed signals(*5)					X			X
	PNP switch		X	X	X	X	X	X	(*4) X
	Brake switch signal(*5)			X			X		(*4) X
	A/T fluid temperature sensors 1, 2		X	X		X	X	X	X
	ASCD	Cruise signal(*5)		X	X	X	X		
		Overdrive release signal(*5)		X		X	X		
	TCM power supply voltage signal		X	X	X	X	X	X	X
Output	Direct clutch solenoid (ATF pressure switch 5)			X	X			X	X
	Input clutch solenoid (ATF pressure switch 3)			X	X			X	X
	High and low reverse clutch solenoid (ATF pressure switch 6)			X	X			X	X
	Front brake solenoid (ATF pressure switch 1)			X	X			X	X
	Low coast brake solenoid (ATF pressure switch 2)			X	X		X	X	X
	Line pressure solenoid		X	X	X	X	X	X	X
	TCC solenoid					X		X	X
	Self-diagnostics table(*6)								X

*1: Spare for vehicle speed sensor·A/T (revolution sensor)
*2: Spare for accelerator pedal position signal
*3: If these input and output signals are different, the TCM triggers the fail-safe function.
*4: Used as a condition for starting self-diagnostics; if self-diagnostics are not started, it is judged that there is some kind of error.
*5: Input by CAN communications.
*6: Output by CAN communications.

Line Pressure Control

ACS002AU

- When an input torque signal equivalent to the engine drive force is sent from the ECM to the TCM, the TCM controls the line pressure solenoid.
- This line pressure solenoid controls the pressure regulator valve as the signal pressure and adjusts the pressure of the operating oil discharged from the oil pump to the line pressure most appropriate to the driving state.

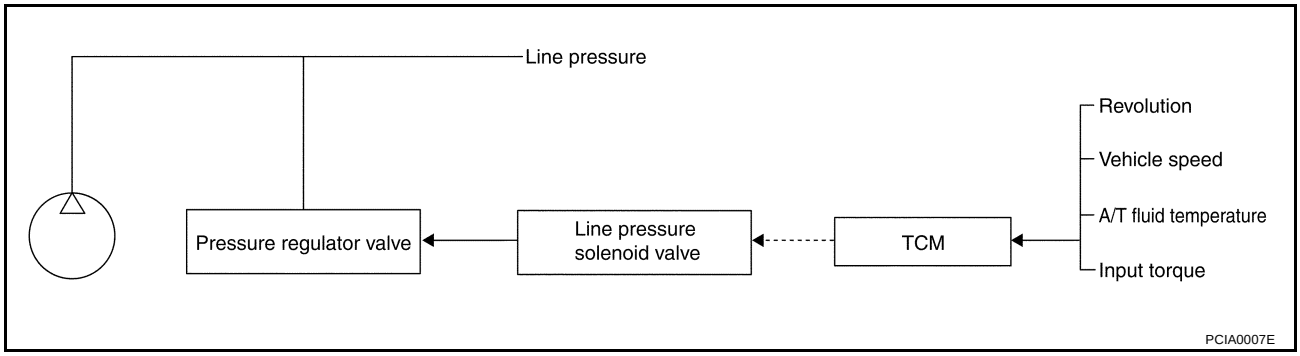

LINE PRESSURE CONTROL IS BASED ON THE TCM LINE PRESSURE CHARACTERISTIC PATTERN

- The TCM has stored in memory a number of patterns for the optimum line pressure characteristic for the driving state.
- In order to obtain the most appropriate line pressure characteristic to meet the current driving state, the TCM controls the line pressure solenoid current valve and thus controls the line pressure.

Normal Control

Each clutch is adjusted to the necessary pressure to match the engine drive force.

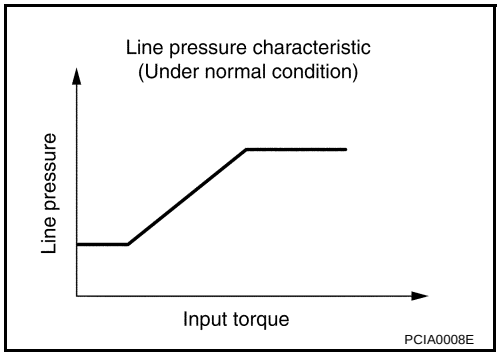

Back-up Control (Engine Brake)

When the select operation is executed during driving and the transmission is shifted down, the line pressure is set according to the vehicle speed.

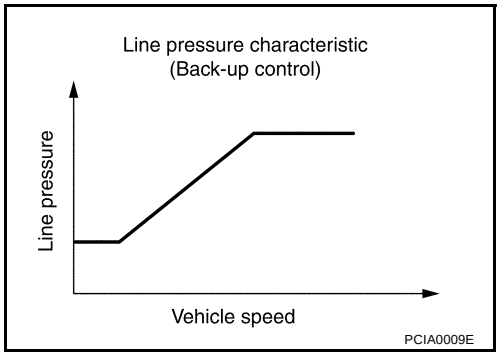

During Shift Change

The necessary and adequate line pressure for shift change is set. For this reason, line pressure pattern setting corresponds to input torque and gearshift selection. Also, line pressure characteristic is according to engine speed, during engine brake operation.

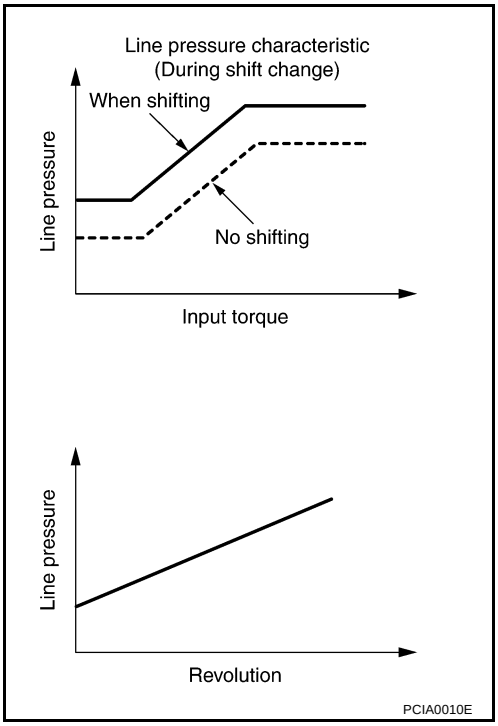

At Low Fluid Temperature

When the A/T fluid temperature drops below the prescribed temperature, in order to speed up the action of each friction element, the line pressure is set higher than the normal line pressure characteristic.

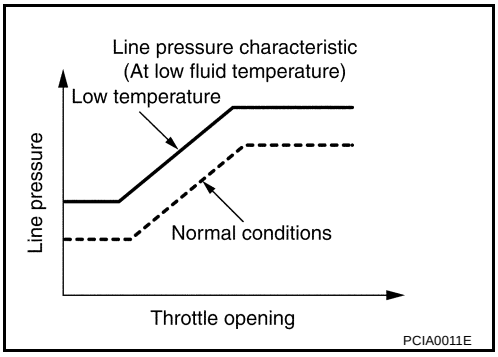

Shift Control

ACS002AV

The clutch pressure control solenoid is controlled by the signals from the switches and sensors. Thus, the clutch pressure is adjusted to be appropriate to the engine load state and vehicle driving state. It becomes possible to finely control the clutch hydraulic pressure with high precision and a smoother shift change characteristic is attained.

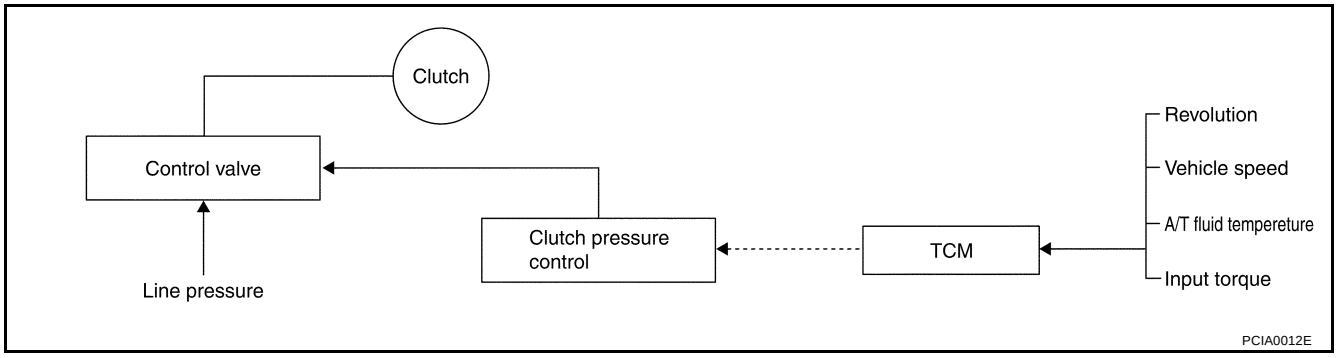

SHIFT CHANGE

The clutch is controlled with the optimum timing and oil pressure by the engine speed, engine torque information, etc.

Shift Change System Diagram

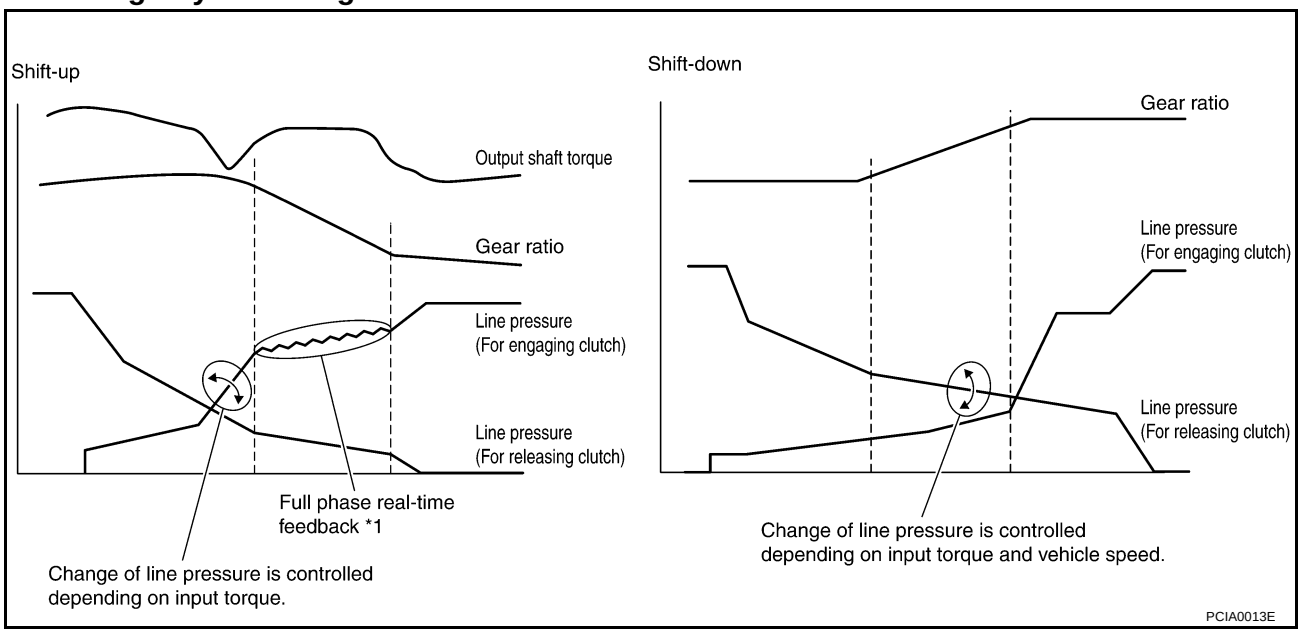

*1: Full phase real-time feedback control monitors movement of gear ratio at gear change, and controls oil pressure at real-time to achieve the best gear ratio.

Lock-Up Control

ACS002AW

The torque converter clutch piston in the torque converter is engaged to eliminate torque converter slip to increase power transmission efficiency.
The torque converter clutch control valve operation is controlled by the torque converter clutch solenoid valve, which is controlled by a signal from TCM, and the torque converter clutch control valve engages or releases the torque converter clutch piston.

Lock-up Operation Condition Table

Select lever	D position, M5 position		M4 position
Gear position	5	4	4
Lock-up	×	–	×
Slip lock-up	×	×	–

TORQUE CONVERTER CLUTCH CONTROL VALVE CONTROL

Lock-up Control System Diagram

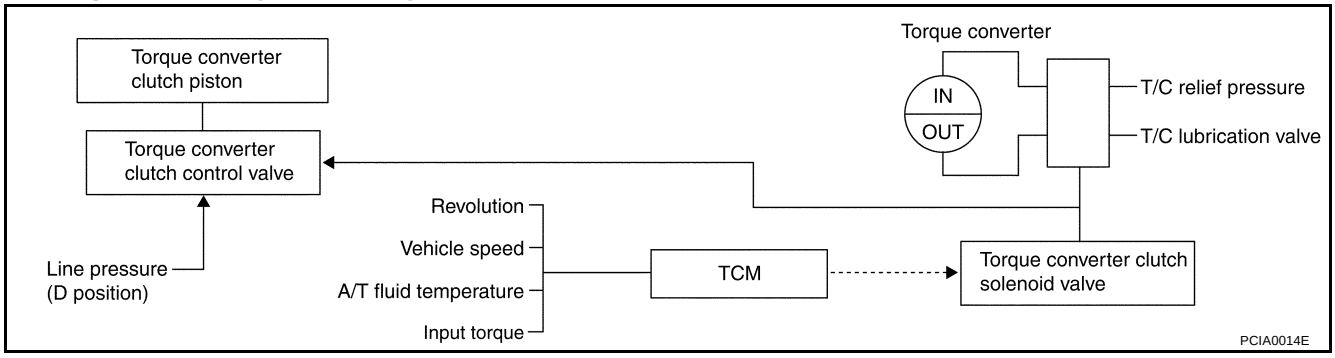

Lock-up Released

- In the lock-up released state, the torque converter clutch control valve is set into the unlocked state by the torque converter clutch solenoid and the lock-up apply pressure is drained.
  In this way, the torque converter clutch piston is not coupled.

Lock-up Applied

- In the lock-up applied state, the torque converter clutch control valve is set into the locked state by the torque converter clutch solenoid and lock-up apply pressure is generated.
  In this way, the torque converter clutch piston is pressed and coupled.

SMOOTH LOCK-UP CONTROL

When shifting from the lock-up released state to the lock-up applied state, the current output to the torque converter clutch solenoid is controlled with the TCM. In this way, when shifting to the lock-up applied state, the torque converter clutch is temporarily set to the half-clutched state to reduce the shock.

Half-clutched State

- The current output from the TCM to the torque converter clutch solenoid is varied to steadily increase the torque converter clutch solenoid pressure.
  In this way, the lock-up apply pressure gradually rises and while the torque converter clutch piston is put into half-clutched status, the torque converter clutch piston operating pressure is increased and the coupling is completed smoothly.

Slip Lock-up Control

- In the slip region, the torque converter clutch solenoid current is controlled with the TCM to put it into the half-clutched state. This absorbs the engine torque fluctuation and lock-up operates from low speed.
  This raises the fuel efficiency for 4th and 5th gear at both low speed and when the accelerator has a low degree of opening.

Engine Brake Control

ACS002AX

- The forward one-way clutch transmits the drive force from the engine to the rear wheels. But the reverse drive from the rear wheels is not transmitted to the engine because the one-way clutch is idling.
  Therefore, the low coast brake solenoid is operated to prevent the forward one-way clutch from idling and the engine brake is operated in the same manner as conventionally.

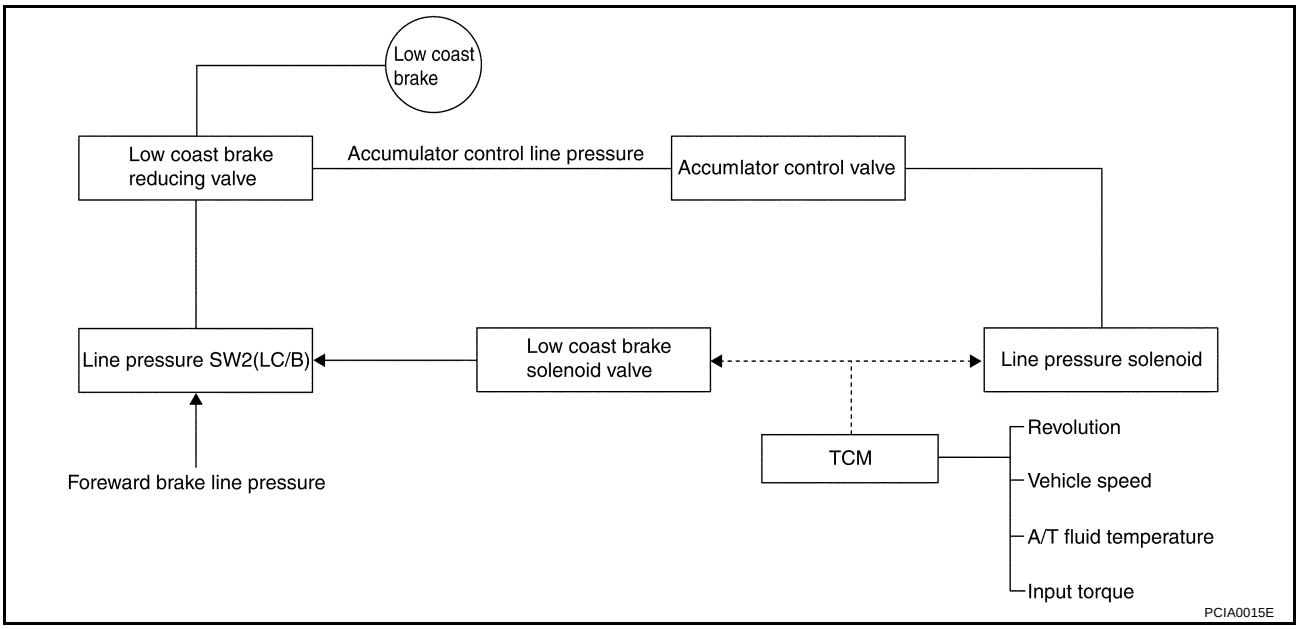

- The operation of the low coast brake solenoid switches the low coast brake switching valve and controls the coupling and releasing of the low coast brake.
  The low coast brake reducing valve controls the low coast brake coupling force.

Control Valve

ACS002AY

FUNCTION OF CONTROL VALVE

Name	Function
Torque converter regulator valve	In order to prevent the pressure supplied to the torque converter from being excessive, the line pressure is adjusted to the optimum pressure (torque converter operating pressure).
Pressure regulator valve Pressure regulator plug Pressure regulator sleeve	Adjusts the oil discharged from the oil pump to the optimum pressure (line pressure) for the driving state.
Front brake control valve	When the front brake is coupled, adjusts the line pressure to the optimum pressure (front brake pressure) and supplies it to the front brake. (In 1st, 2nd, 3rd, and 5th gears, adjusts the clutch pressure.)
Accumulator control valve	Adjusts the pressure (accumulator control pressure) acting on the accumulator piston and low coast reducing valve to the pressure appropriate to the driving state.
Pilot valve A	Adjusts the line pressure and produces the constant pressure (pilot pressure) required for line pressure control, shift change control, and lock-up control.
Pilot valve B	Adjusts the line pressure and produces the constant pressure (pilot pressure) required for shift change control.
Low coast brake switching valve	During engine braking, supplies the line pressure to the low coast brake reducing valve.
Low coast brake reducing valve	When the low coast brake is coupled, adjusts the line pressure to the optimum pressure (low coast brake pressure) and supplies it to the low coast brake.
N-R accumulator	Produces the stabilizing pressure for when N-R is selected.
Direct clutch piston switching valve	Operates in 4th gear and switches the direct clutch coupling capacity.
High and low reverse clutch control valve	When the high and low reverse clutch is coupled, adjusts the line pressure to the optimum pressure (high and low reverse clutch pressure) and supplies it to the high and low reverse clutch. (In 1st, 3rd, 4th and 5th gears, adjusts the clutch pressure.)

Name	Function
Input clutch control valve	When the input clutch is coupled, adjusts the line pressure to the optimum pressure (input clutch pressure) and supplies it to the input clutch. (In 4th and 5th gears, adjusts the clutch pressure.)
Direct clutch control valve	When the direct clutch is coupled, adjusts the line pressure to the optimum pressure (direct clutch pressure) and supplies it to the direct clutch. (In 2nd, 3rd, and 4th gears, adjusts the clutch pressure.)
TCC control valve TCC control plug TCC control sleeve	Switches the lock-up to operating or released. Also, by executing the lock-up operation transiently, lock-up smoothly.
Torque converter lubrication valve	Operates during lock-up to switch the torque converter, cooling, and lubrication system oil path.
Cool bypass valve	Allows excess oil to bypass cooler circuit without being fed into it.
Line pressure relief valve	Discharges excess oil from line pressure circuit.
N-D accumulator	Produces the stabilizing pressure for when N-D is selected.
Manual valve	Sends line pressure to each circuit according to the select position. The circuits to which the line pressure is not sent drain.

FUNCTION OF PRESSURE SWITCH

Name	Function
Pressure switch 1 (Fr/B)	Detects any malfunction in the front brake hydraulic pressure. When it detects any malfunction, it puts the system into fail-safe mode.
Pressure switch 2 (LC/B)	Detects any malfunction in the low coast brake hydraulic pressure. When it detects any malfunction, it puts the system into fail-safe mode.
Pressure switch 3 (I/C)	Detects any malfunction in the input clutch hydraulic pressure. When it detects any malfunction, it puts the system into fail-safe mode.
Pressure switch 5 (D/C)	Detects any malfunction in the direct clutch hydraulic pressure. When it detects any malfunction, it puts the system into fail-safe mode.
Pressure switch 6 (H&LR/C)	Detects any malfunction in the high and low reverse clutch hydraulic pressure. When it detects any malfunction, it puts the system into fail-safe mode.

ON BOARD DIAGNOSTIC (OBD) SYSTEM

PFP:00028

Introduction

ACS002AZ

The A/T system has two self-diagnostic systems.
The first is the emission-related on board diagnostic system (OBD-II) performed by the TCM in combination with the ECM. The malfunction is indicated by the MIL (malfunction indicator lamp) and is stored as a DTC in the ECM memory but not the TCM memory.
The second is the TCM original self-diagnosis indicated by the A/T CHECK indicator lamp. The malfunction is stored in the TCM memory. The detected items are overlapped with OBD-II self-diagnostic items. For detail, refer to AT-92, "SELF-DIAGNOSTIC RESULT MODE" .

OBD-II Function for A/T System

ACS002B0

The ECM provides emission-related on board diagnostic (OBD-II) functions for the A/T system. One function is to receive a signal from the TCM used with OBD-related parts of the A/T system. The signal is sent to the ECM when a malfunction occurs in the corresponding OBD-related part. The other function is to indicate a diagnostic result by means of the MIL (malfunction indicator lamp) on the instrument panel. Sensors, switches and solenoid valves are used as sensing elements.
The MIL automatically illuminates in One or Two Trip Detection Logic when a malfunction is sensed in relation to A/T system parts.

One or Two Trip Detection Logic of OBD-II

ACS002B1

ONE TRIP DETECTION LOGIC

If a malfunction is sensed during the first test drive, the MIL will illuminate and the malfunction will be stored in the ECM memory as a DTC. The TCM is not provided with such a memory function.

TWO TRIP DETECTION LOGIC

When a malfunction is sensed during the first test drive, it is stored in the ECM memory as a 1st trip DTC (diagnostic trouble code) or 1st trip freeze frame data. At this point, the MIL will not illuminate. — First Trip
If the same malfunction as that experienced during the first test drive is sensed during the second test drive, the MIL will illuminate. — Second Trip
The “trip” in the “One or Two Trip Detection Logic” means a driving mode in which self-diagnosis is performed during vehicle operation.

OBD-II Diagnostic Trouble Code (DTC)

ACS002B2

HOW TO READ DTC AND 1ST TRIP DTC

DTC and 1st trip DTC can be read by the following methods.
(with CONSULT-II or GST GST) CONSULT-II or GST (Generic Scan Tool) Examples: P0705, P0720 etc.
These DTC are prescribed by SAE J2012.
(CONSULT-II also displays the malfunctioning component or system.)

- **1st trip DTC No. is the same as DTC No.**
- **Output of the diagnostic trouble code indicates that the indicated circuit has a malfunction. However, in case of the Mode II and GST, they do not indicate whether the malfunction is still occurring or occurred in the past and returned to normal.**
  CONSULT-II can identify them as shown below, therefore, CONSULT-II (if available) is recommended.
  A sample of CONSULT-II display for DTC and 1st trip DTC is shown on the next page. DTC or 1st trip DTC of a malfunction is displayed in SELF-DIAGNOSTIC RESULTS mode for “ENGINE” with CONSULT-II. Time data indicates how many times the vehicle was driven after the last detection of a DTC.

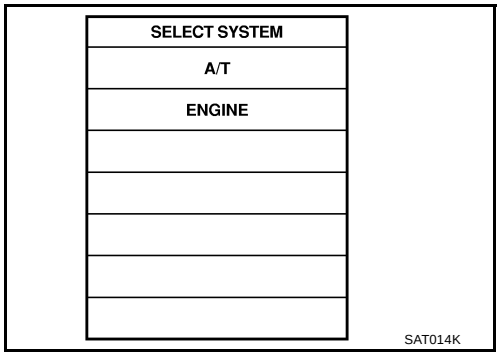

If the DTC is being detected currently, the time data will be “0”.

SELF-DIAG RESULTS	
DTC RESULTS	TIME
PNP SW/CIRC [P0705]	0

SAT015K

If a 1st trip DTC is stored in the ECM, the time data will be “1t”.

SELF-DIAG RESULTS	
DTC RESULTS	TIME
PNP SW/CIRC [P0705]	1 t

SAT016K

Freeze Frame Data and 1st Trip Freeze Frame Data

The ECM has a memory function, which stores the driving condition such as fuel system status, calculated load value, engine coolant temperature, short term fuel trim, long term fuel trim, engine speed and vehicle speed at the moment the ECM detects a malfunction.
Data which are stored in the ECM memory, along with the 1st trip DTC, are called 1st trip freeze frame data, and the data, stored together with the DTC data, are called freeze frame data and displayed on CONSULT-II or GST. The 1st trip freeze frame data can only be displayed on the CONSULT-II screen, not on the GST. For detail, refer to EC-103, "CONSULT-II Function" .
Only one set of freeze frame data (either 1st trip freeze frame data of freeze frame data) can be stored in the ECM. 1st trip freeze frame data is stored in the ECM memory along with the 1st trip DTC. There is no priority for 1st trip freeze frame data and it is updated each time a different 1st trip DTC is detected. However, once freeze frame data (2nd trip detection/MIL on) is stored in the ECM memory, 1st trip freeze frame data is no longer stored. Remember, only one set of freeze frame data can be stored in the ECM. The ECM has the following priorities to update the data.

Priority	Items	
1	Freeze frame data	Misfire — DTC: P0300 - P0306 Fuel Injection System Function — DTC: P0171, P0172, P0174, P0175
2		Except the above items (Includes A/T related items)
3	1st trip freeze frame data	

Both 1st trip freeze frame data and freeze frame data (along with the DTC) are cleared when the ECM memory is erased.

HOW TO ERASE DTC

The diagnostic trouble code can be erased by CONSULT-II, GST or ECM DIAGNOSTIC TEST MODE as described following.

- **If the battery cable is disconnected, the diagnostic trouble code will be lost within 24 hours.**
- **When you erase the DTC, using CONSULT-II or GST is easier and quicker than switching the mode selector on the ECM.**

The following emission-related diagnostic information is cleared from the ECM memory when erasing DTC related to OBD-II. For details, refer to EC-47, "Emission-related Diagnostic Information" .

- **Diagnostic trouble codes (DTC)**
- **1st trip diagnostic trouble codes (1st trip DTC)**
- **Freeze frame data**

- **1st trip freeze frame data**
- **System readiness test (SRT) codes**
- **Test values**

HOW TO ERASE DTC (WITH CONSULT-II)

- **If a DTC is displayed for both ECM and TCM, it is necessary to be erased for both ECM and TCM.**

1. If the ignition switch stays “ON” after repair work, be sure to turn ignition switch “OFF” once. Wait at least 10 seconds and then turn it “ON” (engine stopped) again.
2. Turn CONSULT-II “ON” and touch “A/T”.
3. Touch “SELF-DIAG RESULTS”.
4. Touch “ERASE”. (The DTC in the TCM will be erased.) Then touch “BACK” twice.
5. Touch “ENGINE”.
6. Touch “SELF-DIAG RESULTS”.
7. Touch “ERASE”. (The DTC in the ECM will be erased.)

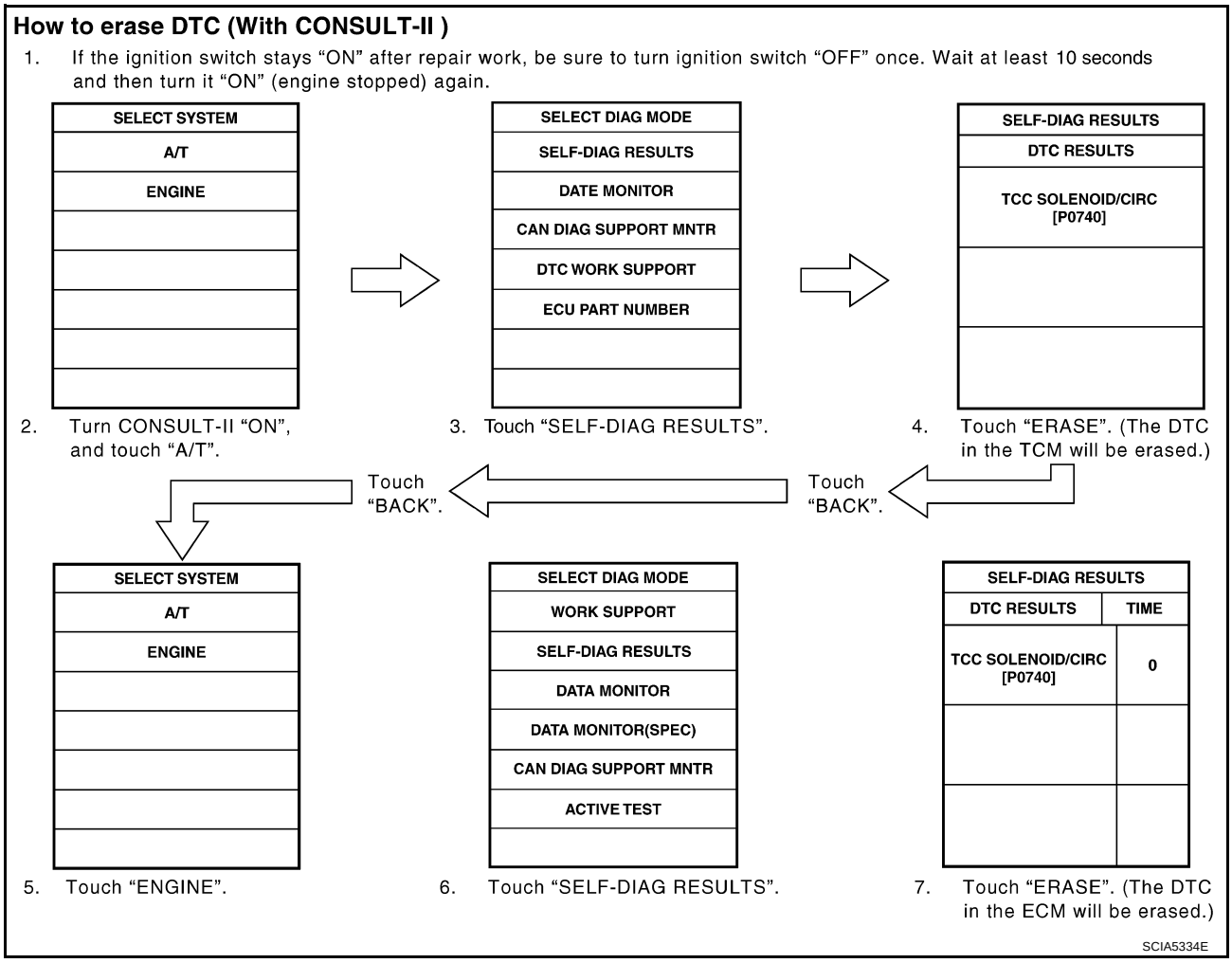

HOW TO ERASE DTC (WITH GST)

1. If the ignition switch stays “ON” after repair work, be sure to turn ignition switch “OFF” once. Wait at least 10 seconds and then turn it “ON” (engine stopped) again.
2. Perform “TCM SELF-DIAGNOSTIC PROCEDURE (No Tools)”. Refer to AT-102, "TCM SELF-DIAGNOSTIC PROCEDURE (NO TOOLS)" . (The engine warm-up step can be skipped when performing the diagnosis only to erase the DTC.)
3. Select Mode 4 with Generic Scan Tool (GST). For details, refer to EC-116, "Generic Scan Tool (GST) Function" .

HOW TO ERASE DTC (NO TOOLS)

The A/T CHECK indicator lamp is located on the instrument panel.

1. If the ignition switch stays “ON” after repair work, be sure to turn ignition switch “OFF” once. Wait at least 10 seconds and then turn it “ON” (engine stopped) again.
2. Perform “TCM SELF-DIAGNOSTIC PROCEDURE (No Tools)”. Refer to AT-102, "TCM SELF-DIAGNOSTIC PROCEDURE (NO TOOLS)" . (The engine warm-up step can be skipped when performing the diagnosis only to erase the DTC.)
3. Perform “OBD-II SELF-DIAGNOSTIC PROCEDURE (No tools)”. Refer to EC-60, "How to Erase DTC" .

Malfunction Indicator Lamp (MIL)

ACS002B3

DESCRIPTION

The MIL is located on the instrument panel.

1. The MIL will light up when the ignition switch is turned “ON” without the engine running. This is a bulb check.

- If the MIL does not light up, refer to DI-28, "WARNING LAMPS" , or see EC-615, "MIL AND DATA LINK CONNECTOR" .

2. When the engine is started, the MIL should go off.
   If the MIL remains on, the on board diagnostic system has detected an engine system malfunction.

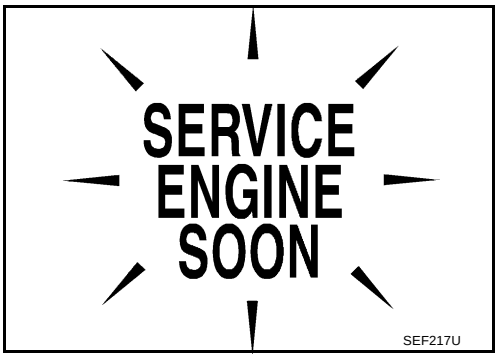

TROUBLE DIAGNOSIS

PFP:00004

DTC Inspection Priority Chart

ACS002B4

If some DTCs are displayed at the same time, perform inspections one by one based on the following priority chart.

NOTE:
If DTC U1000 is displayed with other DTCs, first perform the trouble diagnosis for DTC U1000. Refer to AT-104 .

Priority	Detected items (DTC)
1	U1000 CAN communication line
2	Except above

Fail-Safe

ACS002B5

The TCM has an electrical fail-safe mode. This mode makes it possible to operate even if there is a malfunction in a main electronic control input/output signal circuit.
In fail safe mode, even if the select lever is “D” or “M” mode, the transmission is fixed in 2nd or 4th (depending on the breakdown position), so the customer should feel “slipping” or “poor acceleration”. When fail-safe mode is triggered, when the ignition switch is switched “ON”, the A/T CHECK indicator lamp flashes for about 8 seconds. (Refer to AT-102, "TCM SELF-DIAGNOSTIC PROCEDURE (NO TOOLS)").
Even when the electronic circuits are normal, under special conditions (for example, when slamming on the brake with the wheels spinning drastically and stopping the tire rotation), the transmission can go into fail-safe mode. If this happens, switch “OFF” the ignition switch for 10 seconds, then switch it “ON” again to return to the normal shift pattern. Also, the A/T CHECK indicator lamp flashes for about 8 seconds once, then is cleared. Therefore, the customer's vehicle has returned to normal, so handle according to the “diagnostics flow” (Refer to AT-45).

FAIL-SAFE FUNCTION

If any malfunction occurs in a sensor or solenoid, this function controls the A/T to make driving possible.

Vehicle Speed Sensor

- Signals are input from two systems - from vehicle speed sensor A/T (revolution sensor) installed on the transmission and from combination meter so normal driving is possible even if there is a malfunction in one of the systems. And if vehicle speed sensor A/T (revolution sensor) has unusual cases, 5th gear and manual mode are prohibited.

Accelerator Pedal Position Sensor

- If there is a malfunction in one of the systems, the accelerator opening angle is controlled by ECM according to a pre-determined accelerator angle to make driving possible. And if there are malfunctions in tow systems, the engine speed is fixed by ECM to a pre-determined engine speed to make driving possible.

Throttle Position Sensor

- If there is a malfunction in one of the systems, the accelerator opening angle is controlled by ECM according to a pre-determined accelerator angle to make driving possible. And if there are malfunctions in tow systems, the accelerator opening angle is controlled by the idle signal sent from the ECM which is based on input indicating either idle condition or off-idle condition (pre-determined accelerator opening) in order to make driving possible.

PNP Switch

- In the unlikely event that a malfunction signal enters the TCM, the position indicator is switched “OFF”, the starter relay is switched “OFF” (starter starting is disabled), and the position is fixed to the “D” range to make driving possible.

Starter Relay

- The starter relay is switched “OFF”. (Starter starting is disabled.)

A/T Interlock

- If there is an A/T interlock judgment malfunction, the transmission is fixed in 2nd gear to make driving possible.

  NOTE:
  When the vehicle is driven fixed in 2nd gear, a turbine revolution sensor malfunction is displayed, but this is not a turbine revolution sensor malfunction.
- When the coupling pattern below is detected, the fail-safe action corresponding to the pattern is executed.

A/T INTERLOCK COUPLING PATTERN TABLE

●: NG X: OK

Gear position		ATF pressure switch output					Fail-safe function	Clutch pressure output pattern after fail-safe function					
		SW3 (I/C)	SW6 (HLR/C)	SW5 (D/C)	SW1 (FR/B)	SW2 (LC/B)		I/C	HLR/C	D/C	FR/B	LC/B	L/U
A/T interlock coupling pattern	3rd	–	X	X	–	●	Held in 2nd gear	OFF	OFF	ON	OFF	OFF	OFF
	4th	–	X	X	–	●	Held in 2nd gear	OFF	OFF	ON	OFF	OFF	OFF
	5th	X	X	–	X	●	Held in 2nd gear	OFF	OFF	ON	OFF	OFF	OFF

A/T 1st Engine Braking

- When there is an A/T first gear engine brake judgment malfunction, the low coast brake solenoid is switched “OFF” to avoid the engine brake operation.

Line Pressure Solenoid

- The solenoid is switched “OFF” and the line pressure is set to the maximum hydraulic pressure to make driving possible.

Torque Converter Clutch Solenoid

- The solenoid is switched “OFF” to release the lock-up.

Low Coast Brake Solenoid

- When a (electrical or functional) malfunction occurs, in order to make driving possible, if the solenoid is “ON”, the transmission is held in 2nd gear; if the solenoid is “OFF”, the transmission is held in 4th gear. (engine brake is not applied in 1st and 2nd gear.)

Input Clutch Solenoid

- If a (electrical or functional) malfunction occurs with the solenoid either “ON” or “OFF”, the transmission is held in 4th gear to make driving possible.

Direct Clutch Solenoid

- If a (electrical or functional) malfunction occurs with the solenoid either “ON” or “OFF”, the transmission is held in 4th gear to make driving possible.

Front Brake Solenoid

- If a (electrical or functional) malfunction occurs with the solenoid “ON”, in order to make driving possible, the A/T is held in 5th gear; if the solenoid is OFF, 4th gear.

High and Low Reverse Clutch Solenoid

- If a (electrical or functional) malfunction occurs with the solenoid either “ON” or “OFF”, the transmission is held in 4th gear to make driving possible.

Turbine Revolution Sensor 1 or 2

- The control is the same as if there were no turbine revolution sensors, 5th gear and manual mode are prohibited.

How To Perform Trouble Diagnosis For Quick and Accurate Repair

ACS002B6

INTRODUCTION

The TCM receives a signal from the vehicle speed sensor, accelerator pedal position sensor (throttle position sensor) or PNP switch and provides shift control or lock-up control via A/T solenoid valves.
The TCM also communicates with the ECM by means of a signal sent from sensing elements used with the OBD-related parts of the A/T system for malfunction-diagnostic purposes. The TCM is capable of diagnosing malfunctioning parts while the ECM can store malfunctions in its memory.
Input and output signals must always be correct and stable in the operation of the A/T system. The A/T system must be in good operating condition and be free of valve seizure, solenoid valve malfunction, etc.

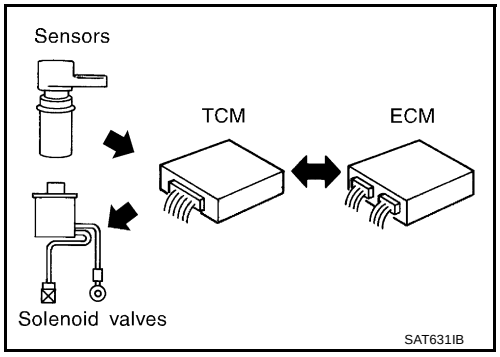

It is much more difficult to diagnose an error that occurs intermittently rather than continuously. Most intermittent errors are caused by poor electric connections or improper wiring. In this case, careful checking of suspected circuits may help prevent the replacement of good parts.
A visual check only may not find the cause of the errors. A road test with CONSULT-II (or GST) or a circuit tester connected should be performed. Follow the AT-45, "WORK FLOW" .

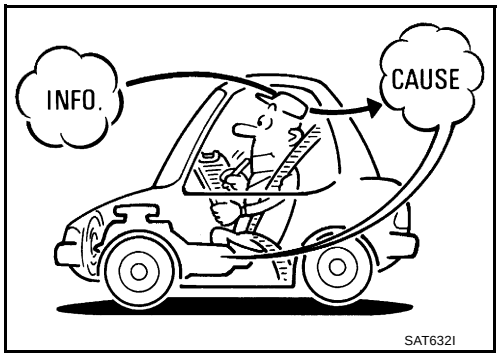

Before undertaking actual checks, take a few minutes to talk with a customer who approaches with a driveability complaint. The customer can supply good information about such errors, especially intermittent ones. Find out what symptoms are present and under what conditions they occur. A “Diagnostic Worksheet” as shown on the example (Refer to AT-46) should be used.
Start your diagnosis by looking for “conventional” errors first. This will help troubleshoot driveability errors on an electronically controlled engine vehicle.
Also check related Service bulletins.

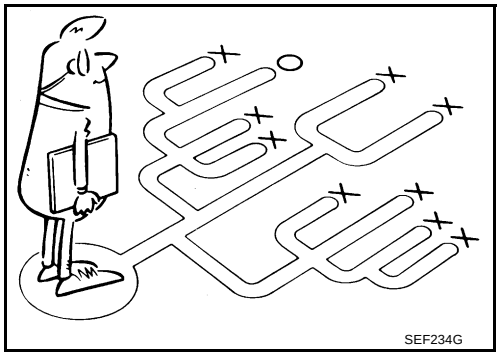

WORK FLOW

A good understanding of the malfunction conditions can make troubleshooting faster and more accurate.
In general, each customer feels differently about a malfunction. It is important to fully understand the symptoms or conditions for a customer complaint.
Make good use of the two sheets provided, “Information From Customer” (Refer to AT-46) and “Diagnostic Worksheet” (Refer to AT-46), to perform the best troubleshooting possible.

Work flow chart

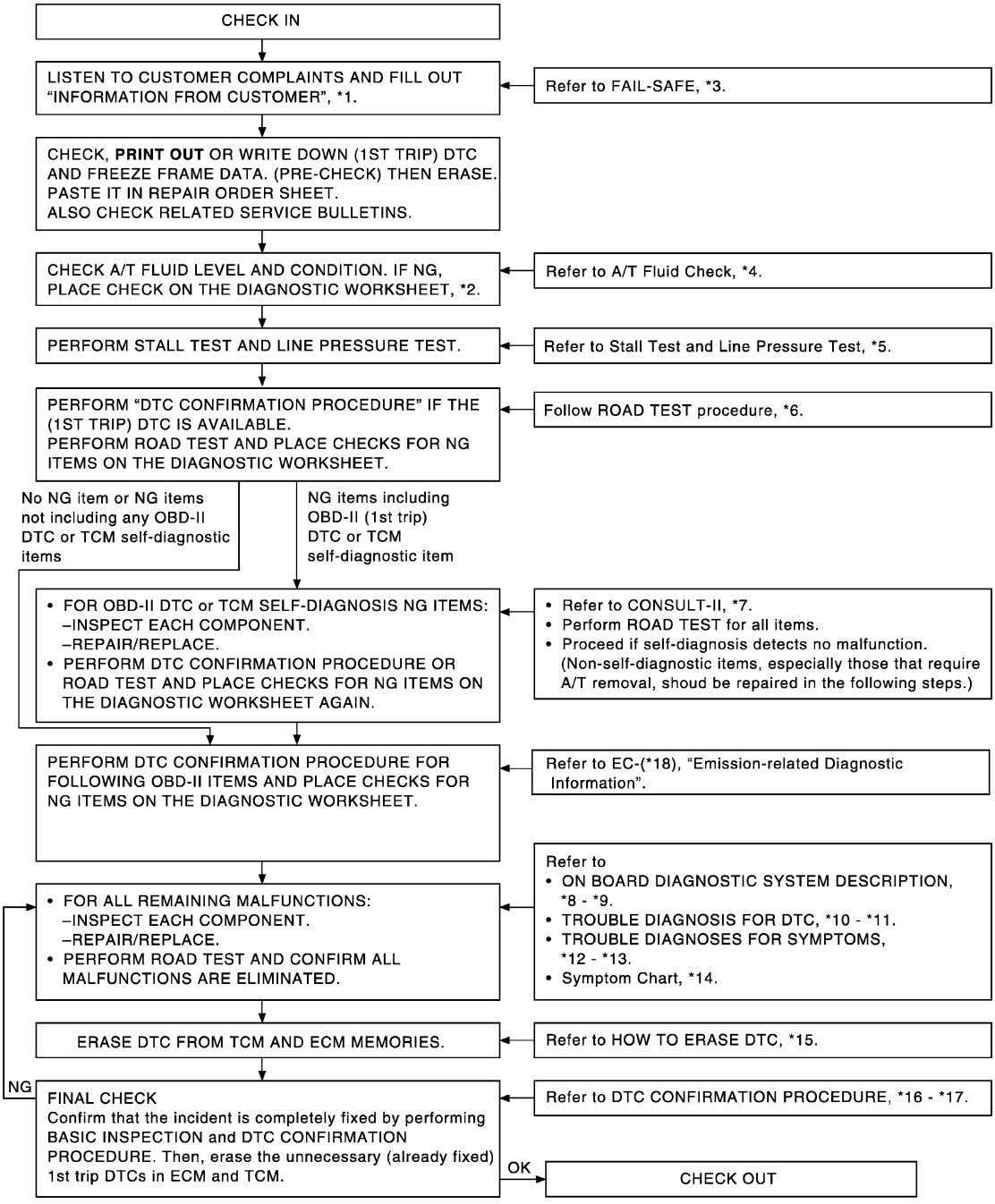

*1. AT-46	*2. AT-46	*3. AT-42
*4. AT-51	*5. AT-51, AT-52	*6. AT-54
*7. AT-91	*8. AT-38	*9. AT-102
*10. AT-104	*11. AT-243	*12. AT-245
*13. AT-287	*14. AT-62	*15. AT-39
*16. AT-104	*17. AT-239	*18. EC-47

DIAGNOSTIC WORKSHEET

Information from Customer

KEY POINTS

- **WHAT**..... Vehicle & A/T model
- **WHEN**..... Date, Frequencies
- **WHERE**..... Road conditions
- **HOW**..... Operating conditions, Symptoms

Customer name MR/MS	Model & Year	VIN
Trans. Model	Engine	Mileage
Incident Date	Manuf. Date	In Service Date
Frequency	❏ Continuous ❏ Intermittent (times a day)	
Symptoms	❏ Vehicle does not move. (❏ Any position ❏ Particular position)	
	❏ No up-shift (❏ 1st → 2nd ❏ 2nd → 3rd ❏ 3rd → 4th ❏ 4th → 5th)	
	❏ No down-shift (❏ 5th → 4th ❏ 4th → 3rd ❏ 3rd → 2nd ❏ 2nd → 1st)	
	❏ Lock-up malfunction	
	❏ Shift point too high or too low.	
	❏ Shift shock or slip (❏ N → D ❏ Lock-up ❏ Any drive position)	
	❏ Noise or vibration	
	❏ No kick down	
	❏ No pattern select	
	❏ Others ( )	
A/T CHECK indicator lamp	Blinks for about 8 seconds.	
	❏ Continuously lit	❏ Not lit
Malfunction indicator lamp (MIL)	❏ Continuously lit	❏ Not lit

Diagnostic Worksheet Chart

1	❏ Read the item on “cautions concerning fail-safe and understand the customer's complaint.			AT-42
2	❏ A/T fluid inspection			AT-51
		❏ Leak (Repair leak location.) ❏ State ❏ Amount		
3	❏ Stall test and line pressure test			AT-51, AT-52
		❏ Stall test		
			❏ Torque converter one-way clutch ❏ Front brake ❏ High and low reverse clutch ❏ Low coast brake ❏ Forward brake ❏ Forward one-way clutch	❏ 1st one-way clutch ❏ 3rd one-way clutch ❏ Engine ❏ Line pressure low ❏ Except for input clutch and direct clutch, clutches and brakes OK
		❏ Line pressure inspection - Suspected part:		

4	❏ Execute all road tests and enter checks in required inspection items.			AT-54
	4-1.	Check before engine is started		AT-55
		❏ The A/T CHECK Indicator Lamp does come on. AT-247 . ❏ Execute self-diagnostics Enter checks for detected items.		
			❏ Vehicle speed sensor·A/T. AT-116 . ❏ Vehicle speed sensor·MTR. AT-163 . ❏ Direct clutch solenoid valve. AT-195 . ❏ TCC solenoid valve. AT-123 . ❏ Line pressure solenoid valve.AT-133 . ❏ Input clutch solenoid valve. AT-176 . ❏ Front brake solenoid valve. AT-185 . ❏ Low coast brake solenoid valve. AT-214 . ❏ High and low reverse clutch solenoid valve. AT-204 . ❏ PNP switch. AT-111 . ❏ A/T fluid temperature sensors 1, 2. AT-152 . ❏ Turbine revolution sensors 1, 2. AT-158 . ❏ A/T interlock. AT-165 . ❏ A/T 1st engine braking. AT-172 . ❏ Start signal. AT-107 . ❏ Accelerator pedal position signal. AT-150 . ❏ Engine speed signal. AT-121 . ❏ CAN communication. AT-104 . ❏ TCM power supply. AT-138 . ❏ Battery ❏ Other	
	4-2.	Idle inspection		AT-55
		❏ Engine Cannot Be Started in “P” and “N” Position. AT-249 . ❏ In “ P” Position, Vehicle Moves When Pushed. AT-250 . ❏ In “N” Position Vehicle Moves. AT-251 . ❏ Large Shock “N” to “D” Position. AT-252 . ❏ Vehicle Does Not Creep Backward In “R” Position. AT-255 . ❏ Vehicle does Not Creep Forward In “D” Position. AT-258 .		
	4-3.	Driving tests		AT-56
		Part 1		
		❏ Vehicle Cannot Be Started From D1. AT-261 . ❏ A/T Does Not Shift: D1 → D2. AT-263 . ❏ A/T Does Not Shift: D2 → D3. AT-265 . ❏ A/T Does Not Shift: D3 → D4. AT-268 . ❏ A/T Does Not Shift: D4 → D5. AT-270 . ❏ A/T Does Not Perform Lock-up. AT-273 ❏ A/T Does Not Hold Lock-up Condition. AT-275 . ❏ Lock-up Is Not Released. AT-276 . ❏ Engine Speed Does Not Return To Idle. AT-277 .		

4	4-3	Part 2		AT-58
		❏ Vehicle Cannot Be Started From D1. AT-261 . ❏ A/T Does Not Shift: D1 → D2. AT-263 . ❏ A/T Does Not Shift: D2 → D3. AT-265 . ❏ A/T Does Not Shift: D3 → D4. AT-268 .		
		Part 3		AT-59
		❏ Cannot Be Changed Manual Mode. AT-278 ❏ A/T Does Not Shift: 5th gear→ 4th gear. AT-279 . ❏ A/T Does Not Shift: 4th gear → 3rd gear. AT-281 . ❏ A/T Does Not Shift: 3rd gear → 2nd gear. AT-283 . ❏ A/T Does Not Shift: 2nd gear →1st gear. AT-285 . ❏ Vehicle Does Not Decelerate By Engine Brake. AT-287 . ❏ Execute self-diagnostics Enter checks for detected items.		
			❏ Vehicle speed sensor·A/T. AT-116 . ❏ Vehicle speed sensor·MTR. AT-163 . ❏ Direct clutch solenoid valve.AT-195 . ❏ TCC solenoid valve. AT-123 . ❏ Line pressure solenoid valve.AT-133 . ❏ Input clutch solenoid valve. AT-176 . ❏ Front brake solenoid valve. AT-185 . ❏ Low coast brake solenoid valve. AT-214 . ❏ High and low reverse clutch solenoid valve. AT-204 ❏ PNP switch. AT-111 . ❏ A/T fluid temperature sensors 1, 2. AT-152 . ❏ Turbine revolution sensors 1, 2. AT-158 . ❏ A/T interlock. AT-165 . ❏ A/T 1st engine braking. AT-172 . ❏ Start signal.AT-107 . ❏ Accelerator pedal position signal. AT-150 . ❏ Engine sped signal. AT-121 . ❏ CAN communication. AT-104 . ❏ TCM power supply. AT-138 . ❏ Battery ❏ Other	
5	❏ Inspect each system for items found to be NG in the self-diagnostics and repair or replace the malfunction parts.			
6	❏ Execute all road tests and enter the checks again for the required items.			AT-54
7	❏ For any remaining NG items, execute the “diagnostics procedure” and repair or replace the malfunction parts. See the chart for diagnostics by symptoms. (This chart also contains other symptoms and inspection procedures.)			AT-62
8	❏ Erase the results of the self-diagnostics from the TCM.			AT-91, AT-102

A/T Electrical Parts Location

ACS002B7

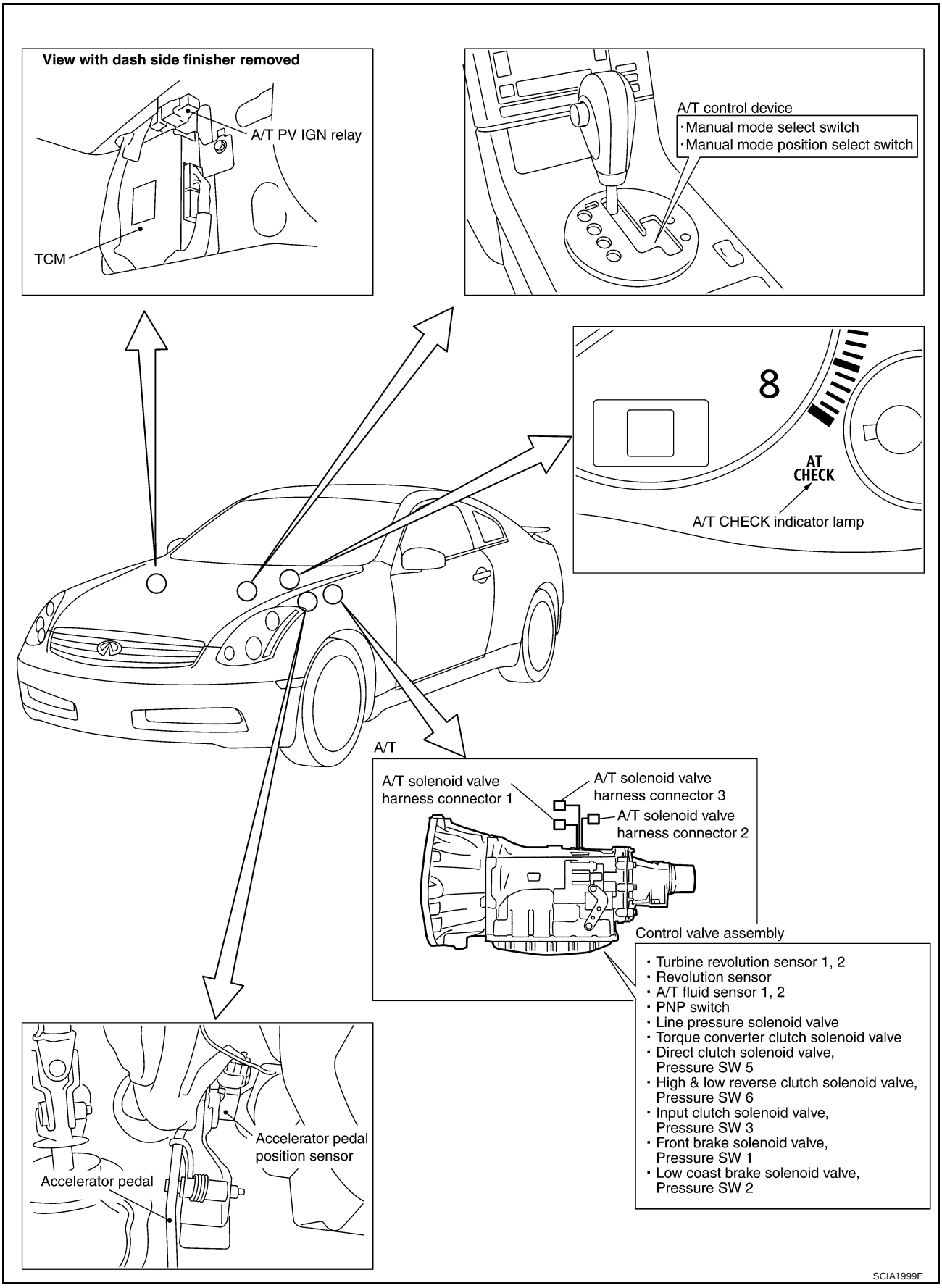

Circuit Diagram

ACS002B8

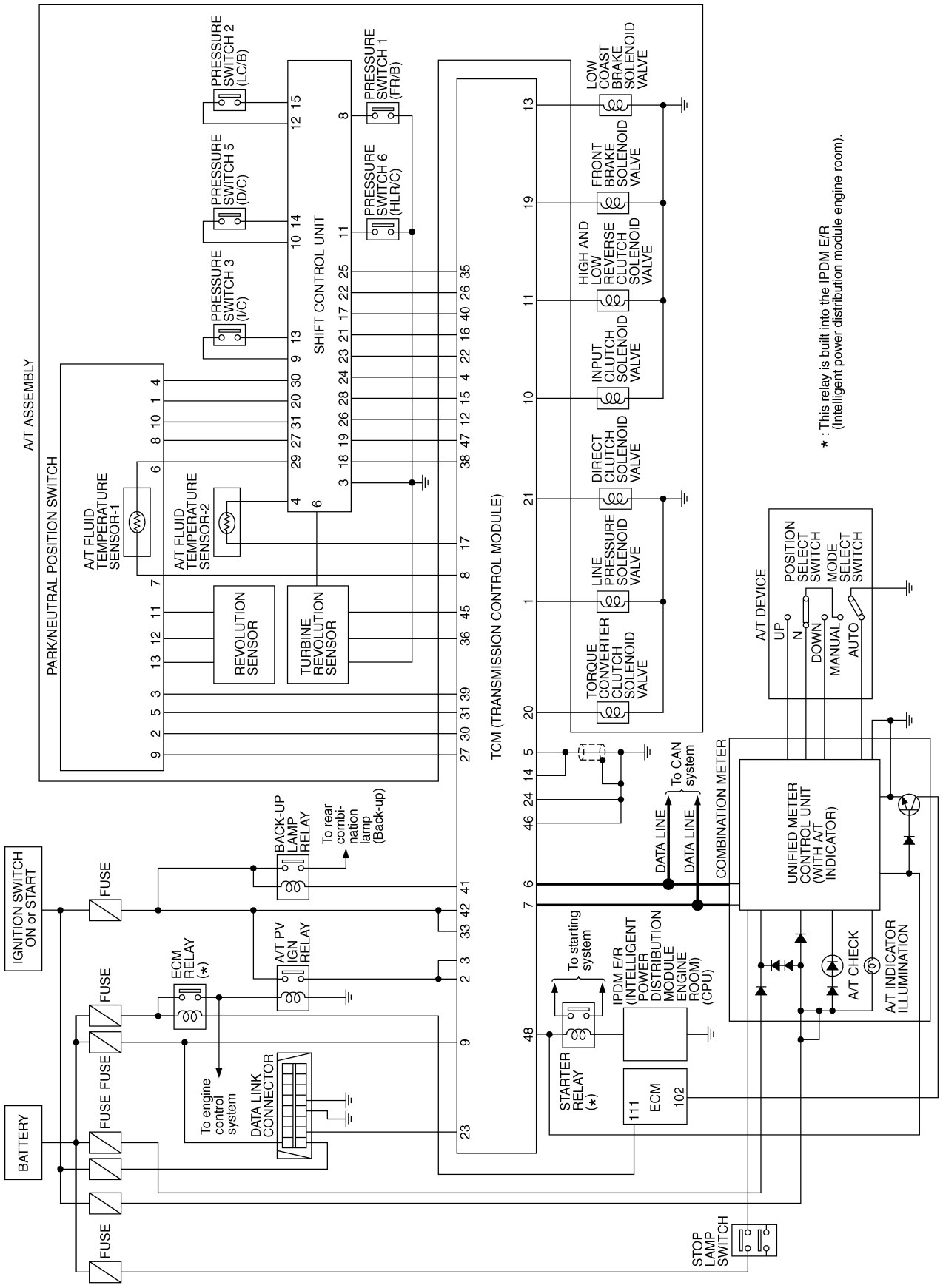

Inspections Before Trouble Diagnosis

ACS002B9

A/T FLUID CHECK

Fluid Leakage and Fluid Level Check

- Inspect for fluid leakage and check the fluid level. Refer to AT-13, "Checking A/T Fluid" .

Fluid Condition Check

Inspect the fluid condition.

Fluid status	Conceivable Cause	Required Operation
Varnished (viscous varnish state)	Clutch, brake scorched	Replace the A/T fluid and check the A/T main unit and the vehicle for malfunctions (wire harnesses, cooler pipes, etc.)
Milky white or cloudy	Water in the fluid	Replace the A/T fluid and check for places where water is getting in.
Large amount of metal powder mixed in	Unusual wear of sliding parts within A/T	Replace the A/T fluid and check for improper operation of the A/T.

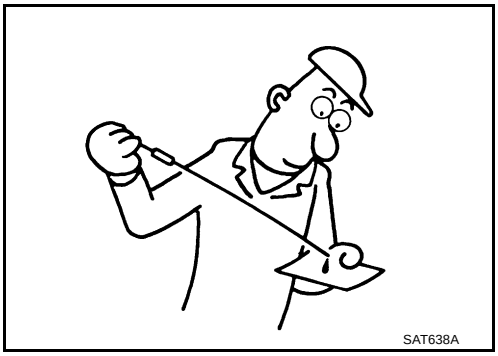

STALL TEST

Stall Test Procedure

1. Inspect the amount of engine oil. Replenish the engine oil if necessary.
2. Drive for about 10 minutes to warm up the vehicle so that the A/T fluid temperature is 50 to 80°C (122 to 176°F). Inspect the amount of A/T fluid. Replenish if necessary.

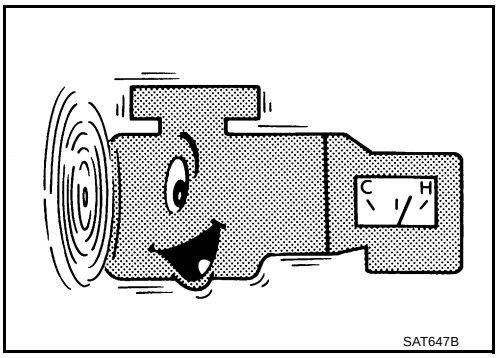

3. Securely engage the parking brake so that the tires do not turn.

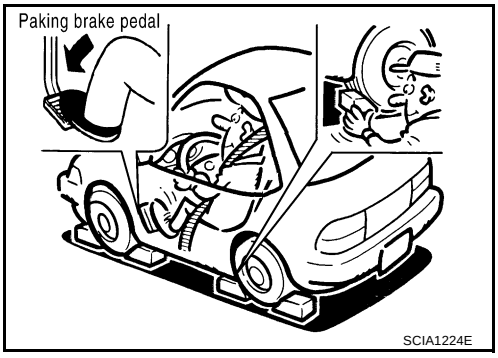

4. Engine start, apply foot brake, and place selector lever in “D” position.
5. While holding down the foot brake, gradually press down the accelerator pedal.
6. Quickly read off the stall speed, then quickly remove your foot from the accelerator pedal.

   CAUTION:
   Do not hold down the accelerator pedal for more than 5 seconds during this test.
7. Move the selector lever to the “N” position.
8. Cool down the A/T fluid.

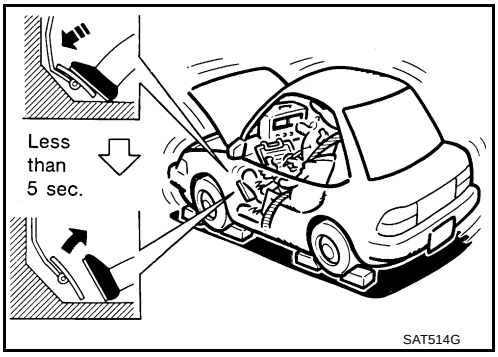

CAUTION:
Run the engine at idle for at least one minute.

Stall speed: 2,600 - 2,900 rpm

Judgement Stall Test

	Selector lever position		Expected problem location
	D, M	R	
Stall rotation	H	O	● Forward brake ● Forward one-way clutch ● 1st one-way clutch ● 3rd one-way clutch
	O	H	● Front brake ● Reverse brake ● 1st one-way clutch
	L	L	● Engine and torque converter one-way clutch
	H	H	● Line pressure low

O: Stall speed within standard value position
H: Stall speed higher than standard value
L: Stall speed lower than standard value

Stall test standard value position

Does not shift-up D, M position 1 → 2	Slipping in 2nd, 3rd, 4th gears	Direct clutch slippage
Does not shift-up D, M position 2 → 3	Slipping in 3rd, 4th, 5th gears	High and low reverse clutch slippage
Does not shift-up D, M position 3 → 4	Slipping in 4th, 5th gears	Input clutch slippage
Does not shift-up D, M position 4 → 5	Slipping in 5th gear	Front brake slippage

LINE PRESSURE TEST

Line Pressure Test Port

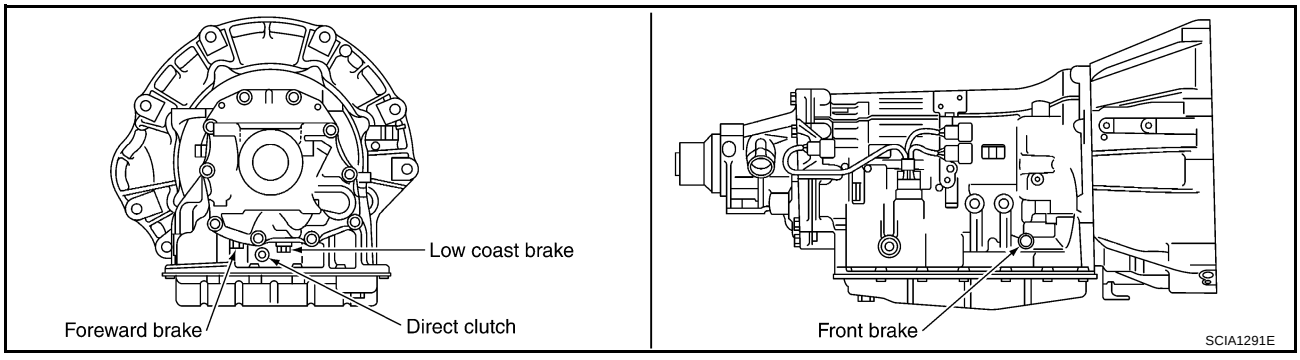

Line Pressure Test Procedure

1. Inspect the amount of engine oil and replenish if necessary.
2. Drive the car for about 10 minutes to warm it up so that the A/T fluid reaches in range of 50 to 80°C (122 to 176°F), then inspect the amount of A/T fluid and replenish if necessary.

   NOTE:
   The automatic fluid temperature rises in range of 50 to 80°C (122 to 176°F) during 10 minutes of driving.

3. After warming up A/T, remove the oil pressure detection plug and install the oil pressure gauge.

   CAUTION:
   When using the oil pressure gauge, be sure to use the O-ring attached to the oil pressure detection plug.

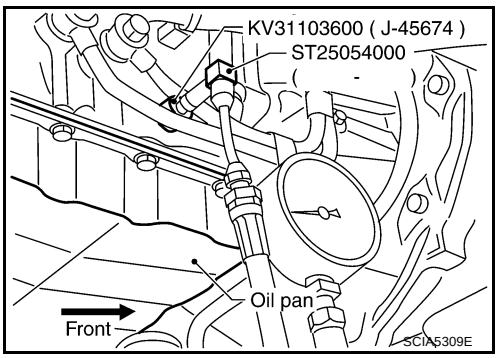

4. Securely engage the parking brake so that the tires do not turn.

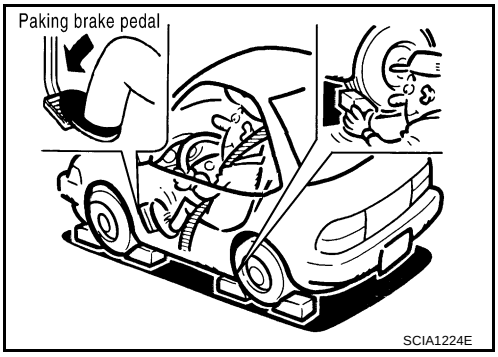

5. Start the engine, then measure the line pressure at both idle and the stall speed.

   CAUTION:
   - **Keep the brake pedal pressed all the way down during measurement.**
   - **When measuring the line pressure at the stall speed, refer to AT-51, "STALL TEST" .**

6. After the measurements are complete, install the oil pressure detection plug and tighten to the regulation torque below.

   :7.3 N·m (0.74 kg-m, 65 in-lb)

   CAUTION:
   Do not reuse the O-ring.

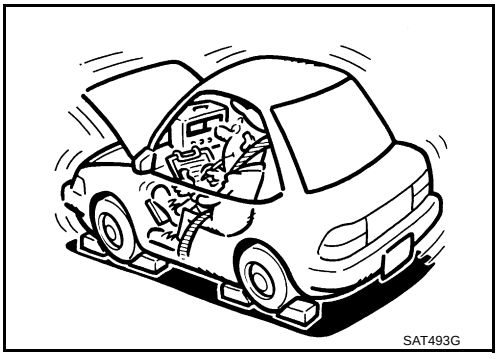

Line Pressure

Engine speed	Line pressure kPa (kg/cm^2 , psi)	
	R position	D, M positions
idle speed	392 - 441 (4.0 - 4.5, 57 - 64)	373 - 422 (3.8 - 4.3, 54 - 61)
stall speed	1,700 - 1,890 (17.3 - 19.3, 247 - 274)	1,310 - 1,500 (13.3 - 15.3, 190 - 218)

Judgement of Line Pressure Test

Judgement		Possible cause
Idle speed	Low for all positions (P, R, N, D, M)	Possible causes include malfunctions in the pressure supply system and low oil pump output. For example ● Oil pump wear ● Pressure regulator valve or plug sticking or spring fatigue ● Oil strainer ⇒ oil pump ⇒ pressure regulator valve passage oil leak ● Engine idle speed too low
	Only low for a specific position	Possible causes include an oil pressure leak in a passage or device related to the position after the pressure is distributed by the manual valve.
	High	Possible causes include a sensor malfunction or malfunction in the line pressure adjustment function. For example ● Accelerator pedal position signal malfunction ● ATF temperature sensor malfunction ● Line pressure solenoid malfunction (sticking in “OFF” state, filter clog, cut line) ● Pressure regulator valve or plug sticking
Stall speed	Oil pressure does not rise higher than the oil pressure for idle.	Possible causes include a sensor malfunction or malfunction in the line pressure adjustment function. For example ● Accelerator pedal position signal malfunction ● TCM breakdown ● Line pressure solenoid malfunction (shorting, sticking in“ ON” state) ● Pressure regulator valve or plug sticking ● Pilot valve sticking or pilot filter clogged
	The pressure rises, but does not enter the standard position.	Possible causes include malfunctions in the pressure supply system and malfunction in the line pressure adjustment function. For example ● Accelerator pedal position signal malfunction ● Line pressure solenoid malfunction (sticking, filter clog) ● Pressure regulator valve or plug sticking ● Pilot valve sticking or pilot filter clogged
	Only low for a specific position	Possible causes include an oil pressure leak in a passage or device related to the position after the pressure is distributed by the manual valve.

ROAD TEST

Description

- The road test inspects overall performance of the A/T and analyzes possible malfunction causes.
- The road test is carried out in the following three stages.

1. Check before engine is started. Refer to AT-55 .
2. Check at idle. Refer to AT-55 .
3. Cruise test

- Inspect all the items from Part 1 to Part 3. Refer to AT-56 , AT-58 , AT-59 .
- Before beginning the road test, check the test procedure and inspection items.
- Test all inspection items until the symptom is uncovered. Diagnose NG items when all road tests are complete.

Check Before Engine is Started

ACS002BA

1. CHECK A/T CHECK INDICATOR LAMP

1. Park vehicle on level surface.
2. Move selector lever to “P” position.
3. Turn ignition switch to “OFF” position and wait at least 10 seconds.
4. Turn ignition switch to “ON” position. (Do not start engine.)

Does A/T CHECK indicator lamp light up for about 2 seconds?

YES >> GO TO 2.
NO >> Stop the road test and go to AT-247, "A/T CHECK Indicator Lamp Does Not Come On" .

2. CHECK A/T CHECK INDICATOR LAMP

Does A/T CHECK indicator lamp flash for about 8 seconds?

YES >> For TCM fail-safe mode, carry out self-diagnostics and record all NG items on the diagnostics worksheet. Refer to AT-91 , AT-102 .
NO >> 1. Turn ignition switch to “OFF” position.
2. Go to AT-55, "Check at Idle" .

Check at Idle

ACS002BB

1. CHECK STARTING THE ENGINE

1. Park vehicle on level surface.
2. Move selector lever to “P” position.
3. Turn ignition switch to “OFF” position.
4. Turn ignition switch to “START” position.

Does the engine start?

YES >> GO TO 2.
NO >> Stop the road test and go to AT-249, "Engine Cannot Be Started In “P” or “N” Position" .

2. CHECK STARTING THE ENGINE

1. Turn ignition switch to “ACC” position.
2. Move selector lever in “D” or “R” position.
3. Turn ignition switch to “START” position.

Does the engine start in either position?

YES >> Stop the road test and go to AT-249, "Engine Cannot Be Started In “P” or “N” Position" .
NO >> GO TO 3.

3. CHECK “P” POSITION FUNCTIONS

1. Move selector lever to “P” position.
2. Turn ignition switch to “OFF” position.
3. Disengage the parking brake.
4. Push the vehicle forward or backward.
5. Engage the parking brake.

When you push the vehicle with disengaging the parking brake, does it move?

YES >> Enter a check mark at “Vehicle moves when pushed in “P” position” on the diagnostics worksheet, then continue the road test.
NO >> GO TO 4.

4. CHECK “N” POSITION FUNCTIONS

1. Start the engine.
2. Move selector lever to “N” position.
3. Release the parking brake.

Does vehicle move forward or backward?

YES >> Enter a check mark at “Vehicle moves in “N” position” on the diagnostics worksheet, then continue the road test.
NO >> GO TO 5.

5. CHECK SHIFT SHOCK

1. Engage the brake.
2. Move selector lever to “D” position.

When the transmission is shifted from “N” to “D”, is there an excessive shock?

YES >> Enter a check mark at “Large shock when shifted from N to D” on the diagnostics worksheet, then continue the road test.
NO >> GO TO 6.

6. CHECK “R” POSITION FUNCTIONS

1. Engage the brake.
2. Move selector lever to “R” position.
3. Disengage the brake for 4 to 5 seconds.

Does the vehicle creep backward?

YES >> GO TO 7.
NO >> Enter a check mark at “Vehicle does not creep backward in R position” on the diagnostics worksheet, then continue the road test.

7. CHECK “D” POSITION FUNCTIONS

Inspect whether the vehicle creep forward when the transmission is put into the “D” position.

Does the vehicle creep forward in the “D” position?

YES >> Go to AT-56, "Cruise Test - Part 1" , AT-58, "Cruise Test - Part 2" , and AT-59, "Cruise Test - Part 3" .
NO >> Enter a check mark at “Vehicle does not creep forward in D position” on the diagnostics worksheet, then continue the road test.

Cruise Test - Part 1

ACS002BC

Cruise test Part 1

1. CHECK STARTING OUT FROM D1

1. Drive the vehicle for about 10 minutes to warm up the engine oil and A/T fluid.
   Appropriate temperature for the A/T fluid: 50 - 80°C (122 - 176°F)
2. Park the vehicle on a level surface.
3. Move selector lever to “P” position.
4. Start the engine.
5. Move selector lever to “D” position.
6. Press the accelerator pedal about half way down to accelerate the vehicle.

With CONSULT-II

Read off the gear positions.

Starts from D1?

YES >> GO TO 2.
NO >> Enter a check mark at “Vehicle cannot be started from D1” on the diagnostics worksheet, then continue the road test.

2. CHECK SHIFT-UP D1 → D2

Press down the accelerator pedal about half way and inspect if the vehicle shifts up (D1 → D2) at the appropriate speed.

- Refer to AT-61 .

With CONSULT-II

Read the gear position, throttle degree of opening, and vehicle speed.

Does the A/T shift up D1 → D2 at the correct speed?

YES >> GO TO 3.
NO >> Enter a check mark at “A/T does not shift D1 → D2” on the diagnostics worksheet, then continue the road test.

3. CHECK SHIFT-UP D2 → D3

Press down the accelerator pedal about half way and inspect if the vehicle shifts up (D2 → D3) at the appropriate speed.

- Refer to AT-61 .

With CONSULT-II

Read the gear position, throttle degree of opening, and vehicle speed.

Does the A/T shift up D2 → D3 at the correct speed?

YES >> GO TO 4.
NO >> Enter a check mark at “A/T does not shift D2 → D3” on the diagnostics worksheet, then continue the road test.

4. CHECK SHIFT-UP D3 → D4

Press down the accelerator pedal about half way and inspect if the vehicle shifts up (D3 → D4) at the appropriate speed.

- Refer to AT-61 .

With CONSULT-II

Read the gear position, throttle degree of opening, and vehicle speed.

Does the A/T shift up D3 → D4 at the correct speed?

YES >> GO TO 5.
NO >> Enter a check mark at “A/T does not shift D3 → D4” on the diagnostics worksheet, then continue the road test.

5. CHECK SHIFT-UP D4 → D5

Press down the accelerator pedal about half way and inspect if the vehicle shifts up (D4 → D5) at the appropriate speed.

- Refer to AT-61 .

With CONSULT-II

Read the gear position, throttle degree of opening, and vehicle speed.

Does the A/T shift up D4 → D5 at the correct speed?

YES >> GO TO 6.
NO >> Enter a check mark at “A/T does not shift D4 → D5” on the diagnostics worksheet, then continue the road test.

6. CHECK LOCK-UP

When releasing accelerator pedal from D5, check lock-up from D5 to L/U.

- Refer to AT-61 .

With CONSULT-II

Select “TCC SOLENOID 0.00A” with the “MAIN SIGNAL” mode for A/T. Refer to AT-91, "CONSULT-II REFERENCE VALUE" .

Does it lock-up?

YES >> GO TO 7.
NO >> Enter a check mark at “A/T does not perform lock-up” on the diagnostics worksheet, then continue the road test.

7. CHECK LOCK-UP HOLD

Does it maintain lock-up status?

YES >> GO TO 8.
NO >> Enter a check mark at “A/T hold does not lock-up condition” on the diagnostics worksheet, then continue the road test.

8. CHECK LOCK-UP RELEASE

Check lock-up cancellation by depressing brake pedal lightly to decelerate.

With CONSULT-II

Select “TCC SOLENOID 0.00A” with the “MAIN SIGNAL” mode for A/T. Refer to AT-91, "CONSULT-II REFERENCE VALUE" .

Does lock-up cancel?

YES >> GO TO 9.
NO >> Enter a check mark at “Lock-up is not released” on the diagnostics worksheet, then continue the road test.

9. CHECK SHIFT-DOWN D5 → D4

Decelerate by pressing lightly on the brake pedal.

With CONSULT-II

Read the gear position and engine speed.

When the A/T shift down D5 → D4, does the engine speed drop smoothly back to idle?

YES >> 1. Stop the vehicle.
2. Go to Cruise test - Part 2 (Refer to AT-58).

NO >> Enter a check mark at “A/T does not shift down” on the diagnostics worksheet, then continue the road test. Go to Cruise test - Part 2 (Refer to AT-58).

Cruise Test - Part 2

ACS002BD

Cruise test Part 2

1. CHECK STARTING FROM D1

1. Move selector lever the “D” position.
2. Accelerate at half throttle.

With CONSULT-II

Read the gear position.

Does it start from D1?

YES >> GO TO 2.
NO >> Enter a check mark at “Vehicle cannot be started from D1” on the diagnostics worksheet, then continue the road test.

2. CHECK SHIFT-UP D1 → D2

Press the accelerator pedal down all the way and inspect whether or not the transmission shifts up (D1 → D2) at the correct speed.

- Refer to AT-61 .

With CONSULT-II

Read the gear position, throttle position and vehicle speed.

Does the A/T shift-up D1 → D2 at the correct speed?

YES >> GO TO 3.
NO >> Enter a check mark at "Vehicle does not shift D1 → D2" on the diagnostics worksheet, then continue the road test.

3. CHECK SHIFT-UP D2 → D3

Press the accelerator pedal down all the way and inspect whether or not the transmission shifts up (D2 → D3) at the correct speed.

- Refer to AT-61 .

With CONSULT-II

Read the gear position, throttle position and vehicle speed.

Does the A/T shift-up D2 → D3 at the correct speed?

YES >> GO TO 4.
NO >> Enter a check mark at "Vehicle does not shift D2 → D3" on the diagnostics worksheet, then continue the road test.

4. CHECK SHIFT-UP D3 → D4 AND ENGINE BRAKE

When the transmission changes speed D3 → D4, return the accelerator pedal.

Does the A/T shift-up D3 → D4 and apply the engine brake?

YES >> 1. Stop the vehicle.
2. Go to Cruise test - Part 3 (Refer to AT-59).
NO >> Enter a check mark at "Vehicle does not shift D3 → D4" on the diagnostics worksheet, then continue the road test.

Cruise Test - Part 3

ACS002BE

Cruise test Part 3

1. MANUAL MODE FUNCTION

Move to manual mode from D position.

Does it switch to manual mode?

Yes >> GO TO 2.
No >> Continue road test and add checkmark to "Cannot be changed to manual mode" on diagnostics worksheet.

2. CHECK SHIFT-DOWN

During manual mode driving, is downshift from $5^M \rightarrow 4^M \rightarrow 3^M \rightarrow 2^M \rightarrow 1^M$ performed?

With CONSULT-II

Read the gear position.

Is downshifting correctly performed?

YES >> GO TO 3.
NO >> Enter a check mark at "Vehicle does not shift" at the corresponding position (5th → 4th, 4th → 3rd, 3rd → 2nd, 2nd → 1st) on the diagnostics worksheet, then continue the road test.

3. CHECK ENGINE BRAKE

Does engine braking effectively reduce speed in M1 position?

YES >> 1. Stop the vehicle.

2. Carry out the self-diagnostics. Refer to AT-91, "CONSULT-II SETTING PROCEDURE" , AT-102, "Diagnostic Procedure Without CONSULT-II" .

NO >> Enter a check mark at “Vehicle does not decelerate by engine brake” on the diagnostics work-sheet, then continue trouble diagnosis.

Vehicle Speed When Shifting Gears

ACS002BF

Throttle position	Vehicle speed km/h (MPH)							
	$D_1 \rightarrow D_2$	$D_2 \rightarrow D_3$	$D_3 \rightarrow D_4$	$D_4 \rightarrow D_5$	$D_5 \rightarrow D_4$	$D_4 \rightarrow D_3$	$D_3 \rightarrow D_2$	$D_2 \rightarrow D_1$
Full throttle	58 - 62 (36 - 39)	90 - 98 (56 - 61)	140 - 150 (87 - 93)	201 - 211 (125 - 131)	197 - 207 (122 - 129)	122 - 132 (76 - 83)	74 - 82 (46 - 51)	34 - 48 (23 - 25)
Half throttle	46 - 50 (29 - 31)	71 - 79 (44 - 49)	107 - 117 (66 - 73)	135 - 145 (84 - 90)	88 - 98 (55 - 61)	63 - 73 (39 - 45)	29 - 37 (18 - 23)	11 - 15 (7 - 9)

- At half throttle, the accelerator opening is 4/8 of the full opening.

Vehicle Speed When Performing and Releasing Complete Lock-up

ACS002BG

Throttle position	Vehicle speed km/h (MPH)	
	Lock-up “ON”	Lock-up “OFF”
Closed throttle	56 - 64 (35 - 40)	53 - 61 (33 - 38)
Half throttle	168 - 176 (104 - 109)	131 - 139 (81 - 86)

- At closed throttle, the accelerator opening is less than 1/8 condition.
- At half throttle, the accelerator opening is 4/8 of the full opening.

Vehicle Speed When Performing and Releasing Slip Lock-up

ACS002BH

Throttle position	Gear position	Vehicle speed km/h (MPH)	
		Slip lock-up “ON”	Slip lock-up “OFF”
Closed throttle	4th	37 - 45 (23 - 28)	34 - 42 (21 - 26)
	5th	44 - 52 (27 - 32)	41 - 49 (25 - 30)

- At closed throttle, the accelerator opening is less than 1/8 condition.

Symptom Chart

ACS002BI

The diagnostics item numbers show the sequence for inspection. Inspect in order from Item 1.

No.	Items	Symptom	Condition	Diagnostic Item	Reference page
1	Shift Shock	Large shock. (“N” →“ D” position) Refer to AT-252, "Large Shock (“N” to “D” Position)" .	ON vehicle	1. Engine idle speed	EC-30
				2. Engine speed signal	AT-121
				3. Accelerator pedal position sensor	AT-150
				4. Control linkage adjustment	AT-290
				5. ATF temperature sensor	AT-152
				6. ATF pressure switch 1 and front brake solenoid valve	AT-227, AT-185
				7. CAN communication line	AT-104
				8. Fluid level and state	AT-51
				9. Line pressure test	AT-52
				10. Control valve assembly	AT-301
			OFF vehicle	11. Forward brake* (ATF condition “NG” only. Refer to AT-51, "Fluid Condition Check" .)	AT-327
2		Shock is too large when changing $D_1 \rightarrow D_2$ or $M_1 \rightarrow M_2$.	ON vehicle	1. Accelerator pedal position sensor	AT-150
				2. Control linkage adjustment	AT-290
				3. ATF pressure switch 5 and direct clutch solenoid valve	AT-235, AT-195
				4. CAN communication line	AT-104
				5. Engine speed signal	AT-121
				6. Turbine revolution sensor	AT-158
				7. Vehicle speed sensor A/T and vehicle speed sensor MTR	AT-116, AT-163
				8. Fluid level and state	AT-51
				9. Control valve assembly	AT-301
			OFF vehicle	10. Direct clutch (ATF condition “NG” only. Refer to AT-51, "Fluid Condition Check" .)	AT-358
3		Shock is too large when changing $D_2 \rightarrow D_3$ or $M_2 \rightarrow M_3$.	ON vehicle	1. Accelerator pedal position sensor	AT-150
				2. Control linkage adjustment	AT-290
				3. ATF pressure switch 6, high and low reverse clutch solenoid valve	AT-239, AT-204
				4. CAN communication line	AT-104
				5. Engine speed signal	AT-121
				6. Turbine revolution sensor	AT-158
				7. Vehicle speed sensor A/T and vehicle speed sensor MTR	AT-116, AT-163
				8. Fluid level and state	AT-51
				9. Control valve assembly	AT-301
			OFF vehicle	10. High and low reverse clutch (ATF condition “NG” only. Refer to AT-51, "Fluid Condition Check" .)	AT-356

No.	Items	Symptom	Condition	Diagnostic Item	Reference page
4	Shift Shock	Shock is too large when changing $D_3 \rightarrow D_4$ or $M_3 \rightarrow M_4$.	ON vehicle	1. Accelerator pedal position sensor	AT-150
				2. Control linkage adjustment	AT-290
				3. ATF pressure switch 3 and input clutch solenoid valve	AT-231, AT-176
				4. CAN communication line	AT-104
				5. Engine speed signal	AT-121
				6. Turbine revolution sensor	AT-158
				7. Vehicle speed sensor A/T and vehicle speed sensor MTR	AT-116, AT-163
				8. Fluid level and state	AT-51
				9. Control valve assembly	AT-301
			OFF vehicle	10. Input clutch (ATF condition “NG” only. Refer to AT-51, "Fluid Condition Check" .)	AT-346
5		Shock is too large when changing $D_4 \rightarrow D_5$ or $M_4 \rightarrow M_5$.	ON vehicle	1. Accelerator pedal position sensor	AT-150
				2. Control linkage adjustment	AT-290
				3. ATF pressure switch 1 and front brake solenoid valve	AT-227, AT-185
				4. CAN communication line	AT-104
				5. Engine speed signal	AT-121
				6. Turbine revolution sensor	AT-158
				7. Vehicle speed sensor A/T and vehicle speed sensor MTR	AT-116, AT-163
				8. Fluid level and state	AT-51
				9. Control valve assembly	AT-301
			OFF vehicle	10. Front brake [brake band (ATF condition “NG” only. Refer to AT-51, "Fluid Condition Check" .)]	AT-319
				11. Input clutch (ATF condition “NG” only. Refer toAT-51, "Fluid Condition Check" .)	AT-346
6		Shock is too large for downshift when accelerator pedal is pressed.	ON vehicle	1. Accelerator pedal position sensor	AT-150
				2. Control linkage adjustment	AT-290
				3. CAN communication line	AT-104
				4. Engine speed signal	AT-121
				5. Turbine revolution sensor	AT-158
				6. Vehicle speed sensor A/T and vehicle speed sensor MTR	AT-116, AT-163
				7. Fluid level and state	AT-51
				8. Control valve assembly	AT-301
			OFF vehicle	9. Front brake [brake band (ATF condition “NG” only. Refer to AT-51, "Fluid Condition Check" .)]	AT-319
				10. Input clutch (ATF condition “NG” only. Refer toAT-51, "Fluid Condition Check" .)	AT-51
				11. High and low reverse clutch (ATF condition “NG” only. Refer to AT-51, "Fluid Condition Check" .)	AT-356
				12. Direct clutch (ATF condition “NG” only. Refer toAT-51, "Fluid Condition Check" .)	AT-358

No.	Items	Symptom	Condition	Diagnostic Item	Reference page
7	Shift Shock	Shock is too large for upshift when accelerator pedal is released.	ON vehicle	1. Accelerator pedal position sensor	AT-150
				2. Control linkage adjustment	AT-290
				3. Engine speed signal	AT-121
				4. CAN communication line	AT-104
				5. Turbine revolution sensor	AT-158
				6. Vehicle speed sensor A/T and vehicle speed sensor MTR	AT-116, AT-163
				7. Fluid level and state	AT-51
				8. Control valve assembly	AT-301
			OFF vehicle	9. Front brake [brake band (ATF condition “NG” only. Refer to AT-51, "Fluid Condition Check" .)]	AT-319
				10. Input clutch (ATF condition “NG” only. Refer to AT-51, "Fluid Condition Check" .)	AT-346
				11. High and low reverse clutch (ATF condition “NG” only. Refer toAT-51, "Fluid Condition Check" .)	AT-356
				12. Direct clutch (ATF condition “NG” only. Refer to AT-51, "Fluid Condition Check" .)	AT-358
8		Shock is too large for lock-up.	ON vehicle	1. Accelerator pedal position sensor	AT-150
				2. Control linkage adjustment	AT-290
				3. Engine speed signal	AT-121
				4. CAN communication line	AT-104
				5. Turbine revolution sensor	AT-158
				6. Vehicle speed sensor A/T and vehicle speed sensor MTR	AT-116, AT-163
				7. Torque converter clutch solenoid valve	AT-123
				8. Fluid level and state	AT-51
				9. Control valve assembly	AT-301
			OFF vehicle	10. Torque converter (ATF condition “NG” only. Refer to AT-51, "Fluid Condition Check" .)	AT-327
9		Shock is too large during engine brake.	ON vehicle	1. Accelerator pedal position sensor	AT-150
				2. Control linkage adjustment	AT-290
				3. CAN communication line	AT-104
				4. Fluid level and state	AT-51
				5. Control valve assembly	AT-301
			OFF vehicle	6. Front brake [brake band (ATF condition “NG” only. Refer to AT-51, "Fluid Condition Check" .)]	AT-319
				7. Input clutch (ATF condition “NG” only. Refer toAT-51, "Fluid Condition Check" .)	AT-346
				8. High and low reverse clutch (ATF condition “NG” only. Refer to AT-51, "Fluid Condition Check" .)	AT-356
				9. Direct clutch (ATF condition “NG” only. Refer toAT-51, "Fluid Condition Check" .)	AT-358

No.	Items	Symptom	Condition	Diagnostic Item	Reference page
10	No Up Shift	Gear does not change from $D_1 \rightarrow D_2$ or from $M_1 \rightarrow M_2$. Refer to AT-263, "A/T Does Not Shift: $D_1 \rightarrow D_2$".	ON vehicle	1. Fluid level and state	AT-51
				2. Vehicle speed sensor A/T and vehicle speed sensor MTR	AT-116, AT-163
				3. ATF pressure switch 5 and direct clutch solenoid valve	AT-235, AT-195
				4. Line pressure test	AT-52
				5. CAN communication line	AT-104
				6. Control valve assembly	AT-301
			OFF vehicle	7. Direct clutch (ATF condition “NG” only. Refer to AT-51, "Fluid Condition Check".)	AT-358
11		Gear does not change from $D_2 \rightarrow D_3$ or from $M_2 \rightarrow M_3$. Refer to AT-265, "A/T Does Not Shift: $D_2 \rightarrow D_3$".	ON vehicle	1. Fluid level and state	AT-51
				2. Vehicle speed sensor A/T and vehicle speed sensor MTR	AT-116, AT-163
				3. ATF pressure switch 6, high and low reverse clutch solenoid valve	AT-239, AT-204
				4. Line pressure test	AT-52
				5. CAN communication line	AT-104
				6. Control valve assembly	AT-301
			OFF vehicle	7. High and low reverse clutch (ATF condition “NG” only. Refer to AT-51, "Fluid Condition Check".)	AT-356
12		Gear does not change from $D_3 \rightarrow D_4$ or from $M_3 \rightarrow M_4$. Refer to AT-268, "A/T Does Not Shift: $D_3 \rightarrow D_4$".	ON vehicle	1. Fluid level and state	AT-51
				2. Vehicle speed sensor A/T and vehicle speed sensor MTR	AT-116, AT-163
				3. ATF pressure switch 3 and input clutch solenoid valve	AT-231, AT-176
				4. ATF pressure switch 1 and front brake solenoid valve	AT-227, AT-185
				5. Line pressure test	AT-52
				6. CAN communication line	AT-104
				7. Control valve assembly	AT-301
			OFF vehicle	8. Input clutch (ATF condition “NG” only. Refer to AT-51, "Fluid Condition Check".)	AT-346
13		Gear does not change from $D_4 \rightarrow D_5$ or from $M_4 \rightarrow M_5$. Refer to AT-270, "A/T Does Not Shift: $D_4 \rightarrow D_5$".	ON vehicle	1. Fluid level and state	AT-51
				2. Vehicle speed sensor A/T and vehicle speed sensor MTR	AT-116, AT-163
				3. ATF pressure switch 1 and front brake solenoid valve	AT-227, AT-185
				4. ATF pressure switch 5 and direct clutch solenoid valve	AT-235, AT-195
				5. Turbine revolution sensor	AT-158
				6. Line pressure test	AT-52
				7. CAN communication line	AT-104
				8. Control valve assembly	AT-301
			OFF vehicle	9. Front brake [brake band (ATF condition “NG” only. Refer to AT-51, "Fluid Condition Check".)]	AT-327
				10. Input clutch (ATF condition “NG” only. Refer to AT-51, "Fluid Condition Check".)	AT-346

No.	Items	Symptom	Condition	Diagnostic Item	Reference page
14	No Down Shift	In D or M range, does not downshift to 4th gear. Refer to AT-279, "A/T Does Not Shift: 5th gear → 4th gear" .	ON vehicle	1. Fluid level and state	AT-51
				2. Vehicle speed sensor A/T and vehicle speed sensor MTR	AT-116, AT-163
				3. ATF pressure switch 1 and front brake solenoid valve	AT-227, AT-185
				4. ATF pressure switch 5 and direct clutch solenoid valve	AT-235, AT-195
				5. CAN communication line	AT-104
				6. Line pressure test	AT-52
				7. Control valve assembly	AT-301
			OFF vehicle	8. Front brake [brake band (ATF condition “NG” only. Refer to AT-51, "Fluid Condition Check" .)]	AT-327
				9. Input clutch (ATF condition “NG” only. Refer to AT-51, "Fluid Condition Check" .)	AT-346
15		In D or M range, does not downshift to 3rd gear. Refer to AT-281, "A/T Does Not Shift: 4th gear → 3rd gear" .	ON vehicle	1. Fluid level and state	AT-51
				2. Vehicle speed sensor A/T and vehicle speed sensor MTR	AT-116, AT-163
				3. ATF pressure switch 3 and input clutch solenoid valve	AT-231, AT-176
				4. ATF pressure switch 1 and front brake solenoid valve	AT-227, AT-185
				5. CAN communication line	AT-104
				6. Line pressure test	AT-52
				7. Control valve assembly	AT-301
			OFF vehicle	8. Input clutch (ATF condition “NG” only. Refer to AT-51, "Fluid Condition Check" .)	AT-346
16		In D or M range, does not downshift to 2nd gear. Refer to AT-283, "A/T Does Not Shift: 3rd gear → 2nd gear" .	ON vehicle	1. Fluid level and state	AT-51
				2. Vehicle speed sensor A/T and vehicle speed sensor MTR	AT-116, AT-163
				3. ATF pressure switch 6, high and low reverse clutch sole-noid valve	AT-239, AT-204
				4. CAN communication line	AT-104
				5. Line pressure test	AT-52
				6. Control valve assembly	AT-301
			OFF vehicle	7. High and low reverse clutch (ATF condition “NG” only. Refer to AT-51, "Fluid Condition Check" .)	AT-356
17		In D or M range, does not downshift to 1st gear. Refer to AT-285, "A/T Does Not Shift: 2nd gear → 1st gear" .	ON vehicle	1. Fluid level and state	AT-51
				2. Vehicle speed sensor A/T and vehicle speed sensor MTR	AT-116, AT-163
				3. ATF pressure switch 5 and direct clutch solenoid valve	AT-235, AT-195
				4. CAN communication line	AT-104
				5. Line pressure test	AT-52
				6. Control valve assembly	AT-301
			OFF vehicle	7. Direct clutch (ATF condition “NG” only. Refer to AT-51, "Fluid Condition Check" .)	AT-358

No.	Items	Symptom	Condition	Diagnostic Item	Reference page
18	Slips/Will Not engage	When D or M position, remains in 1st gear.	ON vehicle	1. Fluid level and state	AT-51
				2. Vehicle speed sensor A/T and vehicle speed sensor MTR	AT-116, AT-163
				3. Direct clutch solenoid valve	AT-195
				4. Line pressure test	AT-52
				5. CAN communication line	AT-104
				6. Control valve assembly	AT-301
			OFF vehicle	7. 3rd one-way clutch (ATF condition “NG” only. Refer to AT-51, "Fluid Condition Check" .)	AT-344
				8. 1st one-way clutch (ATF condition “NG” only. Refer to AT-51, "Fluid Condition Check" .)	AT-351
				9. Gear system (ATF condition “NG” only. Refer to AT-51, "Fluid Condition Check" .)	AT-319
				10. Reverse brake (ATF condition “NG” only. Refer toAT-51, "Fluid Condition Check" .)	AT-327
				11. Forward one-way clutch* (ATF condition “NG” only. Refer toAT-51, "Fluid Condition Check" .)	AT-327
				12. Forward brake* (ATF condition “NG” only. Refer toAT-51, "Fluid Condition Check" .)	AT-327

No.	Items	Symptom	Condition	Diagnostic Item	Reference page
19	Slips/Will Not engage	When D or M position, remains in 2nd gear.	ON vehicle	1. Fluid level and state	AT-51
				2. Vehicle speed sensor A/T and vehicle speed sensor MTR	AT-116 , AT-163
				3. Low coast brake solenoid valve	AT-214
				4. Line pressure test	AT-52
				5. CAN communication line	AT-104
				6. Control valve assembly	AT-301
			OFF vehicle	7. 3rd one-way clutch (ATF condition “NG” only. Refer to AT-51, "Fluid Condition Check" .)	AT-344
				8. Gear system (ATF condition “NG” only. Refer to AT-51, "Fluid Condition Check" .)	AT-319
				9. Direct clutch (ATF condition “NG” only. Refer to AT-51, "Fluid Condition Check" .)	AT-358
				10. Forward brake* (ATF condition “NG” only. Refer toAT-51, "Fluid Condition Check" .)	AT-327
20		When D or M position, remains in 3rd gear.	ON vehicle	1. Fluid level and state	AT-51
				2. Vehicle speed sensor A/T and vehicle speed sensor MTR	AT-116, AT-163
				3. Line pressure test	AT-52
				4. CAN communication line	AT-104
				5. Control valve assembly	AT-301
			OFF vehicle	6. 3rd one-way clutch (ATF condition “NG” only. Refer to AT-51, "Fluid Condition Check" .)	AT-344
				7. Gear system (ATF condition “NG” only. Refer to AT-51, "Fluid Condition Check" .)	AT-319
				8. High and low reverse clutch (ATF condition “NG” only. Refer toAT-51, "Fluid Condition Check" .)	AT-356
				9. Forward one-way clutch* (ATF condition “NG” only. Refer to AT-51, "Fluid Condition Check" .)	AT-327
				10. Forward brake* (ATF condition “NG” only. Refer toAT-51, "Fluid Condition Check" .)	AT-327

No.	Items	Symptom	Condition	Diagnostic Item	Reference page
21	Slips/Will Not engage	When D or M position, remains in 4th gear.	ON vehicle	1. Fluid level and state	AT-51
				2. Vehicle speed sensor A/T and vehicle speed sensor MTR	AT-116, AT-163
				3. ATF pressure switch 3 and input clutch solenoid valve	AT-231, AT-176
				4. ATF pressure switch 5 and direct clutch solenoid valve	AT-235,AT-195
				5. ATF pressure switch 6, high and low reverse clutch solenoid valve	AT-239, AT-204
				6. Low coast brake solenoid valve	AT-214
				7. Front brake solenoid valve	AT-185
				8. Line pressure test	AT-52
				9. CAN communication line	AT-104
				10. Control valve assembly	AT-301
			OFF vehicle	11. Input clutch (ATF condition “NG” only. Refer to AT-51, "Fluid Condition Check" .)	AT-346
				12. Gear system (ATF condition “NG” only. Refer toAT-51, "Fluid Condition Check" .)	AT-319
				13. High and low reverse clutch (ATF condition “NG” only. Refer to AT-51, "Fluid Condition Check" .)	AT-356
				14. Direct clutch (ATF condition “NG” only. Refer to AT-51, "Fluid Condition Check" .)	AT-358
22		When D or M position, remains in 5th gear.	ON vehicle	1. Fluid level and state	AT-51
				2. Vehicle speed sensor A/T and vehicle speed sensor MTR	AT-116, AT-163
				3. ATF pressure switch 1 and front brake solenoid valve	AT-227, AT-185
				4. Line pressure test	AT-52
				5. CAN communication line	AT-104
				6. Control valve assembly	AT-301
			OFF vehicle	7. Front brake [brake band (ATF condition “NG” only. Refer to AT-51, "Fluid Condition Check" .)]	AT-327
				8. Input clutch (ATF condition “NG” only. Refer to AT-51, "Fluid Condition Check" .)	AT-346
				9. Gear system (ATF condition “NG” only. Refer to AT-51, "Fluid Condition Check" .)	AT-319
				10. High and low reverse clutch (ATF condition “NG” only. Refer to AT-51, "Fluid Condition Check" .)	AT-356

No.	Items	Symptom	Condition	Diagnostic Item	Reference page
23	Slips/Will Not Engage	Vehicle cannot be started from D1 . Refer toAT-261, "Vehicle Cannot Be Started From D1" .	ON vehicle	1. Fluid level and state	AT-51
				2. Accelerator pedal position sensor	AT-150
				3. Line pressure test	AT-52
				4. CAN communication line	AT-104
				5. Control valve assembly	AT-301
			OFF vehicle	6. Torque converter (ATF condition “NG” only. Refer to AT-51, "Fluid Condition Check" .)	AT-327
				7. Oil pump assembly (ATF condition “NG” only. Refer toAT-51, "Fluid Condition Check" .)	AT-341
				8. 3rd one-way clutch (ATF condition “NG” only. Refer to AT-51, "Fluid Condition Check" .)	AT-344
				9. 1st one-way clutch (ATF condition “NG” only. Refer to AT-51, "Fluid Condition Check" .)	AT-351
				10. Gear system (ATF condition “NG” only. Refer to AT-51, "Fluid Condition Check" .)	AT-319
				11. Reverse brake (ATF condition “NG” only. Refer to AT-51, "Fluid Condition Check" .)	AT-327
				12. Forward one-way clutch* (ATF condition “NG” only. Refer to AT-51, "Fluid Condition Check" .)	AT-327
				13. Forward brake* (ATF condition “NG” only. Refer toAT-51, "Fluid Condition Check" .)	AT-327
24		Does not lock-up. Refer to AT-273, "A/T Does Not Perform Lock-up" .	ON vehicle	1. Fluid level and state	AT-51
				2. Line pressure test	AT-52
				3. Engine speed signal	AT-121
				4. Turbine revolution sensor	AT-158
				5. Torque converter clutch solenoid valve	AT-123
				6. CAN communication line	AT-104
				7. Control valve assembly	AT-301
			OFF vehicle	8. Torque converter (ATF condition “NG” only. Refer toAT-51, "Fluid Condition Check" .)	AT-327
				9. Oil pump assembly (ATF condition “NG” only. Refer toAT-51, "Fluid Condition Check" .)	AT-341
25		Does not hold lock-up condition. Refer toAT-275, "A/T Does Not Hold Lock-up Condition" .	ON vehicle	1. Fluid level and state	AT-51
				2. Line pressure test	AT-52
				3. Engine speed signal	AT-121
				4. Turbine revolution sensor	AT-158
				5. Torque converter clutch solenoid valve	AT-123
				6. CAN communication line	AT-104
				7. Control valve assembly	AT-301
			OFF vehicle	8. Torque converter (ATF condition “NG” only. Refer to AT-51, "Fluid Condition Check" .)	AT-327
				9. Oil pump assembly (ATF condition “NG” only. Refer to AT-51, "Fluid Condition Check" .)	AT-341

No.	Items	Symptom	Condition	Diagnostic Item	Reference page
26	Slips/Will Not engage	Lock-up is not released. Refer toAT-276, "Lock-up Is Not Released" .	ON vehicle	1. Fluid level and state	AT-51
				2. Line pressure test	AT-52
				3. Engine speed signal	AT-121
				4. Turbine revolution sensor	AT-158
				5. Torque converter clutch solenoid valve	AT-123
				6. CAN communication line	AT-104
				7. Control valve assembly	AT-301
			OFF vehicle	8. Torque converter (ATF condition “NG” only. Refer to AT-51, "Fluid Condition Check" .)	AT-327
				9. Oil pump assembly (ATF condition “NG” only. Refer to AT-51, "Fluid Condition Check" .)	AT-341
27		No shock at all or the clutch slips when vehicle changes speed $D_1 \rightarrow D_2$ or $M_1 \rightarrow M_2$.	ON vehicle	1. Fluid level and state	AT-51
				2. Vehicle speed sensor A/T and vehicle speed sensor MTR	AT-116, AT-163
				3. ATF pressure switch 5 and direct clutch solenoid valve	AT-235, AT-195
				4. CAN communication line	AT-104
				5. Line pressure test	AT-52
				6. Control valve assembly	AT-301
			OFF vehicle	7. Torque converter (ATF condition “NG” only. Refer to AT-51, "Fluid Condition Check" .)	AT-327
				8. Oil pump assembly (ATF condition “NG” only. Refer to AT-51, "Fluid Condition Check" .)	AT-341
				9. 3rd one-way clutch (ATF condition “NG” only. Refer to AT-51, "Fluid Condition Check" .)	AT-344
				10. Gear system (ATF condition “NG” only. Refer to AT-51, "Fluid Condition Check" .)	AT-319
				11. Direct clutch (ATF condition “NG” only. Refer to AT-51, "Fluid Condition Check" .)	AT-358
				12. Forward brake* (ATF condition “NG” only. Refer to AT-51, "Fluid Condition Check" .)	AT-327

No.	Items	Symptom	Condition	Diagnostic Item	Reference page
28	Slips/Will Not engage	No shock at all or the clutch slips when vehicle changes speed D2 → D3 or M2 → M3 .	ON vehicle	1. Fluid level and state	AT-51
				2. Vehicle speed sensor A/T and vehicle speed sensor MTR	AT-116, AT-163
				3. ATF pressure switch 6, high and low reverse clutch solenoid valve	AT-239, AT-204
				4. CAN communication line	AT-104
				5. Line pressure test	AT-52
				6. Control valve assembly	AT-301
			OFF vehicle	7. Torque converter (ATF condition “NG” only. Refer to AT-51, "Fluid Condition Check" .)	AT-327
				8. Oil pump assembly (ATF condition “NG” only. Refer to AT-51, "Fluid Condition Check" .)	AT-341
				9. 3rd one-way clutch (ATF condition “NG” only. Refer to AT-51, "Fluid Condition Check" .)	AT-344
				10. Gear system (ATF condition “NG” only. Refer to AT-51, "Fluid Condition Check" .)	AT-319
				11. High and low reverse clutch (ATF condition “NG” only. Refer to AT-51, "Fluid Condition Check" .)	AT-356
				12. Forward one-way clutch* (ATF condition “NG” only. Refer to AT-51, "Fluid Condition Check" .)	AT-327
				13. Forward brake* (ATF condition “NG” only. Refer to AT-51, "Fluid Condition Check" .)	AT-327
29		No shock at all or the clutch slips when vehicle changes speed D3 → D4 or M3 → M4 .	ON vehicle	1. Fluid level and state	AT-51
				2. Vehicle speed sensor A/T and vehicle speed sensor MTR	AT-116, AT-163
				3. ATF pressure switch 3 and input clutch solenoid valve	AT-231, AT-176
				4. ATF pressure switch 1 and front brake solenoid valve	AT-227, AT-185
				5. CAN communication line	AT-104
				6. Line pressure test	AT-52
				7. Control valve assembly	AT-301
			OFF vehicle	8. Torque converter (ATF condition “NG” only. Refer to AT-51, "Fluid Condition Check" .)	AT-327
				9. Oil pump assembly (ATF condition “NG” only. Refer to AT-51, "Fluid Condition Check" .)	AT-341
				10. Input clutch (ATF condition “NG” only. Refer to AT-51, "Fluid Condition Check" .)	AT-346
				11. Gear system (ATF condition “NG” only. Refer to AT-51, "Fluid Condition Check" .)	AT-319
				12. High and low reverse clutch (ATF condition “NG” only. Refer to AT-51, "Fluid Condition Check" .)	AT-356
				13. Direct clutch (ATF condition “NG” only. Refer to AT-51, "Fluid Condition Check" .)	AT-358

No.	Items	Symptom	Condition	Diagnostic Item	Reference page
30	Slips/Will Not engage	No shock at all or the clutch slips when vehicle changes speed D4 → D5 or M4 → M5 .	ON vehicle	1. Fluid level and state	AT-51
				2. Vehicle speed sensor A/T and vehicle speed sensor MTR	AT-116, AT-163
				3. ATF pressure switch 1 and front brake solenoid valve	AT-227, AT-185
				4. ATF pressure switch 5 and direct clutch solenoid valve	AT-235, AT-195
				5. CAN communication line	AT-104
				6. Line pressure test	AT-52
				7. Control valve assembly	AT-301
			OFF vehicle	8. Torque converter (ATF condition “NG” only. Refer to AT-51, "Fluid Condition Check" .)	AT-327
				9. Oil pump assembly (ATF condition “NG” only. Refer to AT-51, "Fluid Condition Check" .)	AT-341
				10. Front brake [brake band (ATF condition “NG” only. Refer to AT-51, "Fluid Condition Check" .)]	AT-327
				11. Input clutch (ATF condition “NG” only. Refer to AT-51, "Fluid Condition Check" .)	AT-346
				12. Gear system (ATF condition “NG” only. Refer to AT-51, "Fluid Condition Check" .)	AT-319
				13. High and low reverse clutch (ATF condition “NG” only. Refer to AT-51, "Fluid Condition Check" .)	AT-356
31		When you press the accelerator pedal and shift speed D5 → D4 or M5 → M4 the engine idles or the transmission slips.	ON vehicle	1. Fluid level and state	AT-51
				2. Vehicle speed sensor A/T and vehicle speed sensor MTR	AT-116, AT-163
				3. ATF pressure switch 1 and front brake solenoid valve	AT-227, AT-185
				4. ATF pressure switch 5 and direct clutch solenoid valve	AT-235, AT-195
				5. CAN communication line	AT-104
				6. Line pressure test	AT-52
				7. Control valve assembly	AT-301
			OFF vehicle	8. Torque converter (ATF condition “NG” only. Refer to AT-51, "Fluid Condition Check" .)	AT-327
				9. Oil pump assembly (ATF condition “NG” only. Refer to AT-51, "Fluid Condition Check" .)	AT-341
				10. Input clutch (ATF condition “NG” only. Refer to AT-51, "Fluid Condition Check" .)	AT-346
				11. Gear system (ATF condition “NG” only. Refer to AT-51, "Fluid Condition Check" .)	AT-319
				12. High and low reverse clutch (ATF condition “NG” only. Refer to AT-51, "Fluid Condition Check" .)	AT-356
				13. Direct clutch (ATF condition “NG” only. Refer to AT-51, "Fluid Condition Check" .)	AT-358

No.	Items	Symptom	Condition	Diagnostic Item	Reference page
32	Slips/Will Not engage	When you press the accelerator pedal and shift speed D4 → D3 or M4 → M3 the engine idles or the transmission slips.	ON vehicle	1. Fluid level and state	AT-51
				2. Vehicle speed sensor A/T and vehicle speed sensor MTR	AT-116, AT-163
				3. ATF pressure switch 3 and input clutch solenoid valve	AT-231, AT-176
				4. ATF pressure switch 1 and front brake solenoid valve	AT-227, AT-185
				5. CAN communication line	AT-104
				6. Line pressure test	AT-52
				7. Control valve assembly	AT-301
			OFF vehicle	8. Torque converter (ATF condition “NG” only. Refer to AT-51, "Fluid Condition Check" .)	AT-327
				9. Oil pump assembly (ATF condition “NG” only. Refer to AT-51, "Fluid Condition Check" .)	AT-341
				10. 3rd one-way clutch (ATF condition “NG” only. Refer to AT-51, "Fluid Condition Check" .)	AT-344
				11. Gear system (ATF condition “NG” only. Refer to AT-51, "Fluid Condition Check" .)	AT-319
				12. High and low reverse clutch (ATF condition “NG” only. Refer to AT-51, "Fluid Condition Check" .)	AT-356
				13. Forward one-way clutch* (ATF condition “NG” only. Refer to AT-51, "Fluid Condition Check" .)	AT-327
				14. Forward brake* (ATF condition “NG” only. Refer to AT-51, "Fluid Condition Check" .)	AT-327
33		When you press the accelerator pedal and shift speed D3 → D2 or M3 → M2 the engine idles or the transmission slips.	ON vehicle	1. Fluid level and state	AT-51
				2. Vehicle speed sensor A/T and vehicle speed sensor MTR	AT-116, AT-163
				3. ATF pressure switch 6, high and low reverse clutch solenoid valve	AT-239, AT-204
				4. ATF pressure switch 5 and direct clutch solenoid valve	AT-235, AT-195
				5. CAN communication line	AT-104
				6. Line pressure test	AT-52
				7. Control valve assembly	AT-301
			OFF vehicle	8. Torque converter (ATF condition “NG” only. Refer to AT-51, "Fluid Condition Check" .)	AT-327
				9. Oil pump assembly (ATF condition “NG” only. Refer to AT-51, "Fluid Condition Check" .)	AT-341
				10. 3rd one-way clutch (ATF condition “NG” only. Refer to AT-51, "Fluid Condition Check" .)	AT-344
				11. Gear system (ATF condition “NG” only. Refer to AT-51, "Fluid Condition Check" .)	AT-319
				12. Direct clutch (ATF condition “NG” only. Refer to AT-51, "Fluid Condition Check" .)	AT-358
				13. Forward brake* (ATF condition “NG” only. Refer to AT-51, "Fluid Condition Check" .)	AT-327

No.	Items	Symptom	Condition	Diagnostic Item	Reference page
34	Slips/Will Not Engage	When you press the accelerator pedal and shift speed $D_2 \rightarrow D_1$ or $M_2 \rightarrow M_1$ the engine idles or the transmission slips.	ON vehicle	1. Fluid level and state	AT-51
				2. Vehicle speed sensor A/T and vehicle speed sensor MTR	AT-116, AT-163
				3. ATF pressure switch 5 and direct clutch solenoid valve	AT-235, AT-195
				4. CAN communication line	AT-104
				5. Line pressure test	AT-52
				6. Control valve assembly	AT-301
			OFF vehicle	7. Torque converter (ATF condition “NG” only. Refer to AT-51, "Fluid Condition Check" .)	AT-327
				8. Oil pump assembly (ATF condition “NG” only. Refer to AT-51, "Fluid Condition Check" .)	AT-341
				9. 3rd one-way clutch (ATF condition “NG” only. Refer to AT-51, "Fluid Condition Check" .)	AT-344
				10. 1st one-way clutch (ATF condition “NG” only. Refer to AT-51, "Fluid Condition Check" .)	AT-351
				11. Gear system (ATF condition “NG” only. Refer to AT-51, "Fluid Condition Check" .)	AT-319
				12. Reverse brake (ATF condition “NG” only. Refer to AT-51, "Fluid Condition Check" .)	AT-327
				13. Forward one-way clutch* (ATF condition “NG” only. Refer to AT-51, "Fluid Condition Check" .)	AT-327
				14. Forward brake* (ATF condition “NG” only. Refer to AT-51, "Fluid Condition Check" .)	AT-327
35		With selector lever in D position, accelera-tion is extremely poor.	ON vehicle	1. Fluid level and state	AT-51
				2. Line pressure test	AT-52
				3. Accelerator pedal position sensor	AT-150
				4. CAN communication line	AT-104
				5. PNP switch	AT-111
				6. Control linkage adjustment	AT-290
				7. Control valve assembly	AT-301
			OFF vehicle	8. Torque converter (ATF condition “NG” only. Refer to AT-51, "Fluid Condition Check" .)	AT-327
				9. Oil pump assembly (ATF condition “NG” only. Refer to AT-51, "Fluid Condition Check" .)	AT-341
				10. 1st one-way clutch (ATF condition “NG” only. Refer to AT-51, "Fluid Condition Check" .)	AT-351
				11. Gear system (ATF condition “NG” only. Refer to AT-51, "Fluid Condition Check" .)	AT-319
				12. Reverse brake (ATF condition “NG” only. Refer to AT-51, "Fluid Condition Check" .)	AT-327
				13. Forward one-way clutch* (ATF condition “NG” only. Refer to AT-51, "Fluid Condition Check" .)	AT-327
				14. Forward brake* (ATF condition “NG” only. Refer to AT-51, "Fluid Condition Check" .)	AT-327

No.	Items	Symptom	Condition	Diagnostic Item	Reference page
36	Slips/Will Not Engage	With selector lever in R position, acceleration is extremely poor.	ON vehicle	1. Fluid level and state	AT-51
				2. Line pressure test	AT-52
				3. Accelerator pedal position sensor	AT-150
				4. ATF pressure switch 6, high and low reverse clutch solenoid valve	AT-239, AT-204
				5. CAN communication line	AT-104
				6. PNP switch	AT-111
				7. Control linkage adjustment	AT-290
				8. Control valve assembly	AT-301
			OFF vehicle	9. Gear system (ATF condition “NG” only. Refer to AT-51, "Fluid Condition Check" .)	AT-319
				10. Output shaft (ATF condition “NG” only. Refer to AT-51, "Fluid Condition Check" .)	AT-327
				11. Reverse brake (ATF condition “NG” only. Refer to AT-51, "Fluid Condition Check" .)	AT-327
37		While starting off by accelerating in 1st, engine races or slippage occurs.	ON vehicle	1. Fluid level and state	AT-51
				2. Line pressure test	AT-52
				3. Accelerator pedal position sensor	AT-150
				4. CAN communication line	AT-104
				5. Control valve assembly	AT-301
			OFF vehicle	6. Torque converter (ATF condition “NG” only. Refer to AT-51, "Fluid Condition Check" .)	AT-327
				7. Oil pump assembly (ATF condition “NG” only. Refer to AT-51, "Fluid Condition Check" .)	AT-341
				8. 3rd one-way clutch (ATF condition “NG” only. Refer to AT-51, "Fluid Condition Check" .)	AT-344
				9. 1st one-way clutch (ATF condition “NG” only. Refer to AT-51, "Fluid Condition Check" .)	AT-351
				10. Gear system (ATF condition “NG” only. Refer to AT-51, "Fluid Condition Check" .)	AT-319
				11. Reverse brake (ATF condition “NG” only. Refer to AT-51, "Fluid Condition Check" .)	AT-327
				12. Forward one-way clutch* (ATF condition “NG” only. Refer to AT-51, "Fluid Condition Check" .)	AT-327
				13. Forward brake* (ATF condition “NG” only. Refer to AT-51, "Fluid Condition Check" .)	AT-327

No.	Items	Symptom	Condition	Diagnostic Item	Reference page
38	Slips/Will Not Engage	While accelerating in 2nd, engine races or slippage occurs.	ON vehicle	1. Fluid level and state	AT-51
				2. Line pressure test	AT-52
				3. Accelerator pedal position sensor	AT-150
				4. CAN communication line	AT-104
				5. ATF pressure switch 5 and direct clutch solenoid valve	AT-235, AT-195
				6. Control valve assembly	AT-301
			OFF vehicle	7. Torque converter (ATF condition “NG” only. Refer to AT-51, "Fluid Condition Check" .)	AT-327
				8. Oil pump assembly (ATF condition “NG” only. Refer to AT-51, "Fluid Condition Check" .)	AT-341
				9. 3rd one-way clutch (ATF condition “NG” only. Refer to AT-51, "Fluid Condition Check" .)	AT-344
				10. Gear system (ATF condition “NG” only. Refer to AT-51, "Fluid Condition Check" .)	AT-319
				11. Direct clutch (ATF condition “NG” only. Refer to AT-51, "Fluid Condition Check" .)	AT-358
				12. Forward brake* (ATF condition “NG” only. Refer to AT-51, "Fluid Condition Check" .)	AT-327
39		While accelerating in 3rd, engine races or slippage occurs.	ON vehicle	1. Fluid level and state	AT-51
				2. Line pressure test	AT-52
				3. Accelerator pedal position sensor	AT-150
				4. CAN communication line	AT-104
				5. ATF pressure switch 6, high and low reverse clutch solenoid valve	AT-239, AT-204
				6. Control valve assembly	AT-301
			OFF vehicle	7. Torque converter (ATF condition “NG” only. Refer to AT-51, "Fluid Condition Check" .)	AT-327
				8. Oil pump assembly (ATF condition “NG” only. Refer to AT-51, "Fluid Condition Check" .)	AT-341
				9. 3rd one-way clutch (ATF condition “NG” only. Refer toAT-51, "Fluid Condition Check" .)	AT-344
				10. Gear system (ATF condition “NG” only. Refer to AT-51, "Fluid Condition Check" .)	AT-319
				11. High and low reverse clutch (ATF condition “NG” only. Refer to AT-51, "Fluid Condition Check" .)	AT-356
				12. Forward one-way clutch* (ATF condition “NG” only. Refer to AT-51, "Fluid Condition Check" .)	AT-327
				13. Forward brake* (ATF condition “NG” only. Refer to AT-51, "Fluid Condition Check" .)	AT-327

No.	Items	Symptom	Condition	Diagnostic Item	Reference page
40	Slips/Will Not Engage	While accelerating in 4th, engine races or slippage occurs.	ON vehicle	1. Fluid level and state	AT-51
				2. Line pressure test	AT-52
				3. Accelerator pedal position sensor	AT-150
				4. CAN communication line	AT-104
				5. ATF pressure switch 3 and input clutch solenoid valve	AT-231, AT-176
				6. Control valve assembly	AT-301
			OFF vehicle	7. Torque converter (ATF condition “NG” only. Refer to AT-51, "Fluid Condition Check" .)	AT-327
				8. Oil pump assembly (ATF condition “NG” only. Refer to AT-51, "Fluid Condition Check" .)	AT-341
				9. Input clutch (ATF condition “NG” only. Refer to AT-51, "Fluid Condition Check" .)	AT-346
				10. Gear system (ATF condition “NG” only. Refer to AT-51, "Fluid Condition Check" .)	AT-319
				11. High and low reverse clutch (ATF condition “NG” only. Refer to AT-51, "Fluid Condition Check" .)	AT-356
				12. Direct clutch (ATF condition “NG” only. Refer to AT-51, "Fluid Condition Check" .)	AT-358
41		While accelerating in 5th, engine races or slippage occurs.	ON vehicle	1. Fluid level and state	AT-51
				2. Line pressure test	AT-52
				3. Accelerator pedal position sensor	AT-150
				4. CAN communication line	AT-104
				5. ATF pressure switch 1 and front brake solenoid valve	AT-227, AT-185
				6. Control valve assembly	AT-301
			OFF vehicle	7. Torque converter (ATF condition “NG” only. Refer to AT-51, "Fluid Condition Check" .)	AT-327
				8. Oil pump assembly (ATF condition “NG” only. Refer to AT-51, "Fluid Condition Check" .)	AT-341
				9. Front brake [brake band (ATF condition “NG” only. Refer to AT-51, "Fluid Condition Check" .)]	AT-327
				10. Input clutch (ATF condition “NG” only. Refer to AT-51, "Fluid Condition Check" .)	AT-346
				11. Gear system (ATF condition “NG” only. Refer to AT-51, "Fluid Condition Check" .)	AT-319
				12. High and low reverse clutch (ATF condition “NG” only. Refer to AT-51, "Fluid Condition Check" .)	AT-356

No.	Items	Symptom	Condition	Diagnostic Item	Reference page
42	Slips/Will Not Engage	Slips at lock-up.	ON vehicle	1. Fluid level and state	AT-51
				2. Line pressure test	AT-52
				3. Engine speed signal	AT-121
				4. Turbine revolution sensor	AT-158
				5. Torque converter clutch solenoid valve	AT-123
				6. CAN communication line	AT-104
				7. Control valve assembly	AT-301
			OFF vehicle	8. Torque converter (ATF condition “NG” only. Refer to AT-51, "Fluid Condition Check" .)	AT-327
				9. Oil pump assembly (ATF condition “NG” only. Refer to AT-51, "Fluid Condition Check" .)	AT-341
43		No creep at all. Refer toAT-255, "Vehicle Does Not Creep Backward In “R” Position" , AT-258, "Vehicle Does Not Creep Forward In “D” Position"	ON vehicle	1. Fluid level and state	AT-51
				2. Line pressure test	AT-52
				3. Accelerator pedal position sensor	AT-150
				4. ATF pressure switch 5 and direct clutch solenoid valve	AT-235, AT-195
				5. PNP switch	AT-111
				6. CAN communication line	AT-104
				7. Control linkage adjustment	AT-290
				8. Control valve assembly	AT-301
			OFF vehicle	9. Torque converter (ATF condition “NG” only. Refer to AT-51, "Fluid Condition Check" .)	AT-327
				10. Oil pump assembly (ATF condition “NG” only. Refer to AT-51, "Fluid Condition Check" .)	AT-341
				11. 1st one-way clutch (ATF condition “NG” only. Refer to AT-51, "Fluid Condition Check" .)	AT-351
				12. Gear system (ATF condition “NG” only. Refer to AT-51, "Fluid Condition Check" .)	AT-319
				13. Reverse brake (ATF condition “NG” only. Refer to AT-51, "Fluid Condition Check" .)	AT-327
				14. Direct clutch (ATF condition “NG” only. Refer to AT-51, "Fluid Condition Check" .)	AT-358
				15. Forward one-way clutch* (ATF condition “NG” only. Refer to AT-51, "Fluid Condition Check" .)	AT-327
				16. Forward brake* (ATF condition “NG” only. Refer to AT-51, "Fluid Condition Check" .)	AT-327

No.	Items	Symptom	Condition	Diagnostic Item	Reference page
44	Slips/Will Not Engage	Vehicle cannot run in all positions.	ON vehicle	1. Fluid level and state	AT-51
				2. Line pressure test	AT-52
				3. PNP switch	AT-111
				4. Control linkage adjustment	AT-290
				5. Control valve assembly	AT-301
			OFF vehicle	6. Oil pump assembly (ATF condition “NG” only. Refer to AT-51, "Fluid Condition Check" .)	AT-341
				7. Gear system (ATF condition “NG” only. Refer to AT-51, "Fluid Condition Check" .)	AT-319
				8. Output shaft (ATF condition “NG” only. Refer to AT-51, "Fluid Condition Check" .)	AT-327
45		With selector lever in D position, driving is not possible.	ON vehicle	1. Fluid level and state	AT-51
				2. Line pressure test	AT-52
				3. PNP switch	AT-111
				4. Control linkage adjustment	AT-290
				5. Control valve assembly	AT-301
			OFF vehicle	6. Torque converter (ATF condition “NG” only. Refer to AT-51, "Fluid Condition Check" .)	AT-327
				7. Oil pump assembly (ATF condition “NG” only. Refer to AT-51, "Fluid Condition Check" .)	AT-341
				8. 1st one-way clutch (ATF condition “NG” only. Refer to AT-51, "Fluid Condition Check" .)	AT-351
				9. Gear system (ATF condition “NG” only. Refer to AT-51, "Fluid Condition Check" .)	AT-319
				10. Reverse brake (ATF condition “NG” only. Refer to AT-51, "Fluid Condition Check" .)	AT-327
				11. Forward one-way clutch* (ATF condition “NG” only. Refer to AT-51, "Fluid Condition Check" .)	AT-327
				12. Forward brake* (ATF condition “NG” only. Refer to AT-51, "Fluid Condition Check" .)	AT-327
46		With selector lever in R position, driving is not possible.	ON vehicle	1. Fluid level and state	AT-51
				2. Line pressure test	AT-52
				3. PNP switch	AT-111
				4. Control linkage adjustment	AT-290
				5. Control valve assembly	AT-301
			OFF vehicle	6. Gear system (ATF condition “NG” only. Refer to AT-51, "Fluid Condition Check" .)	AT-319
				7. Output shaft (ATF condition “NG” only. Refer to AT-51, "Fluid Condition Check" .)	AT-327
				8. Reverse brake (ATF condition “NG” only. Refer to AT-51, "Fluid Condition Check" .)	AT-327

No.	Items	Symptom	Condition	Diagnostic Item	Reference page
47	Does Not Change	Does not change M5 → M4.	ON vehicle	1. PNP switch	AT-111
				2. Fluid level and state	AT-51
				3. Control linkage adjustment	AT-290
				4. Manual mode switch	AT-223
				5. ATF pressure switch 1	AT-227
				6. CAN communication line	AT-104
				7. Control valve assembly	AT-301
			OFF vehicle	8. Front brake [brake band (ATF condition “NG” only. Refer to AT-51, "Fluid Condition Check" .)]	AT-327
48		Does not change M4 → M3.	ON vehicle	1. PNP switch	AT-111
				2. Fluid level and state	AT-51
				3. Control linkage adjustment	AT-290
				4. Manual mode switch	AT-223
				5. ATF pressure switch 1 and ATF pressure switch 3	AT-227, AT-231
				6. CAN communication line	AT-104
				7. Control valve assembly	AT-301
			OFF vehicle	8. Front brake [brake band (ATF condition “NG” only. Refer to AT-51, "Fluid Condition Check" .)]	AT-327
				9. Input clutch (ATF condition “NG” only. Refer to AT-51, "Fluid Condition Check" .)	AT-346
49		Does not change M3 → M2.	ON vehicle	1. PNP switch	AT-111
				2. Fluid level and state	AT-51
				3. Control linkage adjustment	AT-290
				4. Manual mode switch	AT-223
				5. ATF pressure switch 6	AT-239
				6. CAN communication line	AT-104
				7. Control valve assembly	AT-301
			OFF vehicle	8. Front brake [brake band (ATF condition “NG” only. Refer to AT-51, "Fluid Condition Check" .)]	AT-327
				9. Input clutch (ATF condition “NG” only. Refer to AT-51, "Fluid Condition Check" .)	AT-346
				10. High and low reverse clutch (ATF condition “NG” only. Refer to AT-51, "Fluid Condition Check" .)	AT-356

No.	Items	Symptom	Condition	Diagnostic Item	Reference page
50	Does Not Change	Does not change M2 → M1.	ON vehicle	1. PNP switch	AT-111
				2. Fluid level and state	AT-51
				3. Control linkage adjustment	AT-290
				4. Manual mode switch	AT-223
				5. ATF pressure switch 5	AT-235
				6. CAN communication line	AT-104
				7. Control valve assembly	AT-301
			OFF vehicle	8. Input clutch (ATF condition “NG” only. Refer to AT-51, "Fluid Condition Check" .)	AT-346
				9. High and low reverse clutch (ATF condition “NG” only. Refer to AT-51, "Fluid Condition Check" .)	AT-356
				10. Direct clutch (ATF condition “NG” only. Refer to AT-51, "Fluid Condition Check" .)	AT-358
51		Can not be changed to manual mode. Refer to AT-278, "Cannot Be Changed to Manual Mode" .	ON vehicle	1. Manual mode switch	AT-223
				2. Turbine revolution sensor	AT-158
				3. CAN communication line	AT-104
52	Others	Shift point is high in D position.	ON vehicle	1. Vehicle speed sensor A/T and vehicle speed sensor MTR	AT-116, AT-163
				2. Accelerator pedal position sensor	AT-150
				3. CAN communication line	AT-104
				4. ATF temperature sensor	AT-152
				5. Control valve assembly	AT-301
53		Shift point is low in D position.	ON vehicle	1. Vehicle speed sensor A/T and vehicle speed sensor MTR	AT-116, AT-163
				2. Accelerator pedal position sensor	AT-150
				3. CAN communication line	AT-104
				4. Control valve assembly	AT-301
54		Judder occurs during lock-up.	ON vehicle	1. Fluid level and state	AT-51
				2. Engine speed signal	AT-121
				3. Turbine revolution sensor	AT-158
				4. Vehicle speed sensor A/T and vehicle speed sensor MTR	AT-116, AT-163
				5. Accelerator pedal position sensor	AT-150
				6. CAN communication line	AT-104
				7. Torque converter clutch solenoid valve	AT-123
				8. Control valve assembly	AT-301
			OFF vehicle	9. Torque converter (ATF condition “NG” only. Refer to AT-51, "Fluid Condition Check" .)	AT-327

No.	Items	Symptom	Condition	Diagnostic Item	Reference page
55	Others	Strange noise in “R” position.	ON vehicle	1. Fluid level and state	AT-51
				2. Engine speed signal	AT-121
				3. CAN communication line	AT-104
				4. Control valve assembly	AT-301
			OFF vehicle	5. Torque converter (ATF condition “NG” only. Refer toAT-51, "Fluid Condition Check" .)	AT-327
				6. Oil pump assembly (ATF condition “NG” only. Refer toAT-51, "Fluid Condition Check" .)	AT-341
				7. Gear system (ATF condition “NG” only. Refer to AT-51, "Fluid Condition Check" .)	AT-319
				8. High and low reverse clutch (ATF condition “NG” only. Refer to AT-51, "Fluid Condition Check" .)	AT-356
				9. Reverse brake (ATF condition “NG” only. Refer toAT-51, "Fluid Condition Check" .)	AT-327
56		Strange noise in “N” position.	ON vehicle	1. Fluid level and state	AT-51
				2. Engine speed signal	AT-121
				3. CAN communication line	AT-104
				4. Control valve assembly	AT-301
			OFF vehicle	5. Torque converter (ATF condition “NG” only. Refer to AT-51, "Fluid Condition Check" .)	AT-327
				6. Oil pump assembly (ATF condition “NG” only. Refer toAT-51, "Fluid Condition Check" .)	AT-341
				7. Gear system (ATF condition “NG” only. Refer toAT-51, "Fluid Condition Check" .)	AT-319
57		Strange noise in “D” position.	ON vehicle	1. Fluid level and state	AT-51
				2. Engine speed signal	AT-121
				3. CAN communication line	AT-104
				4. Control valve assembly	AT-301
			OFF vehicle	5. Torque converter (ATF condition “NG” only. Refer to AT-51, "Fluid Condition Check" .)	AT-327
				6. Oil pump assembly (ATF condition “NG” only. Refer to AT-51, "Fluid Condition Check" .)	AT-341
				7. Gear system (ATF condition “NG” only. Refer to AT-51, "Fluid Condition Check" .)	AT-319
				8. Forward brake* (ATF condition “NG” only. Refer toAT-51, "Fluid Condition Check" .)	AT-327

No.	Items	Symptom	Condition	Diagnostic Item	Reference page
58	Others	Vehicle dose not decelerate by engine brake. Refer to AT-287, "Vehicle Does Not Decelerate By Engine Brake" .	ON vehicle	1. PNP switch	AT-111
				2. Fluid level and state	AT-51
				3. Control linkage adjustment	AT-290
				4. Manual mode switch	AT-223
				5. ATF pressure switch 5	AT-235
				6. CAN communication line	AT-104
				7. Control valve assembly	AT-301
			OFF vehicle	8. Input clutch (ATF condition “NG” only. Refer to AT-51, "Fluid Condition Check" .)	AT-346
				9. High and low reverse clutch (ATF condition “NG” only. Refer to AT-51, "Fluid Condition Check" .)	AT-356
				10. Direct clutch (ATF condition “NG” only. Refer to AT-51, "Fluid Condition Check" .)	AT-358
59		Engine brake does not work M5 → M4.	ON vehicle	1. PNP switch	AT-111
				2. Fluid level and state	AT-51
				3. Control linkage adjustment	AT-290
				4. Manual mode switch	AT-223
				5. ATF pressure switch 1	AT-227
				6. CAN communication line	AT-104
				7. Control valve assembly	AT-301
			OFF vehicle	8. Front brake [brake band (ATF condition “NG” only. Refer to AT-51, "Fluid Condition Check" .)]	AT-327
60		Engine brake does not work M4 → M3.	ON vehicle	1. PNP switch	AT-111
				2. Fluid level and state	AT-51
				3. Control linkage adjustment	AT-290
				4. Manual mode switch	AT-223
				5. ATF pressure switch 1 and ATF pressure switch 3	AT-227, AT-231
				6. CAN communication line	AT-104
				7. Control valve assembly	AT-301
			OFF vehicle	8. Front brake [brake band (ATF condition “NG” only. Refer to AT-51, "Fluid Condition Check" .)]	AT-327
				9. Input clutch (ATF condition “NG” only. Refer to AT-51, "Fluid Condition Check" .)	AT-346

No.	Items	Symptom	Condition	Diagnostic Item	Reference page
61	Others	Engine brake does not work M3 → M2.	ON vehicle	1. PNP switch	AT-111
				2. Fluid level and state	AT-51
				3. Control linkage adjustment	AT-290
				4. Manual mode switch	AT-223
				5. ATF pressure switch 6	AT-239
				6. CAN communication line	AT-104
				7. Control valve assembly	AT-301
			OFF vehicle	8. Front brake [brake band (ATF condition “NG” only. Refer to AT-51, "Fluid Condition Check" .)]	AT-327
				9. Input clutch (ATF condition “NG” only. Refer to AT-51, "Fluid Condition Check" .)	AT-346
				10. High and low reverse clutch (ATF condition “NG” only. Refer to AT-51, "Fluid Condition Check" .)	AT-356
62		Engine brake does not work M2 → M1.	ON vehicle	1. PNP switch	AT-111
				2. Fluid level and state	AT-51
				3. Control linkage adjustment	AT-290
				4. Manual mode switch	AT-223
				5. ATF pressure switch 5	AT-235
				6. CAN communication line	AT-104
				7. Control valve assembly	AT-301
			OFF vehicle	8. Input clutch (ATF condition “NG” only. Refer to AT-51, "Fluid Condition Check" .)	AT-346
				9. High and low reverse clutch (ATF condition “NG” only. Refer to AT-51, "Fluid Condition Check" .)	AT-356
				10. Direct clutch (ATF condition “NG” only. Refer to AT-51, "Fluid Condition Check" .)	AT-358

No.	Items	Symptom	Condition	Diagnostic Item	Reference page
63	Others	Maximum speed low.	ON vehicle	1. Fluid level and state	AT-51
				2. Line pressure test	AT-52
				3. Accelerator pedal position sensor	AT-150
				4. CAN communication line	AT-104
				5. Direct clutch solenoid valve	AT-195
				6. Control valve assembly	AT-301
			OFF vehicle	7. Torque converter (ATF condition “NG” only. Refer to AT-51, "Fluid Condition Check" .)	AT-327
				8. Oil pump assembly (ATF condition “NG” only. Refer to AT-51, "Fluid Condition Check" .)	AT-341
				9. Input clutch (ATF condition “NG” only. Refer to AT-51, "Fluid Condition Check" .)	AT-346
				10. Gear system (ATF condition “NG” only. Refer to AT-51, "Fluid Condition Check" .)	AT-319
				11. High and low reverse clutch (ATF condition “NG” only. Refer to AT-51, "Fluid Condition Check" .)	AT-356
				12. Direct clutch (ATF condition “NG” only. Refer to AT-51, "Fluid Condition Check" .)	AT-358
				13. Forward one-way clutch* (ATF condition “NG” only. Refer to AT-51, "Fluid Condition Check" .)	AT-327
				14. Forward brake* (ATF condition “NG” only. Refer to AT-51, "Fluid Condition Check" .)	AT-327
64		Extremely large creep.	ON vehicle	1. Engine idle speed	EC-30
				2. CAN communication line	AT-104
				3. ATF pressure switch 5	AT-235
			OFF vehicle	4. Torque converter (ATF condition “NG” only. Refer to AT-51, "Fluid Condition Check" .)	AT-327
65		With selector lever in P position, vehicle does not enter parking condition or, with selector lever in another position, parking condition is not cancelled. Refer to AT-250, "In “P” Position, Vehicle Moves When Pushed" .	ON vehicle	1. PNP switch	AT-111
				2. Control linkage adjustment	AT-290
				3. Parking pawl components	AT-309
66		Vehicle runs with transmission in “ P” position.	ON vehicle	1. PNP switch	AT-111
				2. Fluid level and state	AT-51
				3. Control linkage adjustment	AT-290
				4. Control valve assembly	AT-301
				5. Parking pawl components (ATF condition “NG” only. Refer to AT-51, "Fluid Condition Check" .)	AT-319
			OFF vehicle	6. Gear system (ATF condition “NG” only. Refer to AT-51, "Fluid Condition Check" .)	AT-319

No.	Items	Symptom	Condition	Diagnostic Item	Reference page
67	Others	Vehicle runs with transmission in “N” position. Refer to AT-251, "In “N” Position, Vehicle Moves" .	ON vehicle	1. PNP switch	AT-111
				2. Fluid level and state	AT-51
				3. Control linkage adjustment	AT-290
				4. Control valve assembly	AT-301
			OFF vehicle	5. Input clutch (ATF condition “NG” only. Refer to AT-51, "Fluid Condition Check" .)	AT-346
				6. Gear system (ATF condition “NG” only. Refer to AT-51, "Fluid Condition Check" .)	AT-319
				7. Direct clutch (ATF condition “NG” only. Refer to AT-51, "Fluid Condition Check" .)	AT-358
				8. Reverse brake (ATF condition “NG” only. Refer to AT-51, "Fluid Condition Check" .)	AT-327
				9. Forward one-way clutch* (ATF condition “NG” only. Refer to AT-51, "Fluid Condition Check" .)	AT-327
				10. Low coast brake* (ATF condition “NG” only. Refer to AT-51, "Fluid Condition Check" .)	AT-327
68		Engine does not start in “N” or “P” position. Refer to AT-249, "Engine Cannot Be Started In “P” or “N” Position" .	ON vehicle	1. Ignition switch and starter	PG-4, SC-10
				2. Control linkage adjustment	AT-290
				3. PNP switch	AT-111
69		Engine starts in positions other than “N” or “P”.	ON vehicle	1. Ignition switch and starter	PG-4, SC-10
				2. Control linkage adjustment	AT-290
				3. PNP switch	AT-111
70		Engine stall.	ON vehicle	1. Fluid level and state	AT-51
				2. Engine speed signal	AT-121
				3. Turbine revolution sensor	AT-158
				4. Torque converter clutch solenoid valve	AT-123
				5. CAN communication line	AT-104
				6. Control valve assembly	AT-301
			OFF vehicle	7. Torque converter (ATF condition “NG” only. Refer to AT-51, "Fluid Condition Check" .)	AT-327
71		Engine stalls when select lever shifted “N” → “D”, “R”.	ON vehicle	1. Fluid level and state	AT-51
				2. Engine speed signal	AT-121
				3. Turbine revolution sensor	AT-158
				4. Torque converter clutch solenoid valve	AT-123
				5. CAN communication line	AT-104
				6. Control valve assembly	AT-301
			OFF vehicle	7. Torque converter (ATF condition “NG” only. Refer to AT-51, "Fluid Condition Check" .)	AT-327

No.	Items	Symptom	Condition	Diagnostic Item	Reference page
72	Others	Engine speed does not return to idle. Refer to AT-277, "Engine Speed Does Not Return To Idle" .	ON vehicle	1. Fluid level and state	AT-51
				2. ATF pressure switch 5 and direct clutch solenoid valve	AT-235, AT-195
				3. ATF pressure switch 1 and front brake solenoid valve	AT-227, AT-185
				4. Accelerator pedal position sensor	AT-150
				5. Vehicle speed sensor A/T and vehicle speed sensor MTR	AT-116, AT-163
				6. CAN communication line	AT-104
				7. Control valve assembly	AT-301
			OFF vehicle	8. Front brake [brake band (ATF condition “NG” only. Refer to AT-51, "Fluid Condition Check" .)]	AT-327
				9. Direct clutch (ATF condition “NG” only. Refer to AT-51, "Fluid Condition Check" .)	AT-358

*: Parts behind Drum Support is impossible to perform inspection by disassembly. Refer to AT-18, "Cross-Sectional View" .

TCM Input/Output Signal Reference Values

ACS002BJ

TCM TERMINAL CONNECTOR LAYOUT

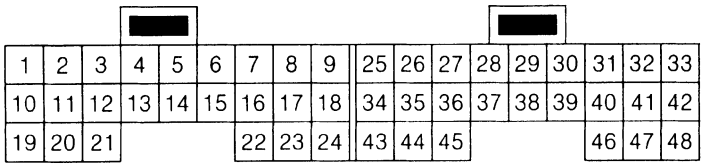

SCIA0495E

TCM INSPECTION TABLE

Data are reference value. Measured between each terminals 5, 14, 24 and 46 (TCM ground).

Terminal No.	Wire color	Item	Condition		Data (Approx.)
1	B/R	Line pressure solenoid valve		After warming up the engine, release your foot from the accelerator pedal.	2V
				After warming up the engine, press the accelerator pedal all the way down.	0.7V
2	W	Power supply		–	Battery voltage
				Measure 3 seconds after switching “OFF” the ignition switch.	0V
3	W	Power supply		–	Battery voltage
				Measure 3 seconds after switching “OFF” the ignition switch.	0V
4	P/L	SEL3 (pressure switch 3)	–		–
5	B	Ground	Always		0V

Terminal No.	Wire color	Item	Condition		Data (Approx.)
6	L	CAN H	–		–
7	R	CAN L	–		–
8	B/OR	Fluid temperature sensor 1	ON	When ATF temperature 0°C (32°F)	2.2V
				When ATF temperature 20°C (68°F)	1.8V
				When ATF temperature 80°C (176°F)	0.6V
9	R/W	Power supply (Memory back-up)	Always		Battery voltage
10	O/R	Input clutch solenoid valve	When vehicle cruises	When the solenoid valve operating (in 1st gear, 2nd gear, or 3rd gear)	More than 2V
				When the solenoid valve is not operating (4th gear or 5th gear)	0V
11	R/L	High and low reverse clutch solenoid valve		When the solenoid valve operating [6 km/h (4MPH) or faster in 1st gear or 2nd gear]	More than 2V
				When the solenoid valve is not operating [6 km/h (4MPH)or slower in 1st gear or 3rd, 4th, or 5th gear]	0V
12	Y/R	Power supply (out)	ON	–	Battery voltage
			OFF	–	0V
13	W/L	Low coast brake solenoid valve	When vehicle cruises	When the solenoid valve is operating (when running in M1-1 gear or M2-2 gear)	Battery voltage
				When the solenoid valve is not operating (when running in “D”)	0V
14	B	Ground	Always		0V
15	B/W	SEL4	–		–
16	W/G	SEL1 (pressure switch 2)	–		–
17	G/R	Fluid temperature sensor 2	ON	When ATF temperature about 0°C (32°F)	2.2V
				When ATF temperature about 20°C (68°F)	1.7V
				When ATF temperature about 80°C (176°F)	0.45V
19	R/B	Front brake solenoid valve	When vehicle cruises	When the solenoid valve is operating (other than 4th gear)	More than 2V
				When the solenoid valve is not operating (4th gear)	0V
20	Y	TCC solenoid valve		When lock-up	More than 2V
				When not lock-up	0V
21	G	Direct clutch solenoid valve		When the solenoid valve is operating (1st gear or 5th gear)	More than 2V
				When the solenoid valve is not operating (2nd gear, 3rd gear, or 4th gear)	0V
22	P/B	SEL2 (pressure switch 5)	–		–
23	LG	K-line (CONSULT-II signal)	The terminal is connected to the data link connector for CONSULT-II.		
24	B	Ground	Always		0V

Terminal No.	Wire color	Item	Condition		Data (Approx.)
26	G/Y	PSC2 (pressure switch 6)	When vehicle cruises	When high and low reverse clutch solenoid valve “ON”.	0V
				When high and low reverse clutch solenoid valve “OFF”.	Battery voltage
27	Y/B	Vehicle speed sensor A/T (revolution sensor)		When moving at 20 km/h (12MPH).	185 (Hz)
30	R/W	PNP switch 1		Selector lever in “P” position.	Battery voltage
				Selector lever in “N” position.	Less than 2.5V
31	OR	PNP switch 2		Selector lever in “P” position.	Battery voltage
				Selector lever in “D” position.	Less than 2.5V
33	Y/R	Power supply		–	Battery voltage
				–	0V
35	B/Y	PSB2 (pressure switch 1)	When vehicle cruises	When front brake solenoid valve “OFF”.	Battery voltage
				When front brake solenoid valve“ ON”.	0V
36	L/Y	Turbine revolution sensor 1		When running at 50 km/h (31MPH) in 4th gear with the closed throttle position signal “OFF”.	1.3 (kHz)
38	SB	PNP switch 3		Selector lever in “D” position.	Battery voltage
				Selector lever in “R” position.	Less than 2.5V
39	BR	PNP switch 4		Selector lever in “D” position.	Less than 2.5V
				Selector lever in “P” position.	Battery voltage
40	Y/G	DATA BIT1	–		–
41	R	Back-up lamp relay		Selector lever in “R” position.	0V
				Selector lever in other positions.	Battery voltage
42	Y/R	Power supply		–	Battery voltage
				–	0V
45	PU	Turbine revolution sensor 2	When vehicle cruises	When moving at 20 km/h (12MPH) in 1st gear with the closed throttle position signal “OFF”.	1.3 (kHz)
46	B	Ground	Always		0V
47	G/W	PNP switch 3 (monitor)		Selector lever in “D” position.	Battery voltage
				Selector lever in “R” position.	Less than 2.5V
48	GY/R	Starter relay		Selector lever in “N”,“ P” position.	Battery voltage
				Selector lever in other positions.	0V

CONSULT-II

ACS002BK

After performing “SELF-DIAGNOSTIC PROCEDURE (WITH CONSULT-II)” (Refer to AT-91), place check marks for results on the AT-46, "DIAGNOSTIC WORKSHEET" . Reference pages are provided following the items.

NOTICE:

1. The CONSULT-II electrically displays shift timing and lock-up timing (that is, operation timing of each solenoid).
   Check for time difference between actual shift timing and the CONSULT-II display. If the difference is noticeable, mechanical parts (except solenoids, sensors, etc.) may be malfunctioning. Check mechanical parts using applicable diagnostic procedures.
2. Shift schedule (which implies gear position) displayed on CONSULT-II and that indicated in Service Manual may differ slightly. This occurs because of the following reasons:
   - Actual shift schedule has more or less tolerance or allowance,
   - Shift schedule indicated in Service Manual refers to the point where shifts start, and
   - Gear position displayed on CONSULT-II indicates the point where shifts are completed.
3. Display of solenoid valves on CONSULT-II changes at the start of shifting, while gear position is displayed upon completion of shifting (which is computed by TCM).
4. Additional CONSULT-II information can be found in the Operation Manual supplied with the CONSULT-II unit.

FUNCTION

Diagnostic test mode	Function	Reference page
Self-diagnostic results	Self-diagnostic results can be read and erased quickly.	AT-92
Data monitor	Input/Output data in the ECM can be read.	AT-95
CAN diagnostic support monitor	The results of transmit/receive diagnosis of CAN communication can be read.	—
Function test	Conducted by CONSULT-II instead of a technician to determine whether each system is “OK” or “NG”.	—
DTC work support	Select the operating condition to confirm Diagnosis Trouble Codes.	AT-99
ECM part number	ECM part number can be read.	—

CONSULT-II REFERENCE VALUE

Item name	Condition	Display value (Approx.)
ATF TEMP SE 1	0°C (32° F) - 20°C (68°F) - 80°C (176°F)	2.2 - 1.8 - 0.6 V
ATF TEMP SE 2		2.2 - 1.7 - 0.45 V
TCC SOLENOID	When perform slip lock-up	0.2 - 0.4 A
	When perform lock-up	0.4 - 0.6 A

CONSULT-II SETTING PROCEDURE

CAUTION:

If CONSULT-II is used with no connection of CONSULT-II CONVERTER, malfunctions might be detected in self-diagnosis depending on control unit which carry out CAN communication.

- For details, refer to the separate “CONSULT-II Operations Manual”.

1. Turn ignition switch “OFF”.
2. Connect CONSULT-II and CONSULT-II CONVERTER to data link connector, which is located in instrument lower panel on driver side.
3. Turn ignition switch “ON”. (Do not start engine.)

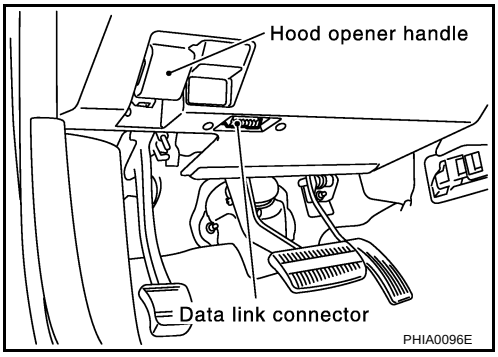

4. Touch “START (NISSAN BASED VHCL)”.

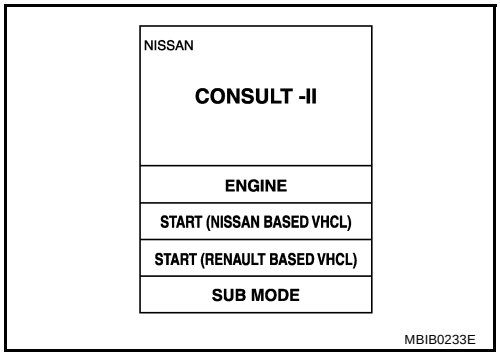

5. Touch “A/T”.
   If “A/T” is not indicated, go to GI-39, "CONSULT-II Data Link Connector (DLC) Circuit" .
6. Perform each diagnostic test mode according to each service procedure.

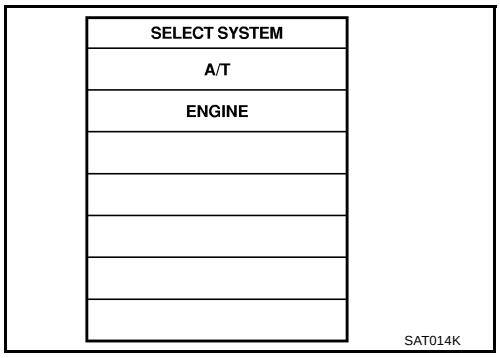

SELF-DIAGNOSTIC RESULT MODE

Operation Procedure

1. Perform “CONSULT-II SETTING PROCEDURE” Refer to AT-91, "CONSULT-II SETTING PROCEDURE" .
2. Touch “SELF-DIAG RESULTS”.
   Display shows malfunction experienced since the last erasing operation.

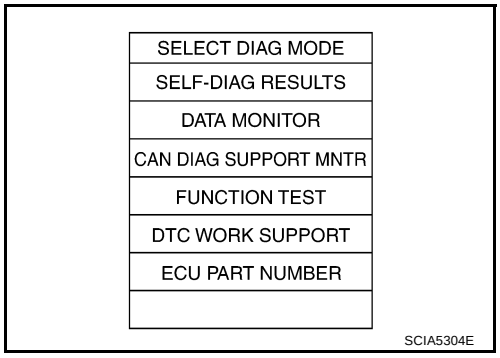

Display Items List

X: Applicable, —: Not applicable

Items (CONSULT-II screen terms)	Malfunction is detected when...	TCM self-diagnosis		OBD-II (DTC)
		A/T CHECK indicator lamp	“A/T” with CONSULT-II	MIL indicator lamp*1, “ENGINE” with CONSULT-II or GST
CAN COMM CIRCUIT	● When a malfunction is detected in CAN communications	X	U1000	U1000
STARTER RELAY/CIRC	● If this signal is ON other than in P or N position, this is judged to be a malfunction. (And if it is OFF in P or N position, this too is judged to be a malfunction.)	X	P0615	—
PNP SW/CIRC	● PNP switch 1-4 signals input with impossible pattern ● PNP switch 3 monitor terminal cut line ● P position is detected from N position without any other position being detected in between.	X	P0705	P0705

Items (CONSULT-II screen terms)	Malfunction is detected when...	TCM self-diagnosis		OBD-II (DTC)
		A/T CHECK indicator lamp	"A/T" with CONSULT-II	MIL indicator lamp*1, "ENGINE" with CONSULT-II or GST
VEH SPD SEN/ CIR AT (Revolution sensor)	● Signal from vehicle speed sensor A/T (Revolution sensor) not input due to cut line or the like ● Unexpected signal input during running ● After ignition switch is turned ON, unexpected signal input from vehicle speed sensor MTR before the vehicle starts moving	X	P0720	P0720
ENGINE SPEED SIG	● TCM does not receive the CAN communication signal from the ECM.	X	P0725	—
TCC SOLENOID/ CIRC	● Normal voltage not applied to solenoid due to cut line, short, or the like	X	P0740	P0740
A/T TCC S/V FNCTN	● A/T cannot perform lock-up even if electrical circuit is good. ● TCM detects as irregular by comparing difference value with slip rotation.	X	P0744	P0744*2
L/PRESS SOL/ CIRC	● Normal voltage not applied to solenoid due to cut line, short, or the like ● TCM detects as irregular by comparing target value with monitor value.	X	P0745	P0745
TCM-POWER SUPPLY	● When the power supply to the TCM is cut "OFF", for example because the battery is removed, and the self-diagnostics memory function stops ● This is not a malfunction message (Whenever shutting "OFF" a power supply to the TCM, this message appears on the screen.)	—	P1701	—
TCM·RAM	● TCM memory (RAM) is malfunctioning.	—	P1702	—
TCM·ROM	● TCM memory (ROM) is malfunctioning.	—	P1703	—
TCM·EEPROM	● TCM memory (EEP ROM) is malfunctioning.	—	P1704	—
TP SEN/CIRC A/T	● TCM does not receive the proper accelerator pedal position signals (input by CAN communication) from ECM.	X	P1705	P1705
ATF TEMP SEN/ CIRC	● During running, the ATF temperature sensor signal voltage is excessively high or low	X	P1710	P0710
TURBINE REV S/ CIRC	● TCM does not receive the proper voltage signal from the sensor. ● TCM detects an irregularity only at position of 4th gear for turbine revolution sensor 2.	X	P1716	P1716
VEH SPD SE/ CIR·MTR	● Signal (CAN communication) from vehicle speed sensor MTR not input due to cut line or the like ● Unexpected signal input during running	—	P1721	—
A/T INTERLOCK	● Except during shift change, the gear position and ATF pressure switch states are monitored and comparative judgement made.	X	P1730	P1730
A/T 1ST E/BRAKING	● Each ATF pressure switch and solenoid current is monitored and if a pattern is detected having engine braking 1st gear other than in the M1 position, a malfunction is detected.	X	P1731	—
I/C SOLENOID/ CIRC	● Normal voltage not applied to solenoid due to functional malfunction, cut line, short, or the like ● TCM detects as irregular by comparing target value with monitor value.	X	P1752	P1752

Items (CONSULT-II screen terms)	Malfunction is detected when...	TCM self-diagnosis		OBD-II (DTC)
		A/T CHECK indicator lamp	"A/T" with CONSULT-II	MIL indicator lamp*1, "ENGINE" with CONSULT-II or GST
I/C SOLENOID FNCTN	● TCM detects that actual gear ratio is irregular, and relation between gear position and condition of ATF pressure switch 3 is irregular during depressing accelerator pedal. (Other than during shift change) ● TCM detects that relation between gear position and condition of ATF pressure switch 3 is irregular during releasing accelerator pedal. (Other than during shift change)	X	P1754	P1754*2
FR/B SOLENOID/ CIRC	● Normal voltage not applied to solenoid due to functional malfunction, cut line, short, or the like ● TCM detects as irregular by comparing target value with monitor value.	X	P1757	P1757
FR/B SOLENOID FNCT	● TCM detects that actual gear ratio is irregular, and relation between gear position and condition of ATF pressure switch 1 is irregular during depressing accelerator pedal. (Other than during shift change) ● TCM detects that relation between gear position and condition of ATF pressure switch 1 is irregular during releasing accelerator pedal. (Other than during shift change)	X	P1759	P1759*2
D/C SOLENOID/ CIRC	● Normal voltage not applied to solenoid due to cut line, short, or the like ● TCM detects as irregular by comparing target value with monitor value.	X	P1762	P1762
D/C SOLENOID FNCTN	● TCM detects that actual gear ratio is irregular, and relation between gear position and condition of ATF pressure switch 5 is irregular during depressing accelerator pedal. (Other than during shift change) ● TCM detects that relation between gear position and condition of ATF pressure switch 5 is irregular during releasing accelerator pedal. (Other than during shift change)	X	P1764	P1764*2
HLR/C SOL/CIRC	● Normal voltage not applied to solenoid due to functional malfunction, cut line, short, or the like ● TCM detects as irregular by comparing target value with monitor value.	X	P1767	P1767
HLR/C SOL FNCTN	● TCM detects that actual gear ratio is irregular, and relation between gear position and condition of ATF pressure switch 6 is irregular during depressing accelerator pedal. (Other than during shift change) ● TCM detects that relation between gear position and condition of ATF pressure switch 6 is irregular during releasing accelerator pedal. (Other than during shift change)	X	P1769	P1769*2
LC/B SOLENOID/ CIRC	● Normal voltage not applied to solenoid due to functional malfunction, cut line, short, or the like	X	P1772	P1772
LC/B SOLENOID FNCT	● TCM detects an improper voltage drop when it tries to operate the solenoid valve. ● Condition of ATF pressure switch 2 is different from monitor value, and relation between gear position and actual gear ratio is irregular.	X	P1774	P1774*2
MANU MODE SW/ CIRC	● When an impossible pattern of switch signals is detected, a malfunction is detected.	—	P1815	—

Items (CONSULT-II screen terms)	Malfunction is detected when...	TCM self-diagnosis		OBD-II (DTC)
		A/T CHECK indicator lamp	"A/T" with CONSULT-II	MIL indicator lamp*1, "ENGINE" with CONSULT-II or GST
ATF PRES SW 1/ CIRC	● TCM detects that actual gear ratio is normal, and relation between gear position and condition of ATF pressure switch 1 is irregular during depressing accelerator pedal. (Other than during shift change)	—	P1841	—
ATF PRES SW 3/ CIRC	● TCM detects that actual gear ratio is normal, and relation between gear position and condition of ATF pressure switch 3 is irregular during depressing accelerator pedal. (Other than during shift change)	—	P1843	—
ATF PRES SW 5/ CIRC	● TCM detects that actual gear ratio is normal, and relation between gear position and condition of ATF pressure switch 5 is irregular during depressing accelerator pedal. (Other than during shift change)	—	P1845	—
ATF PRES SW 6/ CIRC	● TCM detects that actual gear ratio is normal, and relation between gear position and condition of ATF pressure switch 6 is irregular during depressing accelerator pedal. (Other than during shift change)	—	P1846	—
NO DTC IS DETECTED FURTHER TESTING MAY BE REQUIRED	● No NG item has been detected.	—	X	X

*1: Refer to AT-41, "Malfunction Indicator Lamp (MIL)" .
*2: These malfunctions cannot be displayed MIL if another malfunction is assigned to MIL.

DATA MONITOR MODE

Operation Procedure

1. Perform "CONSULT-II SETTING PROCEDURE" Refer to AT-91, "CONSULT-II SETTING PROCEDURE" .

2. Touch "DATA MONITOR".

   NOTE:
   When malfunction is detected, CONSULT-II performs "REAL-TIME DIAGNOSIS". Also, any malfunction detected while in this mode will be displayed at real time.

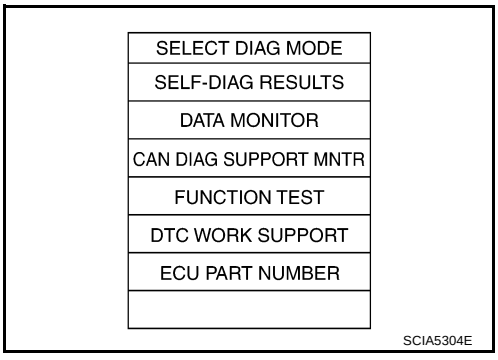

Display Items List

X: Standard, —: Not applicable

Monitored item (Unit)	Monitor Item Selection			Remarks
	ECU INPUT SIGNALS	MAIN SIGNALS	SELECTION FROM MENU	
VHCL/S SE·A/T (km/h)	X	X	X	Revolution sensor
VHCL/S SE·MTR (km/h)	X	—	X	
ACCELE POSI (0.0/8)	X	—	X	Accelerator pedal position signal

Monitored item (Unit)	Monitor Item Selection			Remarks
	ECU INPUT SIGNALS	MAIN SIGNALS	SELECTION FROM MENU	
THROTTLE POSI (0.0/8)	X	X	X	Degree of opening for accelerator recognized by the TCM For fail-safe operation, the specific value used for control is displayed.
BATTERY BOLT (V)	X	—	X	
ENGINE SPEED (rpm)	X	X	X	
TURBINE REV (rpm)	X	—	X	
ATF TEMP 1 (°C)	—	X	X	
ATF TEMP 2 (°C)	—	X	X	
OUTPUT REV (rpm)	X	X	X	
ATF TEMP SE 1 (V)	X	—	X	
ATF TEMP SE 2 (V)	X	—	X	
ATF PRES SW 1 (ON-OFF display)	X	X	X	(for FR/B solenoid)
ATF PRES SW 2 (ON-OFF display)	X	X	X	(for LC/B solenoid)
ATF PRES SW 3 (ON-OFF display)	X	X	X	(for I/C solenoid)
ATF PRES SW 5 (ON-OFF display)	X	X	X	(for D/C solenoid)
ATF PRES SW 6 (ON-OFF display)	X	X	X	(for HLR/C solenoid)
PNP SW 1 (ON-OFF display)	X	—	X	
PNP SW 2 (ON-OFF display)	X	—	X	
PNP SW 3 (ON-OFF display)	X	—	X	
PNP SW 4 (ON-OFF display)	X	—	X	
1 POSITION SW (ON-OFF display)	X	—	X	
ASCD·CRUISE (ON-OFF display)	X	—	X	Not mounted but displayed.
ASCD·OD CUT (ON-OFF display)	X	—	X	
OD CONT SW (ON-OFF display)	X	—	X	
MANU MODE SW (ON-OFF display)	X	—	X	
NON M-MODE SW (ON-OFF display)	X	—	X	
UP SW LEVER (ON-OFF display)	X	—	X	
DOWN SW LEVER (ON-OFF display)	X	—	X	
POWER SHIFT SW (ON-OFF display)	X	—	X	Not mounted but displayed.
CLSO THL POS (ON-OFF display)	X	—	X	Signal input with CAN communications
W/O THL POS (ON-OFF display)	X	—	X	Signal input with CAN communications
TCC SOLENOID (A)	—	X	X	
LINE PRES SOL (A)	—	X	X	
I/C SOLENOID (A)	—	X	X	
FR/B SOLENOID (A)	—	X	X	
D/C SOLENOID (A)	—	X	X	
HLR/C SOL (A)	—	X	X	
HOLD SW (ON-OFF display)	X	—	X	Not mounted but displayed.
BRAKE SW (ON-OFF display)	X	—	X	Stop lamp switch
GEAR	—	X	X	Gear position recognized by the TCM updated after gear-shifting
GEAR RATIO	—	X	X	

Monitored item (Unit)	Monitor Item Selection			Remarks
	ECU INPUT SIGNALS	MAIN SIGNALS	SELECTION FROM MENU	
SLCTLVR POSI	—	X	X	Selector lever position is recognized by the TCM. For fail safe operation, the specific value used for control is displayed.
VEHICLE SPEED (km/h)	—	X	X	Vehicle speed recognized by the TCM.
TC SLIP SPEED (rpm)	—	X	X	Difference between engine speed and torque converter input shaft speed
Voltage (V)	—	—	X	Displays the value measured by the voltage probe.
F SUN GW REV (rpm)	—	—	X	
F CARR GR REV (rpm)	—	—	X	
SFT UP ST SW	—	—	X	Not mounted but displayed.
SFT DWN ST SW	—	—	X	
ABS SIGNAL	—	—	X	
ACC OD CUT	—	—	X	
ACC SIGNAL	—	—	X	
TCS GR/P KEEP	—	—	X	
TCS SIGNAL 2	—	—	X	
TCS SIGNAL 1	—	—	X	
ON OFF SOL (ON-OFF display)	—	—	X	LC/B solenoid
TCC SOL MON	—	—	X	
L/P SOL MON	—	—	X	
I/C SL MON	—	—	X	
FR/B SOL MON	—	—	X	
D/C SOL MON	—	—	X	
HLR/C SOL MON	—	—	X	
ONOFF SOL MON	—	—	X	LC/B solenoid
P POSI IND	—	—	X	
R POSI IND	—	—	X	
N POSI IND	—	—	X	
D POSI IND	—	—	X	
4TH POSI IND	—	—	X	
3RD POSI IND	—	—	X	
2ND POSI IND	—	—	X	
1ST POSI IND	—	—	X	
M MODE IND	—	—	X	
POWER M LAMP	—	—	X	
F-SAFE IND/L	—	—	X	
ATF WARN LAMP	—	—	X	
BACK-UP LAMP	—	—	X	
STARTER RELAY	—	—	X	
PNP SW3 MON (ON-OFF display)	—	—	X	
C/VCLBID 1	—	—	X	
C/VCLBID 2	—	—	X	

Monitored item (Unit)	Monitor Item Selection			Remarks
	ECU INPUT SIGNALS	MAIN SIG-NALS	SELEC-TION FROM MENU	
C/VCLBID 3	—	—	X	
UNIT CLB ID 1	—	—	X	
UNIT CLB ID 2	—	—	X	
UNIT CLB ID 3	—	—	X	
TRGT GR RATIO	—	—	X	
TRG PRE TCC	—	—	X	
TRG PRE L/P	—	—	X	
TRG PRE I/C	—	—	X	
TRG PRE FR/B	—	—	X	
TRG PRE D/C	—	—	X	
TRG PRE HLR/C	—	—	X	
DRV CST JUDGE	—	—	X	
START RLY MON	—	—	X	
Next gear	—	—	X	
SHIFT MODE	—	—	X	
MANU GR POSI	—	—	X	
Frequency (Hz)	—	—	X	The value measured by the pulse probe is displayed.
DUTY·HI (high) (%)	—	—	X	
DUTY·LOW (low) (%)	—	—	X	
PLS WIDTH·HI (ms)	—	—	X	
PLS WIDTH·LOW (ms)	—	—	X	

DTC WORK SUPPORT MODE WITH CONSULT-II

Operation Procedure

1. Perform “CONSULT-II SETTING PROCEDURE” Refer to AT-91, "CONSULT-II SETTING PROCEDURE" .

2. Touch “DTC WORK SUPPORT”.

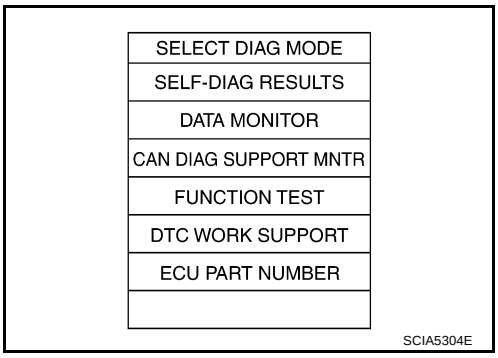

3. Touch select item menu.

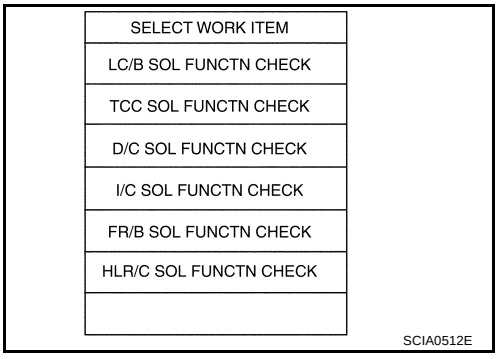

4. Touch “START”.

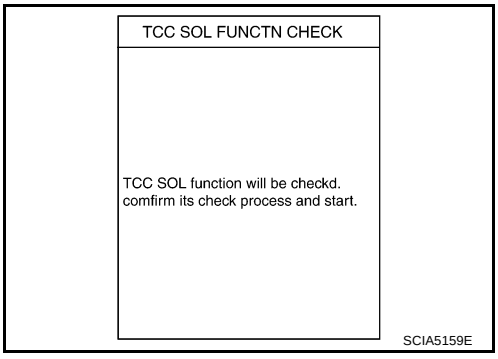

5. Perform driving test according to “DTC CONFIRMATION PROCEDURE” in “TROUBLE DIAGNOSIS FOR DTC”.

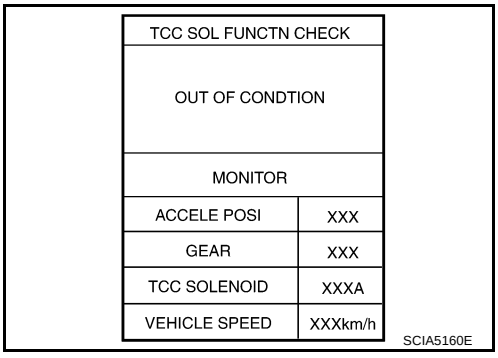

- **When testing conditions are satisfied, CONSULT-II screen changes from “OUT OF CONDITION” to “TESTING”.**

TCC SOL FUNCTN CHECK	
TESTING	
MONITOR	
ACCELE POSI	XXX
GEAR	XXX
TCC SOLENOID	XXXA
VEHICLE SPEED	XXXkm/h

SCIA5161E

6. Stop vehicle. If “NG” appears on the screen, malfunction may exist. Go to “DIAGNOSTIC PROCEDURE”.

TCC SOL FUNCTN CHECK
STOP VEHICLE

SCIA5164E

- **If “NG” appears on the screen, malfunction may exist. Go to “DIAGNOSTIC PROCEDURE”.**

TCC SOL FUNCTN CHECK
NG

SCIA5162E

7. Perform test drive to check gear shift feeling in accordance with instructions displayed.
8. Touch “YES” or “NO”.
9. CONSULT-II procedure is ended.

TCC SOL FUNCTN CHECK
OK

SCIA5163E

- **If “NG” appears on the screen, a malfunction may exist. Go to “DIAGNOSTIC PROCEDURE”.**

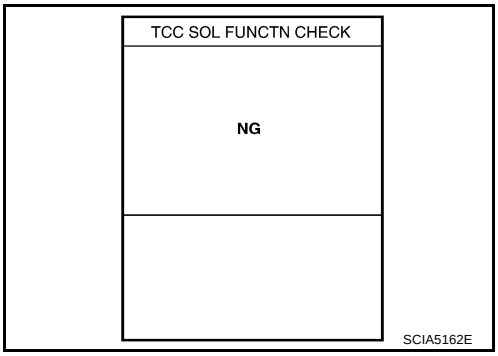

Display Items List

DTC work support item	Description	Check item
I/C SOL FUNCTN CHECK*	—	—
FR/B SOL FUNCTN CHECK*	—	—
D/C SOL FUNCTN CHECK*	—	—
HLR/C SOL FUNCTN CHECK*	—	—
LC/B SOL FUNCTN CHECK*	—	—
TCC SOL FUNCTN CHECK	Following items for “TCC solenoid function (lock-up) ” can be confirmed. ● Self-diagnosis status (whether the diagnosis is being conducted or not) ● Self-diagnosis result (OK or NG)	● TCC solenoid valve ● Hydraulic control circuit

*: Do not use, but displayed.

Diagnostic Procedure Without CONSULT-II

ACS002BL

OBD-II SELF-DIAGNOSTIC PROCEDURE (WITH GST)

Refer to EC-116, "Generic Scan Tool (GST) Function" .

OBD-II SELF-DIAGNOSTIC PROCEDURE (NO TOOLS)

Refer to EC-62, "Malfunction Indicator Lamp (MIL)" .

TCM SELF-DIAGNOSTIC PROCEDURE (NO TOOLS)

Description

In the unlikely event of a malfunction in the electrical system, when the ignition switch is switched “ON”, the A/T CHECK indicator lamp lights up for 2 seconds, then flashes for 8 seconds. If there is no malfunction, when the ignition switch is turned “ON”, the indicator lamp lights up for 2 seconds. As a method for locating the suspect circuit, when the self-diagnostics start signal is input, the memory for the malfunction location is output and the A/T CHECK indicator lamp flashes to display the corresponding DTC.

Diagnostic Procedure

1. CHECK A/T CHECK INDICATOR LAMP

1. Start the engine with selector lever in “P” position. Warm engine to normal operating temperature.
2. Turn ignition switch “ON” and “OFF” at least twice, then leave it in the “OFF” position.
3. Wait 10 seconds.
4. Turn ignition switch to “ON” position. (Do not start engine.)

Does A/T CHECK indicator lamp come on for 2 seconds?

Yes >> GO TO 2.
No >> GO TO AT-247, "A/T CHECK Indicator Lamp Does Not Come On" .

2. JUDGEMENT PROCEDURE STEP 1

1. Turn ignition switch “OFF”.
2. Push shift lock release button.
3. Move selector lever from “P” to “D” position.
4. Release accelerator pedal. (Set the closed throttle position signal “ON”.)
5. Depress brake pedal. (Brake switch signal “ON”.)
6. Turn ignition switch “ON”. (Do not start engine.)
7. Wait 3 seconds.
8. Move the selector lever to the Manual shift gate side. (Manual mode switch “ON”.)
9. Release brake pedal. (Brake switch signal “OFF”.)
10. Move the selector lever to “D” position. (Manual mode switch “OFF”.)
11. Depress brake pedal. (Brake switch signal “ON”.)
12. Release brake pedal. (Brake switch signal “OFF”.)
13. Depress accelerator pedal fully and release it.

>> GO TO 3.

3. CHECK SELF-DIAGNOSIS CODE

Check A/T CHECK indicator lamp.
Refer to AT-103, "Judgement Self-diagnosis Code" .
If the system does not go into self-diagnostics. Refer to AT-243, "PARK/NEUTRAL POSITION, MANUAL MODE, BRAKE AND THROTTLE POSITION SWITCH CIRCUIT" .

>> **DIAGNOSIS END**

Judgement Self-diagnosis Code

If there is a malfunction, the lamp lights up for the time corresponding to the suspect circuit.

1	Revolution sensor 1
2	Direct clutch solenoid valve
3	Torque converter clutch solenoid valve
4	Line pressure solenoid valve
5	Input clutch solenoid valve
6	Front brake solenoid valve
7	Low coast brake solenoid valve
8	High & low reverse clutch solenoid valve
9	PNP switch
10	A/T fluid temperature sensor
11	Turbine revolution sensor
12	A/T interlock
13	A/T 1st engine braking
14	Start signal
15	Accelerator pedal position sensor
16	Engine speed signal
17	CAN

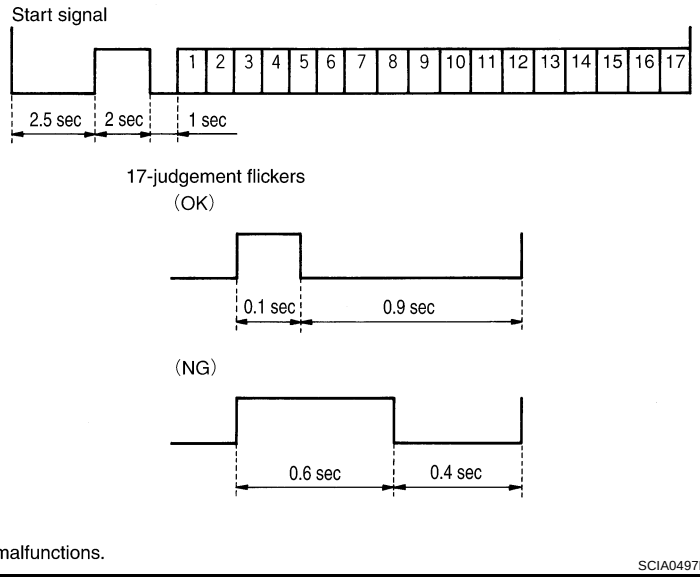

※ Solenoid valve is checked for open and short circuit, and malfunctions.

SCIA0497E

Erase Self-diagnosis

- In order to make it easier to find the cause of hard-to-duplicate malfunctions, malfunction information is stored into the control unit as necessary during use by the user. This memory is not erased no matter how many times the ignition switch is turned ON and OFF.
- However, this information is erased by turning ignition switch “OFF” after executing self-diagnostics or by erasing the memory using the CONSULT-II.

DTC U1000 CAN COMMUNICATION LINE

PFP:23710

Description

ACS002BM

CAN (Controller Area Network) is a serial communication line for real time application. It is an on-vehicle multiplex communication line with high data communication speed and excellent malfunction detection ability. Many electronic control units are equipped onto a vehicle, and each control unit shares information and links with other control units during operation (not independent). In CAN communication, control units are connected with 2 communication lines (CAN H line, CAN L line) allowing a high rate of information transmission with less wiring. Each control unit transmits/receives data but selectively reads required data only.

On Board Diagnosis Logic

ACS002BN

- This is an OBD-II self-diagnostic item.
- Diagnostic trouble code “CAN COMM CIRCUIT” with CONSULT-II or U1000 without CONSULT-II is detected when TCM cannot communicate to other control units.

Possible Cause

ACS002BO

Harness or connectors
(CAN communication line is open or shorted.)

DTC Confirmation Procedure

ACS002BP

NOTE:
If “DTC Confirmation Procedure” has been previously conducted, always turn ignition switch “OFF” and wait at least 10 seconds before conducting the next test.
After the repair, perform the following procedure to confirm the malfunction is eliminated.

WITH CONSULT-II

1. Turn ignition switch ON. (Do not start engine.)
2. Select “DATA MONITOR” mode for “ENGINE” with CONSULT-II.
3. Start engine and wait for at least 6 seconds.
4. If DTC is detected, go to AT-106, "Diagnostic Procedure" .

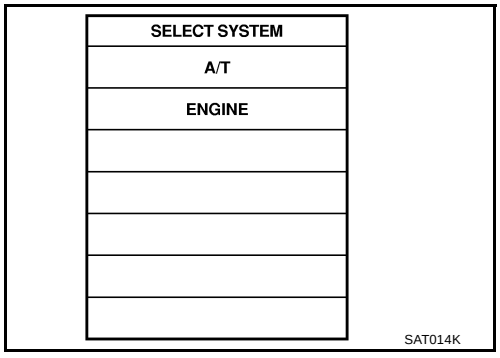

WITH GST

Follow the procedure “WITH CONSULT-II”.

Wiring Diagram — AT — CAN

ACS002BQ

AT-CAN-01

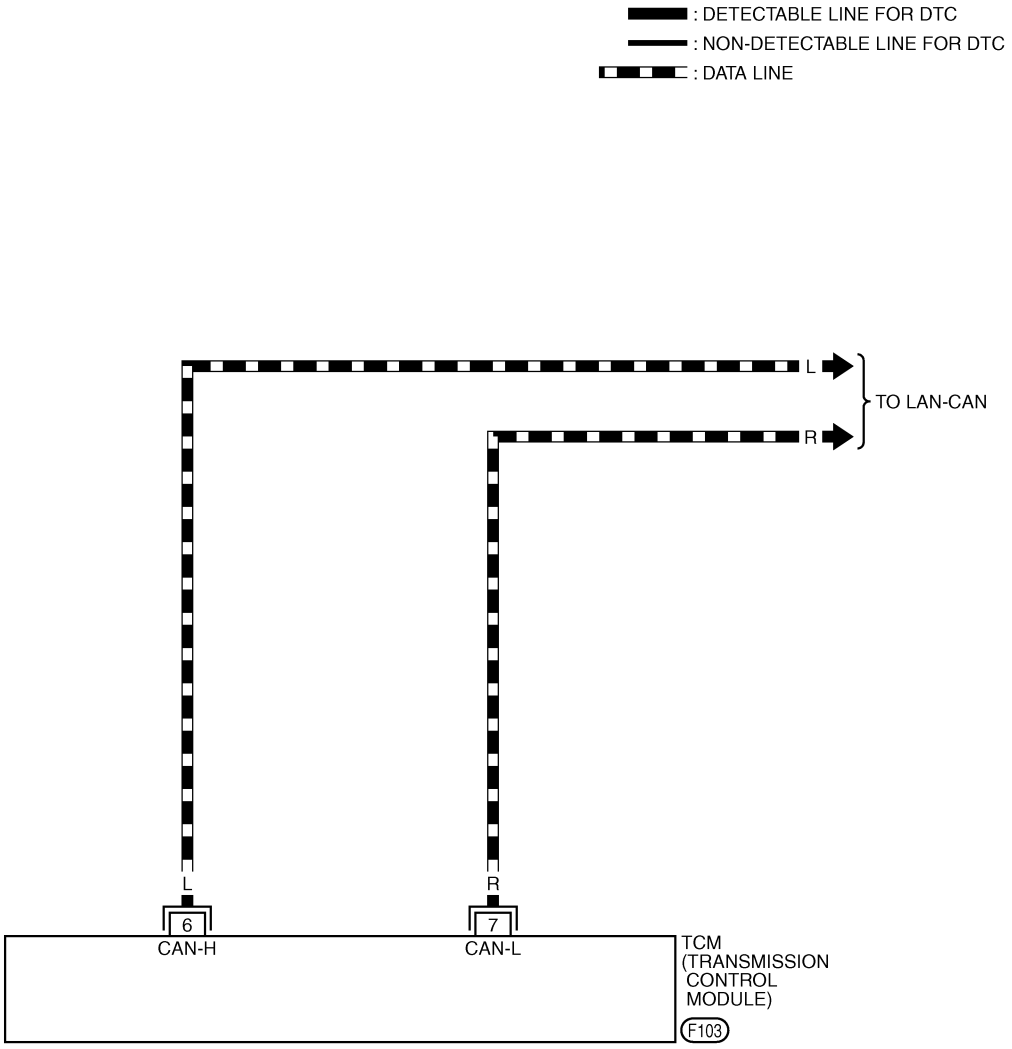

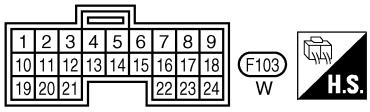

TCWT0054E

TCM terminal and Data are reference value.

Terminal No.	Wire color	Item	Condition	Data (Approx.)
6	L	CAN H	–	–
7	R	CAN L	–	–

Diagnostic Procedure

ACS002BR

1. CHECK CAN COMMUNICATION CIRCUIT

With CONSULT-II

1. Turn ignition switch ON and start engine.
2. Select “SELF-DIAG RESULTS” mode for “A/T” with CONSULT-II.

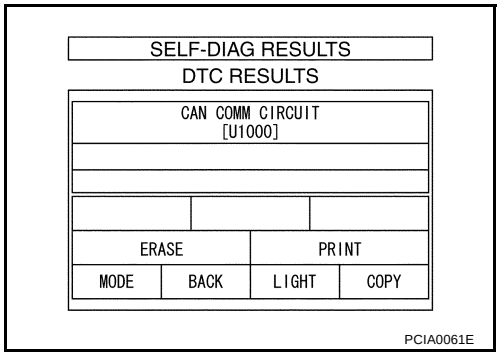

Is any malfunction of the “CAN COMM CIRCUIT” indicated?

YES >> Print out CONSULT-II screen, GO TO LAN section. Refer to LAN-2, "Precautions When Using CONSULT-II".

NO >> **INSPECTION END**

DTC P0615 START SIGNAL CIRCUIT

PFP:25230

Description

ACS002BS

Prohibits cranking other at “P” or “N” position.

On Board Diagnosis Logic

ACS002BT

- This is not an OBD-II self-diagnostic item.
- Diagnostic trouble code “STARTER RELAY/CIRC” with CONSULT-II or 14th judgement flicker without CONSULT-II is detected when detects as irregular when switched “ON” other than at “P” or “N” position. (Or when switched “OFF” at “P” or “N” position).

Possible Cause

ACS002BU

- Harness or connectors
  (The starter relay and TCM circuit is open or shorted.)
- Starter relay circuit

DTC Confirmation Procedure

ACS002BV

NOTE:
If “DTC Confirmation Procedure” has been previously conducted, always turn ignition switch “OFF” and wait at least 10 seconds before conducting the next test.
After the repair, perform the following procedure to confirm the malfunction is eliminated.

WITH CONSULT-II

1. Turn ignition switch ON. (Do not start engine.)
2. Select “DATA MONITOR” mode for “A/T” with CONSULT-II.
3. Start engine.
4. Vehicle start for at least 2 consecutive seconds.
5. If DTC is detected, go to AT-109, "Diagnostic Procedure" .

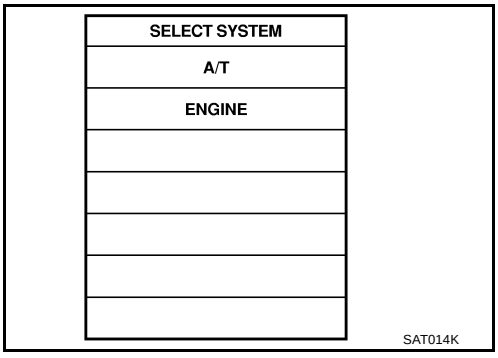

Wiring Diagram — AT — STSIG

ACS002BW

AT-STSIG-01

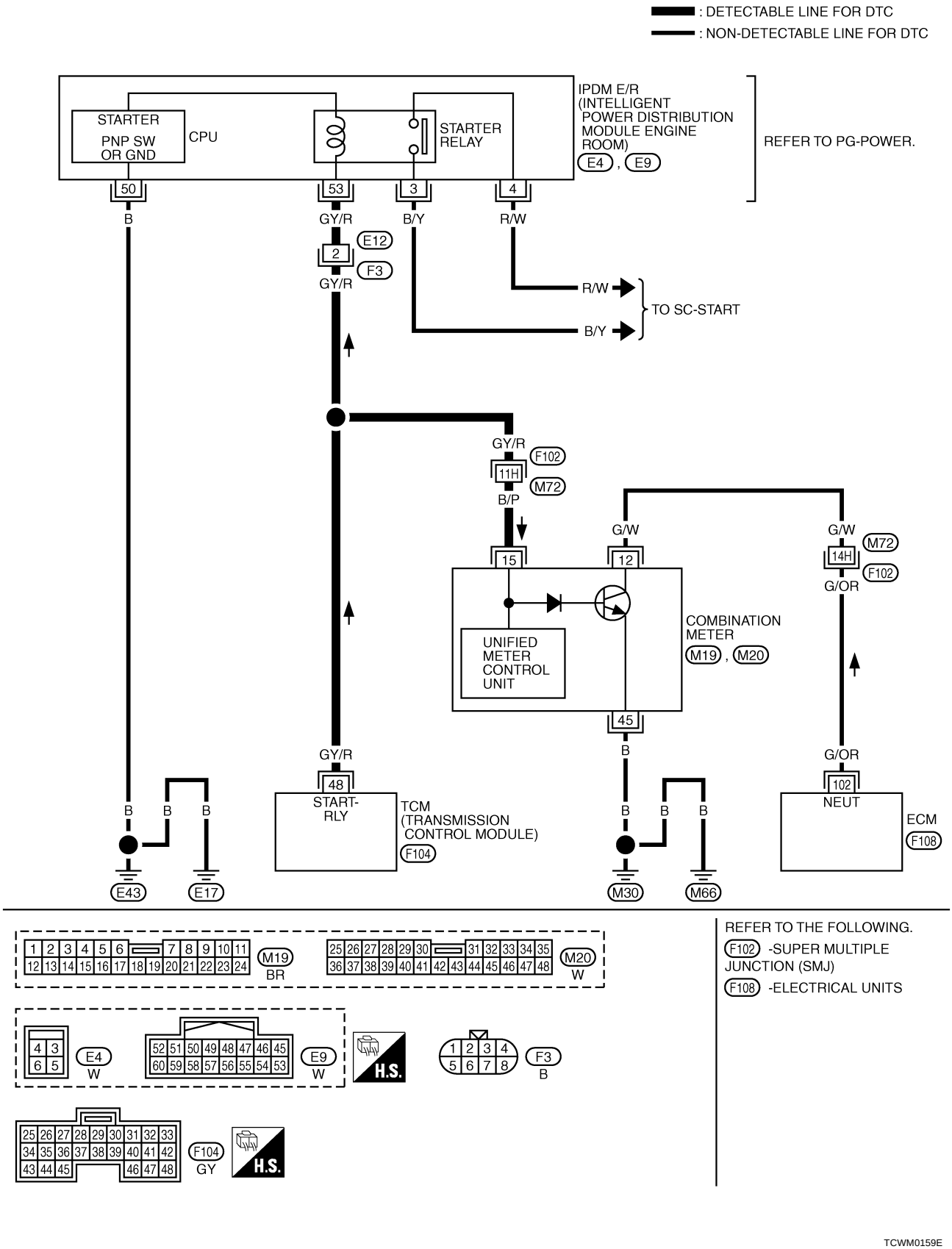

TCWM0159E

TCM terminal and Data are reference value. Measured between each terminals 5, 14, 24 and 46 (TCM ground).

Terminal No.	Wire color	Item	Condition		Data (Approx.)
48	GY/R	Starter relay	IGN ON	Selector lever in “N”,“P” position.	Battery voltage
				Selector lever in other position.	0V

Diagnostic Procedure

ACS002IL

1. CHECK STARTER RELAY (WITH CONSULT-II)

With CONSULT-II

1. Turn ignition switch ON. (Do not start engine.)
2. Select “SELECTION FROM MENU” in “DATA MONITOR” mode for “A/T” with CONSULT-II and check monitor “STARTER RELAY” ON/OFF.

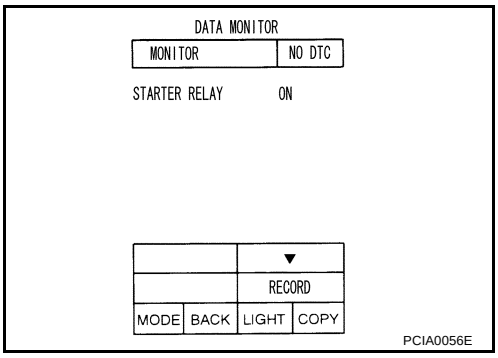

OK or NG

OK >> GO TO 4.
NG >> GO TO 3.

2. CHECK STARTER RELAY (WITHOUT CONSULT-II)

Without CONSULT-II

1. Turn ignition switch ON. (Do not start engine.)
2. Check the voltage between the TCM connector and ground.

Item	Connector No.	Terminal No.		Shift position	Voltage (Approx.)
Starter relay	F104	48	Ground	N and P	Battery voltage
				R and D	0V

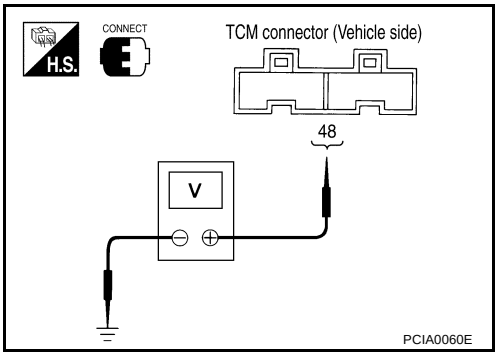

OK or NG

OK >> GO TO 4.
NG >> GO TO 3.

3. DETECT MALFUNCTIONING ITEM

Check the following items:

- Starter relay, Refer to SC-10, "STARTING SYSTEM" .
- Disconnections or short-circuits in the harness between TCM and the IPDM E/R
- Disconnections or short-circuits in the harness between TCM and the combination meter

OK or NG

OK >> GO TO 4.
NG >> Repair or replace damaged parts.

4. CHECK DTC

Perform "DTC confirmation Procedure". Refer to AT-107, "DTC Confirmation Procedure" .

OK or NG

OK >> **INSPECTION END**
NG >> GO TO 5.

5. PERFORM TCM INSPECTION

1. Perform TCM input/output signal inspection. Refer to AT-88, "TCM Input/Output Signal Reference Values".
2. If NG, recheck TCM pin terminals for damage or loose connection with harness connector.

OK or NG

OK >> **INSPECTION END**
NG >> Repair or replace damaged parts.

DTC P0705 PARK/NEUTRAL POSITION SWITCH

PFP:32006

Description

ACS002BY

- The park/neutral position (PNP) switch includes a transmission position switch.
- The transmission range switch detects the selector lever position and sends a signal to the TCM.

On Board Diagnosis Logic

ACS002BZ

- This is an OBD-II self-diagnostic item.
- Diagnostic trouble code “PNP SW/CIRC” with CONSULT-II or P0705 without CONSULT-II is detected under the following conditions.
  - When TCM does not receive the correct voltage signal from the PNP switch 1, 2, 3, 4 based on the gear position.
  - When monitor terminal of PNP switch 3 is disconnected.
  - When no other position but “P” position is detected from “N” positions.

Possible Cause

ACS002C0

- Harness or connectors
  [The park/neutral position (PNP) switch 1, 2, 3, 4 and TCM circuit is open or shorted.]
- Park/neutral position (PNP) switch 1, 2, 3, 4
- Park/neutral position (PNP) switch 3 monitor terminal disconnected

DTC Confirmation Procedure

ACS002C1

CAUTION:
Always drive vehicle at a safe speed.

NOTE:
If “DTC Confirmation Procedure” has been previously conducted, always turn ignition switch “OFF” and wait at least 10 seconds before conducting the next test.
After the repair, perform the following procedure to confirm the malfunction is eliminated.

WITH CONSULT-II

1. Turn ignition switch ON. (Do not start engine.)
2. Select “DATA MONITOR” mode for “ENGINE” with CONSULT-II.
3. Start engine.
4. Drive vehicle and maintain the following conditions for at least 2 consecutive seconds.
   THRTL POS SEN: More than 1.2V
5. If DTC is detected, go to AT-113, "Diagnostic Procedure" .

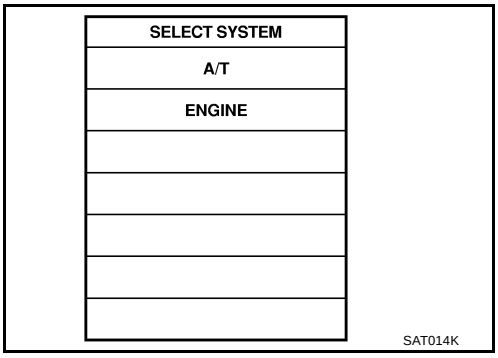

WITH GST

Follow the procedure “With CONSULT-II”.

Wiring Diagram — AT — PNP/SW

ACS002C2

AT-PNP/SW-01

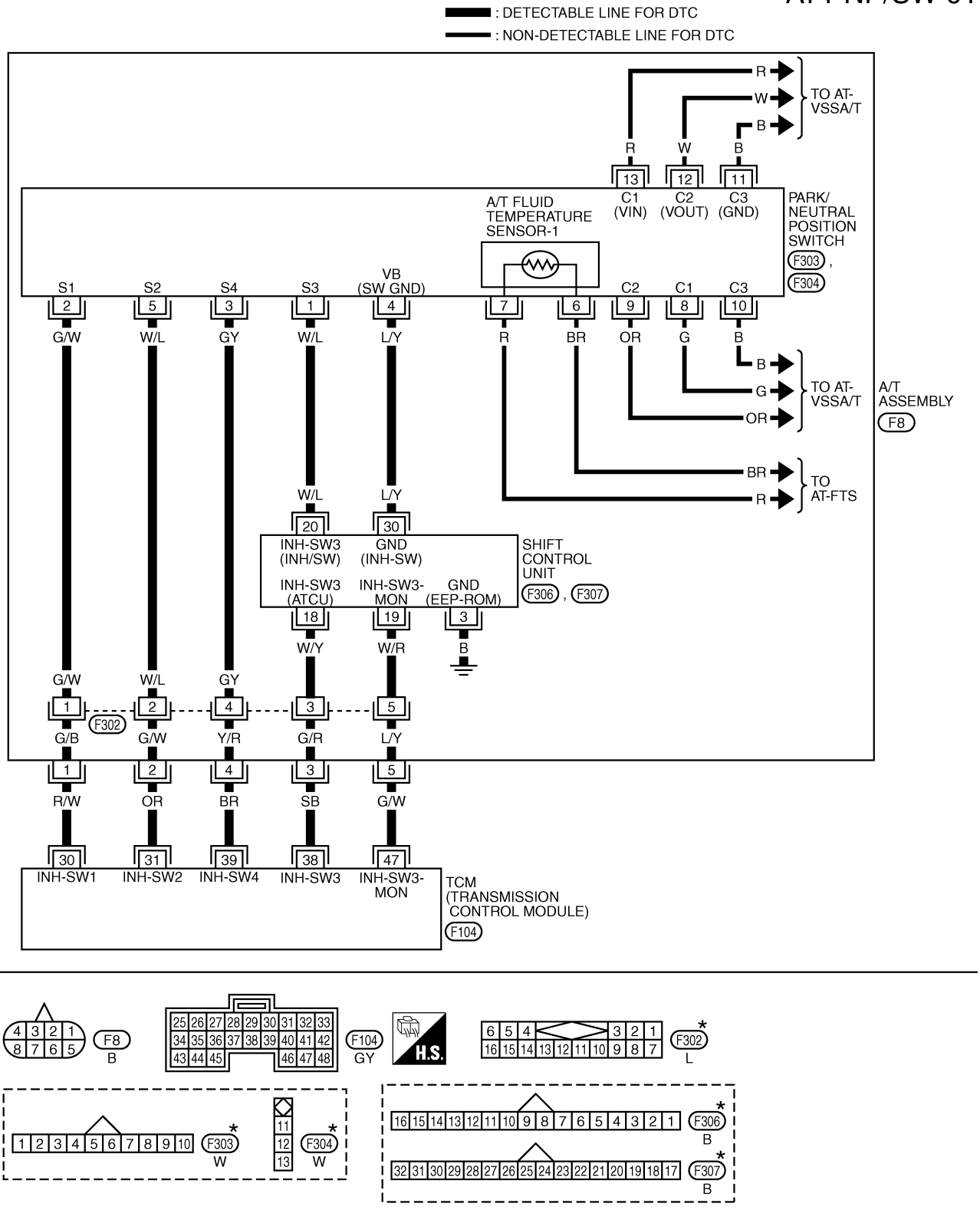

*: THIS CONNECTOR IS NOT SHOWN IN "HARNESS LAYOUT", PG SECTION.

TCWT0100E

TCM terminals and Data are reference value. Measured between each terminals 5, 14, 24 and 46 (TCM ground).

Terminal No.	Wire color	Item	Condition		Data (Approx.)
30	R/W	PNP switch 1	IGN ON	Selector lever in “P” position.	Battery voltage
				Selector lever in “N” position.	Less than 2.5V
31	OR	PNP switch 2		Selector lever in “P” position.	Battery voltage
				Selector lever in “D” position.	Less than 2.5V
38	SB	PNP switch 3		Selector lever in “D” position.	Battery voltage
				Selector lever in “R” position.	Less than 2.5V
39	BR	PNP switch 4		Selector lever in “D” position.	Less than 2.5V
				Selector lever in “P” position.	Battery voltage
47	G/W	PNP switch 3 (monitor)		Selector lever in “D” position.	Battery voltage
				Selector lever in “R” position.	Less than 2.5V

Diagnostic Procedure

ACS002IM

1. CHECK PNP SW CIRCUIT (WITH CONSULT-II)

With CONSULT-II

1. Turn ignition switch ON. (Do not start engine.)
2. Select “MAIN SIGNALS” in “DATA MONITOR” mode for “A/T” with CONSULT-II.
3. Read out “N·P”, “R” and “D” position switches moving selector lever to each position.

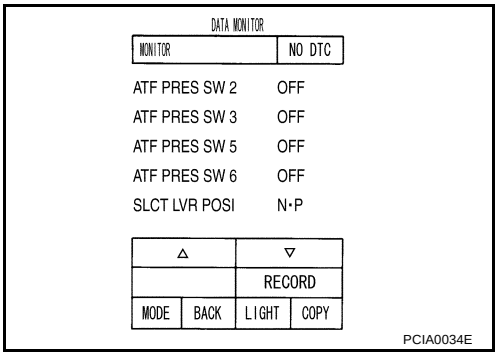

OK or NG

OK >> GO TO 5.
NG >> GO TO 3.

2. CHECK PNP SW CIRCUIT (WITHOUT CONSULT-II)

Without CONSULT-II

1. Turn ignition switch ON. (Do not start engine.)
2. Selector lever to “P“, “R”, “N”, or “D” position to check the voltage between the TCM connector terminals and ground.

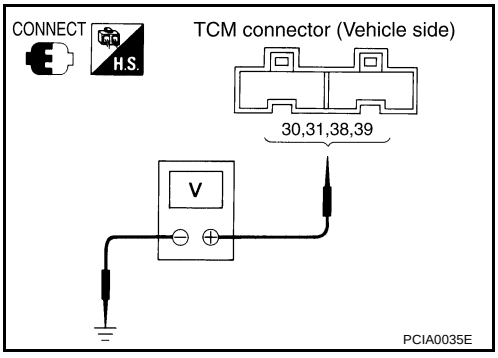

Shift position	Connector No.		F104	
	Terminal No.			
	30(RW) - Ground	31(OR) - Ground	38(SB) - Ground	39(BR) - Ground
P	Battery voltage	Battery voltage	–	Battery voltage
R	–	–	Less than 2.5V	–
N	Less than 2.5V	–	–	–
D	–	Less than 2.5V	Battery voltage	Less than 2.5V

OK or NG

OK >> GO TO 5.
NG >> GO TO 3.

3. DETECT MALFUNCTIONING ITEM

Check the following items.

- Disconnection or short-circuit in the harness between TCM and A/T unit harness connector.
- PNP switch. Refer to AT-115, "Component Inspection" .

OK or NG

OK >> GO TO 4.
NG >> Repair or replace damaged parts.

4. CHECK TERMINAL CORD ASSEMBLY

1. Remove oil pan. Refer to AT-301, "Control Valve Assembly" .
2. Disconnect A/T unit assembly harness connector and control valve assembly harness connector.
3. Check continuity between A/T unit assembly harness connector and control valve assembly harness connector.

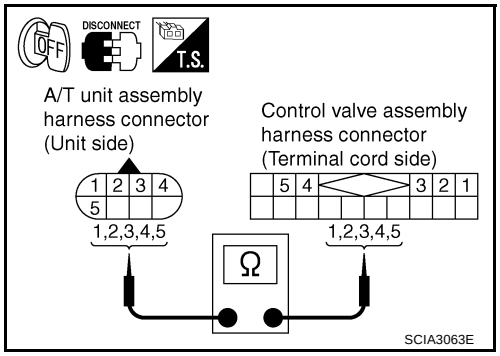

Item	Connector No.	Terminal No. (Wire color)	Continuity
A/T unit assembly harness connector	F8	1 (G/B)	Yes
Control valve assembly harness connector	F302		
A/T unit assembly harness connector	F8	2 (G/W)	Yes
Control valve assembly harness connector	F302		
A/T unit assembly harness connector	F8	3 (G/R)	Yes
Control valve assembly harness connector	F302		
A/T unit assembly harness connector	F8	4 (Y/R)	Yes
Control valve assembly harness connector	F302		
A/T unit assembly harness connector	F8	5 (L/Y)	Yes
Control valve assembly harness connector	F302		

4. If OK, check harness for short to ground and short to power.
5. Reinstall any part removed.

OK or NG

OK >> Replace control valve assembly. Refer to AT-301, "Control Valve Assembly" .
NG >> Repair open circuit or short to ground or short to power in harness or connectors.

5. CHECK DTC

Perform “DTC Confirmation Procedure”. Refer to AT-121, "DTC Confirmation Procedure" .

OK or NG

OK >> **INSPECTION END**
NG >> GO TO 6.

6. PERFORM TCM INSPECTION

1. Perform TCM input/output signal inspection. Refer to AT-88, "TCM Input/Output Signal Reference Values" .
2. If NG, recheck TCM pin terminals for damage or loose connection with harness connector.

OK or NG

OK >> **INSPECTION END**
NG >> Repair or replace damaged parts.

Component Inspection

ACS004K3

PNP SWITCH

1. Selector lever to various positions to check the continuity between terminals on the PNP switch and ground.

PNP SW	Shift position	Connector No.	Terminal No. (Wire color)	Continuity
SW 1	P	F302	1 (G/W) - Ground	No
SW 2			2 (W/L) - Ground	
SW 3	D		3 (W/Y) - Ground	
SW 4			4 (GY) - Ground	Yes
SW 3 Monitor	P, R, N, D		3 (W/Y) - 5 (W/R)	

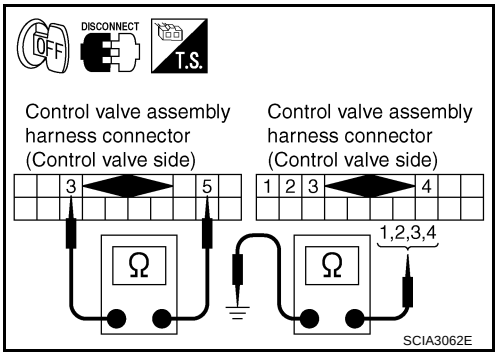

2. If NG, check the continuity with the control linkage disconnected. (Refer to Step 1 above.)
3. If OK with the control linkage disconnected, adjust the control linkage. Refer to AT-290, "Adjustment of A/T Position" .
4. If NG even when the control linkage is disconnected, replace the control valve assembly. Refer to AT-301, "Control Valve Assembly" .

DTC P0720 VEHICLE SPEED SENSOR A/T (REVOLUTION SENSOR)

PFP:32702

Description

ACS002C5

The revolution sensor detects the revolution of the idler gear parking pawl lock gear and emits a pulse signal. The pulse signal is sent to the TCM which converts it into vehicle speed.

On Board Diagnosis Logic

ACS002C6

- This is an OBD-II self-diagnostic item.
- Diagnostic trouble code “VEH SPD SEN/CIR AT” with CONSULT-II or P0720 without CONSULT-II is detected under the following conditions.
  - When TCM does not receive the proper voltage signal from the sensor.
  - After ignition switch is turned “ON”, irregular signal input from vehicle speed sensor MTR before the vehicle starts moving.

Possible Cause

ACS002C7

- Harness or connectors
  (The sensor circuit is open or shorted.)
- Revolution sensor
- Vehicle speed sensor MTR

DTC Confirmation Procedure

ACS002C8

CAUTION:

- **Always drive vehicle at a safe speed.**
- **Be careful not to rev engine into the red zone on the tachometer.**

NOTE:
If “DTC Confirmation Procedure” has been previously conducted, always turn ignition switch “OFF” and wait at least 10 seconds before conducting the next test.
After the repair, perform the following procedure to confirm the malfunction is eliminated.

WITH CONSULT-II

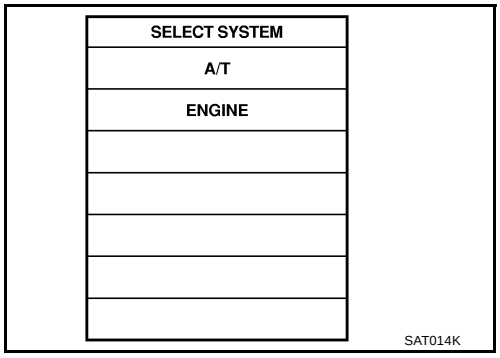

1. Turn ignition switch ON. (Do not start engine.)
2. Select “DATA MONITOR” mode for “A/T” with CONSULT-II.
3. Drive vehicle and check for an increase of “VHCL/S SE·A/T” value in response to “VHCL/S SE·MTR” value.
   If the check result is NG, go to AT-118, "Diagnostic Procedure" .
   If the check result is OK, go to following step.
4. Select “DATA MONITOR” mode for “ENGINE” with CONSULT-II.
5. Start engine and maintain the following conditions for at least 5 consecutive seconds.
   VHCL SPEED SE: 30 km/h (19 MPH) or more
   THRTL POS SEN: More than 1.0/8
   Selector lever: “D” position
   Driving location: Driving the vehicle uphill (increased engine load) will help maintain the driving conditions required for this test.
   If the check result is NG, go to AT-118, "Diagnostic Procedure" .
   If the check result is OK, go to following step.
6. Maintain the following conditions for at least 5 consecutive seconds.
   ENGINE SPEED: 3,500 rpm or more
   THRTL POS SEN: More than 1.0/8
   Selector lever: “D” position
   Driving location: Driving the vehicle uphill (increased engine load) will help maintain the driving conditions required for this test.
   If the check result is NG, go to AT-118, "Diagnostic Procedure" .

WITH GST

Follow the procedure “With CONSULT-II”.

Wiring Diagram — AT — VSSA/T

ACS002C9

AT-VSSA/T-01

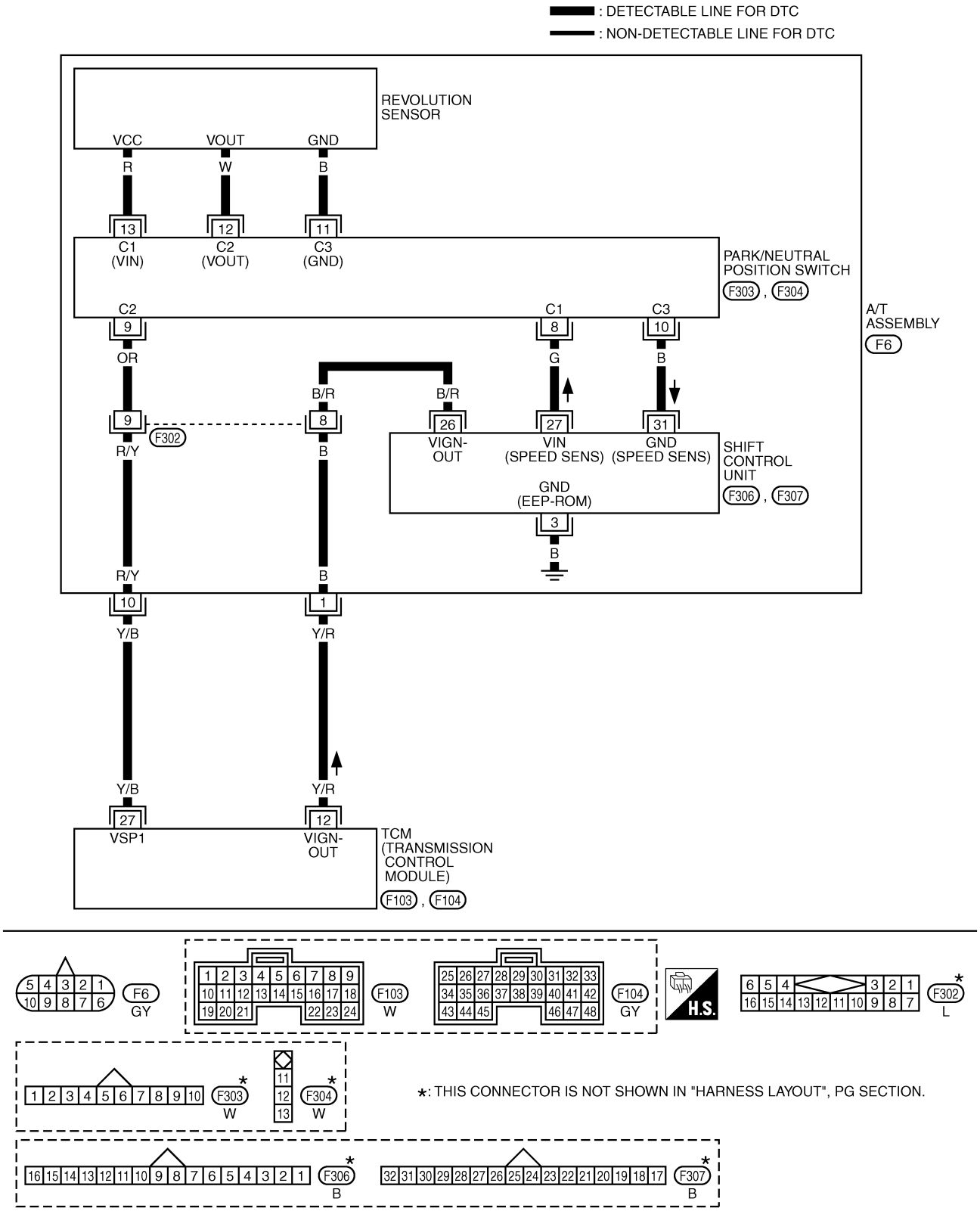

TCM terminals and Data are reference value. Measured between each terminals 5, 14, 24 and 46 (TCM ground).

Terminal No.	Wire color	Item	Condition		Data (Approx.)
12	Y/R	Power supply (out)	IGN ON	–	Battery voltage
			IGN OFF	–	0V
27	Y/B	Vehicle speed sensor A/T (revolution sensor)	When vehicle cruises	When moving at 20 km/h (12MPH).	185 (Hz)

Diagnostic Procedure

ACS002CA

1. CHECK INPUT SIGNALS

With CONSULT-II

1. Turn ignition switch ON. (Do not start engine.)
2. Select “ECU INPUT SIGNALS” in “DATA MONITOR” mode for “A/T” with CONSULT-II.
3. Start the engine.
4. Read out the value of “VHCL/S SE·A/T” while driving. Check the value changes according to driving speed.

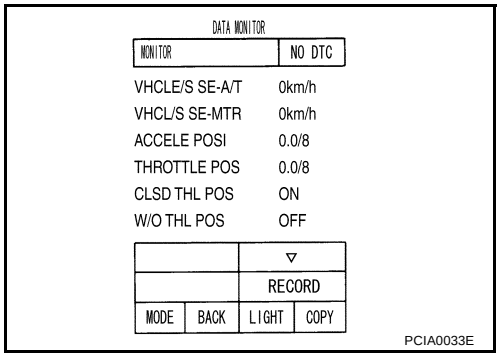

OK or NG

OK >> GO TO 6.
NG >> GO TO 2.

2. CHECK REVOLUTION SENSOR

1. Start the engine.
2. Check the pulse when vehicle cruises.

Condition	Connector No.	Terminal No.	Data (Approx.)
When moving at 20 km/h (12 MPH), use the CONSULT-II pulse frequency measuring function. **CAUTION:** **Connect the data link connector to the vehicle-side diagnosis connector.**	F104	27(Y/B)	185 (Hz)

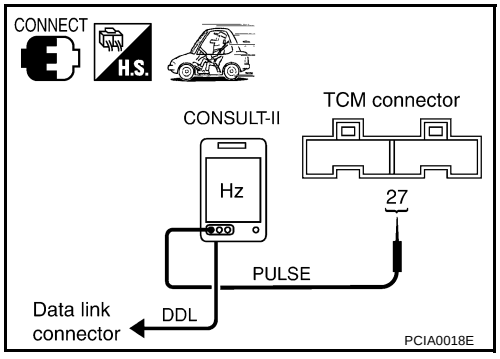

OK or NG

OK >> GO TO 6.
NG >> GO TO 3.

3. CHECK HARNESS BETWEEN TCM AND A/T UNIT ASSEMBLY HARNESS CONNECTOR

1. Turn ignition switch OFF.
2. Disconnect TCM connector.
3. Check continuity between A/T unit assembly harness connector and TCM connector.

Item	Connector No.	Terminal No. (Wire color)	Continuity
TCM	F103	12 (Y/R)	Yes
A/T unit assembly harness connector	F6	1 (Y/R)	
TCM	F104	27 (Y/B)	Yes
A/T unit assembly harness connector	F6	10 (Y/B)	

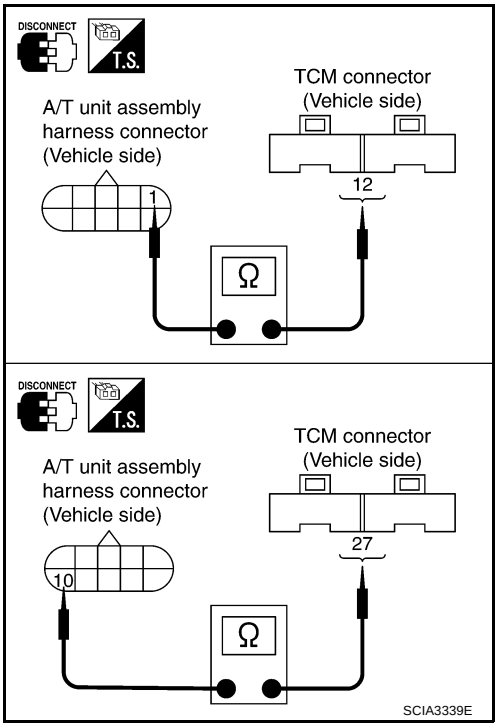

4. If OK, check harness for short to ground and short to power.
5. Reinstall any part removed.

OK or NG

OK >> GO TO 4.
NG >> Repair open circuit or short to ground or short to power in harness or connectors.

4. CHECK TERMINAL CORD ASSEMBLY

1. Remove oil pan. Refer to AT-301, "Control Valve Assembly" .
2. Disconnect A/T unit assembly harness connector and control valve assembly harness connector.
3. Check continuity between A/T unit assembly harness connector and control valve assembly harness connector.

Item	Connector No.	Terminal No. (Wire color)	Continuity
A/T unit assembly harness connector	F6	1 (B)	Yes
Control valve assembly harness connector	F302	8 (B)	
A/T unit assembly harness connector	F6	10 (R/Y)	Yes
Control valve assembly harness connector	F302	9 (R/Y)	

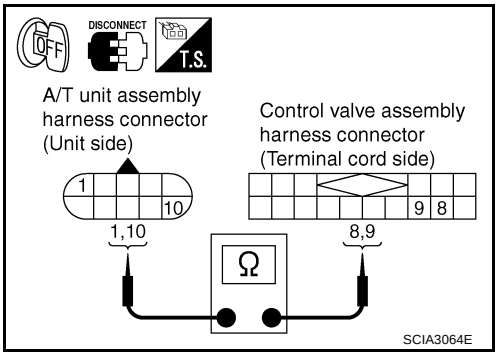

4. If OK, check harness for short to ground and short to power.
5. Reinstall any part removed.

OK or NG

OK >> GO TO 5.
NG >> Repair open circuit or short to ground or short to power in harness or connectors.

5. DETECT MALFUNCTION ITEMS

1. Check control valve assembly. Refer to AT-301, "Control Valve Assembly" .
2. Disassemble A/T. Refer to AT-327, "DISASSEMBLY" .
3. Check revolution sensor. Refer to AT-327, "DISASSEMBLY" .

OK or NG

OK >> GO TO 6.
NG >> Repair or replace damaged parts.

6. CHECK DTC

Perform “DTC Confirmation Procedure”. Refer to AT-116, "DTC Confirmation Procedure" .

OK or NG

OK >> **INSPECTION END**
NG >> GO TO 7.

7. PERFORM TCM INSPECTION

1. Perform TCM input/output signal inspection. Refer to AT-88, "TCM Input/Output Signal Reference Values" .
2. If NG, recheck TCM pin terminals for damage or loose connection with harness connector.

OK or NG

OK >> **INSPECTION END**
NG >> Repair or replace damaged parts.

DTC P0725 ENGINE SPEED SIGNAL

PFP:24825

Description

ACS002CB

The engine speed signal is sent from the ECM to the TCM.

On Board Diagnosis Logic

ACS002CC

- This is an OBD-II self-diagnostic item.
- Diagnostic trouble code “ENGINE SPEED SIG” with CONSULT-II or P0725 without CONSULT-II is detected when TCM does not receive the ignition signal from ECM during engine cranking or running.

Possible Cause

ACS002CD

Harness or connectors
(The ECM to the TCM circuit is open or shorted.)

DTC Confirmation Procedure

ACS002CE

CAUTION:
Always drive vehicle at a safe speed.

NOTE:
If “DTC Confirmation Procedure” has been previously conducted, always turn ignition switch “OFF” and wait at least 10 seconds before conducting the next test.
After the repair, perform the following procedure to confirm the malfunction is eliminated.

WITH CONSULT-II

1. Turn ignition switch ON and select “DATA MONITOR” mode for “A/T” with CONSULT-II.
2. Start engine and maintain the following conditions for at least 10 consecutive seconds.
   VHCL SPEED SE: 10 km/h (6 MPH) or more
   ACCELE POSI: More than 1/8
   Selector lever: “D” position
3. If DTC is detected, go to AT-121, "Diagnostic Procedure" .

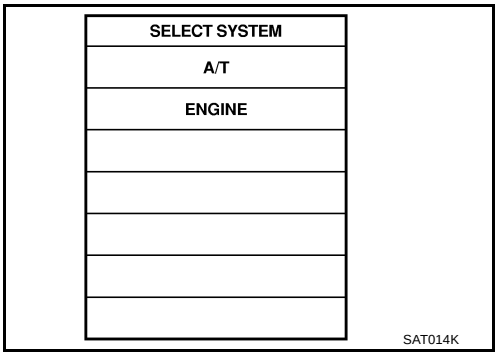

WITH GST

Follow the procedure “With CONSULT-II”.

Diagnostic Procedure

ACS002CF

1. CHECK DTC WITH ECM

With CONSULT-II

1. Turn ignition switch ON. (Do not start engine.)
2. Select “SELF-DIAG RESULTS” mode for “ENGINE” with CONSULT-II. Refer to EC-103, "CONSULT-II Function" .

With GST

Follow the procedure “With CONSULT-II”.

OK or NG

OK >> GO TO 2.
NG >> Check the DTC detected item, go to EC-103, "CONSULT-II Function" .
- If CAN communication line is detected, go to AT-104, "DTC U1000 CAN COMMUNICATION LINE" .

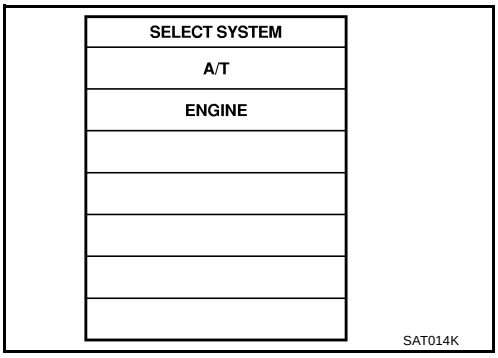

2. CHECK DTC WITH TCM

With CONSULT-II

1. Start engine.
2. Select “ECU INPUT SIGNALS” in “DATA MONITOR” mode for “A/T” with CONSULT-II.
3. While monitoring engine speed, check for engine speed change corresponding to wide-open throttle position signal.

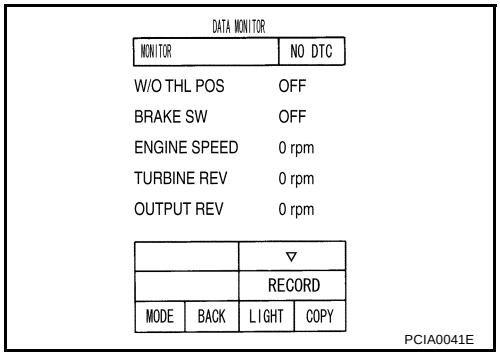

OK or NG

OK >> GO TO 3.
NG >> Check the ignition signal circuit.
- Refer to EC-568, "IGNITION SIGNAL"

3. CHECK DTC

Perform "DTC confirmation Procedure". Refer to AT-121, "DTC Confirmation Procedure" .

OK or NG

OK >> **INSPECTION END**
NG >> GO TO 4.

4. CHECK TCM INSPECTION

1. Perform TCM input/output signal inspection. Refer to AT-88, "TCM Input/Output Signal Reference Values" .
2. If NG, recheck TCM pin terminals for damage or loose connection with harness connector.

OK or NG

OK >> **INSPECTION END**
NG >> Repair or replace damaged parts.

DTC P0740 TORQUE CONVERTER CLUTCH SOLENOID VALVE

PFP:31940

Description

ACS002CG

- The torque converter clutch solenoid valve is activated, with the gear in D_4 , D_5 by the TCM in response to signals sent from the vehicle speed sensor and accelerator pedal position sensor (throttle position sensor). Torque converter clutch piston operation will then be controlled.
- Lock-up operation, however, is prohibited when A/T fluid temperature is too low.
- When the accelerator pedal is depressed (less than 1/8) in lock-up condition, the engine speed should not change abruptly. If there is a big jump in engine speed, there is no lock-up.

CONSULT-II Reference Value

ACS002CH

Item name	Condition	Display value (Approx.) (A)
TCC SOLENOID	When perform slip lock-up	0.2 - 0.4
	When perform lock-up	0.4 - 0.6

On Board Diagnosis Logic

ACS002CI

- This is an OBD-II self-diagnostic item.
- Diagnostic trouble code “TCC SOLENOID/CIRC” with CONSULT-II or P0740 without CONSULT-II is detected under the following conditions.
  - When TCM detects an improper voltage drop when it tries to operate the solenoid valve.
  - When TCM detects as irregular by comparing target value with monitor value.

Possible Cause

ACS002CJ

- Torque converter clutch solenoid valve
- Harness or connectors
  (The solenoid circuit is open or shorted.)

DTC Confirmation Procedure

ACS002CK

CAUTION:
Always drive vehicle at a safe speed.

NOTE:
If “DTC Confirmation Procedure” has been previously conducted, always turn ignition switch “OFF” and wait at least 10 seconds before conducting the next test.
After the repair, perform the following procedure to confirm the malfunction is eliminated.

WITH CONSULT-II

1. Turn ignition switch ON. (Do not start engine.)
2. Select “DATA MONITOR” mode for “ENGINE” with CONSULT-II.
3. Start engine and maintain the following conditions for at least 5 consecutive seconds.
   VHCL SPEED SE: 80 km/h (50 MPH) or more
   ACCELE POS: 0.5/8 - 1.0/8
   SELECTOR LEVER: “D” position
   Driving location: Driving the vehicle uphill (increased engine load) will help maintain the driving conditions required for this test.
4. If DTC is detected go to AT-125, "Diagnostic Procedure" .

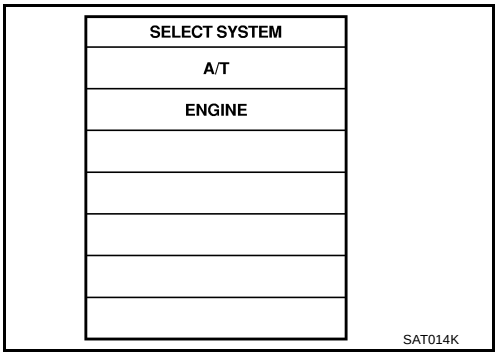

WITH GST

Follow the procedure “With CONSULT-II”.

Wiring Diagram — AT — TCV

ACS002CL

AT-TCV-01

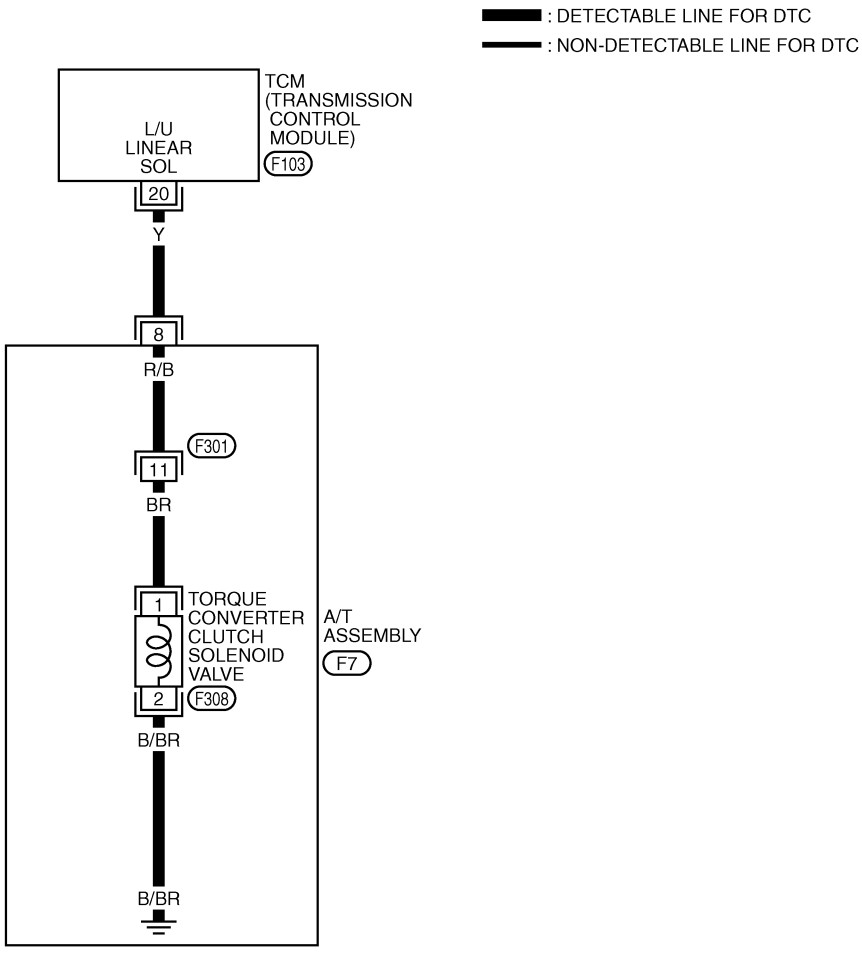

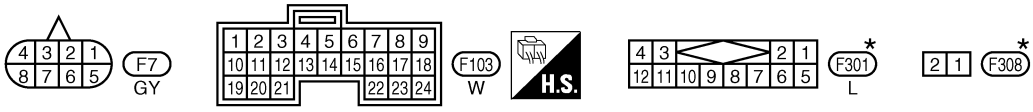

*: THIS CONNECTOR IS NOT SHOWN IN "HARNESS LAYOUT", PG SECTION.

TCWT0102E

TCM terminal and Data are reference value. Measured between each terminals 5, 14, 24 and 46 (TCM ground).

Terminal No.	Wire color	Item	Condition		Data (Approx.)
20	Y	TCC solenoid valve	When vehicle cruises	When lock-up	More than 2V
				When not lock-up	0V

Diagnostic Procedure

ACS002CM

1. CHECK TORQUE CONVERTER CLUTCH SOLENOID VALVE CIRCUIT

1. Turn ignition switch OFF.
2. Disconnect A/T unit assembly harness connector at the transmission right side.
3. Check the resistance between terminal and ground.

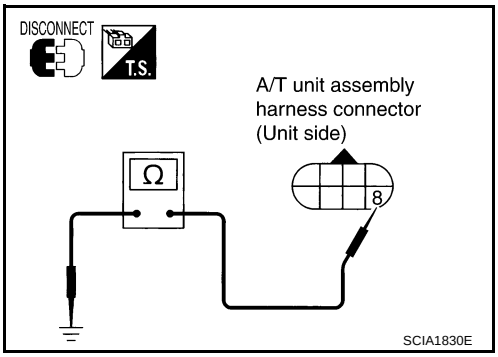

Solenoid valve	Connector No.	Terminal No.	Resistance (Approx.)
Torque converter clutch solenoid valve	F7	8(Y) - Ground	3 - 9 Ω

OK or NG

OK >> GO TO 4.
NG >> GO TO 2.

2. CHECK TERMINAL CORD ASSEMBLY

1. Remove oil pan. Refer to AT-301, "Control Valve Assembly" .
2. Disconnect A/T unit assembly harness connector and control valve assembly harness connector.
3. Check continuity between A/T unit assembly harness connector and control valve assembly harness connector.

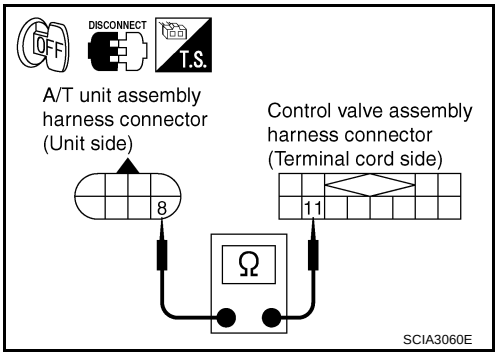

Item	Connector No.	Terminal No. (Wire color)	Continuity
A/T unit assembly harness connector	F7	8 (R/B)	Yes
Control valve assembly harness connector	F301	11 (R/B)	

4. If OK, check harness for short to ground and short to power.
5. Reinstall any part removed.

OK or NG

OK >> GO TO 3.
NG >> Repair open circuit or short to ground or short to power in harness or connectors.

3. CHECK VALVE RESISTANCE

Check valve resistance

- Refer to AT-127, "Component Inspection" .

OK or NG

OK >> GO TO 4.
NG >> Replace the control valve assembly. Refer to AT-301, "Control Valve Assembly" .

4. CHECK POWER SOURCE CIRCUIT

1. Turn ignition switch OFF.
2. Disconnect TCM connector.
3. Check continuity between A/T unit assembly harness connector and TCM connector.

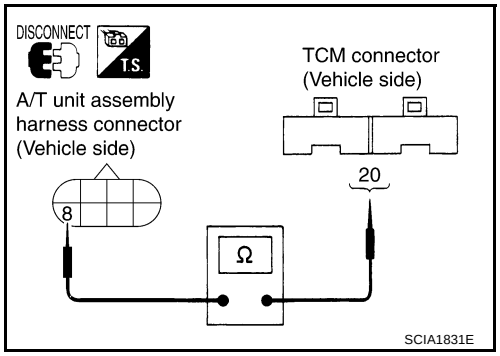

Item	Connector No.	Terminal No. (Wire color)	Continuity
TCM	F103	20 (Y)	Yes
A/T unit assembly harness connector	F7	8 (Y)	

4. If OK, check harness for short to ground and short to power.
5. Reinstall any part removed.

OK or NG

OK >> GO TO 5.
NG >> Repair open circuit or short to ground or short to power in harness or connectors.

5. CHECK DTC

Perform “DTC Confirmation Procedure”. Refer to AT-107, "DTC Confirmation Procedure" .

OK or NG

OK >> **INSPECTION END**
NG >> GO TO 6.

6. PERFORM TCM INSPECTION

1. Perform TCM input/output signal inspection. Refer to AT-88, "TCM Input/Output Signal Reference Values" .
2. If NG, recheck TCM pin terminals for damage or loose connection with harness connector.

OK or NG

OK >> **INSPECTION END**
NG >> Repair or replace damaged parts.

Component Inspection

ACS004K4

TORQUE CONVERTER CLUTCH SOLENOID VALVE

Resistance check

1. Turn ignition switch OFF.
2. Remove oil pan. Refer to AT-301, "Control Valve Assembly" .
3. Disconnect control valve assembly harness connector.
4. Check resistance between terminal and ground.

Solenoid Valve	Connector No.	Terminal No. (Wire color)	Resistance (Ω) (Approx.)
Torque converter clutch solenoid valve	F301	11 (BR) - Ground	3 - 9 Ω

5. If NG, replace control valve assembly. Refer to AT-301, "Control Valve Assembly" .

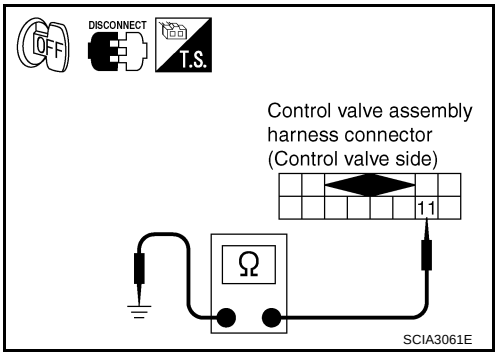

Operation check

- Check solenoid valve by listening for its operating sound while applying battery voltage to the terminal 11 and ground.

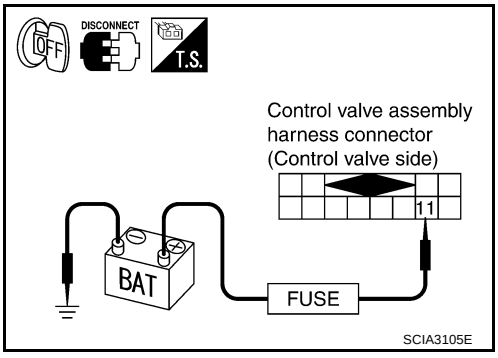

DTC P0744 A/T TCC S/V FUNCTION (LOCK-UP)

PFP:31940

Description

ACS002CN

This malfunction is detected when the A/T does not shift into 5th gear position or the torque converter clutch does not lock-up as instructed by the TCM. This is not only caused by electrical malfunction (circuits open or shorted) but also by mechanical malfunction such as control valve sticking, improper solenoid valve operation, etc.

On Board Diagnosis Logic

ACS002CO

- This is an OBD-II self-diagnostic item.
- Diagnostic trouble code “A/T TCC S/V FNCTN” with CONSULT-II or P0744 without CONSULT-II is detected under the following conditions.
  - When A/T cannot perform lock-up even if electrical circuit is good.
  - When TCM detects as irregular by comparing difference value with slip rotation.

Possible Cause

ACS002CP

- Harness or connectors
  (The solenoid circuit is open or shorted.)
- Torque converter clutch solenoid valve
- Hydraulic control circuit

DTC Confirmation Procedure

ACS002CQ

CAUTION:
Always drive vehicle at a safe speed.

NOTE:
If “DTC Confirmation Procedure” has been previously conducted, always turn ignition switch “OFF” and wait at least 10 seconds before conducting the next test.
After the repair, perform the following procedure to confirm the malfunction is eliminated.

WITH CONSULT-II

1. Start engine and select “DATA MONITOR” mode for “A/T with CONSULT-II.
2. Select “TCC S/V FNCTN CHECK” of “DTC WORK SUPPORT” mode for “A/T” with CONSULT-II and touch “START”.
3. Accelerate vehicle to more than 80 km/h (50 MPH) and maintain the following condition continuously until “TESTING” has turned to “COMPLETE”. (It will take approximately 30 seconds after “TESTING” shows.)
   ACCELE POSI: More than 1.0/8 (at all times during step 4)
   TCC SOLENOID: 0.4 - 0.6 A
   Selector lever: “D” position
   [Reference speed: Constant speed of more than 80 km/h (50 MPH)]

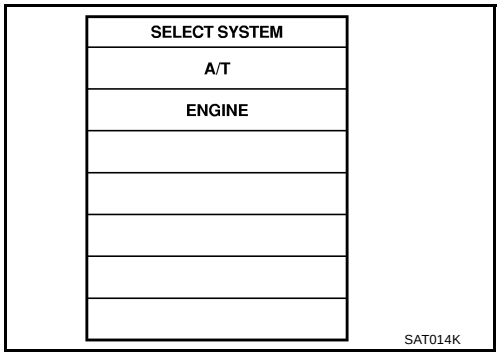

   - **Check that “GEAR” shows “5”.**
   - **For shift schedule, refer to AT-379, "Vehicle Speed When Performing and Releasing Complete Lock-up" .**
   - **If “TESTING” does not appear on CONSULT-II for a long time, select “SELF-DIAG RESULTS”. In case a 1st trip DTC other than P0744 is shown, refer to applicable “TROUBLE DIAGNOSIS FOR DTC”.**
4. Make sure that “OK” is displayed. (If “NG” is displayed, refer to “DIAGNOSTIC PROCEDURE”.)
   Refer to AT-130, "Diagnostic Procedure" .
   Refer to shift schedule, AT-379, "Vehicle Speed When Performing and Releasing Complete Lock-up" .

WITH GST

Follow the procedure “With CONSULT-II”.

Wiring Diagram — AT — TCCSIG

ACS002CR

AT-TCCSIG-01

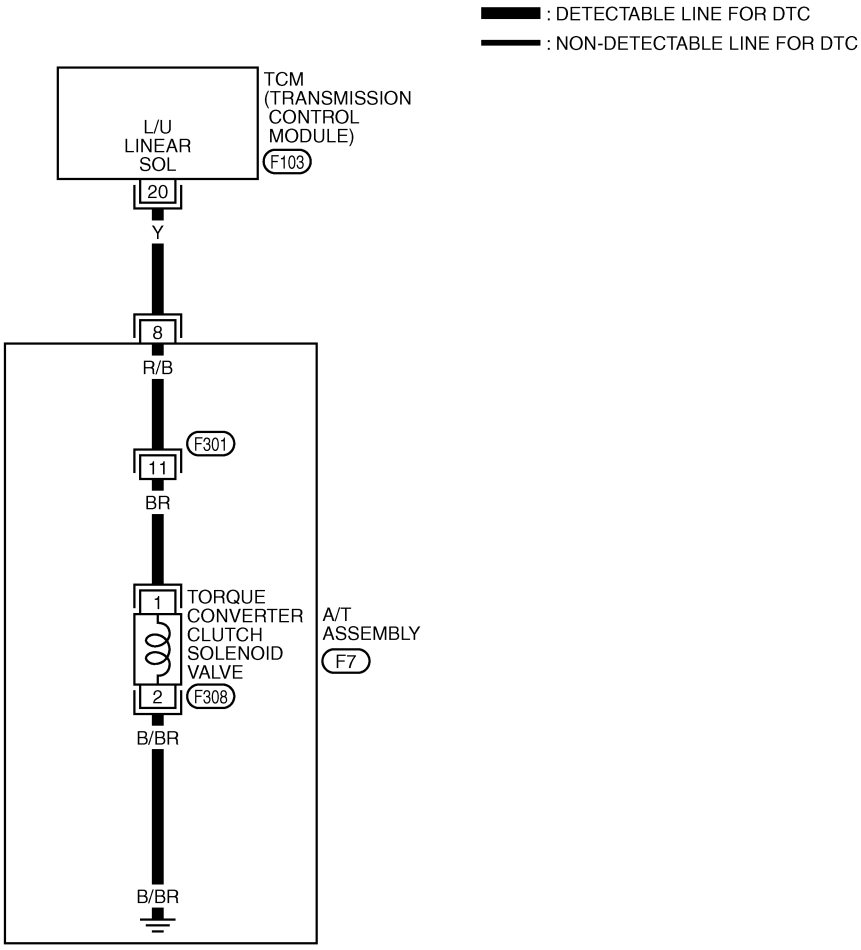

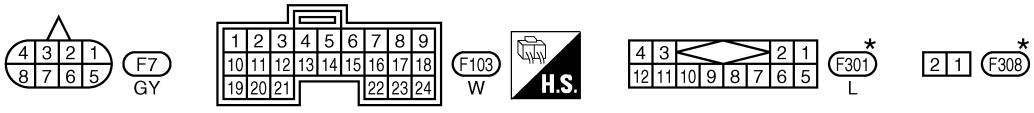

*: THIS CONNECTOR IS NOT SHOWN IN "HARNESS LAYOUT", PG SECTION.

TCWT0103E

TCM terminal and Data are reference value. Measured between each terminals 5, 14, 24 and 46 (TCM ground).

Terminal No.	Wire color	Item	Condition		Data (Approx.)
20	Y	TCC solenoid valve	When vehicle cruises	When lock-up	More than 2V
				When not lock-up	0V

Diagnostic Procedure

ACS002CS

1. CHECK TORQUE CONVERTER CLUTCH SOLENOID VALVE CIRCUIT

1. Turn ignition switch OFF.
2. Disconnect A/T unit assembly harness connector at the transmission right side.
3. Check the resistance between terminal and ground.

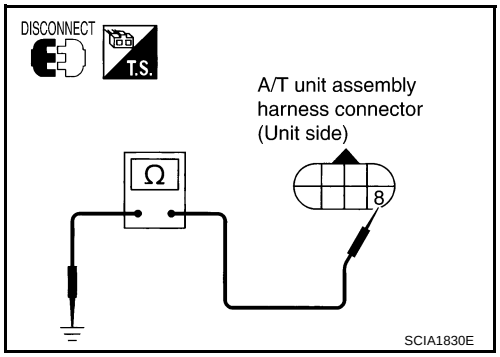

Solenoid valve	Connector No.	Terminal No.	Resistance (Approx.)
Torque converter clutch solenoid valve	F7	8(Y) - Ground	3 - 9 Ω

OK or NG

OK >> GO TO 4.
NG >> GO TO 2.

2. CHECK TERMINAL CORD ASSEMBLY

1. Remove oil pan. Refer to AT-301, "Control Valve Assembly" .
2. Disconnect A/T unit assembly harness connector and control valve assembly harness connector.
3. Check continuity between A/T unit assembly harness connector and control valve assembly harness connector.

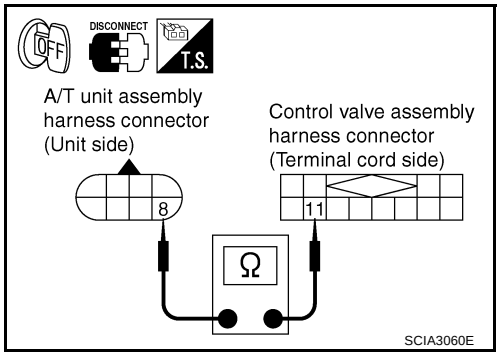

Item	Connector No.	Terminal No. (Wire color)	Continuity
A/T unit assembly harness connector	F7	8 (R/B)	Yes
Control valve assembly harness connector	F301	11 (R/B)	

4. If OK, check harness for short to ground and short to power.
5. Reinstall any part removed.

OK or NG

OK >> GO TO 3.
NG >> Repair open circuit or short to ground or short to power in harness or connectors.

3. CHECK VALVE RESISTANCE

Check valve resistance

- Refer to AT-132, "Component Inspection" .

OK or NG

OK >> GO TO 5.
NG >> Replace the control valve assembly. Refer to AT-301, "Control Valve Assembly" .

4. CHECK POWER SOURCE CIRCUIT

1. Turn ignition switch OFF.
2. Disconnect TCM connector.
3. Check continuity between A/T unit assembly harness connector and TCM connector.

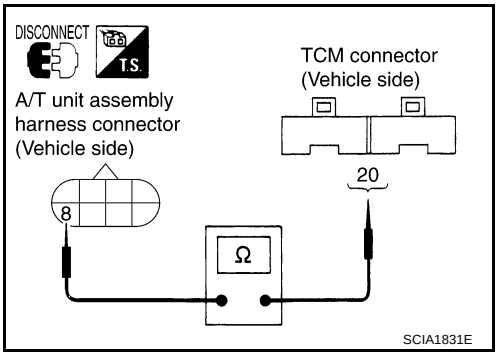

Item	Connector No.	Terminal No. (Wire color)	Continuity
TCM	F103	20 (Y)	Yes
A/T unit assembly harness connector	F7	8 (Y)	

4. If OK, check harness for short to ground and short to power.
5. Reinstall any part removed.

OK or NG

OK >> GO TO 5.
NG >> Repair open circuit or short to ground or short to power in harness or connectors.

5. CHECK DTC

Perform “DTC Confirmation Procedure”. Refer to AT-107, "DTC Confirmation Procedure" .

OK or NG

OK >> **INSPECTION END**
NG >> GO TO 6.

6. PERFORM TCM INSPECTION

1. Perform TCM input/output signal inspection. Refer to AT-88, "TCM Input/Output Signal Reference Values" .
2. If NG, recheck TCM pin terminals for damage or loose connection with harness connector.

OK or NG

OK >> **INSPECTION END**
NG >> Repair or replace damaged parts.

Component Inspection

ACS004K5

TORQUE CONVERTER CLUTCH SOLENOID VALVE

Resistance check

1. Turn ignition switch OFF.
2. Remove oil pan. Refer to AT-301, "Control Valve Assembly" .
3. Disconnect control valve assembly harness connector.
4. Check resistance between terminal and ground.

Solenoid Valve	Connector No.	Terminal No. (Wire color)	Resistance (Ω) (Approx.)
Torque converter clutch solenoid valve	F301	11 (BR) - Ground	3 - 9 Ω

5. If NG, replace control valve assembly. Refer to AT-301, "Control Valve Assembly" .

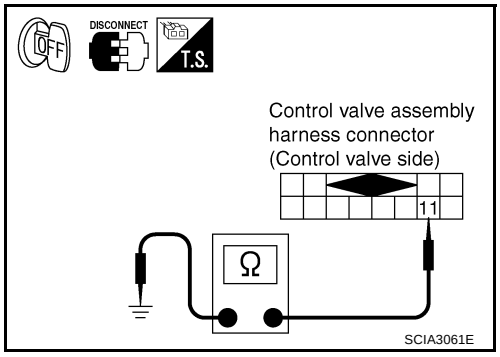

Operation check

- Check solenoid valve by listening for its operating sound while applying battery voltage to the terminal 11 and ground.

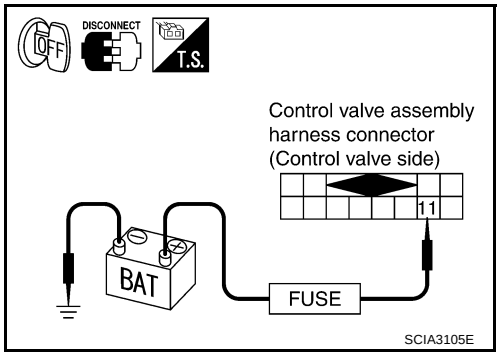

DTC P0745 LINE PRESSURE SOLENOID VALVE

PFP:31940

Description

ACS002CT

The line pressure solenoid valve regulates the oil pump discharge pressure to suit the driving condition in response to a signal sent from the TCM.
The line pressure duty cycle value is not consistent when the closed throttle position signal is “ON”. To confirm the line pressure duty cycle at low pressure, the accelerator (throttle) should be open until the closed throttle position signal is “OFF”.

On Board Diagnosis Logic

ACS002CU

- This is an OBD-II self-diagnostic item.
- Diagnostic trouble code “L/PRESS SOL/CIRC” with CONSULT-II or P0745 without CONSULT-II is detected under the following conditions.
  - When TCM detects an improper voltage drop when it tries to operate the solenoid valve.
  - When TCM detects as irregular by comparing target value with monitor value.

Possible Cause

ACS002CV

- Harness or connectors
  (The solenoid circuit is open or shorted.)
- Line pressure solenoid valve

DTC Confirmation Procedure

ACS002CW

NOTE:
If “DTC Confirmation Procedure” has been previously conducted, always turn ignition switch “OFF” and wait at least 10 seconds before conducting the next test.
After the repair, perform the following procedure to confirm the malfunction is eliminated.

WITH CONSULT-II

1. Turn ignition switch ON and select “DATA MONITOR” mode for “ENGINE” with CONSULT-II.
2. Engine start and wait at least 5 second.
3. If DTC is detected, go to AT-135, "Diagnostic Procedure" .

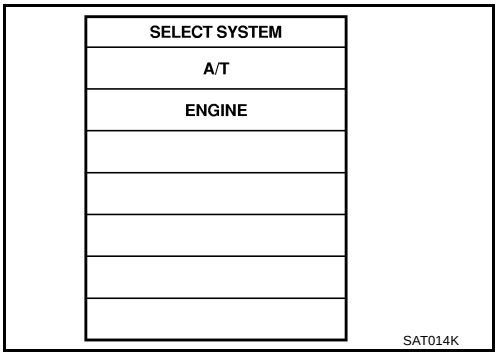

WITH GST

Follow the procedure “With CONSULT-II”.

Wiring Diagram — AT — LPSV

ACS002CX

AT-LPSV-01

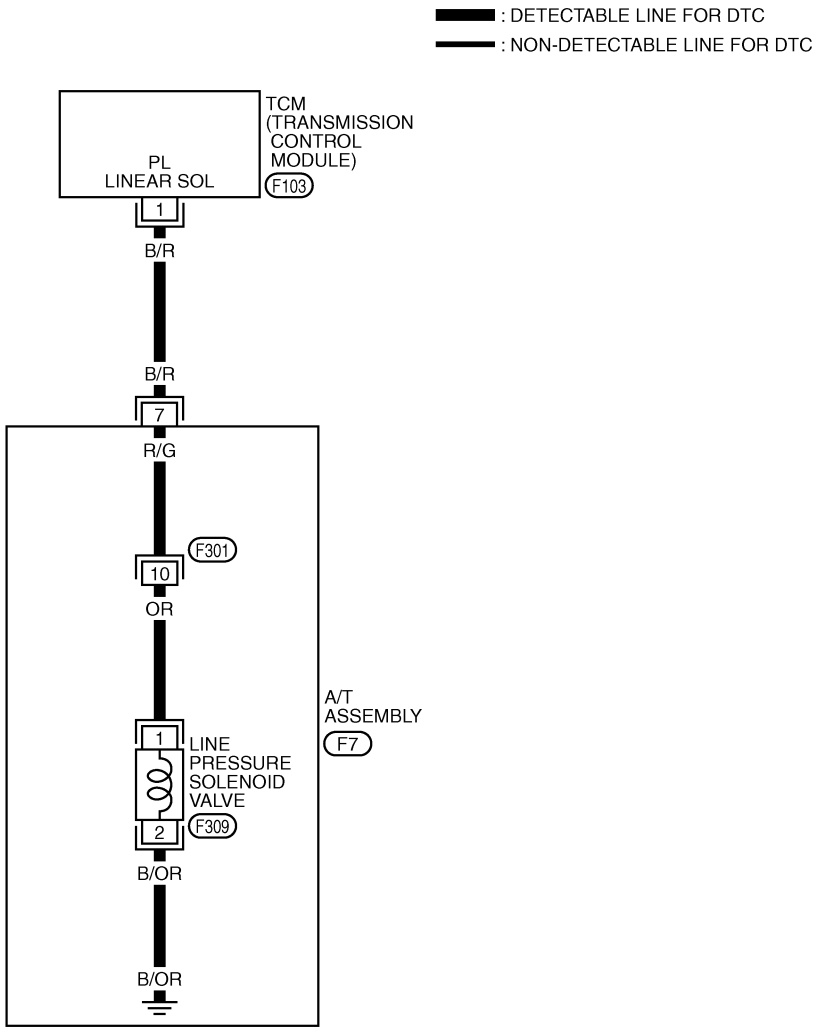

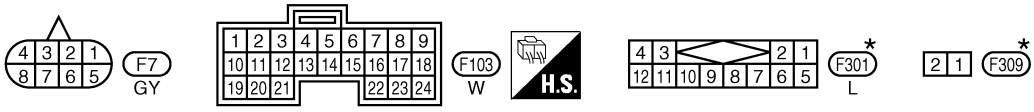

*: THIS CONNECTOR IS NOT SHOWN IN "HARNESS LAYOUT", PG SECTION.

TCWT0104E

TCM terminal and Data are reference value. Measured between each terminals 5, 14, 24 and 46 (TCM ground).

Terminal No.	Wire color	Item	Condition		Data (Approx.)
1	B/R	Line pressure solenoid valve	IGN ON	After warming up the engine, release your foot from the accelerator pedal.	2V
				After warming up the engine, press the accelerator pedal all the way down.	0.7V

Diagnostic Procedure

ACS002CY

1. CHECK LINE PRESSURE SOLENOID VALVE CIRCUIT

1. Turn ignition switch to OFF.
2. Disconnect A/T unit assembly harness connector at the transmission right side.
3. Check the resistance between terminal and ground.

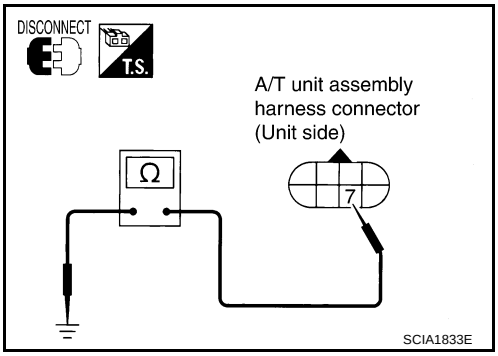

Solenoid valve	Connector No.	Terminal No	Resistance (Approx.)
Line pressure solenoid valve	F7	7(B/R) - Ground	3 - 9 Ω

OK or NG

OK >> GO TO 4.
NG >> GO TO 2.

2. CHECK TERMINAL CORD ASSEMBLY

1. Remove oil pan. Refer to AT-301, "Control Valve Assembly" .
2. Disconnect A/T unit assembly harness connector and control valve assembly harness connector.
3. Check continuity between A/T unit assembly harness connector and control valve assembly harness connector.

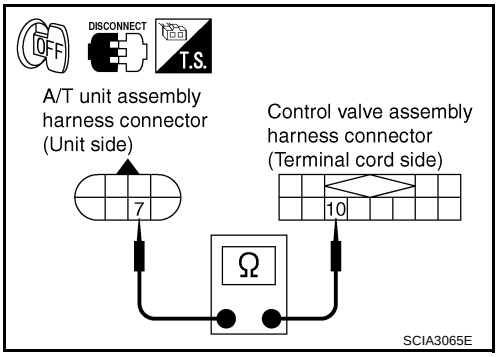

Item	Connector No.	Terminal No. (Wire color)	Continuity
A/T unit assembly harness connector	F7	7 (R/G)	Yes
Control valve assembly harness connector	F301	10 (R/G)	

4. If OK, check harness for short to ground and short to power.
5. Reinstall any part removed.

OK or NG

OK >> GO TO 3.
NG >> Repair open circuit or short to ground or short to power in harness or connectors.

3. CHECK VALVE RESISTANCE

Check valve resistance

- Refer to AT-137, "Component Inspection" .

OK or NG

OK >> GO TO 5.
NG >> Replace the control valve assembly. Refer to AT-301, "Control Valve Assembly" .

4. CHECK POWER SOURCE CIRCUIT

1. Turn ignition switch OFF.
2. Disconnect TCM connector.
3. Check continuity between A/T unit assembly harness connector and TCM connector.

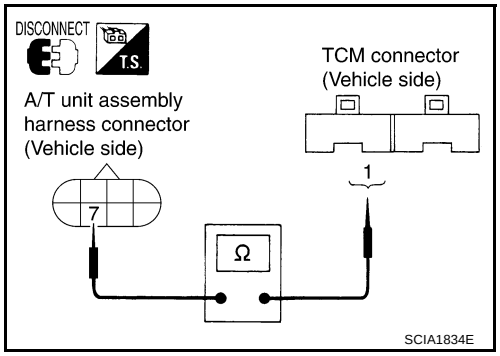

Item	Connector No.	Terminal No. (Wire color)	Continuity
TCM	F103	1 (B/R)	Yes
A/T unit assembly harness connector	F7	7 (B/R)	

4. If OK, check harness for short to ground and short to power.
5. Reinstall any part removed.

OK or NG

OK >> GO TO 5.
NG >> Repair open circuit or short to ground or short to power in harness or connectors.

5. CHECK DTC

Perform “DTC Confirmation Procedure”. Refer to AT-107, "DTC Confirmation Procedure" .

OK or NG

OK >> **INSPECTION END**
NG >> GO TO 6.

6. PERFORM TCM INSPECTION

1. Perform TCM input/output signal inspection. Refer to AT-88, "TCM Input/Output Signal Reference Values" .
2. If NG, recheck TCM pin terminals for damage or loose connection with harness connector.

OK or NG

OK >> **INSPECTION END**
NG >> Repair or replace damaged parts.

Component Inspection

ACS004K6

LINE PRESSURE SOLENOID VALVE

Resistance check

1. Turn ignition switch OFF.
2. Remove oil pan. Refer to AT-301, "Control Valve Assembly" .
3. Disconnect control valve assembly harness connector.
4. Check resistance between terminal and ground.

Solenoid Valve	Connector No.	Terminal No. (Wire color)	Resistance (Ω) (Approx.)
Line pressure solenoid valve	F301	10 (OR) - Ground	3 - 9 Ω

5. If NG, replace control valve assembly. Refer to AT-301, "Control Valve Assembly" .

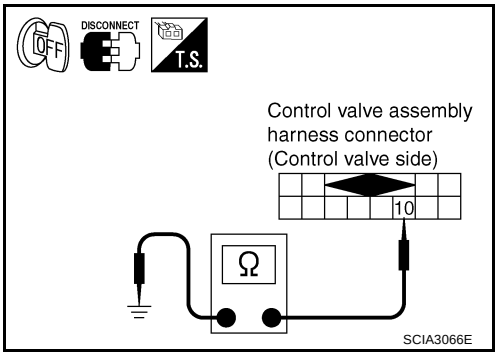

Operation check

- Check solenoid valve by listening for its operating sound while applying battery voltage to the terminal 10 and ground.

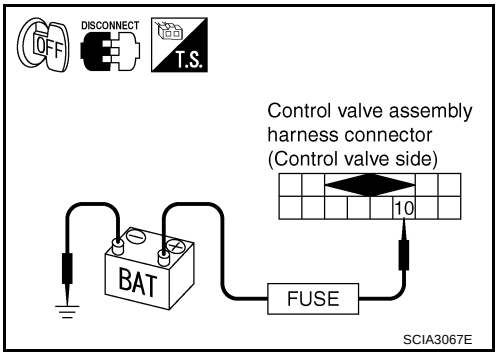

DTC P1701 TRANSMISSION CONTROL MODULE (POWER SUPPLY)

PFP:31036

Description

ACS002CZ

When the power supply to the TCM is cut “OFF”, for example because the battery is removed, and the self-diagnostics memory function stops, malfunction is detected.

On Board Diagnosis Logic

ACS002D0

- This is not an OBD-II self-diagnostic item.
- Diagnostic trouble code “TCM-POWER SUPPLY” with CONSULT-II is detected when TCM does not receive the voltage signal from the battery power supply.
- This is not a malfunction message. (Whenever shutting “OFF” a power supply to the TCM, this message appears on the screen.)

Possible Cause

ACS002D1

Harness or connectors
(Battery or ignition switch and TCM circuit is open or shorted.)

DTC Confirmation Procedure

ACS002D2

NOTE:
If “DTC Confirmation Procedure” has been previously conducted, always turn ignition switch “OFF” and wait at least 10 seconds before conducting the next test.
After the repair, perform the following procedure to confirm the malfunction is eliminated.

WITH CONSULT-II

1. Turn ignition switch ON. (Do not start engine.)
2. Select “DATA MONITOR” mode for “A/T” with CONSULT-II.
3. Wait for at least 2 consecutive seconds.
4. If DTC is detected, go to AT-141, "Diagnostic Procedure" .

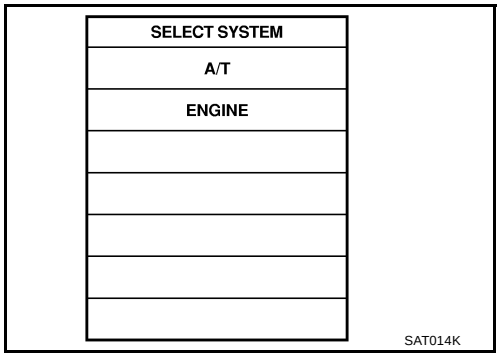

Wiring Diagram — AT — POWER

ACS004LF

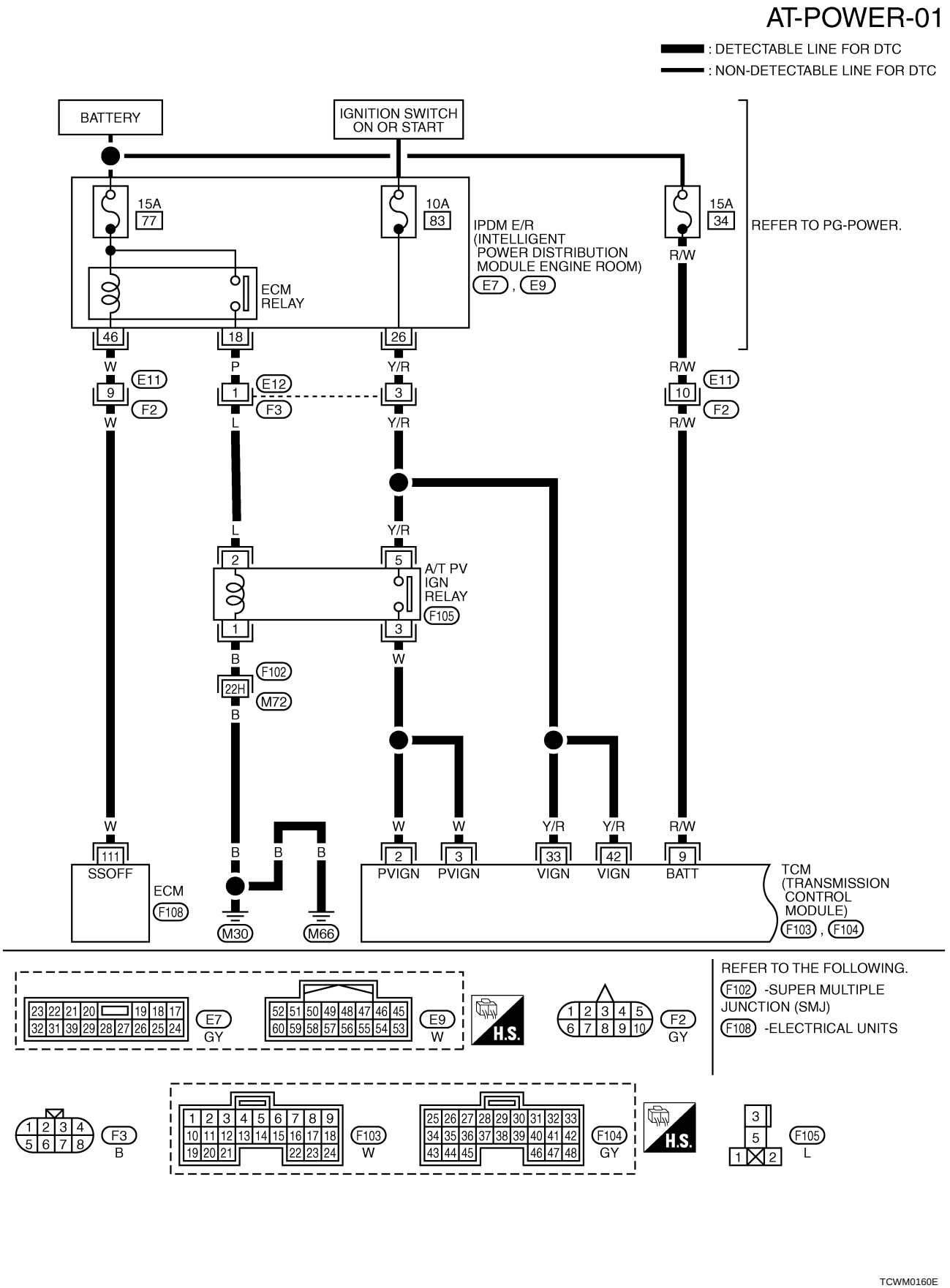

AT-POWER-02

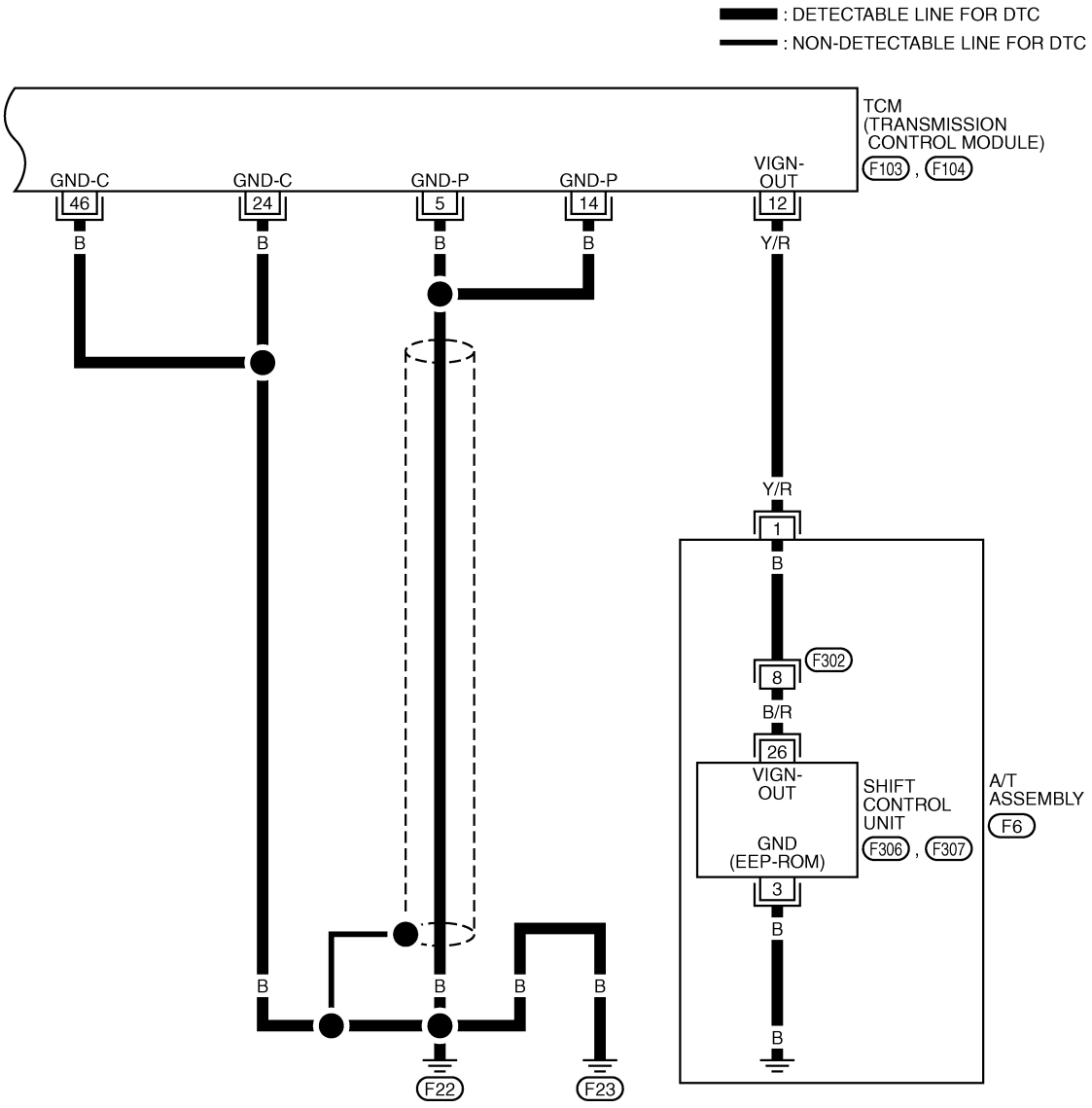

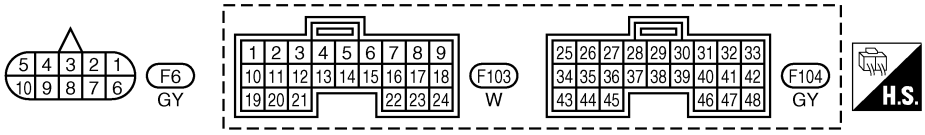

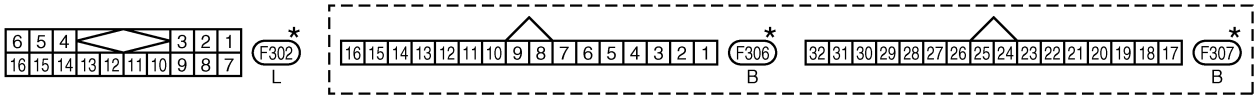

*: THIS CONNECTOR IS NOT SHOWN IN "HARNESS LAYOUT", PG SECTION.

TCWT0106E

TCM terminals and Data are reference value. Measured between each terminals 5, 14, 24 and 46 (TCM ground).

Terminal No.	Wire color	Item	Condition		Data (Approx.)
2	W	Power supply	IGN ON	–	Battery voltage
			IGN OFF	Measure 3 seconds after switching “OFF” the ignition switch.	0V
3	W	Power supply	IGN ON	–	Battery voltage
			IGN OFF	Measure 3 seconds after switching “OFF” the ignition switch.	0V
5	B	Ground	Always		0V
9	R/W	Power supply (Memory back-up)	Always		Battery voltage
12	Y/R	Power supply (out)	IGN ON	–	Battery voltage
			IGN OFF	–	0V
14	B	Ground	Always		0V
24	B	Ground	Always		0V
33	Y/R	Power supply	IGN ON	–	Battery voltage
			IGN OFF	–	0V
42	Y/R	Power supply	IGN ON	–	Battery voltage
			IGN OFF	–	0V
46	B	Ground	Always		0V

Diagnostic Procedure

ACS004K8

1. CHECK TCM POWER SOURCE, STEP 1

1. Turn ignition switch OFF.
2. Check voltage between TCM terminal and ground.

Item	Connector No.	Terminal No.	Voltage
TCM	F103	9 - Ground	Battery voltage

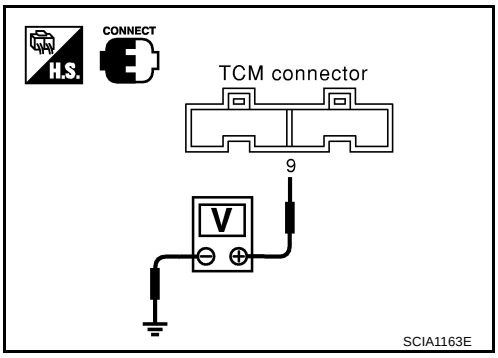

OK or NG

OK >> GO TO 2.
NG >> GO TO 3.

2. CHECK TCM POWER SOURCE, STEP 2

1. Turn ignition switch ON. (Do not start engine.)
2. Check voltage between TCM terminal and ground.

Item	Connector No.	Terminal No.	Voltage
TCM	F103	2 - Ground	Battery voltage
		3 - Ground	
		9 - Ground	
		12 - Ground	
	F104	33 - Ground	
		42 - Ground	

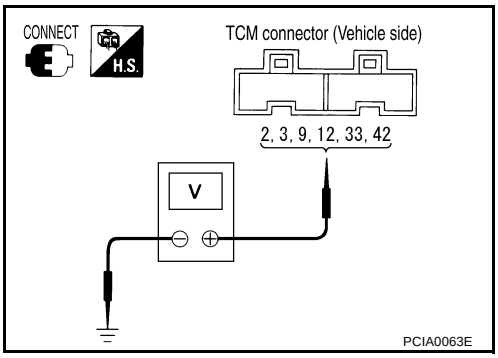

OK or NG

OK >> GO TO 4.
NG >> GO TO 3.

3. DETECT MALFUNCTIONING ITEM

Check the following items:

- Harness for short or open between battery and TCM terminal 9
- Harness for short or open between ignition switch and TCM terminals 2, 3, 33 and 42
- 15A fuse [No.34, located in the fuse block (J/B) and fusible link block] and 10A fuse (No. 71, located in the IPDM E/R)
- Ignition switch; Refer to PG-4, "POWER SUPPLY ROUTING CIRCUIT"
- A/T PV IGN relay; Refer to AT-143, "Component Inspection"
- ECM relay; Refer to EC-129, "POWER SUPPLY AND GROUND CIRCUIT"
- Harness for short or open between IPDM E/R terminal 33 and A/T PV IGN relay terminal 2
- Harness for short or open between A/T PV IGN relay terminal 1 and ground.

OK or NG

OK >> GO TO 4.
NG >> Repair or replace damaged parts.

4. CHECK TCM GROUND CIRCUIT

1. Turn ignition switch OFF.
2. Disconnect TCM harness connector.
3. Check continuity between TCM terminals 5, 14, 24, 46 and ground.

   Continuity should exist.

   If OK, check harness for short to ground and short to power.

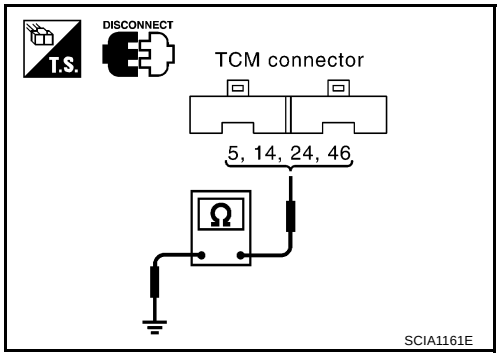

OK or NG

OK >> GO TO 5.
NG >> Repair open circuit or short to ground or short to power in harness or connectors.

5. CHECK DTC

Check again. Refer to AT-138, "DTC Confirmation Procedure" .

OK or NG

OK >> **INSPECTION END**
NG >> GO TO 6.

6. PERFORM TCM INSPECTION

1. Perform TCM input/output signal inspection. Refer to AT-88, "TCM Input/Output Signal Reference Values" .
2. If NG, recheck TCM pin terminals for damage or loose connection with harness connector.

OK or NG

OK >> **INSPECTION END**
NG >> Repair or replace damaged parts.

Component Inspection

ACS004K9

A/T PV IGN RELAY

1. Apply 12V direct current between A/T PV IGN relay terminals 1 and 2.
2. Check continuity between relay terminals 3 and 5.

Condition	Continuity
12V direct current supply between terminals 1 and 2	Yes
OFF	No

3. If NG, replace A/T PV IGN relay.

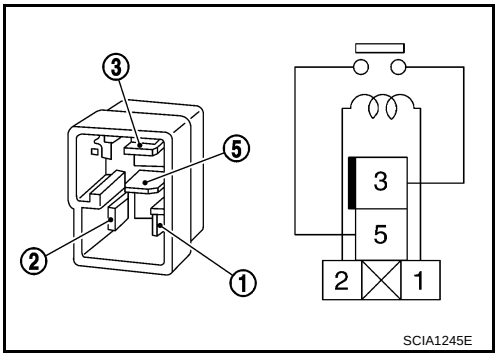

DTC P1702 TRANSMISSION CONTROL MODULE (RAM)

PFP:31036

Description

ACS002D6

The TCM consists of a microcomputer and connectors for signal input and output and for power supply. The TCM controls the A/T.

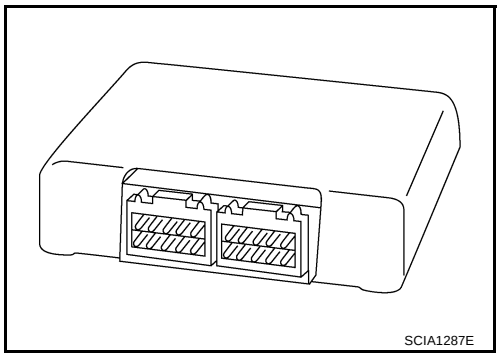

On Board Diagnosis Logic

ACS002D7

- This is not an OBD-II self-diagnostic item.
- Diagnostic trouble code “TCM·RAM” with CONSULT-II is detected when TCM memory RAM is malfunctioning.

Possible Cause

ACS002D8

TCM

DTC Confirmation Procedure

ACS002D9

NOTE:
If “DTC Confirmation Procedure” has been previously conducted, always turn ignition switch “OFF” and wait at least 10 seconds before conducting the next test.
After the repair, perform the following procedure to confirm the malfunction is eliminated.

WITH CONSULT-II

1. Turn ignition switch ON. (Do not start engine.)
2. Select “DATA MONITOR” mode for A/T with CONSULT-II.
3. Start engine.
4. Run engine for at least 2 consecutive seconds at idle speed.
5. If DTC is detected, go to AT-145, "Diagnostic Procedure" .

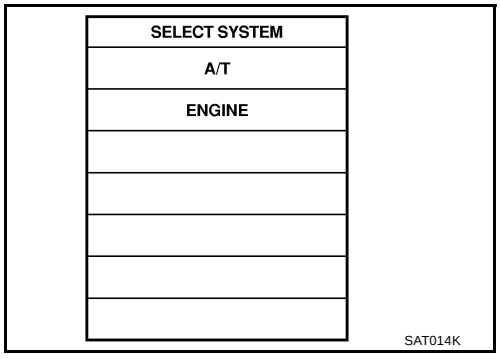

Diagnostic Procedure

ACS002DA

1. CHECK DTC

With CONSULT-II

1. Turn ignition switch ON. (Do not start engine.)
2. Select “SELF DIAG RESULTS” mode for “A/T” with CONSULT-II.
3. Touch “ERASE”.
4. Turn ignition switch OFF and wait at least 10 seconds.
5. Perform DTC confirmation procedure, AT-144, "DTC Confirmation Procedure" .

Is the “TCM·RAM” displayed again?

YES >> Replace TCM.
NO >> **INSPECTION END**

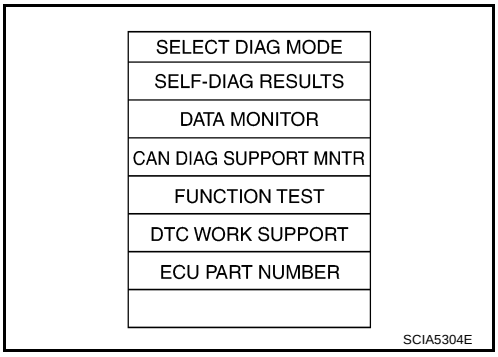

DTC P1703 TRANSMISSION CONTROL MODULE (ROM)

PFP:31036

Description

ACS002DB

The TCM consists of a microcomputer and connectors for signal input and output and for power supply. The TCM controls the A/T.

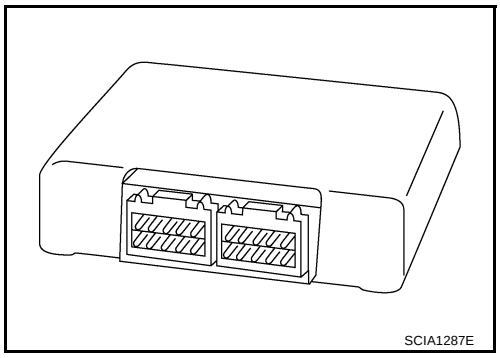

On Board Diagnosis Logic

ACS002DC

- This is not an OBD-II self-diagnostic item.
- Diagnostic trouble code “TCM·ROM” with CONSULT-II is detected when TCM memory ROM is malfunctioning.

Possible Cause

ACS002DD

TCM

DTC Confirmation Procedure

ACS002DE

NOTE:
If “DTC Confirmation Procedure” has been previously conducted, always turn ignition switch “OFF” and wait at least 10 seconds before conducting the next test.
After the repair, perform the following procedure to confirm the malfunction is eliminated.

WITH CONSULT-II

1. Turn ignition switch ON. (Do not start engine.)
2. Select “DATA MONITOR” mode for A/T with CONSULT-II.
3. Start engine.
4. Run engine for at least 2 consecutive seconds at idle speed.
5. If DTC is detected, go to AT-147, "Diagnostic Procedure" .

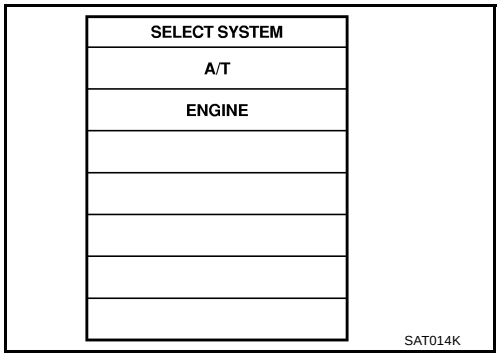

Diagnostic Procedure

ACS002DF

1. CHECK DTC

With CONSULT-II

1. Turn ignition switch ON. (Do not start engine.)
2. Select “SELF DIAG RESULTS” mode for “A/T” with CONSULT-II.
3. Touch “ERASE”.
4. Turn ignition switch OFF and wait at least 10 seconds.
5. Perform DTC confirmation procedure, AT-146, "DTC Confirmation Procedure" .

Is the “TCM·ROM” displayed again?

YES >> Replace TCM.
NO >> **INSPECTION END**

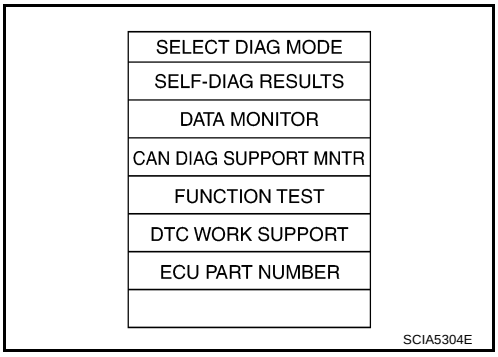

DTC P1704 TRANSMISSION CONTROL MODULE (EEPROM)

PFP:31036

Description

ACS002DG

The TCM consists of a microcomputer and connectors for signal input and output and for power supply. The TCM controls the A/T.

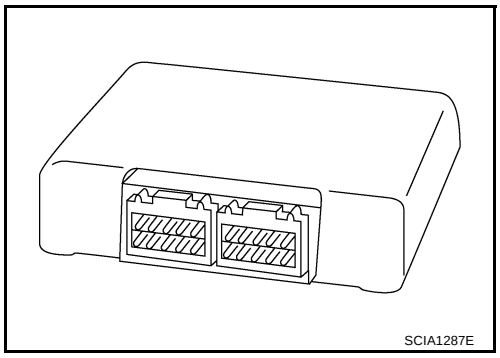

On Board Diagnosis Logic

ACS002DH

- This is not an OBD-II self-diagnostic item.
- Diagnostic trouble code “TCM·EEPROM” with CONSULT-II is detected when TCM memory EEPROM is malfunctioning.

Possible Cause

ACS002DI

TCM

DTC Confirmation Procedure

ACS002DJ

NOTE:
If “DTC Confirmation Procedure” has been previously conducted, always turn ignition switch “OFF” and wait at least 10 seconds before conducting the next test.
After the repair, perform the following procedure to confirm the malfunction is eliminated.

WITH CONSULT-II

1. Turn ignition switch ON. (Do not start engine.)
2. Select “DATA MONITOR” mode for A/T with CONSULT-II.
3. Start engine.
4. Run engine for at least 2 consecutive seconds at idle speed.
5. If DTC is detected, go to AT-149, "Diagnostic Procedure" .

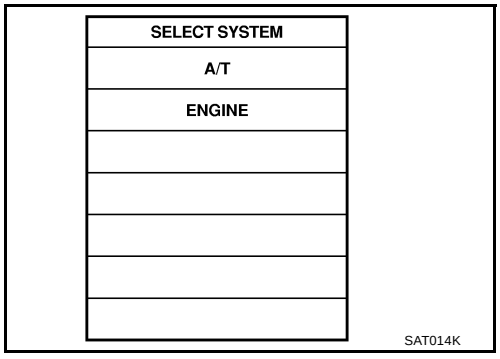

Diagnostic Procedure

ACS002DK

1. CHECK DTC

With CONSULT-II

1. Connect CONSULT-II to data link connector.
2. Turn ignition switch ON. Confirm that CONSULT-II turn ON.
3. Move select lever in “R” position.
4. Touch “START” on CONSULT-II.
5. Select “SELF-DIAG RESULTS” mode for “A/T” with CONSULT-II.
6. Fully press the accelerator pedal (8/8 throttle), and hold it in the fully open position. (This will set the closed throttle position signal to OFF.)
7. Touch “ERASE“ on CONSULT-II, and then touch “YES”.
8. Wait 3 seconds and then release the accelerator pedal.
9. Turn ignition switch OFF and wait at least 10 seconds.
10. Perform “DTC Confirmation Procedure”. Refer to AT-148, "DTC Confirmation Procedure" .

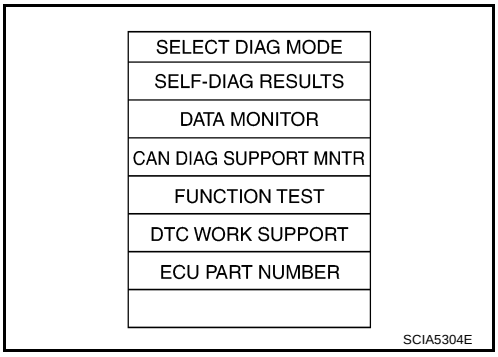

Is the “TCM·EEPROM” displayed again?

YES >> Replace TCM.
NO >> **INSPECTION END**

DTC P1705 THROTTLE POSITION SENSOR

PFP:22620

Description

ACS002DL

Electric throttle control actuator consists of throttle control motor, accelerator pedal position sensor, throttle position sensor, etc. The actuator sends a signal to the ECM, and ECM sends signals to TCM with CAN communication.

On Board Diagnosis Logic

ACS002DM

- This is an OBD-II self-diagnostic item.
- Diagnostic trouble code “TP SEN/CIRC A/T” with CONSULT-II or P1705 without CONSULT-II is detected when TCM does not receive the proper accelerator pedal position signals (input by CAN communication) from ECM.

Possible Cause

ACS002DN

Harness or connectors
(The sensor circuit is open or shorted.)

DTC Confirmation Procedure

ACS002DO

NOTE:
If “DTC Confirmation Procedure” has been previously conducted, always turn ignition switch “OFF” and wait at least 10 seconds before conducting the next test.
After the repair, perform the following procedure to confirm the malfunction is eliminated.

WITH CONSULT-II

1. Turn ignition switch ON. (Do not start engine.)
2. Select “DATA MONITOR” mode for “A/T” with CONSULT-II.
3. Start engine and let it idle for 1 second.
4. If DTC is detected, go to “AT-150, "Diagnostic Procedure" .

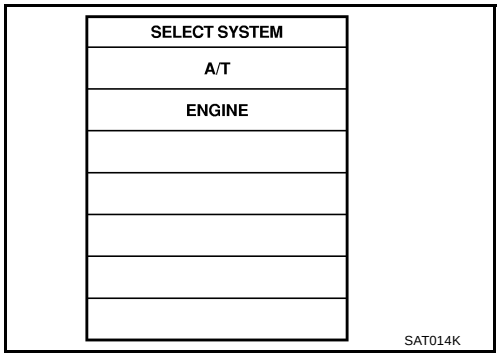

WITH GST

Follow the procedure “With CONSULT-II”.

Diagnostic Procedure

ACS002DP

1. CHECK DTC WITH ECM

With CONSULT-II

1. Turn ignition switch ON. (Do not start engine.)
2. Select “SELF-DIAG RESULTS” mode for “ENGINE” with CONSULT-II. Refer to EC-103, "CONSULT-II Function"

With GST

Follow the procedure “With CONSULT-II”.

OK or NG

OK >> GO TO 2.
NG >> Check the DTC detected item.Go to EC-103, "CONSULT-II Function" .
- If CAN communication line is detected, go to AT-104, "DTC U1000 CAN COMMUNICATION LINE" .

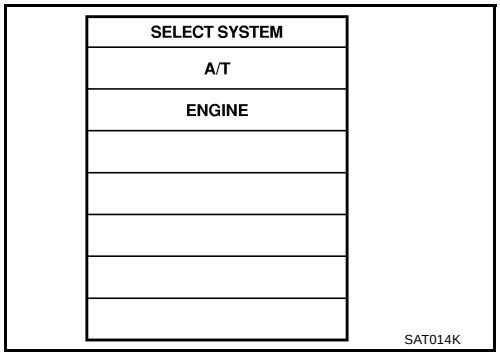

2. CHECK DTC WITH TCM

With CONSULT-II

1. Turn ignition switch ON. (Do not start engine.)
2. Select “ECU INPUT SIGNALS” in “DATA MONITOR” mode for “A/T” with CONSULT-II.
3. Depress accelerator pedal and read out the value of “ACCLE POS” and “THROTTLE POSI”.
   Check engine speed changes according to throttle position.
4. Select “SELF-DIAG RESULTS” mode for “ENGINE” with CONSULT-II. Refer to EC-107, "SELF-DIAG RESULTS MODE" .

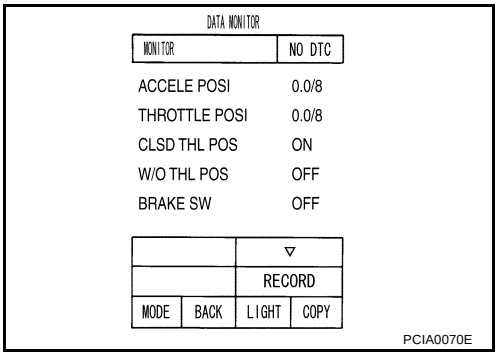

With GST

Follow the procedure “With CONSULT-II”.

OK or NG

OK >> GO TO 3.
NG >> Repair or replace damaged parts.

3. CHECK DTC

Perform “DTC confirmation Procedure”. Refer to AT-150, "DTC Confirmation Procedure" .

OK or NG

OK >> **INSPECTION END**
NG >> GO TO 4.

4. CHECK TCM INSPECTION

1. Perform TCM input/output signal inspection. Refer to AT-88, "TCM Input/Output Signal Reference Values" .
2. If NG, recheck TCM pin terminals for damage or loose connection with harness connector.

OK or NG

OK >> **INSPECTION END**
NG >> Repair or replace damaged parts.

DTC P1710 A/T FLUID TEMPERATURE SENSOR CIRCUIT

PFP:31940

Description

ACS002DQ

The A/T fluid temperature sensor detects the A/T fluid temperature and sends a signal to the TCM.

CONSULT-II Reference Value

ACS002DR

Item name	Condition	Display value (Approx.) (V)
A/T fluid temperature sensor 1	0°C (32°F) - 20°C (68°F) - 80°C (176°F)	2.2 - 1.8 - 0.6
A/T fluid temperature sensor 2		2.2 - 1.7 - 0.45

On Board Diagnosis Logic

ACS002DS

- This is an OBD-II self-diagnostic item.
- Diagnostic trouble code “ATF TEMP SEN/CIRC” with CONSULT-II or P1710 (A/T), P0710 (ENGINE) without CONSULT-II is detected when TCM receives an excessively low or high voltage from the sensor.

Possible Cause

ACS002DT

- Harness or connectors
  (The sensor circuit is open or shorted.)
- A/T fluid temperature sensors 1, 2

DTC Confirmation Procedure

ACS002DU

CAUTION:
Always drive vehicle at a safe speed.

NOTE:
If “DTC Confirmation Procedure” has been previously conducted, always turn ignition switch “OFF” and wait at least 10 seconds before conducting the next test.
After the repair, perform the following procedure to confirm the malfunction is eliminated.

WITH CONSULT-II

1. Turn ignition switch ON. (Do not start engine.)
2. Select “DATA MONITOR” mode for “ENGINE” with CONSULT-II.
3. Start engine and maintain the following conditions for at least 10 minutes (Total). (It is not necessary to maintain continuously.)
   VHCL SPEED SE: 10 km/h (6 MPH) or more
   THRTL POS SEN: More than 1.0/8
   Selector lever: “D” position
4. If DTC is detected, go to AT-154, "Diagnostic Procedure" .

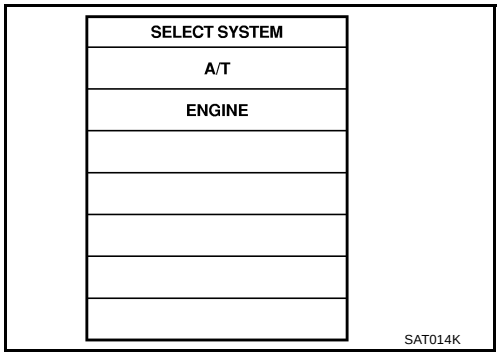

WITH GST

Follow the procedure “With CONSULT-II”.

Wiring Diagram — AT — FTS

ACS002DV

AT-FTS-01

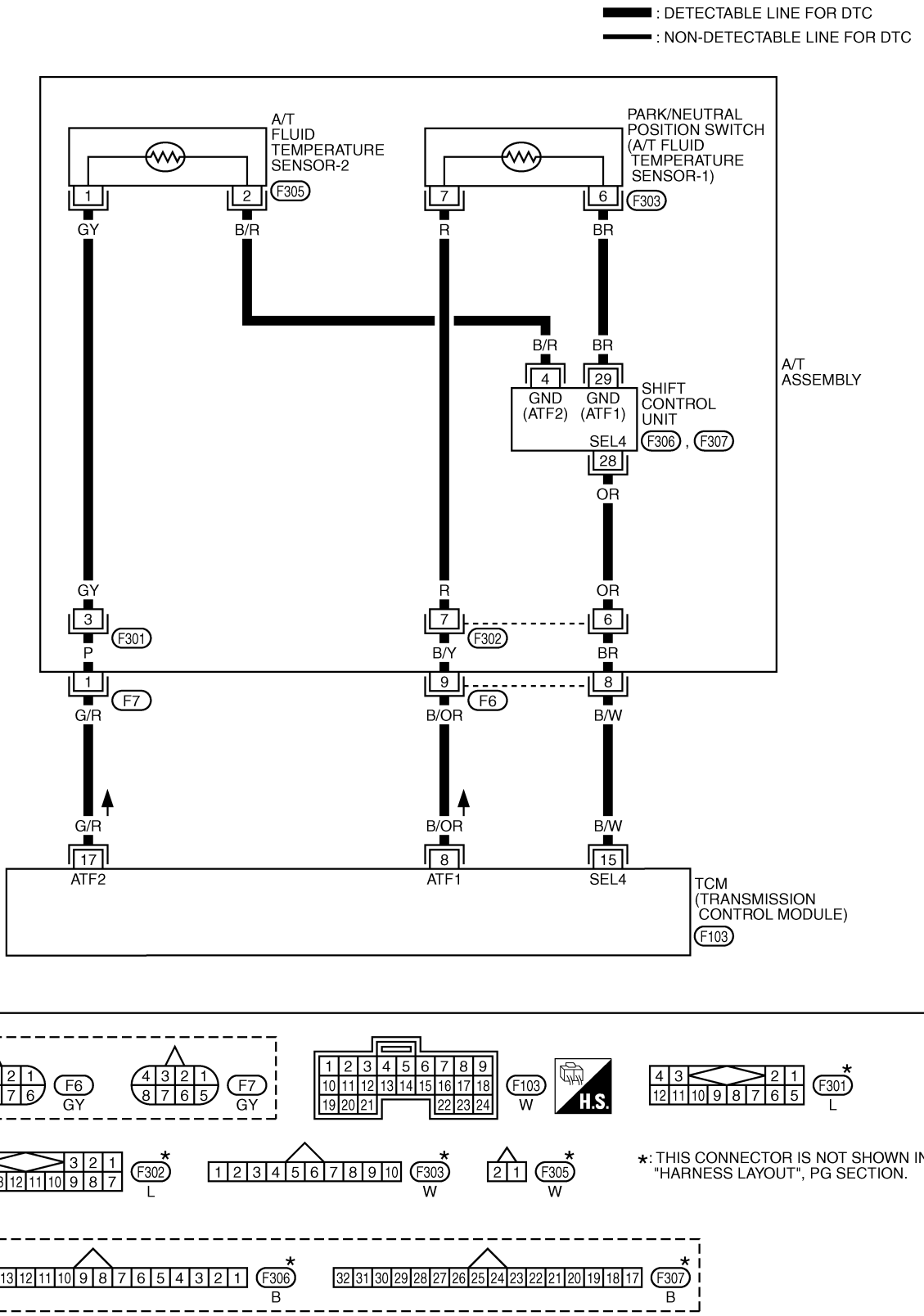

TCM terminals and Data are reference value. Measured between each terminals 5, 14, 24 and 46 (TCM ground).

Terminal No.	Wire color	Item	Condition		Data (Approx.)
8	B/OR	A/T fluid temperature sensor 1	IGN ON	When ATF temperature 0°C (32°F)	2.2V
				When ATF temperature 20°C (68°F)	1.8V
				When ATF temperature 80°C (176°F)	0.6V
15	B/W	SEL4	–	–	–
17	G/R	A/T fluid temperature sensor 2	IGN ON	When ATF temperature about 0°C (32°F)	2.2V
				When ATF temperature about 20°C (68°F)	1.7V
				When ATF temperature about 80°C (176°F)	0.45V

Diagnostic Procedure

ACS002DW

1. CHECK A/T FLUID TEMPERATURE SENSOR (WITH CONSULT-II)

With CONSULT-II

1. Start engine.
2. Select “ECU INPUT SIGNALS” in “DATA MONITOR” mode for “A/T” with CONSULT-II.
3. Read out the value of “ATF TEMP SE 1” or “ATF TEMP SE 2”.

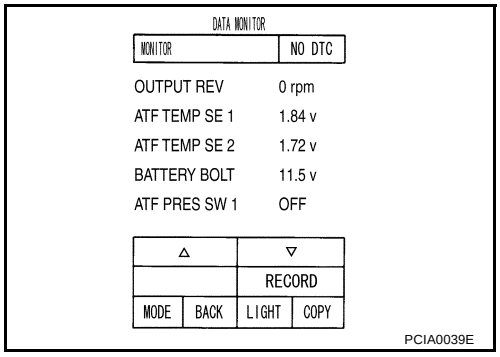

Item name	Condition °C (°F)	Display value (Approx.) V
ATF TEMP SE1	0 (32) - 20 (68) - 80 (176)	2.2 - 1.8 - 0.6
ATF TEMP SE2		2.2 - 1.7 - 0.45

OK or NG

OK >> GO TO 7.
NG >> GO TO 2.

2. CHECK INPUT SIGNALS (WITHOUT CONSULT-II)

Without CONSULT-II

1. Start engine.
2. Check voltage between TCM connector and ground while warming up A/T. Refer to AT-153, "Wiring Diagram — AT — FTS" .

Name	Connector No.	Terminal No.	Temperature °C (°F)	Voltage (V) (Approx.)
A/T fluid temperature sensor 1	F103	8 (B/OR) - 5 (B), 14 (B), 24 (B) or 46 (B)	0 (32)	2.2
			20 (68)	1.8
			80 (176)	0.6
A/T fluid temperature sensor 2		17 (G/R) - 5 (B), 14 (B), 24 (B) or 46 (B)	0 (32)	2.2
			20 (68)	1.7
			80 (176)	0.45

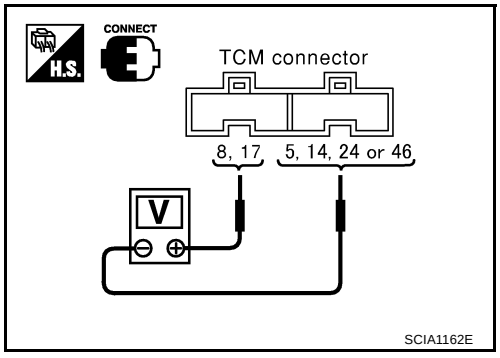

3. Turn ignition switch OFF.
4. Disconnect the TCM connector.
5. Check if there is continuity between the connector terminal and ground.

OK or NG

OK >> GO TO 7.
NG >> GO TO 3.

3. CHECK A/T FLUID TEMPERATURE SENSOR CIRCUIT

1. Turn ignition switch OFF.
2. Disconnect A/T unit assembly harness connector at the transmission right side.
3. Check the resistance between terminal and ground.

Name	Connector No.	Terminal No. (Wire color)	Temperature °C (°F)	Resistance (KΩ) (Approx.)
A/T fluid temperature sensor 1	F6	9 (B/OR) - 8(B/W)	0 (32)	15
			20 (68)	6.5
			80 (176)	0.9
A/T fluid temperature sensor 2	F7	1 (G/R) - 8(B/W)	0 (32)	10
			20 (68)	4
			80 (176)	0.5

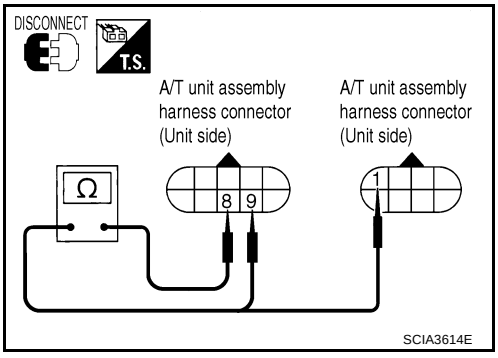

4. Reinstall any part removed.

OK or NG

OK >> GO TO 7.
NG >> GO TO 4.

4. CHECK TERMINAL CORD ASSEMBLY

1. Remove oil pan. Refer to AT-301, "Control Valve Assembly" .
2. Disconnect A/T unit assembly harness connector and control valve assembly harness connector.
3. Check continuity between A/T unit assembly harness connector and control valve assembly harness connector.

Item	Connector No.	Terminal No. (Wire color)	Continuity
A/T unit assembly harness connector	F6	8 (BR)	Yes
Control valve assembly harness connector	F302	6 (BR)	
A/T unit assembly harness connector	F6	9 (B/Y)	Yes
Control valve assembly harness connector	F302	7 (B/Y)	
A/T unit assembly harness connector	F7	1 (P)	Yes
Control valve assembly harness connector	F301	3 (P)	

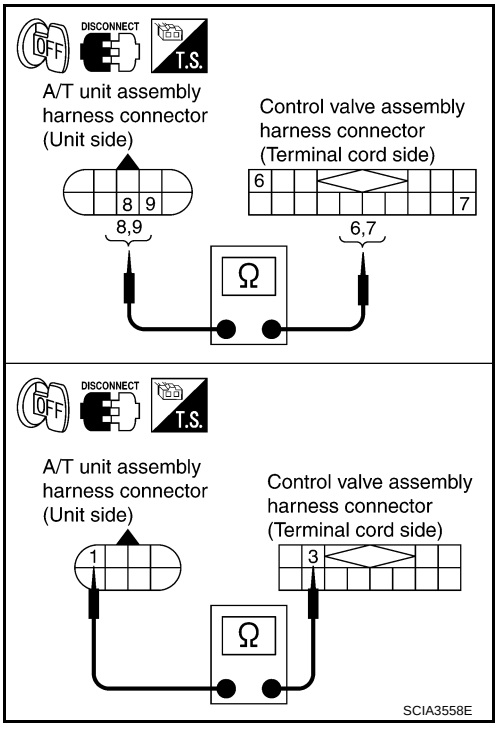

4. If OK, check harness for short to ground and short to power.
5. Reinstall any part removed.

OK or NG

OK - 1 >> If A/T fluid temperature sensor 1 on step 3 is NG, replace the control valve assmebly.
OK - 2 >> If A/T fluid temperature sensor 2 on step 3 is NG, GO TO 5.
NG >> Repair open circuit or short to ground or short to power in harness or connectors.

5. CHECK HARNESS BETWEEN A/T FLUID TEMPERATURE SENSOR 2 AND CONTROL VALVE ASSEMBLY

1. Disconnect A/T fluid temperature sensor 2 harness connector and control valve assembly harness connector.
2. Check continuity between A/T fluid temperature sensor 2 harness connector and control valve assembly harness connector.

Item	Connector No.	Terminal No. (Wire color)	Continuity
A/T fluid temperature sensor 2 harness connector	F305	1 (GY)	Yes
Control valve assembly harness connector	F301	3 (GY)	

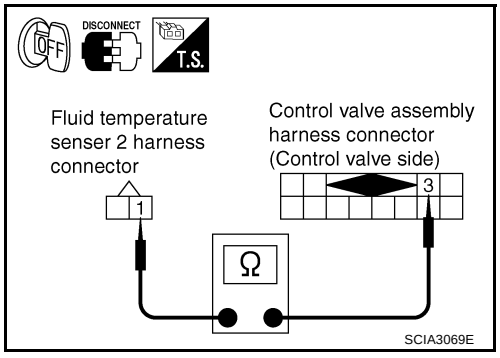

OK or NG

OK >> GO TO 6.
NG >> Repair open circuit or short to ground or short to power in harness or connectors.

6. CHECK A/T FLUID TEMPERATURE SENSOR 2

Check A/T fluid temperature sensor 2.

- Refer to AT-157, "Component Inspection" .

OK or NG

OK >> GO TO 7.
NG >> Repair or replace damaged parts.

7. DETECT MALFUNCTIONING ITEM

Check the following items:

- Harness for short to ground or short to power or open between TCM and A/T unit assembly harness connector.

OK or NG

OK >> GO TO 8.
NG >> Repair or replace damaged parts.

8. CHECK DTC

Perform “DTC Confirmation Procedure”. Refer to AT-152, "DTC Confirmation Procedure" .

OK or NG

OK >> **INSPECTION END**
NG >> GO TO 9.

9. PERFORM TCM INSPECTION

1. Perform TCM input/output signal inspection. Refer to AT-88, "TCM Input/Output Signal Reference Values" .
2. If NG, recheck TCM pin terminals for damage or loose connection with harness connector.

OK or NG

OK >> **INSPECTION END**
NG >> Repair or replace damaged parts.

Component Inspection

ACS004KA

A/T FLUID TEMPERATURE SENSOR 2

1. Remove A/T fluid temperature sensor 2. Refer to AT-301, "Control Valve Assembly" .
2. Check resistance between terminal 1 and 2.

Name	Connector No.	Terminal No. (Wire color)	Tempera-ture °C (°F)	Resistance (KΩ) (Approx.)
A/T fluid temperature sensor 2	F305	1 (GY) - 2 (B/R)	0 (32)	10
			20 (68)	4
			80 (176)	0.5

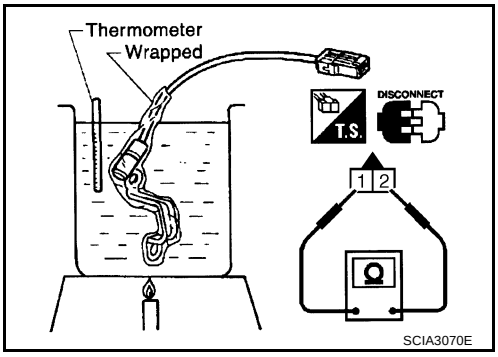

DTC P1716 TURBINE REVOLUTION SENSOR

PFP:31935

Description

ACS002DX

The turbine revolution sensor detects input shaft rpm (revolutions per minute). It is located on the input side of the automatic transmission. Monitors revolution of sensor 1 and sensor 2 for non-standard conditions.

On Board Diagnosis Logic

ACS002DY

- This is an OBD-II self-diagnostic item.
- Diagnostic trouble code “TURBINE REV S/CIRC” with CONSULT-II or P1716 without CONSULT-II is detected under the following conditions.
  - When TCM does not receive the proper voltage signal from the sensor.
  - When TCM detects an irregularity only at position of 4th gear for turbine revolution sensor 2.

Possible Cause

ACS002DZ

- Harness or connectors
  (The sensor circuit is open or shorted.)
- Turbine revolution sensor 1, 2

DTC Confirmation Procedure

ACS002E0

CAUTION:
Always drive vehicle at a safe speed.

NOTE:
If “DTC Confirmation Procedure” has been previously conducted, always turn ignition switch “OFF” and wait at least 10 seconds before conducting the next test.
After the repair, perform the following procedure to confirm the malfunction is eliminated.

WITH CONSULT-II

1. Turn ignition switch ON. (Do not start engine.)
2. Select “DATA MONITOR” mode for “A/T” with CONSULT-II.
3. Start engine and maintain the following conditions for at least 5 consecutive seconds.
   VHCL SPEED SE: 40 km/h (25 MPH) or more
   ENGINE SPEED: 1,500 rpm or more
   ACCELE POS: 0.5/8 or more
   Selector lever: “D” position
   Gear position (Turbine revolution sensor 1): 4th or 5th position
   Gear position (Turbine revolution sensor 2): All position
   Driving location: Driving the vehicle uphill (increased engine load) will help maintain the driving conditions required for this test.

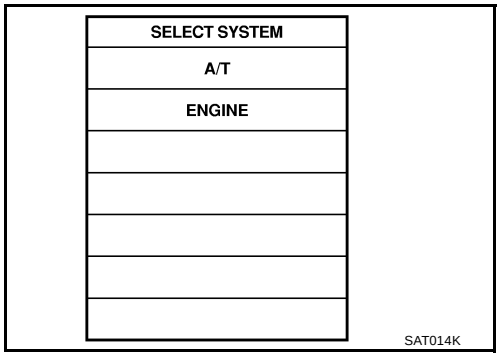

4. If DTC is detected, go to AT-160, "Diagnostic Procedure" .

WITH GST

Follow the procedure “With CONSULT-II”.

Wiring Diagram — AT — TRSA/T

ACS002E1

AT-TRSA/T-01

: DETECTABLE LINE FOR DTC
: NON-DETECTABLE LINE FOR DTC

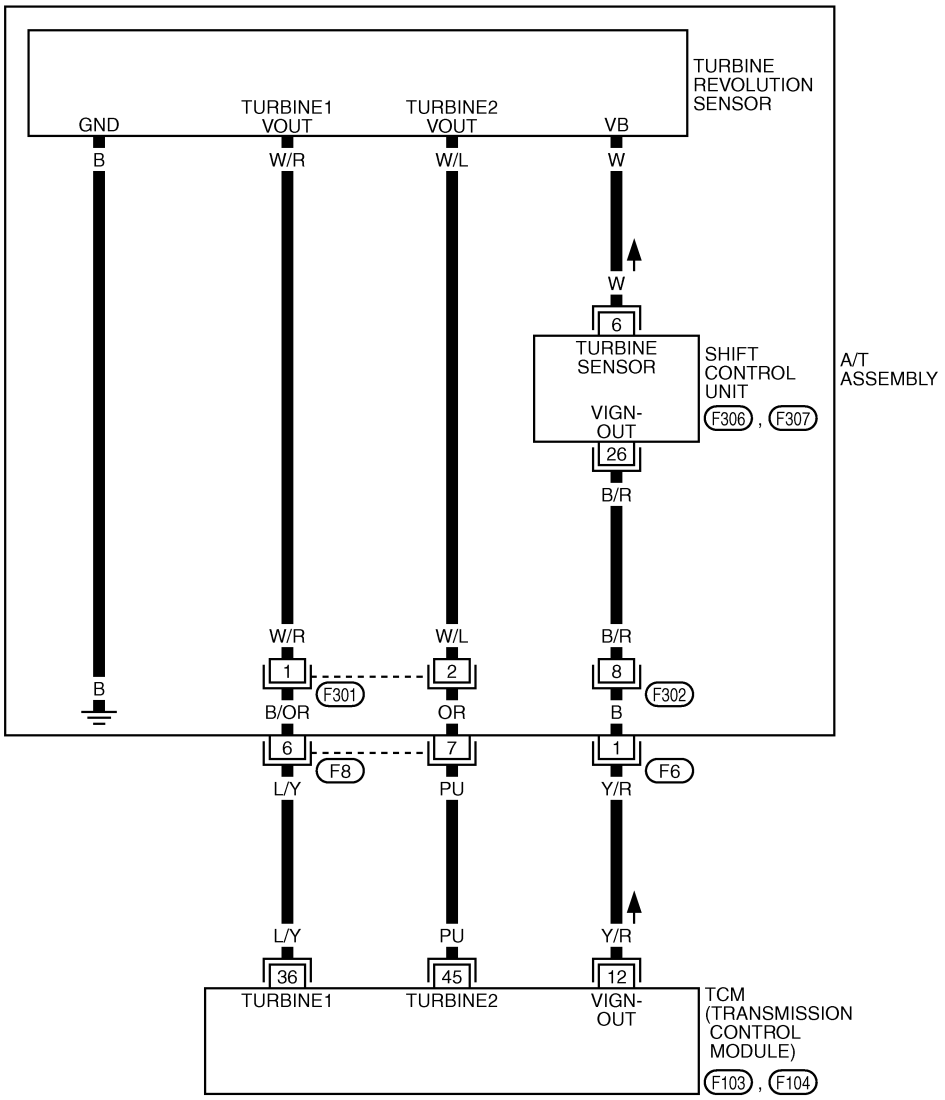

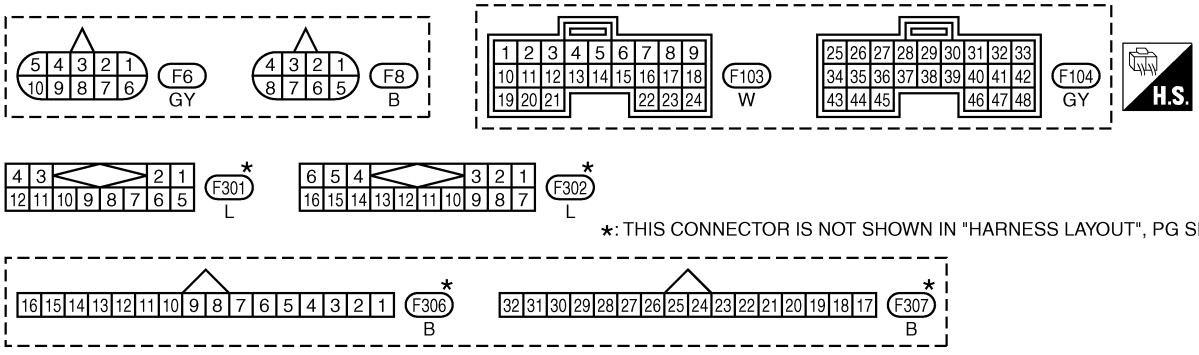

TCWT0108E

TCM terminal and Data are reference value. Measured between each terminals 5, 14, 24 and 46 (TCM ground).

Terminal No.	Wire color	Item	Condition		Data (Approx.)
12	Y/R	Power supply (out)	IGN ON	–	Battery voltage
			IGN OFF	–	0V
36	L/Y	Turbine revolution sensor 1	When vehicle cruises	When running at 50 km/h (31 MPH) in 4th gear with the closed throttle position signal “OFF”.	1.3 (kHz)
45	PU	Turbine revolution sensor 2		When moving at 20 km/h (12 MPH) in 1st gear with the closed throttle position signal “OFF”.	

Diagnostic Procedure

ACS002E2

1. CHECK INPUT SIGNALS

With CONSULT-II

1. Start engine.
2. Select “ECU INPUT SIGNALS” in “DATA MONITOR” mode for “A/T” with CONSULT-II.
3. Vehicle start and read out the value of “TURBINE REV”.

OK or NG

OK >> GO TO 5.
NG >> GO TO 2.

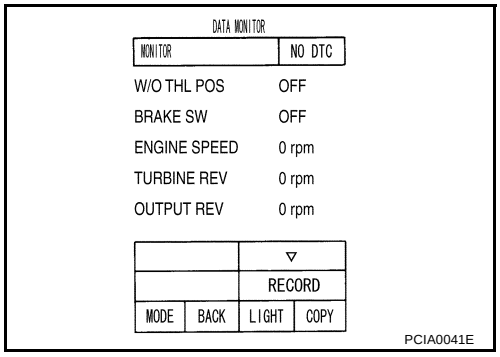

2. CHECK TURBINE REVOLUTION SENSOR

1. Start engine.
2. Check the pulse when vehicle cruises.

Name	Condition
Turbine revolution sensor 1	When running at 50 km/h (31 MPH) in 4th gear with the closed throttle position signal “OFF”, use the CONSULT-II pulse frequency measuring function. **CAUTION:** **Connect the data link connector to the vehicle-side diagnosis connector.**
Turbine revolution sensor 2	When moving at 20 km/h (12 MPH) in 1st gear with the closed throttle position signal “OFF”, use the CONSULT-II pulse frequency measuring function. **CAUTION:** **Connect the data link connector to the vehicle-side diagnosis connector.**

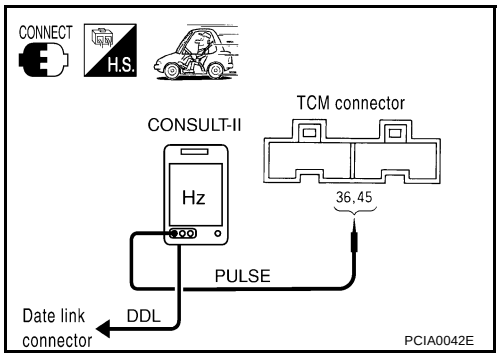

Item	Connector No.	Terminal No.	Name	Data (Approx.)
TCM	F104	36 (L/Y)	Turbine revolution sensor 1	1.3 (kHz)
		45 (PU)	Turbine revolution sensor 2	

OK or NG

OK >> GO TO 5.
NG >> GO TO 3.

3. CHECK HARNESS BETWEEN TCM AND A/T UNIT ASSEMBLY HARNESS CONNECTOR

1. Turn ignition switch OFF.
2. Disconnect TCM connector.
3. Check continuity between A/T unit assembly harness connector and TCM connector.

Item	Connector No.	Terminal No. (Wire color)	Continuity
TCM	F103	12 (Y/R)	Yes
A/T unit assembly harness connector	F6	1 (Y/R)	
TCM	F104	36 (L/Y)	Yes
A/T unit assembly harness connector	F8	6 (L/Y)	
TCM	F104	45 (PU)	Yes
A/T unit assembly harness connector	F8	7 (PU)	

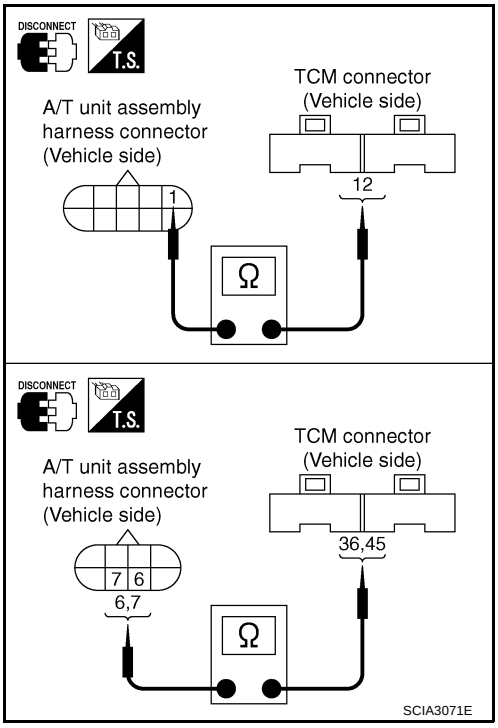

4. If OK, check harness for short to ground and short to power.
5. Reinstall any part removed.

OK or NG

OK >> GO TO 4.
NG >> Repair open circuit or short to ground or short to power in harness or connectors.

4. CHECK TERMINAL CORD ASSEMBLY

1. Remove oil pan. Refer to AT-301, "Control Valve Assembly" .
2. Disconnect A/T unit assembly harness connector and control valve assembly harness connector.
3. Check continuity between A/T unit assembly harness connector and control valve assembly harness connector.

Item	Connector No.	Terminal No. (Wire color)	Continuity
A/T unit assembly harness connector	F6	1 (B)	Yes
Control valve assembly harness connector	F302	8 (B)	
A/T unit assembly harness connector	F8	6 (B/OR)	Yes
Control valve assembly harness connector	F301	1 (B/OR)	
A/T unit assembly harness connector	F8	7 (OR)	Yes
Control valve assembly harness connector	F301	2 (OR)	

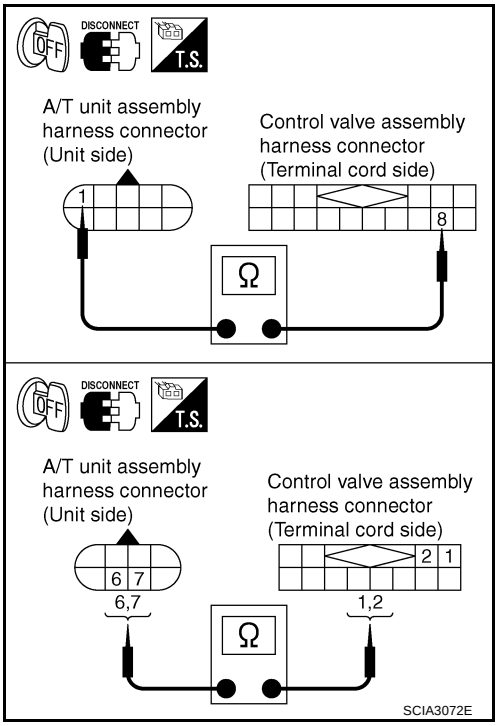

4. If OK, check harness for short to ground and short to power.
5. Reinstall any part removed.

OK or NG

OK >> Replace the control valve assembly. Refer to AT-301, "Control Valve Assembly" .
NG >> Repair or replace damaged parts.

5. CHECK DTC

Perform “DTC Confirmation Procedure”. Refer to AT-107, "DTC Confirmation Procedure" .

OK or NG

OK >> **INSPECTION END**
NG >> GO TO 6.

6. PERFORM TCM INSPECTION

1. Perform TCM input/output signal inspection. Refer to AT-88, "TCM Input/Output Signal Reference Values" .
2. If NG, recheck TCM pin terminals for damage or loose connection with harness connector.

OK or NG

OK >> **INSPECTION END**
NG >> Repair or replace damaged parts.

DTC P1721 VEHICLE SPEED SENSOR MTR

PFP:24814

Description

ACS002E3

The vehicle speed sensor·MTR signal is transmitted from combination meter to TCM by CAN communication line. The signal functions as an auxiliary device to the revolution sensor when it is malfunctioning. The TCM will then use the vehicle speed sensor·MTR signal.

On Board Diagnosis Logic

ACS002E4

- This is not an OBD-II self-diagnostic item.
- Diagnostic trouble code “VHE SPD SE·MTR” with CONSULT-II is detected when TCM does not receive the proper vehicle speed sensor MTR signal (input by CAN communication) from combination meter.

Possible Cause

ACS002E5

Harness or connectors
(The sensor circuit is open or shorted.)

DTC Confirmation Procedure

ACS002E6

CAUTION:
Always drive vehicle at a safe speed.

NOTE:
If “DTC Confirmation Procedure” has been previously conducted, always turn ignition switch “OFF” and wait at least 10 seconds before conducting the next test.
After the repair, perform the following procedure to confirm the malfunction is eliminated.

WITH CONSULT-II

1. Turn ignition switch ON. (Do not start engine.)
2. Select “DATA MONITOR” mode for “A/T” with CONSULT-II.
3. Start engine and maintain the following conditions for at least 5 consecutive seconds.
   ACCELE POS: 1/8 or less
   VHCL SPEED SE: 30 km/h (17 MPH) or more
4. If DTC is detected, go to AT-163, "Diagnostic Procedure" .

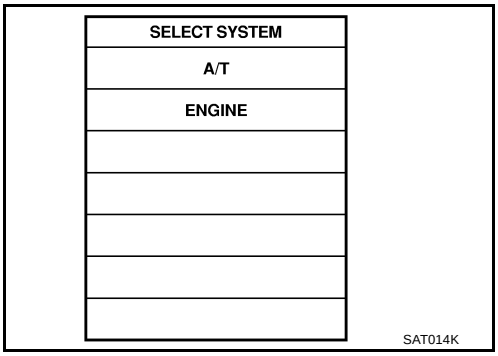

Diagnostic Procedure

ACS002E7

1. CHECK INPUT SIGNALS

With CONSULT-II

1. Start engine.
2. Select “ECU INPUT SIGNALS” in “DATA MONITOR” mode for “A/T” with CONSULT-II.
3. Drive vehicle and read out the value of “VHCL/S SE·MTR”.

OK or NG

OK >> GO TO 3.
NG >> GO TO 2.

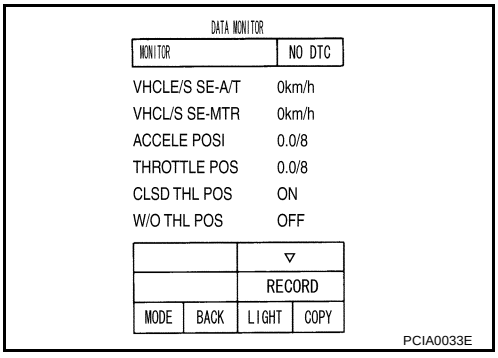

2. CHECK DTC, STEP 1

Check following items.

1. Refer to AT-104, "DTC U1000 CAN COMMUNICATION LINE" .
2. Refer to BRC-25, "CONSULT-II Functions" .
3. Refer to DI-4, "COMBINATION METERS" .

OK or NG

OK >> **INSPECTION END**
NG >> If NG, recheck pin terminals for damage or loose connection with harness connector.

3. CHECK DTC, STEP 2

Perform DTC confirmation procedure. AT-163, "DTC Confirmation Procedure" .

OK or NG

OK >> **INSPECTION END**
NG >> If the system returns a malfunction, recheck pin terminals for damage or loose connection with harness connector.

DTC P1730 A/T INTERLOCK

PFP:00000

Description

ACS002E8

- Fail-safe function to detect interlock conditions.
- Fail-safe function to the transmission range switch detects the selector position and sends a signal to the TCM.

On Board Diagnosis Logic

ACS002E9

- This is an OBD-II self-diagnostic item.
- Diagnostic trouble code “A/T INTERLOCK” with CONSULT-II or P1730 without CONSULT-II is detected when TCM does not receive the proper voltage signal from the sensor and switch.
- TCM monitors and compares gear position and conditions of each pressure switch when gear is steady.

Possible Cause

ACS002EA

- Harness or connectors
  (The solenoid and switch circuit is open or shorted.)
- Low coast brake solenoid valve
- ATF pressure switch 2

DTC Confirmation Procedure

ACS002EB

NOTE:
If “DTC Confirmation Procedure” has been previously conducted, always turn ignition switch “OFF” and wait at least 10 seconds before conducting the next test.
After the repair, perform the following procedure to confirm the malfunction is eliminated.

WITH CONSULT-II

1. Turn ignition switch ON. (Do not start engine.)
2. Select “DATA MONITOR” mode for “A/T” with CONSULT-II.
3. Start engine.
4. Drive vehicle and maintain the following conditions for at least 2 consecutive seconds.
   Selector lever: “D” position
5. If DTC is detected, go to AT-170, "Diagnostic Procedure" .

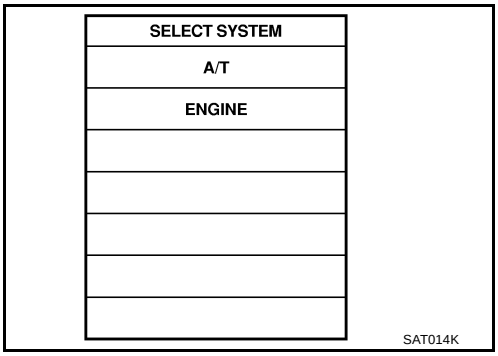

WITH GST

Follow the procedure “With CONSULT-II”.

Wiring Diagram — AT — I/LOCK

ACS002EC

AT-I/LOCK-01

: DETECTABLE LINE FOR DTC
: NON-DETECTABLE LINE FOR DTC

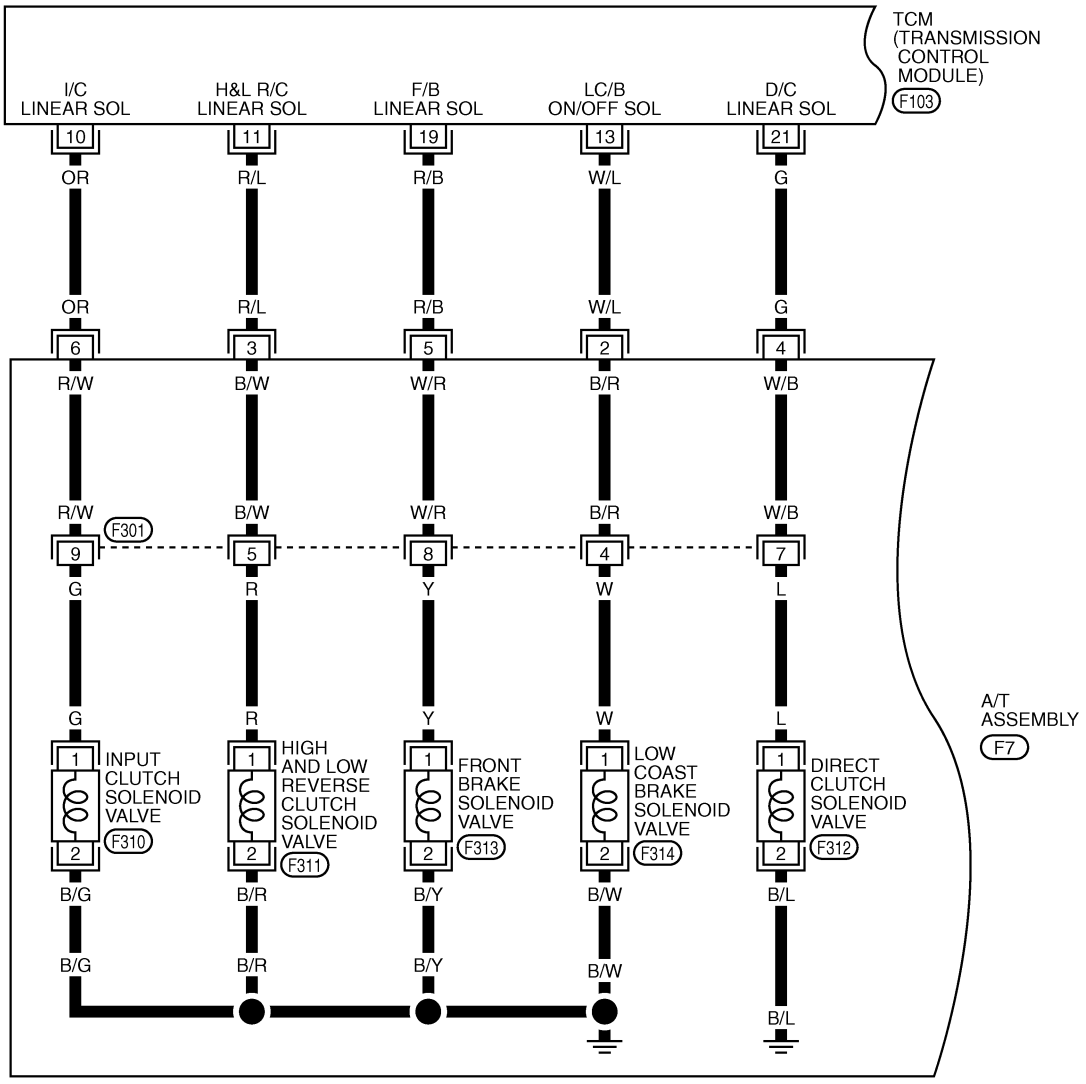

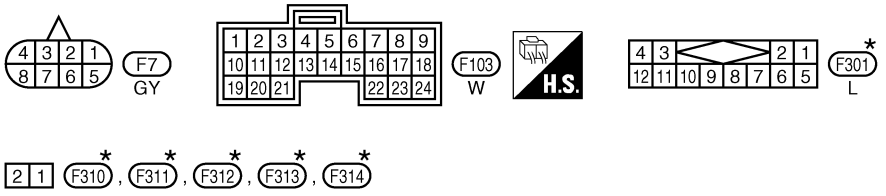

*: THIS CONNECTOR IS NOT SHOWN IN "HARNESS LAYOUT", PG SECTION.

TCWT0109E

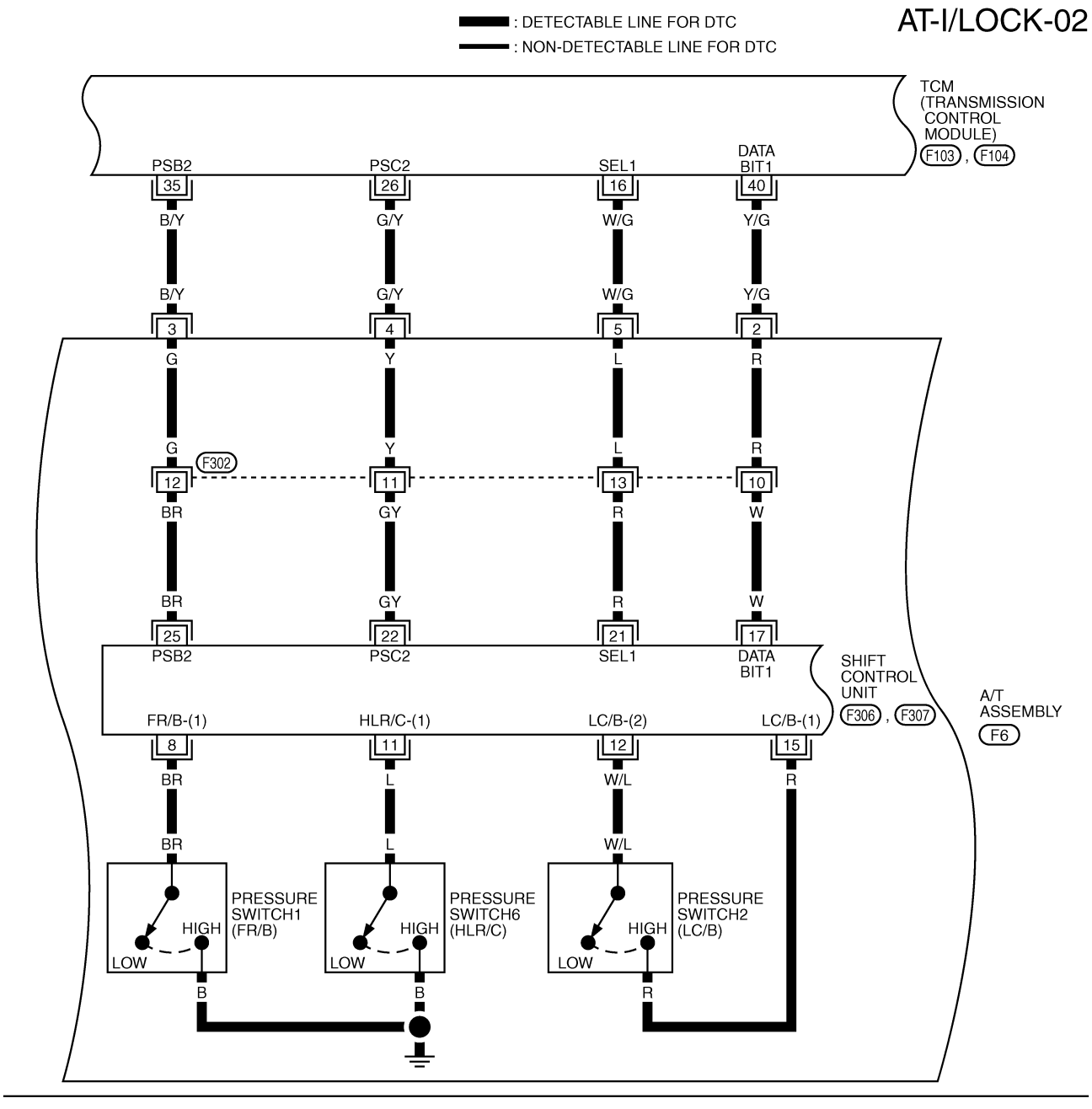

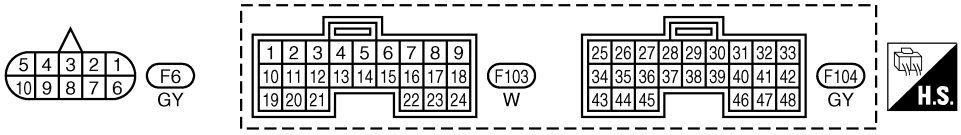

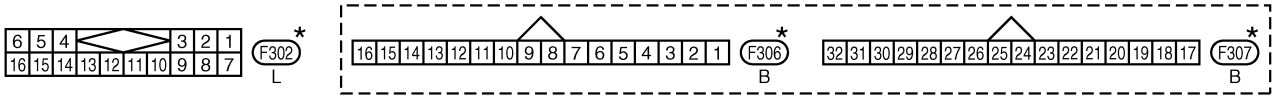

*: THIS CONNECTOR IS NOT SHOWN IN "HARNESS LAYOUT", PG SECTION.

TCWT0110E

AT-I/LOCK-03

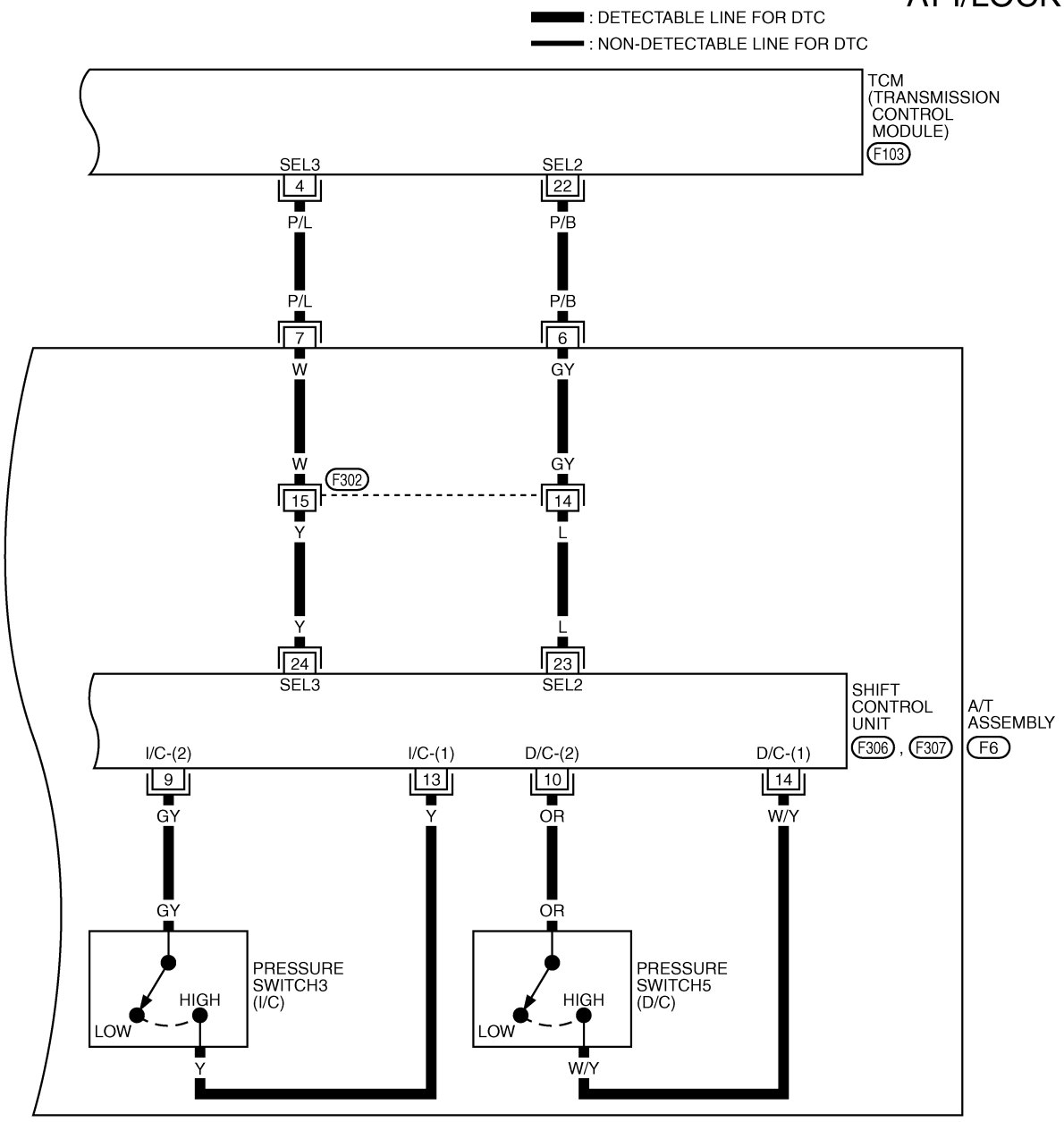

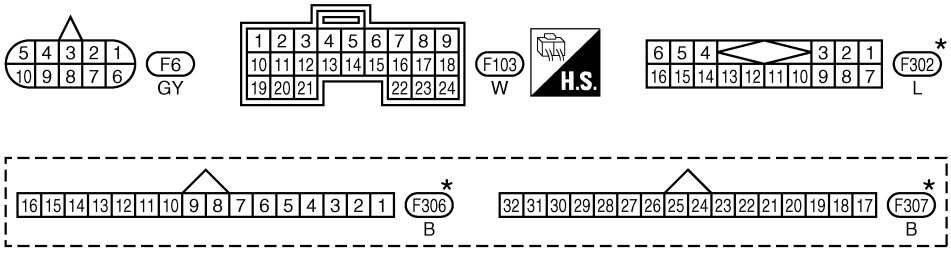

*: THIS CONNECTOR IS NOT SHOWN IN "HARNESS LAYOUT", PG SECTION.

TCWT0111E

TCM terminals and Data are reference value. Measured between each terminals 5, 14, 24 and 46 (TCM ground).

Terminal No.	Wire color	Item	Condition		Data (Approx.)
4	P/L	SEL3 (pressure switch 3)	–	–	–
10	OR	Input clutch solenoid valve	When vehicle cruises	When the solenoid valve operating (in 1st gear, 2nd gear, or 3rd gear)	More than 2V
				When the solenoid valve is not operating (4th gear or 5th gear)	0V
11	R/L	High and low reverse clutch solenoid valve		When the solenoid valve operating [6 km/h (4MPH) or faster in 1st gear or 2nd gear]	More than 2V
				When the solenoid valve is not operating [6 km/h (4MPH) or slower in 1st gear or 3rd, 4th, or 5th gear]	0V
13	W/L	Low coast brake solenoid valve		When the solenoid valve is operating (when running in M1-1 gear or M2-2 gear)	Battery voltage
				When the solenoid valve is not operating (when running in “D”)	0V
16	W/G	SEL1 (pressure switch 2)	–	–	–
19	R/B	Front brake solenoid valve	When vehicle cruises	When the solenoid valve is operating (other than 4th gear)	More than 2V
				When the solenoid valve is not operating (4th gear)	0V
21	G	Direct clutch solenoid valve		When the solenoid valve is operating (1st gear or 5th gear)	More than 2V
				When the solenoid valve is not operating (2nd gear, 3rd gear, or 4th gear)	0V
22	P/B	SEL2 (pressure switch 5)	–	–	–
26	G/Y	PSC2 (pressure switch 6)	When vehicle cruises	When high & low reverse clutch solenoid valve “ON”.	0V
				When high & low reverse clutch solenoid valve “OFF”.	Battery voltage
35	B/Y	PSB2 (pressure switch 1)		When front brake solenoid valve “OFF”.	Battery voltage
				When front brake solenoid valve“ ON”.	0V
40	Y/G	DATA BIT1	–	–	–

Judgement of A/T Interlock

ACS002ED

When A/T Interlock is judged to be malfunctioning, the vehicle should be fixed in 2nd gear, and should be set in a condition in which it can travel.
When one of the following fastening patterns is detected, the fail-safe function in correspondence with the individual pattern should be performed.

A/T INTERLOCK COUPLING PATTERN TABLE

●: NG, X: OK

Gear position		ATF pressure switch output					Fail-safe function	Clutch pressure output pattern after fail-safe function					
		SW3 (I/C)	SW6 (HLR/C)	SW5 (D/C)	SW1 (FR/B)	SW2 (LC/B)		I/C	HLR/C	D/C	FR/B	LC/B	L/U
A/T interlock coupling pattern	3rd	–	X	X	–	●	Held in 2nd gear	OFF	OFF	ON	OFF	OFF	OFF
	4th	–	X	X	–	●	Held in 2nd gear	OFF	OFF	ON	OFF	OFF	OFF
	5th	X	X	–	X	●	Held in 2nd gear	OFF	OFF	ON	OFF	OFF	OFF

Diagnostic Procedure

ACS002EE

1. SELF-DIAGNOSIS

With CONSULT-II

1. Drive vehicle.
2. Stop vehicle and turn ignition switch OFF.
3. Turn ignition switch ON. (Do not start engine.)
4. Select “SELF-DIAG RESULTS” mode for “A/T” with CONSULT-II.

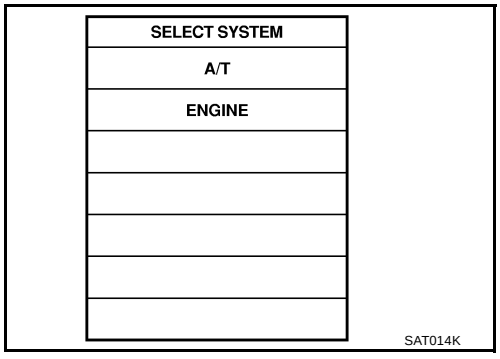

Without CONSULT-II

1. Drive vehicle.
2. Stop vehicle and turn ignition switch OFF.
3. Turn ignition switch ON. (Do not start engine.)
4. Perform self-diagnosis. Refer to AT-102, "TCM SELF-DIAGNOSTIC PROCEDURE (NO TOOLS)" .

OK or NG

OK >> GO TO 2.
NG >> Check low coast brake solenoid valve circuit and function. Refer to AT-214, "DTC P1772 LOW COAST BRAKE SOLENOID VALVE" , AT-219, "DTC P1774 LOW COAST BRAKE SOLENOID VALVE FUNCTION" .

2. CHECK DTC

Perform "DTC confirmation Procedure". Refer to AT-165, "DTC Confirmation Procedure" .

OK or NG

OK >> **INSPECTION END**
NG >> GO TO 3.

3. PERFORM TCM INSPECTION

1. Perform TCM input/output signal inspection. Refer to AT-88, "TCM Input/Output Signal Reference Values".
2. If NG, recheck TCM pin terminals for damage or loose connection with harness connector.

OK or NG

OK >> **INSPECTION END**
NG >> Repair or replace damaged parts.

DTC P1731 A/T 1ST ENGINE BRAKING

PFP:00000

Description

ACS002EF

Fail-safe function to prevent sudden decrease in speed by engine brake other than at 1M position.

On Board Diagnosis Logic

ACS002EG

- This is not an OBD-II self-diagnostic item.
- Diagnostic trouble code “A/T 1ST E/BRAKING” with CONSULT-II or 13th judgement flicker without CONSULT-II is detected under the following condition.
  - When TCM does not receive the proper voltage signal from the sensor.
  - When TCM monitors each pressure switch and solenoid monitor value, and detects as irregular when engine brake of 1st gear acts other than at 1M position.

Possible Cause

ACS002EH

- Harness or connectors
  (The sensor circuit is open or shorted.)
- Low coast brake solenoid valve
- ATF pressure switch 2

DTC Confirmation Procedure

ACS002EI

NOTE:
If “DTC Confirmation Procedure” has been previously conducted, always turn ignition switch “OFF” and wait at least 10 seconds before conducting the next test.
After the repair, perform the following procedure to confirm the malfunction is eliminated.

WITH CONSULT-II

1. Turn ignition switch ON. (Do not start engine.)
2. Select “DATA MONITOR” mode for “A/T” with CONSULT-II.
3. Start engine.
4. Drive vehicle and maintain the following conditions for at least 2 consecutive seconds.
   ENGINE SPEED: 1,200 rpm
   Selector lever: “D” position
   Gear position: 1st gear
5. If DTC is detected, go to AT-174, "Diagnostic Procedure" .

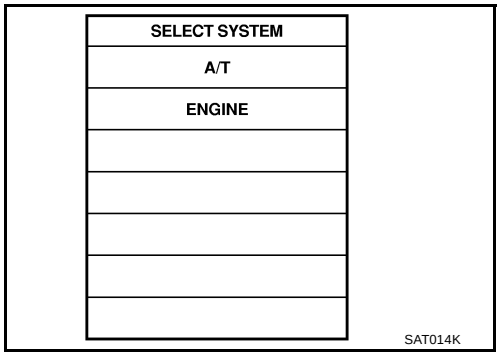

Wiring Diagram — AT — E/BRE

ACS002EJ

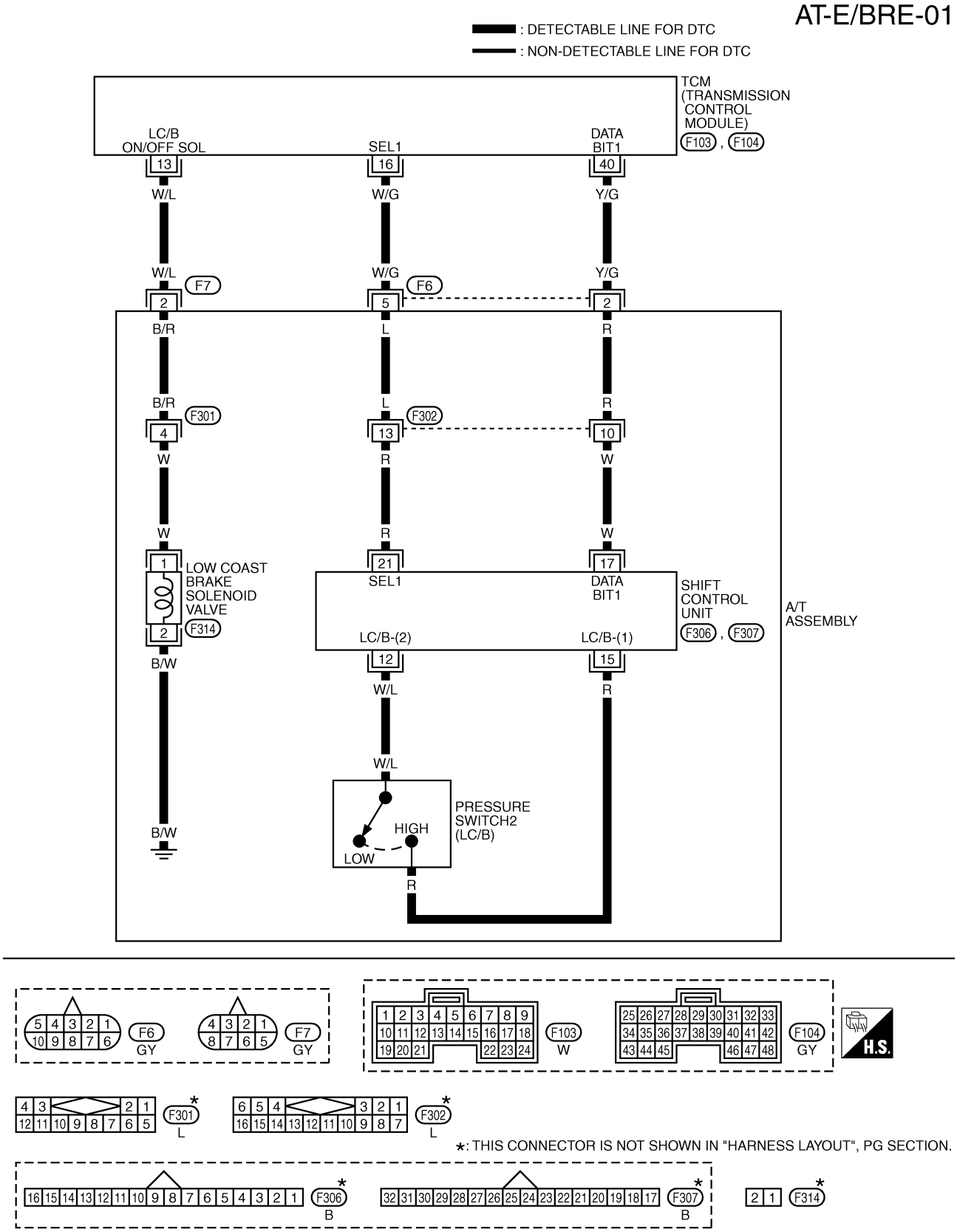

TCM terminals and Data are reference value. Measured between each terminals 5, 14, 24 and 46 (TCM ground).

Terminal No.	Wire color	Item	Condition		Data (Approx.)
13	W/L	Low coast brake solenoid valve	When vehicle cruises	When the solenoid valve is operating (when running in M1-1 gear or M2-2 gear)	Battery voltage
				When the solenoid valve is not operating (when running in “D”)	0V
16	W/G	SEL1 (pressure switch 2)	–		–
40	Y/G	DATA BIT1	–		–

Diagnostic Procedure

ACS004KB

1. CHECK INPUT SIGNALS

With CONSULT-II

1. Start engine.
2. Select “ECU INPUT SIGNALS” or “MAIN SIGNALS” in “DATA MONITOR” mode for “A/T” with CONSULT-II.
3. Accelerate vehicle in the “D” position (1st gear), and confirm the ON/OFF actuation of the “ATF PRES SW 2”.

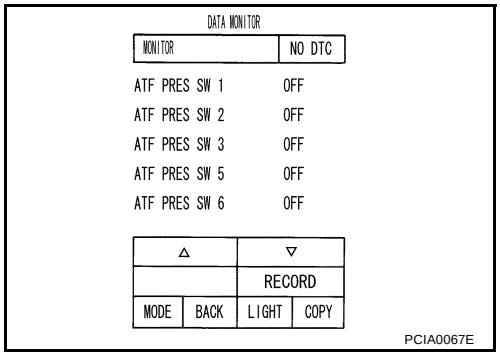

OK or NG

OK >> GO TO 4.
NG >> GO TO 2.

2. CHECK HARNESS BETWEEN TCM AND A/T UNIT ASSEMBLY HARNESS CONNECTOR

1. Turn ignition switch OFF.
2. Disconnect TCM connector.
3. Check continuity between A/T unit assembly harness connector and TCM connector.

Item	Connector No.	Terminal No. (Wire color)	Continuity
TCM	F103	13 (W/L)	Yes
A/T unit assembly harness connector	F7	2 (W/L)	
TCM	F103	16 (W/G)	Yes
A/T unit assembly harness connector	F6	5 (W/G)	
TCM	F104	40 (Y/G)	Yes
A/T unit assembly harness connector	F6	2 (Y/G)	

4. If OK, check harness for short to ground and short to power.
5. Reinstall any part removed.

OK or NG

OK >> GO TO 3.
NG >> Repair open circuit or short to ground or short to power in harness or connectors.

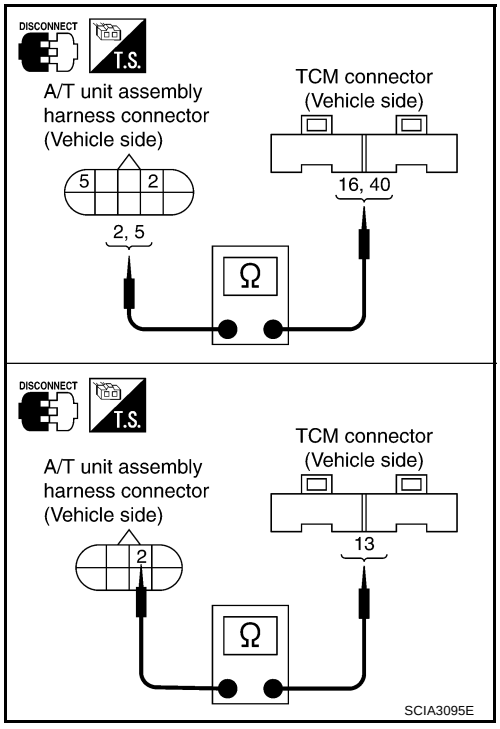

3. CHECK TERMINAL CORD ASSEMBLY

1. Remove oil pan. Refer to AT-301, "Control Valve Assembly" .
2. Disconnect A/T unit assembly harness connector and control valve assembly harness connector.
3. Check continuity between A/T unit assembly harness connector and control valve assembly harness connector.

Item	Connector No.	Terminal No. (Wire color)	Continuity
A/T unit assembly harness connector	F6	2 (R)	Yes
Control valve assembly harness connector	F302	10 (R)	
A/T unit assembly harness connector	F6	5 (L)	Yes
Control valve assembly harness connector	F302	13 (L)	
A/T unit assembly harness connector	F7	2 (B/R)	Yes
Control valve assembly harness connector	F301	4 (B/R)	

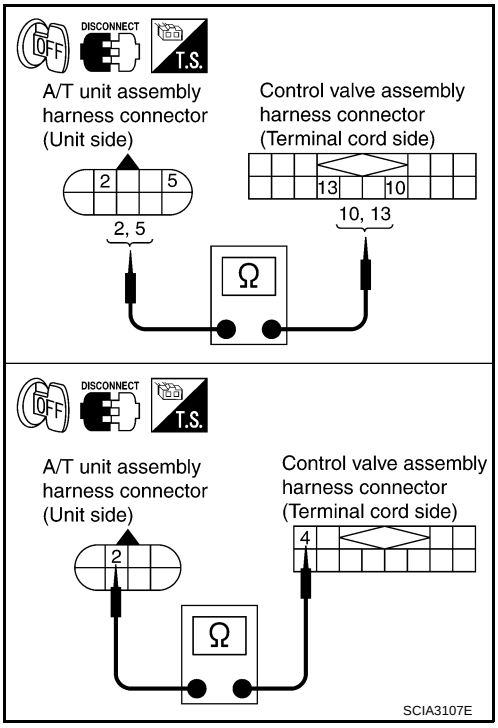

4. If OK, check harness for short to ground and short to power.
5. Reinstall any part removed.

OK or NG

OK >> Replace the control valve assembly. Refer to AT-301, "Control Valve Assembly" .
NG >> Repair open circuit or short to ground or short to power in harness or connectors.

4. CHECK DTC

Perform “DTC Confirmation Procedure”. Refer to AT-107, "DTC Confirmation Procedure" .

OK or NG

OK >> **INSPECTION END**
NG >> GO TO 5.

5. PERFORM TCM INSPECTION

1. Perform TCM input/output signal inspection. Refer to AT-88, "TCM Input/Output Signal Reference Values" .
2. If NG, recheck TCM pin terminals for damage or loose connection with harness connector.

OK or NG

OK >> **INSPECTION END**
NG >> Repair or replace damaged parts.

DTC P1752 INPUT CLUTCH SOLENOID VALVE

PFP:31940

Description

ACS002EL

Input clutch solenoid valve is controlled by the TCM in response to signals sent from the PNP switch, vehicle speed sensor and accelerator pedal position sensor (throttle position sensor). Gears will then be shifted to the optimum position.

On Board Diagnosis Logic

ACS002EM

- This is an OBD-II self-diagnostic item.
- Diagnostic trouble code “I/C SOLENOID/CIRC” with CONSULT-II or P1752 without CONSULT-II is detected under the following conditions.
  - When TCM detects an improper voltage drop when it tries to operate the solenoid valve.
  - When TCM detects as irregular by comparing target value with monitor value.

Possible Cause

ACS002EN

- Harness or connectors
  (The solenoid circuit is open or shorted.)
- Input clutch solenoid valve

DTC Confirmation Procedure

ACS002EO

CAUTION:
Always drive vehicle at a safe speed.

NOTE:
If “DTC Confirmation Procedure” has been previously conducted, always turn ignition switch “OFF” and wait at least 10 seconds before conducting the next test.
After the repair, perform the following procedure to confirm the malfunction is eliminated.

WITH CONSULT-II

1. Turn ignition switch ON. (Do not start engine.)
2. Select “DATA MONITOR” mode for “A/T” with CONSULT-II.
3. Start engine.
4. Drive vehicle and maintain the following conditions for at least 5 consecutive seconds.
   ACCELE POS: 1.5/8 - 2.0/8
   Selector lever: “D” position
   Gear position: 3rd ⇒ 4th Gear (I/C ON/OFF)
   Driving location: Driving the vehicle uphill (increased engine load) will help maintain the driving conditions required for this test.
5. If DTC is detected go to AT-178, "Diagnostic Procedure" .

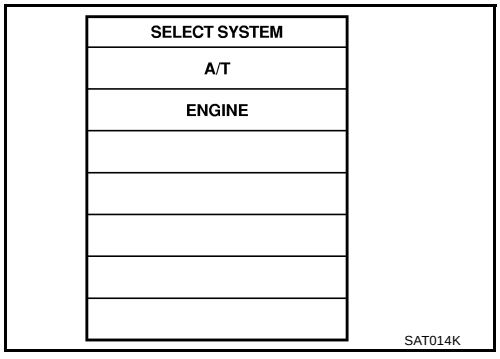

WITH GST

Follow the procedure “With CONSULT-II”.

Wiring Diagram — AT — I/C

ACS002EP

AT-I/C-01

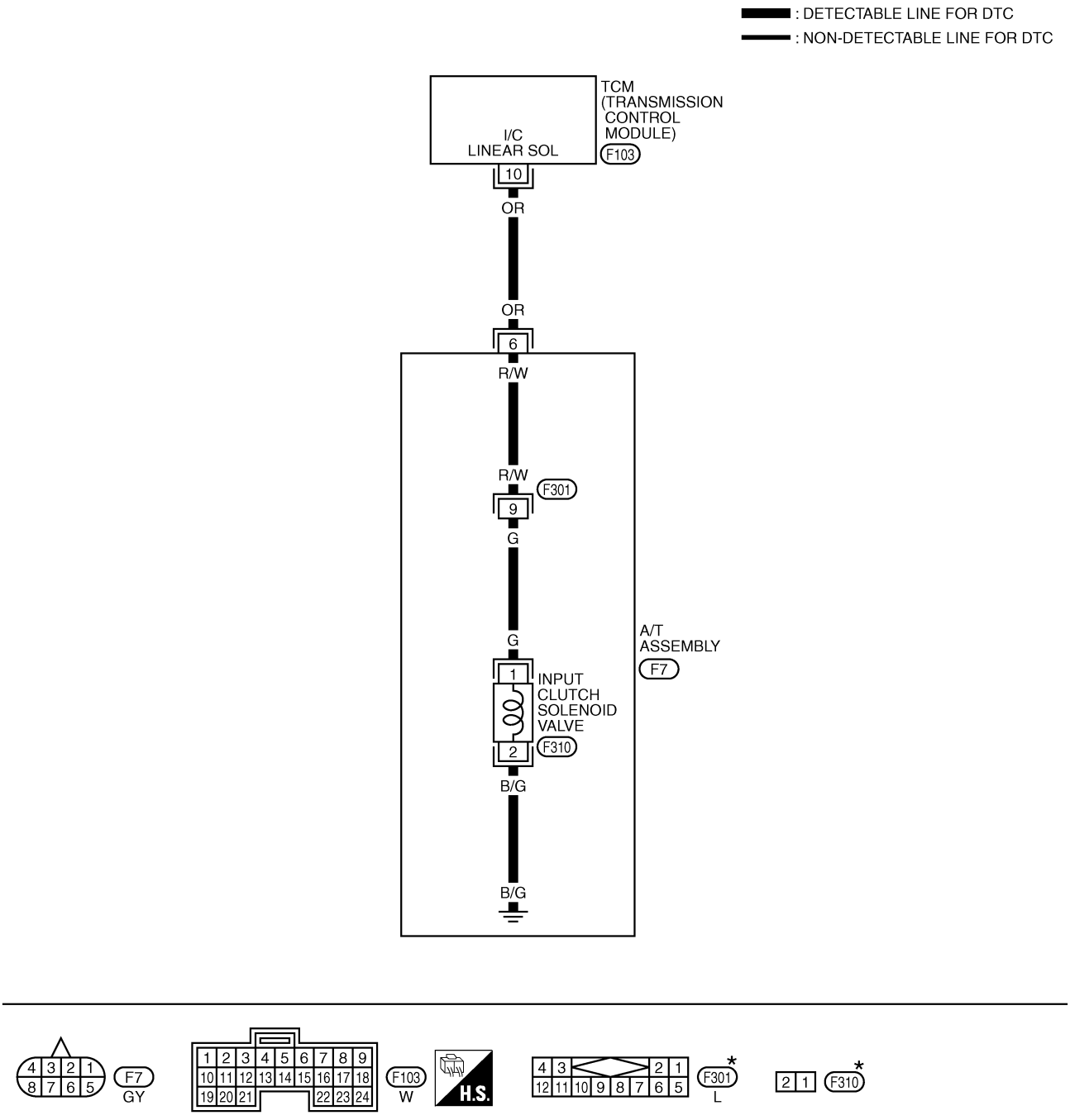

*: THIS CONNECTOR IS NOT SHOWN IN "HARNESS LAYOUT", PG SECTION.

TCWT0113E

TCM terminal and Data are reference value. Measured between each terminals 5, 14, 24 and 46 (TCM ground).

Terminal No.	Wire color	Item	Condition		Data (Approx.)
10	OR	Input clutch solenoid valve	When vehicle cruises	When the solenoid valve operating (in 1st gear, 2nd gear, or 3rd gear)	More than 2V
				When the solenoid valve is not operating (4th gear or 5th gear)	0V

Diagnostic Procedure

ACS002EQ

1. CHECK INPUT CLUTCH SOLENOID VALVE CIRCUIT

1. Turn ignition switch OFF.
2. Disconnect A/T unit assembly harness connector at the transmission right side.
3. Check the resistance between terminal and ground.

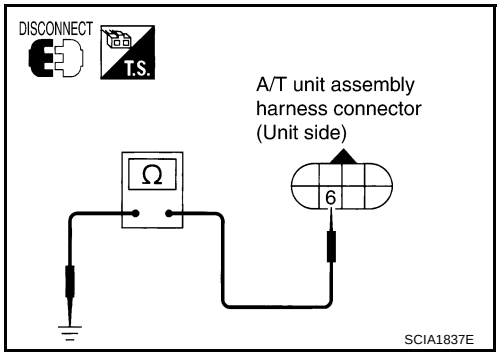

Solenoid valve	Connector No.	Terminal No.	Resistance (Approx.)
Input clutch solenoid valve	F7	6 (OR) - Ground	3 - 9 Ω

OK or NG

OK >> GO TO 4.
NG >> GO TO 2.

2. CHECK TERMINAL CORD ASSEMBLY

1. Remove oil pan. Refer to AT-301, "Control Valve Assembly" .
2. Disconnect A/T unit assembly harness connector and control valve assembly harness connector.
3. Check continuity between A/T unit assembly harness connector and control valve assembly harness connector.

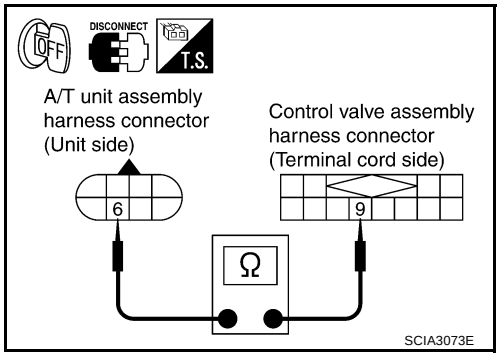

Item	Connector No.	Terminal No. (Wire color)	Continuity
A/T unit assembly harness connector	F7	6 (R/W)	Yes
Control valve assembly harness connector	F301	9 (R/W)	

4. If OK, check harness for short to ground and short to power.

OK or NG

OK >> GO TO 3.
NG >> Repair open circuit or short to ground or short to power in harness or connectors.

3. CHECK VALVE RESISTANCE

Check valve resistance

- Refer to AT-180, "Component Inspection" .

OK or NG

OK >> GO TO 4.
NG >> Replace the control valve assembly. Refer to AT-301, "Control Valve Assembly" .

4. CHECK POWER SOURCE CIRCUIT

1. Turn ignition switch OFF.
2. Disconnect TCM connector.
3. Check continuity between A/T unit assembly harness connector and TCM connector.

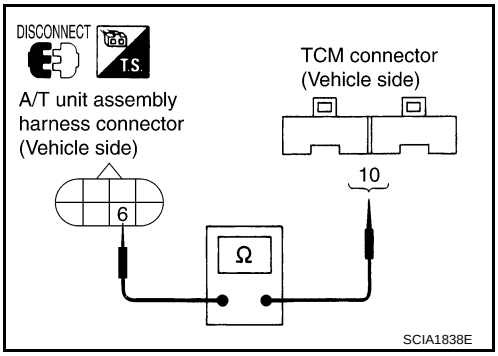

Item	Connector No.	Terminal No. (Wire color)	Continuity
TCM	F103	10 (OR)	Yes
A/T unit assembly harness connector	F7	6 (OR)	

4. If OK, check harness for short to ground and short to power.
5. Reinstall any part removed.

OK or NG

OK >> GO TO 5.
NG >> Repair open circuit or short to ground or short to power in harness or connectors.

5. CHECK DTC

Perform “DTC Confirmation Procedure”. Refer to AT-107, "DTC Confirmation Procedure" .

OK or NG

OK >> **INSPECTION END**
NG >> Repair or replace damaged parts.

6. PERFORM TCM INSPECTION

1. Perform TCM input/output signal inspection. Refer to AT-88, "TCM Input/Output Signal Reference Values" .
2. If NG, recheck TCM pin terminals for damage or loose connection with harness connector.

OK or NG

OK >> **INSPECTION END**
NG >> Repair or replace damaged parts.

Component Inspection

ACS004KC

INPUT CLUTCH SOLENOID VALVE

Resistance check

1. Turn ignition switch OFF.
2. Remove oil pan. Refer to AT-301, "Control Valve Assembly" .
3. Disconnect control valve assembly harness connector.
4. Check resistance between terminal and ground.

Solenoid Valve	Connector No.	Terminal No. (Wire color)	Resistance (Ω) (Approx.)
Input clutch solenoid valve	F301	9 (G) - Ground	3 - 9 Ω

5. If NG, replace control valve assembly. Refer to AT-301, "Control Valve Assembly" .

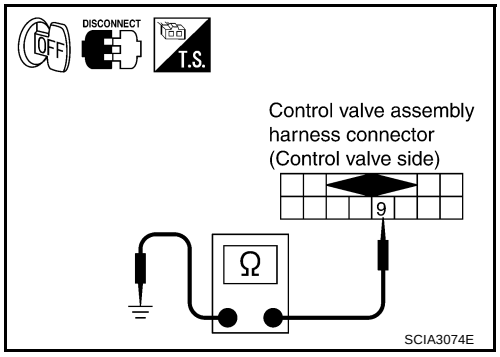

Operation check

- Check solenoid valve by listening for its operating sound while applying battery voltage to the terminal 9 and ground.

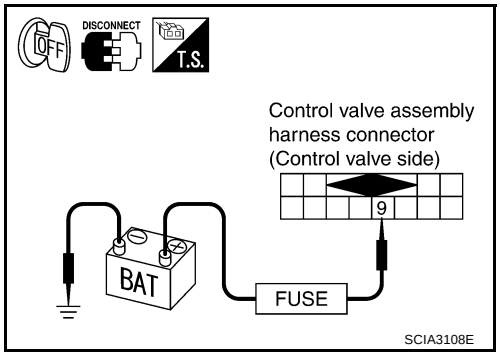

DTC P1754 INPUT CLUTCH SOLENOID VALVE FUNCTION

PFP:31940

Description

ACS002ER

- Input clutch solenoid valve is controlled by the TCM in response to signals sent from the PNP switch, vehicle speed sensor and accelerator pedal position sensor (throttle position sensor). Gears will then be shifted to the optimum position.
- This is not only caused by electrical malfunction (circuits open or shorted) but also by mechanical malfunction such as control valve sticking, improper solenoid valve operation.

On Board Diagnosis Logic

ACS002ES

- This is an OBD-II self-diagnostic item.
- Diagnostic trouble code “I/C SOLENOID FNCTN” with CONSULT-II or P1754 without CONSULT-II is detected under the following conditions.
  - When TCM detects that actual gear ratio is irregular, and relation between gear position and condition of ATF pressure switch 3 is irregular during depressing accelerator pedal. (Other than during shift change)
  - When TCM detects that relation between gear position and condition of ATF pressure switch 3 is irregular during releasing accelerator pedal. (Other than during shift change)

Possible Cause

ACS002ET

- Harness or connectors
  (The solenoid and switch circuits are open or shorted.)
- Input clutch solenoid valve
- ATF pressure switch 3

DTC Confirmation Procedure

ACS002EU

CAUTION:
Always drive vehicle at a safe speed.

NOTE:
If “DTC Confirmation Procedure” has been previously conducted, always turn ignition switch “OFF” and wait at least 10 seconds before conducting the next test.
After the repair, perform the following procedure to confirm the malfunction is eliminated.

WITH CONSULT-II

1. Start engine.
2. Accelerate vehicle to maintain the following condition.
   ACCELE POSI: 1.5/8 - 2.0/8
   Selector lever: “D” position
   Gear position: 3rd ⇒ 4th Gear (I/C ON/OFF)
   Driving location: Driving the vehicle uphill (increased engine load) will help maintain the driving conditions required for this test.
3. Perform step “2” again.
4. Turn ignition switch OFF, then perform step “1” to “3” again.
5. Check “SELF-DIAG RESULTS” mode for “A/T” with CONSULT-II. If DTC (P1754) is detected, refer to AT-183, "Diagnostic Procedure" .
   If DTC (P1752) is detected, go to AT-178, "Diagnostic Procedure" .
   If DTC (P1843) is detected, go to AT-233, "Diagnostic Procedure" .

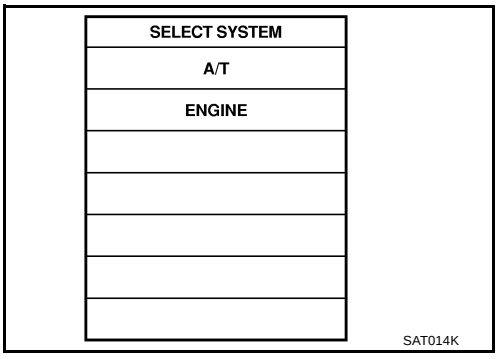

WITH GST

Follow the procedure “With CONSULT-II”.

Wiring Diagram — AT — I/CF

ACS002EV

AT-I/CF-01

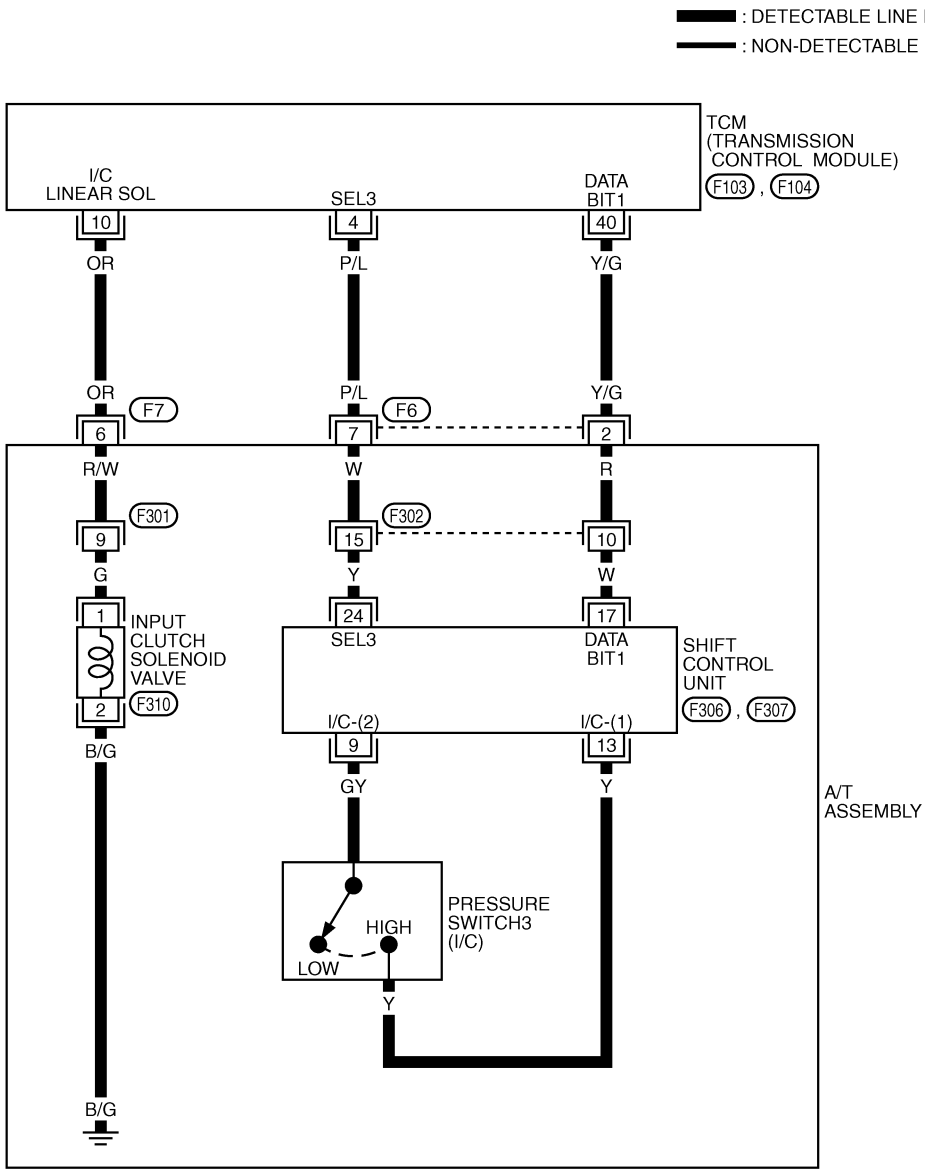

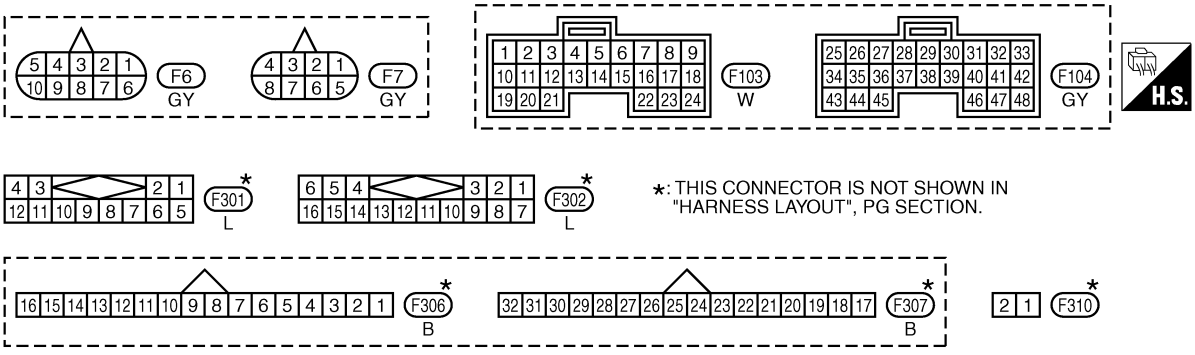

TCWT0114E

TCM terminal and Data are reference value. Measured between each terminals 5, 14, 24 and 46 (TCM ground).

Terminal No.	Wire color	Item	Condition		Data (Approx.)
4	P/L	SEL3 (pressure switch 3)	–		–
10	OR	Input clutch solenoid valve	When vehicle cruises	When the solenoid valve operating (in 1st gear, 2nd gear, or 3rd gear)	More than 2V
				When the solenoid valve is not operating (4th gear or 5th gear)	0V
40	Y/G	DATA BIT1	–		–

Diagnostic Procedure

ACS004KD

1. CHECK INPUT SIGNALS

With CONSULT-II

1. Start engine.
2. Select “ECU INPUT SIGNALS” or “MAIN SIGNALS” in “DATA MONITOR” mode for “A/T” with CONSULT-II.
3. Accelerate vehicle in the “D” position (3rd ⇒ 4th gear), and confirm the ON/OFF actuation of the “ATF PRES SW 3”.

OK or NG

OK >> GO TO 4.
NG >> GO TO 2.

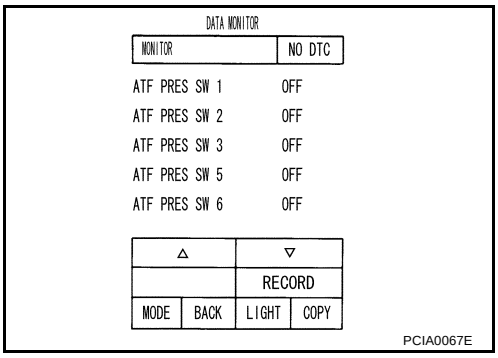

2. CHECK HARNESS BETWEEN TCM AND A/T UNIT ASSEMBLY HARNESS CONNECTOR

1. Turn ignition switch OFF.
2. Disconnect TCM connector.
3. Check continuity between A/T unit assembly harness connector and TCM connector.

Item	Connector No.	Terminal No. (Wire color)	Continuity
TCM	F103	4 (P/L)	Yes
A/T unit assembly harness connector	F6	7 (P/L)	
TCM	F104	40 (Y/G)	Yes
A/T unit assembly harness connector	F6	2 (Y/G)	
TCM	F103	10 (OR)	Yes
A/T unit assembly harness connector	F7	6 (OR)	

4. If OK, check harness for short to ground and short to power.
5. Reinstall any part removed.

OK or NG

OK >> GO TO 3.
NG >> Repair open circuit or short to ground or short to power in harness or connectors.

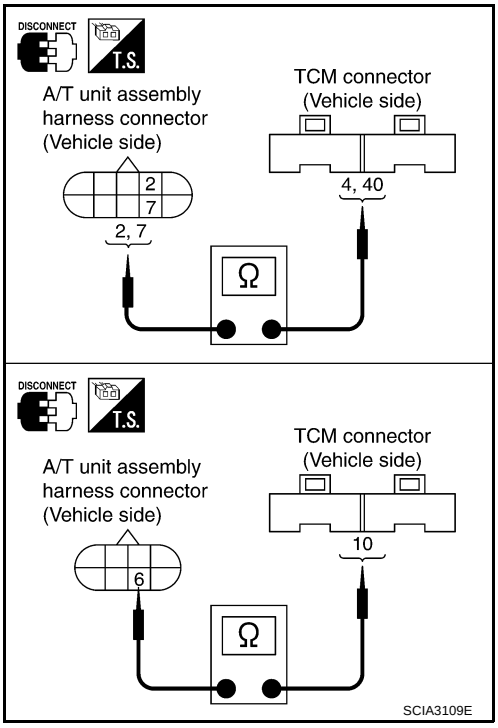

3. CHECK TERMINAL CORD ASSEMBLY

1. Remove oil pan. Refer to AT-301, "Control Valve Assembly" .
2. Disconnect A/T unit assembly harness connector and control valve assembly harness connector.
3. Check continuity between A/T unit assembly harness connector and control valve assembly harness connector.

Item	Connector No.	Terminal No. (Wire color)	Continuity
A/T unit assembly harness connector	F6	2 (R)	Yes
Control valve assembly harness connector	F302	10 (R)	
A/T unit assembly harness connector	F6	7 (W)	Yes
Control valve assembly harness connector	F302	15 (W)	
A/T unit assembly harness connector	F7	6 (R/W)	Yes
Control valve assembly harness connector	F301	9 (R/W)	

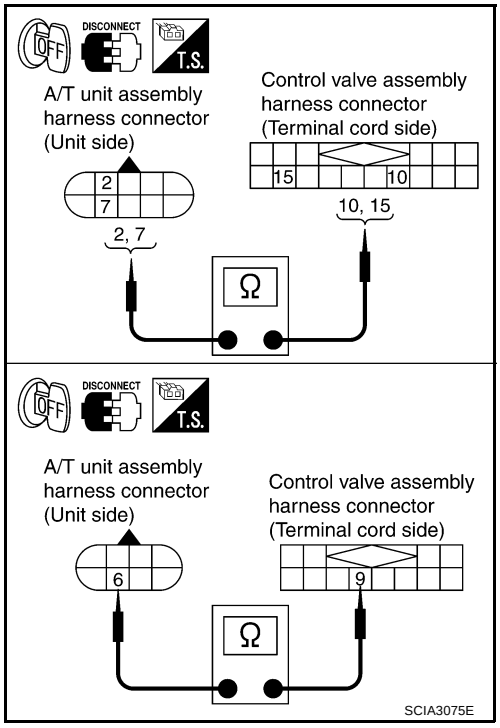

4. If OK, check harness for short to ground and short to power.
5. Reinstall any part removed.

OK or NG

OK >> Replace the control valve assembly. Refer to AT-301, "Control Valve Assembly" .
NG >> Repair open circuit or short to ground or short to power in harness or connectors.

4. CHECK DTC

Perform “DTC Confirmation Procedure”. Refer to AT-107, "DTC Confirmation Procedure" .

OK or NG

OK >> **INSPECTION END**
NG >> GO TO 5.

5. PERFORM TCM INSPECTION

1. Perform TCM input/output signal inspection. Refer to AT-88, "TCM Input/Output Signal Reference Values" .
2. If NG, recheck TCM pin terminals for damage or loose connection with harness connector.

OK or NG

OK >> **INSPECTION END**
NG >> Repair or replace damaged parts.

DTC P1757 FRONT BRAKE SOLENOID VALVE

PFP:31940

Description

ACS002EX

Front brake solenoid valve is controlled by the TCM in response to signals sent from the PNP switch, vehicle speed sensor and accelerator pedal position sensor (throttle position sensor). Gears will then be shifted to the optimum position.

On Board Diagnosis Logic

ACS002EY

- This is an OBD-II self-diagnostic item.
- Diagnostic trouble code “FR/B SOLENOID/CIRC” with CONSULT-II or P1757 without CONSULT-II is detected under the following conditions.
  - When TCM detects an improper voltage drop when it tries to operate the solenoid valve.
  - When TCM detects as irregular by comparing target value with monitor value.

Possible Cause

ACS002EZ

- Harness or connectors
  (The solenoid circuit is open or shorted.)
- Front brake solenoid valve

DTC Confirmation Procedure

ACS002F0

CAUTION:
Always drive vehicle at a safe speed.

NOTE:
If “DTC Confirmation Procedure” has been previously conducted, always turn ignition switch “OFF” and wait at least 10 seconds before conducting the next test.
After the repair, perform the following procedure to confirm the malfunction is eliminated.

WITH CONSULT-II

1. Turn ignition switch ON. (Do not start engine.)
2. Select “DATA MONITOR” mode for “A/T” with CONSULT-II.
3. Start engine.
4. Drive vehicle and maintain the following conditions for at least 5 consecutive seconds.
   ACCELE POS: 1.5/8 - 2.0/8
   Selector lever: “D” position
   Gear position: 3rd ⇒ 4th Gear (FR/B ON/OFF)
   Driving location: Driving the vehicle uphill (increased engine load) will help maintain the driving conditions required for this test.

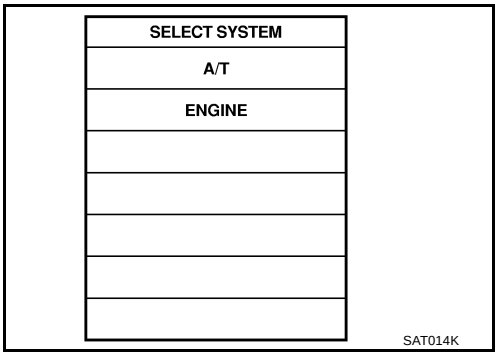

5. If DTC is detected go to AT-187, "Diagnostic Procedure" .

WITH GST

Follow the procedure “With CONSULT-II”.

Wiring Diagram — AT — FR/B

ACS002F1

AT-FR/B-01

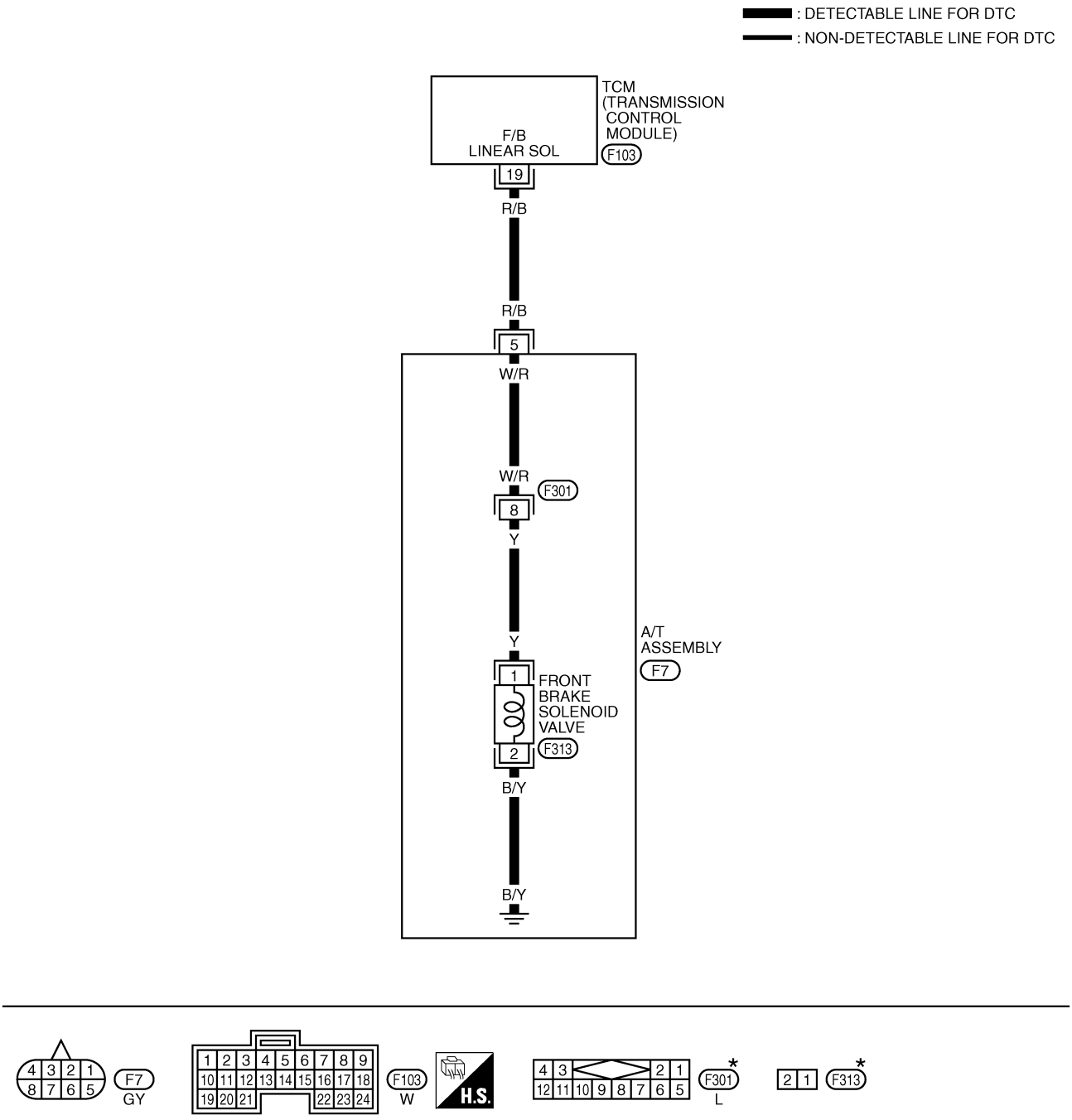

*: THIS CONNECTOR IS NOT SHOWN IN "HARNESS LAYOUT", PG SECTION.

TCWT0115E

TCM terminal and Data are reference value. Measured between each terminals 5, 14, 24 and 46 (TCM ground).

Terminal No.	Wire color	Item	Condition		Data (Approx.)
19	R/B	Front brake solenoid valve	When vehicle starts	When the solenoid valve is operating (other than 4th gear)	More than 2V
				When the solenoid valve is not operating (4th gear)	0V

Diagnostic Procedure

ACS004KE

1. CHECK FRONT BRAKE SOLENOID VALVE CIRCUIT

1. Turn ignition switch OFF.
2. Disconnect A/T unit assembly harness connector at the transmission right side.
3. Check the resistance between terminal and ground.

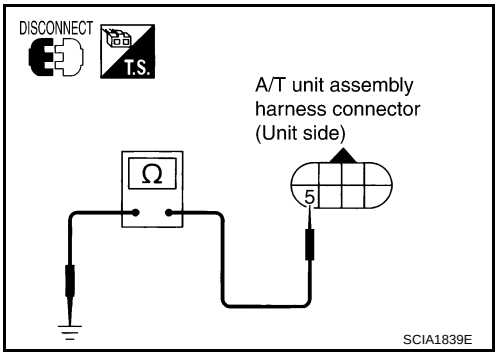

Solenoid valve	Connector No.	Terminal No. (Wire color)	Resistance (Approx.)
Front brake solenoid valve	F7	5 (R/B) - Ground	3 - 9 Ω

OK or NG

OK >> GO TO 4.
NG >> GO TO 2.

2. CHECK TERMINAL CORD ASSEMBLY

1. Remove oil pan. Refer to AT-301, "Control Valve Assembly" .
2. Disconnect A/T unit assembly harness connector and control valve assembly harness connector.
3. Check continuity between A/T unit assembly harness connector and control valve assembly harness connector.

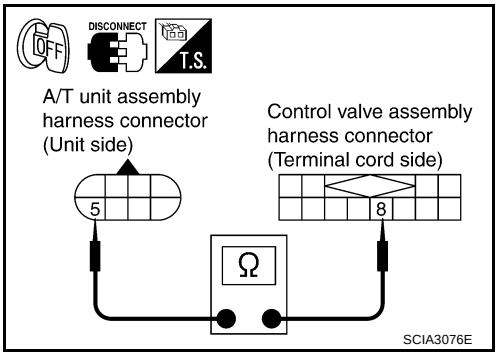

Item	Connector No.	Terminal No. (Wire color)	Continuity
A/T unit assembly harness connector	F7	5 (W/R)	Yes
Control valve assembly harness connector	F301	8 (W/R)	

4. If OK, check harness for short to ground and short to power.

OK or NG

OK >> GO TO 3.
NG >> Repair open circuit or short to ground or short to power in harness or connectors.

3. CHECK VALVE RESISTANCE

Check valve resistance

- Refer to AT-189, "Component Inspection" .

OK or NG

OK >> GO TO 4.
NG >> Replace the control valve assembly. Refer to AT-301, "Control Valve Assembly" .

4. CHECK POWER SOURCE CIRCUIT

1. Turn ignition switch OFF.
2. Disconnect TCM connector.
3. Check continuity between A/T unit assembly harness connector and TCM connector.

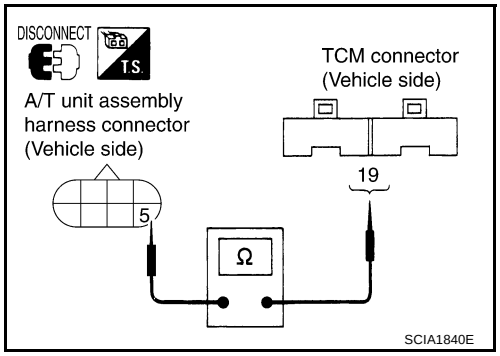

Item	Connector No.	Terminal No. (Wire color)	Continuity
TCM	F103	19 (R/B)	Yes
A/T unit assembly harness connector	F7	5 (R/B)	

4. If OK, check harness for short to ground and short to power.
5. Reinstall any part removed.

OK or NG

OK >> GO TO 5.
NG >> Repair open circuit or short to ground or short to power in harness or connectors.

5. CHECK DTC

Perform “DTC Confirmation Procedure”. Refer to AT-107, "DTC Confirmation Procedure" .

OK or NG

OK >> **INSPECTION END**
NG >> GO TO 6.

6. PERFORM TCM INSPECTION

1. Perform TCM input/output signal inspection. Refer to AT-88, "TCM Input/Output Signal Reference Values" .
2. If NG, recheck TCM pin terminals for damage or loose connection with harness connector.

OK or NG

OK >> **INSPECTION END**
NG >> Repair or replace damaged parts.

Component Inspection

ACS004KF

FRONT BRAKE SOLENOID VALVE

Resistance check

1. Turn ignition switch OFF.
2. Remove oil pan. Refer to AT-301, "Control Valve Assembly" .
3. Disconnect control valve assembly harness connector.
4. Check resistance between terminal and ground.

Solenoid Valve	Connector No.	Terminal No. (Wire color)	Resistance (Ω) (Approx.)
Front brake solenoid valve	F301	8 (Y) - Ground	3 - 9 Ω

5. If NG, replace control valve assembly. Refer to AT-301, "Control Valve Assembly" .

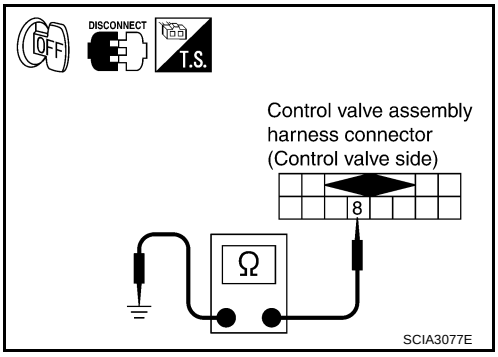

Operation check

- Check solenoid valve by listening for its operating sound while applying battery voltage to the terminal 8 and ground.

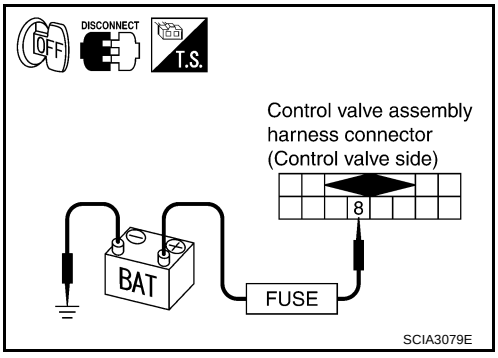

DTC P1759 FRONT BRAKE SOLENOID VALVE FUNCTION

PFP:31940

Description

ACS002F3

- Front brake solenoid valve is controlled by the TCM in response to signals sent from the PNP switch, vehicle speed sensor and accelerator pedal position sensor (throttle position sensor). Gears will then be shifted to the optimum position.
- This is not only caused by electrical malfunction (circuits open or shorted) but also by mechanical malfunction such as control valve sticking, improper solenoid valve operation.

On Board Diagnosis Logic

ACS002F4

- This is an OBD-II self-diagnostic item.
- Diagnostic trouble code “FR/B SOLENOID FNCT” with CONSULT-II or P1759 without CONSULT-II is detected under the following conditions.
  - When TCM detects that actual gear ratio is irregular, and relation between gear position and condition of ATF pressure switch 1 is irregular during depressing accelerator pedal. (Other than during shift change)
  - When TCM detects that relation between gear position and condition of ATF pressure switch 1 is irregular during releasing accelerator pedal. (Other than during shift change)

Possible Cause

ACS002F5

- Harness or connectors
  (The solenoid and switch circuits are open or shorted.)
- Front brake solenoid valve
- ATF pressure switch 1

DTC Confirmation Procedure

ACS002F6

CAUTION:
Always drive vehicle at a safe speed.

NOTE:
If “DTC Confirmation Procedure” has been previously conducted, always turn ignition switch “OFF” and wait at least 10 seconds before conducting the next test.
After the repair, perform the following procedure to confirm the malfunction is eliminated.

WITH CONSULT-II

1. Start engine.
2. Accelerate vehicle to maintain the following condition.
   ACCELE POS: 1.5/8 - 2.0/8
   Selector lever: “D” position
   Gear position: 3rd ⇒ 4th Gear (FR/B ON/OFF)
   Driving location: Driving the vehicle uphill (increased engine load) will help maintain the driving conditions required for this test.
3. Perform step “2” again.
4. Turn ignition switch OFF, then perform step “1” to “3” again.
5. Check “SELF-DIAG RESULTS” mode for “A/T” with CONSULT-II. If DTC (P1759) is detected, refer to AT-192, "Diagnostic Procedure" .
   If DTC (P1757) is detected, go to AT-187, "Diagnostic Procedure" .
   If DTC (P1841) is detected, go to AT-229, "Diagnostic Procedure" .

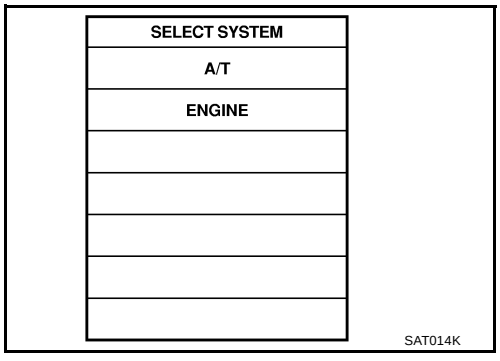

WITH GST

Follow the procedure “With CONSULT-II”.

Wiring Diagram — AT — FR/BF

ACS002F7

AT-FR/BF-01

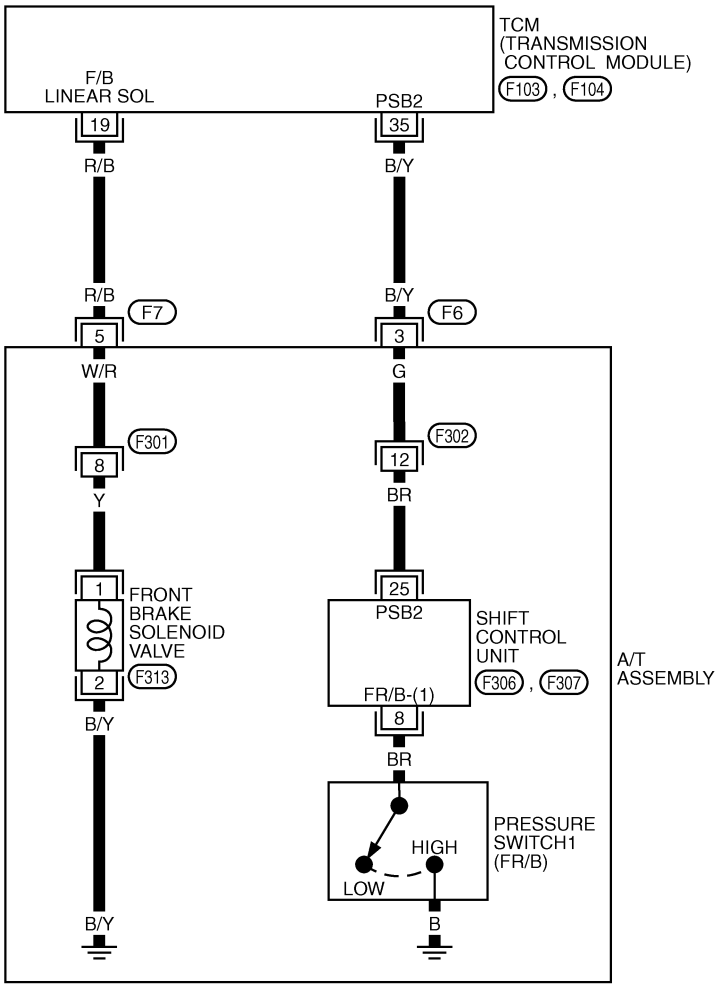

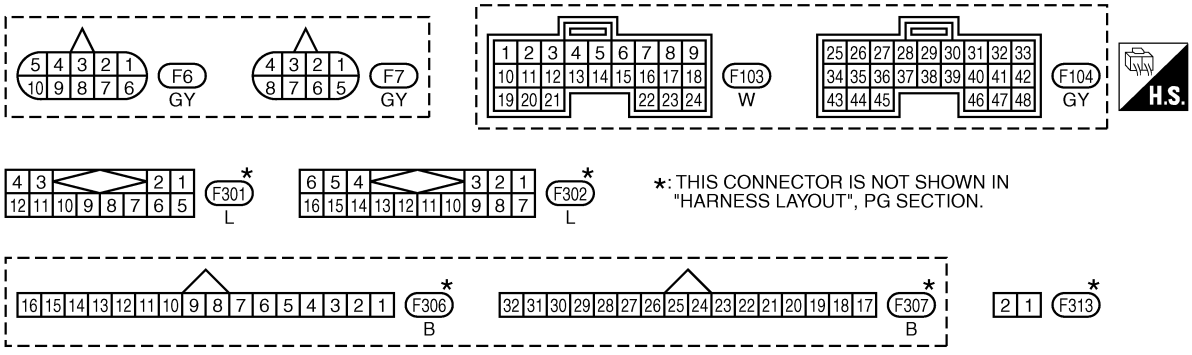

TCWT0116E

TCM terminal and Data are reference value. Measured between each terminals 5, 14, 24 and 46 (TCM ground).

Terminal No.	Wire color	Item	Condition		Data (Approx.)
19	R/B	Front brake solenoid valve	When vehicle cruises	When the solenoid valve is operating (other than 4th gear)	More than 2V
				When the solenoid valve is not operating (4th gear)	0V
35	B/Y	PSB2 (pressure switch 1)		When front brake solenoid valve “OFF”.	Battery voltage
				When front brake solenoid valve“ ON”.	0V

Diagnostic Procedure

ACS004KG

1. CHECK INPUT SIGNALS (WITH CONSULT-II)

With CONSULT-II

1. Start engine.
2. Select “ECU INPUT SIGNALS” or “MAIN SIGNALS” in “DATA MONITOR” mode for “A/T” with CONSULT-II.
3. Accelerate vehicle in the “D” position (3rd ⇒ 4th gear), and confirm the ON/OFF actuation of the “ATF PRES SW 1”.

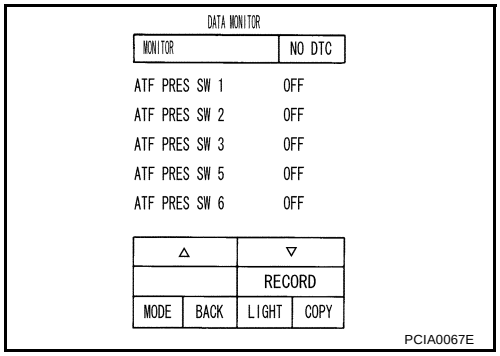

OK or NG

OK >> GO TO 5.
NG >> GO TO 3.

2. CHECK INPUT SIGNALS (WITHOUT CONSULT-II)

Without CONSULT-II

1. Start engine.
2. Accelerate vehicle in the “D” position (3rd ⇒ 4th gear).

Solenoid valve		Connector No.	Terminal No. (Wire color)	Voltage
Front brake solenoid valve	OFF	F104	35 (B/Y) - Ground	Battery voltage
	ON			Approx. 0 V

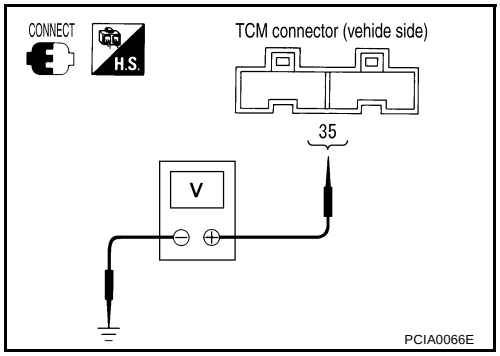

OK or NG

OK >> GO TO 5.
NG >> GO TO 3.

3. CHECK HARNESS BETWEEN TCM AND A/T UNIT ASSEMBLY HARNESS CONNECTOR

1. Turn ignition switch OFF.
2. Disconnect TCM connector.
3. Check continuity between A/T unit assembly harness connector and TCM connector.

Item	Connector No.	Terminal No. (Wire color)	Continuity
TCM	F104	35 (B/Y)	Yes
A/T unit assembly harness connector	F6	3 (B/Y)	
TCM	F103	19 (R/B)	Yes
A/T unit assembly harness connector	F7	5 (R/B)	

4. If OK, check harness for short to ground and short to power.
5. Reinstall any part removed.

OK or NG

OK >> GO TO 4.
NG >> Repair open circuit or short to ground or short to power in harness or connectors.

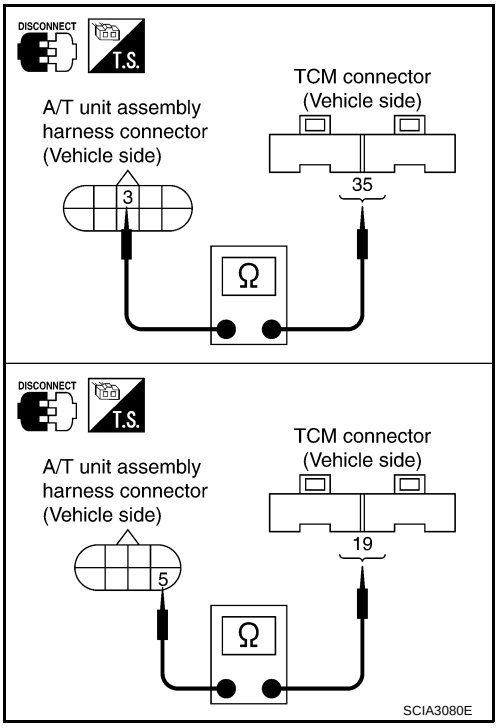

4. CHECK TERMINAL CORD ASSEMBLY

1. Remove oil pan. Refer to AT-301, "Control Valve Assembly" .
2. Disconnect A/T unit assembly harness connector and control valve assembly harness connector.
3. Check continuity between A/T unit assembly harness connector and control valve assembly harness connector.

Item	Connector No.	Terminal No. (Wire color)	Continuity
A/T unit assembly harness connector	F6	3 (G)	Yes
Control valve assembly harness connector	F302	12 (G)	
A/T unit assembly harness connector	F7	5 (W/R)	Yes
Control valve assembly harness connector	F301	8 (W/R)	

4. If OK, check harness for short to ground and short to power.
5. Reinstall any part removed.

OK or NG

OK >> Replace the control valve assembly. Refer to AT-301, "Control Valve Assembly" .
NG >> Repair open circuit or short to ground or short to power in harness or connectors.

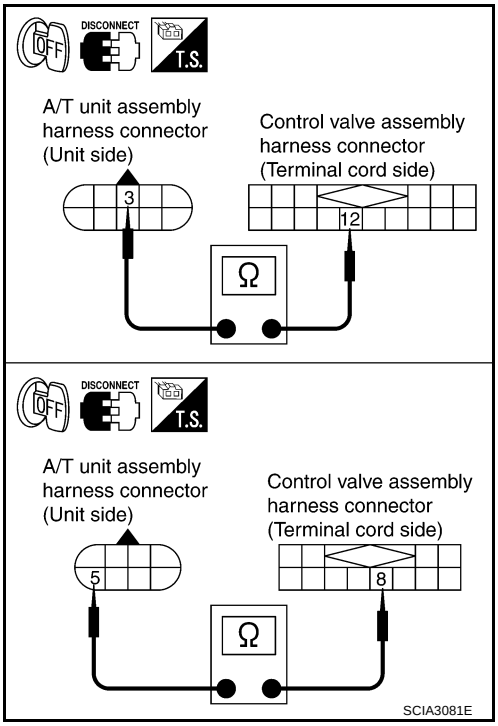

5. CHECK DTC

Perform “DTC Confirmation Procedure”. Refer to AT-107, "DTC Confirmation Procedure" .

OK or NG

OK >> **INSPECTION END**
NG >> GO TO 6.

6. PERFORM TCM INSPECTION

1. Perform TCM input/output signal inspection. Refer to AT-88, "TCM Input/Output Signal Reference Values" .
2. If NG, recheck TCM pin terminals for damage or loose connection with harness connector.

OK or NG

OK >> **INSPECTION END**
NG >> Repair or replace damaged parts.

DTC P1762 DIRECT CLUTCH SOLENOID VALVE

PFP:31940

Description

ACS002F9

Direct clutch solenoid valve is controlled by the TCM in response to signals sent from the PNP switch, vehicle speed sensor and accelerator pedal position sensor (throttle position sensor). Gears will then be shifted to the optimum position.

On Board Diagnosis Logic

ACS002FA

- This is an OBD-II self-diagnostic item.
- Diagnostic trouble code “D/C SOLENOID/CIRC” with CONSULT-II or P1762 without CONSULT-II is detected under the following conditions.
  - When TCM detects an improper voltage drop when it tries to operate the solenoid valve.
  - When TCM detects as irregular by comparing target value with monitor value.

Possible Cause

ACS002FB

- Harness or connectors
  (The solenoid circuit is open or shorted.)
- Direct clutch solenoid valve

DTC Confirmation Procedure

ACS002FC

NOTE:
If “DTC Confirmation Procedure” has been previously conducted, always turn ignition switch “OFF” and wait at least 10 seconds before conducting the next test.
After the repair, perform the following procedure to confirm the malfunction is eliminated.

WITH CONSULT-II

1. Turn ignition switch ON. (Do not start engine.)
2. Select “DATA MONITOR” mode for “A/T” with CONSULT-II.
3. Start engine.
4. Drive vehicle and maintain the following conditions for at least 5 consecutive seconds.
   ACCELE POS: 1.5/8 - 2.0/8
   Selector lever: “D” position
   Gear position: 1st ⇒ 2nd Gear (D/C ON/OFF)
   Driving location: Driving the vehicle uphill (increased engine load) will help maintain the driving conditions required for this test.

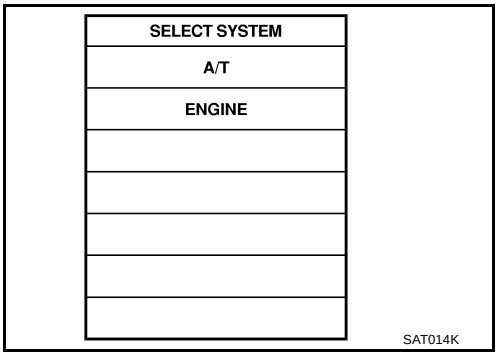

5. If DTC is detected, go to AT-197, "Diagnostic Procedure" .

WITH GST

Follow the procedure “With CONSULT-II”.

Wiring Diagram — AT — D/C

ACS002FD

AT-D/C-01

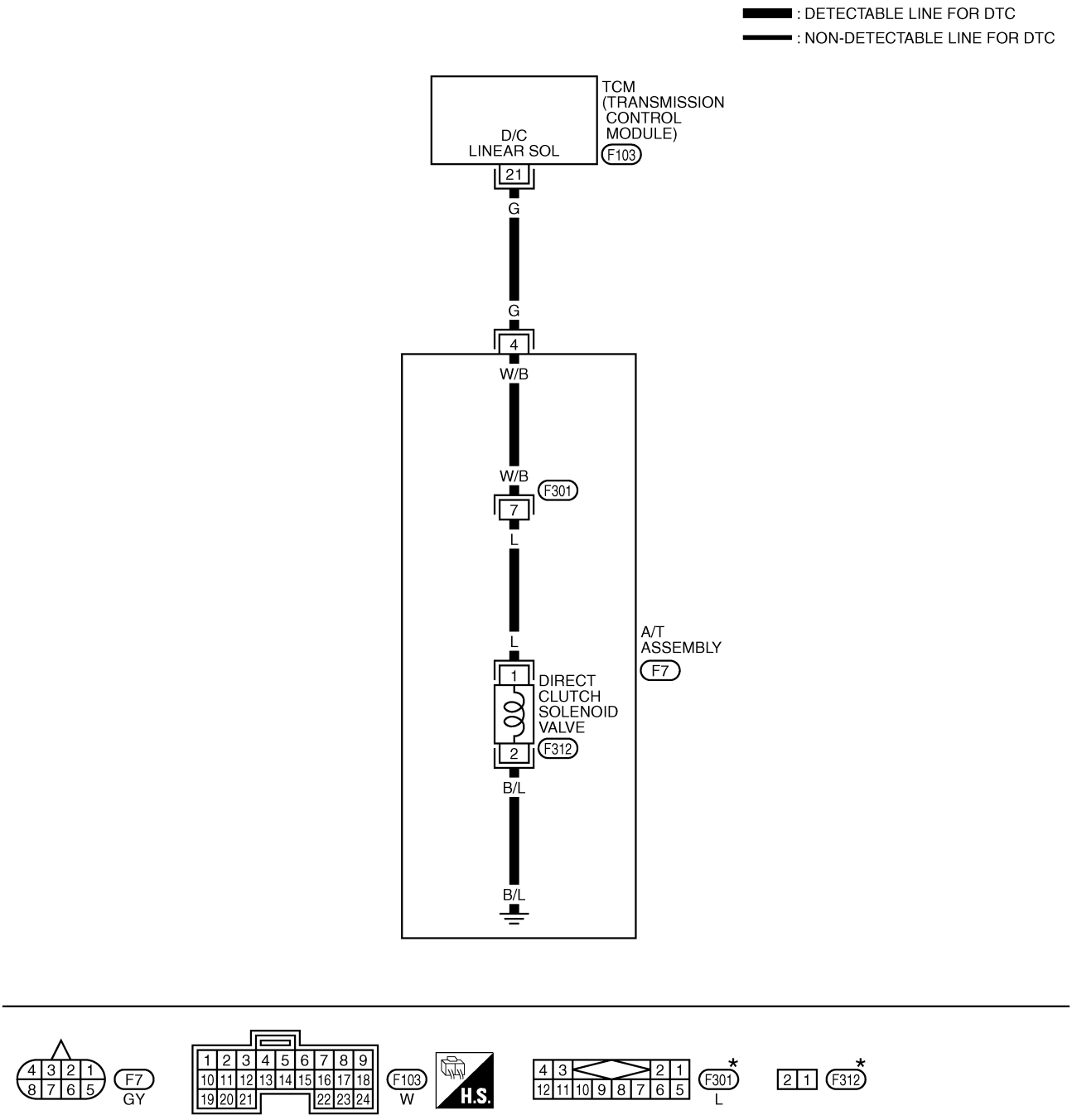

*: THIS CONNECTOR IS NOT SHOWN IN "HARNESS LAYOUT", PG SECTION.

TCWT0117E

TCM terminal and Data are reference value. Measured between each terminals 5, 14, 24 and 46 (TCM ground).

Terminal No.	Wire color	Item	Condition		Data (Approx.)
21	G	Direct clutch solenoid valve	When vehicle cruises	When the solenoid valve is operating (1st gear or 5th gear)	More than 2V
				When the solenoid valve is not operating (2nd gear, 3rd gear, or 4th gear)	0V

Diagnostic Procedure

ACS004KH

1. CHECK DIRECT CLUTCH SOLENOID VALVE CIRCUIT

1. Turn ignition switch OFF.
2. Disconnect A/T unit assembly harness connector at the transmission right side.
3. Check the resistance between terminal and ground.

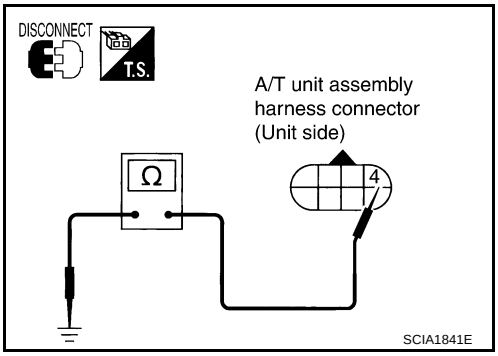

Solenoid valve	Connector No.	Terminal No. (Wire color)	Resistance (Approx.)
Direct clutch solenoid valve	F7	4 (G) - Ground	3 - 9 Ω

OK or NG

OK >> GO TO 4.
NG >> GO TO 2.

2. CHECK TERMINAL CORD ASSEMBLY

1. Remove oil pan. Refer to AT-301, "Control Valve Assembly" .
2. Disconnect A/T unit assembly harness connector and control valve assembly harness connector.
3. Check continuity between A/T unit assembly harness connector and control valve assembly harness connector.

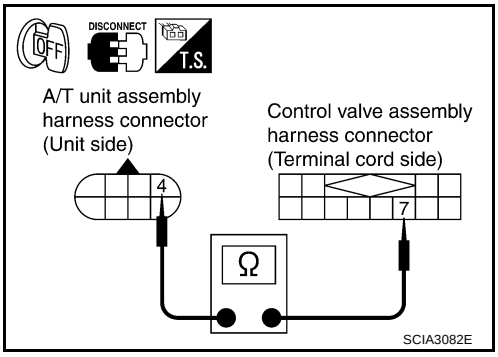

Item	Connector No.	Terminal No. (Wire color)	Continuity
A/T unit assembly harness connector	F7	4 (W/B)	Yes
Control valve assembly harness connector	F301	7 (W/B)	

4. If OK, check harness for short to ground and short to power.

OK or NG

OK >> GO TO 3.
NG >> Repair open circuit or short to ground or short to power in harness or connectors.

3. CHECK VALVE RESISTANCE

Check valve resistance

- Refer to AT-199, "Component Inspection" .

OK or NG

OK >> GO TO 4.
NG >> Replace the control valve assembly. Refer to AT-301, "Control Valve Assembly" .

4. CHECK POWER SOURCE CIRCUIT

1. Turn ignition switch OFF.
2. Disconnect TCM connector.
3. Check continuity between A/T unit assembly harness connector and TCM connector.

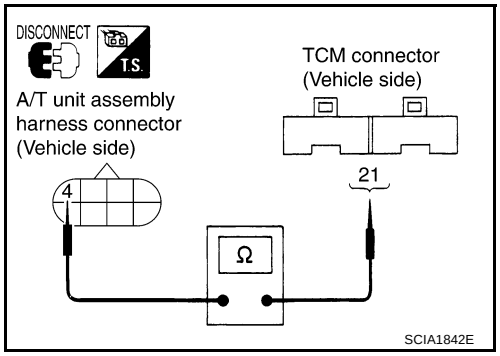

Item	Connector No.	Terminal No. (Wire color)	Continuity
TCM	F103	21 (G)	Yes
A/T unit assembly harness connector	F7	4 (G)	

4. If OK, check harness for short to ground and short to power.
5. Reinstall any part removed.

OK or NG

OK >> GO TO 5.
NG >> Repair open circuit or short to ground or short to power in harness or connectors.

5. CHECK DTC

Perform “DTC Confirmation Procedure”. Refer to AT-107, "DTC Confirmation Procedure" .

OK or NG

OK >> **INSPECTION END**
NG >> GO TO 6.

6. PERFORM TCM INSPECTION

1. Perform TCM input/output signal inspection. Refer to AT-88, "TCM Input/Output Signal Reference Values" .
2. If NG, recheck TCM pin terminals for damage or loose connection with harness connector.

OK or NG

OK >> **INSPECTION END**
NG >> Repair or replace damaged parts.

Component Inspection

ACS004KI

DIRECT CLUTCH SOLENOID VALVE

Resistance check

1. Turn ignition switch OFF.
2. Remove oil pan. Refer to AT-301, "Control Valve Assembly" .
3. Disconnect control valve assembly harness connector.
4. Check resistance between terminal and ground.

Solenoid Valve	Connector No.	Terminal No. (Wire color)	Resistance (Ω) (Approx.)
Direct clutch solenoid valve	F301	7 (L) - Ground	3 - 9 Ω

5. If NG, replace control valve assembly. Refer to AT-301, "Control Valve Assembly" .

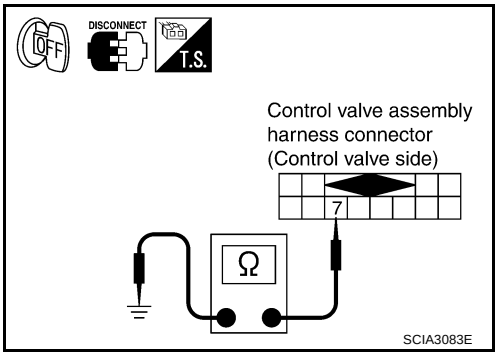

Operation check

- Check solenoid valve by listening for its operating sound while applying battery voltage to the terminal 7 and ground.

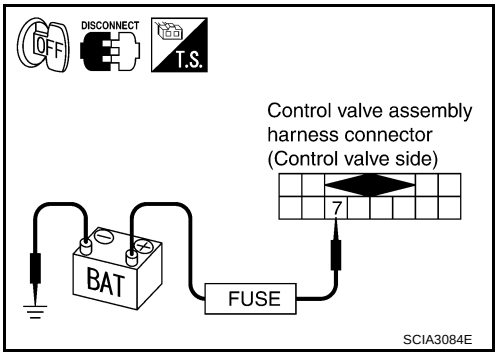

DTC P1764 DIRECT CLUTCH SOLENOID VALVE FUNCTION

PFP:31940

Description

ACS002FF

- Direct clutch solenoid valve is controlled by the TCM in response to signals sent from the PNP switch, vehicle speed sensor and accelerator pedal position sensor (throttle position sensor). Gears will then be shifted to the optimum position.
- This is not only caused by electrical malfunction (circuits open or shorted) but also by mechanical malfunction such as control valve sticking, improper solenoid valve operation.

On Board Diagnosis Logic

ACS002FG

- This is an OBD-II self-diagnostic item.
- Diagnostic trouble code “D/C SOLENOID FNCTN” with CONSULT-II or P1764 without CONSULT-II is detected under the following conditions.
  - When TCM detects that actual gear ratio is irregular, and relation between gear position and condition of ATF pressure switch 5 is irregular during depressing accelerator pedal. (Other than during shift change)
  - When TCM detects that relation between gear position and condition of ATF pressure switch 5 is irregular during releasing accelerator pedal. (Other than during shift change)

Possible Cause

ACS002FH

- Harness or connectors
  (The solenoid and switch circuits are open or shorted.)
- Direct clutch solenoid valve
- ATF pressure switch 5

DTC Confirmation Procedure

ACS002FI

NOTE:
If “DTC Confirmation Procedure” has been previously conducted, always turn ignition switch “OFF” and wait at least 10 seconds before conducting the next test.
After the repair, perform the following procedure to confirm the malfunction is eliminated.

WITH CONSULT-II

1. Start engine.
2. Accelerate vehicle to maintain the following condition.
   ACCELE POS: 1.5/8 - 2.0/8
   Selector lever: “D” position
   Gear position: 1st ⇒ 2nd Gear (D/C ON/OFF)
   Driving location: Driving the vehicle uphill (increased engine load) will help maintain the driving conditions required for this test.
3. Perform step “2” again.
4. Turn ignition switch OFF, then perform step “1” to “3” again.
5. Check “SELF-DIAG RESULTS” mode for “A/T” with CONSULT-II. If DTC (P1764) is detected, refer to AT-202, "Diagnostic Procedure" .
   If DTC (P1762) is detected, go to AT-197, "Diagnostic Procedure" .
   If DTC (P1845) is detected, go to AT-237, "Diagnostic Procedure" .

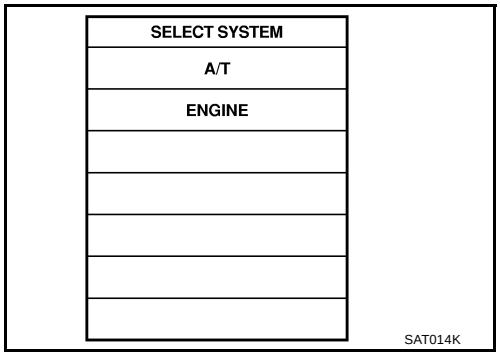

WITH GST

Follow the procedure “With CONSULT-II”.

Wiring Diagram — AT — D/CF

ACS002FJ

AT-D/CF-01

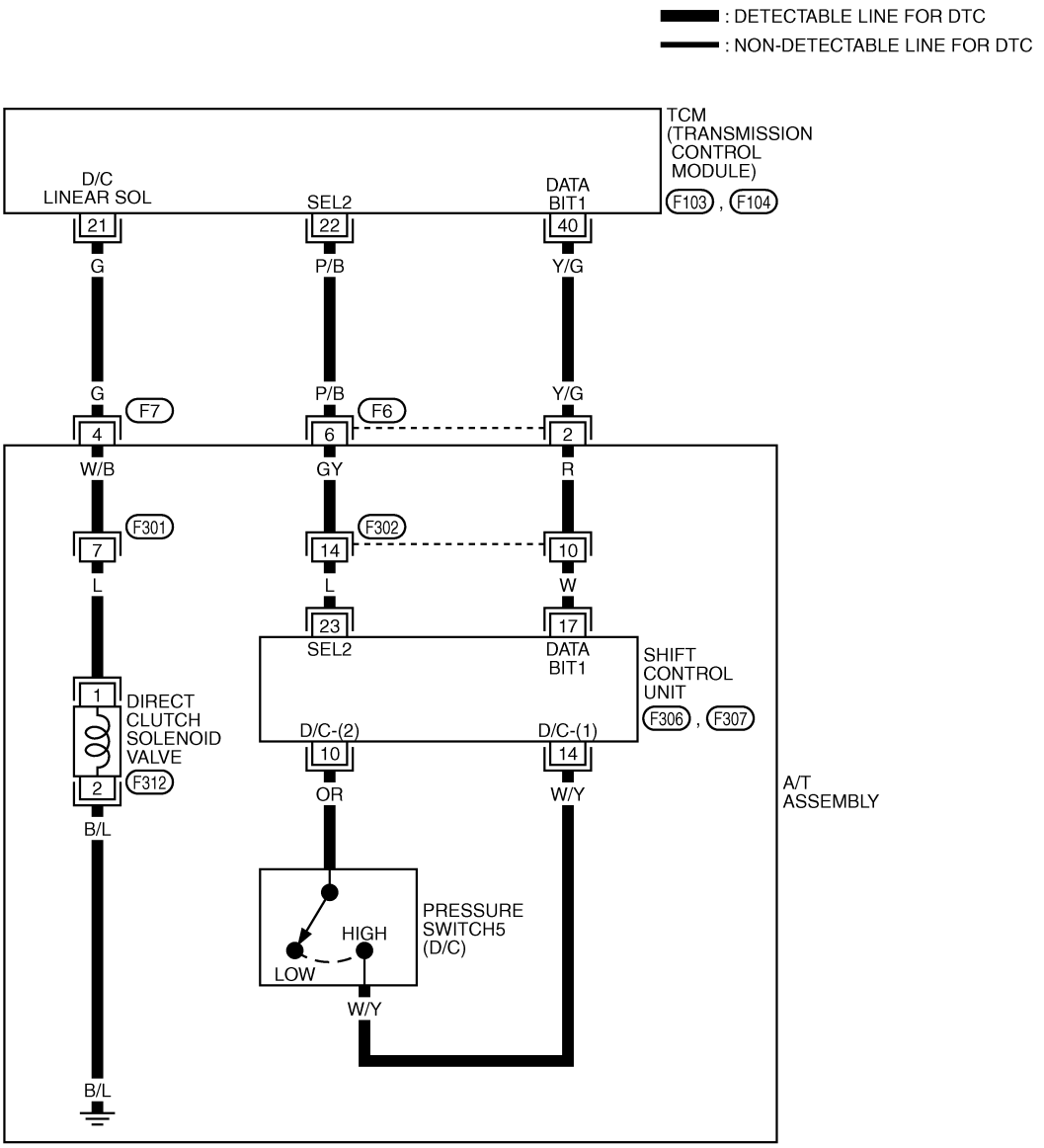

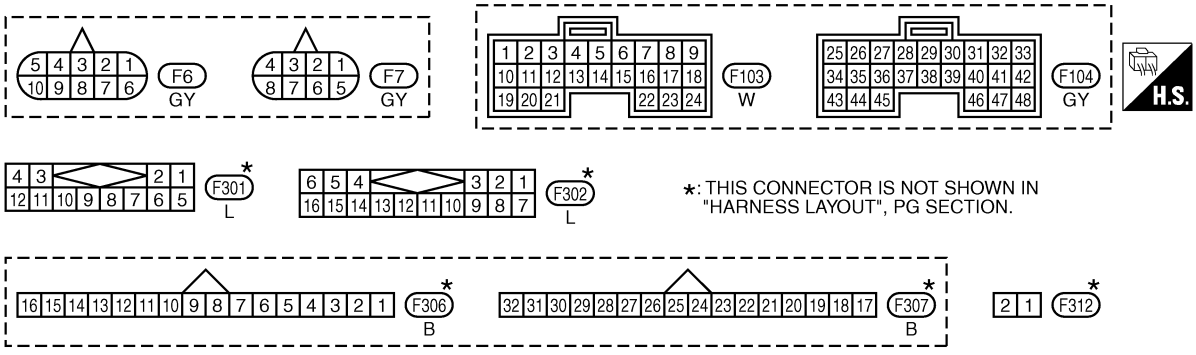

TCWT0118E

TCM terminals and Data are reference value. Measured between each terminals 5, 14, 24 and 46 (TCM ground).

Terminal No.	Wire color	Item	Condition		Data (Approx.)
21	G	Direct clutch solenoid valve	When vehicle cruises	When the solenoid valve is operating (1st gear or 5th gear)	More than 2V
				When the solenoid valve is not operating (2nd gear, 3rd gear, or 4th gear)	0V
22	P/B	SEL2 (pressure switch 5)	–		–
40	Y/G	DATA BIT1	–		–

Diagnostic Procedure

ACS004KJ

1. CHECK INPUT SIGNALS

With CONSULT-II

1. Start engine.
2. Select “ECU INPUT SIGNALS” or “MAIN SIGNALS” in “DATA MONITOR” mode for “A/T” with CONSULT-II.
3. Accelerate vehicle in the “D” position (1st ⇒ 2nd gear), and confirm the ON/OFF actuation of the “ATF PRES SW 5”.

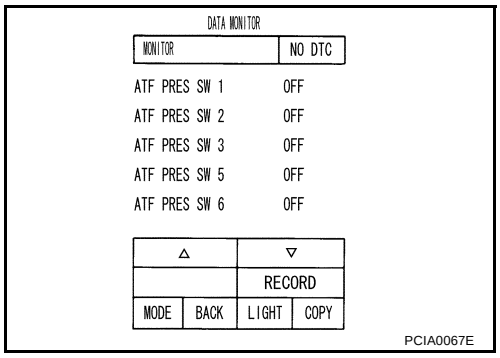

OK or NG

OK >> GO TO 4.
NG >> GO TO 2.

2. CHECK HARNESS BETWEEN TCM AND A/T UNIT ASSEMBLY HARNESS CONNECTOR

1. Turn ignition switch OFF.
2. Disconnect TCM connector.
3. Check continuity between A/T unit assembly harness connector and TCM connector.

Item	Connector No.	Terminal No. (Wire color)	Continuity
TCM	F103	22 (P/B)	Yes
A/T unit assembly harness connector	F6	6 (P/B)	
TCM	F104	40 (Y/G)	Yes
A/T unit assembly harness connector	F6	2 (Y/G)	
TCM	F103	21 (G)	Yes
A/T unit assembly harness connector	F7	4 (G)	

4. If OK, check harness for short to ground and short to power.
5. Reinstall any part removed.

OK or NG

OK >> GO TO 3.
NG >> Repair open circuit or short to ground or short to power in harness or connectors.

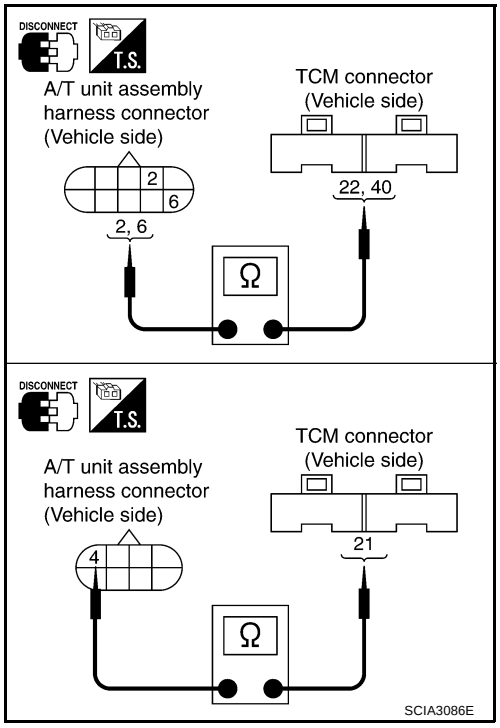

3. CHECK TERMINAL CORD ASSEMBLY

1. Remove oil pan. Refer to AT-301, "Control Valve Assembly" .
2. Disconnect A/T unit assembly harness connector and control valve assembly harness connector.
3. Check continuity between A/T unit assembly harness connector and control valve assembly harness connector.

Item	Connector No.	Terminal No. (Wire color)	Continuity
A/T unit assembly harness connector	F6	2 (R)	Yes
Control valve assembly harness connector	F302	10 (R)	
A/T unit assembly harness connector	F6	6 (GY)	Yes
Control valve assembly harness connector	F302	14 (GY)	
A/T unit assembly harness connector	F7	4 (W/B)	Yes
Control valve assembly harness connector	F301	7 (W/B)	

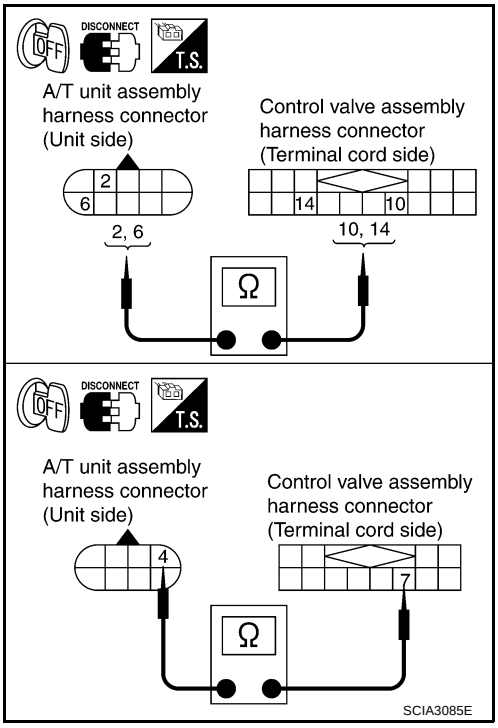

4. If OK, check harness for short to ground and short to power.
5. Reinstall any part removed.

OK or NG

OK >> Replace the control valve assembly. Refer to AT-301, "Control Valve Assembly" .
NG >> Repair open circuit or short to ground or short to power in harness or connectors.

4. CHECK DTC

Perform “DTC Confirmation Procedure”. Refer to AT-107, "DTC Confirmation Procedure" .

OK or NG

OK >> **INSPECTION END**
NG >> GO TO 5.

5. PERFORM TCM INSPECTION

1. Perform TCM input/output signal inspection. Refer to AT-88, "TCM Input/Output Signal Reference Values" .
2. If NG, recheck TCM pin terminals for damage or loose connection with harness connector.

OK or NG

OK >> **INSPECTION END**
NG >> Repair or replace damaged parts.

DTC P1767 HIGH AND LOW REVERSE CLUTCH SOLENOID VALVE

PFP:31940

Description

ACS002FL

High and low reverse clutch solenoid valve is controlled by the TCM in response to signals sent from the PNP switch, vehicle speed sensor and accelerator pedal position sensor (throttle position sensor). Gears will then be shifted to the optimum position.

On Board Diagnosis Logic

ACS002FM

- This is an OBD-II self-diagnostic item.
- Diagnostic trouble code “HLR/C SOL/CIRC” with CONSULT-II or P1767 without CONSULT-II is detected under the following conditions.
  - When TCM detects an improper voltage drop when it tries to operate the solenoid valve.
  - When TCM detects as irregular by comparing target value with monitor value.

Possible Cause

ACS002FN

- Harness or connectors
  (The solenoid circuit is open or shorted.)
- High and low reverse clutch solenoid valve

DTC Confirmation Procedure

ACS002FO

CAUTION:
Always drive vehicle at a safe speed.

NOTE:
If “DTC Confirmation Procedure” has been previously conducted, always turn ignition switch “OFF” and wait at least 10 seconds before conducting the next test.
After the repair, perform the following procedure to confirm the malfunction is eliminated.

WITH CONSULT-II

1. Turn ignition switch ON. (Do not start engine.)
2. Select “DATA MONITOR” mode for “A/T” with CONSULT-II.
3. Start engine.
4. Drive vehicle and maintain the following conditions for at least 5 consecutive seconds.
   ACCELE POS: 1.5/8 - 2.0/8
   Selector lever: “D” position
   Gear position: 2nd ⇒ 3rd Gear (HLR/C ON/OFF)
   Driving location: Driving the vehicle uphill (increased engine load) will help maintain the driving conditions required for this test.
5. If DTC is detected, go to AT-206, "Diagnostic Procedure" .

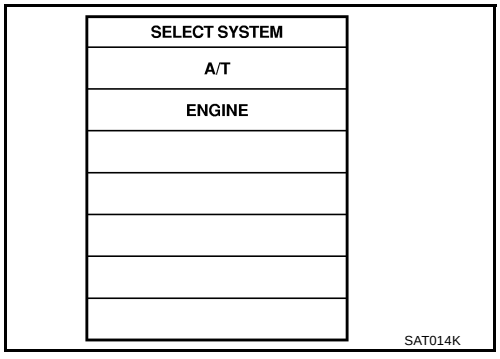

WITH GST

Follow the procedure “With CONSULT-II”.

Wiring Diagram — AT — HLR/C

ACS002FP

AT-HLR/C-01

: DETECTABLE LINE FOR DTC
: NON-DETECTABLE LINE FOR DTC

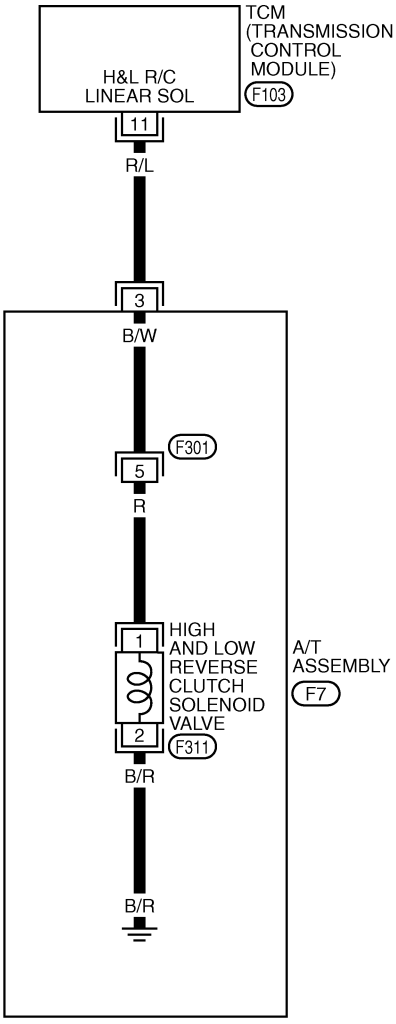

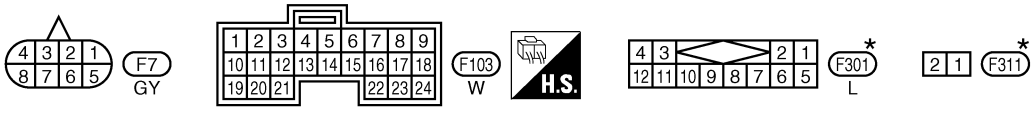

*: THIS CONNECTOR IS NOT SHOWN IN "HARNESS LAYOUT", PG SECTION.

TCWT0119E

TCM terminal and Data are reference value. Measured between each terminals 5, 14, 24 and 46 (TCM ground).

Terminal No.	Wire color	Item	Condition		Data (Approx.)
11	R/L	High and low reverse clutch solenoid valve	When vehicle cruises	When the solenoid valve operating [6 km/h (4 MPH) or faster in 1st gear or 2nd gear]	More than 2V
				When the solenoid valve is not operating [6 km/h (4 MPH) or slower in 1st gear or 3rd, 4th, or 5th gear]	0V

Diagnostic Procedure

ACS004KK

1. CHECK HIGH AND LOW REVERSE CLUTCH SOLENOID VALVE CIRCUIT

1. Turn ignition switch OFF.
2. Disconnect A/T unit assembly harness connector at the transmission right side.
3. Check the resistance between terminal and ground.

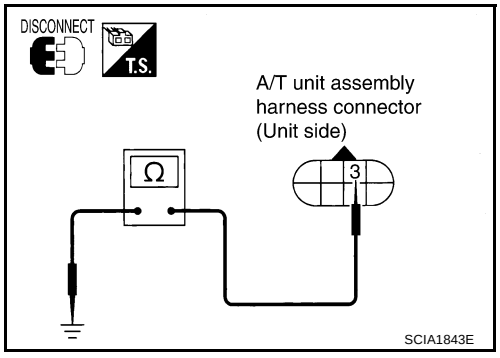

Solenoid valve	Connector No.	Terminal No. (Wire color)	Resistance (Approx.)
High and low reverse clutch solenoid valve	F7	3 (R/L) - Ground	3 - 9 Ω

OK or NG

OK >> GO TO 4.
NG >> GO TO 2.

2. CHECK TERMINAL CORD ASSEMBLY

1. Remove oil pan. Refer to AT-301, "Control Valve Assembly" .
2. Disconnect A/T unit assembly harness connector and control valve assembly harness connector.
3. Check continuity between A/T unit assembly harness connector and control valve assembly harness connector.

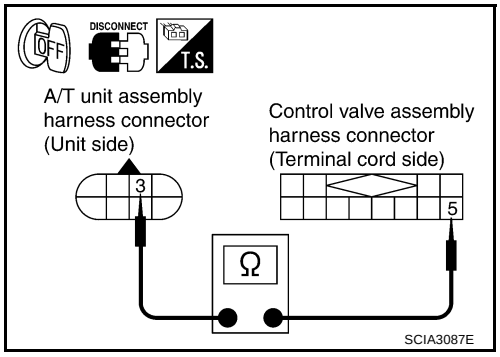

Item	Connector No.	Terminal No. (Wire color)	Continuity
A/T unit assembly harness connector	F7	3 (B/W)	Yes
Control valve assembly harness connector	F301	5 (B/W)	

4. If OK, check harness for short to ground and short to power.

OK or NG

OK >> GO TO 3.
NG >> Repair open circuit or short to ground or short to power in harness or connectors.

3. CHECK VALVE RESISTANCE

Check valve resistance

- Refer to AT-208, "Component Inspection" .

OK or NG

OK >> GO TO 4.
NG >> Replace the control valve assembly. Refer to AT-301, "Control Valve Assembly" .

4. CHECK POWER SOURCE CIRCUIT

1. Turn ignition switch OFF.
2. Disconnect TCM connector.
3. Check continuity between A/T unit assembly harness connector and TCM connector.

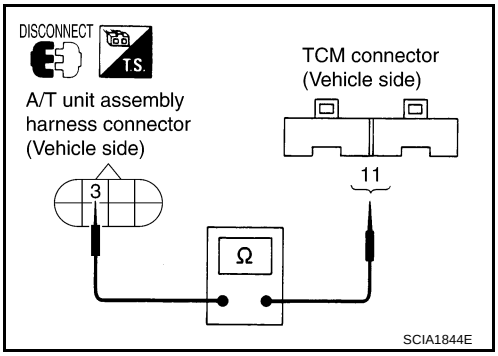

Item	Connector No.	Terminal No. (Wire color)	Continuity
TCM	F103	11 (R/L)	Yes
A/T unit assembly harness connector	F7	3 (R/L)	

4. If OK, check harness for short to ground and short to power.
5. Reinstall any part removed.

OK or NG

OK >> GO TO 5.
NG >> Repair open circuit or short to ground or short to power in harness or connectors.

5. CHECK DTC

Perform “DTC Confirmation Procedure”. Refer to AT-107, "DTC Confirmation Procedure" .

OK or NG

OK >> **INSPECTION END**
NG >> GO TO 6.

6. PERFORM TCM INSPECTION

1. Perform TCM input/output signal inspection.
2. If NG, recheck TCM pin terminals for damage or loose connection with harness connector.

OK or NG

OK >> **INSPECTION END**
NG >> Repair or replace damaged parts.

Component Inspection

ACS004KL

HIGH AND LOW REVERSE CLUTCH SOLENOID VALVE

Resistance check

1. Turn ignition switch OFF.
2. Remove oil pan. Refer to AT-301, "Control Valve Assembly" .
3. Disconnect control valve assembly harness connector.
4. Check resistance between terminal and ground.

Solenoid Valve	Connector No.	Terminal No. (Wire color)	Resistance (Ω) (Approx.)
High and low reverse clutch solenoid valve	F301	5 (R) - Ground	3 - 9 Ω

5. If NG, replace control valve assembly. Refer to AT-301, "Control Valve Assembly" .

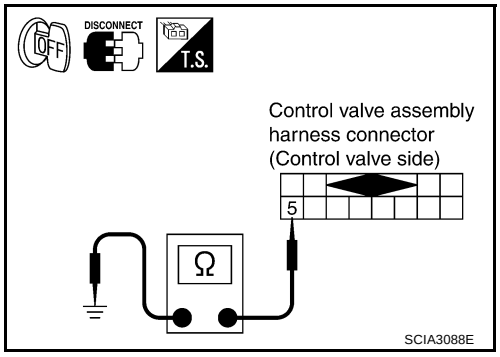

Operation check

- Check solenoid valve by listening for its operating sound while applying battery voltage to the terminal 5 and ground.

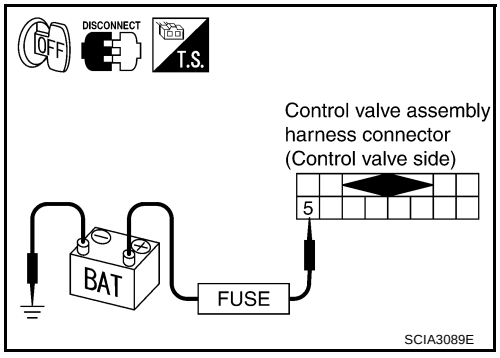

DTC P1769 HIGH AND LOW REVERSE CLUTCH SOLENOID VALVE FUNCTION

PFP:31940

Description

ACS002FR

- High and low reverse clutch solenoid valve is controlled by the TCM in response to signals sent from the PNP switch, vehicle speed sensor and accelerator pedal position sensor (throttle position sensor). Gears will then be shifted to the optimum position.
- This is not only caused by electrical malfunction (circuits open or shorted) but also by mechanical malfunction such as control valve sticking, improper solenoid valve operation.

On Board Diagnosis Logic

ACS002FS

- This is an OBD-II self-diagnostic item.
- Diagnostic trouble code “HLR/C SOL FNCTN” with CONSULT-II or P1769 without CONSULT-II is detected under the following conditions.
  - When TCM detects that actual gear ratio is irregular, and relation between gear position and condition of ATF pressure switch 6 is irregular during depressing accelerator pedal. (Other than during shift change)
  - When TCM detects that relation between gear position and condition of ATF pressure switch 6 is irregular during releasing accelerator pedal. (Other than during shift change)

Possible Cause

ACS002FT

- Harness or connectors
  (The solenoid and switch circuits are open or shorted.)
- High and low reverse clutch solenoid valve
- ATF pressure switch 6

DTC Confirmation Procedure

ACS002FU

CAUTION:
Always drive vehicle at a safe speed.

NOTE:
If “DTC Confirmation Procedure” has been previously conducted, always turn ignition switch “OFF” and wait at least 10 seconds before conducting the next test.
After the repair, perform the following procedure to confirm the malfunction is eliminated.

WITH CONSULT-II

1. Start engine.
2. Accelerate vehicle to maintain the following condition.
   ACCELE POS: 1.5/8 - 2.0/8
   Selector lever: “D” position
   Gear position: 2nd ⇒ 3rd Gear (HLR/C ON/OFF)
   Driving location: Driving the vehicle uphill (increased engine load) will help maintain the driving conditions required for this test.
3. Perform step “2” again.
4. Turn ignition switch OFF, then perform step “1” to “3” again.
5. Check “SELF-DIAG RESULTS” mode for “A/T” with CONSULT-II. If DTC (P1769) is detected, refer to AT-211, "Diagnostic Procedure" .
   If DTC (P1767) is detected, go to AT-206, "Diagnostic Procedure" .
   If DTC (P1846) is detected, go to AT-241, "Diagnostic Procedure" .

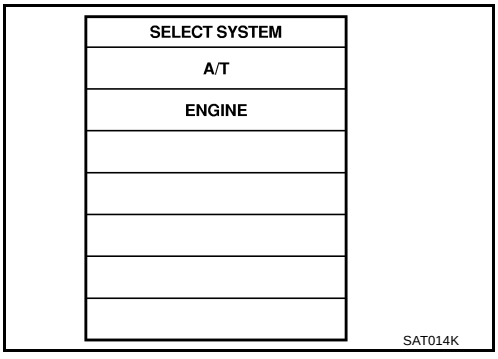

WITH GST

Follow the procedure “With CONSULT-II”.

Wiring Diagram — AT — HLR/CF

ACS002FV

AT-HLR/CF-01

: DETECTABLE LINE FOR DTC
: NON-DETECTABLE LINE FOR DTC

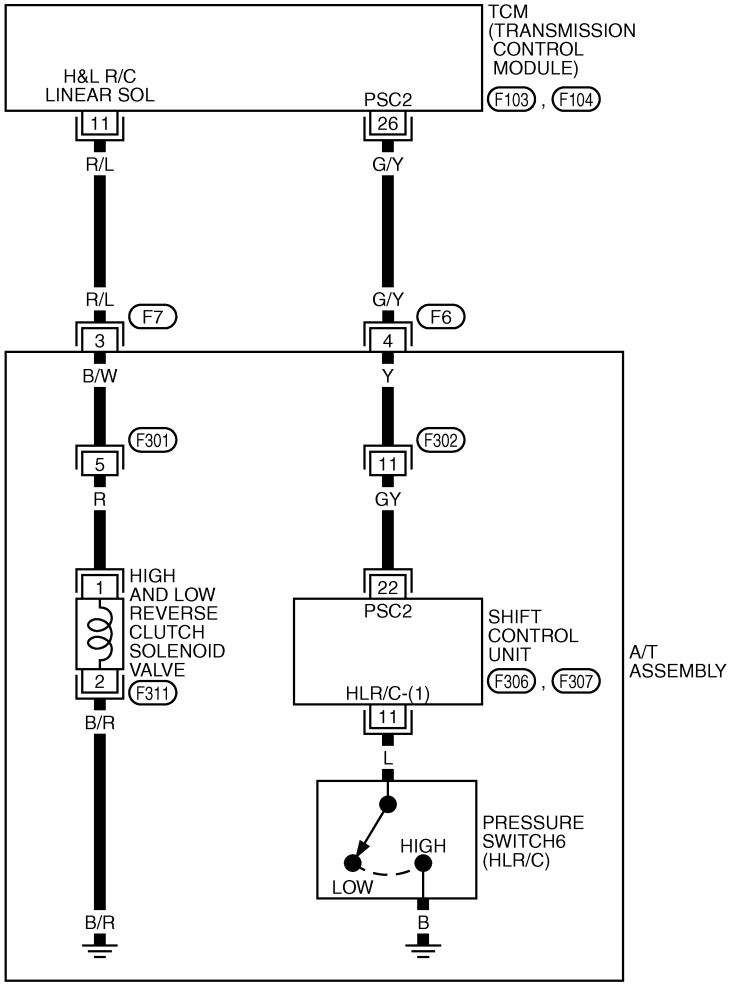

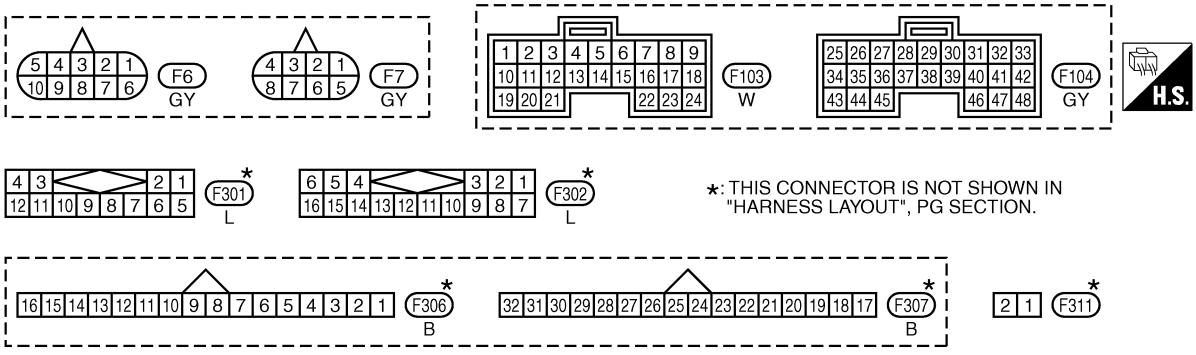

TCWT0120E

TCM terminal and Data are reference value. Measured between each terminals 5,14,24 and 46 (TCM ground).

Terminal No.	Wire color	Item	Condition		Data (Approx.)
11	R/L	High and low reverse clutch solenoid valve	When vehicle cruises	When the solenoid valve operating [6 km/h (4 MPH) or faster in 1st gear or 2nd gear]	More than 2V
				When the solenoid valve is not operating [6 km/h (4 MPH) or slower in 1st gear or 3rd, 4th, or 5th gear]	0V
26	G/Y	PSC2 (pressure switch 6)		When high and low reverse clutch solenoid valve “ON”.	0V
				When high and low reverse clutch solenoid valve “OFF”.	Battery voltage

Diagnostic Procedure

ACS004KM

1. CHECK INPUT SIGNALS (WITH CONSULT-II)

With CONSULT-II

1. Start engine.
2. Select “ECU INPUT SIGNALS” or “MAIN SIGNALS” in “DATA MONITOR” mode for “A/T” with CONSULT-II.
3. Accelerate vehicle in the “D” position (2nd ⇒ 3rd gear), and confirm the ON/OFF actuation of the “ATF PRES SW 6”.

OK or NG

OK >> GO TO 5.
NG >> GO TO 3.

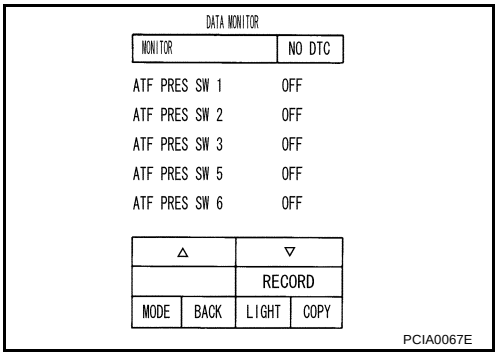

2. CHECK INPUT SIGNALS (WITHOUT CONSULT-II)

Without CONSULT-II

1. Start engine.
2. Accelerate vehicle in the “D” position (2nd ⇒ 3rd gear).

Solenoid valve		Connector No.	Terminal No. (Wire color)	Voltage
High and low reverse clutch solenoid valve	OFF	F104	26 (G/Y) - Ground	Battery voltage
	ON			Approx. 0 V

OK or NG

OK >> GO TO 5.
NG >> GO TO 3.

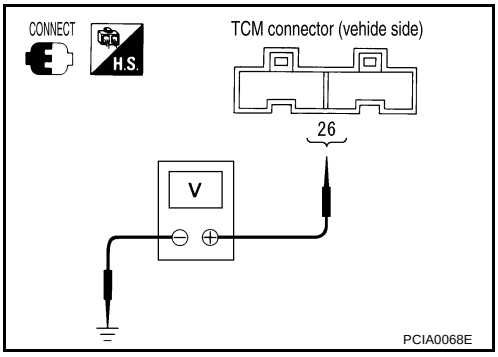

3. CHECK HARNESS BETWEEN TCM AND A/T UNIT ASSEMBLY HARNESS CONNECTOR

1. Turn ignition switch OFF.
2. Disconnect TCM connector.
3. Check continuity between A/T unit assembly harness connector and TCM connector.

Item	Connector No.	Terminal No. (Wire color)	Continuity
TCM	F104	26 (G/Y)	Yes
A/T unit assembly harness connector	F6	4 (G/Y)	
TCM	F103	11 (R/L)	Yes
A/T unit assembly harness connector	F7	3 (R/L)	

4. If OK, check harness for short to ground and short to power.
5. Reinstall any part removed.

OK or NG

OK >> GO TO 4.
NG >> Repair open circuit or short to ground or short to power in harness or connectors.

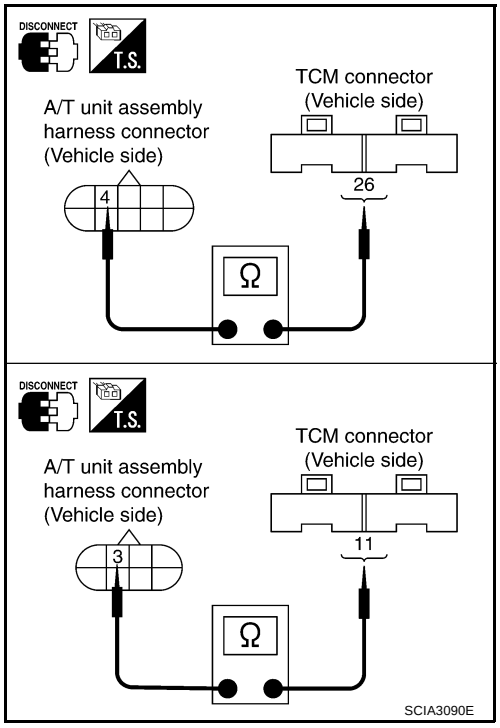

4. CHECK TERMINAL CORD ASSEMBLY

1. Remove oil pan. Refer to AT-301, "Control Valve Assembly" .
2. Disconnect A/T unit assembly harness connector and control valve assembly harness connector.
3. Check continuity between A/T unit assembly harness connector and control valve assembly harness connector.

Item	Connector No.	Terminal No. (Wire color)	Continuity
A/T unit assembly harness connector	F6	4 (Y)	Yes
Control valve assembly harness connector	F302	11 (Y)	
A/T unit assembly harness connector	F7	3 (B/W)	Yes
Control valve assembly harness connector	F301	5 (B/W)	

4. If OK, check harness for short to ground and short to power.
5. Reinstall any part removed.

OK or NG

OK >> Replace the control valve assembly. Refer to AT-301, "Control Valve Assembly" .
NG >> Repair open circuit or short to ground or short to power in harness or connectors.

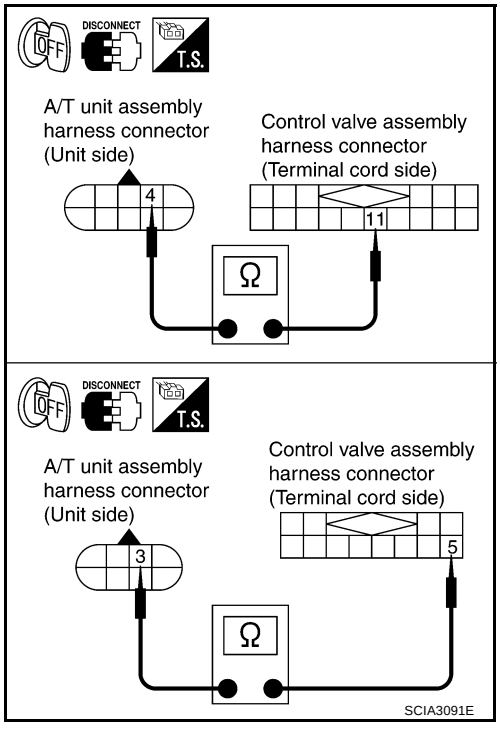

5. CHECK DTC

Perform “DTC Confirmation Procedure”. Refer to AT-107, "DTC Confirmation Procedure" .

OK or NG

OK >> **INSPECTION END**
NG >> GO TO 6.

6. PERFORM TCM INSPECTION

1. Perform TCM input/output signal inspection.
2. If NG, recheck TCM pin terminals for damage or loose connection with harness connector.

OK or NG

OK >> **INSPECTION END**
NG >> Repair or replace damaged parts.

DTC P1772 LOW COAST BRAKE SOLENOID VALVE

PFP:31940

Description

ACS002FX

Low coast brake solenoid valve is turned “ON” or “OFF” by the TCM in response to signals sent from the PNP switch, vehicle speed sensor and accelerator pedal position sensor (throttle position sensor). Gears will then be shifted to the optimum position.

On Board Diagnosis Logic

ACS002FY

- This is an OBD-II self-diagnostic item.
- Diagnostic trouble code “LC/B SOLENOID/CIRC” with CONSULT-II or P1772 without CONSULT-II is detected when TCM detects an improper voltage drop when it tries to operate the solenoid valve.

Possible Cause

ACS002FZ

- Harness or connectors
  (The solenoid circuit is open or shorted.)
- Low coast brake solenoid valve

DTC Confirmation Procedure

ACS002G0

NOTE:
If “DTC Confirmation Procedure” has been previously conducted, always turn ignition switch “OFF” and wait at least 10 seconds before conducting the next test.
After the repair, perform the following procedure to confirm the malfunction is eliminated.

WITH CONSULT-II

1. Turn ignition switch ON. (Do not start engine.)
2. Select “DATA MONITOR” mode for “A/T” with CONSULT-II.
3. Start engine.
4. Drive vehicle and maintain the following conditions for at least 5 consecutive seconds.
   Selector lever: “M” position
   Gear position: “M1-1st” or “M2-2nd” gear (LC/B ON/OFF)
5. If DTC is detected, go to AT-216, "Diagnostic Procedure" .

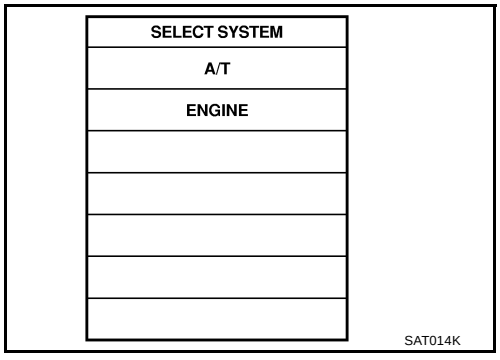

WITH GST

Follow the procedure “With CONSULT-II”.

Wiring Diagram — AT — LC/B

ACS002G1

AT-LC/B-01

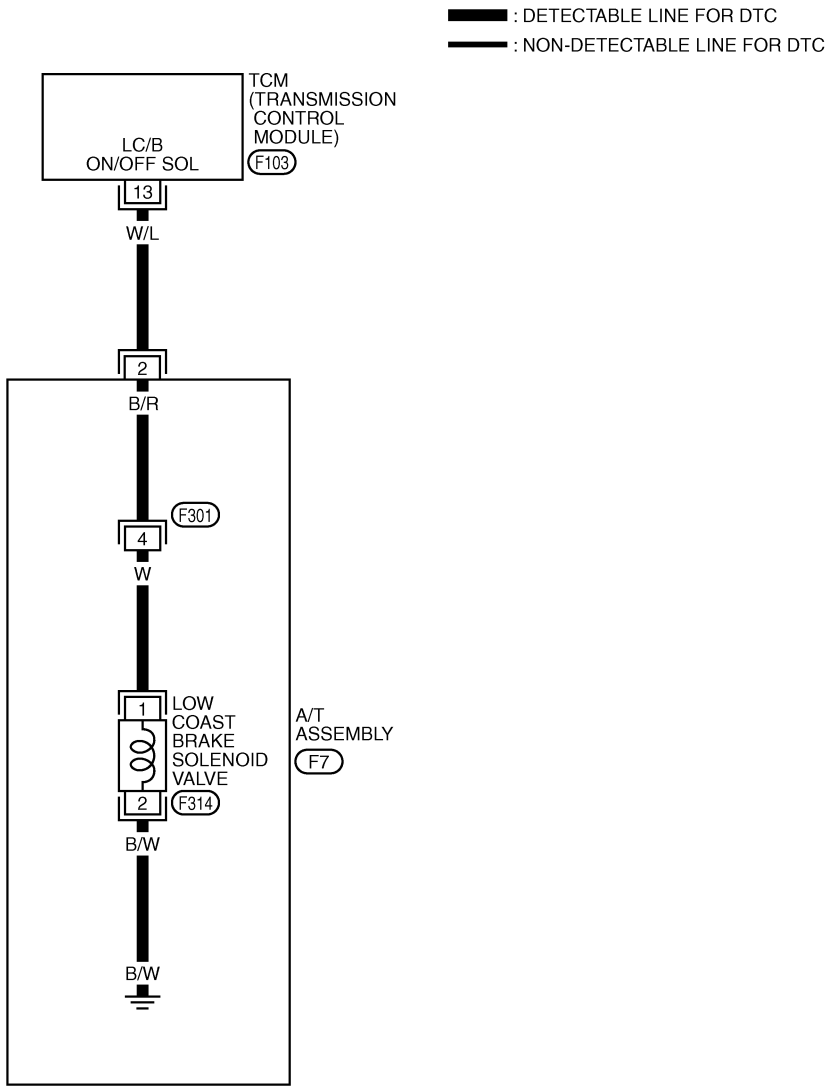

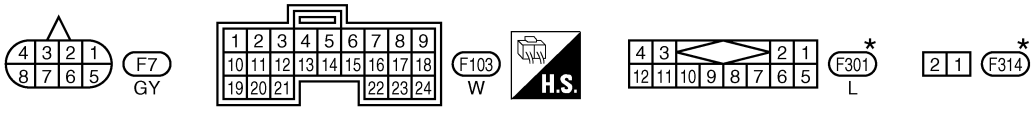

*: THIS CONNECTOR IS NOT SHOWN IN "HARNESS LAYOUT", PG SECTION.

TCWT0121E

TCM terminal and Data are reference value. Measured between each terminals 5, 14, 24 and 46 (TCM ground).

Terminal No.	Wire color	Item	Condition		Data (Approx.)
13	W/L	Low coast brake solenoid valve	When vehicle cruises	When the solenoid valve is operating (when running in M1-1 gear or M2-2 gear)	Battery voltage
				When the solenoid valve is not operating (when running in “D”)	0V

Diagnostic Procedure

ACS004KN

1. CHECK LOW COAST BRAKE SOLENOID VALVE CIRCUIT

1. Turn ignition switch OFF.
2. Disconnect A/T unit assembly harness connector at the transmission right side.
3. Check the resistance between terminal and ground.

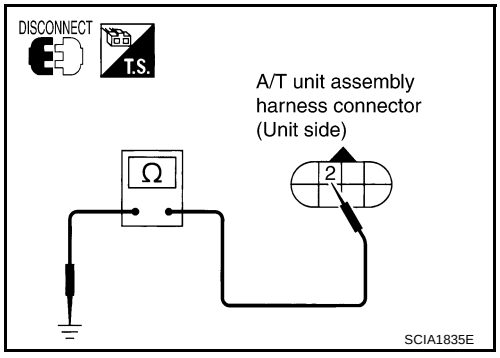

Solenoid valve	Connector No.	Terminal No. (Wire color)	Resistance (Approx.)
Low coast brake solenoid valve	F7	2 (W/L) - Ground	20 - 40 Ω

OK or NG

OK >> GO TO 4.
NG >> GO TO 2.

2. CHECK TERMINAL CORD ASSEMBLY

1. Remove oil pan. Refer to AT-301, "Control Valve Assembly" .
2. Disconnect A/T unit assembly harness connector and control valve assembly harness connector.
3. Check continuity between A/T unit assembly harness connector and control valve assembly harness connector.

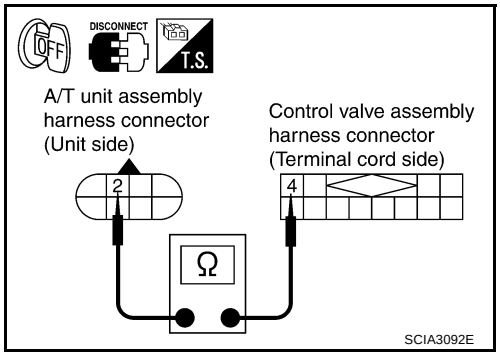

Item	Connector No.	Terminal No. (Wire color)	Continuity
A/T unit assembly harness connector	F7	2 (B/R)	Yes
Control valve assembly harness connector	F301	4 (B/R)	

4. If OK, check harness for short to ground and short to power.

OK or NG

OK >> GO TO 3.
NG >> Repair open circuit or short to ground or short to power in harness or connectors.

3. CHECK VALVE RESISTANCE

Check valve resistance

- Refer to AT-218, "Component Inspection" .

OK or NG

OK >> GO TO 4.
NG >> Replace the control valve assembly. Refer to AT-301, "Control Valve Assembly" .

4. CHECK POWER SOURCE CIRCUIT

1. Turn ignition switch OFF.
2. Disconnect TCM connector.
3. Check continuity between A/T unit assembly harness connector and TCM connector.

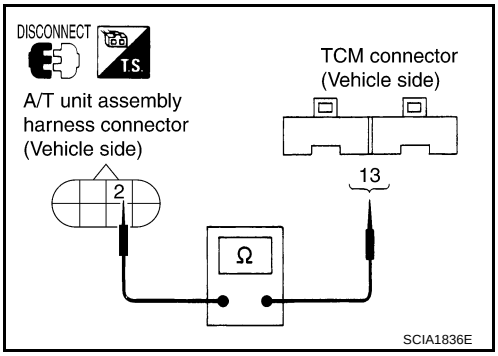

Item	Connector No.	Terminal No. (Wire color)	Continuity
TCM	F103	13 (W/L)	Yes
A/T unit assembly harness connector	F7	2 (W/L)	

4. If OK, check harness for short to ground and short to power.
5. Reinstall any part removed.

OK or NG

OK >> GO TO 5.
NG >> Repair open circuit or short to ground or short to power in harness or connectors.

5. CHECK DTC

Perform “DTC Confirmation Procedure”. Refer to AT-107, "DTC Confirmation Procedure" .

OK or NG

OK >> **INSPECTION END**
NG >> GO TO 6.

6. PERFORM TCM INSPECTION

1. Perform TCM input/output signal inspection. Refer to AT-88, "TCM Input/Output Signal Reference Values" .
2. If NG, recheck TCM pin terminals for damage or loose connection with harness connector.

OK or NG

OK >> **INSPECTION END**
NG >> Repair or replace damaged parts.

Component Inspection

ACS004KO

LOW COAST BRAKE SOLENOID VALVE

Resistance check

1. Turn ignition switch OFF.
2. Remove oil pan. Refer to AT-301, "Control Valve Assembly" .
3. Disconnect control valve assembly harness connector.
4. Check resistance between terminal and ground.

Solenoid Valve	Connector No.	Terminal No. (Wire color)	Resistance (Ω) (Approx.)
Low coast brake solenoid valve	F301	4 (W) - Ground	20 - 40 Ω

5. If NG, replace control valve assembly. Refer to AT-301, "Control Valve Assembly" .

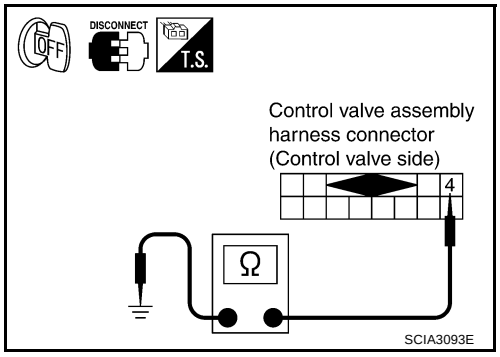

Operation check

- Check solenoid valve by listening for its operating sound while applying battery voltage to the terminal 4 and ground.

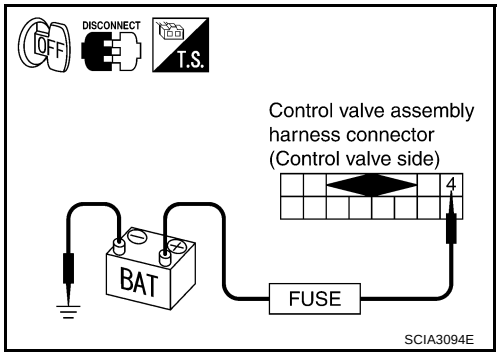

DTC P1774 LOW COAST BRAKE SOLENOID VALVE FUNCTION

PFP:31940

Description

ACS002G3

- Low coast brake solenoid valve is turned “ON” or “OFF” by the TCM in response to signals sent from the PNP switch, vehicle speed sensor and accelerator pedal position sensor (throttle position sensor). Gears will then be shifted to the optimum position.
- This is not only caused by electrical malfunction (circuits open or shorted) but also by mechanical malfunction such as control valve sticking, improper solenoid valve operation.

On Board Diagnosis Logic

ACS002G4

- This is an OBD-II self-diagnostic item.
- Diagnostic trouble code “LC/B SOLENOID FNCT” with CONSULT-II or P1774 without CONSULT-II is detected under the following conditions.
  - When TCM detects that actual gear ratio is irregular, and relation between gear position and condition of ATF pressure switch 2 is irregular during depressing accelerator pedal. (Other than during shift change)
  - When TCM detects that relation between gear position and condition of ATF pressure switch 2 is irregular during releasing accelerator pedal. (Other than during shift change)

Possible Cause

ACS002G5

- Harness or connectors
  (The solenoid and switch circuits are open or shorted.)
- Low coast brake solenoid valve
- ATF Pressure switch 2

DTC Confirmation Procedure

ACS002G6

CAUTION:
Always drive vehicle at a safe speed.

NOTE:
If “DTC Confirmation Procedure” has been previously conducted, always turn ignition switch “OFF” and wait at least 10 seconds before conducting the next test.
After the repair, perform the following procedure to confirm the malfunction is eliminated.

WITH CONSULT-II

1. Start engine.
2. Accelerate vehicle to maintain the following condition.
   Selector lever: “M” position
   Gear position: “M1-1st” or “M2-2nd” gear (LC/B ON/OFF)
3. Perform step “2” again.
4. Turn ignition switch OFF, then perform step “1” to “3” again.
5. Check “SELF-DIAG RESULTS” mode for “A/T” with CONSULT-II. If DTC (P1774) is detected, refer to AT-221, "Diagnostic Procedure" .
   If DTC (P1772) is detected, go to AT-216, "Diagnostic Procedure" .

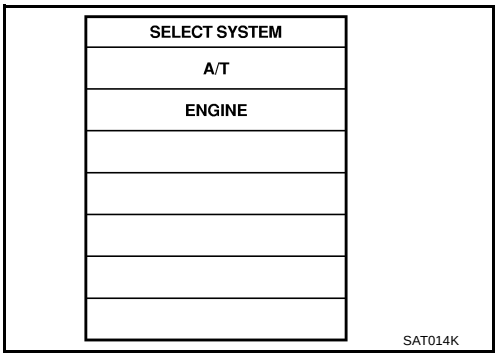

WITH GST

Follow the procedure “With CONSULT-II”.

Wiring Diagram — AT — LC/BF

ACS002G7

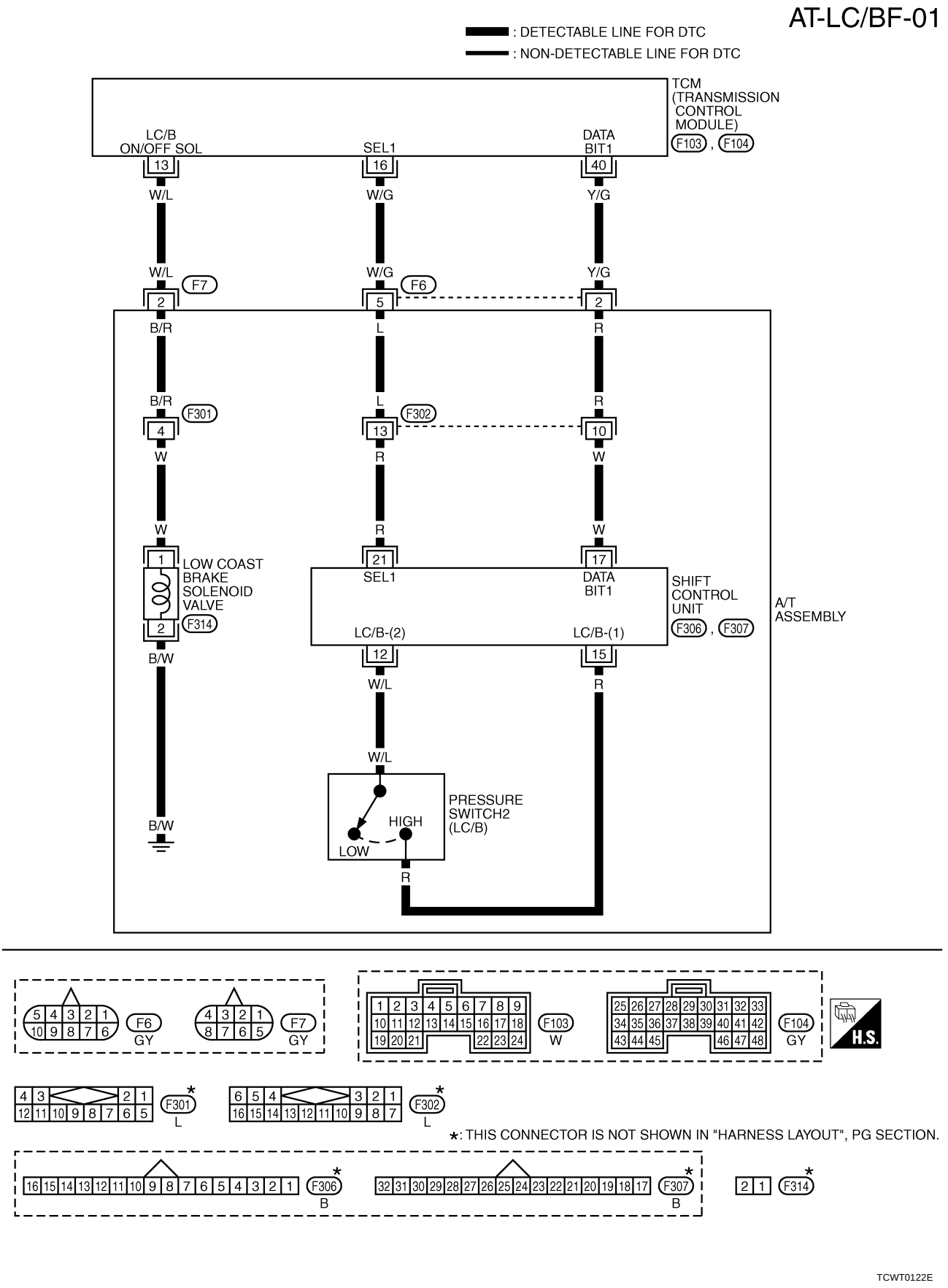

TCM terminals and Data are reference value. Measured between each terminals 5, 14, 24 and 46 (TCM ground).

Terminal No.	Wire color	Item	Condition		Data (Approx.)
13	W/L	Low coast brake solenoid valve	When vehicle cruises	When the solenoid valve is operating (when running in M1-1 speed or M2-2 speed)	Battery voltage
				When the solenoid valve is not operating (when running in “D”)	0V
16	W/G	SEL1 (pressure switch 2)	–		–
40	Y/G	DATA BIT1	–		–

Diagnostic Procedure

ACS004KP

1. CHECK INPUT SIGNALS

With CONSULT-II

1. Start engine.
2. Select “ECU INPUT SIGNALS” or “MAIN SIGNALS” in “DATA MONITOR” mode for “A/T” with CONSULT-II.
3. Accelerate vehicle in the manual mode (“M1-1st” or “M2-2nd” gear), and confirm the ON/OFF actuation of the “ATF PRES SW 2”.

OK or NG

OK >> GO TO 4.
NG >> GO TO 2.

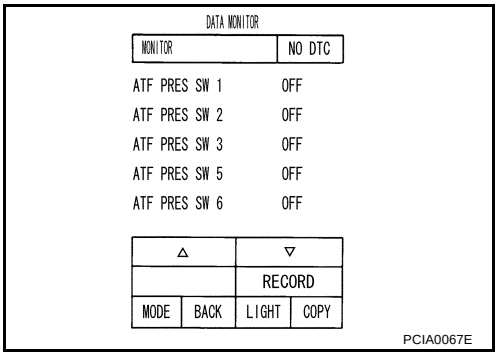

2. CHECK HARNESS BETWEEN TCM AND A/T UNIT ASSEMBLY HARNESS CONNECTOR

1. Turn ignition switch OFF.
2. Disconnect TCM connector.
3. Check continuity between A/T unit assembly harness connector and TCM connector.

Item	Connector No.	Terminal No. (Wire color)	Continuity
TCM	F103	16 (W/G)	Yes
A/T unit assembly harness connector	F6	5 (W/G)	
TCM	F104	40 (Y/G)	Yes
A/T unit assembly harness connector	F6	2 (Y/G)	
TCM	F103	13 (W/L)	Yes
A/T unit assembly harness connector	F7	2 (W/L)	

4. If OK, check harness for short to ground and short to power.
5. Reinstall any part removed.

OK or NG

OK >> GO TO 3.
NG >> Repair open circuit or short to ground or short to power in harness or connectors.

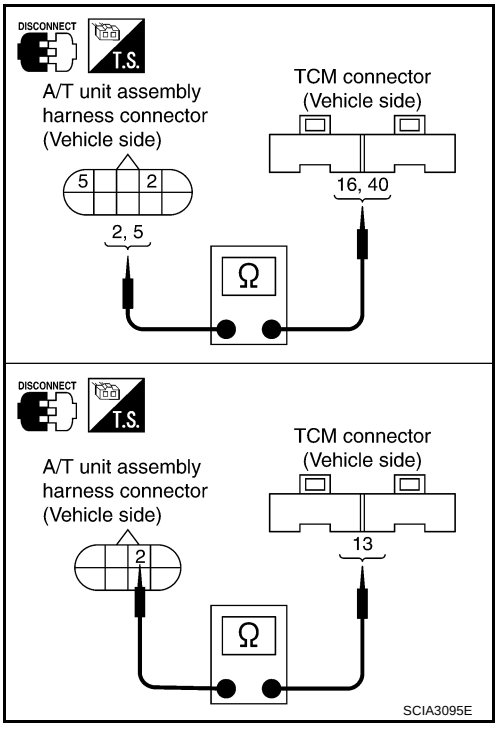

3. CHECK TERMINAL CORD ASSEMBLY

1. Remove oil pan. Refer to AT-301, "Control Valve Assembly" .
2. Disconnect A/T unit assembly harness connector and control valve assembly harness connector.
3. Check continuity between A/T unit assembly harness connector and control valve assembly harness connector.

Item	Connector No.	Terminal No. (Wire color)	Continuity
A/T unit assembly harness connector	F6	2 (R)	Yes
Control valve assembly harness connector	F302	10 (R)	
A/T unit assembly harness connector	F6	5 (L)	Yes
Control valve assembly harness connector	F302	13 (L)	
A/T unit assembly harness connector	F7	2 (B/R)	Yes
Control valve assembly harness connector	F301	4 (B/R)	

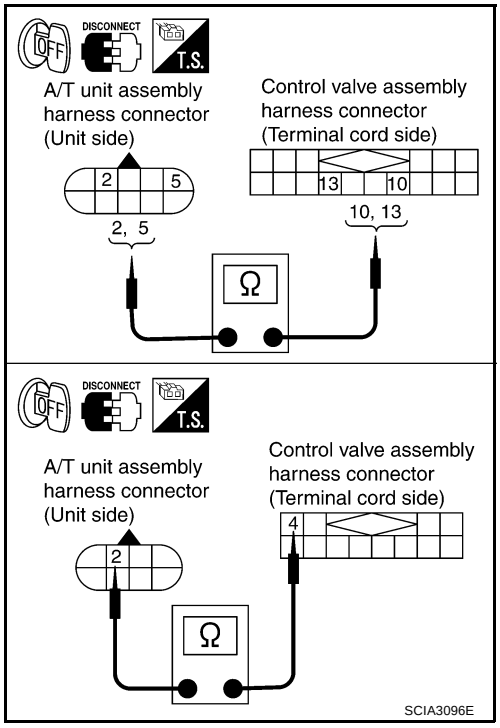

4. If OK, check harness for short to ground and short to power.
5. Reinstall any part removed.

OK or NG

OK >> Replace the control valve assembly. Refer to AT-301, "Control Valve Assembly" .
NG >> Repair open circuit or short to ground or short to power in harness or connectors.

4. CHECK DTC

Perform “DTC Confirmation Procedure”. Refer to AT-107, "DTC Confirmation Procedure" .

OK or NG

OK >> **INSPECTION END**
NG >> GO TO 5.

5. PERFORM TCM INSPECTION

1. Perform TCM input/output signal inspection. Refer to AT-88, "TCM Input/Output Signal Reference Values" .
2. If NG, recheck TCM pin terminals for damage or loose connection with harness connector.

OK or NG

OK >> **INSPECTION END**
NG >> Repair or replace damaged parts.

DTC P1815 MANUAL MODE SWITCH

PFP:34901

Description

ACS002G9

Manual mode switch is installed in A/T device. It sends manual mode switch, shift up and shift down switch signals to TCM.
TCM sends the switch signals to combination meter. By CAN communication line. Then manual mode switch position is indicated on the A/T indicator. For inspection, refer to AT-226, "Position Indicator Lamp" .

CONSULT-II Reference Value in Data Monitor Mode

ACS002GA

Monitor Item	Condition	Reference Value
MANU MODE SW	Manual shift gate position (neutral)	ON
	Other than the above	OFF
NON M-MODE SW	Manual shift gate position	OFF
	Other than the above	ON
UP SW LEVER	Select lever: + side	ON
	Other than the above	OFF
DOWN SW LEVER	Select lever: - side	ON
	Other than the above	OFF

On Board Diagnosis Logic

ACS002GB

- This is not an OBD-II self-diagnostic item.
- Diagnostic trouble code “MANU MODE SW/CIR” with CONSULT-II is detected when TCM monitors Manual mode, Non manual mode, Up or Down switch signal, and detects as irregular when impossible input pattern occurs 1 second or more.

Possible Cause

ACS002GC

- Harness or connectors
  (These switches circuit is open or shorted.)
- Mode select switch (Built into A/T control device)
- Position select switch (Built into A/T control device)

DTC Confirmation Procedure

ACS002GD

NOTE:
If “DTC Confirmation Procedure” has been previously conducted, always turn ignition switch “OFF” and wait at least 10 seconds before conducting the next test.
After the repair, perform the following procedure to confirm the malfunction is eliminated.

WITH CONSULT-II

1. Turn ignition switch ON. (Do not start engine.)
2. Select “DATA MONITOR” mode for “A/T” with CONSULT-II.
3. Move selector lever to “M” position.
4. Start engine and drive vehicle for at least 2 consecutive seconds.
5. If DTC is detected, go to AT-225, "Diagnostic Procedure" .

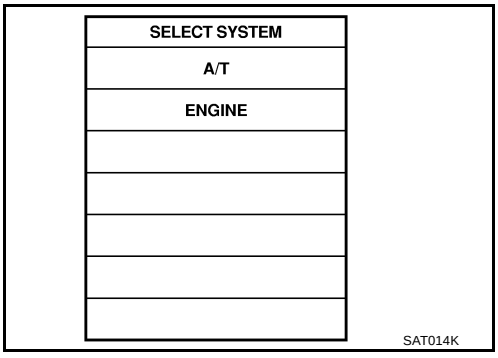

Wiring Diagram — AT — MMSW

ACS002GE

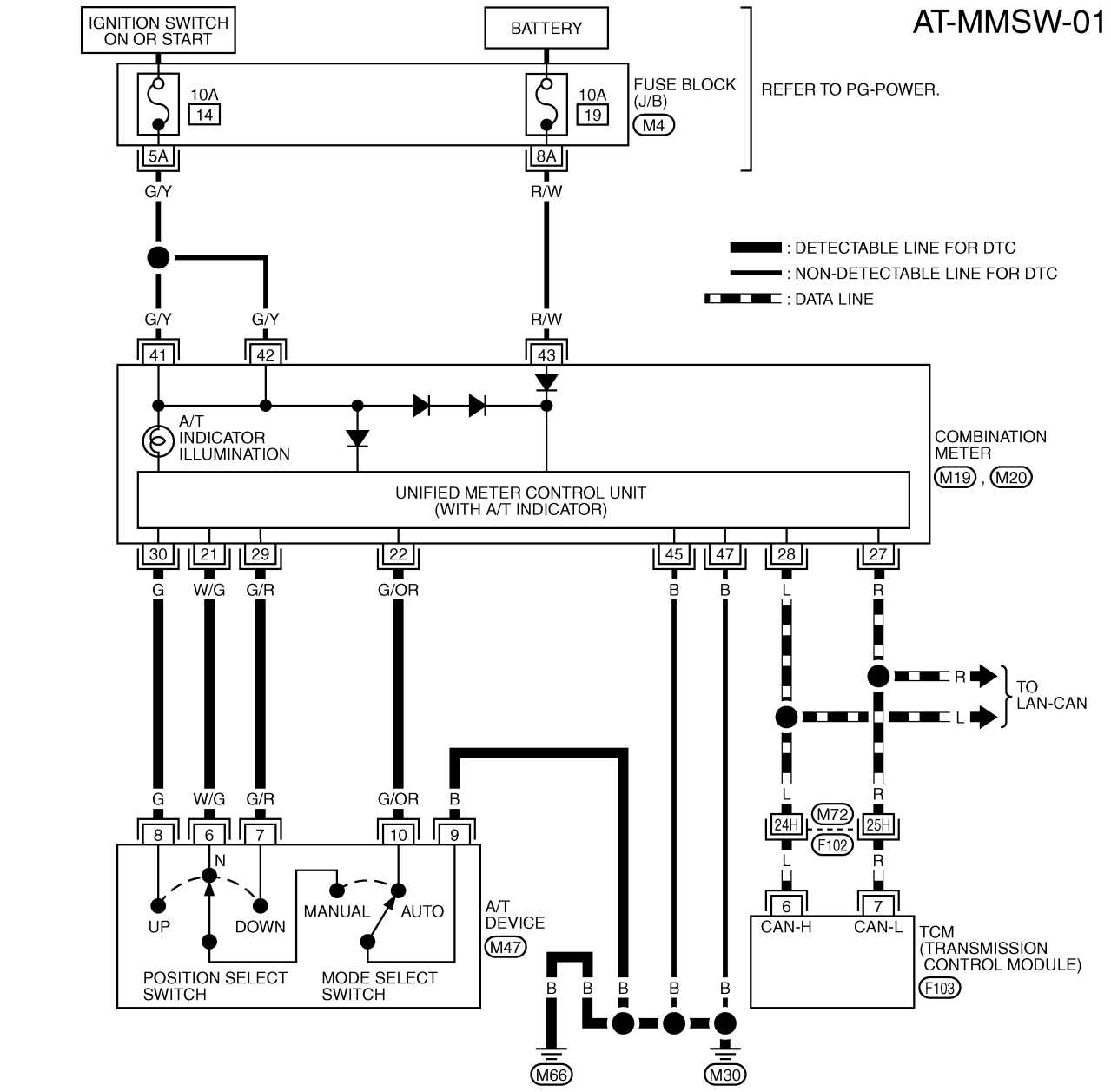

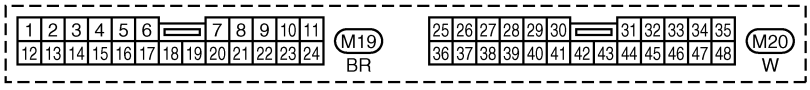

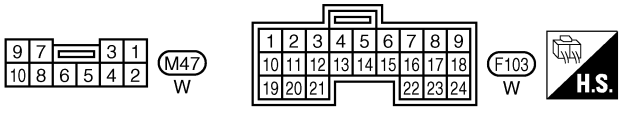

REFER TO THE FOLLOWING.

F102 -SUPER MULTIPLE JUNCTION (SMJ)

M4 -FUSE BLOCK-JUNCTION BOX (J/B)

TCWT0123E

Diagnostic Procedure

ACS002GF

1. CHECK MANUAL MODE SWITCH CIRCUIT (WITH CONSULT-II)

With CONSULT-II

1. Turn ignition switch to “ON” position. (Do not start engine.)
2. Select “ECU INPUT SIGNALS” in “DATA MONITOR” mode for “A/T” with CONSULT-II.
3. Read out ON/OFF switching action of the “MANU MODE SW”, “NON M-MODE SW”, “UP SW LEVER”, “DOWN SW LEVER”.

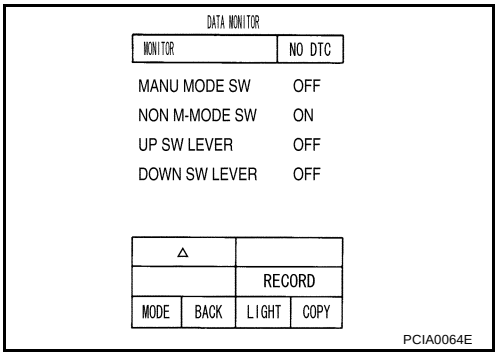

OK or NG

OK >> GO TO 4.
NG >> GO TO 3.

2. CHECK MANUAL MODE SWITCH CIRCUIT (WITHOUT CONSULT-II)

Without CONSULT-II

Drive vehicle in the manual mode, and confirm that the actual gear position and the meter's indication of the position mutually coincide when the selector lever is shifted to the “+ (up)” or “- (down)” side (1st ⇔ 5th gear).

OK or NG

OK >> GO TO 4.
NG >> GO TO 3.

3. DETECT MALFUNCTIONING ITEM

Check the following items.

- Power supply. Refer to DI-4, "COMBINATION METERS" .
- Manual mode switch. Refer to AT-226, "Component Inspection" .
- Pin terminals for damage or loose connection with harness connector.
- Open circuit or short to ground or short to power in harness or connector for A/T device (manual mode switch).

OK or NG

OK >> GO TO 4
NG >> Repair or replace damaged parts.

4. CHECK DTC

Perform DTC confirmation procedure. Refer to AT-223, "DTC Confirmation Procedure" .

OK or NG

OK >> **INSPECTION END**
NG >> Replace the control device assembly. Refer to AT-289, "Control Device Removal and Installation" .

Component Inspection

ACS002GG

MANUAL MODE SWITCH

Check continuity between terminals. Refer to AT-224, "Wiring Diagram — AT — MMSW" .

Item	Position	Connector No.	Terminal No. (Unit side)	Continuity
Manual mode (select) switch	Auto	M47	9 - 10	Yes
	Manual		6 - 9	
UP switch	Up		8 - 9	
DOWN switch	Down		7 - 9	

Position Indicator Lamp

ACS002GH

DIAGNOSTIC PROCEDURE

1. CHECK INPUT SIGNALS

With CONSULT-II

1. Start engine.
2. Select “MAIN SIGNALS” in “DATA MONITOR” mode for A/T with CONSULT-II and read out the value of “GEAR”.
3. Drive vehicle in the manual mode, and confirm that the actual gear position and the meter's indication of the position mutually coincide when the select lever is shifted to the “+ (up)” or “- (down)” side (1st ⇔ 5th gear).

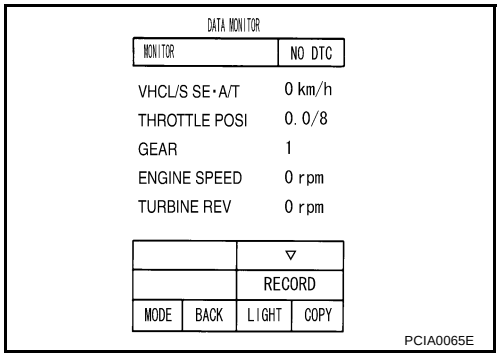

OK or NG

OK >> **INSPECTION END**
NG >> Check the following items.

Position Indicator Lamp Symptom Chart

Items	Presumed location of trouble
The actual gear position does not change, or shifting into the manual mode is not possible (no gear shifting in the manual mode possible). The position indicator lamp is not indicated.	Manual mode switch Refer to AT-223, "DTC P1815 MANUAL MODE SWITCH" . A/T main system (Fail-safe function actuated) ● Refer to AT-91, "CONSULT-II SETTING PROCEDURE" .
The actual gear position changes, but the position indicator lamp is not indicated.	Execute the self-diagnosis function. ● Refer to AT-91, "CONSULT-II SETTING PROCEDURE" .
The actual gear position and the indication on the position indicator lamp do not coincide.	Execute the self-diagnosis function. ● Refer to AT-91, "CONSULT-II SETTING PROCEDURE" .
Only a specific position or positions is/are not indicated on the position indicator lamp.	Check the meter control unit. Refer to DI-4, "COMBINATION METERS" .

DTC P1841 ATF PRESSURE SWITCH 1

PFP:25240

Description

ACS002GI

Fail-safe function to detect front brake clutch solenoid valve condition.

On Board Diagnosis Logic

ACS002GJ

- This is not an OBD-II self-diagnostic item.
- Diagnostic trouble code “ATF PRES SW 1/CIRC” with CONSULT-II is detected, when TCM detects that actual gear ratio is normal, and relation between gear position and condition of ATF pressure switch 1 is irregular during depressing accelerator pedal. (Other than during shift change)

Possible Cause

ACS002GK

- ATF pressure switch 1
- Harness or connectors
  (The switch circuit is open or shorted.)

DTC Confirmation Procedure

ACS002GL

CAUTION:
Always drive vehicle at a safe speed.

NOTE:
If “DTC Confirmation Procedure” has been previously conducted, always turn ignition switch “OFF” and wait at least 10 seconds before conducting the next test.
After the repair, perform the following procedure to confirm the malfunction is eliminated.

WITH CONSULT-II

1. Start engine.
2. Accelerate vehicle to maintain the following condition.
   ACCELE POS: 1.5/8 - 2.0/8
   Selector lever: “D” position
   Gear position: 3rd ⇒ 4th Gear (FR/B ON/OFF)
   Driving location: Driving the vehicle uphill (increased engine load) will help maintain the driving conditions required for this test.
3. Perform step “2” again.
4. Turn ignition switch OFF, then perform step “1” to “3” again.
5. Check “SELF-DIAG RESULTS” mode for “A/T” with CONSULT-II.
   If DTC (P1841) is detected, go to AT-229, "Diagnostic Procedure" .
   If DTC (P1757) is detected, go to AT-187, "Diagnostic Procedure" .

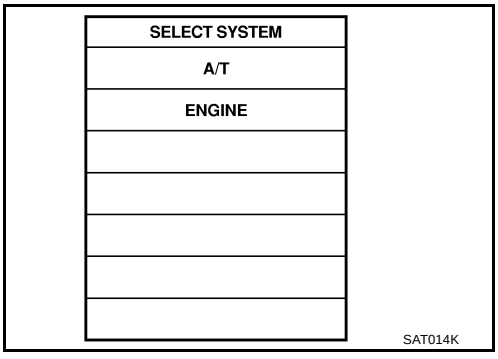

Wiring Diagram — AT — FPSW1

ACS002GM

AT-FPSW1-01

: DETECTABLE LINE FOR DTC
: NON-DETECTABLE LINE FOR DTC

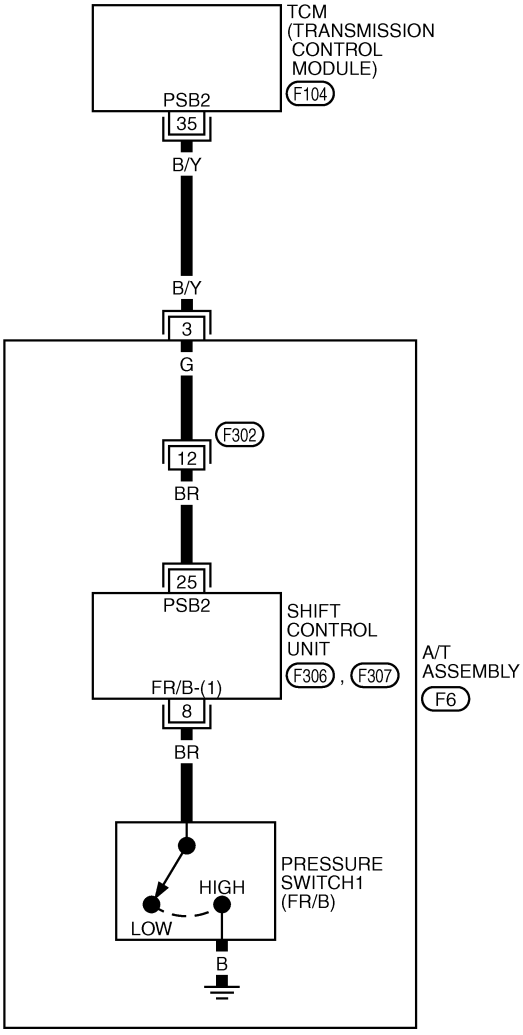

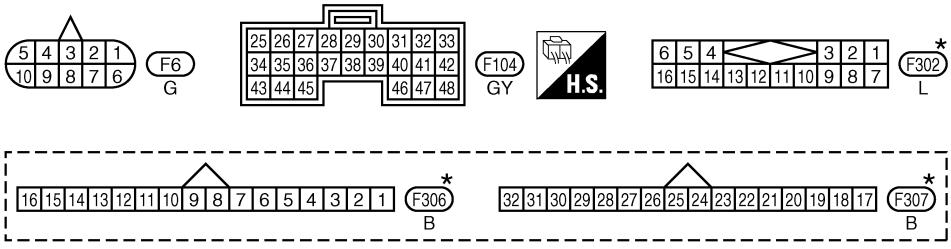

★: THIS CONNECTOR IS NOT SHOWN IN "HARNESS LAYOUT", PG SECTION.

TCWT0124E

TCM terminal and Data are reference value. Measured between each terminals 5, 14, 24 and 46 (TCM ground).

Terminal No.	Wire color	Item	Condition		Data (Approx.)
35	B/Y	PSB2 (pressure switch 1)	When vehicle starts	When front brake solenoid valve “OFF”.	Battery voltage
				When front brake solenoid valve“ ON”.	0V

Diagnostic Procedure

ACS004KQ

1. CHECK INPUT SIGNALS (WITH CONSULT-II)

With CONSULT-II

1. Start engine.
2. Select “ECU INPUT SIGNALS” or “MAIN SIGNALS” in “DATA MONITOR” mode for “A/T” with CONSULT-II.
3. Accelerate vehicle in the “D” position (3rd ⇒ 4th gear), and confirm the ON/OFF actuation of the “ATF PRES SW 1”.

OK or NG

OK >> GO TO 5.
NG >> GO TO 3.

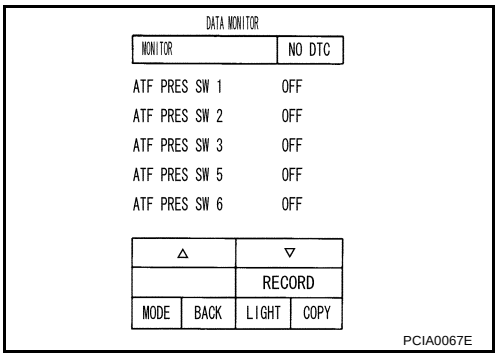

2. CHECK INPUT SIGNALS (WITHOUT CONSULT-II)

Without CONSULT-II

1. Start engine.
2. Accelerate vehicle in the “D” position (3rd ⇒ 4th gear).

Solenoid valve		Connector No.	Terminal No. (Wire color)	Voltage
Front brake solenoid valve	OFF	F104	35 (B/Y) - Ground	Battery voltage
	ON			Approx. 0 V

OK or NG

OK >> GO TO 5.
NG >> GO TO 3.

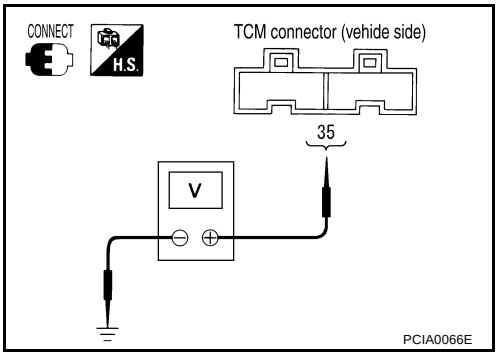

3. CHECK POWER SOURCE CIRCUIT

1. Turn ignition switch OFF.
2. Disconnect TCM connector.
3. Check continuity between A/T unit assembly harness connector and TCM connector.

Item	Connector No.	Terminal No. (Wire color)	Continuity
TCM	F104	35 (B/Y)	Yes
A/T unit assembly harness connector	F6	3 (B/Y)	

4. If OK, check harness for short to ground and short to power.
5. Reinstall any part removed.

OK or NG

OK >> GO TO 4.
NG >> Repair open circuit or short to ground or short to power in harness or connectors.

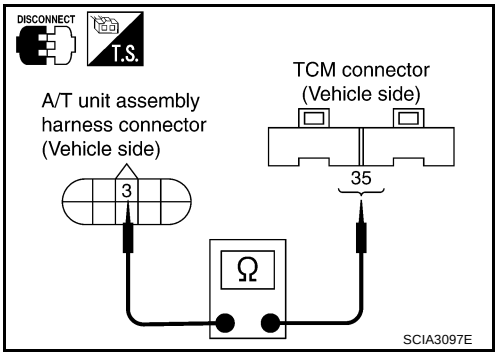

4. CHECK TERMINAL CORD ASSEMBLY

1. Remove oil pan. Refer to AT-301, "Control Valve Assembly" .
2. Disconnect A/T unit assembly harness connector and control valve assembly harness connector.
3. Check continuity between A/T unit assembly harness connector and control valve assembly harness connector.

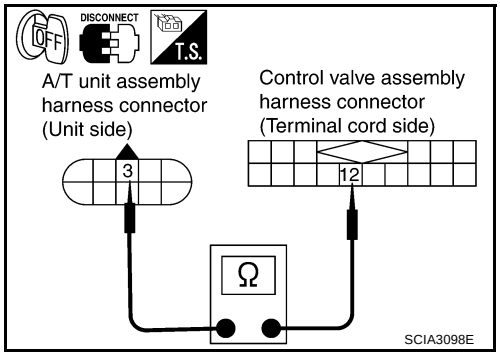

Item	Connector No.	Terminal No. (Wire color)	Continuity
A/T unit assembly harness connector	F6	3 (G)	Yes
Control valve assembly harness connector	F302	12 (G)	

4. If OK, check harness for short to ground and short to power.

OK or NG

OK >> Replace control valve assembly. Refer to AT-301, "Control Valve Assembly" .
NG >> Repair open circuit or short to ground or short to power in harness or connectors.

5. CHECK DTC

Perform DTC confirmation procedure. Refer to AT-107, "DTC Confirmation Procedure" .

OK or NG

OK >> **INSPECTION END**
NG >> GO TO 6.

6. PERFORM TCM INSPECTION

1. Perform TCM input/output signal inspection. Refer to AT-88, "TCM Input/Output Signal Reference Values" .
2. If NG, recheck TCM pin terminals for damage or loose connection with harness connector.

OK or NG

OK >> Replace control valve assembly. Refer to AT-301, "Control Valve Assembly" .
NG >> Repair or replace damaged parts.

DTC P1843 ATF PRESSURE SWITCH 3

PFP:25240

Description

ACS002GO

Fail-safe function to detect input clutch solenoid valve condition.

On Board Diagnosis Logic

ACS002GP

- This is not an OBD-II self-diagnostic item.
- Diagnostic trouble code “ATF PRES SW 3/CIRC” with CONSULT-II is detected, when TCM detects that actual gear ratio is normal, and relation between gear position and condition of ATF pressure switch 3 is irregular during depressing accelerator pedal. (Other than during shift change)

Possible Cause

ACS002GQ

- ATF pressure switch 3
- Harness or connectors
  (The switch circuit is open or shorted.)

DTC Confirmation Procedure

ACS002GR

CAUTION:
Always drive vehicle at a safe speed.

NOTE:
If “DTC Confirmation Procedure” has been previously conducted, always turn ignition switch “OFF” and wait at least 10 seconds before conducting the next test.
After the repair, perform the following procedure to confirm the malfunction is eliminated.

WITH CONSULT-II

1. Start engine.
2. Accelerate vehicle to maintain the following condition.
   ACCELE POS: 1.5/8 - 2.0/8
   Selector lever: “D” position
   Gear position: 3rd ⇒ 4th Gear (I/C ON/OFF)
   Driving location: Driving the vehicle uphill (increased engine load) will help maintain the driving conditions required for this test.
3. Perform step “2” again.
4. Turn ignition switch OFF, then perform step “1” to “3” again.
5. Check “SELF-DIAG RESULTS” mode for “A/T” with CONSULT-II.
   If DTC (P1843) is detected, go to AT-233, "Diagnostic Procedure" .
   If DTC (P1752) is detected, go to AT-178, "Diagnostic Procedure" .

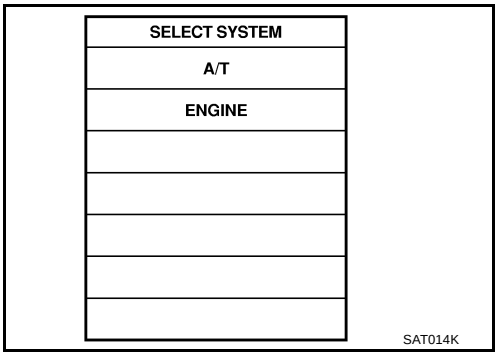

Wiring Diagram — AT — FPSW3

ACS002GS

AT-FPSW3-01

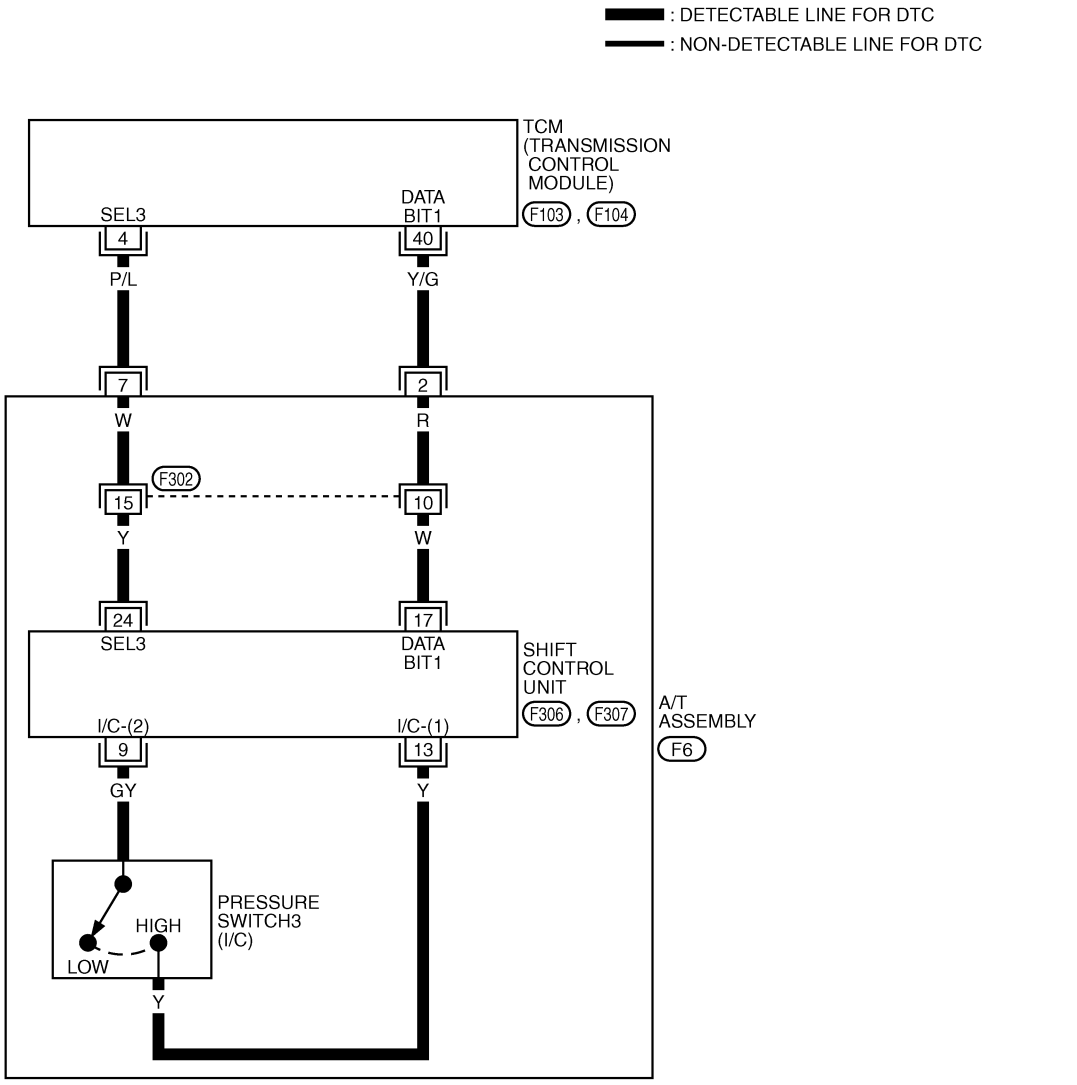

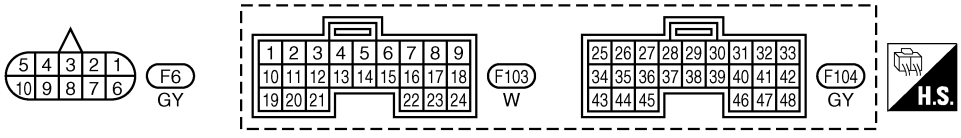

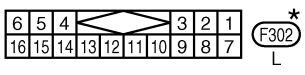

*: THIS CONNECTOR IS NOT SHOWN IN "HARNESS LAYOUT", PG SECTION.

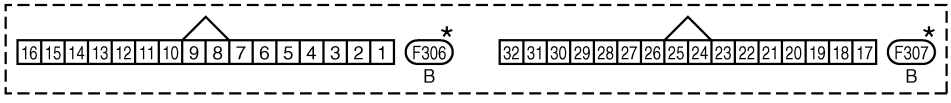

TCWT0125E

TCM terminals and Data are reference value. Measured between each terminals 5, 14, 24 and 46 (TCM ground).				
Terminal No.	Wire color	Item	Condition	Data (Approx.)
4	P/L	SEL3 (pressure switch 3)	–	–
40	Y/G	DATA BIT1	–	–

Diagnostic Procedure

ACS004KR

1. CHECK INPUT SIGNALS

With CONSULT-II

1. Start engine.
2. Select “ECU INPUT SIGNALS” or “MAIN SIGNALS” in “DATA MONITOR” mode for “A/T” with CONSULT-II.
3. Accelerate vehicle in the “D” position (3rd ⇒ 4th gear), and confirm the ON/OFF actuation of the “ATF PRES SW 3”.

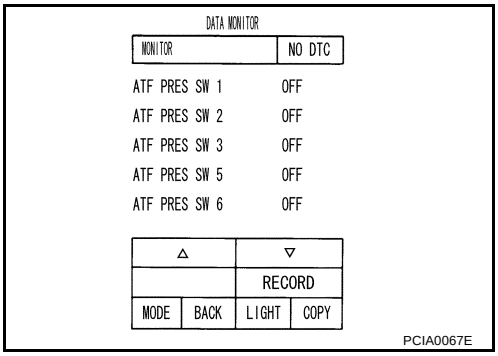

OK or NG

OK >> GO TO 4.
NG >> GO TO 2.

2. CHECK HARNESS BETWEEN TCM AND A/T UNIT ASSEMBLY HARNESS CONNECTOR

1. Turn ignition switch OFF.
2. Disconnect TCM connector.
3. Check continuity between A/T unit assembly harness connector and TCM connector.

Item	Connector No.	Terminal No. (Wire color)	Continuity
TCM	F103	4 (P/L)	Yes
A/T unit assembly harness connector	F6	7 (P/L)	
TCM	F104	40 (Y/G)	Yes
A/T unit assembly harness connector	F6	2 (Y/G)	

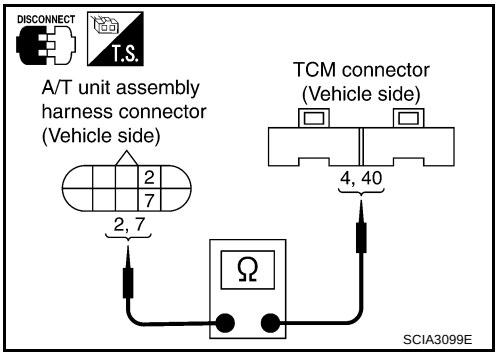

4. If OK, check harness for short to ground and short to power.
5. Reinstall any part removed.

OK or NG

OK >> GO TO 3.
NG >> Repair open circuit or short to ground or short to power in harness or connectors.

3. CHECK TERMINAL CORD ASSEMBLY

1. Remove oil pan. Refer to AT-301, "Control Valve Assembly" .
2. Disconnect A/T unit assembly harness connector and control valve assembly harness connector.
3. Check continuity between A/T unit assembly harness connector and control valve assembly harness connector.

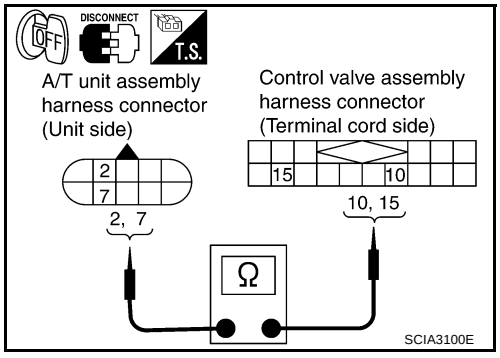

Item	Connector No.	Terminal No. (Wire color)	Continuity
A/T unit assembly harness connector	F6	2 (R)	Yes
Control valve assembly harness connector	F302	10 (R)	
A/T unit assembly harness connector	F6	7 (W)	Yes
Control valve assembly harness connector	F302	15 (W)	

4. If OK, check harness for short to ground and short to power.

OK or NG

OK >> Replace the control valve assembly. Refer to AT-301, "Control Valve Assembly" .
NG >> Repair open circuit or short to ground or short to power in harness or connectors.

4. CHECK DTC

Perform DTC confirmation procedure. Refer to AT-107, "DTC Confirmation Procedure" .

OK or NG

OK >> **INSPECTION END**
NG >> GO TO 5.

5. PERFORM TCM INSPECTION

1. Perform TCM input/output signal inspection. Refer to AT-88, "TCM Input/Output Signal Reference Values" .
2. If NG, recheck TCM pin terminals for damage or loose connection with harness connector.

OK or NG

OK >> Replace the control valve assembly. Refer to AT-301, "Control Valve Assembly" .
NG >> Repair or replace damaged parts.

DTC P1845 ATF PRESSURE SWITCH 5

PFP:25240

Description

ACS002GU

Fail-safe function to detect direct clutch solenoid valve condition.

On Board Diagnosis Logic

ACS002GV

- This is not an OBD-II self-diagnostic item.
- Diagnostic trouble code “ATF PRES SW 5/CIRC” with CONSULT-II is detected, when TCM detects that actual gear ratio is normal, and relation between gear position and condition of ATF pressure switch 5 is irregular during depressing accelerator pedal. (Other than during shift change)

Possible Cause

ACS002GW

- ATF pressure switch 5
- Harness or connectors
  (The switch circuit is open or shorted.)

DTC Confirmation Procedure

ACS002GX

CAUTION:
Always drive vehicle at a safe speed.

NOTE:
If “DTC Confirmation Procedure” has been previously conducted, always turn ignition switch “OFF” and wait at least 10 seconds before conducting the next test.
After the repair, perform the following procedure to confirm the malfunction is eliminated.

WITH CONSULT-II

1. Start engine.
2. Accelerate vehicle to maintain the following condition.
   ACCELE POS: 1.5/8 - 2.0/8
   Selector lever: “D” position
   Gear position: 1st ⇒ 2nd Gear (D/C ON/OFF)
   Driving location: Driving the vehicle uphill (increased engine load) will help maintain the driving conditions required for this test.
3. Perform step “2” again.
4. Turn ignition switch OFF, then perform step “1” to “3” again.
5. Check “SELF-DIAG RESULTS” mode for “A/T” with CONSULT-II.
   If DTC (P1845) is detected, go to AT-237, "Diagnostic Procedure" .
   If DTC (P1762) is detected, go to AT-197, "Diagnostic Procedure" .

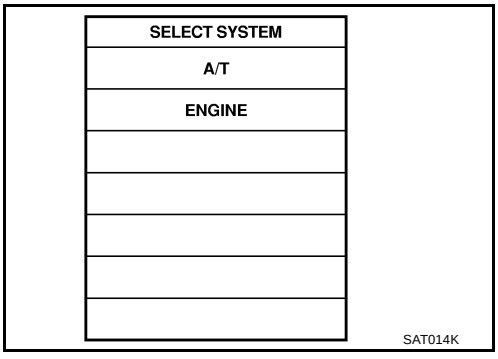

Wiring Diagram — AT — FPSW5

ACS002GY

AT-FPSW5-01

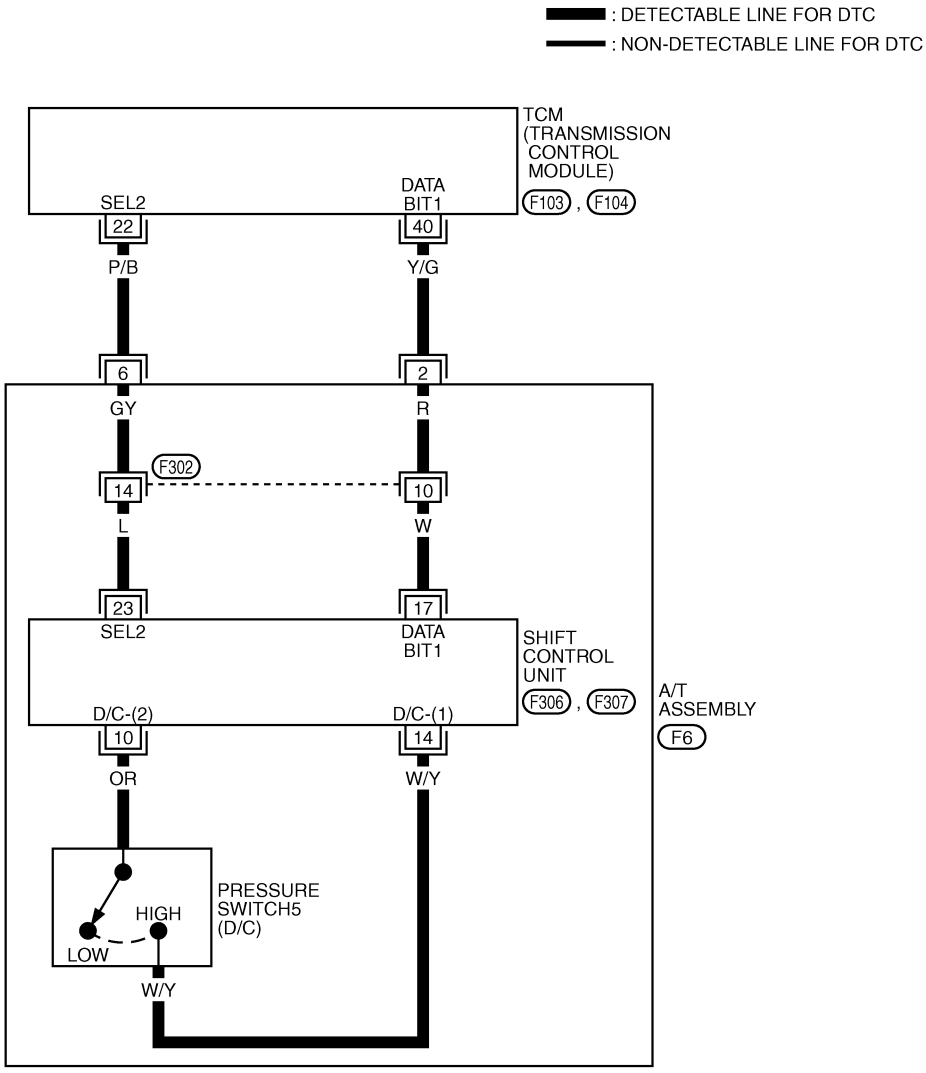

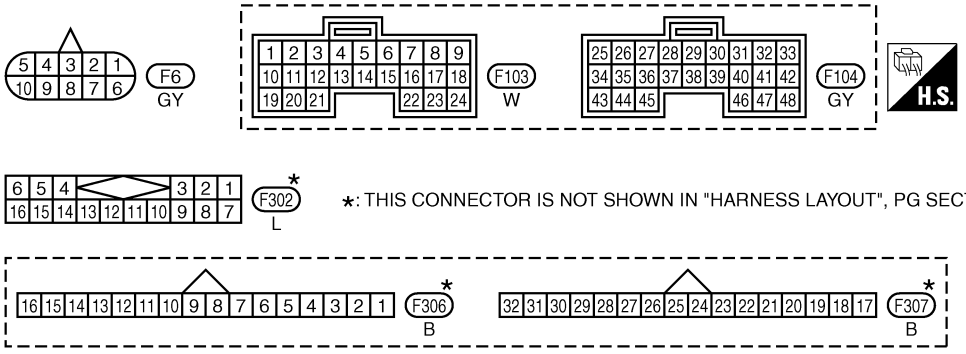

TCWT0126E

TCM terminals and Data are reference value. Measured between each terminals 5, 14, 24 and 46 (TCM ground).

Terminal No.	Wire color	Item	Condition	Data (Approx.)
22	P/B	SEL2 (pressure switch 5)	–	–
40	Y/G	DATA BIT1	–	–

Diagnostic Procedure

ACS004KS

1. CHECK INPUT SIGNALS

With CONSULT-II

1. Start engine.
2. Select “ECU INPUT SIGNALS” or “MAIN SIGNALS” in “DATA MONITOR” mode for “A/T” with CONSULT-II.
3. Accelerate vehicle in the “D” position (1st ⇒ 2nd gear), and confirm the ON/OFF actuation of the “ATF PRES SW 5”.

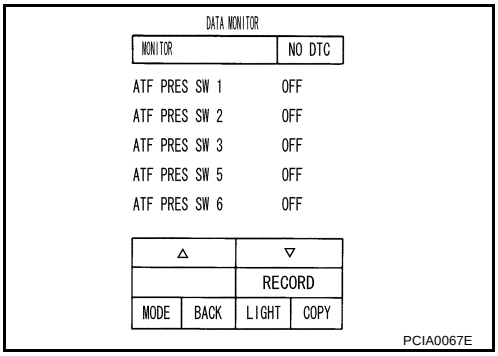

OK or NG

OK >> GO TO 4.
NG >> GO TO 2.

2. CHECK HARNESS BETWEEN TCM AND A/T UNIT ASSEMBLY HARNESS CONNECTOR

1. Turn ignition switch OFF.
2. Disconnect TCM connector.
3. Check continuity between A/T unit assembly harness connector and TCM connector.

Item	Connector No.	Terminal No. (Wire color)	Continuity
TCM	F103	22 (P/B)	Yes
A/T unit assembly harness connector	F6	6 (P/B)	
TCM	F104	40 (Y/G)	Yes
A/T unit assembly harness connector	F6	2 (Y/G)	

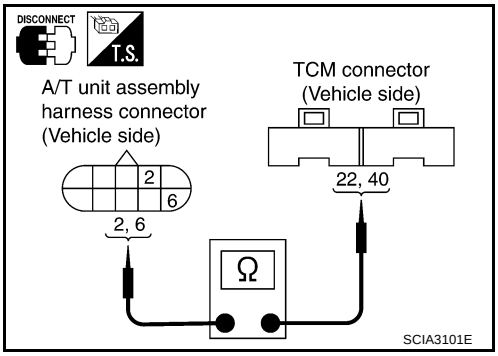

4. If OK, check harness for short to ground and short to power.
5. Reinstall any part removed.

OK or NG

OK >> GO TO 3.
NG >> Repair open circuit or short to ground or short to power in harness or connectors.

3. CHECK TERMINAL CORD ASSEMBLY

1. Remove oil pan. Refer to AT-301, "Control Valve Assembly" .
2. Disconnect A/T unit assembly harness connector and control valve assembly harness connector.
3. Check continuity between A/T unit assembly harness connector and control valve assembly harness connector.

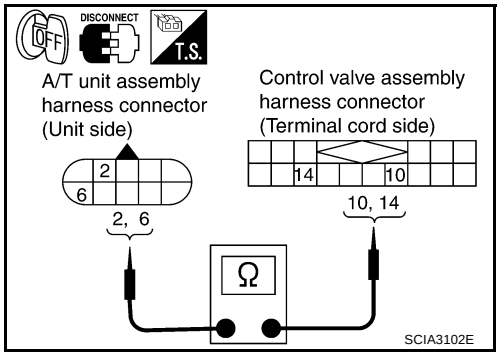

Item	Connector No.	Terminal No. (Wire color)	Continuity
A/T unit assembly harness connector	F6	2 (R)	Yes
Control valve assembly harness connector	F302	10 (R)	
A/T unit assembly harness connector	F6	6 (GY)	Yes
Control valve assembly harness connector	F302	14 (GY)	

4. If OK, check harness for short to ground and short to power.

OK or NG

OK >> Replace the control valve assembly. Refer to AT-301, "Control Valve Assembly" .
NG >> Repair open circuit or short to ground or short to power in harness or connectors.

4. CHECK DTC

Perform DTC confirmation procedure. Refer to AT-107, "DTC Confirmation Procedure" .

OK or NG

OK >> **INSPECTION END**
NG >> GO TO 3.

5. PERFORM TCM INSPECTION

1. Perform TCM input/output signal inspection. Refer to AT-88, "TCM Input/Output Signal Reference Values" .
2. If NG, recheck TCM pin terminals for damage or loose connection with harness connector.

OK or NG

OK >> Replace the control valve assembly. Refer to AT-301, "Control Valve Assembly" .
NG >> Repair or replace damaged parts.

DTC P1846 ATF PRESSURE SWITCH 6

PFP:25240

Description

ACS002H0

Fail-safe function to detect high and low reverse clutch solenoid valve condition.

On Board Diagnosis Logic

ACS002H1

- This is not an OBD-II self-diagnostic item.
- Diagnostic trouble code “ATF PRES SW 6/CIRC” with CONSULT-II is detected, when TCM detects that actual gear ratio is normal, and relation between gear position and condition of ATF pressure switch 6 is irregular during depressing accelerator pedal. (Other than during shift change)

Possible Cause

ACS002H2

- ATF pressure switch 6
- Harness or connectors
  (The switch circuit is open or shorted.)

DTC Confirmation Procedure

ACS002H3

CAUTION:
Always drive vehicle at a safe speed.

NOTE:
If “DTC Confirmation Procedure” has been previously conducted, always turn ignition switch “OFF” and wait at least 10 seconds before conducting the next test.
After the repair, perform the following procedure to confirm the malfunction is eliminated.

WITH CONSULT-II

1. Start engine.
2. Accelerate vehicle to maintain the following condition.
   ACCELE POS: 1.5/8 - 2.0/8
   Selector lever: “D” position
   Gear position: 2nd ⇒ 3rd Gear (HLR/C ON/OFF)
   Driving location: Driving the vehicle uphill (increased engine load) will help maintain the driving conditions required for this test.
3. Perform step “2” again.
4. Turn ignition switch OFF, then perform step “1” to “3” again.
5. Check “SELF-DIAG RESULTS” mode for “A/T” with CONSULT-II.
   If DTC (P1846) is detected, go to AT-241, "Diagnostic Procedure" .
   If DTC (P1767) is detected, go to AT-206, "Diagnostic Procedure" .

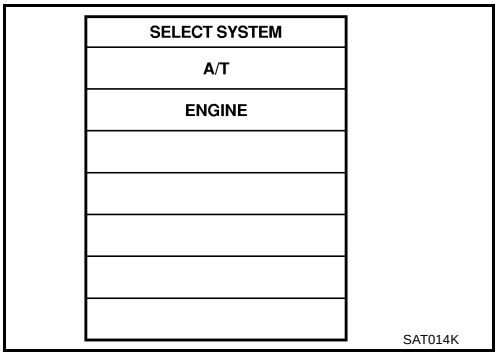

Wiring Diagram — AT — FPSW6

ACS002H4

AT-FPSW6-01

: DETECTABLE LINE FOR DTC
: NON-DETECTABLE LINE FOR DTC

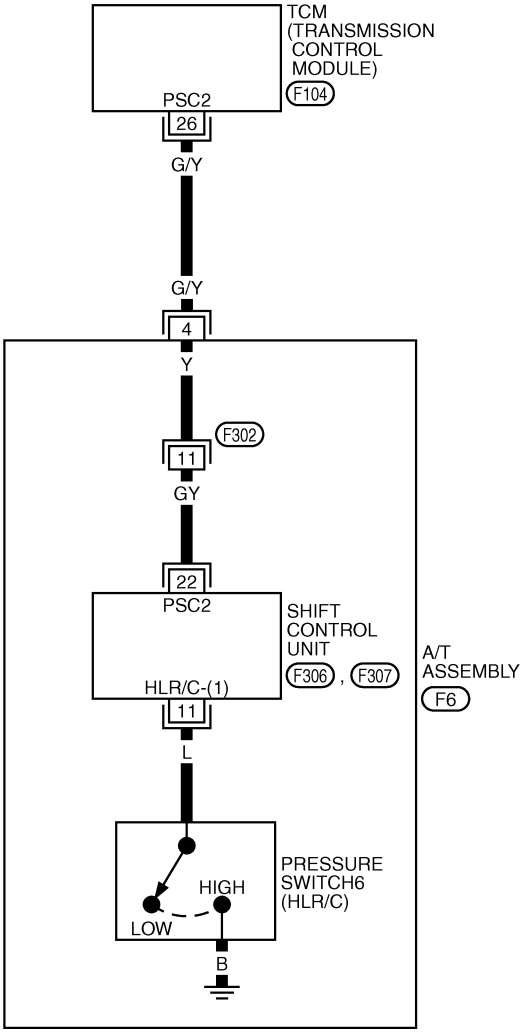

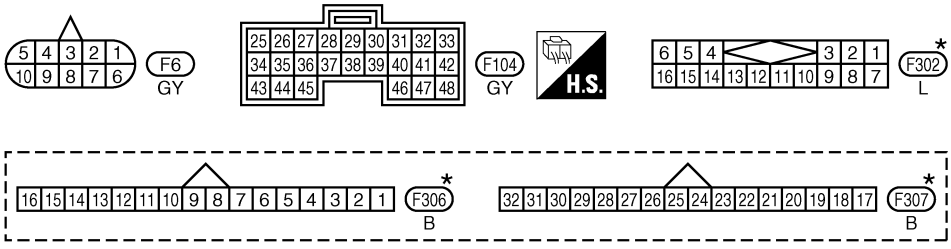

★: THIS CONNECTOR IS NOT SHOWN IN "HARNESS LAYOUT", PG SECTION.

TCWT0127E

TCM terminal and Data are reference value. Measured between each terminals 5,14,24 and 46 (TCM ground).

Terminal No.	Wire color	Item	Condition		Data (Approx.)
26	G/Y	PSC2 (pressure switch 6)	When vehicle cruises	When high and low reverse clutch solenoid valve “ON”.	0V
				When high and low reverse clutch solenoid valve “OFF”.	Battery voltage

Diagnostic Procedure

ACS004KT

1. CHECK INPUT SIGNALS (WITH CONSULT-II)

With CONSULT-II

1. Start engine.
2. Select “ECU INPUT SIGNALS” or “MAIN SIGNALS” in “DATA MONITOR” mode for “A/T” with CONSULT-II.
3. Accelerate vehicle in the “D” position (2nd ⇒ 3rd gear), and confirm the ON/OFF actuation of the “ATF PRES SW 6”.

OK or NG

OK >> GO TO 5.
NG >> GO TO 3.

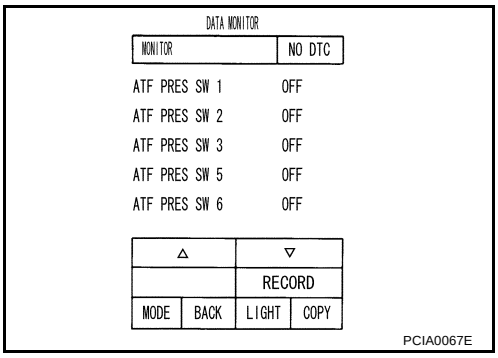

2. CHECK INPUT SIGNALS (WITHOUT CONSULT-II)

Without CONSULT-II

1. Start engine.
2. Accelerate vehicle in the “D” position (2nd ⇒ 3rd gear).

Solenoid valve		Connector No.	Terminal No. (Wire color)	Voltage
High and low reverse clutch solenoid valve	OFF	F104	26 (G/Y) - Ground	Battery voltage
	ON			Approx. 0 V

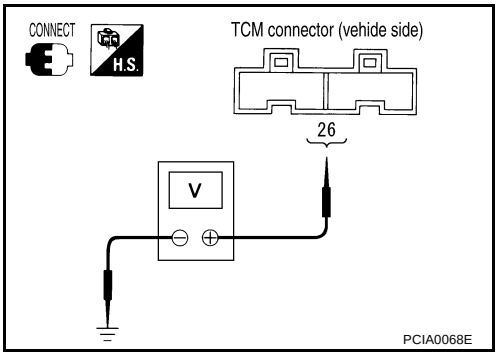

OK or NG

OK >> GO TO 5.
NG >> GO TO 3.

3. CHECK POWER SOURCE CIRCUIT

1. Turn ignition switch OFF.
2. Disconnect TCM connector.
3. Check continuity between A/T unit assembly harness connector and TCM connector.

Item	Connector No.	Terminal No. (Wire color)	Continuity
TCM	F104	26 (G/Y)	Yes
A/T unit assembly harness connector	F6	4 (G/Y)	

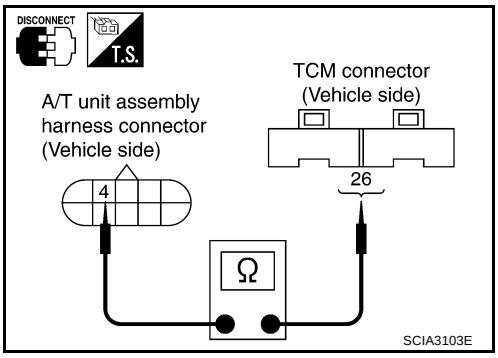

4. If OK, check harness for short to ground and short to power.
5. Reinstall any part removed.

OK or NG

OK >> GO TO 4.
NG >> Repair open circuit or short to ground or short to power in harness or connectors.

4. CHECK TERMINAL CORD ASSEMBLY

1. Remove oil pan. Refer to AT-301, "Control Valve Assembly" .
2. Disconnect A/T unit assembly harness connector and control valve assembly harness connector.
3. Check continuity between A/T unit assembly harness connector and control valve assembly harness connector.

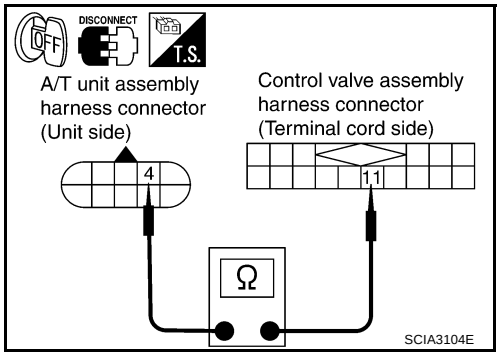

Item	Connector No.	Terminal No. (Wire color)	Continuity
A/T unit assembly harness connector	F6	4 (Y)	Yes
Control valve assembly harness connector	F302	11 (Y)	

4. If OK, check harness for short to ground and short to power.

OK or NG

OK >> Replace the control valve assembly. Refer to AT-301, "Control Valve Assembly" .
NG >> Repair open circuit or short to ground or short to power in harness or connectors.

5. CHECK DTC

Perform DTC confirmation procedure. Refer to AT-107, "DTC Confirmation Procedure" .

OK or NG

OK >> **INSPECTION END**
NG >> GO TO 6.

6. PERFORM TCM INSPECTION

1. Perform TCM input/output signal inspection. Refer to AT-88, "TCM Input/Output Signal Reference Values" .
2. If NG, recheck TCM pin terminals for damage or loose connection with harness connector.

OK or NG

OK >> Replace the control valve assembly. Refer to AT-301, "Control Valve Assembly" .
NG >> Repair or replace damaged parts.

PARK/NEUTRAL POSITION, MANUAL MODE, BRAKE AND THROTTLE POSITION SWITCH CIRCUIT

PFP:31918

Diagnostic Procedure

ACS002H6

1. CHECK PNP SWITCH CIRCUIT

With CONSULT-II

1. Turn ignition switch ON. (Do not start engine.)
2. Select “MAIN SIGNALS” in “DATA MONITOR” mode for “A/T” with CONSULT-II.
3. Read out “N·P”, “R” and “D” position switches moving selector lever to each position.

OK or NG

OK >> GO TO 3.
NG >> GO TO 2.

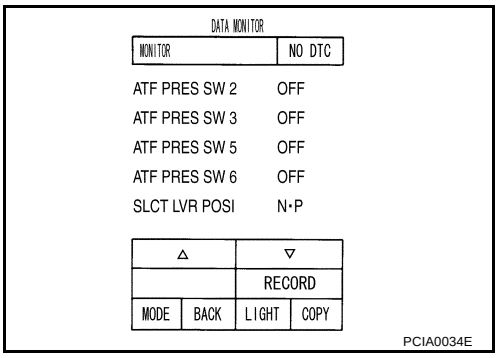

2. DETECT MALFUNCTIONING ITEM

Check the following items.

- Disconnection or short-circuit in the harness between TCM and PNP switch 1, 2, 3, 4.
- Disconnection or short-circuit in the harness between the PNP switch 3 monitor and TCM.
- PNP switch. Refer to AT-111, "DTC P0705 PARK/NEUTRAL POSITION SWITCH" .

OK or NG

OK >> GO TO 3.
NG >> Repair or replace damaged parts.

3. CHECK MANUAL MODE SWITCH CIRCUIT

With CONSULT-II

1. Turn ignition switch ON. (Do not start engine.)
2. Select “ECU INPUT SIGNALS” in “DATA MONITOR” mode for “A/T” with CONSULT-II.
3. Read out ON/OFF switching action of the “MANU MODE SW”, “NON M-MODE SW”, “UP SW LEVER”, “DOWN SW LEVER”.

OK or NG

OK >> GO TO 5.
NG >> GO TO 4.

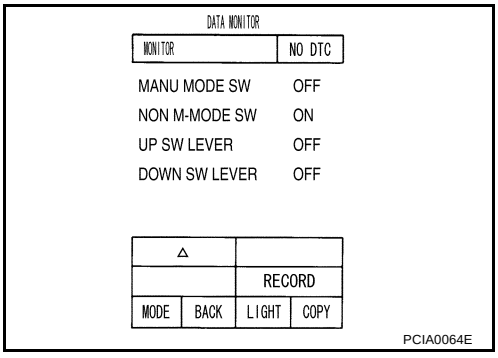

4. DETECT MALFUNCTIONING ITEM

Check the following items.

- Manual mode switch. Refer to AT-223, "DTC P1815 MANUAL MODE SWITCH" .
- Check the connector housing for missing, loosening, bending or falling down of any terminal.

OK or NG

OK >> GO TO 5.
NG >> Repair or replace damaged parts.

5. CHECK BRAKE SWITCH CIRCUIT

With CONSULT-II

1. Turn ignition switch ON. (Do not start engine.)
2. Select “ECU INPUT SIGNALS” in “DATA MONITOR” mode for “A/T” with CONSULT-II.
3. Read out ON/OFF switching action of the “BRAKE SW”.

OK or NG

OK >> GO TO 6.
NG >> Check the following items.

- Brake switch. Refer to BR-6, "BRAKE PEDAL" .
- Combination meter. Refer to DI-4, "COMBINATION METERS" .

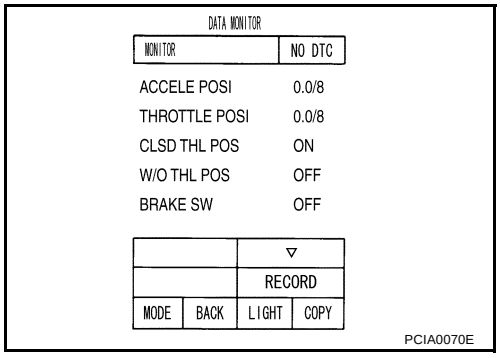

6. CHECK THROTTLE POSITION SIGNAL CIRCUIT

With CONSULT-II

1. Turn ignition switch ON. (Do not start engine.)
2. Select “ECU INPUT SIGNALS” in “DATA MONITOR” mode for “A/T” with CONSULT-II.
3. Depress accelerator pedal and read out the value of “CLSD THL POS” and “W/O THL POS”.

Accelerator pedal operation	Monitor item	
	CLSD THL POS	W/O THL POS
Released	ON	OFF
Fully depressed	OFF	ON

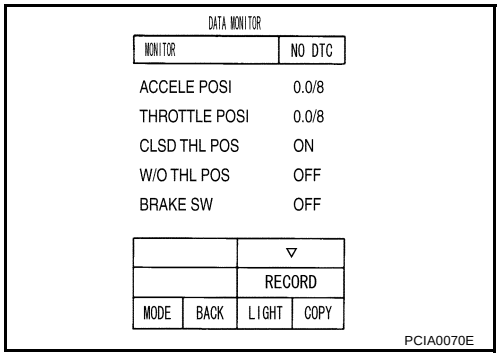

4. Perform the self-diagnosis for “ENGINE” with CONSULT-II.

OK or NG

OK >> GO TO 7.
NG >> Repair or replace damaged parts.

7. CHECK DTC

Perform SELF-DIAGNOSTIC PROCEDURE.

- Refer to AT-91, "CONSULT-II" .
- CAN Communication Line. Refer to AT-104, "DTC U1000 CAN COMMUNICATION LINE" .

OK or NG

OK >> **INSPECTION END**
NG >> GO TO 8.

8. PERFORM TCM INSPECTION

1. Perform TCM input/output signal inspection. Refer to AT-88, "TCM Input/Output Signal Reference Values" .
2. If NG, recheck TCM pin terminals for damage or loose connection with harness connector.

OK or NG

OK >> **INSPECTION END**
NG >> Repair or replace damaged parts.

TROUBLE DIAGNOSIS FOR SYMPTOMS

PFP:00007

Wiring Diagram — AT — NONDTC

ACS002H7

AT-NONDTC-01

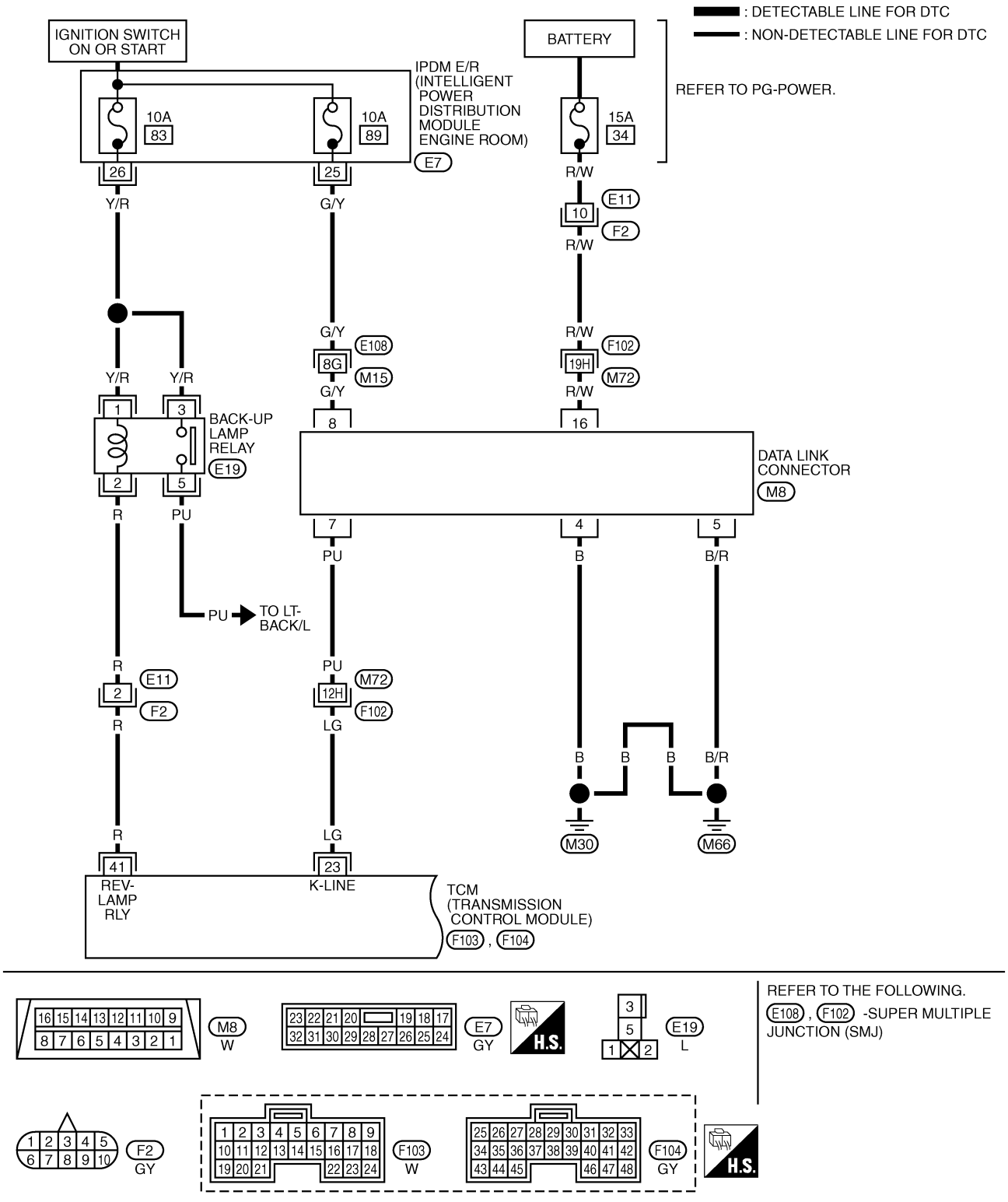

AT-NONDTC-02

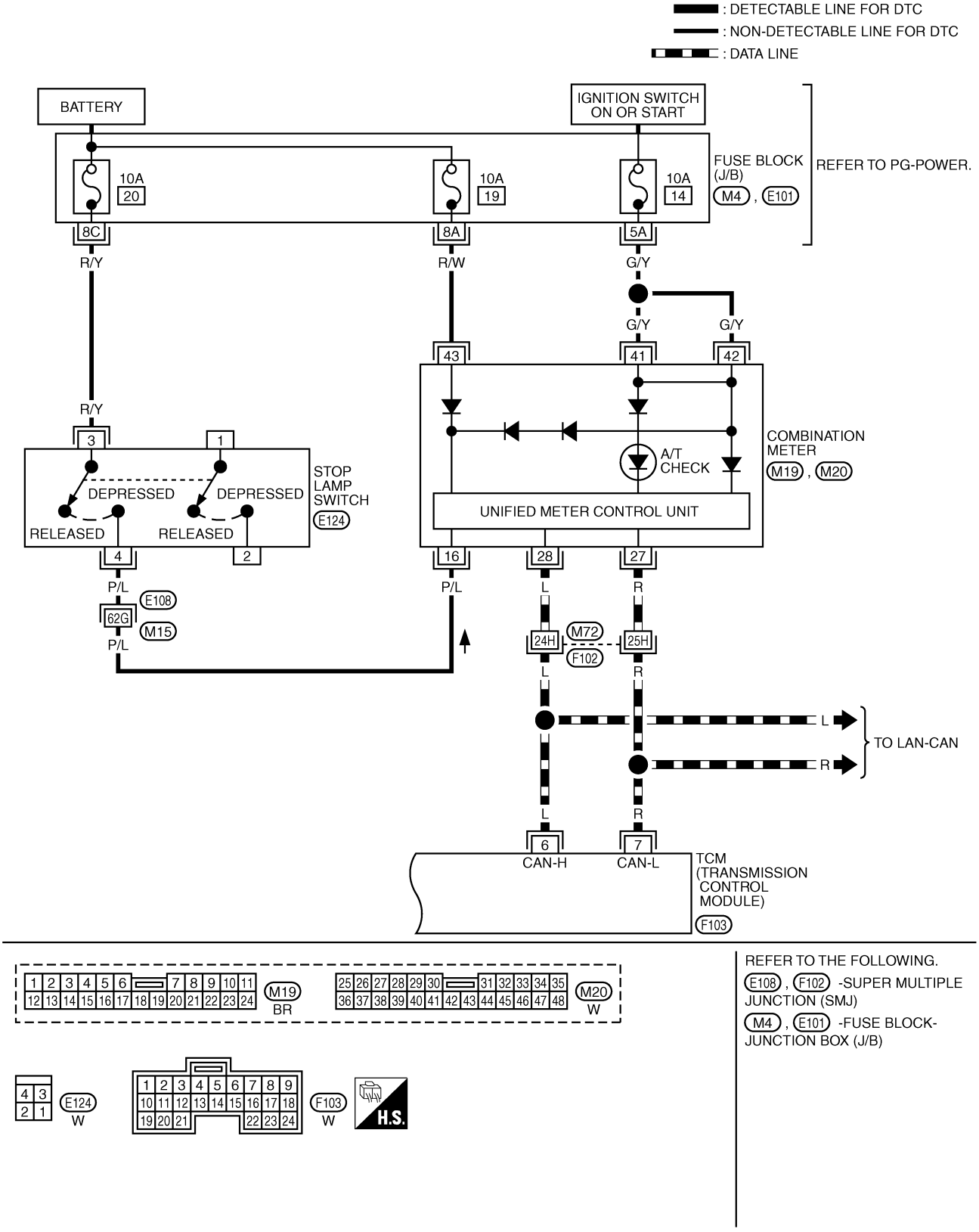
: DETECTABLE LINE FOR DTC
: NON-DETECTABLE LINE FOR DTC
: DATA LINE
BATTERY
IGNITION SWITCH ON OR START
10A 20
10A 19
10A 14
FUSE BLOCK (J/B) M4 , E101
REFER TO PG-POWER.
8C
8A
5A
R/Y
R/W
G/Y
G/Y
G/Y
43
41
42
R/Y
3
1
DEPRESSED
DEPRESSED
RELEASED
RELEASED
STOP LAMP SWITCH E124
4
2
A/T CHECK
COMBINATION METER M19 , M20
UNIFIED METER CONTROL UNIT
16
28
27
P/L
P/L
L
R
E108
62G
M15
P/L
24H
M72
F102
25H
L
R
L
R
TO LAN-CAN
L
R
6
7
CAN-H
CAN-L
TCM (TRANSMISSION CONTROL MODULE)
F103
M19 BR
M20 W
E124 W
F103 W
H.S.
REFER TO THE FOLLOWING.
E108 , F102 -SUPER MULTIPLE JUNCTION (SMJ)
M4 , E101 -FUSE BLOCK-JUNCTION BOX (J/B)
TCWM0162E

TCM terminal and Data are reference value. Measured between each terminals 5, 14, 24 and 46 (TCM ground).

Terminal No.	Wire color	Item	Condition		Data (Approx.)
6	L	CAN-H	–	–	–
7	R	CAN-L	–	–	–
23	LG	K-line (CONSULT-II signal)	The terminal is connected to the Data link connector for CONSULT-II.		
41	R	BACK-UP LAMP relay	IGN ON	Selector lever in “R” position.	0V
				Selector lever in other position.	Battery voltage

A/T CHECK Indicator Lamp Does Not Come On

ACS002H8

SYMPTOM:

A/T CHECK indicator lamp does not come on for about 2 seconds when turning ignition switch to “ON”.

DIAGNOSTIC PROCEDURE

1. CHECK CAN COMMUNICATION LINE

Execute the self-diagnosis.CAN communication indicated in the results?

Do the self-diagnosis results indicate CAN communication?

YES >> Check the CAN communication line. Refer to AT-104, "DTC U1000 CAN COMMUNICATION LINE" .

NO >> GO TO 2.

2. CHECK TCM POWER SOURCE

1. Turn ignition switch ON. (Do not start engine.)
2. Check voltage between TCM connector terminals and ground. Refer to AT-139, "Wiring Diagram — AT — POWER" .

Item	Connector No.	Terminal No. (Wire color)	Voltage
TCM	F103	9 (R/W) - Ground	Battery voltage
	F104	33 (Y/R) - Ground	
		42 (Y/R) - Ground	

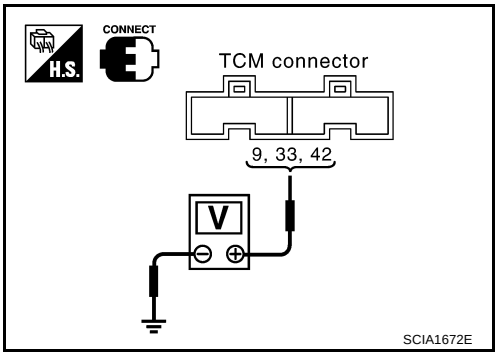

3. Turn ignition switch OFF.
4. Check voltage between TCM connector terminals and ground. Refer to AT-139, "Wiring Diagram — AT — POWER" .

Item	Connector No.	Terminal No. (Wire color)	Voltage
TCM	F103	9 (R/W) - Ground	Battery voltage
	F104	33 (Y/R) - Ground	0V
		42 (Y/R) - Ground	

OK or NG

OK >> GO TO 4.

NG >> GO TO 3.

3. DETECT MALFUNCTIONING ITEM

Check the following items:

- Harness for short or open between battery and TCM terminal 9
- Harness for short or open between ignition switch and TCM terminals 2,3,33 and 42
- 15A fuse [No.34, located in the fuse and fusible link block (J/B)] and 10A fuse (No.71, located in the IPDM E/R)
- Ignition switch; Refer to PG-4, "POWER SUPPLY ROUTING CIRCUIT" .
- A/T PV IGN relay; Refer to AT-143, "Component Inspection" .
- ECM realy; Refer to EC-129, "POWER SUPPLY AND GROUND CIRCUIT" .
- Harness for short or open between IPDM E/R terminal 33 and A/T PV IGN relay terminal 2
- Harness for short or open between A/T PV IGN relay terminal 1 and ground.

OK or NG

OK >> GO TO 4.
NG >> Repair or replace damaged parts.

4. CHECK TCM GROUND CIRCUIT

1. Turn ignition switch to OFF.
2. Disconnect the TCM connector.
3. Check continuity between terminals 5 (B), 14 (B), 24 (B), 46 (B) and ground. Refer to AT-139, "Wiring Diagram — AT — POWER" .
4. If OK, check the harness for short-circuit to ground or the power source.

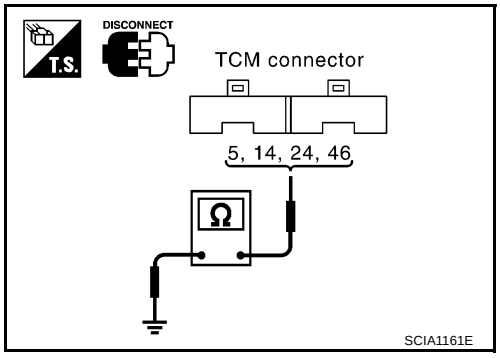

OK or NG

OK >> GO TO 5.
NG >> Repair the short-circuit(s) in the harness or connector to ground or the power source.

5. CHECK A/T CHECK INDICATOR LAMP CIRCUIT

1. Turn ignition switch to OFF.
2. Check the combination meter.
   Refer to DI-4, "COMBINATION METERS" .

OK or NG

OK >> GO TO 6.
NG >> Replace the combination meter. Refer to DI-18, "Removal and Installation for Combination Meter" .

6. CHECK SYMPTOM

Check again. Refer to AT-55, "Check Before Engine is Started" .

OK or NG

OK >> **INSPECTION END**
NG >> GO TO 7.

7. PERFORM TCM INSPECTION

1. Perform TCM input/output signal inspection. Refer to AT-88, "TCM Input/Output Signal Reference Values" .
2. If NG, recheck TCM pin terminals for damage or loose connection with harness connector.

OK or NG

OK >> **INSPECTION END**
NG >> Repair or replace damaged parts.

Engine Cannot Be Started In “P” or “N” Position

ACS002H9

SYMPTOM:

- **Engine cannot be started with selector lever in “P” or “N” position.**
- **Engine can be started with selector lever in “D”or “R” position.**

DIAGNOSTIC PROCEDURE

1. CHECK PNP SWITCH CIRCUIT

Execute self-diagnosis.

Do the self-diagnosis results indicate PNP switch?

YES >> Check the malfunctioning system. Refer to AT-111, "DTC P0705 PARK/NEUTRAL POSITION SWITCH" .
NO >> GO TO 2.

2. CHECK CONTROL LINKAGE

Check the control linkage.

- Refer to AT-290, "Checking of A/T Position" .

OK or NG

OK >> GO TO 3.
NG >> Adjust control linkage. Refer to AT-290, "Adjustment of A/T Position" .

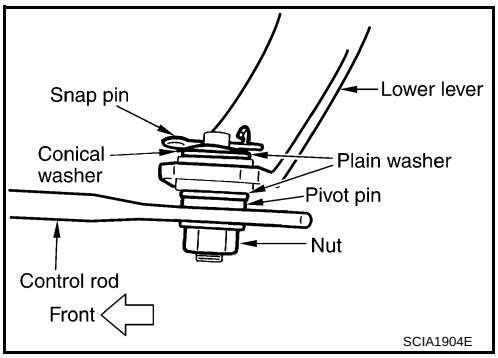

3. CHECK STARTING SYSTEM

Check starting system. Refer to SC-10, "STARTING SYSTEM" .

OK or NG

OK >> **INSPECTION END**
NG >> Repair or replace damaged parts.

In “P” Position, Vehicle Moves When Pushed

ACS002HA

SYMPTOM:

Even though the selector lever is set in the “P” position, the parking mechanism is not actuated, allowing the vehicle to be moved when it is pushed.

DIAGNOSTIC PROCEDURE

1. CHECK PNP SWITCH CIRCUIT

Execute self-diagnosis.

Do the self-diagnosis results indicate PNP switch?

YES >> Check the malfunctioning system. Refer to AT-111, "DTC P0705 PARK/NEUTRAL POSITION SWITCH" .

NO >> GO TO 2.

2. CHECK CONTROL LINKAGE

Check the control linkage.

- Refer to AT-290, "Checking of A/T Position" .

OK or NG

OK >> GO TO 3.

NG >> Adjust control linkage. Refer to AT-290, "Adjustment of A/T Position" .

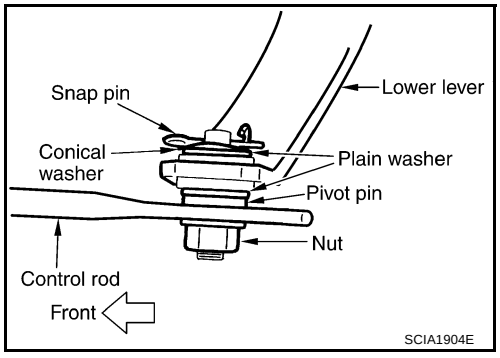

3. CHECK PARKING COMPONENTS

Check parking components. Refer to AT-309, "Parking Components" .

OK or NG

OK >> **INSPECTION END**

NG >> Repair or replace damaged parts.

In “N” Position, Vehicle Moves

ACS004J0

SYMPTOM:

Vehicle moves forward or backward when selecting “N” position.

DIAGNOSTIC PROCEDURE

1. CHECK PNP SWITCH CIRCUIT

Execute self-diagnosis.

Do the self-diagnostic results indicate PNP switch?

YES >> Check the malfunctioning system. Refer to AT-111, "DTC P0705 PARK/NEUTRAL POSITION SWITCH" .

NO >> GO TO 2.

2. CHECK CONTROL LINKAGE

Check the control linkage.

- Refer to AT-290, "Checking of A/T Position" .

OK or NG

OK >> GO TO 3.

NG >> Adjust control linkage. Refer to AT-290, "Adjustment of A/T Position" .

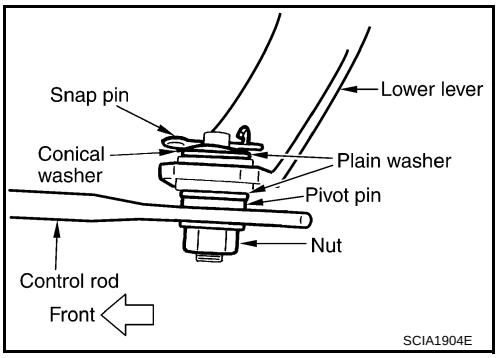

3. CHECK A/T FLUID LEVEL

Check A/T fluid level. Refer to AT-13, "Checking A/T Fluid" .

OK or NG

OK >> GO TO 4.

NG >> Refill ATF.

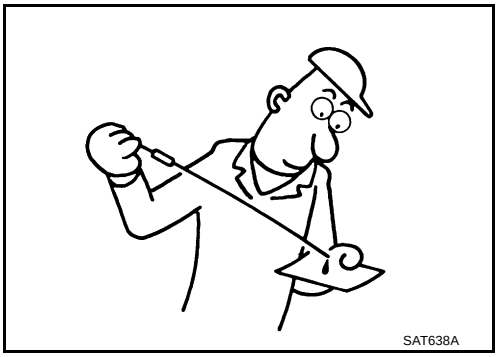

4. CHECK A/T FLUID CONDITION

1. Remove oil pan. Refer to AT-301, "Control Valve Assembly" .
2. Check A/T fluid condition. Refer to AT-51, "Fluid Condition Check" .

OK or NG

OK >> GO TO 5.

NG >> Check the malfunction items. If any items are damaged, repair or replace damaged parts. Refer to AT-62, "Symptom Chart" (Symptom No.67).

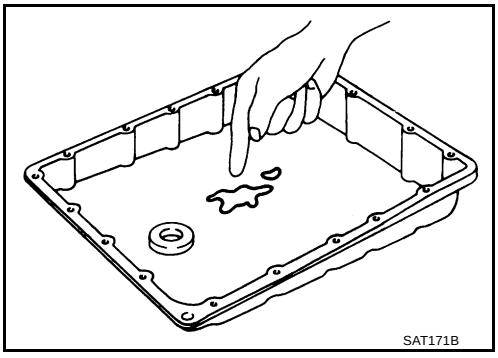

5. CHECK SYMPTOM

Check again. Refer to AT-55, "Check at Idle" .

OK or NG

OK >> **INSPECTION END**
NG >> GO TO 6.

6. PERFORM TCM INSPECTION

1. Perform TCM input/output signal inspection. Refer to AT-88, "TCM Input/Output Signal Reference Values" .
2. If NG, recheck TCM pin terminals for damage or loose connection with harness connector.

OK or NG

OK >> **INSPECTION END**
NG >> Repair or replace damaged parts.

Large Shock (“N” to “D” Position)

ACS004J1

SYMPTOM:

A noticeable shock occurs when the selector lever is shifted from the “N” to “D” position.

DIAGNOSTIC PROCEDURE

1. CHECK SELF-DIAGNOSTIC RESULTS

Execute self-diagnosis.

Do the self-diagnostic results indicate A/T fluid temperature sensor, engine speed signal, accelerator pedal position sensor, ATF pressure switch 1, front brake solenoid valve, CAN communication line?

YES >> Check the malfunctioning system. Refer to AT-152, "DTC P1710 A/T FLUID TEMPERATURE SENSOR CIRCUIT" , AT-121, "DTC P0725 ENGINE SPEED SIGNAL" ., AT-150, "DTC P1705 THROTTLE POSITION SENSOR" , AT-227, "DTC P1841 ATF PRESSURE SWITCH 1" , AT-185, "DTC P1757 FRONT BRAKE SOLENOID VALVE" , AT-104, "DTC U1000 CAN COMMUNICATION LINE" .
NO >> GO TO 2.

2. ENGINE IDLE SPEED

Check the engine idle speed. Refer to EC-30, "Idle Speed and Ignition Timing Check" .

OK or NG

OK >> GO TO 3.
NG >> Repair.

3. CHECK CONTROL LINKAGE

Check the control linkage.

- Refer to AT-290, "Checking of A/T Position" .

OK or NG

OK >> GO TO 4.
NG >> Adjust control linkage. Refer to AT-290, "Adjustment of A/T Position" .

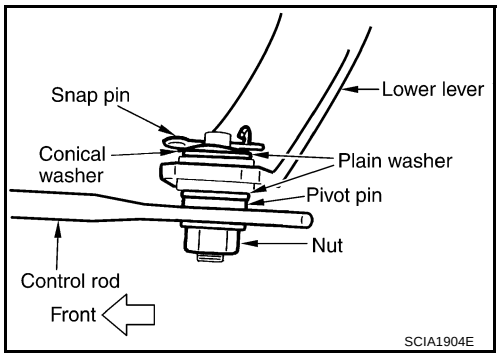

4. CHECK A/T FLUID LEVEL

Check the A/T fluid level. Refer to AT-13, "Checking A/T Fluid" .

OK or NG

OK >> GO TO 5.
NG >> Refill ATF.

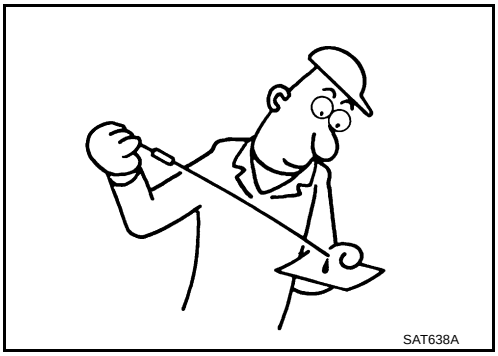

5. CHECK LINE PRESSURE

Check line pressure at idle with selector lever in “D” position. Refer to AT-52, "LINE PRESSURE TEST" .

OK or NG

OK >> GO TO 8.
NG - 1 >> Line pressure high: GO TO 6.
NG - 2 >> Line pressure low: GO TO 7.

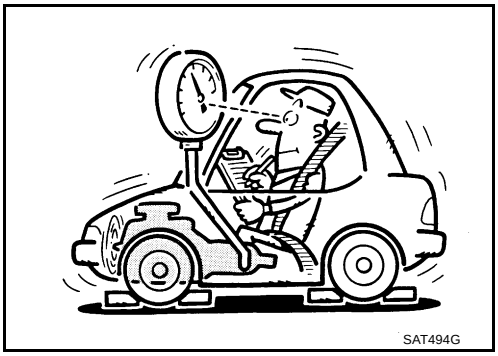

6. DETECT MALFUNCTIONING ITEM

1. Control valve assembly. Refer to AT-301, "Control Valve Assembly" .
2. Disassemble A/T. Refer to AT-327, "DISASSEMBLY" .
3. Check the following items:

– Oil pump assembly. Refer to AT-341, "Oil Pump" .

OK or NG

OK >> GO TO 8.
NG >> Repair or replace damaged parts.

7. DETECT MALFUNCTIONING ITEM

1. Control valve assembly. Refer to AT-301, "Control Valve Assembly" .
2. Disassemble A/T. Refer to AT-327, "DISASSEMBLY" .
3. Check the following items:

– Oil pump assembly. Refer to AT-341, "Oil Pump" .
– Power train system. Refer to AT-327, "DISASSEMBLY" .
– Transmission case. Refer to AT-327, "DISASSEMBLY" .

OK or NG

OK >> GO TO 8.
NG >> Repair or replace damaged parts.

8. CHECK A/T FLUID CONDITION

1. Remove oil pan. Refer to AT-301, "Control Valve Assembly" .
2. Check A/T fluid condition. Refer to AT-51, "Fluid Condition Check" .

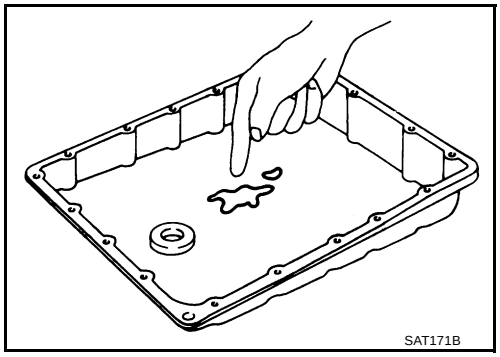

OK or NG

OK >> GO TO 10.
NG >> GO TO 9.

9. DETECT MALFUNCTIONING ITEM

- Check the malfunction items. If any items are damaged, repair or replace damaged parts. Refer to AT-62, "Symptom Chart" (Symptom No.1).

OK or NG

OK >> GO TO 10.
NG >> Repair or replace damaged parts.

10. CHECK SYMPTOM

Check again. Refer to AT-55, "Check at Idle" .

OK or NG

OK >> **INSPECTION END**
NG >> GO TO 11.

11. PERFORM TCM INSPECTION

1. Perform TCM input/output signal inspection. Refer to AT-88, "TCM Input/Output Signal Reference Values" .
2. If NG, recheck TCM pin terminals for damage or loose connection with harness connector.

OK or NG

OK >> **INSPECTION END**
NG >> Repair or replace damaged parts.

Vehicle Does Not Creep Backward In “R” Position

ACS004J2

SYMPTOM:

The vehicle does not creep in the “R” position. Or an extreme lack of acceleration is observed.

DIAGNOSTIC PROCEDURE

1. CHECK SELF-DIAGNOSTIC RESULTS

Execute self-diagnosis.

Do the self-diagnostic results indicate accelerator pedal position sensor, ATF pressure switch 6, high and low reverse clutch solenoid valve, CAN communication line, PNP switch?

YES >> Check the malfunctioning system. Refer to AT-150, "DTC P1705 THROTTLE POSITION SENSOR" , AT-239, "DTC P1846 ATF PRESSURE SWITCH 6" , AT-204, "DTC P1767 HIGH AND LOW REVERSE CLUTCH SOLENOID VALVE" , AT-104, "DTC U1000 CAN COMMUNICATION LINE" , AT-111, "DTC P0705 PARK/NEUTRAL POSITION SWITCH" .

NO >> GO TO 2.

2. CHECK CONTROL LINKAGE

Check the control linkage.

- Refer to AT-290, "Checking of A/T Position" .

OK or NG

OK >> GO TO 3.

NG >> Adjust control linkage. Refer to AT-290, "Adjustment of A/T Position" .

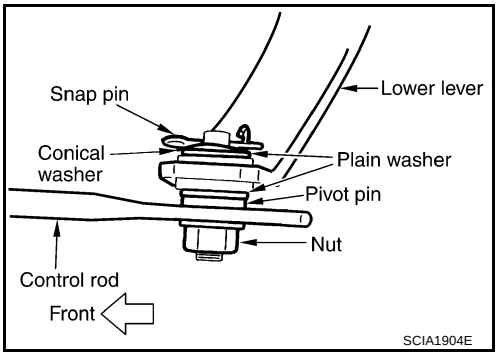

3. CHECK A/T FLUID LEVEL

Check A/T fluid level. Refer to AT-13, "Checking A/T Fluid" .

OK or NG

OK >> GO TO 4.

NG >> Refill ATF.

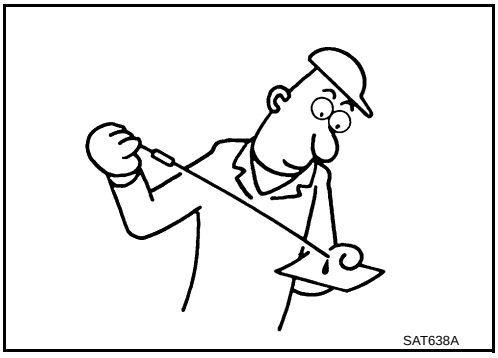

4. CHECK STALL TEST

Check stall revolution with selector lever in “M” and “R” positions.
Refer to AT-51, "STALL TEST" .

OK or NG

OK >> GO TO 5.

OK in “M” position, NG in “R” position>>1.Disassemble A/T. Refer to AT-327, "DISASSEMBLY" .

2. Check the following items. If any items are damaged, repair or replace damaged parts.

– Reverse brake

NG in both “M” and “R” positions>>GO TO 7.

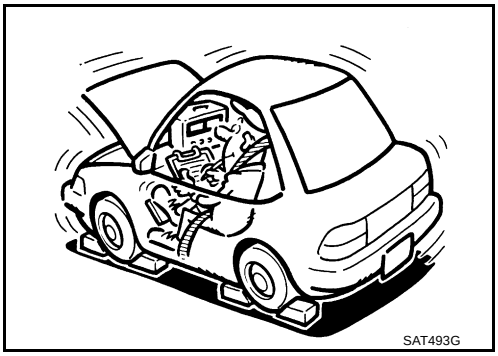

5. CHECK LINE PRESSURE

Check the line pressure with the engine idling. Refer to AT-52, "LINE PRESSURE TEST" .

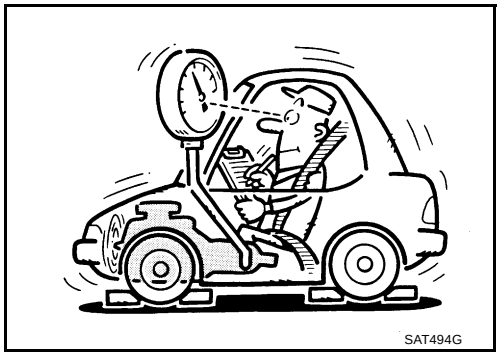

OK or NG

OK >> GO TO 8.
NG - 1 >> Line pressure high. GO TO 6.
NG - 2 >> Line pressure low. GO TO 7.

6. DETECT MALFUNCTIONING ITEM

1. Control valve assembly. Refer to AT-301, "Control Valve Assembly" .
2. Disassemble A/T. Refer to AT-327, "DISASSEMBLY" .
3. Check the following items:

– Oil pump assembly. Refer to AT-341, "Oil Pump" .

OK or NG

OK >> GO TO 8.
NG >> Repair or replace damaged parts.

7. DETECT MALFUNCTIONING ITEM

1. Control valve assembly. Refer to AT-301, "Control Valve Assembly" .
2. Disassemble A/T. Refer to AT-327, "DISASSEMBLY" .
3. Check the following items:

– Oil pump assembly. Refer to AT-341, "Oil Pump" .
– Power train system. Refer to AT-327, "DISASSEMBLY" .
– Transmission case. Refer to AT-327, "DISASSEMBLY" .

OK or NG

OK >> GO TO 8.
NG >> Repair or replace damaged parts.

8. CHECK A/T FLUID CONDITION

1. Remove oil pan. Refer to AT-301, "Control Valve Assembly" .
2. Check A/T fluid condition. Refer to AT-51, "Fluid Condition Check" .

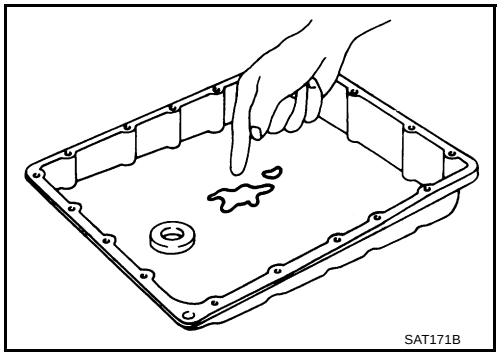

OK or NG

OK >> GO TO 9.
NG >> GO TO 12.

9. DETECT MALFUNCTIONING ITEM

- Check the malfunction items. If any items are damaged, repair or replace damaged parts. Refer to AT-62, "Symptom Chart" (Symptom No.43).

OK or NG

OK >> GO TO 10.
NG >> Repair or replace damaged parts.

10. CHECK SYMPTOM

Check again. Refer to AT-55, "Check at Idle" .

OK or NG

OK >> **INSPECTION END**
NG >> GO TO 11.

11. PERFORM TCM INSPECTION

1. Perform TCM input/output signal inspection. Refer to AT-88, "TCM Input/Output Signal Reference Values" .
2. If NG, recheck TCM pin terminals for damage or loose connection with harness connector.

OK or NG

OK >> **INSPECTION END**
NG >> Repair or replace damaged parts.

12. DETECT MALFUNCTIONING ITEM

- Check the malfunction items. If any items are damaged, repair or replace damaged parts. Refer to AT-62, "Symptom Chart" (Symptom No.43).

OK or NG

OK >> GO TO 10.
NG >> Repair or replace damaged parts.

Vehicle Does Not Creep Forward In “D” Position

ACS004J3

SYMPTOM:

Vehicle does not creep forward when selecting “D” position.

DIAGNOSTIC PROCEDURE

1. CHECK SELF-DIAGNOSTIC RESULTS

Execute self-diagnosis.

Do the self-diagnostic results indicate accelerator pedal position sensor, CAN communication line, PNP switch?

YES >> Check the malfunctioning system. Refer to AT-150, "DTC P1705 THROTTLE POSITION SENSOR" , AT-104, "DTC U1000 CAN COMMUNICATION LINE" , AT-111, "DTC P0705 PARK/NEUTRAL POSITION SWITCH" .

NO >> GO TO 2.

2. CHECK CONTROL LINKAGE

Check the control linkage.

- Refer to AT-290, "Checking of A/T Position" .

OK or NG

OK >> GO TO 3.

NG >> Adjust control linkage. Refer to AT-290, "Adjustment of A/T Position" .

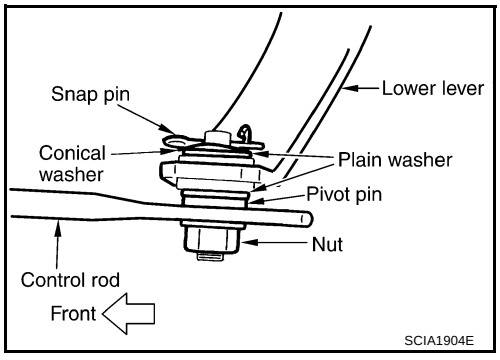

3. CHECK A/T FLUID LEVEL

Check A/T fluid level. Refer to AT-13, "Checking A/T Fluid" .

OK or NG

OK >> GO TO 4.

NG >> Refill ATF.

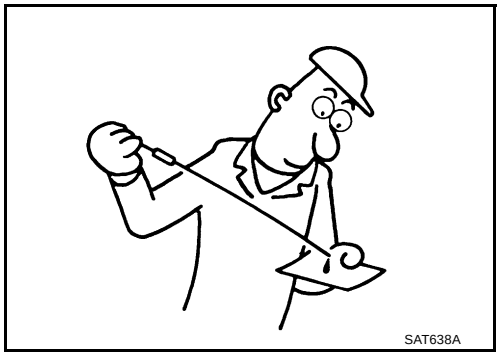

4. CHECK STALL TEST

Check stall revolution with selector lever in “D” position. Refer to AT-51, "STALL TEST" .

OK or NG

OK >> GO TO 5.

NG >> GO TO 7.

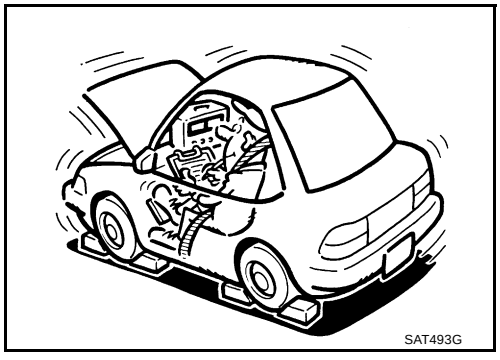

5. CHECK LINE PRESSURE

Check line pressure at idle with selector lever in “D” position. Refer to AT-52, "LINE PRESSURE TEST" .

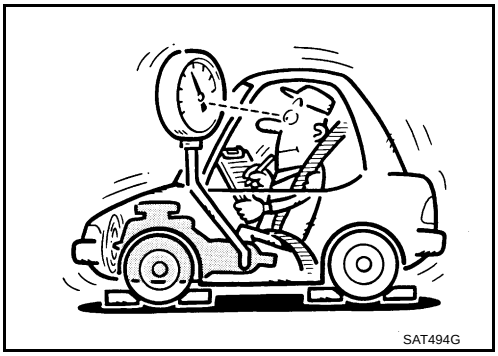

OK or NG

OK >> GO TO 8.
NG - 1 >> Line pressure high. GO TO 6.
NG - 2 >> Line pressure low. GO TO 7.

6. DETECT MALFUNCTIONING ITEM

1. Control valve assembly. Refer to AT-301, "Control Valve Assembly" .
2. Disassemble A/T. Refer to AT-327, "DISASSEMBLY" .
3. Check the following items:

– Oil pump assembly. Refer to AT-341, "Oil Pump" .

OK or NG

OK >> GO TO 8.
NG >> Repair or replace damaged parts.

7. DETECT MALFUNCTIONING ITEM

1. Control valve assembly. Refer to AT-301, "Control Valve Assembly" .
2. Disassemble A/T. Refer to AT-327, "DISASSEMBLY" .
3. Check the following items:

– Oil pump assembly. Refer to AT-341, "Oil Pump" .
– Power train system. Refer to AT-327, "DISASSEMBLY" .
– Transmission case. Refer to AT-327, "DISASSEMBLY" .

OK or NG

OK >> GO TO 8.
NG >> Repair or replace damaged parts.

8. CHECK A/T FLUID CONDITION

1. Remove oil pan. Refer to AT-301, "Control Valve Assembly" .
2. Check A/T fluid condition. Refer to AT-51, "Fluid Condition Check" .

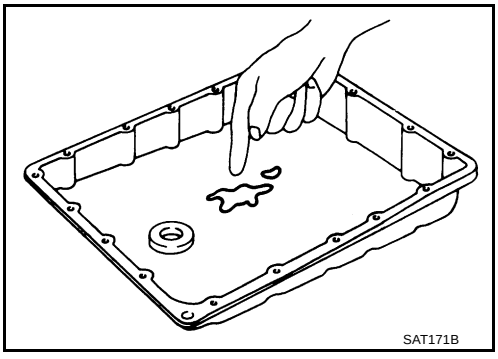

OK or NG

OK >> GO TO 9.
NG >> GO TO 12.

9. DETECT MALFUNCTIONING ITEM

- Check the malfunction items. If any items are damaged, repair or replace damaged parts. Refer to AT-62, "Symptom Chart" (Symptom No.43).

OK or NG

OK >> GO TO 10.
NG >> Repair or replace damaged parts.

10. CHECK SYMPTOM

Check again. Refer to AT-55, "Check at Idle" .

OK or NG

OK >> **INSPECTION END**
NG >> GO TO 11.

11. PERFORM TCM INSPECTION

1. Perform TCM input/output signal inspection. Refer to AT-88, "TCM Input/Output Signal Reference Values" .
2. If NG, recheck TCM pin terminals for damage or loose connection with harness connector.

OK or NG

OK >> **INSPECTION END**
NG >> Repair or replace damaged parts.

12. DETECT MALFUNCTIONING ITEM

- Check the malfunction items. If any items are damaged, repair or replace damaged parts. Refer to AT-62, "Symptom Chart" (Symptom No.43).

OK or NG

OK >> GO TO 10.
NG >> Repair or replace damaged parts.

Vehicle Cannot Be Started From D1

ACS004J4

SYMPTOM:

Vehicle cannot be started from D1 on cruise test - Part 1.

DIAGNOSTIC PROCEDURE

1. CONFIRM THE SYMPTOM

Check if vehicle creeps in “R” position.

OK or NG

OK >> GO TO 2.
NG >> Refer to AT-255, "Vehicle Does Not Creep Backward In “R” Position" .

2. CHECK SELF-DIAGNOSTIC RESULTS

Execute self-diagnosis.

Is any malfunction detected by self-diagnostic results?

YES >> Check the malfunctioning system.
NO >> GO TO 3.

3. CHECK ACCELERATOR POSITION (APP) SENSOR

Check accelerator pedal position (APP) sensor. Refer to AT-150, "DTC P1705 THROTTLE POSITION SENSOR"

OK or NG

OK >> GO TO 4.
NG >> Repair or replace accelerator pedal position (APP) sensor.

4. CHECK A/T FLUID LEVEL

Check A/T fluid level. Refer to AT-13, "Checking A/T Fluid" .

OK or NG

OK >> GO TO 5.
NG >> Refill ATF.

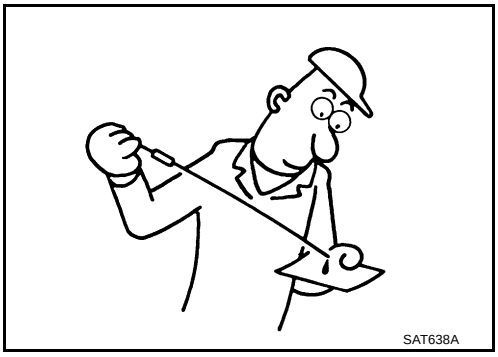

5. CHECK LINE PRESSURE

Check line pressure at the engine stall point. Refer to AT-52, "LINE PRESSURE TEST" .

OK or NG

OK >> GO TO 8.
NG - 1 >> Line pressure high. GO TO 6.
NG - 2 >> Line pressure low. GO TO 7.

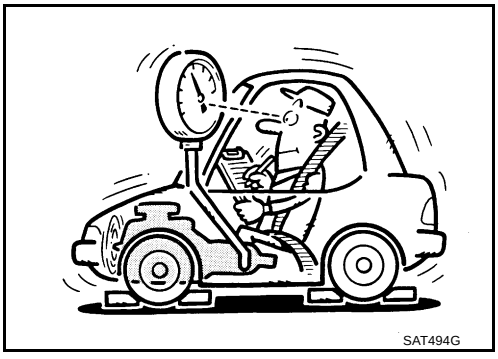

6. DETECT MALFUNCTIONING ITEM

1. Control valve assembly. Refer to AT-301, "Control Valve Assembly" .
2. Disassemble A/T. Refer to AT-327, "DISASSEMBLY" .
3. Check the following items:

– Oil pump assembly. Refer to AT-341, "Oil Pump" .

OK or NG

OK >> GO TO 8.
NG >> Repair or replace damaged parts.

7. DETECT MALFUNCTIONING ITEM

1. Control valve assembly. Refer to AT-301, "Control Valve Assembly" .
2. Disassemble A/T. Refer to AT-327, "DISASSEMBLY" .
3. Check the following items:

– Oil pump assembly. Refer to AT-341, "Oil Pump" .
– Power train system. Refer to AT-327, "DISASSEMBLY" .
– Transmission case. Refer to AT-327, "DISASSEMBLY" .

OK or NG

OK >> GO TO 8.
NG >> Repair or replace damaged parts.

8. CHECK A/T FLUID CONDITION

1. Remove oil pan. Refer to AT-301, "Control Valve Assembly" .
2. Check A/T fluid condition. Refer to AT-51, "Fluid Condition Check" .

OK or NG

OK >> GO TO 9.
NG >> GO TO 12.

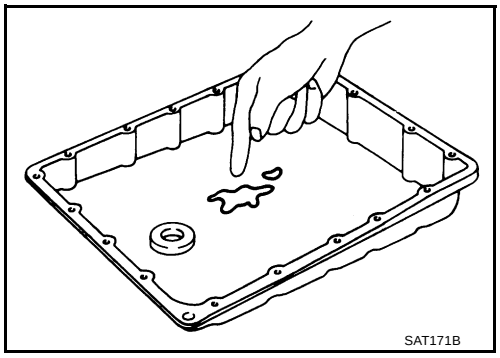

9. DETECT MALFUNCTIONING ITEM

- Check the malfunction items. If any items are damaged, repair or replace damaged parts. Refer to AT-62, "Symptom Chart" (Symptom No.23).

OK or NG

OK >> GO TO 10.
NG >> Repair or replace damaged parts.

10. CHECK SYMPTOM

Check again. Refer to AT-56, "Cruise Test - Part 1" , AT-58, "Cruise Test - Part 2" .

OK or NG

OK >> **INSPECTION END**
NG >> GO TO 11.

11. PERFORM TCM INSPECTION

1. Perform TCM input/output signal inspection. Refer to AT-88, "TCM Input/Output Signal Reference Values" .
2. If NG, recheck TCM pin terminals for damage or loose connection with harness connector.

OK or NG

OK >> **INSPECTION END**
NG >> Repair or replace damaged parts.

12. DETECT MALFUNCTIONING ITEM

- Check the malfunction items. If any items are damaged, repair or replace damaged parts. Refer to AT-62, "Symptom Chart" (Symptom No.23).

OK or NG

OK >> GO TO 10.
NG >> Repair or replace damaged parts.

A/T Does Not Shift: $D_1 \rightarrow D_2$

ACS004J5

SYMPTOM:

The vehicle does not shift-up from the D_1 to D_2 gear at the specified speed.

DIAGNOSTIC PROCEDURE

1. CONFIRM THE SYMPTOM

Check if vehicle creeps forward in “D” position” and vehicle can be started from D_1.

OK or NG

OK >> GO TO 2.
NG >> Refer to AT-258, "Vehicle Does Not Creep Forward In “D” Position" , AT-261, "Vehicle Cannot Be Started From D_1" .

2. CHECK SELF-DIAGNOSTIC RESULTS

Execute self-diagnosis.

Do the self-diagnostic results indicate ATF pressure switch 5, direct clutch solenoid valve, accelerator pedal position sensor, vehicle speed sensor A/T (revolution sensor) and vehicle speed sensor MTR?

YES >> Check the malfunctioning system. Refer to AT-235, "DTC P1845 ATF PRESSURE SWITCH 5" , AT-195, "DTC P1762 DIRECT CLUTCH SOLENOID VALVE" , AT-150, "DTC P1705 THROTTLE POSITION SENSOR" , AT-116, "DTC P0720 VEHICLE SPEED SENSOR A/T (REVOLUTION SENSOR)" , AT-163, "DTC P1721 VEHICLE SPEED SENSOR MTR" .
NO >> GO TO 3.

3. CHECK A/T FLUID LEVEL

Check A/T fluid level. Refer to AT-13, "Checking A/T Fluid" .

OK or NG

OK >> GO TO 4.
NG >> Refill ATF.

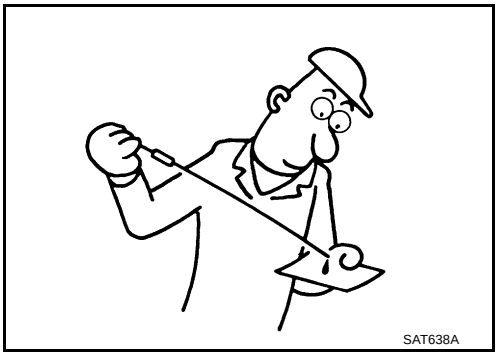

4. CHECK LINE PRESSURE

Check line pressure at the engine stall point. Refer to AT-52, "LINE PRESSURE TEST" .

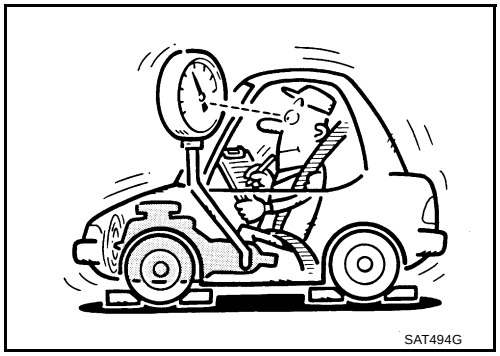

OK or NG

OK >> GO TO 7.
NG - 1 >> Line pressure high. GO TO 5.
NG - 2 >> Line pressure low. GO TO 6.

5. DETECT MALFUNCTIONING ITEM

1. Control valve assembly. Refer to AT-301, "Control Valve Assembly" .
2. Disassemble A/T. Refer to AT-327, "DISASSEMBLY" .
3. Check the following items:

– Oil pump assembly. Refer to AT-341, "Oil Pump" .

OK or NG

OK >> GO TO 7.
NG >> Repair or replace damaged parts.

6. DETECT MALFUNCTIONING ITEM

1. Control valve assembly. Refer to AT-301, "Control Valve Assembly" .
2. Disassemble A/T. Refer to AT-327, "DISASSEMBLY" .
3. Check the following items:

– Oil pump assembly. Refer to AT-341, "Oil Pump" .
– Power train system. Refer to AT-327, "DISASSEMBLY" .
– Transmission case. Refer to AT-327, "DISASSEMBLY" .

OK or NG

OK >> GO TO 7.
NG >> Repair or replace damaged parts.

7. CHECK A/T FLUID CONDITION

1. Remove oil pan. Refer to AT-301, "Control Valve Assembly" .
2. Check A/T fluid condition. Refer to AT-51, "Fluid Condition Check" .

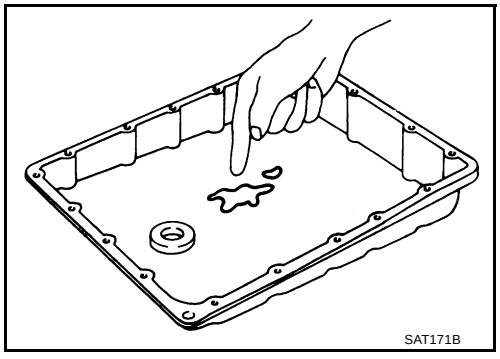

OK or NG

OK >> GO TO 8.
NG >> GO TO 11.

8. DETECT MALFUNCTIONING ITEM

- Check the malfunction items. If any items are damaged, repair or replace damaged parts. Refer to AT-62, "Symptom Chart" (Symptom No.10).

OK or NG

OK >> GO TO 9.
NG >> Repair or replace damaged parts.

9. CHECK SYMPTOM

Check again. Refer to AT-56, "Cruise Test - Part 1" , AT-58, "Cruise Test - Part 2" .

OK or NG

OK >> **INSPECTION END**
NG >> GO TO 10.

10. PERFORM TCM INSPECTION

1. Perform TCM input/output signal inspection. Refer to AT-88, "TCM Input/Output Signal Reference Values" .
2. If NG, recheck TCM pin terminals for damage or loose connection with harness connector.

OK or NG

OK >> **INSPECTION END**
NG >> Repair or replace damaged parts.

11. DETECT MALFUNCTIONING ITEM

- Check the malfunction items. If any items are damaged, repair or replace damaged parts. Refer to AT-62, "Symptom Chart" (Symptom No.10).

OK or NG

OK >> GO TO 9.
NG >> Repair or replace damaged parts.

A/T Does Not Shift: $D_2 \rightarrow D_3$

ACS004J6

SYMPTOM:

The vehicle does not shift-up from D_2 to D_3 gear at the specified speed.

DIAGNOSTIC PROCEDURE

1. CONFIRM THE SYMPTOM

Check if vehicle creeps forward in “D” position” and vehicle can be started from D_1.

OK or NG

OK >> GO TO 2.
NG >> Refer to AT-258, "Vehicle Does Not Creep Forward In “D” Position" ,AT-261, "Vehicle Cannot Be Started From D_1" .

2. CHECK SELF-DIAGNOSTIC RESULTS

Execute self-diagnosis.

Do the self-diagnostic results indicate ATF pressure switch 6, high and low reverse clutch solenoid valve, accelerator pedal position sensor, vehicle speed sensor A/T (revolution sensor) and vehicle speed sensor MTR?

YES >> Check the malfunctioning system. Refer to AT-239, "DTC P1846 ATF PRESSURE SWITCH 6" , AT-204, "DTC P1767 HIGH AND LOW REVERSE CLUTCH SOLENOID VALVE" , AT-150, "DTC P1705 THROTTLE POSITION SENSOR" , AT-116, "DTC P0720 VEHICLE SPEED SENSOR A/T (REVOLUTION SENSOR)" , AT-163, "DTC P1721 VEHICLE SPEED SENSOR MTR" .
NO >> GO TO 3.

3. CHECK A/T FLUID LEVEL

Check A/T fluid level. Refer to AT-13, "Checking A/T Fluid" .

OK or NG

OK >> GO TO 4.
NG >> Refill ATF.

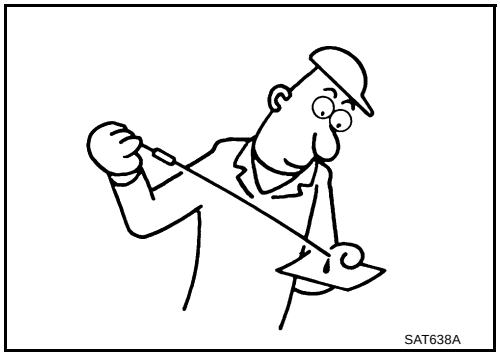

4. CHECK LINE PRESSURE

Check line pressure at the engine stall point. Refer to AT-52, "LINE PRESSURE TEST" .

OK or NG

OK >> GO TO 7.
NG - 1 >> Line pressure high. GO TO 5.
NG - 2 >> Line pressure low. GO TO 6.

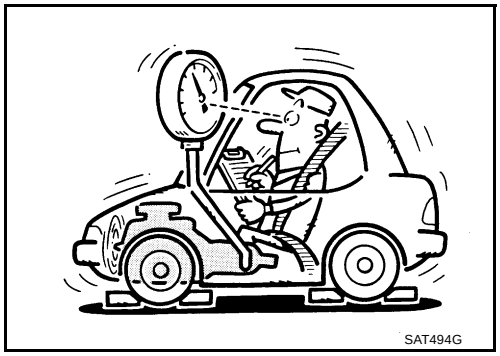

5. DETECT MALFUNCTIONING ITEM

1. Control valve assembly. Refer to AT-301, "Control Valve Assembly" .
2. Disassemble A/T. Refer to AT-327, "DISASSEMBLY" .
3. Check the following items:

– Oil pump assembly. Refer to AT-341, "Oil Pump" .

OK or NG

OK >> GO TO 7.
NG >> Repair or replace damaged parts.

6. DETECT MALFUNCTIONING ITEM

1. Control valve assembly. Refer to AT-301, "Control Valve Assembly" .
2. Disassemble A/T. Refer to AT-327, "DISASSEMBLY" .
3. Check the following items:

– Oil pump assembly. Refer to AT-341, "Oil Pump" .
– Power train system. Refer to AT-327, "DISASSEMBLY" .
– Transmission case. Refer to AT-327, "DISASSEMBLY" .

OK or NG

OK >> GO TO 7.
NG >> Repair or replace damaged parts.

7. CHECK A/T FLUID CONDITION

1. Remove oil pan. Refer to AT-301, "Control Valve Assembly" .
2. Check A/T fluid condition. Refer to AT-51, "Fluid Condition Check" .

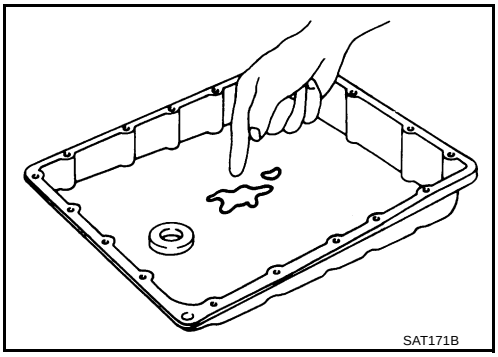

OK or NG

OK >> GO TO 8.
NG >> GO TO 11.

8. DETECT MALFUNCTIONING ITEM

- Check the malfunction items. If any items are damaged, repair or replace damaged parts. Refer to AT-62, "Symptom Chart" (Symptom No.11).

OK or NG

OK >> GO TO 9.
NG >> Repair or replace damaged parts.

9. CHECK SYMPTOM

Check again. Refer to AT-56, "Cruise Test - Part 1" , AT-58, "Cruise Test - Part 2" .

OK or NG

OK >> **INSPECTION END**
NG >> GO TO 10.

10. PERFORM TCM INSPECTION

1. Perform TCM input/output signal inspection. Refer to AT-88, "TCM Input/Output Signal Reference Values" .
2. If NG, recheck TCM pin terminals for damage or loose connection with harness connector.

OK or NG

OK >> **INSPECTION END**
NG >> Repair or replace damaged parts.

11. DETECT MALFUNCTIONING ITEM

- Check the malfunction items. If any items are damaged, repair or replace damaged parts. Refer to AT-62, "Symptom Chart" (Symptom No.11).

OK or NG

OK >> GO TO 9.
NG >> Repair or replace damaged parts.

A/T Does Not Shift: $D_3 \rightarrow D_4$

ACS004J7

SYMPTOM:

- **The vehicle does not shift-up from the D_3 to D_4 gear at the specified speed.**
- **The vehicle does not shift-up from the D_3 to D_4 gear unless A/T is warmed up.**

DIAGNOSTIC PROCEDURE

1. CONFIRM THE SYMPTOM

Check if vehicle creeps forward in “D” position” and vehicle can be started from D_1.

OK or NG

OK >> GO TO 2.
NG >> Refer to AT-258, "Vehicle Does Not Creep Forward In “D” Position" , AT-261, "Vehicle Cannot Be Started From D_1" .

2. CHECK SELF-DIAGNOSTIC RESULTS

Execute self-diagnosis.

Do the self-diagnostic results indicate ATF pressure switch 1, ATF pressure switch 3, front brake solenoid valve, input clutch solenoid valve, accelerator pedal position sensor, vehicle speed sensor A/T (revolution sensor) and vehicle speed sensor MTR?

YES >> Check the malfunctioning system. Refer to AT-227, "DTC P1841 ATF PRESSURE SWITCH 1" , AT-231, "DTC P1843 ATF PRESSURE SWITCH 3" , AT-176, "DTC P1752 INPUT CLUTCH SOLENOID VALVE" , AT-185, "DTC P1757 FRONT BRAKE SOLENOID VALVE" , AT-150, "DTC P1705 THROTTLE POSITION SENSOR" , AT-116, "DTC P0720 VEHICLE SPEED SENSOR A/T (REVOLUTION SENSOR)" , AT-163, "DTC P1721 VEHICLE SPEED SENSOR MTR" .
NO >> GO TO 3.

3. CHECK A/T FLUID LEVEL

Check A/T fluid level. Refer to AT-13, "Checking A/T Fluid" .

OK or NG

OK >> GO TO 4.
NG >> Refill ATF.

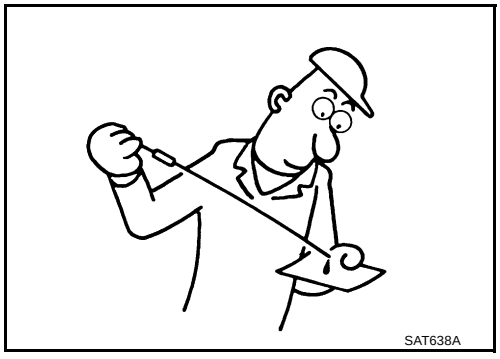

4. CHECK LINE PRESSURE

Check line pressure at the engine stall point. Refer to AT-52, "LINE PRESSURE TEST" .

OK or NG

OK >> GO TO 7.
NG - 1 >> Line pressure high. GO TO 5.
NG - 2 >> Line pressure low. GO TO 6.

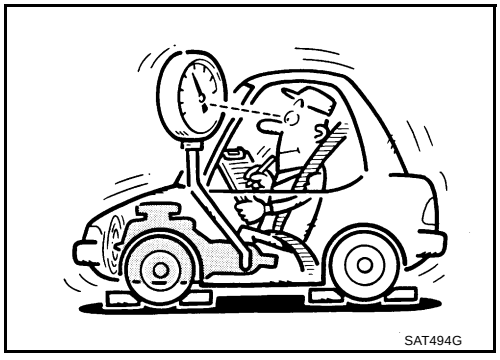

5. DETECT MALFUNCTIONING ITEM

1. Control valve assembly. Refer to AT-301, "Control Valve Assembly" .
2. Disassemble A/T. Refer to AT-327, "DISASSEMBLY" .
3. Check the following items:
- Oil pump assembly. Refer to AT-341, "Oil Pump" .

OK or NG

OK >> GO TO 7.
NG >> Repair or replace damaged parts.

6. DETECT MALFUNCTIONING ITEM

1. Control valve assembly. Refer to AT-301, "Control Valve Assembly" .
2. Disassemble A/T. Refer to AT-327, "DISASSEMBLY" .
3. Check the following items:
- Oil pump assembly. Refer to AT-341, "Oil Pump" .
- Power train system. Refer to AT-327, "DISASSEMBLY" .
- Transmission case. Refer to AT-327, "DISASSEMBLY" .

OK or NG

OK >> GO TO 7.
NG >> Repair or replace damaged parts.

7. CHECK A/T FLUID CONDITION

1. Remove oil pan. Refer to AT-301, "Control Valve Assembly" .
2. Check A/T fluid condition. Refer to AT-51, "Fluid Condition Check" .

OK or NG

OK >> GO TO 8.
NG >> GO TO 11.

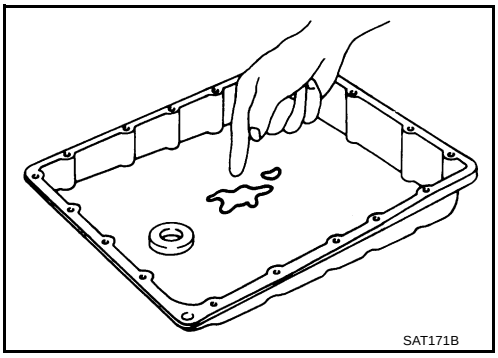

8. DETECT MALFUNCTIONING ITEM

- Check the malfunction items. If any items are damaged, repair or replace damaged parts. Refer to AT-62, "Symptom Chart" (Symptom No.12).

OK or NG

OK >> GO TO 9.
NG >> Repair or replace damaged parts.

9. CHECK SYMPTOM

Check again. Refer to AT-56, "Cruise Test - Part 1" , AT-58, "Cruise Test - Part 2" .

OK or NG

OK >> **INSPECTION END**
NG >> GO TO 10.

10. PERFORM TCM INSPECTION

1. Perform TCM input/output signal inspection. Refer to AT-88, "TCM Input/Output Signal Reference Values" .
2. If NG, recheck TCM pin terminals for damage or loose connection with harness connector.

OK or NG

OK >> **INSPECTION END**
NG >> Repair or replace damaged parts.

11. DETECT MALFUNCTIONING ITEM

- Check the malfunction items. If any items are damaged, repair or replace damaged parts. Refer to AT-62, "Symptom Chart" (Symptom No.12).

OK or NG

OK >> GO TO 9.
NG >> Repair or replace damaged parts.

A/T Does Not Shift: $D_4 \rightarrow D_5$

ACS004J8

SYMPTOM:

- **The vehicle does not shift-up from the D_4 to D_5 gear at the specified speed.**
- **The vehicle does not shift-up from the D_4 to D_5 gear unless A/T is warmed up.**

DIAGNOSTIC PROCEDURE

1. CONFIRM THE SYMPTOM

Check if vehicle creeps forward in “D” position” and vehicle can be started from D_1.

OK or NG

OK >> GO TO 2.
NG >> Refer to AT-258, "Vehicle Does Not Creep Forward In “D” Position" ,AT-261, "Vehicle Cannot Be Started From D_1" .

2. CHECK SELF-DIAGNOSTIC RESULTS

Execute self-diagnosis.

Do the self-diagnostic results indicate ATF pressure switch 1, ATF pressure switch 5, front brake solenoid valve, direct clutch solenoid valve, accelerator pedal position sensor, turbine revolution sensor, vehicle speed sensor A/T (revolution sensor) and vehicle speed sensor MTR?

YES >> Check the malfunctioning system. Refer to AT-227, "DTC P1841 ATF PRESSURE SWITCH 1" , AT-235, "DTC P1845 ATF PRESSURE SWITCH 5" , AT-185, "DTC P1757 FRONT BRAKE SOLENOID VALVE" , AT-195, "DTC P1762 DIRECT CLUTCH SOLENOID VALVE" , AT-150, "DTC P1705 THROTTLE POSITION SENSOR" , AT-158, "DTC P1716 TURBINE REVOLUTION SENSOR" , AT-116, "DTC P0720 VEHICLE SPEED SENSOR A/T (REVOLUTION SENSOR)" , AT-163, "DTC P1721 VEHICLE SPEED SENSOR MTR" .
NO >> GO TO 3.

3. CHECK A/T FLUID LEVEL

Check A/T fluid level. Refer to AT-13, "Checking A/T Fluid" .

OK or NG

OK >> GO TO 4.
NG >> Refill ATF.

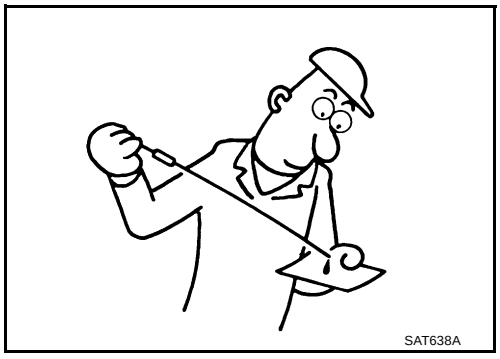

4. CHECK LINE PRESSURE

Check line pressure at the engine stall point. Refer to AT-52, "LINE PRESSURE TEST" .

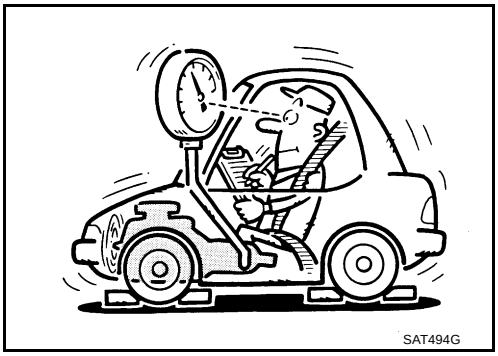

OK or NG

OK >> GO TO 7.
NG - 1 >> Line pressure high. GO TO 5.
NG - 2 >> Line pressure low. GO TO 6.

5. DETECT MALFUNCTIONING ITEM

1. Control valve assembly. Refer to AT-301, "Control Valve Assembly" .
2. Disassemble A/T. Refer to AT-327, "DISASSEMBLY" .
3. Check the following items:

– Oil pump assembly. Refer to AT-341, "Oil Pump" .

OK or NG

OK >> GO TO 7.
NG >> Repair or replace damaged parts.

6. DETECT MALFUNCTIONING ITEM

1. Control valve assembly. Refer to AT-301, "Control Valve Assembly" .
2. Disassemble A/T. Refer to AT-327, "DISASSEMBLY" .
3. Check the following items:

– Oil pump assembly. Refer to AT-341, "Oil Pump" .
– Power train system. Refer to AT-327, "DISASSEMBLY" .
– Transmission case. Refer to AT-327, "DISASSEMBLY" .

OK or NG

OK >> GO TO 7.
NG >> Repair or replace damaged parts.

7. CHECK A/T FLUID CONDITION

1. Remove oil pan. Refer to AT-301, "Control Valve Assembly" .
2. Check A/T fluid condition. Refer to AT-51, "Fluid Condition Check" .

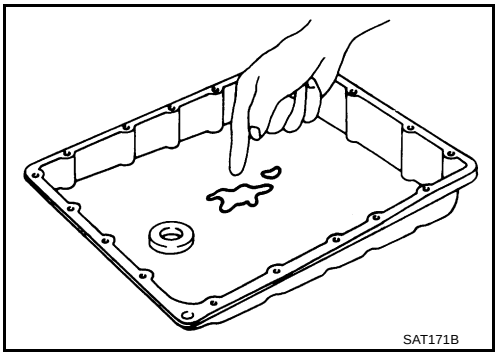

OK or NG

OK >> GO TO 8.
NG >> GO TO 11.

8. DETECT MALFUNCTIONING ITEM

- Check the malfunction items. If any items are damaged, repair or replace damaged parts. Refer to AT-62, "Symptom Chart" (Symptom No.13).

OK or NG

OK >> GO TO 9.
NG >> Repair or replace damaged parts.

9. CHECK SYMPTOM

Check again. Refer to AT-56, "Cruise Test - Part 1" , AT-58, "Cruise Test - Part 2" .

OK or NG

OK >> **INSPECTION END**
NG >> GO TO 10.

10. PERFORM TCM INSPECTION

1. Perform TCM input/output signal inspection. Refer to AT-88, "TCM Input/Output Signal Reference Values" .
2. If NG, recheck TCM pin terminals for damage or loose connection with harness connector.

OK or NG

OK >> **INSPECTION END**
NG >> Repair or replace damaged parts.

11. DETECT MALFUNCTIONING ITEM

- Check the malfunction items. If any items are damaged, repair or replace damaged parts. Refer to AT-62, "Symptom Chart" (Symptom No.13).

OK or NG

OK >> GO TO 9.
NG >> Repair or replace damaged parts.

A/T Does Not Perform Lock-up

ACS004J9

SYMPTOM:

A/T does not perform lock-up at the specified speed.

DIAGNOSTIC PROCEDURE

1. CHECK SELF-DIAGNOSTIC RESULTS

Execute self-diagnosis.

Do the self-diagnostic results indicate torque converter clutch solenoid valve, engine speed signal, turbine revolution sensor, accelerator pedal position sensor, CAN communication?

YES >> Check the malfunctioning system. Refer to AT-123, "DTC P0740 TORQUE CONVERTER CLUTCH SOLENOID VALVE" , AT-121, "DTC P0725 ENGINE SPEED SIGNAL" , AT-158, "DTC P1716 TURBINE REVOLUTION SENSOR" , AT-150, "DTC P1705 THROTTLE POSITION SENSOR" , AT-104, "DTC U1000 CAN COMMUNICATION LINE" .

NO >> GO TO 2.

2. CHECK A/T FLUID LEVEL

Check A/T fluid level. Refer to AT-13, "Checking A/T Fluid" .

OK or NG

OK >> GO TO 3.

NG >> Refill ATF.

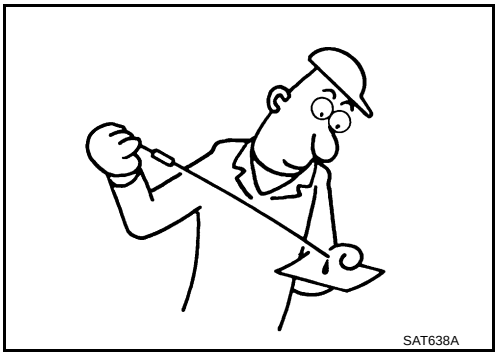

3. CHECK LINE PRESSURE

Check line pressure at the engine stall point. Refer to AT-52, "LINE PRESSURE TEST" .

OK or NG

OK >> GO TO 6.

NG - 1 >> Line pressure high. GO TO 4.

NG - 2 >> Line pressure low. GO TO 5.

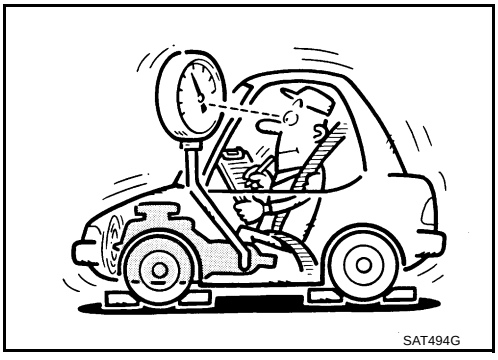

4. DETECT MALFUNCTIONING ITEM

1. Control valve assembly. Refer to AT-301, "Control Valve Assembly" .
2. Disassemble A/T. Refer to AT-327, "DISASSEMBLY" .
3. Check the following items:

– Oil pump assembly. Refer to AT-341, "Oil Pump" .

OK or NG

OK >> GO TO 7.

NG >> Repair or replace damaged parts.

5. DETECT MALFUNCTIONING ITEM

1. Control valve assembly. Refer to AT-301, "Control Valve Assembly" .
2. Disassemble A/T. Refer to AT-327, "DISASSEMBLY" .
3. Check the following items:

- Oil pump assembly. Refer to AT-341, "Oil Pump" .
- Power train system. Refer to AT-327, "DISASSEMBLY" .
- Transmission case. Refer to AT-327, "DISASSEMBLY" .

OK or NG

OK >> GO TO 7.
NG >> Repair or replace damaged parts.

6. CHECK A/T FLUID CONDITION

1. Remove oil pan. Refer to AT-301, "Control Valve Assembly" .
2. Check A/T fluid condition. Refer to AT-51, "Fluid Condition Check" .

OK or NG

OK >> GO TO 7.
NG >> GO TO 10.

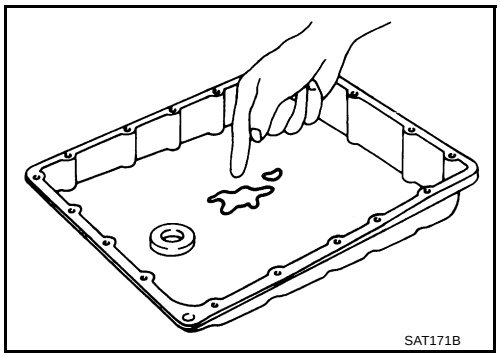

7. DETECT MALFUNCTIONING ITEM

- Check the malfunction items. If any items are damaged, repair or replace damaged parts. Refer to AT-62, "Symptom Chart" (Symptom No.24).

OK or NG

OK >> GO TO 8.
NG >> Repair or replace damaged parts.

8. CHECK SYMPTOM

Check again. Refer to AT-56, "Cruise Test - Part 1" .

OK or NG

OK >> **INSPECTION END**
NG >> GO TO 9.

9. PERFORM TCM INSPECTION

1. Perform TCM input/output signal inspection. Refer to AT-88, "TCM Input/Output Signal Reference Values" .
2. If NG, recheck TCM pin terminals for damage or loose connection with harness connector.

OK or NG

OK >> **INSPECTION END**
NG >> Repair or replace damaged parts.

10. DETECT MALFUNCTIONING ITEM

- Check the malfunction items. If any items are damaged, repair or replace damaged parts. Refer to AT-62, "Symptom Chart" (Symptom No.24).

OK or NG

OK >> GO TO 8.
NG >> Repair or replace damaged parts.

A/T Does Not Hold Lock-up Condition

ACS004JA

SYMPTOM:

The lock-up condition cannot be maintained for more than 30 seconds.

DIAGNOSTIC PROCEDURE

1. CHECK SELF-DIAGNOSTIC RESULTS

Execute self-diagnosis.

Do the self-diagnostic results indicate torque converter clutch solenoid valve, engine speed signal, turbine revolution sensor, CAN communication?

YES >> Check the malfunctioning system. Refer to AT-123, "DTC P0740 TORQUE CONVERTER CLUTCH SOLENOID VALVE" , AT-121, "DTC P0725 ENGINE SPEED SIGNAL" , AT-158, "DTC P1716 TURBINE REVOLUTION SENSOR" , AT-104, "DTC U1000 CAN COMMUNICATION LINE" .
NO >> GO TO 2.

2. CHECK A/T FLUID LEVEL

Check A/T fluid level. Refer to AT-13, "Checking A/T Fluid" .

OK or NG

OK >> GO TO 3.
NG >> Refill ATF.

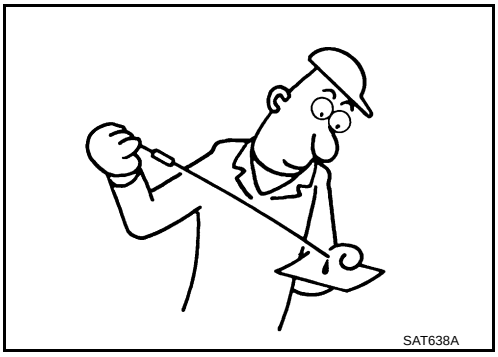

3. CHECK A/T FLUID CONDITION

1. Remove oil pan. Refer to AT-301, "Control Valve Assembly" .
2. Check A/T fluid condition. Refer to AT-51, "Fluid Condition Check" .

OK or NG

OK >> GO TO 4.
NG >> GO TO 7.

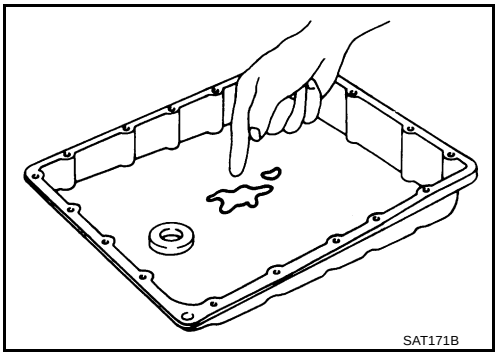

4. DETECT MALFUNCTIONING ITEM

- Check the malfunction items. If any items are damaged, repair or replace damaged parts. Refer to AT-62, "Symptom Chart" (Symptom No.25).

OK or NG

OK >> GO TO 5.
NG >> Repair or replace damaged parts.

5. CHECK SYMPTOM

Check again. Refer to AT-56, "Cruise Test - Part 1" .

OK or NG

OK >> **INSPECTION END**
NG >> GO TO 6.

6. PERFORM TCM INSPECTION

1. Perform TCM input/output signal inspection. Refer to AT-88, "TCM Input/Output Signal Reference Values" .
2. If NG, recheck TCM pin terminals for damage or loose connection with harness connector.

OK or NG

OK >> **INSPECTION END**
NG >> Repair or replace damaged parts.

7. DETECT MALFUNCTIONING ITEM

- Check the malfunction items. If any items are damaged, repair or replace damaged parts. Refer to AT-62, "Symptom Chart" (Symptom No.25).

OK or NG

OK >> GO TO 5.
NG >> Repair or replace damaged parts.

Lock-up Is Not Released

ACS004JB

SYMPTOM:

The lock-up condition cannot be cancelled even after releasing the accelerator pedal.

DIAGNOSTIC PROCEDURE

1. CHECK SELF-DIAGNOSTIC RESULTS

Execute self-diagnosis.

Do the self-diagnostic results indicate torque converter clutch solenoid valve, engine speed signal, turbine revolution sensor, CAN communication?

YES >> Check the malfunctioning system. Refer to AT-123, "DTC P0740 TORQUE CONVERTER CLUTCH SOLENOID VALVE" , AT-121, "DTC P0725 ENGINE SPEED SIGNAL" , AT-158, "DTC P1716 TURBINE REVOLUTION SENSOR" , AT-104, "DTC U1000 CAN COMMUNICATION LINE" .
NO >> GO TO 2.

2. CHECK SYMPTOM

Check again. Refer to AT-56, "Cruise Test - Part 1" .

OK or NG

OK >> **INSPECTION END**
NG >> GO TO 3.

3. PERFORM TCM INSPECTION

1. Perform TCM input/output signal inspection. Refer to AT-88, "TCM Input/Output Signal Reference Values" .
2. If NG, recheck TCM pin terminals for damage or loose connection with harness connector.

OK or NG

OK >> **INSPECTION END**
NG >> Repair or replace damaged parts.

Engine Speed Does Not Return To Idle

ACS004JC

SYMPTOM:

When a shift-down is performed, the engine speed does not smoothly return to the idling speed.

DIAGNOSTIC PROCEDURE

1. CHECK A/T FLUID LEVEL

Check A/T fluid level. Refer to AT-13, "Checking A/T Fluid" .

OK or NG

OK >> GO TO 2.
NG >> Refill ATF.

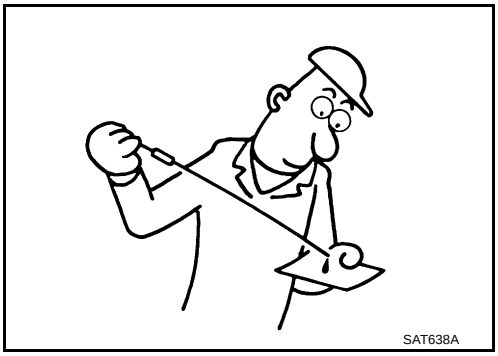

2. CHECK SELF-DIAGNOSTIC RESULTS

Execute self-diagnosis.

Do the self-diagnostic results indicate front brake solenoid valve, direct clutch solenoid valve, ATF pressure switch 1, ATF pressure switch 5, accelerator pedal position sensor, vehicle speed sensor A/T (revolution sensor) and vehicle speed sensor MTR?

YES >> Check the malfunctioning system. Refer to AT-185, "DTC P1757 FRONT BRAKE SOLENOID VALVE" , AT-195, "DTC P1762 DIRECT CLUTCH SOLENOID VALVE" , AT-227, "DTC P1841 ATF PRESSURE SWITCH 1" , AT-235, "DTC P1845 ATF PRESSURE SWITCH 5" , AT-150, "DTC P1705 THROTTLE POSITION SENSOR" , AT-116, "DTC P0720 VEHICLE SPEED SENSOR A/T (REVOLUTION SENSOR)" , AT-163, "DTC P1721 VEHICLE SPEED SENSOR MTR" .
NO >> GO TO 3.

3. CHECK A/T FLUID CONDITION

1. Remove oil pan. Refer to AT-301, "Control Valve Assembly" .
2. Check A/T fluid condition. Refer to AT-51, "Fluid Condition Check" .

OK or NG

OK >> GO TO 4.
NG >> GO TO 7.

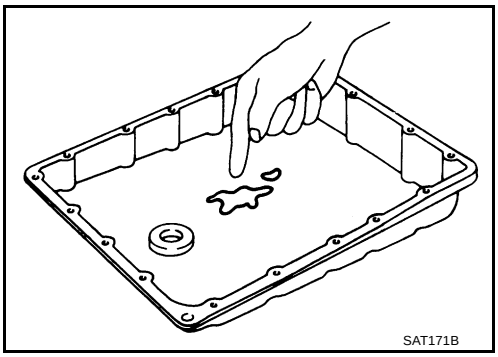

4. DETECT MALFUNCTIONING ITEM

- Check the malfunction items. If any items are damaged, repair or replace damaged parts. Refer to AT-62, "Symptom Chart" (Symptom No.72).

OK or NG

OK >> GO TO 5.
NG >> Repair or replace damaged parts.

5. CHECK SYMPTOM

Check again. Refer to AT-56, "Cruise Test - Part 1" .

OK or NG

OK >> **INSPECTION END**
NG >> GO TO 6.

6. PERFORM TCM INSPECTION

1. Perform TCM input/output signal inspection. Refer to AT-88, "TCM Input/Output Signal Reference Values" .
2. If NG, recheck TCM pin terminals for damage or loose connection with harness connector.

OK or NG

OK >> **INSPECTION END**
NG >> Repair or replace damaged parts.

7. DETECT MALFUNCTIONING ITEM

- Check the malfunction items. If any items are damaged, repair or replace damaged parts. Refer to AT-62, "Symptom Chart" (Symptom No.72).

OK or NG

OK >> GO TO 5.
NG >> Repair or replace damaged parts.

Cannot Be Changed to Manual Mode

ACS004JD

SYMPTOM:

Does not change to manual mode when manual shift gate is used.

DIAGNOSTIC PROCEDURE

1. MANUAL MODE SWITCH

Check the manual mode switch. Refer to AT-223, "DTC P1815 MANUAL MODE SWITCH" .

OK or NG

OK >> GO TO 2.
NG >> Repair or replace damaged parts.

2. CHECK SELF-DIAGNOSIS RESULTS

Execute self-diagnosis.

Do the self-diagnosis results indicate turbine revolution sensor?

YES >> Check the malfunctioning system. Refer to AT-158, "DTC P1716 TURBINE REVOLUTION SENSOR" .
NO >> **INSPECTION END**

A/T Does Not Shift: 5th gear → 4th gear

ACS004JE

SYMPTOM:

When shifted from 5M to 4M position in manual mode, does not downshift from 5th to 4th gear.

DIAGNOSTIC PROCEDURE

1. CHECK SELF-DIAGNOSTIC RESULTS

Execute self-diagnosis.

Do the self-diagnostic results indicate PNP switch, ATF pressure switch 1?

YES >> Check the malfunctioning system. Refer to AT-111, "DTC P0705 PARK/NEUTRAL POSITION SWITCH" , AT-227, "DTC P1841 ATF PRESSURE SWITCH 1" .

NO >> GO TO 2.

2. CHECK A/T FLUID LEVEL

Check A/T fluid level. Refer to AT-13, "Checking A/T Fluid" .

OK or NG

OK >> GO TO 3.

NG >> Refill ATF.

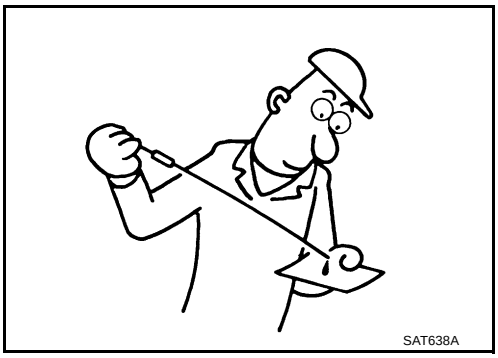

3. CHECK CONTROL LINKAGE

Check the control linkage.

- Refer to AT-290, "Checking of A/T Position" .

OK or NG

OK >> GO TO 4.

NG >> Adjust control linkage. Refer to AT-290, "Adjustment of A/T Position" .

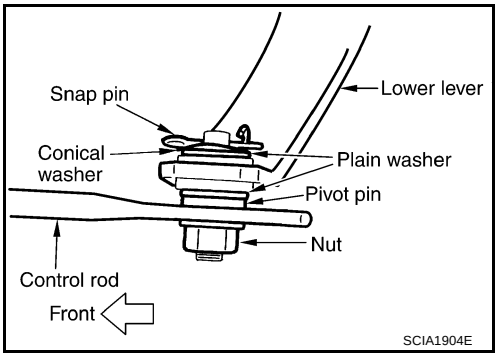

4. MANUAL MODE SWITCH

Check the manual mode switch. Refer to AT-223, "DTC P1815 MANUAL MODE SWITCH" .

OK or NG

OK >> GO TO 5.

NG >> Repair or replace damaged parts.

5. CHECK A/T FLUID CONDITION

1. Remove oil pan. Refer to AT-301, "Control Valve Assembly" .
2. Check A/T fluid condition. Refer to AT-51, "Fluid Condition Check" .

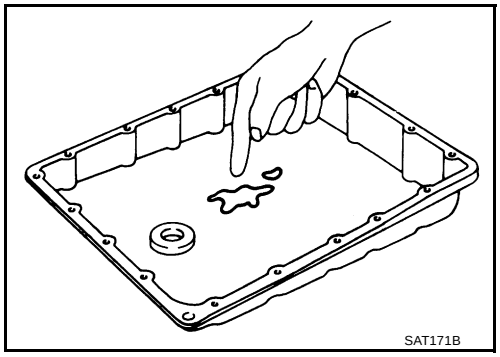

OK or NG

OK >> GO TO 6.
NG >> GO TO 9.

6. DETECT MALFUNCTIONING ITEM

- Check the malfunction items. If any items are damaged, repair or replace damaged parts. Refer to AT-62, "Symptom Chart" (Symptom No.14).

OK or NG

OK >> GO TO 7.
NG >> Repair or replace damaged parts.

7. CHECK SYMPTOM

Check again. Refer to AT-59, "Cruise Test - Part 3" .

OK or NG

OK >> **INSPECTION END**
NG >> GO TO 8.

8. PERFORM TCM INSPECTION

1. Perform TCM input/output signal inspection. Refer to AT-88, "TCM Input/Output Signal Reference Values" .
2. If NG, recheck TCM pin terminals for damage or loose connection with harness connector.

OK or NG

OK >> **INSPECTION END**
NG >> Repair or replace damaged parts.

9. DETECT MALFUNCTIONING ITEM

- Check the malfunction items. If any items are damaged, repair or replace damaged parts. Refer to AT-62, "Symptom Chart" (Symptom No.14).

OK or NG

OK >> GO TO 7.
NG >> Repair or replace damaged parts.

A/T Does Not Shift: 4th gear → 3rd gear

ACS004JF

SYMPTOM:

When shifted from 4M to 3M position in manual mode, does not downshift from 4th to 3rd gear.

DIAGNOSTIC PROCEDURE

1. CHECK SELF-DIAGNOSTIC RESULTS

Execute self-diagnosis.

Do the self-diagnostic results indicate PNP switch, ATF pressure switch 1, ATF pressure switch 3?

YES >> Check the malfunctioning system. Refer to AT-111, "DTC P0705 PARK/NEUTRAL POSITION SWITCH" , AT-227, "DTC P1841 ATF PRESSURE SWITCH 1" , AT-231, "DTC P1843 ATF PRESSURE SWITCH 3" .

NO >> GO TO 2.

2. CHECK A/T FLUID LEVEL

Check A/T fluid level. Refer to AT-13, "Checking A/T Fluid" .

OK or NG

OK >> GO TO 3.

NG >> Refill ATF.

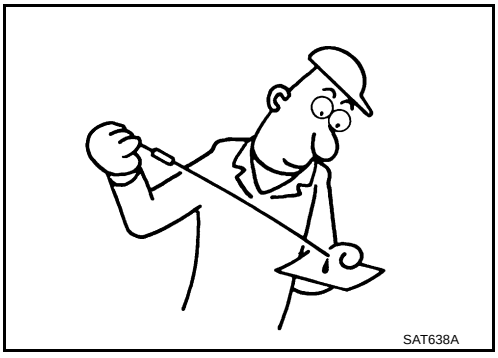

3. CHECK CONTROL LINKAGE

Check the control linkage.

- Refer to AT-290, "Checking of A/T Position" .

OK or NG

OK >> GO TO 4.

NG >> Adjust control linkage. Refer to AT-290, "Adjustment of A/T Position" .

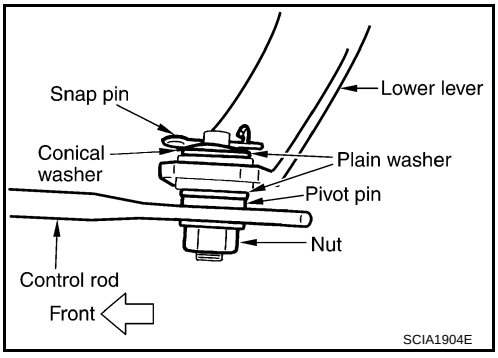

4. MANUAL MODE SWITCH

Check the manual mode switch. Refer to AT-223, "DTC P1815 MANUAL MODE SWITCH" .

OK or NG

OK >> GO TO 5.

NG >> Repair or replace damaged parts.

5. CHECK A/T FLUID CONDITION

1. Remove oil pan. Refer to AT-301, "Control Valve Assembly" .
2. Check A/T fluid condition. Refer to AT-51, "Fluid Condition Check" .

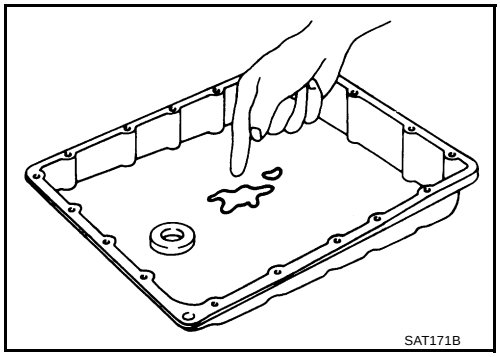

OK or NG

OK >> GO TO 6.
NG >> GO TO 9.

6. DETECT MALFUNCTIONING ITEM

- Check the malfunction items. If any items are damaged, repair or replace damaged parts. Refer to AT-62, "Symptom Chart" (Symptom No.15).

OK or NG

OK >> GO TO 7.
NG >> Repair or replace damaged parts.

7. CHECK SYMPTOM

Check again. Refer to AT-59, "Cruise Test - Part 3" .

OK or NG

OK >> **INSPECTION END**
NG >> GO TO 8.

8. PERFORM TCM INSPECTION

1. Perform TCM input/output signal inspection. Refer to AT-88, "TCM Input/Output Signal Reference Values" .
2. If NG, recheck TCM pin terminals for damage or loose connection with harness connector.

OK or NG

OK >> **INSPECTION END**
NG >> Repair or replace damaged parts.

9. DETECT MALFUNCTIONING ITEM

- Check the malfunction items. If any items are damaged, repair or replace damaged parts. Refer to AT-62, "Symptom Chart" (Symptom No.15).

OK or NG

OK >> GO TO 7.
NG >> Repair or replace damaged parts.

A/T Does Not Shift: 3rd gear → 2nd gear

ACS004JG

SYMPTOM:

When shifted from 3M to 2M position in manual mode, does not downshift from 3rd to 2nd gear.

DIAGNOSTIC PROCEDURE

1. CHECK SELF-DIAGNOSTIC RESULTS

Execute self-diagnosis.

Do the self-diagnostic results indicate PNP switch, ATF pressure switch 6?

YES >> Check the malfunctioning system. Refer to AT-111, "DTC P0705 PARK/NEUTRAL POSITION SWITCH" , AT-239, "DTC P1846 ATF PRESSURE SWITCH 6" .

NO >> GO TO 2.

2. CHECK A/T FLUID LEVEL

Check A/T fluid level. Refer to AT-13, "Checking A/T Fluid" .

OK or NG

OK >> GO TO 3.

NG >> Refill ATF.

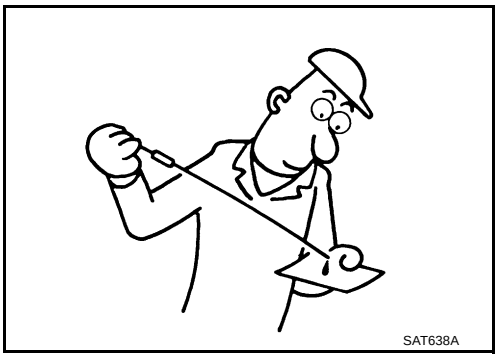

3. CHECK CONTROL LINKAGE

Check the control linkage.

- Refer to AT-290, "Checking of A/T Position" .

OK or NG

OK >> GO TO 4.

NG >> Adjust control linkage. Refer to AT-290, "Adjustment of A/T Position" .

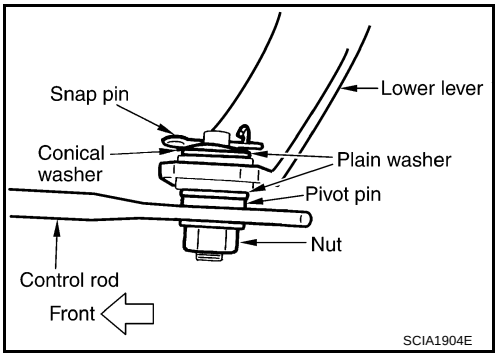

4. MANUAL MODE SWITCH

Check the manual mode switch. Refer to AT-223, "DTC P1815 MANUAL MODE SWITCH" .

OK or NG

OK >> GO TO 5.

NG >> Repair or replace damaged parts.

5. CHECK A/T FLUID CONDITION

1. Remove oil pan. Refer to AT-301, "Control Valve Assembly" .
2. Check A/T fluid condition. Refer to AT-51, "Fluid Condition Check" .

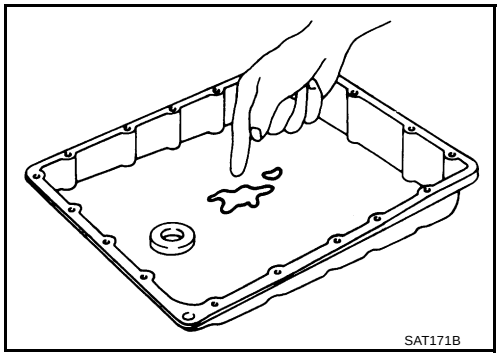

OK or NG

OK >> GO TO 6.
NG >> GO TO 9.

6. DETECT MALFUNCTIONING ITEM

- Check the malfunction items. If any items are damaged, repair or replace damaged parts. Refer to AT-62, "Symptom Chart" (Symptom No.16).

OK or NG

OK >> GO TO 7.
NG >> Repair or replace damaged parts.

7. CHECK SYMPTOM

Check again. Refer to AT-59, "Cruise Test - Part 3" .

OK or NG

OK >> **INSPECTION END**
NG >> GO TO 8.

8. PERFORM TCM INSPECTION

1. Perform TCM input/output signal inspection. Refer to AT-88, "TCM Input/Output Signal Reference Values" .
2. If NG, recheck TCM pin terminals for damage or loose connection with harness connector.

OK or NG

OK >> **INSPECTION END**
NG >> Repair or replace damaged parts.

9. DETECT MALFUNCTIONING ITEM

- Check the malfunction items. If any items are damaged, repair or replace damaged parts. Refer to AT-62, "Symptom Chart" (Symptom No.16).

OK or NG

OK >> GO TO 7.
NG >> Repair or replace damaged parts.

A/T Does Not Shift: 2nd gear → 1st gear

ACS004JH

SYMPTOM:

When shifted from 2M to 1M position in manual mode, does not downshift from 2nd to 1st gear.

DIAGNOSTIC PROCEDURE

1. CHECK SELF-DIAGNOSTIC RESULTS

Execute self-diagnosis.

Do the self-diagnostic results indicate PNP switch, ATF pressure switch 5?

YES >> Check the malfunctioning system. Refer to AT-111, "DTC P0705 PARK/NEUTRAL POSITION SWITCH" , AT-235, "DTC P1845 ATF PRESSURE SWITCH 5" .

NO >> GO TO 2.

2. CHECK A/T FLUID LEVEL

Check A/T fluid level. Refer to AT-13, "Checking A/T Fluid" .

OK or NG

OK >> GO TO 3.

NG >> Refill ATF.

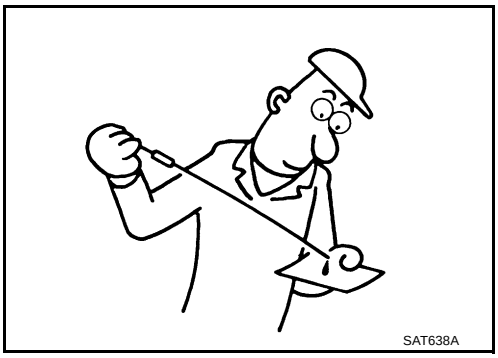

3. CHECK CONTROL LINKAGE

Check the control linkage.

- Refer to AT-290, "Checking of A/T Position" .

OK or NG

OK >> GO TO 4.

NG >> Adjust control linkage. Refer to AT-290, "Adjustment of A/T Position" .

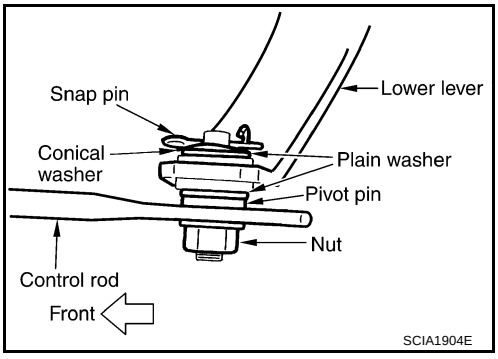

4. MANUAL MODE SWITCH

Check the manual mode switch. Refer to AT-223, "DTC P1815 MANUAL MODE SWITCH" .

OK or NG

OK >> GO TO 5.

NG >> Repair or replace damaged parts.

5. CHECK A/T FLUID CONDITION

1. Remove oil pan. Refer to AT-301, "Control Valve Assembly" .
2. Check A/T fluid condition. Refer to AT-51, "Fluid Condition Check" .

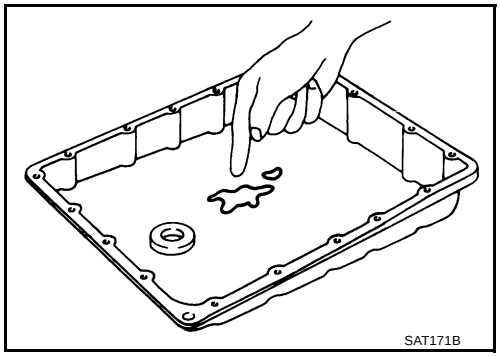

OK or NG

OK >> GO TO 6.
NG >> GO TO 9.

6. DETECT MALFUNCTIONING ITEM

- Check the malfunction items. If any items are damaged, repair or replace damaged parts. Refer to AT-62, "Symptom Chart" (Symptom No.17).

OK or NG

OK >> GO TO 7.
NG >> Repair or replace damaged parts.

7. CHECK SYMPTOM

Check again. Refer to AT-59, "Cruise Test - Part 3" .

OK or NG

OK >> **INSPECTION END**
NG >> GO TO 8.

8. PERFORM TCM INSPECTION

1. Perform TCM input/output signal inspection. Refer to AT-88, "TCM Input/Output Signal Reference Values" .
2. If NG, recheck TCM pin terminals for damage or loose connection with harness connector.

OK or NG

OK >> **INSPECTION END**
NG >> Repair or replace damaged parts.

9. DETECT MALFUNCTIONING ITEM

- Check the malfunction items. If any items are damaged, repair or replace damaged parts. Refer to AT-62, "Symptom Chart" (Symptom No.17).

OK or NG

OK >> GO TO 7.
NG >> Repair or replace damaged parts.

Vehicle Does Not Decelerate By Engine Brake

ACS004JI

SYMPTOM:

No engine brake is applied when the gear is shifted from the 2nd to 1st gear.

DIAGNOSTIC PROCEDURE

1. CHECK SELF-DIAGNOSTIC RESULTS

Execute self-diagnosis.

Do the self-diagnostic results indicate PNP switch, ATF pressure switch 5?

YES >> Check the malfunctioning system. Refer to AT-111, "DTC P0705 PARK/NEUTRAL POSITION SWITCH" , AT-235, "DTC P1845 ATF PRESSURE SWITCH 5" .

NO >> GO TO 2.

2. CHECK A/T FLUID LEVEL

Check A/T fluid level. Refer to AT-13, "Checking A/T Fluid" .

OK or NG

OK >> GO TO 3.

NG >> Refill ATF.

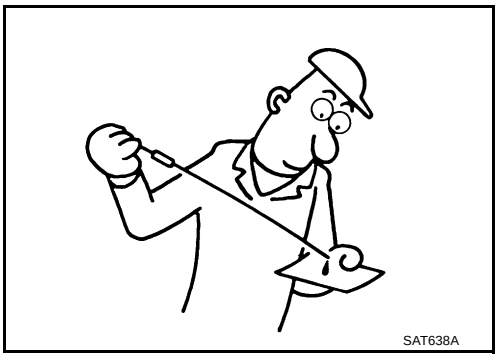

3. CHECK CONTROL LINKAGE

Check the control linkage.

- Refer to AT-290, "Checking of A/T Position" .

OK or NG

OK >> GO TO 4.

NG >> Adjust control linkage. Refer to AT-290, "Adjustment of A/T Position" .

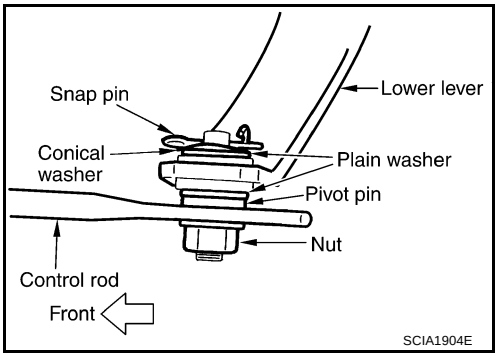

4. MANUAL MODE SWITCH

Check the manual mode switch. Refer to AT-223, "DTC P1815 MANUAL MODE SWITCH" .

OK or NG

OK >> GO TO 5.

NG >> Repair or replace damaged parts.

5. CHECK A/T FLUID CONDITION

1. Remove oil pan. Refer to AT-301, "Control Valve Assembly" .
2. Check A/T fluid condition. Refer to AT-51, "Fluid Condition Check" .

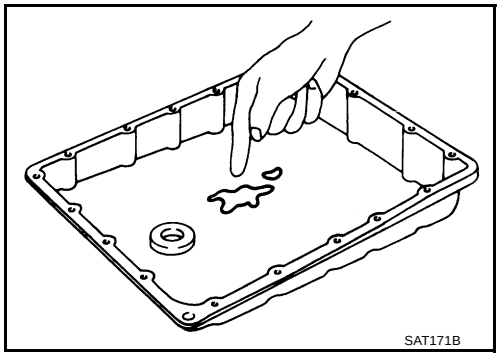

OK or NG

OK >> GO TO 6.
NG >> GO TO 9.

6. DETECT MALFUNCTIONING ITEM

- Check the malfunction items. If any items are damaged, repair or replace damaged parts. Refer to AT-62, "Symptom Chart" (Symptom No.58).

OK or NG

OK >> GO TO 7.
NG >> Repair or replace damaged parts.

7. CHECK SYMPTOM

Check again. Refer to AT-59, "Cruise Test - Part 3" .

OK or NG

OK >> **INSPECTION END**
NG >> GO TO 8.

8. PERFORM TCM INSPECTION

1. Perform TCM input/output signal inspection. Refer to AT-88, "TCM Input/Output Signal Reference Values" .
2. If NG, recheck TCM pin terminals for damage or loose connection with harness connector.

OK or NG

OK >> **INSPECTION END**
NG >> Repair or replace damaged parts.

9. DETECT MALFUNCTIONING ITEM

- Check the malfunction items. If any items are damaged, repair or replace damaged parts. Refer to AT-62, "Symptom Chart" (Symptom No.58).

OK or NG

OK >> GO TO 7.
NG >> Repair or replace damaged parts.

SHIFT CONTROL SYSTEM

PFP:34901

Control Device Removal and Installation

ACS002HV

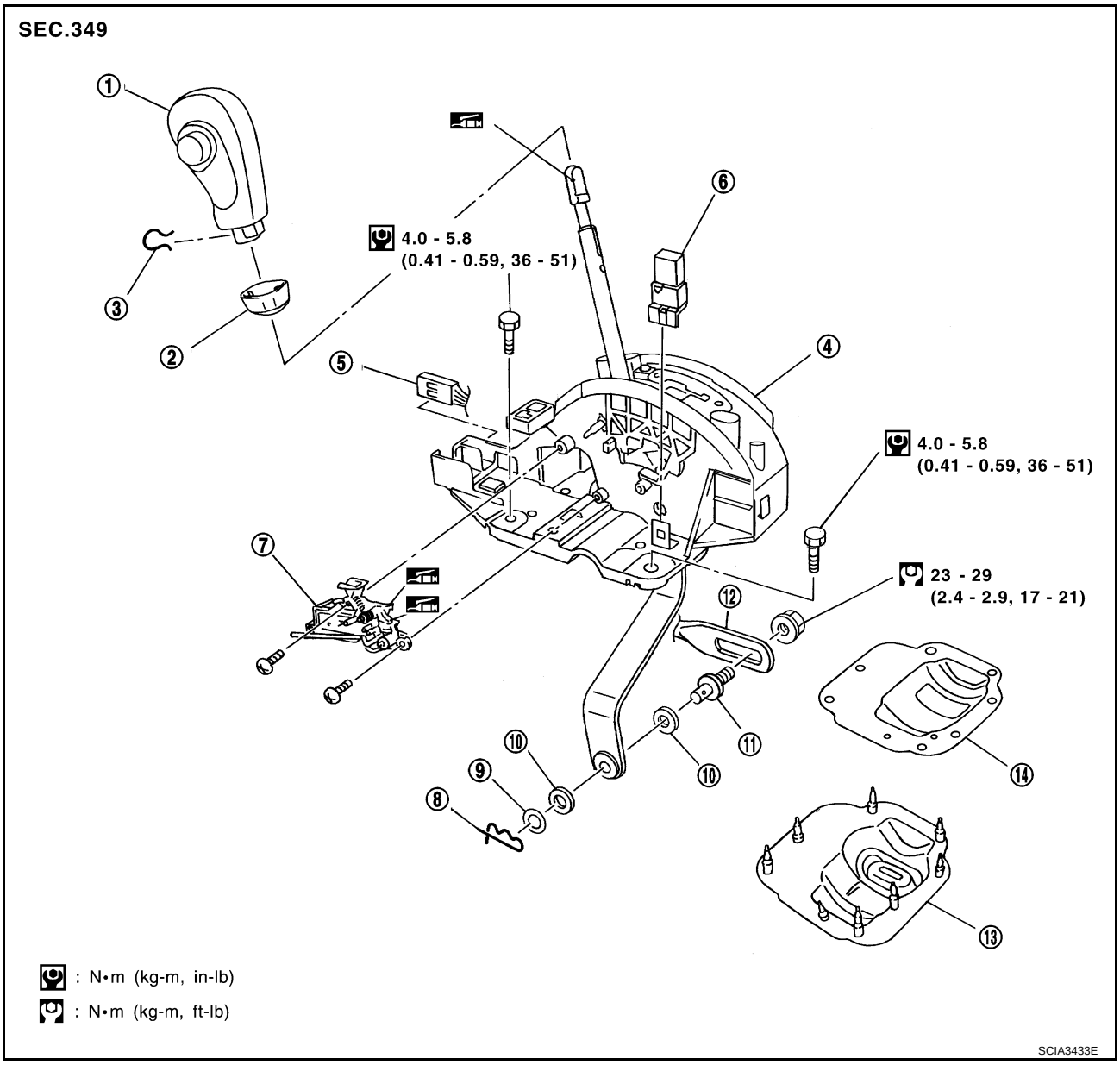

1.	Select lever knob	2.	Knob cover	3.	Lock pin
4.	Control device assembly	5.	A/T device harness connector	6.	Shift lock relay
7.	Shift lock solenoid and park position switch assembly	8.	Snap pin	9.	Conical washer
10.	Plain washer	11.	Pivot pin	12.	Control rod
13.	Dust cover	14.	Dust cover plate		

REMOVAL

1. Disconnect lower lever of control device and control rod.
2. Remove knob cover below select lever downward.
3. Pull lock pin out of select lever knob.
4. Remove select lever knob.
5. Remove console finisher.
   - Refer to IP-10, "INSTRUMENT PANEL ASSEMBLY" .
6. Remove center console.
   - Refer to IP-10, "INSTRUMENT PANEL ASSEMBLY" .
7. Remove key interlock cable from control device assembly.
   - Refer to AT-298, "KEY INTERLOCK CABLE" .
8. Disconnect A/T device harness connector.
9. Remove control device assembly.

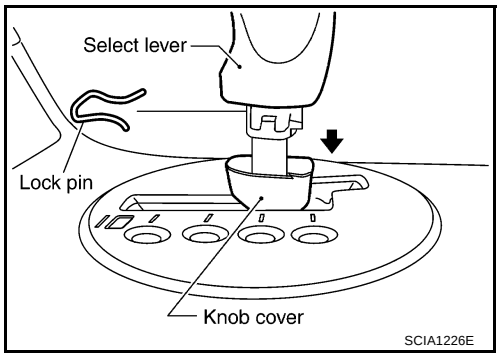

INSTALLATION

Install in reverse order of removal. Be careful of the following:

- After installation is completed, adjust and check A/T position.

Adjustment of A/T Position

ACS002HW

1. Loosen nut of pivot pin.
2. Place PNP switch and selector lever in “P” position.
3. While pressing lower lever toward rear of vehicle (in “P” position direction), tighten nut to specified torque.

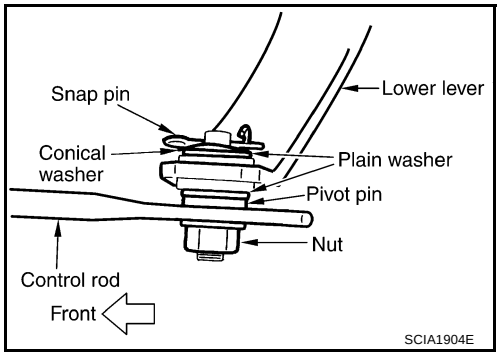

Checking of A/T Position

ACS002HX

1. Place select lever in “P” position, and turn ignition switch ON (engine stop).
2. Check that select lever can be shifted to other than “P” position when brake pedal is depressed. Also check that select lever can be shifted from “P” position only when brake pedal is depressed.
3. Move the select lever and check for excessive effort, sticking, noise or rattle.
4. Confirm the select lever stops at each position with the feel of engagement when it is moved through all the positions. Check whether or not the actual position the select lever is in matches the position shown by the shift position indicator and the transmission body.
5. The method of operating the lever to individual positions correctly should be as shown in the figure.
6. When select button is pressed in “P”, “R”, or “N” position without applying forward/backward force to select lever, check button operation for sticking.
7. Confirm the back-up lamps illuminate only when lever is placed in the “R” position. Confirm the back-up lamps does not illuminate when select lever is in the “P” or “N” position with the lever pushed against the “R” position.
8. Confirm the engine can only be started with the select lever in the “P” and “N” positions. And confirm that the engine can be started when the select lever is being moved back and front in the “P” position.

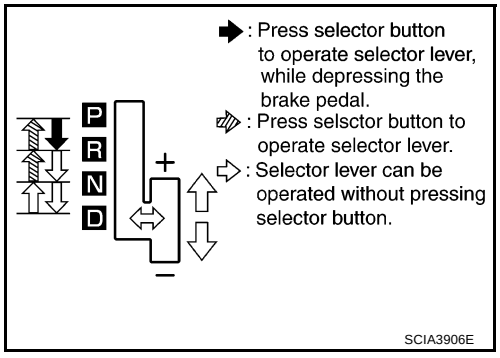

9. Check that transmission is locked completely in “P” position.
10. When select lever is set to manual shift gate, check that manual mode is displayed on combination meter.

Shift select lever to “+” and “-” sides, and check that set shift position changes. (Only while a car is operating)

A/T SHIFT LOCK SYSTEM

PFP:34950

Description

ACS002HY

- The mechanical key interlock mechanism also operates as a shift lock:
  With the ignition switch turned to ON, the select lever cannot be shifted from “P” (parking) to any other position unless the brake pedal is depressed.
  With the key removed, the select lever cannot be shifted from “P” to any other position.
  The key cannot be removed unless the select lever is placed in “P”.
- The shift lock and key interlock mechanisms are controlled by the ON-OFF operation of the shift lock solenoid and by the operation of the rotator and slider located inside the key cylinder.

Shift Lock System Electrical Parts Location

ACS002HZ

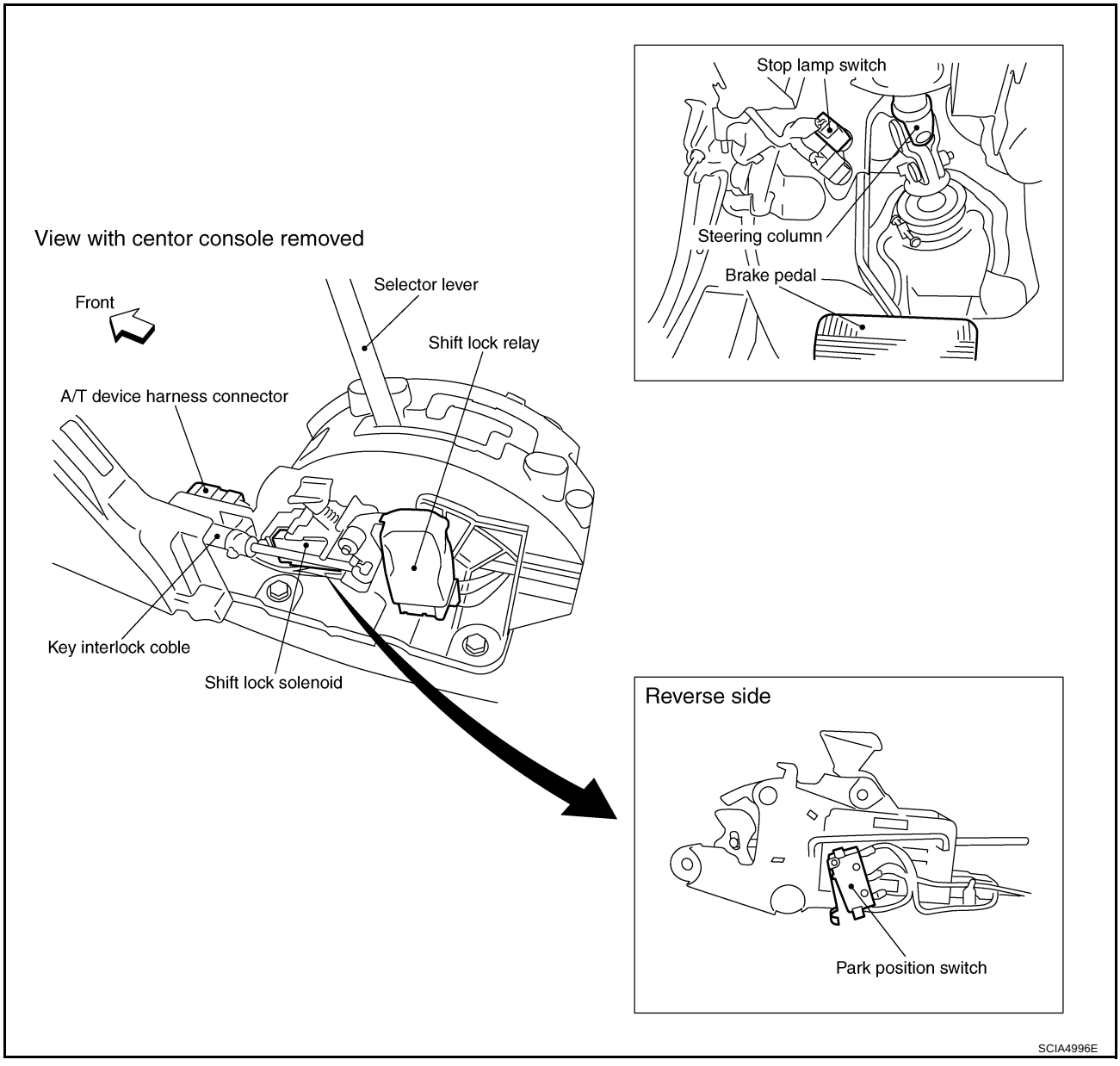

Wiring Diagram — AT — SHIFT

ACS002I0

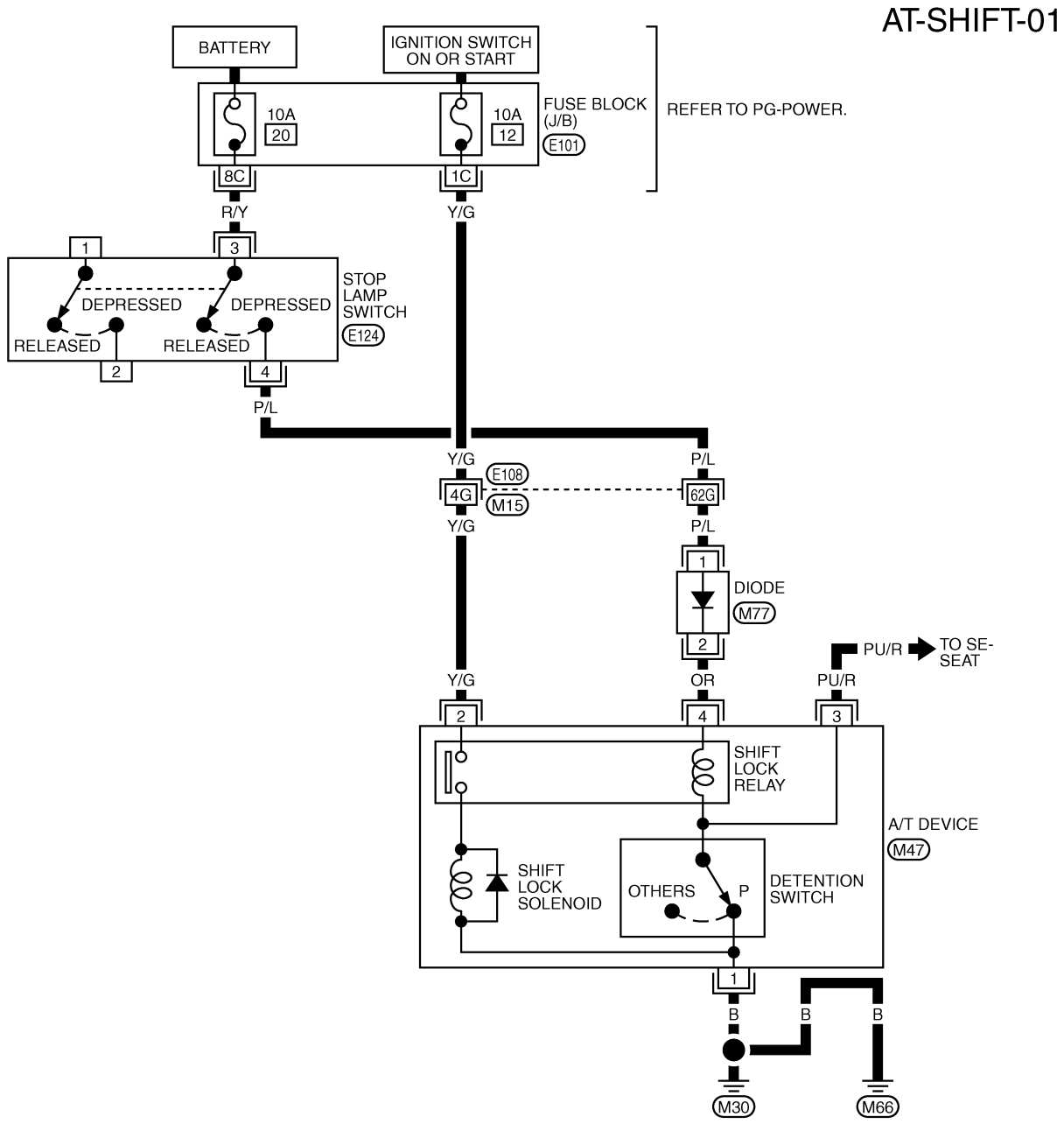

REFER TO THE FOLLOWING.

E108 -SUPER MULTIPLE JUNCTION (SMJ)

E101 -FUSE BLOCK-JUNCTION BOX (J/B)

TCWM0163E

Diagnostic Procedure

ACS002I1

SYMPTOM 1:

- **Select lever cannot be moved from “P” position with key in ON position and brake pedal applied.**
- **Select lever can be moved from “P” position with key in ON position and brake pedal released.**
- **Select lever can be moved from “P” position when key is removed from key cylinder.**

SYMPTOM 2:

- **Ignition key cannot be removed when select lever is set to “P” position.**
- **Ignition key can be removed when select lever is set to any position except “P”.**

1. CHECK KEY INTERLOCK CABLE

Check key interlock cable for damage.

OK or NG

OK >> GO TO 2.
NG >> Repair key interlock cable. Refer to AT-298, "KEY INTERLOCK CABLE" .

2. CHECK SELECT LEVER POSITION

Check select lever position for damage.

OK or NG

OK >> GO TO 3.
NG >> Check select lever. Refer to AT-290, "Adjustment of A/T Position" .

3. CHECK POWER SOURCE

1. Turn ignition switch ON. (Do not start engine.)
2. Check voltage between A/T device harness connector M47 terminal 2 (Y/G) and ground.

Voltage: Battery voltage

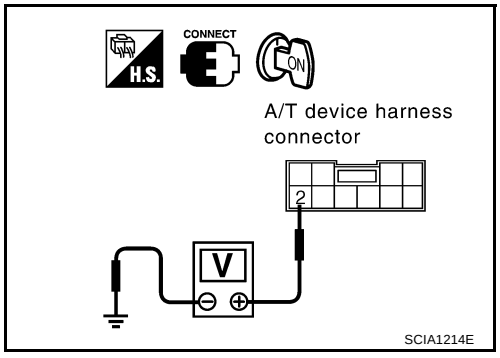

OK or NG

OK >> GO TO 5.
NG >> GO TO 4.

4. DETECT MALFUNCTIONING ITEM

Check the following items:

1. Harness for short or open between ignition switch and A/T device harness terminal 2
2. 10A fuse [No.12, located in the fuse block (J/B)]
3. Ignition switch (Refer to PG-4, "POWER SUPPLY ROUTING CIRCUIT" .)

OK or NG

OK >> GO TO 5.
NG >> Repair or replace damaged parts.

5. CHECK INPUT SIGNAL A/T DEVICE

Turn ignition switch OFF.

- Check voltage between A/T device harness connector M47 terminal 4 (OR) and ground.

Voltage:

Brake pedal depressed

:Battery voltage

Brake pedal released

:0V

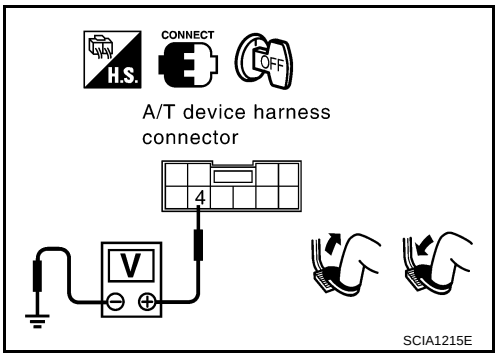

OK or NG

OK >> GO TO 7.
NG >> GO TO 6.

6. DETECT MALFUNCTIONING ITEM

Check the following items:

1. Harness for short or open between battery and stop lamp switch harness connector 3
2. Harness for short or open between stop lamp switch harness connector 4 and A/T device harness connector 4
3. 10A fuse [No.20, located in the fuse block (J/B)]
4. Stop lamp switch

– Check continuity between stop lamp switch harness connector E124 terminals 3 (R/Y) and 4 (P/L).

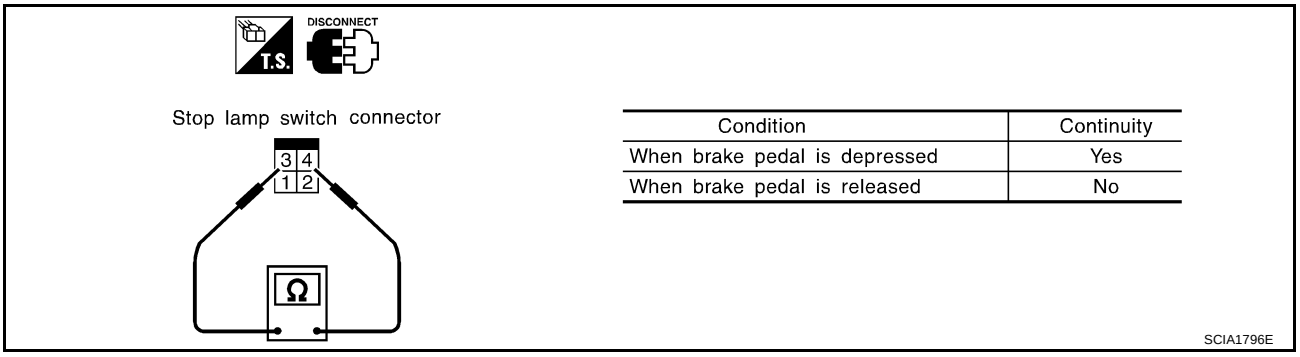

Condition	Continuity
When brake pedal is depressed	Yes
When brake pedal is released	No

Check stop lamp switch after adjusting brake pedal — refer to **BR-6, "BRAKE PEDAL"** **.**

OK or NG

OK >> GO TO 7.
NG >> Repair or replace damaged parts.

7. CHECK GROUND CIRCUIT

1. Turn ignition switch OFF.
2. Disconnect A/T device harness connector.
3. Check continuity between A/T device harness connector terminal 1 (B) and ground.

Continuity should exist.

If OK, check harness for short to ground and short to power.

OK or NG

OK >> GO TO 8.
NG >> Repair open circuit or short to ground or short to power in harness or connectors.

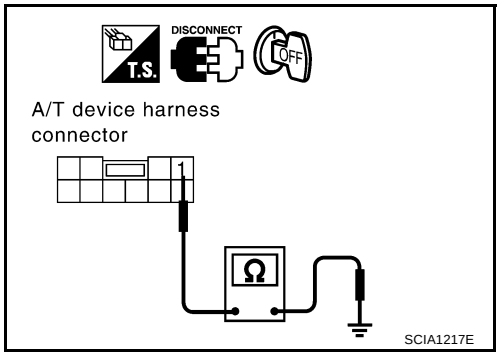

8. CHECK PARK POSITION SWITCH AND RELAY CIRCUIT (COIL SIDE)

Check continuity between A/T device harness connector terminals 1 (B) and 4 (OR).

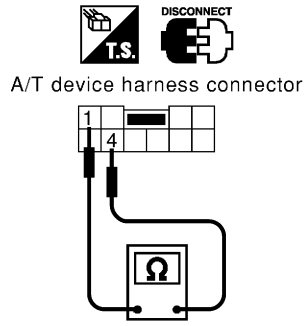

Condition	Continuity
When selector lever is set in “P” position and selector lever button is released	Yes
Except above	No

SCIA1218E

OK or NG

OK >> GO TO 9.
NG >> ● Replace park position switch or relay.
● Repair open circuit or short to ground or short to power in harness or connectors.

9. CHECK SHIFT LOCK SOLENOID AND RELAY CIRCUIT (POINT SIDE)

1. Connect A/T device harness connector.
2. Turn ignition switch ON. (Do not start engine.)
3. Check shift lock solenoid and relay operation.

Condition	Brake pedal	Operation
When ignition switch is turned to “ON” position and selector lever is set in “P” position.	Depressed	Yes
	Released	No

OK or NG

OK >> GO TO 10.
NG >> ● Replace shift lock solenoid or relay.
● Repair open circuit or short to ground or short to power in harness or connectors.

10. CHECK SHIFT LOCK OPERATION

1. Connect A/T device harness connector.
2. Turn ignition switch from OFF to ON. (Do not start engine.)
3. Recheck shift lock operation.

OK or NG

OK >> **INSPECTION END**
NG >> GO TO 11.

11. CHECK A/T DEVICE INSPECTION

1. Perform A/T device input/output signal inspection test.
2. If NG, recheck harness connector connection.

OK or NG

OK >> **INSPECTION END**
NG >> Repair or replace damaged parts.

KEY INTERLOCK CABLE

PFP:34908

Components

ACS002I6

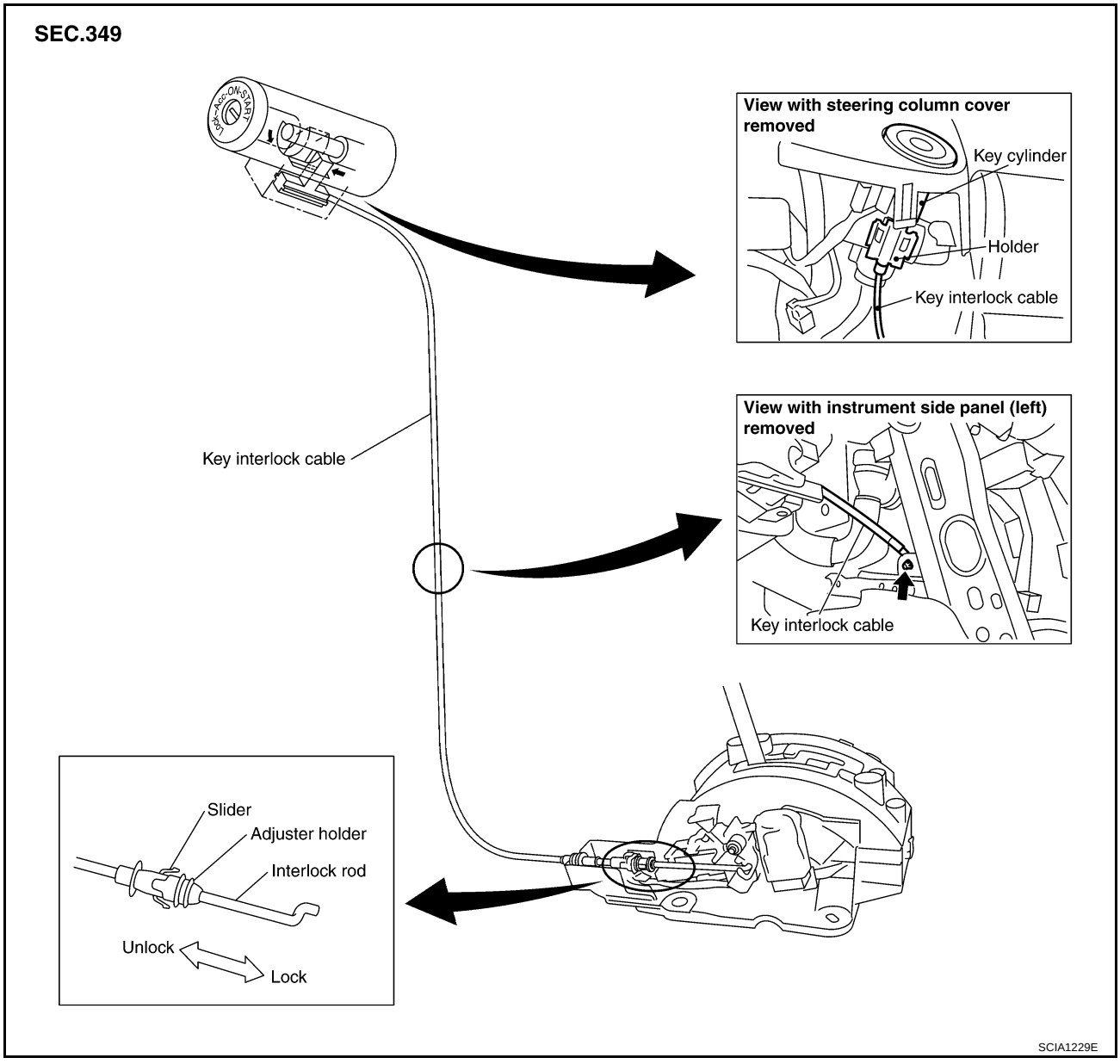

CAUTION:

- **Install key interlock cable in such a way that it will not be damaged by sharp bends, twists or interference with adjacent parts.**
- **After installing key interlock cable to control device, make sure that casing cap and bracket are firmly secured in their positions. If casing cap be removed with an external load of less than 39.2 N (4.0 kg, 8.8 lb), replace key interlock cable with new one.**

Removal

ACS002I7

1. Unlock slider by squeezing lock tabs on slider from adjuster holder.
2. Remove casing cap from bracket of control device and remove interlock rod from key interlock cable.

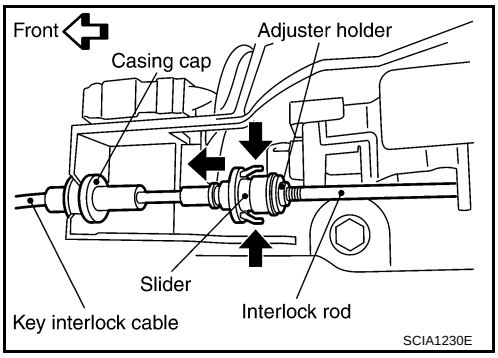

3. Remove holder from key cylinder and remove key interlock cable.

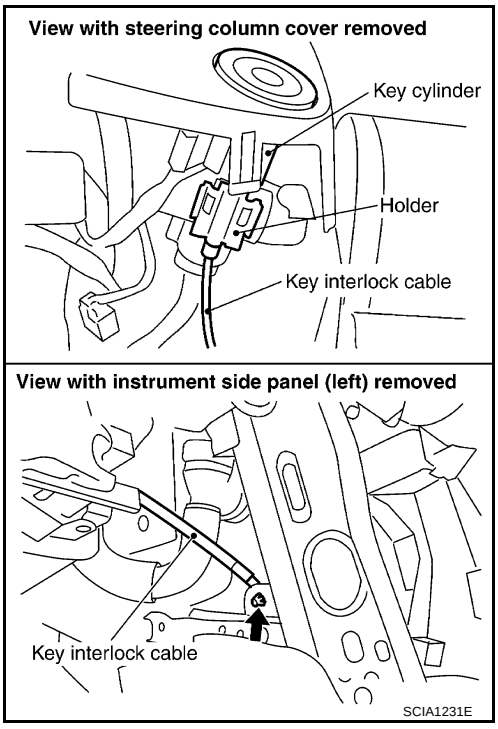

Installation

ACS002I8

1. Set key interlock cable to key cylinder and install holder.
2. Clamp cable and fix to control cable with band.
3. Turn ignition key to lock position.
4. Set select lever to P position.

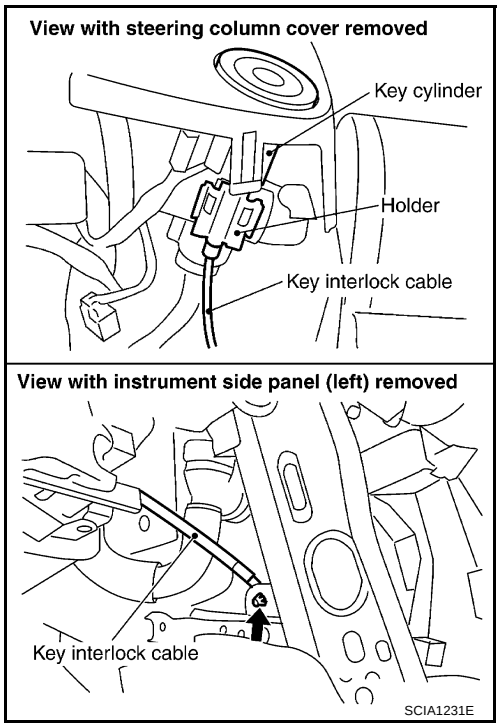

5. Insert interlock rod into adjuster holder.
6. Install casing cap to bracket.
7. Move slider in order to fix adjuster holder to interlock rod.

   CAUTION:
   Do not touch any adjacent parts of key interlock cable when slider is being held.
   Insert slider into key interlock rod straightly.

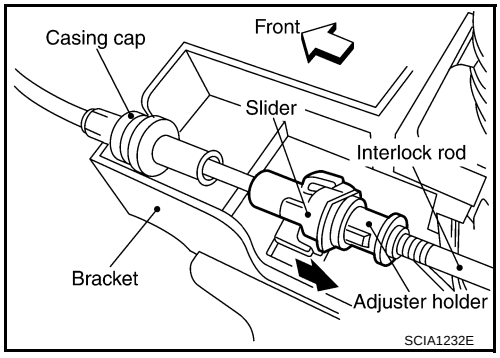

ON-VEHICLE SERVICE

PFP:00000

Control Valve Assembly

ACS004JJ

CAUTION:

When replacing the control valve assembly, erase EEP ROM in TCM. Refer to AT-8, "Precautions for TCM, A/T Assembly and Control Valve Assembly Replacement" .

COMPONENTS

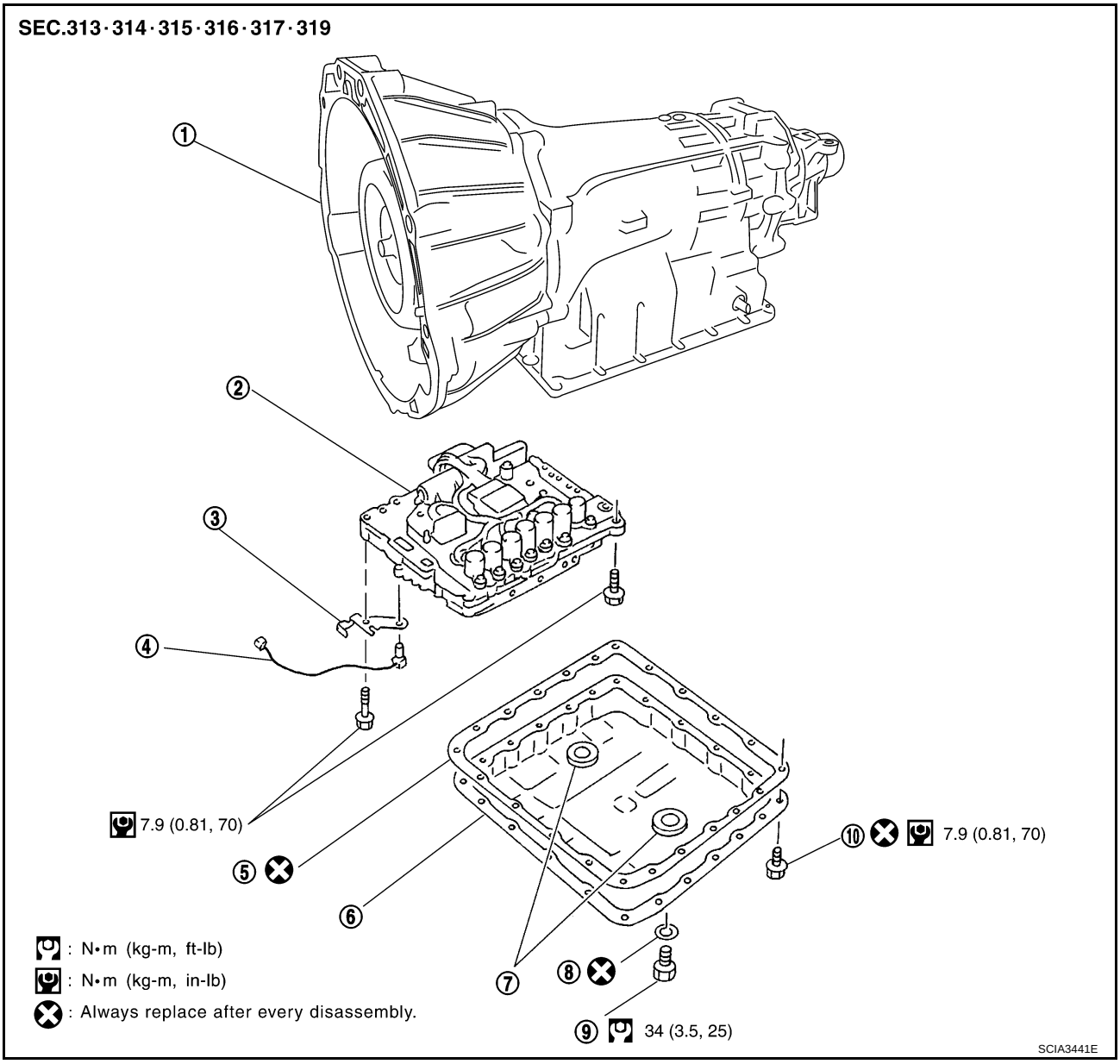

1. Transmission	2. Control valve assembly	3. Bracket
4. A/T fluid temperature sensor 2	5. Oil pan gasket	6. Oil pan
7. Magnet	8. Drain plug gasket	9. Drain plug
10. Oil pan mounting bolt		

REMOVAL

1. Disconnect the negative battery terminal
2. Disconnect heated oxygen sensor 2 harness connector.
3. Drain ATF through drain plug.

4. Remove oil pan and oil pan gasket.

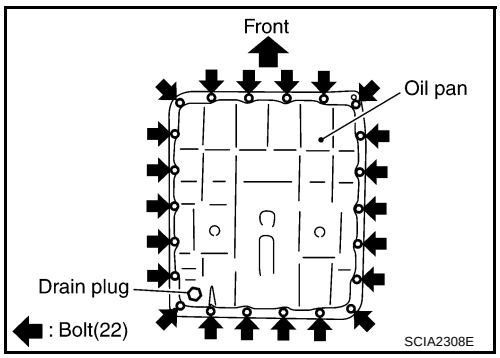

5. Check foreign materials in oil pan to help determine causes of malfunction. If the A/T fluid is very dark, smells burned, or contains foreign particles, the frictional material (clutches, band) may need replacement. A tacky film that will not wipe clean indicates varnish build up. Varnish can cause valves, servo, and clutches to stick and can inhibit pump pressure.
   - **If frictional material is detected, perform A/T fluid cooler cleaning. Refer to** **AT-15, "A/T Fluid Cooler Cleaning"**.

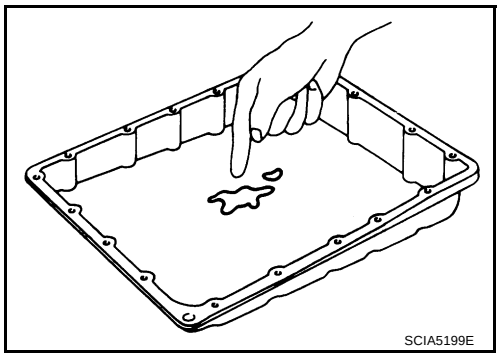

6. Remove magnets from oil pan.

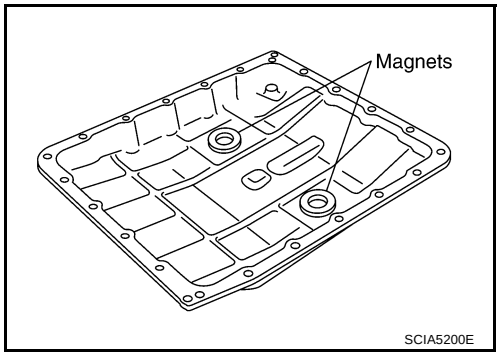

7. Disconnect terminal cord assembly connectors.

   CAUTION:
   Be careful not to damage connector.

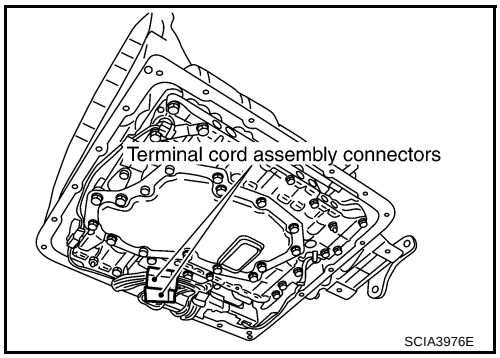

8. Disconnect A/T fluid temperature sensor 2 connector.

   CAUTION:
   Be careful not to damage connector.

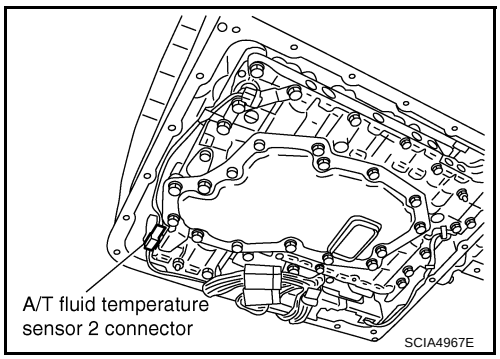

9. Remove terminal cord assembly connectors from bracket.

CAUTION:
Be careful not to damage connector.

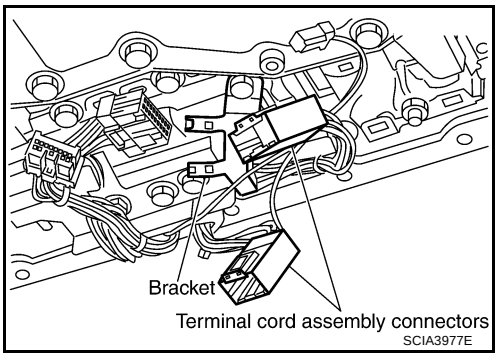

10. Disconnect revolution sensor connector.

CAUTION:
Be careful not to damage connector.

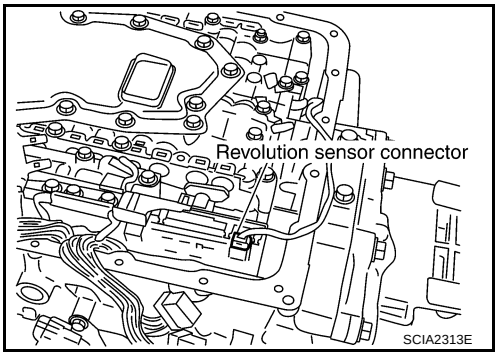

11. Straighten terminal clips to free terminal cord assembly and revolution sensor harness then remove terminal clips.

CAUTION:
Hang down terminal cord assembly and revolution sensor harness toward outside so as not to disturb removal of control valve assembly.

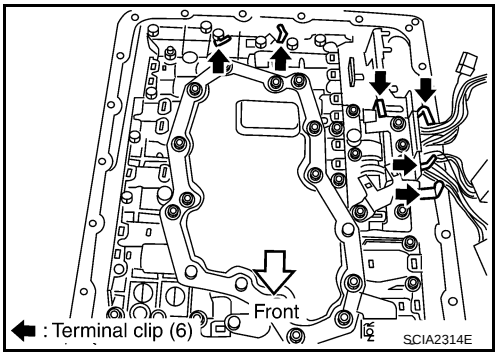

12. Remove bolts A, B and C from control valve assembly.

Bolt symbol	Length mm (in)	Number of bolts
A	42 (1.65)	5
B	55 (2.17)	6
C	40 (1.57)	1

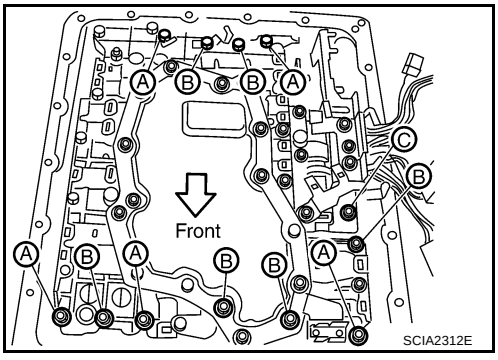

13. Remove control valve assembly from transmission case.

CAUTION:
When removing, be careful with the manual valve notch and manual plate height. Remove it vertically.

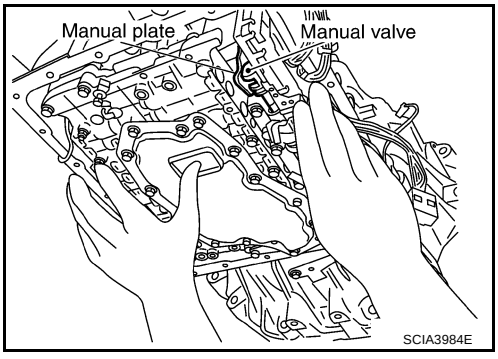

14. Remove A/T fluid temperature sensor 2 with bracket from control valve assembly.

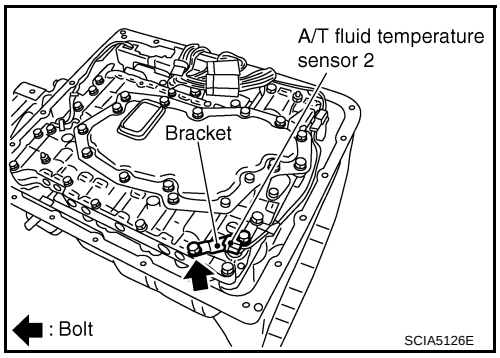

15. Remove bracket from A/T fluid temperature sensor 2.

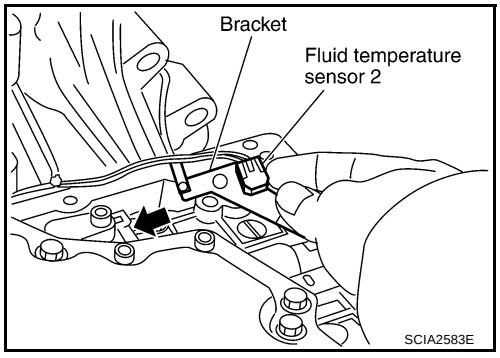

INSTALLATION

CAUTION:

After completing installation, check A/T fluid leakage and A/T fluid level. Refer to AT-13, "Changing A/T Fluid" , AT-13, "Checking A/T Fluid" .

1. Install A/T fluid temperature sensor 2 in bracket.

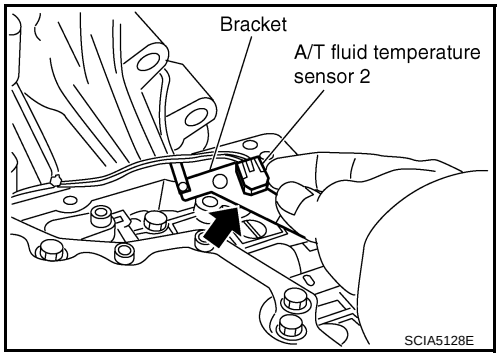

2. Install A/T fluid temperature sensor 2 in control valve assembly. (With bracket.)

   : 7.9 N·m (0.81 kg-m, 70 in-lb)

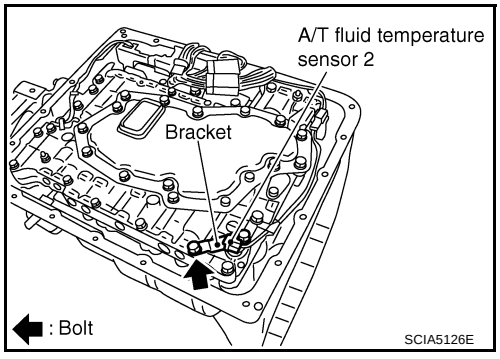

3. Install control valve assembly.

a. Install control valve assembly in transmission case.

CAUTION:

- **Make sure that turbine revolution sensor securely installs turbine revolution sensor hole.**
- **Hang down terminal cord assembly and revolution sensor harness toward outside so as not to disturb installation of control valve assembly.**

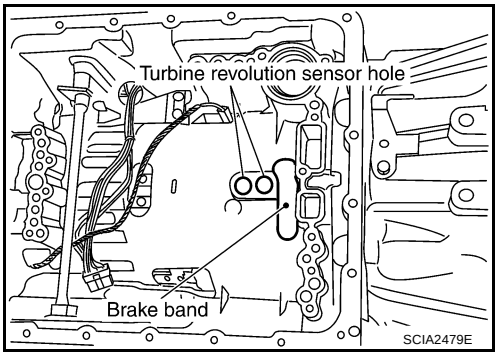

- **Assemble it so that manual valve cutout is engaged with manual plate projection.**

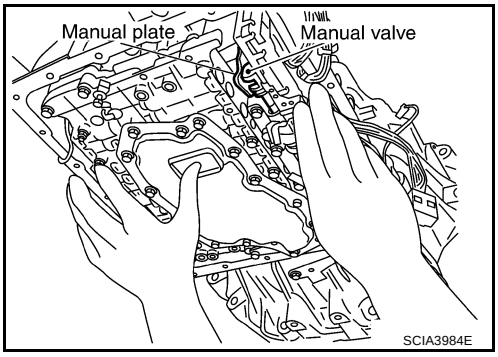

b. Install bolts A, B and C in control valve assembly.

Bolt symbol	Length mm (in)	Number of bolts
A	42 (1.65)	5
B	55 (2.17)	6
C	40 (1.57)	1

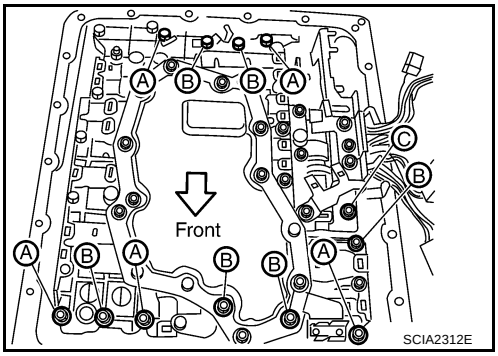

c. Tighten bolt 1, 2 and 3 temporarily to prevent dislocation. After that tighten them in order (1 → 2 → 3), and then tighten other bolts.

: 7.9 N·m (0.81 kg-m, 70 in-lb)

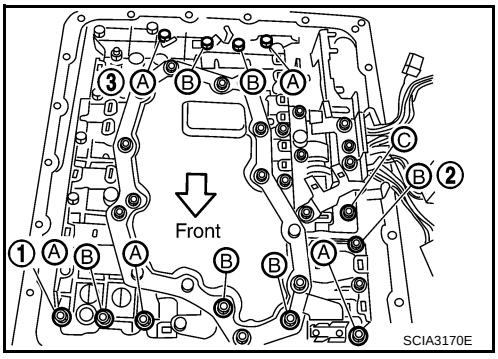

4. Install terminal cord assembly connectors in bracket.

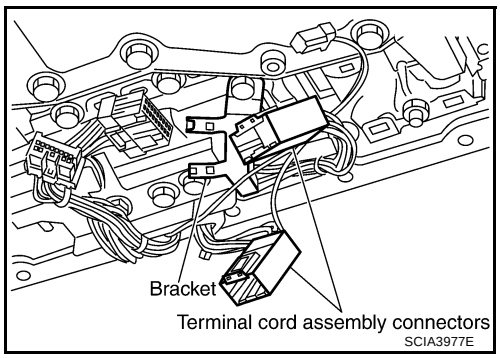

5. Connect terminal cord assembly connectors.

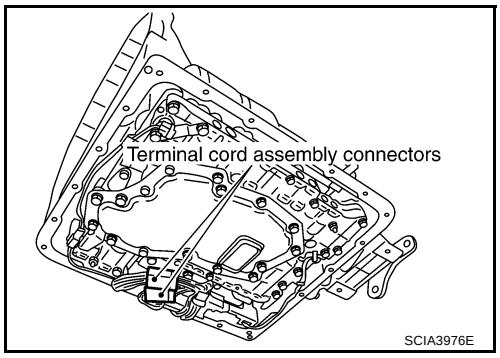

6. Connect A/T fluid temperature sensor 2 connector.

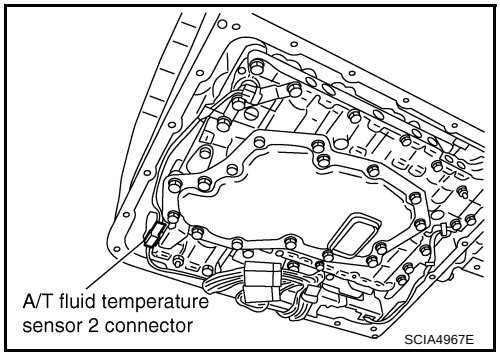

7. Connect revolution sensor connector.

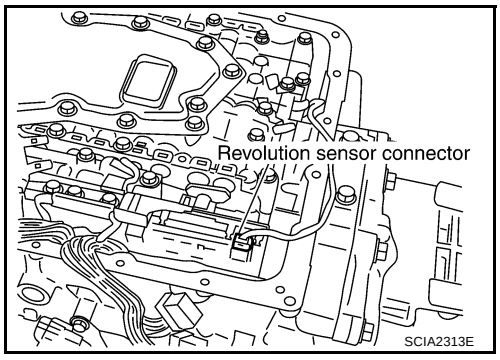

8. Securely fasten terminal harness with terminal clips.

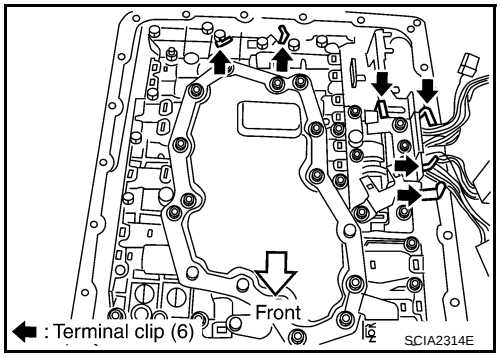

9. Install magnets in oil pan.

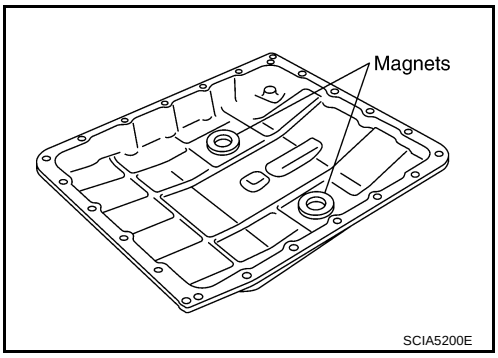

10. Install oil pan in transmission case.

a. Install oil pan gasket in oil pan.

CAUTION:

- **Do not reuse oil pan gasket.**
- **Install it in the direction to align hole positions.**

b. Install oil pan (with oil pan gasket) in transmission case.

CAUTION:

- **Install it so that drain plug comes to the position as shown in the figure.**
- **Be careful not to pinch harnesses.**

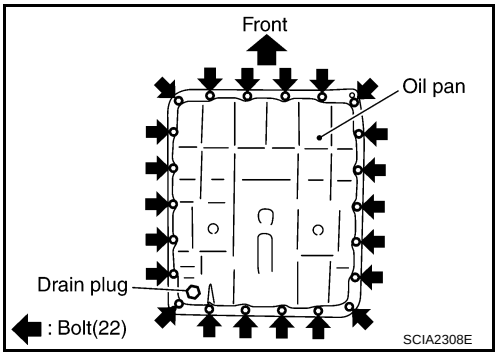

c. Tighten oil pan mounting bolts to the specified torque in numerical order shown in the figure after temporarily tightening them.

CAUTION:

Do not reuse oil pan mounting bolts.

: 7.9 N·m (0.81 kg-m, 70 in-lb)

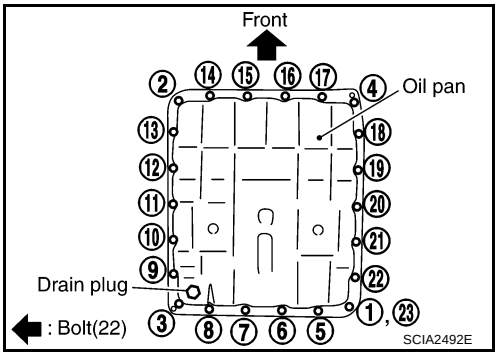

11. Install drain plug in oil pan.

CAUTION:

Do not reuse drain plug gasket.

: 34 N·m (3.5 kg-m, 25 ft-lb)

12. Pour ATF into transmission assembly.
13. Connect heated oxygen sensor 2 harness connector.
14. Connect the negative battery terminal

Rear Oil Seal

ACS004KV

REMOVAL

1. Remove exhaust tube with power tool.Refer to EX-3, "Removal and Installation" .
2. Remove propeller shaft.Refer to PR-4, "Removal and Installation" .
3. Remove rear oil seal using a flat-bladed screwdriver.

   CAUTION:
   Be careful not to scratch rear extension assembly.

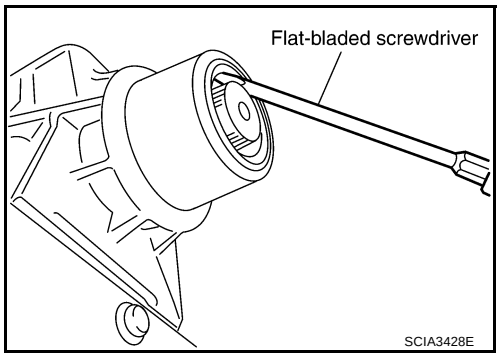

INSTALLATION

CAUTION:
After completing installation, check A/T fluid leakage and A/T fluid level. Refer to AT-13, "Changing A/T Fluid" ,AT-13, "Checking A/T Fluid" .

1. As shown below, use a drift to drive rear oil seal into the extension until it is flush.

   CAUTION:
   - **Apply ATF to rear oil seal.**
   - **Do not reuse rear oil seal**

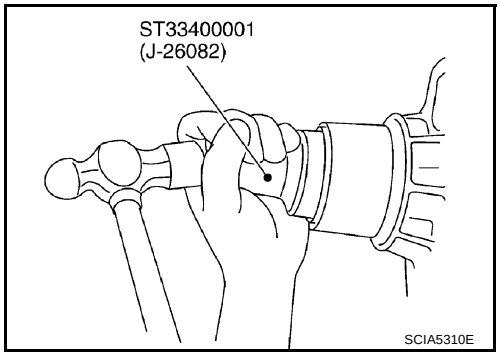

2. Install propeller shaft. Refer to PR-4, "Removal and Installation" .
3. Install exhaust tube. Refer to EX-3, "Removal and Installation" .

Parking Components

ACS004KU

COMPONENTS

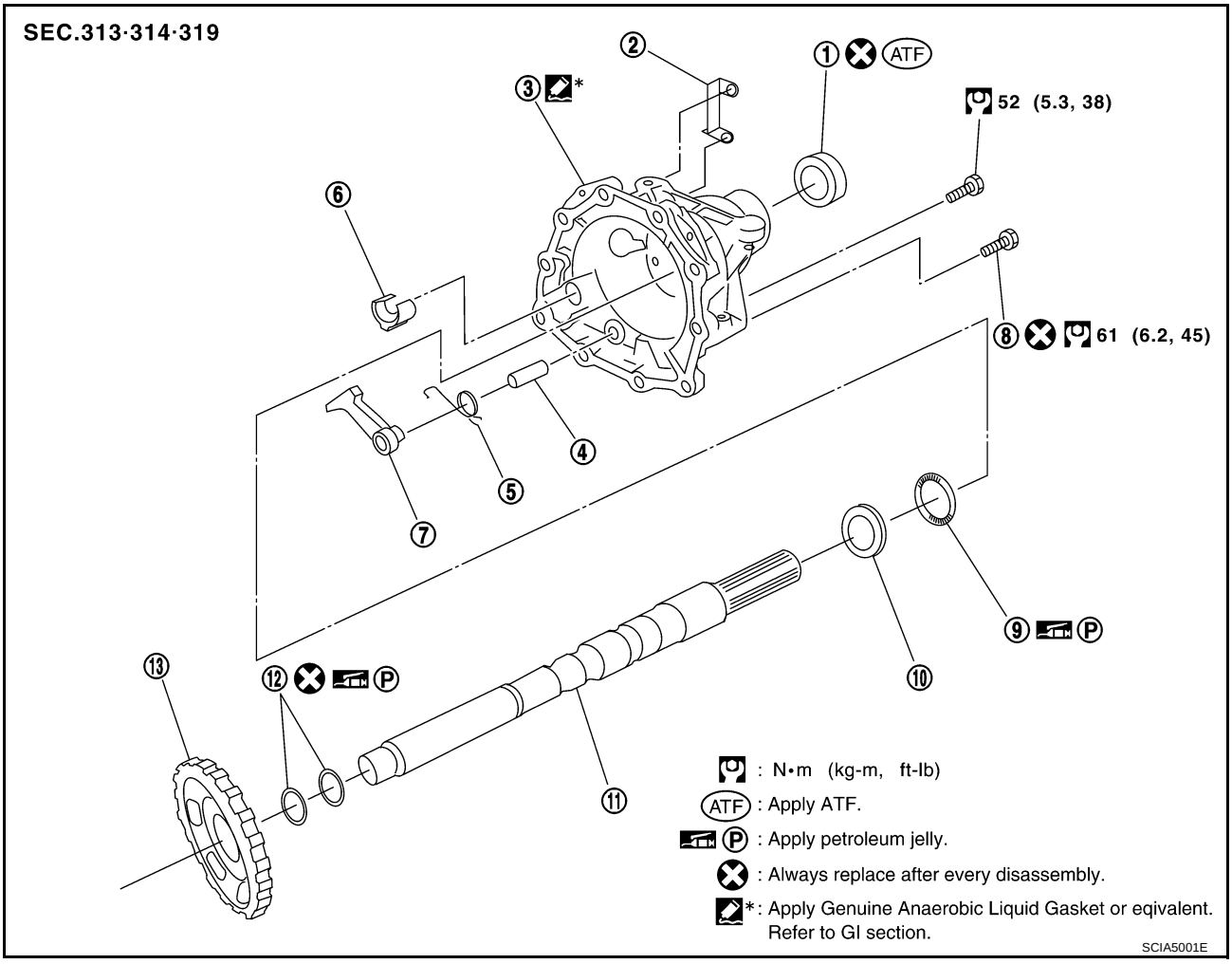

1. Rear oil seal	2. Terminal bracket	3. Rear extension
4. Pawl shaft	5. Return spring	6. Parking actuator support
7. Parking pawl	8. Self-sealing bolt	9. Needle bearing
10. Bearing race	11. Output shaft	12. Seal ring
13. Parking gear		

REMOVAL

1. Drain ATF through drain plug.
2. Remove exhaust tube with power tool.Refer to EX-3, "Removal and Installation" .
3. Remove propeller shaft.Refer to PR-4, "Removal and Installation" .
4. Support transmission assembly with a transmission jack.

   CAUTION:
   When setting transmission jack, be careful not to allow it to collide against the drain plug.
5. Remove engine rear member with power tool. Refer to AT-316, "Removal and Installation" .

6. Remove tightening bolts for rear extension assembly and terminal bracket.

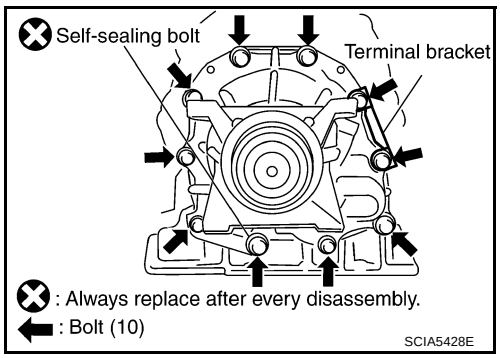

7. Tap rear extension assembly with soft hammer.

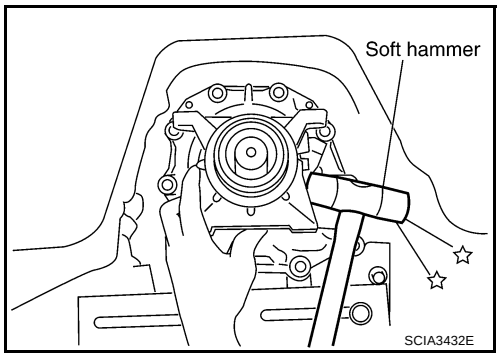

8. Remove rear extension assembly from transmission case.

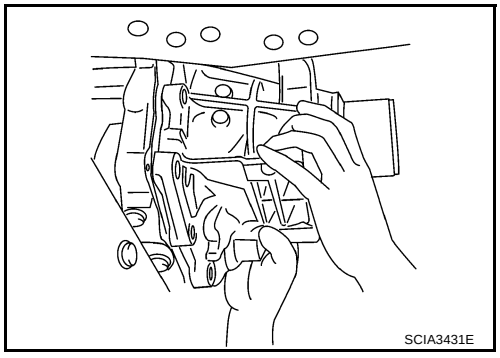

9. Remove bearing race from output shaft.

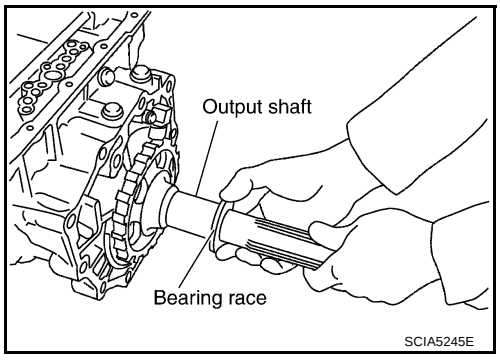

10. Remove output shaft from transmission case.

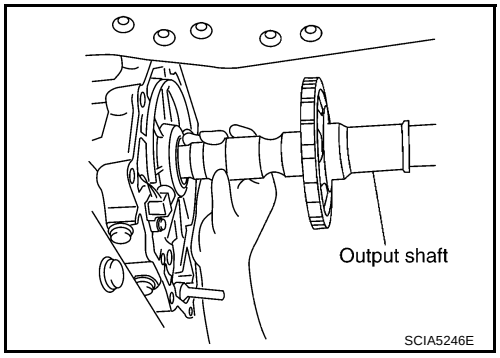

11. Remove parking gear from output shaft.

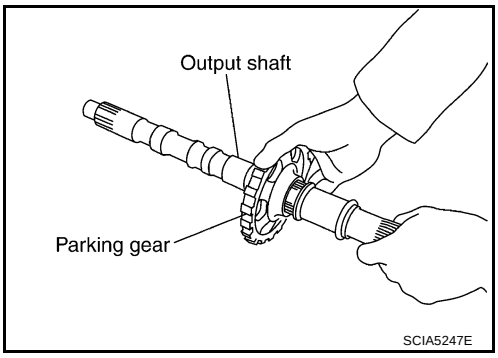

12. Remove seal rings from output shaft.

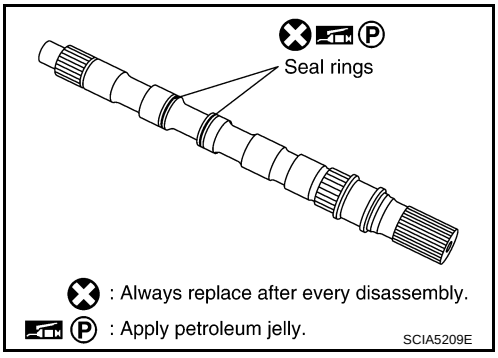

13. Remove needle bearing from rear extension.
14. Remove parking actuator support from rear extension assembly.

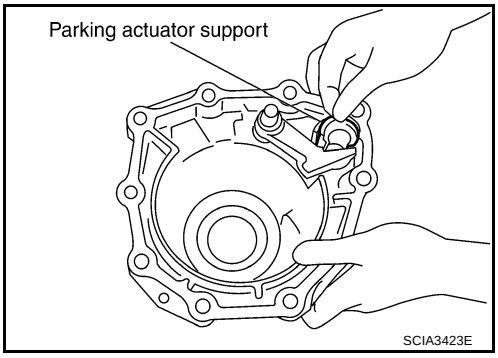

15. Remove parking pawl, pawl shaft and return spring from rear extension.

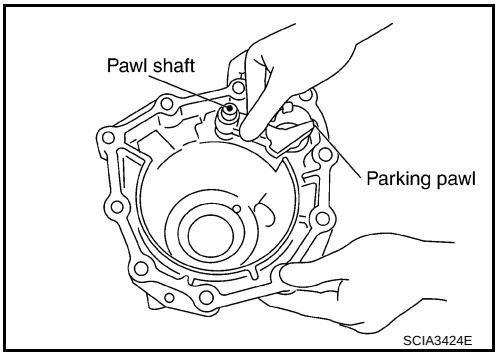

16. Remove return spring from parking pawl.

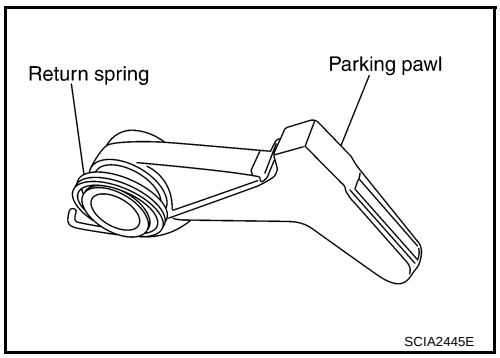

17. Remove rear oil seal from rear extension.

CAUTION:
Be careful not to scratch rear extension.

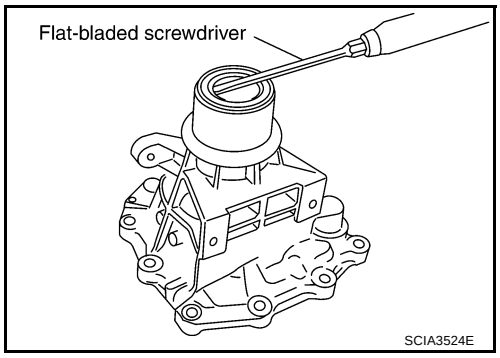

INSTALLATION

CAUTION:
After completing installation, check A/T fluid leakage and A/T fluid level. Refer to AT-13, "Changing A/T Fluid" , AT-13, "Checking A/T Fluid" .

1. As shown below, use a drift to drive rear oil seal into the rear extension until it is flush.

   CAUTION:
   - **Apply ATF to rear oil seal.**
   - **Do not reuse rear oil seal.**

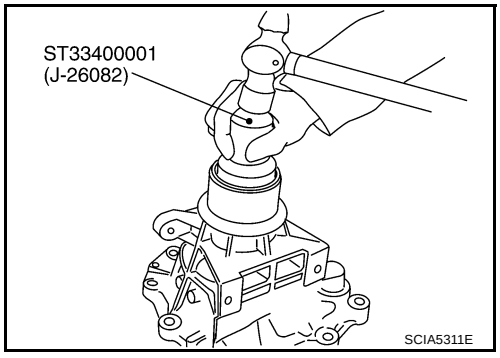

2. Install return spring in parking pawl.

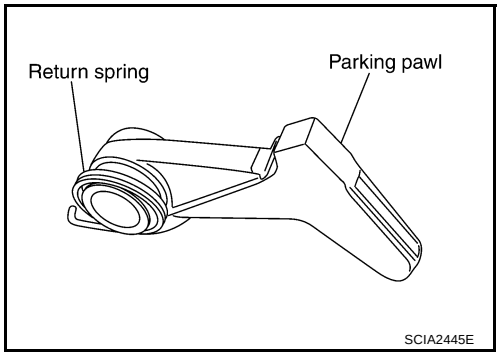

3. Install parking pawl and pawl shaft in rear extension.

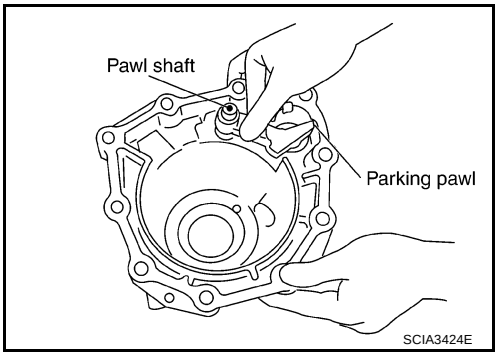

4. Install parking actuator support in rear extension.
5. Install needle bearing in rear extension.

   CAUTION:
   Apply petroleum jelly to needle bearing.

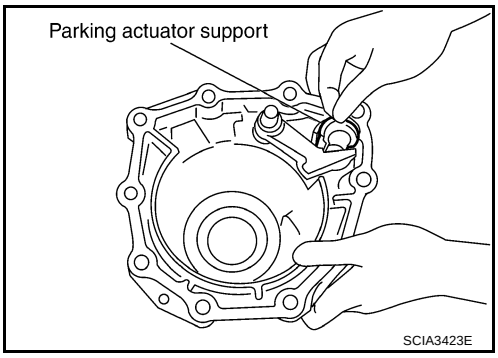

6. Install seal rings in out put shaft.

   CAUTION:
   - **Do not reuse seal rings.**
   - **Apply petroleum jelly to seal rings.**

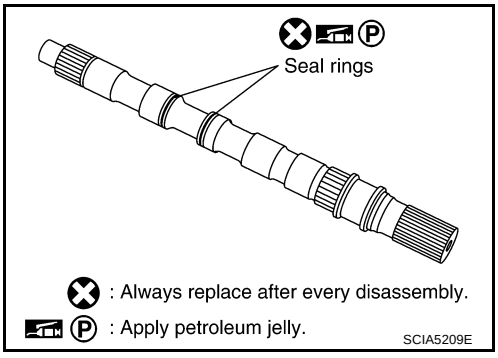

7. Install parking gear in output shaft

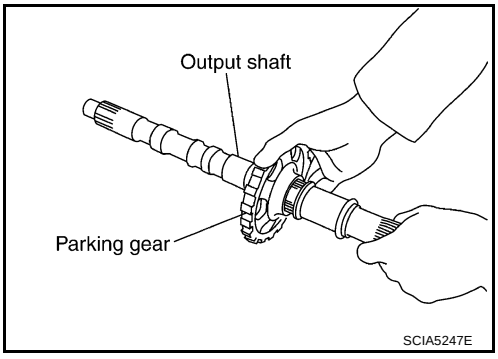

8. Install output shaft in transmission case.

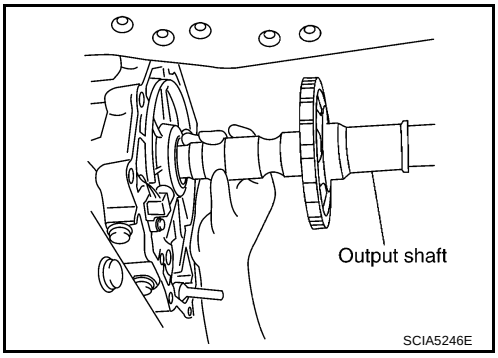

9. Install bearing race in output shaft.

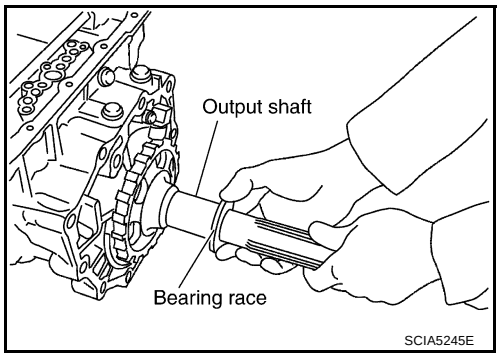

10. Apply recommended sealant (Genuine Anaerobic Liquid Gasket or equivalent.Refer to GI-47, "Recommended Chemical Products and Sealants" .) to rear extension assembly as shown in illustration.

CAUTION:
Complete remove all moisture, oil and old sealant, etc. From the transmission case and rear extension assembly.

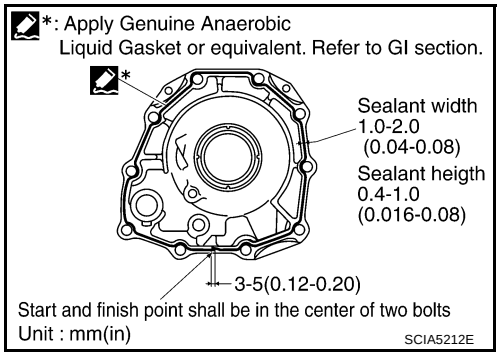

11. Install rear extension assembly in transmission case.

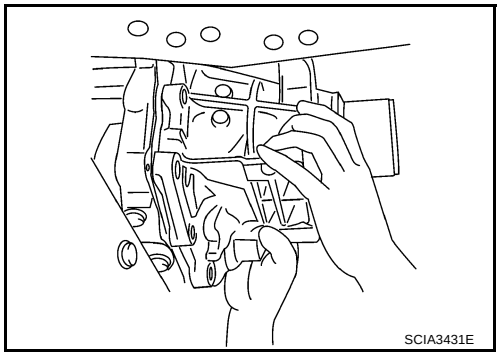

12. Tighten rear extension assembly mounting bolts to specified torque.(Because terminal bracket is tightened together with rear extension assy before procedure 11)

CAUTION:
Do not reuse self–sealing bolt.

Rear extension mounting bolt

: 52 N·m (5.3 Kg-m, 38 ft-lb)

Self-sealing bolt

: 61 N·m (6.2 Kg-m, 45 ft-lb)

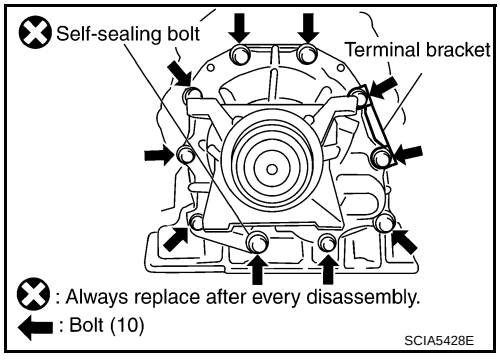

13. Install engine rear member. Refer to AT-316, "Removal and Installation" .
14. Install propeller shaft. Refer to PR-4, "Removal and Installation" .
15. Install exhaust tube. Refer to EX-3, "Removal and Installation" .
16. Install drain plug in oil pan.

CAUTION:
Do not reuse drain plug gasket.

: 34 N·m (3.5 Kg-m, 25ft-lb)

17. Pour ATF into transmission assembly.

AIR BREATHER HOSE

PFP:31098

Removal and Installation

ACS002I9

Refer to the figure below for air breather hose removal and installation procedure.

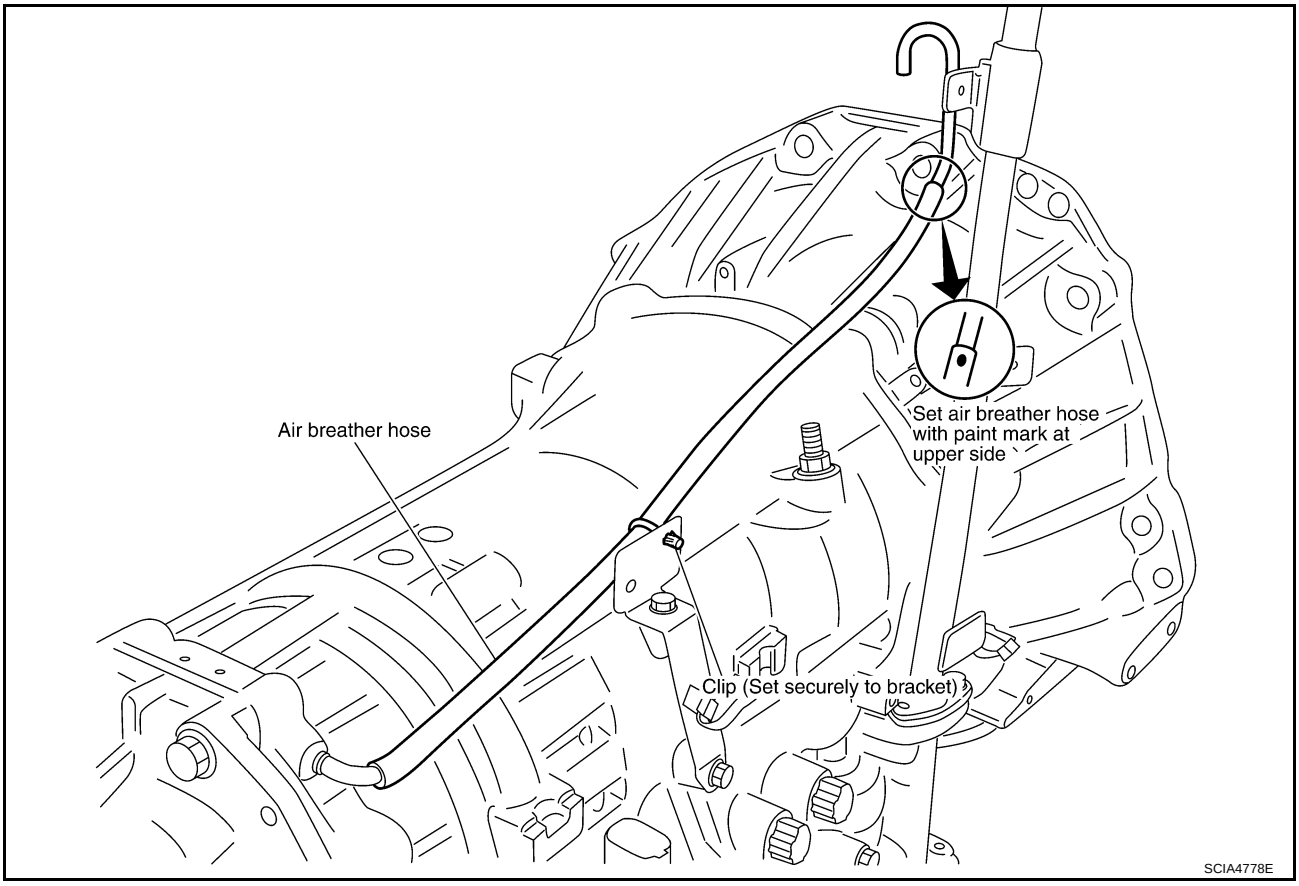

CAUTION:

- **When installing an air breather hose, be careful not to be crushed or blocked by folding or bending the hose.**
- **When inserting a hose to the transmission tube, be sure to insert it fully until its end reaches the tube bend R portion.**

TRANSMISSION ASSEMBLY

PFP:31020

Removal and Installation

ACS002IA

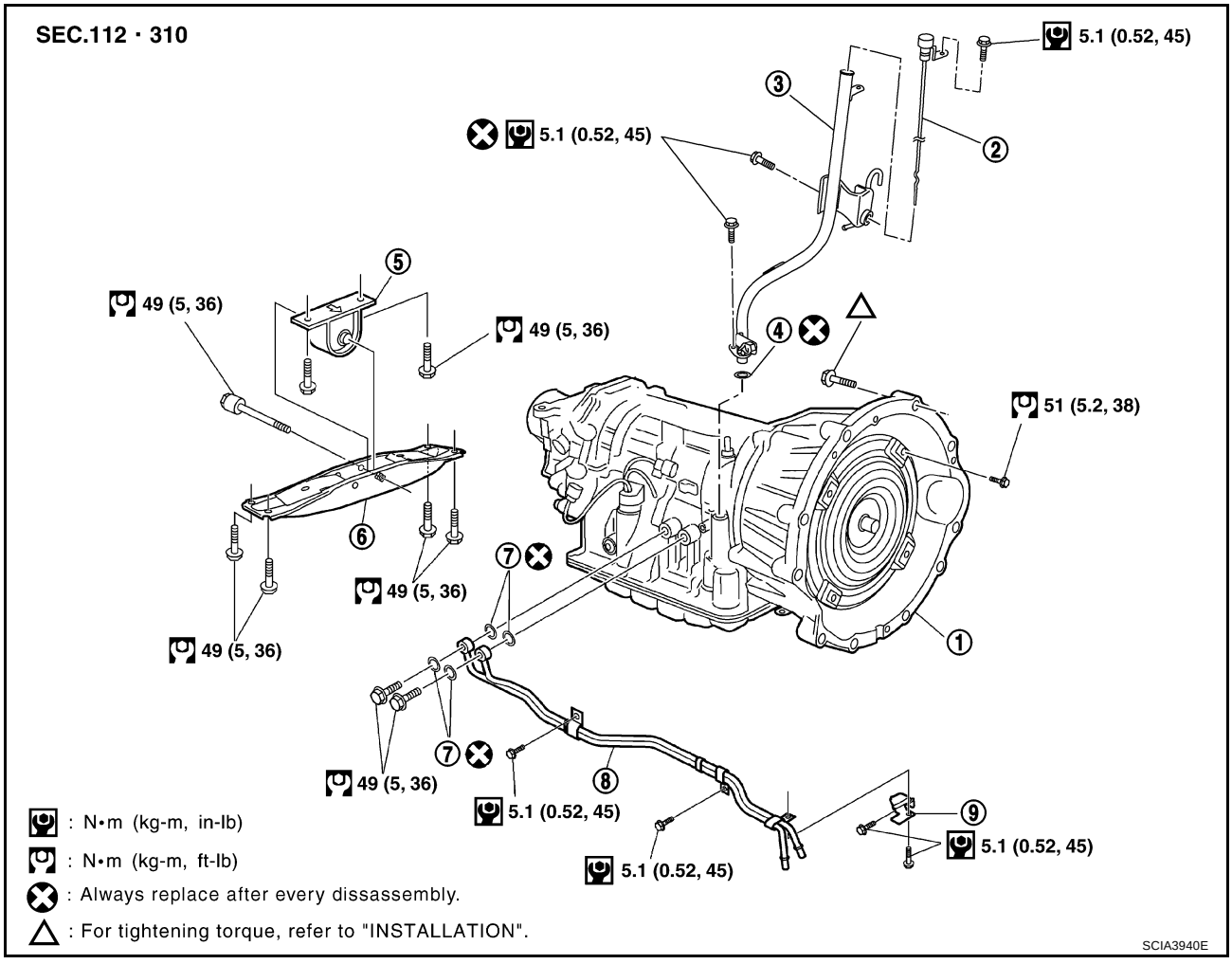

1. Transmission assembly	2. A/T fluid level gauge	3. A/T fluid charging pipe
4. O-ring	5. Insulator	6. Engine rear member
7. Copper washer	8. Fluid cooler tube	9. Bracket

REMOVAL

CAUTION:

When removing the A/T assembly from engine, first remove the crankshaft position sensor (POS) from the A/T assembly.
Be careful not to damage sensor edge.

1. Disconnect the negative battery terminal.
2. Remove engine under cover with power tool.
3. Remove exhaust tube with power tool. Refer to EX-3, "EXHAUST SYSTEM" .
4. Remove three way catalyst. Refer to EM-24, "Removal and Installation" .
5. Remove propeller shaft. Refer to PR-4, "REAR PROPELLER SHAFT" .
6. Remove A/T control rod. Refer to AT-289, "SHIFT CONTROL SYSTEM" .
7. Disconnect A/T solenoid valve harness connectors.

8. Remove crankshaft position sensor (POS) from A/T assembly.

   CAUTION:
   - **Do not subject it to impact by dropping or hitting it.**
   - **Do not disassemble.**
   - **Do not allow metal filings, etc., to get on the sensor's front edge magnetic area.**
   - **Do not place in an area affected by magnetism.**

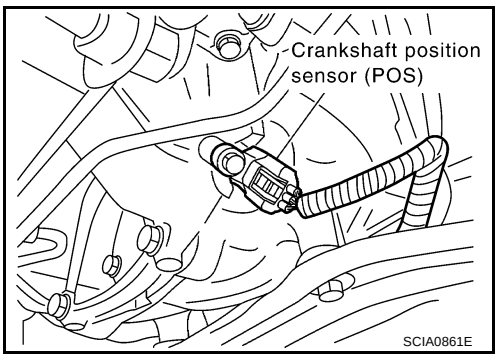

9. Remove fluid cooler tube and A/T fluid charging pipe.
10. Plug up openings such as the fluid charging pipe hole, etc.
11. Remove air breather hose. Refer to AT-315, "AIR BREATHER HOSE" .
12. Remove starter motor. Refer to SC-10, "STARTING SYSTEM" .
13. Remove dust cover from converter housing part.
14. Turn crankshaft, and remove the four tightening bolts for drive plate and torque converter.

    CAUTION:
    When turning crankshaft, turn it clockwise as viewed from the front of the engine.

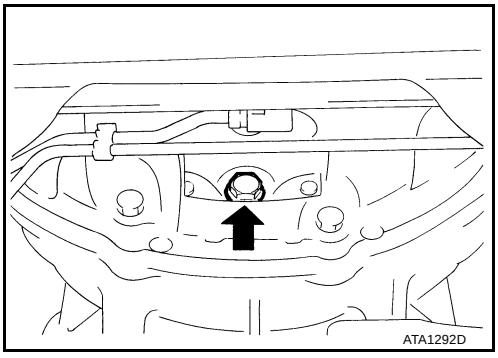

15. Support A/T assembly with a transmission jack.

    CAUTION:
    When setting the transmission jack, be careful not to allow it to collide against the drain plug.
16. Remove engine rear member with power tool.
17. Remove bolts fixing A/T assembly to engine with power tool.
18. Remove A/T assembly from vehicle with a transmission jack.
    - **Secure torque converter to prevent it from dropping.**
    - **Secure A/T assembly to a transmission jack.**

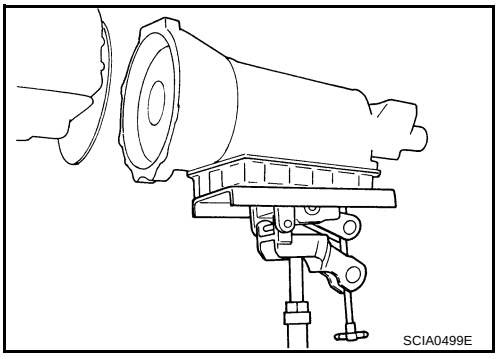

INSPECTION

Installation and Inspection of Torque Converter

- After inserting a torque converter to a transmission, be sure to check dimension A to ensure it is within the reference value limit.

  Dimension A : 25.0 mm (0.98 in) or more

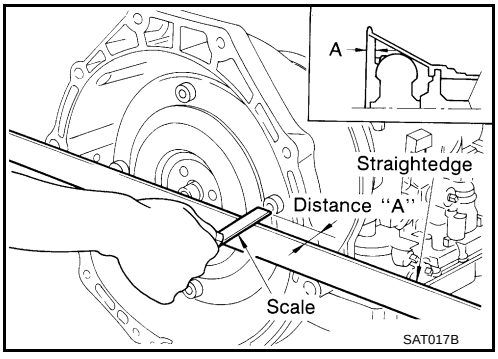

INSTALLATION

Install the removed parts in the reverse order of the removal, while paying attention to the following work.

- When installing transmission to the engine, attach the fixing bolts in accordance with the following standard.

Bolt No.	1	2	3
Number of bolts	1	5	3
Bolt length "ℓ"mm (in)	55 (2.17)	65 (2.56)	35 (1.38)
Tightening torque N·m (kg-m, ft-lb)	70 - 80 (7.2 - 8.1, 52 - 59)		41 - 52 (4.2 - 5.3, 31 - 38)

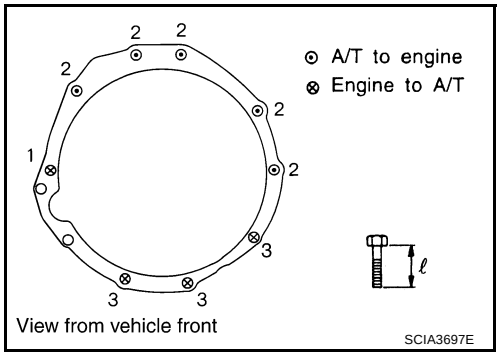

- Align the positions of tightening bolts for drive plate with those of the torque converter, and temporarily tighten the bolts. Then, tighten the bolts with the specified torque.

  : 51 N·m (5.2 kg-m, 38 ft-lb)

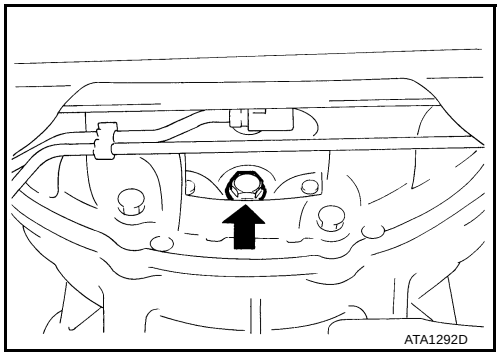

CAUTION:

- **When turning crankshaft, turn it clockwise as viewed from the front of the engine.**
- **When tightening the tightening bolts for the torque converter after fixing the crankshaft pulley bolts, be sure to confirm the tightening torque of the crankshaft pulley mounting bolts.**
- **After converter is installed to drive plate, rotate crankshaft several turns and check to be sure that transmission rotates freely without binding.**

- Install crankshaft position sensor (POS). Refer to EM-28, "OIL PAN AND OIL STRAINER" .
- After completing installation, check fluid leakage, fluid level, and the positions of A/T. Refer to AT-13, "Changing A/T Fluid" , AT-290, "Adjustment of A/T Position" , AT-290, "Checking of A/T Position" .
- When replacing the A/T assembly, erase EEP ROM in TCM. Refer to AT-8, "Precautions for TCM, A/T Assembly and Control Valve Assembly Replacement" .

OVERHAUL

PFP:00000

Components

ACS004JK

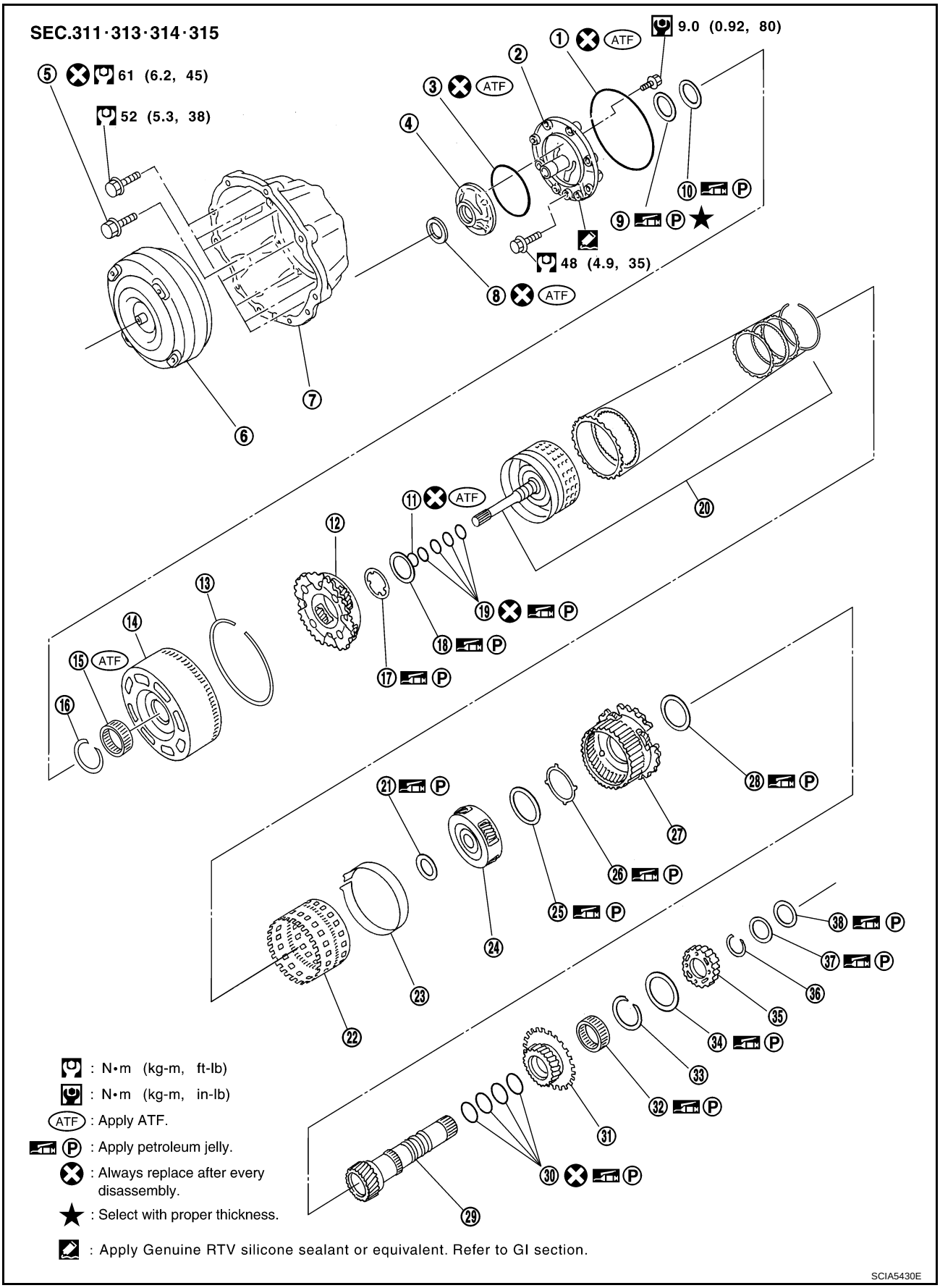

1. O-ring
2. Oil pump cover
3. O-ring
4. Oil pump housing
5. Self-sealing bolt
6. Torque converter
7. Converter housing
8. Oil pump housing oil seal
9. Bearing race
10. Needle bearing
11. O-ring
12. Front carrier assembly
13. Snap ring
14. Front sun gear
15. 3rd one-way clutch
16. Snap ring
17. Bearing race
18. Needle bearing
19. Seal ring
20. Input clutch assembly
21. Needle bearing
22. Rear internal gear
23. Brake band
24. Mid carrier assembly
25. Needle bearing
26. Bearing race
27. Rear carrier assembly
28. Needle bearing
29. Mid sun gear
30. Seal ring
31. Rear sun gear
32. 1st one-way clutch
33. Snap ring
34. Needle bearing
35. High and low reverse clutch hub
36. Snap ring
37. Bearing race
38. Needle bearing

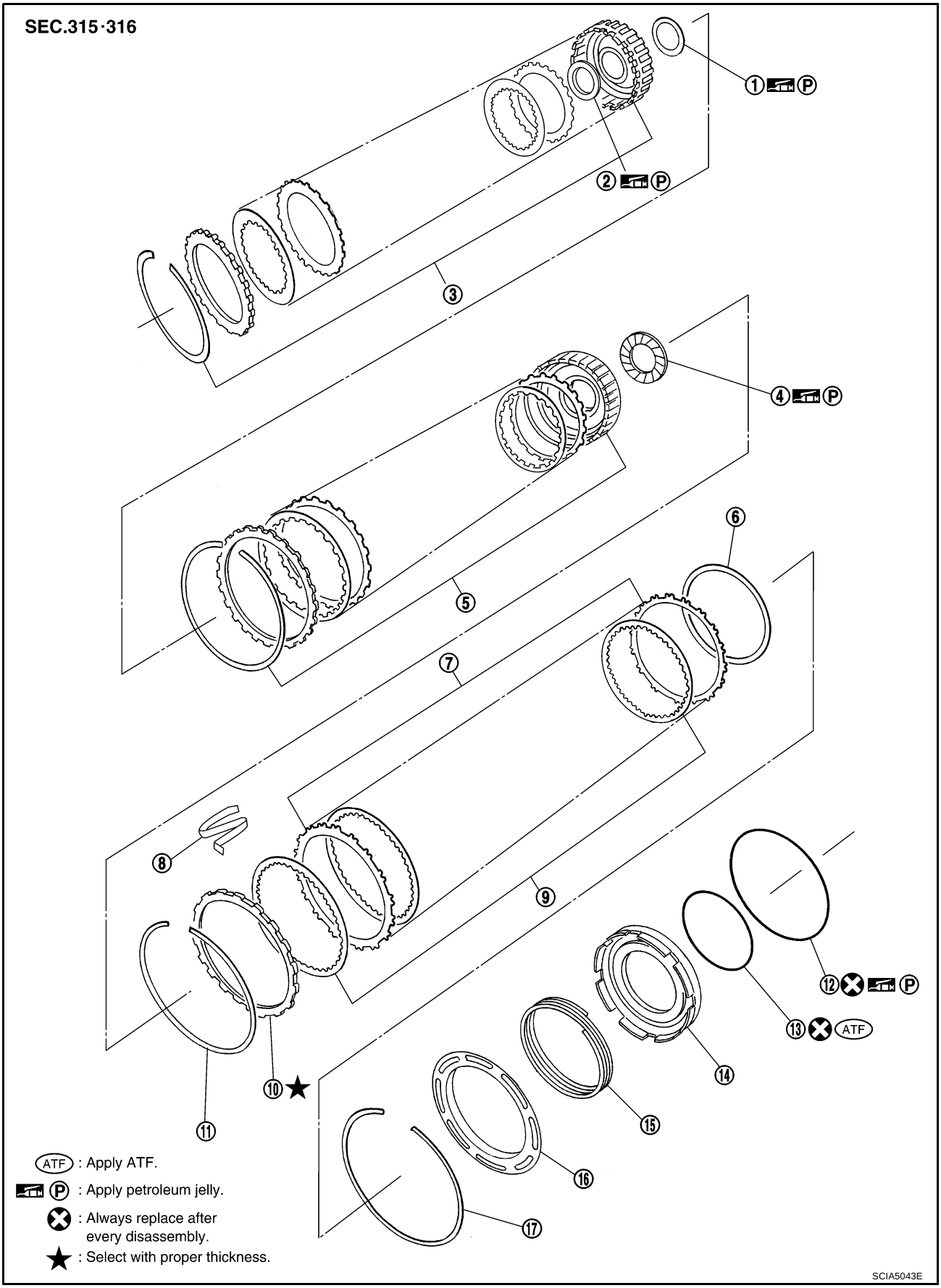

1.	Needle bearing	2.	Bearing race	3.	High and low reverse clutch assembly
4.	Needle bearing	5.	Direct clutch assembly	6.	Reverse brake dish plate

7. Reverse brake driven plate
8. N-spring
9. Reverse brake drive plate
10. Reverse brake retaining plate
11. Snap ring
12. Lip seal
13. D-ring
14. Reverse brake piston
15. Return spring
16. Spring retainer
17. Snap ring

SEC.313 · 314 · 315 · 316 · 317 · 319

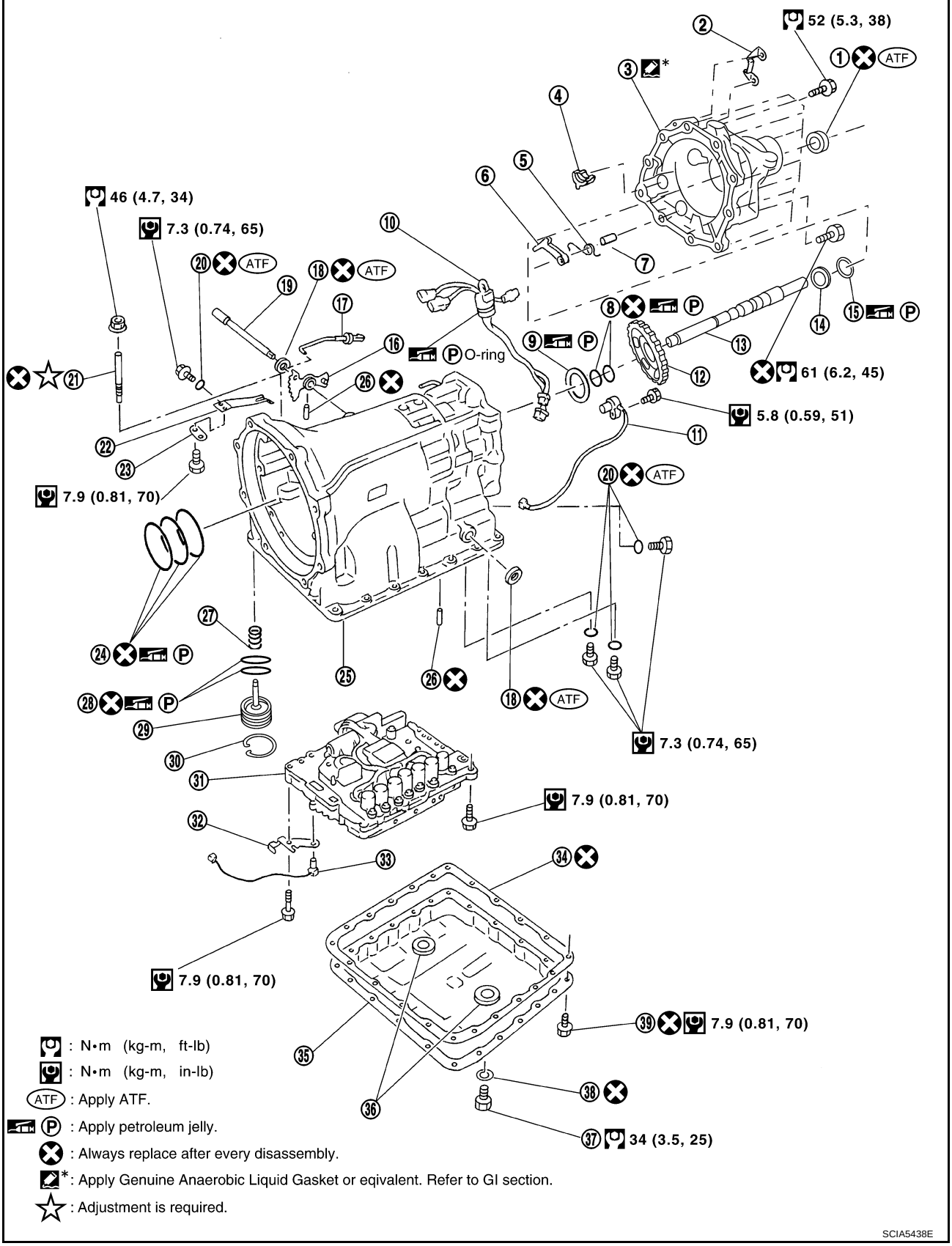

1.	Rear oil seal	2.	Terminal bracket	3.	Rear extension
4.	Parking actuator support	5.	Return spring	6.	Parking pawl
7.	Pawl shaft	8.	Seal ring	9.	Needle bearing

10. Terminal cord assembly
11. Revolution sensor
12. Parking gear
13. Output shaft
14. Bearing race
15. Needle bearing
16. Manual plate
17. Parking rod
18. Manual shaft oil seal
19. Manual shaft
20. O-ring
21. Band servo anchor end pin
22. Detent spring
23. Spacer
24. Seal ring
25. Transmission case
26. Retaining pin
27. Return spring
28. O-ring
29. Servo assembly
30. Snap ring
31. Control valve assembly
32. Bracket
33. A/T fluid temperature sensor 2
34. Oil pan gasket
35. Oil pan
36. Magnet
37. Drain plug
38. Drain plug gasket
39. Oil pan mounting bolt

Oil Channel

ACS004JL

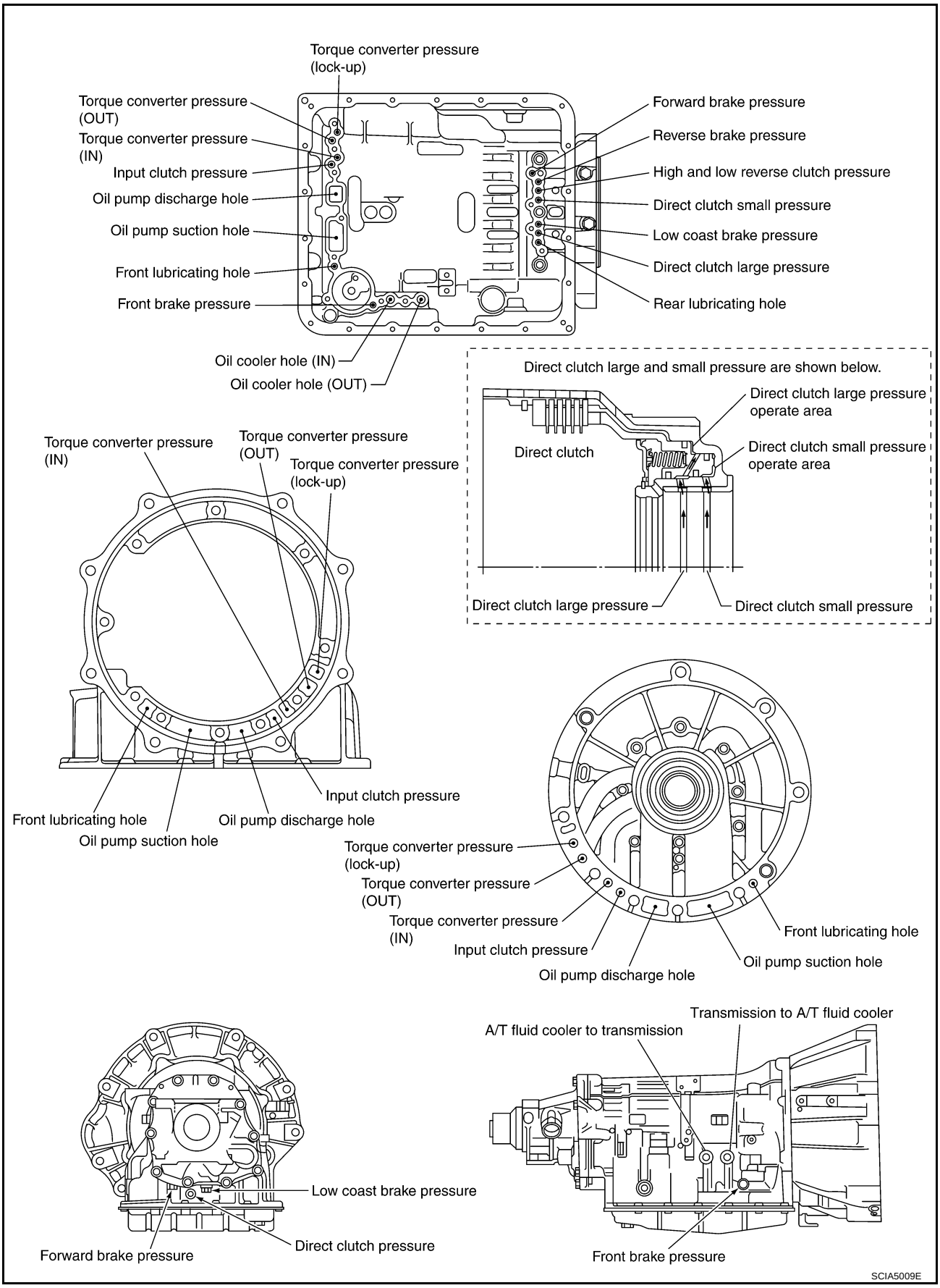

Locations of Adjusting Shims, Needle Bearings, Thrust Washers and Snap Rings

ACS004JM

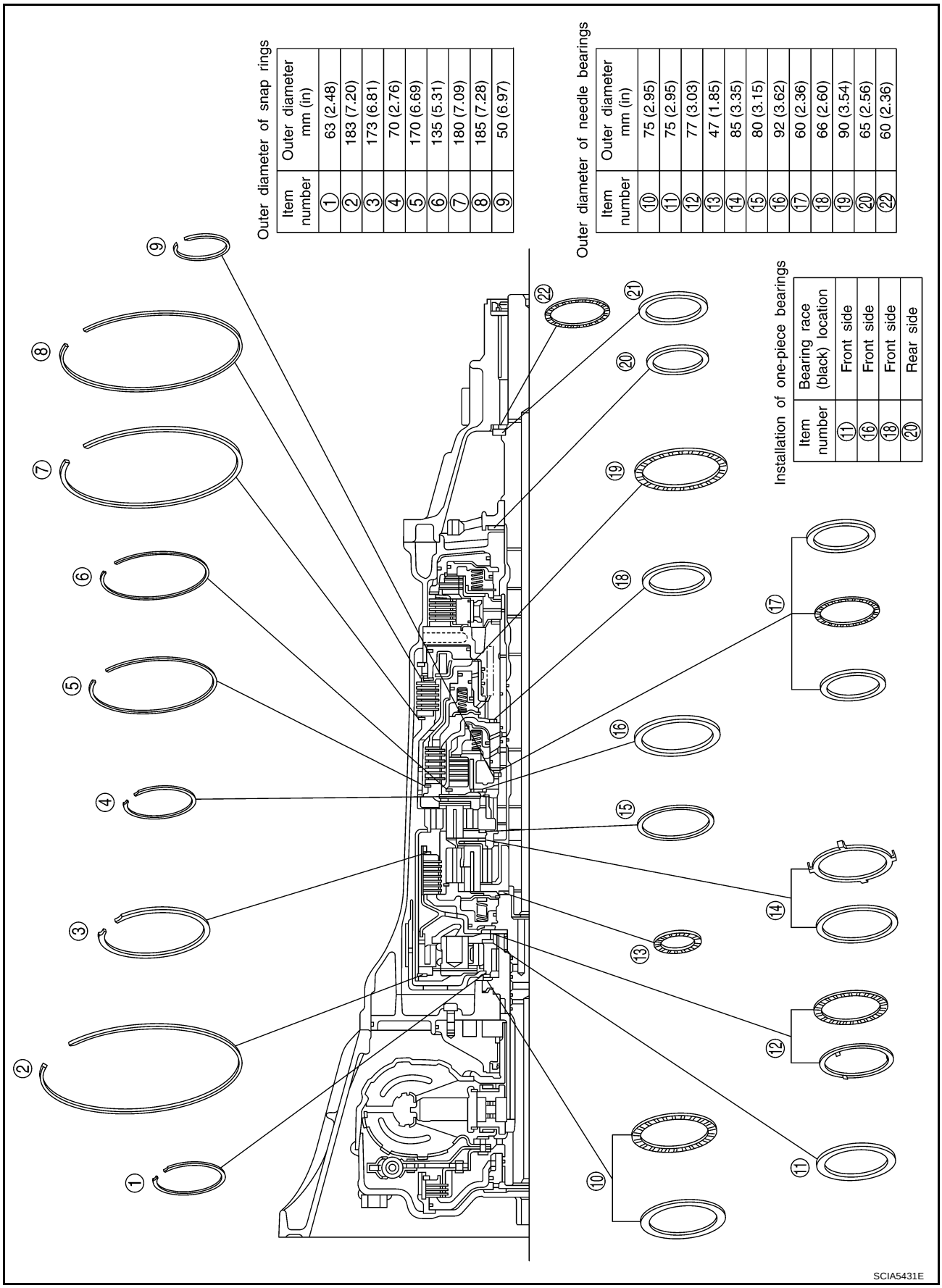

Outer diameter of snap rings

Item number	Outer diameter mm (in)
1	63 (2.48)
2	183 (7.20)
3	173 (6.81)
4	70 (2.76)
5	170 (6.69)
6	135 (5.31)
7	180 (7.09)
8	185 (7.28)
9	50 (6.97)

Outer diameter of needle bearings

Item number	Outer diameter mm (in)
10	75 (2.95)
11	75 (2.95)
12	77 (3.03)
13	47 (1.85)
14	85 (3.35)
15	80 (3.15)
16	92 (3.62)
17	60 (2.36)
18	66 (2.60)
19	90 (3.54)
20	65 (2.56)
22	60 (2.36)

Installation of one-piece bearings

Item number	Bearing race (black) location
11	Front side
16	Front side
18	Front side
20	Rear side

DISASSEMBLY

PFP:31020

Disassembly

ACS004KW

CAUTION:
Do not disassemble parts behind Drum Support. Refer to AT-18, "Cross-Sectional View" .

1. Drain ATF through drain plug.
2. Remove torque converter by holding it firmly and turing while pulling straight out.

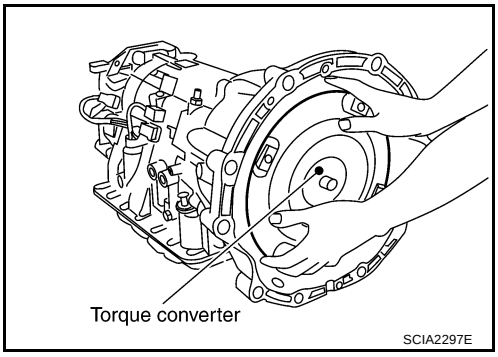

3. Check torque converter one-way clutch using check tool as shown at figure.
a. Insert check tool into the groove of bearing support built into one-way clutch outer race.
b. When fixing bearing support with check tool, rotate one- way clutch spline using screwdriver.
c. Check that inner race rotates clockwise only. If not, replace torque converter assembly.

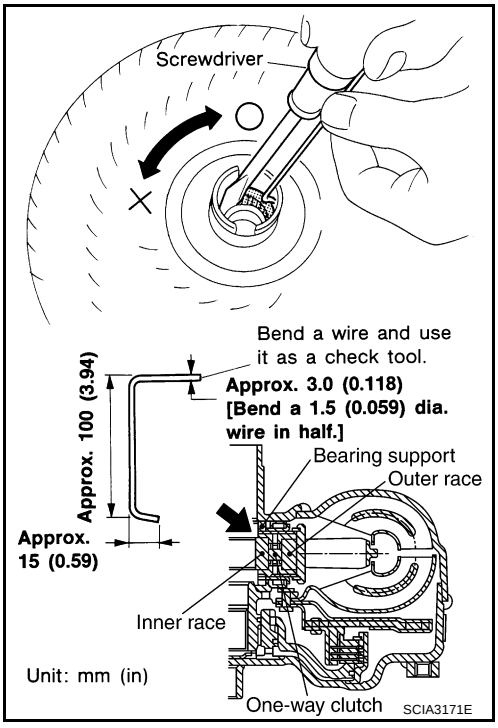

4. Remove converter housing from transmission case.

CAUTION:
Be careful not to scratch converter housing.

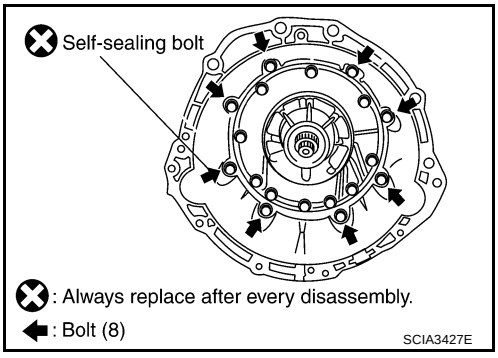

5. Remove O-ring from input clutch assembly.

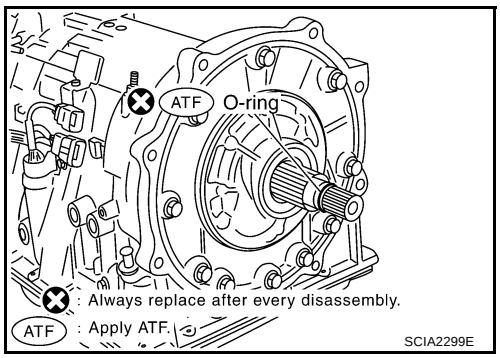

6. Remove tightening bolts for oil pump assembly and transmission case.

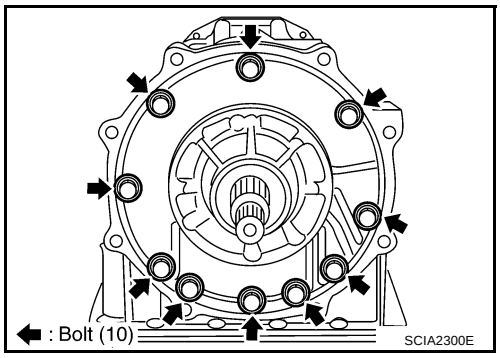

7. Attach sliding hammer to oil pump assembly and extract it evenly from transmission case.

CAUTION:

- **Fully tighten sliding hammer screw.**
- **Make sure that bearing race is installed to the oil pump assembly edge surface.**

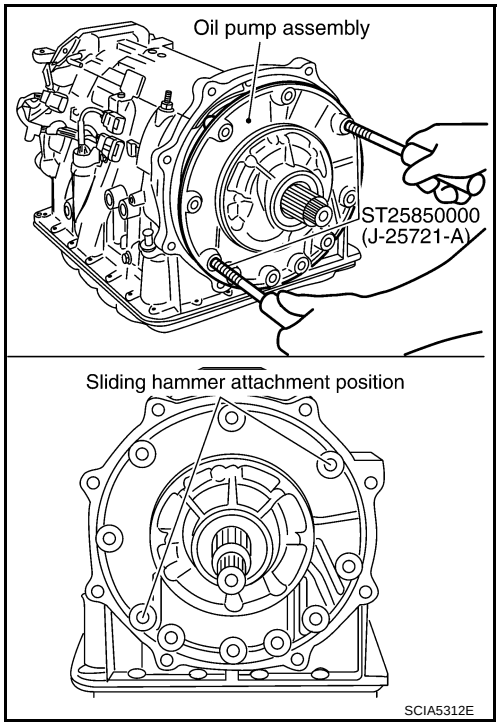

8. Remove O-ring from oil pump assembly.

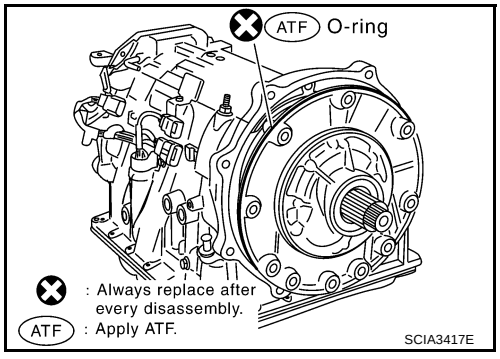

9. Remove bearing race, needle bearing and front sun gear from transmission case.

   NOTE:
   Remove front sun gear by rotating left and right.

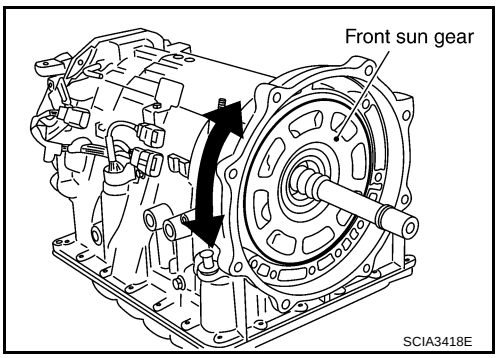

10. Remove seal rings from input clutch assembly.

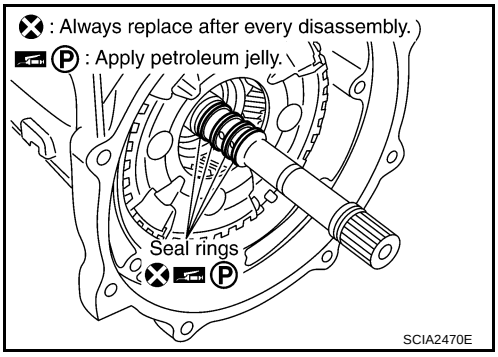

11. Remove front carrier assembly from transmission case. (With input clutch assembly and rear internal gear.)

   CAUTION:
   Be careful to remove it with needle bearing.

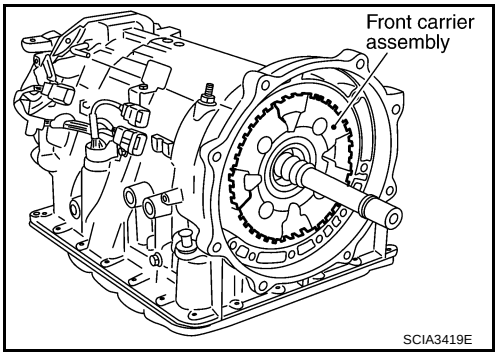

12. Loosen lock nut and remove band servo anchor end pin from transmission case.

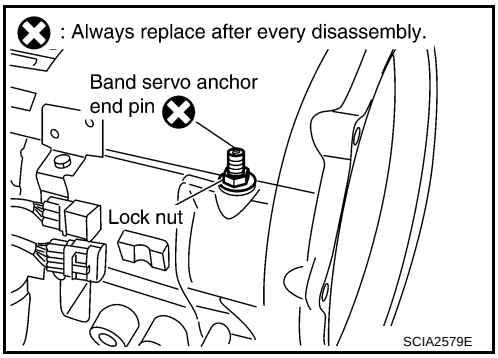

13. Remove brake band from transmission case.

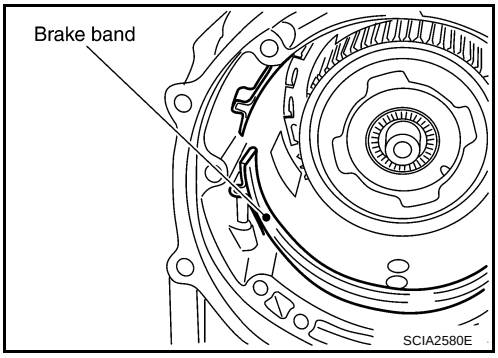

- **To prevent brake linings from cracking or peeling, do not stretch the flexible band unnecessarily. When removing the brake band, always secure it with a clip as shown in the figure at left.**
  Leave the clip in position after removing the brake band.
- **Check brake band facing for damage, cracks, wear or burns.**

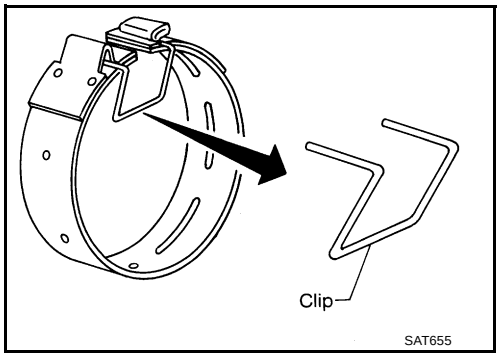

14. Remove mid carrier assembly and rear carrier assembly as a unit.
15. Remove mid carrier assembly from rear carrier assembly.

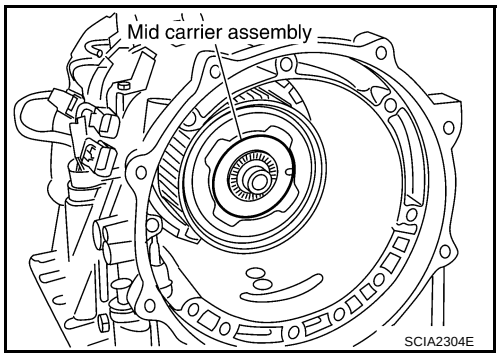

16. Remove needle bearing (front side) from mid carrier assembly.

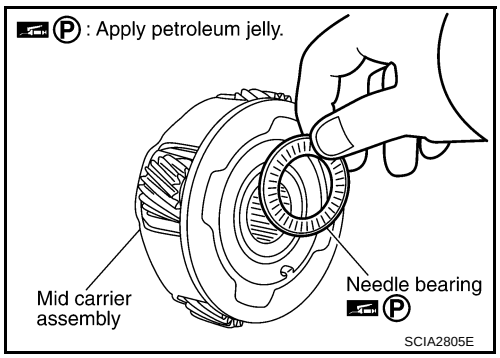

17. Remove needle bearing (rear side) from mid carrier assembly.

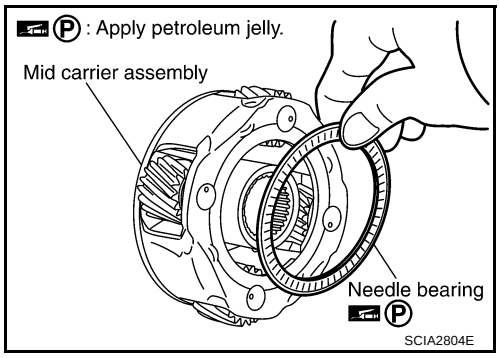

18. Remove bearing race from rear carrier assembly.

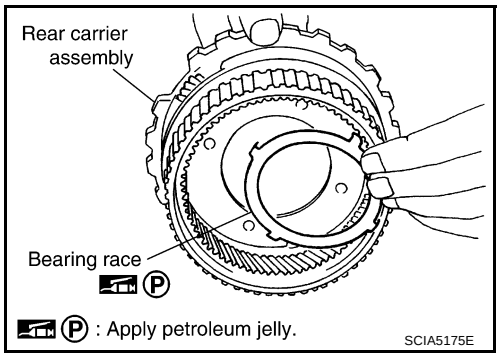

19. Remove needle bearing from rear carrier assembly.

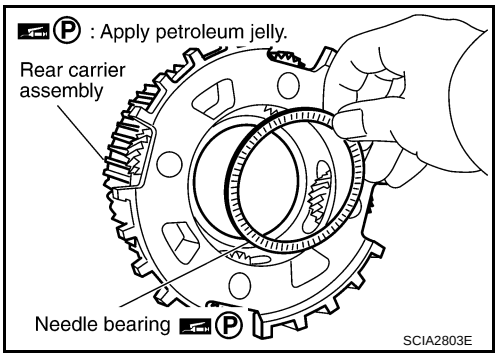

20. Remove mid sun gear assembly, rear sun gear assembly and high and low reverse clutch hub as a unit.

CAUTION:
Be careful to remove then with bearing race and needle bearing.

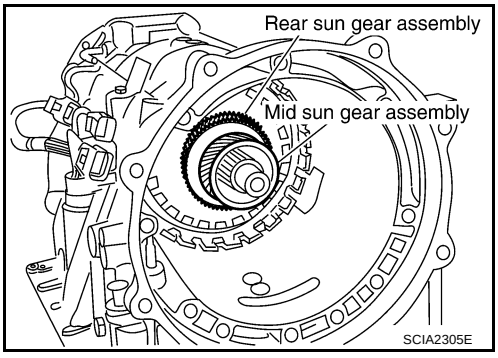

21. Remove high and low reverse clutch assembly from transmission case.

CAUTION:
Make sure that needle bearing is installed to the high and low reverse clutch assembly edge surface.

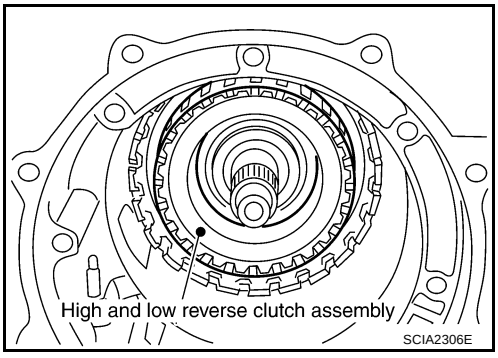

22. Remove direct clutch assembly from transmission case.

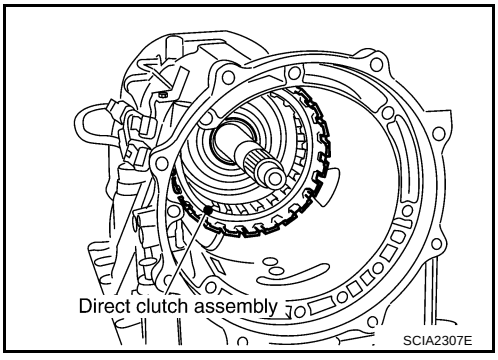

23. Remove needle bearing from drum support edge surface.

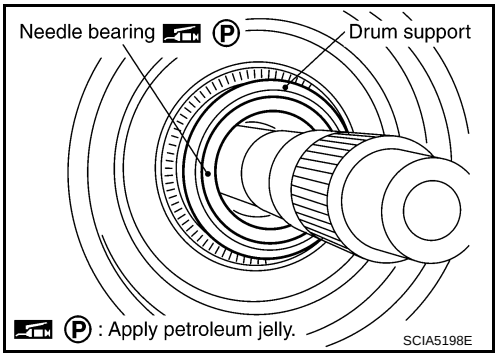

24. Remove oil pan and oil pan gasket.

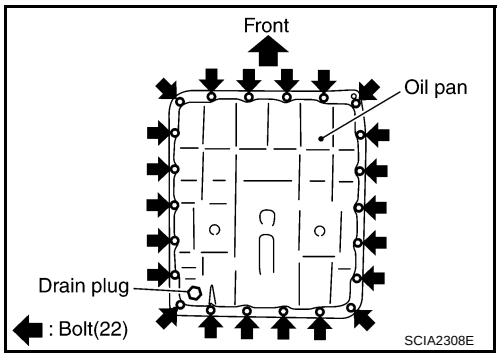

25. Remove magnets from oil pan.

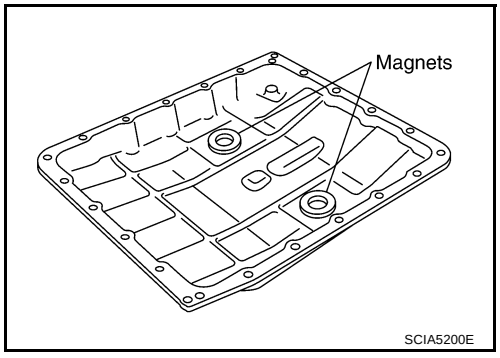

26. Check foreign materials in oil pan to help determine causes of malfunction. If the A/T fluid is very dark, smells burned, or contains foreign particles, the frictional material (clutches, band) may need replacement. A tacky film that will not wipe clean indicates varnish build up. Varnish can cause valves, servo, and clutches to stick and can inhibit pump pressure.
    - **If frictional material is detected, perform A/T fluid cooler cleaning. Refer to** AT-15, "A/T Fluid Cooler Cleaning".

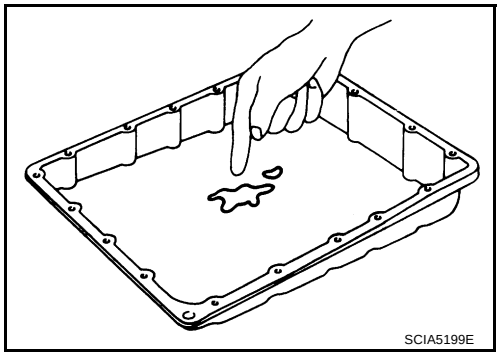

27. Disconnect terminal cord assembly connectors.

    CAUTION:
    Be careful not to damage connector.

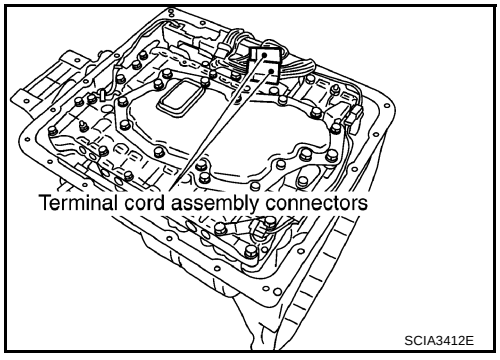

28. Disconnect A/T fluid temperature sensor 2 connector.

    CAUTION:
    Be careful not to damage connector.

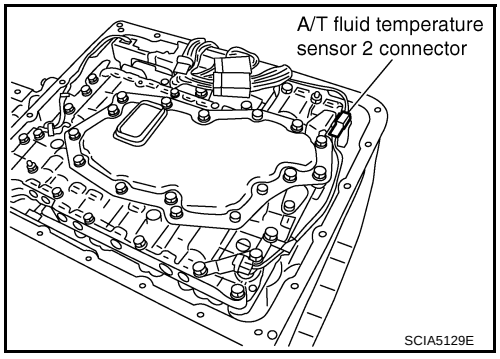

29. Remove terminal cord assembly connectors from bracket.

CAUTION:
Be careful not to damage connector.

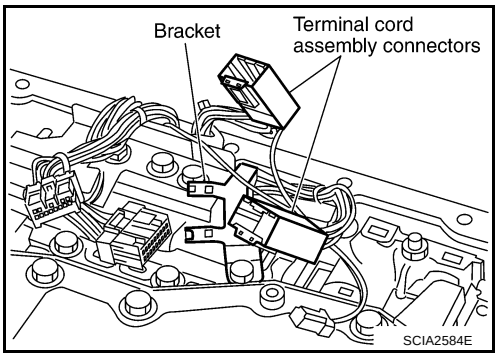

30. Disconnect revolution sensor connector.

CAUTION:
Be careful not to damage connector.

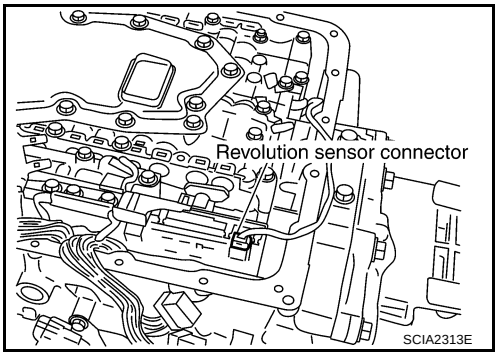

31. Straighten terminal clips to free terminal cord assembly and revolution sensor harness then remove terminal clips.

CAUTION:
Hang down terminal cord assembly and revolution sensor harness toward outside so as not to disturb removal of control valve assembly.

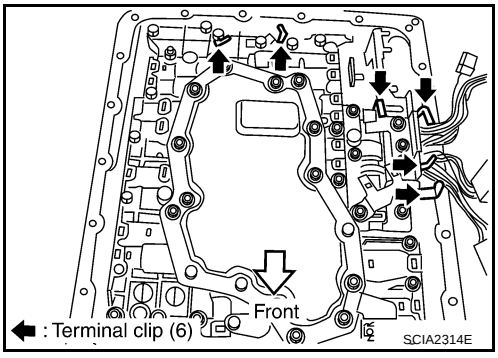

32. Remove bolts A, B and C from control valve assembly.

Bolt symbol	Length mm (in)	Number of bolts
A	42 (1.65)	5
B	55 (2.17)	6
C	40 (1.57)	1

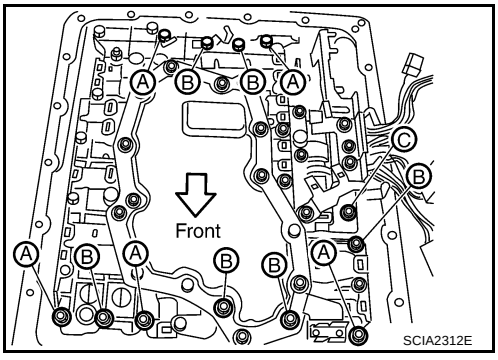

33. Remove control valve assembly from transmission case.

CAUTION:
When removing, be careful with the manual valve notch and manual plate height. Remove it vertically.

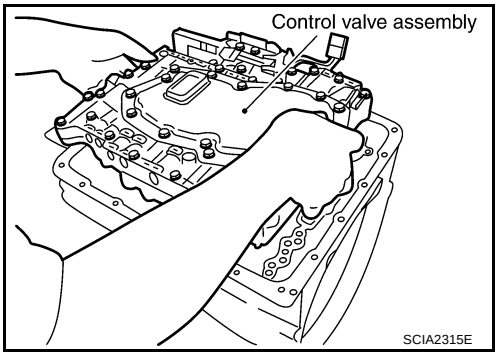

34. Remove A/T fluid temperature sensor 2 with bracket from control valve assembly.

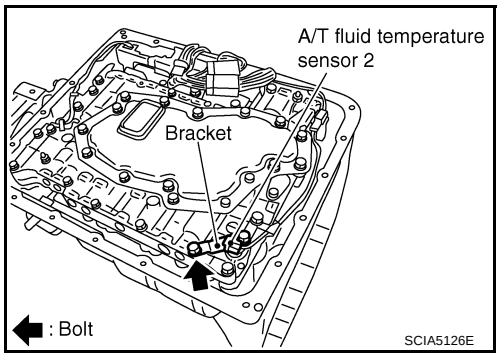

35. Remove bracket from A/T fluid temperature sensor 2.

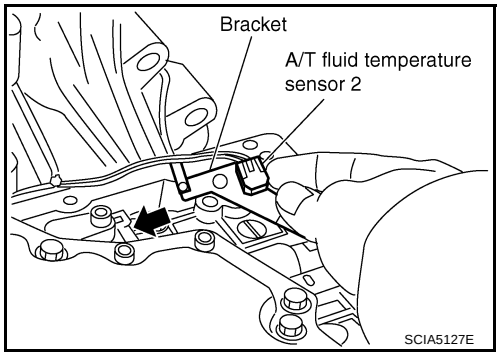

36. Remove tightening bolts for rear extension assembly and transmission case.

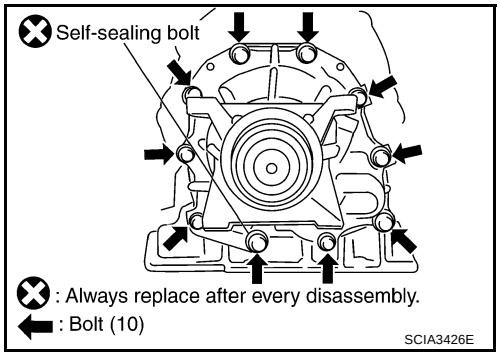

37. Tap rear extension assembly with soft hammer.

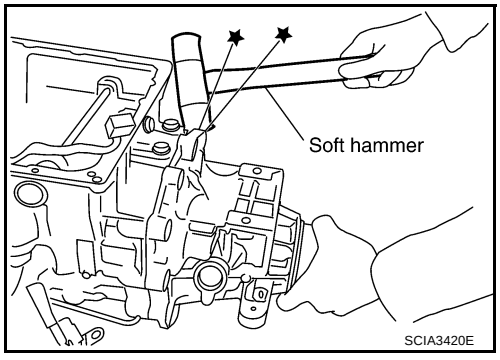

38. Remove rear extension assembly from transmission case.

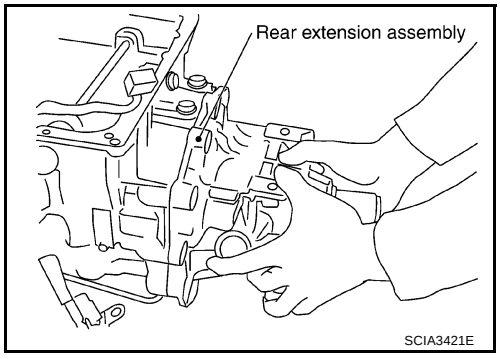

39. Remove bearing race from output shaft.

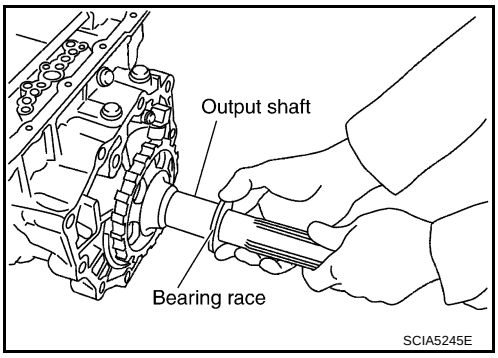

40. Remove output shaft from transmission case by rotating left and right.

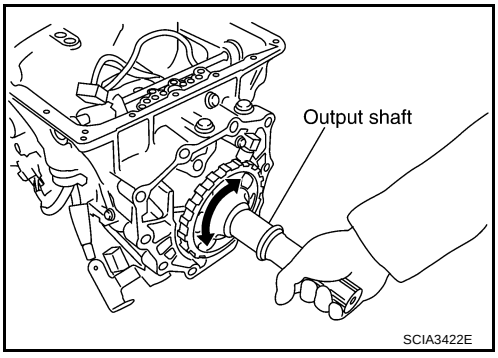

41. Remove parking gear from output shaft.

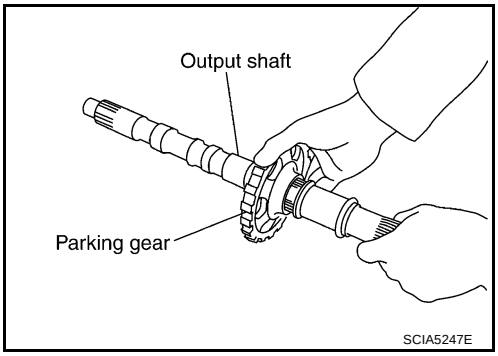

42. Remove seal rings from output shaft.

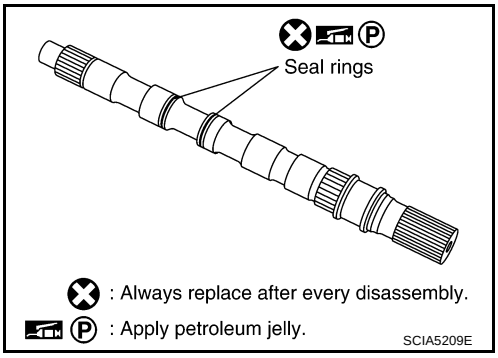

43. Remove needle bearing from transmission case.

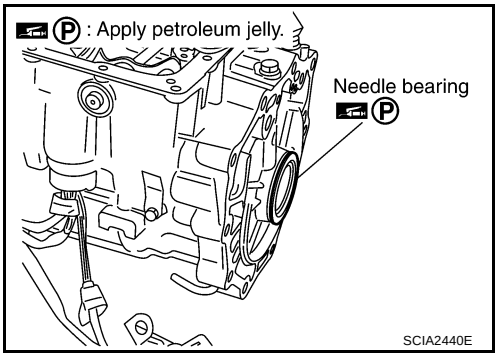

44. Remove revolution sensor from transmission case.

CAUTION:

- **Do not subject it to impact by dropping or hitting it.**
- **Do not disassemble.**
- **Do not allow metal filings, etc., to get on the sensor's front edge magnetic area.**
- **Do not place in an area affected by magnetism.**

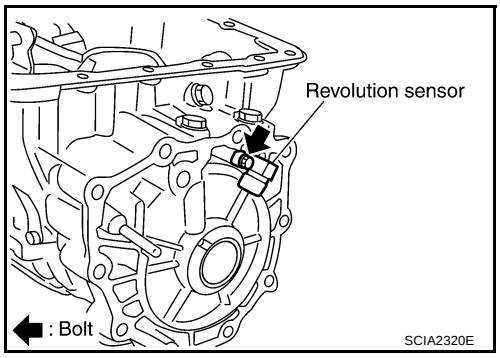

45. Remove reverse brake snap ring (fixing plate) using 2 flat-bladed screwdrivers.

NOTE:
Press out snap ring from the transmission case oil pan side gap using a flat-bladed screwdriver, and remove it using another screwdriver.

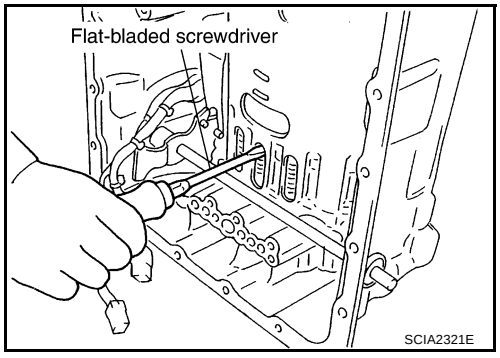

46. Remove reverse brake retaining plate, drive plates, driven plates and dish plate from transmission case.

CAUTION:
Be careful to remove it with N-spring.

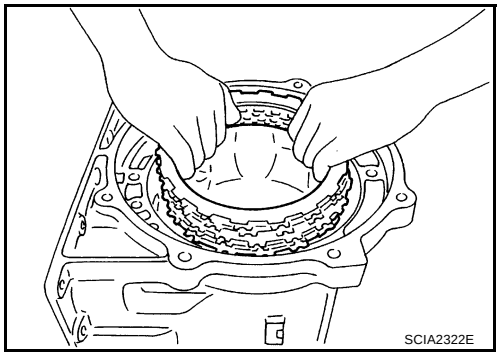

47. Remove snap ring (fixing spring retainer) using a flat-bladed screwdriver.

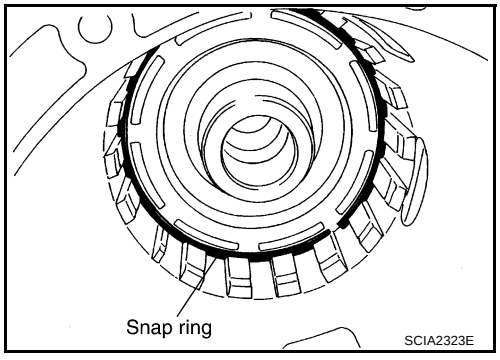

48. Remove spring retainer and return spring from transmission case.

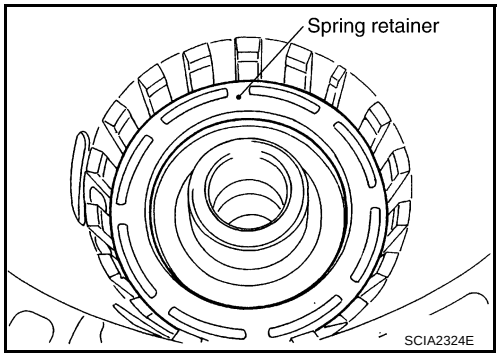

49. Remove seal rings from drum support.

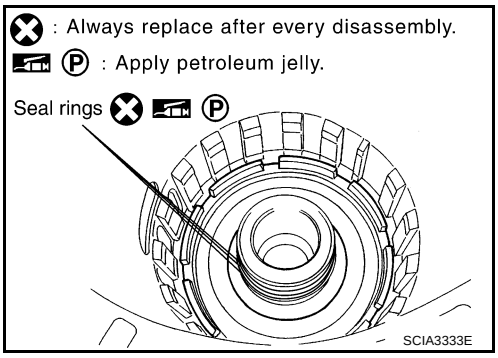

50. Remove needle bearing from drum support edge surface.

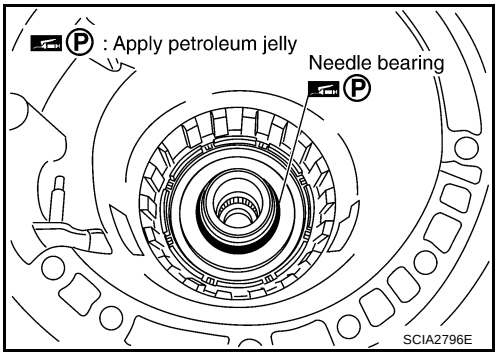

51. Remove reverse brake piston from transmission case.

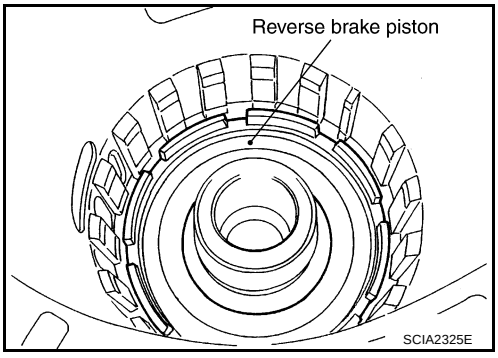

52. Remove lip seal and D-ring from reverse brake piston.

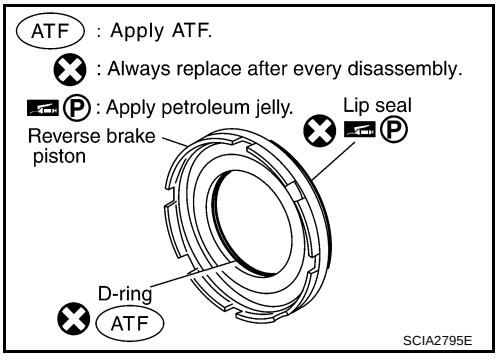

53. Remove terminal cord assembly connectors from bracket.

CAUTION:

Be careful not to damage connector.

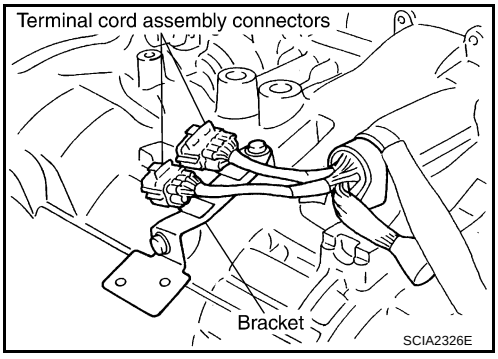

54. Remove terminal cord assembly from transmission case.

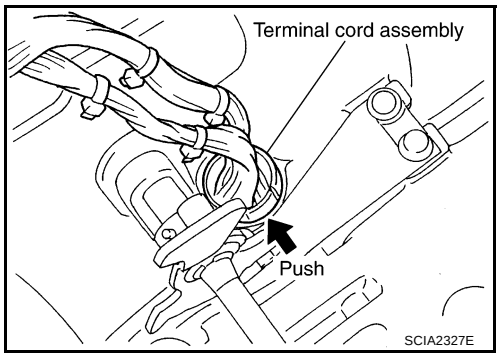

55. Use a pin punch (4mm dia. commercial service tool) to knock out retaining pin.

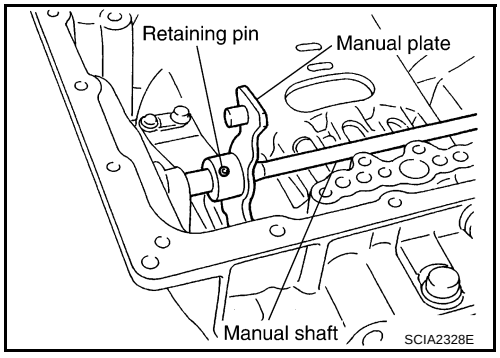

56. Remove manual shaft retaining pin with nippers.
57. Remove manual plate (with parking rod) from manual shaft.

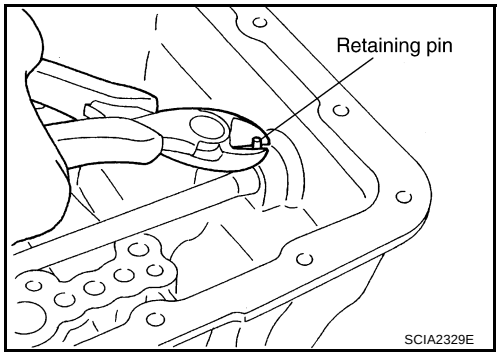

58. Remove parking rod from manual plate.
59. Remove manual shaft from transmission case.

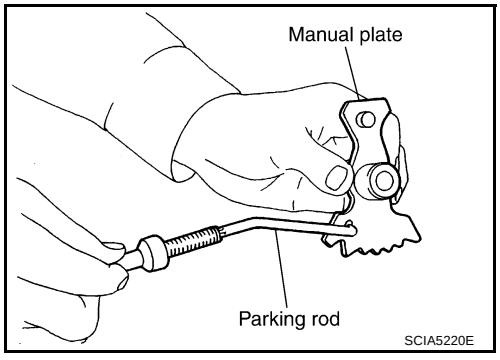

60. Remove manual shaft oil seals using a flat-bladed screwdriver.

CAUTION:

Be careful not to scratch transmission case.

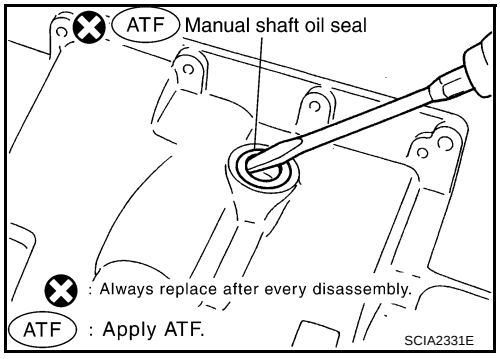

61. Remove detent spring and spacer from transmission case.

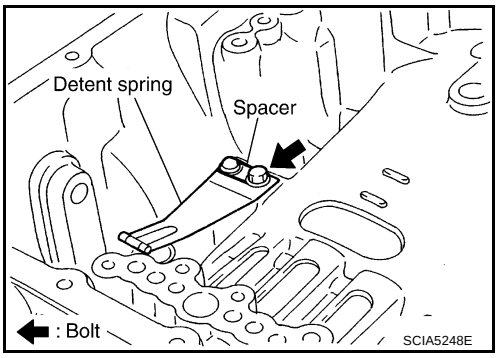

62. Using snap ring pliers, remove snap ring from transmission case.

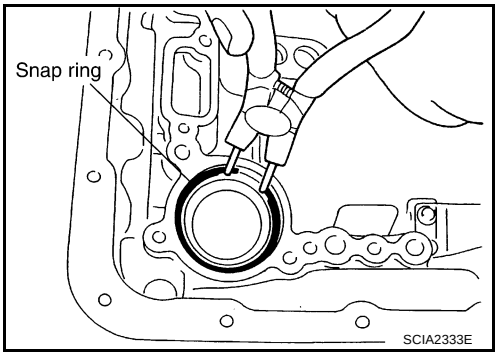

63. Remove servo assembly (with return spring) from transmission case.
64. Remove return spring from servo assembly.
65. Remove O-rings from servo assembly.

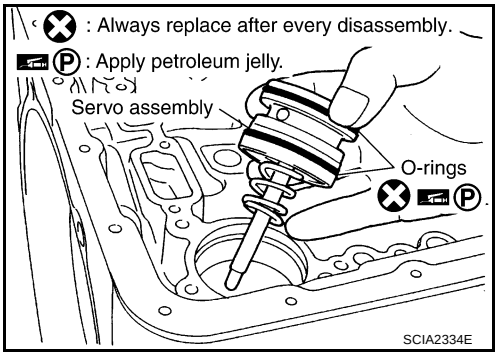

66. Remove parking actuator support from rear extension.

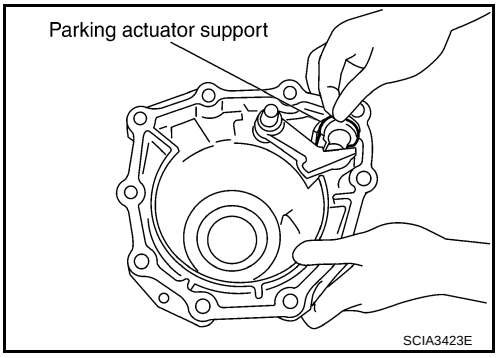

67. Remove parking pawl, pawl shaft and return spring from rear extension.

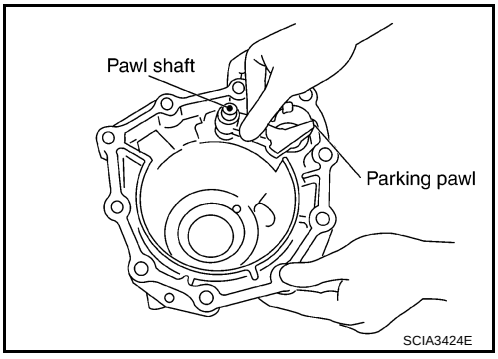

68. Remove return spring from parking pawl.

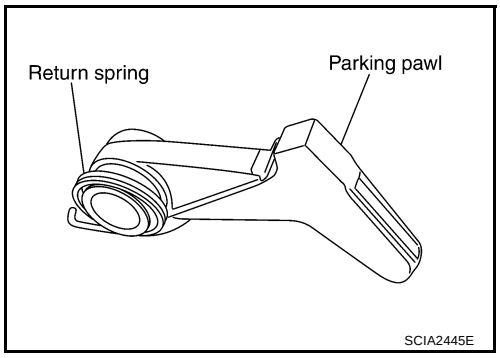

69. Remove needle bearing from rear extension.
70. Remove rear oil seal from rear extension.

CAUTION:
Be careful not to scratch rear extension.

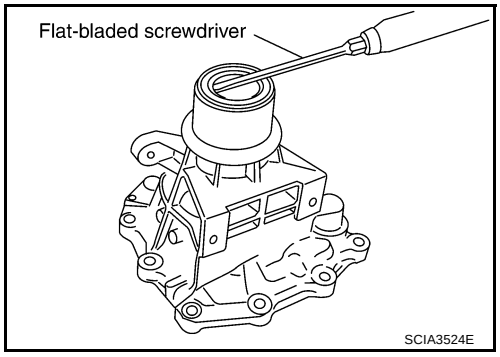

REPAIR FOR COMPONENT PARTS

PFP:00000

Oil Pump

ACS004JO

COMPONENTS

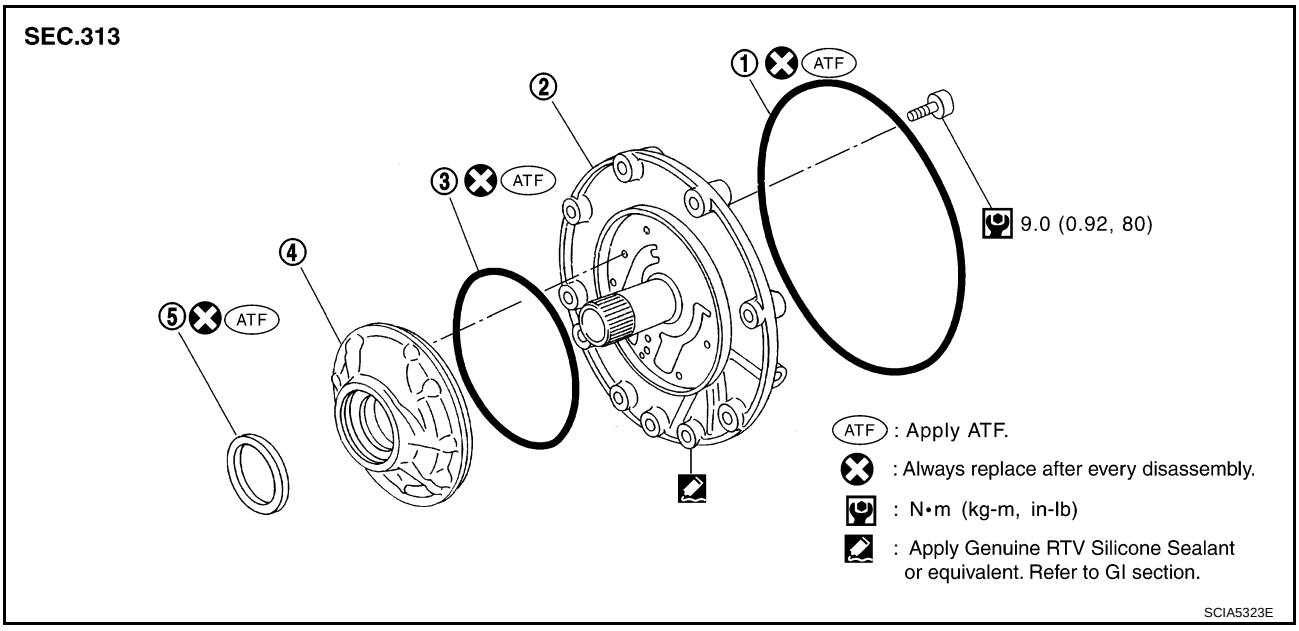

1. O-ring
2. Oil pump cover
3. O-ring
4. Oil pump housing
5. Oil pump housing oil seal

DISASSEMBLY

1. Remove oil pump housing from oil pump cover.

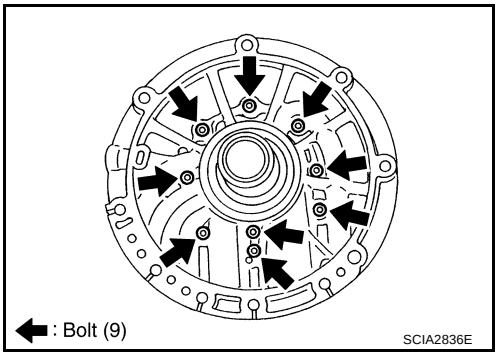

2. Remove oil pump housing oil seal using a flat-bladed screwdriver.

   CAUTION:
   Be careful not to scratch oil pump housing.

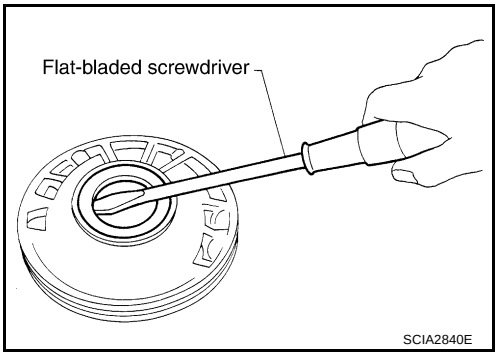

3. Remove O-ring from oil pump housing.

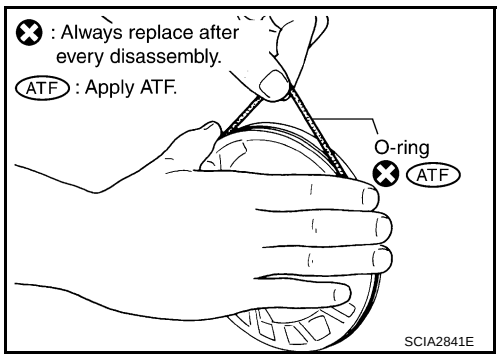

4. Remove O-ring from oil pump cover.

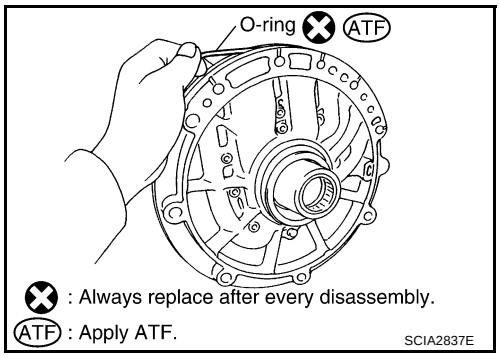

ASSEMBLY

1. Install O-ring in oil pump cover.

   CAUTION:
   - **Do not reuse O-ring.**
   - **Apply ATF to O-ring.**

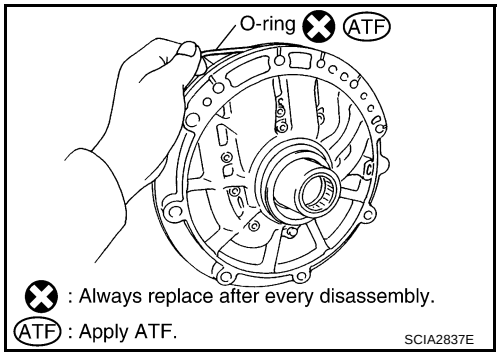

2. Install O-ring in oil pump housing.

   CAUTION:
   - **Do not reuse O-ring.**
   - **Apply ATF to O-ring.**

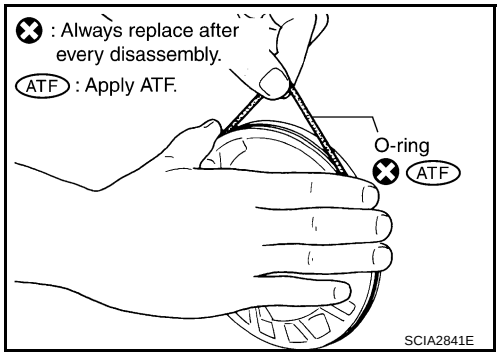

3. Using a drift, install oil pump housing oil seal to the oil pump housing until is flush.

CAUTION:

- **Do not reuse oil pump housing oil seal.**
- **Apply ATF to oil pump housing oil seal.**

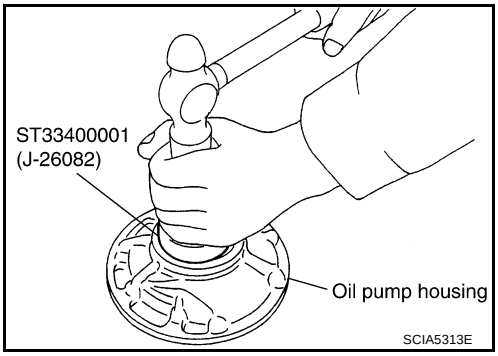

4. Install oil pump housing in oil pump cover.

: 9.0 N·m (0.92 kg-m, 80 in-lb.)

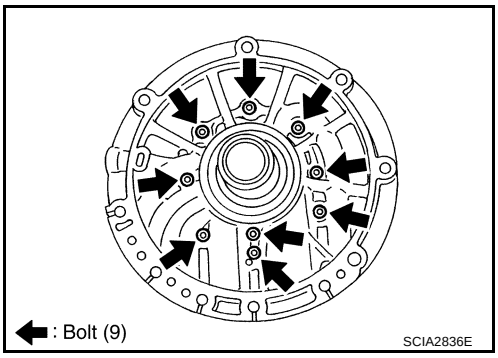

Front Sun Gear, 3rd One-Way Clutch

ACS004JP

COMPONENTS

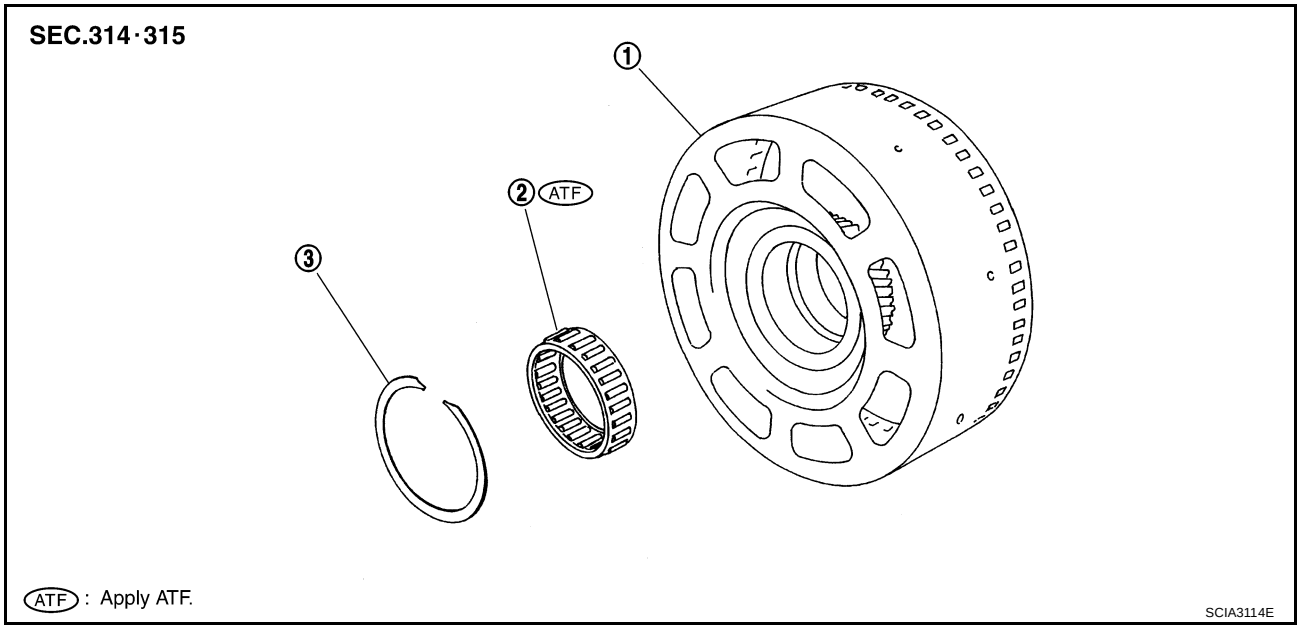

1. Front sun gear
2. 3rd one-way clutch
3. Snap ring

DISASSEMBLY

1. Using a flat-bladed screwdriver, remove snap ring from front sun gear.

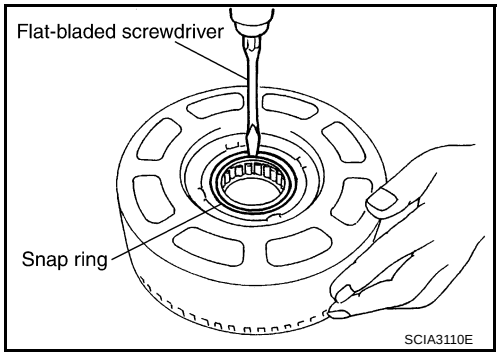

2. Remove 3rd one-way clutch from front sun gear.

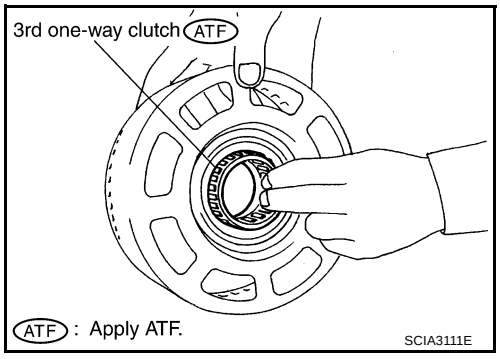

INSPECTION

3rd One-way Clutch

- Check frictional surface for wear or damage.

  CAUTION:
  If necessary, replace the 3rd one-way clutch.

Front Sun Gear Snap Ring

- Check for deformation, fatigue or damage.

CAUTION:
If necessary, replace the snap ring.

Front Sun Gear

- Check for deformation, fatigue or damage.

CAUTION:
If necessary, replace the front sun gear.

ASSEMBLY

1. Install 3rd one-way clutch in front sun gear.

CAUTION:
Apply ATF to 3rd one-way clutch.

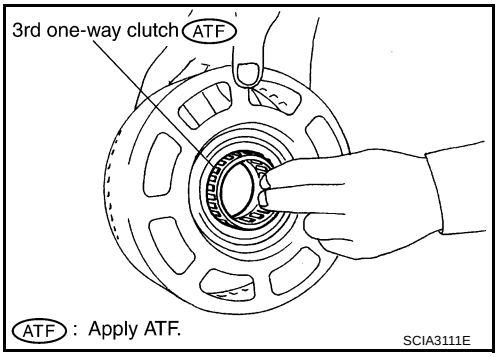

2. Using a flat-bladed screwdriver, install snap ring in front sun gear.

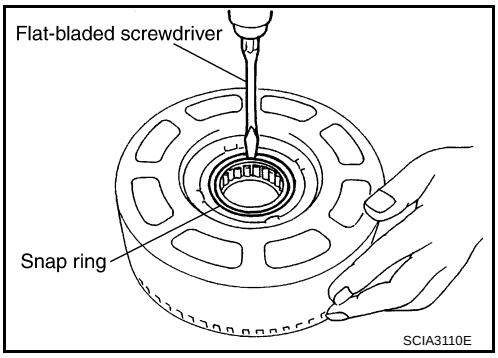

3. Check operation of 3rd one-way clutch.

a. Hold oil pump assembly and turn front sun gear.

b. Check 3rd one-way clutch for correct locking and unlocking directions.

CAUTION:
If not as shown in illustration, check installation direction of 3rd one-way clutch.

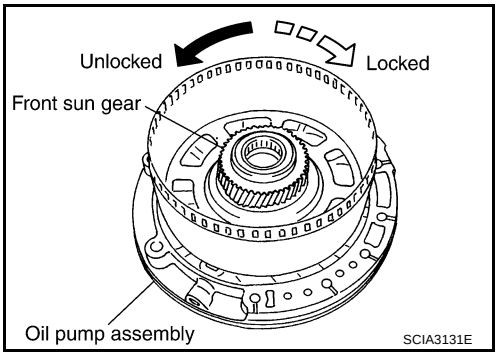

Front Carrier, Input Clutch, Rear Internal Gear

ACS004JQ

COMPONENTS

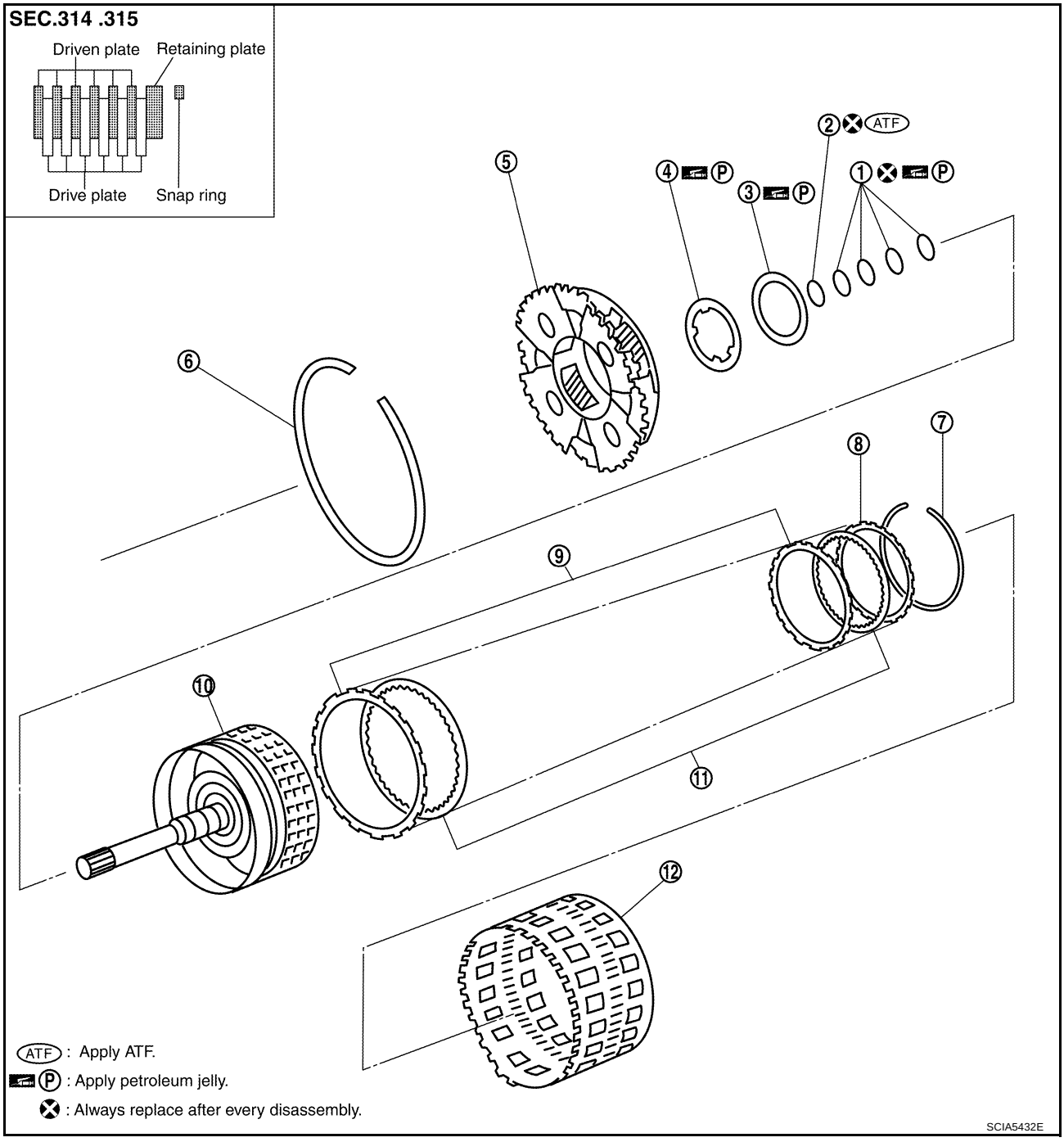

1.	Seal ring	2.	O-ring	3.	Needle bearing
4.	Bearing race	5.	Front carrier assembly	6.	Snap ring
7.	Snap ring	8.	Retaining plate	9.	Driven plate
10.	Input clutch drum	11.	Drive plate	12.	Rear internal gear

DISASSEMBLY

1. Compress snap ring using 2 flat-bladed screwdrivers.
2. Remove front carrier assembly and input clutch assembly from rear internal gear.
3. Remove front carrier assembly from input clutch assembly.

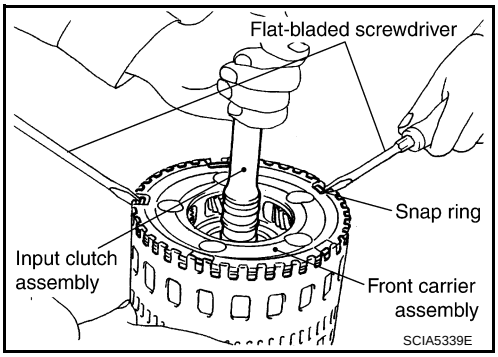

a. Remove bearing race from front carrier assembly.

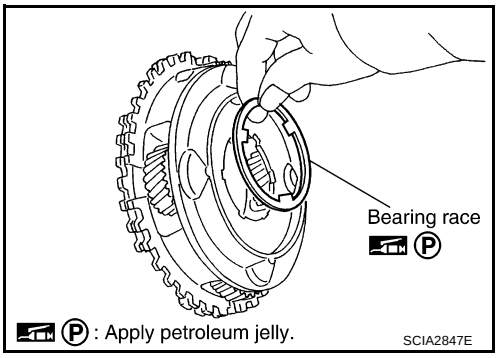

b. Remove snap ring from front carrier assembly.

CAUTION:
Do not expand snap ring excessively.

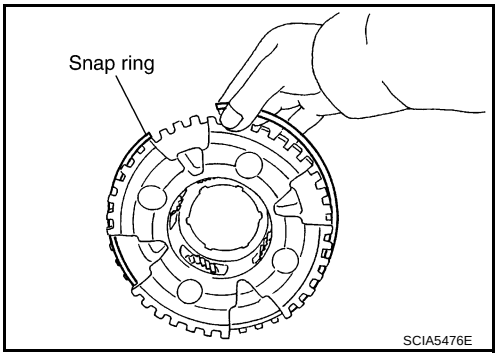

4. Disassemble input clutch assembly.

a. Remove o-ring and seal rings from input clutch assembly.

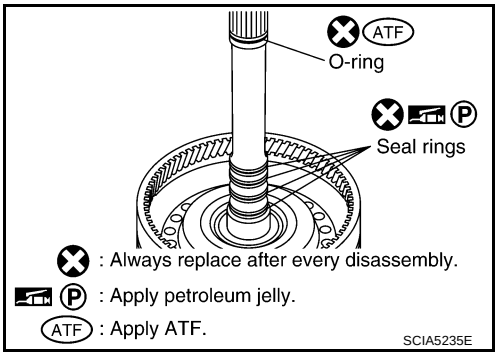

b. Remove needle bearing from input clutch assembly.

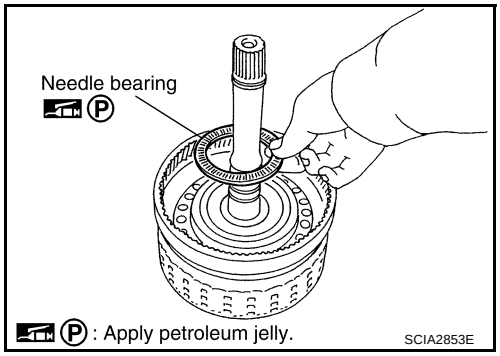

c. Using a flat-bladed screwdriver, remove snap ring from input clutch drum.

d. Remove drive plates, driven plates and retaining plate from input clutch drum.

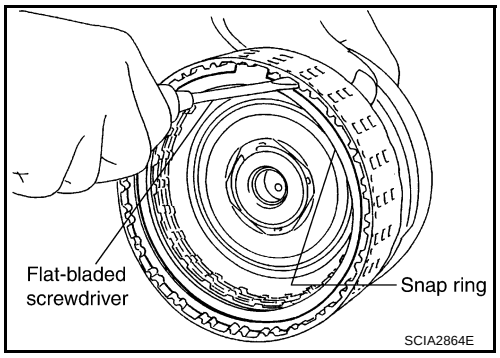

INSPECTION

Front Carrier Snap Ring

- Check for deformation, fatigue or damage.

  CAUTION:
  If necessary, replace the snap ring.

Input Clutch Snap Ring

- Check for deformation, fatigue or damage.

  CAUTION:
  If necessary, replace the input clutch assembly.

Input Clutch Drum

- Check for deformation, fatigue or damage or burns.

  CAUTION:
  If necessary, replace the input clutch assembly.

Input Clutch Drive Plates

- Check facing for burns, cracks or damage.

  CAUTION:
  If necessary, replace the input clutch assembly.

Input Clutch Retaining Plates and Driven Plates

- Check facing for burns, cracks or damage.

  CAUTION:
  If necessary, replace the input clutch assembly.

Front Carrier

- Check for deformation, fatigue or damage.

  CAUTION:
  If necessary, replace the front carrier assembly.

Rear Internal Gear

- Check for deformation, fatigue or damage.

  CAUTION:
  If necessary, replace the rear internal gear assembly.

ASSEMBLY

1. Install input clutch.

a. Install drive plates, driven plates and retaining plate in input clutch drum.

CAUTION:
Take care with order of plates.

b. Using a flat-bladed screwdriver, install snap ring in input clutch drum.

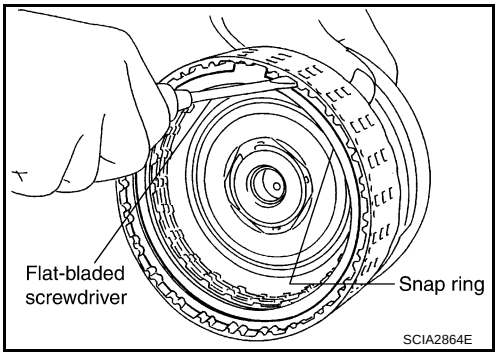

c. Install needle bearing in input clutch assembly.

CAUTION:
Apply petroleum jelly to needle bearing.

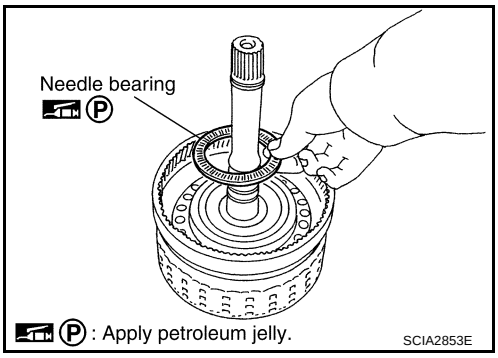

d. Install O-ring and seal rings in input clutch assembly.

CAUTION:
- **Do not reuse O-ring and seal rings.**
- **Apply ATF to O-ring.**
- **Apply petroleum jelly to seal rings.**

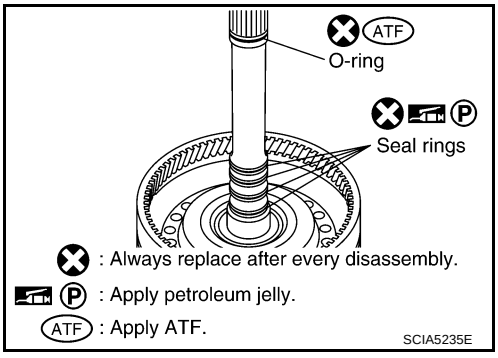

2. Install front carrier assembly.

a. Install snap ring to front carrier assembly.

CAUTION:
Do not expand snap ring excessively.

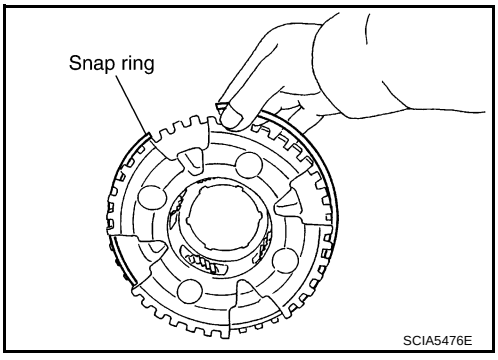

b. Install bearing race in front carrier assembly.

CAUTION:

Apply petroleum jelly to bearing race.

c. Install front carrier assembly to input clutch assembly.

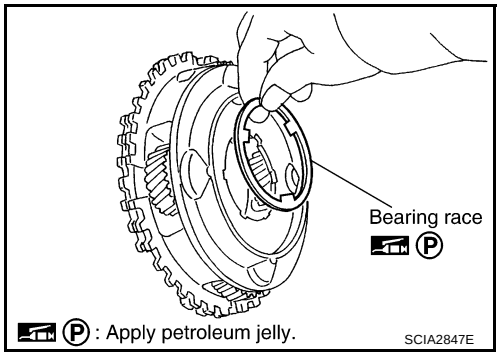

3. Compress snap ring using 2 flat-bladed screwdrivers.
4. Install front carrier assembly and input clutch assembly to rear internal gear.

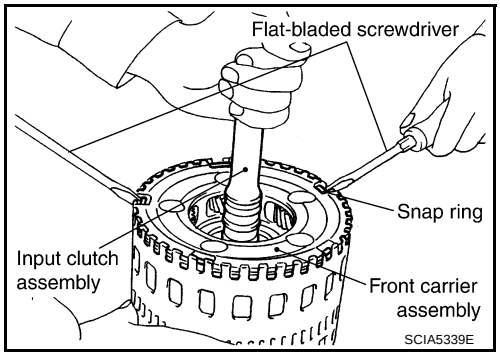

Mid Sun Gear, Rear Sun Gear, High and Low Reverse Clutch Hub

ACS004JR

COMPONENTS

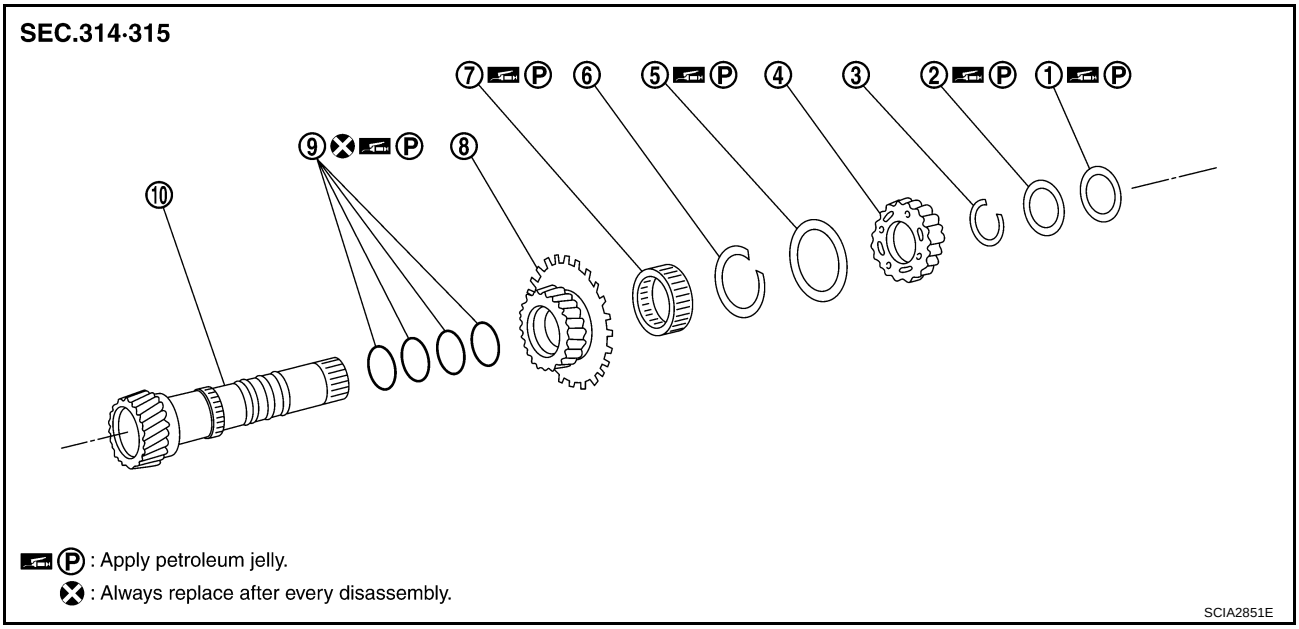

1.	Needle bearing	2.	Bearing race	3.	Snap ring
4.	High and low reverse clutch hub	5.	Needle bearing	6.	Snap ring
7.	1st one-way clutch	8.	Rear sun gear	9.	Seal ring
10.	Mid sun gear				

DISASSEMBLY

1. Remove needle bearing and bearing race.

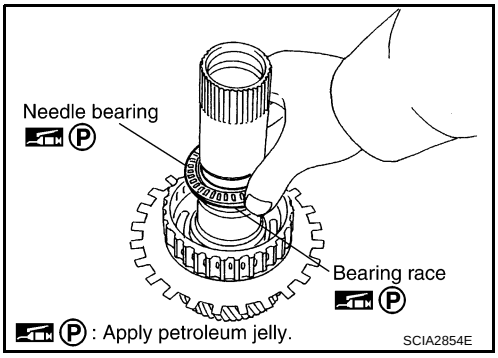

2. Using a snap ring pliers, remove snap ring from high and low reverse clutch hub.

   CAUTION:
   Do not expand snap ring excessively.

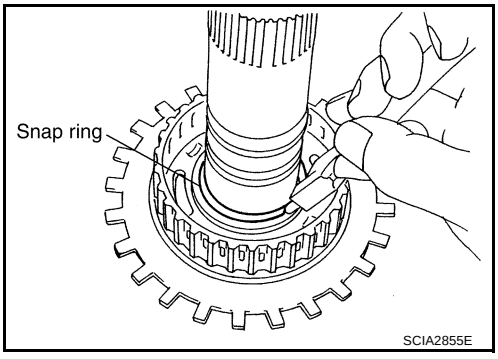

3. Remove high and low reverse clutch hub from mid sun gear assembly.

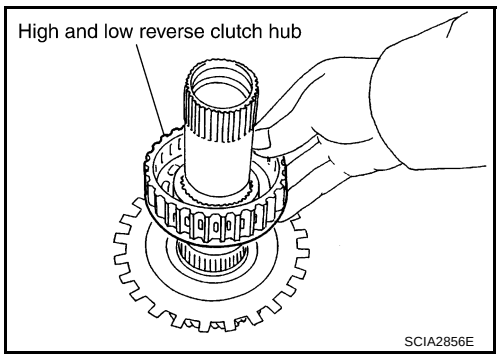

a. Remove needle bearing from high and low reverse clutch hub.

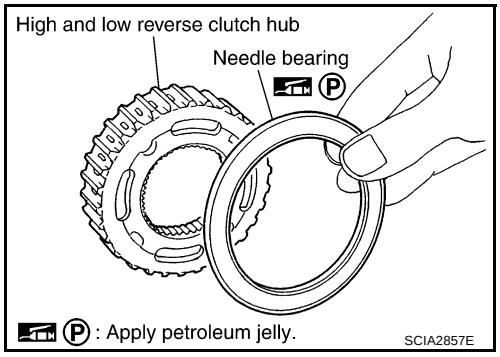

4. Remove rear sun gear assembly from mid sun gear assembly.

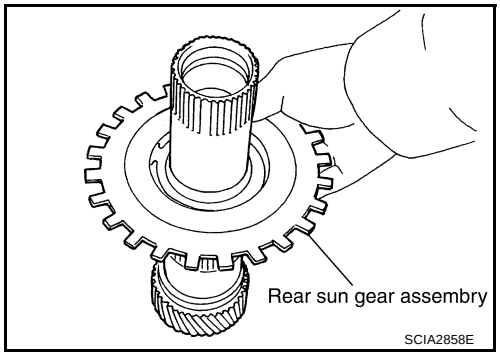

a. Using a flat-bladed screwdriver, remove snap ring from rear sun gear.

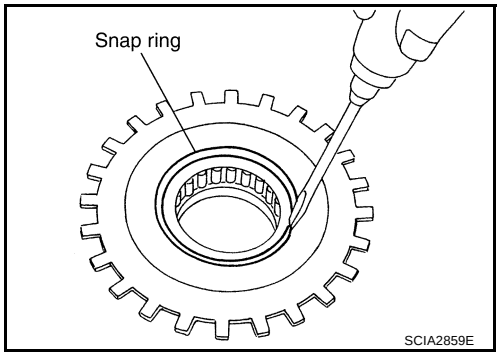

b. Remove 1st one-way clutch from rear sun gear.

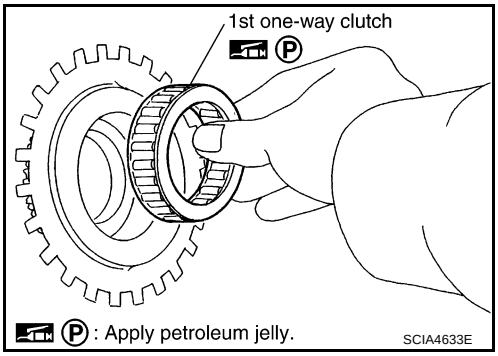

5. Remove seal rings from mid sun gear.

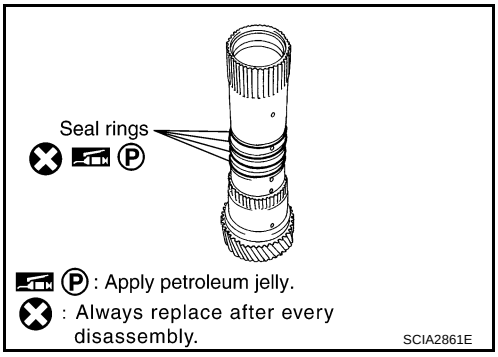

INSPECTION

High and Low Reverse Clutch Hub Snap Ring, Rear Sun Gear Snap Ring

- Check for deformation, fatigue or damage.

  CAUTION:
  If necessary, replace the snap ring.

1st One-way Clutch

- Check frictional surface for wear or damage.

  CAUTION:
  If necessary, replace the 1st one-way clutch.

Mid Sun Gear

- Check for deformation, fatigue or damage.

  CAUTION:
  Replace mid sun gear assembly and high and low reverse clutch assembly as a set if necessary.

Rear Sun Gear

- Check for deformation, fatigue or damage.

  CAUTION:
  If necessary, replace the rear sun gear.

High and Low Reverse Clutch Hub

- Check for deformation, fatigue or damage.

  CAUTION:
  If necessary, replace the high and low reverse clutch hub.

ASSEMBLY

1. Install seal rings from mid sun gear.

   CAUTION:
   - **Do not reuse seal rings.**
   - **Apply petroleum jelly to seal rings.**

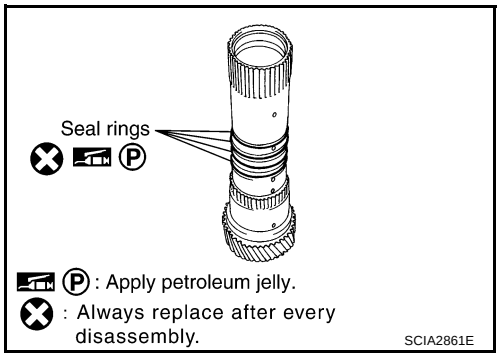

2. Install 1st one-way clutch in rear sun gear.

   CAUTION:
   Apply petroleum jelly to 1st one-way clutch.

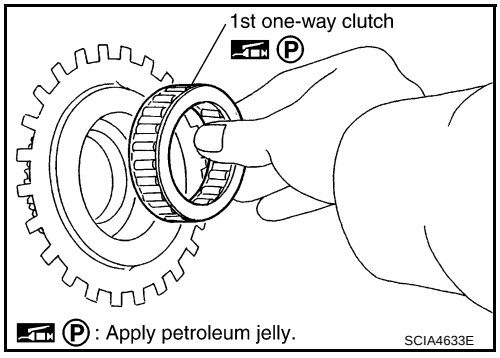

3. Using a flat-bladed screwdriver, install snap ring in rear sun gear.

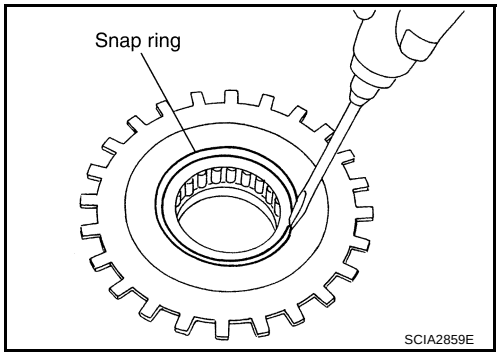

4. Install rear sun gear assembly in mid sun gear assembly.

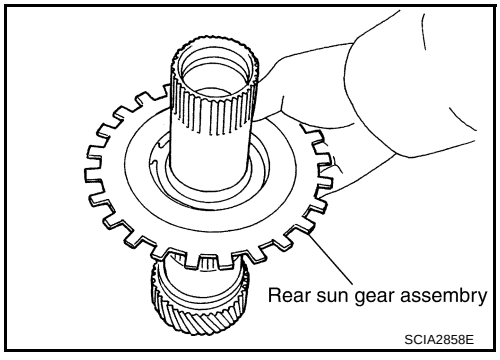

5. Install needle bearing in high and low reverse clutch hub.

CAUTION:
Apply petroleum jelly to needle bearing.

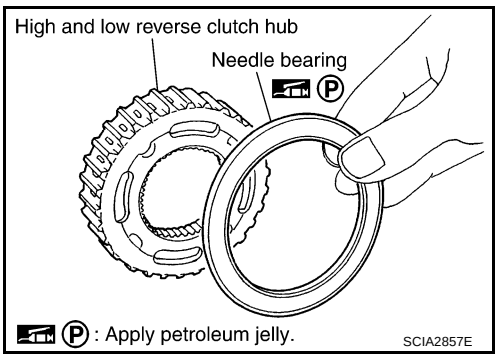

6. Install high and low reverse clutch hub in mid sun gear assembly.

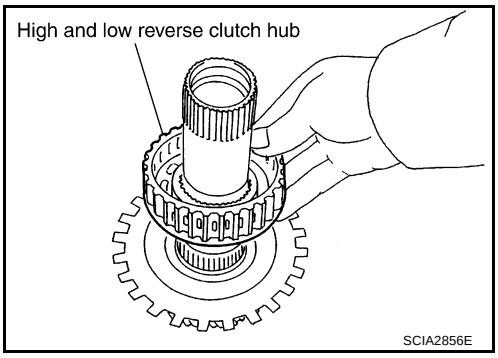

7. Using a snap ring pliers, install snap ring in high and low reverse clutch hub.

CAUTION:
Do not expand snap ring excessively.

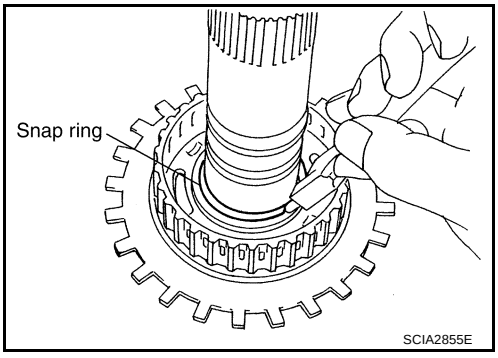

8. Check operation of 1st one-way clutch.

a. Hold mid sun gear and turn rear sun gear.

b. Check 1st one-way clutch for correct locking and unlocking directions.

CAUTION:
If not as shown in illustration, check installation direction of 1st one-way clutch.

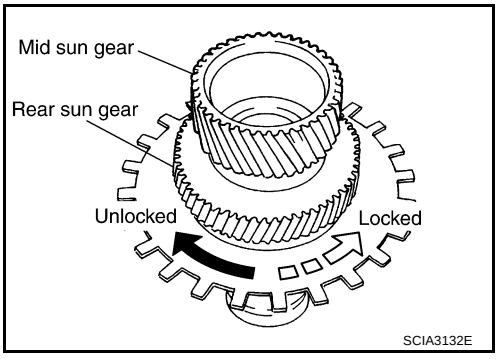

9. Install needle bearing and bearing race.

CAUTION:
Apply petroleum jelly to needle bearing and bearing race.

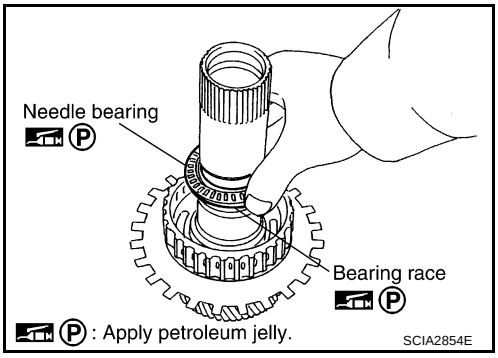

High and Low Reverse Clutch

ACS004JS

COMPONENTS

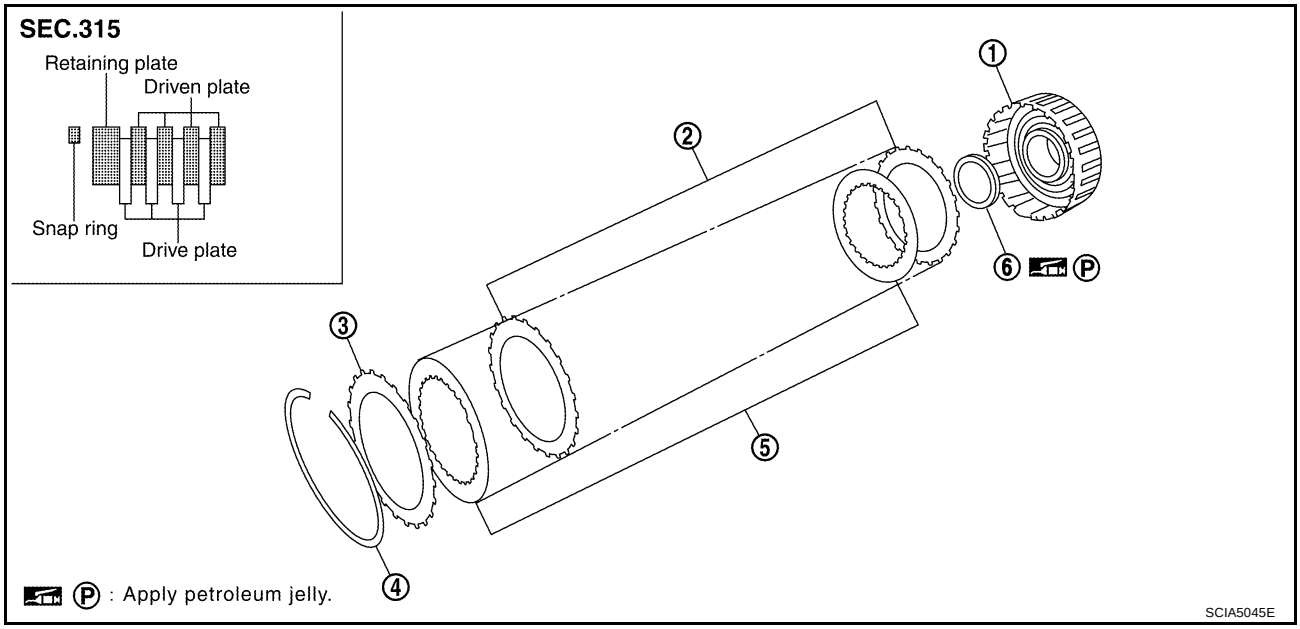

1.	High and low reverse clutch drum	2.	Driven plate	3.	Retaining plate
4.	Snap ring	5.	Drive plate	6.	Bearing race

DISASSEMBLY

1. Remove bearing race from high and low reverse clutch drum.

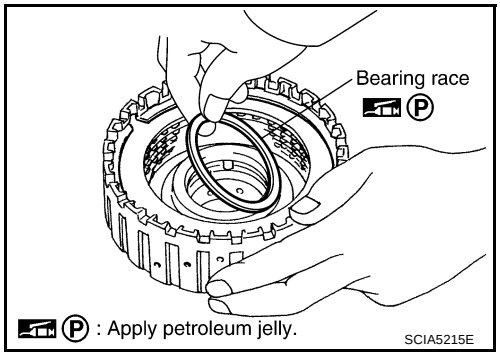

2. Using a flat-bladed screwdriver, remove snap ring from high and low reverse clutch drum.
3. Remove drive plates, driven plates and retaining plate from high and low reverse clutch drum.

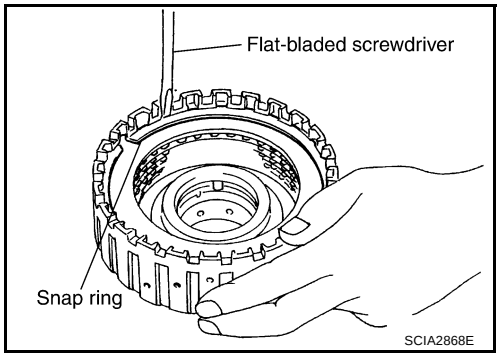

INSPECTION

- **Check the following, and replace high and low reverse clutch assembly if necessary.**

High and Low Reverse Clutch Snap Ring

- Check for deformation, fatigue or damage.

High and Low Reverse Clutch Drive Plates

- Check facing for burns, cracks or damage.

High and Low Reverse Clutch Retaining Plate and Driven Plates

- Check facing for burns, cracks or damage.

ASSEMBLY

1. Install drive plates, driven plates and retaining plate in high and low reverse clutch drum.
2. Using a flat-bladed screwdriver, install snap ring in high and low reverse clutch drum.

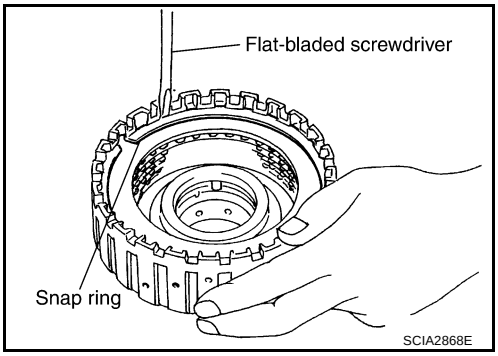

3. Install bearing race to high and low reverse clutch drum.

   CAUTION:
   Apply petroleum jelly to bearing race.

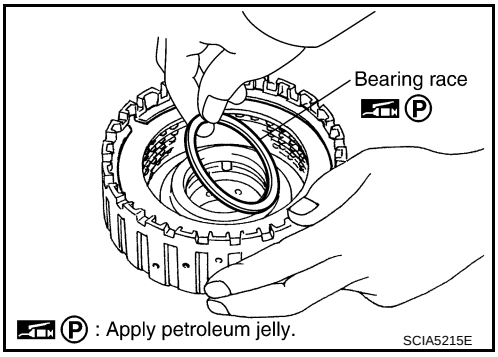

Direct Clutch

ACS004JT

COMPONENTS

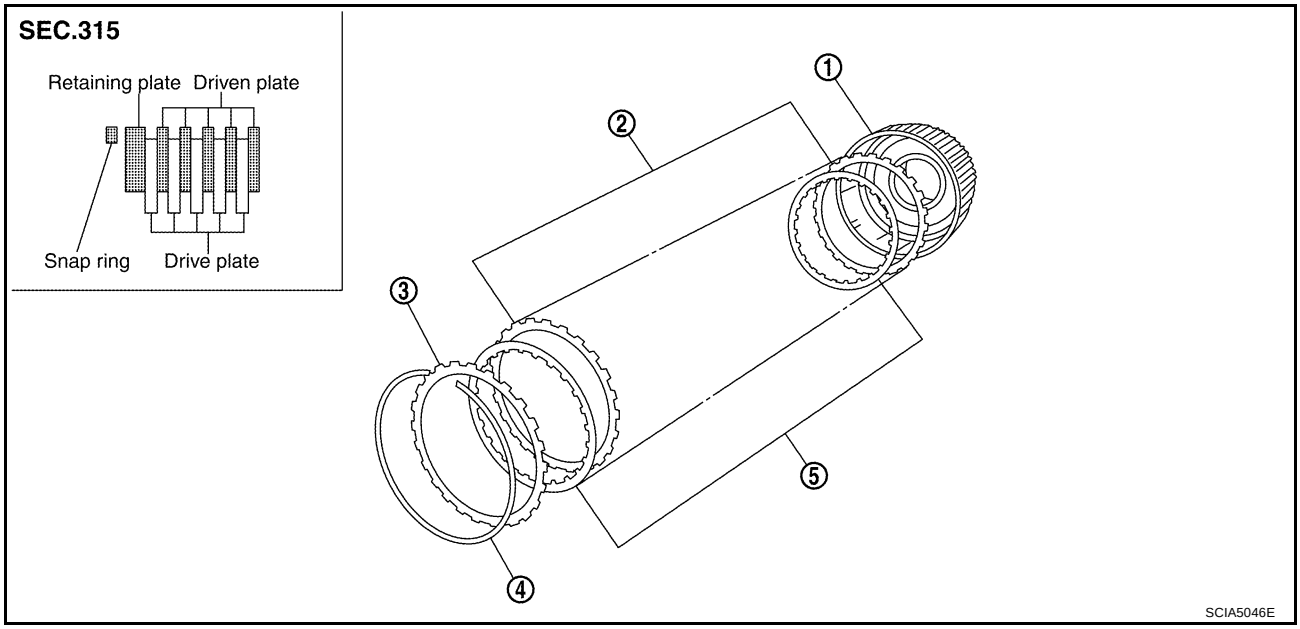

1. Direct clutch drum
2. Driven plate
3. Retaining plate
4. Snap ring
5. Drive plate

DISASSEMBLY

1. Using a flat-bladed screwdriver, remove snap ring from direct clutch drum.
2. Remove drive plates, driven plates and retaining plate from direct clutch drum.

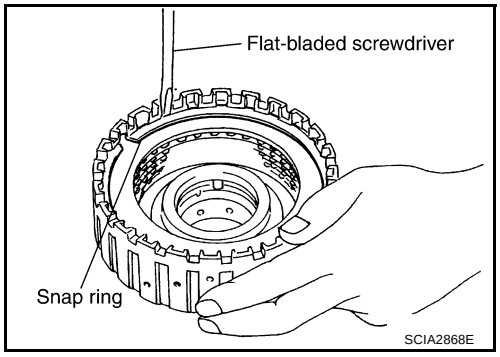

INSPECTION

- **Check the following, and replace direct clutch assembly if necessary.**

Direct Clutch Snap Ring

- Check for deformation, fatigue or damage.

Direct Clutch Drive Plates

- Check facing for burns, cracks or damage.

Direct Clutch Retaining Plate and Driven Plates

- Check facing for burns, cracks or damage.

ASSEMBLY

1. Install drive plates, driven plates and retaining plate in direct clutch drum.
2. Using a flat-bladed screwdriver, install snap ring in direct clutch drum.

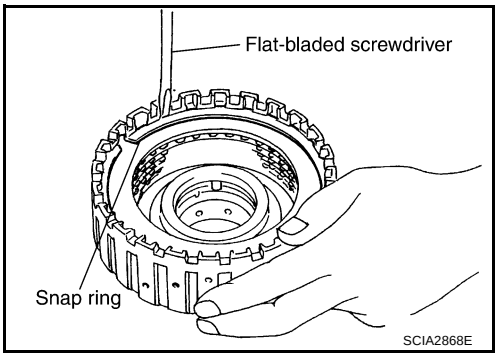

ASSEMBLY

PFP:00000

Assembly (1)

ACS004KX

1. As shown below, use a drift [commercial service tool ϕ22 mm (0.87 in)] to drive manual shaft oil seal into the transmission case until it is flush.

   CAUTION:
   - **Apply ATF to manual shaft oil seals.**
   - **Do not reuse manual shaft oil seals.**

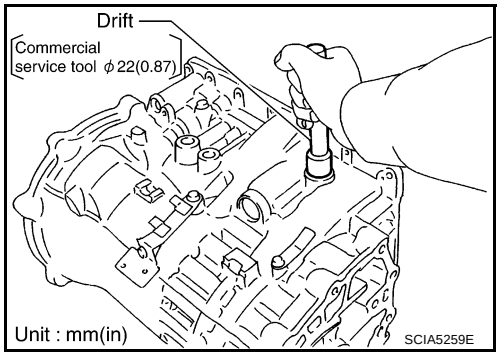

2. Install detent spring and spacer in transmission case.

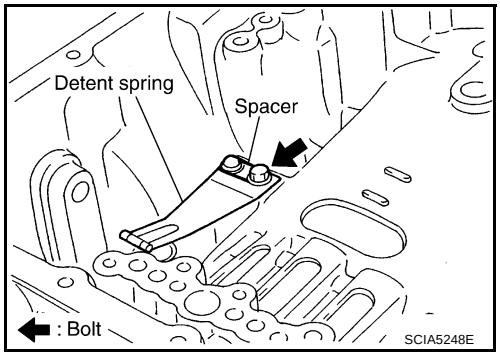

3. Assemble manual shaft, manual plate, and parking rod after installing manual shaft to transmission case.
4. Install retaining pin into the manual plate and manual shaft.

a. Fit pinhole of the manual plate to pinhole of the manual shaft with a pin punch.

b. Use a hammer to tap the retaining pin into the manual plate.

   CAUTION:
   - **Drive retaining pin to 2±0.5 mm over the manual plate.**
   - **Do not reuse retaining pin.**

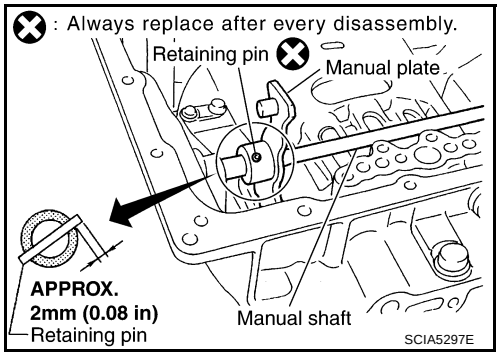

5. Install retaining pin into the transmission case and manual shaft.

a. Fit pinhole of the transmission case to pinhole of the manual shaft with a pin punch.

b. Use a hammer to tap the retaining pin into the transmission case.

   CAUTION:
   - **Drive retaining pin to 5±1 mm over the transmission case.**
   - **Do not reuse retaining pin.**

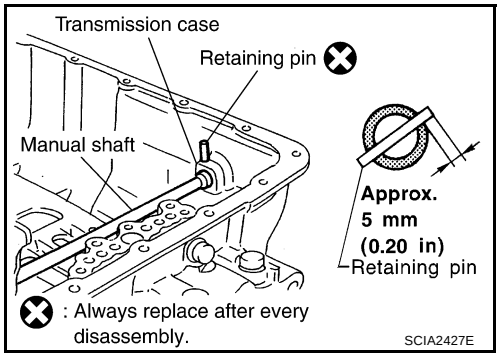

6. Install terminal cord assembly in transmission case.

CAUTION:
Apply petroleum jelly to O-ring.

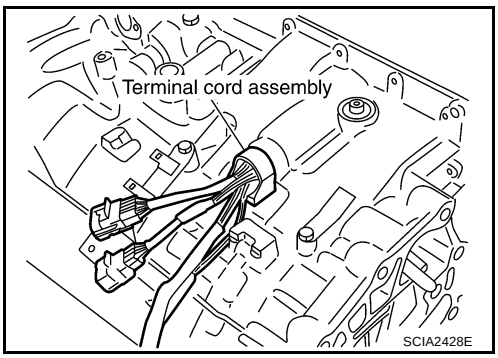

7. Install terminal cord assembly connectors in bracket.

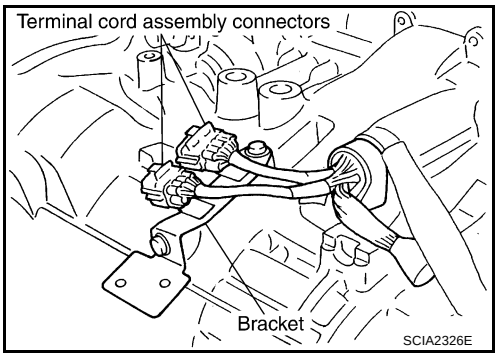

8. Install O-rings in servo assembly.

CAUTION:
Do not reuse O-rings.
Apply petroleum jelly to O-rings.

9. Install return spring in servo assembly.
10. Install servo assembly in transmission case.

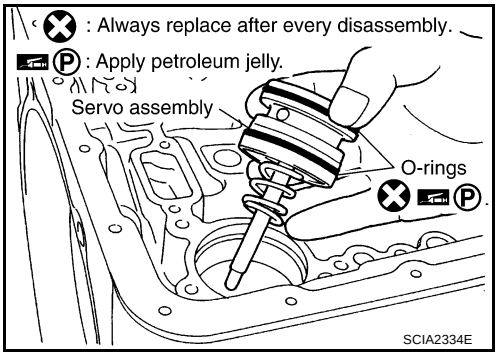

11. Using snap ring pliers, install snap ring in transmission case.

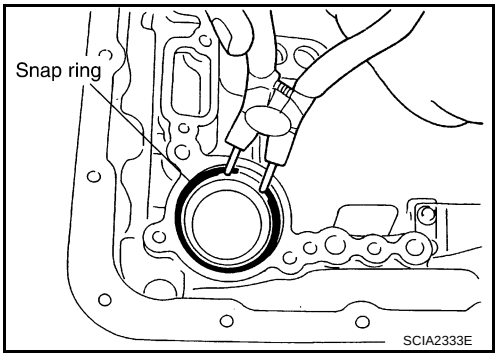

12. Install lip seal and D-ring in reverse brake piston.

CAUTION:
- **Do not reuse lip seal and D-ring.**
- **Apply petroleum jelly to lip seal.**
- **Apply ATF to D-ring.**

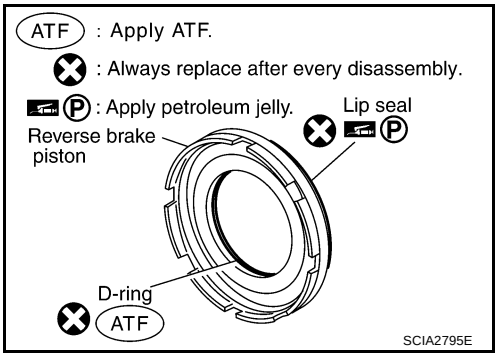

13. Install reverse brake piston in transmission case.

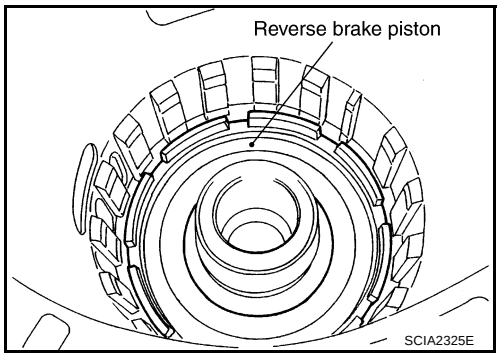

14. Install needle bearing in transmission case.

CAUTION:

Apply petroleum jelly to needle bearing.

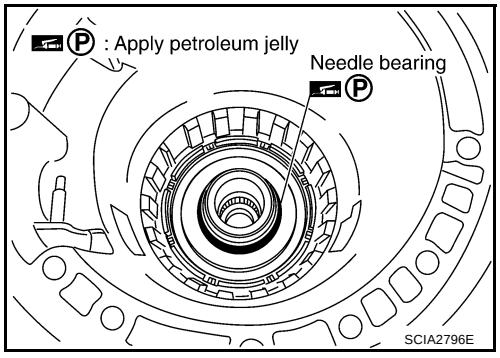

15. Install seal rings in drum support.

CAUTION:

- **Do not reuse seal rings.**
- **Apply petroleum jelly to seal rings.**

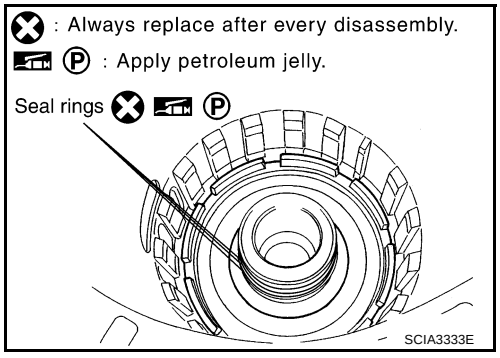

16. After installing the return spring and spring retainer in transmission case, use a clutch spring compressor to install snap ring in transmission case.

CAUTION:

Securely assemble them using a flat-bladed screwdriver so that snap ring tension is slightly weak.

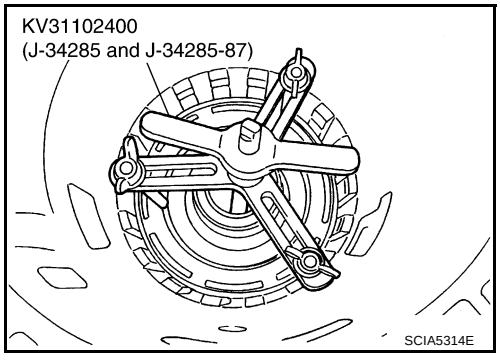

17. Install reverse brake retaining plate, drive plates, driven plates and dish plate in transmission case.

CAUTION:
Take care with order of plates.

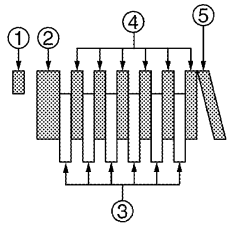

6/6 ※

① Snap ring
② Retaining plate
③ Drive plate
④ Driven plate
⑤ Dish plate
※ Drive/Driven

SCIA5250E

18. Assemble N-spring.

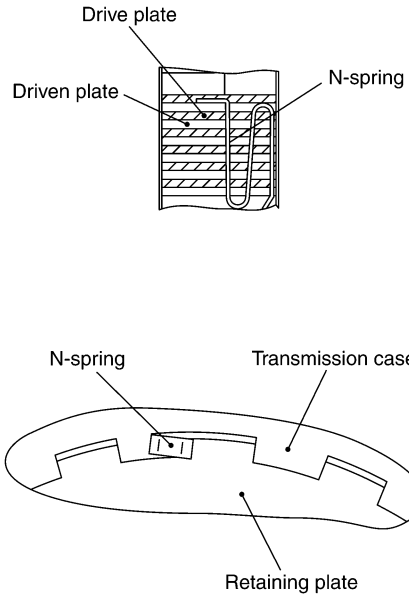

SCIA3179E

19. Install snap ring in transmission case.

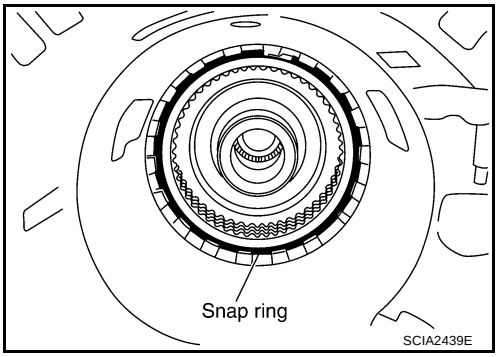

SCIA2439E

20. Measure clearance between retaining plate and snap ring. If not within specified clearance, select proper retaining plate.

    Specified clearance "A":

    Standard: 0.7 - 1.1mm (0.028 - 0.043 in)

    Retaining plate:

    Refer to AT-381, "Reverse Brake" .

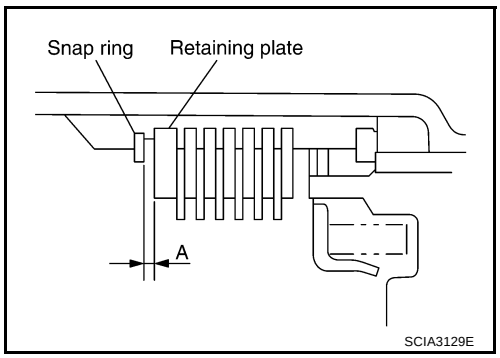

21. Install needle bearing in transmission case.

    CAUTION:

    Apply petroleum jelly to needle bearing.

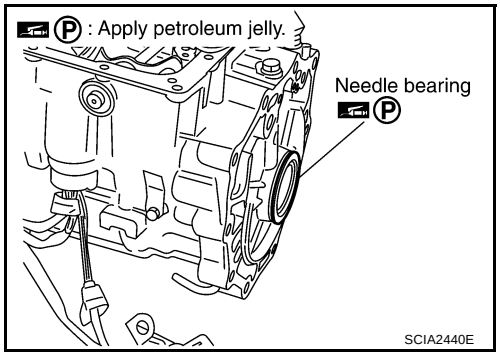

22. Install revolution sensor in transmission case.

    CAUTION:

    - **Do not subject it to impact by dropping or hitting it.**
    - **Do not disassemble.**
    - **Do not allow metal filings, etc., to get on the sensor's front edge magnetic area.**
    - **Do not place in an area affected by magnetism.**

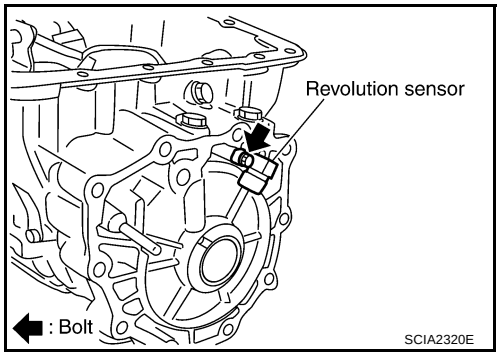

23. As shown below, use a drift to drive rear oil seal into the rear extension until it is flush.

    CAUTION:

    - **Apply ATF to rear oil seal.**
    - **Do not reuse rear oil seal.**

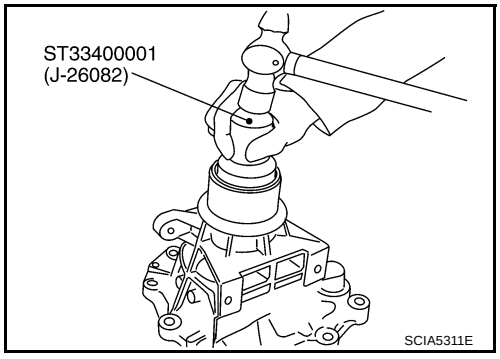

24. Install return spring in parking pawl.

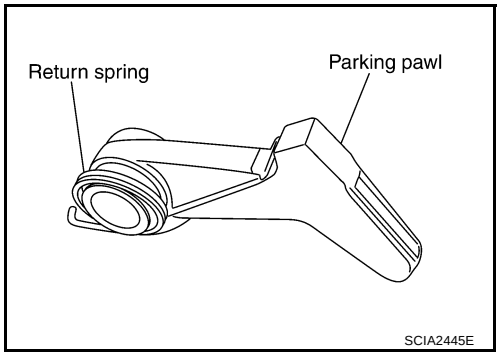

25. Install parking pawl and pawl shaft in rear extension.

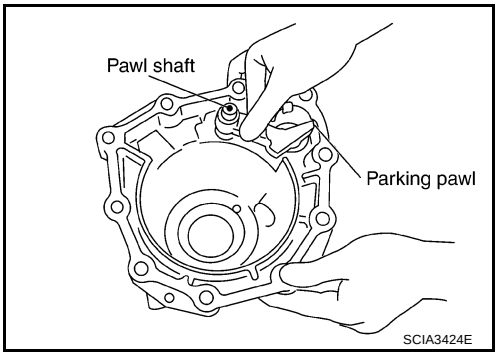

26. Install parking actuator support in rear extension.
27. Install needle bearing in rear extension.

CAUTION:
Apply petroleum jelly to needle bearing.

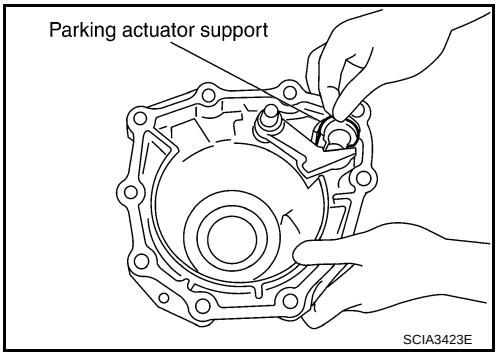

28. Install seal rings in output shaft.

CAUTION:
- **Do not reuse seal rings.**
- **Apply petroleum jelly to seal rings.**

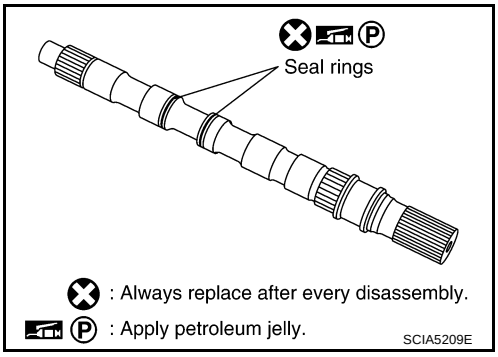

29. Install parking gear in output shaft.

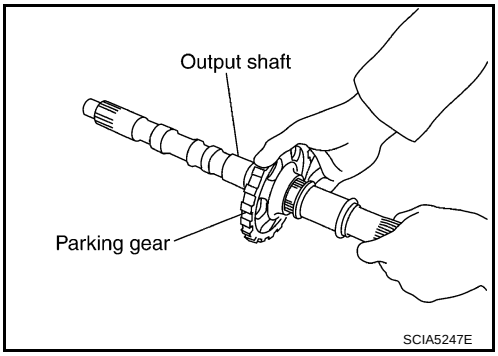

30. Install output shaft in transmission case.

CAUTION:
Be careful not to mistake front for rear because both sides looks similar. (Thinner end is front side.)

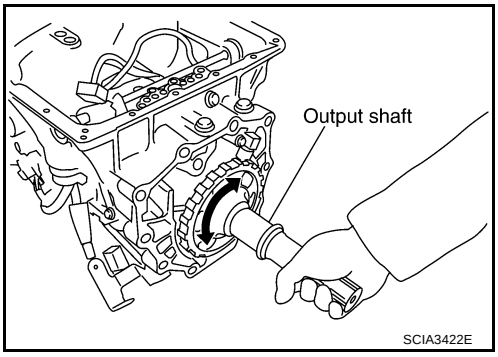

31. Install bearing race in output shaft.

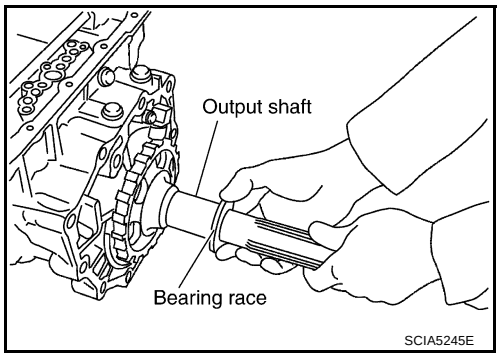

32. Apply recommended sealant (Genuine Anaerobic Liquid Gasket or equivalent. Refer to GI-47, "Recommended Chemical Products and Sealants" .) to rear extension assy as shown in illustration.

CAUTION:
Complete remove all moisture, oil and old sealant, etc. From the transmission case and rear extension mounting surfaces.

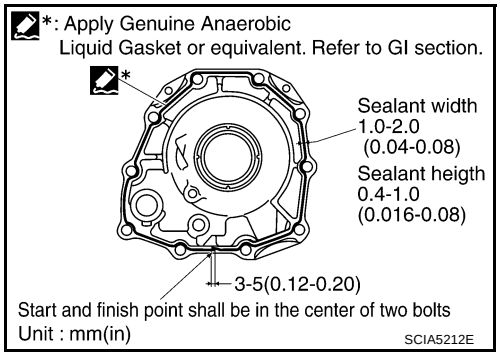

33. Install rear extension assembly in transmission case.

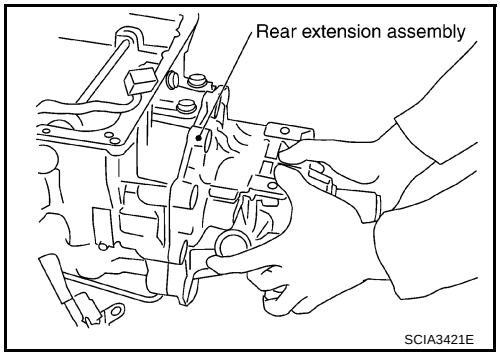

34. Tighten rear extension assembly mounting bolts to specified torque. (Because terminal bracket is tightened together with rear extension assembly, it should be installed before procedure 33.)

CAUTION:
Do not reuse self-sealing bolt.

Rear extension assy mounting bolt:

: 52 N·m (5.3 kg-m, 38 ft-lb)

Self-sealing bolt:

: 61 N·m (6.2 kg-m, 45 ft-lb)

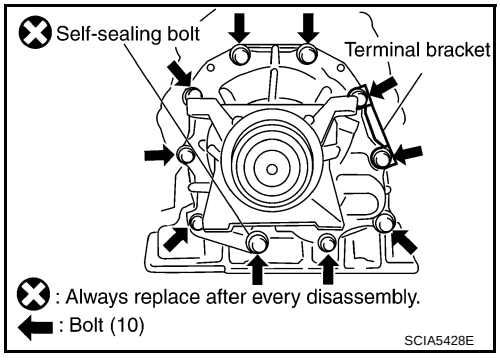

35. Install direct clutch assembly in reverse brake.

CAUTION:
Make sure that drum support edge surface and direct clutch inner boss edge surface come to almost same place.

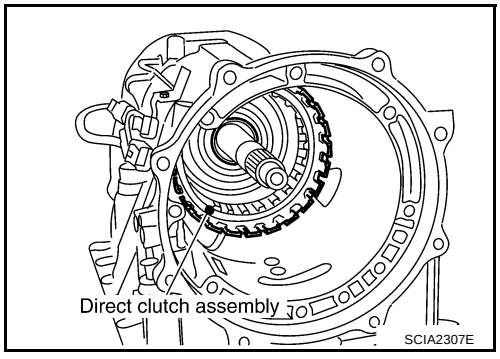

36. Install needle bearing in drum support edge surface.

CAUTION:
Apply petroleum jelly to needle bearing.

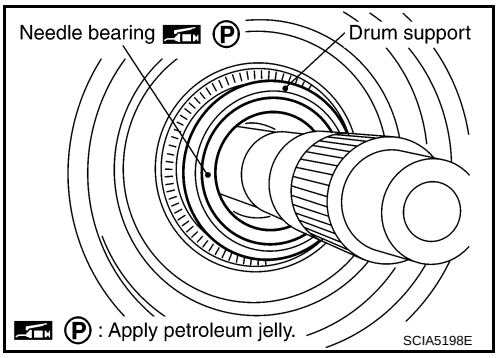

37. Install high and low reverse clutch assembly in direct clutch assembly.

CAUTION:
Be sure to replace high and low reverse clutch and mid sun gear as a set.

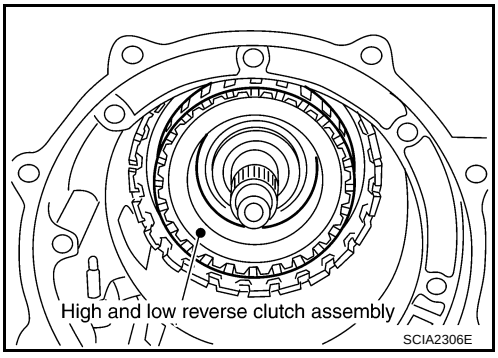

38. Using a flat-bladed screwdriver, range the drive plates.

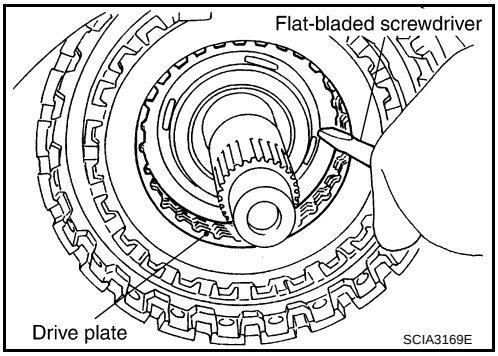

39. Install high and low reverse clutch hub, mid sun gear assembly and rear sun gear assembly as a unit.

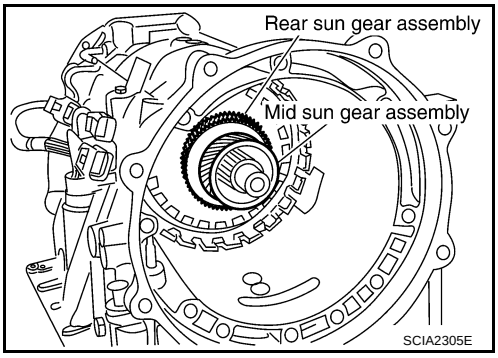

CAUTION:
Check that portion A of high and low reverse clutch drum protrudes approximately 2 mm (0.08 in) beyond portion B of rear sun gear.

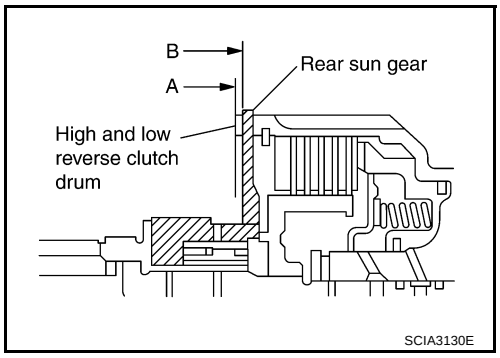

40. Install needle bearing in rear carrier assembly.

CAUTION:
Apply petroleum jelly to needle bearing.

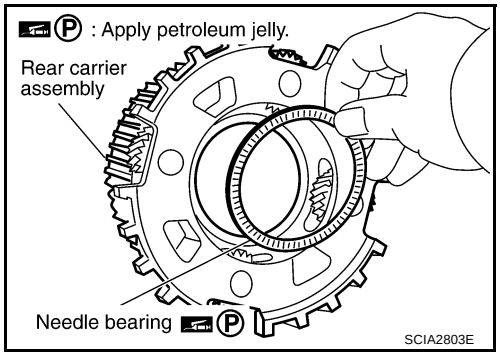

41. Install bearing race in rear carrier assembly.

CAUTION:
Apply petroleum jelly to bearing race.

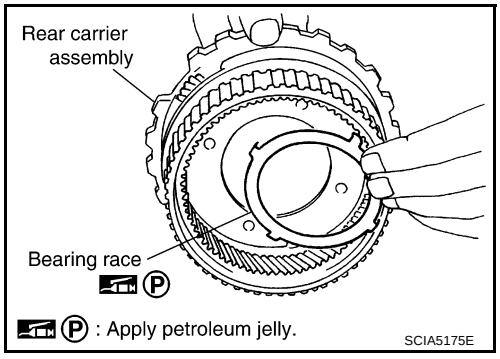

42. Install rear carrier assembly in direct clutch drum.

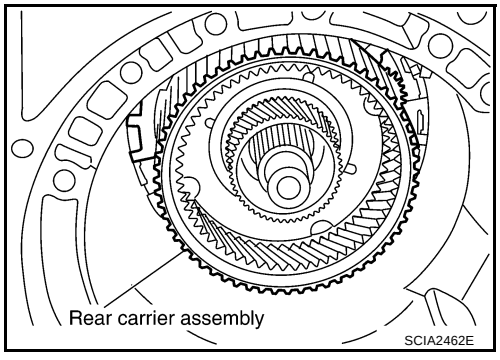

43. Install needle bearing (rear side) in mid carrier assembly.

CAUTION:

Apply petroleum jelly to needle bearing.

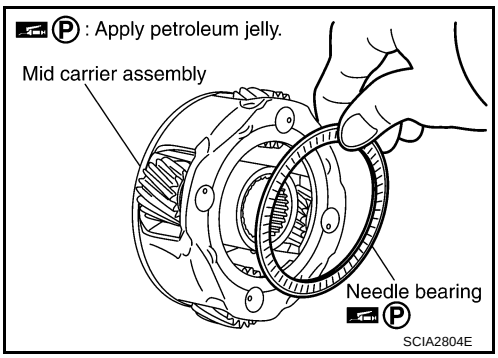

44. Install needle bearing (front side) in mid carrier assembly.

CAUTION:

Apply petroleum jelly to needle bearing.

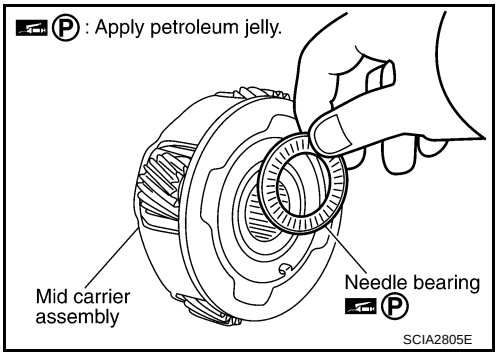

45. Install mid carrier assembly in rear carrier assembly.

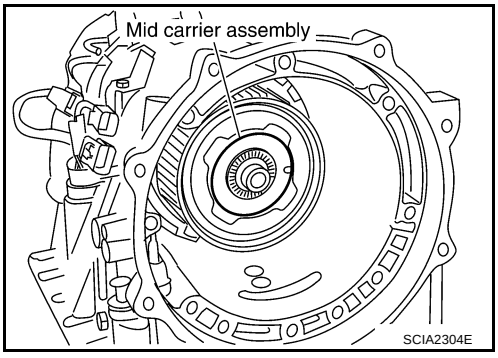

46. Install front carrier assembly (With input clutch assembly and rear internal gear) to rear carrier assembly.

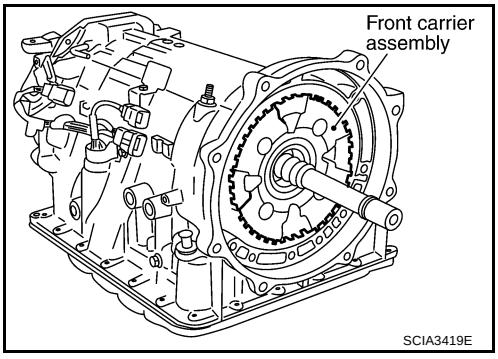

47. Install seal rings in input clutch assembly.

CAUTION:

- **Do not reuse seal rings.**
- **Apply petroleum jelly to seal rings.**

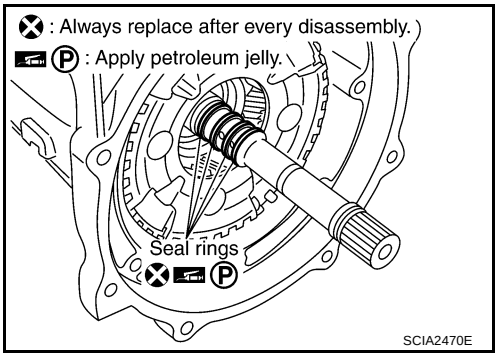

48. Install band servo anchor end pin and lock nut in transmission case.

CAUTION:
Do not reuse band servo anchor end pin.

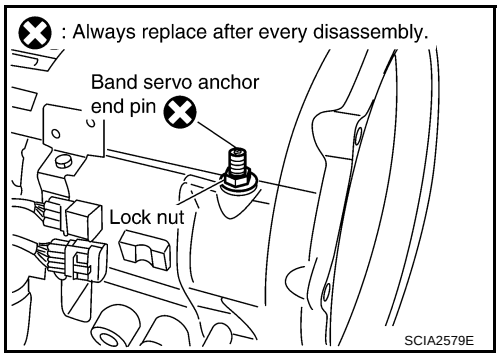

49. Install brake band in transmission case.

CAUTION:
Assemble it so that identification to avoid incorrect installation faces servo side.

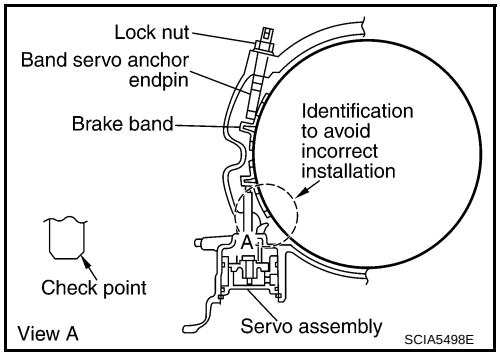

50. Install front sun gear in transmission case.

CAUTION:
Apply ATF to front sun gear bearing and 3rd one-way clutch end bearing.

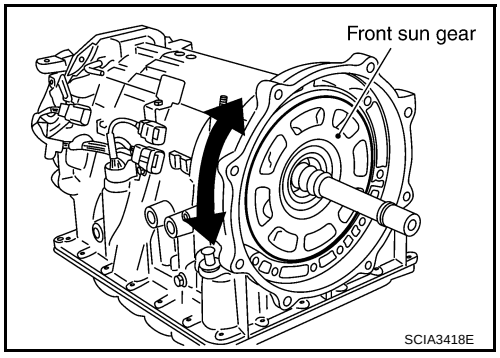

51. Install needle bearing in front sun gear.

CAUTION:
Apply petroleum jelly to needle bearing.

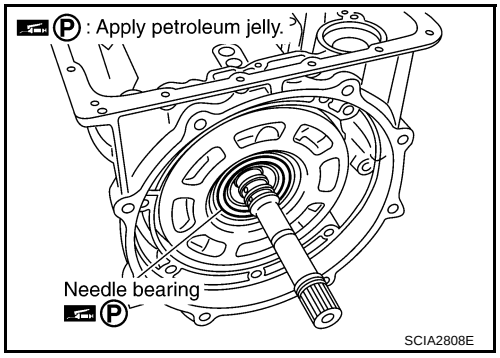

52. Adjust brake band tilting using clips so that brake band contacts front sun gear drum evenly.

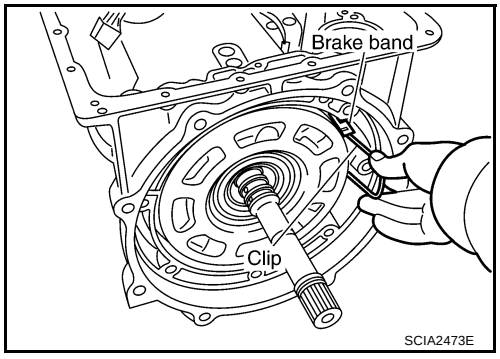

53. Adjust brake band.
a. Loosen lock nut.
b. Tighten band servo anchor end pin to specified torque.

: 5.0 N·m (0.51 kg-m, 44 in-lb)

c. Back of band servo anchor end pin three turns.
d. While band servo anchor end pin, tighten lock nut to specified torque.

: 46 N·m (4.7 kg-m, 34 ft-lb)

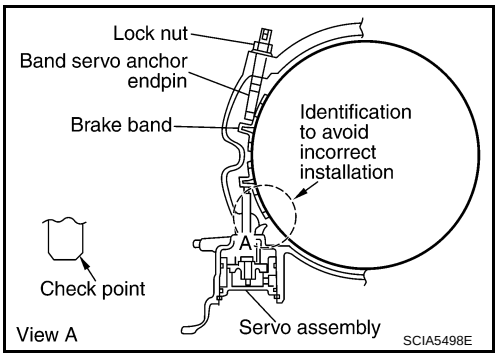

ACS004KY

Adjustment

TOTAL END PLAY

- Measure clearance between front sun gear and needle bearing for oil pump cover.
- Select proper thickness of bearing race so that end play is within specifications.

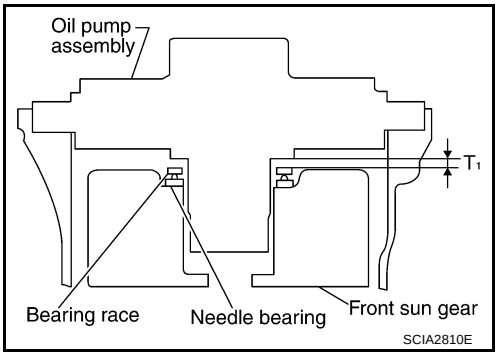

1. Measure dimensions “K” and “L” and then calculate dimension “J”.

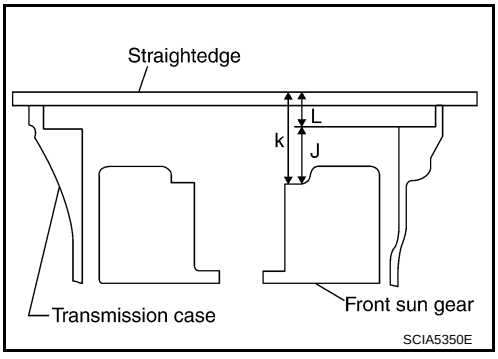

a. Measure dimension “K”.

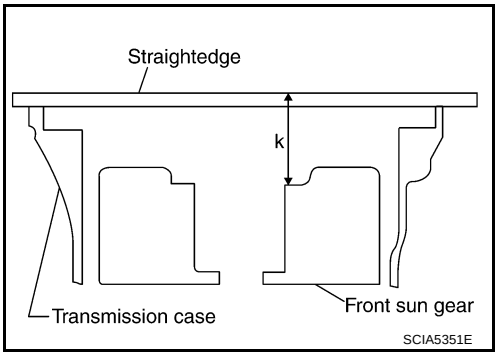

b. Measure dimension “L”.

c. Calculate dimension “J”.

“J”: Distance between oil pump fitting surface of transmission case and needle bearing mating surface of front sun gear.

J = K – L

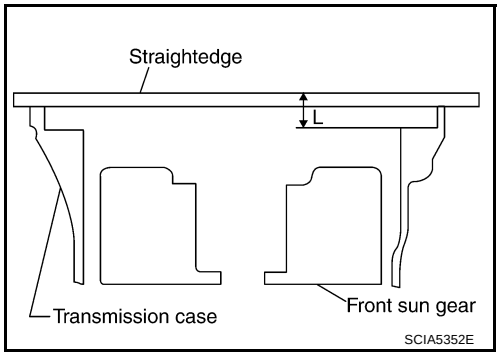

2. Measure dimensions “M_1 ” and “M_2 ” and then calculate dimension “M”.

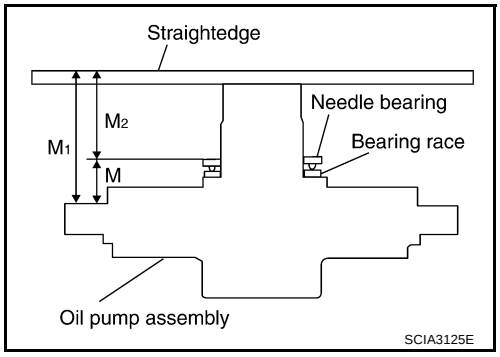

a. Place bearing race and needle bearing on oil pump assembly.

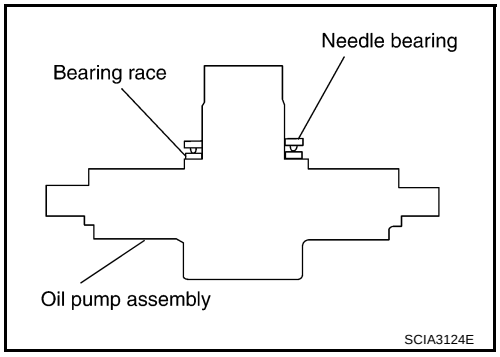

b. Measure thickness of straightedge “M_1 ”.

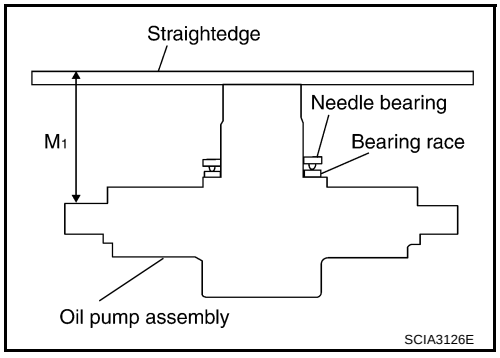

c. Measure thickness of straightedge “M_2 ”.

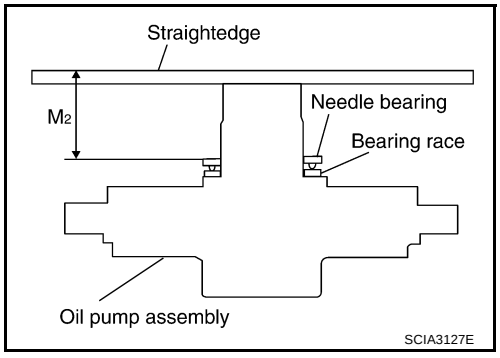

d. Calculate dimension “M”.

“M”: Distance between trans mission case fitting surface of oil pump and needle bearing on oil pump.

$M = M_1 - M_2$

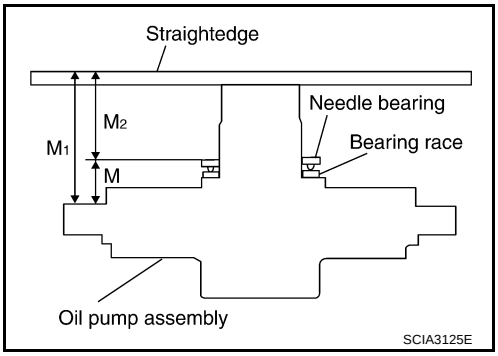

3. Adjust total end play “T_1 ”.

$T_1 = J - M$

Total end play “T_1 ”:

0.25 - 0.55 mm (0.0098 - 0.0217 in)

- Select proper thickness of bearing race so that total end play is within specifications.

Bearing races: **Refer to AT-381, "BEARING RACE FOR ADJUSTING TOTAL END PLAY" .**

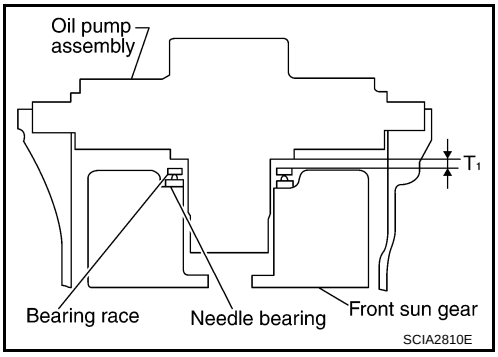

ACS004KZ

Assembly (2)

1. Install O-ring in oil pump assembly.

CAUTION:

- **Do not reuse O-ring.**
- **Apply ATF to O-ring.**

2. Install bearing race in oil pump assembly.

CAUTION:

Apply petroleum jelly to bearing race.

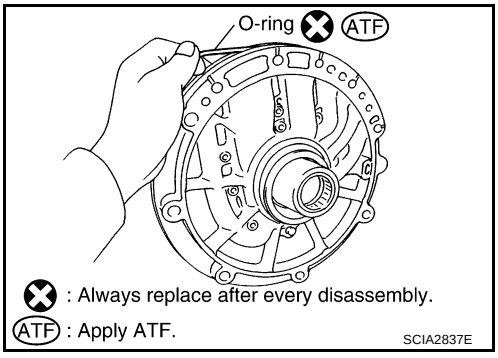

3. Install oil pump assembly in transmission case.

CAUTION:

Apply ATF to oil pump bush.

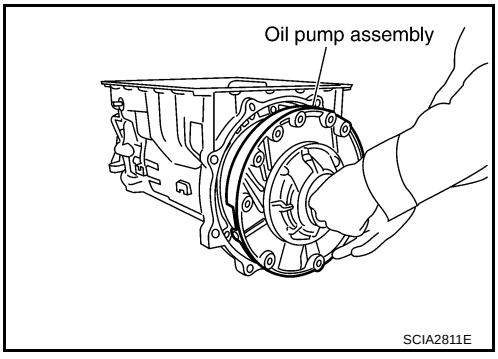

4. Apply recommended sealant (Genuine RTV Silicone Sealant or equivalent. Refer to GI-47, "Recommended Chemical Products and Sealants" .) to oil pump assembly as shown in illustration.

   CAUTION:
   Complete remove all moisture, oil and old sealant, etc. From the oil pump mounting bolts and oil pump mounting bolt mounting surfaces.

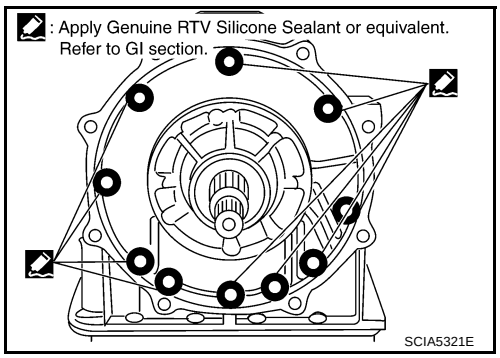

5. Tighten oil pump mounting bolts to specified torque. Refer to AT-319, "Components" .

   CAUTION:
   Apply ATF to oil pump bushing.

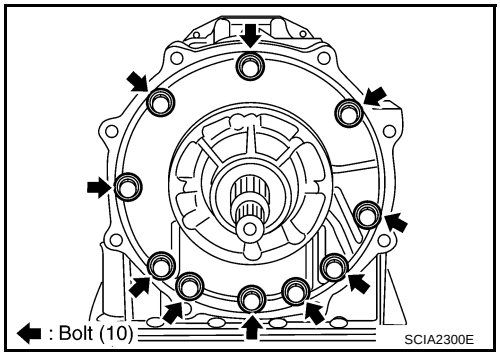

6. Install O-ring in input clutch assembly.

   CAUTION:
   - **Do not reuse O-ring.**
   - **Apply ATF to O-ring.**

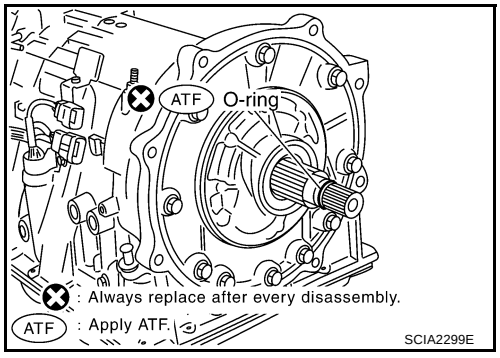

7. Install converter housing in transmission case.

   CAUTION:
   Do not reuse self-sealing bolt.

   Converter housing mounting bolt:

   : 52 N·m (5.3 kg-m, 38 ft-lb)

   Self-sealing bolt:

   : 61 N·m (6.2 kg-m, 45 ft-lb)

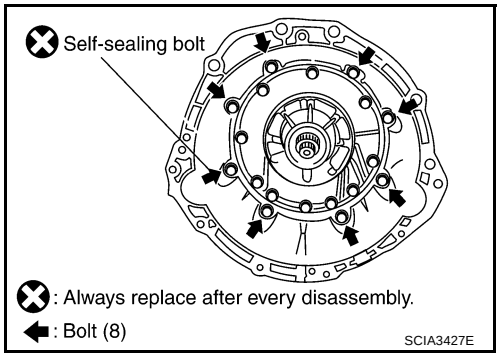

8. Make sure that brake band does not close turbine revolution sensor hole.

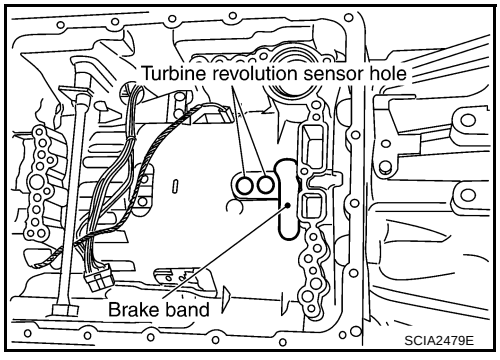

9. Install A/T fluid temperature sensor 2 in bracket.

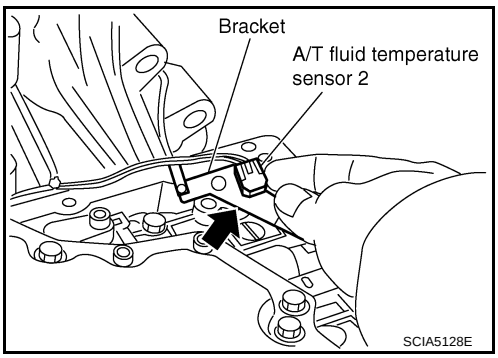

10. Install A/T fluid temperature sensor 2 (with bracket) in control valve assembly.

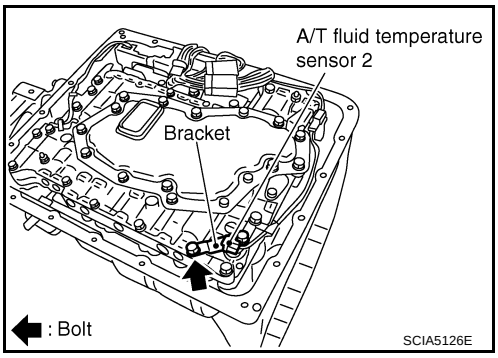

11. Install control valve assembly.

a. Install control valve assembly in transmission case.

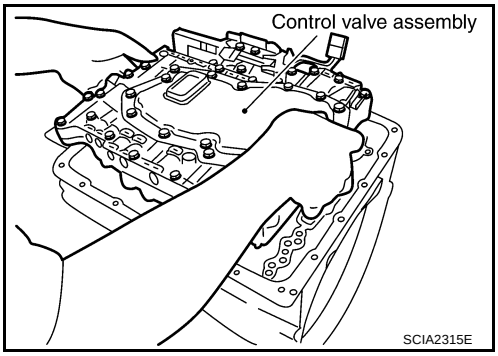

CAUTION:

- **Hang down terminal cord assembly and revolution sensor harness toward outside so as not to disturb installation of control valve assembly.**
- **Make sure that turbine sensor securely installs turbine sensor hole.**
- **Assemble it so that manual valve cutout is engaged with manual plate projection.**

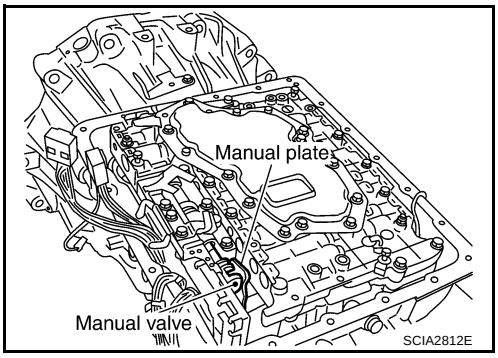

b. Install bolts A, B and C in control valve assembly.

Bolt symbol	Length mm (in)	Number of bolts
A	42 (1.65)	5
B	55 (2.17)	6
C	40 (1.57)	1

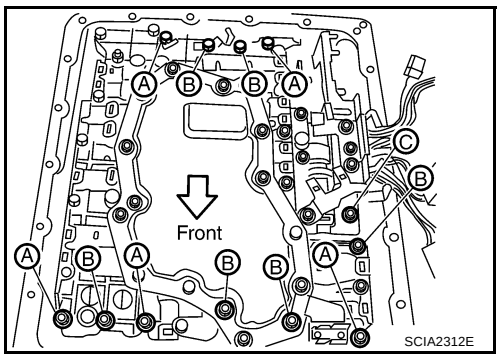

c. Tighten bolt 1, 2 and 3 temporarily to prevent dislocation. After that tighten them in order (1 → 2 → 3), and then tighten other bolts.

: 7.9 N·m (0.81 kg-m, 70 in-lb)

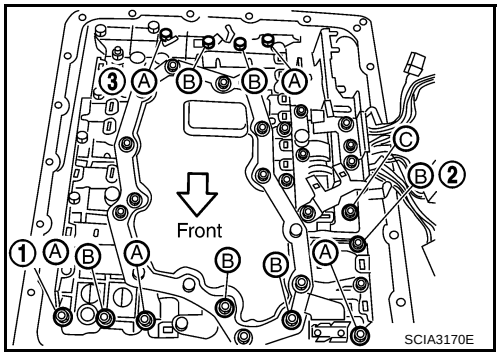

12. Install terminal cord assembly connectors in bracket.

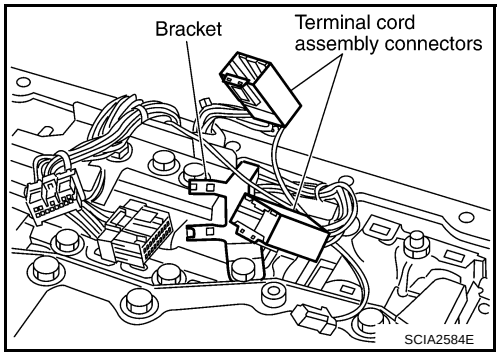

13. Connect terminal cord assembly connectors.

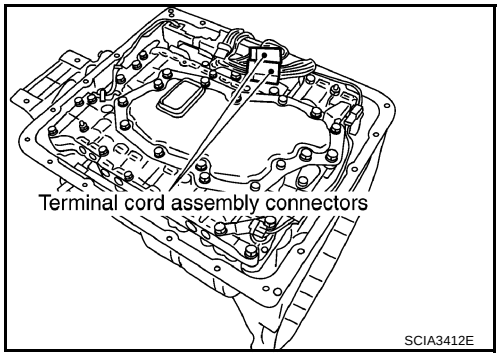

14. Connect A/T fluid temperature sensor 2 connector.

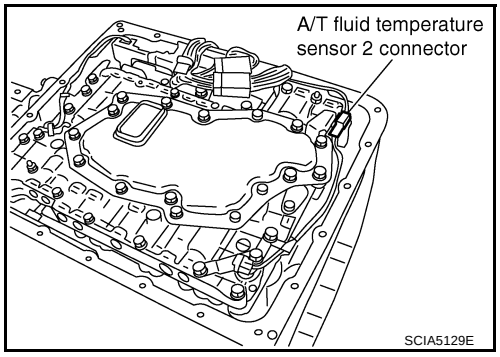

15. Connect revolution sensor connector.

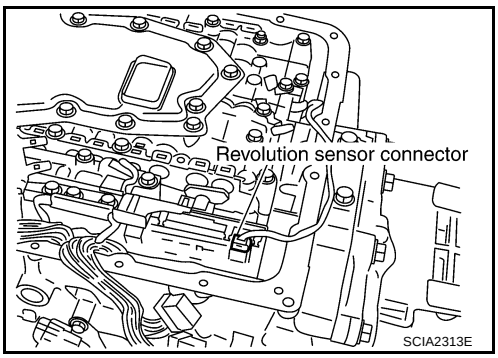

16. Securely fasten terminal harness with terminal clips.

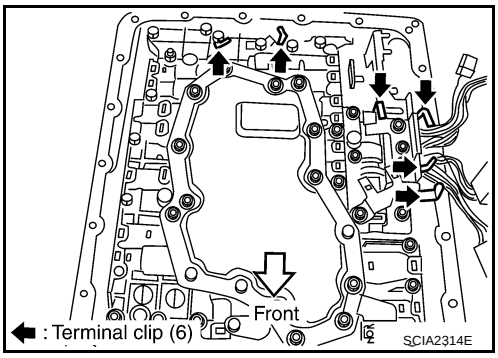

17. Install magnets in oil pan

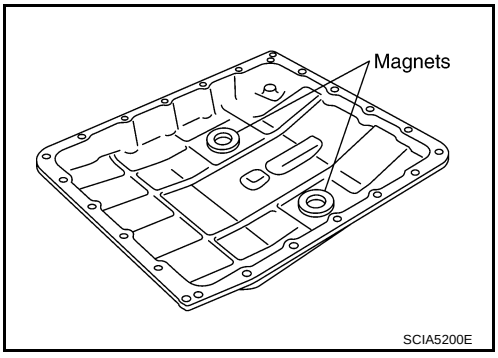

18. Install oil pan in transmission case.

a. Install oil pan gasket in oil pan.

CAUTION:

- **Do not reuse oil pan gasket.**
- **Install it in the direction to align hole positions.**

b. Install oil pan (with oil pan gasket) in transmission case.

CAUTION:

- **Install it so that drain plug comes to the position as shown in the figure.**
- **Be careful not to pinch harnesses.**

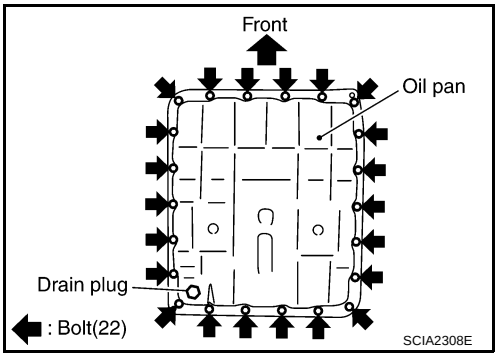

c. Tighten oil pan mounting bolts to the specified torque in numerical order shown in the figure after temporarily tightening them.

CAUTION:
Do not reuse oil pan mounting bolts.

19. Install drain plug in oil pan.

CAUTION:
Do not reuse drain plug gasket.

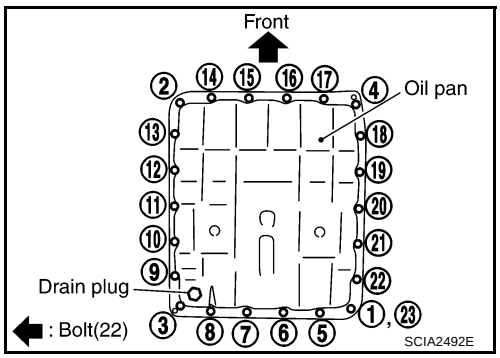

20. Install torque converter.

a. Pour ATF into torque converter.

- **Approximately 2 liter (2-1/8 US qt, 1-3/4 Imp qt) of fluid is required for a new torque converter.**
- **When reusing old torque converter, add the same amount of fluid as was drained.**

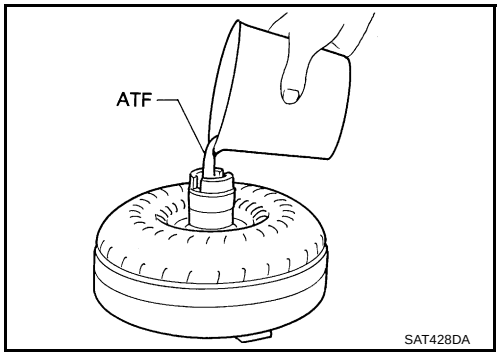

b. Install torque converter while aligning notches of torque converter with notches of oil pump.

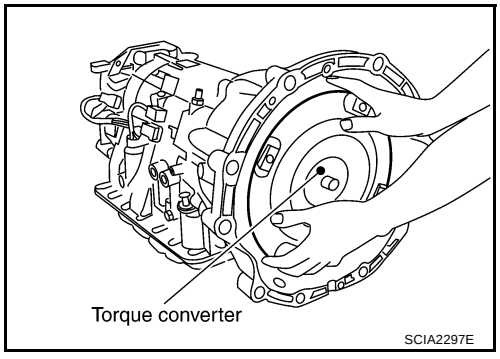

c. Measure distance “A” to check that torque converter is in proper position.

Distance “A”:

: 25.0 mm (0.98 in) or more

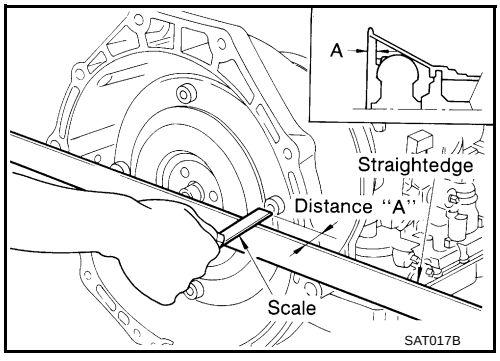

SERVICE DATA AND SPECIFICATIONS (SDS)

PFP:00030

General Specifications

ACS002IB

Applied model		VQ35DE engine
Automatic transmission model		RE5R05A
Transmission model code number		91X18
Stall torque ratio		2.0 : 1
Transmission gear ratio	1st	3.540
	2nd	2.264
	3rd	1.417
	4th	1.000
	5th	0.834
	Reverse	2.370
Recommended fluid		Genuine Nissan Matic J ATF*1
Fluid capacity		10.3 liter (10-7/8 US qt, 9-1/8 Imp qt)

CAUTION:

- **Use only Genuine Nissan Matic J ATF. Do not mix with other fluid.**
- **Using automatic transmission fluid other than Genuine Nissan Matic J ATF will deteriorate in driveability and automatic transmission durability, and may damage the automatic transmission, which is not covered by the warranty.**

*1: Refer to MA-9, "Fluids and Lubricants" .

Vehicle Speed When Shifting Gears

ACS002IC

Throttle position	Vehicle speed km/h (MPH)							
	D1 →D2	D2 →D3	D3 →D4	D4 →D5	D5 →D4	D4 →D3	D3 →D2	D2 →D1
Full throttle	58 - 62 (36 - 39)	90 - 98 (56 - 61)	140 - 150 (87 - 93)	201 - 211 (125 - 131)	197 - 207 (122 - 129)	122 - 132 (76 - 83)	74 - 82 (46 - 51)	34 - 48 (23 - 25)
Half throttle	46 - 50 (29 - 31)	71 - 79 (44 - 49)	107 - 117 (66 - 73)	135 - 145 (84 - 90)	88 - 98 (55 - 61)	63 - 73 (39 - 45)	29 - 37 (18 - 23)	11 - 15 (7 - 9)

- At half throttle, the accelerator opening is 4/8 of the full opening.

Vehicle Speed When Performing and Releasing Complete Lock-up

ACS002ID

Throttle position	Vehicle speed km/h (MPH)	
	Lock-up “ON”	Lock-up “OFF”
Closed throttle	56 - 64 (35 - 40)	53 - 61 (33 - 38)
Half throttle	168 - 176 (104 - 109)	131 - 139 (81 - 86)

- At closed throttle, the accelerator opening is less than 1/8 condition.
- At half throttle, the accelerator opening is 4/8 of the full opening.

Vehicle Speed When Performing and Releasing Slip Lock-up

ACS002IE

Throttle position	Gear position	Vehicle speed km/h (MPH)	
		Slip lock-up “ON”	Slip lock-up “OFF”
Closed throttle	4th	37 - 45 (23 - 28)	34 - 42 (21 - 26)
	5th	44 - 52 (27 - 32)	41 - 49 (25 - 30)

- At closed throttle, the accelerator opening is less than 1/8 condition.

Stall Speed

ACS002IF

Stall speed	2,600 - 2,900 rpm

Line Pressure

ACS002IG

Engine speed	Line pressure kPa (kg/cm^2 , psi)	
	R position	D, M positions
idle speed	392 - 441 (4.0 - 4.5, 57 - 64)	373 - 422 (3.8 - 4.3, 54 - 61)
stall speed	1,700 - 1,890 (17.3 - 19.3, 247 - 274)	1,310 - 1,500 (13.3 - 15.3, 190 - 218)

Solenoid Valves

ACS002IH

Name	Resistance (Approx.) (Ω)	Terminal No.
Line pressure solenoid valve	3 - 9	7
Torque converter clutch solenoid valve		8
Input clutch solenoid valve		6
High & low reverse clutch solenoid valve		3
Front brake solenoid valve		5
Direct clutch solenoid valve		4
Low coast brake solenoid valve	20 - 40	2

A/T Fluid Temperature Sensor

ACS002II

Name	Condition	CONSULT-II “DATA MONITOR” (Approx.) (V)	Resistance (Approx.) (kΩ)
A/T fluid temperature sensor 1	0°C (32°F)	2.2	15
	20°C (68°F)	1.8	6.5
	80°C (176°F)	0.6	0.9
A/T fluid temperature sensor 2	0°C (32°F)	2.2	10
	20°C (68°F)	1.7	4
	80°C (176°F)	0.45	0.5

Turbine Revolution Sensor

ACS002IJ

Name	Condition	Data (Approx.)
Turbine revolution sensor 1	When running at 50 km/h (31 MPH) in 4th speed with the closed throttle position switch “OFF”.	1.3 (kHz)
Turbine revolution sensor 2	When moving at 20 km/h (12 MPH) in 1st speed with the closed throttle position switch “OFF”.	

Vehicle Speed Sensor A/T (Revolution Sensor)

ACS002IK

Name	Condition	Data (Approx.)
Revolution sensor	When moving at 20 km/h (12 MPH).	185 (Hz)

Reverse Brake

ACS004JX

	Thickness mm (in)	Part number*
Thickness of retaining plates	4.2 (0.165)	31667 90X14
	4.4 (0.173)	31667 90X15
	4.6 (0.181)	31667 90X16
	4.8 (0.189)	31667 90X17
	5.0 (0.197)	31667 90X18
	5.2 (0.205)	31667 90X19

*: Always check with the Parts Department for the latest parts information.

Total End Play

ACS004JY

Total end play mm (in)	0.25 - 0.55 (0.0098 - 0.0217)

BEARING RACE FOR ADJUSTING TOTAL END PLAY

Thickness mm (in)	Part number*
1.2 (0.047)	31435 90X02
1.4 (0.055)	31435 90X03
1.6 (0.063)	31435 90X04
1.8 (0.071)	31435 90X05
2.0 (0.079)	31435 90X06

*: Always check with the Parts Department for the latest parts information.