SECTION AT
AUTOMATIC TRANSMISSION

CONTENTS

INDEX FOR DTC

PFP:00024

Alphabetical Index

NCS000AZ

NOTE:
If DTC "U1000 CAN COMM CIRCUIT" is displayed with other DTCs, first perform the trouble diagnosis for "DTC U1000 CAN COMMUNICATION LINE". Refer to AT-98 .

Items (CONSULT-II screen terms)	DTC		Reference page
	OBD-II	Except OBD-II	
	CONSULT-II or GST*1	CONSULT-II only "A/T"	
A/T 1ST E/BRAKING	—	P1731	AT-138
ATF PRES SW 1/CIRC	—	P1841	AT-164
ATF PRES SW 3/CIRC	—	P1843	AT-166
ATF PRES SW 5/CIRC	—	P1845	AT-168
ATF PRES SW 6/CIRC	—	P1846	AT-170
A/T INTERLOCK	P1730	P1730	AT-135
A/T TCC S/V FNCTN	P0744	P0744	AT-121
ATF TEMP SEN/CIRC	P0710	P1710	AT-128
CAN COMM CIRCUIT	U1000	U1000	AT-98
D/C SOLENOID/CIRC	P1762	P1762	AT-148
D/C SOLENOID FNCTN	P1764	P1764	AT-150
ENGINE SPEED SIG	P0725	P0725	AT-117
FR/B SOLENOID/CIRC	P1757	P1757	AT-144
FR/B SOLENOID FNCT	P1759	P1759	AT-146
HLR/C SOL/CIRC	P1767	P1767	AT-152
HLR/C SOL FNCTN	P1769	P1769	AT-154
I/C SOLENOID/CIRC	P1752	P1752	AT-140
I/C SOLENOID FNCTN	P1754	P1754	AT-142
L/PRESS SOL/CIRC	P0745	P0745	AT-123
LC/B SOLENOID/CIRC	P1772	P1772	AT-156
LC/B SOLENOID FNCT	P1774	P1774	AT-158
MANU MODE SW/CIRC	—	P1815	AT-160
PNP SW/CIRC	P0705	P0705	AT-106
STARTER RELAY/CIRC	—	P0615	AT-101
TCC SOLENOID/CIRC	P0740	P0740	AT-119
TCM	P0700	P0700	AT-105
TP SEN/CIRC A/T	P1705	P1705	AT-125
TURBINE REV S/CIRC	P0717	P0717	AT-110
VEH SPD SE/CIR-MTR	—	P1721	AT-133
VEH SPD SEN/CIR AT	P0720	P0720	AT-112

*1: These numbers are prescribed by SAE J2012.

DTC No. Index

NCS000B0

NOTE:
If DTC "U1000 CAN COMM CIRCUIT" is displayed with other DTCs, first perform the trouble diagnosis for "DTC U1000 CAN COMMUNICATION LINE". Refer to AT-98 .

DTC		Items (CONSULT-II screen terms)	Reference page
OBD-II	Except OBD-II		
CONSULT-II or GST*1	CONSULT-II only "A/T"		
—	P0615	STARTER RELAY/CIRC	AT-101
P0700	P0700	TCM	AT-105
P0705	P0705	PNP SW/CIRC	AT-106
P0710	P1710	ATF TEMP SEN/CIRC	AT-128
P0717	P0717	TURBINE REV S/CIRC	AT-110
P0720	P0720	VEH SPD SEN/CIR AT	AT-112
P0725	P0725	ENGINE SPEED SIG	AT-117
P0740	P0740	TCC SOLENOID/CIRC	AT-119
P0744	P0744	A/T TCC S/V FNCTN	AT-121
P0745	P0745	L/PRESS SOL/CIRC	AT-123
P1705	P1705	TP SEN/CIRC A/T	AT-125
—	P1721	VEH SPD SE/CIR-MTR	AT-133
P1730	P1730	A/T INTERLOCK	AT-135
—	P1731	A/T 1ST E/BRAKING	AT-138
P1752	P1752	I/C SOLENOID/CIRC	AT-140
P1754	P1754	I/C SOLENOID FNCTN	AT-142
P1757	P1757	FR/B SOLENOID/CIRC	AT-144
P1759	P1759	FR/B SOLENOID FNCT	AT-146
P1762	P1762	D/C SOLENOID/CIRC	AT-148
P1764	P1764	D/C SOLENOID FNCTN	AT-150
P1767	P1767	HLR/C SOL/CIRC	AT-152
P1769	P1769	HLR/C SOL FNCTN	AT-154
P1772	P1772	LC/B SOLENOID/CIRC	AT-156
P1774	P1774	LC/B SOLENOID FNCT	AT-158
—	P1815	MANU MODE SW/CIRC	AT-160
—	P1841	ATF PRES SW 1/CIRC	AT-164
—	P1843	ATF PRES SW 3/CIRC	AT-166
—	P1845	ATF PRES SW 5/CIRC	AT-168
—	P1846	ATF PRES SW 6/CIRC	AT-170
U1000	U1000	CAN COMM CIRCUIT	AT-98

*1: These numbers are prescribed by SAE J2012.

PRECAUTIONS

PFP:00001

Precautions for Supplemental Restraint System (SRS) “AIR BAG” and “SEAT BELT PRE-TENSIONER”

NCS000B1

The Supplemental Restraint System such as “AIR BAG” and “SEAT BELT PRE-TENSIONER”, used along with a front seat belt, helps to reduce the risk or severity of injury to the driver and front passenger for certain types of collision. This system includes seat belt switch inputs and dual stage front air bag modules. The SRS system uses the seat belt switches to determine the front air bag deployment, and may only deploy one front air bag, depending on the severity of a collision and whether the front occupants are belted or unbelted.
Information necessary to service the system safely is included in the SRS and SB section of this Service Manual.

WARNING:

- **To avoid rendering the SRS inoperative, which could increase the risk of personal injury or death in the event of a collision which would result in air bag inflation, all maintenance must be performed by an authorized NISSAN/INFINITI dealer.**
- **Improper maintenance, including incorrect removal and installation of the SRS, can lead to personal injury caused by unintentional activation of the system. For removal of Spiral Cable and Air Bag Module, see the SRS section.**
- **Do not use electrical test equipment on any circuit related to the SRS unless instructed to in this Service Manual. SRS wiring harnesses can be identified by yellow and/or orange harnesses or harness connectors.**

Precautions for Battery Service

NCS000B2

Before disconnecting the battery, lower both the driver and passenger windows. This will prevent any interference between the window edge and the vehicle when the door is opened/closed. During normal operation, the window slightly raises and lowers automatically to prevent any window to vehicle interference. The automatic window function will not work with the battery disconnected.

Precautions for On Board Diagnostic (OBD) System of A/T and Engine

NCS000B3

The ECM has an on board diagnostic system. It will light up the malfunction indicator lamp (MIL) to warn the driver of a malfunction causing emission deterioration.

CAUTION:

- **Be sure to turn the ignition switch OFF and disconnect the negative battery cable before any repair or inspection work. The open/short circuit of related switches, sensors, solenoid valves, etc. Will cause the MIL to light up.**
- **Be sure to connect and lock the connectors securely after work. A loose (unlocked) connector will cause the MIL to light up due to an open circuit. (Be sure the connector is free from water, grease, dirt, bent terminals, etc.)**
- **Be sure to route and secure the harnesses properly after work. Interference of the harness with a bracket, etc. May cause the MIL to light up due to a short circuit.**
- **Be sure to connect rubber tubes properly after work. A misconnected or disconnected rubber tube may cause the MIL to light up due to a malfunction of the EGR system or fuel injection system, etc.**
- **Be sure to erase the unnecessary malfunction information (repairs completed) from the TCM and ECM before returning the vehicle to the customer.**

Precautions

NCS000B4

- **Before connecting or disconnecting the A/T assembly harness connector, turn ignition switch OFF and disconnect negative battery cable from the negative terminal. Because battery voltage is applied to TCM even if ignition switch is turned OFF.**

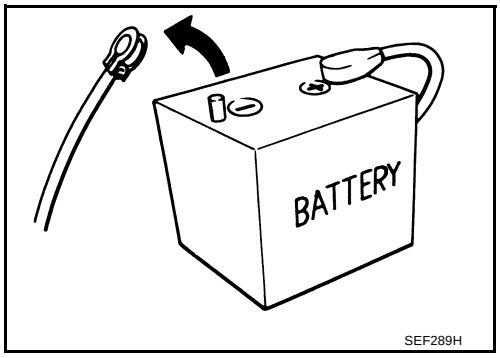

- **After performing each TROUBLE DIAGNOSIS, perform "DTC Confirmation Procedure".**
  If the repair is completed the DTC should not be displayed in the "DTC Confirmation Procedure".

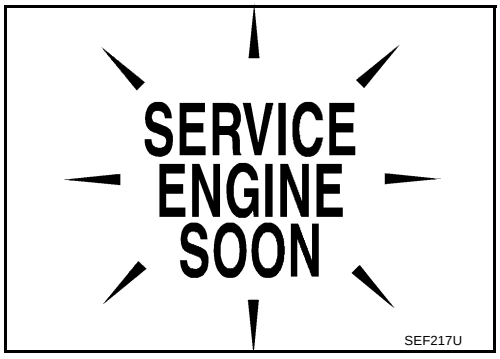

- Always use the specified brand of A/T fluid. Refer to MA-10, "Fluids and Lubricants" .
- Use lint-free paper not cloth rags during work.
- After replacing the A/T fluid, dispose of the waste oil using the methods prescribed by law, ordinance, etc.
- Before proceeding with disassembly, thoroughly clean the outside of the A/T. It is important to prevent the internal parts from becoming contaminated by dirt or other foreign matter.
- Disassembly should be done in a clean work area.
- Use lint-free paper for wiping parts clean. Common shop rags can leave fibers that could interfere with the operation of the A/T.
- Place disassembled parts in order for easier and proper assembly.
- All parts should be carefully cleaned with a general purpose, non-flammable solvent before inspection or reassembly.
- Gaskets, seals and O-rings should be replaced any time the A/T is disassembled.
- It is very important to perform functional tests whenever they are indicated.
- The valve body contains precision parts and requires extreme care when parts are removed and serviced. Place disassembled valve body parts in order for easier and proper assembly. Care will also prevent springs and small parts from becoming scattered or lost.
- Properly installed valves, sleeves, plugs, etc. will slide along bores in valve body under their own weight.
- Before assembly, apply a coat of recommended ATF to all parts. Apply petroleum jelly to protect O-rings and seals, or hold bearings and washers in place during assembly. Do not use grease.
- Extreme care should be taken to avoid damage to O-rings, seals and gaskets when assembling.
- Clean or replace ATF cooler if excessive foreign material is found in oil pan or clogging strainer. Refer to AT-9, "A/T FLUID COOLER SERVICE" .
- After overhaul, refill the A/T with new ATF.
- When the A/T drain plug is removed, only some of the ATF is drained. Old ATF will remain in torque converter and ATF cooling system.
  Always follow the procedures under "Changing A/T Fluid" in the AT section when changing A/T fluid. Refer to AT-12, "Changing A/T Fluid" , AT-12, "Checking A/T Fluid" .

Service Notice or Precautions

NCS000B5

A/T FLUID COOLER SERVICE

If ATF contains frictional material (clutches, bands, etc.), or if an A/T is repaired, overhauled, or replaced, inspect and clean the A/T fluid cooler mounted in the radiator or replace the radiator. Flush cooler lines using cleaning solvent and compressed air after repair. For A/T fluid cooler cleaning procedure, refer to AT-14, "A/T Fluid Cooler Cleaning" . For radiator replacement, refer to CO-13, "RADIATOR" .

OBD-II SELF-DIAGNOSIS

- A/T self-diagnosis is performed by the TCM in combination with the ECM. The results can be read through the blinking pattern of the A/T CHECK indicator or the malfunction indicator lamp (MIL). Refer to the table on AT-86, "SELF-DIAGNOSTIC RESULT MODE" for the indicator used to display each self-diagnostic result.
- The self-diagnostic results indicated by the MIL are automatically stored in both the ECM and TCM memories.
  Always perform the procedure on AT-38, "HOW TO ERASE DTC" to complete the repair and avoid unnecessary blinking of the MIL.

For details of OBD-II, refer to EC-47, "ON BOARD DIAGNOSTIC (OBD) SYSTEM" .

- **Certain systems and components, especially those related to OBD, may use the new style slide-locking type harness connector. For description and how to disconnect, refer to PG-65, "HARNESS CONNECTOR" .**

PREPARATION

PFP:00002

Special Service Tools

NCS000B7

The actual shapes of Kent-Moore tools may differ from those of special service tools illustrated here.

Tool number (Kent-Moore No.) Tool name		Description
ST2505S001 (J-34301-C) Oil pressure gauge set 1. ST25051001 (—) Oil pressure gauge 2. ST25052000 (—) Hose 3. ST25053000 (—) Joint pipe 4. ST25054000 (—) Adapter 5. ST25055000 (—) Adapter	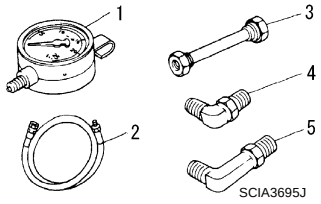	Measuring line pressure
KV31103600 (J-45674) Joint pipe adapter (With ST25054000)	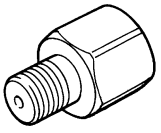	Measuring line pressure
ST33400001 (J-26082) Drift a: 60 mm (2.36 in) dia. b: 47 mm (1.85 in) dia.	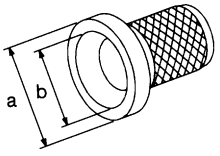	● Installing rear oil seal ● Installing oil pump housing oil seal
KV31102400 (J-34285 and J-34285-87) Clutch spring compressor a: 320 mm (12.60 in) b: 174 mm (6.85 in)	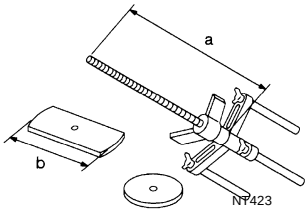	Installing reverse brake return spring retainer
ST25850000 (J-25721-A) Sliding hammer a: 179 mm (7.05 in) b: 70 mm (2.76 in) c: 40 mm (1.57 in) d: M12X1.75P	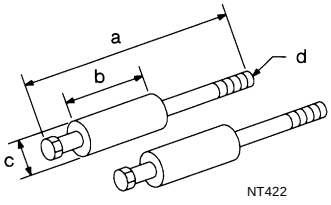	Remove oil pump assembly

Commercial Service Tools

NCS000B8

Tool name	Description
Power tool 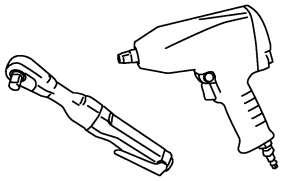 PBIC0190E	Loosening bolts and nuts
Drift a: 22 mm (0.87 in) dia. 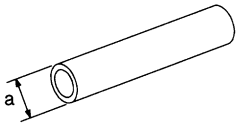 NT083	Installing manual shaft oil seal

A/T FLUID

PFP:KLE40

Changing A/T Fluid

NCS000B9

1. Warm up ATF.
2. Stop engine.
3. Loosen the level gauge bolt.
4. Drain ATF from drain hole and refill with new ATF. Always refill same volume with drained ATF.
   - To replace the ATF, pour in new ATF at the A/T fluid charging pipe with the engine idling and at the same time drain the old ATF from the radiator cooler hose return side.
   - When the color of the ATF coming out is about the same as the color of the new ATF, the replacement is complete. The amount of new ATF to use should be 30 to 50% increase of the stipulated amount.

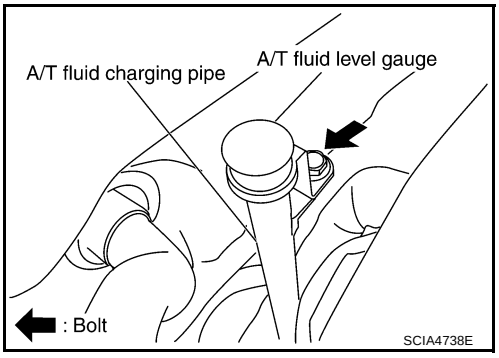

ATF: Genuine NISSAN Matic J ATF

Fluid capacity: 10.3 ℓ (10-7/8 US qt, 9-1/8 Imp qt)

CAUTION:
- **Use only Genuine NISSAN Matic J ATF. Do not mix with other ATF.**
- **Using ATF other than Genuine NISSAN Matic J ATF will cause deterioration in driveability and A/T durability, and may damage the A/T, which is not covered by the warranty.**
- **When filling ATF, take care not to scatter heat generating parts such as exhaust.**
- **Do not reuse drain plug gasket.**

Drain plug

: 34 N·m (3.5 kg-m, 25 ft-lb)

5. Run engine at idle speed for 5 minutes.
6. Check A/T fluid level and condition. Refer to AT-12, "Checking A/T Fluid" . If ATF is still dirty, repeat step 2. through 5.
7. Install the removed A/T fluid level gauge in the A/T fluid charging pipe.
8. Tighten the level gauge bolt.

Level gauge bolt

: 5.1 N·m (0.52 kg-m, 45 in-lb)

Checking A/T Fluid

NCS000BA

1. Warm up engine.
2. Check for A/T fluid leakage.
3. Loosen the level gauge bolt.
4. Before driving, A/T fluid level can be checked at A/T fluid temperatures of 30 to 50°C (86 to 122°F) using “COLD” range on A/T fluid level gauge as follows.

a. Park vehicle on level surface and set parking brake.
b. Start engine and move selector lever through each gear position. Leave selector lever in “P” position.
c. Check A/T fluid level with engine idling.
d. Remove A/T fluid level gauge and wipe clean with lint-free paper.

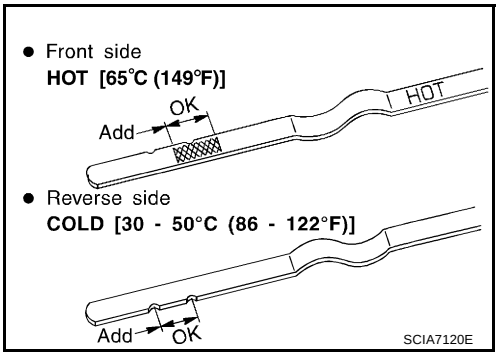

CAUTION:
When wiping away the A/T fluid level gauge, always use lint-free paper, not a cloth one.

e. Reinsert A/T fluid level gauge into A/T fluid charging pipe as far as it will go.

CAUTION:
To check A/T fluid level, insert the A/T fluid level gauge until the cap contacts the end of the A/T fluid charging pipe, with the A/T fluid level gauge reversed from the normal attachment conditions.

f. Remove A/T fluid level gauge and note reading. If reading is at low side of range, add ATF to the A/T fluid charging pipe.

CAUTION:
Do not overfill.

5. Drive vehicle for approximately 5 minutes in urban areas.
6. Make the A/T fluid temperature approximately 65°C (149°F).

NOTE:
A/T fluid level will be greatly affected by temperature as shown in figure. Therefore, be certain to perform operation while checking data with CONSULT-II.

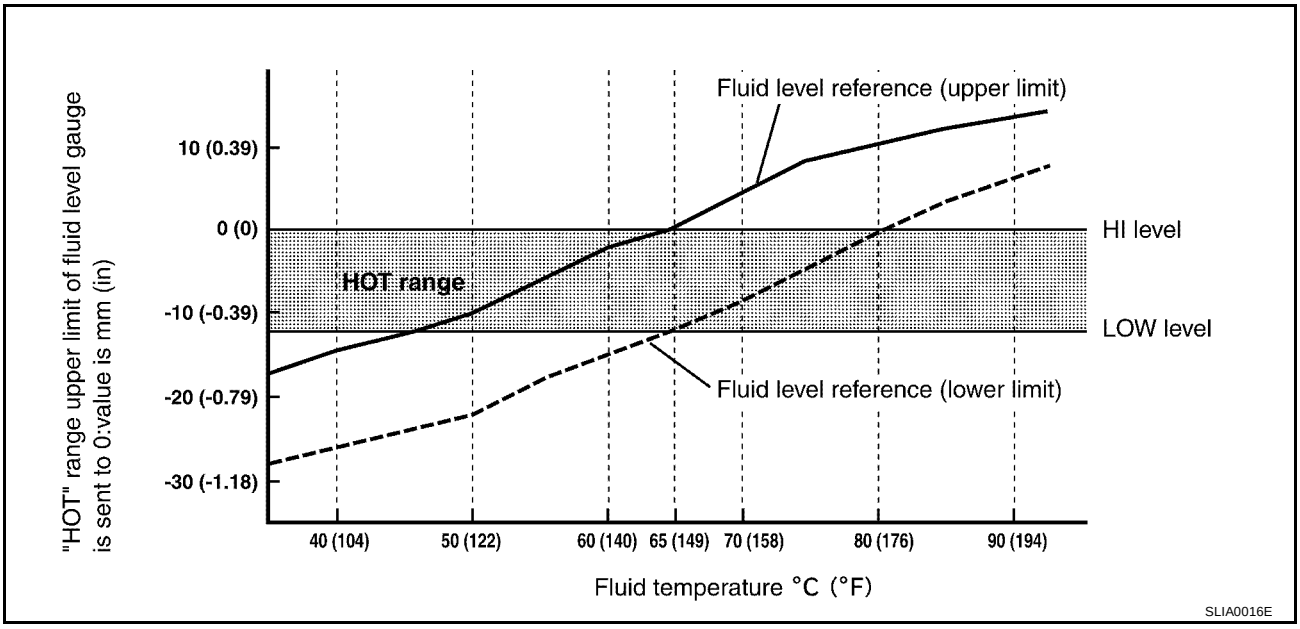

a. Connect CONSULT-II to data link connector. Refer to GI-37, "CONSULT-II Start Procedure" .
b. Select “MAIN SIGNALS” in “DATA MONITOR” mode for “A/T” with CONSULT-II.
c. Read out the value of “ATF TEMP 1”.

7. Recheck A/T fluid level at A/T fluid temperatures of approximately 65°C (149°F) using “HOT” range on A/T fluid level gauge.

CAUTION:
- **When wiping away the A/T fluid level gauge, always use lint-free paper, not a cloth one.**
- **To check A/T fluid level, insert the A/T fluid level gauge until the cap contacts the end of the A/T fluid charging pipe, with the A/T fluid level gauge reversed from the normal attachment conditions as shown.**

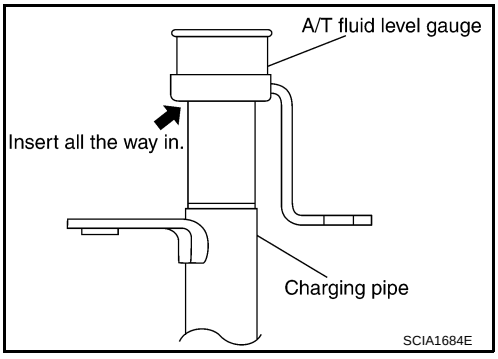

8. Check A/T fluid condition.
   - If ATF is very dark or smells burned, check operation of A/T. Flush cooling system after repair of A/T.
   - If ATF contains frictional material (clutches, bands, etc.), replace radiator and flush cooler line using cleaning solvent and compressed air after repair of A/T. Refer to CO-13, "RADIATOR" and AT-14, "A/T Fluid Cooler Cleaning" .

9. Install the removed A/T fluid level gauge in the A/T fluid charging pipe.
10. Tighten the level gauge bolt.

Level gauge bolt

: 5.1N·m (0.52 kg-m, 45 in-lb)

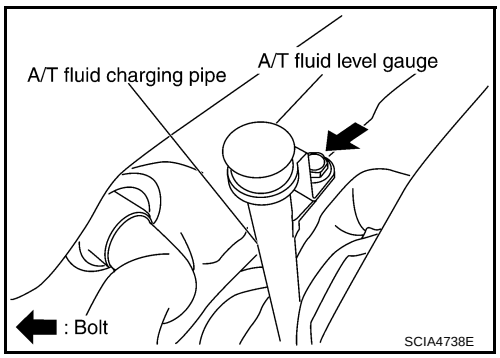

A/T Fluid Cooler Cleaning

NCS000BB

Whenever an A/T is repaired, overhauled, or replaced, the A/T fluid cooler mounted in the radiator must be inspected and cleaned.
Metal debris and friction material, if present, can become trapped in the A/T fluid cooler. This debris can contaminate the newly serviced A/T or, in severe cases, can block or restrict the flow of ATF. In either case, malfunction of the newly serviced A/T may result.
Debris, if present, may build up as ATF enters the cooler inlet. It will be necessary to back flush the cooler through the cooler outlet in order to flush out any built up debris.

A/T FLUID COOLER CLEANING PROCEDURE

1. Position an oil pan under the A/T's inlet and outlet cooler hoses.
2. Identify the inlet and outlet fluid cooler hoses.
3. Disconnect the fluid cooler inlet and outlet rubber hoses from the steel cooler tubes or bypass valve.

   NOTE:
   Replace the cooler hoses if rubber material from the hose remains on the tube fitting.
4. Allow any ATF that remains in the cooler hoses to drain into the oil pan.

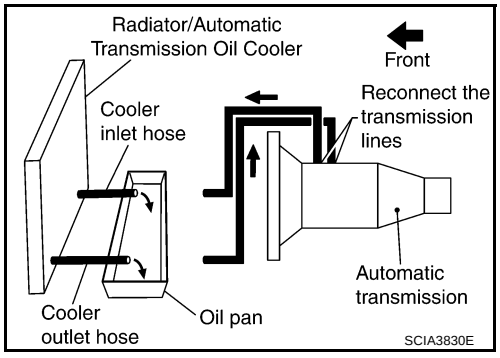

5. Insert the extension adapter hose of a can of Transmission Cooler Cleaner (Nissan P/N 999MP-AM006) into the cooler outlet hose.

   CAUTION:
   - **Wear safety glasses and rubber gloves when spraying the Transmission Cooler Cleaner.**
   - **Spray Transmission Cooler Cleaner only with adequate ventilation.**
   - **Avoid contact with eyes and skin.**
   - **Do not breath vapors or spray mist.**
6. Hold the hose and can as high as possible and spray Transmission Cooler Cleaner in a continuous stream into the cooler outlet hose until ATF flows out of the cooler inlet hose for 5 seconds.

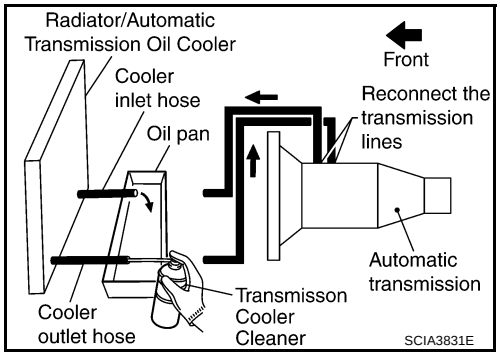

7. Insert the tip of an air gun into the end of the cooler outlet hose.
8. Wrap a shop rag around the air gun tip and of the cooler outlet hose.
9. Blow compressed air regulated to 5 to 9 kg/cm^2 (70 to 130 psi) through the cooler outlet hose for 10 seconds to force out any remaining ATF.
10. Repeat steps 5 through 9 three additional times.
11. Position an oil pan under the banjo bolts that connect the fluid cooler steel lines to the A/T.
12. Remove the banjo bolts.

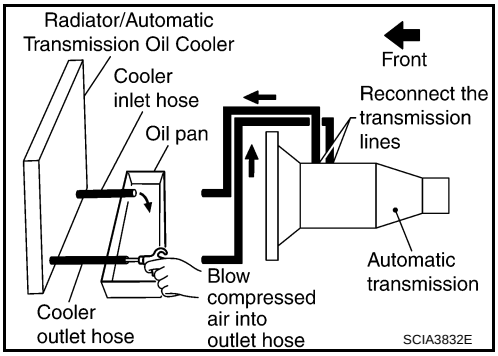

13. Flush each steel line from the cooler side back toward the A/T by spraying Transmission Cooler Cleaner in a continuous stream for 5 seconds.
14. Blow compressed air regulated to 5 to 9 kg/cm^2 (70 to 130 psi) through each steel line from the cooler side back toward the A/T for 10 seconds to force out any remaining ATF.
15. Ensure all debris is removed from the steel cooler lines.
16. Ensure all debris is removed from the banjo bolts and fittings.
17. Perform AT-15, "A/T FLUID COOLER DIAGNOSIS PROCEDURE" .

A/T FLUID COOLER DIAGNOSIS PROCEDURE

NOTE:
Insufficient cleaning of the cooler inlet hose exterior may lead to inaccurate debris identification.

1. Position an oil pan under the A/T's inlet and outlet cooler hoses.
2. Clean the exterior and tip of the cooler inlet hose.
3. Insert the extension adapter hose of a can of Transmission Cooler Cleaner (Nissan P/N 999MP-AM006) into the cooler outlet hose.

   CAUTION:
   - **Wear safety glasses and rubber gloves when spraying the Transmission Cooler Cleaner.**
   - **Spray Transmission Cooler Cleaner only with adequate ventilation.**
   - **Avoid contact with eyes and skin.**
   - **Do not breath vapors or spray mist.**

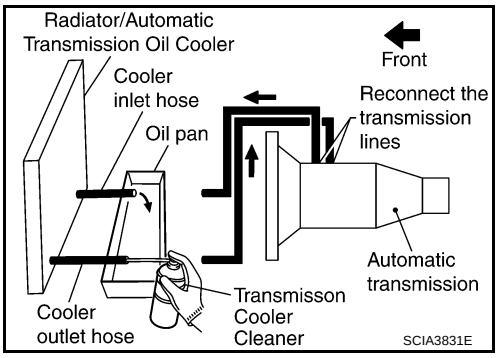

4. Hold the hose and can as high as possible and spray Transmission Cooler Cleaner in a continuous stream into the cooler outlet hose until ATF flows out of the cooler inlet hose for 5 seconds.
5. Tie a common white, basket-type coffee filter to the end of the cooler inlet hose.

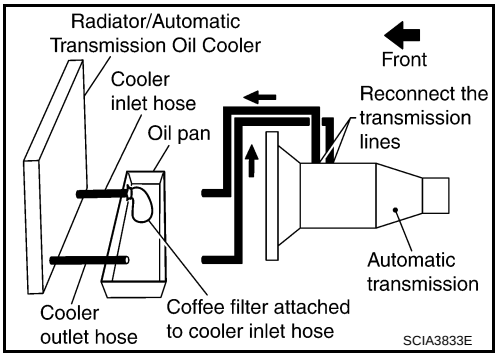

6. Insert the tip of an air gun into the end of the cooler outlet hose.
7. Wrap a shop rag around the air gun tip and end of cooler outlet hose.
8. Blow compressed air regulated to 5 to 9 kg/cm^2 (70 to 130 psi) through the cooler outlet hose to force any remaining ATF into the coffee filter.
9. Remove the coffee filter from the end of the cooler inlet hose.
10. Perform AT-16, "A/T FLUID COOLER INSPECTION PROCEDURE" .

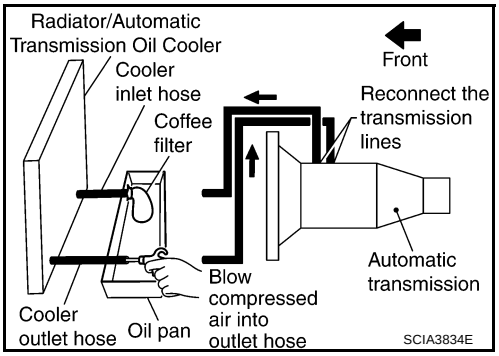

A/T FLUID COOLER INSPECTION PROCEDURE

1. Inspect the coffee filter for debris.

a. If small metal debris less than 1 mm (0.040 in) in size or metal powder is found in the coffee filter, this is normal. If normal debris is found, the A/T fluid cooler/radiator can be re-used and the procedure is ended.

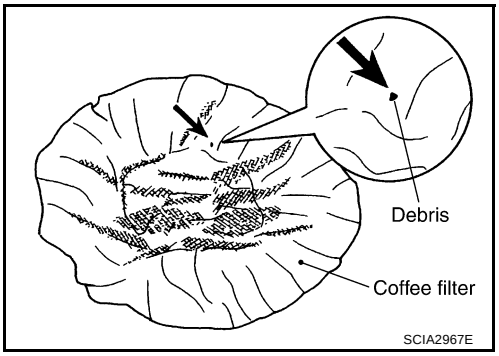

b. If one or more pieces of debris are found that are over 1 mm (0.040 in) size and/or peeled clutch facing material is found in the coffee filter, the A/T fluid cooler is not serviceable. The A/T fluid cooler/radiator must be replaced and the inspection procedure is ended. Refer to CO-13, "RADIATOR" and CO-17, "RADIATOR (ALUMINUM TYPE)" .

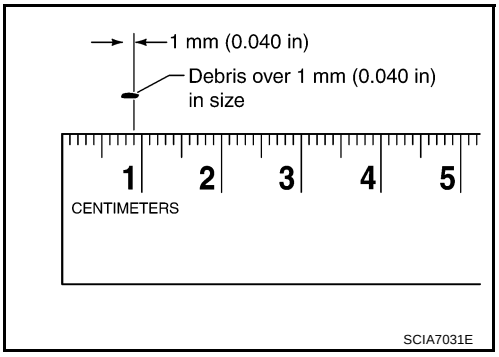

A/T FLUID COOLER FINAL INSPECTION

After performing all procedures, ensure that all remaining oil is cleaned from all components.

A/T CONTROL SYSTEM

PFP:31036

Cross-sectional View

NCS000BC

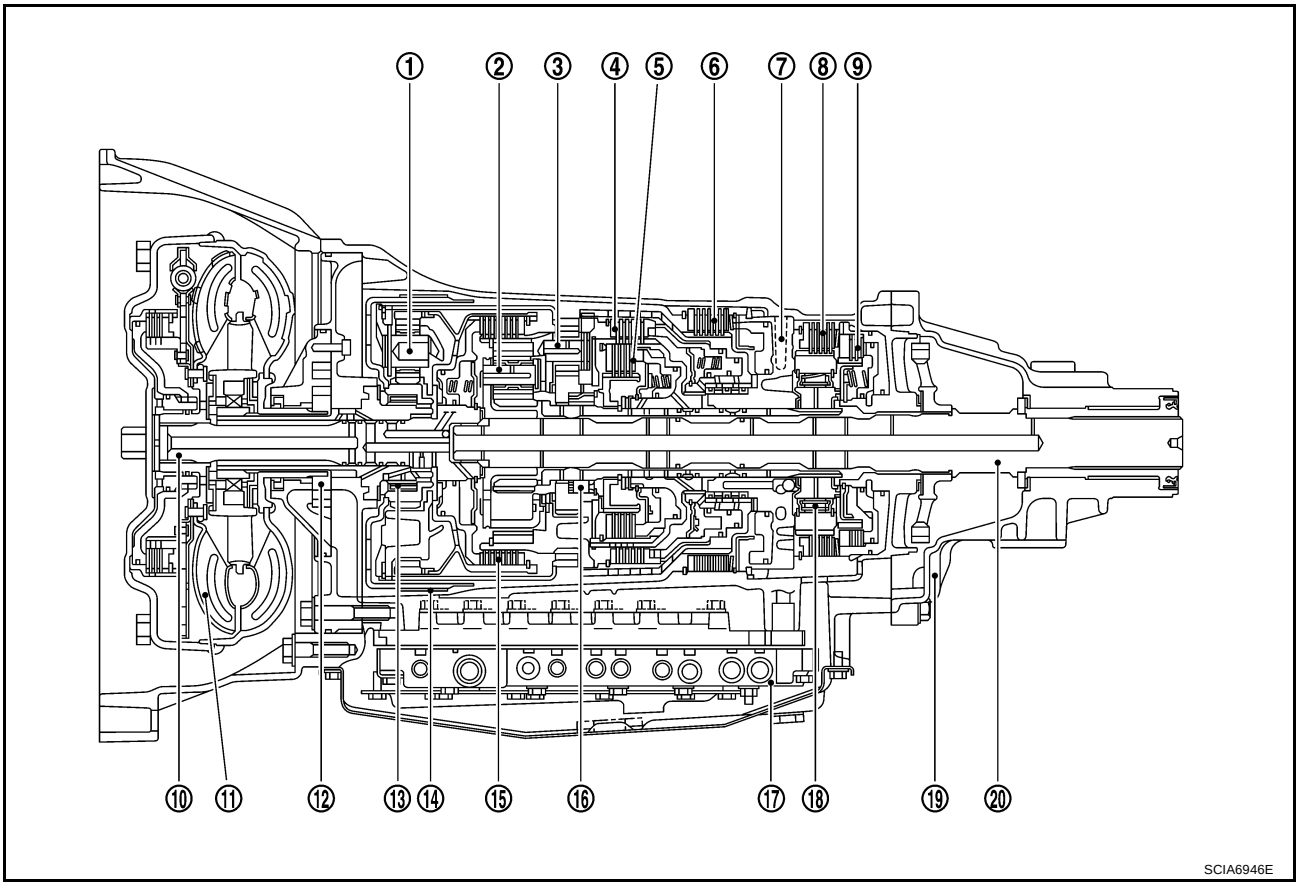

1. Front planetary gear
2. Mid planetary gear
3. Rear planetary gear
4. Direct clutch
5. High and low reverse clutch
6. Reverse brake
7. Drum support
8. Forward brake
9. Low coast brake
10. Input shaft
11. Torque converter
12. Oil pump
13. 3rd one-way clutch
14. Front brake
15. Input clutch
16. 1st one-way clutch
17. Control valve with TCM
18. Forward one-way clutch
19. Rear extension
20. Output shaft

Shift Mechanism

NCS000BD

The A/T uses compact triple planetary gear systems to improve power-transmission efficiency, simplify construction and reduce weight.
It also employs an optimum shift control and super wide gear ratios. They improve starting performance and acceleration during medium and high-speed operation.

CONSTRUCTION

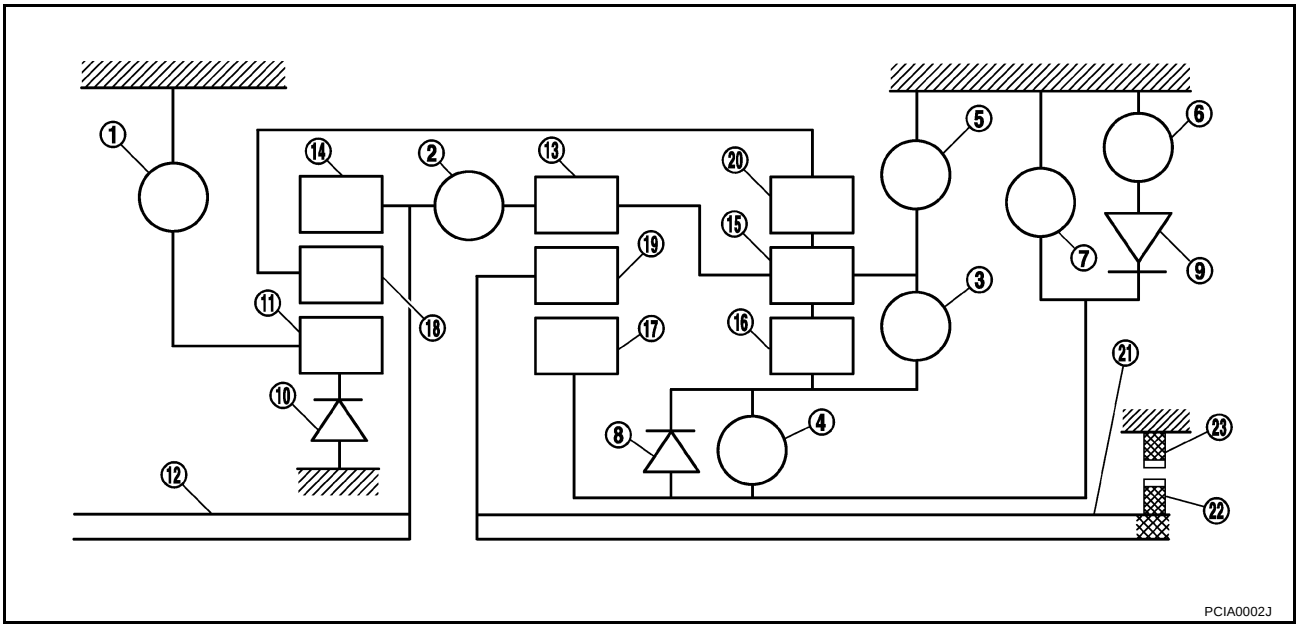

1. Front brake
2. Input clutch
3. Direct clutch
4. High and low reverse clutch
5. Reverse brake
6. Forward brake
7. Low coast brake
8. 1st one-way clutch
9. Forward one-way clutch
10. 3rd one-way clutch
11. Front sun gear
12. Input shaft
13. Mid internal gear
14. Front internal gear
15. Rear carrier
16. Rear sun gear
17. Mid sun gear
18. Front carrier
19. Mid carrier
20. Rear internal gear
21. Output shaft
22. Parking gear
23. Parking pawl

FUNCTION OF CLUTCH AND BRAKE

Name of the Part	Abbreviation	Function
Front brake (1)	FR/B	Fastens the front sun gear (11).
Input clutch (2)	I/C	Connects the input shaft (12), the front internal gear (14) and the mid internal gear (13).
Direct clutch (3)	D/C	Connects the rear carrier (15) and the rear sun gear (16).
High and low reverse clutch (4)	HLR/C	Connects the mid sun gear (17) and the rear sun gear (16).
Reverse brake (5)	R/B	Fastens the rear carrier (15).
Forward brake (6)	Fwd/B	Fastens the mid sun gear (17).
Low coast brake (7)	LC/B	Fastens the mid sun gear (17).
1st one-way clutch (8)	1st OWC	Allows the rear sun gear (16) to turn freely forward relative to the mid sun gear (17) but fastens it for reverse rotation.
Forward one-way clutch (9)	Fwd OWC	Allows the mid sun gear (17) to turn freely in the forward direction but fastens it for reverse rotation.
3rd one-way clutch (10)	3rd OWC	Allows the front sun gear (11) to turn freely in the forward direction but fastens it for reverse rotation.

CLUTCH AND BAND CHART

Shift position		I/C	HLR/C	D/C	R/B	FR/B	LC/B	Fwd/B	1st OWC	Fwd OWC	3rd OWC	Remarks
P			△			△						PARK POSITION
R			○		○	○			◎		◎	REVERSE POSITION
N			△			△						NEUTRAL POSITION
D	1st		△ *			△	△ **	○	◎	◎	◎	Automatic shift 1↔2↔3↔4↔5
	2nd			○		△		○		◎	◎	
	3rd		○	○		○		△	◇		◎	
	4th	○	○	○				△	◇			
	5th	○	○			○		△	◇		◇	
M5	5th	○	○			○		△	◇		◇	Locks* (held stationary) in 5th gear
M4	4th	○	○	○				△	◇			Locks* (held stationary) in 4th gear
M3	3rd		○	○		○		△	◇		◎	Locks* (held stationary) in 3rd gear
M2	2nd			○		○	○	○		◎	◎	Locks* (held stationary) in 2nd gear
M1	1st		○			○	○	○	◎	◎	◎	Locks* (held stationary) in 1st gear

*: Down shift automatically according to the vehicle speed.

○ — Operates
◎ — Operates during "progressive" acceleration.
◇ — Operates and affects power transmission while coasting.
△ — Line pressure is applied but does not affect power transmission.
△ * — Operates under conditions shown in illustration ①.
△ ** — Operates under conditions shown in illustration ②. Delay control is applied during D (4,3,2,1) → N shift.

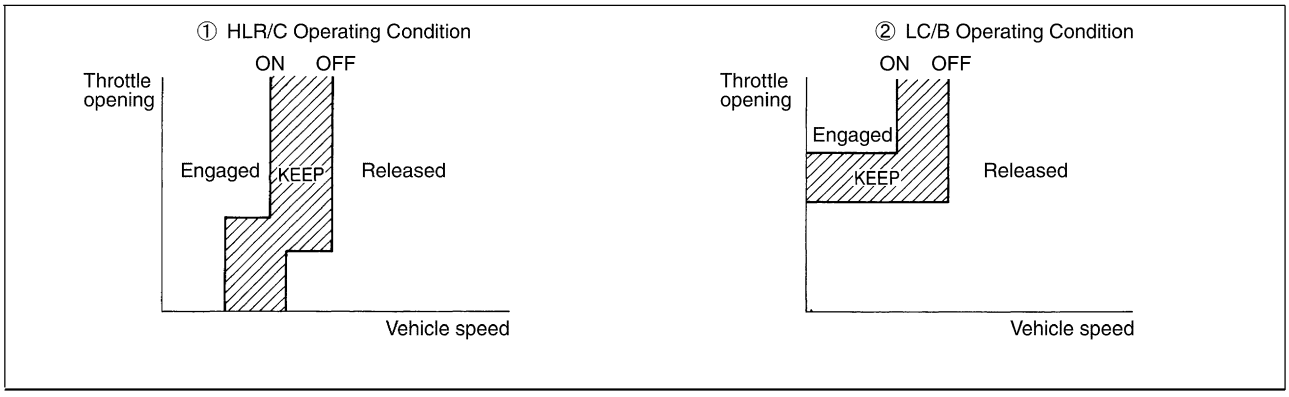

SCIA6962E

POWER TRANSMISSION

“N” Position

Since both the forward brake and the reverse brake are released, torque from the input shaft drive is not transmitted to the output shaft.

“P” Position

- The same as for the “N” position, both the forward brake and the reverse brake are released, so torque from the input shaft drive is not transmitted to the output shaft.
- The parking pawl linked with the selector lever meshes with the parking gear and fastens the output shaft mechanically.

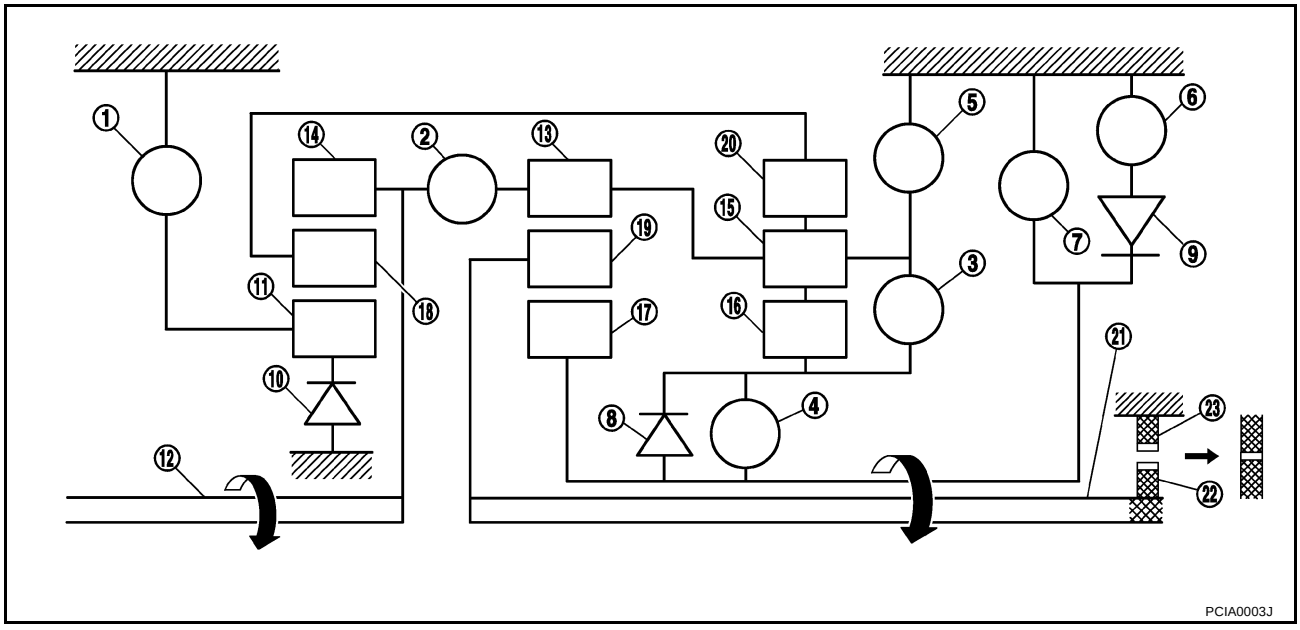

1. Front brake	2. Input clutch	3. Direct clutch
4. High and low reverse clutch	5. Reverse brake	6. Forward brake
7. Low coast brake	8. 1st one-way clutch	9. Forward one-way clutch
10. 3rd one-way clutch	11. Front sun gear	12. Input shaft
13. Mid internal gear	14. Front internal gear	15. Rear carrier
16. Rear sun gear	17. Mid sun gear	18. Front carrier
19. Mid carrier	20. Rear internal gear	21. Output shaft
22. Parking gear	23. Parking pawl	

"D1 " Position

- The forward brake and the forward one-way clutch regulate reverse rotation of the mid sun gear.
- The 1st one-way clutch regulates reverse rotation of the rear sun gear.
- The 3rd one-way clutch regulates reverse rotation of the front sun gear.
- During deceleration, the mid sun gear turns forward, so the forward one-way clutch idles and the engine brake is not activated.

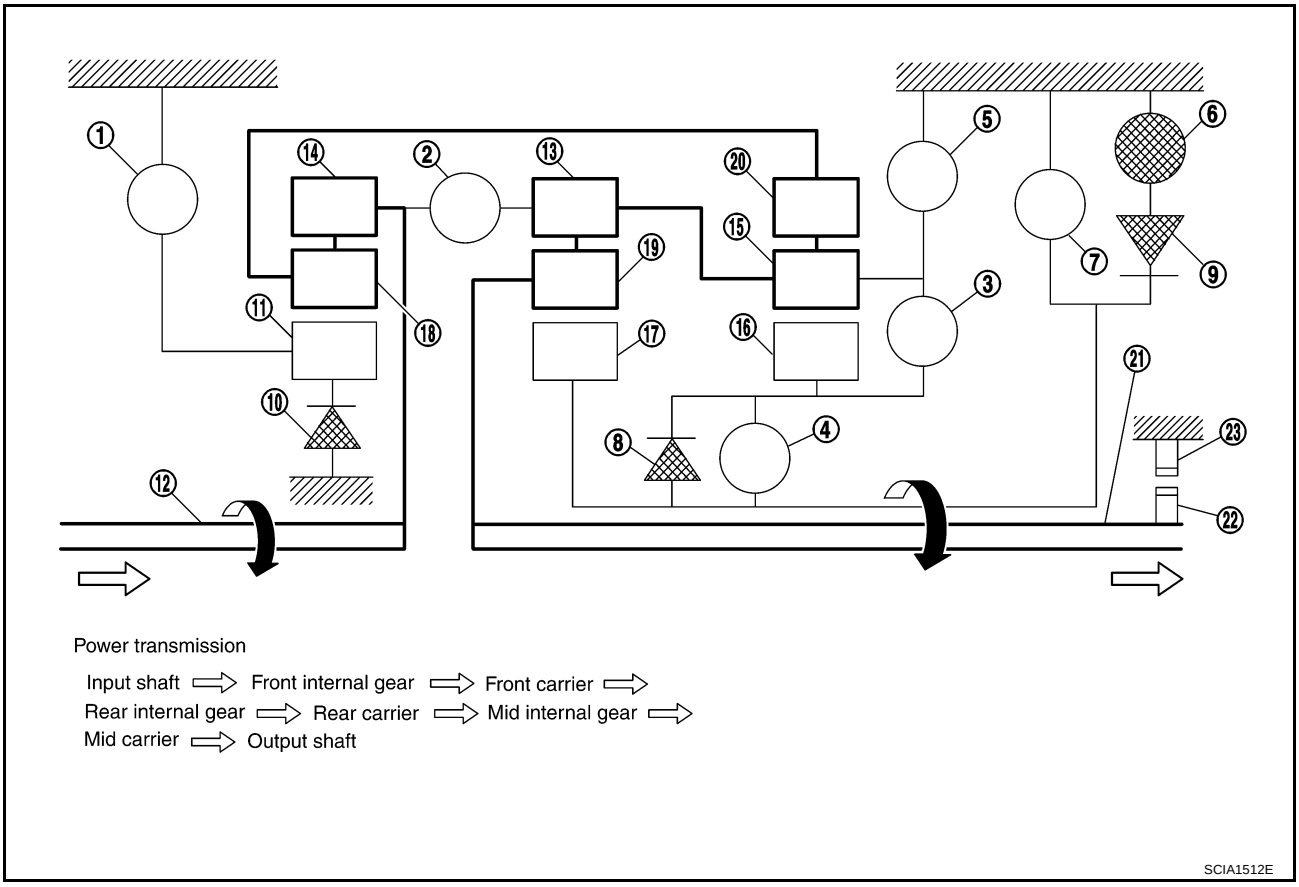

1.	Front brake	2.	Input clutch	3.	Direct clutch
4.	High and low reverse clutch	5.	Reverse brake	6.	Forward brake
7.	Low coast brake	8.	1st one-way clutch	9.	Forward one-way clutch
10.	3rd one-way clutch	11.	Front sun gear	12.	Input shaft
13.	Mid internal gear	14.	Front internal gear	15.	Rear carrier
16.	Rear sun gear	17.	Mid sun gear	18.	Front carrier
19.	Mid carrier	20.	Rear internal gear	21.	Output shaft
22.	Parking gear	23.	Parking pawl		

“M1” Position

- The front brake fastens the front sun gear.
- The forward brake and the forward one-way clutch regulate reverse rotation of the mid sun gear.
- High and low reverse clutch connects the rear sun gear and the mid sun gear.
- The low coast brake fastens the mid sun gear.
- During deceleration, the low coast brake regulates forward rotation of the mid sun gear and the engine brake functions.

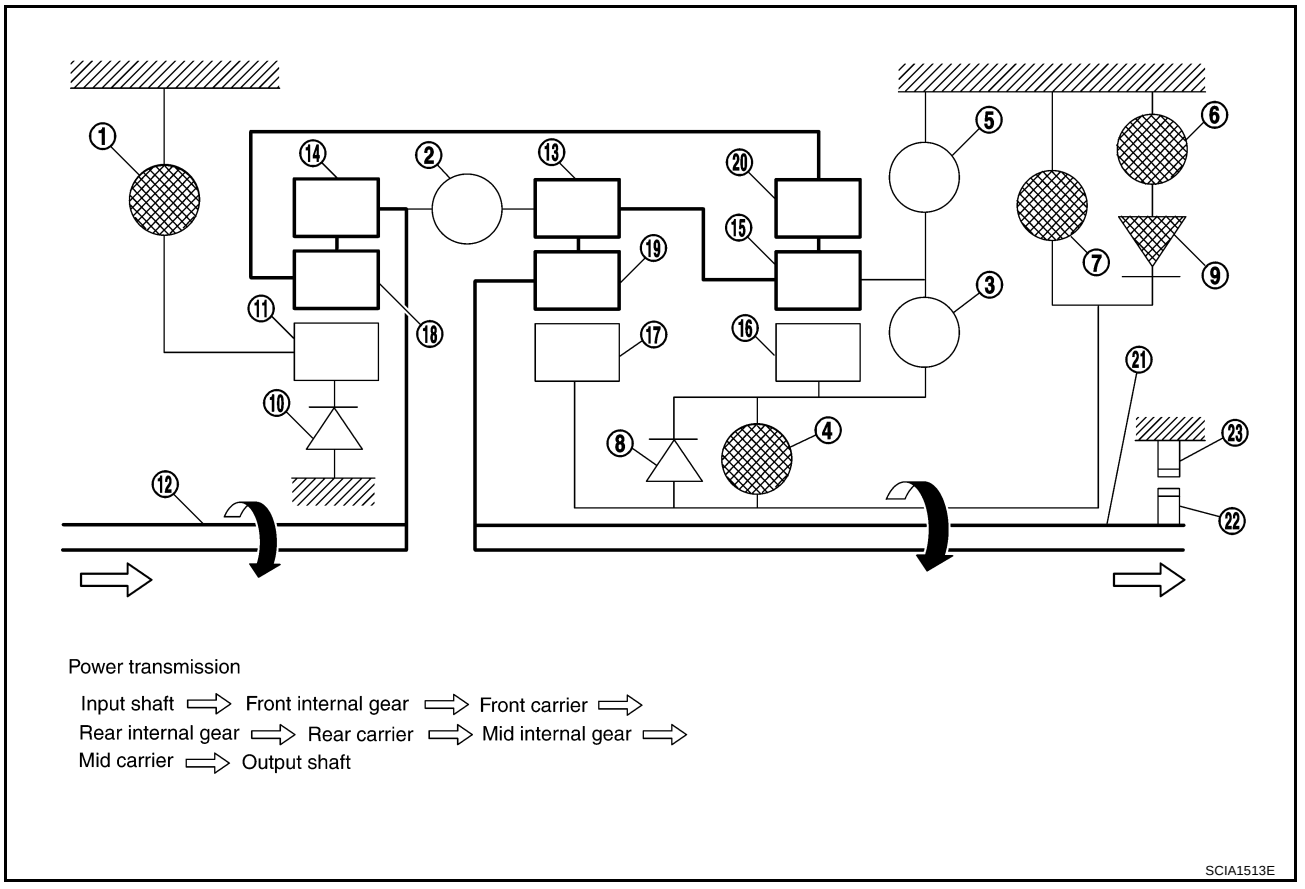

1.	Front brake	2.	Input clutch	3.	Direct clutch
4.	High and low reverse clutch	5.	Reverse brake	6.	Forward brake
7.	Low coast brake	8.	1st one-way clutch	9.	Forward one-way clutch
10.	3rd one-way clutch	11.	Front sun gear	12.	Input shaft
13.	Mid internal gear	14.	Front internal gear	15.	Rear carrier
16.	Rear sun gear	17.	Mid sun gear	18.	Front carrier
19.	Mid carrier	20.	Rear internal gear	21.	Output shaft
22.	Parking gear	23.	Parking pawl		

"D2 " Position

- The forward brake and the forward one-way clutch regulate reverse rotation of the mid sun gear.
- The 3rd one-way clutch regulates reverse rotation of the front sun gear.
- The direct clutch is coupled, and the rear carrier and rear sun gear are connected.
- During deceleration, the mid sun gear turns forward, so the forward one-way clutch idles and engine brake is not activated.

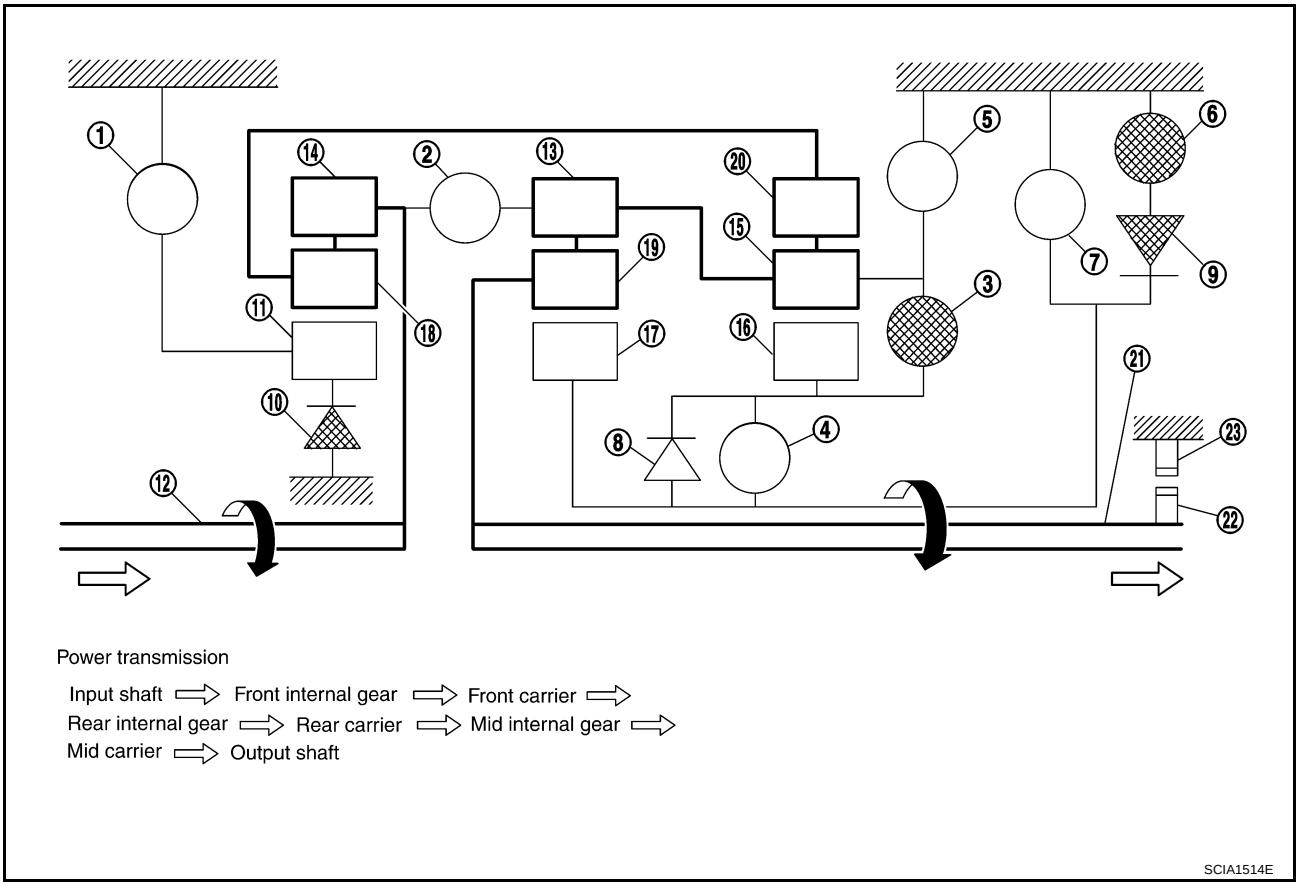

1.	Front brake	2.	Input clutch	3.	Direct clutch
4.	High and low reverse clutch	5.	Reverse brake	6.	Forward brake
7.	Low coast brake	8.	1st one-way clutch	9.	Forward one-way clutch
10.	3rd one-way clutch	11.	Front sun gear	12.	Input shaft
13.	Mid internal gear	14.	Front internal gear	15.	Rear carrier
16.	Rear sun gear	17.	Mid sun gear	18.	Front carrier
19.	Mid carrier	20.	Rear internal gear	21.	Output shaft
22.	Parking gear	23.	Parking pawl		

"M2" Position

- The front brake fastens the front sun gear.
- The forward brake and the forward one-way clutch regulate reverse rotation of the mid sun gear.
- The direct clutch is coupled, and the rear carrier and rear sun gear are connected.
- The low coast brake fastens the mid sun gear.
- During deceleration, the low coast brake regulates forward rotation of the mid sun gear and the engine brake functions.

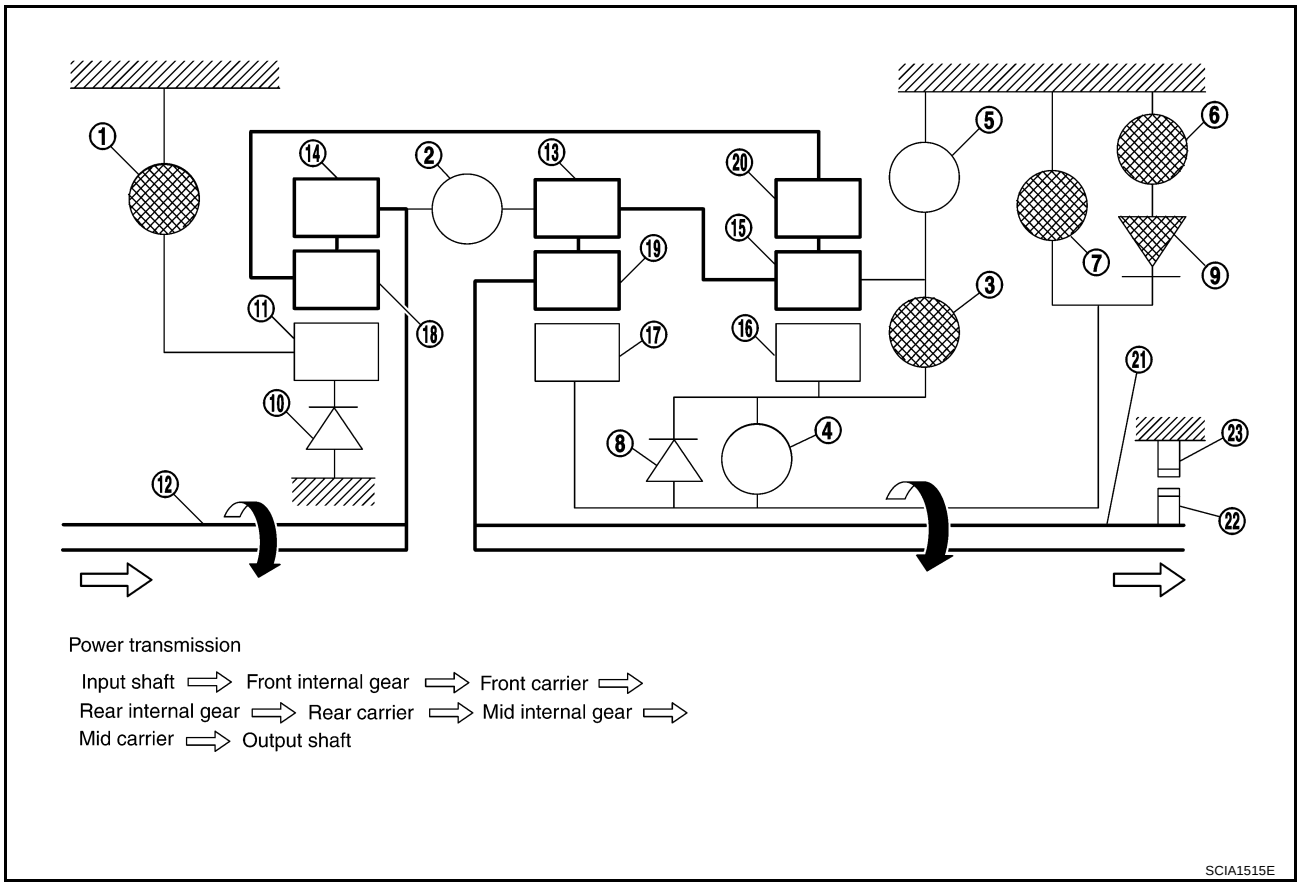

1.	Front brake	2.	Input clutch	3.	Direct clutch
4.	High and low reverse clutch	5.	Reverse brake	6.	Forward brake
7.	Low coast brake	8.	1st one-way clutch	9.	Forward one-way clutch
10.	3rd one-way clutch	11.	Front sun gear	12.	Input shaft
13.	Mid internal gear	14.	Front internal gear	15.	Rear carrier
16.	Rear sun gear	17.	Mid sun gear	18.	Front carrier
19.	Mid carrier	20.	Rear internal gear	21.	Output shaft
22.	Parking gear	23.	Parking pawl		

“D3 ” and “M3” Positions

- The front brake fastens the front sun gear.
- The direct clutch is coupled, and the rear carrier and rear sun gear are connected.
- The high and low reverse clutch is coupled, and the mid sun gear and rear sun gear are connected.

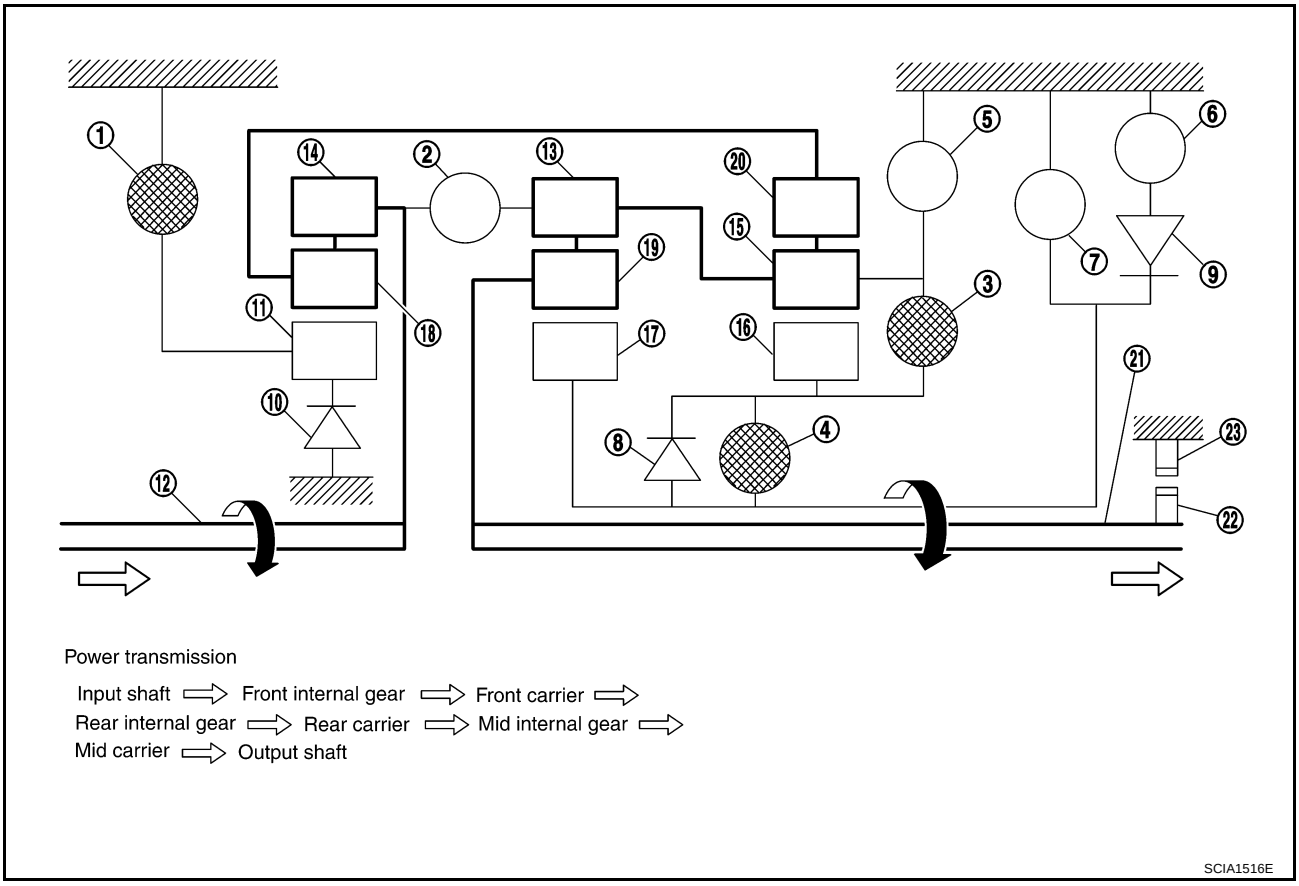

1.	Front brake	2.	Input clutch	3.	Direct clutch
4.	High and low reverse clutch	5.	Reverse brake	6.	Forward brake
7.	Low coast brake	8.	1st one-way clutch	9.	Forward one-way clutch
10.	3rd one-way clutch	11.	Front sun gear	12.	Input shaft
13.	Mid internal gear	14.	Front internal gear	15.	Rear carrier
16.	Rear sun gear	17.	Mid sun gear	18.	Front carrier
19.	Mid carrier	20.	Rear internal gear	21.	Output shaft
22.	Parking gear	23.	Parking pawl		

"D4 " and "M4" Positions

- The direct clutch is coupled, and the rear carrier and rear sun gear are connected.
- The high and low reverse clutch is coupled, and the mid sun gear and rear sun gear are connected.
- The input clutch is coupled, and the front internal gear and mid internal gear are connected.
- The drive power is conveyed to the front internal gear, mid internal gear, and rear carrier and the three planetary gears rotate forward as one unit.

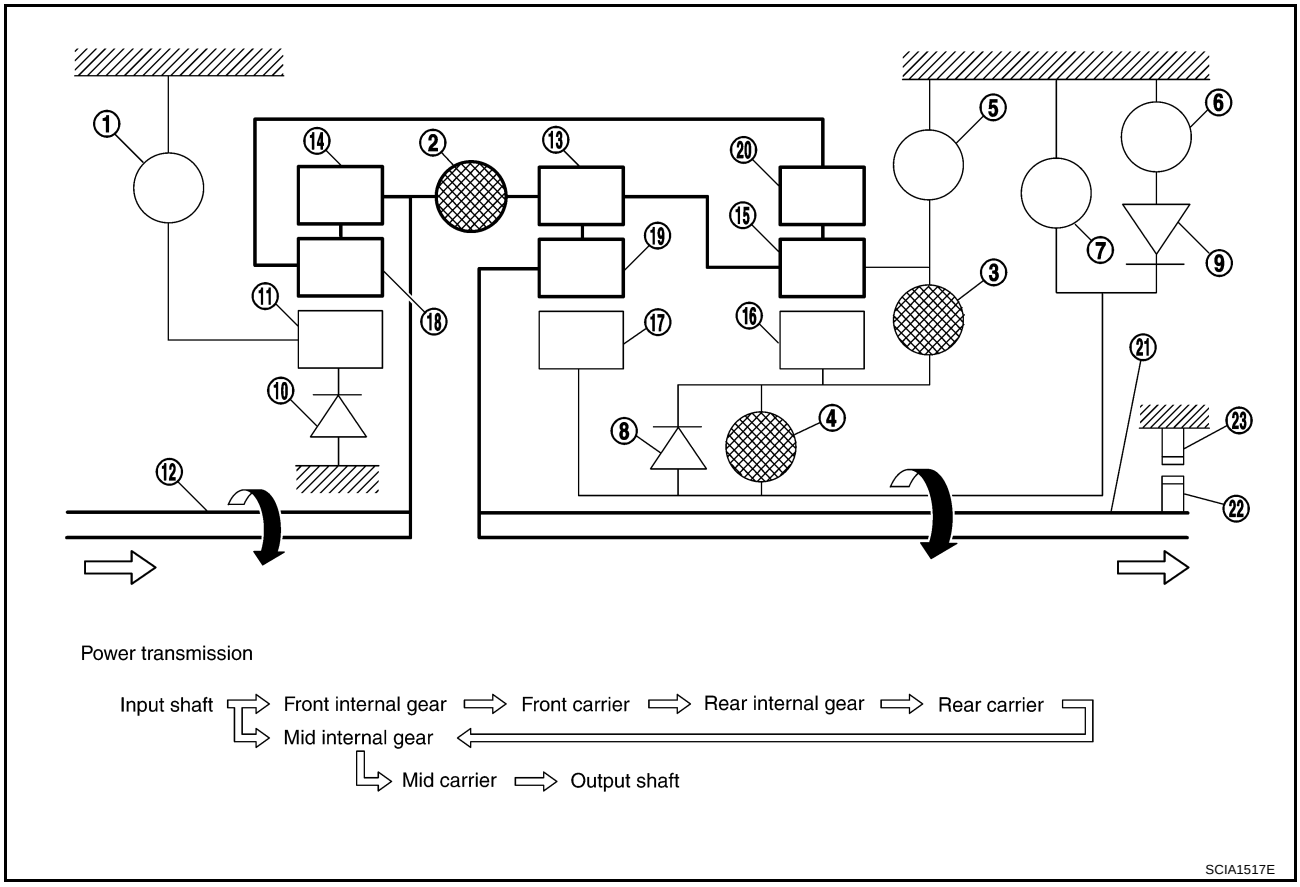

1. Front brake	2. Input clutch	3. Direct clutch
4. High and low reverse clutch	5. Reverse brake	6. Forward brake
7. Low coast brake	8. 1st one-way clutch	9. Forward one-way clutch
10. 3rd one-way clutch	11. Front sun gear	12. Input shaft
13. Mid internal gear	14. Front internal gear	15. Rear carrier
16. Rear sun gear	17. Mid sun gear	18. Front carrier
19. Mid carrier	20. Rear internal gear	21. Output shaft
22. Parking gear	23. Parking pawl	

“D5 ” and “M5” Positions

- The front brake fastens the front sun gear.
- The input clutch is coupled, and the front internal gear and mid internal gear are connected.
- The high and low reverse clutch is coupled, and the mid sun gear and rear sun gear are connected.

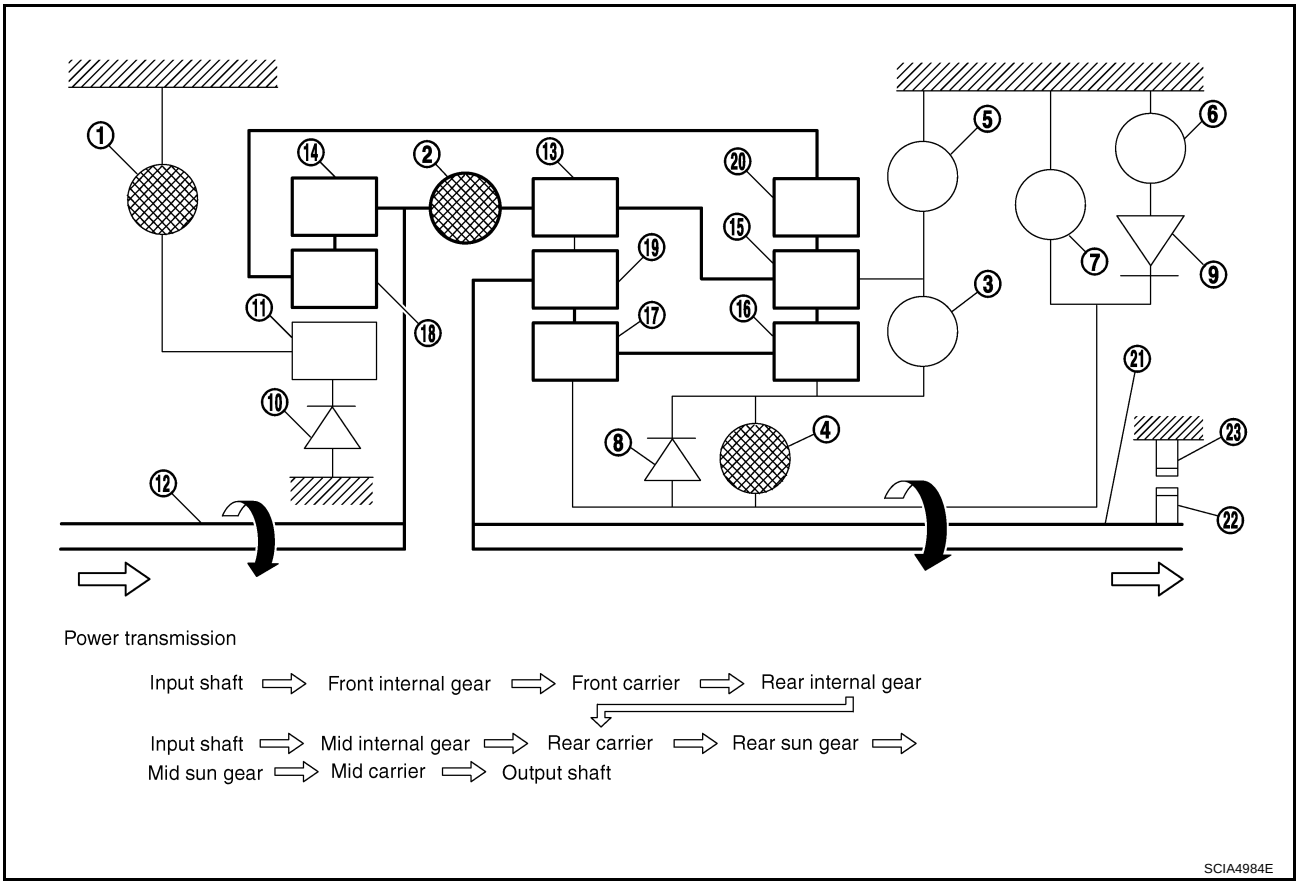

1.	Front brake	2.	Input clutch	3.	Direct clutch
4.	High and low reverse clutch	5.	Reverse brake	6.	Forward brake
7.	Low coast brake	8.	1st one-way clutch	9.	Forward one-way clutch
10.	3rd one-way clutch	11.	Front sun gear	12.	Input shaft
13.	Mid internal gear	14.	Front internal gear	15.	Rear carrier
16.	Rear sun gear	17.	Mid sun gear	18.	Front carrier
19.	Mid carrier	20.	Rear internal gear	21.	Output shaft
22.	Parking gear	23.	Parking pawl		

"R" Position

- The front brake fastens the front sun gear.
- The high and low reverse clutch is coupled, and the mid sun gear and rear sun gear are connected.
- The reverse brake fastens the rear carrier.

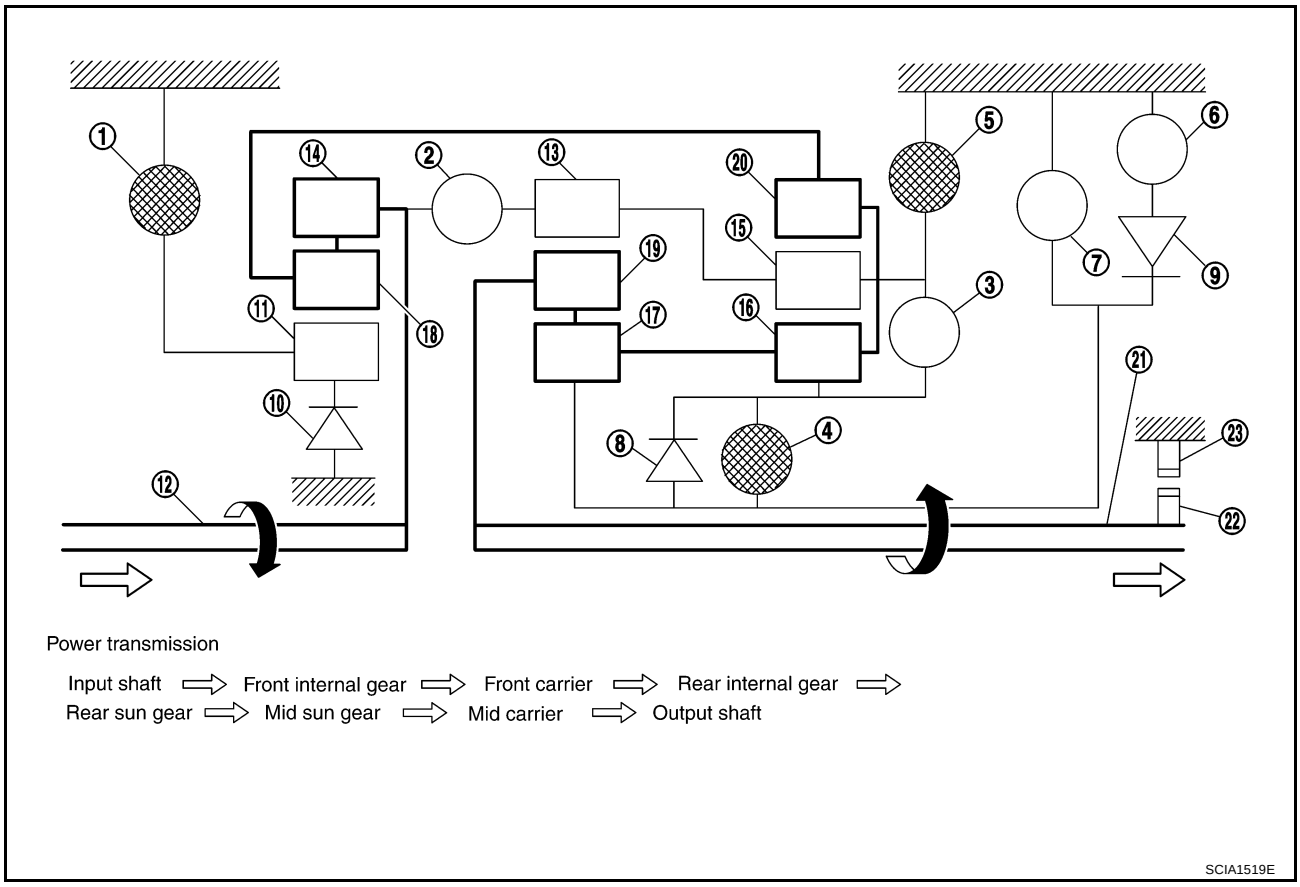

1.	Front brake	2.	Input clutch	3.	Direct clutch
4.	High and low reverse clutch	5.	Reverse brake	6.	Forward brake
7.	Low coast brake	8.	1st one-way clutch	9.	Forward one-way clutch
10.	3rd one-way clutch	11.	Front sun gear	12.	Input shaft
13.	Mid internal gear	14.	Front internal gear	15.	Rear carrier
16.	Rear sun gear	17.	Mid sun gear	18.	Front carrier
19.	Mid carrier	20.	Rear internal gear	21.	Output shaft
22.	Parking gear	23.	Parking pawl		

TCM Function

NCS000BE

The function of the TCM is to:

- Receive input signals sent from various switches and sensors.
- Determine required line pressure, shifting point, lock-up operation, and engine brake operation.
- Send required output signals to the respective solenoids.

CONTROL SYSTEM OUTLINE

The A/T senses vehicle operating conditions through various sensors or signals. It always controls the optimum shift position and reduces shifting and lock-up shocks.

SENSORS (or SIGNALS)		TCM		ACTUATORS
PNP switch Accelerator pedal position signal Closed throttle position signal Wide open throttle position signal Engine speed signal A/T fluid temperature sensor Revolution sensor Vehicle speed signal Manual mode switch signal Stop lamp switch signal Turbine revolution sensor ATF pressure switch	⇒	Shift control Line pressure control Lock-up control Engine brake control Timing control Fail-safe control Self-diagnosis CONSULT-II communication line Duet-EA control CAN system	⇒	Input clutch solenoid valve Direct clutch solenoid valve Front brake solenoid valve High and low reverse clutch solenoid valve Low coast brake solenoid valve Torque converter clutch solenoid valve Line pressure solenoid valve A/T CHECK indicator lamp Back-up lamp relay Starter relay

CONTROL SYSTEM DIAGRAM

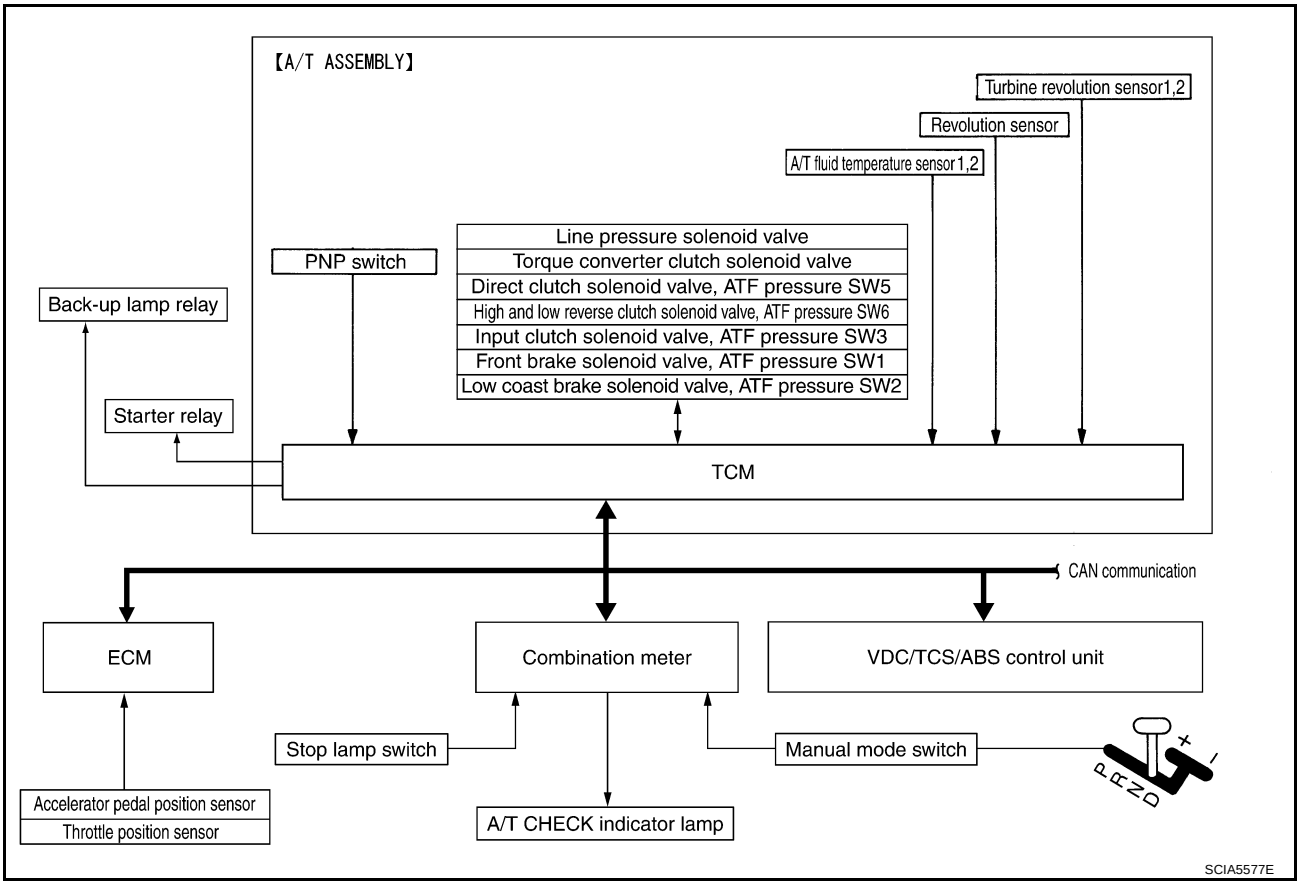

CAN Communication

NCS000BF

SYSTEM DESCRIPTION

CAN (Controller Area Network) is a serial communication line for real time application. It is an on-vehicle multiplex communication line with high data communication speed and excellent error detection ability. Many electronic control units are equipped onto a vehicle, and each control unit shares information and links with other control units during operation (not independent). In CAN communication, control units are connected with 2 communication lines (CAN H line, CAN L line) allowing a high rate of information transmission with less wiring. Each control unit transmits/receives data but selectively reads required data only. For details, refer to LAN-47, "CAN System Specification Chart" .

Input/Output Signal of TCM

NCS001A9

Control item			Line pressure control	Vehicle speed control	Shift control	Lock-up control	Engine brake control	Fail-safe function (*3)	Self-diagnostics function
Input	Accelerator pedal position signal (*5)		X	X	X	X	X	X	X
	Vehicle speed sensor A/T (revolution sensor)		X	X	X	X	X	X	X
	Vehicle speed sensor MTR(*1) (*5)							X	
	Closed throttle position signal(*5)			X(*2)	X	X		X	X(*4)
	Wide open throttle position signal(*5)							X	X(*4)
	Turbine revolution sensor 1			X		X	X	X	X
	Turbine revolution sensor 2 (for 4th speed only)			X		X	X	X	X
	Engine speed signals(*5)		X	X	X	X	X	X	X
	Stop lamp switch signal(*5)			X	X	X			X(*4)
	A/T fluid temperature sensors 1, 2		X	X	X	X		X	X
	ASCD or ICC sensor integrated unit	Operation signal(*5)		X	X	X			
		Overdrive cancel signal(*5)		X					
Output	Direct clutch solenoid (ATF pressure switch 5)			X	X			X	X
	Input clutch solenoid (ATF pressure switch 3)			X	X			X	X
	High and low reverse clutch solenoid (ATF pressure switch 6)			X	X			X	X
	Front brake solenoid (ATF pressure switch 1)			X	X			X	X
	Low coast brake solenoid (ATF pressure switch 2)			X	X		X	X	X
	Line pressure solenoid		X	X	X	X	X	X	X
	TCC solenoid					X		X	X
	Self-diagnostics table(*6)								X
	Starter relay							X	X

*1: Spare for vehicle speed sensor·A/T (revolution sensor)
*2: Spare for accelerator pedal position signal
*3: If these input and output signals are different, the TCM triggers the fail-safe function.
*4: Used as a condition for starting self-diagnostics; if self-diagnostics are not started, it is judged that there is some kind of error.
*5: Input by CAN communications.
*6: Output by CAN communications.

Line Pressure Control

NCS000BH

- When an input torque signal equivalent to the engine drive force is sent from the ECM to the TCM, the TCM controls the line pressure solenoid.
- This line pressure solenoid controls the pressure regulator valve as the signal pressure and adjusts the pressure of the operating oil discharged from the oil pump to the line pressure most appropriate to the driving state.

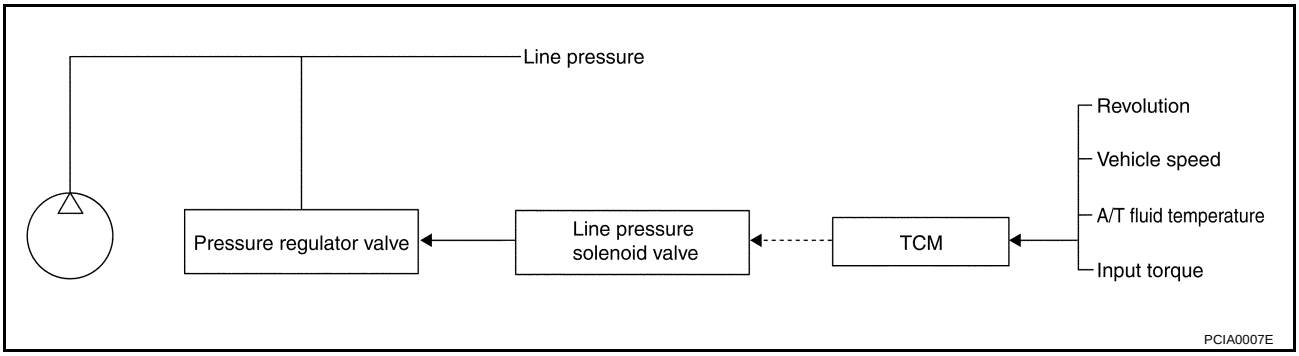

LINE PRESSURE CONTROL IS BASED ON THE TCM LINE PRESSURE CHARACTERISTIC PATTERN

- The TCM has stored in memory a number of patterns for the optimum line pressure characteristic for the driving state.
- In order to obtain the most appropriate line pressure characteristic to meet the current driving state, the TCM controls the line pressure solenoid current value and thus controls the line pressure.

Normal Control

Each clutch is adjusted to the necessary pressure to match the engine drive force.

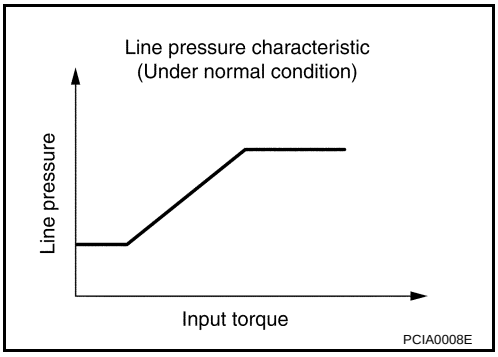

Back-up Control (Engine Brake)

When the select operation is executed during driving and the A/T is shifted down, the line pressure is set according to the vehicle speed.

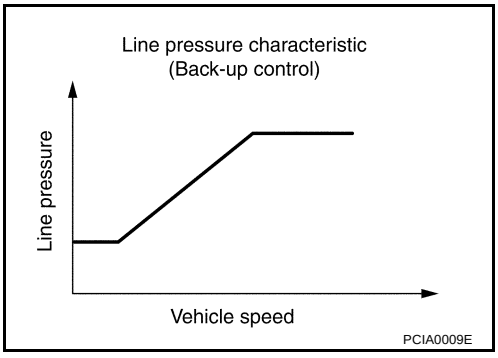

During Shift Change

The necessary and adequate line pressure for shift change is set. For this reason, line pressure pattern setting corresponds to input torque and gearshift selection. Also, line pressure characteristic is set according to engine speed, during engine brake operation.

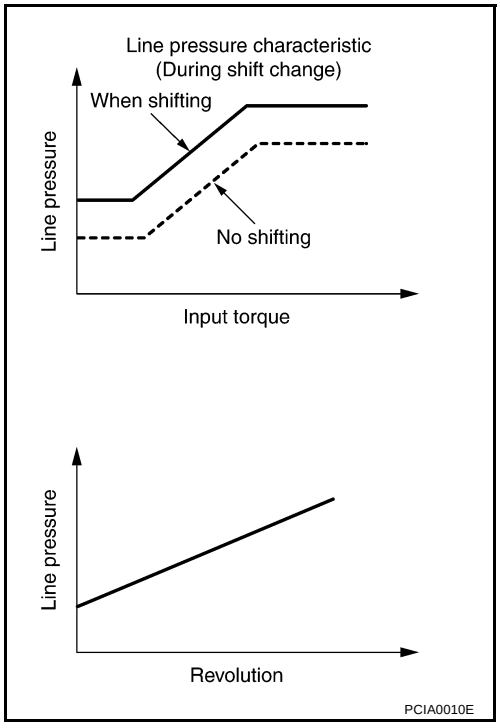

At Low Fluid Temperature

When the A/T fluid temperature drops below the prescribed temperature, in order to speed up the action of each friction element, the line pressure is set higher than the normal line pressure characteristic.

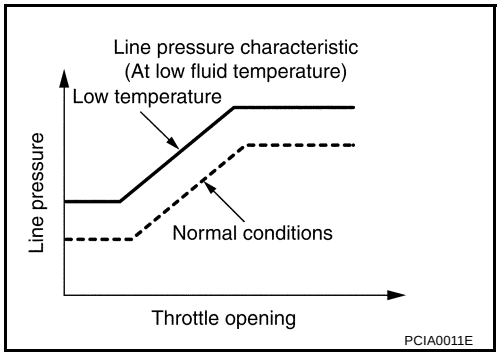

Shift Control

NCS000BI

The clutch pressure control solenoid is controlled by the signals from the switches and sensors. Thus, the clutch pressure is adjusted to be appropriate to the engine load state and vehicle driving state. It becomes possible to finely control the clutch hydraulic pressure with high precision and a smoother shift change characteristic is attained.

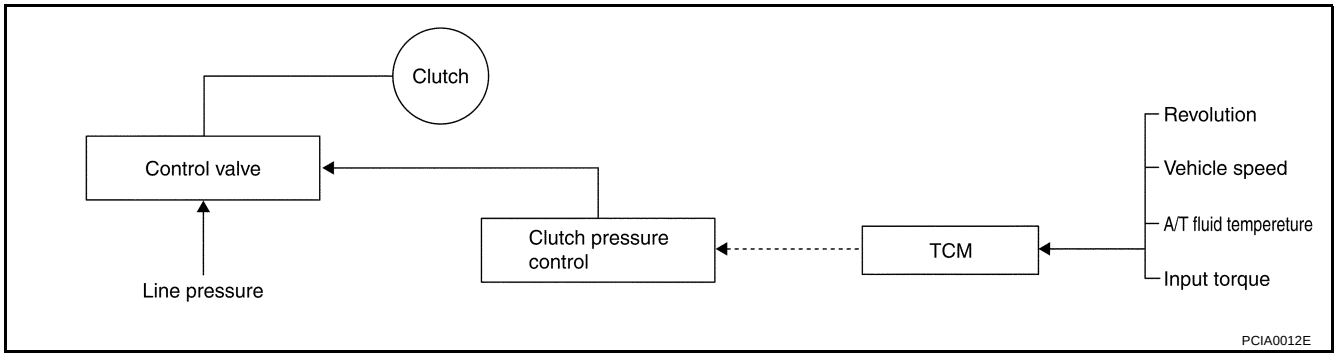

NORMAL SHIFT CONTROL

The clutch is controlled with the optimum timing and oil pressure by the engine speed, engine torque information, etc.

Shift Change System Diagram

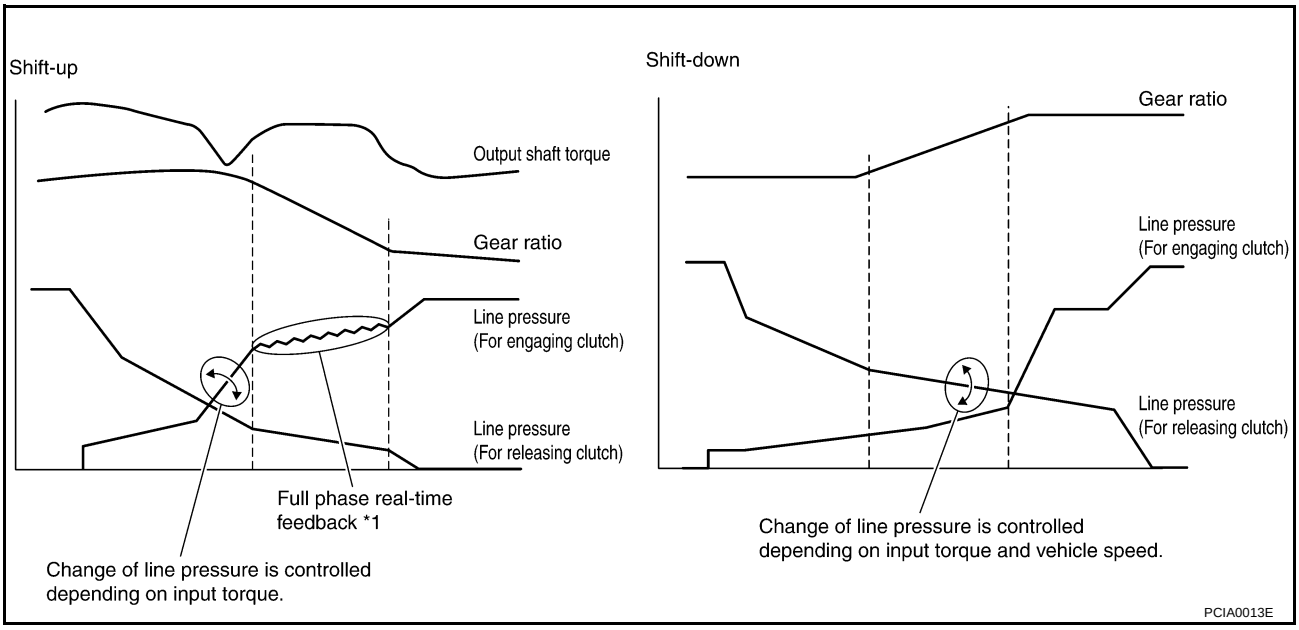

- *1: Full phase real-time feedback control monitors movement of gear ratio at gear change, and controls oil pressure at real-time to achieve the best gear ratio.

BLIPPING CONTROL

This system makes transmission clutch engage readily by controlling (synchronizing) engine revolution according to the (calculation of) engine revolution after shifting down.

- “BLIPPING CONTROL” functions.
  - When downshifting by accelerator pedal depression at “D” position.
  - When downshifting under the manual mode.
- TCM selects “BLIPPING CONTROL” or “NORMAL SHIFT CONTROL” according to the gear position, the select lever position, the engine torque and the speed when accelerating by pedal depression.
- Revolution control demand signal is transmitted from TCM to ECM under “BLIPPING CONTROL”.
- TCM synchronizes engine revolution according to the revolution control demand signal.

Shift Change System Diagram

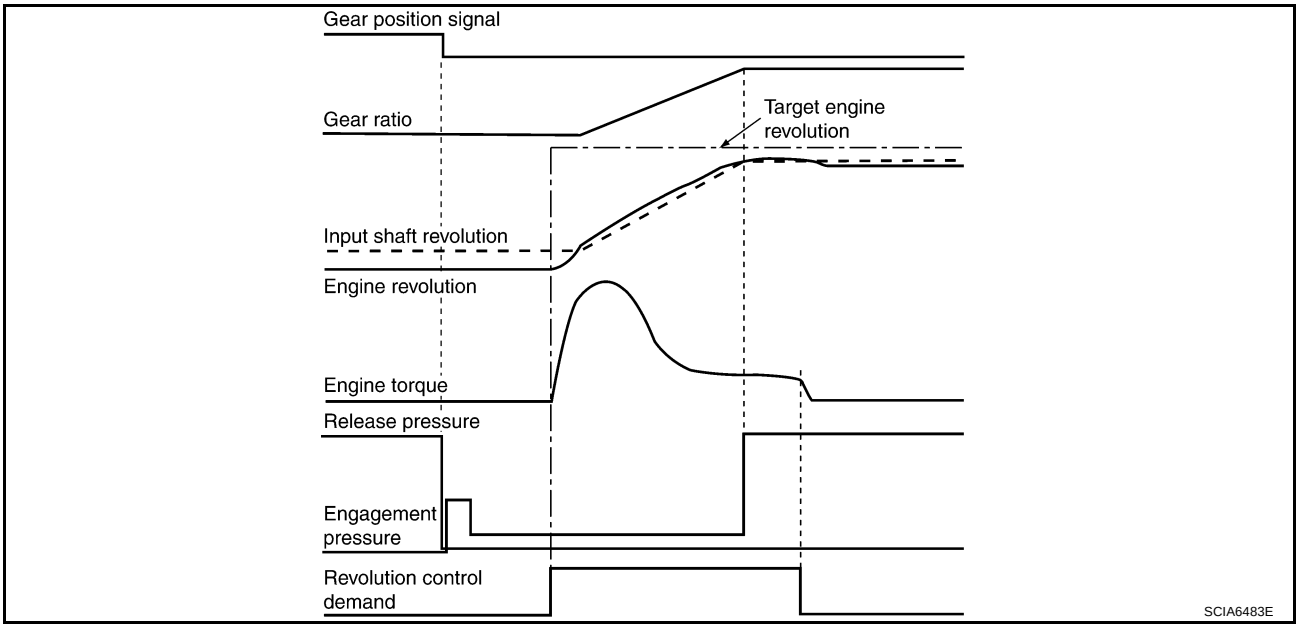

Lock-up Control

NCS000BJ

The torque converter clutch piston in the torque converter is engaged to eliminate torque converter slip to increase power transmission efficiency.
The torque converter clutch control valve operation is controlled by the torque converter clutch solenoid valve, which is controlled by a signal from TCM, and the torque converter clutch control valve engages or releases the torque converter clutch piston.

Lock-up Operation Condition Table

selector lever	"D" position		"M" position			
Gear position	5	4	5	4	3	2
Lock-up	×	–	×	×	×	×
Slip lock-up	×	×	–	–	–	–

TORQUE CONVERTER CLUTCH CONTROL VALVE CONTROL

Lock-up Control System Diagram

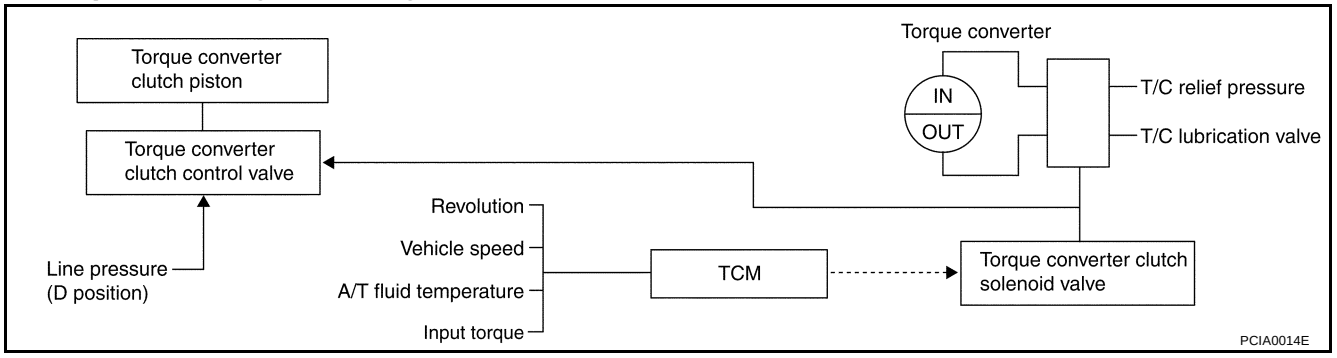

Lock-up Released

In the lock-up released state, the torque converter clutch control valve is set into the unlocked state by the torque converter clutch solenoid and the lock-up apply pressure is drained.
In this way, the torque converter clutch piston is not coupled.

Lock-up Applied

In the lock-up applied state, the torque converter clutch control valve is set into the locked state by the torque converter clutch solenoid and lock-up apply pressure is generated.
In this way, the torque converter clutch piston is pressed and coupled.

SMOOTH LOCK-UP CONTROL

When shifting from the lock-up released state to the lock-up applied state, the current output to the torque converter clutch solenoid is controlled with the TCM. In this way, when shifting to the lock-up applied state, the torque converter clutch is temporarily set to the half-clutched state to reduce the shock.

Half-clutched State

The current output from the TCM to the torque converter clutch solenoid is varied to gradually increase the torque converter clutch solenoid pressure.
In this way, the lock-up apply pressure gradually rises and while the torque converter clutch piston is put into half-clutched status, the torque converter clutch piston operating pressure is increased and the coupling is completed smoothly.

Slip Lock-up Control

In the slip region, the torque converter clutch solenoid current is controlled with the TCM to put it into the half-clutched state. This absorbs the engine torque fluctuation and lock-up operates from low speed.
This raises the fuel efficiency for 4th and 5th gears at both low speed and when the accelerator has a low degree of opening.

Engine Brake Control

NCS000BK

- The forward one-way clutch transmits the drive force from the engine to the rear wheels. But the reverse drive from the rear wheels is not transmitted to the engine because the one-way clutch is idling.
  Therefore, the low coast brake solenoid is operated to prevent the forward one-way clutch from idling and the engine brake is operated in the same manner as conventionally.

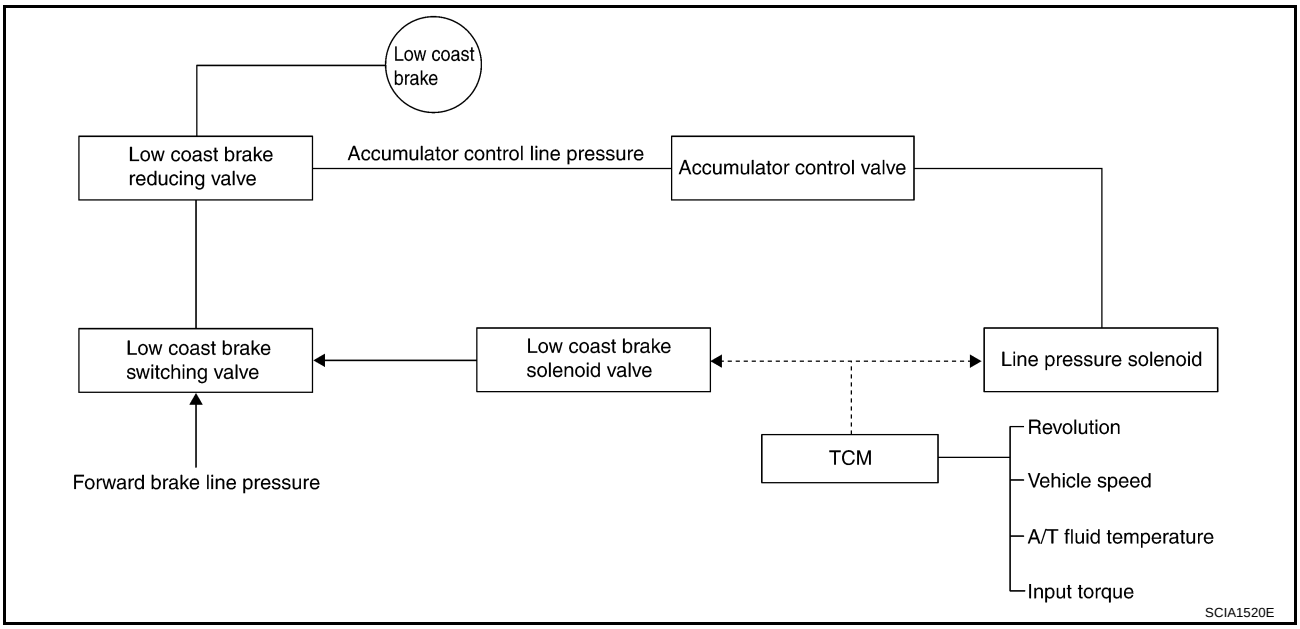

- The operation of the low coast brake solenoid switches the low coast brake switching valve and controls the coupling and releasing of the low coast brake.
  The low coast brake reducing valve controls the low coast brake coupling force.

Control Valve

NCS000BL

FUNCTION OF CONTROL VALVE

Name	Function
Torque converter regulator valve	In order to prevent the pressure supplied to the torque converter from being excessive, the line pressure is adjusted to the optimum pressure (torque converter operating pressure).
Pressure regulator valve Pressure regulator plug Pressure regulator sleeve	Adjusts the oil discharged from the oil pump to the optimum pressure (line pressure) for the driving state.
Front brake control valve	When the front brake is coupled, adjusts the line pressure to the optimum pressure (front brake pressure) and supplies it to the front brake. (In 1st, 2nd, 3rd, and 5th gears, adjusts the clutch pressure.)
Accumulator control valve	Adjusts the pressure (accumulator control pressure) acting on the accumulator piston and low coast reducing valve to the pressure appropriate to the driving state.
Pilot valve A	Adjusts the line pressure and produces the constant pressure (pilot pressure) required for line pressure control, shift change control, and lock-up control.
Pilot valve B	Adjusts the line pressure and produces the constant pressure (pilot pressure) required for shift change control.
Low coast brake switching valve	During engine braking, supplies the line pressure to the low coast brake reducing valve.
Low coast brake reducing valve	When the low coast brake is coupled, adjusts the line pressure to the optimum pressure (low coast brake pressure) and supplies it to the low coast brake.
N-R accumulator	Produces the stabilizing pressure for when N-R is selected.
Direct clutch piston switching valve	Operates in 4th gear and switches the direct clutch coupling capacity.
High and low reverse clutch control valve	When the high and low reverse clutch is coupled, adjusts the line pressure to the optimum pressure (high and low reverse clutch pressure) and supplies it to the high and low reverse clutch. (In 1st, 3rd, 4th and 5th gears, adjusts the clutch pressure.)

Name	Function
Input clutch control valve	When the input clutch is coupled, adjusts the line pressure to the optimum pressure (input clutch pressure) and supplies it to the input clutch. (In 4th and 5th gears, adjusts the clutch pressure.)
Direct clutch control valve	When the direct clutch is coupled, adjusts the line pressure to the optimum pressure (direct clutch pressure) and supplies it to the direct clutch. (In 2nd, 3rd, and 4th gears, adjusts the clutch pressure.)
TCC control valve TCC control plug TCC control sleeve	Switches the lock-up to operating or released. Also, by executing the lock-up operation transiently, lock-up smoothly.
Torque converter lubrication valve	Operates during lock-up to switch the torque converter, cooling, and lubrication system oil path.
Cool bypass valve	Allows excess oil to bypass cooler circuit without being fed into it.
Line pressure relief valve	Discharges excess oil from line pressure circuit.
N-D accumulator	Produces the stabilizing pressure for when N-D is selected.
Manual valve	Sends line pressure to each circuit according to the select position. The circuits to which the line pressure is not sent drain.

FUNCTION OF ATF PRESSURE SWITCH

Name	Function
ATF pressure switch 1 (FR/B)	Detects any malfunction in the front brake hydraulic pressure. When it detects any malfunction, it puts the system into fail-safe mode.
ATF pressure switch 2 (LC/B)	Detects any malfunction in the low coast brake hydraulic pressure. When it detects any malfunction, it puts the system into fail-safe mode.
ATF pressure switch 3 (I/C)	Detects any malfunction in the input clutch hydraulic pressure. When it detects any malfunction, it puts the system into fail-safe mode.
ATF pressure switch 5 (D/C)	Detects any malfunction in the direct clutch hydraulic pressure. When it detects any malfunction, it puts the system into fail-safe mode.
ATF pressure switch 6 (HLR/C)	Detects any malfunction in the high and low reverse clutch hydraulic pressure. When it detects any malfunction, it puts the system into fail-safe mode.

ON BOARD DIAGNOSTIC (OBD) SYSTEM

PFP:00028

Introduction

NCS000BM

The A/T system has two self-diagnostic systems.
The first is the emission-related on board diagnostic system (OBD-II) performed by the TCM in combination with the ECM. The malfunction is indicated by the MIL (malfunction indicator lamp) and is stored as a DTC in the ECM memory but not the TCM memory.
The second is the TCM original self-diagnosis indicated by the A/T CHECK indicator lamp. The malfunction is stored in the TCM memory. The detected items are overlapped with OBD-II self-diagnostic items. For detail, refer to AT-86, "Display Items List" .

OBD-II Function for A/T System

NCS000BN

The ECM provides emission-related on board diagnostic (OBD-II) functions for the A/T system. One function is to receive a signal from the TCM used with OBD-related parts of the A/T system. The signal is sent to the ECM when a malfunction occurs in the corresponding OBD-related part. The other function is to indicate a diagnostic result by means of the MIL (malfunction indicator lamp) on the instrument panel. Sensors, switches and solenoid valves are used as sensing elements.
The MIL automatically illuminates in “One or Two Trip Detection Logic” when a malfunction is sensed in relation to A/T system parts.

One or Two Trip Detection Logic of OBD-II

NCS000BO

ONE TRIP DETECTION LOGIC

If a malfunction is sensed during the first test drive, the MIL will illuminate and the malfunction will be stored in the ECM memory as a DTC. The TCM is not provided with such a memory function.

TWO TRIP DETECTION LOGIC

When a malfunction is sensed during the first test drive, it is stored in the ECM memory as a 1st trip DTC (diagnostic trouble code) or 1st trip freeze frame data. At this point, the MIL will not illuminate. — 1st trip
If the same malfunction as that experienced during the first test drive is sensed during the second test drive, the MIL will illuminate. — 2nd trip
The “trip” in the “One or Two Trip Detection Logic” means a driving mode in which self-diagnosis is performed during vehicle operation.

OBD-II Diagnostic Trouble Code (DTC)

NCS000BP

HOW TO READ DTC AND 1ST TRIP DTC

DTC and 1st trip DTC can be read by the following methods.
(with CONSULT-II or GST GST) CONSULT-II or GST (Generic Scan Tool) Examples: P0705, P0720 etc.
These DTC are prescribed by SAE J2012.
(CONSULT-II also displays the malfunctioning component or system.)

- **1st trip DTC No. is the same as DTC No.**
- **Output of the diagnostic trouble code indicates that the indicated circuit has a malfunction. However, in case of the Mode II and GST, they do not indicate whether the malfunction is still occurring or occurred in the past and returned to normal.**
  CONSULT-II can identify them as shown below, therefore, CONSULT-II (if available) is recommended.

A sample of CONSULT-II display for DTC and 1st trip DTC is shown on the next page. DTC or 1st trip DTC of a malfunction is displayed in SELF-DIAGNOSTIC RESULTS mode for “ENGINE” with CONSULT-II. Time data indicates how many times the vehicle was driven after the last detection of a DTC.

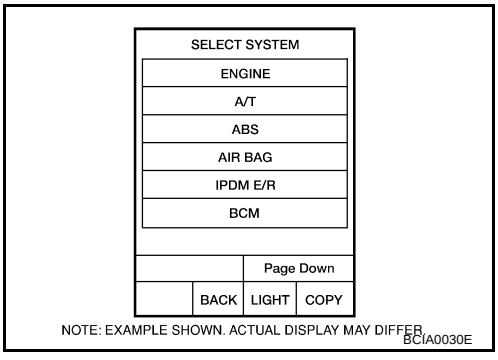

If the DTC is being detected currently, the time data will be “0”.

SELF-DIAG RESULTS	
DTC RESULTS	TIME
PNP SW/CIRC [P0705]	0

SAT015K

If a 1st trip DTC is stored in the ECM, the time data will be “1t”.

SELF-DIAG RESULTS	
DTC RESULTS	TIME
PNP SW/CIRC [P0705]	1 t

SAT016K

Freeze Frame Data and 1st Trip Freeze Frame Data

The ECM has a memory function, which stores the driving condition such as fuel system status, calculated load value, engine coolant temperature, short term fuel trim, long term fuel trim, engine speed and vehicle speed at the moment the ECM detects a malfunction.
Data which are stored in the ECM memory, along with the 1st trip DTC, are called 1st trip freeze frame data, and the data, stored together with the DTC data, are called freeze frame data and displayed on CONSULT-II or GST. The 1st trip freeze frame data can only be displayed on the CONSULT-II screen, not on the GST. For detail, refer to EC-121, "CONSULT-II Function (ENGINE)" .
Only one set of freeze frame data (either 1st trip freeze frame data of freeze frame data) can be stored in the ECM. 1st trip freeze frame data is stored in the ECM memory along with the 1st trip DTC. There is no priority for 1st trip freeze frame data and it is updated each time a different 1st trip DTC is detected. However, once freeze frame data (2nd trip detection/MIL on) is stored in the ECM memory, 1st trip freeze frame data is no longer stored. Remember, only one set of freeze frame data can be stored in the ECM. The ECM has the following priorities to update the data.

Priority	Items	
1	Freeze frame data	Misfire — DTC: P0300 - P0306 Fuel Injection System Function — DTC: P0171, P0172, P0174, P0175
2		Except the above items (Includes A/T related items)
3	1st trip freeze frame data	

Both 1st trip freeze frame data and freeze frame data (along with the DTC) are cleared when the ECM memory is erased.

HOW TO ERASE DTC

The diagnostic trouble code can be erased by CONSULT-II, GST or ECM DIAGNOSTIC TEST MODE as described following.

- **If the battery cable is disconnected, the DTC will be lost within 24 hours.**
- **When you erase the DTC, using CONSULT-II or GST is easier and quicker than switching the mode selector on the ECM.**

The following emission-related diagnostic information is cleared from the ECM memory when erasing DTC related to OBD-II. For details, refer to EC-48, "Emission-Related Diagnostic Information" .

- **Diagnostic trouble codes (DTC)**
- **1st trip diagnostic trouble codes (1st trip DTC)**
- **Freeze frame data**

- **1st trip freeze frame data**
- **System readiness test (SRT) codes**
- **Test values**

HOW TO ERASE DTC (WITH CONSULT-II)

- **If a DTC is displayed for both ECM and TCM, it is necessary to be erased for both ECM and TCM.**

1. If the ignition switch stays ON after repair work, be sure to turn ignition switch OFF once. Wait at least 10 seconds and then turn it ON (engine stopped) again.
2. Turn CONSULT-II ON and touch “A/T”.
3. Touch “SELF-DIAG RESULTS”.
4. Touch “ERASE”. (The DTC in the TCM will be erased.) Then touch “BACK” twice.
5. Touch “ENGINE”.
6. Touch “SELF-DIAG RESULTS”.
7. Touch “ERASE”. (The DTC in the ECM will be erased.)

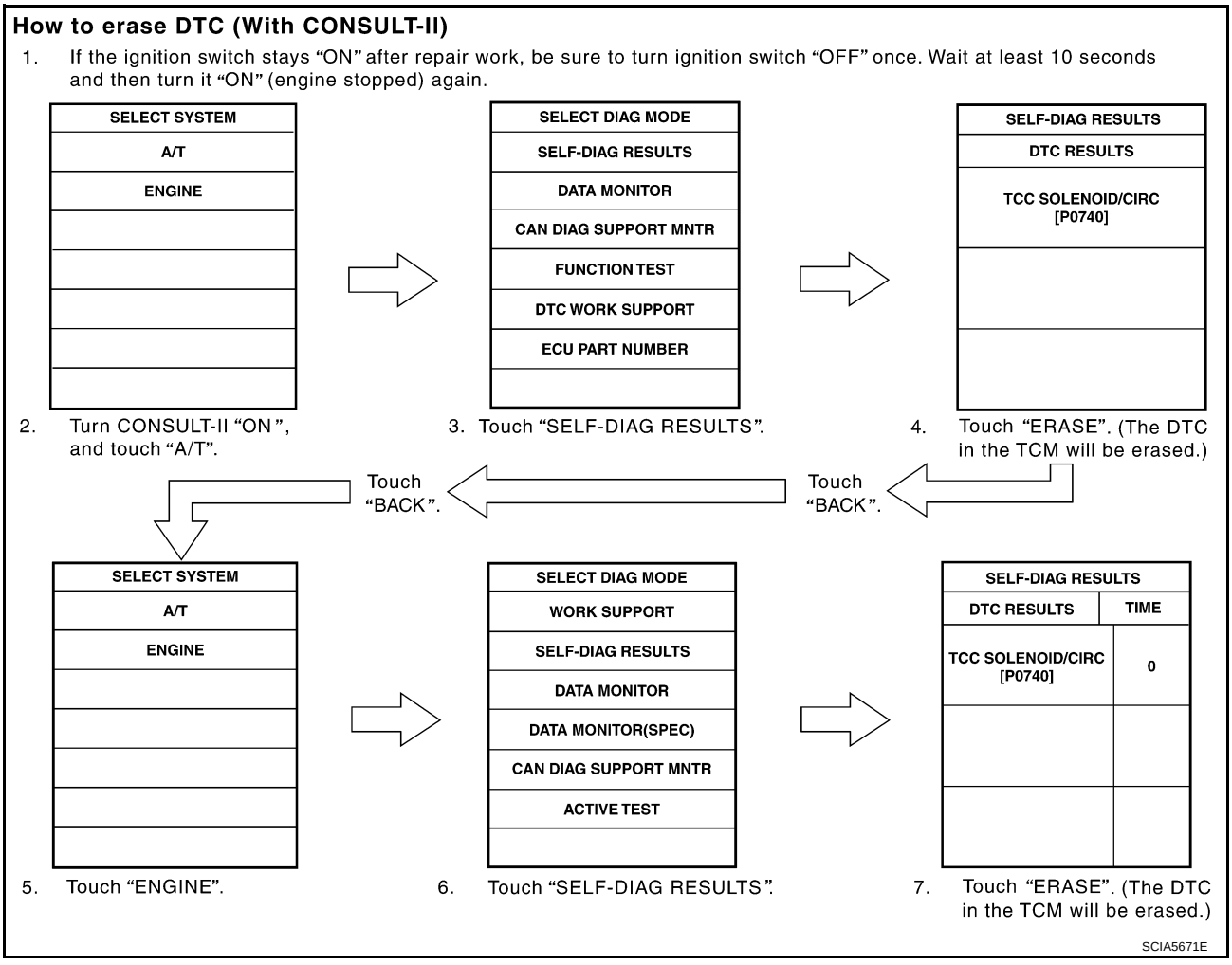

HOW TO ERASE DTC (WITH GST)

1. If the ignition switch stays ON after repair work, be sure to turn ignition switch OFF once. Wait at least 10 seconds and then turn it ON (engine stopped) again.
2. Perform AT-95, "TCM SELF-DIAGNOSTIC PROCEDURE (NO TOOLS)" . (The engine warm-up step can be skipped when performing the diagnosis only to erase the DTC.)
3. Select Mode 4 with GST (Generic Scan Tool). For details, refer to EC-133, "Generic Scan Tool (GST) Function" .

HOW TO ERASE DTC (NO TOOLS)

The A/T CHECK indicator lamp is located on the instrument panel.

1. If the ignition switch stays ON after repair work, be sure to turn ignition switch OFF once. Wait at least 10 seconds and then turn it ON (engine stopped) again.
2. Perform AT-95, "TCM SELF-DIAGNOSTIC PROCEDURE (NO TOOLS)" . (The engine warm-up step can be skipped when performing the diagnosis only to erase the DTC.)
3. Perform “OBD-II SELF-DIAGNOSTIC PROCEDURE (No tools)”. Refer to EC-61, "How to Erase DTC" .

Malfunction Indicator Lamp (MIL)

NCS000BQ

DESCRIPTION

The MIL is located on the instrument panel.

1. The MIL will light up when the ignition switch is turned ON without the engine running. This is a bulb check.

- If the MIL does not light up, refer to DI-21, "WARNING LAMPS" , or see EC-683, "MIL AND DATA LINK CONNECTOR" .

2. When the engine is started, the MIL should go off.
   If the MIL remains on, the on board diagnostic system has detected an engine system malfunction.

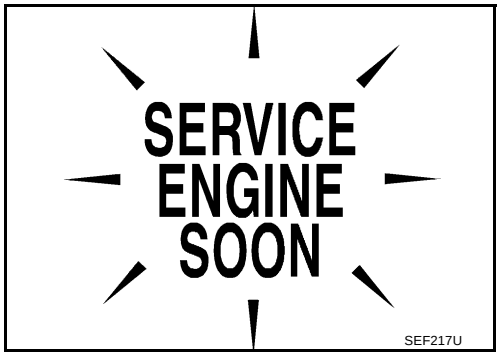

TROUBLE DIAGNOSIS

PFP:00004

DTC Inspection Priority Chart

NCS000BR

If some DTCs are displayed at the same time, perform inspections one by one based on the following priority chart.

NOTE:
If DTC "U1000CAN COMM CIRCUIT" is displayed with other DTCs, first perform the trouble diagnosis for "DTC U1000 CAN COMMUNICATION LINE". Refer to AT-98 .

Priority	Detected items (DTC)
1	U1000 CAN communication line
2	Except above

Fail-safe

NCS000BS

The TCM has an electrical fail-safe mode. This mode makes it possible to operate even if there is a an error in a main electronic control input/output signal circuit.
In fail-safe mode, even if the selector lever is "D" or "M" mode, the A/T is fixed in 2nd, 4th or 5th (depending on the breakdown position), so the customer should feel "slipping" or "poor acceleration".
Even when the electronic circuits are normal, under special conditions (for example, when slamming on the brake with the wheels spinning drastically and stopping the tire rotation), the A/T can go into fail-safe mode. If this happens, switch OFF the ignition switch for 10 seconds, then switch it ON again to return to the normal shift pattern. Therefore, the customer's vehicle has returned to normal, so handle according to the AT-44, "WORK FLOW" .

FAIL-SAFE FUNCTION

If any malfunction occurs in a sensor or solenoid, this function controls the A/T to mark driving possible.

Vehicle Speed Sensor A/T (Revolution Sensor)

Signals are input from two systems - from vehicle speed sensor A/T (revolution sensor) installed on the A/T and from combination meter so normal driving is possible even if there is a malfunction in one of the systems. And if vehicle speed sensor A/T (revolution sensor) has unusual cases, 5th gear and manual mode are prohibited.

Accelerator Pedal Position Sensor

If there is a malfunction in one of the systems, the accelerator opening angle is controlled by ECM according to a pre-determined accelerator angle to make driving possible. And if there are malfunctions in tow systems, the engine speed is fixed by ECM to a pre-determined engine speed to make driving possible.

Throttle Position Sensor

If there is a malfunction in one of the systems, the accelerator opening angle is controlled by ECM according to a pre-determined accelerator angle to make driving possible. And if there are malfunctions in tow systems, the accelerator opening angle is controlled by the idle signal sent from the ECM which is based on input indicating either idle condition or off-idle condition (pre-determined accelerator opening) in order to make driving possible.

PNP Switch

In the unlikely event that a malfunction signal enters the TCM, the position indicator is switched OFF, the starter relay is switched OFF (starter starting is disabled), the back-up lamp relay switched OFF (back-up lamp is OFF) and the position is fixed to the "D" range to make driving possible.

Starter Relay

The starter relay is switched OFF. (Starter starting is disabled.)

A/T Interlock

- If there is an A/T interlock judgment malfunction, the A/T is fixed in 2nd gear to make driving possible.

  NOTE:
  When the vehicle is driven fixed in 2nd gear, a turbine revolution sensor malfunction is displayed, but this is not a turbine revolution sensor malfunction.
- When the coupling pattern below is detected, the fail-safe action corresponding to the pattern is performed.

A/T INTERLOCK COUPLING PATTERN TABLE

●: NG X: OK

Gear position		ATF pressure switch output					Fail-safe function	Clutch pressure output pattern after fail-safe function					
		SW3 (I/C)	SW6 (HLR/C)	SW5 (D/C)	SW1 (FR/B)	SW2 (LC/B)		I/C	HLR/C	D/C	FR/B	LC/B	L/U
A/T interlock coupling pattern	3rd	–	X	X	–	●	Held in 2nd gear	OFF	OFF	ON	OFF	OFF	OFF
	4th	–	X	X	–	●	Held in 2nd gear	OFF	OFF	ON	OFF	OFF	OFF
	5th	X	X	–	X	●	Held in 2nd gear	OFF	OFF	ON	OFF	OFF	OFF

A/T 1st Engine Braking

When there is an A/T first gear engine brake judgment malfunction, the low coast brake solenoid is switched OFF to avoid the engine brake operation.

Line Pressure Solenoid

The solenoid is switched OFF and the line pressure is set to the maximum hydraulic pressure to make driving possible.

Torque Converter Clutch Solenoid

The solenoid is switched OFF to release the lock-up.

Low Coast Brake Solenoid

When a malfunction (electrical or functional) occurs, in order to make driving possible, if the solenoid is ON, the A/T is held in 2nd gear; if the solenoid is OFF, the A/T is held in 4th gear. (engine brake is not applied in 1st and 2nd gear.)

Input Clutch Solenoid

If a malfunction (electrical or functional) occurs with the solenoid either ON or OFF, the A/T is held in 4th gear to make driving possible.

Direct Clutch Solenoid

If a malfunction (electrical or functional) occurs with the solenoid either ON or OFF, the A/T is held in 4th gear to make driving possible.

Front Brake Solenoid

If a malfunction (electrical or functional) occurs with the solenoid ON, in order to make driving possible, the A/T is held in 5th gear; if the solenoid is OFF, 4th gear.

High and Low Reverse Clutch Solenoid

If a malfunction (electrical or functional) occurs with the solenoid either ON or OFF, the A/T is held in 4th gear to make driving possible.

Turbine Revolution Sensor 1 or 2

The control is the same as if there were no turbine revolution sensors, 5th gear and manual mode are prohibited.

How To Perform Trouble Diagnosis for Quick and Accurate Repair

NCS000BT

INTRODUCTION

The TCM receives a signal from the vehicle speed sensor, accelerator pedal position sensor (throttle position sensor) or PNP switch and provides shift control or lock-up control via A/T solenoid valves.
The TCM also communicates with the ECM by means of a signal sent from sensing elements used with the OBD-related parts of the A/T system for malfunction-diagnostic purposes. The TCM is capable of diagnosing malfunctioning parts while the ECM can store malfunctions in its memory.
Input and output signals must always be correct and stable in the operation of the A/T system. The A/T system must be in good operating condition and be free of valve seizure, solenoid valve malfunction, etc.

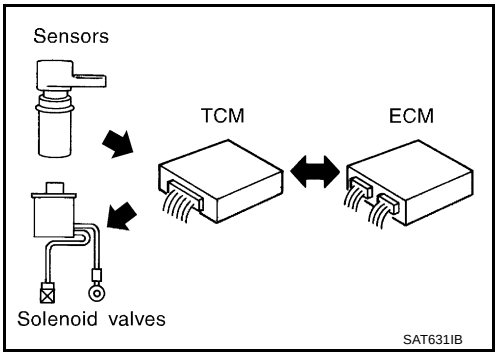

It is much more difficult to diagnose a error that occurs intermittently rather than continuously. Most intermittent errors are caused by poor electric connections or improper wiring. In this case, careful checking of suspected circuits may help prevent the replacement of good parts.
A visual check only may not find the cause of the errors. A road test with CONSULT-II (or GST) or a circuit tester connected should be performed. Follow the AT-44, "WORK FLOW" .

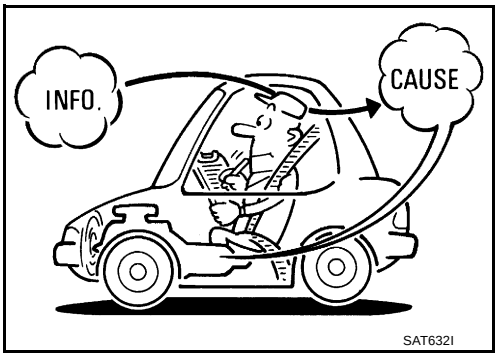

Before undertaking actual checks, take a few minutes to talk with a customer who approaches with a driveability complaint. The customer can supply good information about such errors, especially intermittent ones. Find out what symptoms are present and under what conditions they occur. A “Diagnostic Worksheet” as shown on the example (Refer to AT-45) should be used.
Start your diagnosis by looking for “conventional” errors first. This will help troubleshoot driveability errors on an electronically controlled engine vehicle.
Also check related Service bulletins.

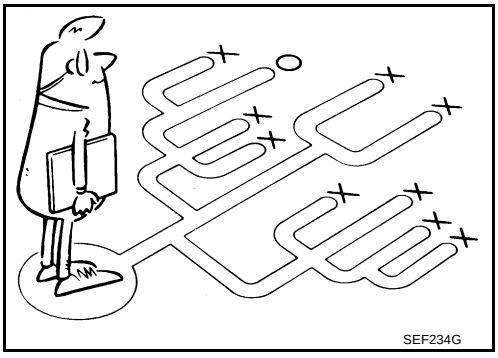

WORK FLOW

A good understanding of the malfunction conditions can make troubleshooting faster and more accurate.
In general, each customer feels differently about a malfunction. It is important to fully understand the symptoms or conditions for a customer complaint.
Make good use of the two sheets provided, AT-45, "Information From Customer" and AT-45, "Diagnostic Worksheet Chart" , to perform the best troubleshooting possible.

Work Flow Chart

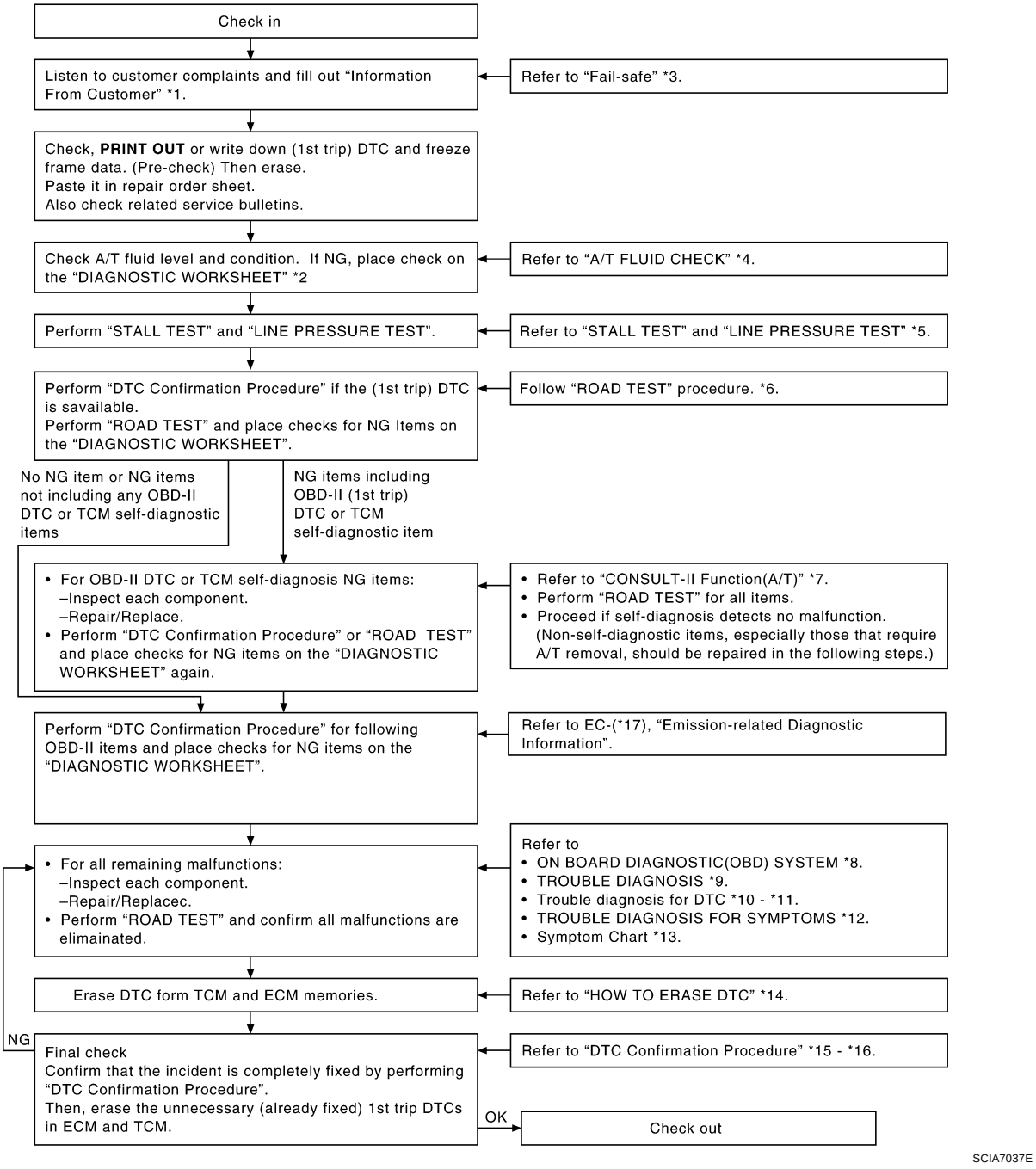

*1. AT-45	*2. AT-45	*3. AT-41
*4. AT-50	*5. AT-50, AT-52	*6. AT-54
*7. AT-84	*8. AT-37	*9. AT-41
*10. AT-98	*11. AT-170	*12. AT-179
*13. AT-60	*14. AT-38	*15. AT-98
*16. AT-170	*17. EC-48	

DIAGNOSTIC WORKSHEET

Information From Customer

KEY POINTS

- **WHAT**..... Vehicle & A/T model
- **WHEN**..... Date, Frequencies
- **WHERE**..... Road conditions
- **HOW**..... Operating conditions, Symptoms

Customer name MR/MS	Model & Year	VIN
Trans. Model	Engine	Mileage
Incident Date	Manuf. Date	In Service Date
Frequency	❑ Continuous ❑ Intermittent (times a day)	
Symptoms	❑ Vehicle does not move. (❑ Any position ❑ Particular position)	
	❑ No up-shift (❑ 1st → 2nd ❑ 2nd → 3rd ❑ 3rd → 4th ❑ 4th → 5th)	
	❑ No down-shift (❑ 5th → 4th ❑ 4th → 3rd ❑ 3rd → 2nd ❑ 2nd → 1st)	
	❑ Lock-up malfunction	
	❑ Shift point too high or too low.	
	❑ Shift shock or slip (❑ N → D ❑ N → R ❑ Lock-up ❑ Any drive position)	
	❑ Noise or vibration	
	❑ No kick down	
	❑ No pattern select	
	❑ Others ( )	
A/T CHECK indicator lamp	❑ Continuously lit	❑ Not lit
Malfunction indicator lamp (MIL)	❑ Continuously lit	❑ Not lit

Diagnostic Worksheet Chart

1	❑ Read the item on cautions concerning fail-safe and understand the customer's complaint.			AT-41
2	❑ ATF inspection			AT-50
		❑ Leak (Repair leak location.) ❑ State ❑ Amount		
3	❑ Stall test and line pressure test			AT-50, AT-52
		❑ Stall test		
			❑ Torque converter one-way clutch ❑ Front brake ❑ high and low reverse clutch ❑ Low coast brake ❑ Forward brake ❑ Reverse brake ❑ Forward one-way clutch	❑ 1st one-way clutch ❑ 3rd one-way clutch ❑ Engine ❑ Line pressure low ❑ Except for input clutch and direct clutch, clutches and brakes OK
		❑ Line pressure inspection - Suspected part:		

4	❏ Perform all road tests and enter checks in required inspection items.			AT-54
	4-1.	Check before engine is started		AT-54
		❏ AT-181, "A/T CHECK Indicator Lamp Does Not Come On" ❏ Perform self-diagnostics. Enter checks for detected items. AT-86 , AT-95		
			❏ AT-98, "DTC U1000 CAN COMMUNICATION LINE" ❏ AT-101, "DTC P0615 START SIGNAL CIRCUIT" ❏ AT-105, "DTC P0700 TCM" ❏ AT-106, "DTC P0705 PARK/NEUTRAL POSITION SWITCH" ❏ AT-110, "DTC P0717 TURBINE REVOLUTION SENSOR" ❏ AT-112, "DTC P0720 VEHICLE SPEED SENSOR A/T (REVOLUTION SENSOR)" ❏ AT-117, "DTC P0725 ENGINE SPEED SIGNAL" ❏ AT-119, "DTC P0740 TORQUE CONVERTER CLUTCH SOLENOID VALVE" ❏ AT-121, "DTC P0744 A/T TCC S/V FUNCTION (LOCK-UP)" ❏ AT-123, "DTC P0745 LINE PRESSURE SOLENOID VALVE" ❏ AT-125, "DTC P1705 THROTTLE POSITION SENSOR" ❏ AT-128, "DTC P1710 A/T FLUID TEMPERATURE SENSOR CIRCUIT" ❏ AT-133, "DTC P1721 VEHICLE SPEED SENSOR MTR" ❏ AT-135, "DTC P1730 A/T INTERLOCK" ❏ AT-138, "DTC P1731 A/T 1ST ENGINE BRAKING" ❏ AT-140, "DTC P1752 INPUT CLUTCH SOLENOID VALVE" ❏ AT-142, "DTC P1754 INPUT CLUTCH SOLENOID VALVE FUNCTION" ❏ AT-144, "DTC P1757 FRONT BRAKE SOLENOID VALVE" ❏ AT-146, "DTC P1759 FRONT BRAKE SOLENOID VALVE FUNCTION" ❏ AT-148, "DTC P1762 DIRECT CLUTCH SOLENOID VALVE" ❏ AT-150, "DTC P1764 DIRECT CLUTCH SOLENOID VALVE FUNCTION" ❏ AT-152, "DTC P1767 HIGH AND LOW REVERSE CLUTCH SOLENOID VALVE" ❏ AT-154, "DTC P1769 HIGH AND LOW REVERSE CLUTCH SOLENOID VALVE FUNCTION" ❏ AT-156, "DTC P1772 LOW COAST BRAKE SOLENOID VALVE" ❏ AT-158, "DTC P1774 LOW COAST BRAKE SOLENOID VALVE FUNCTION" ❏ AT-160, "DTC P1815 MANUAL MODE SWITCH" ❏ AT-164, "DTC P1841 ATF PRESSURE SWITCH 1" ❏ AT-166, "DTC P1843 ATF PRESSURE SWITCH 3" ❏ AT-168, "DTC P1845 ATF PRESSURE SWITCH 5" ❏ AT-170, "DTC P1846 ATF PRESSURE SWITCH 6"	
	4-2.	Check at idle		AT-54
		❏ AT-181, "Engine Cannot Be Started in “P” or “N” Position" ❏ AT-182, "In “P” Position, Vehicle Moves When Pushed" ❏ AT-183, "In “N” Position, Vehicle Moves" ❏ AT-184, "Large Shock (“N” to “D” Position)" ❏ AT-186, "Vehicle Does Not Creep Backward in “R” Position" ❏ AT-188, "Vehicle Does Not Creep Forward in “D” Position"		
	4-3.	Cruise tests		AT-56
		Part 1		
		❏ AT-190, "Vehicle Cannot Be Started From D_1" ❏ AT-192, "A/T Does Not Shift: $D_1 \rightarrow D_2$" ❏ AT-194, "A/T Does Not Shift: $D_2 \rightarrow D_3$" ❏ AT-196, "A/T Does Not Shift: $D_3 \rightarrow D_4$" ❏ AT-198, "A/T Does Not Shift: $D_4 \rightarrow D_5$" ❏ AT-200, "A/T Does Not Perform Lock-up" ❏ AT-201, "A/T Does Not Hold Lock-up Condition" ❏ AT-203, "Lock-up Is Not Released" ❏ AT-203, "Engine Speed Does Not Return to Idle"		

4	4-3.	Part 2		AT-58
		❏ AT-190, "Vehicle Cannot Be Started From D_1" ❏ AT-192, "A/T Does Not Shift: $D_1 \rightarrow D_2$" ❏ AT-194, "A/T Does Not Shift: $D_2 \rightarrow D_3$" ❏ AT-196, "A/T Does Not Shift: $D_3 \rightarrow D_4$"		
		Part 3		AT-59
		❏ AT-205, "Cannot Be Changed to Manual Mode" ❏ AT-205, "A/T Does Not Shift: 5th Gear → 4th Gear" ❏ AT-206, "A/T Does Not Shift: 4th Gear → 3rd Gear" ❏ AT-208, "A/T Does Not Shift: 3rd Gear → 2nd Gear" ❏ AT-209, "A/T Does Not Shift: 2nd Gear → 1st Gear" ❏ AT-211, "Vehicle Does Not Decelerate by Engine Brake" ❏ Perform self-diagnostics. Enter checks for detected items. AT-86 , AT-95		
			❏ AT-98, "DTC U1000 CAN COMMUNICATION LINE" ❏ AT-101, "DTC P0615 START SIGNAL CIRCUIT" ❏ AT-105, "DTC P0700 TCM" ❏ AT-106, "DTC P0705 PARK/NEUTRAL POSITION SWITCH" ❏ AT-110, "DTC P0717 TURBINE REVOLUTION SENSOR" ❏ AT-112, "DTC P0720 VEHICLE SPEED SENSOR A/T (REVOLUTION SENSOR)" ❏ AT-117, "DTC P0725 ENGINE SPEED SIGNAL" ❏ AT-119, "DTC P0740 TORQUE CONVERTER CLUTCH SOLENOID VALVE" ❏ AT-121, "DTC P0744 A/T TCC S/V FUNCTION (LOCK-UP)" ❏ AT-123, "DTC P0745 LINE PRESSURE SOLENOID VALVE" ❏ AT-125, "DTC P1705 THROTTLE POSITION SENSOR" ❏ AT-128, "DTC P1710 A/T FLUID TEMPERATURE SENSOR CIRCUIT" ❏ AT-133, "DTC P1721 VEHICLE SPEED SENSOR MTR" ❏ AT-135, "DTC P1730 A/T INTERLOCK" ❏ AT-138, "DTC P1731 A/T 1ST ENGINE BRAKING" ❏ AT-140, "DTC P1752 INPUT CLUTCH SOLENOID VALVE" ❏ AT-142, "DTC P1754 INPUT CLUTCH SOLENOID VALVE FUNCTION" ❏ AT-144, "DTC P1757 FRONT BRAKE SOLENOID VALVE" ❏ AT-146, "DTC P1759 FRONT BRAKE SOLENOID VALVE FUNCTION" ❏ AT-148, "DTC P1762 DIRECT CLUTCH SOLENOID VALVE" ❏ AT-150, "DTC P1764 DIRECT CLUTCH SOLENOID VALVE FUNCTION" ❏ AT-152, "DTC P1767 HIGH AND LOW REVERSE CLUTCH SOLENOID VALVE" ❏ AT-154, "DTC P1769 HIGH AND LOW REVERSE CLUTCH SOLENOID VALVE FUNCTION" ❏ AT-156, "DTC P1772 LOW COAST BRAKE SOLENOID VALVE" ❏ AT-158, "DTC P1774 LOW COAST BRAKE SOLENOID VALVE FUNCTION" ❏ AT-160, "DTC P1815 MANUAL MODE SWITCH" ❏ AT-164, "DTC P1841 ATF PRESSURE SWITCH 1" ❏ AT-166, "DTC P1843 ATF PRESSURE SWITCH 3" ❏ AT-168, "DTC P1845 ATF PRESSURE SWITCH 5" ❏ AT-170, "DTC P1846 ATF PRESSURE SWITCH 6"	
5	❏ Inspect each system for items found to be NG in the self-diagnostics and repair or replace the malfunction parts.			
6	❏ Perform all road tests and enter the checks again for the required items.			AT-54
7	❏ For any remaining NG items, execute the “diagnostics procedure” and repair or replace the malfunction parts. See the chart for diagnostics by symptoms. (This chart also contains other symptoms and inspection procedures.)			AT-60
8	❏ Erase the results of the self-diagnostics from the TCM and the ECM.			AT-39, AT-97

A/T Electrical Parts Location

NCS000BU

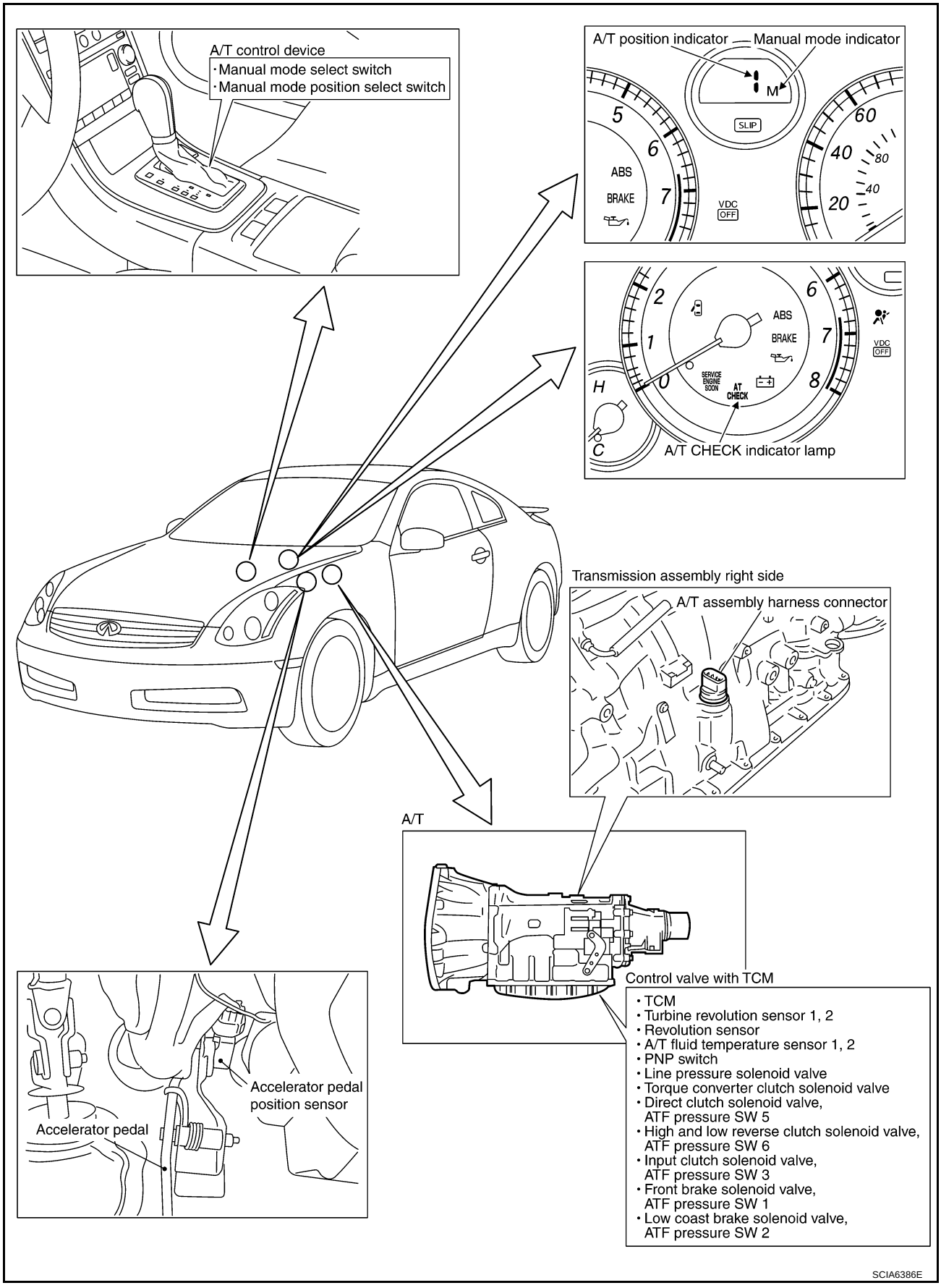

Circuit Diagram

NCS000BV

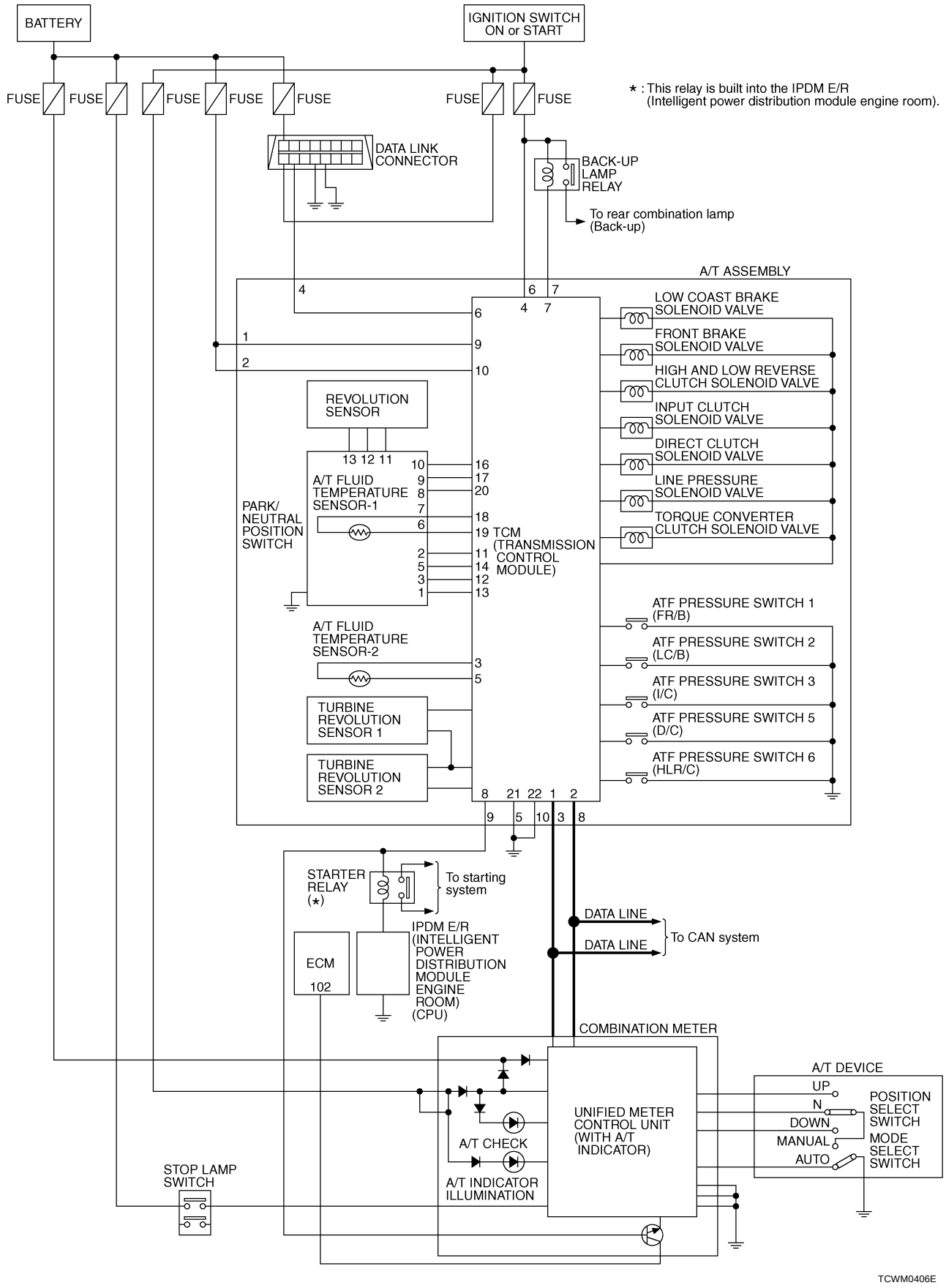

Inspections Before Trouble Diagnosis

NCS000BW

A/T FLUID CHECK

A/T Fluid Leakage and A/T Fluid Level Check

Inspect for A/T fluid leakage and check the A/T fluid level. Refer to AT-12, "Checking A/T Fluid" .

A/T Fluid Condition Check

Inspect the A/T fluid condition.

Fluid condition	Conceivable Cause	Required Operation
Varnished (viscous varnish state)	Clutch, brake scorched	Replace the ATF and check the A/T main unit and the vehicle for mal-functions (wire harnesses, cooler pipes, etc.)
Milky white or cloudy	Water in the fluid	Replace the ATF and check for places where water is getting in.
Large amount of metal powder mixed in	Unusual wear of sliding parts within A/T	Replace the ATF and check for improper operation of the A/T.

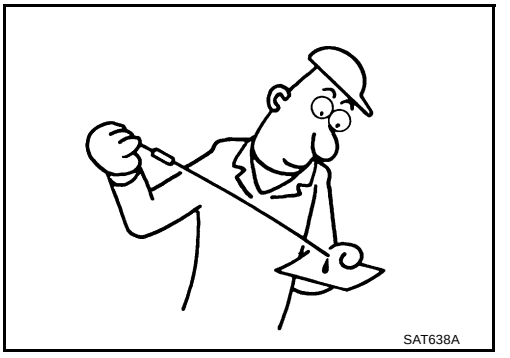
SAT638A

STALL TEST

Stall Test Procedure

1. Inspect the amount of engine oil. Replenish the engine oil if necessary.
2. Drive for about 10 minutes to warm up the vehicle so that the A/T fluid temperature is 50 to 80°C (122 to 176°F). Inspect the amount of ATF. Replenish if necessary.

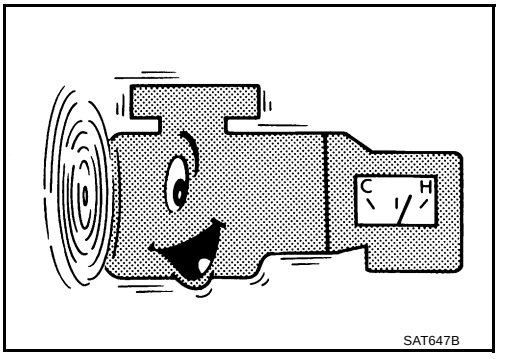

SAT647B

3. Securely engage the parking brake so that the tires do not turn.

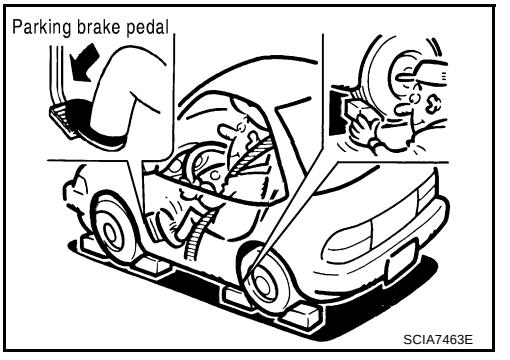

SCIA7463E

4. Engine start, apply foot brake, and place selector lever in “D” position.

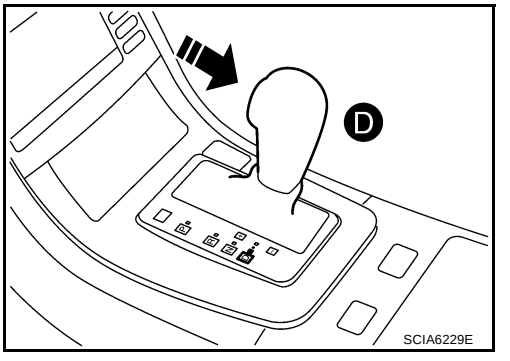

SCIA6229E

5. While holding down the foot brake, gradually press down the accelerator pedal.
6. Quickly read off the stall speed, then quickly remove your foot from the accelerator pedal.

   CAUTION:
   Do not hold down the accelerator pedal for more than 5 seconds during this test.

   Stall speed: 2,650 - 2,950 rpm

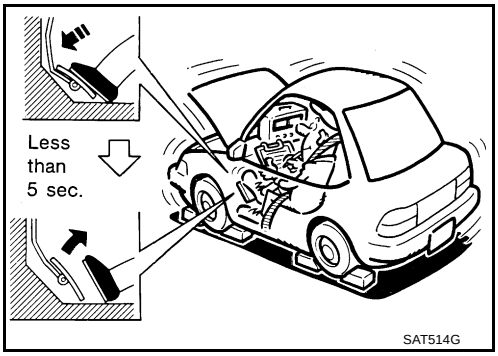

7. Move the selector lever to the “N” position.
8. Cool down the ATF.

   CAUTION:
   Run the engine at idle for at least one minute.
9. Repeat steps 5 through 8 with selector lever in “R” position.

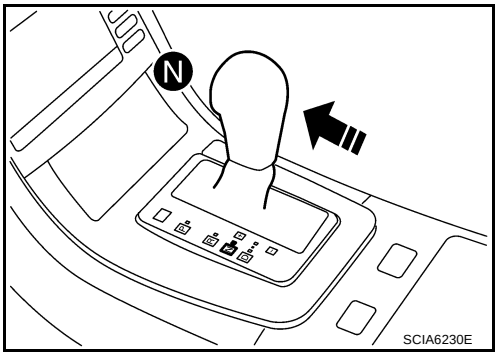

Judgment Stall Test

	Selector lever position		Expected problem location
	“D”, “M”	“R”	
Stall speed	H	O	● Forward brake ● Forward one-way clutch ● 1st one-way clutch ● 3rd one-way clutch
	O	H	● Reverse brake
	L	L	● Engine and torque converter one-way clutch
	H	H	● Line pressure low

O: Stall speed within standard value position
H: Stall speed higher than standard value
L: Stall speed lower than standard value

Stall test standard value position

Does not shift up “D”, “M” position 1 → 2	Slipping in 2nd, 3rd or 4th gear	Direct clutch slippage
Does not shift up “D”, “M” position 2 → 3	Slipping in 3rd, 4th or 5th gear	high and low reverse clutch slippage
Does not shift up “D”, “M” position 3 → 4	Slipping in 4th or 5th gear	Input clutch slippage
Does not shift up “D”, “M” position 4 → 5	Slipping in 5th gear	Front brake slippage

LINE PRESSURE TEST

Line Pressure Test Port

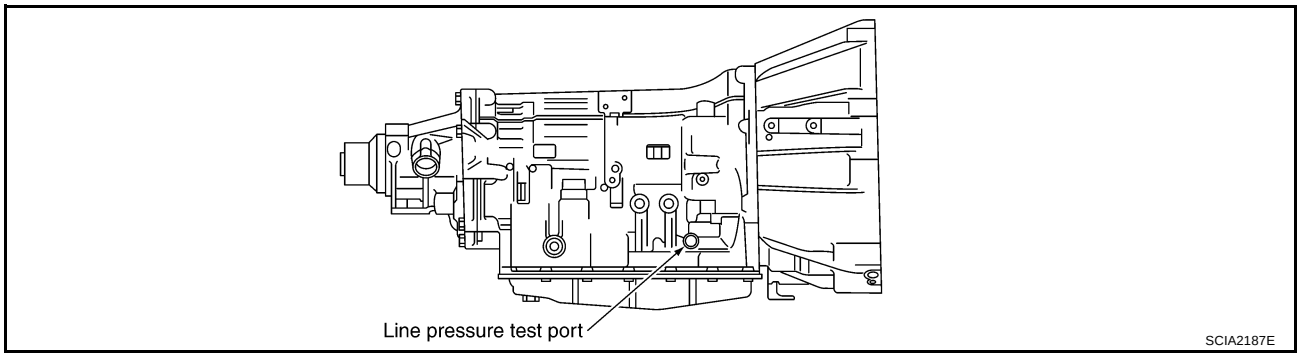

Line Pressure Test Procedure

1. Inspect the amount of engine oil and replenish if necessary.
2. Drive the car for about 10 minutes to warm it up so that the A/T fluid reaches in range of 50 to 80°C (122 to 176°F), then inspect the amount of ATF and replenish if necessary.

   NOTE:
   The A/T fluid temperature rises in range of 50 to 80°C (122 to 176°F) during 10 minutes of driving.
3. After warming up remove the oil pressure detection plug and install the oil pressure gauge [ST2505S001(J-34301-C)].

   CAUTION:
   When using the oil pressure gauge, be sure to use the O-ring attached to the oil pressure detection plug.

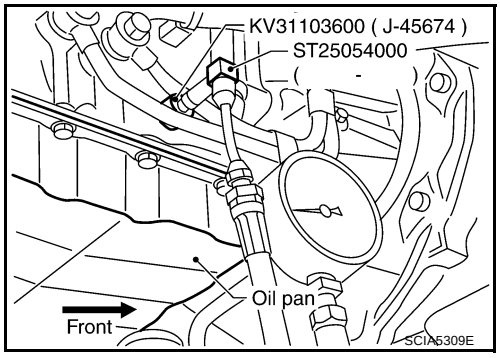

4. Securely engage the parking brake so that the tires do not turn.

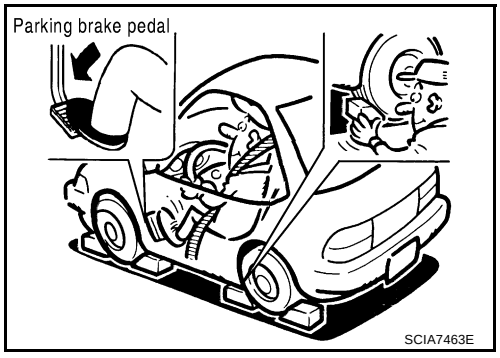

5. Start the engine, then measure the line pressure at both idle and the stall speed.

   CAUTION:
   - **Keep the brake pedal pressed all the way down during measurement.**
   - **When measuring the line pressure at the stall speed, refer to AT-50, "STALL TEST" .**
6. After the measurements are complete, install the oil pressure detection plug and tighten to the specified torque below.

   : 7.3 N·m (0.74 kg-m, 65 in-lb)

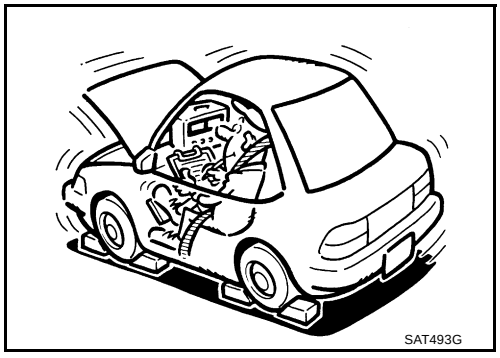

   CAUTION:
   - **Do not reuse O-ring.**

- **Apply ATF to O-ring.**

Line Pressure

Engine speed	Line pressure kPa (kg/cm^2 , psi)	
	"R" position	"D", "M" positions
At idle speed	425 - 465 (4.3 - 4.7, 62 - 67)	379 - 428 (3.9 - 4.4, 55 - 62)
At stall speed	1,605 - 1,950 (16.4 - 19.9, 233 - 283)	1,310 - 1,500 (13.4 - 15.3, 190 - 218)

Judgment of Line Pressure Test

Judgment		Possible cause
Idle speed	Low for all positions ("P", "R", "N", "D", "M")	Possible causes include malfunctions in the pressure supply system and low oil pump output. For example ● Oil pump wear ● Pressure regulator valve or plug sticking or spring fatigue ● Oil strainer ⇒ oil pump ⇒ pressure regulator valve passage oil leak ● Engine idle speed too low
	Only low for a specific position	Possible causes include an oil pressure leak in a passage or device related to the position after the pressure is distributed by the manual valve.
	High	Possible causes include a sensor malfunction or malfunction in the line pressure adjustment function. For example ● Accelerator pedal position signal malfunction ● A/T fluid temperature sensor malfunction ● Line pressure solenoid malfunction (sticking in OFF state, filter clog, cut line) ● Pressure regulator valve or plug sticking
Stall speed	Line pressure does not rise higher than the line pressure for idle.	Possible causes include a sensor malfunction or malfunction in the pressure adjustment function. For example ● Accelerator pedal position signal malfunction ● TCM breakdown ● Line pressure solenoid malfunction (shorting, sticking in ON state) ● Pressure regulator valve or plug sticking ● Pilot valve sticking or pilot filter clogged
	The pressure rises, but does not enter the standard position.	Possible causes include malfunctions in the pressure supply system and malfunction in the pressure adjustment function. For example ● Accelerator pedal position signal malfunction ● Line pressure solenoid malfunction (sticking, filter clog) ● Pressure regulator valve or plug sticking ● Pilot valve sticking or pilot filter clogged
	Only low for a specific position	Possible causes include an oil pressure leak in a passage or device related to the position after the pressure is distributed by the manual valve.

ROAD TEST

Description

- The road test inspects overall performance of the A/T and analyzes possible malfunction causes.
- The road test is carried out in the following three stages.

1. Check before engine is started. Refer to AT-54 .
2. Check at idle. Refer to AT-54 .
3. Cruise test

– Inspect all the items from Part 1 to Part 3. Refer to AT-56 , AT-58 , AT-59 .

- Before beginning the road test, check the test procedure and inspection items.
- Test all inspection items until the symptom is uncovered. Diagnose NG items when all road tests are complete.

Check Before Engine is Started

NCS000BX

1. CHECK A/T CHECK INDICATOR LAMP

1. Park vehicle on level surface.
2. Move selector lever to “P” position.
3. Turn ignition switch OFF and wait at least 10 seconds.
4. Turn ignition switch ON. (Do not start engine.)

Does A/T CHECK indicator lamp light up for about 2 seconds?

YES >> 1. Turn ignition switch OFF.
2. Perform self-diagnostics and record all NG items on the AT-45, "DIAGNOSTIC WORKSHEET" . Refer to AT-86, "SELF-DIAGNOSTIC RESULT MODE" , AT-95, "Diagnostic Procedure Without CONSULT-II" .
3. Go to AT-54, "Check at Idle" .

NO >> Stop the road test and go to AT-181, "A/T CHECK Indicator Lamp Does Not Come On" .

Check at Idle

NCS000BY

1. CHECK STARTING THE ENGINE

1. Park vehicle on level surface.
2. Move selector lever to “P” or “N” position.
3. Turn ignition switch OFF.
4. Turn ignition switch to “START” position.

Does the engine start?

YES >> GO TO 2.
NO >> Stop the road test and go to AT-181, "Engine Cannot Be Started in “P” or “N” Position" .

2. CHECK STARTING THE ENGINE

1. Turn ignition switch ON. (Do not start engine.)
2. Move selector lever to “D”, “M” or “R” position.
3. Turn ignition switch to “START” position.

Does the engine start in either position?

YES >> Stop the road test and go to AT-181, "Engine Cannot Be Started in “P” or “N” Position" .
NO >> GO TO 3.

3. CHECK “P” POSITION FUNCTIONS

1. Move selector lever to “P” position.
2. Turn ignition switch OFF.
3. Release the parking brake.
4. Push the vehicle forward or backward.
5. Engage the parking brake.

When you push the vehicle with releasing the parking brake, does it move?

YES >> Enter a check mark at AT-182, "In “P” Position, Vehicle Moves When Pushed" on the AT-45, "DIAGNOSTIC WORKSHEET" , then continue the road test.

NO >> GO TO 4.

4. CHECK “N” POSITION FUNCTIONS

1. Start the engine.
2. Move selector lever to “N” position.
3. Release the parking brake.

Does vehicle move forward or backward?

YES >> Enter a check mark at AT-183, "In “N” Position, Vehicle Moves" on the AT-45, "DIAGNOSTIC WORKSHEET" , then continue the road test.

NO >> GO TO 5.

5. CHECK SHIFT SHOCK

1. Engage the brake.
2. Move selector lever to “D” position.

When the A/T is shifted from “N” to “D”, is there an excessive shock?

YES >> Enter a check mark at AT-184, "Large Shock (“N” to “D” Position)" on the AT-45, "DIAGNOSTIC WORKSHEET" , then continue the road test.

NO >> GO TO 6.

6. CHECK “R” POSITION FUNCTIONS

1. Engage the brake.
2. Move selector lever to “R” position.
3. Release the brake for 4 to 5 seconds.

Does the vehicle creep backward?

YES >> GO TO 7.

NO >> Enter a check mark at AT-186, "Vehicle Does Not Creep Backward in “R” Position" on the AT-45, "DIAGNOSTIC WORKSHEET" , then continue the road test.

7. CHECK “D” POSITION FUNCTIONS

Inspect whether the vehicle creep forward when the A/T is put into the “D” position.

Does the vehicle creep forward in the “D” positions?

YES >> Go to AT-56, "Cruise Test - Part 1" , AT-58, "Cruise Test - Part 2" and AT-59, "Cruise Test - Part 3" .

NO >> Enter a check mark at AT-188, "Vehicle Does Not Creep Forward in “D” Position" on the AT-45, "DIAGNOSTIC WORKSHEET" , then continue the road test. Go to AT-56, "Cruise Test - Part 1" , AT-58, "Cruise Test - Part 2" and AT-59, "Cruise Test - Part 3" .

Cruise Test - Part 1

NCS000BZ

1. CHECK STARTING OUT FROM D1

1. Drive the vehicle for about 10 minutes to warm up the engine oil and ATF.
   Appropriate temperature for the ATF: 50 to 80°C (122 to 176°F)
2. Park the vehicle on a level surface.
3. Move selector lever to “P” position.
4. Start the engine.
5. Move selector lever to “D” position.
6. Press the accelerator pedal about half-way down to accelerate the vehicle.

With CONSULT-II

Read the gear positions. Refer to AT-89, "DATA MONITOR MODE" .

Starts from D1?

YES >> GO TO 2.

NO >> Enter a check mark at AT-190, "Vehicle Cannot Be Started From D1" on the AT-45, "DIAGNOSTIC WORKSHEET" , then continue the road test.

2. CHECK SHIFT UP D1 → D2

Press down the accelerator pedal about half-way and inspect if the vehicle shifts up (D1 → D2) at the appropriate speed. Refer to AT-59, "Vehicle Speed at Which Gear Shifting Occurs" .

With CONSULT-II

Read the gear position, throttle degree of opening, and vehicle speed. Refer to AT-89, "DATA MONITOR MODE" .

Does the A/T shift up D1 → D2 at the correct speed?

YES >> GO TO 3.

NO >> Enter a check mark at AT-192, "A/T Does Not Shift: D1 → D2" on the AT-45, "DIAGNOSTIC WORKSHEET" , then continue the road test.

3. CHECK SHIFT UP D2 → D3

Press down the accelerator pedal about half-way and inspect if the vehicle shifts up (D2 → D3) at the appropriate speed. Refer to AT-59, "Vehicle Speed at Which Gear Shifting Occurs" .

With CONSULT-II

Read the gear position, throttle degree of opening, and vehicle speed. Refer to AT-89, "DATA MONITOR MODE" .

Does the A/T shift up D2 → D3 at the correct speed?

YES >> GO TO 4.

NO >> Enter a check mark at AT-194, "A/T Does Not Shift: D2 → D3" on the AT-45, "DIAGNOSTIC WORKSHEET" , then continue the road test.

4. CHECK SHIFT UP D3 → D4

Press down the accelerator pedal about half-way and inspect if the vehicle shifts up (D3 → D4) at the appropriate speed. Refer to AT-59, "Vehicle Speed at Which Gear Shifting Occurs" .

With CONSULT-II

Read the gear position, throttle degree of opening, and vehicle speed. Refer to AT-89, "DATA MONITOR MODE" .

Does the A/T shift up D3 → D4 at the correct speed?

YES >> GO TO 5.

NO >> Enter a check mark at AT-196, "A/T Does Not Shift: D3 → D4" on the AT-45, "DIAGNOSTIC WORKSHEET" , then continue the road test.

5. CHECK SHIFT UP D4 → D5

Press down the accelerator pedal about half-way and inspect if the vehicle shifts up (D4 → D5) at the appropriate speed. Refer to AT-59, "Vehicle Speed at Which Gear Shifting Occurs" .

With CONSULT-II

Read the gear position, throttle degree of opening, and vehicle speed. Refer to AT-89, "DATA MONITOR MODE" .

Does the A/T shift up D4 → D5 at the correct speed?

YES >> GO TO 6.

NO >> Enter a check mark at AT-198, "A/T Does Not Shift: D4 → D5" on the AT-45, "DIAGNOSTIC WORKSHEET" , then continue the road test.

6. CHECK LOCK-UP

When releasing accelerator pedal (closed throttle position signal: OFF) from D5, check lock-up from D5 to L/U. Refer to AT-59, "Vehicle Speed at Which Gear Shifting Occurs" .

With CONSULT-II

Select “TCC SOLENOID” with the “MAIN SIGNALS” mode for “A/T”. Refer to AT-84, "CONSULT-II REFERENCE VALUE" .

Does it lock-up?

YES >> GO TO 7.

NO >> Enter a check mark at AT-200, "A/T Does Not Perform Lock-up" on the AT-45, "DIAGNOSTIC WORKSHEET" , then continue the road test.

7. CHECK LOCK-UP HOLD

Check hold lock-up.

With CONSULT-II

Select “TCC SOLENOID” with the “MAIN SIGNALS” mode for “A/T”. Refer to AT-84, "CONSULT-II REFERENCE VALUE"

Does it maintain lock-up status?

YES >> GO TO 8.

NO >> Enter a check mark at AT-201, "A/T Does Not Hold Lock-up Condition" on the AT-45, "DIAGNOSTIC WORKSHEET" , then continue the road test.

8. CHECK LOCK-UP RELEASE

Check lock-up cancellation by depressing brake pedal lightly to decelerate.

With CONSULT-II

Select “TCC SOLENOID” with the “MAIN SIGNALS” mode for “A/T”. Refer to AT-84, "CONSULT-II REFERENCE VALUE"

Does lock-up cancel?

YES >> GO TO 9.

NO >> Enter a check mark at AT-203, "Lock-up Is Not Released" on the AT-45, "DIAGNOSTIC WORKSHEET" , then continue the road test.

9. CHECK SHIFT DOWN D5 → D4

Decelerate by pressing lightly on the brake pedal.

With CONSULT-II

Read the gear position and engine speed. Refer to AT-89, "DATA MONITOR MODE" .

When the A/T shift down D5 → D4, does the engine speed drop smoothly back to idle?

YES >> 1. Stop the vehicle.
2. Go to AT-58, "Cruise Test - Part 2" .

NO >> Enter a check mark at AT-203, "Engine Speed Does Not Return to Idle" on the AT-45, "DIAGNOSTIC WORKSHEET" , then continue the road test. Go to AT-58, "Cruise Test - Part 2" .

Cruise Test - Part 2

NCS000C0

1. CHECK STARTING FROM D1

1. Move selector lever to “D” position.
2. Accelerate at half throttle.

With CONSULT-II

Read the gear position. Refer to AT-89, "DATA MONITOR MODE" .

Does it start from D1?

YES >> GO TO 2.

NO >> Enter a check mark at AT-190, "Vehicle Cannot Be Started From D_1" on the AT-45, "DIAGNOSTIC WORKSHEET" , then continue the road test.

2. CHECK SHIFT UP D1 → D2

Press the accelerator pedal down all the way and inspect whether or not the A/T shifts up (D1 → D2) at the correct speed. Refer to AT-59, "Vehicle Speed at Which Gear Shifting Occurs" .

With CONSULT-II

Read the gear position, throttle position and vehicle speed. Refer to AT-89, "DATA MONITOR MODE" .

Does the A/T shift up D1 → D2 at the correct speed?

YES >> GO TO 3.

NO >> Enter a check mark at AT-192, "A/T Does Not Shift: D_1 → D_2" on the AT-45, "DIAGNOSTIC WORKSHEET" , then continue the road test.

3. CHECK SHIFT UP D2 → D3

Press the accelerator pedal down all the way and inspect whether or not the A/T shifts up (D2 → D3) at the correct speed. Refer to AT-59, "Vehicle Speed at Which Gear Shifting Occurs" .

With CONSULT-II

Read the gear position, throttle position and vehicle speed. Refer to AT-89, "DATA MONITOR MODE" .

Does the A/T shift up D2 → D3 at the correct speed?

YES >> GO TO 4.

NO >> Enter a check mark at AT-194, "A/T Does Not Shift: D_2 → D_3" on the AT-45, "DIAGNOSTIC WORKSHEET" , then continue the road test.

4. CHECK SHIFT UP D3 → D4 AND ENGINE BRAKE

When the A/T changes speed D3 → D4, return the accelerator pedal.

With CONSULT-II

Read the gear position. Refer to AT-89, "DATA MONITOR MODE" .

Does the A/T shift up D3 → D4 and apply the engine brake?

YES >> 1. Stop the vehicle.
2. Go to AT-59, "Cruise Test - Part 3" .

NO >> Enter a check mark at AT-196, "A/T Does Not Shift: D_3 → D_4" on the AT-45, "DIAGNOSTIC WORKSHEET" , then continue the road test. Go to AT-59, "Cruise Test - Part 3" .

Cruise Test - Part 3

NCS000C1

1. MANUAL MODE FUNCTION

Move to manual mode from “D” position.

Does it switch to manual mode?

YES >> GO TO 2.

NO >> Enter a check mark at AT-205, "Cannot Be Changed to Manual Mode" on the AT-45, "DIAGNOSTIC WORKSHEET" , then continue the road test.

2. CHECK SHIFT DOWN

During manual mode driving, is downshift from M5 → M4 → M3 → M2 → M1 performed?

With CONSULT-II

Read the gear position. Refer to AT-89, "DATA MONITOR MODE" .

Is downshifting correctly performed?

YES >> GO TO 2.

NO >> Enter a check mark at “A/T Does Not Shift” at the corresponding position (5th → 4th, 4th → 3rd, 3rd → 2nd, 2nd → 1st) on the AT-45, "DIAGNOSTIC WORKSHEET" , then continue the road test.

3. CHECK ENGINE BRAKE

Check engine brake.

Does engine braking effectively reduce speed in M1 position?

YES >> 1. Stop the vehicle.

2. Perform self-diagnostics. Refer to AT-86, "SELF-DIAGNOSTIC RESULT MODE" , AT-95, "Diagnostic Procedure Without CONSULT-II" .

NO >> Enter a check mark at AT-211, "Vehicle Does Not Decelerate by Engine Brake" on the AT-45, "DIAGNOSTIC WORKSHEET" , then continue trouble diagnosis.

Vehicle Speed at Which Gear Shifting Occurs

NCS000C2

Throttle position	Vehicle speed km/h (MPH)							
	$D_1 \rightarrow D_2$	$D_2 \rightarrow D_3$	$D_3 \rightarrow D_4$	$D_4 \rightarrow D_5$	$D_5 \rightarrow D_4$	$D_4 \rightarrow D_3$	$D_3 \rightarrow D_2$	$D_2 \rightarrow D_1$
Full throttle	51 - 55 (32 - 34)	83 - 91 (52 - 57)	129 - 139 (80 - 86)	193 - 203 (120 - 126)	189 - 199 (117 - 124)	111- 121 (69 - 75)	67 - 75 (42 - 47)	26 - 30 (16 - 19)
Half throttle	42 - 46 (26 - 29)	68 - 74 (42 - 46)	107 - 115 (67 - 71)	139 - 147 (86 - 91)	107 - 115 (67 - 71)	64 - 72 (40 - 45)	40 - 46 (25 - 29)	9 - 13 (6 - 8)

- At half throttle, the accelerator opening is 4/8 of the full opening.

Vehicle Speed at Which Lock-up Occurs/Releases

NCS000C3

Throttle position	Vehicle speed km/h (MPH)	
	Lock-up ON	Lock-up OFF
Closed throttle	54 - 62 (34 - 39)	51 - 59 (32 - 37)
Half throttle	166 - 174 (103 - 108)	132 - 140 (82 - 87)

- At closed throttle, the accelerator opening is less than 1/8 condition. (Closed throttle position signal: OFF)
- At half throttle, the accelerator opening is 4/8 of the full opening.

Symptom Chart

NCS000C4

- **The diagnostics item numbers show the sequence for inspection. Inspect in order from item 1.**
- **Overhaul and inspect inside the A/T only if A/T fluid condition is NG. Refer to** AT-50, "A/T Fluid Condition Check".

No.	Items	Symptom	Condition	Diagnostic Item	Reference page
1	Shift Shock	Large shock. (“N” → “D” position) Refer to AT-184, "Large Shock (“N” to “D” Position)" .	ON vehicle	1. Engine idle speed	EC-76
				2. Engine speed signal	AT-117
				3. Accelerator pedal position sensor	AT-125
				4. A/T position	AT-215
				5. A/T fluid temperature sensor	AT-128
				6. ATF pressure switch 1 and front brake solenoid valve	AT-164, AT-144
				7. CAN communication line	AT-98
				8. A/T fluid level and state	AT-50
				9. Line pressure test	AT-52
				10. Control valve with TCM	AT-225
			OFF vehicle	11. Forward brake (Parts behind drum support is impossible to perform inspection by disassembly. Refer to AT-17, "Cross-sectional View" .)	AT-263
2		Shock is too large when changing D_1 → D_2 or M_1 → M_2 .	ON vehicle	1. Accelerator pedal position sensor	AT-125
				2. A/T position	AT-215
				3. ATF pressure switch 5 and direct clutch solenoid valve	AT-168, AT-148
				4. CAN communication line	AT-98
				5. Engine speed signal	AT-117
				6. Turbine revolution sensor	AT-110
				7. Vehicle speed sensor A/T and vehicle speed sensor MTR	AT-112, AT-133
				8. A/T fluid level and state	AT-50
				9. Control valve with TCM	AT-225
			OFF vehicle	10. Direct clutch	AT-296
3		Shock is too large when changing D_2 → D_3 or M_2 → M_3 .	ON vehicle	1. Accelerator pedal position sensor	AT-125
				2. A/T position	AT-215
				3. ATF pressure switch 6 and high and low reverse clutch solenoid valve	AT-170, AT-152
				4. CAN communication line	AT-98
				5. Engine speed signal	AT-117
				6. Turbine revolution sensor	AT-110
				7. Vehicle speed sensor A/T and vehicle speed sensor MTR	AT-112, AT-133
				8. A/T fluid level and state	AT-50
				9. Control valve with TCM	AT-225
			OFF vehicle	10. High and low reverse clutch	AT-294

No.	Items	Symptom	Condition	Diagnostic Item	Reference page
4	Shift Shock	Shock is too large when changing D3 → D4 or M3 → M4 .	ON vehicle	1. Accelerator pedal position sensor	AT-125
				2. A/T position	AT-215
				3. ATF pressure switch 3 and input clutch solenoid valve	AT-166, AT-140
				4. CAN communication line	AT-98
				5. Engine speed signal	AT-117
				6. Turbine revolution sensor	AT-110
				7. Vehicle speed sensor A/T and vehicle speed sensor MTR	AT-112, AT-133
				8. A/T fluid level and state	AT-50
				9. Control valve with TCM	AT-225
			OFF vehicle	10. Input clutch	AT-284
5		Shock is too large when changing D4 → D5 or M4 → M5 .	ON vehicle	1. Accelerator pedal position sensor	AT-125
				2. A/T position	AT-215
				3. ATF pressure switch 1 and front brake solenoid valve	AT-164, AT-144
				4. CAN communication line	AT-98
				5. Engine speed signal	AT-117
				6. Turbine revolution sensor	AT-110
				7. Vehicle speed sensor A/T and vehicle speed sensor MTR	AT-112, AT-133
				8. A/T fluid level and state	AT-50
				9. Control valve with TCM	AT-225
			OFF vehicle	10. Front brake (brake band)	AT-263
				11. Input clutch	AT-284
6		Shock is too large for downshift when accelerator pedal is pressed.	ON vehicle	1. Accelerator pedal position sensor	AT-125
				2. A/T position	AT-215
				3. CAN communication line	AT-98
				4. Engine speed signal	AT-117
				5. Turbine revolution sensor	AT-110
				6. Vehicle speed sensor A/T and vehicle speed sensor MTR	AT-112, AT-133
				7. A/T fluid level and state	AT-50
				8. Control valve with TCM	AT-225
			OFF vehicle	9. Front brake (brake band)	AT-263
				10. Input clutch	AT-284
				11. High and low reverse clutch	AT-294
				12. Direct clutch	AT-296

No.	Items	Symptom	Condition	Diagnostic Item	Reference page
7	Shift Shock	Shock is too large for upshift when accelerator pedal is released.	ON vehicle	1. Accelerator pedal position sensor	AT-125
				2. A/T position	AT-215
				3. Engine speed signal	AT-117
				4. CAN communication line	AT-98
				5. Turbine revolution sensor	AT-110
				6. Vehicle speed sensor A/T and vehicle speed sensor MTR	AT-112, AT-133
				7. A/T fluid level and state	AT-50
				8. Control valve with TCM	AT-225
			OFF vehicle	9. Front brake (brake band)	AT-263
				10. Input clutch	AT-284
				11. High and low reverse clutch	AT-294
				12. Direct clutch	AT-296
8		Shock is too large for lock-up.	ON vehicle	1. Accelerator pedal position sensor	AT-125
				2. A/T position	AT-215
				3. Engine speed signal	AT-117
				4. CAN communication line	AT-98
				5. Turbine revolution sensor	AT-110
				6. Vehicle speed sensor A/T and vehicle speed sensor MTR	AT-112, AT-133
				7. Torque converter clutch solenoid valve	AT-119
				8. A/T fluid level and state	AT-50
				9. Control valve with TCM	AT-225
			OFF vehicle	10. Torque converter	AT-263
9		Shock is too large during engine brake.	ON vehicle	1. Accelerator pedal position sensor	AT-125
				2. A/T position	AT-215
				3. CAN communication line	AT-98
				4. A/T fluid level and state	AT-50
				5. Control valve with TCM	AT-225
			OFF vehicle	6. Front brake (brake band)	AT-263
				7. Input clutch	AT-284
				8. High and low reverse clutch	AT-294
				9. Direct clutch	AT-296
10	No Up Shift	Gear does not change from $D_1 \rightarrow D_2$ or from $M_1 \rightarrow M_2$. Refer to AT-192, "A/T Does Not Shift: $D_1 \rightarrow D_2$".	ON vehicle	1. A/T fluid level and state	AT-50
				2. Vehicle speed sensor A/T and vehicle speed sensor MTR	AT-112, AT-133
				3. ATF pressure switch 5 and direct clutch solenoid valve	AT-168, AT-148
				4. Line pressure test	AT-52
				5. CAN communication line	AT-98
				6. Control valve with TCM	AT-225
			OFF vehicle	7. Direct clutch	AT-296

No.	Items	Symptom	Condition	Diagnostic Item	Reference page
11	No Up Shift	Gear does not change from $D_2 \rightarrow D_3$ or from $M_2 \rightarrow M_3$. Refer to AT-194, "A/T Does Not Shift: $D_2 \rightarrow D_3$".	ON vehicle	1. A/T fluid level and state	AT-50
				2. Vehicle speed sensor A/T and vehicle speed sensor MTR	AT-112, AT-133
				3. ATF pressure switch 6 and high and low reverse clutch solenoid valve	AT-170, AT-152
				4. Line pressure test	AT-52
				5. CAN communication line	AT-98
				6. Control valve with TCM	AT-225
			OFF vehicle	7. High and low reverse clutch	AT-294
12		Gear does not change from $D_3 \rightarrow D_4$ or from $M_3 \rightarrow M_4$. Refer to AT-196, "A/T Does Not Shift: $D_3 \rightarrow D_4$".	ON vehicle	1. A/T fluid level and state	AT-50
				2. Vehicle speed sensor A/T and vehicle speed sensor MTR	AT-112, AT-133
				3. ATF pressure switch 3 and input clutch solenoid valve	AT-166, AT-140
				4. ATF pressure switch 1 and front brake solenoid valve	AT-164, AT-144
				5. Line pressure test	AT-52
				6. CAN communication line	AT-98
				7. Control valve with TCM	AT-225
			OFF vehicle	8. Input clutch	AT-284
13		Gear does not change from $D_4 \rightarrow D_5$ or from $M_4 \rightarrow M_5$. Refer to AT-198, "A/T Does Not Shift: $D_4 \rightarrow D_5$".	ON vehicle	1. A/T fluid level and state	AT-50
				2. Vehicle speed sensor A/T and vehicle speed sensor MTR	AT-112, AT-133
				3. ATF pressure switch 1 and front brake solenoid valve	AT-164, AT-144
				4. ATF pressure switch 5 and direct clutch solenoid valve	AT-168, AT-148
				5. Turbine revolution sensor	AT-110
				6. Line pressure test	AT-52
				7. CAN communication line	AT-98
				8. Control valve with TCM	AT-225
			OFF vehicle	9. Front brake (brake band)	AT-263
				10. Input clutch	AT-284

No.	Items	Symptom	Condition	Diagnostic Item	Reference page
14	No Down Shift	In “D” or “M” position, does not downshift to 4th gear.	ON vehicle	1. A/T fluid level and state	AT-50
				2. Vehicle speed sensor A/T and vehicle speed sensor MTR	AT-112, AT-133
				3. ATF pressure switch 1 and front brake solenoid valve	AT-164, AT-144
				4. ATF pressure switch 5 and direct clutch solenoid valve	AT-168, AT-148
				5. CAN communication line	AT-98
				6. Line pressure test	AT-52
				7. Control valve with TCM	AT-225
			OFF vehicle	8. Front brake (brake band)	AT-263
				9. Input clutch	AT-284
15		In “D” or “M” position, does not downshift to 3rd gear.	ON vehicle	1. A/T fluid level and state	AT-50
				2. Vehicle speed sensor A/T and vehicle speed sensor MTR	AT-112, AT-133
				3. ATF pressure switch 3 and input clutch solenoid valve	AT-166, AT-140
				4. ATF pressure switch 1 and front brake solenoid valve	AT-164, AT-144
				5. CAN communication line	AT-98
				6. Line pressure test	AT-52
				7. Control valve with TCM	AT-225
			OFF vehicle	8. Input clutch	AT-284
16		In “D” or “M” position, does not downshift to 2nd gear.	ON vehicle	1. A/T fluid level and state	AT-50
				2. Vehicle speed sensor A/T and vehicle speed sensor MTR	AT-112, AT-133
				3. ATF pressure switch 6 and high and low reverse clutch solenoid valve	AT-170, AT-152
				4. CAN communication line	AT-98
				5. Line pressure test	AT-52
				6. Control valve with TCM	AT-225
			OFF vehicle	7. High and low reverse clutch	AT-294
17		In “D” or “M” position, does not downshift to 1st gear.	ON vehicle	1. A/T fluid level and state	AT-50
				2. Vehicle speed sensor A/T and vehicle speed sensor MTR	AT-112, AT-133
				3. ATF pressure switch 5 and direct clutch solenoid valve	AT-168, AT-148
				4. CAN communication line	AT-98
				5. Line pressure test	AT-52
				6. Control valve with TCM	AT-225
			OFF vehicle	7. Direct clutch	AT-296

No.	Items	Symptom	Condition	Diagnostic Item	Reference page
18	Slips/Will Not Engage	When “D” or “M” position, remains in 1st gear.	ON vehicle	1. A/T fluid level and state	AT-50
				2. Vehicle speed sensor A/T and vehicle speed sensor MTR	AT-112, AT-133
				3. Direct clutch solenoid valve	AT-148
				4. Line pressure test	AT-52
				5. CAN communication line	AT-98
				6. Control valve with TCM	AT-225
			OFF vehicle	7. 3rd one-way clutch	AT-282
				8. 1st one-way clutch	AT-289
				9. Gear system	AT-255
				10. Reverse brake	AT-263
				11. Forward one-way clutch (Parts behind drum support is impossible to perform inspection by disassembly. Refer to AT-17, "Cross-sectional View" .)	AT-263
				12. Forward brake (Parts behind drum support is impossible to perform inspection by disassembly. Refer to AT-17, "Cross-sectional View" .)	AT-263
19		When “D” or “M” position, remains in 2nd gear.	ON vehicle	1. A/T fluid level and state	AT-50
				2. Vehicle speed sensor A/T and vehicle speed sensor MTR	AT-112, AT-133
				3. Low coast brake solenoid valve	AT-156
				4. Line pressure test	AT-52
				5. CAN communication line	AT-98
				6. Control valve with TCM	AT-225
			OFF vehicle	7. 3rd one-way clutch	AT-282
				8. Gear system	AT-255
				9. Direct clutch	AT-296
				10. Forward brake (Parts behind drum support is impossible to perform inspection by disassembly. Refer to AT-17, "Cross-sectional View" .)	AT-263
20		When “D” or “M” position, remains in 3rd gear.	ON vehicle	1. A/T fluid level and state	AT-50
				2. Vehicle speed sensor A/T and vehicle speed sensor MTR	AT-112, AT-133
				3. Line pressure test	AT-52
				4. CAN communication line	AT-98
				5. Control valve with TCM	AT-225
			OFF vehicle	6. 3rd one-way clutch	AT-282
				7. Gear system	AT-255
				8. High and low reverse clutch	AT-294
				9. Forward one-way clutch (Parts behind drum support is impossible to perform inspection by disassembly. Refer to AT-17, "Cross-sectional View" .)	AT-263
				10. Forward brake (Parts behind drum support is impossible to perform inspection by disassembly. Refer to AT-17, "Cross-sectional View" .)	AT-263

No.	Items	Symptom	Condition	Diagnostic Item	Reference page
21	Slips/Will Not Engage	When “D” or “M” position, remains in 4th gear.	ON vehicle	1. A/T fluid level and state	AT-50
				2. Vehicle speed sensor A/T and vehicle speed sensor MTR	AT-112, AT-133
				3. ATF pressure switch 3 and input clutch solenoid valve	AT-166, AT-140
				4. ATF pressure switch 5 and direct clutch solenoid valve	AT-168, AT-148
				5. ATF pressure switch 6 and high and low reverse clutch solenoid valve	AT-170, AT-152
				6. Low coast brake solenoid valve	AT-156
				7. Front brake solenoid valve	AT-263
				8. Line pressure test	AT-52
				9. CAN communication line	AT-98
				10. Control valve with TCM	AT-225
			OFF vehicle	11. Input clutch	AT-284
				12. Gear system	AT-255
				13. High and low reverse clutch	AT-294
				14. Direct clutch	AT-296
22		When “D” or “M” position, remains in 5th gear.	ON vehicle	1. A/T fluid level and state	AT-50
				2. Vehicle speed sensor A/T and vehicle speed sensor MTR	AT-112, AT-133
				3. ATF pressure switch 1 and front brake solenoid valve	AT-164, AT-144
				4. Line pressure test	AT-52
				5. CAN communication line	AT-98
				6. Control valve with TCM	AT-225
			OFF vehicle	7. Front brake (brake band)	AT-263
				8. Input clutch	AT-284
				9. Gear system	AT-255
				10. High and low reverse clutch	AT-294

No.	Items	Symptom	Condition	Diagnostic Item	Reference page
23	Slips/Will Not Engage	Vehicle cannot be started from D_1 . Refer to AT-190, "Vehicle Cannot Be Started From D_1" .	ON vehicle	1. A/T fluid level and state	AT-50
				2. Accelerator pedal position sensor	AT-125
				3. Line pressure test	AT-52
				4. CAN communication line	AT-98
				5. Control valve with TCM	AT-225
			OFF vehicle	6. Torque converter	AT-263
				7. Oil pump assembly	AT-279
				8. 3rd one-way clutch	AT-282
				9. 1st one-way clutch	AT-289
				10. Gear system	AT-255
				11. Reverse brake	AT-263
				12. Forward one-way clutch (Parts behind drum support is impossible to perform inspection by disassembly. Refer to AT-17, "Cross-sectional View" .)	AT-263
				13. Forward brake (Parts behind drum support is impossible to perform inspection by disassembly. Refer to AT-17, "Cross-sectional View" .)	AT-263
24		Does not lock-up. Refer to AT-200, "A/T Does Not Perform Lock-up" .	ON vehicle	1. A/T fluid level and state	AT-50
				2. Line pressure test	AT-52
				3. Engine speed signal	AT-117
				4. Turbine revolution sensor	AT-110
				5. Torque converter clutch solenoid valve	AT-119
				6. CAN communication line	AT-98
				7. Control valve with TCM	AT-225
			OFF vehicle	8. Torque converter	AT-263
				9. Oil pump assembly	AT-279
25		Does not hold lock-up condition. Refer to AT-201, "A/T Does Not Hold Lock-up Condition" .	ON vehicle	1. A/T fluid level and state	AT-50
				2. Line pressure test	AT-52
				3. Engine speed signal	AT-117
				4. Turbine revolution sensor	AT-110
				5. Torque converter clutch solenoid valve	AT-119
				6. CAN communication line	AT-98
				7. Control valve with TCM	AT-225
			OFF vehicle	8. Torque converter	AT-263
				9. Oil pump assembly	AT-279

No.	Items	Symptom	Condition	Diagnostic Item	Reference page
26	Slips/Will Not Engage	Lock-up is not released. Refer toAT-203, "Lock-up Is Not Released" .	ON vehicle	1. A/T fluid level and state	AT-50
				2. Line pressure test	AT-52
				3. Engine speed signal	AT-117
				4. Turbine revolution sensor	AT-110
				5. Torque converter clutch solenoid valve	AT-119
				6. CAN communication line	AT-98
				7. Control valve with TCM	AT-225
			OFF vehicle	8. Torque converter	AT-263
				9. Oil pump assembly	AT-279
27		No shock at all or the clutch slips when vehicle changes speed $D_1 \rightarrow D_2$ or $M_1 \rightarrow M_2$.	ON vehicle	1. A/T fluid level and state	AT-50
				2. Vehicle speed sensor A/T and vehicle speed sensor MTR	AT-112, AT-110
				3. ATF pressure switch 5 and direct clutch solenoid valve	AT-168, AT-148
				4. CAN communication line	AT-98
				5. Line pressure test	AT-52
				6. Control valve with TCM	AT-225
			OFF vehicle	7. Torque converter	AT-263
				8. Oil pump assembly	AT-279
				9. 3rd one-way clutch	AT-282
				10. Gear system	AT-255
				11. Direct clutch	AT-296
				12. Forward brake (Parts behind drum support is impossible to perform inspection by disassembly. Refer to AT-17, "Cross-sectional View" .)	AT-263
28		No shock at all or the clutch slips when vehicle changes speed $D_2 \rightarrow D_3$ or $M_2 \rightarrow M_3$.	ON vehicle	1. A/T fluid level and state	AT-50
				2. Vehicle speed sensor A/T and vehicle speed sensor MTR	AT-112, AT-133
				3. ATF pressure switch 6 and high and low reverse clutch solenoid valve	AT-170, AT-152
				4. CAN communication line	AT-98
				5. Line pressure test	AT-52
				6. Control valve with TCM	AT-225
			OFF vehicle	7. Torque converter	AT-263
				8. Oil pump assembly	AT-279
				9. 3rd one-way clutch	AT-282
				10. Gear system	AT-255
				11. High and low reverse clutch	AT-294
				12. Forward one- way clutch (Parts behind drum support is impossible to perform inspection by disassembly. Refer to AT-17, "Cross-sectional View" .)	AT-263
				13. Forward brake (Parts behind drum support is impossible to perform inspection by disassembly. Refer to AT-17, "Cross-sectional View" .)	AT-263

No.	Items	Symptom	Condition	Diagnostic Item	Reference page
29	Slips/Will Not Engage	No shock at all or the clutch slips when vehicle changes speed $D_3 \rightarrow D_4$ or $M_3 \rightarrow M_4$.	ON vehicle	1. A/T fluid level and state	AT-50
				2. Vehicle speed sensor A/T and vehicle speed sensor MTR	AT-112, AT-133
				3. ATF pressure switch 3 and input clutch solenoid valve	AT-166, AT-140
				4. ATF pressure switch 1 and front brake solenoid valve	AT-164, AT-144
				5. CAN communication line	AT-98
				6. Line pressure test	AT-52
				7. Control valve with TCM	AT-225
			OFF vehicle	8. Torque converter	AT-263
				9. Oil pump assembly	AT-279
				10. Input clutch	AT-284
				11. Gear system	AT-255
				12. High and low reverse clutch	AT-294
				13. Direct clutch	AT-296
30		No shock at all or the clutch slips when vehicle changes speed $D_4 \rightarrow D_5$ or $M_4 \rightarrow M_5$.	ON vehicle	1. A/T fluid level and state	AT-50
				2. Vehicle speed sensor A/T and vehicle speed sensor MTR	AT-112, AT-133
				3. ATF pressure switch 1 and front brake solenoid valve	AT-164, AT-144
				4. ATF pressure switch 5 and direct clutch solenoid valve	AT-168, AT-148
				5. CAN communication line	AT-98
				6. Line pressure test	AT-52
				7. Control valve with TCM	AT-225
			OFF vehicle	8. Torque converter	AT-263
				9. Oil pump assembly	AT-279
				10. Front brake (brake band)	AT-263
				11. Input clutch	AT-284
				12. Gear system	AT-255
				13. High and low reverse clutch	AT-294

No.	Items	Symptom	Condition	Diagnostic Item	Reference page
31	Slips/Will Not Engage	When you press the accelerator pedal and shift speed D5 → D4 or M5 → M4 the engine idles or the A/T slips.	ON vehicle	1. A/T fluid level and state	AT-50
				2. Vehicle speed sensor A/T and vehicle speed sensor MTR	AT-112, AT-133
				3. ATF pressure switch 1 and front brake solenoid valve	AT-164, AT-144
				4. ATF pressure switch 5 and direct clutch solenoid valve	AT-168, AT-148
				5. CAN communication line	AT-98
				6. Line pressure test	AT-52
				7. Control valve with TCM	AT-225
			OFF vehicle	8. Torque converter	AT-263
				9. Oil pump assembly	AT-279
				10. Input clutch	AT-284
				11. Gear system	AT-255
				12. High and low reverse clutch	AT-294
				13. Direct clutch	AT-296
32		When you press the accelerator pedal and shift speed D4 → D3 or M4 → M3 the engine idles or the A/T slips.	ON vehicle	1. A/T fluid level and state	AT-50
				2. Vehicle speed sensor A/T and vehicle speed sensor MTR	AT-112, AT-133
				3. ATF pressure switch 3 and input clutch solenoid valve	AT-166, AT-140
				4. ATF pressure switch 1 and front brake solenoid valve	AT-164, AT-144
				5. CAN communication line	AT-98
				6. Line pressure test	AT-52
				7. Control valve with TCM	AT-225
			OFF vehicle	8. Torque converter	AT-263
				9. Oil pump assembly	AT-279
				10. 3rd one-way clutch	AT-282
				11. Gear system	AT-255
				12. High and low reverse clutch	AT-294
				13. Forward one- way clutch (Parts behind drum support is impossible to perform inspection by disassembly. Refer to AT-17, "Cross-sectional View" .)	AT-263
				14. Forward brake (Parts behind drum support is impossible to perform inspection by disassembly. Refer to AT-17, "Cross-sectional View" .)	AT-263

No.	Items	Symptom	Condition	Diagnostic Item	Reference page
33	Slips/Will Not Engage	When you press the accelerator pedal and shift speed D3 → D2 or M3 → M2 the engine idles or the A/T slips.	ON vehicle	1. A/T fluid level and state	AT-50
				2. Vehicle speed sensor A/T and vehicle speed sensor MTR	AT-112, AT-133
				3. ATF pressure switch 6 and high and low reverse clutch solenoid valve	AT-170, AT-152
				4. ATF pressure switch 5 and direct clutch solenoid valve	AT-168, AT-148
				5. CAN communication line	AT-98
				6. Line pressure test	AT-52
				7. Control valve with TCM	AT-225
			OFF vehicle	8. Torque converter	AT-263
				9. Oil pump assembly	AT-279
				10. 3rd one-way clutch	AT-282
				11. Gear system	AT-255
				12. Direct clutch	AT-296
				13. Forward brake (Parts behind drum support is impossible to perform inspection by disassembly. Refer to AT-17, "Cross-sectional View" .)	AT-263
34		When you press the accelerator pedal and shift speed D2 → D1 or M2 → M1 the engine idles or the A/T slips.	ON vehicle	1. A/T fluid level and state	AT-50
				2. Vehicle speed sensor A/T and vehicle speed sensor MTR	AT-112, AT-133
				3. ATF pressure switch 5 and direct clutch solenoid valve	AT-168, AT-148
				4. CAN communication line	AT-98
				5. Line pressure test	AT-52
				6. Control valve with TCM	AT-225
			OFF vehicle	7. Torque converter	AT-263
				8. Oil pump assembly	AT-279
				9. 3rd one-way clutch	AT-282
				10. 1st one-way clutch	AT-289
				11. Gear system	AT-255
				12. Reverse brake	AT-263
				13. Forward one- way clutch (Parts behind drum support is impossible to perform inspection by disassembly. Refer to AT-17, "Cross-sectional View" .)	AT-263
				14. Forward brake (Parts behind drum support is impossible to perform inspection by disassembly. Refer to AT-17, "Cross-sectional View" .)	AT-263

No.	Items	Symptom	Condition	Diagnostic Item	Reference page
35	Slips/Will Not Engage	With selector lever in “D” position, acceleration is extremely poor.	ON vehicle	1. A/T fluid level and state	AT-50
				2. Line pressure test	AT-52
				3. Accelerator pedal position sensor	AT-125
				4. CAN communication line	AT-98
				5. PNP switch	AT-106
				6. A/T position	AT-215
				7. Control valve with TCM	AT-225
			OFF vehicle	8. Torque converter	AT-263
				9. Oil pump assembly	AT-279
				10. 1st one-way clutch	AT-289
				11. Gear system	AT-255
				12. Reverse brake	AT-263
				13. Forward one- way clutch (Parts behind drum support is impossible to perform inspection by disassembly. Refer to AT-17, "Cross-sectional View" .)	AT-263
				14. Forward brake (Parts behind drum support is impossible to perform inspection by disassembly. Refer to AT-17, "Cross-sectional View" .)	AT-263
36		With selector lever in “R” position, acceleration is extremely poor.	ON vehicle	1. A/T fluid level and state	AT-50
				2. Line pressure test	AT-52
				3. Accelerator pedal position sensor	AT-125
				4. ATF pressure switch 6 and high and low reverse clutch solenoid valve	AT-170, AT-152
				5. CAN communication line	AT-98
				6. PNP switch	AT-106
				7. A/T position	AT-215
				8. Control valve with TCM	AT-225
			OFF vehicle	9. Gear system	AT-255
				10. Output shaft	AT-263
				11. Reverse brake	AT-263

No.	Items	Symptom	Condition	Diagnostic Item	Reference page
37	Slips/Will Not Engage	While starting off by accelerating in 1st, engine races or slip-page occurs.	ON vehicle	1. A/T fluid level and state	AT-50
				2. Line pressure test	AT-52
				3. Accelerator pedal position sensor	AT-125
				4. CAN communication line	AT-98
				5. Control valve with TCM	AT-225
			OFF vehicle	6. Torque converter	AT-263
				7. Oil pump assembly	AT-279
				8. 3rd one-way clutch	AT-282
				9. 1st one-way clutch	AT-289
				10. Gear system	AT-255
				11. Reverse brake	AT-263
				12. Forward one- way clutch (Parts behind drum support is impossible to perform inspection by disassembly. Refer to AT-17, "Cross-sectional View" .)	AT-263
				13. Forward brake (Parts behind drum support is impossible to perform inspection by disassembly. Refer to AT-17, "Cross-sectional View" .)	AT-263
38		While accelerating in 2nd, engine races or slippage occurs.	ON vehicle	1. A/T fluid level and state	AT-50
				2. Line pressure test	AT-52
				3. Accelerator pedal position sensor	AT-125
				4. CAN communication line	AT-98
				5. ATF pressure switch 5 and direct clutch solenoid valve	AT-168, AT-148
				6. Control valve with TCM	AT-225
			OFF vehicle	7. Torque converter	AT-263
				8. Oil pump assembly	AT-279
				9. 3rd one-way clutch	AT-282
				10. Gear system	AT-255
				11. Direct clutch	AT-296
				12. Forward brake (Parts behind drum support is impossible to perform inspection by disassembly. Refer to AT-17, "Cross-sectional View" .)	AT-263

No.	Items	Symptom	Condition	Diagnostic Item	Reference page
39	Slips/Will Not Engage	While accelerating in 3rd, engine races or slippage occurs.	ON vehicle	1. A/T fluid level and state	AT-50
				2. Line pressure test	AT-52
				3. Accelerator pedal position sensor	AT-125
				4. CAN communication line	AT-98
				5. ATF pressure switch 6 and high and low reverse clutch solenoid valve	AT-170, AT-152
				6. Control valve with TCM	AT-225
			OFF vehicle	7. Torque converter	AT-263
				8. Oil pump assembly	AT-279
				9. 3rd one-way clutch	AT-282
				10. Gear system	AT-255
				11. High and low reverse clutch	AT-294
				12. Forward one- way clutch (Parts behind drum support is impossible to perform inspection by disassembly. Refer to AT-17, "Cross-sectional View" .)	AT-263
				13. Forward brake (Parts behind drum support is impossible to perform inspection by disassembly. Refer to AT-17, "Cross-sectional View" .)	AT-263
40		While accelerating in 4th, engine races or slippage occurs.	ON vehicle	1. A/T fluid level and state	AT-50
				2. Line pressure test	AT-52
				3. Accelerator pedal position sensor	AT-125
				4. CAN communication line	AT-98
				5. ATF pressure switch 3 and input clutch solenoid valve	AT-166, AT-140
				6. Control valve with TCM	AT-225
			OFF vehicle	7. Torque converter	AT-263
				8. Oil pump assembly	AT-279
				9. Input clutch	AT-284
				10. Gear system	AT-255
				11. High and low reverse clutch	AT-294
				12. Direct clutch	AT-296

No.	Items	Symptom	Condition	Diagnostic Item	Reference page
41	Slips/Will Not Engage	While accelerating in 5th, engine races or slippage occurs.	ON vehicle	1. A/T fluid level and state	AT-50
				2. Line pressure test	AT-52
				3. Accelerator pedal position sensor	AT-125
				4. CAN communication line	AT-98
				5. ATF pressure switch 1 and front brake solenoid valve	AT-164, AT-144
				6. Control valve with TCM	AT-225
			OFF vehicle	7. Torque converter	AT-263
				8. Oil pump assembly	AT-279
				9. Front brake (brake band)	AT-263
				10. Input clutch	AT-284
				11. Gear system	AT-255
				12. High and low reverse clutch	AT-294
42		Slips at lock-up.	ON vehicle	1. A/T fluid level and state	AT-50
				2. Line pressure test	AT-52
				3. Engine speed signal	AT-117
				4. Turbine revolution sensor	AT-110
				5. Torque converter clutch solenoid valve	AT-119
				6. CAN communication line	AT-98
				7. Control valve with TCM	AT-225
			OFF vehicle	8. Torque converter	AT-263
				9. Oil pump assembly	AT-279
43		No creep at all. Refer to AT-186, "Vehicle Does Not Creep Backward in "R" Position" , AT-188, "Vehicle Does Not Creep Forward in "D" Position"	ON vehicle	1. A/T fluid level and state	AT-50
				2. Line pressure test	AT-52
				3. Accelerator pedal position sensor	AT-125
				4. ATF pressure switch 5 and direct clutch solenoid valve	AT-168, AT-148
				5. PNP switch	AT-106
				6. CAN communication line	AT-98
				7. A/T position	AT-215
				8. Control valve with TCM	AT-225
			OFF vehicle	9. Torque converter	AT-263
				10. Oil pump assembly	AT-279
				11. 1st one-way clutch	AT-289
				12. Gear system	AT-255
				13. Reverse brake	AT-263
				14. Direct clutch	AT-296
				15. Forward one- way clutch (Parts behind drum support is impossible to perform inspection by disassembly. Refer to AT-17, "Cross-sectional View" .)	AT-263
				16. Forward brake (Parts behind drum support is impossible to perform inspection by disassembly. Refer to AT-17, "Cross-sectional View" .)	AT-263

No.	Items	Symptom	Condition	Diagnostic Item	Reference page
44	Slips/Will Not Engage	Vehicle cannot run in all positions.	ON vehicle	1. A/T fluid level and state	AT-50
				2. Line pressure test	AT-52
				3. PNP switch	AT-106
				4. A/T position	AT-215
				5. Control valve with TCM	AT-225
			OFF vehicle	6. Oil pump assembly	AT-279
				7. Gear system	AT-255
				8. Output shaft	AT-263
45		With selector lever in “D” position, driving is not possible.	ON vehicle	1. A/T fluid level and state	AT-50
				2. Line pressure test	AT-52
				3. PNP switch	AT-106
				4. A/T position	AT-215
				5. Control valve with TCM	AT-225
			OFF vehicle	6. Torque converter	AT-263
				7. Oil pump assembly	AT-279
				8. 1st one-way clutch	AT-289
				9. Gear system	AT-255
				10. Reverse brake	AT-263
				11. Forward one- way clutch (Parts behind drum support is impossible to perform inspection by disassembly. Refer to AT-17, "Cross-sectional View" .)	AT-263
				12. Forward brake (Parts behind drum support is impossible to perform inspection by disassembly. Refer to AT-17, "Cross-sectional View" .)	AT-263
46		With selector lever in “R” position, driving is not possible.	ON vehicle	1. A/T fluid level and state	AT-50
				2. Line pressure test	AT-52
				3. PNP switch	AT-106
				4. A/T position	AT-215
				5. Control valve with TCM	AT-225
			OFF vehicle	6. Gear system	AT-255
				7. Output shaft	AT-263
				8. Reverse brake	AT-263
47	Does Not Change	Does not change M5 → M4. Refer to AT-205, "A/T Does Not Shift: 5th Gear → 4th Gear" .	ON vehicle	1. PNP switch	AT-106
				2. A/T fluid level and state	AT-50
				3. A/T position	AT-215
				4. Manual mode switch	AT-160
				5. ATF pressure switch 1	AT-164
				6. CAN communication line	AT-98
				7. Control valve with TCM	AT-225
			OFF vehicle	8. Front brake (brake band)	AT-263

No.	Items	Symptom	Condition	Diagnostic Item	Reference page
48	Does Not Change	Does not change M4 → M3. Refer to AT-206, "A/T Does Not Shift: 4th Gear → 3rd Gear" .	ON vehicle	1. PNP switch	AT-106
				2. A/T fluid level and state	AT-50
				3. A/T position	AT-215
				4. Manual mode switch	AT-160
				5. ATF pressure switch 1 and ATF pressure switch 3	AT-164, AT-166
				6. CAN communication line	AT-98
				7. Control valve with TCM	AT-225
			OFF vehicle	8. Front brake (brake band)	AT-263
				9. Input clutch	AT-284
49		Does not change M3 → M2. Refer to AT-208, "A/T Does Not Shift: 3rd Gear → 2nd Gear" .	ON vehicle	1. PNP switch	AT-106
				2. A/T fluid level and state	AT-50
				3. A/T position	AT-215
				4. Manual mode switch	AT-160
				5. ATF pressure switch 6	AT-170
				6. CAN communication line	AT-98
				7. Control valve with TCM	AT-225
			OFF vehicle	8. Front brake (brake band)	AT-263
				9. Input clutch	AT-284
				10. High and low reverse clutch	AT-294
50		Does not change M2 → M1. Refer to AT-209, "A/T Does Not Shift: 2nd Gear → 1st Gear" .	ON vehicle	1. PNP switch	AT-106
				2. A/T fluid level and state	AT-50
				3. A/T position	AT-215
				4. Manual mode switch	AT-160
				5. ATF pressure switch 5	AT-168
				6. CAN communication line	AT-98
				7. Control valve with TCM	AT-225
			OFF vehicle	8. Input clutch	AT-284
				9. High and low reverse clutch	AT-294
				10. Direct clutch	AT-296
51		Can not be changed to manual mode. Refer to AT-205, "Cannot Be Changed to Manual Mode" .	ON vehicle	1. Manual mode switch	AT-160
				2. Turbine revolution sensor	AT-110
				3. CAN communication line	AT-98
52	Others	Shift point is high in “D” position.	ON vehicle	1. Vehicle speed sensor A/T and vehicle speed sensor MTR	AT-112, AT-133
				2. Accelerator pedal position sensor	AT-125
				3. CAN communication line	AT-98
				4. A/T fluid temperature sensor	AT-128
				5. Control valve with TCM	AT-225

No.	Items	Symptom	Condition	Diagnostic Item	Reference page
53	Others	Shift point is low in “D” position.	ON vehicle	1. Vehicle speed sensor A/T and vehicle speed sensor MTR	AT-112, AT-133
				2. Accelerator pedal position sensor	AT-125
				3. CAN communication line	AT-98
				4. Control valve with TCM	AT-225
54		Judder occurs during lock-up.	ON vehicle	1. A/T fluid level and state	AT-50
				2. Engine speed signal	AT-117
				3. Turbine revolution sensor	AT-110
				4. Vehicle speed sensor A/T and vehicle speed sensor MTR	AT-112, AT-133
				5. Accelerator pedal position sensor	AT-125
				6. CAN communication line	AT-98
				7. Torque converter clutch solenoid valve	AT-119
				8. Control valve with TCM	AT-225
			OFF vehicle	9. Torque converter	AT-263
55		Strange noise in “R” position.	ON vehicle	1. A/T fluid level and state	AT-50
				2. Engine speed signal	AT-117
				3. CAN communication line	AT-98
				4. Control valve with TCM	AT-225
			OFF vehicle	5. Torque converter	AT-263
				6. Oil pump assembly	AT-279
				7. Gear system	AT-255
				8. High and low reverse clutch	AT-294
				9. Reverse brake	AT-263
56		Strange noise in “N” position.	ON vehicle	1. A/T fluid level and state	AT-50
				2. Engine speed signal	AT-117
				3. CAN communication line	AT-98
				4. Control valve with TCM	AT-225
			OFF vehicle	5. Torque converter	AT-263
				6. Oil pump assembly	AT-279
				7. Gear system	AT-255
57		Strange noise in “D” position.	ON vehicle	1. A/T fluid level and state	AT-50
				2. Engine speed signal	AT-117
				3. CAN communication line	AT-98
				4. Control valve with TCM	AT-225
			OFF vehicle	5. Torque converter	AT-263
				6. Oil pump assembly	AT-279
				7. Gear system	AT-255
				8. Forward brake (Parts behind drum support is impossible to perform inspection by disassembly. Refer to AT-17, "Cross-sectional View" .)	AT-263

No.	Items	Symptom	Condition	Diagnostic Item	Reference page
58	Others	Vehicle does not decelerate by engine brake. Refer to AT-211, "Vehicle Does Not Decelerate by Engine Brake" .	ON vehicle	1. PNP switch	AT-106
				2. A/T fluid level and state	AT-50
				3. A/T position	AT-215
				4. Manual mode switch	AT-160
				5. ATF pressure switch 5	AT-168
				6. CAN communication line	AT-98
				7. Control valve with TCM	AT-225
			OFF vehicle	8. Input clutch	AT-284
				9. High and low reverse clutch	AT-294
				10. Direct clutch	AT-296
59		Engine brake does not work M5 → M4.	ON vehicle	1. PNP switch	AT-106
				2. A/T fluid level and state	AT-50
				3. A/T position	AT-215
				4. Manual mode switch	AT-160
				5. ATF pressure switch 1	AT-164
				6. CAN communication line	AT-98
				7. Control valve with TCM	AT-225
			OFF vehicle	8. Front brake (brake band)	AT-263
60		Engine brake does not work M4 → M3.	ON vehicle	1. PNP switch	AT-106
				2. A/T fluid level and state	AT-50
				3. A/T position	AT-215
				4. Manual mode switch	AT-160
				5. ATF pressure switch 1 and ATF pressure switch 3	AT-164, AT-166
				6. CAN communication line	AT-98
				7. Control valve with TCM	AT-225
			OFF vehicle	8. Front brake (brake band)	AT-263
				9. Input clutch	AT-284
61		Engine brake does not work M3 → M2.	ON vehicle	1. PNP switch	AT-106
				2. A/T fluid level and state	AT-50
				3. A/T position	AT-215
				4. Manual mode switch	AT-160
				5. ATF pressure switch 6	AT-170
				6. CAN communication line	AT-98
				7. Control valve with TCM	AT-225
			OFF vehicle	8. Front brake (brake band)	AT-263
				9. Input clutch	AT-284
				10. High and low reverse clutch	AT-294

No.	Items	Symptom	Condition	Diagnostic Item	Reference page
62	Others	Engine brake does not work M2 → M1.	ON vehicle	1. PNP switch	AT-106
				2. A/T fluid level and state	AT-50
				3. A/T position	AT-215
				4. Manual mode switch	AT-160
				5. ATF pressure switch 5	AT-168
				6. CAN communication line	AT-98
				7. Control valve with TCM	AT-225
			OFF vehicle	8. Input clutch	AT-284
				9. High and low reverse clutch	AT-294
				10. Direct clutch	AT-296
63		Maximum speed low.	ON vehicle	1. A/T fluid level and state	AT-50
				2. Line pressure test	AT-52
				3. Accelerator pedal position sensor	AT-125
				4. CAN communication line	AT-98
				5. Direct clutch solenoid valve	AT-148
				6. Control valve with TCM	AT-225
			OFF vehicle	7. Torque converter	AT-263
				8. Oil pump assembly	AT-279
				9. Input clutch	AT-284
				10. Gear system	AT-255
				11. High and low reverse clutch	AT-294
				12. Direct clutch	AT-296
				13. Forward one- way clutch (Parts behind drum support is impossible to perform inspection by disassembly. Refer to AT-17, "Cross-sectional View" .)	AT-263
				14. Forward brake (Parts behind drum support is impossible to perform inspection by disassembly. Refer to AT-17, "Cross-sectional View" .)	AT-263
64		Extremely large creep.	ON vehicle	1. Engine idle speed	EC-76
				2. CAN communication line	AT-98
				3. ATF pressure switch 5	AT-168
			OFF vehicle	4. Torque converter	AT-263
65		With selector lever in “P” position, vehicle does not enter parking condition or, with selector lever in another position, parking condition is not cancelled.	ON vehicle	1. PNP switch	AT-106
				2. A/T position	AT-215
				3. Parking components	AT-236

No.	Items	Symptom	Condition	Diagnostic Item	Reference page
66	Others	Vehicle runs with A/T in “P” position.	ON vehicle	1. PNP switch	AT-106
				2. A/T fluid level and state	AT-50
				3. A/T position	AT-215
				4. Control valve with TCM	AT-225
				5. Parking components	AT-236
			OFF vehicle	6. Gear system	AT-255
67		Vehicle runs with A/T in “N” position. Refer to AT-183, "In “N” Position, Vehicle Moves" .	ON vehicle	1. PNP switch	AT-106
				2. A/T fluid level and state	AT-50
				3. A/T position	AT-215
				4. Control valve with TCM	AT-225
			OFF vehicle	5. Input clutch	AT-284
				6. Gear system	AT-255
				7. Direct clutch	AT-296
				8. Reverse brake	AT-263
				9. Forward one- way clutch (Parts behind drum support is impossible to perform inspection by disassembly. Refer to AT-17, "Cross-sectional View" .)	AT-263
				10. Low coast brake (Parts behind drum support is impossible to perform inspection by disassembly. Refer to AT-17, "Cross-sectional View" .)	AT-263
68		Engine does not start in “N” or “P” position. Refer to AT-181, "Engine Cannot Be Started in “P” or “N” Position" .	ON vehicle	1. Ignition switch and starter	PG-3, SC-10
				2. A/T position	AT-215
				3. PNP switch	AT-106
69		Engine starts in positions other than “N” or “P”.	ON vehicle	1. Ignition switch and starter	PG-3, SC-10
				2. A/T position	AT-215
				3. PNP switch	AT-106
70		Engine stall.	ON vehicle	1. A/T fluid level and state	AT-50
				2. Engine speed signal	AT-117
				3. Turbine revolution sensor	AT-110
				4. Torque converter clutch solenoid valve	AT-119
				5. CAN communication line	AT-98
				6. Control valve with TCM	AT-225
			OFF vehicle	7. Torque converter	AT-263

No.	Items	Symptom	Condition	Diagnostic Item	Reference page
71	Others	Engine stalls when select lever shifted “N” → “D”, “R”.	ON vehicle	1. A/T fluid level and state	AT-50
				2. Engine speed signal	AT-117
				3. Turbine revolution sensor	AT-110
				4. Torque converter clutch solenoid valve	AT-119
				5. CAN communication line	AT-98
				6. Control valve with TCM	AT-225
			OFF vehicle	7. Torque converter	AT-263
72		Engine speed does not return to idle. Refer to AT-203, "Engine Speed Does Not Return to Idle" .	ON vehicle	1. A/T fluid level and state	AT-50
				2. ATF pressure switch 5 and direct clutch solenoid valve	AT-168, AT-148
				3. ATF pressure switch 1 and front brake solenoid valve	AT-164, AT-144
				4. Accelerator pedal position sensor	AT-125
				5. Vehicle speed sensor A/T and vehicle speed sensor MTR	AT-112, AT-133
				6. CAN communication line	AT-98
				7. Control valve with TCM	AT-225
			OFF vehicle	8. Front brake (brake band)	AT-263
				9. Direct clutch	AT-296

TCM Input/Output Signal Reference Values

NCS000C5

A/T ASSEMBLY HARNESS CONNECTOR TERMINAL LAYOUT

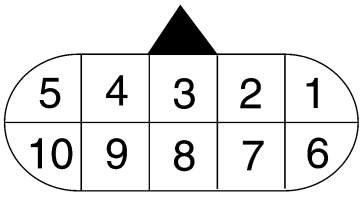

SCIA1658E

TCM INSPECTION TABLE

Data are reference value and are measured between each terminal and ground.

Terminal	Wire color	Item	Condition		Data (Approx.)
1	R/W	Power supply (Memory back-up)	Always		Battery voltage
2	R/W	Power supply (Memory back-up)	Always		Battery voltage
3	L	CAN-H	–		–
4	PU	K-line (CONSULT-II signal)	The terminal is connected to the data link connector for CONSULT-II.		–
5	B	Ground	Always		0 V
6	Y/R	Power supply		–	Battery voltage
				–	0 V
7	R	Back-up lamp relay		Selector lever in “R” position.	0 V
				Selector lever in other positions.	Battery voltage
8	P	CAN-L	–		–
9	GY/R	Starter relay		Selector lever in “N” and “P” positions.	Battery voltage
				Selector lever in other positions.	0 V
10	B	Ground	Always		0 V

CONSULT-II Function (A/T)

NCS000C6

CONSULT-II can display each diagnostic item using the diagnostic test modes shown following.

FUNCTION

Diagnostic test mode	Function	Reference page
Self-diagnostic results	Self-diagnostic results can be read and erased quickly.	AT-86
Data monitor	Input/Output data in the TCM can be read.	AT-89
CAN diagnostic support monitor	The results of transmit/receive diagnosis of CAN communication can be read.	AT-93
Function test	Conducted by CONSULT-II instead of a technician to determine whether each system is “OK” or “NG”.	—
DTC work support	Select the operating condition to confirm Diagnosis Trouble Codes.	AT-93
ECU part number	TCM part number can be read.	—

CONSULT-II REFERENCE VALUE

NOTICE:

1. The CONSULT-II electrically displays shift timing and lock-up timing (that is, operation timing of each solenoid).
   Check for time difference between actual shift timing and the CONSULT-II display. If the difference is noticeable, mechanical parts (except solenoids, sensors, etc.) may be malfunctioning. Check mechanical parts using applicable diagnostic procedures.
2. Shift schedule (which implies gear position) displayed on CONSULT-II and that indicated in Service Manual may differ slightly. This occurs because of the following reasons:

– Actual shift schedule has more or less tolerance or allowance,
– Shift schedule indicated in Service Manual refers to the point where shifts start, and
– Gear position displayed on CONSULT-II indicates the point where shifts are completed.

3. Display of solenoid valves on CONSULT-II changes at the start of shifting, while gear position is displayed upon completion of shifting (which is computed by TCM).

Item name	Condition	Display value (Approx.)
ATF TEMP SE 1	0°C (32°F) - 20°C (68°F) - 80°C (176°F)	3.3 - 2.7 - 0.9 V
ATF TEMP SE 2		3.3 - 2.5 - 0.7 V
TCC SOLENOID	Slip lock-up is active	0.2 - 0.4 A
	Lock-up is active	0.4 - 0.6 A
SLCT LVR POSI	Selector lever in “N” and “P” positions.	N/P
	Selector lever in “R” position.	R
	Selector lever in “D” position.	D
VHCL/S SE-A/T	During driving	Approximately matches the speedometer reading.
ENGINE SPEED	Engine running	Closely matches the tachometer reading.
LINE PRES SOL	During driving	0.2 - 0.6 A
TURBINE REV	During driving (lock-up ON)	Approximately matches the engine speed.
VHCL/S SE-MTR	During driving	Approximately matches the speedometer reading.
ATF PRES SW 1	Front brake engaged. Refer to AT-19 .	ON
	Front brake disengaged. Refer to AT-19 .	OFF
ATF PRES SW 2	Low coast brake engaged. Refer to AT-19 .	ON
	Low coast brake disengaged. Refer to AT-19 .	OFF
ATF PRES SW 3	Input clutch engaged. Refer to AT-19 .	ON
	Input clutch disengaged. Refer to AT-19 .	OFF

Item name	Condition	Display value (Approx.)
ATF PRES SW 5	Direct clutch engaged. Refer to AT-19 .	ON
	Direct clutch disengaged. Refer to AT-19 .	OFF
ATF PRES SW 6	High and low reverse clutch engaged. Refer to AT-19 .	ON
	High and low reverse clutch disengaged. Refer to AT-19 .	OFF
I/C SOLENOID	Input clutch disengaged. Refer to AT-19 .	0.6 - 0.8 A
	Input clutch engaged. Refer to AT-19 .	0 - 0.05 A
FR/B SOLENOID	Front brake engaged. Refer to AT-19 .	0.6 - 0.8 A
	Front brake disengaged. Refer to AT-19 .	0 - 0.05 A
D/C SOLENOID	Direct clutch disengaged. Refer to AT-19 .	0.6 - 0.8 A
	Direct clutch engaged. Refer to AT-19 .	0 - 0.05 A
HLR/C SOL	High and low reverse clutch disengaged. Refer to AT-19 .	0.6 - 0.8 A
	High and low reverse clutch engaged. Refer to AT-19 .	0 - 0.05 A
ON OFF SOL	Low coast brake engaged. Refer to AT-19 .	ON
	Low coast brake disengaged. Refer to AT-19 .	OFF
MANU MODE SW	Manual shift gate position (neutral)	ON
	Other than the above	OFF
NON M-MODE SW	Manual shift gate position	OFF
	Other than the above	ON
UP SW LEVER	Selector lever: + side	ON
	Other than the above	OFF
DOWN SW LEVER	Selector lever: - side	ON
	Other than the above	OFF
STARTER RELAY	Selector lever in “N” and “P” positions.	ON
	Selector lever in other positions.	OFF
ACCELE POSI	Released accelerator pedal.	0.0/8
	Fully depressed accelerator pedal.	8.0/8
CLSD THL POS	Released accelerator pedal.	ON
	Fully depressed accelerator pedal.	OFF
W/O THL POS	Fully depressed accelerator pedal.	ON
	Released accelerator pedal.	OFF
BRAKE SW	Depressed brake pedal.	ON
	Released brake pedal.	OFF
GEAR	During driving	1, 2, 3, 4, 5

CONSULT-II SETTING PROCEDURE

Refer to GI-37, "CONSULT-II Start Procedure" .

SELF-DIAGNOSTIC RESULT MODE

After performing self-diagnosis, place check marks for results on the AT-45, "DIAGNOSTIC WORKSHEET" . Reference pages are provided following the items.

Operation Procedure

1. Touch “SELF-DIAG RESULTS” on “SELECT DIAG MODE” screen.
   Display shows malfunction experienced since the last erasing operation.

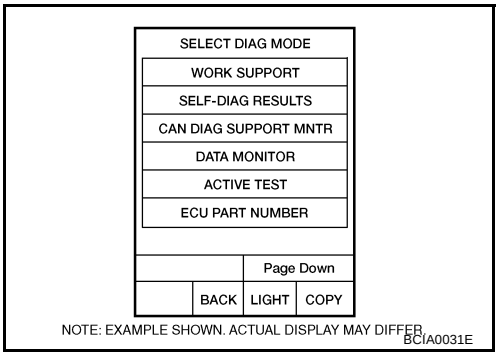

Display Items List

X: Applicable, —: Not applicable

Items (CONSULT-II screen terms)	Malfunction is detected when...	TCM self-diagnosis	OBD-II (DTC)	Reference page
		“A/T” with CONSULT-II	MIL*1 , “ENGINE” with CONSULT-II or GST	
CAN COMM CIRCUIT	● When TCM is not transmitting or receiving CAN communication signal for 2 seconds or more.	U1000	U1000	AT-98
STARTER RELAY/CIRC	● If this signal is ON other than in “P” or “N” position, this is judged to be a malfunction. (And if it is OFF in “P” or “N” position, this too is judged to be a malfunction.)	P0615	—	AT-101
TCM	● TCM is malfunctioning	P0700	P0700	AT-105
PNP SW/CIRC	● PNP switch 1-4 signals input with impossible pattern ● PNP switch 3 monitor terminal cut line ● P position is detected from “N” position without any other position being detected in between.	P0705	P0705	AT-106
TURBINE REV S/CIRC	● TCM does not receive the proper voltage signal from the sensor. ● TCM detects an irregularity only at position of 4th gear for turbine revolution sensor 2.	P0717	P0717	AT-110
VEH SPD SEN/CIR AT	● Signal from vehicle speed sensor A/T (Revolution sensor) not input due to cut line or the like ● Unexpected signal input during running ● After ignition switch is turned ON, unexpected signal input from vehicle speed sensor MTR before the vehicle starts moving	P0720	P0720	AT-112
ENGINE SPEED SIG	● TCM does not receive the CAN communication signal from the ECM.	P0725	P0725	AT-117
TCC SOLENOID/CIRC	● Normal voltage not applied to solenoid due to cut line, short, or the like	P0740	P0740	AT-119
A/T TCC S/V FNCTN	● A/T cannot perform lock-up even if electrical circuit is good. ● TCM detects as irregular by comparing difference value with slip rotation.	P0744	P0744*2	AT-121

Items (CONSULT-II screen terms)	Malfunction is detected when...	TCM self-diagnosis	OBD-II (DTC)	Reference page
		"A/T" with CONSULT-II	MIL*1, "ENGINE" with CONSULT-II or GST	
L/PRESS SOL/CIRC	● Normal voltage not applied to solenoid due to cut line, short, or the like ● TCM detects as irregular by comparing target value with monitor value.	P0745	P0745	AT-123
TP SEN/CIRC A/T	● TCM does not receive the proper accelerator pedal position signals (input by CAN communication) from ECM.	P1705	P1705	AT-125
ATF TEMP SEN/CIRC	● During running, the A/T fluid temperature sensor signal voltage is excessively high or low	P1710	P0710	AT-128
VEH SPD SE/CIR-MTR	● Signal (CAN communication) from vehicle speed sensor MTR not input due to cut line or the like ● Unexpected signal input during running	P1721	—	AT-133
A/T INTERLOCK	● Except during shift change, the gear position and ATF pressure switch states are monitored and comparative judgment made.	P1730	P1730	AT-135
A/T 1ST E/BRAKING	● Each ATF pressure switch and solenoid current is monitored and if a pattern is detected having engine braking 1st gear other than in the M1 position, a malfunction is detected.	P1731	—	AT-138
I/C SOLENOID/CIRC	● Normal voltage not applied to solenoid due to functional malfunction, cut line, short, or the like ● TCM detects as irregular by comparing target value with monitor value.	P1752	P1752	AT-140
I/C SOLENOID FNCTN	● TCM detects that actual gear ratio is irregular, and relation between gear position and condition of ATF pressure switch 3 is irregular during depressing accelerator pedal. (Other than during shift change) ● TCM detects that relation between gear position and condition of ATF pressure switch 3 is irregular during releasing accelerator pedal. (Other than during shift change)	P1754	P1754*2	AT-142
FR/B SOLENOID/CIRC	● Normal voltage not applied to solenoid due to functional malfunction, cut line, short, or the like ● TCM detects as irregular by comparing target value with monitor value.	P1757	P1757	AT-144
FR/B SOLENOID FNCT	● TCM detects that actual gear ratio is irregular, and relation between gear position and condition of ATF pressure switch 1 is irregular during depressing accelerator pedal. (Other than during shift change) ● TCM detects that relation between gear position and condition of ATF pressure switch 1 is irregular during releasing accelerator pedal. (Other than during shift change)	P1759	P1759*2	AT-146
D/C SOLENOID/CIRC	● Normal voltage not applied to solenoid due to cut line, short, or the like ● TCM detects as irregular by comparing target value with monitor value.	P1762	P1762	AT-148

Items (CONSULT-II screen terms)	Malfunction is detected when...	TCM self-diagnosis	OBD-II (DTC)	Reference page
		"A/T" with CONSULT-II	MIL*1, "ENGINE" with CONSULT-II or GST	
D/C SOLENOID FNCTN	● TCM detects that actual gear ratio is irregular, and relation between gear position and condition of ATF pressure switch 5 is irregular during depressing accelerator pedal. (Other than during shift change) ● TCM detects that relation between gear position and condition of ATF pressure switch 5 is irregular during releasing accelerator pedal. (Other than during shift change)	P1764	P1764*2	AT-150
HLR/C SOL/CIRC	● Normal voltage not applied to solenoid due to functional malfunction, cut line, short, or the like ● TCM detects as irregular by comparing target value with monitor value.	P1767	P1767	AT-152
HLR/C SOL FNCTN	● TCM detects that actual gear ratio is irregular, and relation between gear position and condition of ATF pressure switch 6 is irregular during depressing accelerator pedal. (Other than during shift change) ● TCM detects that relation between gear position and condition of ATF pressure switch 6 is irregular during releasing accelerator pedal. (Other than during shift change)	P1769	P1769*2	AT-154
LC/B SOLENOID/ CIRC	● Normal voltage not applied to solenoid due to functional malfunction, cut line, short, or the like	P1772	P1772	AT-156
LC/B SOLENOID FNCT	● TCM detects an improper voltage drop when it tries to operate the solenoid valve. ● Condition of ATF pressure switch 2 is different from monitor value, and relation between gear position and actual gear ratio is irregular.	P1774	P1774*2	AT-158
MANU MODE SW/ CIRC	● When an impossible pattern of switch signals is detected, a malfunction is detected.	P1815	—	AT-160
ATF PRES SW 1/ CIRC	● TCM detects that actual gear ratio is normal, and relation between gear position and condition of ATF pressure switch 1 is irregular during depressing accelerator pedal. (Other than during shift change)	P1841	—	AT-164
ATF PRES SW 3/ CIRC	● TCM detects that actual gear ratio is normal, and relation between gear position and condition of ATF pressure switch 3 is irregular during depressing accelerator pedal. (Other than during shift change)	P1843	—	AT-166
ATF PRES SW 5/ CIRC	● TCM detects that actual gear ratio is normal, and relation between gear position and condition of ATF pressure switch 5 is irregular during depressing accelerator pedal. (Other than during shift change)	P1845	—	AT-168
ATF PRES SW 6/ CIRC	● TCM detects that actual gear ratio is normal, and relation between gear position and condition of ATF pressure switch 6 is irregular during depressing accelerator pedal. (Other than during shift change)	P1846	—	AT-170
NO DTC IS DETECTED FURTHER TESTING MAY BE REQUIRED	● No NG item has been detected.	X	X	—

*1: Refer to AT-40, "Malfunction Indicator Lamp (MIL)" .
*2: These malfunctions cannot be displayed MIL if another malfunction is assigned to MIL.

How to Erase Self-diagnostic Results

1. Touch “SELF-DIAG RESULTS” on “SELECT DIAG MODE” screen.

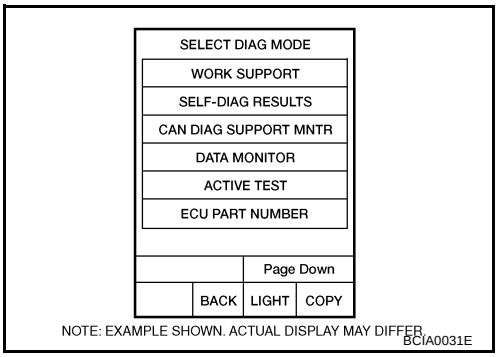

2. Touch ”ERASE”. (The self-diagnostic results will be erased.)

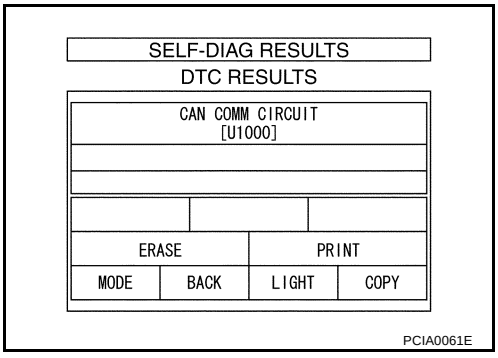

DATA MONITOR MODE

Operation Procedure

1. Touch “DATA MONITOR” on “SELECT DIAG MODE” screen.

   NOTE:
   When malfunction is detected, CONSULT-II performs “REAL-TIME DIAGNOSIS”. Also, any malfunction detected while in this mode will be displayed at real time.

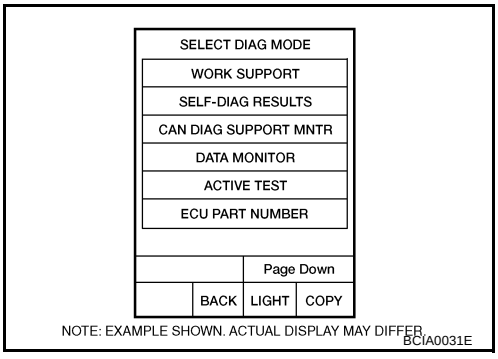

Display Items List

X: Standard, —: Not applicable, ▼: Option

Monitored item (Unit)	Monitor Item Selection			Remarks
	ECU INPUT SIGNALS	MAIN SIGNALS	SELECTION FROM MENU	
VHCL/S SE-A/T (km/h)	X	X	▼	Revolution sensor
VHCL/S SE-MTR (km/h)	X	—	▼	
ACCELE POSI (0.0/8)	X	—	▼	Accelerator pedal position signal
THROTTLE POSI (0.0/8)	X	X	▼	Degree of opening for accelerator recognized by the TCM For fail-safe operation, the specific value used for control is displayed.
CLSD THL POS (ON/OFF)	X	—	▼	Signal input with CAN communications
W/O THL POS (ON/OFF)	X	—	▼	
BRAKE SW (ON/OFF)	X	—	▼	Stop lamp switch

Monitored item (Unit)	Monitor Item Selection			Remarks
	ECU INPUT SIGNALS	MAIN SIG-NALS	SELEC-TION FROM MENU	
GEAR	—	X	▼	Gear position recognized by the TCM updated after gear-shifting
ENGINE SPEED (rpm)	X	X	▼	
TURBINE REV (rpm)	X	X	▼	
OUTPUT REV (rpm)	X	X	▼	
GEAR RATIO	—	X	▼	
TC SLIP SPEED (rpm)	—	X	▼	Difference between engine speed and torque converter input shaft speed
F SUN GR REV (rpm)	—	—	▼	
F CARR GR REV (rpm)	—	—	▼	
ATF TEMP SE 1 (V)	X	—	▼	
ATF TEMP SE 2 (V)	X	—	▼	
ATF TEMP 1 (°C)	—	X	▼	
ATF TEMP 2 (°C)	—	X	▼	
BATTERY VOLT (V)	X	—	▼	
ATF PRES SW 1 (ON/OFF)	X	X	▼	(for FR/B solenoid)
ATF PRES SW 2 (ON/OFF)	X	X	▼	(for LC/B solenoid)
ATF PRES SW 3 (ON/OFF)	X	X	▼	(for I/C solenoid)
ATF PRES SW 5 (ON/OFF)	X	X	▼	(for D/C solenoid)
ATF PRES SW 6 (ON/OFF)	X	X	▼	(for HLR/C solenoid)
PNP SW 1 (ON/OFF)	X	—	▼	
PNP SW 2 (ON/OFF)	X	—	▼	
PNP SW 3 (ON/OFF)	X	—	▼	
PNP SW 4 (ON/OFF)	X	—	▼	
1 POSITION SW (ON/OFF)	X	—	▼	Not mounted but displayed.
SLCT LVR POSI	—	X	▼	Selector lever position is recognized by the TCM. For fail-safe operation, the specific value used for control is displayed.
OD CONT SW (ON/OFF)	X	—	▼	Not mounted but displayed.
POWERSHIFT SW (ON/OFF)	X	—	▼	
HOLD SW (ON/OFF)	X	—	▼	
MANU MODE SW (ON/OFF)	X	—	▼	
NON M-MODE SW (ON/OFF)	X	—	▼	
UP SW LEVER (ON/OFF)	X	—	▼	
DOWN SW LEVER (ON/OFF)	X	—	▼	
SFT UP ST SW (ON/OFF)	—	—	▼	Not mounted but displayed.
SFT DWN ST SW (ON/OFF)	—	—	▼	

Monitored item (Unit)	Monitor Item Selection			Remarks
	ECU INPUT SIGNALS	MAIN SIG-NALS	SELEC-TION FROM MENU	
ASCD-OD CUT (ON/OFF)	—	—	▼	
ASCD-CRUISE (ON/OFF)	—	—	▼	
ABS SIGNAL (ON/OFF)	—	—	▼	
ACC OD CUT (ON/OFF)	—	—	▼	Not mounted but displayed.
ACC SIGNAL (ON/OFF)	—	—	▼	
TCS GR/P KEEP (ON/OFF)	—	—	▼	
TCS SIGNAL 2 (ON/OFF)	—	—	▼	
TCS SIGNAL 1 (ON/OFF)	—	—	▼	
TCC SOLENOID (A)	—	X	▼	
LINE PRES SOL (A)	—	X	▼	
I/C SOLENOID (A)	—	X	▼	
FR/B SOLENOID (A)	—	X	▼	
D/C SOLENOID (A)	—	X	▼	
HLR/C SOL (A)	—	X	▼	
ON OFF SOL (ON/OFF)	—	—	▼	LC/B solenoid
TCC SOL MON (A)	—	—	▼	
L/P SOL MON (A)	—	—	▼	
I/C SOL MON (A)	—	—	▼	
FR/B SOL MON (A)	—	—	▼	
D/C SOL MON (A)	—	—	▼	
HLR/C SOL MON (A)	—	—	▼	
ON OFF SOL MON (ON/OFF)	—	—	▼	LC/B solenoid
P POSI IND (ON/OFF)	—	—	▼	
R POSI IND (ON/OFF)	—	—	▼	
N POSI IND (ON/OFF)	—	—	▼	
D POSI IND (ON/OFF)	—	—	▼	
4TH POSI IND (ON/OFF)	—	—	▼	
3RD POSI IND (ON/OFF)	—	—	▼	
2ND POSI IND (ON/OFF)	—	—	▼	
1ST POSI IND (ON/OFF)	—	—	▼	
MANU MODE IND (ON/OFF)	—	—	▼	
POWER M LAMP (ON/OFF)	—	—	▼	
F-SAFE IND/L (ON/OFF)	—	—	▼	
ATF WARN LAMP (ON/OFF)	—	—	▼	Not mounted but displayed.
BACK-UP LAMP (ON/OFF)	—	—	▼	

Monitored item (Unit)	Monitor Item Selection			Remarks
	ECU INPUT SIGNALS	MAIN SIG-NALS	SELEC-TION FROM MENU	
STARTER RELAY (ON/OFF)	—	—	▼	
PNP SW3 MON (ON/OFF)	—	—	▼	
C/V CLB ID1	—	—	▼	
C/V CLB ID2	—	—	▼	
C/V CLB ID3	—	—	▼	
UNIT CLB ID1	—	—	▼	
UNIT CLB ID2	—	—	▼	
UNIT CLB ID3	—	—	▼	
TRGT GR RATIO	—	—	▼	
TRGT PRES TCC (kPa)	—	—	▼	
TRGT PRES L/P (kPa)	—	—	▼	
TRGT PRES I/C (kPa)	—	—	▼	
TRGT PRE FR/B (kPa)	—	—	▼	
TRGT PRES D/C (kPa)	—	—	▼	
TRG PRE HLR/C (kPa)	—	—	▼	
SHIFT PATTERN	—	—	▼	
DRV CST JUDGE	—	—	▼	
START RLY MON	—	—	▼	
NEXT GR POSI	—	—	▼	
SHIFT MODE	—	—	▼	
MANU GR POSI	—	—	▼	
VEHICLE SPEED (km/h)	—	X	▼	Vehicle speed recognized by the TCM.
Voltage (V)	—	—	▼	Displays the value measured by the voltage probe.
Frequency (Hz)	—	—	▼	The value measured by the pulse probe is displayed.
DUTY-HI (high) (%)	—	—	▼	
DUTY-LOW (low) (%)	—	—	▼	
PLS WIDTH-HI (ms)	—	—	▼	
PLS WIDTH-LOW (ms)	—	—	▼	

CAN DIAGNOSTIC SUPPORT MONITOR MODE

Operation Procedure

1. Touch “CAN DAIG SUPPORT MNTR” on “SELECT DIAG MODE” screen. Refer to LAN-44, "CAN Diagnostic Support Monitor" .

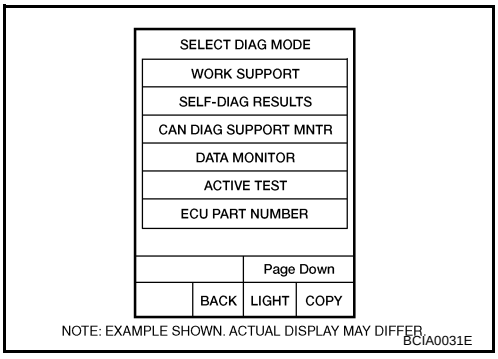

DTC WORK SUPPORT MODE

Operation Procedure

1. Touch “DTC WORK SUPPORT” on “SELECT DIAG MODE” screen.

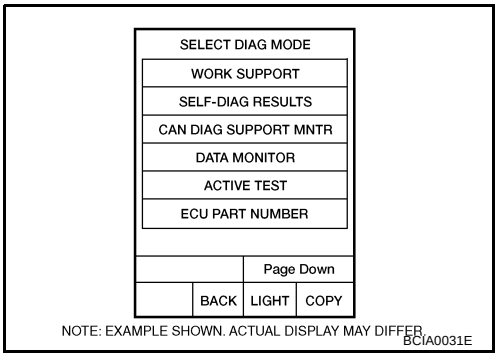

2. Touch select item menu.

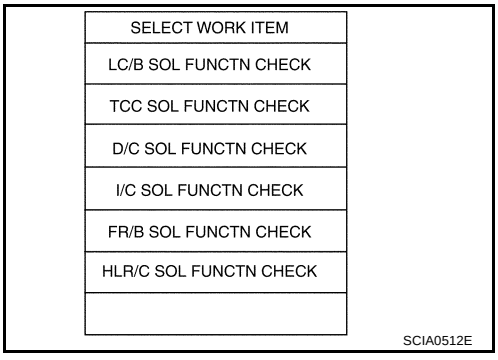

3. Touch “START”.

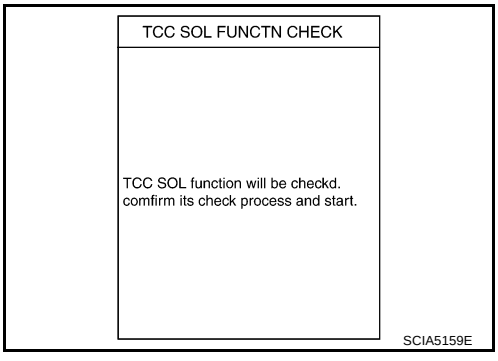

4. Perform driving test according to “DTC Confirmation Procedure” in “TROUBLE DIAGNOSIS FOR DTC”.

TCC SOL FUNCTN CHECK	
OUT OF CONDTION	
MONITOR	
ACCELE POSI	XXX
GEAR	XXX
TCC SOLENOID	XXXA
VEHICLE SPEED	XXXkm/h

SCIA5160E

- **When testing conditions are satisfied, CONSULT-II screen changes from “OUT OF CONDITION” to “TESTING”.**

TCC SOL FUNCTN CHECK	
TESTING	
MONITOR	
ACCELE POSI	XXX
GEAR	XXX
TCC SOLENOID	XXXA
VEHICLE SPEED	XXXkm/h

SCIA5161E

5. Stop vehicle.

TCC SOL FUNCTN CHECK
STOP VEHICLE

SCIA5164E

- **If “NG” appears on the screen, malfunction may exist. Go to “Diagnostic Procedure”.**

TCC SOL FUNCTN CHECK
NG

SCIA5162E

6. Perform test drive to check gear shift feeling in accordance with instructions displayed.
7. Touch “YES” or “NO”.
8. CONSULT-II procedure is ended.

TCC SOL FUNCTN CHECK
OK

SCIA5163E

- **If “NG” appears on the screen, malfunction may exist. Go to “Diagnostic Procedure”.**

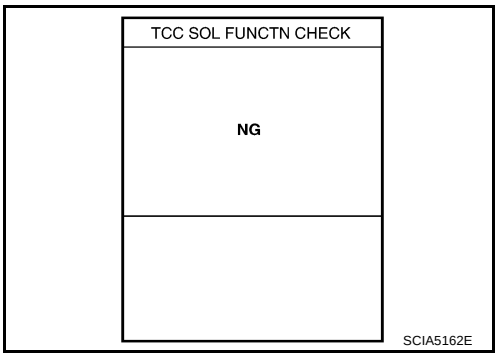

Display Items List

DTC work support item	Description	Check item
I/C SOL FUNCTN CHECK*	—	—
FR/B SOL FUNCTN CHECK*	—	—
D/C SOL FUNCTN CHECK*	—	—
HLR/C SOL FUNCTN CHECK*	—	—
LC/B SOL FUNCTN CHECK*	—	—
TCC SOL FUNCTN CHECK	Following items for “TCC solenoid function (lock-up) ” can be confirmed. ● Self-diagnosis status (whether the diagnosis is being performed or not) ● Self-diagnosis result (OK or NG)	● TCC solenoid valve ● Hydraulic control circuit

*: Do not use, but displayed.

Diagnostic Procedure Without CONSULT-II

NCS000C7

OBD-II SELF-DIAGNOSTIC PROCEDURE (WITH GST)

Refer to EC-133, "Generic Scan Tool (GST) Function" .

OBD-II SELF-DIAGNOSTIC PROCEDURE (NO TOOLS)

Refer to EC-62, "Malfunction Indicator Lamp (MIL)" .

TCM SELF-DIAGNOSTIC PROCEDURE (NO TOOLS)

Description

As a method for locating the suspect circuit, when the self-diagnostics start signal is input, the memory for the malfunction location is output and the A/T CHECK indicator lamp flashes to display the corresponding DTC.

Operation Procedure

1. CHECK A/T CHECK INDICATOR LAMP

1. Start the engine with selector lever in “P” position. Warm engine to normal operating temperature.
2. Turn ignition switch ON and OFF at least twice, then leave it in the OFF position.
3. Wait 10 seconds.
4. Turn ignition switch ON. (Do not start engine.)

Does A/T CHECK indicator lamp come on for about 2 seconds?

YES >> GO TO 2.
NO >> GO TO AT-181, "A/T CHECK Indicator Lamp Does Not Come On" .

2. JUDGMENT PROCEDURE

1. Turn ignition switch OFF.
2. Keep pressing shift lock release button.
3. Move selector lever from “P” to “D” position.
4. Release accelerator pedal. (Set the closed throttle position signal ON.)
5. Depress brake pedal. (Stop lamp switch signal ON.)
6. Turn ignition switch ON. (Do not start engine.)
7. Wait 3 seconds.
8. Move the selector lever to the manual shift gate side. (Manual mode signal ON.)
9. Release brake pedal. (Stop lamp switch signal OFF.)
10. Move the selector lever to “D” position. (Manual mode signal OFF.)
11. Depress brake pedal. (Stop lamp switch signal ON.)
12. Release brake pedal. (Stop lamp switch signal OFF.)
13. Depress accelerator pedal fully and release it.

>> GO TO 3.

3. CHECK SELF-DIAGNOSIS CODE

Check A/T CHECK indicator lamp.
Refer to AT-97, "Judgment Self-diagnosis Code" .
If the system does not go into self-diagnostics. Refer to AT-106, "DTC P0705 PARK/NEUTRAL POSITION SWITCH" , AT-160, "DTC P1815 MANUAL MODE SWITCH" , AT-176, "CLOSED THROTTLE POSITION AND WIDE OPEN THROTTLE POSITION CIRCUIT" , AT-177, "BRAKE SIGNAL CIRCUIT" .

>> **DIAGNOSIS END**

Judgment Self-diagnosis Code

If there is a malfunction, the lamp lights up for the time corresponding to the suspect circuit.

No.	Malfunctioning item	No.	Malfunctioning item
1.	Revolution sensor AT-112	10.	A/T fluid temperature sensor AT-128
2.	Direct clutch solenoid valve AT-148 , AT-150	11.	Turbine revolution sensor AT-110
3.	Torque converter clutch solenoid valve AT-119 , AT-121	12.	A/T interlock AT-135
4.	Line pressure solenoid valve AT-123	13.	A/T 1st engine braking AT-138
5.	Input clutch solenoid valve AT-140 , AT-142	14.	Start signal AT-101
6.	Front brake solenoid valve AT-144 , AT-146	15.	Accelerator pedal position sensor AT-125
7.	Low coast brake solenoid valve AT-156 , AT-158	16.	Engine speed signal AT-117
8.	High and low reverse clutch solenoid valve AT-152 , AT-154	17.	CAN communication line AT-98
9.	PNP switch AT-106		

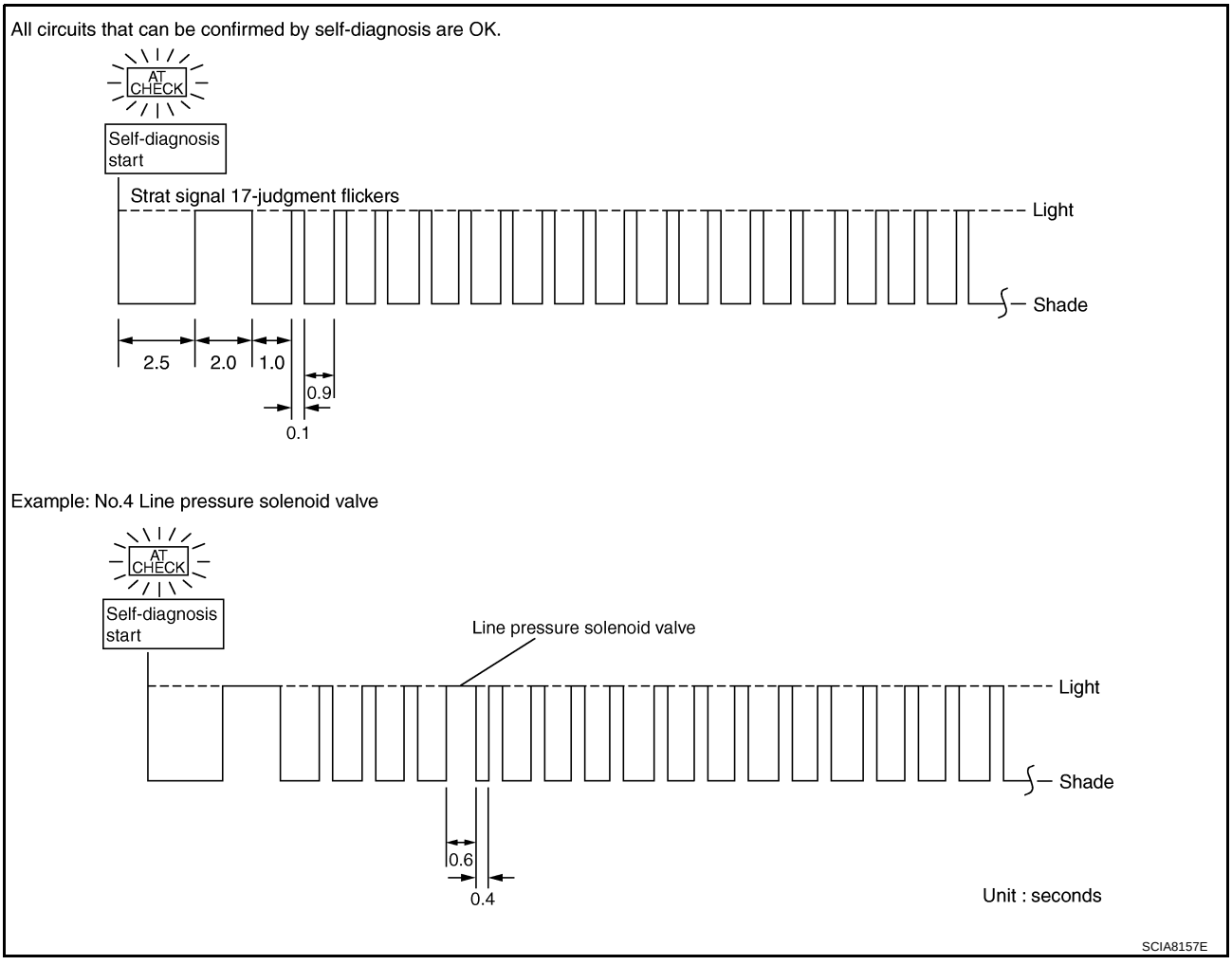

Erase Self-diagnosis

- In order to make it easier to find the cause of hard-to-duplicate malfunctions, malfunction information is stored into the control unit as necessary during use by the user. This memory is not erased no matter how many times the ignition switch is turned ON and OFF.
- However, this information is erased by turning ignition switch OFF after performing self-diagnostics or by erasing the memory using the CONSULT-II.

DTC U1000 CAN COMMUNICATION LINE

PFP:23710

Description

NCS000C8

CAN (Controller Area Network) is a serial communication line for real time application. It is an on-vehicle multiplex communication line with high data communication speed and excellent malfunction detection ability. Many electronic control units are equipped onto a vehicle, and each control unit shares information and links with other control units during operation (not independent). In CAN communication, control units are connected with 2 communication lines (CAN H line, CAN L line) allowing a high rate of information transmission with less wiring. Each control unit transmits/receives data but selectively reads required data only.

On Board Diagnosis Logic

NCS000C9

- This is an OBD-II self-diagnostic item.
- Diagnostic trouble code “U1000 CAN COMM CIRCUIT” with CONSULT-II or 17th judgment flicker without CONSULT-II is detected when TCM cannot communicate to other control units.

Possible Cause

NCS000CA

Harness or connector
(CAN communication line is open or shorted.)

DTC Confirmation Procedure

NCS000CB

NOTE:
If “DTC Confirmation Procedure” has been previously performed, always turn ignition switch OFF and wait at least 10 seconds before performing the next test.
After the repair, perform the following procedure to confirm the malfunction is eliminated.

WITH CONSULT-II

1. Turn ignition switch ON.
2. Select “ECU INPUT SIGNALS” or “MAIN SIGNALS” in “DATA MONITOR” mode for “A/T” with CONSULT-II.
3. Start engine and wait for at least 6 seconds.
4. If DTC is detected, go to AT-100, "Diagnostic Procedure" .

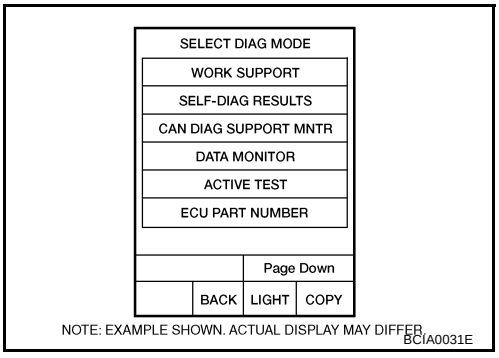

WITH GST

Follow the procedure “WITH CONSULT-II”.

Wiring Diagram — AT — CAN

NCS000CC

AT-CAN-01

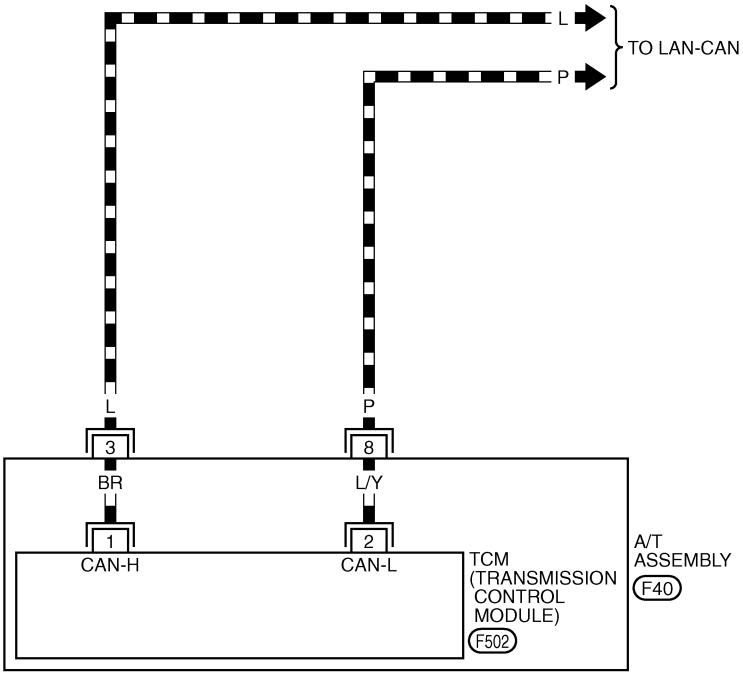

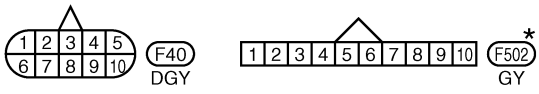

*: THIS CONNECTOR IS NOT SHOWN IN "HARNESS LAYOUT", PG SECTION.

TCWM0407E

TCM terminals and data are reference value. Measured between each terminal and ground.

Terminal	Wire color	Item	Condition	Data (Approx.)
3	L	CAN-H	–	–
8	P	CAN-L	–	–

Diagnostic Procedure

NCS000CD

1. CHECK CAN COMMUNICATION CIRCUIT

With CONSULT-II

1. Turn ignition switch ON and start engine.
2. Select “SELF-DIAG RESULTS” mode for “A/T” with CONSULT-II.

Is any malfunction of the “U1000 CAN COMM CIRCUIT” indicated?

YES >> Print out CONSULT-II screen, go to LAN section. Refer to LAN-47, "CAN System Specification Chart" .

NO >> **INSPECTION END**

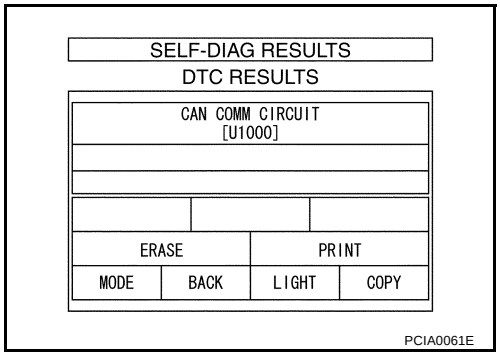

DTC P0615 START SIGNAL CIRCUIT

PFP:25230

Description

NCS000CE

Prohibits cranking other at “P” or “N” position.

CONSULT-II Reference Value

NCS000CF

Item name	Condition	Display value
STARTER RELAY	Selector lever in “N” and “P” positions.	ON
	Selector lever in other positions.	OFF

On Board Diagnosis Logic

NCS000CG

- This is not an OBD-II self-diagnostic item.
- Diagnostic trouble code “P0615 STARTER RELAY/CIRC” with CONSULT-II or 14th judgment flicker without CONSULT-II is detected when starter relay is switched ON other than at “P” or “N” position. (Or when switched OFF at “P” or “N” position).

Possible Cause

NCS000CH

- Harness or connectors.
  (Starter relay and TCM circuit is open or shorted.)
- Starter relay circuit.

DTC Confirmation Procedure

NCS000CI

CAUTION:
Always drive vehicle at a safe speed.

NOTE:
If “DTC Confirmation Procedure” has been previously conducted, always turn ignition switch OFF and wait at least 10 seconds before conducting the next test.
After the repair, perform the following procedure to confirm the malfunction is eliminated.

WITH CONSULT-II

1. Turn ignition switch ON.
2. Select “SELECTION FROM MENU” in “DATA MONITOR” mode for “A/T” with CONSULT-II and check monitor “STARTER RELAY” ON/OFF.
3. Start the engine.
4. Vehicle start for at least 2 consecutive seconds.
5. If DTC is detected, go to AT-103, "Diagnostic Procedure" .

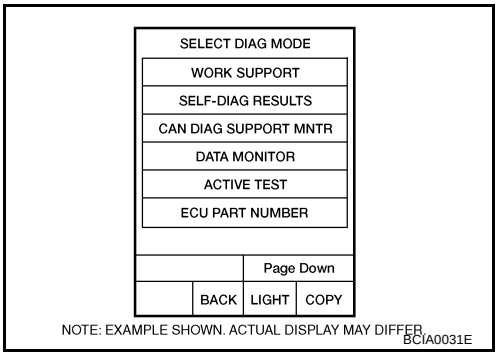

Wiring Diagram — AT — STSIG

NCS000CJ

AT-STSIG-01

: DETECTABLE LINE FOR DTC
: NON-DETECTABLE LINE FOR DTC

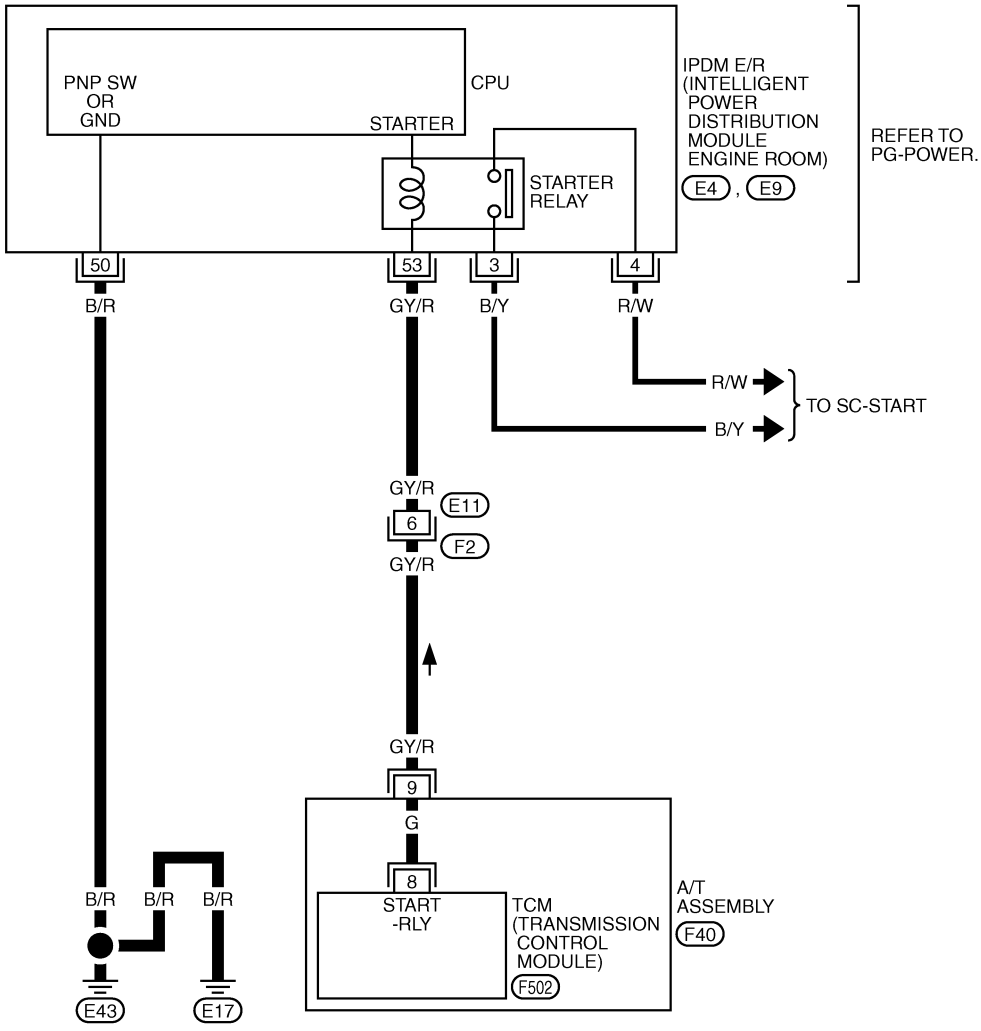

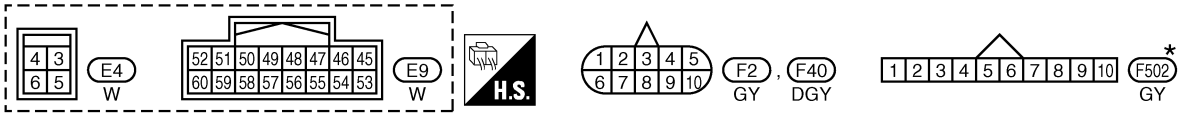

*: THIS CONNECTOR IS NOT SHOWN IN "HARNESS LAYOUT", PG SECTION.

TCWM0408E

TCM terminals and data are reference value. Measured between each terminal and ground.

Terminal	Wire color	Item	Condition		Data (Approx.)
9	GY/R	Starter relay	ON	Selector lever in “N” and “P” positions.	Battery voltage
				Selector lever in other positions.	0 V

Diagnostic Procedure

NCS000CK

1. CHECK STARTER RELAY

With CONSULT-II

1. Turn ignition switch ON.
2. Select “SELECTION FROM MENU” in “DATA MONITOR” mode for “A/T” with CONSULT-II and check monitor “STARTER RELAY” ON/OFF.

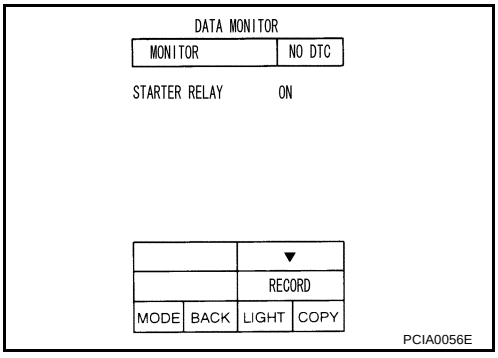

Item name	Condition	Display value
STARTER RELAY	Selector lever in “N” and “P” positions.	ON
	Selector lever in other positions.	OFF

Without CONSULT-II

1. Turn ignition switch ON.
2. Check voltage between the IPDM E/R connector and ground.

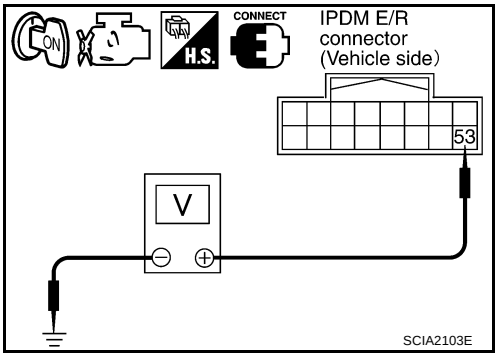

Item	Connector	Terminal	Shift position	Voltage (Approx.)
Starter relay	E9	53 - Ground	“N” and “P”	Battery voltage
			“R” and “D”	0 V

OK or NG

OK >> GO TO 5.
NG >> GO TO 2.

2. CHECK HARNESS BETWEEN A/T ASSEMBLY HARNESS CONNECTOR AND IPDM E/R CONNECTOR

1. Turn ignition switch OFF.
2. Disconnect A/T assembly harness connector and IPDM E/R connector.
3. Check continuity between A/T assembly harness connector and IPDM E/R connector.

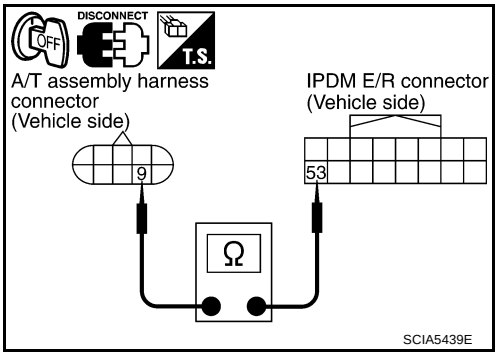

Item	Connector	Terminal	Continuity
A/T assembly harness connector	F40	9	Yes
IPDM E/R connector	E9	53	

4. If OK, check harness for short to ground and short to power.
5. Reinstall any part removed.

OK or NG

OK >> GO TO 3.
NG >> Repair open circuit or short to ground or short to power in harness or connectors.

3. CHECK TERMINAL CORD ASSEMBLY

1. Remove control valve with TCM. Refer to AT-225, "Control Valve with TCM and A/T Fluid Temperature Sensor 2" .
2. Disconnect A/T assembly harness connector and TCM connector.
3. Check continuity between A/T assembly harness connector terminal and TCM connector terminal.

Item	Connector	Terminal	Continuity
A/T assembly harness connector	F40	9	Yes
TCM connector	F502	8	

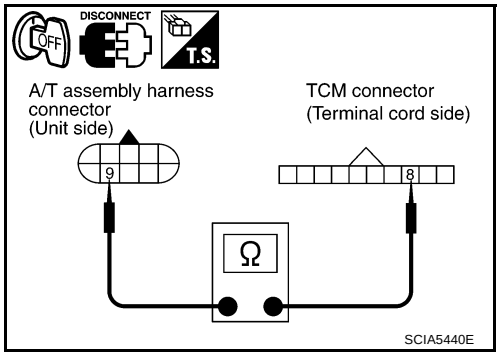

4. If OK, check harness for short to ground and short to power.
5. Reinstall any part removed.

OK or NG

OK >> GO TO 4.
NG >> Replace open circuit or short to ground and short to power in harness or connectors.

4. DETECT MALFUNCTIONING ITEM

Check the following.

- Starter relay, Refer to SC-10, "STARTING SYSTEM" .
- IPDM E/R, Refer to PG-16, "IPDM E/R (INTELLIGENT POWER DISTRIBUTION MODULE ENGINE ROOM)" .

OK or NG

OK >> Replace control valve with TCM. Refer to AT-225, "Control Valve with TCM and A/T Fluid Temperature Sensor 2" .
NG >> Repair or replace damaged parts.

5. CHECK DTC

Perform AT-101, "DTC Confirmation Procedure" .

OK or NG

OK >> **INSPECTION END**
NG >> GO TO 2.

DTC P0700 TCM

PFP:31036

Description

NCS000CL

The TCM consists of a microcomputer and connectors for signal input and output and for power supply. The TCM controls the A/T.

On Board Diagnosis Logic

NCS000CM

- This is an OBD-II self-diagnostic item.
- Diagnostic trouble code “P0700 TCM” with CONSULT-II is detected when TCM is malfunctioning.

Possible Cause

NCS000CN

TCM.

DTC Confirmation Procedure

NCS000CO

NOTE:
If “DTC Confirmation Procedure” has been previously performed, always turn ignition switch OFF and wait at least 10 seconds before performing the next test.
After the repair, perform the following procedure to confirm the malfunction is eliminated.

WITH CONSULT-II

1. Turn ignition switch ON.
2. Select “ECU INPUT SIGNALS” or “MAIN SIGNALS” in “DATA MONITOR” mode for “A/T” with CONSULT-II.
3. Touch “START”.
4. Start engine.
5. Run engine for at least 2 consecutive seconds at idle speed.
6. If DTC is detected, go to AT-105, "Diagnostic Procedure" .

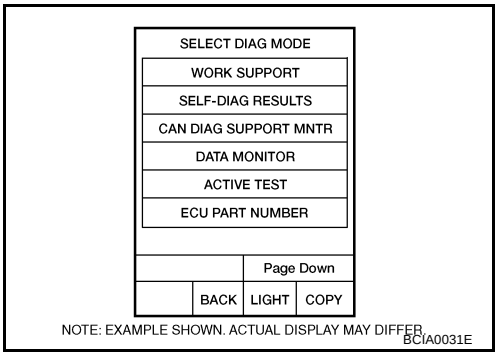

WITH GST

Follow the procedure “WITH CONSULT-II”.

Diagnostic Procedure

NCS000CP

1. CHECK DTC

With CONSULT-II

1. Turn ignition switch ON.
2. Select “SELF DIAG RESULTS” mode for “A/T” with CONSULT-II.
3. Touch “ERASE”.
4. Turn ignition switch “OFF” and wait at least 10 seconds.
5. Perform “DTC Confirmation Procedure”. Refer to AT-105, "DTC Confirmation Procedure" .

Is the “P0700 TCM” displayed again?

YES >> Replace the control valve with TCM. Refer to AT-225, "Control Valve with TCM and A/T Fluid Temperature Sensor 2" .

NO >> **INSPECTION END**

DTC P0705 PARK/NEUTRAL POSITION SWITCH

PFP:32006

Description

NCS000CQ

- The PNP switch includes a transmission range switch.
- The transmission range switch detects the selector lever position and sends a signal to the TCM.

CONSULT-II Reference Value

NCS000CR

Item name	Condition	Display value
SLCT LVR POSI	Selector lever in “N” and “P” positions.	N/P
	Selector lever in “R” position.	R
	Selector lever in “D” position.	D

On Board Diagnosis Logic

NCS000CS

- This is an OBD-II self-diagnostic item.
- Diagnostic trouble code “P0705 PNP SW/CIRC” with CONSULT-II or 9th judgment flicker without CONSULT-II is detected under the following conditions.
  - When TCM does not receive the correct voltage signal from the PNP switches 1, 2, 3 and 4 based on the gear position.
  - When no other position but “P” position is detected from “N” positions.

Possible Cause

NCS000CT

- Harness or connectors.
  (PNP switches 1, 2, 3 and 4 and TCM circuit is open or shorted.)
- PNP switches 1, 2, 3 and 4.

DTC Confirmation Procedure

NCS000CU

CAUTION:
Always drive vehicle at a safe speed.

NOTE:
If “DTC Confirmation Procedure” has been previously performed, always turn ignition switch OFF and wait at least 10 seconds before performing the next test.
After the repair, perform the following procedure to confirm the malfunction is eliminated.

WITH CONSULT-II

1. Turn ignition switch ON.
2. Select “ECU INPUT SIGNALS” or “MAIN SIGNALS” in “DATA MONITOR” mode for “A/T” with CONSULT-II.
3. Touch “START”.
4. Start engine.
5. Drive vehicle and maintain the following conditions for at least 2 consecutive seconds.
   ACCELE POSI: More than 1.0/8
6. If DTC is detected, go to AT-108, "Diagnostic Procedure" .

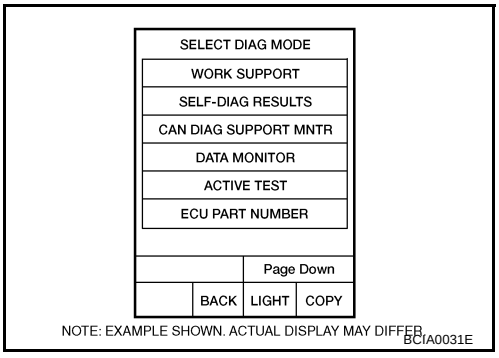

WITH GST

Follow the procedure “WITH CONSULT-II”.

Wiring Diagram — AT — PNP/SW

NCS000CV

AT-PNP/SW-01

: DETECTABLE LINE FOR DTC
: NON-DETECTABLE LINE FOR DTC

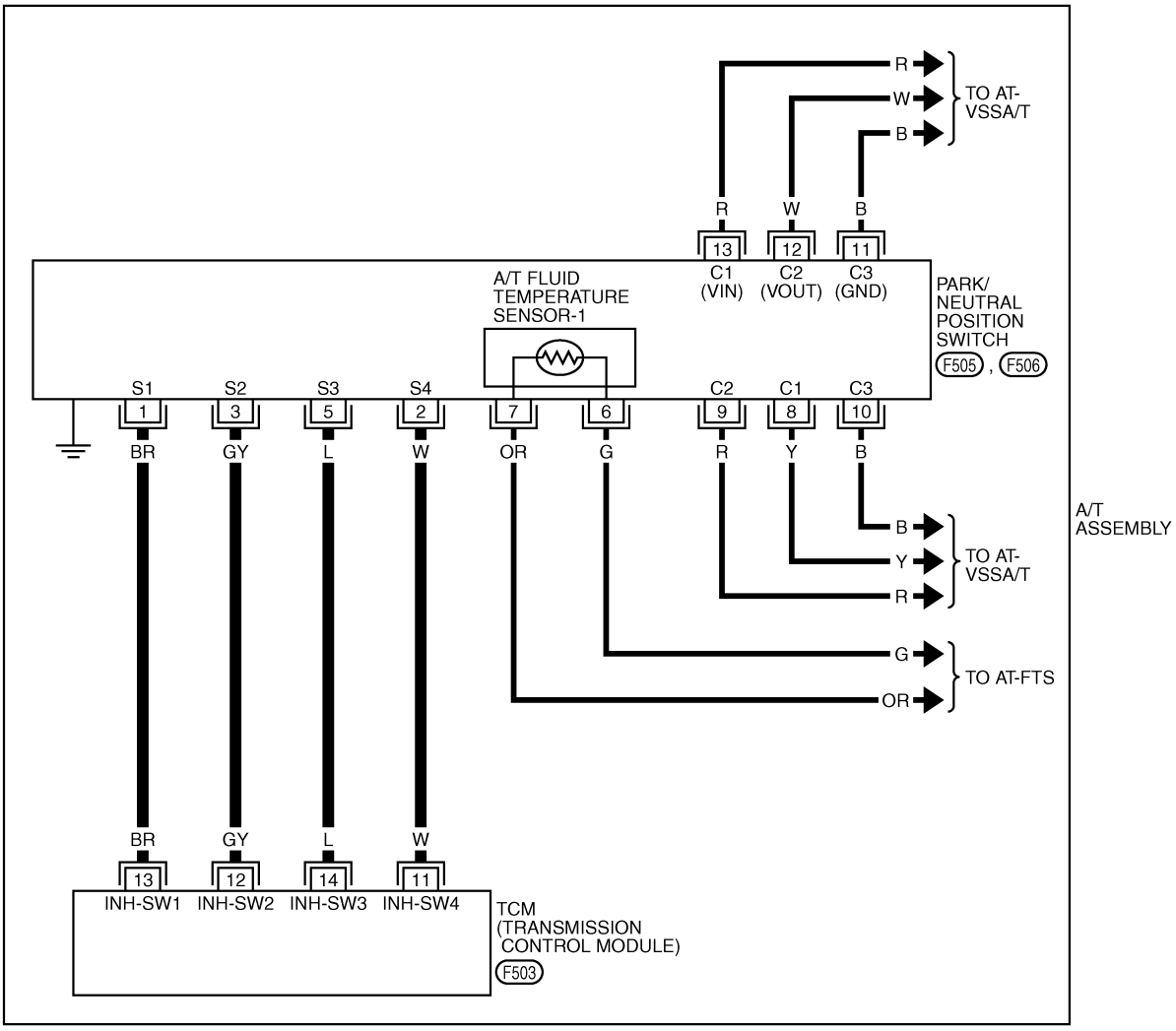

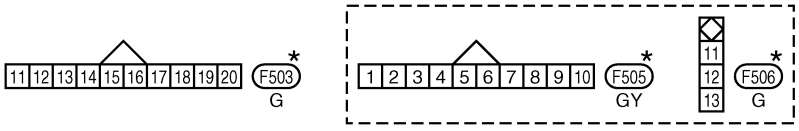

*: THIS CONNECTOR IS NOT SHOWN IN "HARNESS LAYOUT", PG SECTION.

TCWM0248E

Diagnostic Procedure

NCS000CW

1. CHECK PNP SW CIRCUIT

With CONSULT-II

1. Turn ignition switch ON.
2. Select “SELECTION FROM MENU” in “DATA MONITOR” mode for “A/T” with CONSULT-II.
3. Check if correct selector lever position (N/P, R or D) is displayed as selector lever is moved into each position.

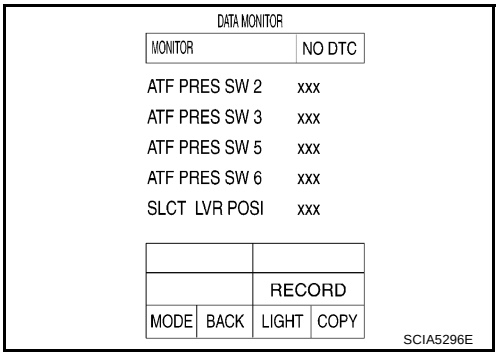

Item name	Condition	Display value
SLCT LVR POSI	Selector lever in “N” and “P” positions.	N/P
	Selector lever in “R” position.	R
	Selector lever in “D” position.	D

OK or NG

OK >> GO TO 5.
NG >> GO TO 2.

2. CHECK TCM POWER SUPPLY AND GROUND CIRCUIT

Check TCM power supply and ground circuit. Refer to AT-172, "MAIN POWER SUPPLY AND GROUND CIRCUIT" .

OK or NG

OK >> GO TO 3.
NG >> Repair or replace damaged parts.

3. DETECT MALFUNCTIONING ITEM

Check A/T assembly harness connector pin terminals for damage or loose connection with harness connector.

OK or NG

OK >> GO TO 4.
NG >> Repair or replace damaged parts.

4. CHECK SUB-HARNESS

1. Remove control valve with TCM. Refer to AT-225, "Control Valve with TCM and A/T Fluid Temperature Sensor 2" .
2. Disconnect park/neutral position switch connector and TCM connector.
3. Check continuity between park/neutral position switch connector terminals and TCM connector terminals.

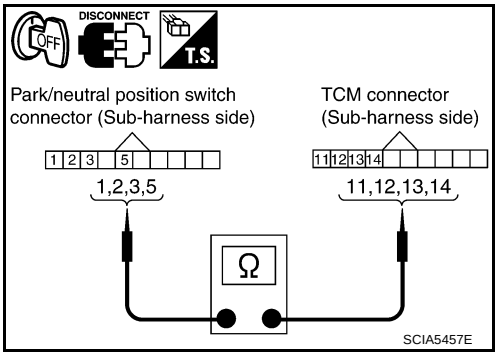

Item	Connector	Terminal	Continuity
Park/neutral position switch connector	F505	1	Yes
TCM connector	F503	13	
Park/neutral position switch connector	F505	2	Yes
TCM connector	F503	11	
Park/neutral position switch connector	F505	3	Yes
TCM connector	F503	12	
Park/neutral position switch connector	F505	5	Yes
TCM connector	F503	14	

4. If OK, check harness for short to ground and short to power.
5. Reinstall any part removed.

OK or NG

OK >> Replace control valve with TCM. Refer to AT-225, "Control Valve with TCM and A/T Fluid Temperature Sensor 2" .

NG >> Replace open circuit or short to ground and short to power in harness or connectors.

5. CHECK DTC

Perform AT-106, "DTC Confirmation Procedure" .

OK or NG

OK >> **INSPECTION END**

NG >> GO TO 2.

DTC P0717 TURBINE REVOLUTION SENSOR

PFP:31935

Description

NCS000EG

The turbine revolution sensor detects input shaft rpm (revolutions per minute). It is located on the input side of the A/T. Monitors revolution of sensor 1 and sensor 2 for non-standard conditions.

CONSULT-II Reference Value

NCS000EH

Item name	Condition	Display value
TURBINE REV	During driving (lock-up ON)	Approximately matches the engine speed.

On Board Diagnosis Logic

NCS000EI

- This is an OBD-II self-diagnostic item.
- Diagnostic trouble code “P0717 TURBINE REV S/CIRC” with CONSULT-II or 11th judgment flicker without CONSULT-II is detected under the following conditions.
  - When TCM does not receive the proper voltage signal from the sensor.
  - When TCM detects an irregularity only at position of 4th gear for turbine revolution sensor 2.

Possible Cause

NCS000EJ

- Harness or connectors.
  (Sensor circuit is open or shorted.)
- Turbine revolution sensor 1 and/or 2.

DTC Confirmation Procedure

NCS000EK

CAUTION:

- **Always drive vehicle at a safe speed.**
- **Be careful not to rev engine into the red zone on the tachometer.**

NOTE:

If “DTC Confirmation Procedure” has been previously performed, always turn ignition switch OFF and wait at least 10 seconds before performing the next test.

After the repair, perform the following procedure to confirm the malfunction is eliminated.

WITH CONSULT-II

1. Turn ignition switch ON.
2. Select “SELECTION FROM MENU” in “DATA MONITOR” mode for “A/T” with CONSULT-II and check monitor “VHCL/S SE-A/T”, “ACCELE POSI”, “ENGINE SPEED”, “SLCT LVR POSI” and “GEAR”.
3. Touch “START”.
4. Start engine and maintain the following conditions for at least 5 consecutive seconds.
   VHCL/S SE-A/T: 40 km/h (25 MPH) or more
   ACCELE POSI: More than 0.5/8
   ENGINE SPEED: 1,500 rpm or more
   SLCT LVR POSI: “D” position
   GEAR (Turbine revolution sensor 1): “4” or “5” position
   GEAR (Turbine revolution sensor 2): All positions
   Driving location: Driving the vehicle uphill (increased engine load) will help maintain the driving conditions required for this test.

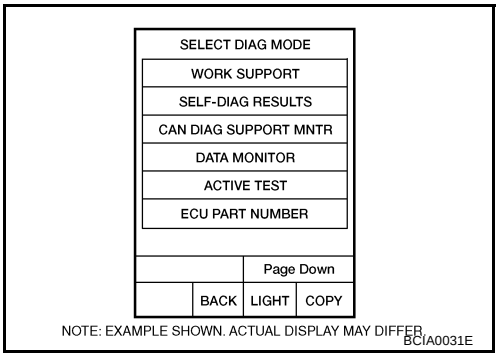

5. If DTC is detected, go to AT-111, "Diagnostic Procedure" .

WITH GST

Follow the procedure “WITH CONSULT-II”.

Diagnostic Procedure

NCS000EL

1. CHECK INPUT SIGNAL

With CONSULT-II

1. Start engine.
2. Select “ECU INPUT SIGNALS” in “DATA MONITOR” mode for “A/T” with CONSULT-II.
3. Vehicle start and read out the value of “TURBINE REV”.

Item name	Condition	Display value
TURBINE REV	During driving (lock-up ON)	Approximately matches the engine speed.

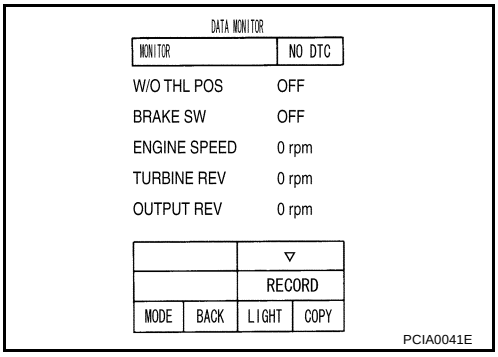

OK or NG

OK >> GO TO 4.
NG >> GO TO 2.

2. CHECK TCM POWER SUPPLY AND GROUND CIRCUIT

Check TCM power supply and ground circuit. Refer to AT-172, "MAIN POWER SUPPLY AND GROUND CIRCUIT" .

OK or NG

OK >> GO TO 3.
NG >> Repair or replace damaged parts.

3. DETECT MALFUNCTIONING ITEM

Check A/T assembly harness connector pin terminals for damage or loose connection with harness connector.

OK or NG

OK >> Replace control valve with TCM. Refer to AT-225, "Control Valve with TCM and A/T Fluid Temperature Sensor 2" .
NG >> Repair or replace damaged parts.

4. CHECK DTC

Perform AT-110, "DTC Confirmation Procedure" .

OK or NG

OK >> **INSPECTION END**
NG >> GO TO 2.

DTC P0720 VEHICLE SPEED SENSOR A/T (REVOLUTION SENSOR)

PFP:32702

Description

NCS000CX

The revolution sensor detects the revolution of the parking gear and emits a pulse signal. The pulse signal is sent to the TCM which converts it into vehicle speed.

CONSULT-II Reference Value

NCS000CY

Item name	Condition	Display value
VHCL/S SE-A/T	During driving	Approximately matches the speedometer reading.

On Board Diagnosis Logic

NCS000CZ

- This is an OBD-II self-diagnostic item.
- Diagnostic trouble code “P0720 VEH SPD SEN/CIR AT” with CONSULT-II or 1st judgment flicker without CONSULT-II is detected under the following conditions.
  - When TCM does not receive the proper voltage signal from the sensor.
  - After ignition switch is turned ON, irregular signal input from vehicle speed sensor MTR before the vehicle starts moving.

Possible Cause

NCS000D0

- Harness or connectors.
  (Sensor circuit is open or shorted.)
- Revolution sensor.
- Vehicle speed sensor MTR.

DTC Confirmation Procedure

NCS000D1

CAUTION:

- **Always drive vehicle at a safe speed.**
- **Be careful not to rev engine into the red zone on the tachometer.**

NOTE:

If “DTC Confirmation Procedure” has been previously performed, always turn ignition switch OFF and wait at least 10 seconds before performing the next test.

After the repair, perform the following procedure to confirm the malfunction is eliminated.

WITH CONSULT-II

1. Turn ignition switch ON.
2. Select “ECU INPUT SIGNALS” in “DATA MONITOR” mode for “A/T” with CONSULT-II.
3. Touch “START”.
4. Drive vehicle and check for an increase of “VHCL/S SE-A/T” value in response to “VHCL/S SE-MTR” value.
   If the check result is NG, go to AT-115, "Diagnostic Procedure" .
   If the check result is OK, go to following step.
5. Select “SELECTION FROM MENU” in “DATA MONITOR” mode for “A/T” with CONSULT-II and check monitor “VHCL/S SE-A/T”, “ACCELE POSI”, “ENGINE SPEED” and “SLCT LVR POSI”.

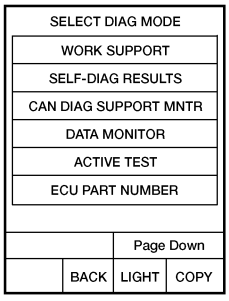

NOTE: EXAMPLE SHOWN. ACTUAL DISPLAY MAY DIFFER.
BCIA0031E

6. Start engine and maintain the following conditions for at least 5 consecutive seconds.
   VHCL/S SE-A/T: 30 km/h (19 MPH) or more
   ACCELE POSI: More than 1.0/8
   SLCT LVR POSI: “D” position
   Driving location: Driving the vehicle uphill (increased engine load) will help maintain the driving conditions required for this test.
   If the check result is NG, go to AT-115, "Diagnostic Procedure" .
   If the check result is OK, go to following step.
7. Maintain the following conditions for at least 5 consecutive seconds.
   ENGINE SPEED: 3,500 rpm or more
   ACCELE POSI: More than 1.0/8

SLCT LVR POSI: “D” position
Driving location: Driving the vehicle uphill (increased engine load) will help maintain the driving conditions required for this test.

8. If DTC is detected, go to AT-115, "Diagnostic Procedure" .

WITH GST

Follow the procedure “WITH CONSULT-II”.

Wiring Diagram — AT — VSSA/T

NCS000D2

AT-VSSA/T-01

: DETECTABLE LINE FOR DTC
: NON-DETECTABLE LINE FOR DTC

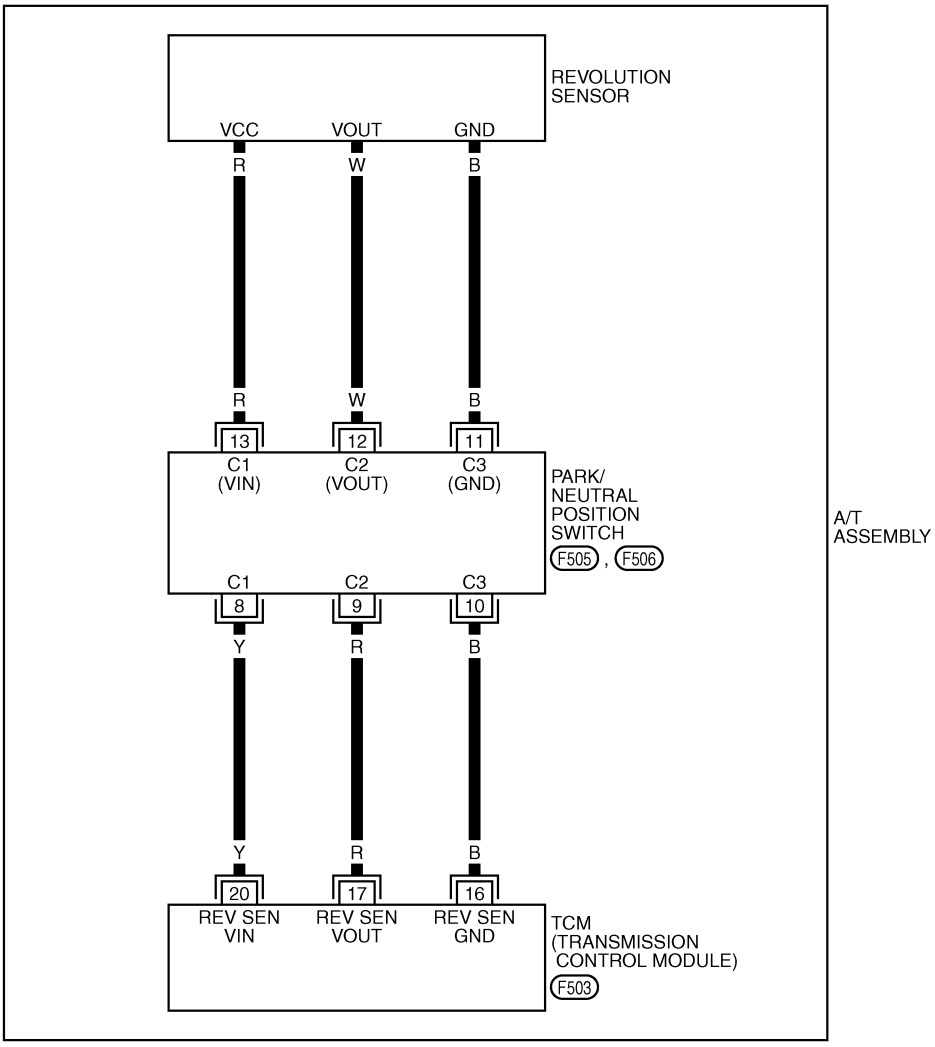

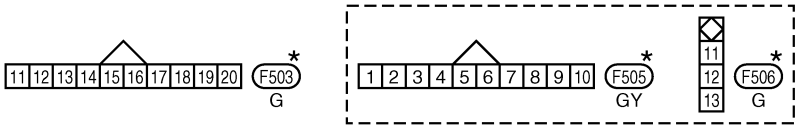

*: THIS CONNECTOR IS NOT SHOWN IN "HARNESS LAYOUT", PG SECTION.

TCWM0249E

Diagnostic Procedure

NCS000D3

1. CHECK INPUT SIGNAL

With CONSULT-II

1. Turn ignition switch ON.
2. Select “ECU INPUT SIGNALS” in “DATA MONITOR” mode for “A/T” with CONSULT-II.
3. Start the engine.
4. Read out the value of “VHCL/S SE-A/T” while driving.
   Check the value changes according to driving speed.

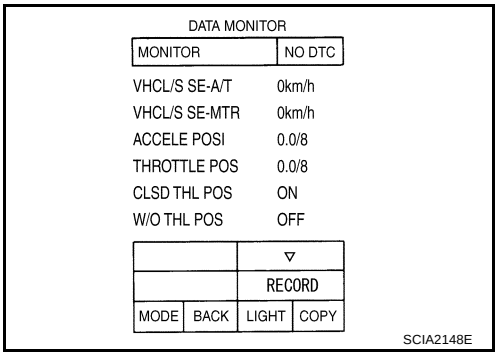

Item name	Condition	Display value
VHCL/S SE-A/T	During driving	Approximately matches the speedometer reading.

OK or NG

OK >> GO TO 6.
NG >> GO TO 2.

2. CHECK TCM POWER SUPPLY AND GROUND CIRCUIT

Check TCM power supply and ground circuit. Refer to AT-172, "MAIN POWER SUPPLY AND GROUND CIRCUIT" .

OK or NG

OK >> GO TO 3.
NG >> Repair or replace damaged parts.

3. DETECT MALFUNCTIONING ITEM

Check A/T assembly harness connector pin terminals for damage or loose connection with harness connector.

OK or NG

OK >> GO TO 4.
NG >> Repair or replace damaged parts.

4. CHECK SUB-HARNESS

1. Remove control valve with TCM. Refer to AT-225, "Control Valve with TCM and A/T Fluid Temperature Sensor 2" .
2. Disconnect park/neutral position switch connector and TCM connector.
3. Check continuity between park/neutral position switch connector terminals and TCM connector terminals.

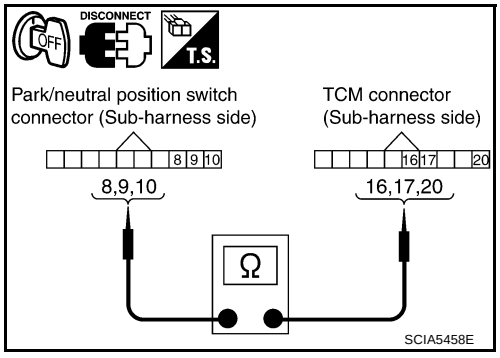

Item	Connector	Terminal	Continuity
Park/neutral position switch connector	F505	8	Yes
TCM connector	F503	20	
Park/neutral position switch connector	F505	9	Yes
TCM connector	F503	17	
Park/neutral position switch connector	F505	10	Yes
TCM connector	F503	16	

4. If OK, check harness for short to ground and short to power.
5. Reinstall any part removed.

OK or NG

OK >> GO TO 5.
NG >> Replace open circuit or short to ground and short to power in harness or connectors.

5. REPLACE REVOLUTION SENSOR AND CHECK DTC

1. Replace revolution sensor. Refer to AT-244, "Revolution Sensor" .
2. Perform “DTC Confirmation Procedure”. Refer to AT-112, "DTC Confirmation Procedure" .

OK or NG

OK >> **INSPECTION END**
NG >> Replace the control valve with TCM. Refer to AT-225, "Control Valve with TCM and A/T Fluid Temperature Sensor 2" .

6. CHECK DTC

Perform AT-112, "DTC Confirmation Procedure" .

OK or NG

OK >> **INSPECTION END**
NG >> GO TO 2.

DTC P0725 ENGINE SPEED SIGNAL

PFP:24825

Description

NCS000D4

The engine speed signal is sent from the ECM to the TCM.

CONSULT-II Reference Value

NCS000D5

Item name	Condition	Display value
ENGINE SPEED	Engine running	Closely matches the tachometer reading.

On Board Diagnosis Logic

NCS000D6

- This is an OBD-II self-diagnostic item.
- Diagnostic trouble code “P0725 ENGINE SPEED SIG” with CONSULT-II or 16th judgment flicker without CONSULT-II is detected when TCM does not receive the ignition signal from ECM during engine cranking or running.

Possible Cause

NCS000D7

Harness or connectors.
(ECM to TCM circuit is open or shorted.)

DTC Confirmation Procedure

NCS000D8

CAUTION:
Always drive vehicle at a safe speed.

NOTE:
If “DTC Confirmation Procedure” has been previously performed, always turn ignition switch OFF and wait at least 10 seconds before performing the next test.
After the repair, perform the following procedure to confirm the malfunction is eliminated.

WITH CONSULT-II

1. Turn ignition switch ON.
2. Select “SELECTION FROM MENU” in “DATA MONITOR” mode for “A/T” with CONSULT-II and check monitor “VHCL/S SE-A/T”, “ACCELE POSI” and “SLCT LVR POSI”.
3. Touch “START”.
4. Start engine and maintain the following conditions for at least 10 consecutive seconds.
   VHCL/S SE-A/T: 10 km/h (6 MPH) or more
   ACCELE POSI: More than 1.0/8
   SLCT LVR POSI: “D” position
5. If DTC is detected, go to AT-118, "Diagnostic Procedure" .

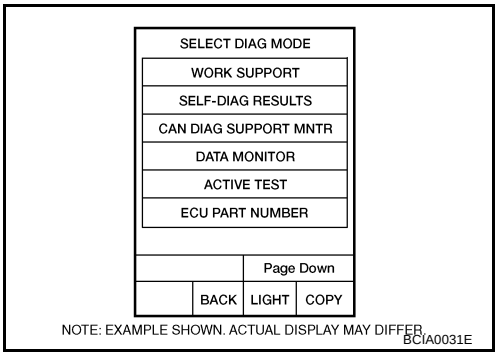

WITH GST

Follow the procedure “WITH CONSULT-II”.

Diagnostic Procedure

NCS000D9

1. CHECK CAN COMMUNICATION LINE

Perform self-diagnosis. Refer to AT-86, "SELF-DIAGNOSTIC RESULT MODE" , AT-95, "Diagnostic Procedure Without CONSULT-II" .

Is a malfunction in the CAN communication indicated in the results?

YES >> Check CAN communication line. Refer to AT-98, "DTC U1000 CAN COMMUNICATION LINE" .
NO >> GO TO 2.

2. CHECK DTC WITH TCM

With CONSULT-II

1. Start engine.
2. Select “ECU INPUT SIGNALS” in “DATA MONITOR” mode for “A/T” with CONSULT-II.
3. While monitoring engine speed, check for engine speed change corresponding to wide-open throttle position signal.

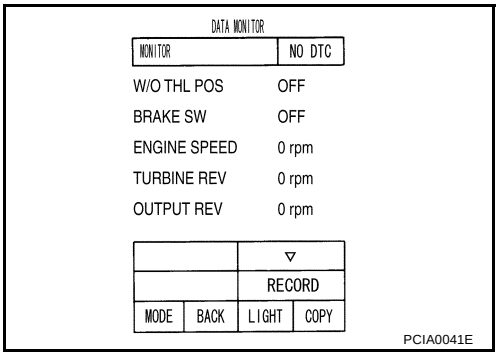

Item name	Condition	Display value
ENGINE SPEED	Engine running	Closely matches the tachometer reading.

OK or NG

OK >> GO TO 3.
NG >> Check the ignition signal circuit. Refer to EC-665, "IGNITION SIGNAL" .

3. CHECK DTC

Perform AT-117, "DTC Confirmation Procedure" .

OK or NG

OK >> **INSPECTION END**
NG >> GO TO 4.

4. CHECK TCM POWER SUPPLY AND GROUND CIRCUIT

Check TCM power supply and ground circuit. Refer to AT-172, "MAIN POWER SUPPLY AND GROUND CIRCUIT" .

OK or NG

OK >> GO TO 5.
NG >> Repair or replace damaged parts.

5. DETECT MALFUNCTIONING ITEM

Check A/T assembly harness connector pin terminals for damage or loose connection with harness connector.

OK or NG

OK >> Replace control valve with TCM. Refer to AT-225, "Control Valve with TCM and A/T Fluid Temperature Sensor 2" .
NG >> Repair or replace damaged parts.

DTC P0740 TORQUE CONVERTER CLUTCH SOLENOID VALVE

PFP:31940

Description

NCS000DA

- The torque converter clutch solenoid valve is activated, with the gear in D4 , D5 , M2, M3, M4 and M5 by the TCM in response to signals sent from the vehicle speed sensor and accelerator pedal position sensor (throttle position sensor). Torque converter clutch piston operation will then be controlled.
- Lock-up operation, however, is prohibited when A/T fluid temperature is too low.
- When the accelerator pedal is depressed (less than 1.0/8) in lock-up condition, the engine speed should not change abruptly. If there is a big jump in engine speed, there is no lock-up.

CONSULT-II Reference Value

NCS000DB

Item name	Condition	Display value (Approx.)
TCC SOLENOID	Slip lock-up is active	0.2 - 0.4 A
	Lock-up is active	0.4 - 0.6 A

On Board Diagnosis Logic

NCS000DC

- This is an OBD-II self-diagnostic item.
- Diagnostic trouble code “P0740 TCC SOLENOID/CIRC” with CONSULT-II or 3rd judgment flicker without CONSULT-II is detected under the following conditions.
  - When TCM detects an improper voltage drop when it tries to operate the solenoid valve.
  - When TCM detects as irregular by comparing target value with monitor value.

Possible Cause

NCS000DD

- Torque converter clutch solenoid valve.
- Harness or connectors.
  (Solenoid circuit is open or shorted.)

DTC Confirmation Procedure

NCS000DE

CAUTION:
Always drive vehicle at a safe speed.

NOTE:
If “DTC Confirmation Procedure” has been previously performed, always turn ignition switch OFF and wait at least 10 seconds before performing the next test.
After the repair, perform the following procedure to confirm the malfunction is eliminated.

WITH CONSULT-II

1. Turn ignition switch ON.
2. Select “SELECTION FROM MENU” in “DATA MONITOR” mode for “A/T” with CONSULT-II and check monitor “VHCL/S SE-A/T”, “ACCELE POSI” and “SLCT LVR POSI”.
3. Touch “START”.
4. Start engine and maintain the following conditions for at least 5 consecutive seconds.
   VHCL/S SE-A/T: 80 km/h (50 MPH) or more
   ACCELE POSI: 0.5/8 - 1.0/8
   SLCT LVR POSI: “D” position
   Driving location: Driving the vehicle uphill (increased engine load) will help maintain the driving conditions required for this test.
5. If DTC is detected, go to AT-120, "Diagnostic Procedure" .

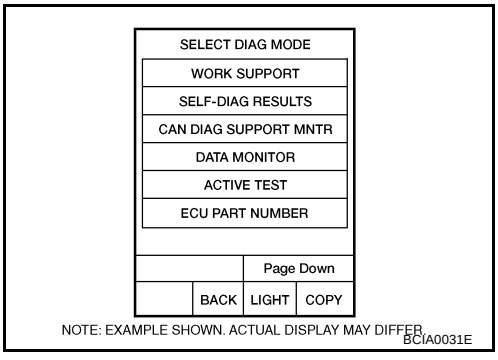

WITH GST

Follow the procedure “WITH CONSULT-II”.

Diagnostic Procedure

NCS000DF

1. CHECK INPUT SIGNAL

With CONSULT-II

1. Turn ignition switch ON.
2. Select “MAIN SIGNALS” in “DATA MONITOR” mode for “A/T” with CONSULT-II.
3. Start engine.
4. Read out the value of “TCC SOLENOID” while driving.

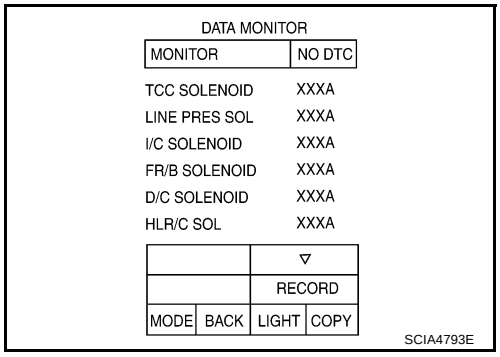

Item name	Condition	Display value (Approx.)
TCC SOLENOID	Slip lock-up is active	0.2 - 0.4 A
	Lock-up is active	0.4 - 0.6 A

OK or NG

OK >> GO TO 4.
NG >> GO TO 2.

2. CHECK TCM POWER SUPPLY AND GROUND CIRCUIT

Check TCM power supply and ground circuit. Refer to AT-172, "MAIN POWER SUPPLY AND GROUND CIRCUIT" .

OK or NG

OK >> GO TO 3.
NG >> Repair or replace damaged parts.

3. DETECT MALFUNCTIONING ITEM

Check A/T assembly harness connector pin terminals for damage or loose connection with harness connector.

OK or NG

OK >> Replace control valve with TCM. Refer to AT-225, "Control Valve with TCM and A/T Fluid Temperature Sensor 2" .
NG >> Repair or replace damaged parts.

4. CHECK DTC

Perform AT-119, "DTC Confirmation Procedure" .

OK or NG

OK >> **INSPECTION END**
NG >> GO TO 2.

DTC P0744 A/T TCC S/V FUNCTION (LOCK-UP)

PFP:31940

Description

NCS000DG

This malfunction is detected when the A/T does not shift into 5th gear position or the torque converter clutch does not lock-up as instructed by the TCM. This is not only caused by electrical malfunction (circuits open or shorted) but also by mechanical malfunction such as control valve sticking, improper solenoid valve operation, etc.

CONSULT-II Reference Value

NCS000DH

Item name	Condition	Display value (Approx.)
TCC SOLENOID	Slip lock-up is active	0.2 - 0.4 A
	Lock-up is active	0.4 - 0.6 A

On Board Diagnosis Logic

NCS000DI

- This is an OBD-II self-diagnostic item.
- Diagnostic trouble code “P0744 A/T TCC S/V FNCTN” with CONSULT-II or 3rd judgment flicker without CONSULT-II is detected under the following conditions.
  - When A/T cannot perform lock-up even if electrical circuit is good.
  - When TCM detects as irregular by comparing difference value with slip rotation.

Possible Cause

NCS000DJ

- Harness or connectors.
  (Solenoid circuit is open or shorted.)
- Torque converter clutch solenoid valve.
- Hydraulic control circuit.

DTC Confirmation Procedure

NCS000DK

CAUTION:
Always drive vehicle at a safe speed.

NOTE:
If “DTC Confirmation Procedure” has been previously performed, always turn ignition switch OFF and wait at least 10 seconds before performing the next test.
After the repair, perform the following procedure to confirm the malfunction is eliminated.

WITH CONSULT-II

1. Start engine and Select “TCC SOL FUNCTN CHECK” of “DTC WORK SUPPORT” mode for “A/T” with CONSULT-II and touch “START”.
2. Accelerate vehicle to more than 80 km/h (50 MPH) and maintain the following condition continuously until “TESTING” has turned to “COMPLETE”. (It will take approximately 30 seconds after “TESTING” shows.)
   ACCELE POSI: More than 1.0/8 (at all times during step 4)
   TCC SOLENOID: 0.4 - 0.6 A
   SLCT LVR POSI: “D” position
   [Reference speed: Constant speed of more than 80 km/h (50 MPH)]

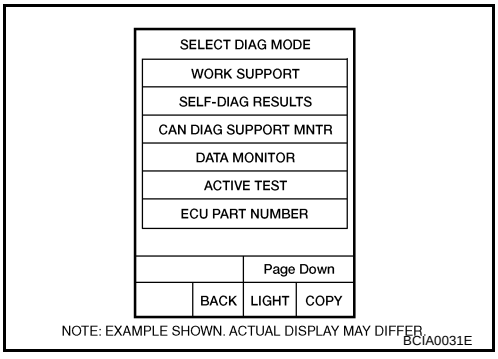

- **Make sure “GEAR” shows “5”.**
- **For shift schedule, refer to AT-59, "Vehicle Speed at Which Lock-up Occurs/Releases" .**
- **If “TESTING” does not appear on CONSULT-II for a long time, select “SELF-DIAG RESULTS”. In case a DTC other than P0744 is shown, refer to applicable “TROUBLE DIAGNOSIS FOR DTC”.**

3. Make sure that “OK” is displayed. (If “NG” is displayed, refer to AT-122, "Diagnostic Procedure" .)
   Refer to shift schedule, AT-59, "Vehicle Speed at Which Lock-up Occurs/Releases" .

WITH GST

Follow the procedure “WITH CONSULT-II”.

Diagnostic Procedure

NCS000DL

1. CHECK INPUT SIGNAL

With CONSULT-II

1. Turn ignition switch ON.
2. Select “MAIN SIGNALS” in “DATA MONITOR” mode for “A/T” with CONSULT-II.
3. Start the engine.
4. Read out the value of “TCC SOLENOID” while driving.

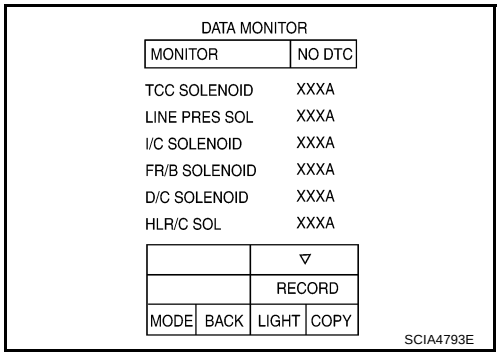

Item name	Condition	Display value (Approx.)
TCC SOLENOID	Slip lock-up is active	0.2 - 0.4 A
	Lock-up is active	0.4 - 0.6 A

OK or NG

OK >> GO TO 4.
NG >> GO TO 2.

2. CHECK TCM POWER SUPPLY AND GROUND CIRCUIT

Check TCM power supply and ground circuit. Refer to AT-172, "MAIN POWER SUPPLY AND GROUND CIRCUIT" .

OK or NG

OK >> GO TO 3.
NG >> Repair or replace damaged parts.

3. DETECT MALFUNCTIONING ITEM

Check A/T assembly harness connector pin terminals for damage or loose connection with harness connector.

OK or NG

OK >> Replace control valve with TCM. Refer to AT-172, "MAIN POWER SUPPLY AND GROUND CIRCUIT" .
NG >> Repair or replace damaged parts.

4. CHECK DTC

Perform AT-121, "DTC Confirmation Procedure" .

OK or NG

OK >> **INSPECTION END**
NG >> GO TO 2.

DTC P0745 LINE PRESSURE SOLENOID VALVE

PFP:31940

Description

NCS000DM

The line pressure solenoid valve regulates the oil pump discharge pressure to suit the driving condition in response to a signal sent from the TCM.

CONSULT-II Reference Value

NCS000DN

Item name	Condition	Display value (Approx.)
LINE PRES SOL	During driving	0.2 - 0.6 A

On Board Diagnosis Logic

NCS000DO

- This is an OBD-II self-diagnostic item.
- Diagnostic trouble code “P0745 L/PRESS SOL/CIRC” with CONSULT-II or 4th judgment flicker without CONSULT-II is detected under the following conditions.
  - When TCM detects an improper voltage drop when it tries to operate the solenoid valve.
  - When TCM detects as irregular by comparing target value with monitor value.

Possible Cause

NCS000DP

- Harness or connectors.
  (Solenoid circuit is open or shorted.)
- Line pressure solenoid valve.

DTC Confirmation Procedure

NCS000DQ

NOTE:
If “DTC Confirmation Procedure” has been previously performed, always turn ignition switch OFF and wait at least 10 seconds before performing the next test.
After the repair, perform the following procedure to confirm the malfunction is eliminated.

WITH CONSULT-II

1. Turn ignition switch ON.
2. Select “MAIN SIGNALS” in “DATA MONITOR” mode for “A/T” with CONSULT-II.
3. Touch “START”.
4. Start engine and wait for at least 5 seconds.
5. If DTC is detected, go to AT-124, "Diagnostic Procedure" .

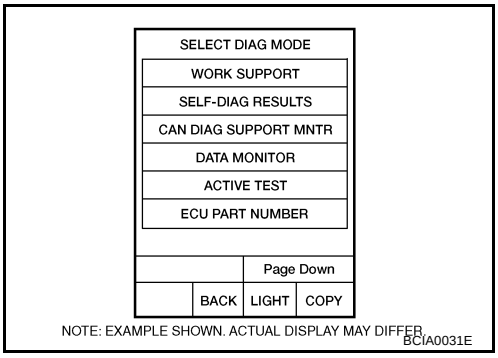

WITH GST

Follow the procedure “WITH CONSULT-II”.

Diagnostic Procedure

NCS000DR

1. CHECK INPUT SIGNAL

With CONSULT-II

1. Turn ignition switch ON.
2. Select “MAIN SIGNALS” in “DATA MONITOR” mode for “A/T” with CONSULT-II.
3. Start the engine.
4. Read out the value of “LINE PRES SOL” while driving.

Item name	Condition	Display value (Approx.)
LINE PRES SOL	During driving	0.2 - 0.6 A

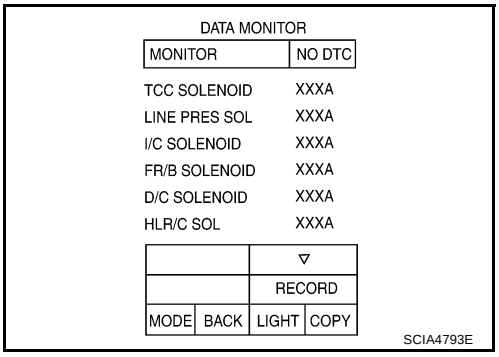

OK or NG

OK >> GO TO 4.
NG >> GO TO 2.

2. CHECK TCM POWER SUPPLY AND GROUND CIRCUIT

Check TCM power supply and ground circuit. Refer to AT-172, "MAIN POWER SUPPLY AND GROUND CIRCUIT" .

OK or NG

OK >> GO TO 3.
NG >> Repair or replace damaged parts.

3. DETECT MALFUNCTIONING ITEM

Check A/T assembly harness connector pin terminals for damage or loose connection with harness connector.

OK or NG

OK >> Replace control valve with TCM. Refer to AT-225, "Control Valve with TCM and A/T Fluid Temperature Sensor 2" .
NG >> Repair or replace damaged parts.

4. CHECK DTC

Perform AT-123, "DTC Confirmation Procedure" .

OK or NG

OK >> **INSPECTION END**
NG >> GO TO 2.

DTC P1705 THROTTLE POSITION SENSOR

PFP:22620

Description

NCS000E2

Electric throttle control actuator consists of throttle control motor, accelerator pedal position sensor, throttle position sensor, etc. The actuator sends a signal to the ECM, and ECM sends signals to TCM with CAN communication.

CONSULT-II Reference Value

NCS000E3

Item name	Condition	Display value
ACCELE POSI	Released accelerator pedal	0.0/8
	Fully depressed accelerator pedal	8.0/8

On Board Diagnosis Logic

NCS000E4

- This is an OBD-II self-diagnostic item.
- Diagnostic trouble code “P1705 TP SEN/CIRC A/T” with CONSULT-II or 15th judgment flicker without CONSULT-II is detected when TCM does not receive the proper accelerator pedal position signals (input by CAN communication) from ECM.

Possible Cause

NCS000E5

Harness or connectors.
(Sensor circuit is open or shorted.)

DTC Confirmation Procedure

NCS000E6

NOTE:
If “DTC Confirmation Procedure” has been previously performed, always turn ignition switch OFF and wait at least 10 seconds before performing the next test.
After the repair, perform the following procedure to confirm the malfunction is eliminated.

WITH CONSULT-II

1. Turn ignition switch ON.
2. Select “ECU INPUT SIGNALS” in “DATA MONITOR” mode for “A/T” with CONSULT-II.
3. Touch “START”.
4. Start engine and let it idle for 1 second.
5. If DTC is detected, go to AT-126, "Diagnostic Procedure" .

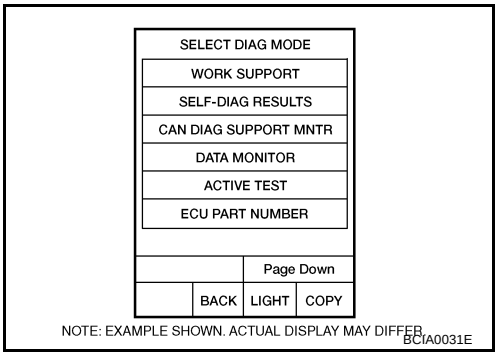

WITH GST

Follow the procedure “WITH CONSULT-II”.

Diagnostic Procedure

NCS000E7

1. CHECK CAN COMMUNICATION LINE

Perform self-diagnosis. Refer to AT-86, "SELF-DIAGNOSTIC RESULT MODE" , AT-95, "Diagnostic Procedure Without CONSULT-II" .

Is a malfunction in the CAN communication indicated in the results?

YES >> Check CAN communication line. Refer to AT-98, "DTC U1000 CAN COMMUNICATION LINE" .
NO >> GO TO 2.

2. CHECK DTC WITH TCM

With CONSULT-II

1. Turn ignition switch ON.
2. Select “ECU INPUT SIGNALS” in “DATA MONITOR” mode for “A/T” with CONSULT-II.
3. Depress accelerator pedal and read out the value of “ACCELE POSI”.

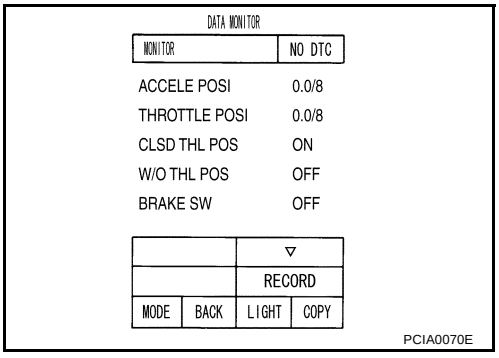

Item name	Condition	Display value (Approx.)
ACCELE POSI	Released accelerator pedal.	0.0/8
	Fully depressed accelerator pedal.	8.0/8

4. Select “SELF-DIAG RESULTS” mode for “A/T” with CONSULT-II. Refer to AT-86, "SELF-DIAGNOSTIC RESULT MODE"

OK or NG

OK >> GO TO 4.
NG >> GO TO 3.

3. CHECK DTC WITH ECM

With CONSULT-II

1. Turn ignition switch ON.
2. Select “SELF-DIAG RESULTS” mode for “ENGINE” with CONSULT-II. Refer to EC-121, "CONSULT-II Function (ENGINE)" .

OK or NG

OK >> GO TO 4.
NG >> Check the DTC detected item. Refer to EC-121, "CONSULT-II Function (ENGINE)" .
- If CAN communication line is detected, go to AT-98, "DTC U1000 CAN COMMUNICATION LINE" .

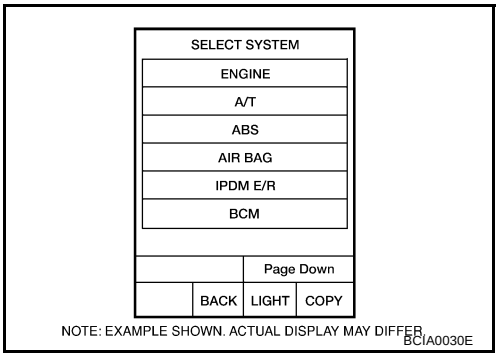

4. CHECK DTC

Perform AT-125, "DTC Confirmation Procedure" .

OK or NG

OK >> **INSPECTION END**
NG >> GO TO 5.

5. CHECK TCM POWER SUPPLY AND GROUND CIRCUIT

Check TCM power supply and ground circuit. Refer to AT-172, "MAIN POWER SUPPLY AND GROUND CIRCUIT" .

OK or NG

OK >> GO TO 6.
NG >> Repair or replace damaged parts.

6. DETECT MALFUNCTIONING ITEM

Check A/T assembly harness connector pin terminals for damage or loose connection with harness connector.

OK or NG

OK >> Replace control valve with TCM. Refer to AT-225, "Control Valve with TCM and A/T Fluid Temperature Sensor 2" .

NG >> Repair or replace damaged parts.

DTC P1710 A/T FLUID TEMPERATURE SENSOR CIRCUIT

PFP:31940

Description

NCS000E8

The A/T fluid temperature sensor detects the A/T fluid temperature and sends a signal to the TCM.

CONSULT-II Reference Value

NCS000E9

Item name	Condition °C (°F)	Display value (Approx.)
ATF TEMP SE 1	0 (32) - 20 (68) - 80 (176)	3.3 - 2.7 - 0.9 V
ATF TEMP SE 2		3.3 - 2.5 - 0.7 V

On Board Diagnosis Logic

NCS000EA

- This is an OBD-II self-diagnostic item.
- Diagnostic trouble code “P1710 (A/T), P0710 (ENGINE) ATF TEMP SEN/CIRC” with CONSULT-II or 10th judgment flicker without CONSULT-II is detected when TCM receives an excessively low or high voltage from the sensor.

Possible Cause

NCS000EB

- Harness or connectors.
  (Sensor circuit is open or shorted.)
- A/T fluid temperature sensors 1 and/or 2.

DTC Confirmation Procedure

NCS000EC

CAUTION:
Always drive vehicle at a safe speed.

NOTE:
If “DTC Confirmation Procedure” has been previously performed, always turn ignition switch OFF and wait at least 10 seconds before performing the next test.
After the repair, perform the following procedure to confirm the malfunction is eliminated.

WITH CONSULT-II

1. Turn ignition switch ON.
2. Select “SELECTION FROM MENU” in “DATA MONITOR” mode for “A/T” with CONSULT-II and check monitor “VHCL/S SE-A/T”, “ACCELE POSI” and “SLCT LVR POSI”.
3. Touch “START”.
4. Start engine and maintain the following conditions for at least 10 minutes (Total). (It is not necessary to maintain continuously.)
   VHCL/S SE-A/T: 10 km/h (6 MPH) or more
   ACCELE POSI: More than 1.0/8
   SLCT LVR POSI: “D” position
5. If DTC is detected, go to AT-130, "Diagnostic Procedure" .

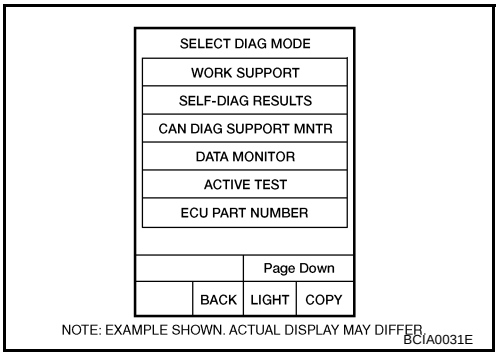

WITH GST

Follow the procedure “WITH CONSULT-II”.

Wiring Diagram — AT — FTS

NCS000ED

AT-FTS-01

: DETECTABLE LINE FOR DTC
: NON-DETECTABLE LINE FOR DTC

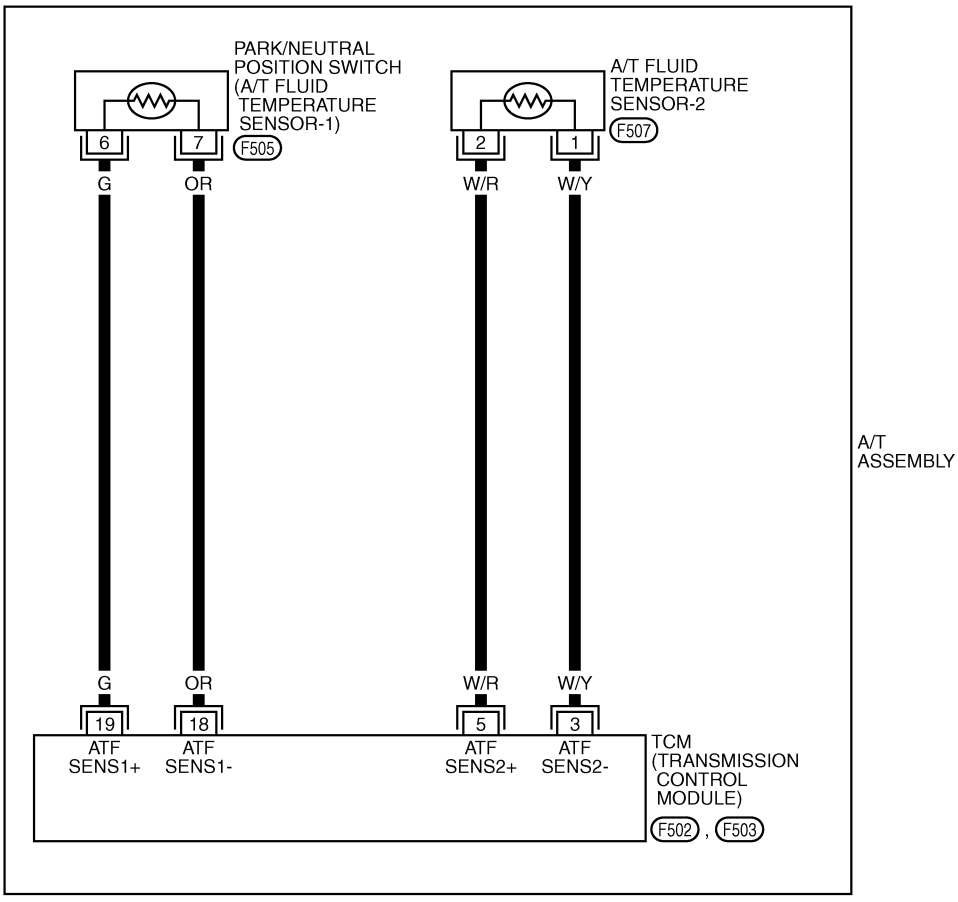

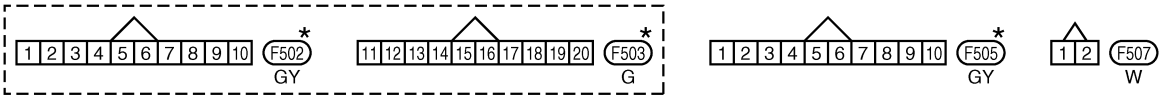

*: THIS CONNECTOR IS NOT SHOWN IN "HARNESS LAYOUT", PG SECTION.

TCWM0251E

Diagnostic Procedure

NCS000EE

1. CHECK A/T FLUID TEMPERATURE SENSOR 1 SIGNAL

With CONSULT-II

1. Start engine.
2. Select “ECU INPUT SIGNALS” in “DATA MONITOR” mode for “A/T” with CONSULT-II.
3. Read out the value of “ATF TEMP SE 1”.

Item name	Condition °C (°F)	Display value (Approx.)
ATF TEMP SE 1	0 (32) - 20 (68) - 80 (176)	3.3 - 2.7 - 0.9 V

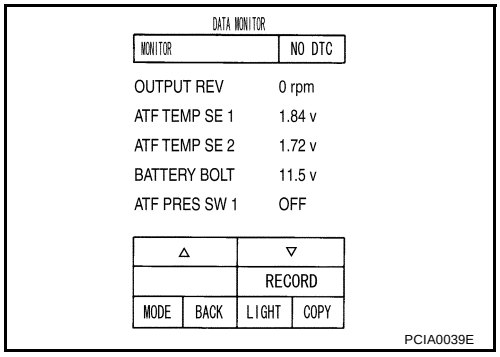

OK or NG

OK >> GO TO 2.
NG >> GO TO 3.

2. CHECK A/T FLUID TEMPERATURE SENSOR 2 SIGNAL

With CONSULT-II

1. Start engine.
2. Select “ECU INPUT SIGNALS” in “DATA MONITOR” mode for “A/T” with CONSULT-II.
3. Read out the value of “ATF TEMP SE 2”.

Item name	Condition °C (°F)	Display value (Approx.)
ATF TEMP SE 2	0 (32) - 20 (68) - 80 (176)	3.3 - 2.5 - 0.7 V

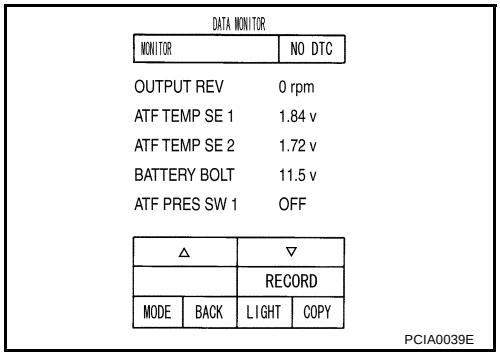

OK or NG

OK >> GO TO 8.
NG >> GO TO 5.

3. CHECK A/T FLUID TEMPERATURE SENSOR 1

Check A/T fluid temperature sensor 1. Refer to AT-132, "A/T FLUID TEMPERATURE SENSOR 1" .

OK or NG

OK >> GO TO 4.
NG >> Replace control valve with TCM. Refer to AT-225, "Control Valve with TCM and A/T Fluid Temperature Sensor 2" .

4. CHECK SUB-HARNESS

1. Disconnect park/neutral position switch connector and TCM connector.
2. Check continuity between park/neutral position switch connector terminals and TCM connector terminals.

Item	Connector	Terminal	Continuity
Park/neutral position switch connector	F505	6	Yes
TCM connector	F503	19	
Park/neutral position switch connector	F505	7	Yes
TCM connector	F503	18	

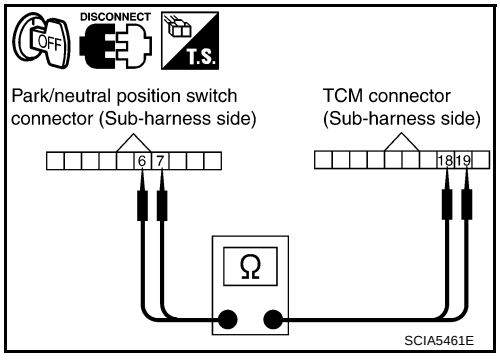

3. If OK, check harness for short to ground and short to power.

OK or NG

OK >> GO TO 7.
NG >> Replace open circuit or short to ground and short to power in harness or connectors.

5. CHECK A/T FLUID TEMPERATURE SENSOR 2

Check A/T fluid temperature sensor 2. Refer to AT-132, "A/T FLUID TEMPERATURE SENSOR 2" .

OK or NG

OK >> GO TO 6.
NG >> Replace A/T fluid temperature sensor 2. Refer to AT-233, "A/T FLUID TEMPERATURE SENSOR 2 REMOVAL AND INSTALLATION" .

6. CHECK TERMINAL CORD ASSEMBLY

1. Disconnect A/T fluid temperature sensor 2 connector and TCM connector.
2. Check continuity between A/T fluid temperature sensor 2 connector terminals and TCM connector terminals.

Item	Connector	Terminal	Continuity
A/T fluid temperature sensor 2 connector	F507	1	Yes
TCM connector	F502	3	
A/T fluid temperature sensor 2 connector	F507	2	Yes
TCM connector	F502	5	

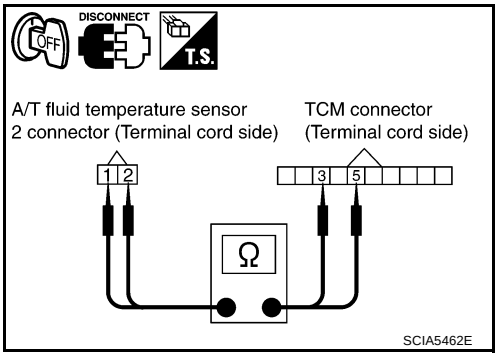

3. If OK, check harness for short to ground and short to power.

OK or NG

OK >> GO TO 7.
NG >> Replace open circuit or short to ground and short to power in harness or connectors.

7. CHECK TCM POWER SUPPLY AND GROUND CIRCUIT

1. Check TCM power supply and ground circuit. Refer to AT-172, "MAIN POWER SUPPLY AND GROUND CIRCUIT" .
2. Reinstall any part removed.

OK or NG

OK >> Replace control valve with TCM. Refer to AT-225, "Control Valve with TCM and A/T Fluid Temperature Sensor 2" .
NG >> Repair or replace damaged parts.

8. CHECK DTC

Perform AT-128, "DTC Confirmation Procedure" .

OK or NG

OK >> **INSPECTION END**
NG >> GO TO 1.

Component Inspection

NCS000EF

A/T FLUID TEMPERATURE SENSOR 1

1. Remove control valve with TCM. Refer to AT-225, "Control Valve with TCM and A/T Fluid Temperature Sensor 2" .
2. Check resistance between terminals.

Name	Connector	Terminal	Temperature °C (°F)	Resistance (Approx.) (kΩ)
A/T fluid temperature sensor 1	F505	6 - 7	0 (32)	15
			20 (68)	6.5
			80 (176)	0.9

3. If NG, replace control valve with TCM. Refer to AT-225, "Control Valve with TCM and A/T Fluid Temperature Sensor 2" .

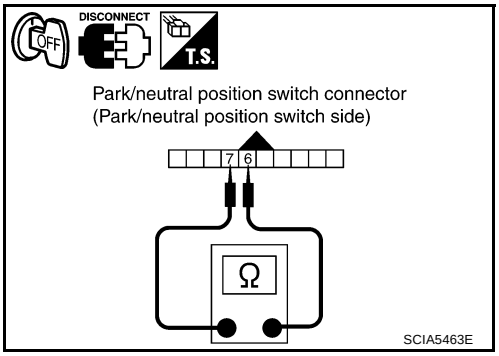

A/T FLUID TEMPERATURE SENSOR 2

1. Remove A/T fluid temperature sensor 2. Refer to AT-233, "A/T FLUID TEMPERATURE SENSOR 2 REMOVAL AND INSTALLATION" .
2. Check resistance between terminals.

Name	Connector	Terminal	Temperature °C (°F)	Resistance (Approx.) (kΩ)
A/T fluid temperature sensor 2	F507	1 - 2	0 (32)	10
			20 (68)	4
			80 (176)	0.5

3. If NG, replace A/T fluid temperature sensor 2. Refer to AT-233, "A/T FLUID TEMPERATURE SENSOR 2 REMOVAL AND INSTALLATION" .

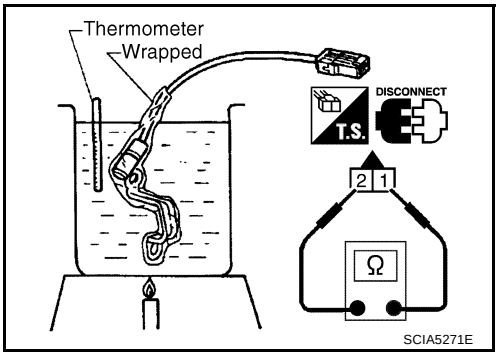

DTC P1721 VEHICLE SPEED SENSOR MTR

PFP:24814

Description

NCS000EM

The vehicle speed sensor·MTR signal is transmitted from combination meter to TCM by CAN communication line. The signal functions as an auxiliary device to the revolution sensor when it is malfunctioning. The TCM will then use the vehicle speed sensor·MTR signal.

CONSULT-II Reference Value

NCS000EN

Item name	Condition	Display value
VHCL/S SE-MTR	During driving	Approximately matches the speedometer reading.

On Board Diagnosis Logic

NCS000EO

- This is not an OBD-II self-diagnostic item.
- Diagnostic trouble code “P1721 VEH SPD SE/CIR-MTR” with CONSULT-II is detected when TCM does not receive the proper vehicle speed sensor MTR signal (input by CAN communication) from combination meter.

Possible Cause

NCS000EP

Harness or connectors.
(Sensor circuit is open or shorted.)

DTC Confirmation Procedure

NCS000EQ

CAUTION:
Always drive vehicle at a safe speed.

NOTE:
If “DTC Confirmation Procedure” has been previously performed, always turn ignition switch OFF and wait at least 10 seconds before performing the next test.
After the repair, perform the following procedure to confirm the malfunction is eliminated.

WITH CONSULT-II

1. Turn ignition switch ON.
2. Select “ECU INPUT SIGNALS” in “DATA MONITOR” mode for “A/T” with CONSULT-II.
3. Touch “START”.
4. Start engine and maintain the following conditions for at least 5 consecutive seconds.
   ACCELE POSI: 1.0/8 or less
   VHCL/S SE-MTR: 30 km/h (17 MPH) or more
5. If DTC is detected, go to AT-134, "Diagnostic Procedure" .

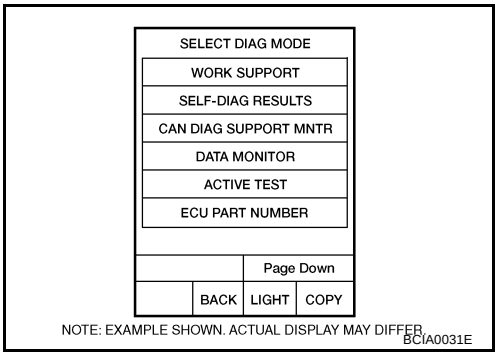

Diagnostic Procedure

NCS000ER

1. CHECK CAN COMMUNICATION LINE

Perform self-diagnosis. Refer to AT-86, "SELF-DIAGNOSTIC RESULT MODE" , AT-95, "Diagnostic Procedure Without CONSULT-II" .

Is malfunction in the CAN communication indicated in the result?

YES >> Check CAN communication line. Refer to AT-98, "DTC U1000 CAN COMMUNICATION LINE" .
NO >> GO TO 2.

2. CHECK INPUT SIGNAL

With CONSULT-II

1. Start engine.
2. Select “ECU INPUT SIGNALS” in “DATA MONITOR” mode for “A/T” with CONSULT-II.
3. Drive vehicle and read out the value of “VHCL/S SE-MTR”.

Item name	Condition	Display value
VHCL/S SE-MTR	During driving	Approximately matches the speed-ometer reading.

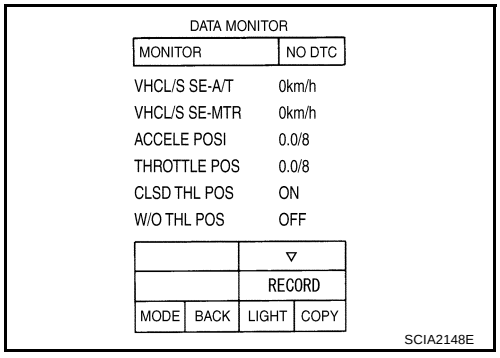

OK or NG

OK >> GO TO 4.
NG >> GO TO 3.

3. CHECK COMBINATION METERS

Check combination meters. Refer to DI-13, "Trouble Diagnosis" .

OK or NG

OK >> GO TO 4.
NG >> Repair or replace damaged parts.

4. CHECK DTC

Perform AT-133, "DTC Confirmation Procedure" .

OK or NG

OK >> **INSPECTION END**
NG >> GO TO 5.

5. CHECK TCM POWER SUPPLY AND GROUND CIRCUIT

Check TCM power supply and ground circuit. Refer to AT-172, "MAIN POWER SUPPLY AND GROUND CIR-CUIT" .

OK or NG

OK >> GO TO 6.
NG >> Repair or replace damaged parts.

6. DETECT MALFUNCTIONING ITEM

Check A/T assembly harness connector pin terminals for damage or loose connection with harness connector.

OK or NG

OK >> Replace control valve with TCM. Refer to AT-225, "Control Valve with TCM and A/T Fluid Temper-ature Sensor 2" .
NG >> Repair or replace damaged parts.

DTC P1730 A/T INTERLOCK

PFP:00000

Description

NCS000ES

Fail-safe function to detect interlock conditions.

On Board Diagnosis Logic

NCS000ET

- This is an OBD-II self-diagnostic item.
- Diagnostic trouble code “P1730 A/T INTERLOCK” with CONSULT-II or 12th judgment flicker without CONSULT-II is detected when TCM does not receive the proper voltage signal from the sensor and switch.
- TCM monitors and compares gear position and conditions of each ATF pressure switch when gear is steady.

Possible Cause

NCS000EU

- Harness or connectors.
  (Solenoid and switch circuit is open or shorted.)
- Low coast brake solenoid valve.
- ATF pressure switch 2.

DTC Confirmation Procedure

NCS000EV

CAUTION:
Always drive vehicle at a safe speed.

NOTE:
If “DTC Confirmation Procedure” has been previously performed, always turn ignition switch OFF and wait at least 10 seconds before performing the next test.
After the repair, perform the following procedure to confirm the malfunction is eliminated.

WITH CONSULT-II

1. Turn ignition switch ON.
2. Select “MAIN SIGNALS” in “DATA MONITOR” mode for “A/T” with CONSULT-II.
3. Touch “START”.
4. Start engine.
5. Drive vehicle and maintain the following conditions for at least 2 consecutive seconds.
   SLCT LVR POSI: “D” position
6. If DTC is detected, go to AT-136, "Diagnostic Procedure" .

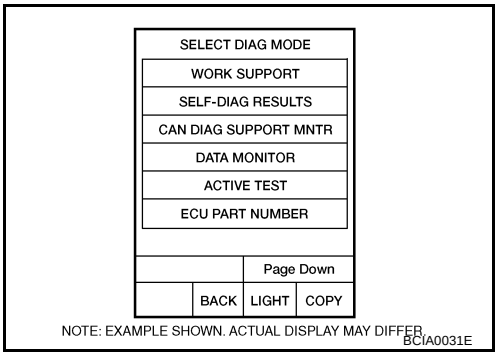

WITH GST

Follow the procedure “WITH CONSULT-II”.

Judgement of A/T Interlock

NCS000EW

When A/T Interlock is judged to be malfunctioning, the vehicle should be fixed in 2nd gear, and should be set in a condition in which it can travel.
When one of the following fastening patterns is detected, the fail-safe function in correspondence with the individual pattern should be performed.

NOTE:
When the vehicle is driven fixed in 2nd gear, a turbine revolution sensor malfunction is displayed, but this is not a turbine revolution sensor malfunction.

A/T INTERLOCK COUPLING PATTERN TABLE

●: NG, X: OK

Gear position		ATF pressure switch output					Fail-safe function	Clutch pressure output pattern after fail-safe function					
		SW3 (I/C)	SW6 (HLR/C)	SW5 (D/C)	SW1 (FR/B)	SW2 (LC/B)		I/C	HLR/C	D/C	FR/B	LC/B	L/U
A/T interlock coupling pattern	3rd	–	X	X	–	●	Held in 2nd gear	OFF	OFF	ON	OFF	OFF	OFF
	4th	–	X	X	–	●	Held in 2nd gear	OFF	OFF	ON	OFF	OFF	OFF
	5th	X	X	–	X	●	Held in 2nd gear	OFF	OFF	ON	OFF	OFF	OFF

Diagnostic Procedure

NCS000EX

1. CHECK SELF-DIAGNOSTIC RESULTS

With CONSULT-II

1. Drive vehicle.
2. Stop vehicle and turn ignition switch OFF.
3. Turn ignition switch ON.
4. Select “SELF-DIAG RESULTS” mode for “A/T” with CONSULT-II.

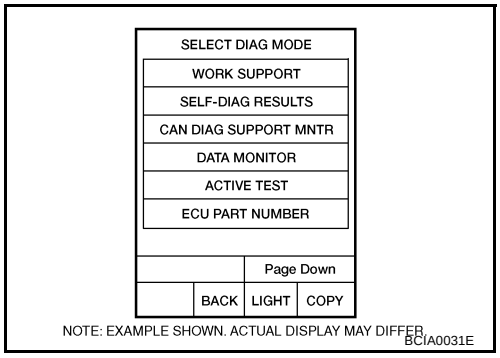

Without CONSULT-II

1. Drive vehicle.
2. Stop vehicle and turn ignition switch OFF.
3. Turn ignition switch ON.
4. Perform self-diagnosis. Refer to AT-95, "TCM SELF-DIAGNOSTIC PROCEDURE (NO TOOLS)" .

OK or NG

OK >> GO TO 2.
NG >> Check low coast brake solenoid valve circuit and function. Refer to AT-156, "DTC P1772 LOW COAST BRAKE SOLENOID VALVE" , AT-158, "DTC P1774 LOW COAST BRAKE SOLENOID VALVE FUNCTION" .

2. CHECK DTC

Perform AT-135, "DTC Confirmation Procedure" .

OK or NG

OK >> **INSPECTION END**
NG >> GO TO 3.

3. CHECK TCM POWER SUPPLY AND GROUND CIRCUIT

Check TCM power supply and ground circuit. Refer to AT-172, "MAIN POWER SUPPLY AND GROUND CIRCUIT" .

OK or NG

OK >> GO TO 4.
NG >> Repair or replace damaged parts.

4. DETECT MALFUNCTIONING ITEM

Check A/T assembly harness connector pin terminals for damage or loose connection with harness connector.

OK or NG

OK >> Replace control valve with TCM. Refer to AT-225, "Control Valve with TCM and A/T Fluid Temperature Sensor 2" .
NG >> Repair or replace damaged parts.

DTC P1731 A/T 1ST ENGINE BRAKING

PFP:00000

Description

NCS000EY

Fail-safe function to prevent sudden decrease in speed by engine brake other than at M1 position.

CONSULT-II Reference Value

NCS000EZ

Item name	Condition	Display value
ON OFF SOL	Low coast brake engaged. Refer to AT-19 .	ON
	Low coast brake disengaged. Refer to AT-19 .	OFF
ATF PRES SW 2	Low coast brake engaged. Refer to AT-19 .	ON
	Low coast brake disengaged. Refer to AT-19 .	OFF

On Board Diagnosis Logic

NCS000F0

- This is not an OBD-II self-diagnostic item.
- Diagnostic trouble code “P1731 A/T 1ST E/BRAKING” with CONSULT-II or 13th judgment flicker without CONSULT-II is detected under the following conditions.
  - When TCM does not receive the proper voltage signal from the sensor.
  - When TCM monitors each ATF pressure switch and solenoid monitor value, and detects as irregular when engine brake of 1st gear acts other than at M1 position.

Possible Cause

NCS000F1

- Harness or connectors.
  (Sensor circuit is open or shorted.).
- Low coast brake solenoid valve.
- ATF pressure switch 2.

DTC Confirmation Procedure

NCS000F2

CAUTION:

- **Always drive vehicle at a safe speed.**
- **Be careful not to rev engine into the red zone on the tachometer.**

NOTE:

If “DTC Confirmation Procedure” has been previously preformed, always turn ignition switch OFF and wait at least 10 seconds before performing the next test.

After the repair, perform the following procedure to confirm the malfunction is eliminated.

WITH CONSULT-II

1. Turn ignition switch ON.
2. Select “SELECTION FROM MENU” in “DATA MONITOR” mode for “A/T” with CONSULT-II and check monitor “ENGINE SPEED”, “MANU MODE SW” and “GEAR”.
3. Touch “START”.
4. Start engine.
5. Drive vehicle and maintain the following conditions for at least 2 consecutive seconds.
   ENGINE SPEED: 1,200 rpm
   MANU MODE SW: ON
   GEAR: “1” position
6. If DTC is detected, go to AT-139, "Diagnostic Procedure" .

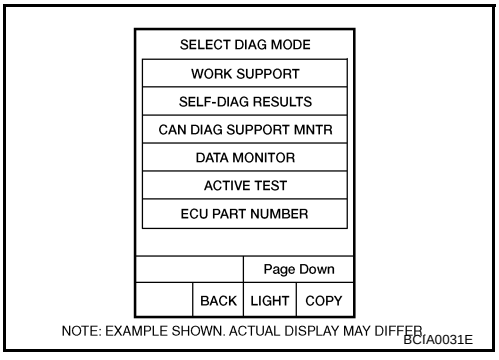

Diagnostic Procedure

NCS000F3

1. CHECK INPUT SIGNALS

With CONSULT-II

1. Start the engine.
2. Select “SELECTION FROM MENU” in “DATA MONITOR” mode for “A/T” with CONSULT-II.
3. Drive vehicle in the “M” position (1st gear), and confirm the ON/OFF actuation of “ATF PRES SW 2” and “ON OFF SOL”.

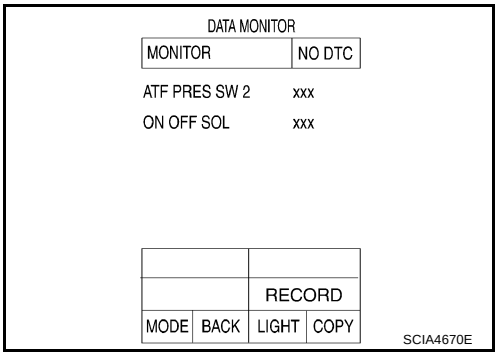

Item name	Condition	Display value
ON OFF SOL	Low coast brake engaged. Refer to AT-19 .	ON
	Low coast brake disengaged. Refer to AT-19 .	OFF
ATF PRES SW 2	Low coast brake engaged. Refer to AT-19 .	ON
	Low coast brake disengaged. Refer to AT-19 .	OFF

OK or NG

OK >> GO TO 4.
NG >> GO TO 2.

2. CHECK TCM POWER SUPPLY AND GROUND CIRCUIT

Check TCM power supply and ground circuit. Refer to AT-172, "MAIN POWER SUPPLY AND GROUND CIRCUIT" .

OK or NG

OK >> GO TO 3.
NG >> Repair or replace damaged parts.

3. DETECT MALFUNCTIONING ITEM

Check A/T assembly harness connector pin terminals for damage or loose connection with harness connector.

OK or NG

OK >> Replace control valve with TCM. Refer to AT-225, "Control Valve with TCM and A/T Fluid Temperature Sensor 2" .
NG >> Repair or replace damaged parts.

4. CHECK DTC

Perform AT-138, "DTC Confirmation Procedure" .

OK or NG

OK >> **INSPECTION END**
NG >> GO TO 2.

DTC P1752 INPUT CLUTCH SOLENOID VALVE

PFP:31940

Description

NCS000F4

Input clutch solenoid valve is controlled by the TCM in response to signals sent from the PNP switch, vehicle speed sensor and accelerator pedal position sensor (throttle position sensor). Gears will then be shifted to the optimum position.

CONSULT-II Reference Value

NCS000F5

Item name	Condition	Display value (Approx.)
I/C SOLENOID	Input clutch disengaged. Refer to AT-19 .	0.6 - 0.8 A
	Input clutch engaged. Refer to AT-19 .	0 - 0.05 A

On Board Diagnosis Logic

NCS000F6

- This is an OBD-II self-diagnostic item.
- Diagnostic trouble code “P1752 I/C SOLENOID/CIRC” with CONSULT-II or 5th judgment without CONSULT-II is detected under the following conditions.
  - When TCM detects an improper voltage drop when it tries to operate the solenoid valve.
  - When TCM detects as irregular by comparing target value with monitor value.

Possible Cause

NCS000F7

- Harness or connectors.
  (Solenoid circuit is open or shorted.)
- Input clutch solenoid valve.

DTC Confirmation Procedure

NCS000F8

CAUTION:
Always drive vehicle at a safe speed.

NOTE:
If “DTC Confirmation Procedure” has been previously performed, always turn ignition switch OFF and wait at least 10 seconds before performing the next test.
After the repair, perform the following procedure to confirm the malfunction is eliminated.

WITH CONSULT-II

1. Turn ignition switch ON.
2. Select “SELECTION FROM MENU” in “DATA MONITOR” mode for “A/T” with CONSULT-II and check monitor “ACCELE POSI”, “SLCT LVR POSI” and “GEAR”.
3. Touch “START”.
4. Start engine.
5. Drive vehicle and maintain the following conditions for at least 5 consecutive seconds.
   ACCELE POSI: 1.5/8 - 2.0/8
   SLCT LVR POSI: “D” position
   GEAR: “3” ⇒ “4” (I/C ON/OFF)
   Driving location: Driving the vehicle uphill (increased engine load) will help maintain the driving conditions required for this test.

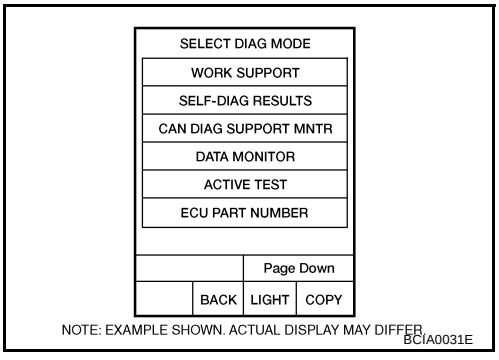

6. If DTC is detected, go to AT-141, "Diagnostic Procedure" .

WITH GST

Follow the procedure “WITH CONSULT-II”.

Diagnostic Procedure

NCS000F9

1. CHECK INPUT SIGNAL

With CONSULT-II

1. Turn ignition switch ON.
2. Select “MAIN SIGNALS” in “DATA MONITOR” mode for “A/T” with CONSULT-II.
3. Start the engine.
4. Read out the value of “I/C SOLENOID” while driving.

Item name	Condition	Display value (Approx.)
I/C SOLENOID	Input clutch disengaged. Refer to AT-19 .	0.6 - 0.8 A
	Input clutch engaged. Refer to AT-19 .	0 - 0.05 A

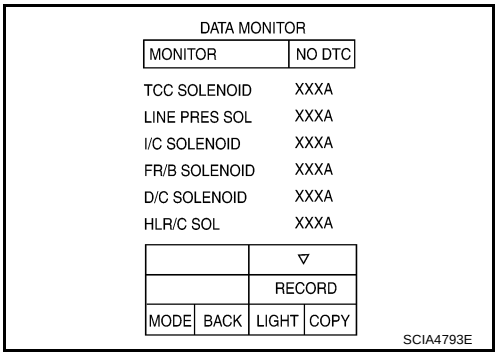

OK or NG

OK >> GO TO 4.
NG >> GO TO 2.

2. CHECK TCM POWER SUPPLY AND GROUND CIRCUIT

Check TCM power supply and ground circuit. Refer to AT-172, "MAIN POWER SUPPLY AND GROUND CIRCUIT" .

OK or NG

OK >> GO TO 3.
NG >> Repair or replace damaged parts.

3. DETECT MALFUNCTIONING ITEM

Check A/T assembly harness connector pin terminals for damage or loose connection with harness connector.

OK or NG

OK >> Replace control valve with TCM. Refer to AT-225, "Control Valve with TCM and A/T Fluid Temperature Sensor 2" .
NG >> Repair or replace damaged parts.

4. CHECK DTC

Perform AT-140, "DTC Confirmation Procedure" .

OK or NG

OK >> **INSPECTION END**
NG >> GO TO 2.

DTC P1754 INPUT CLUTCH SOLENOID VALVE FUNCTION

PFP:31940

Description

NCS000FA

- Input clutch solenoid valve is controlled by the TCM in response to signals sent from the PNP switch, vehicle speed sensor and accelerator pedal position sensor (throttle position sensor). Gears will then be shifted to the optimum position.
- This is not only caused by electrical malfunction (circuits open or shorted) but also by mechanical malfunction such as control valve sticking, improper solenoid valve operation.

CONSULT-II Reference Value

NCS000FB

Item name	Condition	Display value (Approx.)
I/C SOLENOID	Input clutch disengaged. Refer to AT-19 .	0.6 - 0.8 A
	Input clutch engaged. Refer to AT-19 .	0 - 0.05 A
ATF PRES SW 3	Input clutch engaged. Refer to AT-19 .	ON
	Input clutch disengaged. Refer to AT-19 .	OFF

On Board Diagnosis Logic

NCS000FC

- This is an OBD-II self-diagnostic item.
- Diagnostic trouble code “P1754 I/C SOLENOID FNCTN” with CONSULT-II or 5th judgment flicker without CONSULT-II is detected under the following conditions.
  - When TCM detects that actual gear ratio is irregular, and relation between gear position and condition of ATF pressure switch 3 is irregular during depressing accelerator pedal. (Other than during shift change)
  - When TCM detects that relation between gear position and condition of ATF pressure switch 3 is irregular during releasing accelerator pedal. (Other than during shift change)

Possible Cause

NCS000FD

- Harness or connectors.
  (Solenoid and switch circuits are open or shorted.)
- Input clutch solenoid valve.
- ATF pressure switch 3.

DTC Confirmation Procedure

NCS000FE

CAUTION:
Always drive vehicle at a safe speed.

NOTE:
If “DTC Confirmation Procedure” has been previously performed, always turn ignition switch OFF and wait at least 10 seconds before performing the next test.
After the repair, perform the following procedure to confirm the malfunction is eliminated.

WITH CONSULT-II

1. Start the engine.
2. Accelerate vehicle to maintain the following conditions.
   ACCELE POSI: 1.5/8 - 2.0/8
   SLCT LVR POSI: “D” position
   GEAR: “3” ⇒ “4” (I/C ON/OFF)
   Driving location: Driving the vehicle uphill (increased engine load) will help maintain the driving conditions required for this test.
3. Perform step “2” again.
4. Turn ignition switch OFF, then perform step “1” to “3” again.
5. Check “SELF-DIAG RESULTS” mode for “A/T” with CONSULT-II. If DTC (P1754) is detected, refer to AT-143, "Diagnostic Procedure" .
   If DTC (P1752) is detected, go to AT-141, "Diagnostic Procedure" .
   If DTC (P1843) is detected, go to AT-167, "Diagnostic Procedure" .

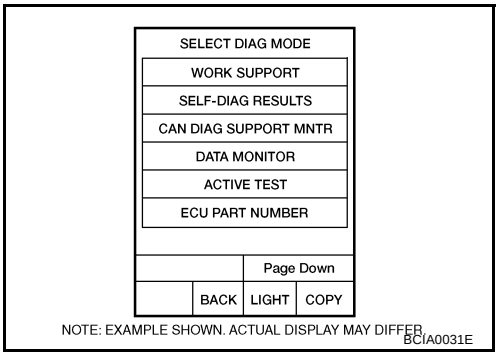

WITH GST

Follow the procedure “WITH CONSULT-II”.

Diagnostic Procedure

NCS000FF

1. CHECK INPUT SIGNALS

With CONSULT-II

1. Start engine.
2. Select “SELECTION FROM MENU” in “DATA MONITOR” mode for “A/T” with CONSULT-II.
3. Drive vehicle in “D” position (3rd ⇒ 4th gear), and confirm the ON/OFF actuation of “ATF PRES SW 3” and electrical current value of “I/C SOLENOID”.

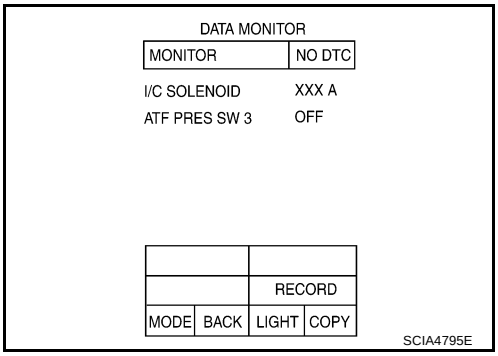

Item name	Condition	Display value (Approx.)
I/C SOLENOID	Input clutch disengaged. Refer to AT-19 .	0.6 - 0.8 A
	Input clutch engaged. Refer to AT-19 .	0 - 0.05 A
ATF PRES SW 3	Input clutch engaged. Refer to AT-19 .	ON
	Input clutch disengaged. Refer to AT-19 .	OFF

OK or NG

OK >> GO TO 4.
NG >> GO TO 2.

2. CHECK TCM POWER SUPPLY AND GROUND CIRCUIT

Check TCM power supply and ground circuit. Refer to AT-172, "MAIN POWER SUPPLY AND GROUND CIRCUIT" .

OK or NG

OK >> GO TO 3.
NG >> Repair or replace damaged parts.

3. DETECT MALFUNCTIONING ITEM

Check A/T assembly harness connector pin terminals for damage or loose connection with harness connector.

OK or NG

OK >> Replace control valve with TCM. Refer to AT-225, "Control Valve with TCM and A/T Fluid Temperature Sensor 2" .
NG >> Repair or replace damaged parts.

4. CHECK DTC

Perform AT-142, "DTC Confirmation Procedure" .

OK or NG

OK >> **INSPECTION END**
NG >> GO TO 2.

DTC P1757 FRONT BRAKE SOLENOID VALVE

PFP:31940

Description

NCS000FG

Front brake solenoid valve is controlled by the TCM in response to signals sent from the PNP switch, vehicle speed sensor and accelerator pedal position sensor (throttle position sensor). Gears will then be shifted to the optimum position.

CONSULT-II Reference Value

NCS000FH

Item name	Condition	Display value (Approx.)
FR/B SOLENOID	Front brake engaged. Refer to AT-19 .	0.6 - 0.8 A
	Front brake disengaged. Refer to AT-19 .	0 - 0.05 A

On Board Diagnosis Logic

NCS000FI

- This is an OBD-II self-diagnostic item.
- Diagnostic trouble code “P1757 FR/B SOLENOID/CIRC” with CONSULT-II or 6th judgment flicker without CONSULT-II is detected under the following conditions.
  - When TCM detects an improper voltage drop when it tries to operate the solenoid valve.
  - When TCM detects as irregular by comparing target value with monitor value.

Possible Cause

NCS000FJ

- Harness or connectors.
  (Solenoid circuit is open or shorted.)
- Front brake solenoid valve.

DTC Confirmation Procedure

NCS000FK

CAUTION:
Always drive vehicle at a safe speed.

NOTE:
If “DTC Confirmation Procedure” has been previously performed, always turn ignition switch OFF and wait at least 10 seconds before preforming the next test.
After the repair, perform the following procedure to confirm the malfunction is eliminated.

WITH CONSULT-II

1. Turn ignition switch ON.
2. Select “SELECTION FROM MENU” in “DATA MONITOR” mode for “A/T” with CONSULT-II and check monitor “ACCELE POSI”, “SLCT LVR POSI” and “GEAR”.
3. Touch “START”.
4. Start engine.
5. Drive vehicle and maintain the following conditions for at least 5 consecutive seconds.
   ACCELE POSI: 1.5/8 - 2.0/8
   SLCT LVR POSI: “D” position
   GEAR: “3” ⇒ “4” (FR/B ON/OFF)
   Driving location: Driving the vehicle uphill (increased engine load) will help maintain the driving conditions required for this test.

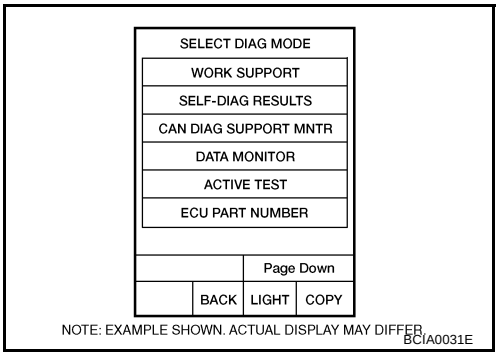

6. If DTC is detected go to AT-145, "Diagnostic Procedure" .

WITH GST

Follow the procedure “WITH CONSULT-II”.

Diagnostic Procedure

NCS000FL

1. CHECK INPUT SIGNAL

With CONSULT-II

1. Turn ignition switch ON.
2. Select “MAIN SIGNALS” in “DATA MONITOR” mode for “A/T” with CONSULT-II.
3. Start engine.
4. Read out the value of “FR/B SOLENOID” while driving.

Item name	Condition	Display value (Approx.)
FR/B SOLENOID	Front brake engaged. Refer to AT-19 .	0.6 - 0.8 A
	Front brake disengaged. Refer to AT-19 .	0 - 0.05 A

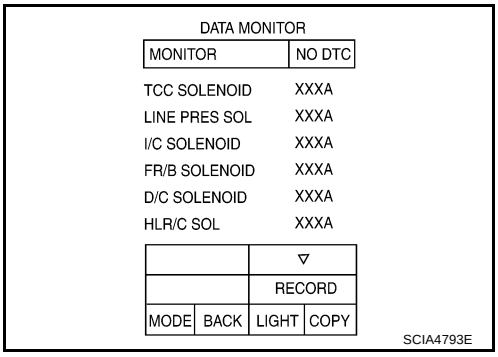

OK or NG

OK >> GO TO 4.
NG >> GO TO 2.

2. CHECK TCM POWER SUPPLY AND GROUND CIRCUIT

Check TCM power supply and ground circuit. Refer to AT-172, "MAIN POWER SUPPLY AND GROUND CIRCUIT" .

OK or NG

OK >> GO TO 3.
NG >> Repair or replace damaged parts.

3. DETECT MALFUNCTIONING ITEM

Check A/T assembly harness connector pin terminals for damage or loose connection with harness connector.

OK or NG

OK >> Replace control valve with TCM. Refer to AT-225, "Control Valve with TCM and A/T Fluid Temperature Sensor 2" .
NG >> Repair or replace damaged parts.

4. CHECK DTC

Perform AT-144, "DTC Confirmation Procedure" .

OK or NG

OK >> **INSPECTION END**
NG >> GO TO 2.

DTC P1759 FRONT BRAKE SOLENOID VALVE FUNCTION

PFP:31940

Description

NCS000FM

- Front brake solenoid valve is controlled by the TCM in response to signals sent from the PNP switch, vehicle speed sensor and accelerator pedal position sensor (throttle position sensor). Gears will then be shifted to the optimum position.
- This is not only caused by electrical malfunction (circuits open or shorted) but also by mechanical malfunction such as control valve sticking, improper solenoid valve operation.

CONSULT-II Reference Value

NCS000FN

Item name	Condition	Display value (Approx.)
FR/B SOLENOID	Front brake engaged. Refer to AT-19 .	0.6 - 0.8 A
	Front brake disengaged. Refer to AT-19 .	0 - 0.05 A
ATF PRES SW 1	Front brake engaged. Refer to AT-19 .	ON
	Front brake disengaged. Refer to AT-19 .	OFF

On Board Diagnosis Logic

NCS000FO

- This is an OBD-II self-diagnostic item.
- Diagnostic trouble code “P1759 FR/B SOLENOID FNCT” with CONSULT-II or 6th judgment flicker without CONSULT-II is detected under the following conditions.
  - When TCM detects that actual gear ratio is irregular, and relation between gear position and condition of ATF pressure switch 1 is irregular during depressing accelerator pedal. (Other than during shift change)
  - When TCM detects that relation between gear position and condition of ATF pressure switch 1 is irregular during releasing accelerator pedal. (Other than during shift change)

Possible Cause

NCS000FP

- Harness or connectors.
  (Solenoid and switch circuits are open or shorted.)
- Front brake solenoid valve.
- ATF pressure switch 1.

DTC Confirmation Procedure

NCS000FQ

CAUTION:
Always drive vehicle at a safe speed.

NOTE:
If “DTC Confirmation Procedure” has been previously performed, always turn ignition switch OFF and wait at least 10 seconds before performing the next test.
After the repair, perform the following procedure to confirm the malfunction is eliminated.

WITH CONSULT-II

1. Start engine.
2. Accelerate vehicle to maintain the following conditions.
   ACCELE POSI: 1.5/8 - 2.0/8
   SLCT LVR POSI: “D” position
   GEAR: “3” ⇒ “4” (FR/B ON/OFF)
   Driving location: Driving the vehicle uphill (increased engine load) will help maintain the driving conditions required for this test.
3. Perform step “2” again.
4. Turn ignition switch OFF, then perform step “1” to “3” again.
5. Check “SELF-DIAG RESULTS” mode for “A/T” with CONSULT-II. If DTC (P1759) is detected, refer to AT-147, "Diagnostic Procedure" .
   If DTC (P1757) is detected, go to AT-145, "Diagnostic Procedure" .
   If DTC (P1841) is detected, go to AT-165, "Diagnostic Procedure" .

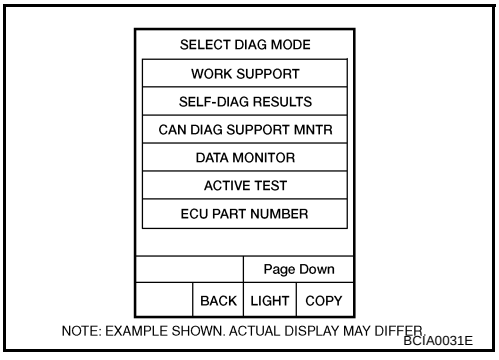

WITH GST

Follow the procedure “WITH CONSULT-II”.

Diagnostic Procedure

NCS000FR

1. CHECK INPUT SIGNALS

With CONSULT-II

1. Start engine.
2. Select “SELECTION FROM MENU” in “DATA MONITOR” mode for “A/T” with CONSULT-II.
3. Drive vehicle in the “D” position (3rd ⇒ 4th gear), and confirm the ON/OFF actuation of the “ATF PRES SW 1” and electrical current value of “FR/B SOLENOID”.

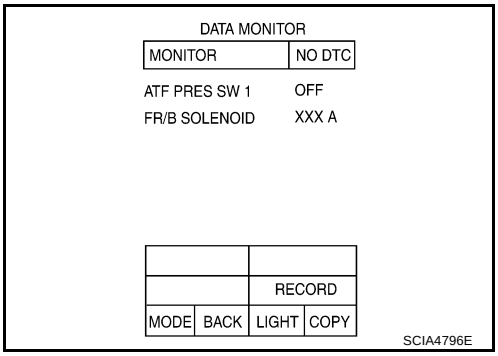

Item name	Condition	Display value (Approx.)
FR/B SOLENOID	Front brake engaged. Refer to AT-19 .	0.6 - 0.8 A
	Front brake disengaged. Refer to AT-19 .	0 - 0.05 A
ATF PRES SW 1	Front brake engaged. Refer to AT-19 .	ON
	Front brake disengaged. Refer to AT-19 .	OFF

OK or NG

OK >> GO TO 4.
NG >> GO TO 2.

2. CHECK TCM POWER SUPPLY AND GROUND CIRCUIT

Check TCM power supply and ground circuit. Refer to AT-172, "MAIN POWER SUPPLY AND GROUND CIRCUIT" .

OK or NG

OK >> GO TO 3.
NG >> Repair or replace damaged parts.

3. DETECT MALFUNCTIONING ITEM

Check A/T assembly harness connector pin terminals for damage or loose connection with harness connector.

OK or NG

OK >> Replace control valve with TCM. Refer to AT-225, "Control Valve with TCM and A/T Fluid Temperature Sensor 2" .
NG >> Repair or replace damaged parts.

4. CHECK DTC

Perform AT-146, "DTC Confirmation Procedure" .

OK or NG

OK >> **INSPECTION END**
NG >> GO TO 2.

DTC P1762 DIRECT CLUTCH SOLENOID VALVE

PFP:31940

Description

NCS000FS

Direct clutch solenoid valve is controlled by the TCM in response to signals sent from the PNP switch, vehicle speed sensor and accelerator pedal position sensor (throttle position sensor). Gears will then be shifted to the optimum position.

CONSULT-II Reference Value

NCS000FT

Item name	Condition	Display value (Approx.)
D/C SOLENOID	Direct clutch disengaged. Refer to AT-19 .	0.6 - 0.8 A
	Direct clutch engaged. Refer to AT-19 .	0 - 0.05 A

On Board Diagnosis Logic

NCS000FU

- This is an OBD-II self-diagnostic item.
- Diagnostic trouble code “P1762 D/C SOLENOID/CIRC” with CONSULT-II or 2nd judgment flicker without CONSULT-II is detected under the following conditions.
  - When TCM detects an improper voltage drop when it tries to operate the solenoid valve.
  - When TCM detects as irregular by comparing target value with monitor value.

Possible Cause

NCS000FV

- Harness or connectors.
  (Solenoid circuit is open or shorted.)
- Direct clutch solenoid valve.

DTC Confirmation Procedure

NCS000FW

CAUTION:
Always drive vehicle at a safe speed.

NOTE:
If “DTC Confirmation Procedure” has been previously performed, always turn ignition switch OFF and wait at least 10 seconds before performing the next test.
After the repair, perform the following procedure to confirm the malfunction is eliminated.

WITH CONSULT-II

1. Turn ignition switch ON.
2. Select “SELECTION FROM MENU” in “DATA MONITOR” mode for “A/T” with CONSULT-II and check monitor “ACCELE POSI”, “SLCT LVR POSI” and “GEAR”.
3. Touch “START”.
4. Start engine.
5. Drive vehicle and maintain the following conditions for at least 5 consecutive seconds.
   ACCELE POSI: 1.5/8 - 2.0/8
   SLCT LVR POSI: “D” position
   GEAR: “1” ⇒ “2” (D/C ON/OFF)
   Driving location: Driving the vehicle uphill (increased engine load) will help maintain the driving conditions required for this test.

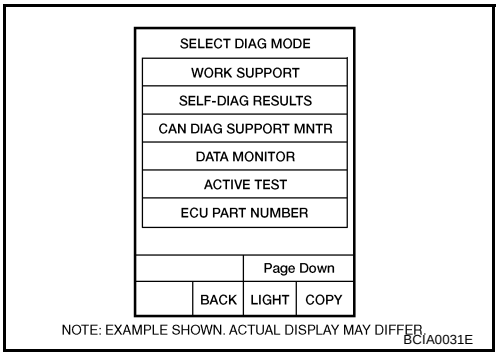

6. If DTC is detected, go to AT-149, "Diagnostic Procedure" .

WITH GST

Follow the procedure “WITH CONSULT-II”.

Diagnostic Procedure

NCS000FX

1. CHECK INPUT SIGNAL

With CONSULT-II

1. Turn ignition switch ON.
2. Select “MAIN SIGNALS” in “DATA MONITOR” mode for “A/T” with CONSULT-II.
3. Start the engine.
4. Read out the value of “D/C SOLENOID” while driving.

Item name	Condition	Display value (Approx.)
D/C SOLENOID	Direct clutch disengaged. Refer to AT-19 .	0.6 - 0.8 A
	Direct clutch engaged. Refer to AT-19 .	0 - 0.05 A

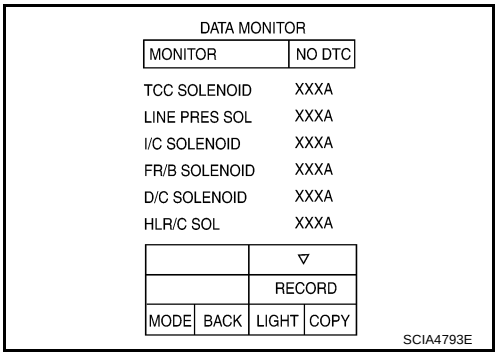

OK or NG

OK >> GO TO 4.
NG >> GO TO 2.

2. CHECK TCM POWER SUPPLY AND GROUND CIRCUIT

Check TCM power supply and ground circuit. Refer to AT-172, "MAIN POWER SUPPLY AND GROUND CIRCUIT" .

OK or NG

OK >> GO TO 3.
NG >> Repair or replace damaged parts.

3. DETECT MALFUNCTIONING ITEM

Check A/T assembly harness connector pin terminals for damage or loose connection with harness connector.

OK or NG

OK >> Replace control valve with TCM. Refer to AT-225, "Control Valve with TCM and A/T Fluid Temperature Sensor 2" .
NG >> Repair or replace damaged parts.

4. CHECK DTC

Perform AT-148, "DTC Confirmation Procedure" .

OK or NG

OK >> **INSPECTION END**
NG >> GO TO 2.

DTC P1764 DIRECT CLUTCH SOLENOID VALVE FUNCTION

PFP:31940

Description

NCS000FY

- Direct clutch solenoid valve is controlled by the TCM in response to signals sent from the PNP switch, vehicle speed sensor and accelerator pedal position sensor (throttle position sensor). Gears will then be shifted to the optimum position.
- This is not only caused by electrical malfunction (circuits open or shorted) but also by mechanical malfunction such as control valve sticking, improper solenoid valve operation.

CONSULT-II Reference Value

NCS000FZ

Item name	Condition	Display value (Approx.)
D/C SOLENOID	Direct clutch disengaged. Refer to AT-19 .	0.6 - 0.8 A
	Direct clutch engaged. Refer to AT-19 .	0 - 0.05 A
ATF PRES SW 5	Direct clutch engaged. Refer to AT-19 .	ON
	Direct clutch disengaged. Refer to AT-19 .	OFF

On Board Diagnosis Logic

NCS000G0

- This is an OBD-II self-diagnostic item.
- Diagnostic trouble code “P1764 D/C SOLENOID FNCTN” with CONSULT-II or 2nd judgment flicker without CONSULT-II is detected under the following conditions.
  - When TCM detects that actual gear ratio is irregular, and relation between gear position and condition of ATF pressure switch 5 is irregular during depressing accelerator pedal. (Other than during shift change)
  - When TCM detects that relation between gear position and condition of ATF pressure switch 5 is irregular during releasing accelerator pedal. (Other than during shift change)

Possible Cause

NCS000G1

- Harness or connectors.
  (Solenoid and switch circuits are open or shorted.)
- Direct clutch solenoid valve.
- ATF pressure switch 5.

DTC Confirmation Procedure

NCS000G2

CAUTION:
Always drive vehicle at a safe speed.

NOTE:
If “DTC Confirmation Procedure” has been previously performed, always turn ignition switch OFF and wait at least 10 seconds before performing the next test.
After the repair, perform the following procedure to confirm the malfunction is eliminated.

WITH CONSULT-II

1. Start engine.
2. Accelerate vehicle to maintain the following conditions.
   ACCELE POSI: 1.5/8 - 2.0/8
   SLCT LVR POSI: “D” position
   GEAR: “1” ⇒ “2” (D/C ON/OFF)
   Driving location: Driving the vehicle uphill (increased engine load) will help maintain the driving conditions required for this test.
3. Perform step “2” again.
4. Turn ignition switch OFF, then perform step “1” to “3” again.
5. Check “SELF-DIAG RESULTS” mode for “A/T” with CONSULT-II. If DTC (P1764) is detected, refer to AT-151, "Diagnostic Procedure" .
   If DTC (P1762) is detected, go to AT-149, "Diagnostic Procedure" .
   If DTC (P1845) is detected, go to AT-169, "Diagnostic Procedure" .

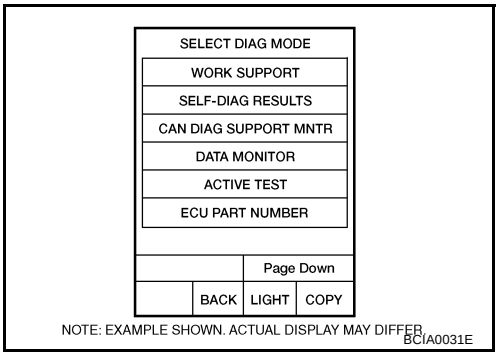

WITH GST

Follow the procedure “WITH CONSULT-II”.

Diagnostic Procedure

NCS000G3

1. CHECK INPUT SIGNALS

With CONSULT-II

1. Start engine.
2. Select “SELECTION FROM MENU” in “DATA MONITOR” mode for “A/T” with CONSULT-II.
3. Drive vehicle in the “D” position (1st ⇒ 2nd gear), and confirm the ON/OFF actuation of the “ATF PRES SW 5” and electrical current value of “D/C SOLENOID”.

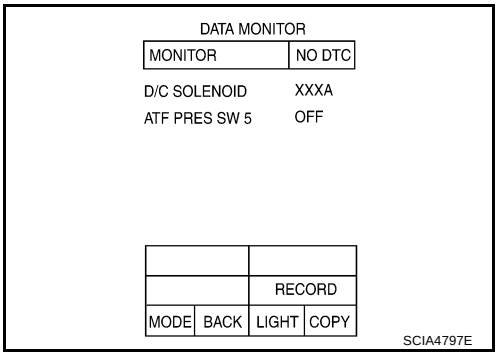

Item name	Condition	Display value (Approx.)
D/C SOLENOID	Direct clutch disengaged. Refer to AT-19 .	0.6 - 0.8 A
	Direct clutch engaged. Refer to AT-19 .	0 - 0.05 A
ATF PRES SW 5	Direct clutch engaged. Refer to AT-19 .	ON
	Direct clutch disengaged. Refer to AT-19 .	OFF

OK or NG

OK >> GO TO 4.
NG >> GO TO 2.

2. CHECK TCM POWER SUPPLY AND GROUND CIRCUIT

Check TCM power supply and ground circuit. Refer to AT-172, "MAIN POWER SUPPLY AND GROUND CIRCUIT" .

OK or NG

OK >> GO TO 3.
NG >> Repair or replace damaged parts.

3. DETECT MALFUNCTIONING ITEM

Check A/T assembly harness connector pin terminals for damage or loose connection with harness connector.

OK or NG

OK >> Replace control valve with TCM. Refer to AT-225, "Control Valve with TCM and A/T Fluid Temperature Sensor 2" .
NG >> Repair or replace damaged parts.

4. CHECK DTC

Perform AT-150, "DTC Confirmation Procedure" .

OK or NG

OK >> **INSPECTION END**
NG >> GO TO 2.

DTC P1767 HIGH AND LOW REVERSE CLUTCH SOLENOID VALVE

PFP:31940

Description

NCS000G4

High and low reverse clutch solenoid valve is controlled by the TCM in response to signals sent from the PNP switch, vehicle speed sensor and accelerator pedal position sensor (throttle position sensor). Gears will then be shifted to the optimum position.

CONSULT-II Reference Value

NCS000G5

Item name	Condition	Display value (Approx.)
HLR/C SOL	High and low reverse clutch disengaged. Refer to AT-19 .	0.6 - 0.8 A
	High and low reverse clutch engaged. Refer to AT-19 .	0 - 0.05 A

On Board Diagnosis Logic

NCS000G6

- This is an OBD-II self-diagnostic item.
- Diagnostic trouble code “P1767 HLR/C SOL/CIRC” with CONSULT-II or 8th judgment flicker without CONSULT-II is detected under the following conditions.
  - When TCM detects an improper voltage drop when it tries to operate the solenoid valve.
  - When TCM detects as irregular by comparing target value with monitor value.

Possible Cause

NCS000G7

- Harness or connectors.
  (Solenoid circuit is open or shorted.)
- High and low reverse clutch solenoid valve.

DTC Confirmation Procedure

NCS000G8

CAUTION:
Always drive vehicle at a safe speed.

NOTE:
If “DTC Confirmation Procedure” has been previously performed, always turn ignition switch OFF and wait at least 10 seconds before performing the next test.
After the repair, perform the following procedure to confirm the malfunction is eliminated.

WITH CONSULT-II

1. Turn ignition switch ON.
2. Select “SELECTION FROM MENU” in “DATA MONITOR” mode for “A/T” with CONSULT-II and check monitor “ACCELE POSI”, “SLCT LVR POSI” and “GEAR”.
3. Touch “START”.
4. Start engine.
5. Drive vehicle and maintain the following conditions for at least 5 consecutive seconds.
   ACCELE POSI: 1.5/8 - 2.0/8
   SLCT LVR POSI: “D” position
   GEAR: “2” ⇒ “3” (HLR/C ON/OFF)
   Driving location: Driving the vehicle uphill (increased engine load) will help maintain the driving conditions required for this test.

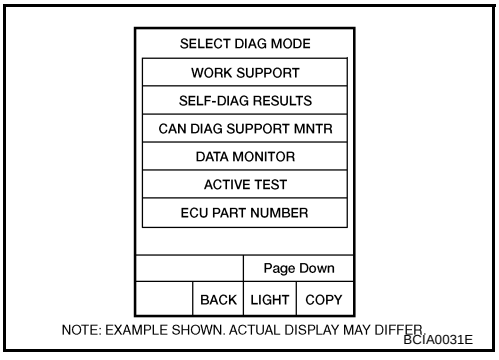

6. If DTC is detected, go to AT-153, "Diagnostic Procedure" .

WITH GST

Follow the procedure “WITH CONSULT-II”.

Diagnostic Procedure

NCS000G9

1. CHECK INPUT SIGNAL

With CONSULT-II

1. Turn ignition switch ON.
2. Select “MAIN SIGNALS” in “DATA MONITOR” mode for “A/T” with CONSULT-II.
3. Start the engine.
4. Read out the value of “HLR/C SOL” while driving.

Item name	Condition	Display value (Approx.)
HLR/C SOL	High and low reverse clutch disengaged. Refer to AT-19 .	0.6 - 0.8 A
	High and low reverse clutch engaged. Refer to AT-19 .	0 - 0.05 A

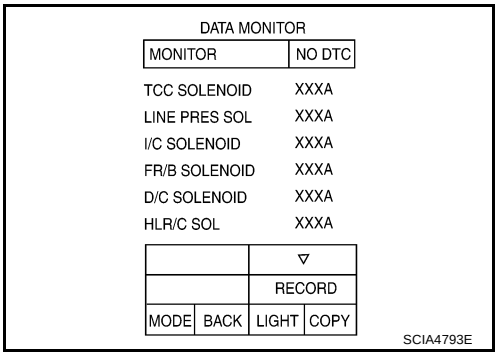

OK or NG

OK >> GO TO 4.
NG >> GO TO 2.

2. CHECK TCM POWER SUPPLY AND GROUND CIRCUIT

Check TCM power supply and ground circuit. Refer to AT-172, "MAIN POWER SUPPLY AND GROUND CIRCUIT" .

OK or NG

OK >> GO TO 3.
NG >> Repair or replace damaged parts.

3. DETECT MALFUNCTIONING ITEM

Check A/T assembly harness connector pin terminals for damage or loose connection with harness connector.

OK or NG

OK >> Replace control valve with TCM. Refer to AT-225, "Control Valve with TCM and A/T Fluid Temperature Sensor 2" .
NG >> Repair or replace damaged parts.

4. CHECK TCM

Perform AT-152, "DTC Confirmation Procedure" .

OK or NG

OK >> **INSPECTION END**
NG >> GO TO 2.

DTC P1769 HIGH AND LOW REVERSE CLUTCH SOLENOID VALVE FUNCTION

PFP:31940

Description

NCS000GA

- High and low reverse clutch solenoid valve is controlled by the TCM in response to signals sent from the PNP switch, vehicle speed sensor and accelerator pedal position sensor (throttle position sensor). Gears will then be shifted to the optimum position.
- This is not only caused by electrical malfunction (circuits open or shorted) but also by mechanical malfunction such as control valve sticking, improper solenoid valve operation.

CONSULT-II Reference Value

NCS000GB

Item name	Condition	Display value (Approx.)
HLR/C SOL	High and low reverse clutch disengaged. Refer to AT-19 .	0.6 - 0.8 A
	High and low reverse clutch engaged. Refer to AT-19 .	0 - 0.05 A
ATF PRES SW 6	High and low reverse clutch engaged. Refer to AT-19 .	ON
	High and low reverse clutch disengaged. Refer to AT-19 .	OFF

On Board Diagnosis Logic

NCS000GC

- This is an OBD-II self-diagnostic item.
- Diagnostic trouble code “P1769 HLR/C SOL FNCTN” with CONSULT-II or 8th judgment flicker without CONSULT-II is detected under the following conditions.
  - When TCM detects that actual gear ratio is irregular, and relation between gear position and condition of ATF pressure switch 6 is irregular during depressing accelerator pedal. (Other than during shift change)
  - When TCM detects that relation between gear position and condition of ATF pressure switch 6 is irregular during releasing accelerator pedal. (Other than during shift change)

Possible Cause

NCS000GD

- Harness or connectors.
  (Solenoid and switch circuits are open or shorted.)
- High and low reverse clutch solenoid valve.
- ATF pressure switch 6.

DTC Confirmation Procedure

NCS000GE

CAUTION:
Always drive vehicle at a safe speed.

NOTE:
If “DTC Confirmation Procedure” has been previously performed, always turn ignition switch OFF and wait at least 10 seconds before performing the next test.
After the repair, perform the following procedure to confirm the malfunction is eliminated.

WITH CONSULT-II

1. Start engine.
2. Accelerate vehicle to maintain the following conditions.
   ACCELE POSI: 1.5/8 - 2.0/8
   SLCT LVR POSI: “D” position
   GEAR: “2” ⇒ “3” (HLR/C ON/OFF)
   Driving location: Driving the vehicle uphill (increased engine load) will help maintain the driving conditions required for this test.
3. Perform step “2” again.
4. Turn ignition switch OFF, then perform step “1” to “3” again.
5. Check “SELF-DIAG RESULTS” mode for “A/T” with CONSULT-II. If DTC (P1769) is detected, refer to AT-155, "Diagnostic Procedure" .
   If DTC (P1767) is detected, go to AT-153, "Diagnostic Procedure" .
   If DTC (P1846) is detected, go to AT-171, "Diagnostic Procedure" .

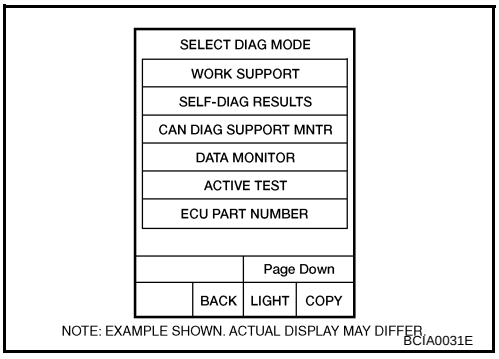

WITH GST

Follow the procedure “WITH CONSULT-II”.

Diagnostic Procedure

NCS000GF

1. CHECK INPUT SIGNALS

With CONSULT-II

1. Start the engine.
2. Select “SELECTION FROM MENU” in “DATA MONITOR” mode for “A/T” with CONSULT-II.
3. Drive vehicle in the “D” position (2nd ⇒ 3rd gear), and confirm the ON/OFF actuation of the “ATF PRES SW 6” and electrical current value of “HLR/C SOL”.

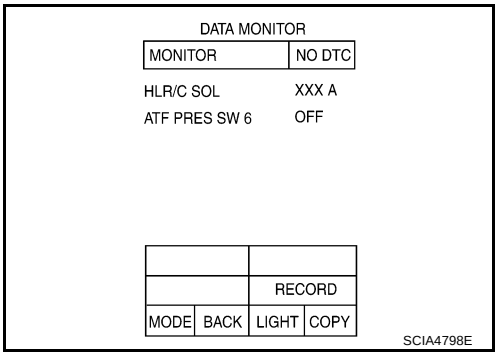

Item name	Condition	Display value (Approx.)
HLR/C SOL	High and low reverse clutch disengaged. Refer to AT-19 .	0.6 - 0.8 A
	High and low reverse clutch engaged. Refer to AT-19 .	0 - 0.05 A
ATF PRES SW 6	High and low reverse clutch engaged. Refer to AT-19 .	ON
	High and low reverse clutch disengaged. Refer to AT-19 .	OFF

OK or NG

OK >> GO TO 4.
NG >> GO TO 2.

2. CHECK TCM POWER SUPPLY AND GROUND CIRCUIT

Check TCM power supply and ground circuit. Refer to AT-172, "MAIN POWER SUPPLY AND GROUND CIRCUIT" .

OK or NG

OK >> GO TO 3.
NG >> Repair or replace damaged parts.

3. DETECT MALFUNCTIONING ITEM

Check A/T assembly harness connector pin terminals for damage or loose connection with harness connector.

OK or NG

OK >> Replace control valve with TCM. Refer to AT-225, "Control Valve with TCM and A/T Fluid Temperature Sensor 2" .
NG >> Repair or replace damaged parts.

4. CHECK DTC

Perform AT-154, "DTC Confirmation Procedure" .

OK or NG

OK >> **INSPECTION END**
NG >> GO TO 2.

DTC P1772 LOW COAST BRAKE SOLENOID VALVE

PFP:31940

Description

NCS000GG

Low coast brake solenoid valve is turned ON or OFF by the TCM in response to signals sent from the PNP switch, vehicle speed sensor and accelerator pedal position sensor (throttle position sensor). Gears will then be shifted to the optimum position.

CONSULT-II Reference Value

NCS000GH

Item name	Condition	Display value
ON OFF SOL	Low coast brake engaged. Refer to AT-19 .	ON
	Low coast brake disengaged. Refer to AT-19 .	OFF

On Board Diagnosis Logic

NCS000GI

- This is an OBD-II self-diagnostic item.
- Diagnostic trouble code “P1772 LC/B SOLENOID/CIRC” with CONSULT-II or 7th judgment flicker without CONSULT-II is detected when TCM detects an improper voltage drop when it tries to operate the solenoid valve.

Possible Cause

NCS000GJ

- Harness or connectors.
  (Solenoid circuit is open or shorted.)
- Low coast brake solenoid valve.

DTC Confirmation Procedure

NCS000GK

CAUTION:
Always drive vehicle at a safe speed.

NOTE:
If “DTC Confirmation Procedure” has been previously performed, always turn ignition switch OFF and wait at least 10 seconds before performing the next test.
After the repair, perform the following procedure to confirm the malfunction is eliminated.

WITH CONSULT-II

1. Turn ignition switch ON.
2. Select “SELECTION FROM MENU” in “DATA MONITOR” mode for “A/T” with CONSULT-II and check monitor “MANU MODE SW” and “GEAR”.
3. Touch “START”.
4. Start engine.
5. Drive vehicle and maintain the following conditions for at least 5 consecutive seconds.
   MANU MODE SW: ON
   GEAR: “1” or “2” (LC/B ON/OFF)
6. If DTC is detected, go to AT-157, "Diagnostic Procedure" .

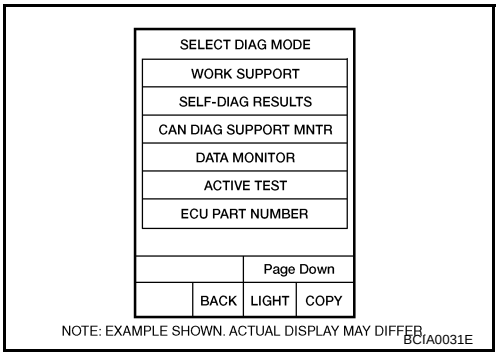

WITH GST

Follow the procedure “WITH CONSULT-II”.

Diagnostic Procedure

NCS000GL

1. CHECK INPUT SIGNAL

With CONSULT-II

1. Turn ignition switch ON.
2. Select “SELECTION FROM MENU” in “DATA MONITOR” mode for “A/T” with CONSULT-II.
3. Start the engine.
4. Read out the value of “ON OFF SOL” while driving.

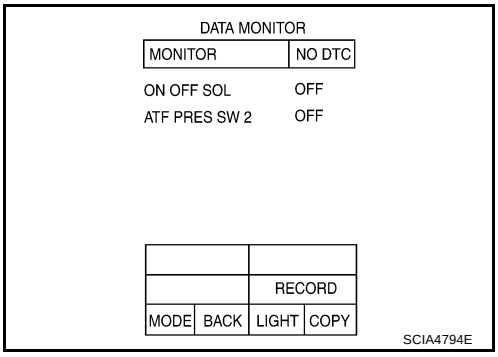

Item name	Condition	Display value
ON OFF SOL	Low coast brake engaged. Refer to AT-19 .	ON
	Low coast brake disengaged. Refer to AT-19 .	OFF

OK or NG

OK >> GO TO 4.
NG >> GO TO 2.

2. CHECK TCM POWER SUPPLY AND GROUND CIRCUIT

Check TCM power supply and ground circuit. Refer to AT-172, "MAIN POWER SUPPLY AND GROUND CIRCUIT" .

OK or NG

OK >> GO TO 3.
NG >> Repair or replace damaged parts.

3. DETECT MALFUNCTIONING ITEM

Check A/T assembly harness connector pin terminals for damage or loose connection with harness connector.

OK or NG

OK >> Replace control valve with TCM. Refer to AT-225, "Control Valve with TCM and A/T Fluid Temperature Sensor 2" .
NG >> Repair or replace damaged parts.

4. CHECK DTC

Perform AT-156, "DTC Confirmation Procedure" .

OK or NG

OK >> **INSPECTION END**
NG >> GO TO 2.

DTC P1774 LOW COAST BRAKE SOLENOID VALVE FUNCTION

PFP:31940

Description

NCS000GM

- Low coast brake solenoid valve is turned ON or OFF by the TCM in response to signals sent from the PNP switch, vehicle speed sensor and accelerator pedal position sensor (throttle position sensor). Gears will then be shifted to the optimum position.
- This is not only caused by electrical malfunction (circuits open or shorted) but also by mechanical malfunction such as control valve sticking, improper solenoid valve operation.

CONSULT-II Reference Value

NCS000GN

Item name	Condition	Display value
ON OFF SOL	Low coast brake engaged. Refer to AT-19 .	ON
	Low coast brake disengaged. Refer to AT-19 .	OFF
ATF PRES SW 2	Low coast brake engaged. Refer to AT-19 .	ON
	Low coast brake disengaged. Refer to AT-19 .	OFF

On Board Diagnosis Logic

NCS000GO

- This is an OBD-II self-diagnostic item.
- Diagnostic trouble code “P1774 LC/B SOLENOID FNCT” with CONSULT-II or 7th judgment flicker without CONSULT-II is detected under the following conditions.
  - When TCM detects that actual gear ratio is irregular, and relation between gear position and condition of ATF pressure switch 2 is irregular during depressing accelerator pedal. (Other than during shift change)
  - When TCM detects that relation between gear position and condition of ATF pressure switch 2 is irregular during releasing accelerator pedal. (Other than during shift change)

Possible Cause

NCS000GP

- Harness or connectors.
  (Solenoid and switch circuits are open or shorted.)
- Low coast brake solenoid valve.
- ATF pressure switch 2.

DTC Confirmation Procedure

NCS000GQ

CAUTION:
Always drive vehicle at a safe speed.

NOTE:
If “DTC Confirmation Procedure” has been previously performed, always turn ignition switch OFF and wait at least 10 seconds before performing the next test.
After the repair, perform the following procedure to confirm the malfunction is eliminated.

WITH CONSULT-II

1. Start engine.
2. Accelerate vehicle to maintain the following conditions.
   MANU MODE SW: ON
   GEAR: “1” or “2” (LC/B ON/OFF)
3. Perform step “2” again.
4. Turn ignition switch OFF, then perform step “1” to “3” again.
5. Check “SELF-DIAG RESULTS” mode for “A/T” with CONSULT-II. If DTC (P1774) is detected, refer to AT-159, "Diagnostic Procedure" .
   If DTC (P1772) is detected, go to AT-157, "Diagnostic Procedure" .

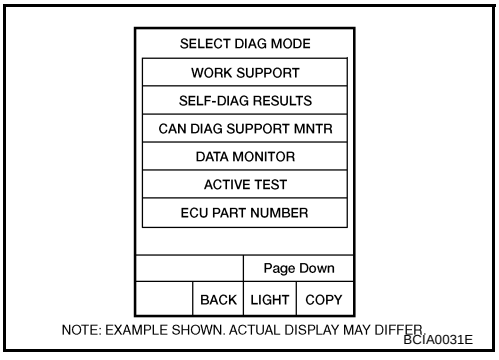

WITH GST

Follow the procedure “WITH CONSULT-II”.

Diagnostic Procedure

NCS000GR

1. CHECK INPUT SIGNALS

With CONSULT-II

1. Start the engine.
2. Select “SELECTION FROM MENU” in “DATA MONITOR” mode for “A/T” with CONSULT-II.
3. Drive vehicle in the manual mode (1st or 2nd gear), and confirm the ON/OFF actuation of the “ATF PRES SW 2” and “ON OFF SOL”.

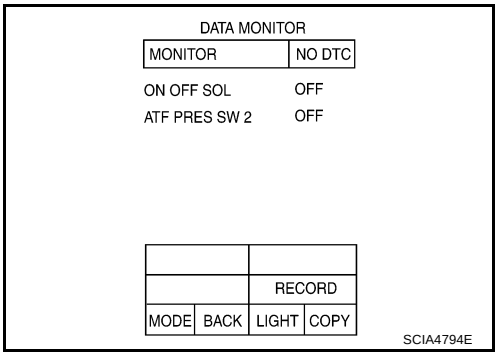

Item name	Condition	Display value
ON OFF SOL	Low coast brake engaged. Refer to AT-19 .	ON
	Low coast brake disengaged. Refer to AT-19 .	OFF
ATF PRES SW 2	Low coast brake engaged. Refer to AT-19 .	ON
	Low coast brake disengaged. Refer to AT-19 .	OFF

OK or NG

OK >> GO TO 4.
NG >> GO TO 2.

2. CHECK TCM POWER SUPPLY AND GROUND CIRCUIT

Check TCM power supply and ground circuit. Refer to AT-172, "MAIN POWER SUPPLY AND GROUND CIRCUIT" .

OK or NG

OK >> GO TO 3.
NG >> Repair or replace damaged parts.

3. DETECT MALFUNCTIONING ITEM

Check A/T assembly harness connector pin terminals for damage or loose connection with harness connector.

OK or NG

OK >> Replace control valve with TCM. Refer to AT-225, "Control Valve with TCM and A/T Fluid Temperature Sensor 2" .
NG >> Repair or replace damaged parts.

4. CHECK DTC

Perform AT-158, "DTC Confirmation Procedure" .

OK or NG

OK >> **INSPECTION END**
NG >> GO TO 2.

DTC P1815 MANUAL MODE SWITCH

PFP:34901

Description

NCS000GS

Manual mode switch is installed in A/T control device. It sends manual mode switch, shift-up and shift-down switch signals to TCM.
TCM sends the switch signals to combination meter. By CAN communication line. Then manual mode switch position is indicated on the A/T position indicator. For inspection, refer to AT-178, "A/T INDICATOR CIRCUIT" .

CONSULT-II Reference Value

NCS000GT

Item name	Condition	Display Value
MANU MODE SW	Manual shift gate position (neutral)	ON
	Other than the above	OFF
NON M-MODE SW	Manual shift gate position	OFF
	Other than the above	ON
UP SW LEVER	Selector lever: + side	ON
	Other than the above	OFF
DOWN SW LEVER	Selector lever: - side	ON
	Other than the above	OFF

On Board Diagnosis Logic

NCS000GU

- This is not an OBD-II self-diagnostic item.
- Diagnostic trouble code “P1815 MANU MODE SW/CIRC” with CONSULT-II is detected when TCM monitors Manual mode, Non manual mode, Up or Down switch signal, and detects as irregular when impossible input pattern occurs 1 second or more.

Possible Cause

NCS000GV

- Harness or connectors.
  (These switches circuit is open or shorted.)
- Manual mode select switch. (Into control device.)
- Manual mode position select switch. (Into control device.)

DTC Confirmation Procedure

NCS000GW

CAUTION:
Always drive vehicle at a safe speed.

NOTE:
If “DTC Confirmation Procedure” has been previously performed, always turn ignition switch OFF and wait at least 10 seconds before performing the next test.
After the repair, perform the following procedure to confirm the malfunction is eliminated.

WITH CONSULT-II

1. Turn ignition switch ON.
2. Select “ECU INPUT SIGNALS” in “DATA MONITOR” mode for “A/T” with CONSULT-II.
3. Start engine.
4. Drive vehicle and maintain the following conditions for at least 2 consecutive seconds.
   MANU MODE SW: ON
5. If DTC is detected, go to AT-162, "Diagnostic Procedure" .

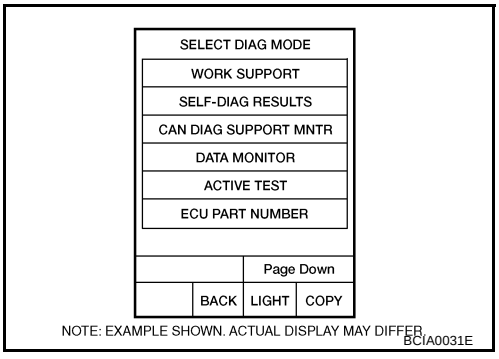

Wiring Diagram — AT — MMSW

NCS000GX

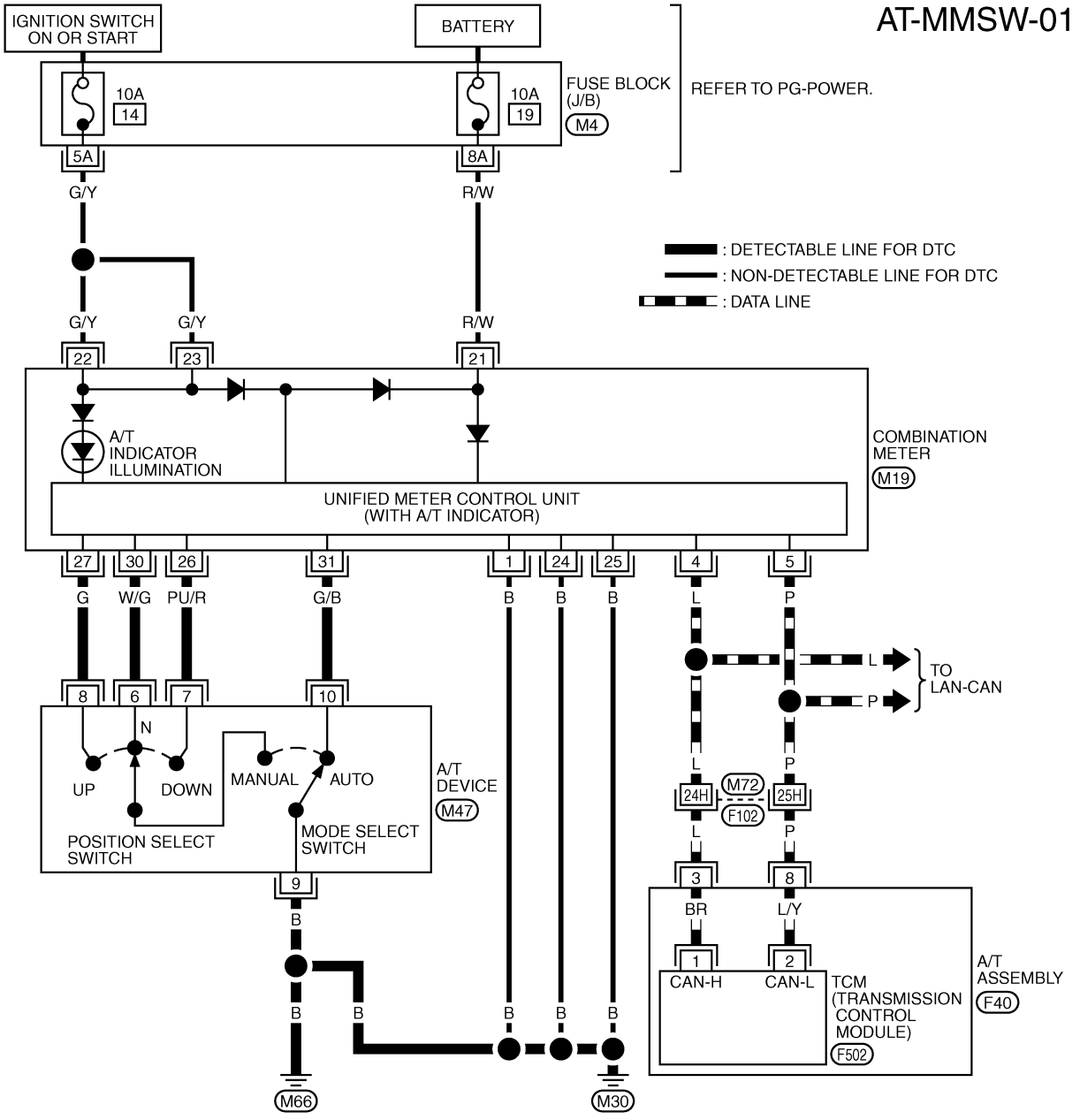

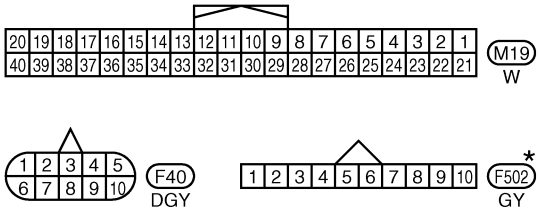

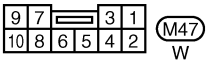

*: THIS CONNECTOR IS NOT SHOWN IN "HARNESS LAYOUT", PG SECTION.

REFER TO THE FOLLOWING.

F102 -SUPER MULTIPLE JUNCTION (SMJ)

M4 -FUSE BLOCK-JUNCTION BOX (J/B)

TCWM0467E

TCM terminals and data are reference value. Measured between each terminal and ground.

Terminal	Wire color	Item	Condition	Data (Approx.)
3	L	CAN-H	–	–
8	P	CAN-L	–	–

Diagnostic Procedure

NCS000GY

1. CHECK CAN COMMUNICATION LINE

Perform self-diagnosis. Refer to AT-86, "SELF-DIAGNOSTIC RESULT MODE" .

Is a malfunction in the CAN communication indicated in the results?

YES >> Check CAN communication line. Refer to AT-98, "DTC U1000 CAN COMMUNICATION LINE" .
NO >> GO TO 2.

2. CHECK MANUAL MODE SWITCH CIRCUIT

With CONSULT-II

1. Turn ignition switch ON.
2. Select “ECU INPUT SIGNALS” in “DATA MONITOR” mode for “A/T” with CONSULT-II.
3. Read out ON/OFF switching action of “MANU MODE SW”, “NON M-MODE SW”, “UP SW LEVER”, “DOWN SW LEVER”.

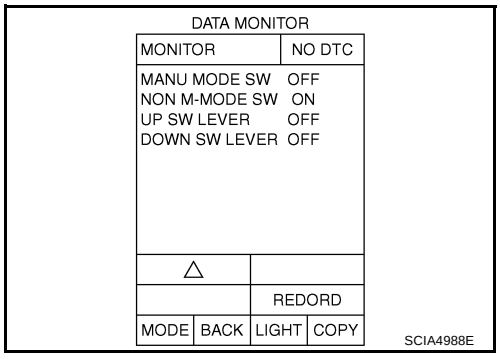

Item name	Condition	Display Value
MANU MODE SW	Manual shift gate position (neutral)	ON
	Other than the above	OFF
NON M-MODE SW	Manual shift gate position	OFF
	Other than the above	ON
UP SW LEVER	Selector lever: +side	ON
	Other than the above	OFF
DOWN SW LEVER	Selector lever: -side	ON
	Other than the above	OFF

Without CONSULT-II

Drive vehicle in the manual mode, and confirm that the actual gear position and the meter's indication of the position mutually coincide when the selector lever is shifted to the “+ (up)” or “- (down)” side (1st ⇔ 5th gear).

OK or NG

OK >> GO TO 4.
NG >> GO TO 3.

3. DETECT MALFUNCTIONING ITEM

Check the following.

- Manual mode switch. Refer to AT-163, "Component Inspection" .
- Pin terminals for damage or loose connection with harness connector.
- Open circuit or short to ground or short to power in harness or connector for A/T device (manual mode switch).
- Combination meter. Refer to DI-4, "COMBINATION METERS" .

OK or NG

OK >> GO TO 4.
NG >> Repair or replace damaged parts.

4. CHECK DTC

Perform Refer to AT-160, "DTC Confirmation Procedure" .

OK or NG

OK >> **INSPECTION END**
NG >> GO TO 5.

5. CHECK TCM POWER SUPPLY AND GROUND CIRCUIT

Check TCM power supply and ground circuit. Refer to AT-172, "MAIN POWER SUPPLY AND GROUND CIRCUIT" .

OK or NG

OK >> GO TO 6.
NG >> Repair or replace damaged parts.

6. DETECT MALFUNCTIONING ITEM

Check A/T assembly harness connector pin terminals for damage or loose connection with harness connector.

OK or NG

OK >> Replace control valve with TCM. Refer to AT-225, "Control Valve with TCM and A/T Fluid Temperature Sensor 2" .
NG >> Repair or replace damaged parts.

Component Inspection

NCS000GZ

MANUAL MODE SWITCH

Check continuity between terminals.

Item	Position	Connector	Terminal (Unit side)	Continuity
Manual mode select switch	Auto	M47	9 - 10	Yes
	Manual		6 - 9	
Manual mode position select switch	UP		8 - 9	
	DOWN		7 - 9	

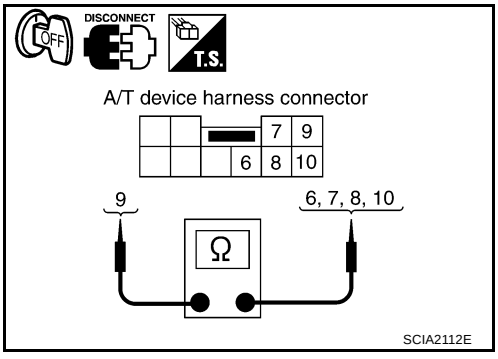

DTC P1841 ATF PRESSURE SWITCH 1

PFP:25240

Description

NCS000H0

Fail-safe function to detect front brake solenoid valve condition.

CONSULT-II Reference Value

NCS000H1

Item name	Condition	Display value
ATF PRES SW 1	Front brake engaged. Refer to AT-19 .	ON
	Front brake disengaged. Refer to AT-19 .	OFF

On Board Diagnosis Logic

NCS000H2

- This is not an OBD-II self-diagnostic item.
- Diagnostic trouble code “P1841 ATF PRES SW 1/CIRC” with CONSULT-II is detected when TCM detects that actual gear ratio is normal, and relation between gear position and condition of ATF pressure switch 1 is irregular during depressing accelerator pedal. (Other than during shift change)

Possible Cause

NCS000H3

- ATF pressure switch 1.
- Harness or connectors.
  (Switch circuit is open or shorted.)

DTC Confirmation Procedure

NCS000H4

CAUTION:
Always drive vehicle at a safe speed.

NOTE:
If “DTC Confirmation Procedure” has been previously performed, always turn ignition switch OFF and wait at least 10 seconds before performing the next test.
After the repair, perform the following procedure to confirm the malfunction is eliminated.

WITH CONSULT-II

1. Start the engine.
2. Accelerate vehicle to maintain the following conditions.
   ACCELE POSI: 1.5/8 - 2.0/8
   SLCT LVR POSI: “D” position
   GEAR: “3” ⇒ “4” (FR/B ON/OFF)
   Driving location: Driving the vehicle uphill (increased engine load) will help maintain the driving conditions required for this test.
3. Perform step “2” again.
4. Turn ignition switch OFF, then perform step “1” to “3” again.
5. Check “SELF-DIAG RESULTS” mode for “A/T” with CONSULT-II.
   If DTC (P1841) is detected, go to AT-165, "Diagnostic Procedure" .
   If DTC (P1757) is detected, go to AT-145, "Diagnostic Procedure" .

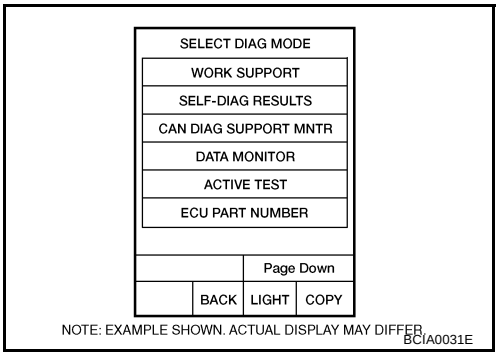

Diagnostic Procedure

NCS000H5

1. CHECK INPUT SIGNAL

With CONSULT-II

1. Start engine.
2. Select “ECU INPUT SIGNALS” or “MAIN SIGNALS” in “DATA MONITOR” mode for “A/T” with CONSULT-II.
3. Drive vehicle in the “D” position (3rd ⇒ 4th gear), and confirm the ON/OFF actuation of the “ATF PRES SW 1”.

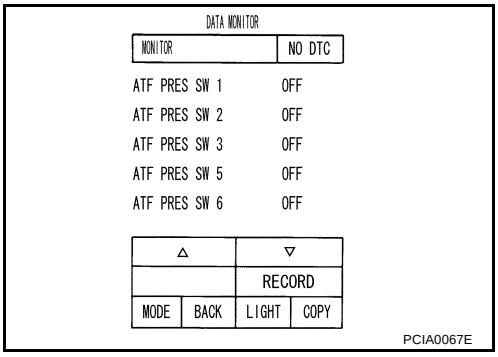

Item name	Condition	Display value
ATF PRES SW 1	Front brake engaged. Refer to AT-19 .	ON
	Front brake disengaged. Refer to AT-19 .	OFF

OK or NG

OK >> GO TO 4.
NG >> GO TO 2.

2. CHECK TCM POWER SUPPLY AND GROUND CIRCUIT

Check TCM power supply and ground circuit. Refer to AT-172, "MAIN POWER SUPPLY AND GROUND CIRCUIT" .

OK or NG

OK >> GO TO 3.
NG >> Repair or replace damaged parts.

3. DETECT MALFUNCTIONING ITEM

Check A/T assembly harness connector pin terminals for damage or loose connection with harness connector.

OK or NG

OK >> Replace control valve with TCM. Refer to AT-225, "Control Valve with TCM and A/T Fluid Temperature Sensor 2" .
NG >> Repair or replace damaged parts.

4. CHECK DTC

Perform AT-164, "DTC Confirmation Procedure" .

OK or NG

OK >> **INSPECTION END**
NG >> GO TO 2.

DTC P1843 ATF PRESSURE SWITCH 3

PFP:25240

Description

NCS000H6

Fail-safe function to detect input clutch solenoid valve condition.

CONSULT-II Reference Value

NCS000H7

Item name	Condition	Display value
ATF PRES SW 3	Input clutch engaged. Refer to AT-19 .	ON
	Input clutch disengaged. Refer to AT-19 .	OFF

On Board Diagnosis Logic

NCS000H8

- This is not an OBD-II self-diagnostic item.
- Diagnostic trouble code “P1843 ATF PRES SW 3/CIRC” with CONSULT-II is detected when TCM detects that actual gear ratio is normal, and relation between gear position and condition of ATF pressure switch 3 is irregular during depressing accelerator pedal. (Other than during shift change)

Possible Cause

NCS000H9

- ATF pressure switch 3.
- Harness or connectors.
  (Switch circuit is open or shorted.)

DTC Confirmation Procedure

NCS000HA

CAUTION:
Always drive vehicle at a safe speed.

NOTE:
If “DTC Confirmation Procedure” has been previously performed, always turn ignition switch OFF and wait at least 10 seconds before performing the next test.
After the repair, perform the following procedure to confirm the malfunction is eliminated.

WITH CONSULT-II

1. Start the engine.
2. Accelerate vehicle to maintain the following conditions.
   ACCELE POSI: 1.5/8 - 2.0/8
   SLCT LVR POSI: “D” position
   GEAR: “3” ⇒ “4” (I/C ON/OFF)
   Driving location: Driving the vehicle uphill (increased engine load) will help maintain the driving conditions required for this test.
3. Perform step “2” again.
4. Turn ignition switch OFF, then perform step “1” to “3” again.
5. Check “SELF-DIAG RESULTS” mode for “A/T” with CONSULT-II.
   If DTC (P1843) is detected, go to AT-167, "Diagnostic Procedure" .
   If DTC (P1752) is detected, go to AT-141, "Diagnostic Procedure" .

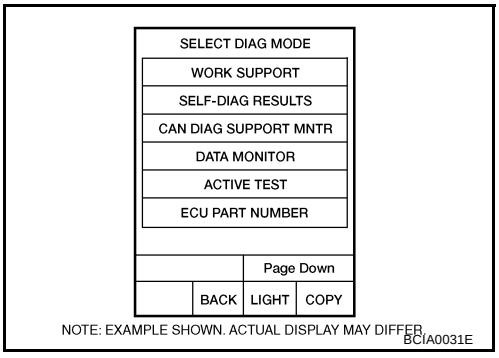

Diagnostic Procedure

NCS000HB

1. CHECK INPUT SIGNAL

With CONSULT-II

1. Start engine.
2. Select “ECU INPUT SIGNALS” or “MAIN SIGNALS” in “DATA MONITOR” mode for “A/T” with CONSULT-II.
3. Drive vehicle in the “D” position (3rd ⇒ 4th gear), and confirm the ON/OFF actuation of the “ATF PRES SW 3”.

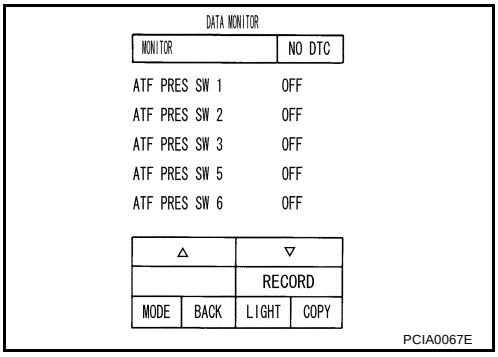

Item name	Condition	Display value
ATF PRES SW 3	Input clutch engaged. Refer to AT-19 .	ON
	Input clutch disengaged. Refer to AT-19 .	OFF

OK or NG

OK >> GO TO 4.
NG >> GO TO 2.

2. CHECK TCM POWER SUPPLY AND GROUND CIRCUIT

Check TCM power supply and ground circuit. Refer to AT-172, "MAIN POWER SUPPLY AND GROUND CIRCUIT" .

OK or NG

OK >> GO TO 3.
NG >> Repair or replace damaged parts.

3. DETECT MALFUNCTIONING ITEM

Check A/T assembly harness connector pin terminals for damage or loose connection with harness connector.

OK or NG

OK >> Replace control valve with TCM. Refer to AT-225, "Control Valve with TCM and A/T Fluid Temperature Sensor 2" .
NG >> Repair or replace damaged parts.

4. CHECK DTC

Perform AT-166, "DTC Confirmation Procedure" .

OK or NG

OK >> **INSPECTION END**
NG >> GO TO 2.

DTC P1845 ATF PRESSURE SWITCH 5

PFP:25240

Description

NCS000HC

Fail-safe function to detect direct clutch solenoid valve condition.

CONSULT-II Reference Value

NCS000HD

Item name	Condition	Display value
ATF PRES SW 5	Direct clutch engaged. Refer to AT-19 .	ON
	Direct clutch disengaged. Refer to AT-19 .	OFF

On Board Diagnosis Logic

NCS000HE

- This is not an OBD-II self-diagnostic item.
- Diagnostic trouble code “P1845 ATF PRES SW 5/CIRC” with CONSULT-II is detected when TCM detects that actual gear ratio is normal, and relation between gear position and condition of ATF pressure switch 5 is irregular during depressing accelerator pedal. (Other than during shift change)

Possible Cause

NCS000HF

- ATF pressure switch 5.
- Harness or connectors.
  (Switch circuit is open or shorted.)

DTC Confirmation Procedure

NCS000HG

CAUTION:
Always drive vehicle at a safe speed.

NOTE:
If “DTC Confirmation Procedure” has been previously performed, always turn ignition switch OFF and wait at least 10 seconds before performing the next test.
After the repair, perform the following procedure to confirm the malfunction is eliminated.

WITH CONSULT-II

1. Start engine.
2. Accelerate vehicle to maintain the following conditions.
   ACCELE POSI: 1.5/8 - 2.0/8
   SLCT LVR POSI: “D” position
   GEAR: “1” ⇒ “2” (D/C ON/OFF)
   Driving location: Driving the vehicle uphill (increased engine load) will help maintain the driving conditions required for this test.
3. Perform step “2” again.
4. Turn ignition switch OFF, then perform step “1” to “3” again.
5. Check “SELF-DIAG RESULTS” mode for “A/T” with CONSULT-II.
   If DTC (P1845) is detected, go to AT-169, "Diagnostic Procedure" .
   If DTC (P1762) is detected, go to AT-149, "Diagnostic Procedure" .

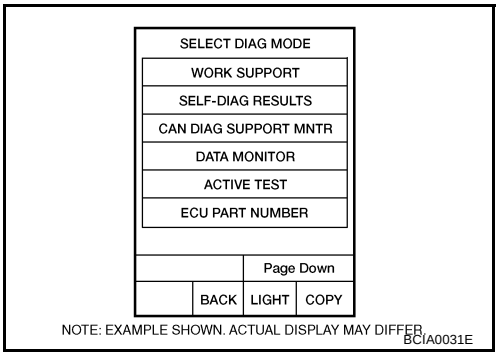

Diagnostic Procedure

NCS000HH

1. CHECK INPUT SIGNAL

With CONSULT-II

1. Start engine.
2. Select “ECU INPUT SIGNALS” or “MAIN SIGNALS” in “DATA MONITOR” mode for “A/T” with CONSULT-II.
3. Drive vehicle in the “D” position (1st ⇒ 2nd gear), and confirm the ON/OFF actuation of the “ATF PRES SW 5”.

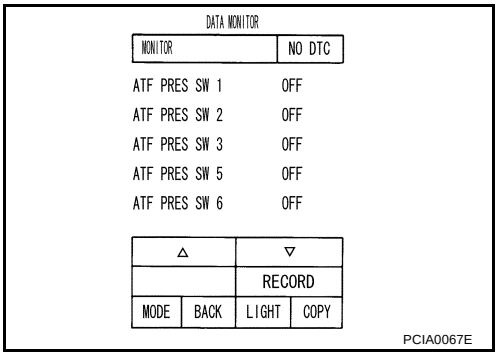

Item name	Condition	Display value
ATF PRES SW 5	Direct clutch engaged. Refer to AT-19 .	ON
	Direct clutch disengaged. Refer to AT-19 .	OFF

OK or NG

OK >> GO TO 4.
NG >> GO TO 2.

2. CHECK TCM POWER SUPPLY AND GROUND CIRCUIT

Check TCM power supply and ground circuit. Refer to AT-172, "MAIN POWER SUPPLY AND GROUND CIRCUIT" .

OK or NG

OK >> GO TO 3.
NG >> Repair or replace damaged parts.

3. DETECT MALFUNCTIONING ITEM

Check A/T assembly harness connector pin terminals for damage or loose connection with harness connector.

OK or NG

OK >> Replace control valve with TCM. Refer to AT-225, "Control Valve with TCM and A/T Fluid Temperature Sensor 2"
NG >> Repair or replace damaged parts.

4. CHECK DTC

Perform AT-168, "DTC Confirmation Procedure" .

OK or NG

OK >> **INSPECTION END**
NG >> GO TO 2.

DTC P1846 ATF PRESSURE SWITCH 6

PFP:25240

Description

NCS000HI

Fail-safe function to detect high and low reverse clutch solenoid valve condition.

CONSULT-II Reference Value

NCS000HJ

Item name	Condition	Display value
ATF PRES SW 6	High and low reverse clutch engaged. Refer to AT-19 .	ON
	High and low reverse clutch disengaged. Refer to AT-19 .	OFF

On Board Diagnosis Logic

NCS000HK

- This is not an OBD-II self-diagnostic item.
- Diagnostic trouble code “P1846 ATF PRES SW 6/CIRC” with CONSULT-II is detected when TCM detects that actual gear ratio is normal, and relation between gear position and condition of ATF pressure switch 6 is irregular during depressing accelerator pedal. (Other than during shift change)

Possible Cause

NCS000HL

- ATF pressure switch 6.
- Harness or connectors.
  (Switch circuit is open or shorted.)

DTC Confirmation Procedure

NCS000HM

CAUTION:
Always drive vehicle at a safe speed.

NOTE:
If “DTC Confirmation Procedure” has been previously performed, always turn ignition switch OFF and wait at least 10 seconds before performing the next test.
After the repair, perform the following procedure to confirm the malfunction is eliminated.

WITH CONSULT-II

1. Start engine.
2. Accelerate vehicle to maintain the following conditions.
   ACCELE POSI: 1.5/8 - 2.0/8
   SLCT LVR POSI: “D” position
   GEAR: “2” ⇒ “3” (HLR/C ON/OFF)
   Driving location: Driving the vehicle uphill (increased engine load) will help maintain the driving conditions required for this test.
3. Perform step “2” again.
4. Turn ignition switch OFF, then perform step “1” to “3” again.
5. Check “SELF-DIAG RESULTS” mode for “A/T” with CONSULT-II.
   If DTC (P1846) is detected, go to AT-171, "Diagnostic Procedure" .
   If DTC (P1767) is detected, go to AT-153, "Diagnostic Procedure" .

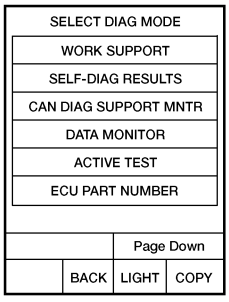

NOTE: EXAMPLE SHOWN. ACTUAL DISPLAY MAY DIFFER.
BCIA0031E

Diagnostic Procedure

NCS000HN

1. CHECK INPUT SIGNAL

With CONSULT-II

1. Start the engine.
2. Select “ECU INPUT SIGNALS” or “MAIN SIGNALS” in “DATA MONITOR” mode for “A/T” with CONSULT-II.
3. Drive vehicle in the “D” position (2nd ⇒ 3rd gear), and confirm the ON/OFF actuation of the “ATF PRES SW 6”.

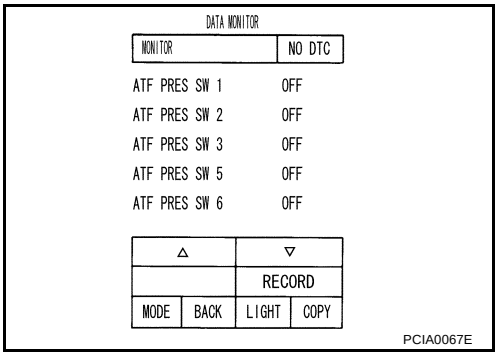

Item name	Condition	Display value
ATF PRES SW 6	High and low reverse clutch engaged. Refer to AT-19 .	ON
	High and low reverse clutch disengaged. Refer to AT-19 .	OFF

OK or NG

OK >> GO TO 4.
NG >> GO TO 2.

2. CHECK TCM POWER SUPPLY AND GROUND CIRCUIT

Check TCM power supply and ground circuit. Refer to AT-172, "MAIN POWER SUPPLY AND GROUND CIRCUIT" .

OK or NG

OK >> GO TO 3.
NG >> Repair or replace damaged parts.

3. DETECT MALFUNCTIONING ITEM

Check A/T assembly harness connector pin terminals for damage or loose connection with harness connector.

OK or NG

OK >> Replace control valve with TCM. Refer to AT-225, "Control Valve with TCM and A/T Fluid Temperature Sensor 2" .
NG >> Repair or replace damaged parts.

4. CHECK DTC

Perform AT-170, "DTC Confirmation Procedure" .

OK or NG

OK >> **INSPECTION END**
NG >> GO TO 2.

MAIN POWER SUPPLY AND GROUND CIRCUIT

PFP:00100

Wiring Diagram — AT — MAIN

NCS000HO

AT-MAIN-01

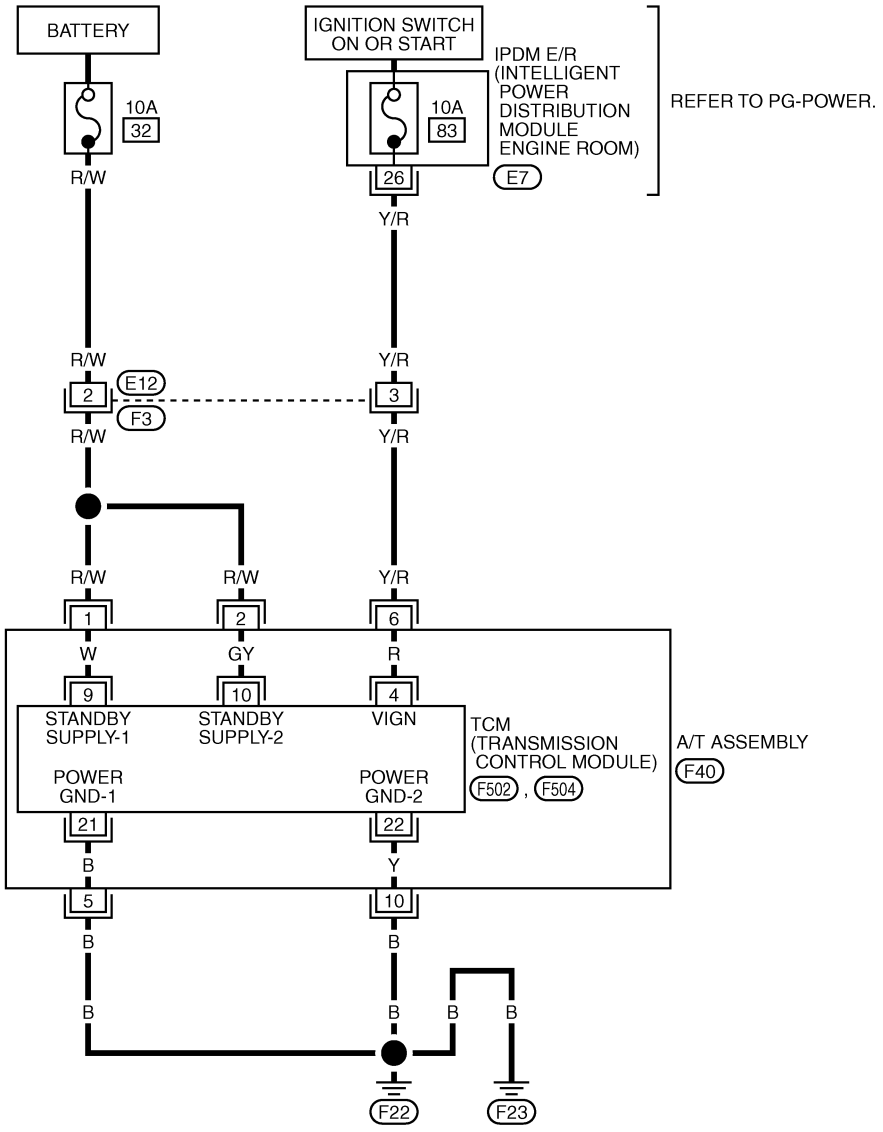

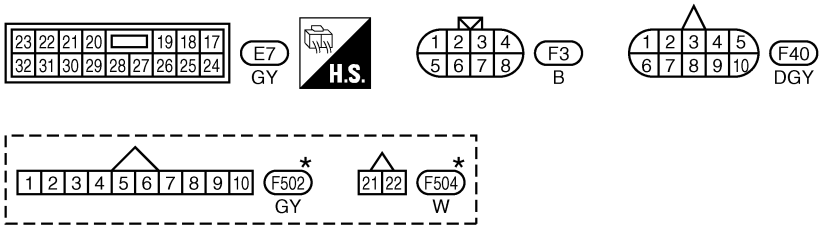

*: THIS CONNECTOR IS NOT SHOWN IN "HARNESS LAYOUT", PG SECTION.

TCWM0410E

TCM terminals and data are reference value. Measured between each terminal and ground.

Terminal	Wire color	Item	Condition		Data (Approx.)
1	R/W	Power supply (Memory back-up)	Always		Battery voltage
2	R/W	Power supply (Memory back-up)	Always		Battery voltage
5	B	Ground	Always		0 V
6	Y/R	Power supply	ON	–	Battery voltage
			OFF	–	0 V
10	B	Ground	Always		0 V

Diagnostic Procedure

NCS000HP

1. CHECK TCM POWER SOURCE STEP 1

1. Turn ignition switch OFF.
2. Disconnect A/T assembly harness connector.
3. Check voltage between A/T assembly harness connector and ground.

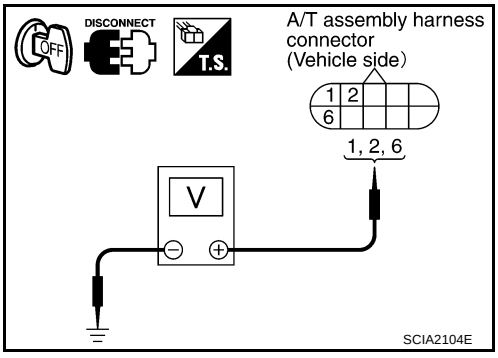

Item	Connector	Terminal	Voltage
TCM	F40	1 - Ground	Battery voltage
		2 - Ground	
		6 - Ground	0V

OK or NG

OK >> GO TO 2.
NG >> GO TO 3.

2. CHECK TCM POWER SOURCE STEP 2

1. Disconnect A/T assembly harness connector.
2. Turn ignition switch ON.
3. Check voltage between A/T assembly harness connector and ground.

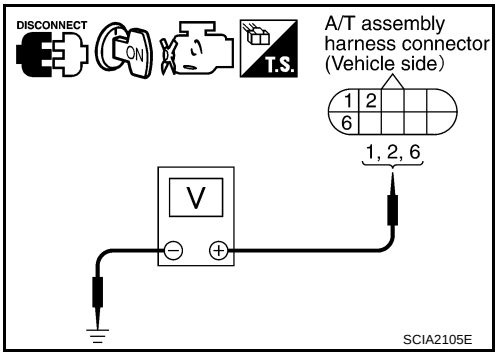

Item	Connector	Terminal	Voltage
TCM	F40	1- Ground	Battery voltage
		2 - Ground	
		6 - Ground	

OK or NG

OK >> GO TO 4.
NG >> GO TO 3.

3. DETECT MALFUNCTIONING ITEM

Check the following.

- Harness for short or open between battery and A/T assembly harness connector terminals 1, 2
- Harness for short or open between ignition switch and A/T assembly harness connector terminal 6
- 10 A fuse (No.32, located in the fuse and fusible link block) and 10 A fuse (No.83, located in the IPDM E/R)
- Ignition switch, Refer to PG-3, "POWER SUPPLY ROUTING CIRCUIT" .

OK or NG

OK >> GO TO 4.
NG >> Repair or replace damaged parts.

4. CHECK TCM GROUND CIRCUIT

1. Turn ignition switch OFF.
2. Disconnect A/T assembly harness connector.
3. Check continuity between A/T assembly harness connector terminals and ground.

   Continuity should exist.

   If OK, check harness for short to ground and short to power.

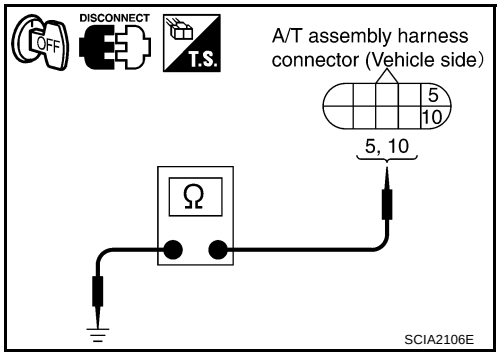

OK or NG

OK >> GO TO 5.
NG >> Repair open circuit or short to ground or short to power in harness or connectors.

5. DETECT MALFUNCTIONING ITEM

Check A/T assembly harness connector terminals for damage or loose connection with harness connector.

OK or NG

OK >> GO TO 6.
NG >> Repair or replace damaged parts.

6. PERFORM SELF-DIAGNOSIS

Perform self-diagnosis. Refer to AT-86, "SELF-DIAGNOSTIC RESULT MODE" .

OK or NG

OK >> **INSPECTION END**
NG - 1 >> Self-diagnosis does not activate: GO TO 7.
NG - 2 >> DTC is displayed: Check the malfunctioning system. Refer to AT-86, "SELF-DIAGNOSTIC RESULT MODE" .

7. CHECK TERMINAL CORD ASSEMBLY

1. Remove control valve with TCM. Refer to AT-225, "Control Valve with TCM and A/T Fluid Temperature Sensor 2" .
2. Disconnect A/T assembly harness connector and TCM connector.
3. Check continuity between A/T assembly harness connector terminals and TCM connector terminals.

Item	Connector	Terminal	Continuity
A/T assembly harness connector	F40	1	Yes
TCM connector	F502	9	
A/T assembly harness connector	F40	2	Yes
TCM connector	F502	10	
A/T assembly harness connector	F40	6	Yes
TCM connector	F502	4	

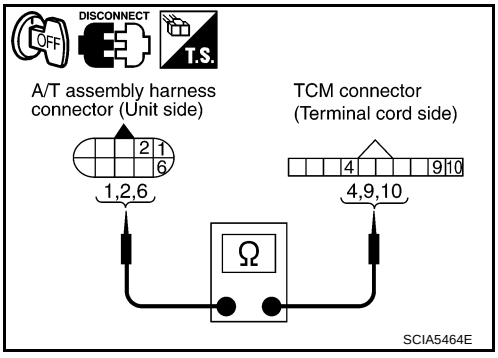

4. Check continuity between A/T assembly harness connector terminals and TCM connector terminals.

Item	Connector	Terminal	Continuity
A/T assembly harness connector	F40	5	Yes
TCM connector	F504	21	
A/T assembly harness connector	F40	10	Yes
TCM connector	F504	22	

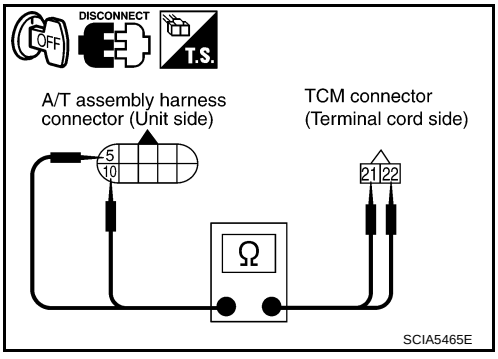

5. If OK, check harness for short to ground and short to power.

OK or NG

OK >> Replace control valve with TCM. Refer to AT-225, "Control Valve with TCM and A/T Fluid Temperature Sensor 2" .

NG >> Replace open circuit or short to ground and short to power in harness or connectors.

CLOSED THROTTLE POSITION AND WIDE OPEN THROTTLE POSITION CIRCUIT

PFP:18002

CONSULT-II Reference Value

NCS000HQ

Item name	Condition	Display value
CLSD THL POS	Released accelerator pedal	ON
	Fully depressed accelerator pedal	OFF
W/O THL POS	Fully depressed accelerator pedal	ON
	Released accelerator pedal	OFF

Diagnostic Procedure

NCS000HR

1. CHECK CAN COMMUNICATION LINE

Perform self-diagnosis. Refer to AT-86, "SELF-DIAGNOSTIC RESULT MODE" , AT-95, "Diagnostic Procedure Without CONSULT-II" .

Is a malfunction in the CAN communication indicated in the results?

YES >> Check CAN communication line. Refer to AT-98, "DTC U1000 CAN COMMUNICATION LINE" .
NO >> GO TO 2.

2. CHECK THROTTLE POSITION SIGNAL CIRCUIT

With CONSULT-II

1. Turn ignition switch ON.
2. Select “ECU INPUT SIGNALS” in “DATA MONITOR” mode for “A/T” with CONSULT-II.
3. Depress accelerator pedal and read out the value of “CLSD THL POS” and “W/O THL POS”.

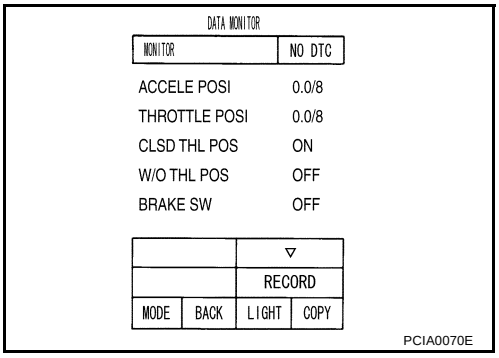

Accelerator Pedal Operation	Monitor Item	
	CLSD THL POS	W/O THL POS
Released	ON	OFF
Fully depressed	OFF	ON

OK or NG

OK >> **INSPECTION END**
NG >> Check the following items. If NG, repair or replace damaged parts.

- Perform self-diagnosis for “ENGINE” with CONSULT-II. Refer to EC-121, "CONSULT-II Function (ENGINE)" .
- Open circuit or short to ground or short to power in harness or connectors.
- Pin terminals for damage or loose connection with harness connector.

BRAKE SIGNAL CIRCUIT

PFP:25320

CONSULT-II Reference Value

NCS000HS

Item name	Condition	Display value
BRAKE SW	Depressed brake pedal	ON
	Released brake pedal	OFF

Diagnostic Procedure

NCS000HT

1. CHECK CAN COMMUNICATION LINE

Perform self-diagnosis. Refer to AT-86, "SELF-DIAGNOSTIC RESULT MODE" , AT-95, "Diagnostic Procedure Without CONSULT-II" .

Is a malfunction in the CAN communication indicated in the results?

YES >> Check CAN communication line. Refer to AT-98, "DTC U1000 CAN COMMUNICATION LINE" .
NO >> GO TO 2.

2. CHECK STOP LAMP SWITCH CIRCUIT

With CONSULT-II

1. Turn ignition switch ON.
2. Select “ECU INPUT SIGNALS” in “DATA MONITOR” mode for “A/T” with CONSULT-II.
3. Read out ON/OFF switching action of the “BRAKE SW”.

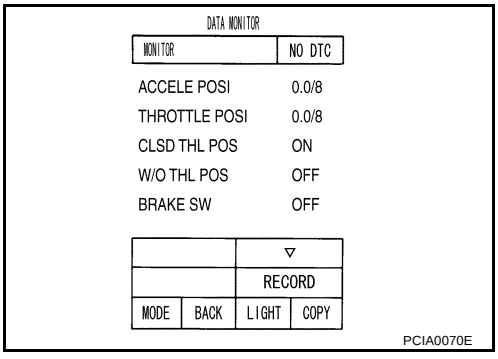

Item name	Condition	Display value
BRAKE SW	Depressed brake pedal	ON
	Released brake pedal	OFF

OK or NG

OK >> **INSPECTION END**
NG >> GO TO 3.

3. CHECK STOP LAMP SWITCH

Check continuity between stop lamp switch harness connector E124 terminals 3 and 4. Refer to AT-179, "Wiring Diagram — AT — NON-DTC" .

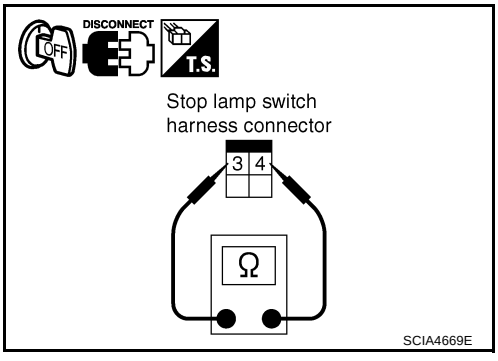

Condition	Continuity
When brake pedal is depressed	Yes
When brake pedal is released	No

Check stop lamp switch after adjusting brake pedal — refer to BR-6, "BRAKE PEDAL" .

OK or NG

OK >> Check the following items. If NG, repair or replace damaged parts.
- Harness for short or open between battery and stop lamp switch.
- Harness for short or open between stop lamp switch and combination meter.
- 10A fuse (No.20, located in fuse block).

NG >> Repair or replace the stop lamp switch.

A/T INDICATOR CIRCUIT

PFP:24810

Description

NCS000HU

TCM sends the switch signals to combination meters. By CAN communication line. Then manual mode switch position is indicated on the A/T indicator.

CONSULT-II Reference Value

NCS000HV

Item name	Condition	Display value
GEAR	During driving	1, 2, 3, 4, 5

Diagnostic Procedure

NCS000HW

1. CHECK INPUT SIGNALS

With CONSULT-II

1. Start engine.
2. Select “MAIN SIGNALS” in “DATA MONITOR” mode for “A/T” with CONSULT-II and read out the value of “GEAR”.
3. Drive vehicle in the manual mode, and confirm that the actual gear position and the meter's indication of the position mutually coincide when the selector lever is shifted to the “+ (up)” or “- (down)” side (1st ⇔ 5th gear).

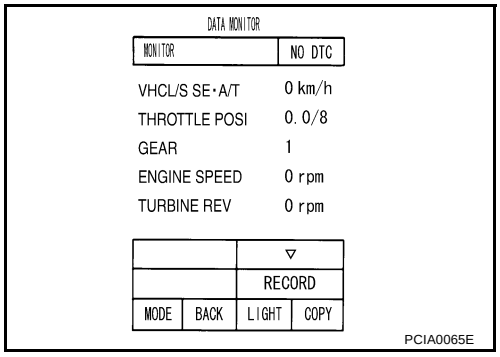

OK or NG

OK >> **INSPECTION END**
NG >> Check the following.

A/T INDICATOR SYMPTOM CHART

Items	Possible location of malfunction
The actual gear position does not change, or shifting into the manual mode is not possible (no gear shifting in the manual mode possible). The A/T indicator is not indicated.	Manual mode switch ● Refer to AT-160, "DTC P1815 MANUAL MODE SWITCH" . A/T main system (Fail-safe function actuated) ● Refer to AT-86, "SELF-DIAGNOSTIC RESULT MODE" .
The actual gear position changes, but the A/T indicator is not indicated.	Perform the self-diagnosis function. ● Refer to AT-86, "SELF-DIAGNOSTIC RESULT MODE" .
The actual gear position and the indication on the A/T indicator do not coincide.	Perform the self-diagnosis function. ● Refer to AT-86, "SELF-DIAGNOSTIC RESULT MODE" .
Only a specific position or positions is/are not indicated on the A/T indicator.	Check the combination meters. ● Refer to DI-4, "COMBINATION METERS" .

TROUBLE DIAGNOSIS FOR SYMPTOMS

PFP:00007

Wiring Diagram — AT — NONDTC

NCS000HX

AT-NONDTC-01

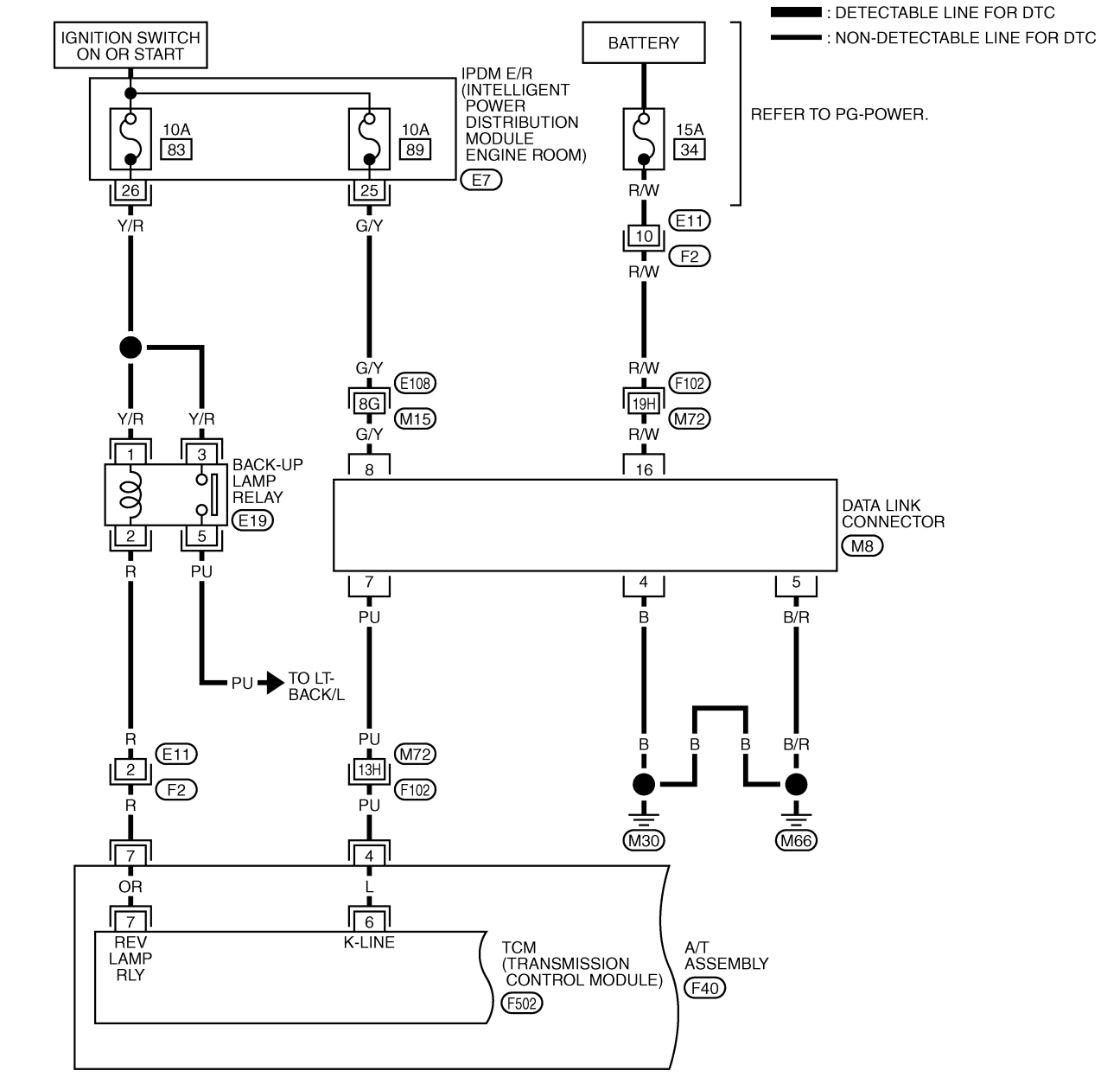

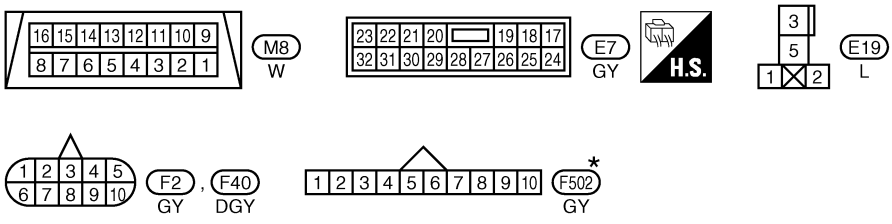

*: THIS CONNECTOR IS NOT SHOWN IN "HARNESS LAYOUT", PG SECTION.

REFER TO THE FOLLOWING.
E108 , F102 -SUPER MULTIPLE JUNCTION (SMJ)

TCWM0411E

AT-NONDTC-02

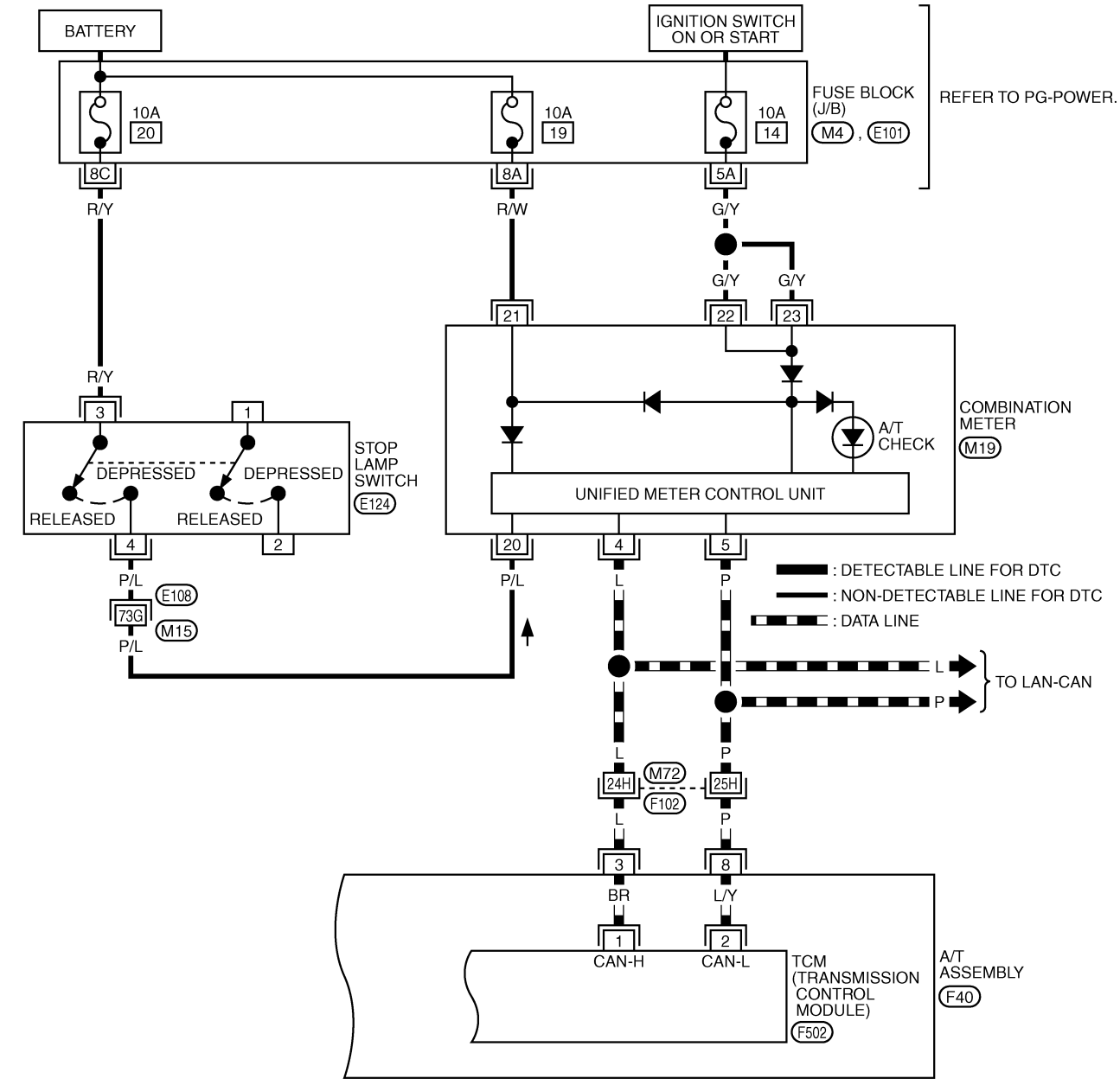

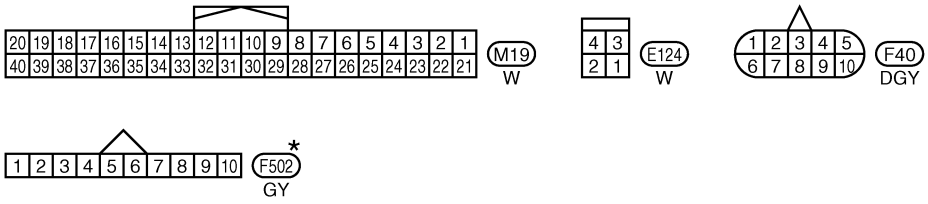

*: THIS CONNECTOR IS NOT SHOWN IN "HARNESS LAYOUT", PG SECTION.

REFER TO THE FOLLOWING.
E108 , F102 -SUPER MULTIPLE JUNCTION (SMJ)
M4 , E101 -FUSE BLOCK-JUNCTION BOX (J/B)

TCWM0412E

TCM terminals and data are reference value. Measured between each terminal and ground.

Terminal	Wire color	Item	Condition		Data (Approx.)
3	L	CAN-H	–		–
4	PU	K-line (CONSULT-II signal)	The terminal is connected to the data link connector for CONSULT-II.		–
7	R	Back-up lamp relay		Selector lever in “R” position.	0 V
				Selector lever in other positions.	Battery voltage
8	P	CAN-L	–		–

A/T CHECK Indicator Lamp Does Not Come On

NCS000HY

SYMPTOM:

A/T CHECK indicator lamp does not come on for about 2 seconds when turning ignition switch to ON.

DIAGNOSTIC PROCEDURE

1. CHECK CAN COMMUNICATION LINE

Perform self-diagnosis. Refer to AT-86, "SELF-DIAGNOSTIC RESULT MODE" , AT-95, "TCM SELF-DIAGNOSTIC PROCEDURE (NO TOOLS)" .

Is a malfunction in the CAN communication indicated in the results?

YES >> Check CAN communication line. Refer to AT-98, "DTC U1000 CAN COMMUNICATION LINE" .
NO >> GO TO 2.

2. CHECK A/T CHECK INDICATOR LAMP CIRCUIT

Check combination meter. Refer to DI-4, "COMBINATION METERS" .

OK or NG

OK >> GO TO 3.
NG >> Repair or replace damaged parts.

3. CHECK TCM POWER SUPPLY AND GROUND CIRCUIT

Check TCM power supply and ground circuit. Refer to AT-172, "MAIN POWER SUPPLY AND GROUND CIRCUIT" .

OK or NG

OK >> **INSPECTION END**
NG >> Repair or replace damaged parts.

Engine Cannot Be Started in “P” or “N” Position

NCS000HZ

SYMPTOM:

- **Engine cannot be started with selector lever in “P” or “N” position.**
- **Engine can be started with selector lever in “D” or “R” position.**

DIAGNOSTIC PROCEDURE

1. CHECK PNP SWITCH CIRCUIT

Perform self-diagnosis. Refer to AT-86, "SELF-DIAGNOSTIC RESULT MODE" , AT-95, "Diagnostic Procedure Without CONSULT-II" .

Do the self-diagnosis results indicate PNP switch?

YES >> Check the malfunctioning system. Refer to AT-106, "DTC P0705 PARK/NEUTRAL POSITION SWITCH" .
NO >> GO TO 2.

2. CHECK A/T POSITION

Check A/T position. Refer to AT-216, "Checking of A/T Position" .

OK or NG

OK >> GO TO 3.
NG >> Adjust A/T position. Refer to AT-215, "Adjustment of A/T Position" .

3. CHECK STARTING SYSTEM

Check starting system. Refer to SC-10, "STARTING SYSTEM" .

OK or NG

OK >> **INSPECTION END**
NG >> Repair or replace damaged parts.

In “P” Position, Vehicle Moves When Pushed

NCS000I0

SYMPTOM:

Even though the selector lever is set in the “P” position, the parking mechanism is not actuated, allowing the vehicle to be moved when it is pushed.

DIAGNOSTIC PROCEDURE

1. CHECK A/T POSITION

Check A/T position. Refer to AT-216, "Checking of A/T Position" .

OK or NG

OK >> GO TO 2.
NG >> Adjust A/T position. Refer to AT-215, "Adjustment of A/T Position" .

2. CHECK PARKING COMPONENTS

Check parking components. Refer to AT-236, "Parking Components" .

OK or NG

OK >> **INSPECTION END**
NG >> Repair or replace damaged parts.

In “N” Position, Vehicle Moves

NCS000I1

SYMPTOM:

Vehicle moves forward or backward when selecting “N” position.

DIAGNOSTIC PROCEDURE

1. CHECK PNP SWITCH CIRCUIT

Perform self-diagnosis. Refer to AT-86, "SELF-DIAGNOSTIC RESULT MODE" , AT-95, "Diagnostic Procedure Without CONSULT-II" .

Do the self-diagnostic results indicate PNP switch?

YES >> Check the malfunctioning system. Refer to AT-106, "DTC P0705 PARK/NEUTRAL POSITION SWITCH" .

NO >> GO TO 2.

2. CHECK A/T POSITION

Check A/T position. Refer to AT-216, "Checking of A/T Position" .

OK or NG

OK >> GO TO 3.

NG >> Adjust A/T position. Refer to AT-215, "Adjustment of A/T Position" .

3. CHECK A/T FLUID LEVEL

Check A/T fluid level. Refer to AT-12, "Checking A/T Fluid" .

OK or NG

OK >> GO TO 4.

NG >> Refill ATF.

4. CHECK A/T FLUID CONDITION

1. Remove oil pan. Refer to AT-225, "Control Valve with TCM and A/T Fluid Temperature Sensor 2" .
2. Check A/T fluid condition. Refer to AT-50, "A/T Fluid Condition Check" .

OK or NG

OK >> GO TO 5.

NG >> Check the malfunction items. If any items are damaged, repair or replace damaged parts. Refer to AT-60, "Symptom Chart" (Symptom No.67).

5. CHECK SYMPTOM

Check again. Refer to AT-54, "Check at Idle" .

OK or NG

OK >> **INSPECTION END**

NG >> GO TO 6.

6. CHECK TCM

1. Check TCM input/output signals. Refer to AT-83, "TCM Input/Output Signal Reference Values" .
2. If NG, recheck A/T assembly harness connector terminals for damage or loose connection with harness connector.

OK or NG

OK >> **INSPECTION END**

NG >> Repair or replace damaged parts.

Large Shock (“N” to “D” Position)

NCS000I2

SYMPTOM:

A noticeable shock occurs when the selector lever is shifted from the “N” to “D” position.

DIAGNOSTIC PROCEDURE

1. CHECK SELF-DIAGNOSTIC RESULTS

Perform self-diagnosis. Refer to AT-86, "SELF-DIAGNOSTIC RESULT MODE" , AT-95, "Diagnostic Procedure Without CONSULT-II" .

Is any malfunction detected by self-diagnostic results?

YES >> Check the malfunctioning system. Refer to AT-86, "SELF-DIAGNOSTIC RESULT MODE" , AT-97, "Judgment Self-diagnosis Code" .

NO >> GO TO 2.

2. CHECK ENGINE IDLE SPEED

Check the engine idle speed. Refer to EC-76, "Idle Speed and Ignition Timing Check" .

OK or NG

OK >> GO TO 3.

NG >> Adjust engine idle speed. Refer to EC-76, "Idle Speed and Ignition Timing Check" .

3. CHECK A/T POSITION

Check A/T position. Refer to AT-216, "Checking of A/T Position" .

OK or NG

OK >> GO TO 4.

NG >> Adjust A/T position. Refer to AT-215, "Adjustment of A/T Position" .

4. CHECK A/T FLUID LEVEL

Check the A/T fluid level. Refer to AT-12, "Checking A/T Fluid" .

OK or NG

OK >> GO TO 5.

NG >> Refill ATF.

5. CHECK LINE PRESSURE

Check line pressure at idle with selector lever in “D” position. Refer to AT-52, "LINE PRESSURE TEST" .

OK or NG

OK >> GO TO 8.

NG - 1 >> Line pressure high: GO TO 6.

NG - 2 >> Line pressure low: GO TO 7.

6. DETECT MALFUNCTIONING ITEM

1. Check control valve with TCM. Refer to AT-225, "Control Valve with TCM and A/T Fluid Temperature Sensor 2" .
2. Disassemble A/T. Refer to AT-263, "DISASSEMBLY" .
3. Check the following.

– Oil pump assembly. Refer to AT-279, "Oil Pump" .

OK or NG

OK >> GO TO 8.

NG >> Repair or replace damaged parts.

7. DETECT MALFUNCTIONING ITEM

1. Check control valve with TCM. Refer to AT-225, "Control Valve with TCM and A/T Fluid Temperature Sensor 2" .
2. Disassemble A/T. Refer to AT-263, "DISASSEMBLY" .
3. Check the following.

- Oil pump assembly. Refer to AT-279, "Oil Pump" .
- Power train system. Refer to AT-263, "DISASSEMBLY" .
- Transmission case. Refer to AT-263, "DISASSEMBLY" .

OK or NG

OK >> GO TO 8.
NG >> Repair or replace damaged parts.

8. CHECK A/T FLUID CONDITION

1. Remove oil pan. Refer to AT-225, "Control Valve with TCM and A/T Fluid Temperature Sensor 2" .
2. Check A/T fluid condition. Refer to AT-50, "A/T Fluid Condition Check" .

OK or NG

OK >> GO TO 10.
NG >> GO TO 9.

9. DETECT MALFUNCTIONING ITEM

Check the malfunction items. If any items are damaged, repair or replace damaged parts. Refer to AT-60, "Symptom Chart" (Symptom No.1).

OK or NG

OK >> GO TO 10.
NG >> Repair or replace damaged parts.

10. CHECK SYMPTOM

Check again. Refer to AT-54, "Check at Idle" .

OK or NG

OK >> **INSPECTION END**
NG >> GO TO 11.

11. CHECK TCM

1. Check TCM input/output signals. Refer to AT-83, "TCM Input/Output Signal Reference Values" .
2. If NG, recheck A/T assembly harness connector terminals for damage or loose connection with harness connector.

OK or NG

OK >> **INSPECTION END**
NG >> Repair or replace damaged parts.

Vehicle Does Not Creep Backward in “R” Position

NCS000I3

SYMPTOM:

The vehicle does not creep in the “R” position. Or an extreme lack of acceleration is observed.

DIAGNOSTIC PROCEDURE

1. CHECK SELF-DIAGNOSTIC RESULTS

Perform self-diagnosis. Refer to AT-86, "SELF-DIAGNOSTIC RESULT MODE" , AT-95, "Diagnostic Procedure Without CONSULT-II" .

Is any malfunction detected by self-diagnostic results?

YES >> Check the malfunctioning system. Refer to AT-86, "SELF-DIAGNOSTIC RESULT MODE" , AT-97, "Judgment Self-diagnosis Code" .

NO >> GO TO 2.

2. CHECK A/T POSITION

Check A/T position. Refer to AT-216, "Checking of A/T Position" .

OK or NG

OK >> GO TO 3.

NG >> Adjust A/T position. Refer to AT-215, "Adjustment of A/T Position" .

3. CHECK A/T FLUID LEVEL

Check A/T fluid level. Refer to AT-12, "Checking A/T Fluid" .

OK or NG

OK >> GO TO 4.

NG >> Refill ATF.

4. CHECK STALL TEST

Check stall revolution with selector lever in “M” and “R” positions. Refer to AT-50, "STALL TEST" .

OK or NG

OK >> GO TO 6.

OK in “M” position, NG in “R” position>>GO TO 5.

NG in both “M” and “R” positions>>GO TO 8.

5. DETECT MALFUNCTIONING ITEM

1. Disassemble A/T. Refer to AT-263, "DISASSEMBLY" .
2. Check the following.

– Reverse brake. Refer to AT-263, "DISASSEMBLY" .

OK or NG

OK >> GO TO 9.

NG >> Repair or replace damaged parts.

6. CHECK LINE PRESSURE

Check the line pressure with the engine idling. Refer to AT-52, "LINE PRESSURE TEST" .

OK or NG

OK >> GO TO 9.

NG - 1 >> Line pressure high. GO TO 7.

NG - 2 >> Line pressure low. GO TO 8.

7. DETECT MALFUNCTIONING ITEM

1. Check control valve with TCM. Refer to AT-225, "Control Valve with TCM and A/T Fluid Temperature Sensor 2" .
2. Disassemble A/T. Refer to AT-263, "DISASSEMBLY" .
3. Check the following.

– Oil pump assembly. Refer to AT-279, "Oil Pump" .

OK or NG

OK >> GO TO 9.
NG >> Repair or replace damaged parts.

8. DETECT MALFUNCTIONING ITEM

1. Check control valve with TCM. Refer to AT-225, "Control Valve with TCM and A/T Fluid Temperature Sensor 2" .
2. Disassemble A/T. Refer to AT-263, "DISASSEMBLY" .
3. Check the following.

– Oil pump assembly. Refer to AT-279, "Oil Pump" .
– Power train system. Refer to AT-263, "DISASSEMBLY" .
– Transmission case. Refer to AT-263, "DISASSEMBLY" .

OK or NG

OK >> GO TO 9.
NG >> Repair or replace damaged parts.

9. CHECK A/T FLUID CONDITION

1. Remove oil pan. Refer to AT-225, "Control Valve with TCM and A/T Fluid Temperature Sensor 2" .
2. Check A/T fluid condition. Refer to AT-50, "A/T Fluid Condition Check" .

OK or NG

OK >> GO TO 10.
NG >> GO TO 13.

10. DETECT MALFUNCTIONING ITEM

Check the malfunction items. If any items are damaged, repair or replace damaged parts. Refer to AT-60, "Symptom Chart" (Symptom No.43).

OK or NG

OK >> GO TO 11.
NG >> Repair or replace damaged parts.

11. CHECK SYMPTOM

Check again. Refer to AT-54, "Check at Idle" .

OK or NG

OK >> **INSPECTION END**
NG >> GO TO 12.

12. CHECK TCM

1. Check TCM input/output signals. Refer to AT-83, "TCM Input/Output Signal Reference Values" .
2. If NG, recheck A/T assembly harness connector terminals for damage or loose connection with harness connector.

OK or NG

OK >> **INSPECTION END**
NG >> Repair or replace damaged parts.

13. DETECT MALFUNCTIONING ITEM

Check the malfunction items. If any items are damaged, repair or replace damaged parts. Refer to AT-60, "Symptom Chart" (Symptom No.43).

OK or NG

OK >> GO TO 11.
NG >> Repair or replace damaged parts.

Vehicle Does Not Creep Forward in “D” Position

NCS000I4

SYMPTOM:

Vehicle does not creep forward when selecting “D” position.

DIAGNOSTIC PROCEDURE

1. CHECK SELF-DIAGNOSTIC RESULTS

Perform self-diagnosis. Refer to AT-86, "SELF-DIAGNOSTIC RESULT MODE" , AT-95, "Diagnostic Procedure Without CONSULT-II" .

Is any malfunction detected by self-diagnostic results?

YES >> Check the malfunctioning system. Refer to AT-86, "SELF-DIAGNOSTIC RESULT MODE" , AT-97, "Judgment Self-diagnosis Code" .
NO >> GO TO 2.

2. CHECK A/T POSITION

Check A/T position. Refer to AT-216, "Checking of A/T Position" .

OK or NG

OK >> GO TO 3.
NG >> Adjust A/T position. Refer to AT-215, "Adjustment of A/T Position" .

3. CHECK A/T FLUID LEVEL

Check A/T fluid level. Refer to AT-12, "Checking A/T Fluid" .

OK or NG

OK >> GO TO 4.
NG >> Refill ATF.

4. CHECK STALL TEST

Check stall revolution with selector lever in “D” position. Refer to AT-50, "STALL TEST" .

OK or NG

OK >> GO TO 5.
NG >> GO TO 7.

5. CHECK LINE PRESSURE

Check line pressure at idle with selector lever in “D” position. Refer to AT-52, "LINE PRESSURE TEST" .

OK or NG

OK >> GO TO 8.
NG - 1 >> Line pressure high. GO TO 6.
NG - 2 >> Line pressure low. GO TO 7.

6. DETECT MALFUNCTIONING ITEM

1. Check control valve with TCM. Refer to AT-225, "Control Valve with TCM and A/T Fluid Temperature Sensor 2" .
2. Disassemble A/T. Refer to AT-263, "DISASSEMBLY" .
3. Check the following.

– Oil pump assembly. Refer to AT-279, "Oil Pump" .

OK or NG

OK >> GO TO 8.
NG >> Repair or replace damaged parts.

7. DETECT MALFUNCTIONING ITEM

1. Check control valve with TCM. Refer to AT-225, "Control Valve with TCM and A/T Fluid Temperature Sensor 2" .
2. Disassemble A/T. Refer to AT-263, "DISASSEMBLY" .
3. Check the following.

– Oil pump assembly. Refer to AT-279, "Oil Pump" .
– Power train system. Refer to AT-263, "DISASSEMBLY" .
– Transmission case. Refer to AT-263, "DISASSEMBLY" .

OK or NG

OK >> GO TO 8.
NG >> Repair or replace damaged parts.

8. CHECK A/T FLUID CONDITION

1. Remove oil pan. Refer to AT-225, "Control Valve with TCM and A/T Fluid Temperature Sensor 2" .
2. Check A/T fluid condition. Refer to AT-50, "A/T Fluid Condition Check" .

OK or NG

OK >> GO TO 9.
NG >> GO TO 12.

9. DETECT MALFUNCTIONING ITEM

Check the malfunction items. If any items are damaged, repair or replace damaged parts. Refer to AT-60, "Symptom Chart" (Symptom No.43).

OK or NG

OK >> GO TO 10.
NG >> Repair or replace damaged parts.

10. CHECK SYMPTOM

Check again. Refer to AT-54, "Check at Idle" .

OK or NG

OK >> **INSPECTION END**
NG >> GO TO 11.

11. CHECK TCM

1. Check TCM input/output signals. Refer to AT-83, "TCM Input/Output Signal Reference Values" .
2. If NG, recheck A/T assembly harness connector terminals for damage or loose connection with harness connector.

OK or NG

OK >> **INSPECTION END**
NG >> Repair or replace damaged parts.

12. DETECT MALFUNCTIONING ITEM

Check the malfunction items. If any items are damaged, repair or replace damaged parts. Refer to AT-60, "Symptom Chart" (Symptom No.43).

OK or NG

OK >> GO TO 10.
NG >> Repair or replace damaged parts.

Vehicle Cannot Be Started From D1

NCS000I5

SYMPTOM:

Vehicle cannot be started from D1 on “Cruise Test - Part 1” and “Cruise Test - Part 2”.

DIAGNOSTIC PROCEDURE

1. CHECK SYMPTOM

Check if vehicle creeps in “R” position.

OK or NG

OK >> GO TO 2.
NG >> Refer to AT-186, "Vehicle Does Not Creep Backward in “R” Position" .

2. CHECK SELF-DIAGNOSTIC RESULTS

Perform self-diagnosis. Refer to AT-86, "SELF-DIAGNOSTIC RESULT MODE" , AT-95, "Diagnostic Procedure Without CONSULT-II" .

Is any malfunction detected by self-diagnostic results?

YES >> Check the malfunctioning system. Refer to AT-86, "SELF-DIAGNOSTIC RESULT MODE" , AT-97, "Judgment Self-diagnosis Code" .
NO >> GO TO 3.

3. CHECK ACCELERATOR PEDAL POSITION SENSOR

Check accelerator pedal position sensor. Refer to AT-125, "DTC P1705 THROTTLE POSITION SENSOR"

OK or NG

OK >> GO TO 4.
NG >> Repair or replace accelerator pedal position sensor.

4. CHECK A/T FLUID LEVEL

Check A/T fluid level. Refer to AT-12, "Checking A/T Fluid" .

OK or NG

OK >> GO TO 5.
NG >> Refill ATF.

5. CHECK LINE PRESSURE

Check line pressure at the engine stall point. Refer to AT-52, "LINE PRESSURE TEST" .

OK or NG

OK >> GO TO 8.
NG - 1 >> Line pressure high. GO TO 6.
NG - 2 >> Line pressure low. GO TO 7.

6. DETECT MALFUNCTIONING ITEM

1. Check control valve with TCM. Refer to AT-225, "Control Valve with TCM and A/T Fluid Temperature Sensor 2" .
2. Disassemble A/T. Refer to AT-263, "DISASSEMBLY" .
3. Check the following.

– Oil pump assembly. Refer to AT-279, "Oil Pump" .

OK or NG

OK >> GO TO 8.
NG >> Repair or replace damaged parts.

7. DETECT MALFUNCTIONING ITEM

1. Check control valve with TCM. Refer to AT-225, "Control Valve with TCM and A/T Fluid Temperature Sensor 2" .
2. Disassemble A/T. Refer to AT-263, "DISASSEMBLY" .
3. Check the following.

– Oil pump assembly. Refer to AT-279, "Oil Pump" .
– Power train system. Refer to AT-263, "DISASSEMBLY" .
– Transmission case. Refer to AT-263, "DISASSEMBLY" .

OK or NG

OK >> GO TO 8.
NG >> Repair or replace damaged parts.

8. CHECK A/T FLUID CONDITION

1. Remove oil pan. Refer to AT-225, "Control Valve with TCM and A/T Fluid Temperature Sensor 2" .
2. Check A/T fluid condition. Refer to AT-50, "A/T Fluid Condition Check" .

OK or NG

OK >> GO TO 9.
NG >> GO TO 12.

9. DETECT MALFUNCTIONING ITEM

Check the malfunction items. If any items are damaged, repair or replace damaged parts. Refer to AT-60, "Symptom Chart" (Symptom No.23).

OK or NG

OK >> GO TO 10.
NG >> Repair or replace damaged parts.

10. CHECK SYMPTOM

Check again. Refer to AT-56, "Cruise Test - Part 1" , AT-58, "Cruise Test - Part 2" .

OK or NG

OK >> **INSPECTION END**
NG >> GO TO 11.

11. CHECK TCM

1. Check TCM input/output signals. Refer to AT-83, "TCM Input/Output Signal Reference Values" .
2. If NG, recheck A/T assembly harness connector terminals for damage or loose connection with harness connector.

OK or NG

OK >> **INSPECTION END**
NG >> Repair or replace damaged parts.

12. DETECT MALFUNCTIONING ITEM

Check the malfunction items. If any items are damaged, repair or replace damaged parts. Refer to AT-60, "Symptom Chart" (Symptom No.23).

OK or NG

OK >> GO TO 10.
NG >> Repair or replace damaged parts.

A/T Does Not Shift: $D_1 \rightarrow D_2$

NCS000I6

SYMPTOM:

The vehicle does not shift-up from the D_1 to D_2 gear at the specified speed.

DIAGNOSTIC PROCEDURE

1. CHECK SYMPTOM

Check if vehicle creeps forward in “D” position and vehicle can be started from D_1.

OK or NG

OK >> GO TO 2.
NG >> Refer to AT-188, "Vehicle Does Not Creep Forward in “D” Position" , AT-190, "Vehicle Cannot Be Started From D_1" .

2. CHECK SELF-DIAGNOSTIC RESULTS

Perform self-diagnosis. Refer to AT-86, "SELF-DIAGNOSTIC RESULT MODE" , AT-95, "Diagnostic Procedure Without CONSULT-II" .

Is any malfunction detected by self-diagnostic results?

YES >> Check the malfunctioning system. Refer to AT-86, "SELF-DIAGNOSTIC RESULT MODE" , AT-97, "Judgment Self-diagnosis Code" .
NO >> GO TO 3.

3. CHECK A/T FLUID LEVEL

Check A/T fluid level. Refer to AT-12, "Checking A/T Fluid" .

OK or NG

OK >> GO TO 4.
NG >> Refill ATF.

4. CHECK LINE PRESSURE

Check line pressure at the engine stall point. Refer to AT-52, "LINE PRESSURE TEST" .

OK or NG

OK >> GO TO 7.
NG - 1 >> Line pressure high. GO TO 5.
NG - 2 >> Line pressure low. GO TO 6.

5. DETECT MALFUNCTIONING ITEM

1. Check control valve with TCM. Refer to AT-225, "Control Valve with TCM and A/T Fluid Temperature Sensor 2" .
2. Disassemble A/T. Refer to AT-263, "DISASSEMBLY" .
3. Check the following.

– Oil pump assembly. Refer to AT-279, "Oil Pump" .

OK or NG

OK >> GO TO 7.
NG >> Repair or replace damaged parts.

6. DETECT MALFUNCTIONING ITEM

1. Check control valve with TCM. Refer to AT-225, "Control Valve with TCM and A/T Fluid Temperature Sensor 2" .
2. Disassemble A/T. Refer to AT-263, "DISASSEMBLY" .
3. Check the following.

- Oil pump assembly. Refer to AT-279, "Oil Pump" .
- Power train system. Refer to AT-263, "DISASSEMBLY" .
- Transmission case. Refer to AT-263, "DISASSEMBLY" .

OK or NG

OK >> GO TO 7.
NG >> Repair or replace damaged parts.

7. CHECK A/T FLUID CONDITION

1. Remove oil pan. Refer to AT-225, "Control Valve with TCM and A/T Fluid Temperature Sensor 2" .
2. Check A/T fluid condition. Refer to AT-50, "A/T Fluid Condition Check" .

OK or NG

OK >> GO TO 8.
NG >> GO TO 11.

8. DETECT MALFUNCTIONING ITEM

Check the malfunction items. If any items are damaged, repair or replace damaged parts. Refer to AT-60, "Symptom Chart" (Symptom No.10).

OK or NG

OK >> GO TO 9.
NG >> Repair or replace damaged parts.

9. CHECK SYMPTOM

Check again. Refer to AT-56, "Cruise Test - Part 1" , AT-58, "Cruise Test - Part 2" .

OK or NG

OK >> **INSPECTION END**
NG >> GO TO 10.

10. CHECK TCM

1. Check TCM input/output signals. Refer to AT-83, "TCM Input/Output Signal Reference Values" .
2. If NG, recheck A/T assembly harness connector terminals for damage or loose connection with harness connector.

OK or NG

OK >> **INSPECTION END**
NG >> Repair or replace damaged parts.

11. DETECT MALFUNCTIONING ITEM

Check the malfunction items. If any items are damaged, repair or replace damaged parts. Refer to AT-60, "Symptom Chart" (Symptom No.10).

OK or NG

OK >> GO TO 9.
NG >> Repair or replace damaged parts.

A/T Does Not Shift: $D_2 \rightarrow D_3$

NCS000I7

SYMPTOM:

The vehicle does not shift-up from D_2 to D_3 gear at the specified speed.

DIAGNOSTIC PROCEDURE

1. CHECK SYMPTOM

Check if vehicle creeps forward in “D” position and vehicle can be started from D_1.

OK or NG

OK >> GO TO 2.
NG >> Refer to AT-188, "Vehicle Does Not Creep Forward in “D” Position" , AT-190, "Vehicle Cannot Be Started From D_1" .

2. CHECK SELF-DIAGNOSTIC RESULTS

Perform self-diagnosis. Refer to AT-86, "SELF-DIAGNOSTIC RESULT MODE" , AT-95, "Diagnostic Procedure Without CONSULT-II" .

Is any malfunction detected by self-diagnostic results?

YES >> Check the malfunctioning system. Refer to AT-86, "SELF-DIAGNOSTIC RESULT MODE" , AT-97, "Judgment Self-diagnosis Code" .
NO >> GO TO 3.

3. CHECK A/T FLUID LEVEL

Check A/T fluid level. Refer to AT-12, "Checking A/T Fluid" .

OK or NG

OK >> GO TO 4.
NG >> Refill ATF.

4. CHECK LINE PRESSURE

Check line pressure at the engine stall point. Refer to AT-52, "LINE PRESSURE TEST" .

OK or NG

OK >> GO TO 7.
NG - 1 >> Line pressure high. GO TO 5.
NG - 2 >> Line pressure low. GO TO 6.

5. DETECT MALFUNCTIONING ITEM

1. Check control valve with TCM. Refer to AT-225, "Control Valve with TCM and A/T Fluid Temperature Sensor 2" .
2. Disassemble A/T. Refer to AT-263, "DISASSEMBLY" .
3. Check the following.

– Oil pump assembly. Refer to AT-279, "Oil Pump" .

OK or NG

OK >> GO TO 7.
NG >> Repair or replace damaged parts.

6. DETECT MALFUNCTIONING ITEM

1. Check control valve with TCM. Refer to AT-225, "Control Valve with TCM and A/T Fluid Temperature Sensor 2" .
2. Disassemble A/T. Refer to AT-263, "DISASSEMBLY" .
3. Check the following.

- Oil pump assembly. Refer to AT-279, "Oil Pump" .
- Power train system. Refer to AT-263, "DISASSEMBLY" .
- Transmission case. Refer to AT-263, "DISASSEMBLY" .

OK or NG

OK >> GO TO 7.
NG >> Repair or replace damaged parts.

7. CHECK A/T FLUID CONDITION

1. Remove oil pan. Refer to AT-225, "Control Valve with TCM and A/T Fluid Temperature Sensor 2" .
2. Check A/T fluid condition. Refer to AT-50, "A/T Fluid Condition Check" .

OK or NG

OK >> GO TO 8.
NG >> GO TO 11.

8. DETECT MALFUNCTIONING ITEM

Check the malfunction items. If any items are damaged, repair or replace damaged parts. Refer to AT-60, "Symptom Chart" (Symptom No.11).

OK or NG

OK >> GO TO 9.
NG >> Repair or replace damaged parts.

9. CHECK SYMPTOM

Check again. Refer to AT-56, "Cruise Test - Part 1" , AT-58, "Cruise Test - Part 2" .

OK or NG

OK >> **INSPECTION END**
NG >> GO TO 10.

10. CHECK TCM

1. Check TCM input/output signals. Refer to AT-83, "TCM Input/Output Signal Reference Values" .
2. If NG, recheck A/T assembly harness connector terminals for damage or loose connection with harness connector.

OK or NG

OK >> **INSPECTION END**
NG >> Repair or replace damaged parts.

11. DETECT MALFUNCTIONING ITEM

Check the malfunction items. If any items are damaged, repair or replace damaged parts. Refer to AT-60, "Symptom Chart" (Symptom No.11).

OK or NG

OK >> GO TO 9.
NG >> Repair or replace damaged parts.

A/T Does Not Shift: $D_3 \rightarrow D_4$

NCS000I8

SYMPTOM:

The vehicle does not shift-up from the D_3 to D_4 gear at the specified speed.

DIAGNOSTIC PROCEDURE

1. CHECK SYMPTOM

Check if vehicle creeps forward in “D” position and vehicle can be started from D_1.

OK or NG

OK >> GO TO 2.
NG >> Refer to AT-188, "Vehicle Does Not Creep Forward in “D” Position" , AT-190, "Vehicle Cannot Be Started From D_1" .

2. CHECK SELF-DIAGNOSTIC RESULTS

Perform self-diagnosis. Refer to AT-86, "SELF-DIAGNOSTIC RESULT MODE" , AT-95, "Diagnostic Procedure Without CONSULT-II" .

Is any malfunction detected by self-diagnostic results?

YES >> Check the malfunctioning system. Refer to AT-86, "SELF-DIAGNOSTIC RESULT MODE" , AT-97, "Judgment Self-diagnosis Code" .
NO >> GO TO 3.

3. CHECK A/T FLUID LEVEL

Check A/T fluid level. Refer to AT-12, "Checking A/T Fluid" .

OK or NG

OK >> GO TO 4.
NG >> Refill ATF.

4. CHECK LINE PRESSURE

Check line pressure at the engine stall point. Refer to AT-52, "LINE PRESSURE TEST" .

OK or NG

OK >> GO TO 7.
NG - 1 >> Line pressure high. GO TO 5.
NG - 2 >> Line pressure low. GO TO 6.

5. DETECT MALFUNCTIONING ITEM

1. Check control valve with TCM. Refer to AT-225, "Control Valve with TCM and A/T Fluid Temperature Sensor 2" .
2. Disassemble A/T. Refer to AT-263, "DISASSEMBLY" .
3. Check the following.

– Oil pump assembly. Refer to AT-279, "Oil Pump" .

OK or NG

OK >> GO TO 7.
NG >> Repair or replace damaged parts.

6. DETECT MALFUNCTIONING ITEM

1. Check control valve with TCM. Refer to AT-225, "Control Valve with TCM and A/T Fluid Temperature Sensor 2" .
2. Disassemble A/T. Refer to AT-263, "DISASSEMBLY" .
3. Check the following.

- Oil pump assembly. Refer to AT-279, "Oil Pump" .
- Power train system. Refer to AT-263, "DISASSEMBLY" .
- Transmission case. Refer to AT-263, "DISASSEMBLY" .

OK or NG

OK >> GO TO 7.
NG >> Repair or replace damaged parts.

7. CHECK A/T FLUID CONDITION

1. Remove oil pan. Refer to AT-225, "Control Valve with TCM and A/T Fluid Temperature Sensor 2" .
2. Check A/T fluid condition. Refer to AT-50, "A/T Fluid Condition Check" .

OK or NG

OK >> GO TO 8.
NG >> GO TO 11.

8. DETECT MALFUNCTIONING ITEM

Check the malfunction items. If any items are damaged, repair or replace damaged parts. Refer to AT-60, "Symptom Chart" (Symptom No.12).

OK or NG

OK >> GO TO 9.
NG >> Repair or replace damaged parts.

9. CHECK SYMPTOM

Check again. Refer to AT-56, "Cruise Test - Part 1" , AT-58, "Cruise Test - Part 2" .

OK or NG

OK >> **INSPECTION END**
NG >> GO TO 10.

10. CHECK TCM

1. Check TCM input/output signals. Refer to AT-83, "TCM Input/Output Signal Reference Values" .
2. If NG, recheck A/T assembly harness connector terminals for damage or loose connection with harness connector.

OK or NG

OK >> **INSPECTION END**
NG >> Repair or replace damaged parts.

11. DETECT MALFUNCTIONING ITEM

Check the malfunction items. If any items are damaged, repair or replace damaged parts. Refer to AT-60, "Symptom Chart" (Symptom No.12).

OK or NG

OK >> GO TO 9.
NG >> Repair or replace damaged parts.

A/T Does Not Shift: $D_4 \rightarrow D_5$

NCS000I9

SYMPTOM:

- **The vehicle does not shift-up from the D_4 to D_5 gear at the specified speed.**
- **The vehicle does not shift-up from the D_4 to D_5 gear unless A/T is warmed up.**

DIAGNOSTIC PROCEDURE

1. CHECK SYMPTOM

Check if vehicle creeps forward in “D” position and vehicle can be started from D_1.

OK or NG

OK >> GO TO 2.
NG >> Refer to AT-188, "Vehicle Does Not Creep Forward in “D” Position" , AT-190, "Vehicle Cannot Be Started From D_1" .

2. CHECK SELF-DIAGNOSTIC RESULTS

Perform self-diagnosis. Refer to AT-86, "SELF-DIAGNOSTIC RESULT MODE" , AT-95, "Diagnostic Procedure Without CONSULT-II" .

Is any malfunction detected by self-diagnostic results?

YES >> Check the malfunctioning system. Refer to AT-86, "SELF-DIAGNOSTIC RESULT MODE" , AT-97, "Judgment Self-diagnosis Code" .
NO >> GO TO 3.

3. CHECK A/T FLUID LEVEL

Check A/T fluid level. Refer to AT-12, "Checking A/T Fluid" .

OK or NG

OK >> GO TO 4.
NG >> Refill ATF.

4. CHECK LINE PRESSURE

Check line pressure at the engine stall point. Refer to AT-52, "LINE PRESSURE TEST" .

OK or NG

OK >> GO TO 7.
NG - 1 >> Line pressure high. GO TO 5.
NG - 2 >> Line pressure low. GO TO 6.

5. DETECT MALFUNCTIONING ITEM

1. Check control valve with TCM. Refer to AT-225, "Control Valve with TCM and A/T Fluid Temperature Sensor 2" .
2. Disassemble A/T. Refer to AT-263, "DISASSEMBLY" .
3. Check the following.

– Oil pump assembly. Refer to AT-279, "Oil Pump" .

OK or NG

OK >> GO TO 7.
NG >> Repair or replace damaged parts.

6. DETECT MALFUNCTIONING ITEM

1. Check control valve with TCM. Refer to AT-225, "Control Valve with TCM and A/T Fluid Temperature Sensor 2" .
2. Disassemble A/T. Refer to AT-263, "DISASSEMBLY" .
3. Check the following.

- Oil pump assembly. Refer to AT-279, "Oil Pump" .
- Power train system. Refer to AT-263, "DISASSEMBLY" .
- Transmission case. Refer to AT-263, "DISASSEMBLY" .

OK or NG

OK >> GO TO 7.
NG >> Repair or replace damaged parts.

7. CHECK A/T FLUID CONDITION

1. Remove oil pan. Refer to AT-225, "Control Valve with TCM and A/T Fluid Temperature Sensor 2" .
2. Check A/T fluid condition. Refer to AT-50, "A/T Fluid Condition Check" .

OK or NG

OK >> GO TO 8.
NG >> GO TO 11.

8. DETECT MALFUNCTIONING ITEM

Check the malfunction items. If any items are damaged, repair or replace damaged parts. Refer to AT-60, "Symptom Chart" (Symptom No.13).

OK or NG

OK >> GO TO 9.
NG >> Repair or replace damaged parts.

9. CHECK SYMPTOM

Check again. Refer to AT-56, "Cruise Test - Part 1" .

OK or NG

OK >> **INSPECTION END**
NG >> GO TO 10.

10. CHECK TCM

1. Check TCM input/output signals. Refer to AT-83, "TCM Input/Output Signal Reference Values" .
2. If NG, recheck A/T assembly harness connector terminals for damage or loose connection with harness connector.

OK or NG

OK >> **INSPECTION END**
NG >> Repair or replace damaged parts.

11. DETECT MALFUNCTIONING ITEM

Check the malfunction items. If any items are damaged, repair or replace damaged parts. Refer to AT-60, "Symptom Chart" (Symptom No.13).

OK or NG

OK >> GO TO 9.
NG >> Repair or replace damaged parts.

A/T Does Not Perform Lock-up

NCS000IA

SYMPTOM:

A/T does not lock-up at the specified speed.

DIAGNOSTIC PROCEDURE

1. CHECK SELF-DIAGNOSTIC RESULTS

Perform self-diagnosis. Refer to AT-86, "SELF-DIAGNOSTIC RESULT MODE" , AT-95, "Diagnostic Procedure Without CONSULT-II" .

Is any malfunction detected by self-diagnostic results?

YES >> Check the malfunctioning system. Refer to AT-86, "SELF-DIAGNOSTIC RESULT MODE" , AT-97, "Judgment Self-diagnosis Code" .

NO >> GO TO 2.

2. CHECK A/T FLUID LEVEL

Check A/T fluid level. Refer to AT-12, "Checking A/T Fluid" .

OK or NG

OK >> GO TO 3.

NG >> Refill ATF.

3. CHECK LINE PRESSURE

Check line pressure at the engine stall point. Refer to AT-52, "LINE PRESSURE TEST" .

OK or NG

OK >> GO TO 6.

NG - 1 >> Line pressure high. GO TO 4.

NG - 2 >> Line pressure low. GO TO 5.

4. DETECT MALFUNCTIONING ITEM

1. Check control valve with TCM. Refer to AT-225, "Control Valve with TCM and A/T Fluid Temperature Sensor 2" .
2. Disassemble A/T. Refer to AT-263, "DISASSEMBLY" .
3. Check the following.

– Oil pump assembly. Refer to AT-279, "Oil Pump" .

OK or NG

OK >> GO TO 6.

NG >> Repair or replace damaged parts.

5. DETECT MALFUNCTIONING ITEM

1. Check control valve with TCM. Refer to AT-225, "Control Valve with TCM and A/T Fluid Temperature Sensor 2" .
2. Disassemble A/T. Refer to AT-263, "DISASSEMBLY" .
3. Check the following.

– Oil pump assembly. Refer to AT-279, "Oil Pump" .

– Power train system. Refer to AT-263, "DISASSEMBLY" .

– Transmission case. Refer to AT-263, "DISASSEMBLY" .

OK or NG

OK >> GO TO 6.

NG >> Repair or replace damaged parts.

6. CHECK A/T FLUID CONDITION

1. Remove oil pan. Refer to AT-225, "Control Valve with TCM and A/T Fluid Temperature Sensor 2" .
2. Check A/T fluid condition. Refer to AT-50, "A/T Fluid Condition Check" .

OK or NG

OK >> GO TO 7.
NG >> GO TO 10.

7. DETECT MALFUNCTIONING ITEM

Check the malfunction items. If any items are damaged, repair or replace damaged parts. Refer to AT-60, "Symptom Chart" (Symptom No.24).

OK or NG

OK >> GO TO 8.
NG >> Repair or replace damaged parts.

8. CHECK SYMPTOM

Check again. Refer to AT-56, "Cruise Test - Part 1" .

OK or NG

OK >> **INSPECTION END**
NG >> GO TO 9.

9. CHECK TCM

1. Perform TCM input/output signals. Refer to AT-83, "TCM Input/Output Signal Reference Values" .
2. If NG, recheck A/T assembly harness connector terminals for damage or loose connection with harness connector.

OK or NG

OK >> **INSPECTION END**
NG >> Repair or replace damaged parts.

10. DETECT MALFUNCTIONING ITEM

Check the malfunction items. If any items are damaged, repair or replace damaged parts. Refer to AT-60, "Symptom Chart" (Symptom No.24).

OK or NG

OK >> GO TO 8.
NG >> Repair or replace damaged parts.

A/T Does Not Hold Lock-up Condition

NCS000IB

SYMPTOM:

The lock-up condition cannot be maintained for more than 30 seconds.

DIAGNOSTIC PROCEDURE

1. CHECK SELF-DIAGNOSTIC RESULTS

Perform self-diagnosis. Refer to AT-86, "SELF-DIAGNOSTIC RESULT MODE" , AT-95, "Diagnostic Procedure Without CONSULT-II" .

Is any malfunction detected by self-diagnostic results?

YES >> Check the malfunctioning system. Refer to AT-86, "SELF-DIAGNOSTIC RESULT MODE" , AT-97, "Judgment Self-diagnosis Code" .
NO >> GO TO 2.

2. CHECK A/T FLUID LEVEL

Check A/T fluid level. Refer to AT-12, "Checking A/T Fluid" .

OK or NG

OK >> GO TO 3.
NG >> Refill ATF.

3. CHECK A/T FLUID CONDITION

1. Remove oil pan. Refer to AT-225, "Control Valve with TCM and A/T Fluid Temperature Sensor 2" .
2. Check A/T fluid condition. Refer to AT-50, "A/T Fluid Condition Check" .

OK or NG

OK >> GO TO 4.
NG >> GO TO 7.

4. DETECT MALFUNCTIONING ITEM

Check the malfunction items. If any items are damaged, repair or replace damaged parts. Refer to AT-60, "Symptom Chart" (Symptom No.25).

OK or NG

OK >> GO TO 5.
NG >> Repair or replace damaged parts.

5. CHECK SYMPTOM

Check again. Refer to AT-56, "Cruise Test - Part 1" .

OK or NG

OK >> **INSPECTION END**
NG >> GO TO 6.

6. CHECK TCM

1. Check TCM input/output signals. Refer to AT-83, "TCM Input/Output Signal Reference Values" .
2. If NG, recheck A/T assembly harness connector terminals for damage or loose connection with harness connector.

OK or NG

OK >> **INSPECTION END**
NG >> Repair or replace damaged parts.

7. DETECT MALFUNCTIONING ITEM

Check the malfunction items. If any items are damaged, repair or replace damaged parts. Refer to AT-60, "Symptom Chart" (Symptom No.25).

OK or NG

OK >> GO TO 5.
NG >> Repair or replace damaged parts.

Lock-up Is Not Released

NCS000IC

SYMPTOM:

The lock-up condition cannot be cancelled even after releasing the accelerator pedal.

DIAGNOSTIC PROCEDURE

1. CHECK SELF-DIAGNOSTIC RESULTS

Perform self-diagnosis. Refer to AT-86, "SELF-DIAGNOSTIC RESULT MODE" , AT-95, "Diagnostic Procedure Without CONSULT-II" .

Is any malfunction detected by self-diagnostic results?

YES >> Check the malfunctioning system. Refer to AT-86, "SELF-DIAGNOSTIC RESULT MODE" , AT-97, "Judgment Self-diagnosis Code" .

NO >> GO TO 2.

2. CHECK SYMPTOM

Check again. Refer to AT-56, "Cruise Test - Part 1" .

OK or NG

OK >> **INSPECTION END**

NG >> GO TO 3.

3. CHECK TCM

1. Check TCM input/output signals. Refer to AT-83, "TCM Input/Output Signal Reference Values" .
2. If NG, recheck A/T assembly harness connector terminals for damage or loose connection with harness connector.

OK or NG

OK >> **INSPECTION END**

NG >> Repair or replace damaged parts.

Engine Speed Does Not Return to Idle

NCS000ID

SYMPTOM:

When a shift-down is performed, the engine speed does not smoothly return to the idling speed.

DIAGNOSTIC PROCEDURE

1. CHECK A/T FLUID LEVEL

Check A/T fluid level. Refer to AT-12, "Checking A/T Fluid" .

OK or NG

OK >> GO TO 2.

NG >> Refill ATF.

2. CHECK SELF-DIAGNOSTIC RESULTS

Perform self-diagnosis. Refer to AT-86, "SELF-DIAGNOSTIC RESULT MODE" , AT-95, "Diagnostic Procedure Without CONSULT-II" .

Is any malfunction detected by self-diagnostic results?

YES >> Check the malfunctioning system. Refer to AT-86, "SELF-DIAGNOSTIC RESULT MODE" , AT-97, "Judgment Self-diagnosis Code" .

NO >> GO TO 3.

3. CHECK A/T FLUID CONDITION

1. Remove oil pan. Refer to AT-225, "Control Valve with TCM and A/T Fluid Temperature Sensor 2" .
2. Check A/T fluid condition. Refer to AT-50, "A/T Fluid Condition Check" .

OK or NG

OK >> GO TO 4.
NG >> GO TO 7.

4. DETECT MALFUNCTIONING ITEM

Check the malfunction items. If any items are damaged, repair or replace damaged parts. Refer to AT-60, "Symptom Chart" (Symptom No.72).

OK or NG

OK >> GO TO 5.
NG >> Repair or replace damaged parts.

5. CHECK SYMPTOM

Check again. Refer to AT-56, "Cruise Test - Part 1" .

OK or NG

OK >> **INSPECTION END**
NG >> GO TO 6.

6. CHECK TCM

1. Check TCM input/output signals. Refer to AT-83, "TCM Input/Output Signal Reference Values" .
2. If NG, recheck A/T assembly harness connector terminals for damage or loose connection with harness connector.

OK or NG

OK >> **INSPECTION END**
NG >> Repair or replace damaged parts.

7. DETECT MALFUNCTIONING ITEM

Check the malfunction items. If any items are damaged, repair or replace damaged parts. Refer to AT-60, "Symptom Chart" (Symptom No.72).

OK or NG

OK >> GO TO 5.
NG >> Repair or replace damaged parts.

Cannot Be Changed to Manual Mode

NCS000IE

SYMPTOM:

Does not change to manual mode when manual shift gate is used.

DIAGNOSTIC PROCEDURE

1. CHECK MANUAL MODE SWITCH

Check the manual mode switch. Refer to AT-160, "DTC P1815 MANUAL MODE SWITCH" .

OK or NG

OK >> GO TO 2.
NG >> Repair or replace damaged parts.

2. CHECK SELF-DIAGNOSTIC RESULTS

Perform self-diagnosis. Refer to AT-86, "SELF-DIAGNOSTIC RESULT MODE" , AT-95, "Diagnostic Procedure Without CONSULT-II" .

Is any malfunction detected by self-diagnostic results?

YES >> Check the malfunctioning system. Refer to AT-86, "SELF-DIAGNOSTIC RESULT MODE" , AT-97, "Judgment Self-diagnosis Code" .
NO >> **INSPECTION END**

A/T Does Not Shift: 5th Gear → 4th Gear

NCS000IF

SYMPTOM:

When shifted from M5 to M4 position in manual mode, does not downshift from 5th to 4th gear.

DIAGNOSTIC PROCEDURE

1. CHECK SELF-DIAGNOSTIC RESULTS

Perform self-diagnosis. Refer to AT-86, "SELF-DIAGNOSTIC RESULT MODE" , AT-95, "Diagnostic Procedure Without CONSULT-II" .

Is any malfunction detected by self-diagnostic results?

YES >> Check the malfunctioning system. Refer to AT-86, "SELF-DIAGNOSTIC RESULT MODE" , AT-97, "Judgment Self-diagnosis Code" .
NO >> GO TO 2.

2. CHECK A/T FLUID LEVEL

Check A/T fluid level. Refer to AT-12, "Checking A/T Fluid" .

OK or NG

OK >> GO TO 3.
NG >> Refill ATF.

3. CHECK A/T POSITION

Check A/T position. Refer to AT-216, "Checking of A/T Position" .

OK or NG

OK >> GO TO 4.
NG >> Adjust A/T position. Refer to AT-215, "Adjustment of A/T Position" .

4. CHECK MANUAL MODE SWITCH

Check the manual mode switch. Refer to AT-160, "DTC P1815 MANUAL MODE SWITCH" .

OK or NG

OK >> GO TO 5.
NG >> Repair or replace damaged parts.

5. CHECK A/T FLUID CONDITION

1. Remove oil pan. Refer to AT-225, "Control Valve with TCM and A/T Fluid Temperature Sensor 2" .
2. Check A/T fluid condition. Refer to AT-50, "A/T Fluid Condition Check" .

OK or NG

OK >> GO TO 6.
NG >> GO TO 9.

6. DETECT MALFUNCTIONING ITEM

Check the malfunction items. If any items are damaged, repair or replace damaged parts. Refer to AT-60, "Symptom Chart" (Symptom No.47).

OK or NG

OK >> GO TO 7.
NG >> Repair or replace damaged parts.

7. CHECK SYMPTOM

Check again. Refer to AT-59, "Cruise Test - Part 3" .

OK or NG

OK >> **INSPECTION END**
NG >> GO TO 8.

8. CHECK TCM

1. Check TCM input/output signals. Refer to AT-83, "TCM Input/Output Signal Reference Values" .
2. If NG, recheck A/T assembly harness connector terminals for damage or loose connection with harness connector.

OK or NG

OK >> **INSPECTION END**
NG >> Repair or replace damaged parts.

9. DETECT MALFUNCTIONING ITEM

Check the malfunction items. If any items are damaged, repair or replace damaged parts. Refer to AT-60, "Symptom Chart" (Symptom No.47).

OK or NG

OK >> GO TO 7.
NG >> Repair or replace damaged parts.

A/T Does Not Shift: 4th Gear → 3rd Gear

NCS000IG

SYMPTOM:

When shifted from M4 to M3 position in manual mode, does not downshift from 4th to 3rd gear.

DIAGNOSTIC PROCEDURE

1. CHECK SELF-DIAGNOSTIC RESULTS

Perform self-diagnosis. Refer to AT-86, "SELF-DIAGNOSTIC RESULT MODE" , AT-95, "Diagnostic Procedure Without CONSULT-II" .

Is any malfunction detected by self-diagnostic results?

YES >> Check the malfunctioning system. Refer to AT-86, "SELF-DIAGNOSTIC RESULT MODE" , AT-97, "Judgment Self-diagnosis Code" .
NO >> GO TO 2.

2. CHECK A/T FLUID LEVEL

Check A/T fluid level. Refer to AT-12, "Checking A/T Fluid" .

OK or NG

OK >> GO TO 3.
NG >> Refill ATF.

3. CHECK A/T POSITION

Check A/T position. Refer to AT-216, "Checking of A/T Position" .

OK or NG

OK >> GO TO 4.
NG >> Adjust A/T position. Refer to AT-215, "Adjustment of A/T Position" .

4. CHECK MANUAL MODE SWITCH

Check the manual mode switch. Refer to AT-160, "DTC P1815 MANUAL MODE SWITCH" .

OK or NG

OK >> GO TO 5.
NG >> Repair or replace damaged parts.

5. CHECK A/T FLUID CONDITION

1. Remove oil pan. Refer to AT-225, "Control Valve with TCM and A/T Fluid Temperature Sensor 2" .
2. Check A/T fluid condition. Refer to AT-50, "A/T Fluid Condition Check" .

OK or NG

OK >> GO TO 6.
NG >> GO TO 9.

6. DETECT MALFUNCTIONING ITEM

Check the malfunction items. If any items are damaged, repair or replace damaged parts. Refer to AT-60, "Symptom Chart" (Symptom No.48).

OK or NG

OK >> GO TO 7.
NG >> Repair or replace damaged parts.

7. CHECK SYMPTOM

Check again. Refer to AT-59, "Cruise Test - Part 3" .

OK or NG

OK >> **INSPECTION END**
NG >> GO TO 8.

8. CHECK TCM

1. Check TCM input/output signals. Refer to AT-83, "TCM Input/Output Signal Reference Values" .
2. If NG, recheck A/T assembly harness connector terminals for damage or loose connection with harness connector.

OK or NG

OK >> **INSPECTION END**
NG >> Repair or replace damaged parts.

9. DETECT MALFUNCTIONING ITEM

Check the malfunction items. If any items are damaged, repair or replace damaged parts. Refer to AT-60, "Symptom Chart" (Symptom No.48).

OK or NG

OK >> GO TO 7.
NG >> Repair or replace damaged parts.

A/T Does Not Shift: 3rd Gear → 2nd Gear

NCS000IH

SYMPTOM:

When shifted from M3 to M2 position in manual mode, does not downshift from 3rd to 2nd gear.

DIAGNOSTIC PROCEDURE

1. CHECK SELF-DIAGNOSTIC RESULTS

Perform self-diagnosis. Refer to AT-86, "SELF-DIAGNOSTIC RESULT MODE" , AT-95, "Diagnostic Procedure Without CONSULT-II" .

Is any malfunction detected by self-diagnostic results?

YES >> Check the malfunctioning system. Refer to AT-86, "SELF-DIAGNOSTIC RESULT MODE" , AT-97, "Judgment Self-diagnosis Code" .
NO >> GO TO 2.

2. CHECK A/T FLUID LEVEL

Check A/T fluid level. Refer to AT-12, "Checking A/T Fluid" .

OK or NG

OK >> GO TO 3.
NG >> Refill ATF.

3. CHECK A/T POSITION

Check A/T position. Refer to AT-216, "Checking of A/T Position" .

OK or NG

OK >> GO TO 4.
NG >> Adjust A/T position. Refer to AT-215, "Adjustment of A/T Position" .

4. CHECK MANUAL MODE SWITCH

Check the manual mode switch. Refer to AT-160, "DTC P1815 MANUAL MODE SWITCH" .

OK or NG

OK >> GO TO 5.
NG >> Repair or replace damaged parts.

5. CHECK A/T FLUID CONDITION

1. Remove oil pan. Refer to AT-225, "Control Valve with TCM and A/T Fluid Temperature Sensor 2" .
2. Check A/T fluid condition. Refer to AT-50, "A/T Fluid Condition Check" .

OK or NG

OK >> GO TO 6.
NG >> GO TO 9.

6. DETECT MALFUNCTIONING ITEM

Check the malfunction items. If any items are damaged, repair or replace damaged parts. Refer to AT-60, "Symptom Chart" (Symptom No.49).

OK or NG

OK >> GO TO 7.
NG >> Repair or replace damaged parts.

7. CHECK SYMPTOM

Check again. Refer to AT-59, "Cruise Test - Part 3" .

OK or NG

OK >> **INSPECTION END**
NG >> GO TO 8.

8. CHECK TCM

1. Check TCM input/output signals. Refer to AT-83, "TCM Input/Output Signal Reference Values" .
2. If NG, recheck A/T assembly harness connector terminals for damage or loose connection with harness connector.

OK or NG

OK >> **INSPECTION END**
NG >> Repair or replace damaged parts.

9. DETECT MALFUNCTIONING ITEM

Check the malfunction items. If any items are damaged, repair or replace damaged parts. Refer to AT-60, "Symptom Chart" (Symptom No.49).

OK or NG

OK >> GO TO 7.
NG >> Repair or replace damaged parts.

A/T Does Not Shift: 2nd Gear → 1st Gear

NCS000II

SYMPTOM:

When shifted from M2 to M1 position in manual mode, does not downshift from 2nd to 1st gear.

DIAGNOSTIC PROCEDURE

1. CHECK SELF-DIAGNOSTIC RESULTS

Perform self-diagnosis. Refer to AT-86, "SELF-DIAGNOSTIC RESULT MODE" , AT-95, "Diagnostic Procedure Without CONSULT-II" .

Is any malfunction detected by self-diagnostic results?

YES >> Check the malfunctioning system. Refer to AT-86, "SELF-DIAGNOSTIC RESULT MODE" , AT-97, "Judgment Self-diagnosis Code" .
NO >> GO TO 2.

2. CHECK A/T FLUID LEVEL

Check A/T fluid level. Refer to AT-12, "Checking A/T Fluid" .

OK or NG

OK >> GO TO 3.
NG >> Refill ATF.

3. CHECK A/T POSITION

Check A/T position. Refer to AT-216, "Checking of A/T Position" .

OK or NG

OK >> GO TO 4.
NG >> Adjust A/T position. Refer to AT-215, "Adjustment of A/T Position" .

4. CHECK MANUAL MODE SWITCH

Check the manual mode switch. Refer to AT-160, "DTC P1815 MANUAL MODE SWITCH" .

OK or NG

OK >> GO TO 5.
NG >> Repair or replace damaged parts.

5. CHECK A/T FLUID CONDITION

1. Remove oil pan. Refer to AT-225, "Control Valve with TCM and A/T Fluid Temperature Sensor 2" .
2. Check A/T fluid condition. Refer to AT-50, "A/T Fluid Condition Check" .

OK or NG

OK >> GO TO 6.
NG >> GO TO 9.

6. DETECT MALFUNCTIONING ITEM

Check the malfunction items. If any items are damaged, repair or replace damaged parts. Refer to AT-60, "Symptom Chart" (Symptom No.50).

OK or NG

OK >> GO TO 7.
NG >> Repair or replace damaged parts.

7. CHECK SYMPTOM

Check again. Refer to AT-59, "Cruise Test - Part 3" .

OK or NG

OK >> **INSPECTION END**
NG >> GO TO 8.

8. CHECK TCM

1. Check TCM input/output signals. Refer to AT-83, "TCM Input/Output Signal Reference Values" .
2. If NG, recheck A/T assembly harness connector terminals for damage or loose connection with harness connector.

OK or NG

OK >> **INSPECTION END**
NG >> Repair or replace damaged parts.

9. DETECT MALFUNCTIONING ITEM

Check the malfunction items. If any items are damaged, repair or replace damaged parts. Refer to AT-60, "Symptom Chart" (Symptom No.50).

OK or NG

OK >> GO TO 7.
NG >> Repair or replace damaged parts.

Vehicle Does Not Decelerate by Engine Brake

NCS000IJ

SYMPTOM:

No engine brake is applied when the gear is shifted from the 2nd to 1st gear.

DIAGNOSTIC PROCEDURE

1. CHECK SELF-DIAGNOSTIC RESULTS

Perform self-diagnosis. Refer to AT-86, "SELF-DIAGNOSTIC RESULT MODE" , AT-95, "Diagnostic Procedure Without CONSULT-II" .

Is any malfunction detected by self-diagnostic results?

YES >> Check the malfunctioning system. Refer to AT-86, "SELF-DIAGNOSTIC RESULT MODE" , AT-97, "Judgment Self-diagnosis Code" .

NO >> GO TO 2.

2. CHECK A/T FLUID LEVEL

Check A/T fluid level. Refer to AT-12, "Checking A/T Fluid" .

OK or NG

OK >> GO TO 3.

NG >> Refill ATF.

3. CHECK A/T POSITION

Check A/T position. Refer to AT-216, "Checking of A/T Position" .

OK or NG

OK >> GO TO 4.

NG >> Adjust A/T position. Refer to AT-215, "Adjustment of A/T Position" .

4. CHECK MANUAL MODE SWITCH

Check the manual mode switch. Refer to AT-160, "DTC P1815 MANUAL MODE SWITCH" .

OK or NG

OK >> GO TO 5.

NG >> Repair or replace damaged parts.

5. CHECK A/T FLUID CONDITION

1. Remove oil pan. Refer to AT-225, "Control Valve with TCM and A/T Fluid Temperature Sensor 2" .
2. Check A/T fluid condition. Refer to AT-50, "A/T Fluid Condition Check" .

OK or NG

OK >> GO TO 6.

NG >> GO TO 9.

6. DETECT MALFUNCTIONING ITEM

Check the malfunction items. If any items are damaged, repair or replace damaged parts. Refer to AT-60, "Symptom Chart" (Symptom No.58).

OK or NG

OK >> GO TO 7.

NG >> Repair or replace damaged parts.

7. CHECK SYMPTOM

Check again. Refer to AT-59, "Cruise Test - Part 3" .

OK or NG

OK >> **INSPECTION END**

NG >> GO TO 8.

8. CHECK TCM

1. Check TCM input/output signals. Refer to AT-83, "TCM Input/Output Signal Reference Values" .
2. If NG, recheck A/T assembly harness connector terminals for damage or loose connection with harness connector.

OK or NG

OK >> **INSPECTION END**
NG >> Repair or replace damaged parts.

9. DETECT MALFUNCTIONING ITEM

Check the malfunction items. If any items are damaged, repair or replace damaged parts. Refer to AT-60, "Symptom Chart" (Symptom No.58).

OK or NG

OK >> GO TO 7.
NG >> Repair or replace damaged parts.

SHIFT CONTROL SYSTEM

PFP:34901

Control Device Removal and Installation

NCS000IK

CONTROL DEVICE COMPONENTS

SEC.349

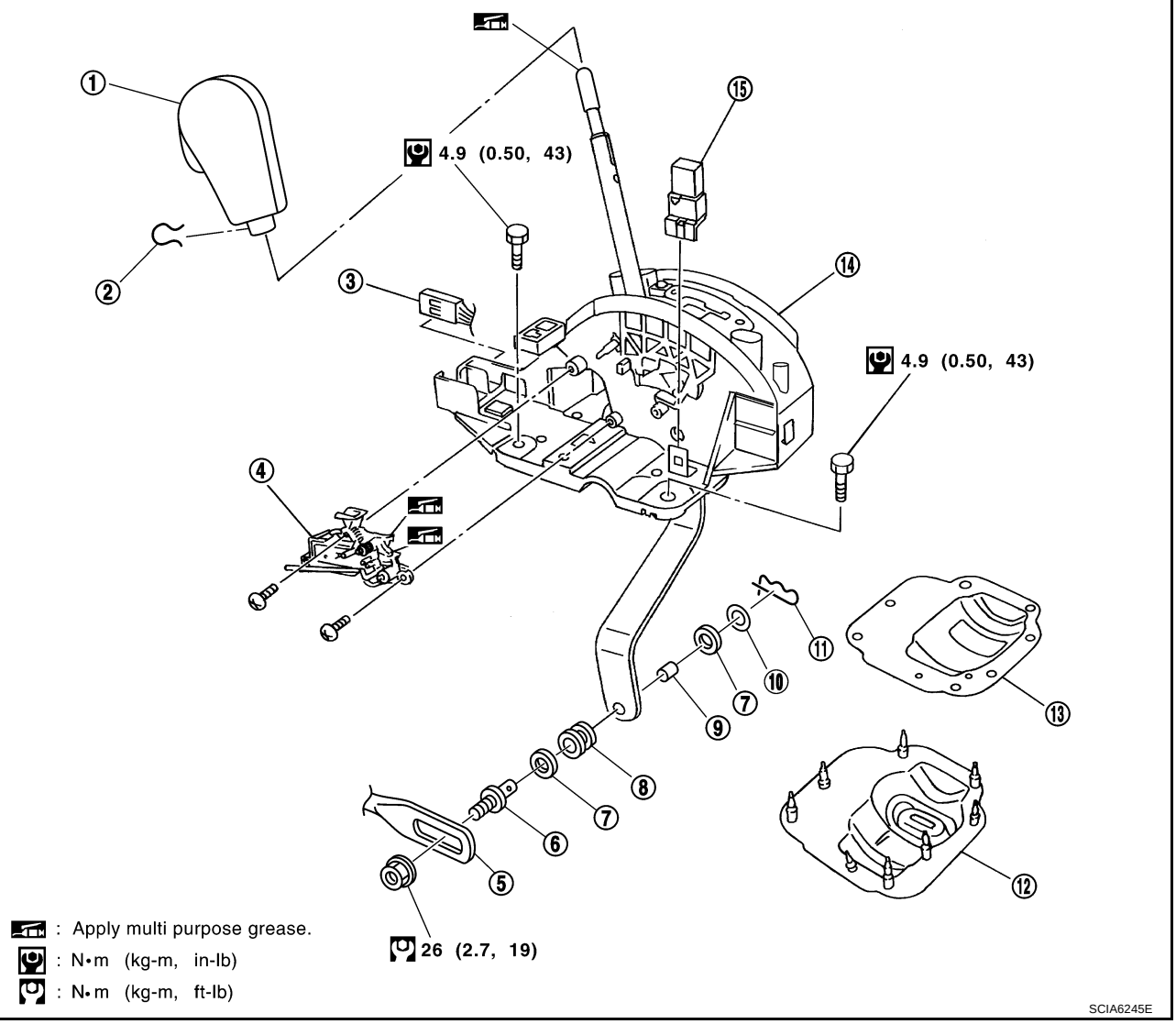

1.	Selector lever knob	2.	Lock pin	3.	A/T device harness connector
4.	Shift lock solenoid and park position switch assembly	5.	Control rod	6.	Pivot pin
7.	Plain washer	8.	Bushing	9.	Collar
10.	Conical washer	11.	Snap pin	12.	Dust cover
13.	Dust cover plate	14.	Control device assembly	15.	Shift lock relay

REMOVAL

1. Disconnect lower lever of control device and control rod.
2. Remove knob cover below selector lever downward.
3. Pull lock pin out of selector lever knob.
4. Remove selector lever knob.
5. Remove console finisher. Refer to IP-11, "Removal and Installation" .
6. Remove center console. Refer to IP-11, "Removal and Installation" .

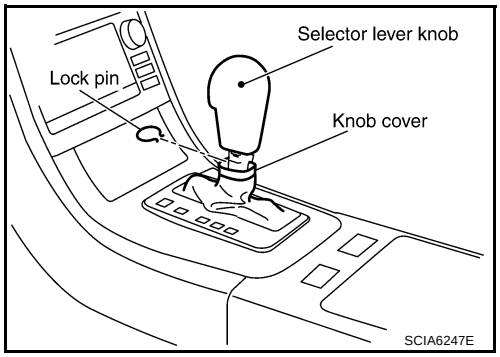

7. Remove key interlock cable from control device. Refer to AT-223, "Removal and Installation" .
8. Disconnect A/T device harness connector.

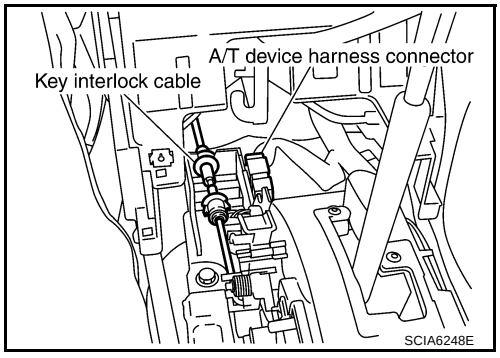

9. Remove control device assembly.

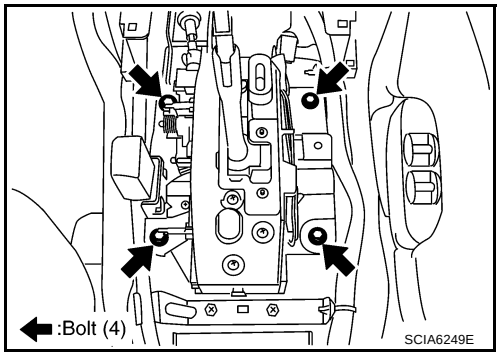

INSTALLATION

Note the following, and install in the reverse order of removal.

- After installation is completed, adjust and check A/T position. Refer to AT-215, "Adjustment of A/T Position" and AT-216, "Checking of A/T Position" .

Control Rod Removal and Installation

NCS000IL

CONTROL ROD COMPONENTS

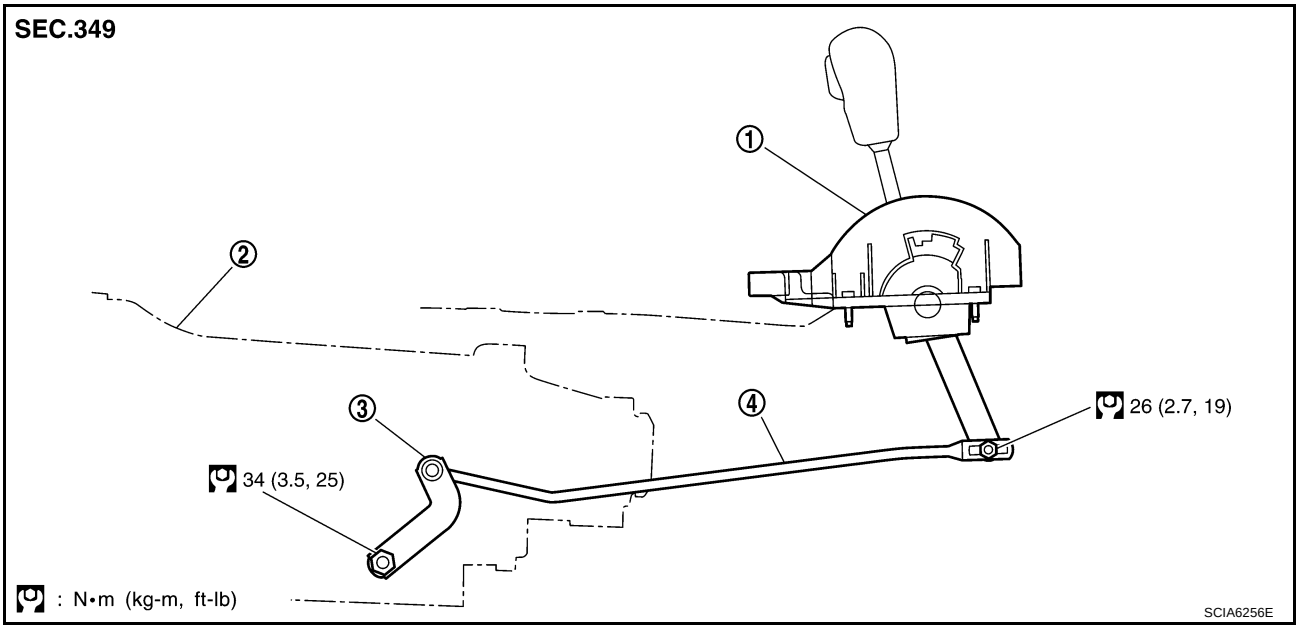

1. Control device assembly
2. A/T assembly
3. Manual lever
4. Control rod

REMOVAL

1. Disconnect lower lever of control device and control rod.
2. Remove manual lever from A/T.
3. Remove control rod from vehicle.

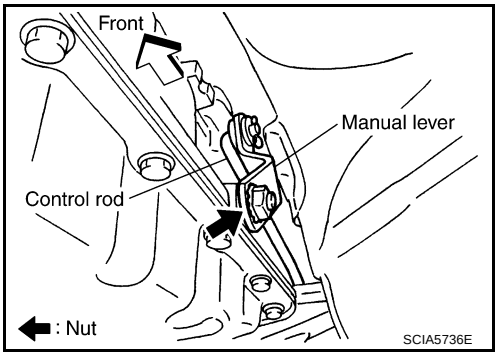

INSTALLATION

Note the following, and install in the reverse order of removal.

- After installation is completed, adjust and check A/T position. Refer to AT-215, "Adjustment of A/T Position" and AT-216, "Checking of A/T Position" .

Adjustment of A/T Position

NCS000IM

1. Loosen nut of pivot pin.
2. Place PNP switch and selector lever in “P” position.
3. While pressing lower lever toward rear of vehicle (in “P” position direction), tighten nut to specified torque. Refer to AT-215, "CONTROL ROD COMPONENTS" .

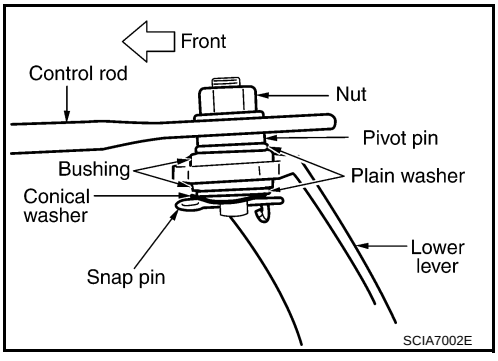

Checking of A/T Position

NCS000IN

1. Place selector lever in “P” position, and turn ignition switch ON (engine stop).
2. Check that selector lever can be shifted to other than “P” position when brake pedal is depressed. Also check that selector lever can be shifted from “P” position only when brake pedal is depressed.
3. Move the selector lever and check for excessive effort, sticking, noise or rattle.
4. Confirm the selector lever stops at each position with the feel of engagement when it is moved through all the positions. Check whether or not the actual position the selector lever is in matches the position shown by the shift position indicator and the A/T body.
5. The method of operating the lever to individual positions correctly should be as shown in the figure.
6. When select button is pressed in “P”, “R”, or “N” position without applying forward/backward force to selector lever, check button operation for sticking.
7. Confirm the back-up lamps illuminate only when lever is placed in the “R” position. Confirm the back-up lamps does not illuminate when selector lever is in the “P” or “N” position with the lever pushed against the “R” position.
8. Confirm the engine can only be started with the selector lever in the “P” and “N” positions. And confirm that the engine can be started when the selector lever is being moved back and front in the “P” position.

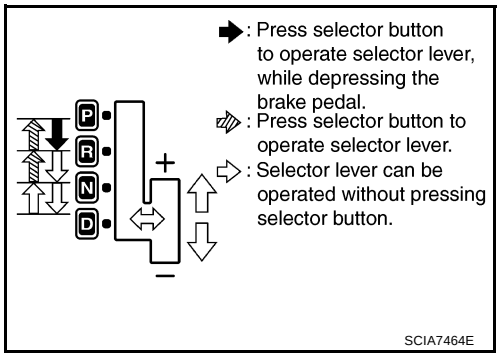

9. Check that A/T is locked completely in “P” position.
10. When selector lever is set to manual shift gate, check that manual mode is displayed on combination meter.
    Shift selector lever to “+” and “-” sides, and check that set shift position changes. (Only while a vehicle is operating)

A/T SHIFT LOCK SYSTEM

PFP:34950

Description

NCS000IO

- The mechanical key interlock mechanism also operates as a shift lock:
  With the ignition switch turned to ON, the selector lever cannot be shifted from “P” position to any other position unless the brake pedal is depressed.
  With the key removed, the selector lever cannot be shifted from “P” position to any other position.
  The key cannot be removed unless the selector lever is placed in “P” position.
- The shift lock and key interlock mechanisms are controlled by the ON-OFF operation of the shift lock solenoid and by the operation of the rotator and slider located inside the key cylinder.

Shift Lock System Electrical Parts Location

NCS000IP

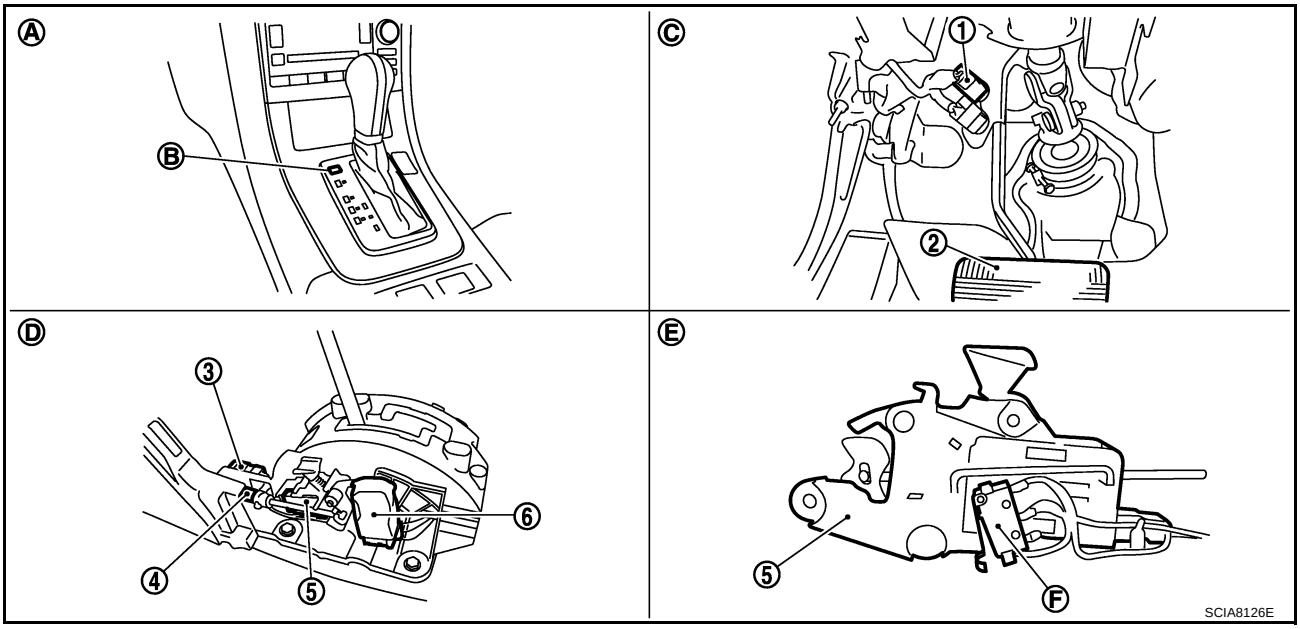

1.	Stop lamp switch	2.	Brake pedal	3.	A/T device harness connector
4.	Key inter lock cable	5.	Shift lock solenoid	6.	Shift lock relay
A.	A/T console finisher	B.	Shift lock release button	C.	Blake pedal, upper
D.	Control device assembly	E.	Shift lock solenoid, revers side	F.	Park position switch

Wiring Diagram — AT — SHIFT

NCS000IQ

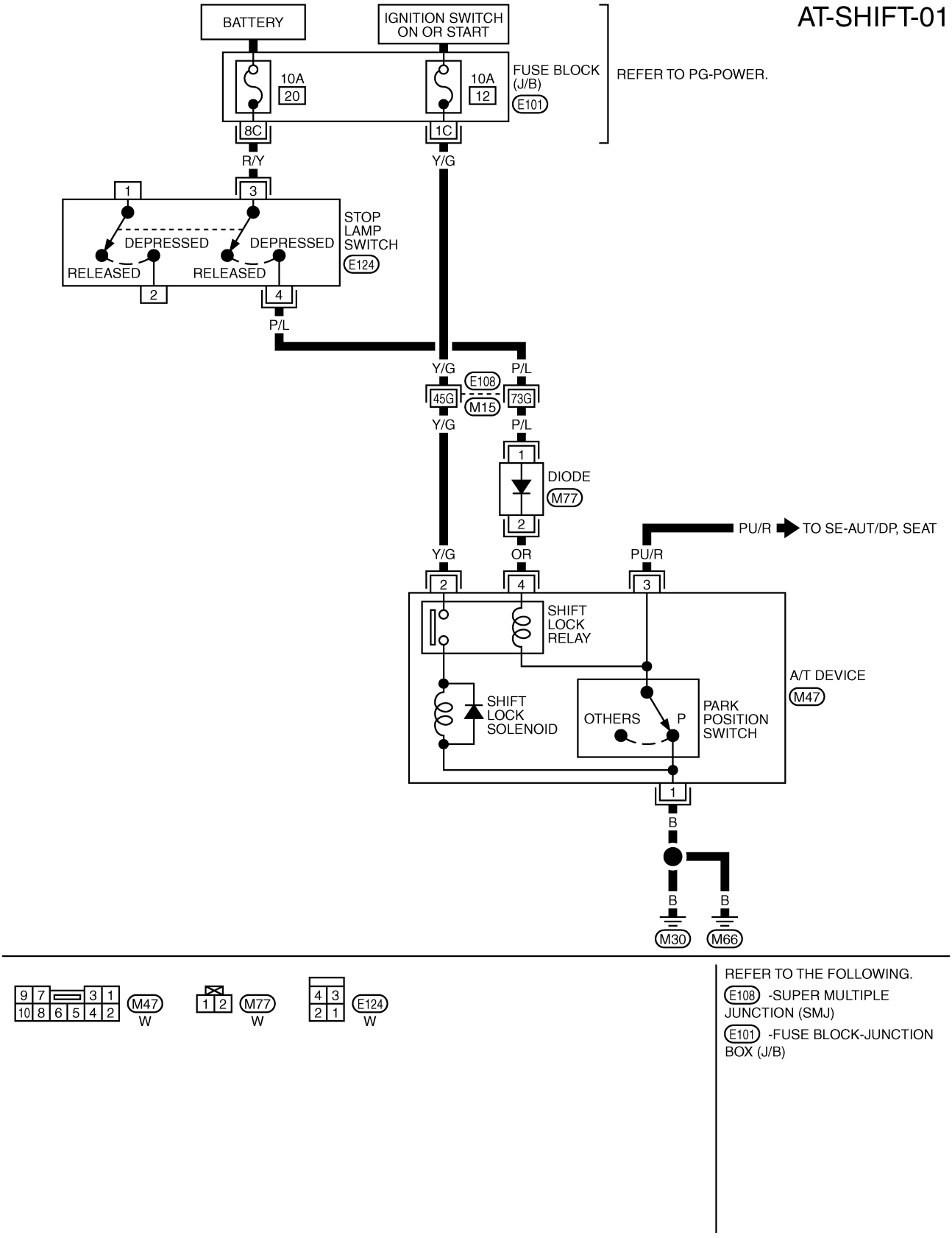

A/T Device Inspection Table

NCS000IR

Data are reference value and are measured between each terminal and ground.

Terminal	Wire color	Item	Condition	Judgment standard
1	B	Ground	Always	Approx. 0 V
2	Y/G	Shift lock relay (switch side) and shift lock solenoid	Ignition switch: ON	Battery voltage
			Ignition switch: OFF	Approx. 0 V
4	OR	Shift lock relay (coil side) and park position switch	When brake pedal is depressed	Battery voltage
			When brake pedal is released	Approx. 0 V

Diagnostic Procedure

NCS000IS

SYMPTOM 1:

- **Selector lever cannot be moved from “P” position with key in ON position and brake pedal applied.**
- **Selector lever can be moved from “P” position with key in ON position and brake pedal released.**
- **Selector lever can be moved from “P” position when key is removed from key cylinder.**

SYMPTOM 2:

- **Ignition key cannot be removed when selector lever is set to “P” position.**
- **Ignition key can be removed when selector lever is set to any position except “P” position.**

1. CHECK KEY INTERLOCK CABLE

Check key interlock cable for damage.

OK or NG

OK >> GO TO 2.
NG >> Repair key interlock cable. Refer to AT-222, "KEY INTERLOCK CABLE" .

2. CHECK SELECTOR LEVER POSITION

Check selector lever position for damage. Refer to AT-216, "Checking of A/T Position" .

OK or NG

OK >> GO TO 3.
NG >> Check selector lever. Refer to AT-215, "Adjustment of A/T Position" .

3. CHECK POWER SOURCE

1. Turn ignition switch ON.
2. Check voltage between A/T device harness connector M47 terminal 2 and ground.

Voltage: Battery voltage

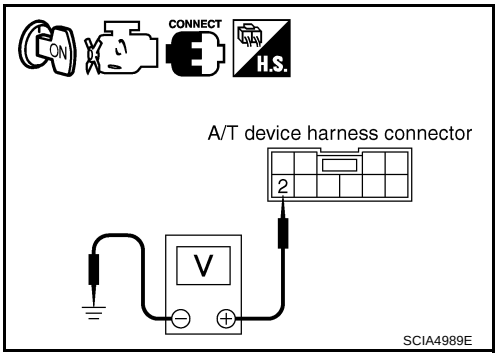

OK or NG

OK >> GO TO 5.
NG >> GO TO 4.

4. DETECT MALFUNCTIONING ITEM

Check the following.

1. Harness for short or open between ignition switch and A/T device harness connector M47 terminal 2.
2. 10 A fuse. [No.12, located in the fuse block (J/B)]
3. Ignition switch. Refer to PG-3, "POWER SUPPLY ROUTING CIRCUIT" .

OK or NG

OK >> GO TO 5.
NG >> Repair or replace damaged parts.

5. CHECK INPUT SIGNAL A/T DEVICE

1. Turn ignition switch OFF.
2. Disconnect A/T device harness connector.

- Check voltage between A/T device harness connector M47 terminal 4 and ground.

Voltage:

Depressed brake pedal

: Battery voltage

Released brake pedal

: Approx. 0 V

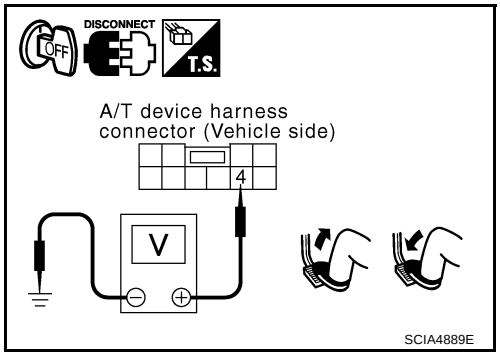

OK or NG

OK >> GO TO 7.
NG >> GO TO 6.

6. DETECT MALFUNCTIONING ITEM

Check the following.

1. Harness for short or open between battery and stop lamp switch harness connector terminal 3.
2. Harness for short or open between stop lamp switch harness connector E124 terminal 4 and A/T device harness connector M47 terminal 4.
3. 10 A fuse. [No.20, located in the fuse block (J/B)]
4. Stop lamp switch.

– Check continuity between stop lamp switch harness connector E124 terminals 3 and 4.

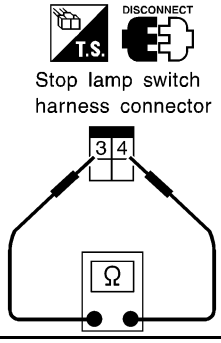

Condition	Continuity
When brake pedal is depressed	Yes
When brake pedal is released	No

SCIA3953E

Check stop lamp switch after adjusting brake pedal — refer to BR-6, "BRAKE PEDAL" .

OK or NG

OK >> GO TO 7.
NG >> Repair or replace damaged parts.

7. CHECK GROUND CIRCUIT

1. Turn ignition switch OFF.
2. Disconnect A/T device harness connector.
3. Check continuity between A/T device harness connector M47 terminal 1 and ground.

   Continuity should exist.

   If OK, check harness for short to ground and short to power.

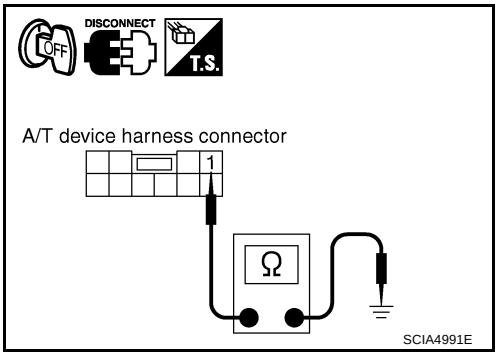

OK or NG

OK >> GO TO 8.
NG >> Repair open circuit or short to ground or short to power in harness or connectors.

8. CHECK PARK POSITION SWITCH AND SHIFT LOCK RELAY CIRCUIT (COIL SIDE)

Check continuity between A/T device harness connector M47 terminals 1 and 4.

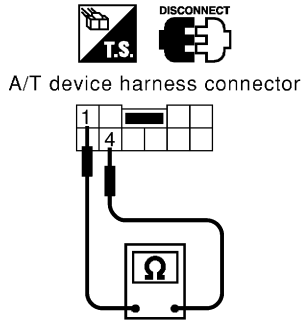

Condition	Continuity
When selector lever is set in “P” position and selector lever button is released	Yes
Except above	No

SCIA1218E

OK or NG

OK >> GO TO 9.
NG >> ● Replace park position switch or shift lock relay.
● Repair open circuit or short to ground or short to power in harness or connectors.

9. CHECK SHIFT LOCK SOLENOID AND SHIFT LOCK RELAY CIRCUIT (SWITCH SIDE)

1. Connect A/T device harness connector.
2. Turn ignition switch ON.
3. Check shift lock solenoid and shift lock relay operation.

Condition	Brake pedal	Operation
When ignition switch is turned to ON position and selector lever is set in “P” position.	Depressed	Yes
	Released	No

OK or NG

OK >> GO TO 10.
NG >> ● Replace shift lock solenoid or shift lock relay.
● Repair open circuit or short to ground or short to power in harness or connectors.

10. CHECK A/T DEVICE INSPECTION

1. Perform A/T device input/output signal inspection test. Refer to AT-219, "A/T Device Inspection Table" .
2. If NG, recheck harness connector connection.

OK or NG

OK >> **INSPECTION END**
NG >> Repair or replace damaged parts.

KEY INTERLOCK CABLE

PFP:34908

Components

NCS000IT

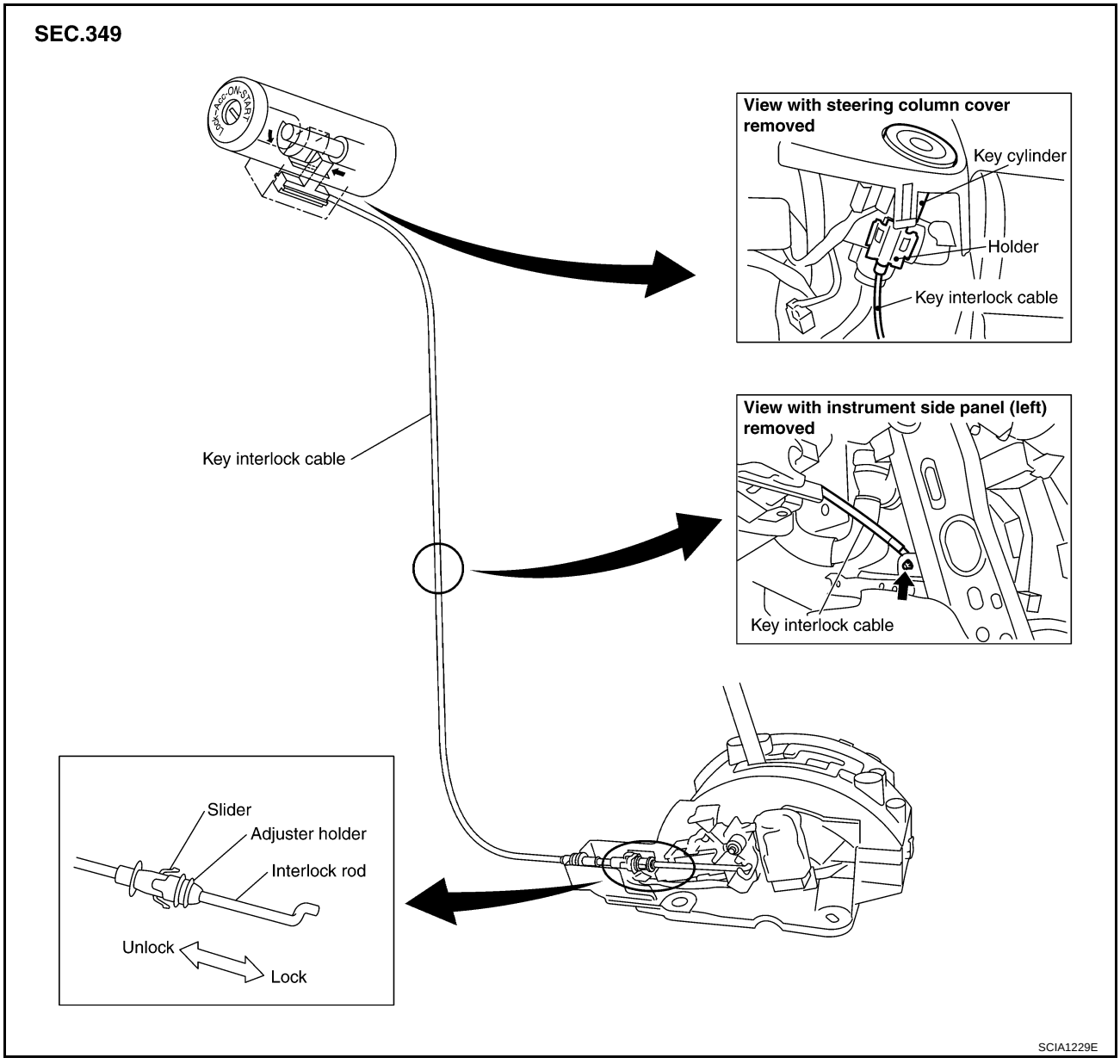

CAUTION:

- **Install key interlock cable in such a way that it will not be damaged by sharp bends, twists or interference with adjacent parts.**
- **After installing key interlock cable to control device, make sure that casing cap and bracket are firmly secured in their positions. If casing cap can be removed with an external load of less than 39.2 N (4.0 kg, 8.8 lb), replace key interlock cable with new one.**

Removal and Installation

NCS000IU

REMOVAL

1. Unlock slider by squeezing lock tabs on slider from adjuster holder.
2. Remove casing cap from bracket of control device assembly and remove interlock rod from key interlock cable.

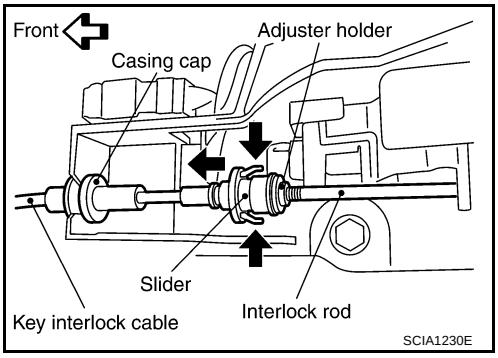

3. Remove holder from key cylinder and remove key interlock cable.

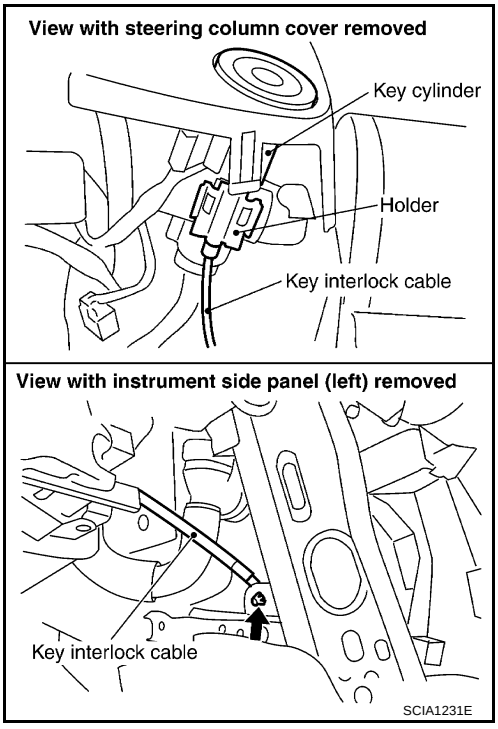

INSTALLATION

1. Set key interlock cable to key cylinder and install holder.
2. Clamp cable and fix to control cable with band.
3. Turn ignition key to lock position.
4. Set select lever to “P” position.

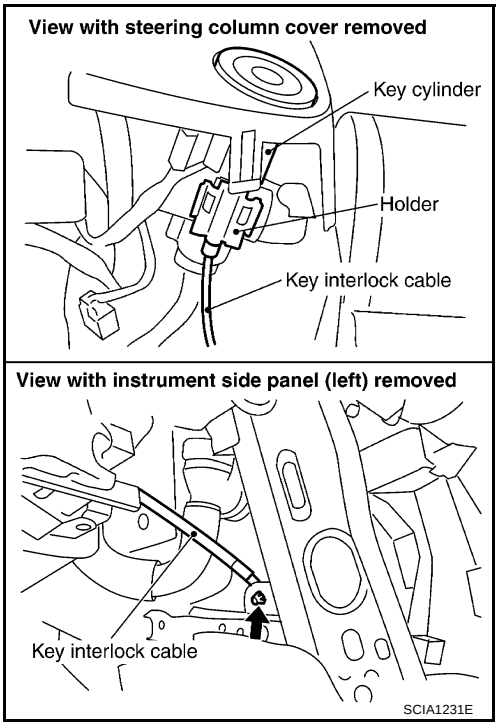

5. Insert interlock rod into adjuster holder.
6. Install casing cap to bracket.
7. Move slider in order to fix adjuster holder to interlock rod.

   CAUTION:
   Do not touch any adjacent parts of key interlock cable when slider is being held.
   Insert slider into key interlock rod straightly.

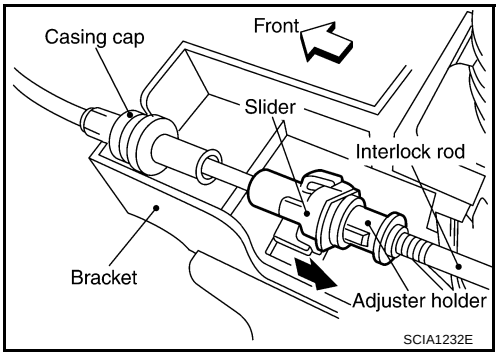

ON-VEHICLE SERVICE

PFP:00000

Control Valve with TCM and A/T Fluid Temperature Sensor 2

NCS000IV

COMPONENTS

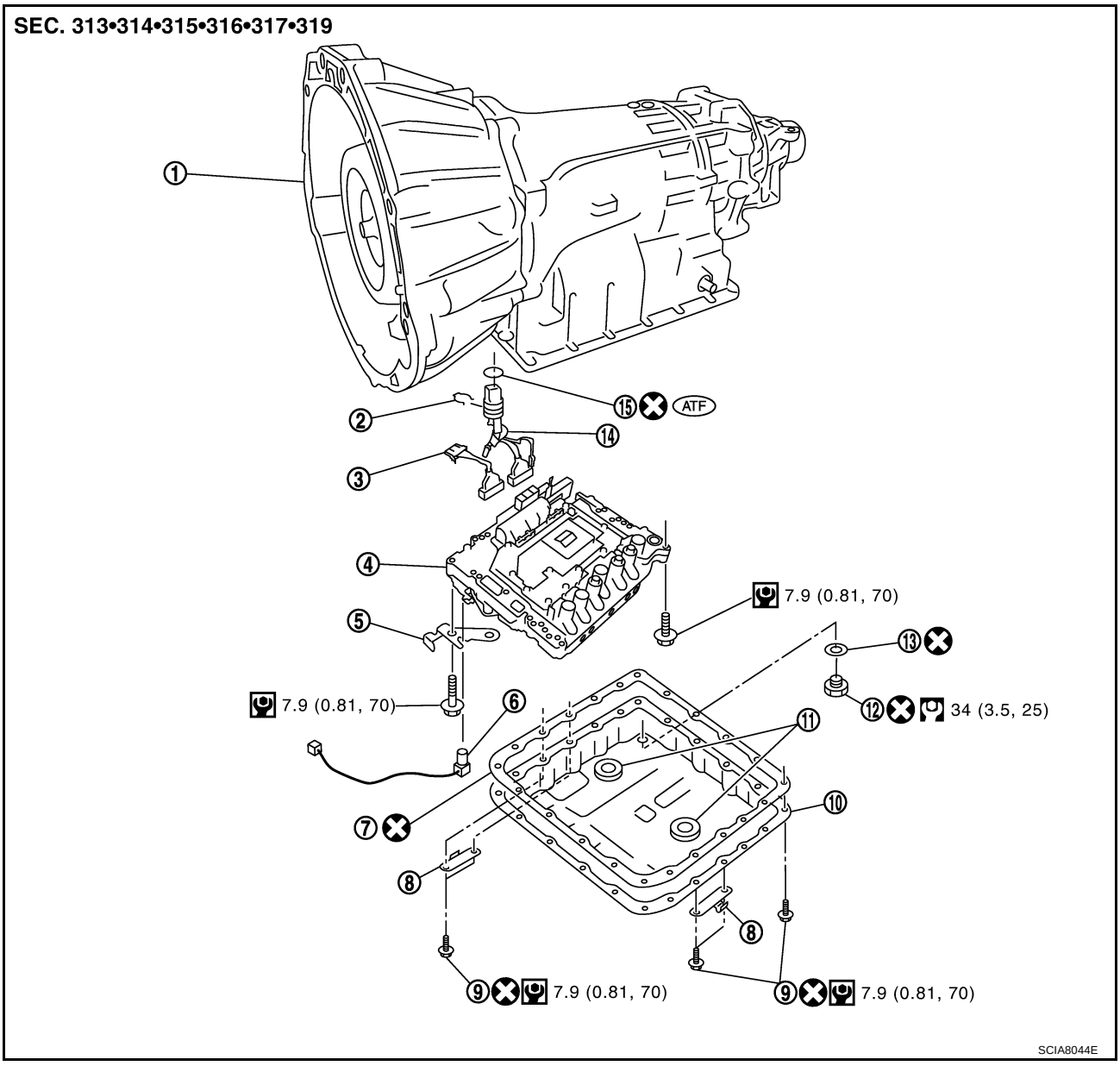

1.	A/T	2.	Snap ring	3.	Sub-harness
4.	Control valve with TCM	5.	Bracket	6.	A/T fluid temperature sensor 2
7.	Oil pan gasket	8.	Clip	9.	Oil pan mounting bolt
10.	Oil pan	11.	Magnet	12.	Drain plug
13.	Drain plug gasket	14.	Terminal cord assembly	15.	O-ring

Refer to GI section to make sure icons (symbol marks) in the figure. Refer to GI-10, "Components" .

CONTROL VALVE WITH TCM REMOVAL AND INSTALLATION

Removal

1. Disconnect the battery cable from the negative terminal.
2. Disconnect heated oxygen sensor 2 harness connector.
3. Drain ATF through drain plug.
4. Disconnect A/T assembly harness connector.

5. Remove snap ring from A/T assembly harness connector.

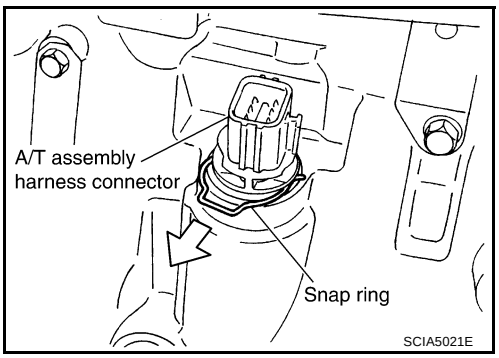

6. Push A/T assembly harness connector.

   CAUTION:
   Be careful not to damage connector.

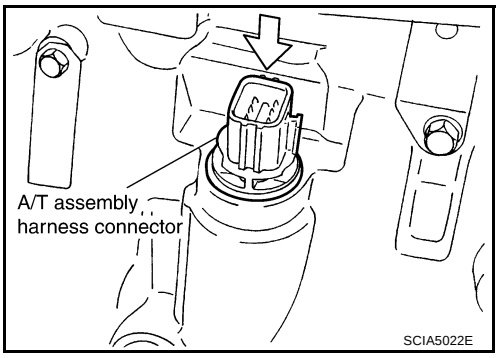

7. Remove clips (1).
8. Remove oil pan (2) and oil pan gasket.
   - ⇦: Vehicle front
   - ⬅: Bolt (22)
   - Drain plug (3)

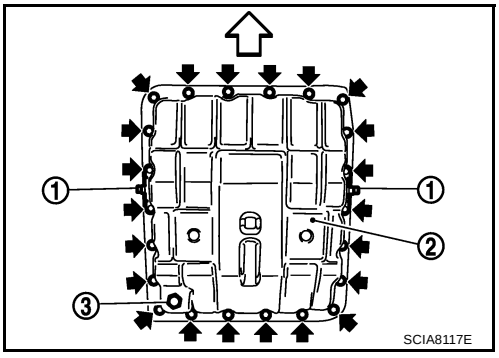

9. Check foreign materials in oil pan to help determine causes of malfunction. If the ATF is very dark, smells burned, or contains foreign particles, the frictional material (clutches, band) may need replacement. A tacky film that will not wipe clean indicates varnish build up. Varnish can cause valves, servo, and clutches to stick and can inhibit pump pressure.
   - **If frictional material is detected, perform A/T fluid cooler cleaning. Refer to AT-14, "A/T Fluid Cooler Cleaning".**

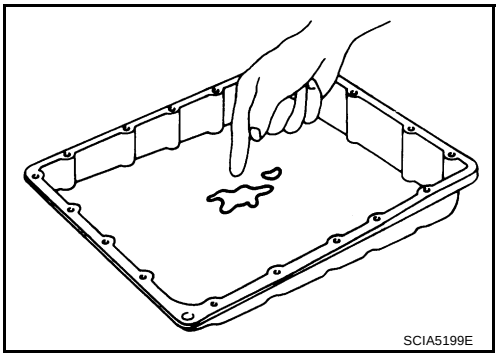

10. Remove magnets from oil pan.

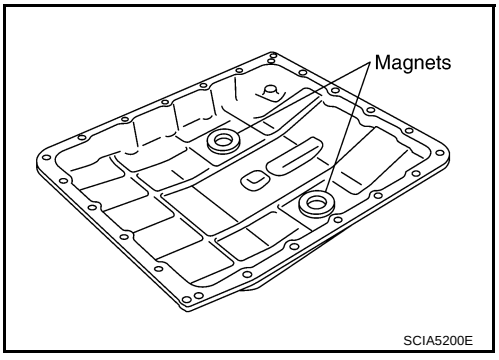

11. Disconnect A/T fluid temperature sensor 2 connector (A).

CAUTION:
Be careful not to damage connector.

12. Straighten terminal clips to free terminal cord assembly and A/T fluid temperature sensor 2 harness.
    - ⬅: Terminal clip (4)

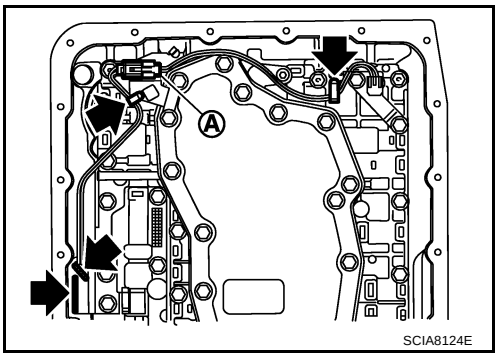

13. Disconnect revolution sensor connector.

CAUTION:
Be careful not to damage connector.

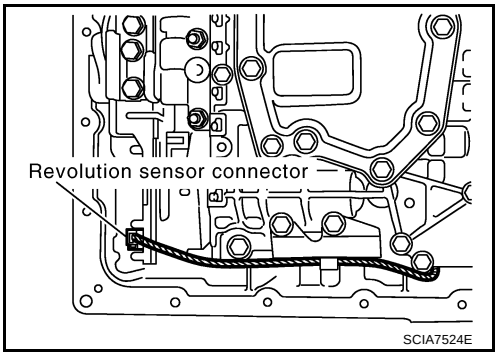

14. Straighten terminal clip to free revolution sensor harness.

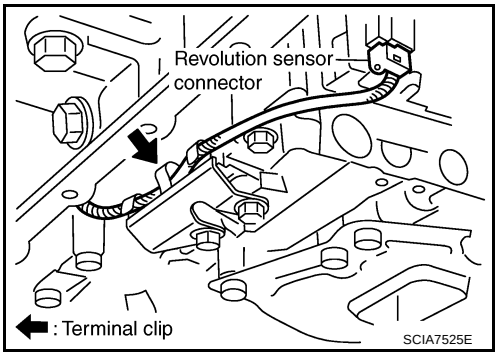

15. Remove bolts A, B and C from control valve with TCM.
    - ⇦: Vehicle front

Bolt symbol	Length mm (in)	Number of bolts
A	42 (1.65)	5
B	55 (2.17)	6
C	40 (1.57)	1

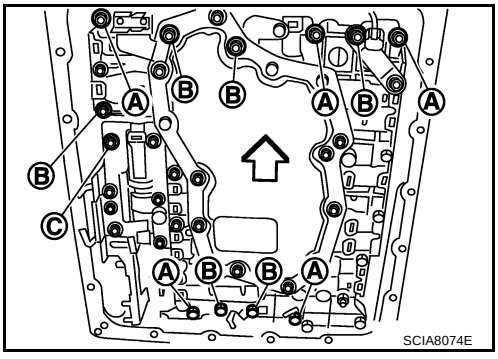

16. Remove control valve with TCM from transmission case.

CAUTION:
When removing, be careful with the manual valve notch and manual plate height. Remove it vertically.

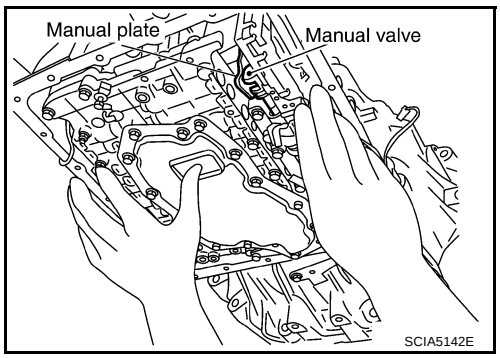

17. Remove A/T fluid temperature sensor 2 with bracket from control valve with TCM.

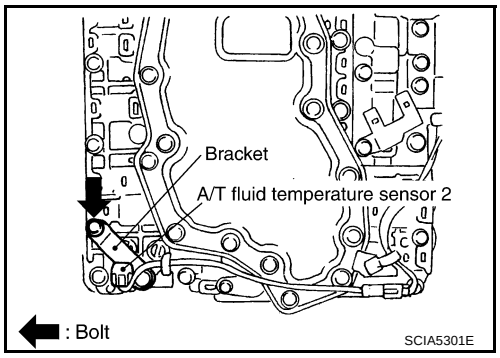

18. Remove bracket from A/T fluid temperature sensor 2.

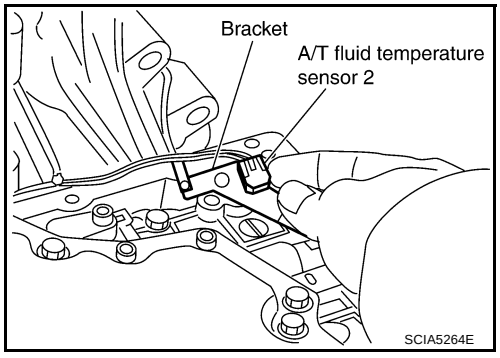

19. Remove O-ring from A/T assembly harness connector.

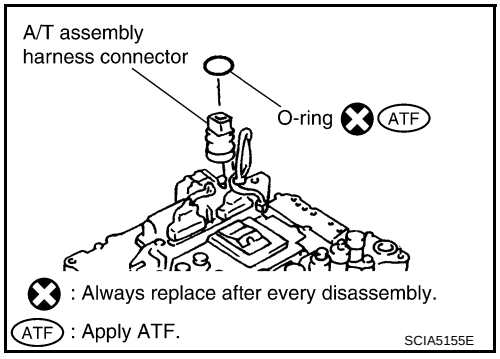

20. Disconnect TCM connectors.

CAUTION:
Be careful not to damage connectors.

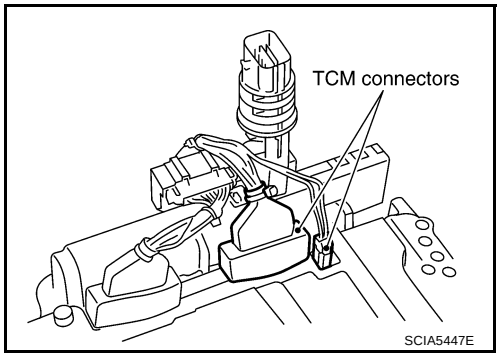

21. Remove A/T assembly harness connector from control valve with TCM using a flat-bladed screwdriver.

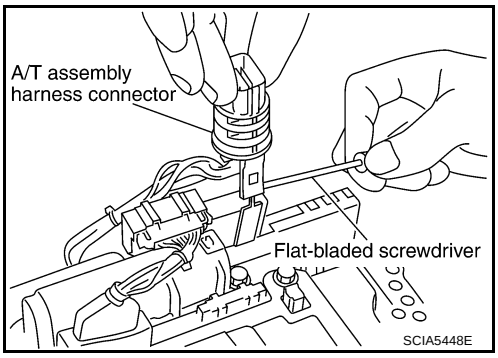

22. Disconnect TCM connector and park/neutral position switch connector.

CAUTION:
Be careful not to damage connectors.

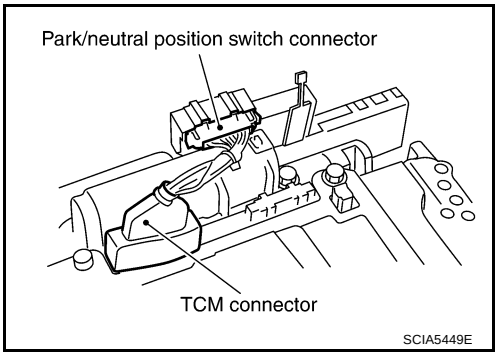

Installation

CAUTION:
After completing installation, check A/T fluid leakage and A/T fluid level. Refer to AT-12, "Changing A/T Fluid" , AT-12, "Checking A/T Fluid" .

1. Connect TCM connector and park/neutral position switch connector.

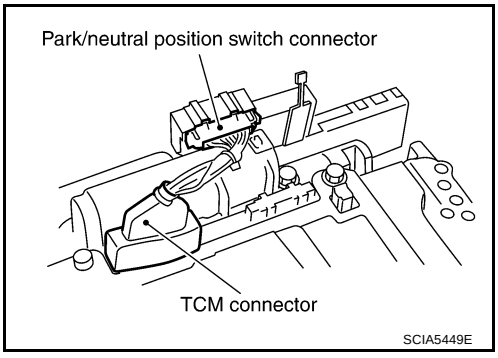

2. Install A/T assembly harness connector from control valve with TCM.

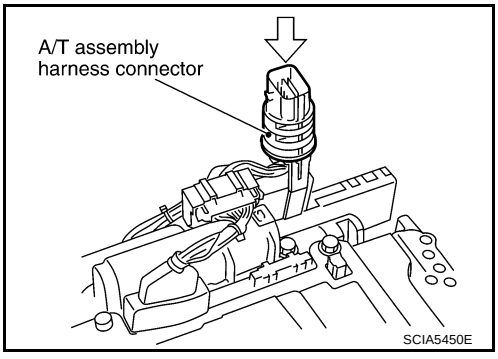

3. Connect TCM connectors.

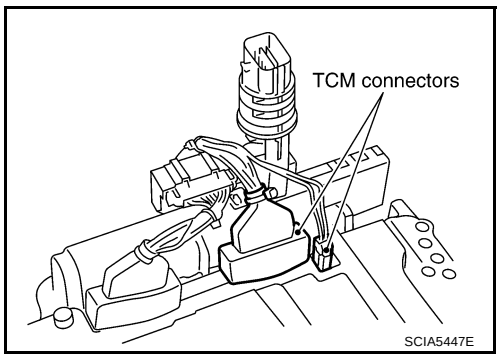

4. Install O-ring in A/T assembly harness connector.

CAUTION:
- **Do not reuse O-ring.**
- **Apply ATF to O-ring.**

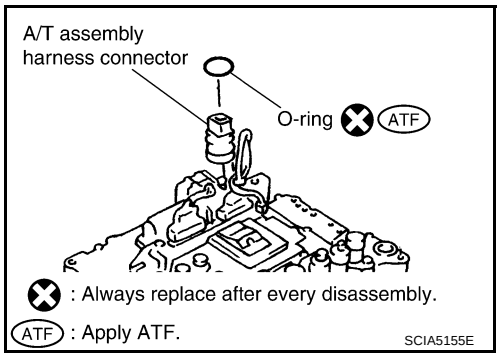

5. Install A/T fluid temperature sensor 2 to bracket.

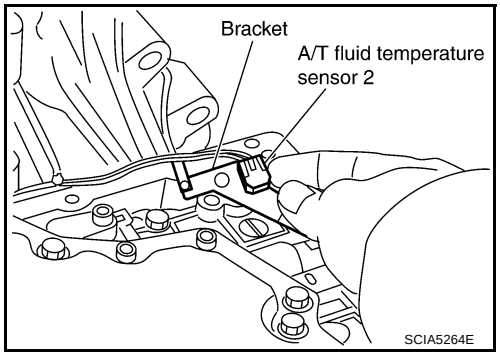

6. Install A/T fluid temperature sensor 2 (with bracket) in control valve with TCM, and then tighten A/T fluid temperature sensor 2 bolt to the specified torque. Refer to AT-225, "COMPONENTS" .

CAUTION:
Adjust bolt hole of bracket to bolt hole of control valve with TCM.

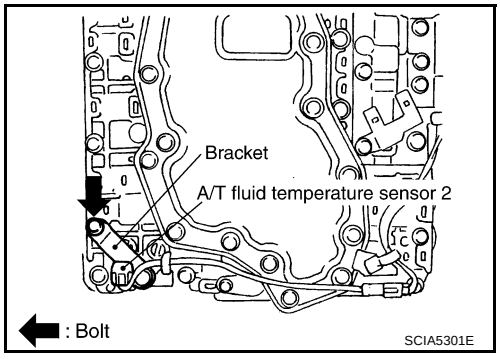

7. Install control valve with TCM in transmission case.

CAUTION:
- **Make sure that turbine revolution sensor securely installs turbine revolution sensor hole.**
- **Hang down revolution sensor harness toward outside so as not to disturb installation of control valve with TCM.**
- **Adjust A/T assembly harness connector of control valve with TCM to terminal hole of transmission case.**

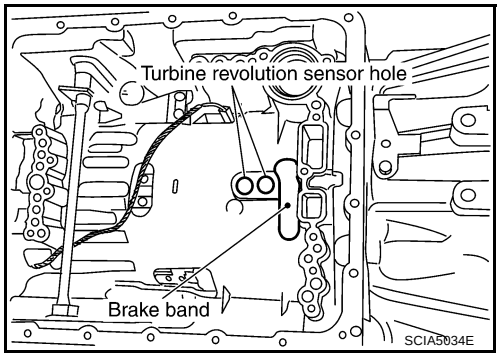

- **Assemble it so that manual valve cutout is engaged with manual plate projection.**

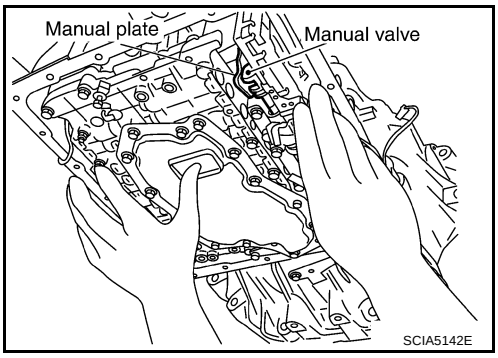

8. Install bolts A, B and C in control valve with TCM.
   - ⇦: Vehicle front

Bolt symbol	Length mm (in)	Number of bolts
A	42 (1.65)	5
B	55 (2.17)	6
C	40 (1.57)	1

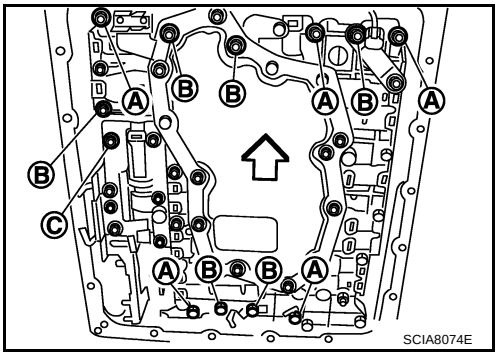

9. Tighten bolt 1, 2 and 3 temporarily to prevent dislocation. After that tighten them in order (1 → 2 → 3), and then tighten other bolts to the specified torque. Refer to AT-225, "COMPONENTS".
   - ⇦: Vehicle front

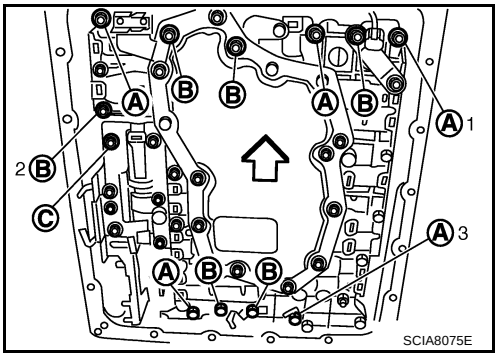

10. Connect A/T fluid temperature sensor 2 connector (A).
11. Securely fasten terminal cord assembly and A/T fluid temperature sensor 2 harness with terminal clips.
    - ⬅: Terminal clip (4)

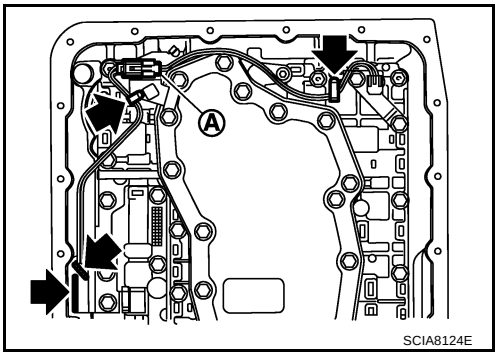

12. Connect revolution sensor connector.

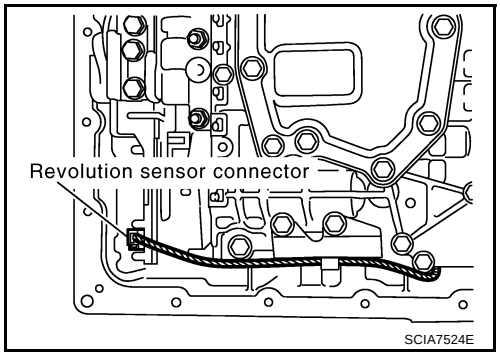

13. Securely fasten revolution sensor harness with terminal clip.

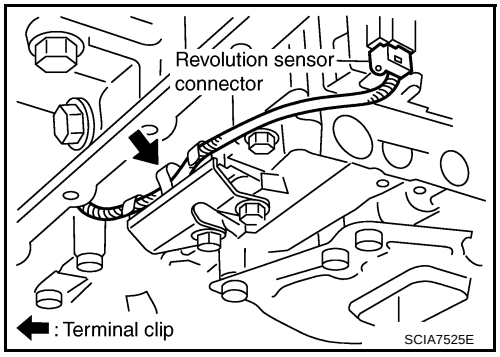

14. Install magnets in oil pan.

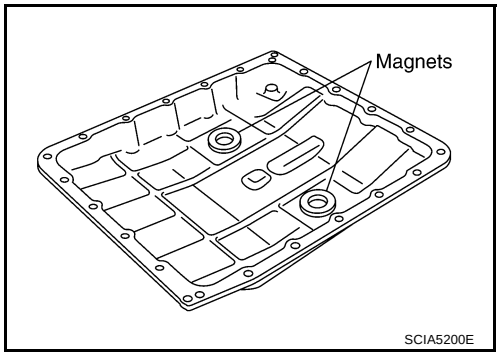

15. Install oil pan to transmission case.

a. Install oil pan gasket to oil pan.

CAUTION:

- **Do not reuse oil pan gasket.**
- **Install it in the direction to align hole positions.**
- **Completely remove all moisture, oil and old gasket, etc. from oil pan gasket mounting surface.**

b. Install oil pan (2) (with oil pan gasket) and clips (1) to transmission case.

- ⇦: Vehicle front
- ⬅: Bolt (22)

CAUTION:

- **Install it so that drain plug (3) comes to the position as shown in the figure.**
- **Be careful not to pinch harnesses.**
- **Completely remove all moisture, oil and old gasket, etc. from oil pan mounting surface.**

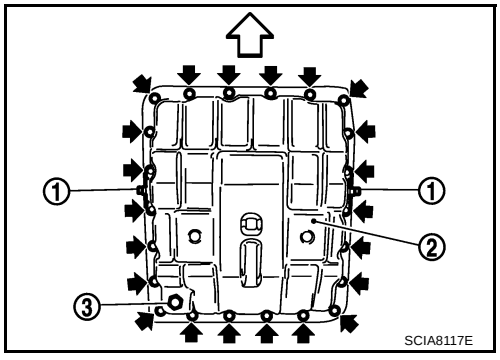

c. Tighten oil pan mounting bolts to the specified torque in numerical order shown in the figure after temporarily tightening them. Refer to AT-225, "COMPONENTS" .

CAUTION:
Do not reuse oil pan mounting bolts.

16. Install drain plug to oil pan, and then tighten drain plug to the specified torque. Refer to AT-225, "COMPONENTS" .

CAUTION:
Do not reuse drain plug gasket.

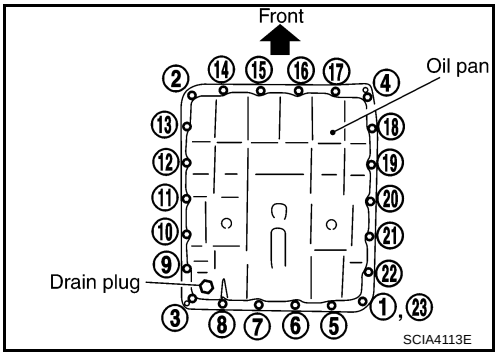

17. Pull up A/T assembly harness connector.

CAUTION:
Be careful not to damage connector.

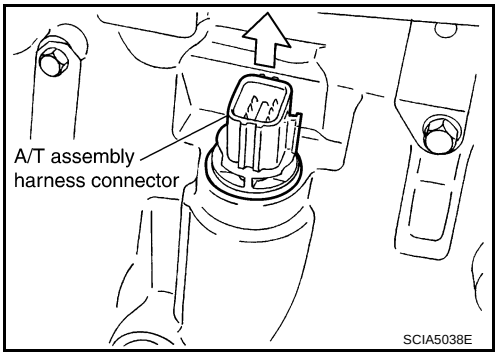

18. Install snap ring to A/T assembly harness connector.
19. Connect A/T assembly harness connector.
20. Connect heated oxygen sensor 2 harness connector.
21. Pour ATF into A/T assembly. Refer to AT-12, "Changing A/T Fluid" .
22. Connect the battery cable to the negative terminal.

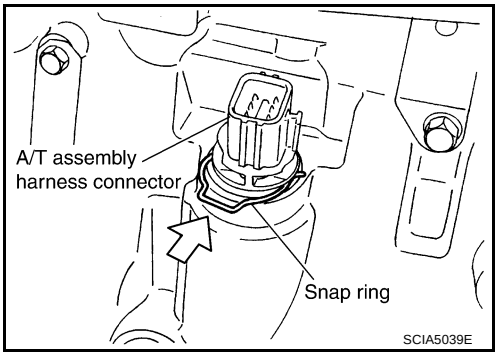

A/T FLUID TEMPERATURE SENSOR 2 REMOVAL AND INSTALLATION

Removal

1. Disconnect the battery cable from the negative terminal.
2. Disconnect heated oxygen sensor 2 harness connector.
3. Drain ATF through drain plug.
4. Remove clips (1).
5. Remove oil pan (2) and oil pan gasket.
   - ⇦: Vehicle front
   - ⬅: Bolt (22)
   - Drain plug (3)

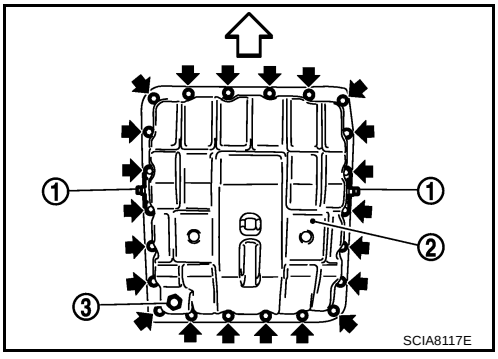

6. Check foreign materials in oil pan to help determine causes of malfunction. If the ATF is very dark, smells burned, or contains foreign particles, the frictional material (clutches, band) may need replacement. A tacky film that will not wipe clean indicates varnish build up. Varnish can cause valves, servo, and clutches to stick and can inhibit pump pressure.
   - **If frictional material is detected, perform A/T fluid cooler cleaning. Refer to AT-14, "A/T Fluid Cooler Cleaning".**

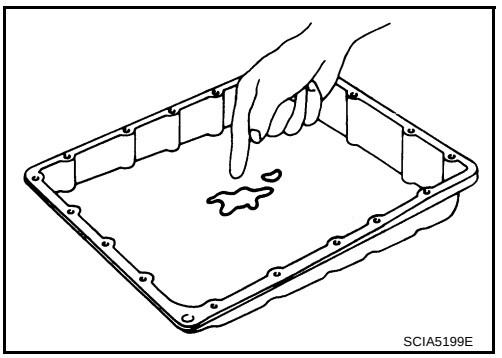

7. Disconnect A/T fluid temperature sensor 2 connector (A).

   CAUTION:
   Be careful not to damage connector.
8. Straighten terminal clip (⬅) to free A/T fluid temperature sensor 2 harness.

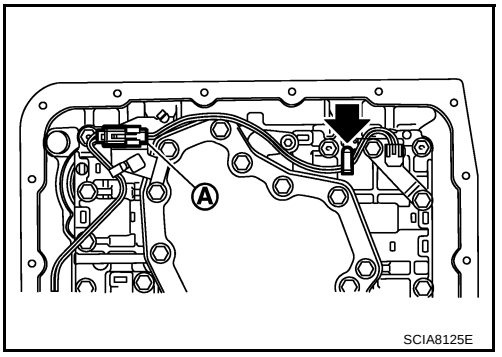

9. Remove A/T fluid temperature sensor 2 with bracket from control valve with TCM.

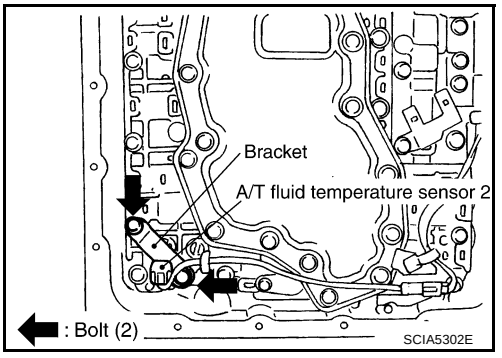

10. Remove bracket from A/T fluid temperature sensor 2.

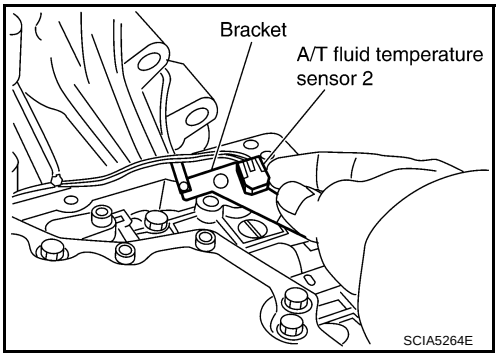

Installation

CAUTION:

After completing installation, check A/T fluid leakage and A/T fluid level. Refer to AT-12, "Changing A/T Fluid" , AT-12, "Checking A/T Fluid" .

1. Install A/T fluid temperature sensor 2 to bracket.

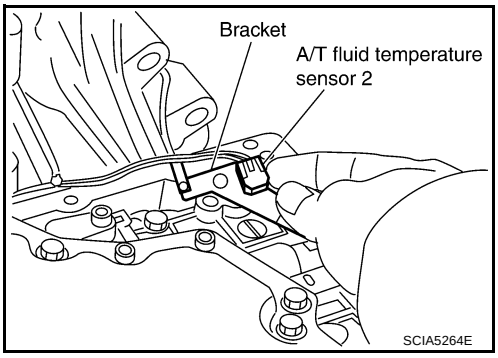

2. Install A/T fluid temperature sensor 2 (with bracket) in control valve with TCM, and then tighten A/T fluid temperature sensor 2 bolts to the specified torque. Refer to AT-225, "COMPONENTS" .

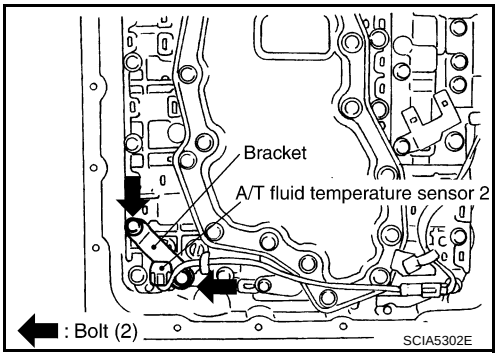

3. Connect A/T fluid temperature sensor 2 connector (A).
4. Securely fasten A/T fluid temperature sensor 2 harness with terminal clip (⬅).

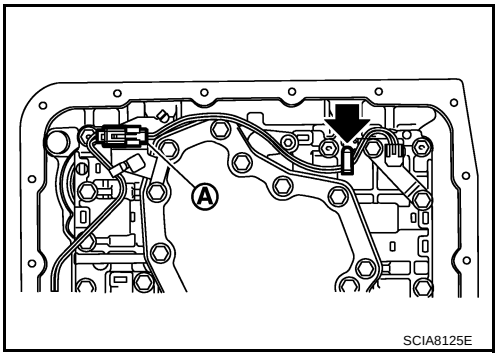

5. Install oil pan to transmission case.

a. Install oil pan gasket to oil pan.

CAUTION:

- **Do not reuse oil pan gasket.**
- **Install it in the direction to align hole positions.**
- **Completely remove all moisture, oil and old gasket, etc. from oil pan gasket mounting surface.**

b. Install oil pan (2) (with oil pan gasket) and clips (1) to transmission case.

- ⇦: Vehicle front
- ⬅: Bolt (22)

CAUTION:

- **Install it so that drain plug (3) comes to the position as shown in the figure.**
- **Be careful not to pinch harnesses.**
- **Completely remove all moisture, oil and old gasket, etc. from oil pan mounting surface.**

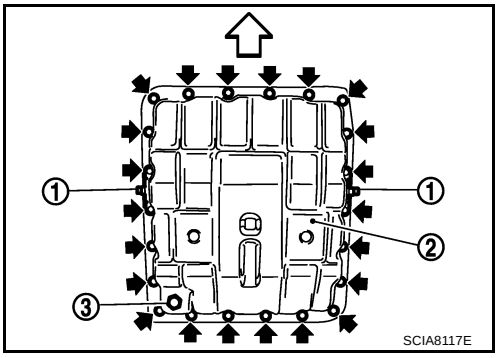

c. Tighten oil pan mounting bolts to the specified torque in numerical order shown in the figure after temporarily tightening them. Refer to AT-225, "COMPONENTS" .

CAUTION:
Do not reuse oil pan mounting bolts.

6. Install drain plug to oil pan, and then tighten drain plug to the specified torque. Refer to AT-225, "COMPONENTS" .

CAUTION:
Do not reuse drain plug gasket.

7. Connect heated oxygen sensor 2 harness connector.
8. Pour ATF into A/T assembly. Refer to AT-12, "Changing A/T Fluid" .
9. Connect the battery cable to the negative terminal.

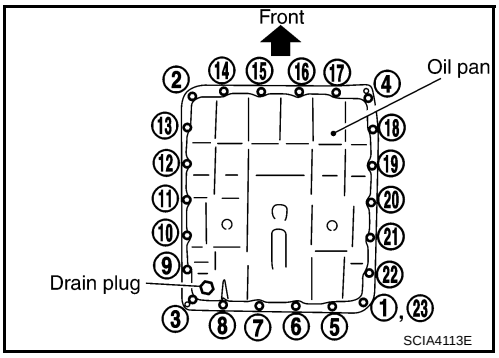

Parking Components

NCS000IW

COMPONENTS

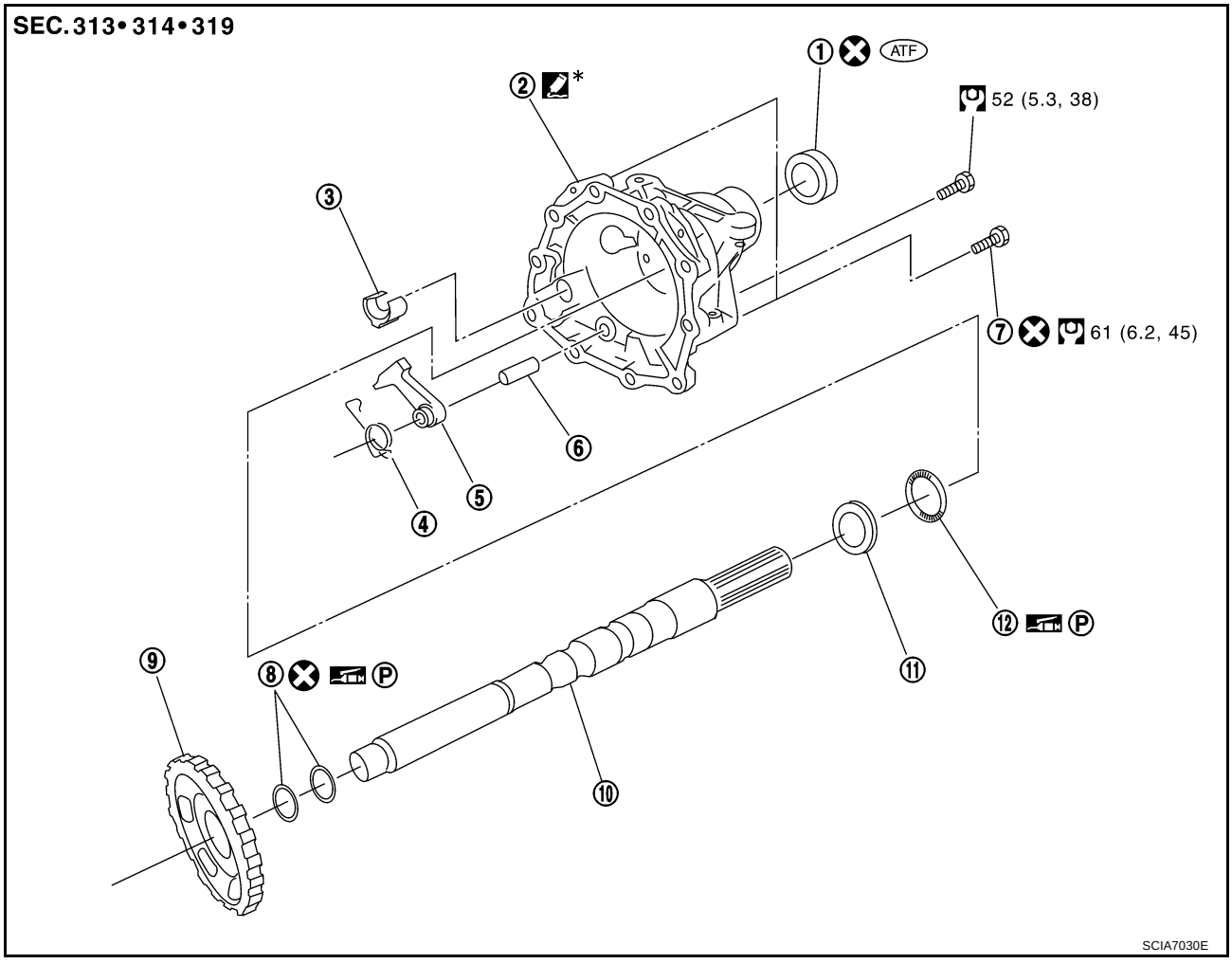

1.	Rear oil seal	2.	Rear extension	3.	Parking actuator support
4.	Return spring	5.	Parking pawl	6.	Pawl shaft
7.	Self-sealing bolt	8.	Seal ring	9.	Parking gear
10.	Output shaft	11.	Bearing race	12.	Needle bearing

Refer to GI section to make sure icons (symbol marks) in the figure. Refer to GI-10, "Components" .

However, refer to the following symbols for others.

* : Apply Genuine Anaerobic Liquid Gasket or equivalent. Refer to GI-46, "Recommended Chemical Products and Sealants" .

REMOVAL

1. Drain ATF through drain plug.
2. Remove exhaust front tube and center muffler with power tool. Refer to EX-3, "Removal and Installation" .
3. Remove rear propeller shaft. Refer to PR-4, "Removal and Installation" .
4. Remove control rod. Refer to AT-215, "Control Rod Removal and Installation" .
5. Support A/T assembly with a transmission jack.

   CAUTION:
   When setting transmission jack, be careful not to allow it to collide against the drain plug.
6. Remove rear engine mounting member with power tool. Refer to AT-251, "Removal and Installation" .

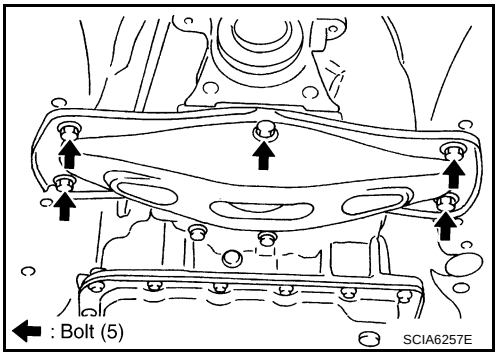

7. Remove engine mounting insulator (rear). Refer to AT-251, "Removal and Installation" .

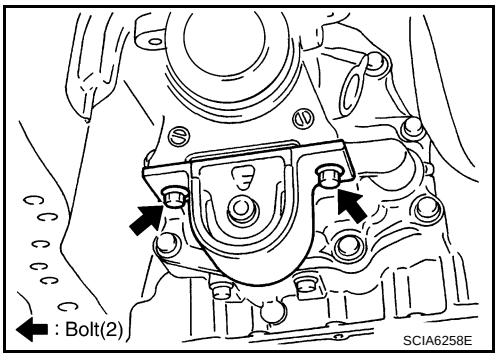

8. Remove tightening bolts for rear extension assembly and transmission case.

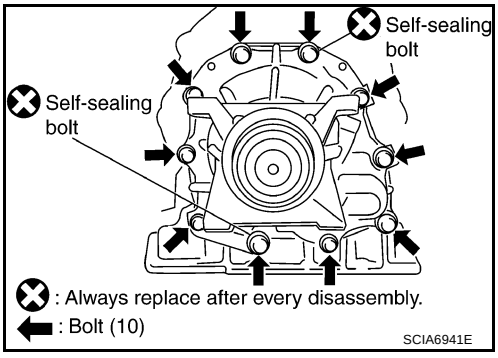

9. Tap rear extension assembly with a soft hammer.

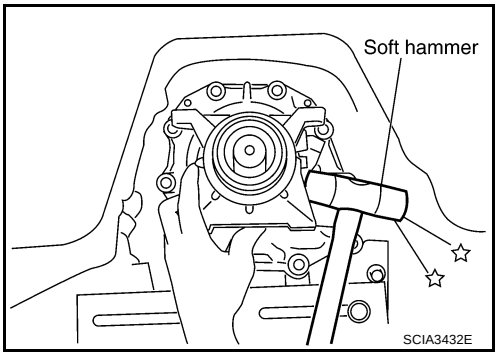

10. Remove rear extension assembly from transmission case. (With needle bearing.)

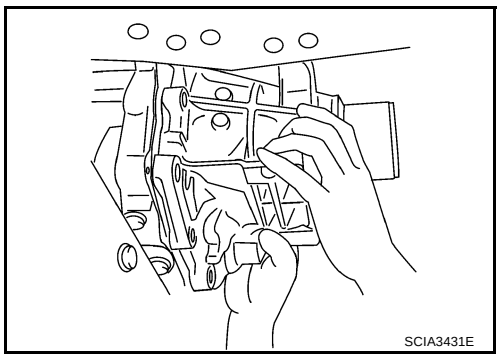

11. Remove bearing race from output shaft.

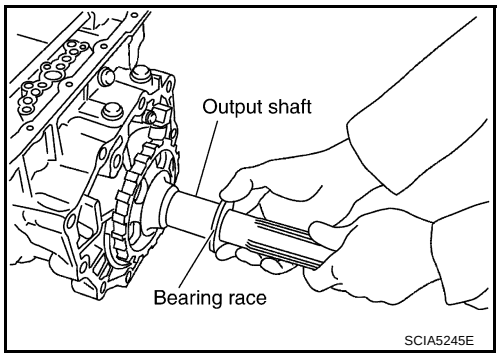

12. Remove output shaft from transmission case by rotating left/right.

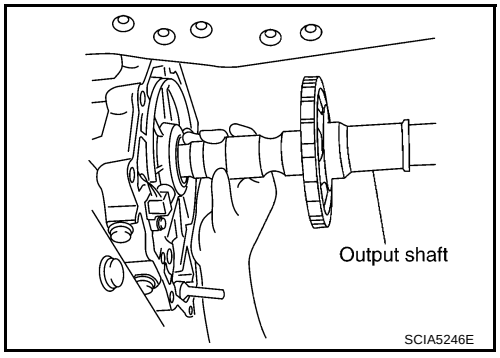

13. Remove parking gear from output shaft.

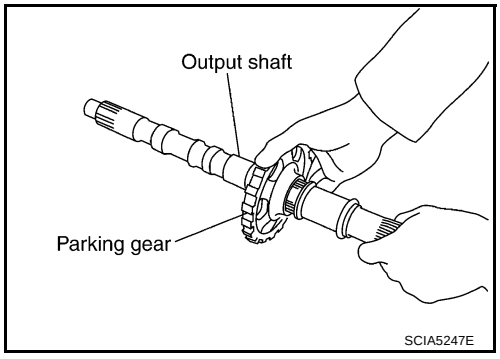

14. Remove seal rings from output shaft.

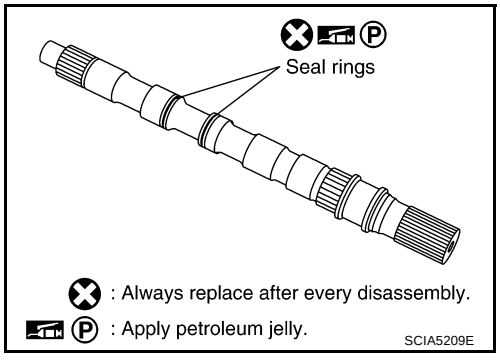

15. Remove needle bearing (1) from rear extension.

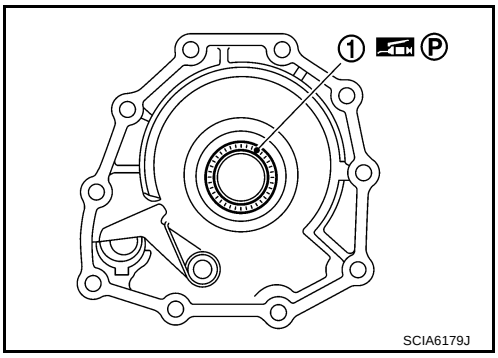

16. Remove parking actuator support from rear extension.

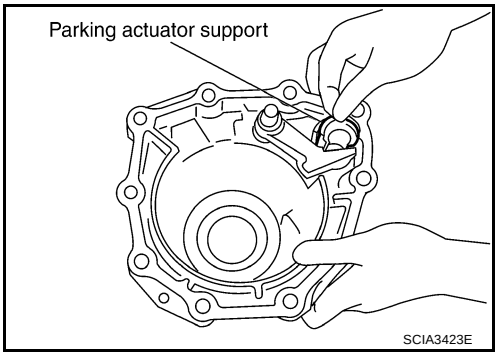

17. Remove parking pawl (with return spring) and pawl shaft from rear extension.

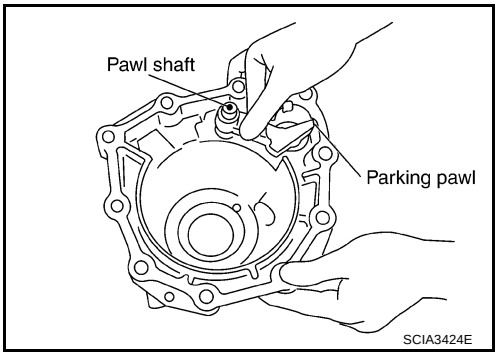

18. Remove return spring (1) from parking pawl (2).

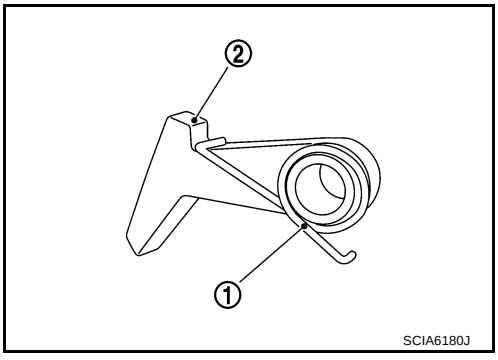

19. Remove rear oil seal from rear extension.

CAUTION:
Be careful not to scratch rear extension.

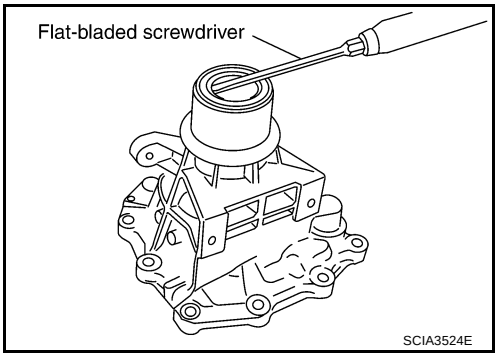

INSPECTION

- If the contact surface on parking actuator support, parking pawl, etc. has excessive wear, abrasion, bend, or any other damage, replace the components.

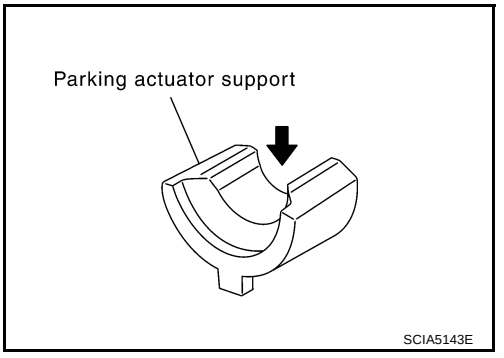

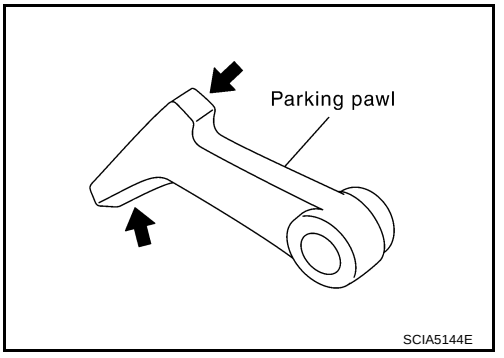

INSTALLATION

CAUTION:

After completing installation, check A/T position, A/T fluid leakage and A/T fluid level. Refer to AT-216, "Checking of A/T Position" , AT-12, "Checking A/T Fluid" .

1. As shown in the figure, use a drift to drive rear oil seal into the rear extension until it is flush.

   CAUTION:
   - **Do not reuse rear oil seal.**
   - **Apply ATF to rear oil seal.**

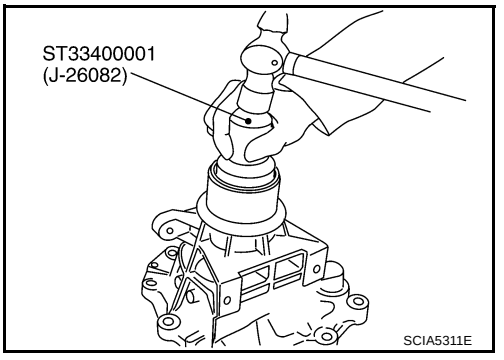

2. Install return spring (1) to parking pawl (2).

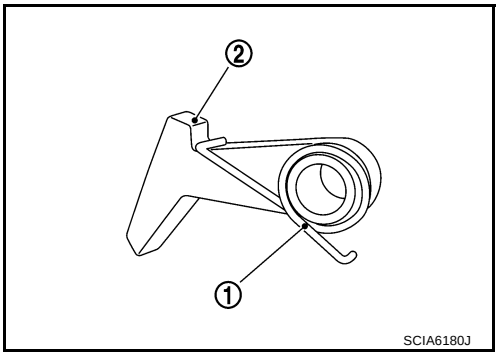

3. Install parking pawl (with return spring) and pawl shaft to rear extension.

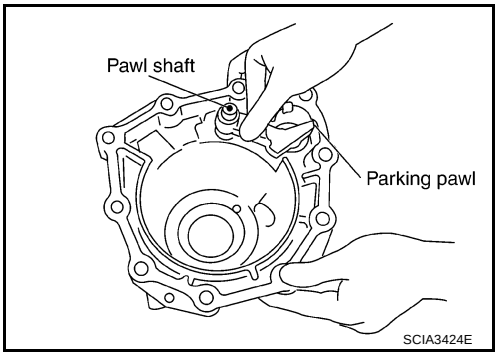

4. Install parking actuator support to rear extension.

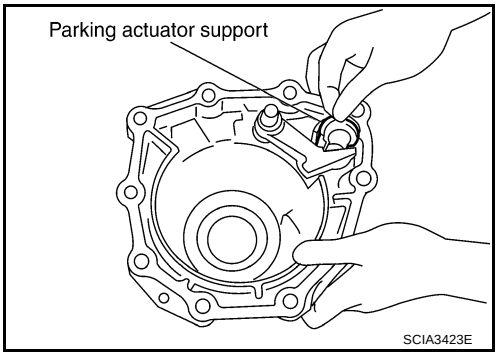

5. Install needle bearing (1) to rear extension.

CAUTION:

- **Take care with direction of needle bearing. Refer to AT-262, "Locations of Adjusting Shims, Needle Bearings, Thrust Washers and Snap Rings" .**
- **Apply petroleum jelly to needle bearing (1).**

Refer to GI section to make sure icons (symbol marks) in the figure. Refer to GI-10, "Components" .

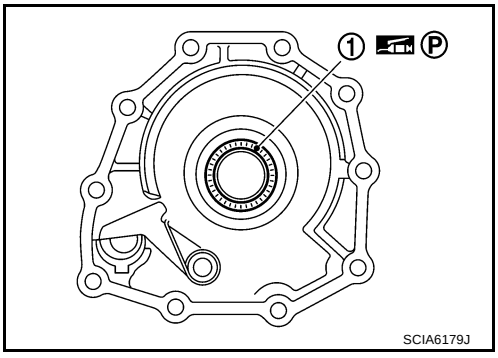

6. Install seal rings to output shaft.

CAUTION:

- **Do not reuse seal rings.**
- **Apply petroleum jelly to seal rings.**

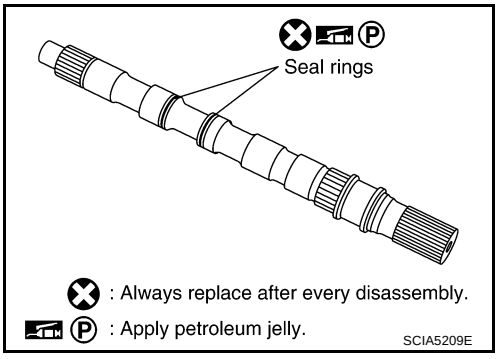

7. Install parking gear to output shaft.

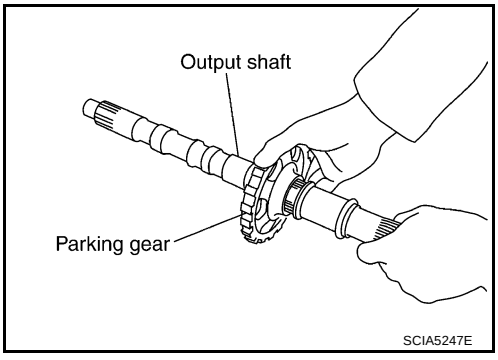

8. Install output shaft in transmission case.

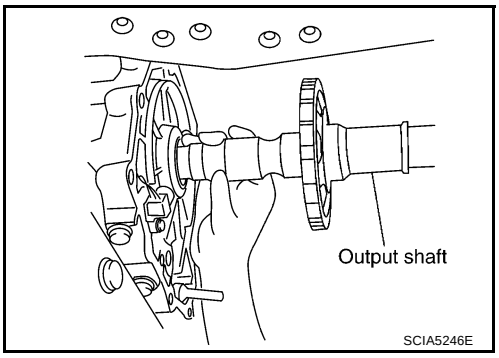

9. Install bearing race to output shaft.

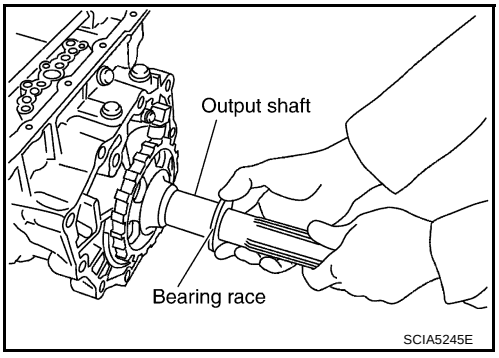

10. Apply recommended sealant (Genuine Anaerobic Liquid Gasket or equivalent. Refer to GI-46, "Recommended Chemical Products and Sealants" .) to rear extension assembly as shown in the figure.

CAUTION:
Completely remove all moisture, oil and old sealant, etc. from the transmission case and rear extension assembly mounting surfaces.

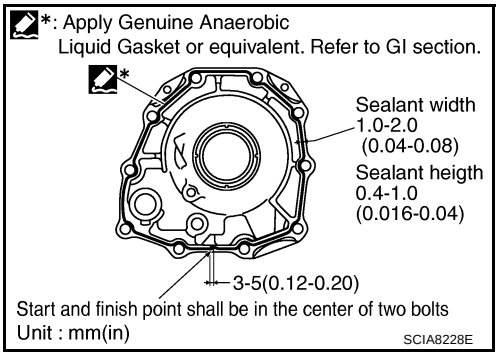

11. Install rear extension assembly to transmission case. (With needle bearing.)

CAUTION:
Insert the tip of parking rod between the parking pawl and the parking actuator support when assembling the rear extension assembly.

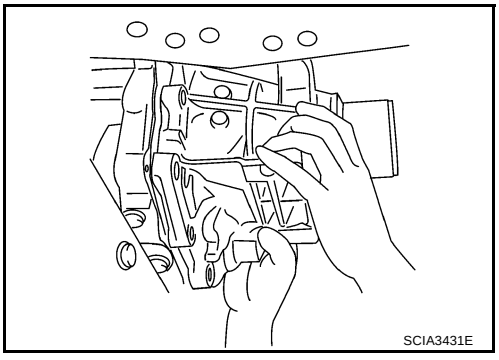

12. Tighten rear extension assembly mounting bolts to specified torque. Refer to AT-236, "COMPONENTS" .

CAUTION:
Do not reuse self-sealing bolts.

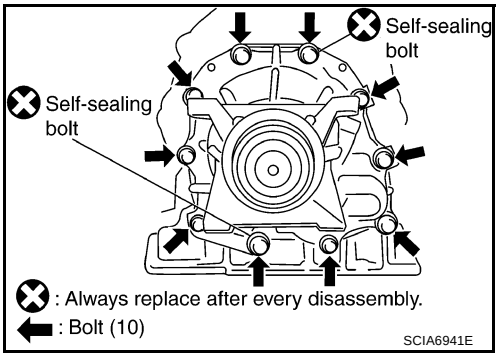

13. Install engine mounting insulator (rear). Refer to AT-251, "Removal and Installation" .

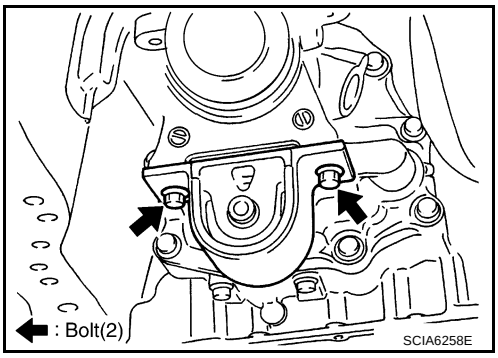

14. Install rear engine mounting member. Refer to AT-251, "Removal and Installation" .
15. Install rear propeller shaft. Refer to PR-4, "Removal and Installation" .
16. Install control rod. Refer to AT-215, "Control Rod Removal and Installation" .
17. Install exhaust front tube and center muffler. Refer to EX-3, "Removal and Installation" .
18. Install drain plug to oil pan, and then tighten drain plug to the specified torque. Refer to AT-225, "COMPONENTS" .

    CAUTION:
    Do not reuse drain plug gasket.

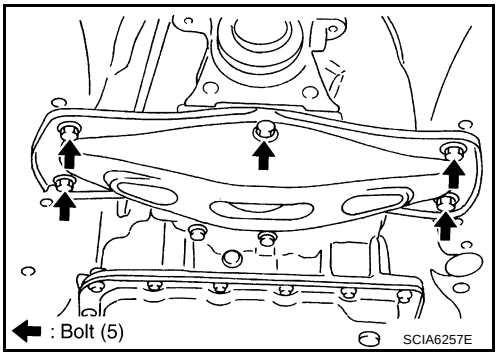

19. Pour ATF into A/T assembly. Refer to AT-12, "Changing A/T Fluid" .

Rear Oil Seal

NCS000IX

REMOVAL

1. Remove exhaust front tube and center muffler with power tool. Refer to EX-3, "Removal and Installation" .
2. Remove rear propeller shaft. Refer to PR-4, "Removal and Installation" .
3. Remove rear oil seal using a flat-bladed screwdriver.

   CAUTION:
   Be careful not to scratch rear extension assembly.

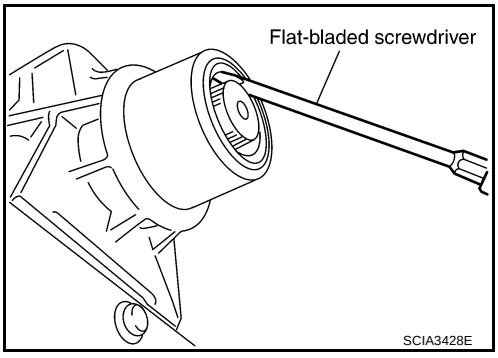

INSTALLATION

CAUTION:
After completing installation, check A/T fluid leakage and A/T fluid level. Refer to AT-12, "Changing A/T Fluid" , AT-12, "Checking A/T Fluid" .

1. As shown in the figure, use the drift to drive rear oil seal into rear extension assembly until it is flush.

   CAUTION:
   - **Do not reuse rear oil seal.**
   - **Apply ATF to rear oil seal.**
2. Install rear propeller shaft. Refer to PR-4, "Removal and Installation" .
3. Install exhaust front tube and center muffler. Refer to EX-3, "Removal and Installation" .

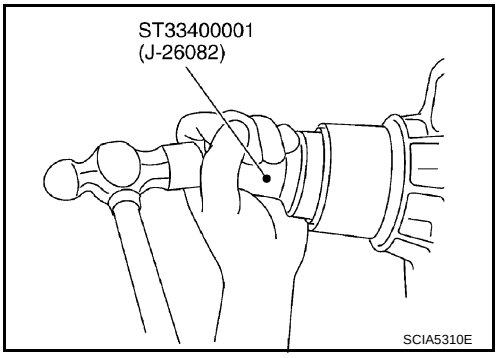

Revolution Sensor

NCS000IY

COMPONENTS

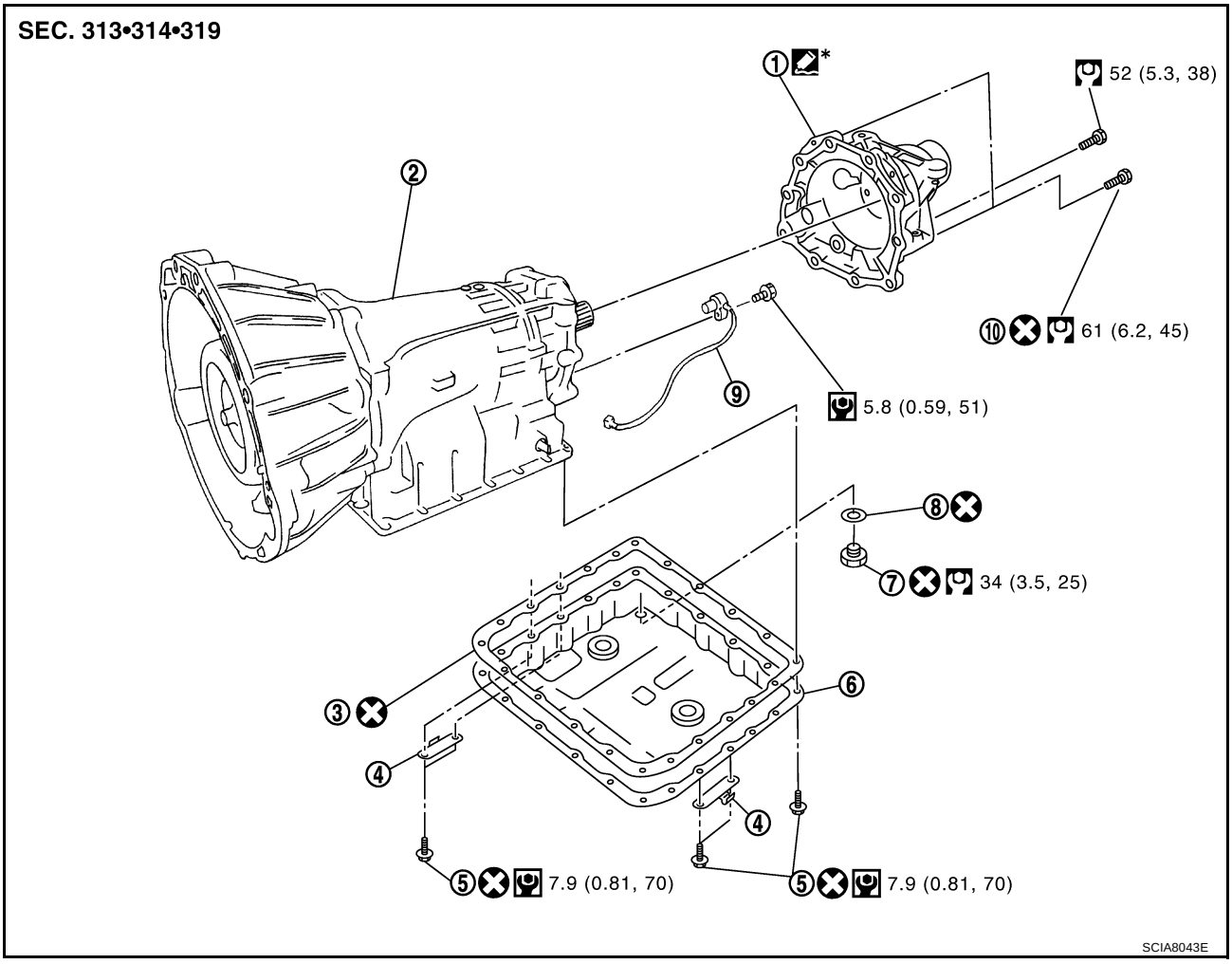

1.	Rear extension	2.	A/T	3.	Oil pan gasket
4.	Clip	5.	Oil pan mounting bolt	6.	Oil pan
7.	Drain plug	8.	Drain plug gasket	9.	Revolution sensor
10.	Self-sealing bolt				

Refer to GI section to make sure icons (symbol marks) in the figure. Refer to GI-10, "Components" .

However, refer to the following symbols for others.

: Apply Genuine Anaerobic Liquid Gasket or equivalent. Refer to GI-46, "Recommended Chemical Products and Sealants" .

REMOVAL

1. Disconnect the battery cable from the negative terminal.
2. Drain ATF through drain plug.
3. Remove exhaust front tube and center muffler with power tool. Refer to EX-3, "Removal and Installation" .
4. Remove rear propeller shaft. Refer to PR-4, "Removal and Installation" .
5. Remove control rod. Refer to AT-215, "Control Rod Removal and Installation" .

6. Remove clips (1).
7. Remove oil pan (2) and oil pan gasket.
   - ⇦: Vehicle front
   - ⬅: Bolt (22)
   - Drain plug (3)

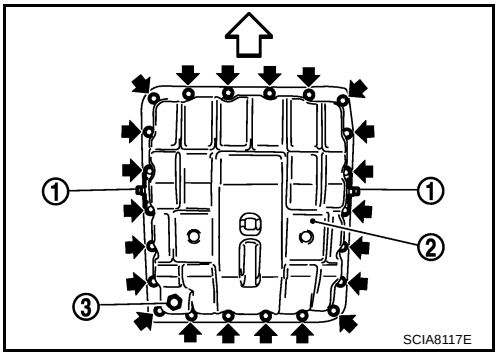

8. Check foreign materials in oil pan to help determine causes of malfunction. If the ATF is very dark, smells burned, or contains foreign particles, the frictional material (clutches, band) may need replacement. A tacky film that will not wipe clean indicates varnish build up. Varnish can cause valves, servo, and clutches to stick and can inhibit pump pressure.
   - **If frictional material is detected, perform A/T fluid cooler cleaning. Refer to** **AT-14, "A/T Fluid Cooler Cleaning"**.

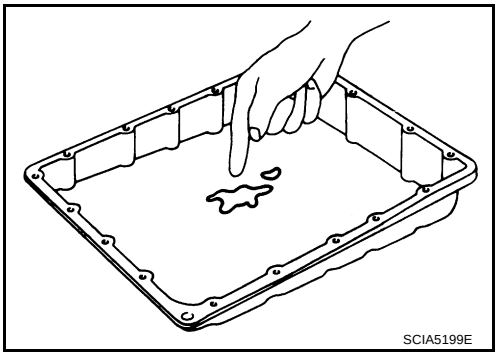

9. Support A/T assembly with a transmission jack.

   CAUTION:
   When setting transmission jack, place wooden blocks to prevent from damaging control valve with TCM and transmission case.
10. Remove rear engine mounting member with power tool. Refer to AT-251, "Removal and Installation" .

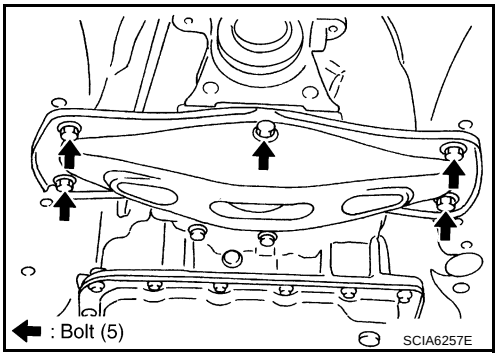

11. Remove tightening bolts for rear extension assembly and transmission case.

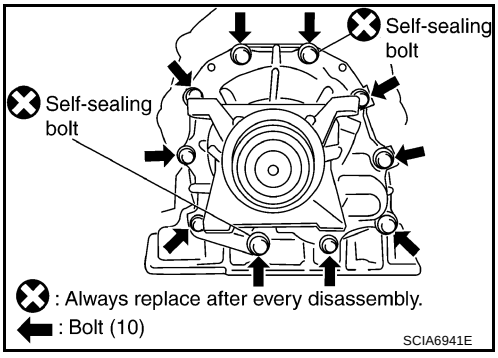

12. Tap rear extension assembly with a soft hammer.

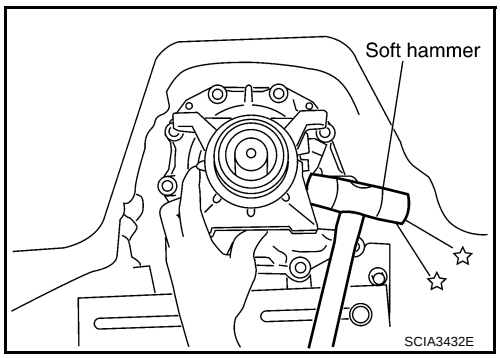

13. Remove rear extension assembly from transmission case. (With needle bearing.)

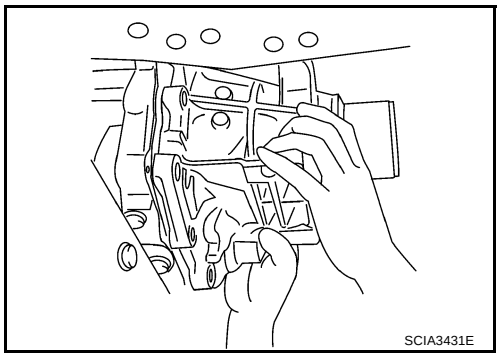

14. Disconnect revolution sensor connector.

CAUTION:

Be careful not to damage connector.

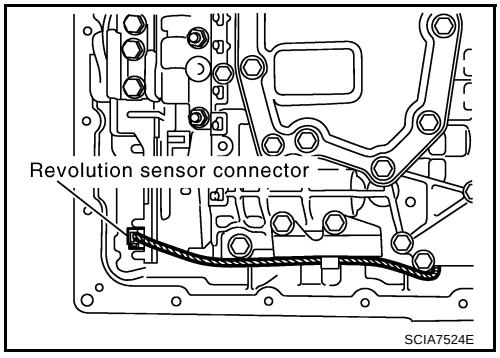

15. Straighten terminal clip to free revolution sensor harness.

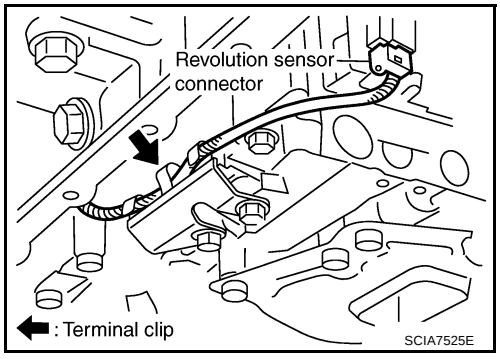

16. Remove revolution sensor from transmission case.

CAUTION:

- **Do not subject it to impact by dropping or hitting it.**
- **Do not disassemble.**
- **Do not allow metal filings, etc. to get on the sensor's front edge magnetic area.**
- **Do not place in an area affected by magnetism.**

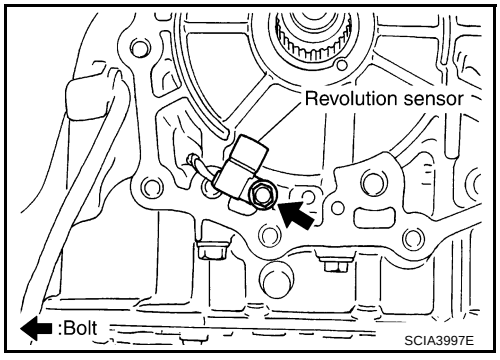

INSTALLATION

CAUTION:

After completing installation, check A/T position, A/T fluid leakage and A/T fluid level. Refer to AT-216, "Checking of A/T Position" , AT-12, "Checking A/T Fluid" .

1. Install revolution sensor in transmission case, and then tighten revolution sensor mounting bolt to the specified torque. Refer to AT-244, "COMPONENTS" .

   CAUTION:
   - **Do not subject it to impact by dropping or hitting it.**
   - **Do not disassemble.**
   - **Do not allow metal filings, etc. to get on the sensor's front edge magnetic area.**
   - **Do not place in an area affected by magnetism.**

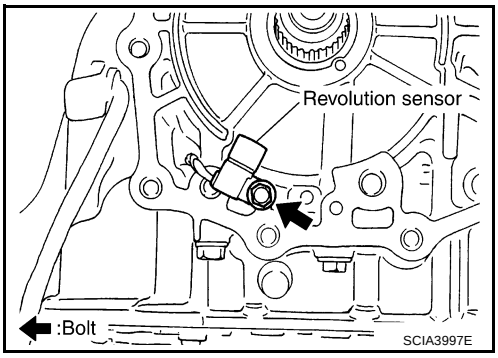

2. Connect revolution sensor connector.

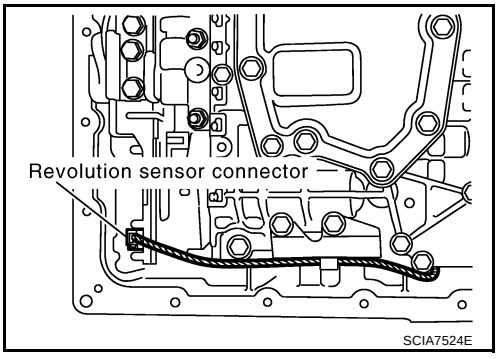

3. Securely fasten revolution sensor harness with clip.

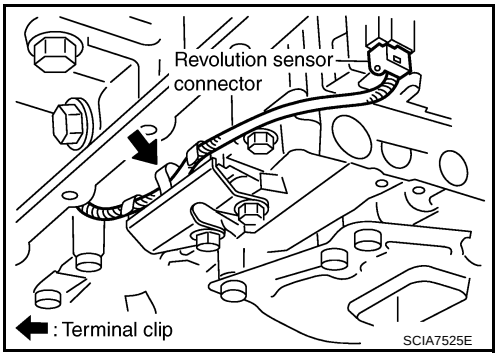

4. Apply recommended sealant (Genuine Anaerobic Liquid Gasket or equivalent. Refer to GI-46, "Recommended Chemical Products and Sealants" .) to rear extension assembly as shown in the figure.

   CAUTION:
   Completely remove all moisture, oil and old sealant, etc. from transmission case and rear extension assembly mounting surfaces.

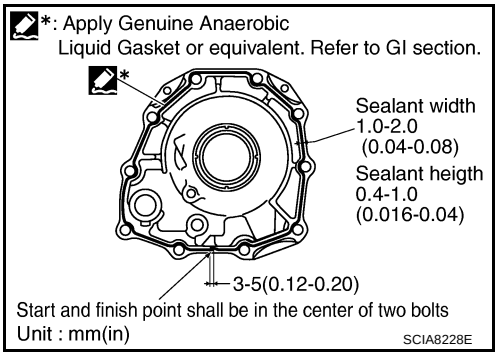

5. Install rear extension assembly to transmission case. (With needle bearing.)

CAUTION:
Insert the tip of parking rod between the parking pawl and the parking actuator support when assembling the rear extension assembly.

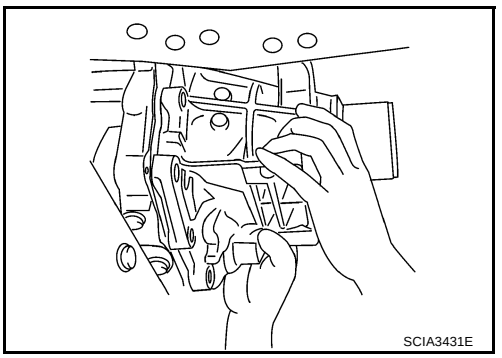

6. Tighten rear extension assembly mounting bolts to specified torque. Refer to AT-244, "COMPONENTS" .

CAUTION:
Do not reuse self-sealing bolts.

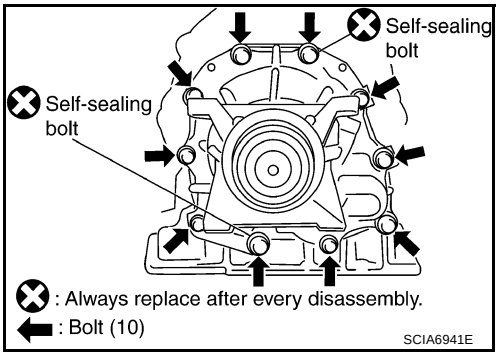

7. Install rear engine mounting member. Refer to AT-251, "Removal and Installation" .
8. Install oil pan to transmission case.

a. Install oil pan gasket to oil pan.

CAUTION:
- **Do not reuse oil pan gasket.**
- **Install it in the direction to align hole positions.**
- **Completely remove all moisture, oil and old gasket, etc. from oil pan gasket mounting surface.**

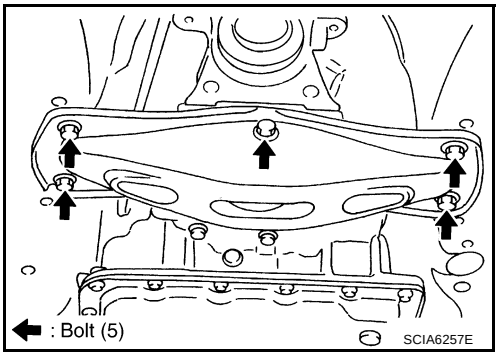

b. Install oil pan (2) (with oil pan gasket) and clips (1) to transmission case.
- ⇦: Vehicle front
- ⬅: Bolt (22)

CAUTION:
- **Install it so that drain plug (3) comes to the position as shown in the figure.**
- **Be careful not to pinch harnesses.**
- **Completely remove all moisture, oil and old gasket, etc. from oil pan mounting surface.**

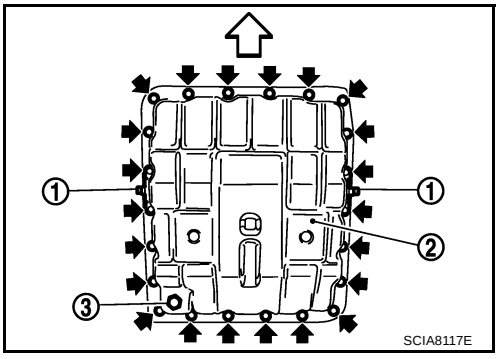

c. Tighten oil pan mounting bolts to the specified torque in numerical order shown in the figure after temporarily tightening them. Refer to AT-244, "COMPONENTS" .

CAUTION:
Do not reuse oil pan mounting bolts.

9. Install drain plug to oil pan, and then tighten drain plug to the specified torque. Refer to AT-244, "COMPONENTS" .

CAUTION:
Do not reuse drain plug gasket.

10. Install control rod. Refer to AT-215, "Control Rod Removal and Installation" .

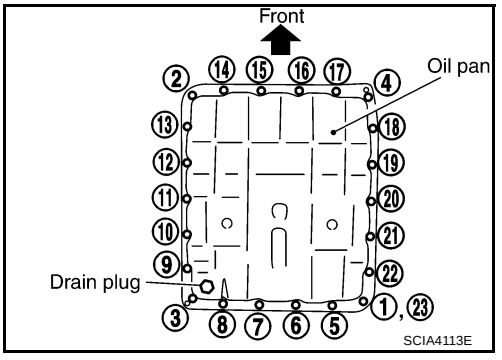

11. Install rear propeller shaft. Refer to PR-4, "Removal and Installation" .
12. Install exhaust front tube and center muffler. Refer to EX-3, "Removal and Installation" .
13. Pour ATF into A/T assembly. Refer to AT-12, "Changing A/T Fluid" .
14. Connect the battery cable to the negative terminal.

AIR BREATHER HOSE

PFP:31098

Removal and Installation

NCS000IZ

Refer to the figure below for air breather hose removal and installation procedure.

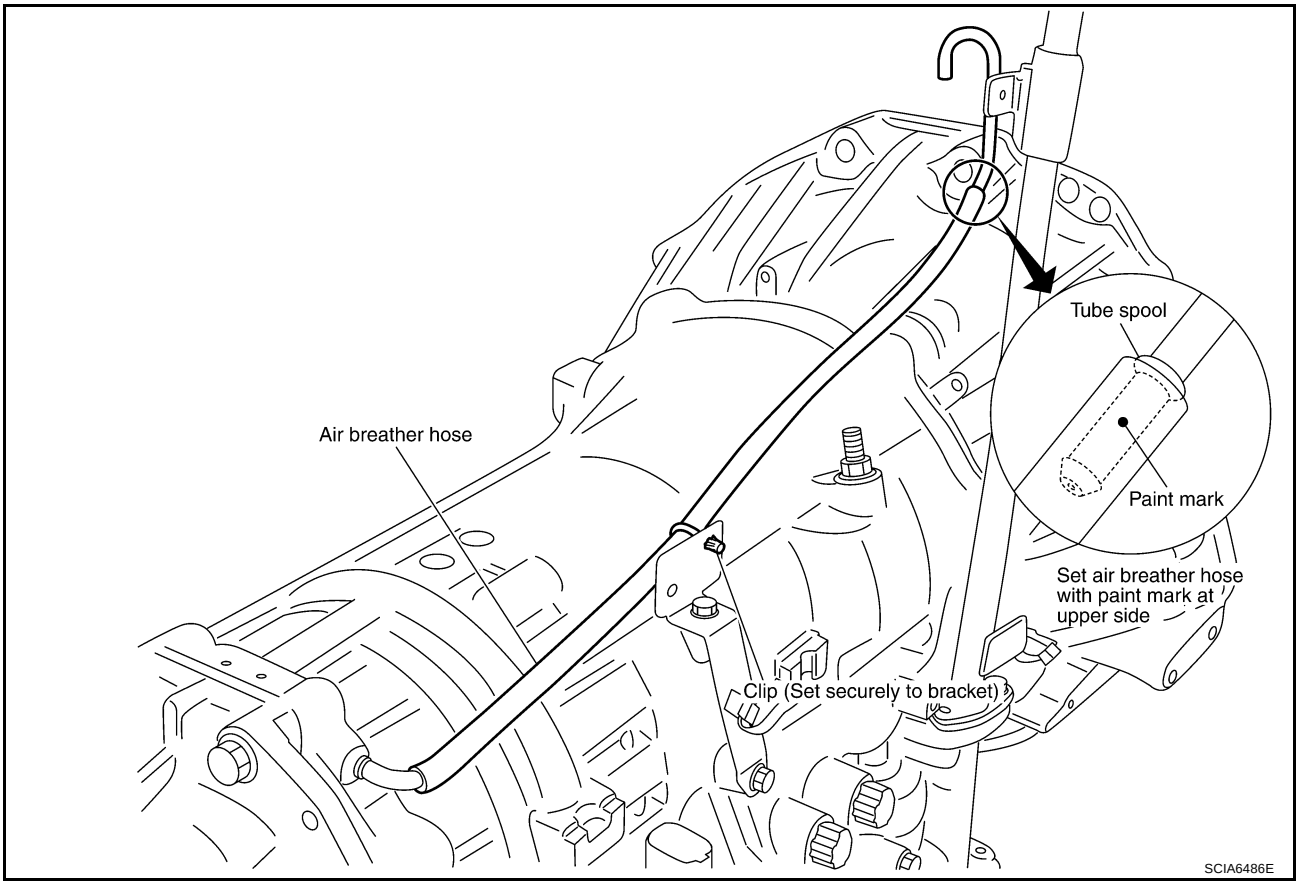

CAUTION:

- **When installing an air breather hose, be careful not to be crushed or blocked by folding or bending the hose.**
- **When inserting a hose to the transmission tube, be sure to insert it fully until its end reaches the tube bend R portion.**
- **When inserting a hose to the air breather tube, be sure to insert it fully until its end reaches the tube spool portion.**

TRANSMISSION ASSEMBLY

PFP:31020

Removal and Installation

NCS000J0

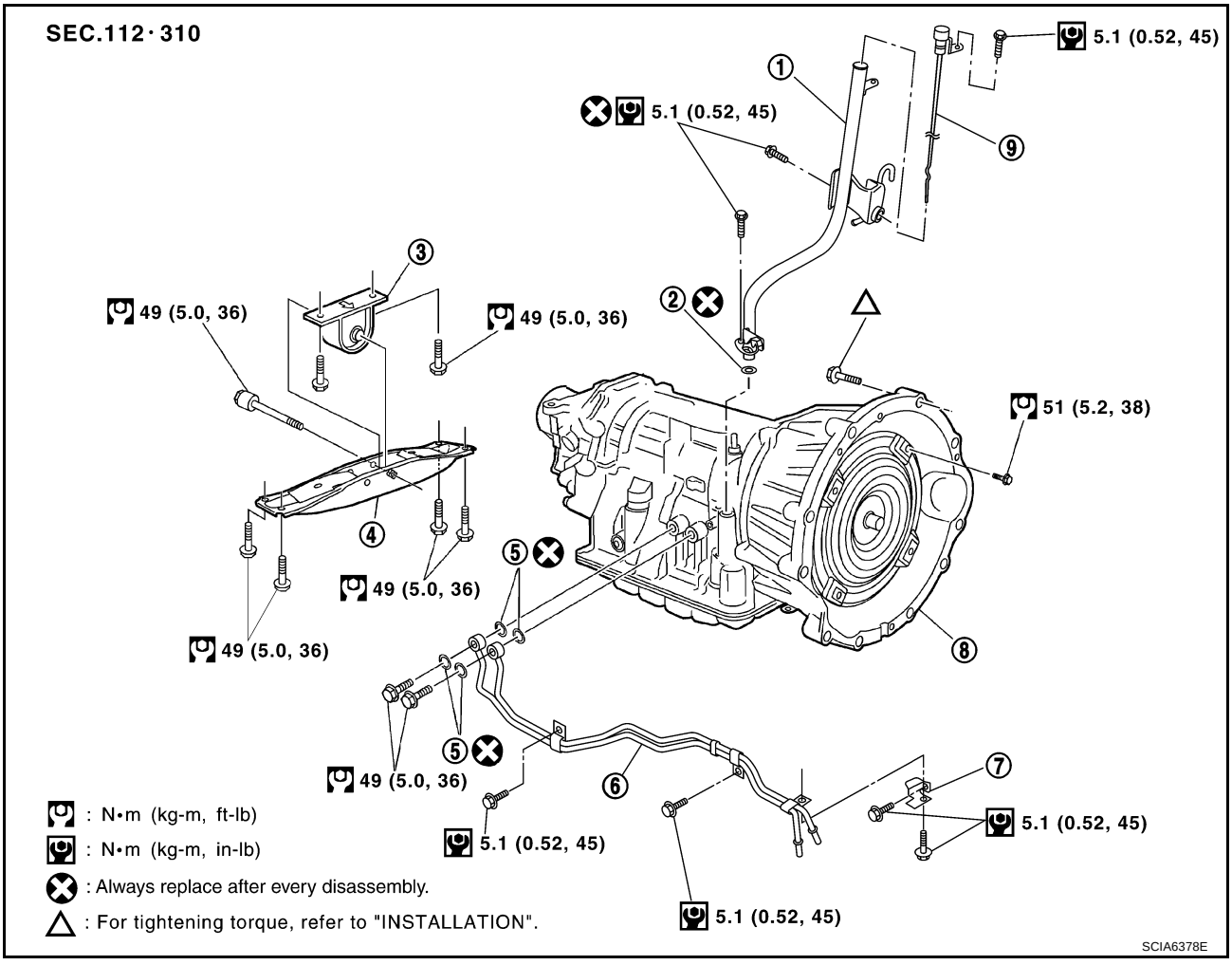

1. A/T fluid charging pipe	2. O-ring	3. Engine mounting insulator (rear)
4. Rear engine mounting member	5. Copper washer	6. Fluid cooler tube
7. Bracket	8. A/T assembly	9. A/T fluid level gauge

REMOVAL

CAUTION:

- **When removing the A/T assembly from engine, first remove the crankshaft position sensor (POS) from the A/T assembly.**
- **Be careful not to damage sensor edge.**

1. Disconnect the battery cable from the negative terminal.
2. Remove engine cover.
3. Remove A/T fluid level gauge.
4. Remove engine under cover with power tool.
5. Remove front cross bar with power tool. Refer to FSU-8, "Components" .
6. Remove exhaust front tube and center muffler with power tool. Refer to EX-3, "Removal and Installation" .
7. Remove three way catalyst. Refer to EM-25, "Removal and Installation" .
8. Remove rear propeller shaft. Refer to PR-4, "Removal and Installation" .

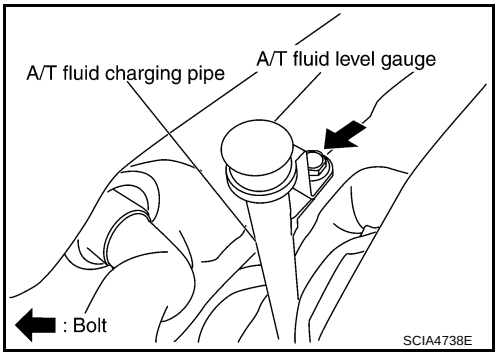

9. Remove control rod. Refer to AT-215, "Control Rod Removal and Installation" .
10. Remove crankshaft position sensor (POS) from A/T assembly. Refer to EM-29, "Removal and Installation" .

    CAUTION:
    - **Do not subject it to impact by dropping or hitting it.**
    - **Do not disassemble.**
    - **Do not allow metal filings, etc. to get on the sensor's front edge magnetic area.**
    - **Do not place in an area affected by magnetism.**

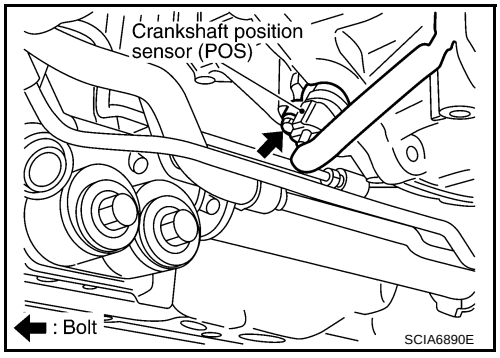

11. Remove rear cover plate. Refer to EM-29, "Removal and Installation" .
12. Remove starter motor. Refer to SC-19, "Removal and Installation" .

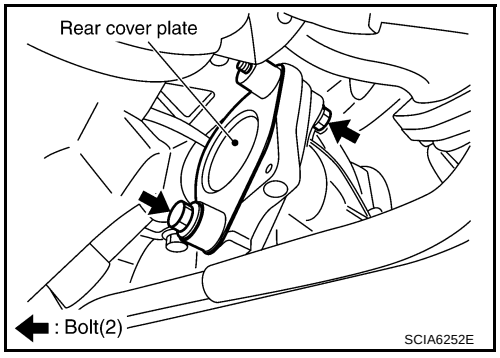

13. Remove rear plate cover from converter housing part. Refer to EM-29, "Removal and Installation" .

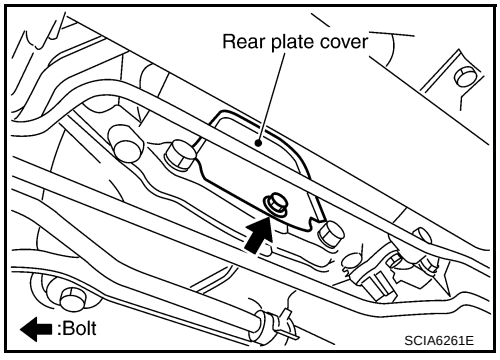

14. Turn crankshaft, and remove the four tightening bolts for drive plate and torque converter.

    CAUTION:
    When turning crankshaft, turn it clockwise as viewed from the front of the engine.
15. Support A/T assembly with a transmission jack.

    CAUTION:
    When setting the transmission jack, be careful not to allow it to collide against the drain plug.

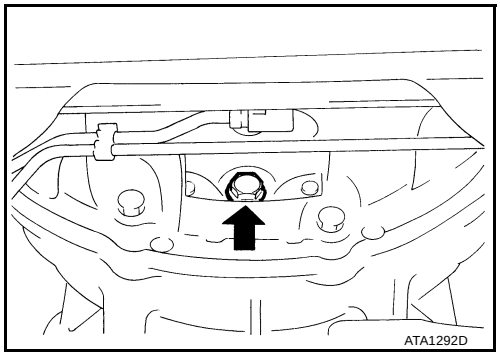

16. Remove rear engine mounting member with power tool.

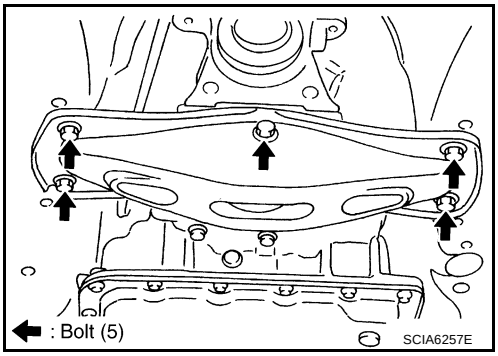

17. Remove engine mounting insulator (rear).
18. Remove air breather hose. Refer to AT-250, "Removal and Installation" .
19. Disconnect A/T assembly harness connector.
20. Remove fluid cooler tube and A/T fluid charging pipe.
21. Remove O-ring from A/T fluid charging pipe.
22. Plug up openings such as the A/T fluid charging pipe hole, etc.
23. Remove bolts fixing A/T assembly to engine with power tool.

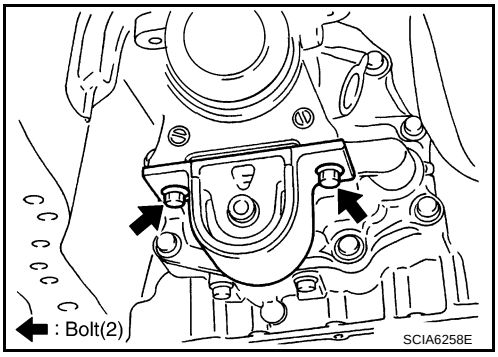

24. Remove A/T assembly from vehicle with a transmission jack.
    - **Secure torque converter to prevent it from dropping.**
    - **Secure A/T assembly to a transmission jack.**

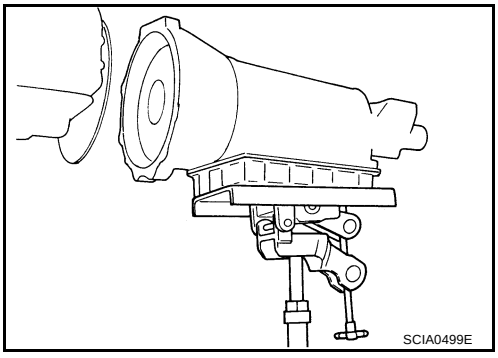

INSPECTION

Installation and Inspection of Torque Converter

- After inserting a torque converter to a A/T, be sure to check distance “A” to ensure it is within the reference value limit.

  Distance “A”: 25.0 mm (0.98 in) or more

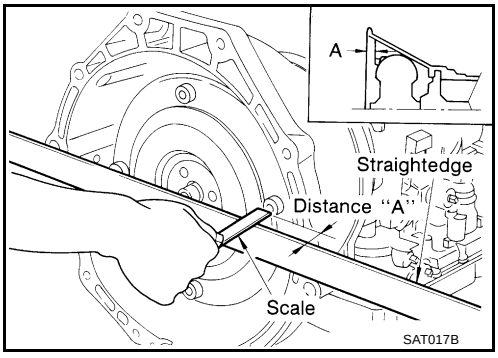

INSTALLATION

Install the removed parts in the reverse order of the removal, while paying attention to the following work.

- When installing A/T assembly to the engine, attach the fixing bolts in accordance with the following standard.

Bolt No.	1	2	3	4
Number of bolts	1	5	2	2
Bolt length "ℓ"mm (in)	55 (2.17)	65 (2.56)	56.5 (2.224)	35 (1.38)
Tightening torque N·m (kg-m, ft-lb)	75 (7.7, 55)		55 (5.6, 41)	47 (4.8, 35)

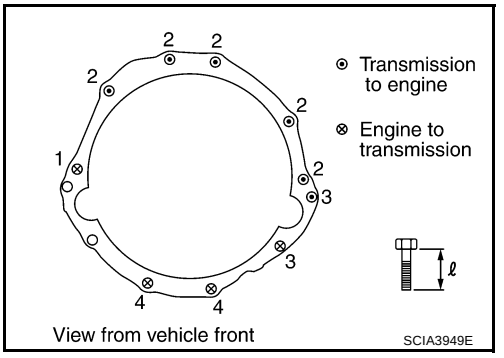

- Align the positions of tightening bolts for drive plate with those of the torque converter, and temporarily tighten the bolts. Then tighten the bolts with the specified torque. Refer to AT-251, "Removal and Installation" .

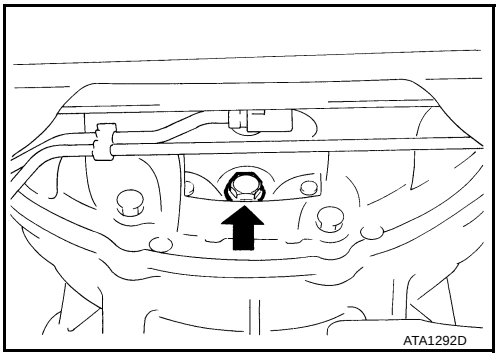

CAUTION:

- **When turning crankshaft, turn it clockwise as viewed from the front of the engine.**
- **When tightening the tightening bolts for the torque converter after fixing the crankshaft pulley bolts, be sure to confirm the tightening torque of the crankshaft pulley mounting bolts. Refer to EM-89, "INSTALLATION" .**
- **After converter is installed to drive plate, rotate crankshaft several turns and check to be sure that A/T rotates freely without binding.**

- Install crankshaft position sensor (POS). Refer to EM-29, "Removal and Installation" .
- After completing installation, check A/T fluid leakage, A/T fluid level and A/T position. Refer to AT-12, "Checking A/T Fluid" , AT-216, "Checking of A/T Position" .

OVERHAUL

PFP:00000

Components

NCS000J1

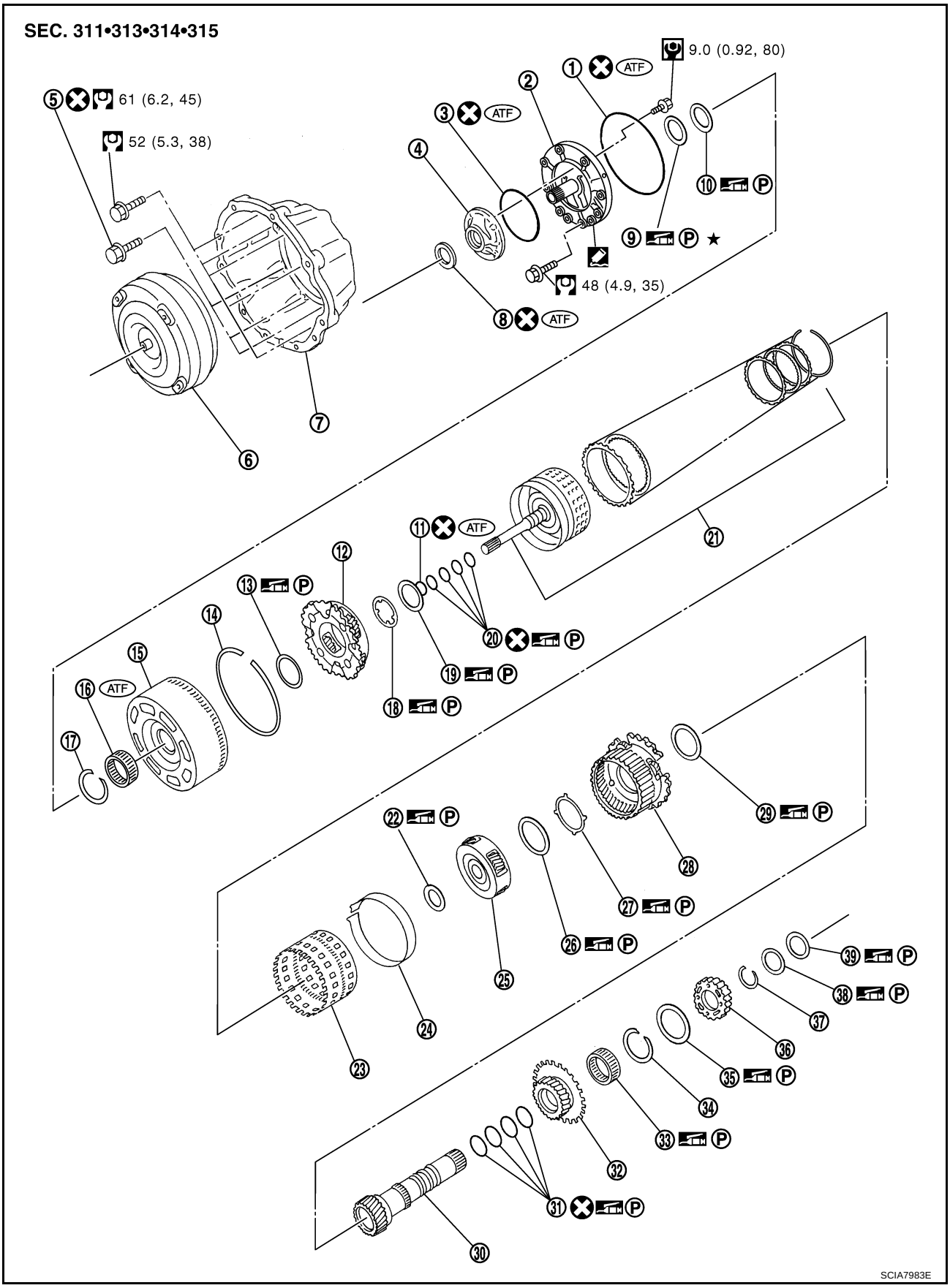

1.	O-ring	2.	Oil pump cover	3.	O-ring
4.	Oil pump housing	5.	Self-sealing bolt	6.	Torque converter
7.	Converter housing	8.	Oil pump housing oil seal	9.	Bearing race
10.	Needle bearing	11.	O-ring	12.	Front carrier assembly
13.	Needle bearing	14.	Snap ring	15.	Front sun gear
16.	3rd one-way clutch	17.	Snap ring	18.	Bearing race
19.	Needle bearing	20.	Seal ring	21.	Input clutch assembly
22.	Needle bearing	23.	Rear internal gear	24.	Brake band
25.	Mid carrier assembly	26.	Needle bearing	27.	Bearing race
28.	Rear carrier assembly	29.	Needle bearing	30.	Mid sun gear
31.	Seal ring	32.	Rear sun gear	33.	1st one-way clutch
34.	Snap ring	35.	Needle bearing	36.	High and low reverse clutch hub
37.	Snap ring	38.	Bearing race	39.	Needle bearing

Refer to GI section to make sure icons (symbol marks) in the figure. Refer to GI-10, "Components" .

However, refer to the following symbols for others.

: Apply Genuine RTV silicone sealant or equivalent. Refer to GI-46, "Recommended Chemical Products and Sealants" .

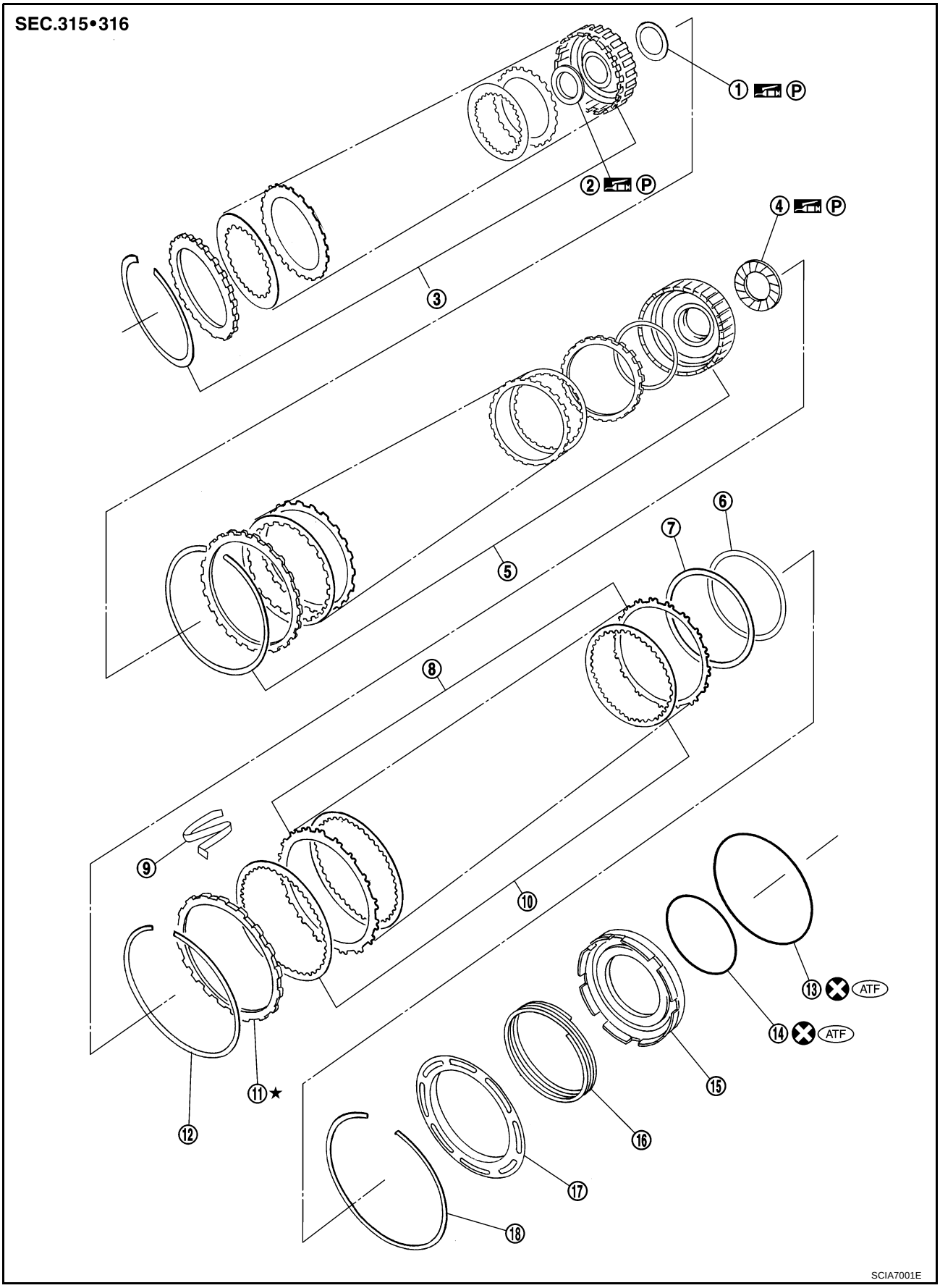

1. Needle bearing
2. Bearing race
3. High and low reverse clutch assembly
4. Needle bearing
5. Direct clutch assembly
6. Reverse brake dish plate
7. Reverse brake dish plate
8. Reverse brake driven plate
9. N-spring

10. Reverse brake drive plate	11. Reverse brake retaining plate	12. Snap ring
13. D-ring	14. D-ring	15. Reverse brake piston
16. Return spring	17. Spring retainer	18. Snap ring

Refer to GI section to make sure icons (symbol marks) in the figure. Refer to GI-10, "Components" .

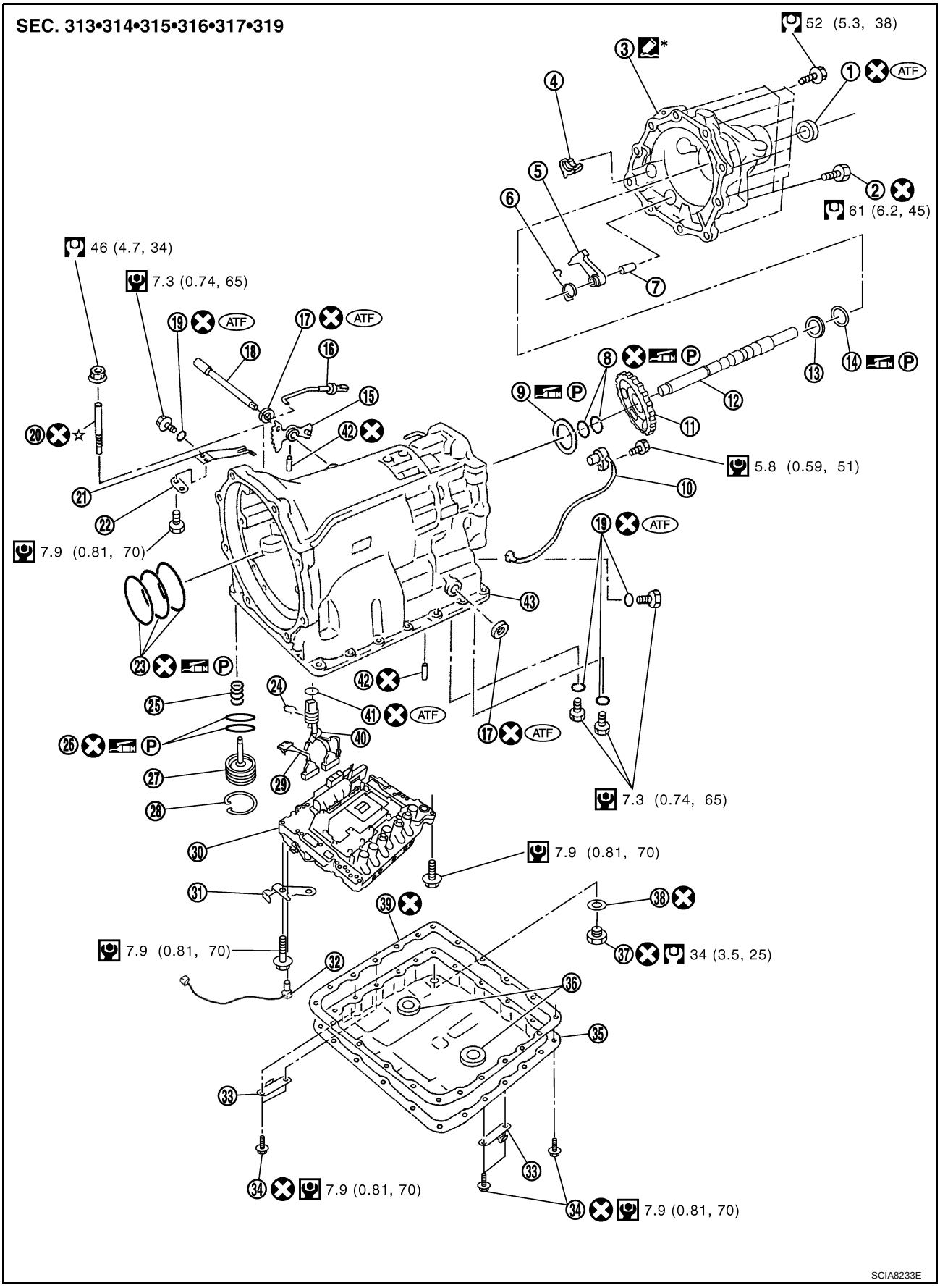

1.	Rear oil seal	2.	Self-sealing bolt	3.	Rear extension
4.	Parking actuator support	5.	Parking pawl	6.	Return spring
7.	Pawl shaft	8.	Seal ring	9.	Needle bearing

10.	Revolution sensor	11.	Parking gear	12.	Output shaft
13.	Bearing race	14.	Needle bearing	15.	Manual plate
16.	Parking rod	17.	Manual shaft oil seal	18.	Manual shaft
19.	O-ring	20.	Band servo anchor end pin	21.	Detent spring
22.	Spacer	23.	Seal ring	24.	Snap ring
25.	Return spring	26.	O-ring	27.	Servo assembly
28.	Snap ring	29.	Sub-harness	30.	Control valve with TCM
31.	Bracket	32.	A/T fluid temperature sensor 2	33.	Clip
34.	Oil pan mounting bolt	35.	Oil pan	36.	Magnet
37.	Drain plug	38.	Drain plug gasket	39.	Oil pan gasket
40.	Terminal cord assembly	41.	O-ring	42.	Retaining pin
43.	Transmission case				

Refer to GI section to make sure icons (symbol marks) in the figure. Refer to GI-10, "Components" .

However, refer to the following symbols for others.

* : Apply Genuine Anaerobic Liquid Gasket or equivalent. Refer to GI-46, "Recommended Chemical Products and Sealants" .

Oil Channel

NCS000J2

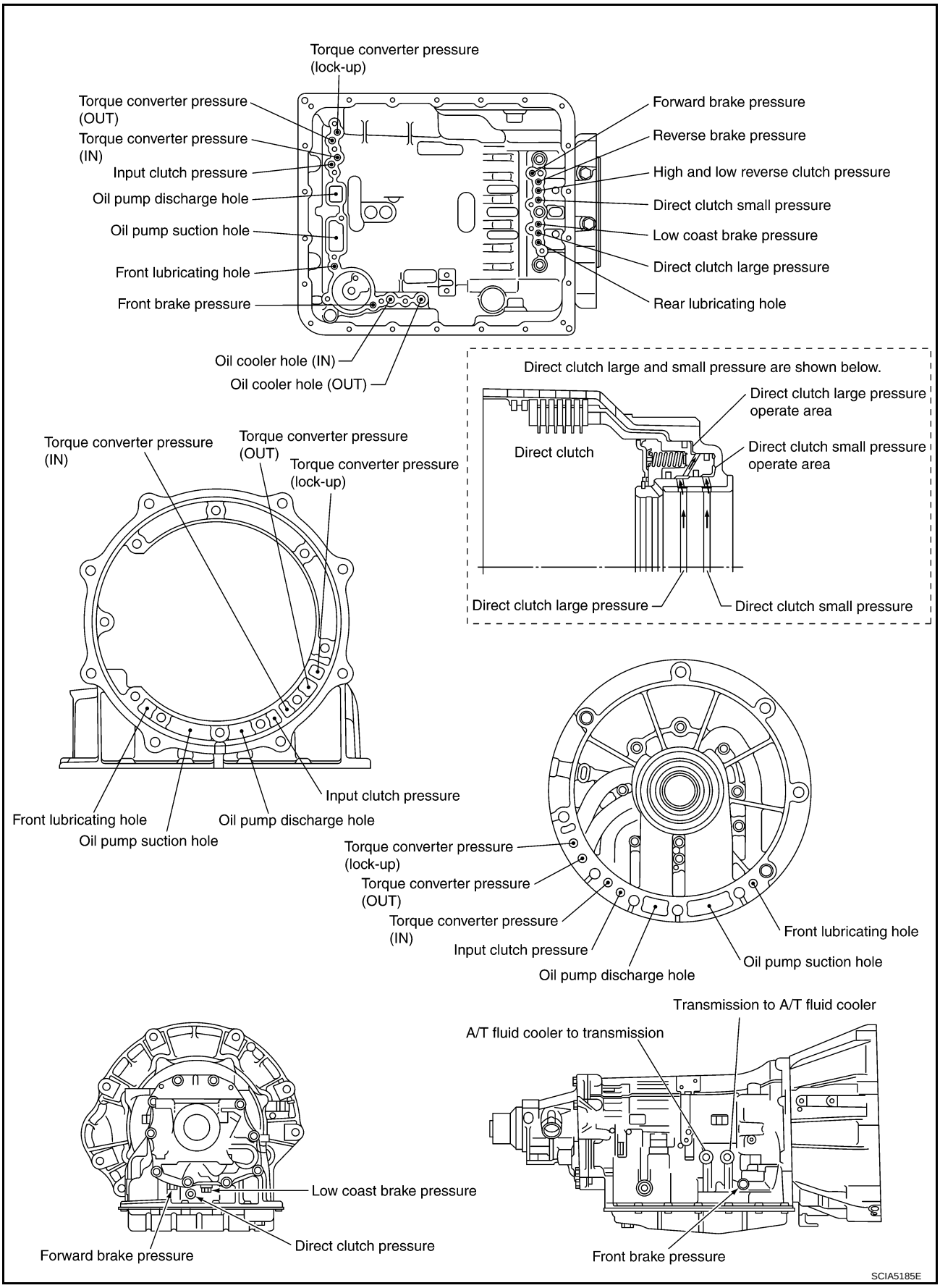

Locations of Adjusting Shims, Needle Bearings, Thrust Washers and Snap Rings

NCS000J3

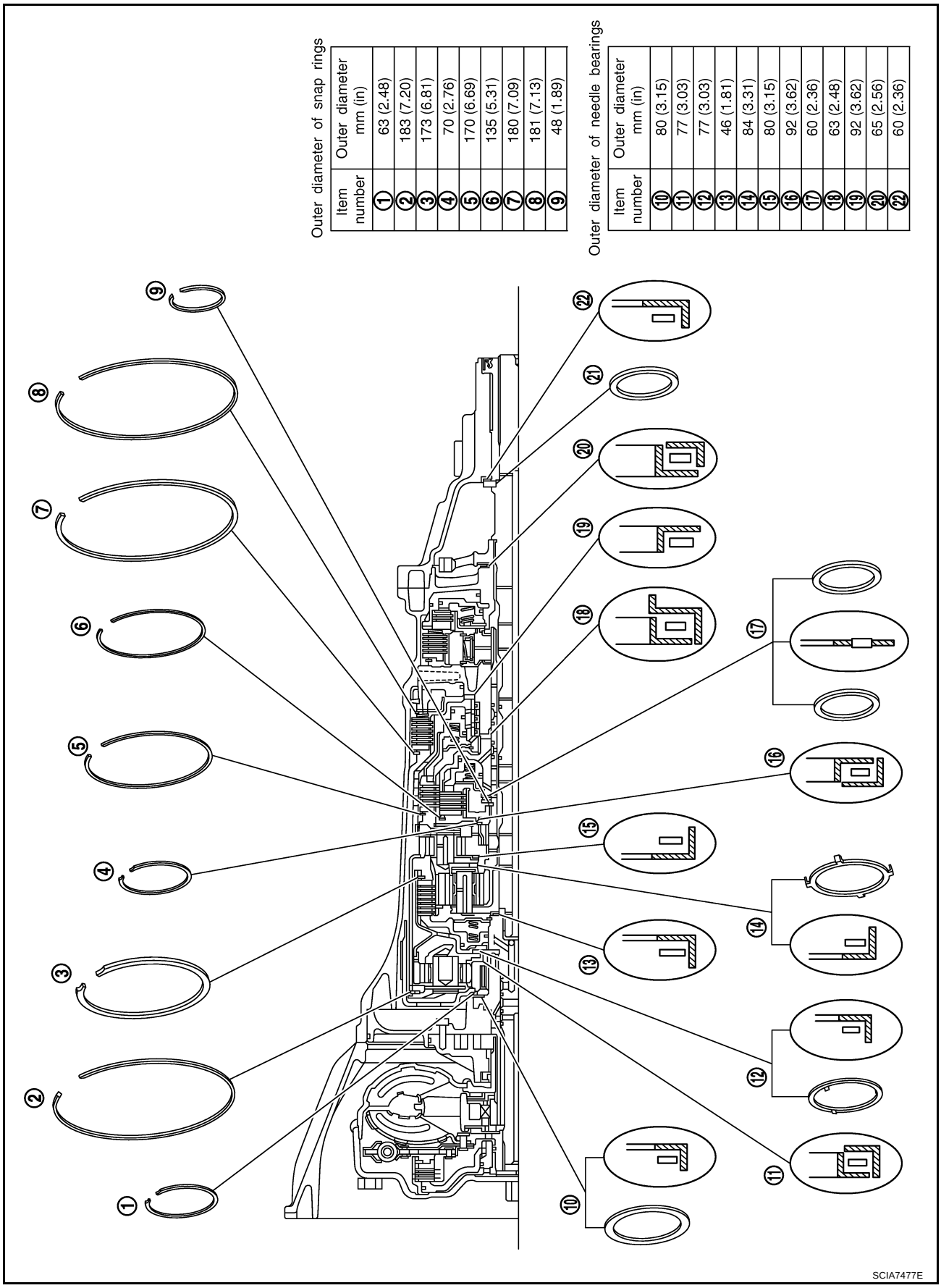

Outer diameter of snap rings

Item number	Outer diameter mm (in)
1	63 (2.48)
2	183 (7.20)
3	173 (6.81)
4	70 (2.76)
5	170 (6.69)
6	135 (5.31)
7	180 (7.09)
8	181 (7.13)
9	48 (1.89)

Outer diameter of needle bearings

Item number	Outer diameter mm (in)
10	80 (3.15)
11	77 (3.03)
12	77 (3.03)
13	46 (1.81)
14	84 (3.31)
15	80 (3.15)
16	92 (3.62)
17	60 (2.36)
18	63 (2.48)
19	92 (3.62)
20	65 (2.56)
22	60 (2.36)

DISASSEMBLY

PFP:31020

Disassembly

NCS000J4

CAUTION:
Do not disassemble parts behind Drum Support. Refer to AT-17, "Cross-sectional View" .

1. Drain ATF through drain plug.
2. Remove torque converter by holding it firmly and turing while pulling straight out.

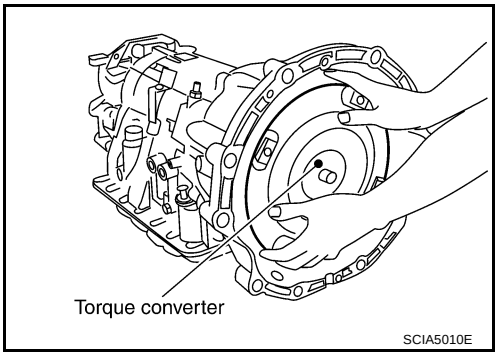

3. Check torque converter one-way clutch using check tool as shown at figure.
a. Insert check tool into the groove of bearing support built into one-way clutch outer race.
b. When fixing bearing support with check tool, rotate one-way clutch spline using screwdriver.
c. Check that inner race rotates clockwise only. If not, replace torque converter assembly.

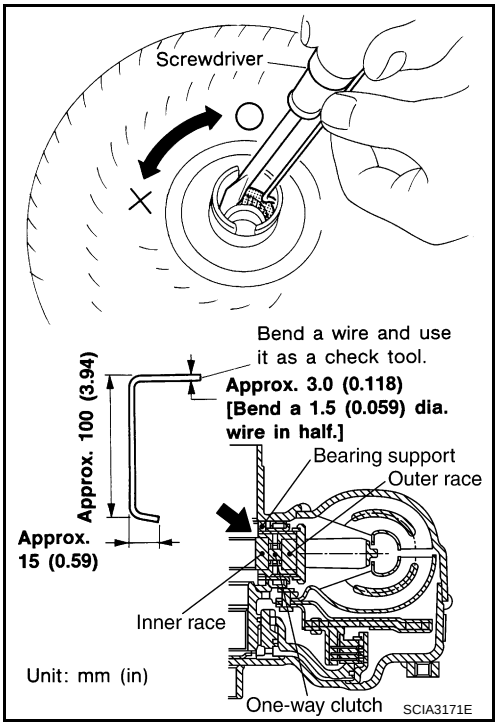

4. Remove tightening bolts (1) for converter housing and transmission case.
- ⬅: Bolt (8)
- Self-sealing bolts (2)
5. Remove converter housing from transmission case.

CAUTION:
Be careful not to scratch converter housing.

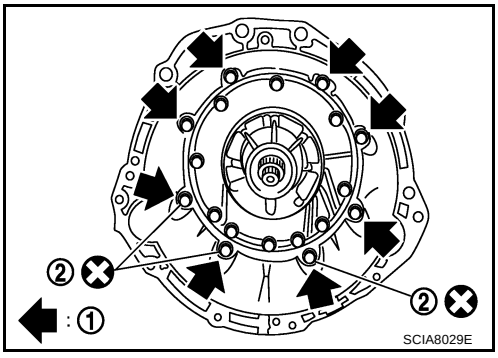

6. Remove O-ring from input clutch assembly.

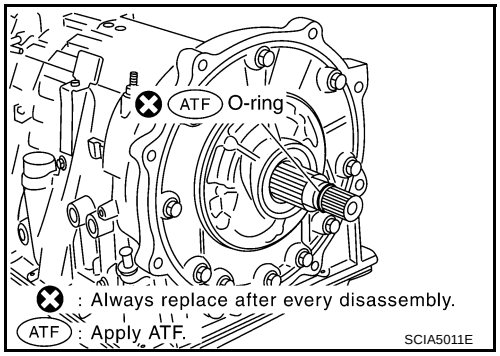

7. Remove tightening bolts for oil pump assembly and transmission case.

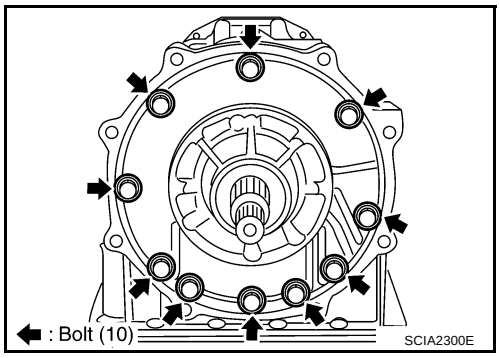

8. Attach the sliding hammers to oil pump assembly and extract it evenly from transmission case.

CAUTION:

- **Fully tighten sliding hammer screw.**
- **Make sure that bearing race is installed to the oil pump assembly edge surface.**

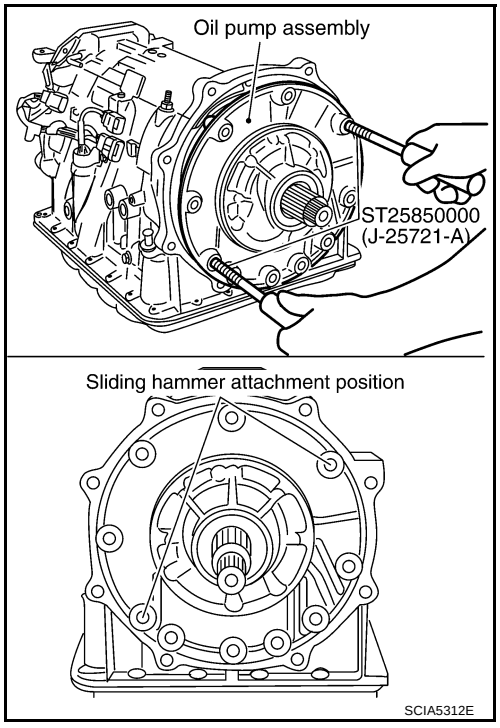

9. Remove O-ring from oil pump assembly.

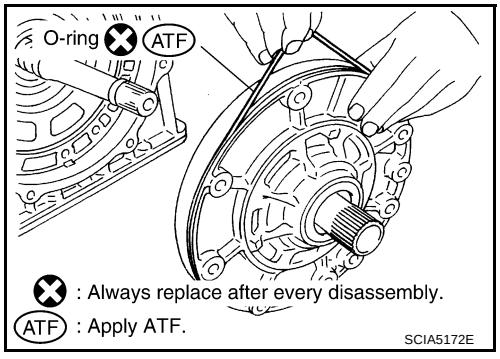

10. Remove bearing race from oil pump assembly.

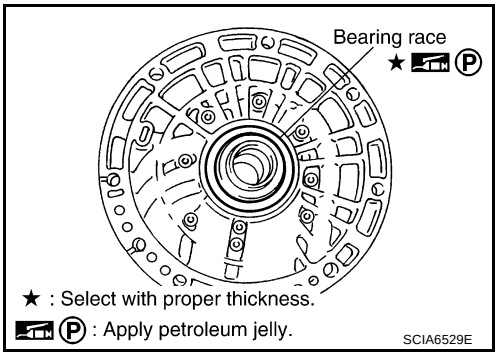

11. Remove needle bearing from front sun gear.

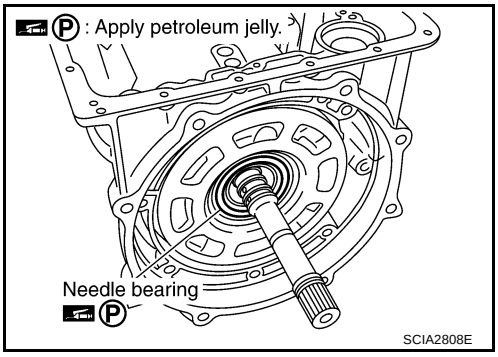

12. Remove front sun gear assembly from front carrier assembly.

NOTE:
Remove front sun gear by rotating left/right.

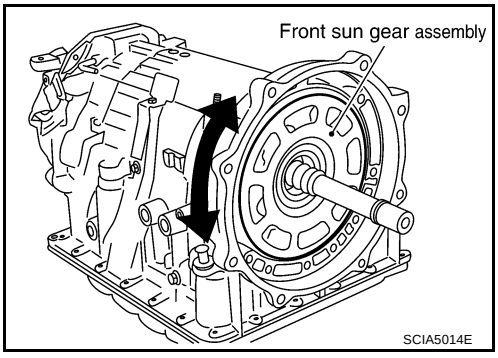

13. Remove seal rings from input clutch assembly.

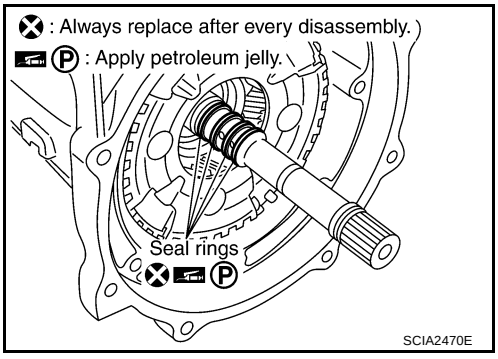

14. Remove front carrier assembly from rear carrier assembly. (With input clutch assembly and rear internal gear.)

CAUTION:
Be careful to remove it with needle bearing.

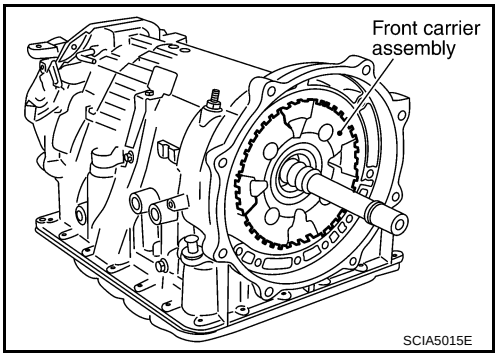

15. Loosen lock nut and remove band servo anchor end pin from transmission case.

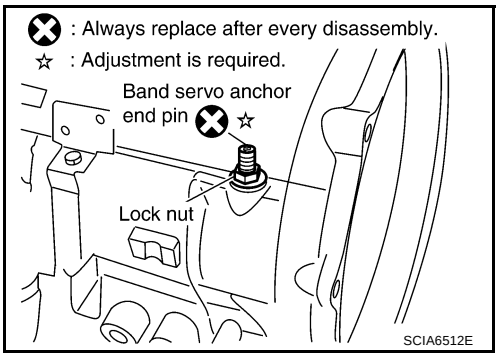

16. Remove brake band from transmission case.

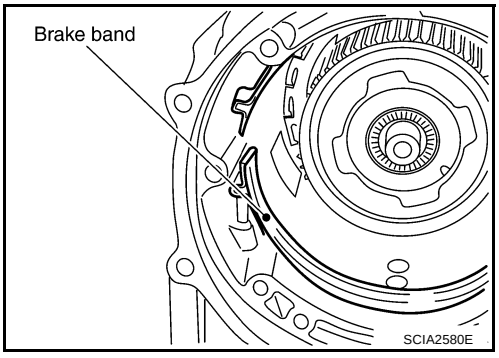

- **To prevent brake linings from cracking or peeling, do not stretch the flexible band unnecessarily. When removing the brake band, always secure it with a clip as shown in the figure at right.**
  Leave the clip in position after removing the brake band.
- **Check brake band facing for damage, cracks, wear or burns.**

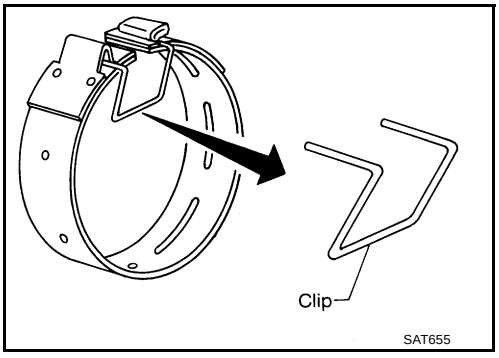

17. Remove mid carrier assembly and rear carrier assembly as a unit.

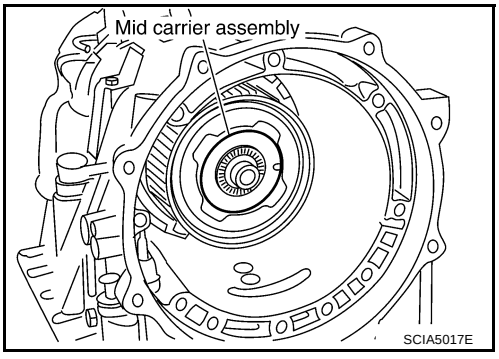

18. Remove mid carrier assembly from rear carrier assembly.

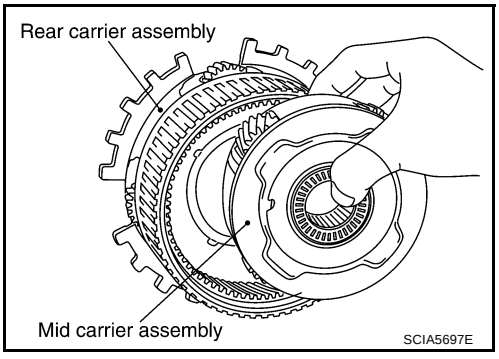

19. Remove needle bearing (front side) from mid carrier assembly.

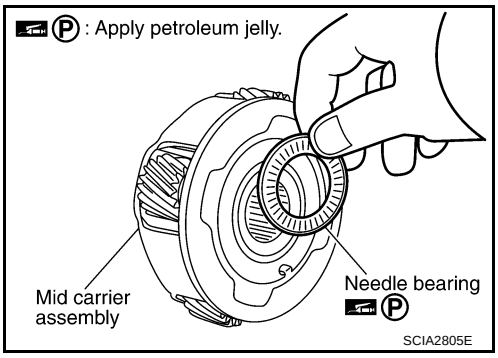

20. Remove needle bearing (rear side) from mid carrier assembly.

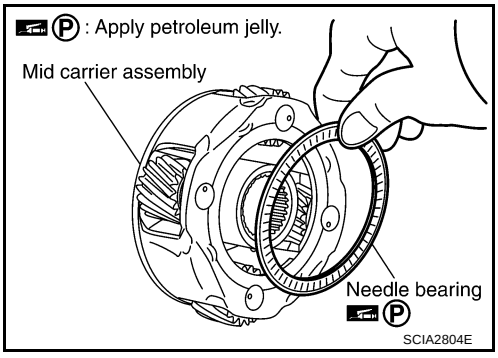

21. Remove bearing race from rear carrier assembly.

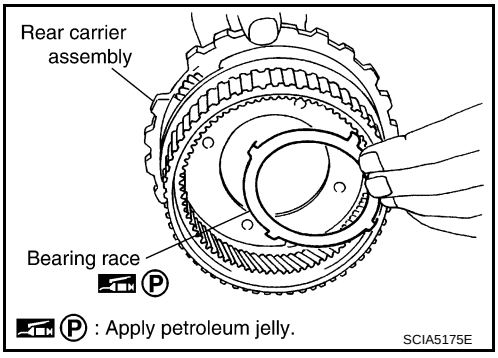

22. Remove needle bearing from rear carrier assembly.

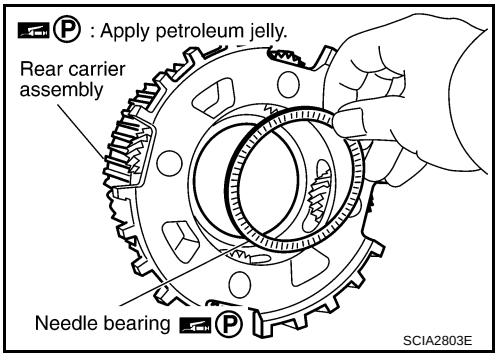

23. Remove mid sun gear assembly, rear sun gear assembly and high and low reverse clutch hub as a unit.

CAUTION:
Be careful to remove then with bearing race and needle bearing.

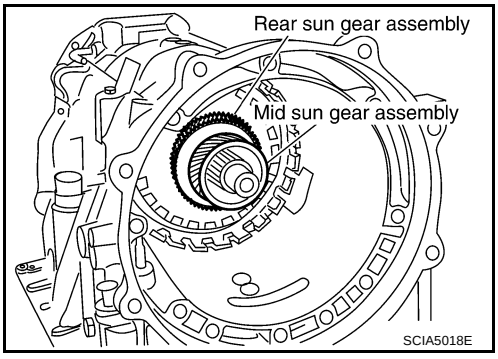

24. Remove high and low reverse clutch assembly from direct clutch assembly.

CAUTION:
Make sure that needle bearing is installed to the high and low reverse clutch assembly edge surface.

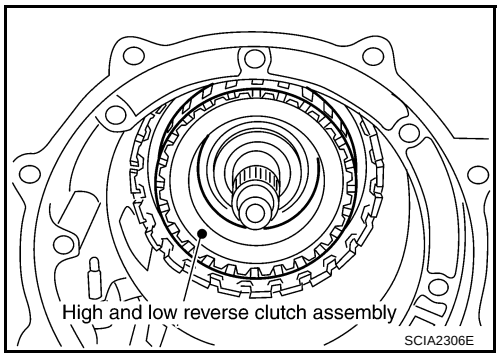

25. Remove direct clutch assembly from reverse brake.

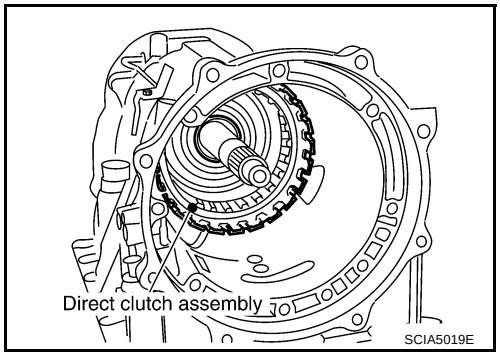

26. Remove needle bearing from drum support.

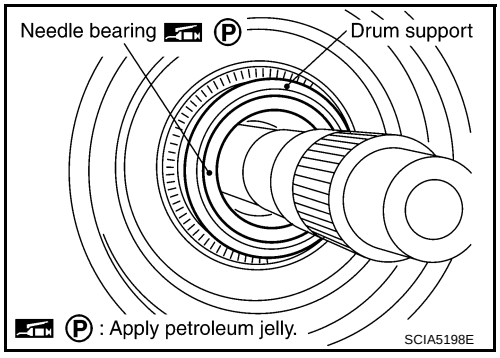

27. Remove snap ring from A/T assembly harness connector.

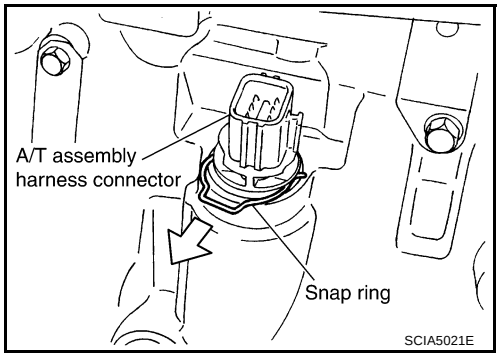

28. Push A/T assembly harness connector.

CAUTION:
Be careful not to damage connector.

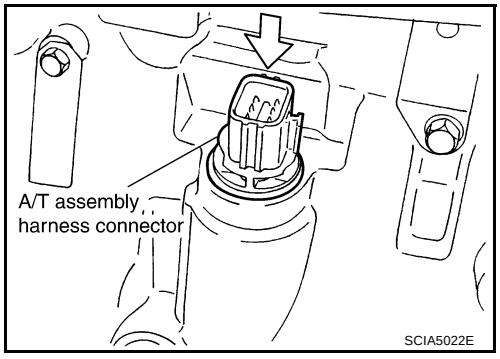

29. Remove clips (1).
30. Remove oil pan (2) and oil pan gasket.
    - ⇦: Front
    - ⬅: Bolt (22)
    - Drain plug (3)

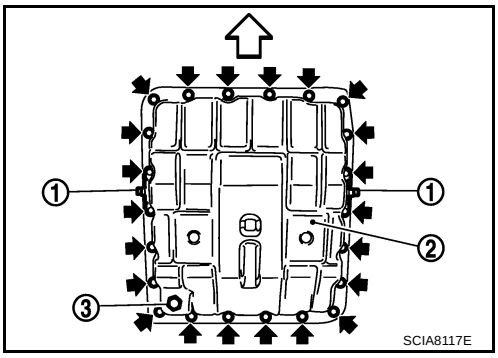

31. Check foreign materials in oil pan to help determine causes of malfunction. If the ATF is very dark, smells burned, or contains foreign particles, the frictional material (clutches, band) may need replacement. A tacky film that will not wipe clean indicates varnish build up. Varnish can cause valves, servo, and clutches to stick and can inhibit pump pressure.
    - **If frictional material is detected, perform A/T fluid cooler cleaning. Refer to AT-14, "A/T Fluid Cooler Cleaning".**

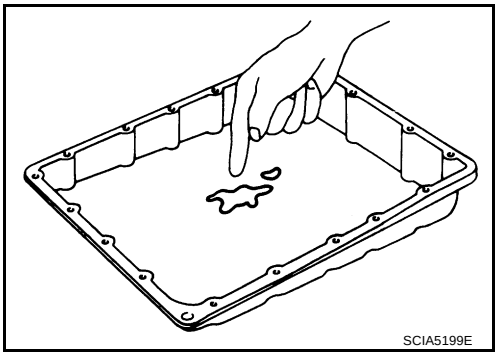

32. Remove magnets from oil pan.

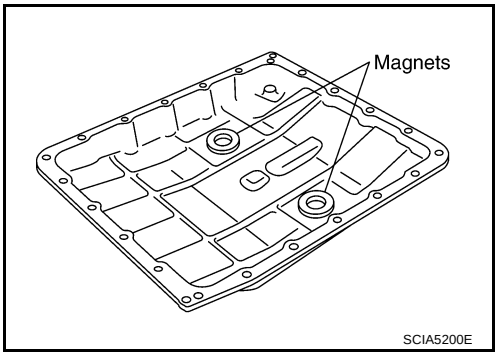

33. Disconnect A/T fluid temperature sensor 2 connector (A).

    CAUTION:
    Be careful not to damage connector.
34. Straighten terminal clips to free terminal cord assembly and A/T fluid temperature sensor 2 harness.
    - ⬅: Terminal clip (4)

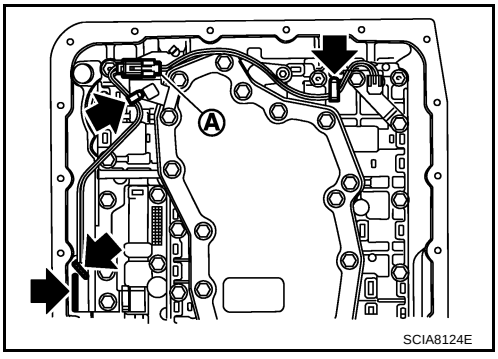

35. Disconnect revolution sensor connector.

    CAUTION:
    Be careful not to damage connector.

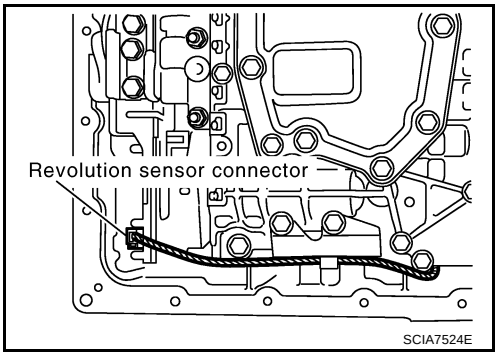

36. Straighten terminal clip to free revolution sensor harness.

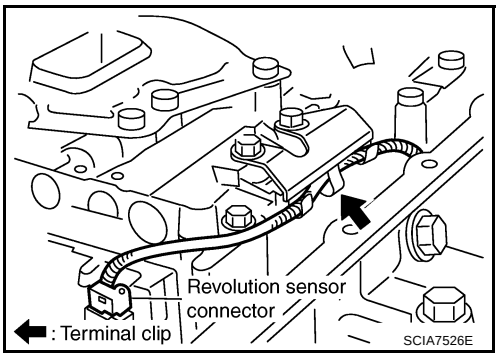

37. Remove bolts A, B and C from control valve with TCM.
    - ⇦: Front

Bolt symbol	Length mm (in)	Number of bolts
A	42 (1.65)	5
B	55 (2.17)	6
C	40 (1.57)	1

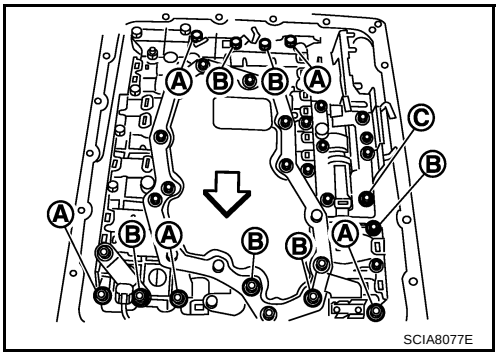

38. Remove control valve with TCM from transmission case.

    CAUTION:
    When removing, be careful with the manual valve notch and manual plate height. Remove it vertically.

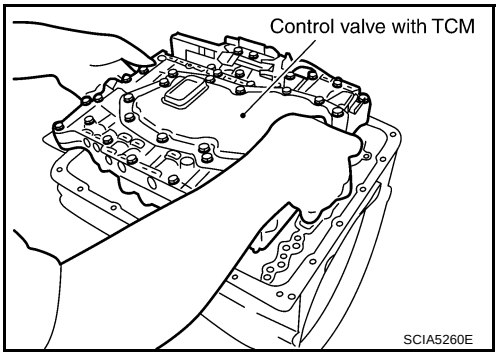

39. Remove A/T fluid temperature sensor 2 with bracket from control valve with TCM.

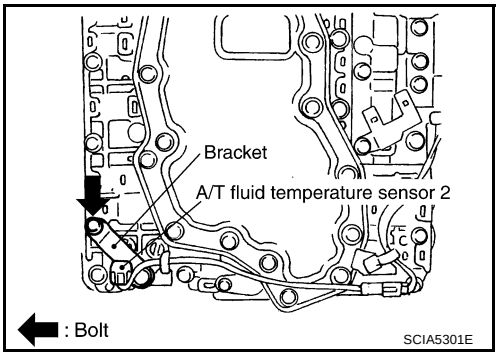

40. Remove bracket from A/T fluid temperature sensor 2.

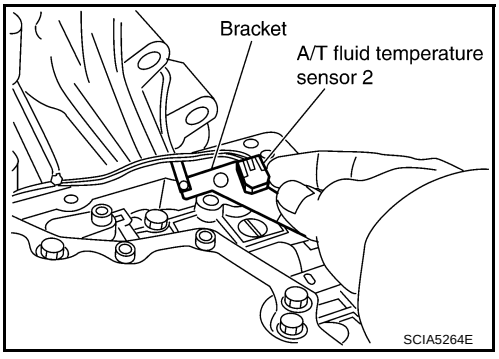

41. Remove O-ring from A/T assembly harness connector.

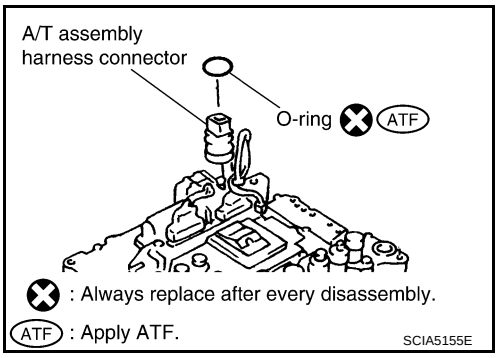

42. Disconnect TCM connectors.

CAUTION:
Be careful not to damage connectors.

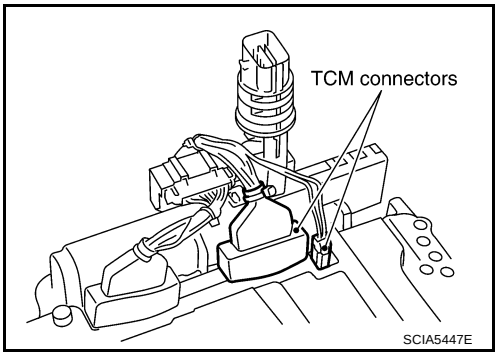

43. Remove A/T assembly harness connector from control valve with TCM using a flat-bladed screwdriver.

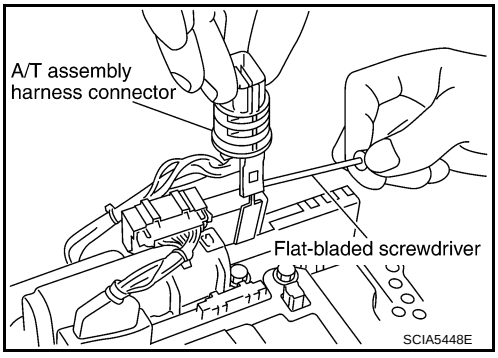

44. Disconnect TCM connector and park/neutral position switch connector.

CAUTION:
Be careful not to damage connectors.

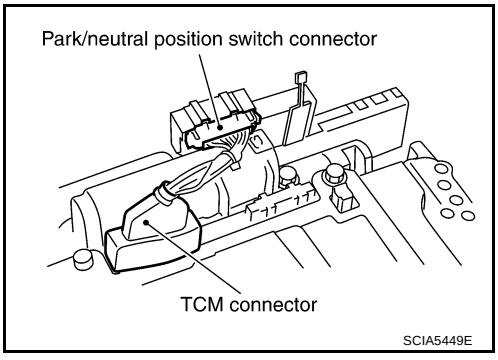

45. Remove tightening bolts for rear extension assembly and transmission case.

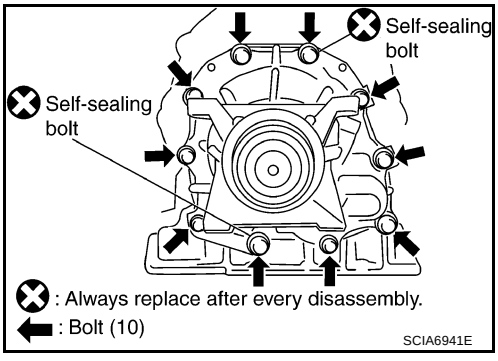

46. Tap rear extension assembly with a soft hammer.

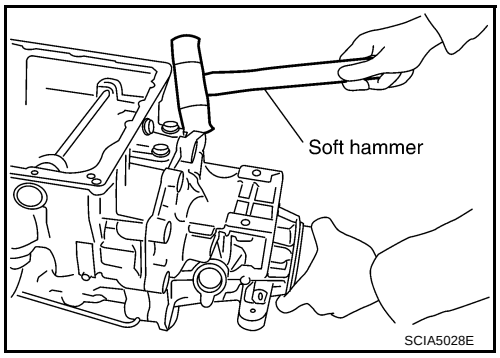

47. Remove rear extension assembly from transmission case. (With needle bearing)

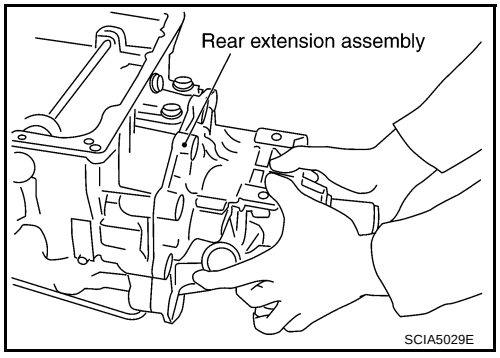

48. Remove bearing race from output shaft.

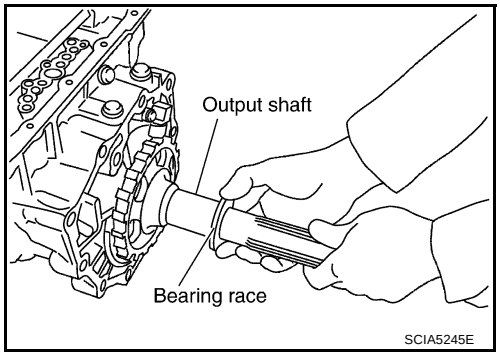

49. Remove output shaft from transmission case by rotating left/ right.

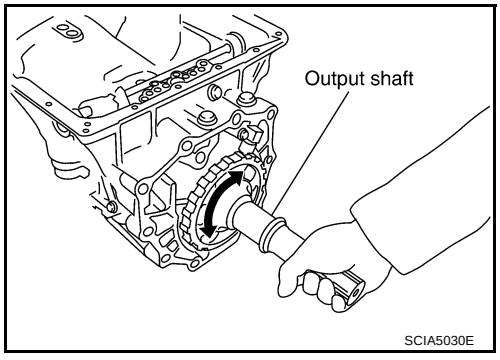

50. Remove parking gear from output shaft.

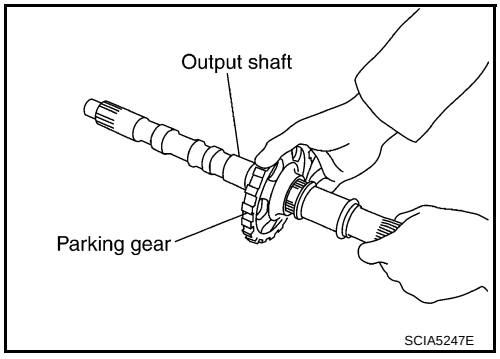

51. Remove seal rings from output shaft.

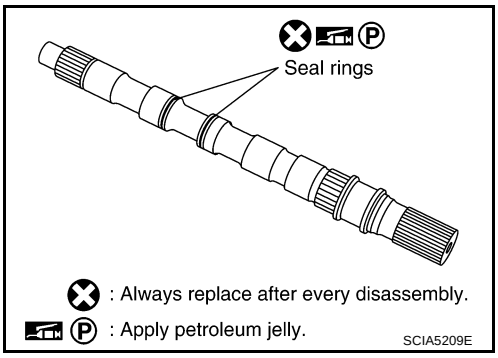

52. Remove needle bearing from transmission case.

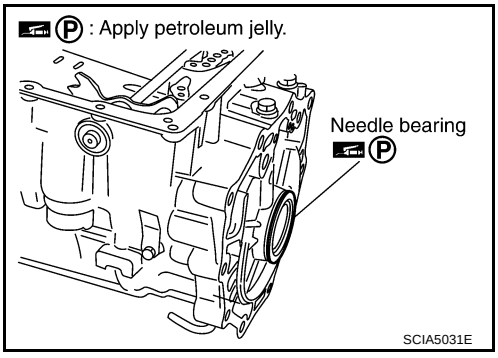

53. Remove revolution sensor from transmission case.

CAUTION:

- **Do not subject it to impact by dropping or hitting it.**
- **Do not disassemble.**
- **Do not allow metal filings, etc. to get on the sensor's front edge magnetic area.**
- **Do not place in an area affected by magnetism.**

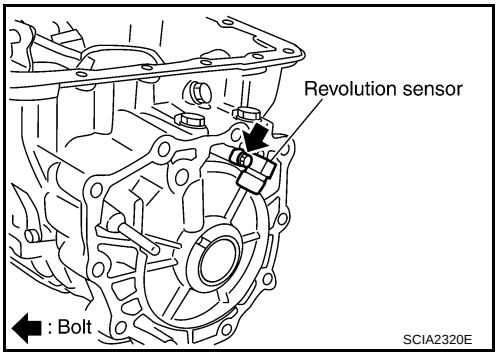

54. Remove reverse brake snap ring (fixing plate) using 2 flat-bladed screwdrivers.

NOTE:
Press out snap ring from the transmission case oil pan side gap using a flat-bladed screwdriver, and remove it using another screwdriver.

55. Remove reverse brake retaining plate from transmission case.
    - **Check facing for burns, cracks or damage. If necessary, replace the plate.**

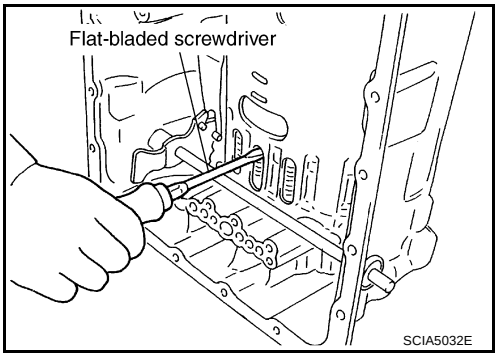

56. Remove N-spring from transmission case.

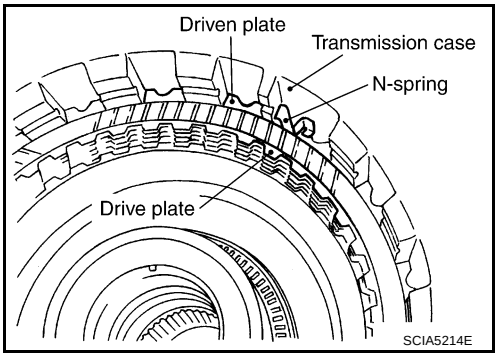

57. Remove reverse brake drive plates, driven plates and dish plates from transmission case.
    - **Check facing for burns, cracks or damage. If necessary, replace the plate.**

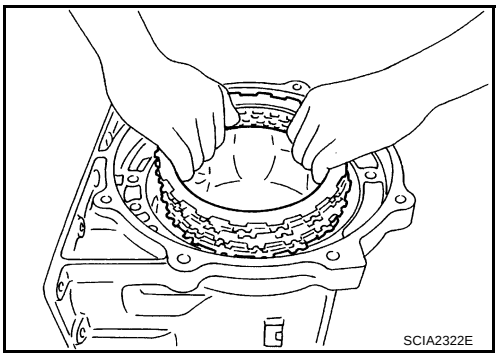

58. Remove snap ring (fixing spring retainer) using a flat-bladed screwdriver.

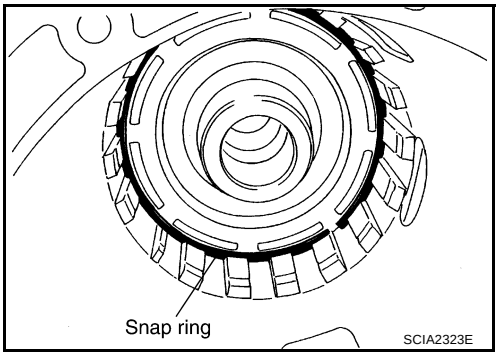

59. Remove spring retainer and return spring from transmission case.

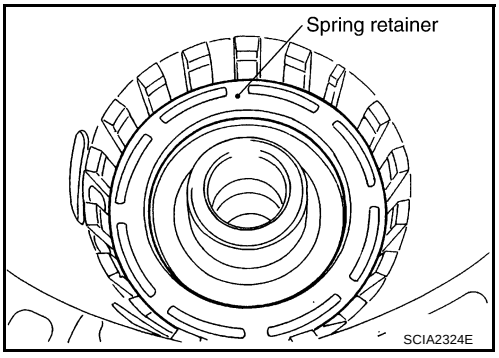

60. Remove seal rings from drum support.

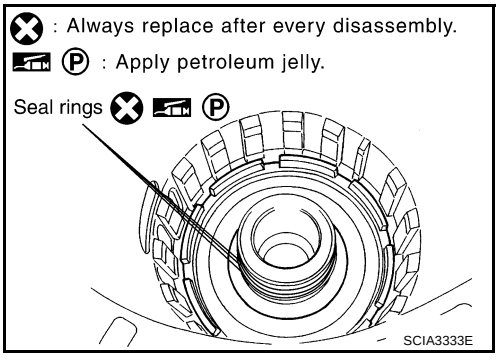

61. Remove needle bearing from drum support edge surface.

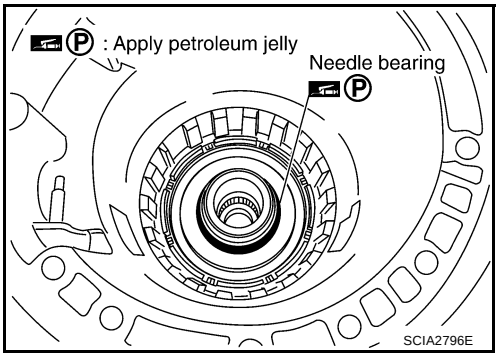

62. Remove reverse brake piston from transmission case with compressed air. Refer to AT-261, "Oil Channel" .

CAUTION:
Care should be taken not to abruptly blow air. It makes pistons incline, as the result, it becomes hard to disassemble the pistons.

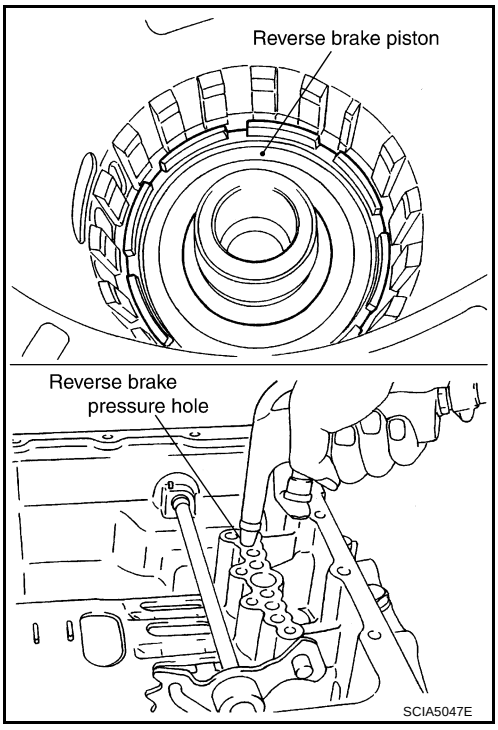

63. Remove D-rings from reverse brake piston.

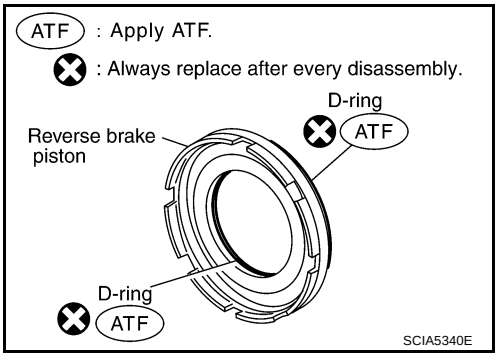

64. Use a pin punch [4 mm (0.16 in) dia. commercial service tool] to knock out retaining pin.

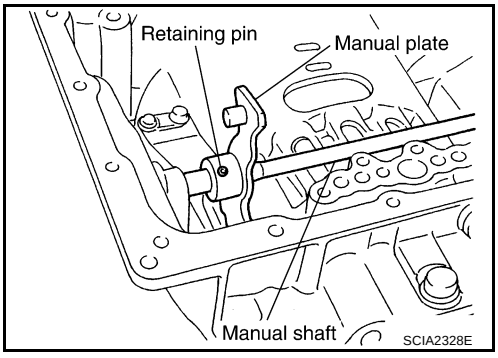

65. Remove manual shaft retaining pin with pair of nippers.

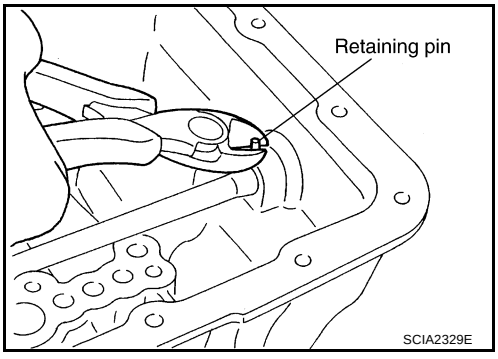

66. Remove manual plate (with parking rod) from manual shaft.

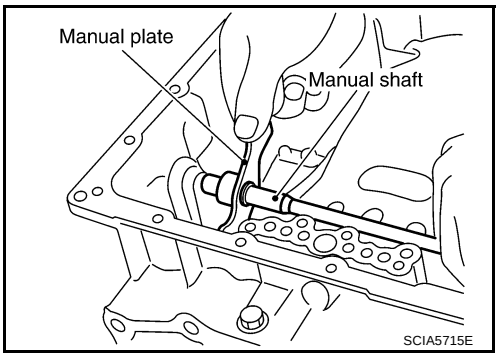

67. Remove parking rod from manual plate.

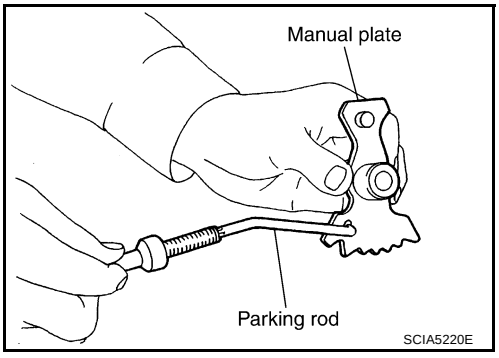

68. Remove manual shaft from transmission case.

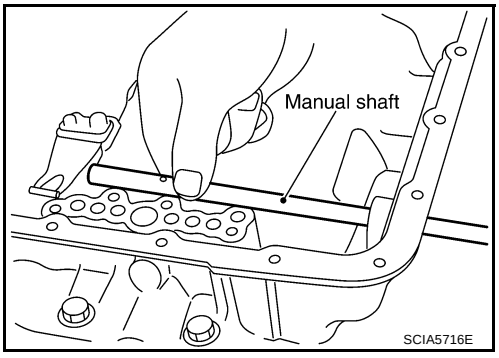

69. Remove manual shaft oil seals using a flat-bladed screwdriver.

CAUTION:

Be careful not to scratch transmission case.

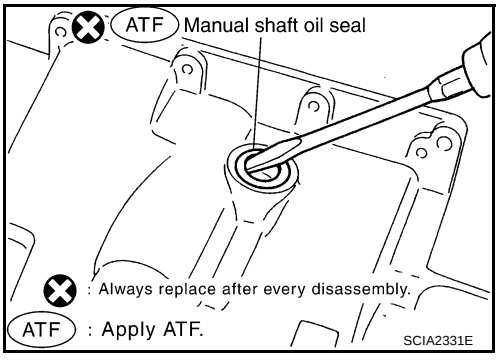

70. Remove detent spring and spacer from transmission case.

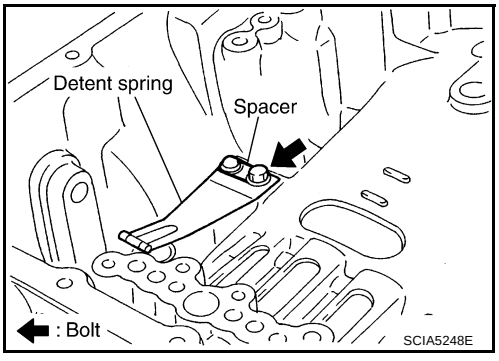

71. Using pair of snap ring pliers, remove snap ring from transmission case.

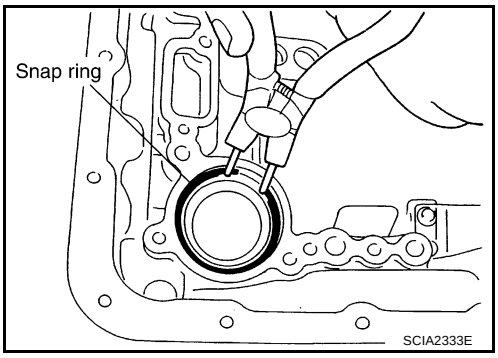

72. Remove servo assembly (with return spring) from transmission case.

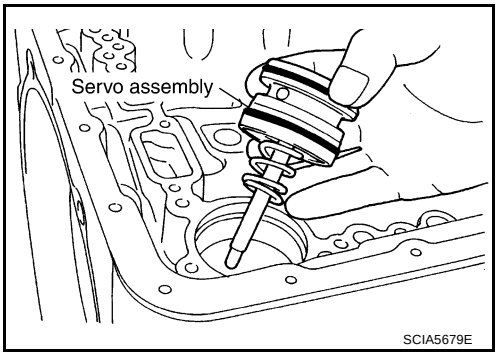

73. Remove return spring from servo assembly.

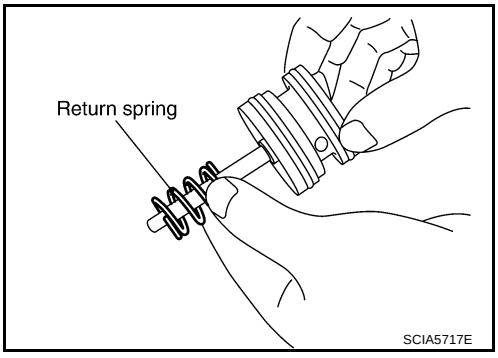

74. Remove O-rings from servo assembly.

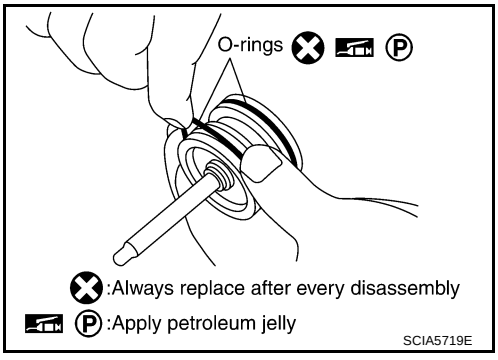

75. Remove needle bearing (1) from rear extension.

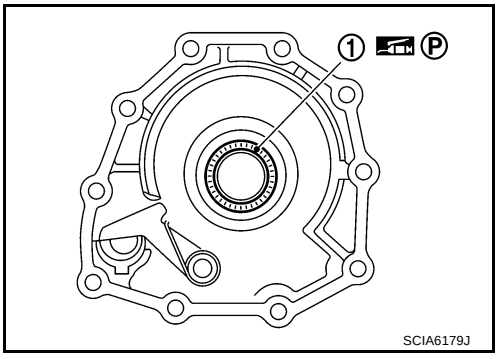

76. Remove parking actuator support from rear extension.

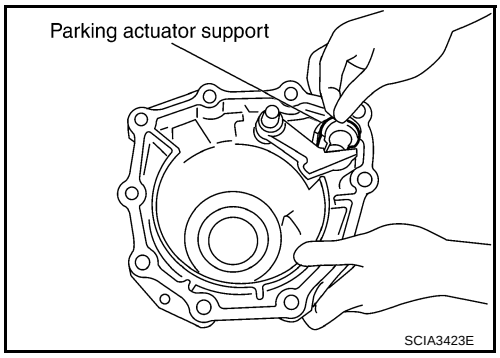

77. Remove parking pawl (with return spring) and pawl shaft from rear extension.

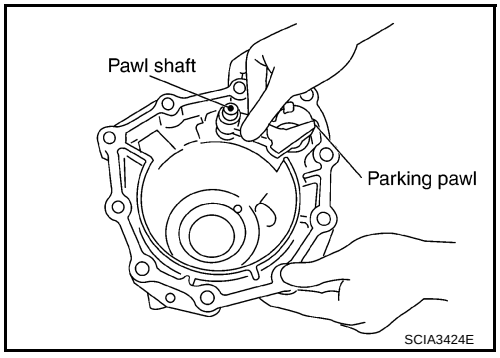

78. Remove return spring (1) from parking pawl (2).

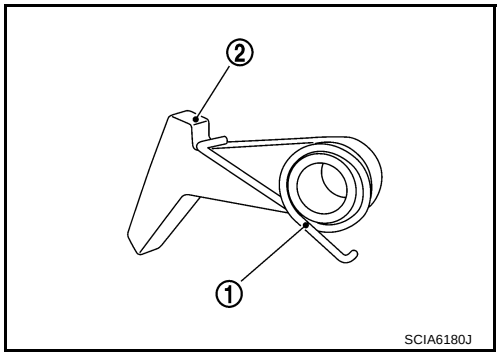

79. Remove rear oil seal from rear extension.

CAUTION:

Be careful not to scratch rear extension.

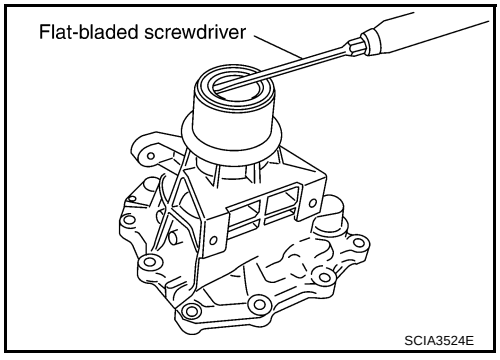

REPAIR FOR COMPONENT PARTS

PFP:00000

Oil Pump

NCS000J5

COMPONENTS

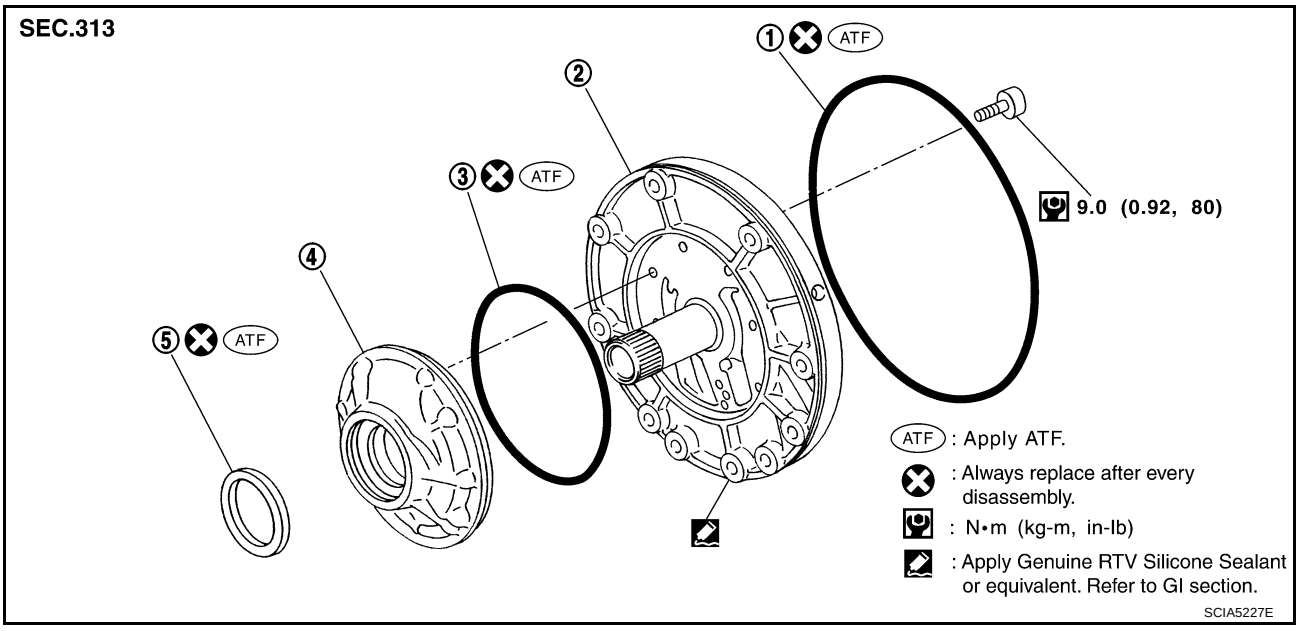

1. O-ring
2. Oil pump cover
3. O-ring
4. Oil pump housing
5. Oil pump housing oil seal

DISASSEMBLY

1. Remove oil pump housing from oil pump cover.

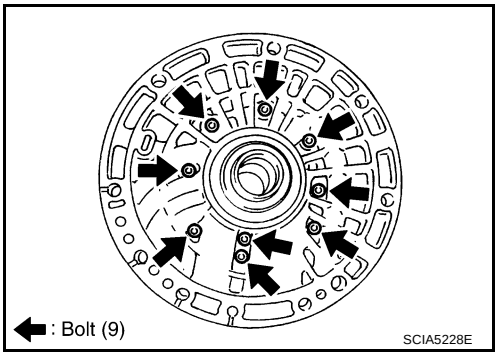

2. Remove oil pump housing oil seal using a flat-bladed screwdriver.

CAUTION:
Be careful not to scratch oil pump housing.

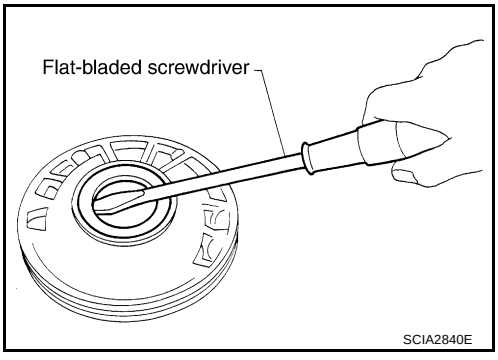

3. Remove O-ring from oil pump housing.

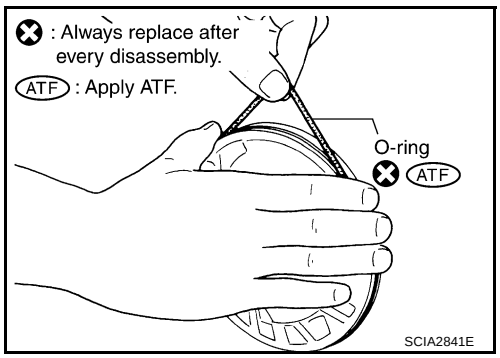

4. Remove O-ring from oil pump cover.

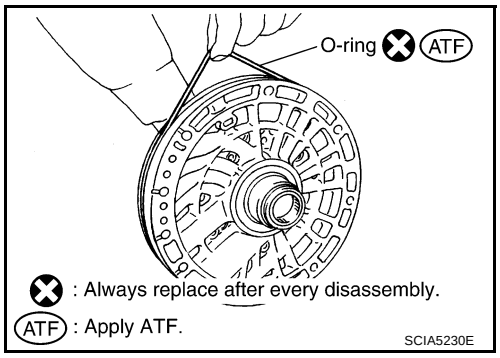

ASSEMBLY

1. Install O-ring to oil pump cover.

   CAUTION:
   - **Do not reuse O-ring.**
   - **Apply ATF to O-ring.**

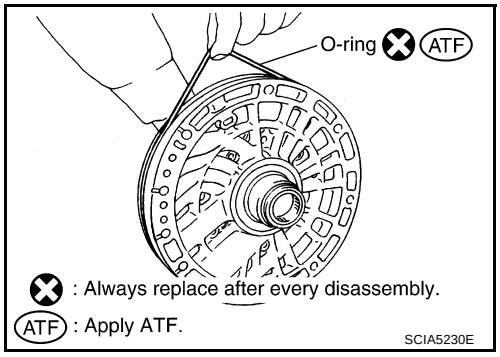

2. Install O-ring to oil pump housing.

   CAUTION:
   - **Do not reuse O-ring.**
   - **Apply ATF to O-ring.**

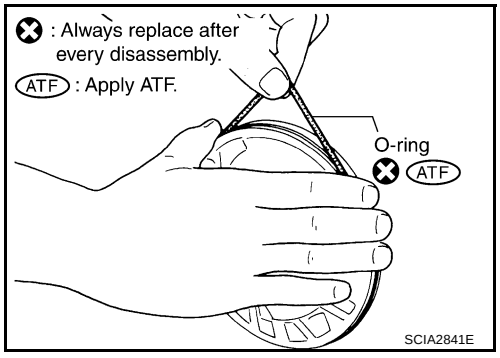

3. Using the drift, install oil pump housing oil seal to the oil pump housing until it is flush.

CAUTION:

- **Do not reuse oil pump housing oil seal.**
- **Apply ATF to oil pump housing oil seal.**

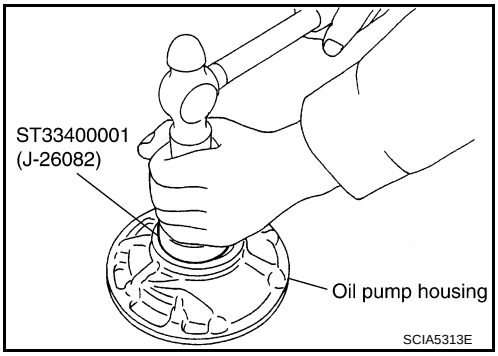

4. Install oil pump housing to oil pump cover.
5. Tighten bolts to the specified torque in numerical order shown in the figure after temporarily tightening them. Refer to AT-279, "COMPONENTS" .

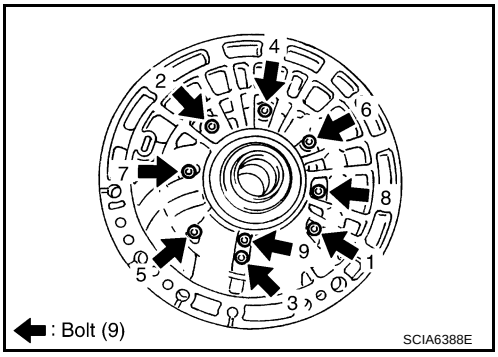

Front Sun Gear, 3rd One-way Clutch

NCS000J6

COMPONENTS

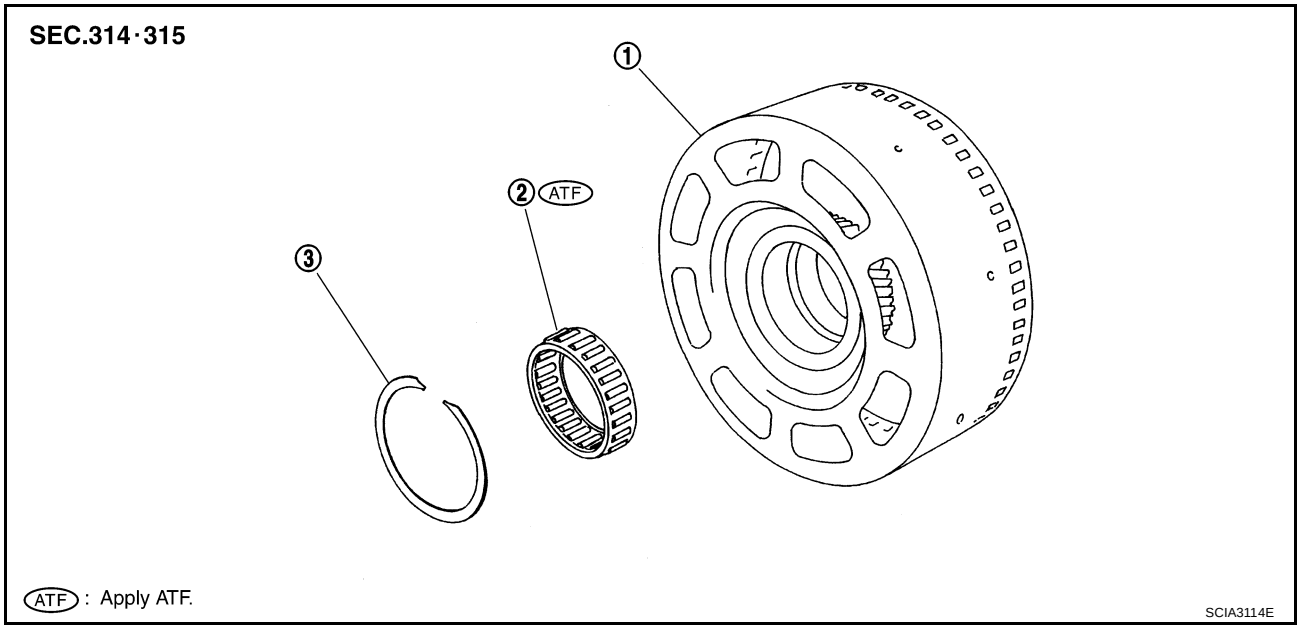

1. Front sun gear
2. 3rd one-way clutch
3. Snap ring

DISASSEMBLY

1. Using a flat-bladed screwdriver, remove snap ring from front sun gear.

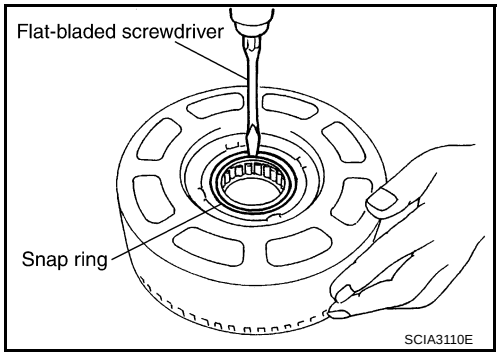

2. Remove 3rd one-way clutch from front sun gear.

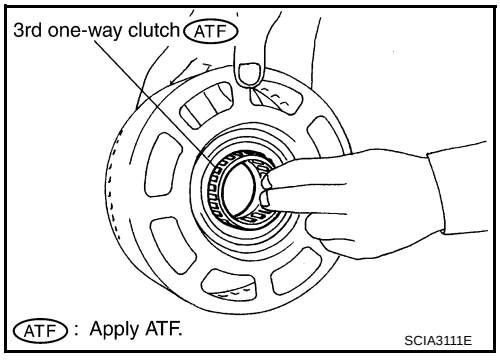

INSPECTION

3rd One-way Clutch

- Check frictional surface for wear or damage.

  CAUTION:

  If necessary, replace the 3rd one-way clutch.

Front Sun Gear Snap Ring

- Check for deformation, fatigue or damage.

  CAUTION:
  If necessary, replace the snap ring.

Front Sun Gear

- Check for deformation, fatigue or damage.

  CAUTION:
  If necessary, replace the front sun gear.

ASSEMBLY

1. Install 3rd one-way clutch in front sun gear.

   CAUTION:
   Apply ATF to 3rd one-way clutch.

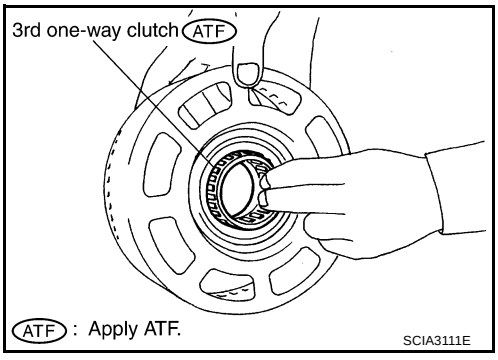

2. Using a flat-bladed screwdriver, install snap ring in front sun gear.

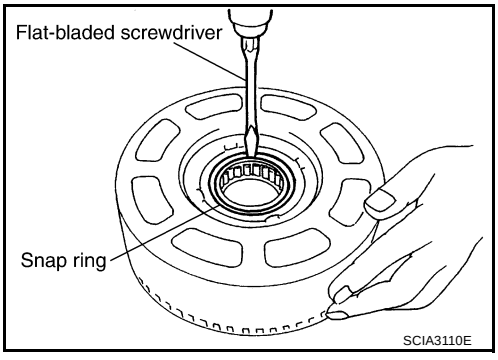

3. Check operation of 3rd one-way clutch.

a. Hold oil pump assembly and turn front sun gear.

b. Check 3rd one-way clutch for correct locking and unlocking directions.

   CAUTION:
   If not as shown in the figure, check installation direction of 3rd one-way clutch.

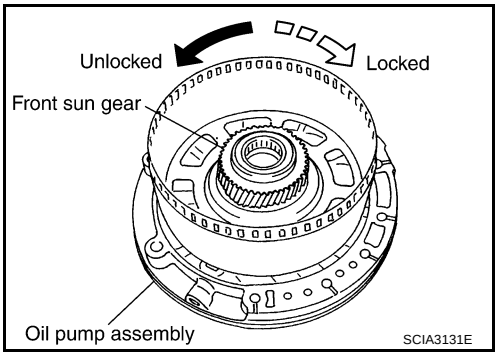

Front Carrier, Input Clutch, Rear Internal Gear

NCS000J7

COMPONENTS

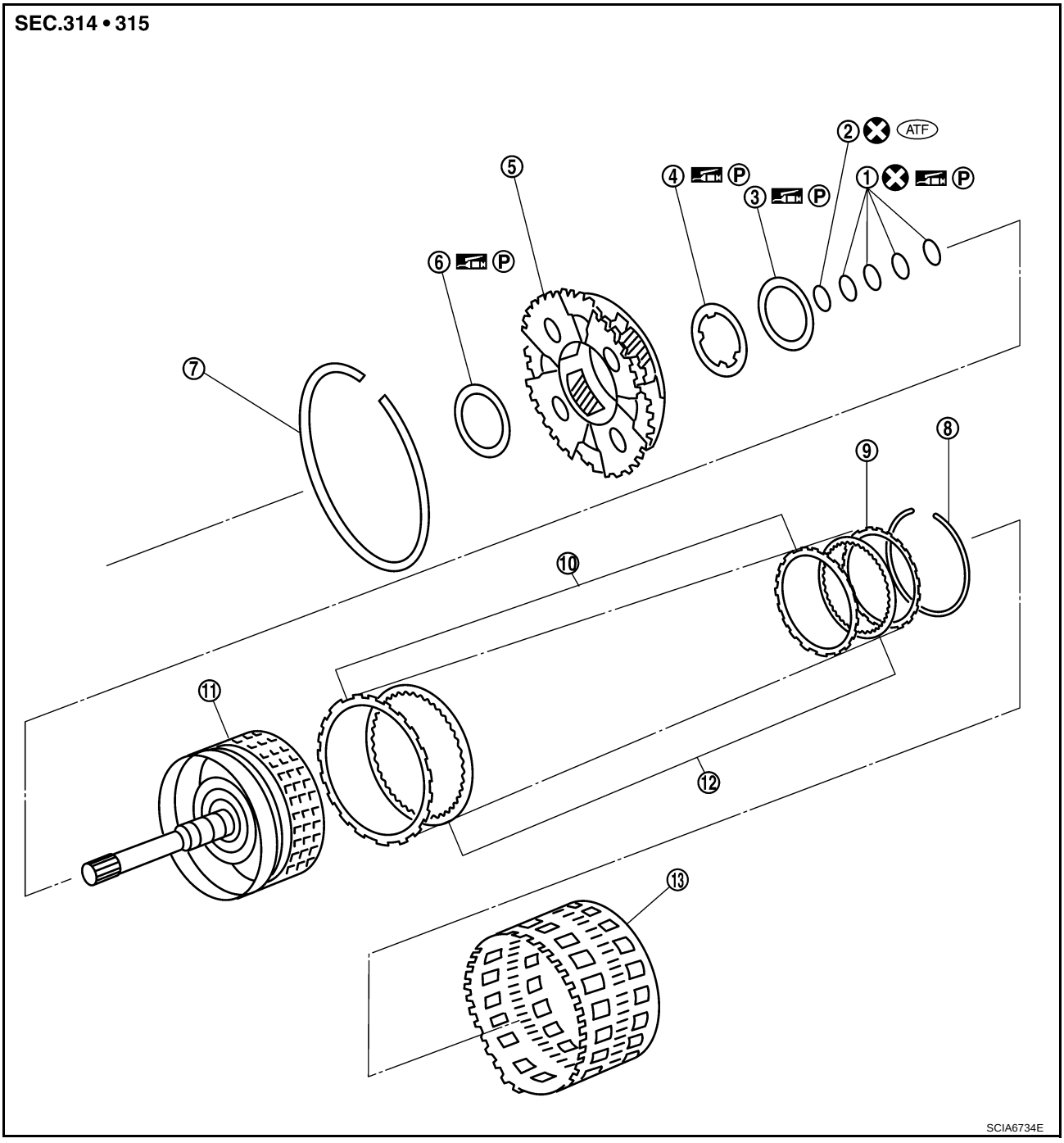

1.	Seal ring	2.	O-ring	3.	Needle bearing
4.	Bearing race	5.	Front carrier assembly	6.	Needle bearing
7.	Snap ring	8.	Snap ring	9.	Retaining plate
10.	Driven plate	11.	Input clutch drum	12.	Drive plate
13.	Rear internal gear				

Refer to GI section to make sure icons (symbol marks) in the figure. Refer to GI-10, "Components" .

DISASSEMBLY

1. Compress snap ring using 2 flat-bladed screwdrivers.
2. Remove front carrier assembly and input clutch assembly from rear internal gear.
3. Remove front carrier assembly from input clutch assembly.

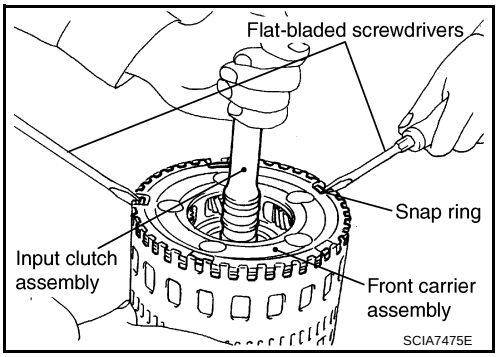

a. Remove bearing race from front carrier assembly.

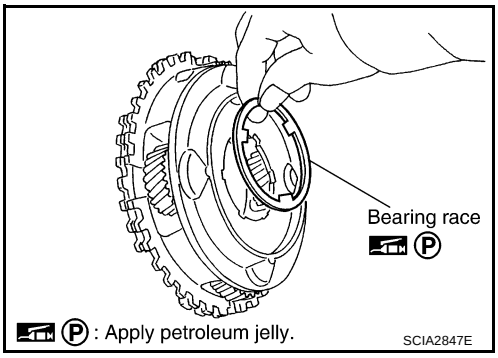

b. Remove needle bearing from front carrier assembly.

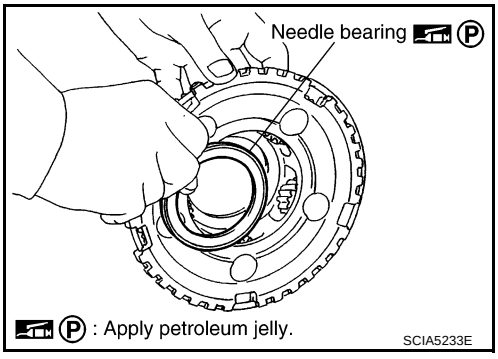

c. Remove snap ring from front carrier assembly.

CAUTION:
Do not expand snap ring excessively.

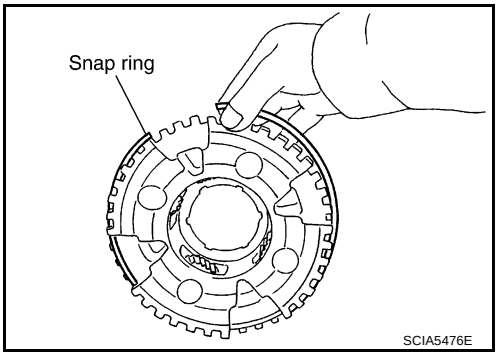

4. Disassemble input clutch assembly.

a. Remove O-ring and seal rings from input clutch assembly.

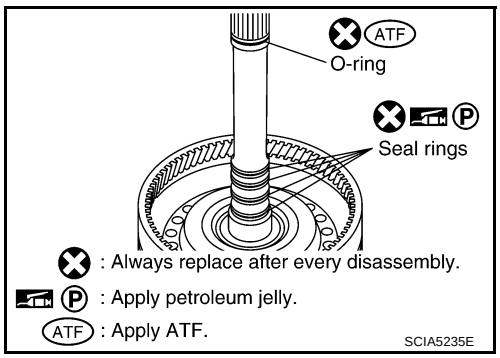

b. Remove needle bearing from input clutch assembly.

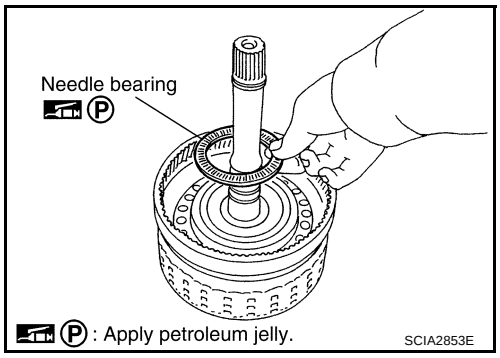

c. Using a flat-bladed screwdriver, remove snap ring from input clutch drum.

d. Remove drive plates, driven plates and retaining plate from input clutch drum.

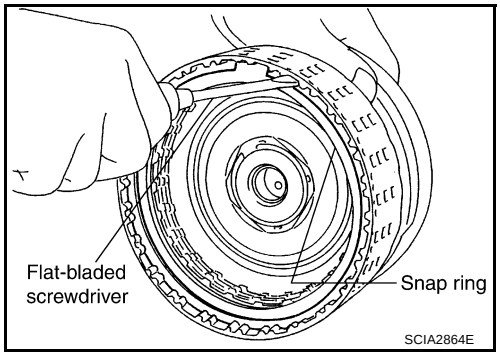

INSPECTION

Front Carrier Snap Ring

- Check for deformation, fatigue or damage.

  CAUTION:
  If necessary, replace the snap ring.

Input Clutch Snap Ring

- Check for deformation, fatigue or damage.

  CAUTION:
  If necessary, replace the input clutch assembly.

Input Clutch Drum

- Check for deformation, fatigue or damage or burns.

  CAUTION:
  If necessary, replace the input clutch assembly.

Input Clutch Drive Plates

- Check facing for burns, cracks or damage.

  CAUTION:
  If necessary, replace the input clutch assembly.

Input Clutch Retaining Plate and Driven Plates

- Check facing for burns, cracks or damage.

CAUTION:
If necessary, replace the input clutch assembly.

Front Carrier

- Check for deformation, fatigue or damage.

CAUTION:
If necessary, replace the front carrier assembly.

Rear Internal Gear

- Check for deformation, fatigue or damage.

CAUTION:
If necessary, replace the rear internal gear.

ASSEMBLY

1. Install input clutch.

a. Install drive plates, driven plates and retaining plate in input clutch drum.
   - Snap ring (1)
   - Retaining plate (2)
   - Drive plate (3)
   - Driven plate (4)
   - Drive plate/Driven plate: 7/7

   CAUTION:
   Take care with order of plates.

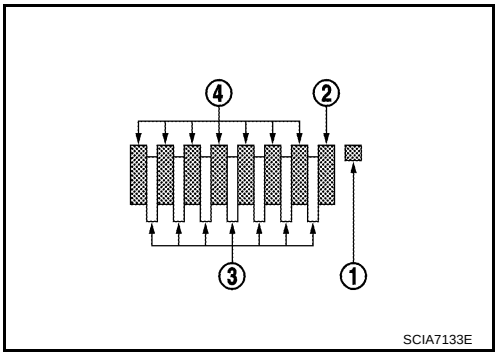

b. Using a flat-bladed screwdriver, install snap ring in input clutch drum.

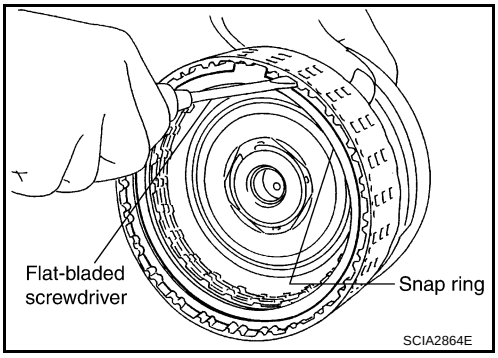

c. Install needle bearing in input clutch assembly.

   CAUTION:
   - **Take care with the direction of needle bearing. Refer to** **AT-262, "Locations of Adjusting Shims, Needle Bearings, Thrust Washers and Snap Rings"** **.**
   - **Apply petroleum jelly to needle bearing.**

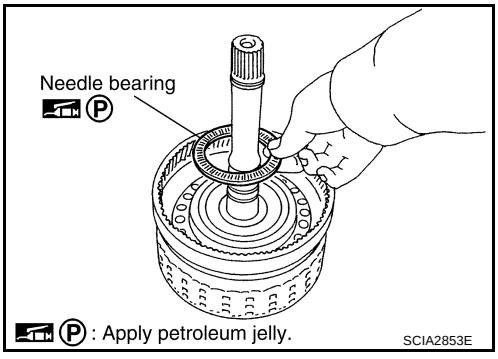

d. Install O-ring and seal rings in input clutch assembly.

CAUTION:

- **Do not reuse O-ring and seal rings.**
- **Apply ATF to O-ring.**
- **Apply petroleum jelly to seal rings.**

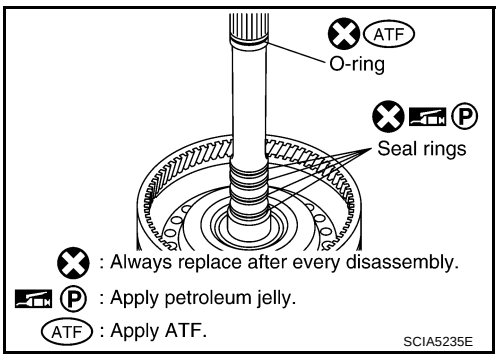

2. Install front carrier assembly.

a. Install snap ring to front carrier assembly.

CAUTION:

Do not expand snap ring excessively.

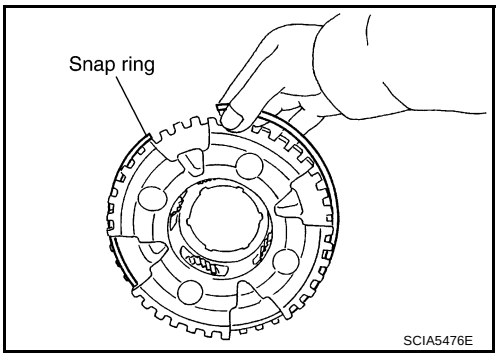

b. Install needle bearing in front carrier assembly.

CAUTION:

- **Take care with the direction of needle bearing. Refer to** **AT-262, "Locations of Adjusting Shims, Needle Bearings, Thrust Washers and Snap Rings"** **.**
- **Apply petroleum jelly to needle bearing.**

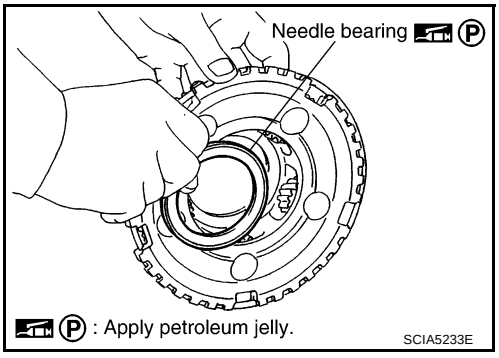

c. Install bearing race in front carrier assembly.

CAUTION:

Apply petroleum jelly to bearing race.

d. Install front carrier assembly to input clutch assembly.

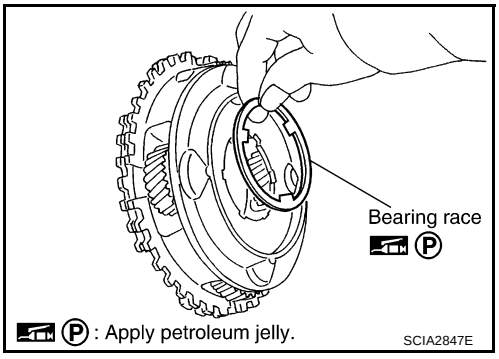

3. Compress snap ring using 2 flat-bladed screwdrivers.
4. Install front carrier assembly and input clutch assembly to rear internal gear.

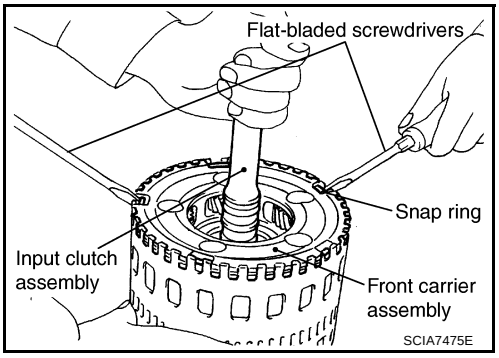

Mid Sun Gear, Rear Sun Gear, High and Low Reverse Clutch Hub

NCS000J8

COMPONENTS

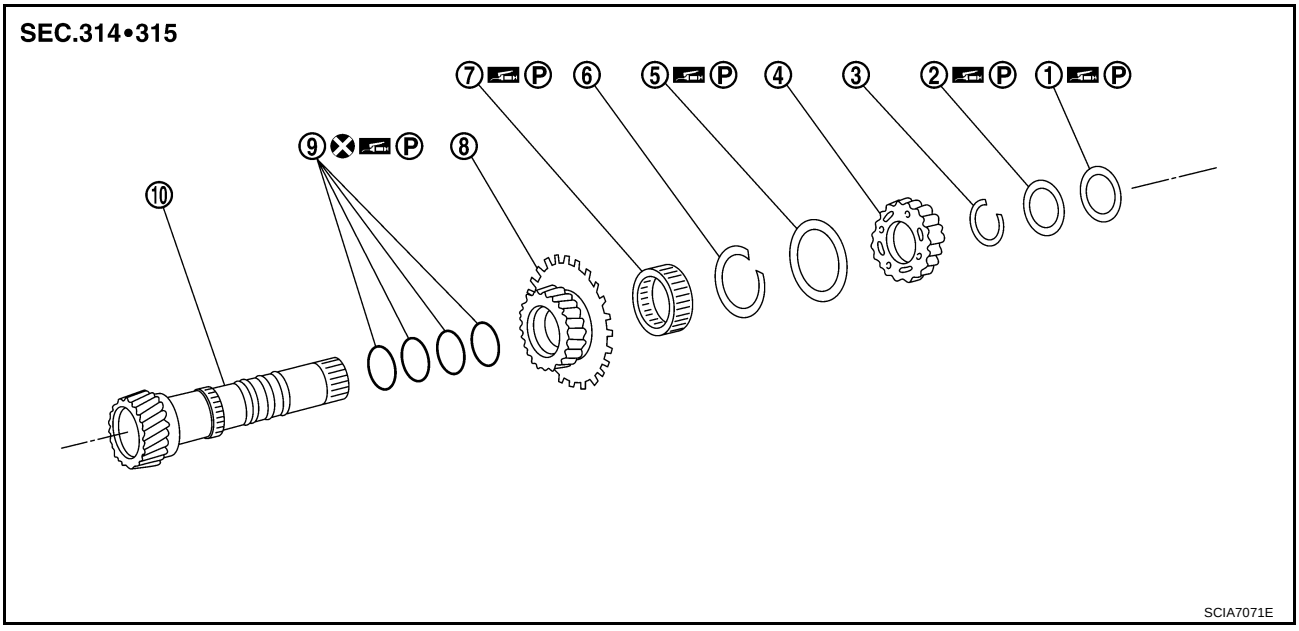

1.	Needle bearing	2.	Bearing race	3.	Snap ring
4.	High and low reverse clutch hub	5.	Needle bearing	6.	Snap ring
7.	1st one-way clutch	8.	Rear sun gear	9.	Seal ring
10.	Mid sun gear				

Refer to GI section to make sure icons (symbol marks) in the figure. Refer to GI-10, "Components" .

DISASSEMBLY

1. Remove needle bearing and bearing race from high and low reverse clutch hub.

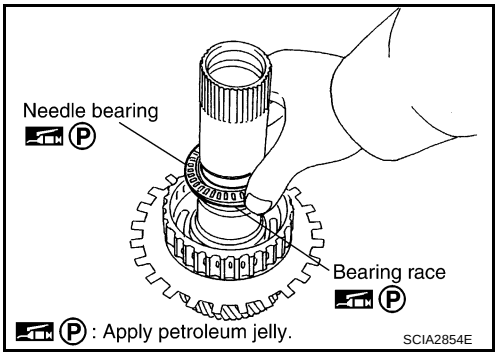

2. Using pair of snap ring pliers, remove snap ring from mid sun gear assembly.

   CAUTION:
   Do not expand snap ring excessively.

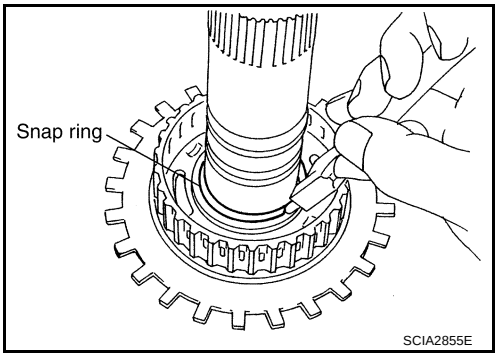

3. Remove high and low reverse clutch hub from mid sun gear assembly.

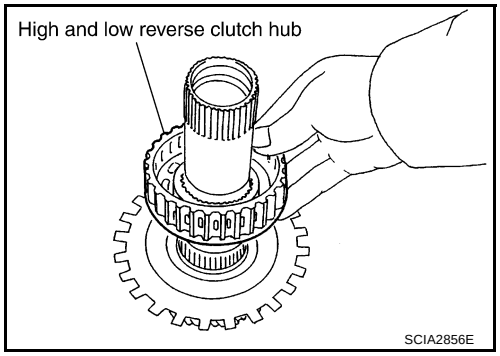

a. Remove needle bearing from high and low reverse clutch hub.

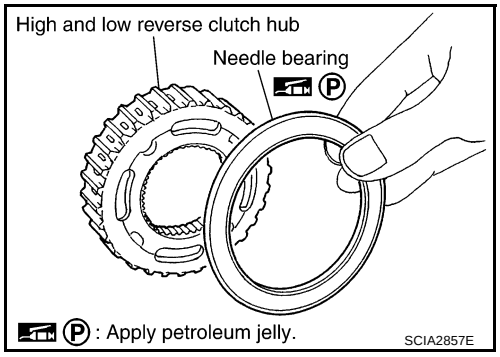

4. Remove rear sun gear assembly (1) from mid sun gear assembly.

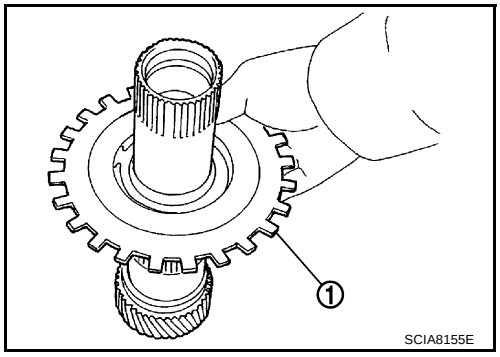

a. Using a flat-bladed screwdriver, remove snap ring from rear sun gear.

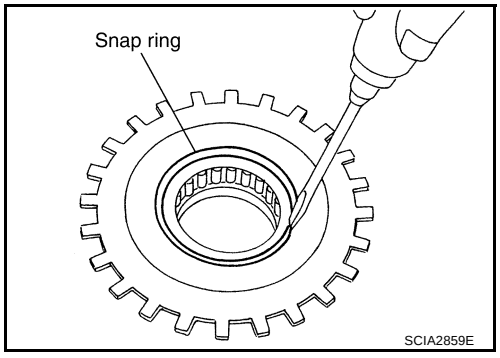

b. Remove 1st one-way clutch from rear sun gear.

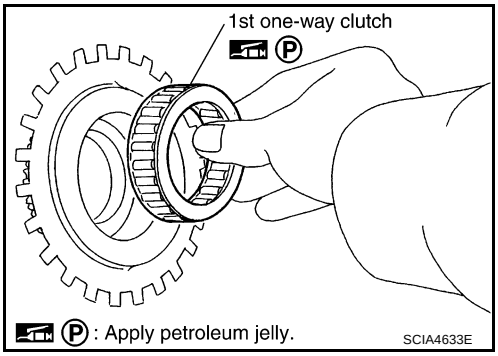

5. Remove seal rings from mid sun gear.

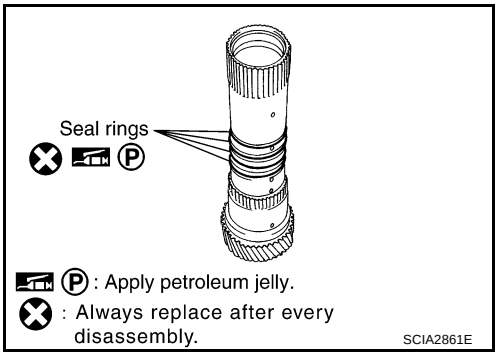

INSPECTION

High and Low Reverse Clutch Hub Snap Ring, Rear Sun Gear Snap Ring

- Check for deformation, fatigue or damage.

  CAUTION:
  If necessary, replace the snap ring.

1st One-way Clutch

- Check frictional surface for wear or damage.

  CAUTION:
  If necessary, replace the 1st one-way clutch.

Mid Sun Gear

- Check for deformation, fatigue or damage.

  CAUTION:
  If necessary, replace the mid sun gear.

Rear Sun Gear

- Check for deformation, fatigue or damage.

  CAUTION:
  If necessary, replace the rear sun gear.

High and Low Reverse Clutch Hub

- Check for deformation, fatigue or damage.

  CAUTION:
  If necessary, replace the high and low reverse clutch hub.

ASSEMBLY

1. Install seal rings to mid sun gear.

   CAUTION:
   - **Do not reuse seal rings.**
   - **Apply petroleum jelly to seal rings.**

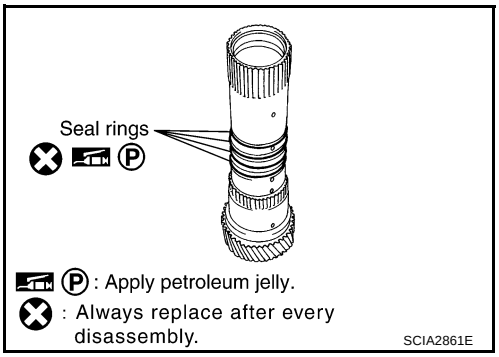

2. Install 1st one-way clutch to rear sun gear.

   CAUTION:
   Apply petroleum jelly to 1st one-way clutch.

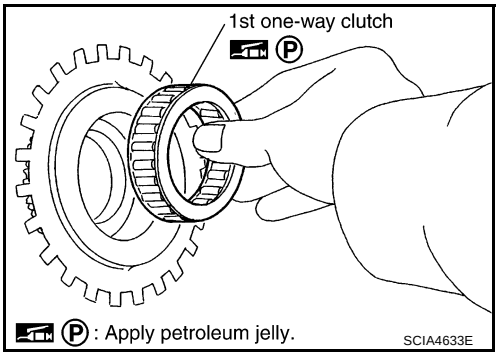

3. Using a flat-bladed screwdriver, install snap ring to rear sun gear.

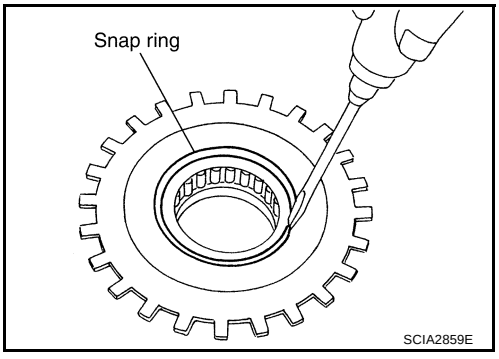

4. Install rear sun gear assembly (1) to mid sun gear assembly.

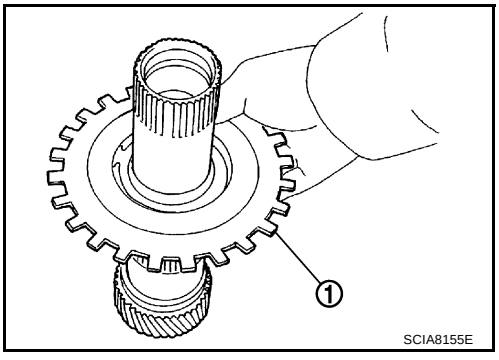

5. Install needle bearing to high and low reverse clutch hub.

CAUTION:

- **Take care with the direction of needle bearing. Refer to** **AT-262, "Locations of Adjusting Shims, Needle Bearings, Thrust Washers and Snap Rings"** **.**
- **Apply petroleum jelly to needle bearing.**

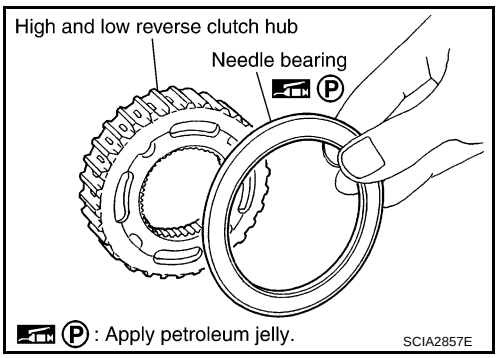

6. Install high and low reverse clutch hub to mid sun gear assembly.

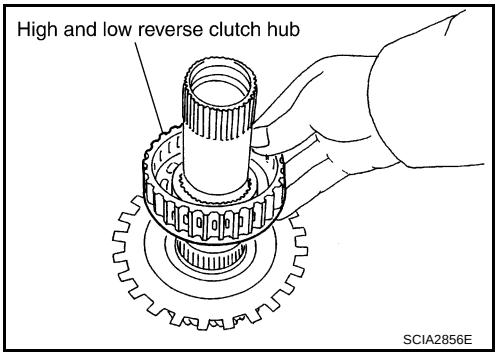

7. Using pair of snap ring pliers, install snap ring to mid sun gear assembly.

CAUTION:

Do not expand snap ring excessively.

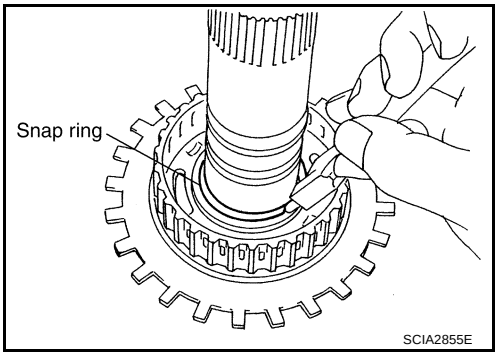

8. Check operation of 1st one-way clutch.

a. Hold mid sun gear and turn rear sun gear.

b. Check 1st one-way clutch for correct locking and unlocking directions.

CAUTION:

If not as shown in the figure, check installation direction of 1st one-way clutch.

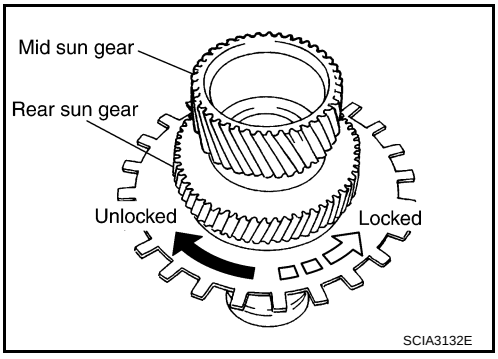

9. Install needle bearing and bearing race to high and low reverse clutch hub.

CAUTION:

- **Take care with the direction of needle bearing. Refer to** **AT-262, "Locations of Adjusting Shims, Needle Bearings, Thrust Washers and Snap Rings"** **.**
- **Apply petroleum jelly to needle bearing.**

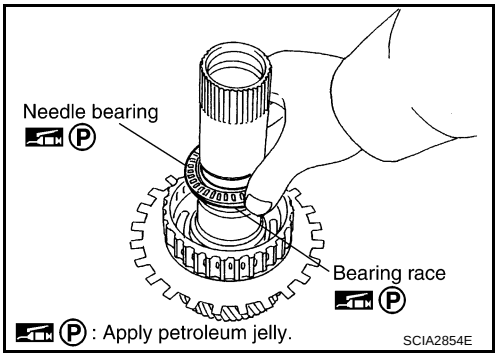

High and Low Reverse Clutch

NCS000J9

COMPONENTS

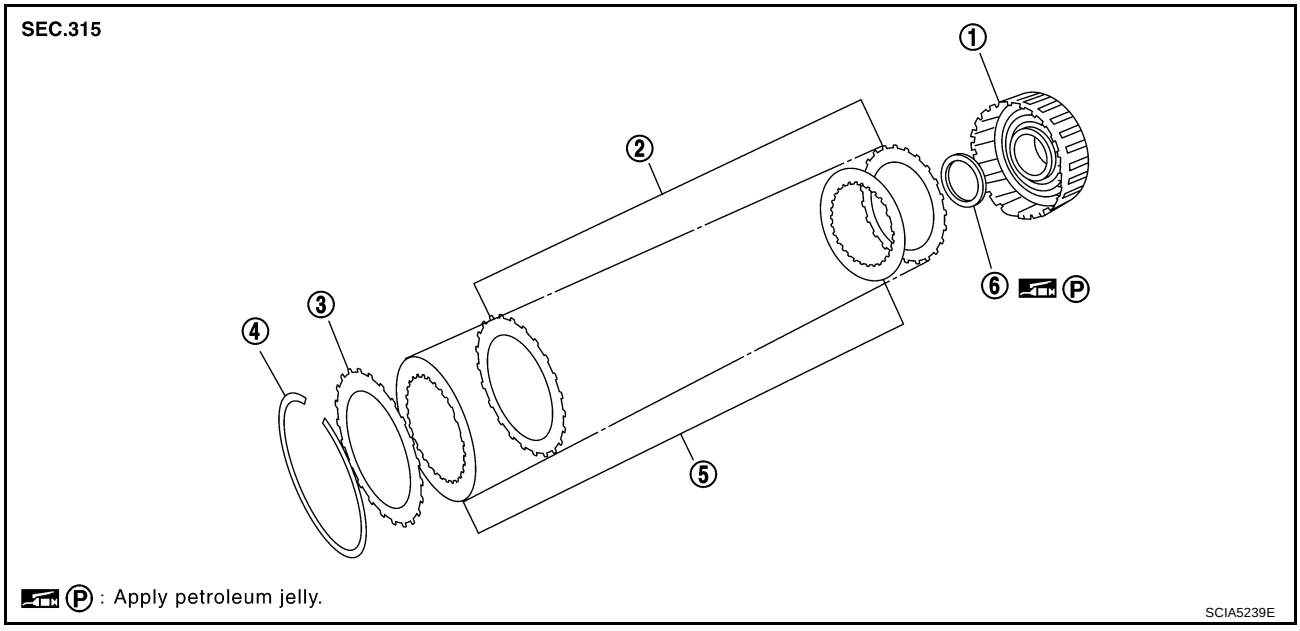

1. High and low reverse clutch drum
2. Driven plate
3. Retaining plate
4. Snap ring
5. Drive plate
6. Bearing race

DISASSEMBLY

1. Remove bearing race from high and low reverse clutch drum.

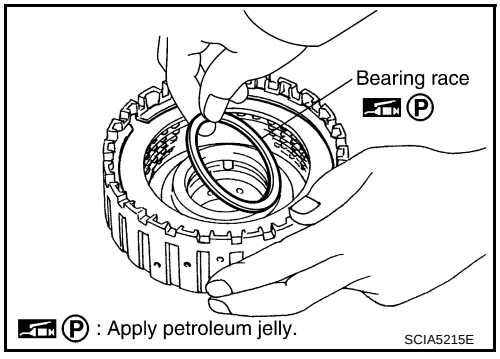

2. Using a flat-bladed screwdriver, remove snap ring from high and low reverse clutch drum.
3. Remove drive plates, driven plates and retaining plate from high and low reverse clutch drum.

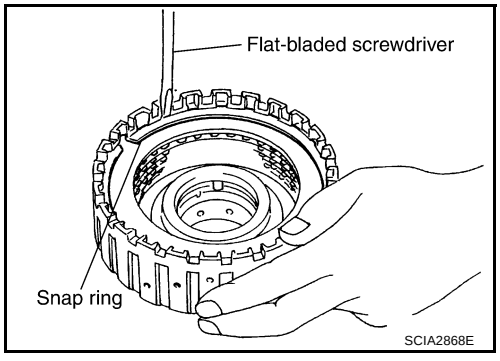

INSPECTION

- **Check the following, and replace high and low reverse clutch assembly if necessary.**

High and Low Reverse Clutch Snap Ring

- Check for deformation, fatigue or damage.

High and Low Reverse Clutch Drive Plates

- Check facing for burns, cracks or damage.

High and Low Reverse Clutch Retaining Plate and Driven Plates

- Check facing for burns, cracks or damage.

ASSEMBLY

1. Install drive plates, driven plates and retaining plate in high and low reverse clutch drum.

   CAUTION:
   Take care with order of plates.
   - Snap ring (1)
   - Retaining plate (2)
   - Drive plate (3)
   - Driven plate (4)
   - Drive plate/Driven plate: 4/4

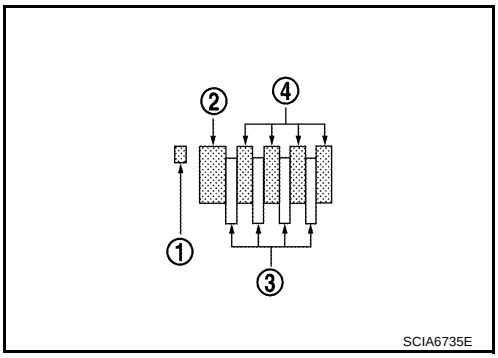

2. Using a flat-bladed screwdriver, install snap ring in high and low reverse clutch drum.

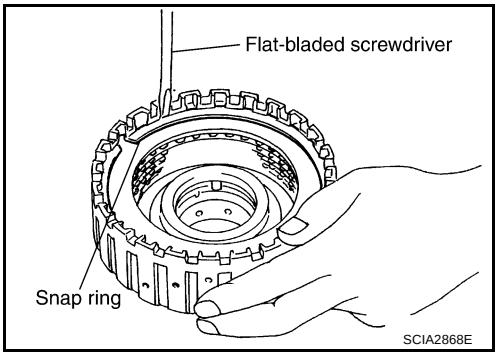

3. Install bearing race to high and low reverse clutch drum.

   CAUTION:
   - **Take care with the direction of needle bearing. Refer to** **AT-262, "Locations of Adjusting Shims, Needle Bearings, Thrust Washers and Snap Rings"** **.**
   - **Apply petroleum jelly to needle bearing.**

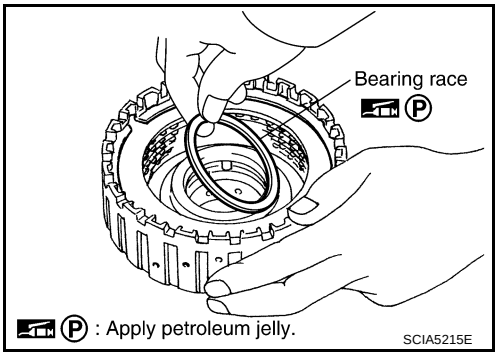

Direct Clutch

NCS000JA

COMPONENTS

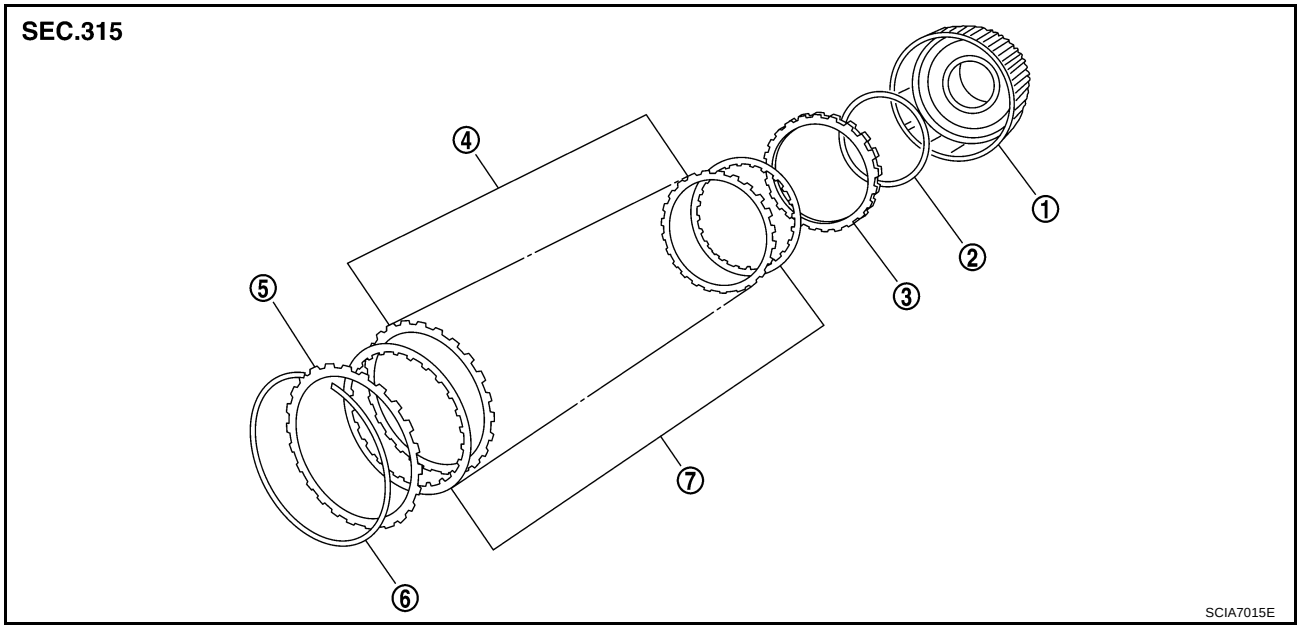

1. Direct clutch drum
2. Dish plate
3. Retaining plate
4. Driven plate
5. Retaining plate
6. Snap ring
7. Drive plate

DISASSEMBLY

1. Using a flat-bladed screwdriver, remove snap ring from direct clutch drum.
2. Remove drive plates, driven plates, dish plate and retaining plate from direct clutch drum.

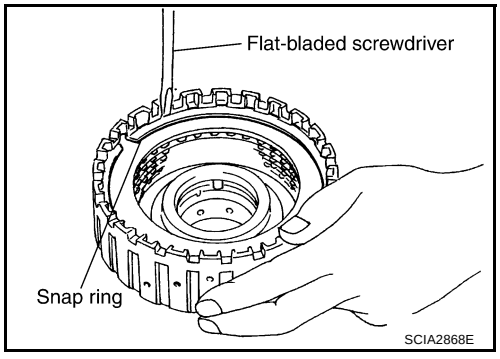

INSPECTION

- **Check the following, and replace direct clutch assembly if necessary.**

Direct Clutch Snap Ring

- Check for deformation, fatigue or damage.

Direct Clutch Drive Plates

- Check facing for burns, cracks or damage.

Direct Clutch Retaining Plate and Driven Plates

- Check facing for burns, cracks or damage.

ASSEMBLY

1. Install drive plates, driven plates, dish plate and retaining plate in direct clutch drum.

   CAUTION:
   Take care with order of plates.
   - Snap ring (1)
   - Retaining plate (2)
   - Drive plate (3)
   - Driven plate (4)
   - Dish plate (5)
   - Drive plate/Driven plate: 5/4

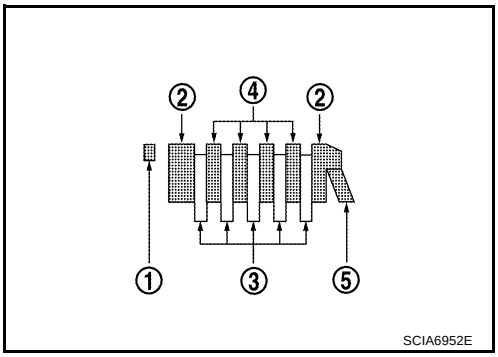

2. Using a flat-bladed screwdriver, install snap ring in direct clutch drum.

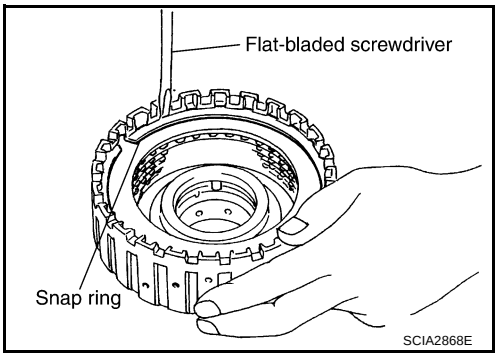

ASSEMBLY

PFP:00000

Assembly (1)

NCS000JB

1. As shown in the figure, use a drift [commercial service tool 22 mm (0.87 in) dia.] to drive manual shaft oil seals into the transmission case until it is flush.

   CAUTION:
   - **Do not reuse manual shaft oil seals.**
   - **Apply ATF to manual shaft oil seals.**

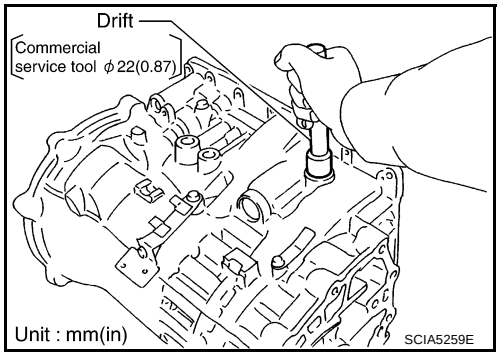

2. Install detent spring and spacer in transmission case, and then tighten detent spring and spacer mounting bolt to the specified torque. Refer to AT-255, "Components"

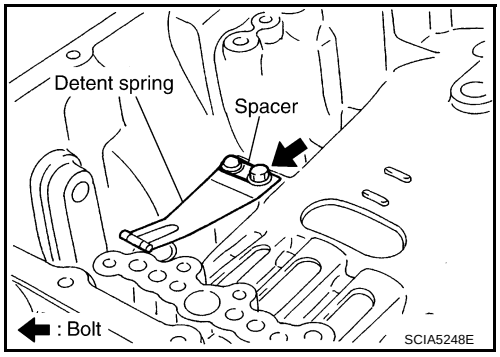

3. Install manual shaft to transmission case.

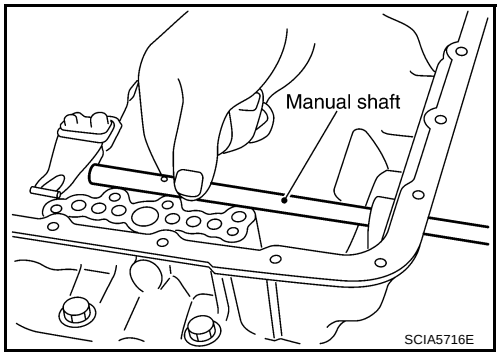

4. Install parking rod to manual plate.

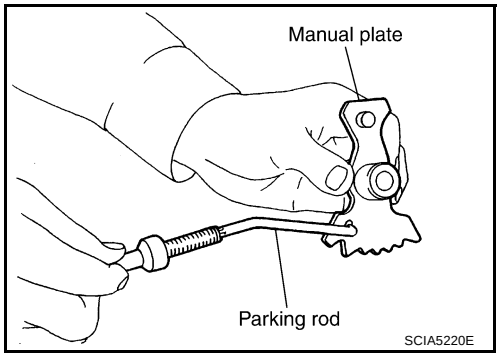

5. Install manual plate (with parking rod) to manual shaft.

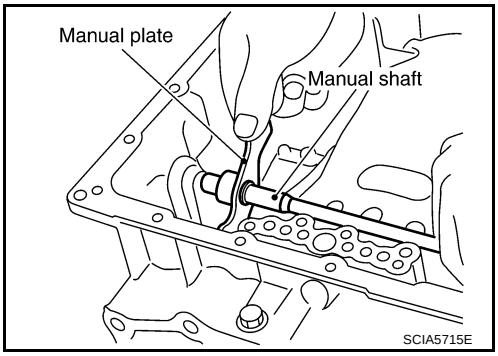

6. Install retaining pin into the manual plate and manual shaft.
a. Fit pinhole of the manual plate to pinhole of the manual shaft with a pin punch.
b. Use a hammer to tap the retaining pin into the manual plate.

CAUTION:
- **Do not reuse retaining pin.**
- **Drive retaining pin to 2±0.5 mm (0.08±0.020 in) over the manual plate.**

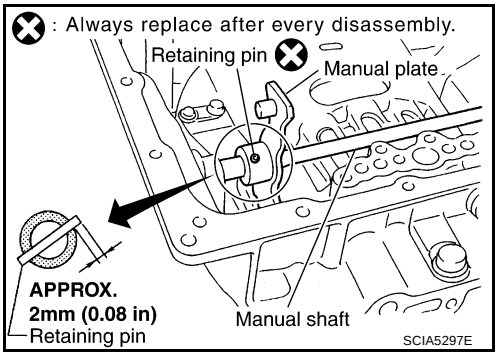

7. Install retaining pin into the transmission case and manual shaft.
a. Fit pinhole of the transmission case to pinhole of the manual shaft with a pin punch.
b. Use a hammer to tap the retaining pin into the transmission case.

CAUTION:
- **Do not reuse retaining pin.**
- **Drive retaining pin to 5±1 mm (0.20±0.04 in) over the transmission case.**

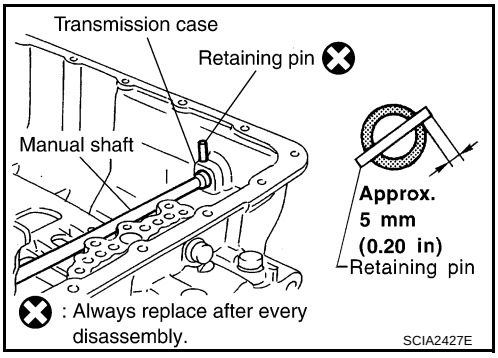

8. Install O-rings to servo assembly.

CAUTION:
- **Do not reuse O-rings.**
- **Apply petroleum jelly to O-rings.**

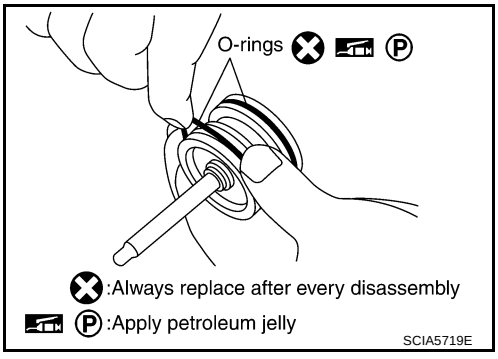

9. Install return spring to servo assembly.

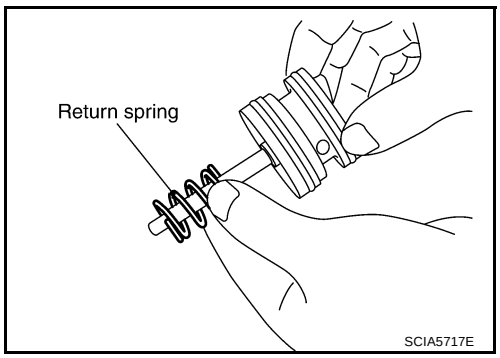

10. Install servo assembly in transmission case.

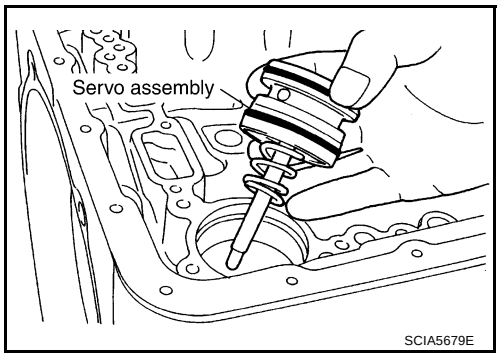

11. Using pair of snap ring pliers, install snap ring to transmission case.

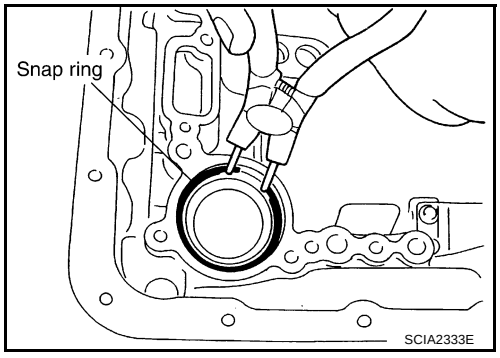

12. Install D-rings in reverse brake piston.

CAUTION:

- **Do not reuse D-rings.**
- **Apply ATF to D-rings.**

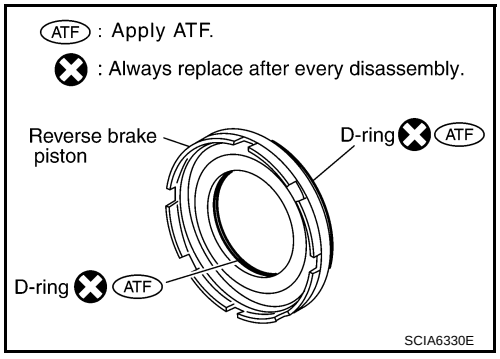

13. Install reverse brake piston in transmission case.

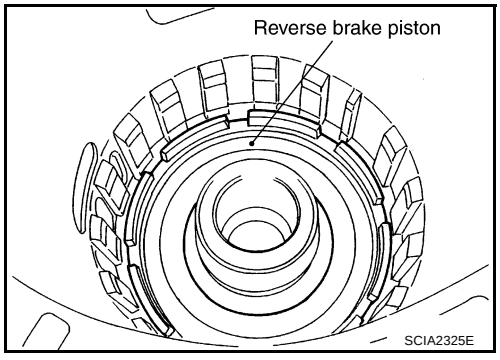

14. Install needle bearing to drum support edge surface.

CAUTION:

- **Take care with the direction of needle bearing. Refer to** **AT-262, "Locations of Adjusting Shims, Needle Bearings, Thrust Washers and Snap Rings"** **.**
- **Apply petroleum jelly to needle bearing.**

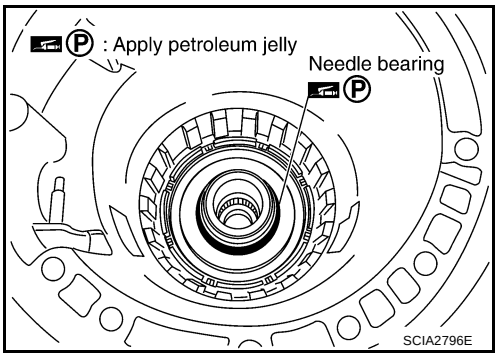

15. Install seal rings to drum support.

CAUTION:

- **Do not reuse seal rings.**
- **Apply petroleum jelly to seal rings.**

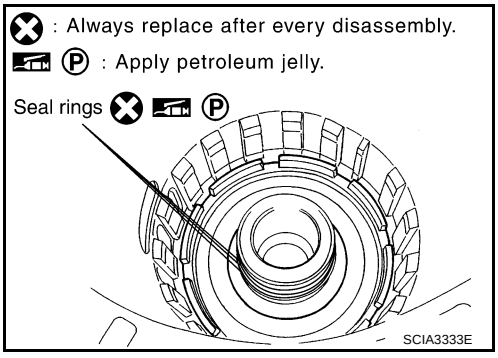

16. Install spring retainer and return spring in transmission case.

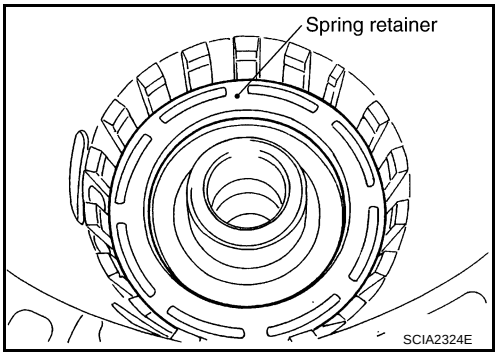

17. Set the SST on spring retainer and install snap ring (fixing spring retainer) in transmission case while compressing return spring.

CAUTION:

Securely assemble them using a flat-bladed screwdriver so that snap ring tension is slightly weak.

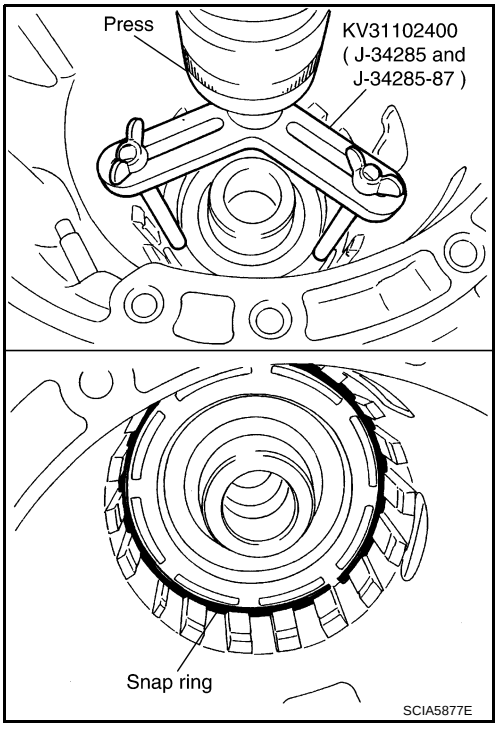

18. Install reverse brake drive plates, driven plates and dish plates in transmission case.

CAUTION:
Take care with order of plates.

- Snap ring (1)
- Retaining plate (2)
- Drive plate (3)
- Driven plate (4)
- Dish plate (5)
- Drive plate/Driven plate: 6/6

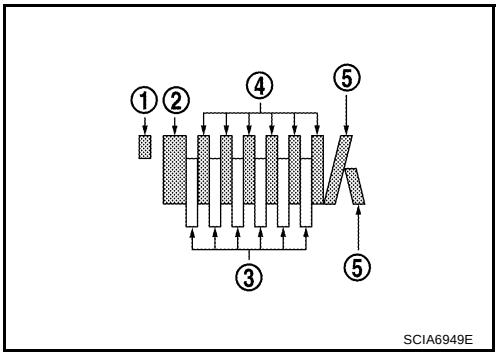

19. Assemble N-spring.
20. Install reverse brake retaining plate in transmission case.

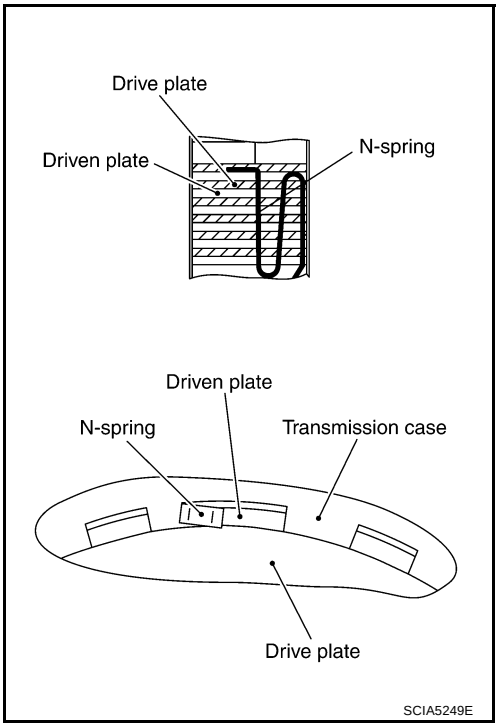

21. Install snap ring in transmission case.

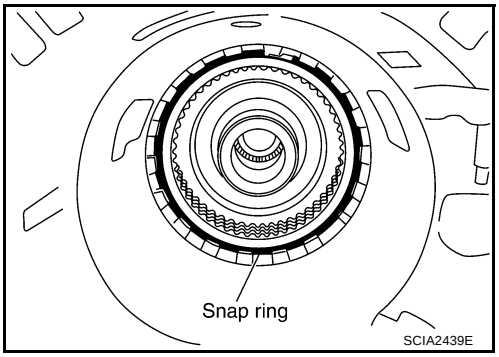

22. Measure clearance between retaining plate and snap ring. If not within specified clearance, select proper retaining plate. Refer to “Parts Information” for retaining plate selection.

Specified clearance “A”:

Standard : **Refer to** **AT-320, "Reverse Brake"** **.**

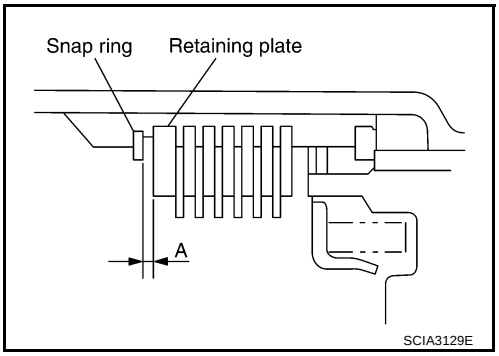

23. Install needle bearing to transmission case.

CAUTION:

- **Take care with the direction of needle bearing. Refer to AT-262, "Locations of Adjusting Shims, Needle Bearings, Thrust Washers and Snap Rings" .**
- **Apply petroleum jelly to needle bearing.**

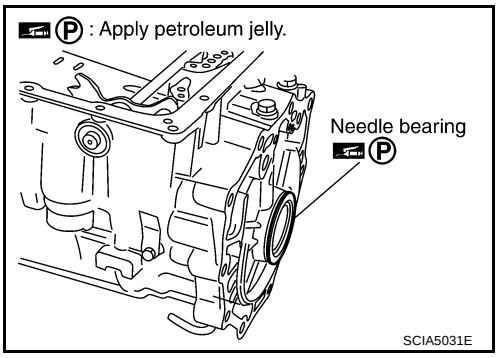

24. Install revolution sensor to transmission case, and then tighten revolution sensor mounting bolt to the specified torque. Refer to AT-255, "Components" .

CAUTION:

- **Do not subject it to impact by dropping or hitting it.**
- **Do not disassemble.**
- **Do not allow metal filings, etc. to get on the sensor's front edge magnetic area.**
- **Do not place in an area affected by magnetism.**

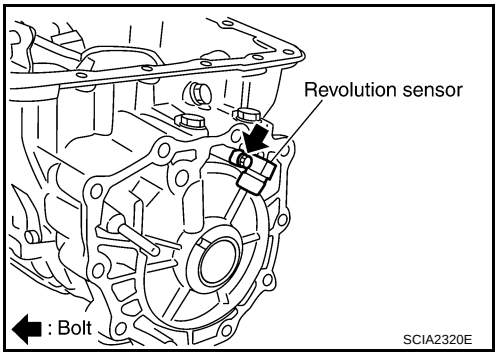

25. As shown in the figure, use a drift to drive rear oil seal into the rear extension until it is flush.

CAUTION:

- **Do not reuse rear oil seal.**
- **Apply ATF to rear oil seal.**

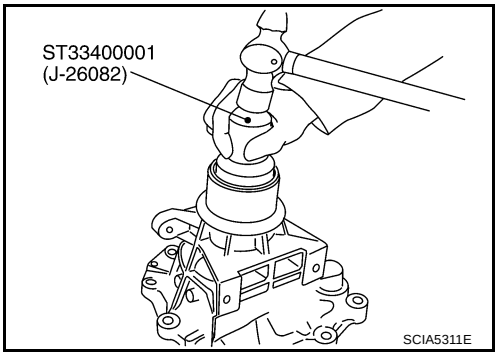

26. Install return spring (1) to parking pawl (2).

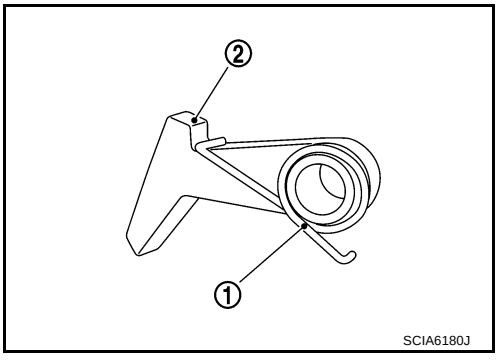

27. Install parking pawl (with return spring) and pawl shaft to rear extension.

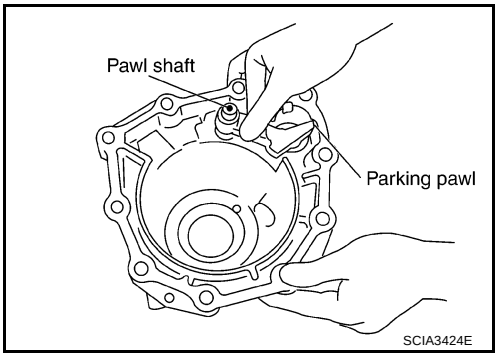

28. Install parking actuator support to rear extension.

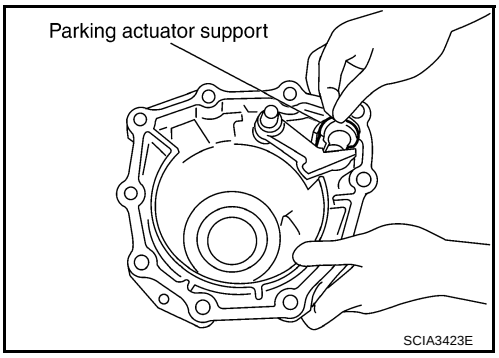

29. Install needle bearing (1) to rear extension.

CAUTION:

- **Take care with the direction of needle bearing. Refer to AT-262, "Locations of Adjusting Shims, Needle Bearings, Thrust Washers and Snap Rings" .**
- **Apply petroleum jelly to needle bearing.**

Refer to GI section to make sure icons (symbol marks) in the figure. Refer to GI-10, "Components" .

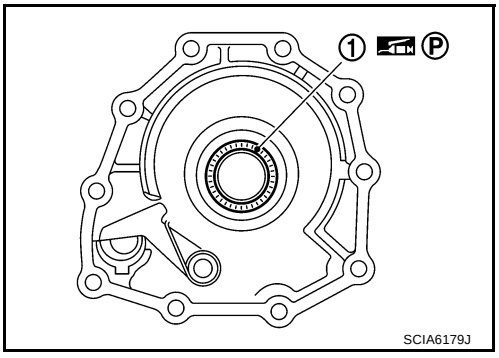

30. Install seal rings to output shaft.

CAUTION:

- **Do not reuse seal rings.**
- **Apply petroleum jelly to seal rings.**

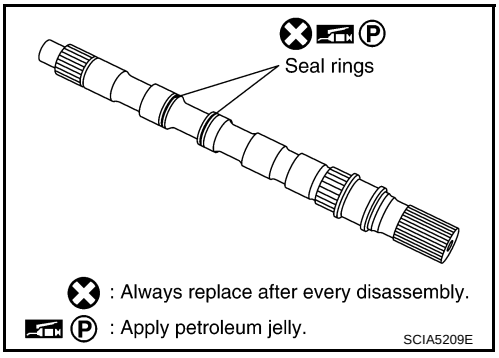

31. Install parking gear to output shaft.

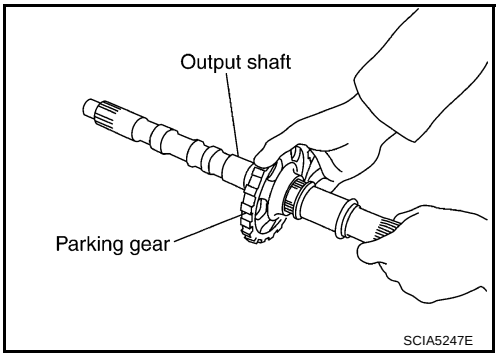

32. Install output shaft in transmission case.

CAUTION:

Be careful not to mistake front for rear because both sides looks similar. (Thinner end is front side.)

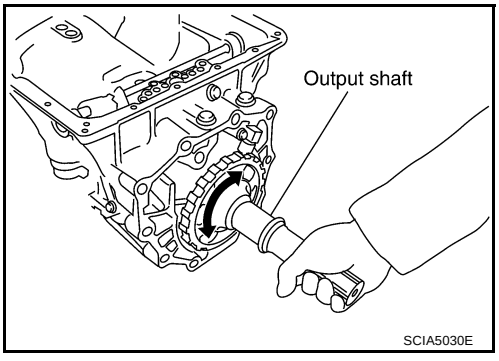

33. Install bearing race to output shaft.

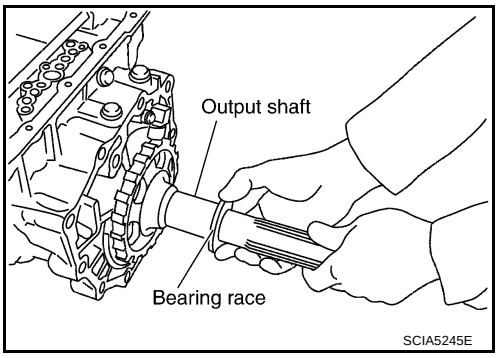

34. Apply recommended sealant (Genuine Anaerobic Liquid Gasket or equivalent. Refer to GI-46, "Recommended Chemical Products and Sealants" .) to rear extension assembly as shown in the figure.

CAUTION:

Completely remove all moisture, oil and old sealant, etc. from the transmission case and rear extension assembly mounting surfaces.

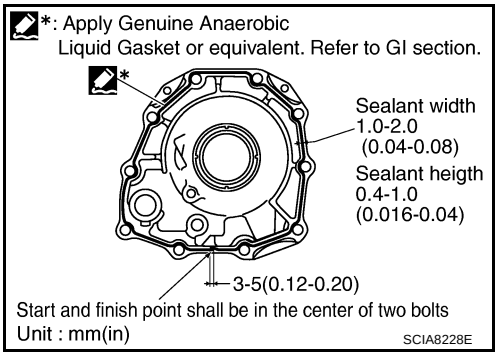

35. Install rear extension assembly to transmission case.

CAUTION:

Insert the tip of parking rod between the parking pawl and the parking actuator support when assembling the rear extension assembly.

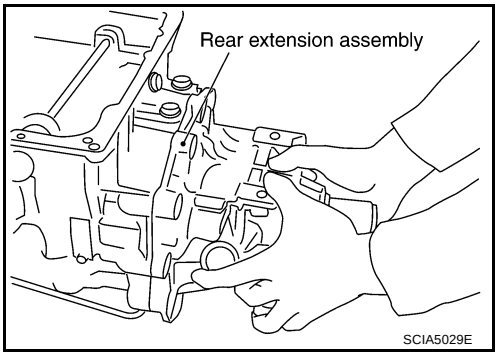

36. Tighten rear extension assembly mounting bolts to the specified torque. Refer to AT-255, "Components" .

CAUTION:

Do not reuse self-sealing bolts.

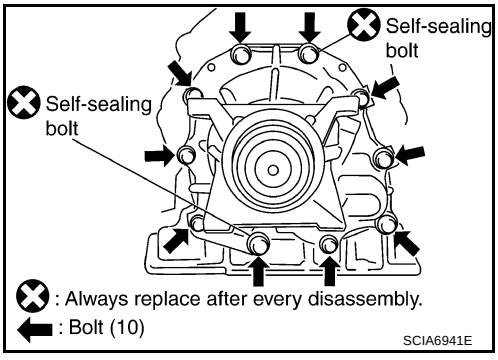

37. Install needle bearing in drum support.

CAUTION:

- **Take care with the direction of needle bearing. Refer to AT-262, "Locations of Adjusting Shims, Needle Bearings, Thrust Washers and Snap Rings" .**
- **Apply petroleum jelly to needle bearing.**

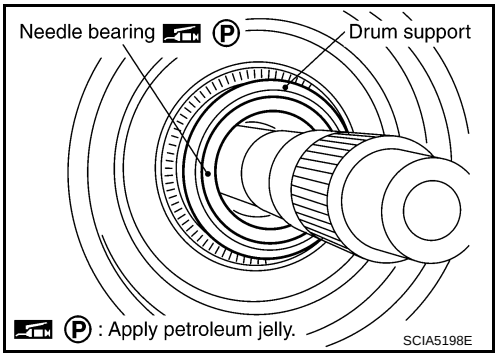

38. Install direct clutch assembly in reverse brake.

CAUTION:
Make sure that drum support edge surface and direct clutch inner boss edge surface come to almost same place.

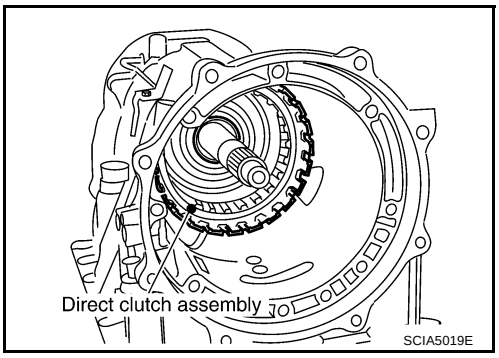

39. Install high and low reverse clutch assembly in direct clutch.

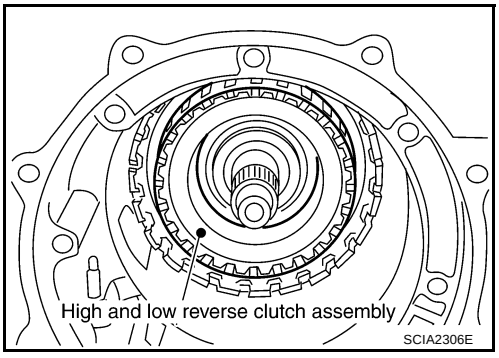

40. Using a flat-bladed screwdriver, adjust the drive plate.

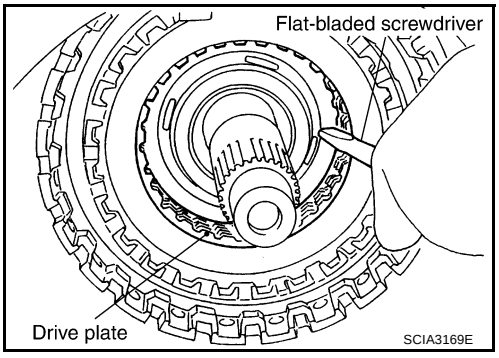

41. Install high and low reverse clutch hub, mid sun gear assembly and rear sun gear assembly as a unit.

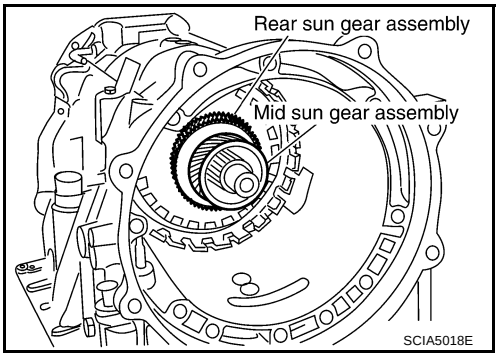

CAUTION:
Check that portion “A” of high and low reverse clutch drum protrudes approximately 2 mm (0.08 in) beyond portion “B” of rear sun gear.

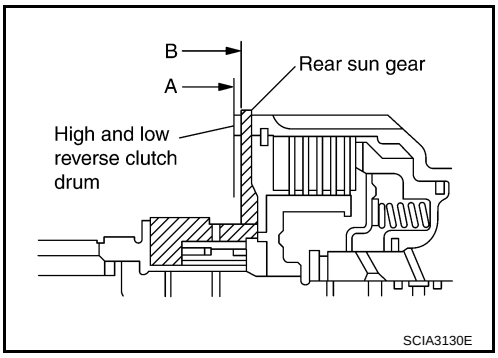

42. Install needle bearing in rear carrier assembly.

CAUTION:
- **Take care with the direction of needle bearing. Refer to** **AT-262, "Locations of Adjusting Shims, Needle Bearings, Thrust Washers and Snap Rings"** **.**
- **Apply petroleum jelly to needle bearing.**

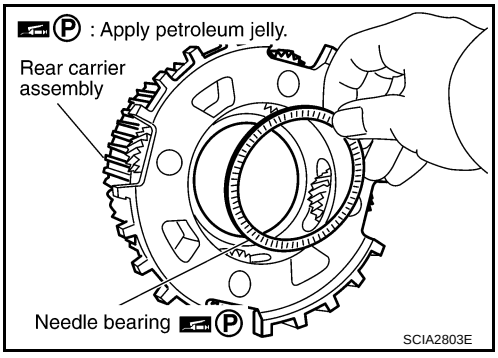

43. Install bearing race in rear carrier assembly.

CAUTION:
Apply petroleum jelly to bearing race.

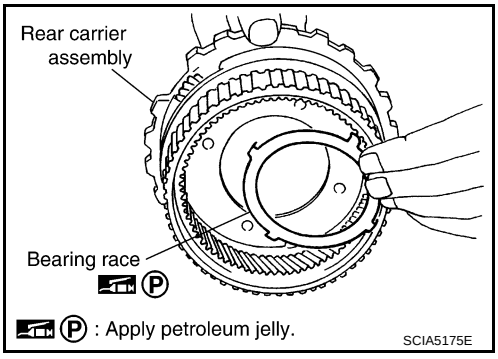

44. Install rear carrier assembly in direct clutch drum.

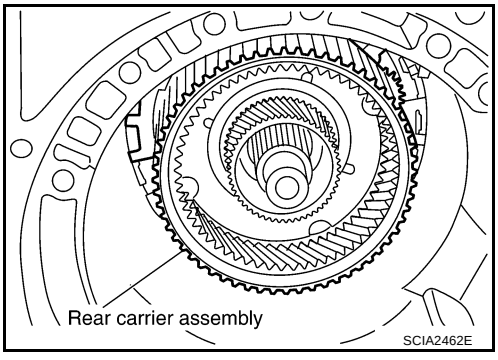

45. Install needle bearing (rear side) to mid carrier assembly.

CAUTION:

- **Take care with the direction of needle bearing. Refer to AT-262, "Locations of Adjusting Shims, Needle Bearings, Thrust Washers and Snap Rings" .**
- **Apply petroleum jelly to needle bearing.**

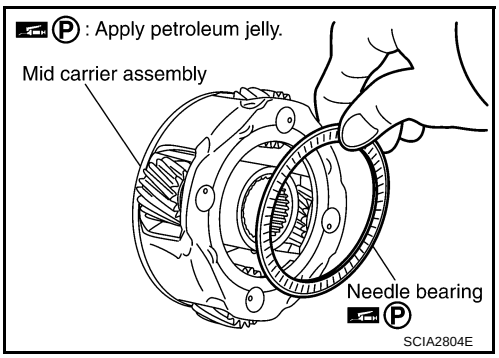

46. Install needle bearing (front side) to mid carrier assembly.

CAUTION:

- **Take care with the direction of needle bearing. Refer to AT-262, "Locations of Adjusting Shims, Needle Bearings, Thrust Washers and Snap Rings" .**
- **Apply petroleum jelly to needle bearing.**

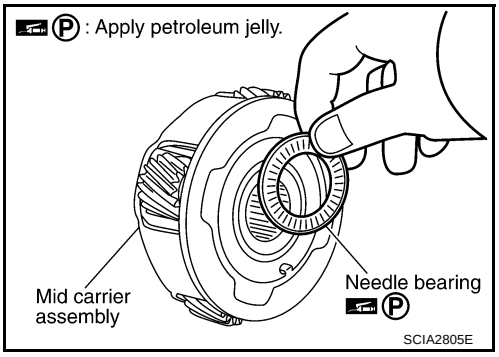

47. Install mid carrier assembly in rear carrier assembly.

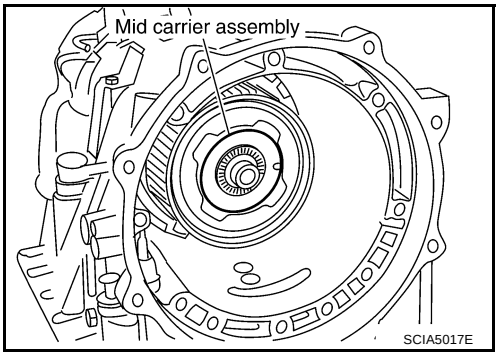

48. Install front carrier assembly, input clutch assembly and rear internal gear as a unit.

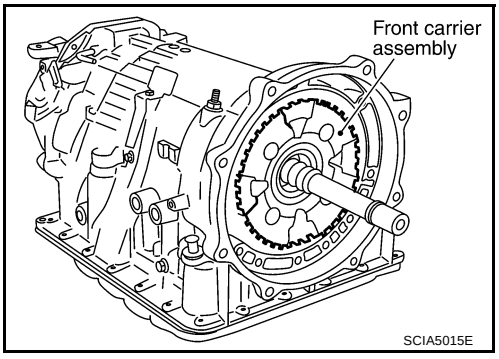

49. Install seal rings in input clutch assembly.

CAUTION:

- **Do not reuse seal rings.**
- **Apply petroleum jelly to seal rings.**

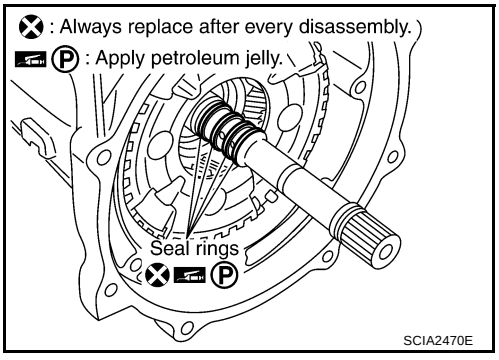

50. Install band servo anchor end pin and lock nut in transmission case.

CAUTION:
Do not reuse band servo anchor end pin.

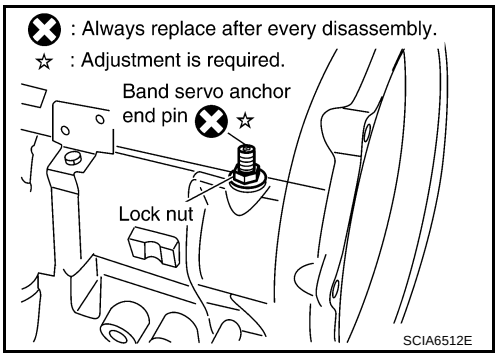

51. Install brake band in transmission case.

CAUTION:
Assemble it so that identification to avoid incorrect installation faces servo side.

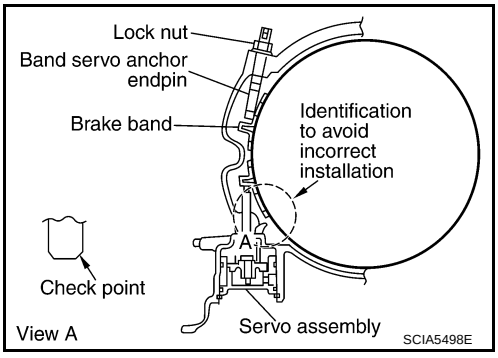

52. Install front sun gear to front carrier assembly.

CAUTION:
Apply ATF to front sun gear bearing and 3rd one-way clutch end bearing.

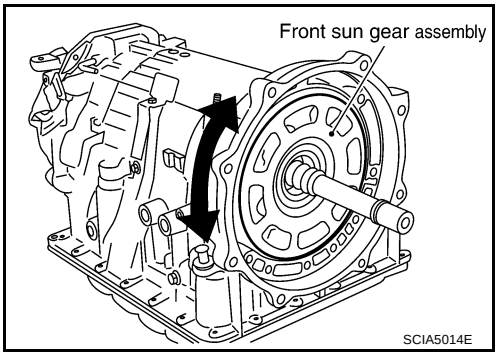

53. Install needle bearing to front sun gear.

CAUTION:
- **Take care with the direction of needle bearing. Refer to** **AT-262, "Locations of Adjusting Shims, Needle Bearings, Thrust Washers and Snap Rings"** **.**
- **Apply petroleum jelly to needle bearing.**

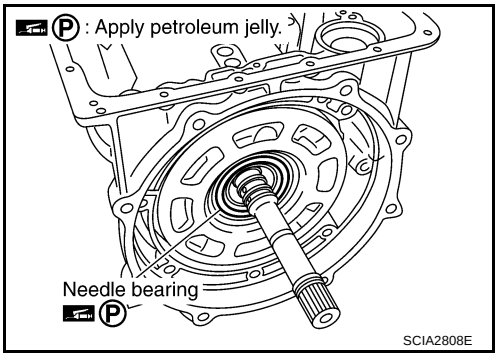

54. Adjust brake band tilting using clips so that brake band contacts front sun gear drum evenly.

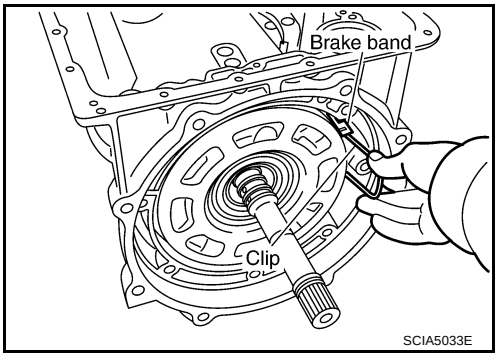

55. Adjust brake band.
a. Loosen lock nut.
b. Tighten band servo anchor end pin to the specified torque.

: 5.0 N·m (0.51 kg-m, 44 in-lb)

c. Back of band servo anchor end pin three turns.
d. Holding band servo anchor end pin, and then tighten lock nut to the specified torque. Refer to AT-255, "Components" .

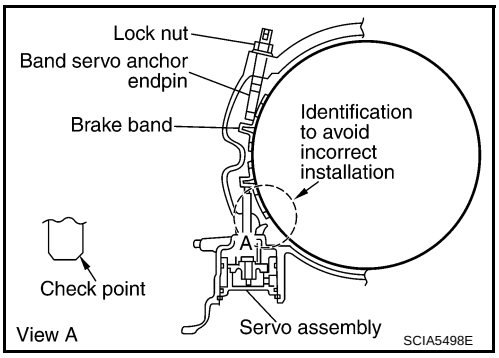

Adjustment

NCS000JC

TOTAL END PLAY

- Measure clearance between front sun gear and bearing race for oil pump cover.
- Select proper thickness of bearing race so that end play is within specifications.

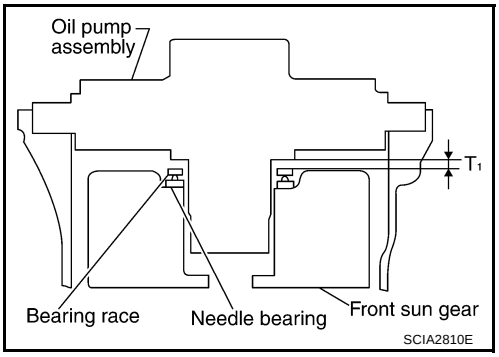

1. Measure dimensions “K” and “L” and then calculate dimension “J”.

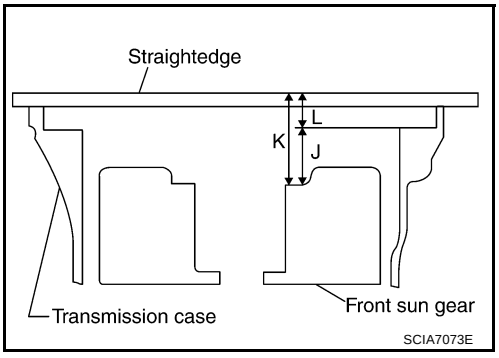

a. Measure dimension “K”.

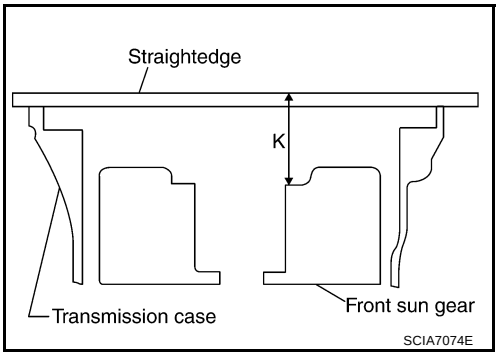

b. Measure dimension “L”.

c. Calculate dimension “J”.

“J”: Distance between oil pump fitting surface of transmission case and needle bearing mating surface of front sun gear.

J = K – L

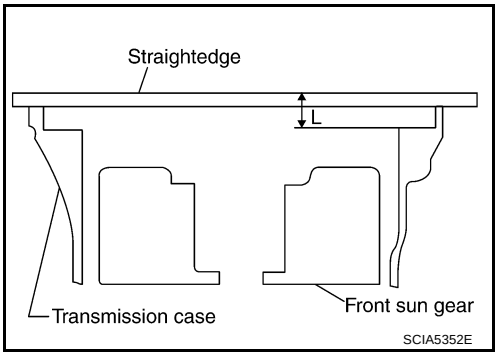

2. Measure dimensions “M_1 ” and “M_2 ” and then calculate dimension “M”.

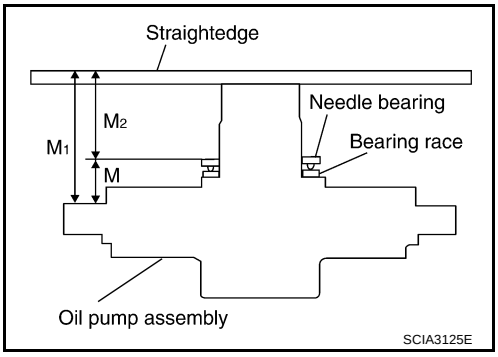

a. Place bearing race and needle bearing on oil pump assembly.

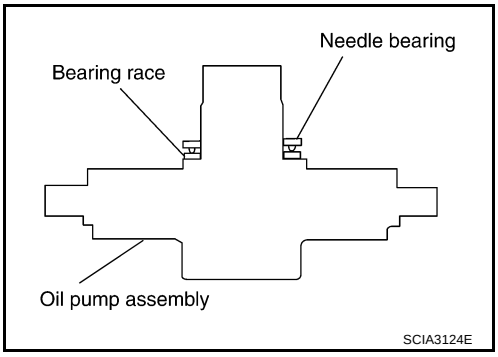

b. Measure dimension “M_1 ”.

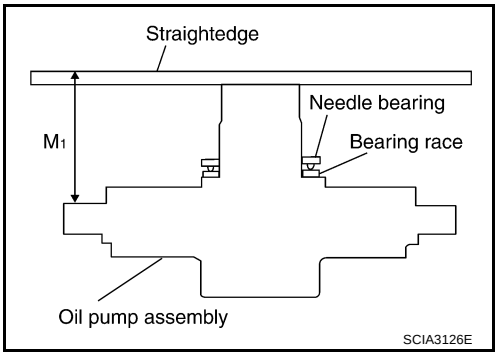

c. Measure dimension “M_2 ”.

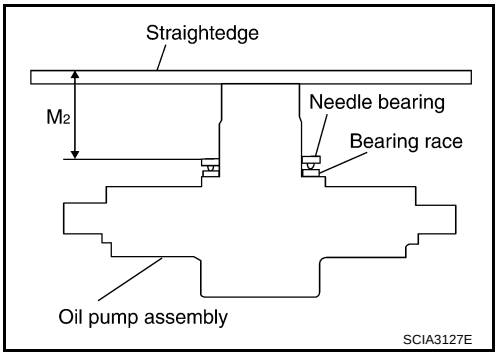

d. Calculate dimension “M”.

“M”: “M”: Distance between transmission case fitting surface of oil pump and needle bearing on oil pump.

$M = M_1 - M_2$

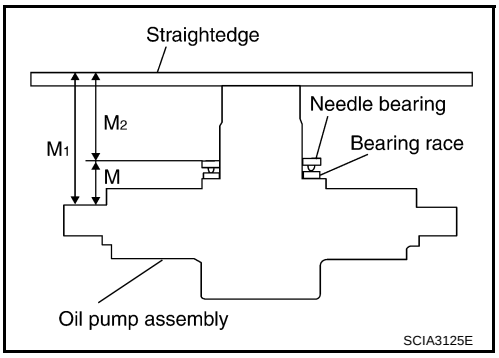

3. Adjust total end play “T_1 ”.

$T_1 = J - M$

Total end play “T_1 ”

: Refer to AT-320, "Total End Play" .

- Select proper thickness of bearing race so that total end play is within specifications. Refer to “Parts Information” for bearing race selection.

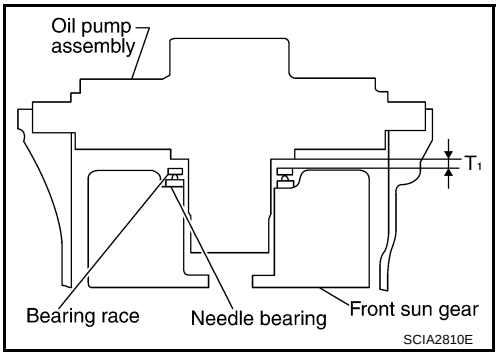

Assembly (2)

NCS000JD

1. Install O-ring to oil pump assembly.

CAUTION:

- **Do not reuse O-ring.**
- **Apply ATF to O-ring.**

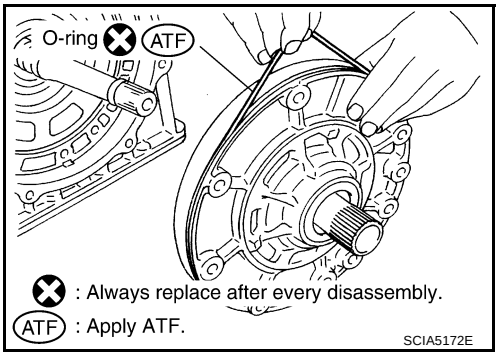

2. Install bearing race to oil pump assembly.

CAUTION:

Apply petroleum jelly to bearing race.

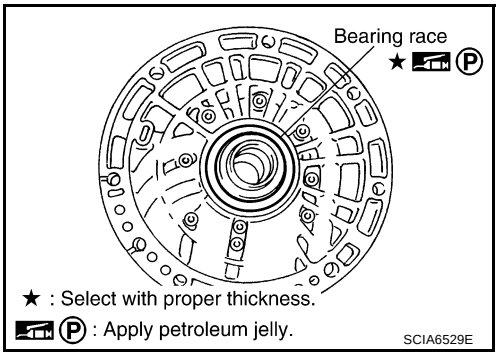

3. Install oil pump assembly in transmission case.

CAUTION:
Apply ATF to oil pump bearing.

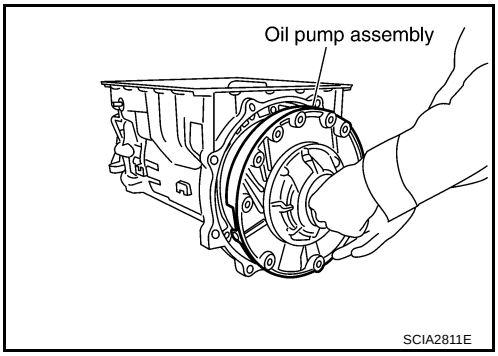

4. Apply recommended sealant (Genuine RTV Silicone Sealant or equivalent. Refer to GI-46, "Recommended Chemical Products and Sealants" .) to oil pump assembly as shown in the figure.

CAUTION:
Completely remove all moisture, oil and old sealant, etc. From the oil pump mounting bolts and oil pump mounting bolt mounting surfaces.

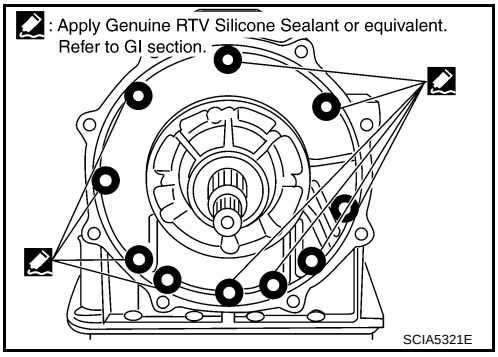

5. Tighten oil pump mounting bolts to specified torque. Refer to AT-255, "Components"

CAUTION:
Apply ATF to oil pump bushing.

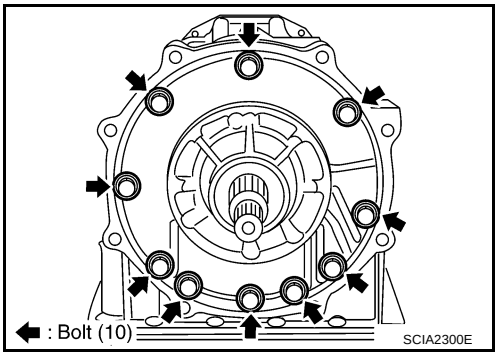

6. Install O-ring to input clutch assembly.

CAUTION:
- **Do not reuse O-ring.**
- **Apply ATF to O-ring.**

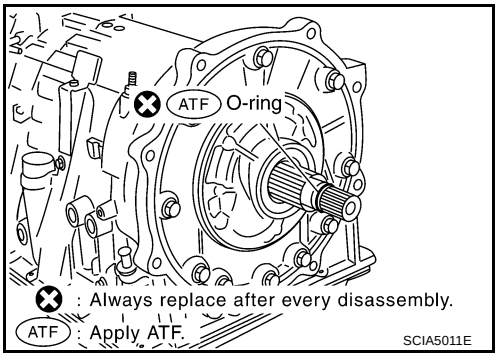

7. Install converter housing to transmission case. Tighten converter housing bolts to the specified torque. Refer to AT-255, "Components" .
- ⬅: Bolt (8)

CAUTION:
Do not reuse self-sealing bolt (2).

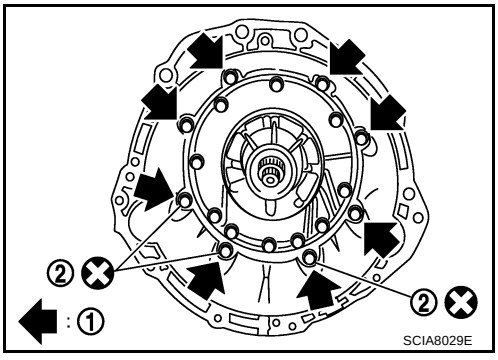

8. Make sure that brake band does not close turbine revolution sensor hole.

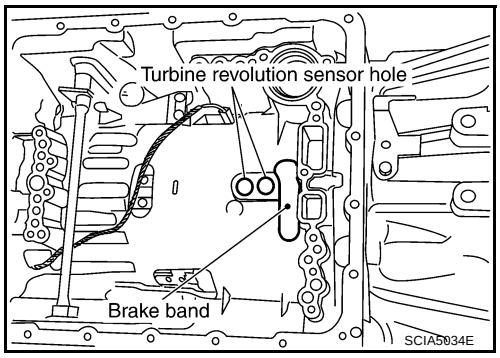

9. Install control valve with TCM.

a. Connect TCM connector and park/neutral position switch connector.

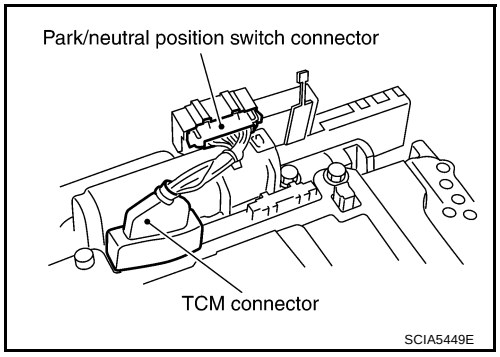

b. Install A/T assembly harness connector from control valve with TCM.

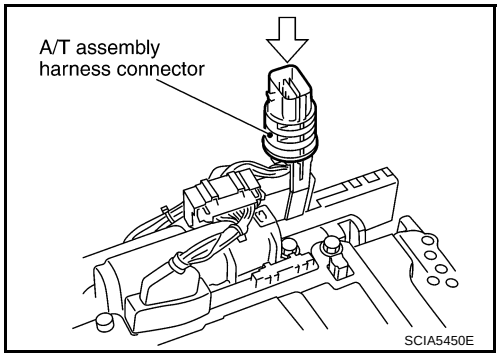

c. Connect TCM connectors.

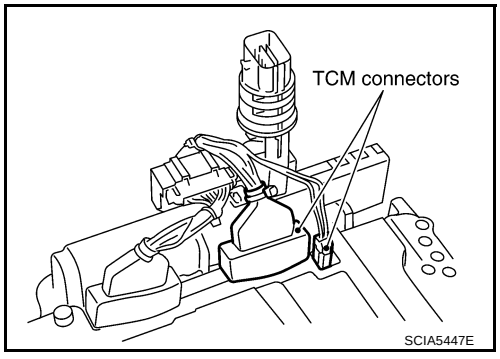

d. Install O-ring to A/T assembly harness connector.

CAUTION:

- **Do not reuse O-ring.**
- **Apply ATF to O-ring.**

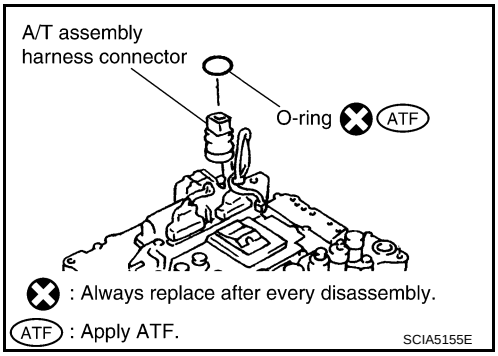

e. Install A/T fluid temperature sensor 2 to bracket.

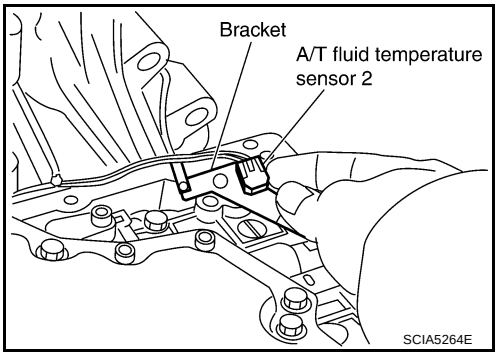

f. Install A/T fluid temperature sensor 2 (with bracket) in control valve with TCM, and then tighten A/T fluid temperature sensor 2 mounting bolt to the specified torque. Refer to AT-255, "Components"

CAUTION:

Adjust bolt hole of bracket to bolt hole of control valve.

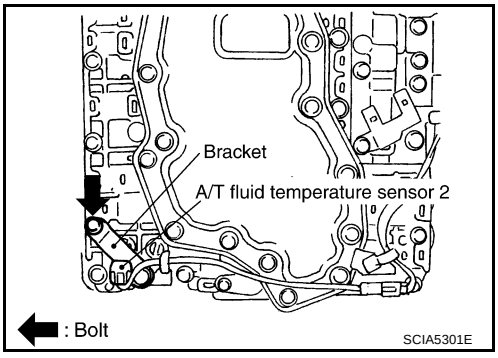

g. Install control valve with TCM in transmission case.

CAUTION:

- **Make sure that turbine revolution sensor securely installs turbine revolution sensor hole.**
- **Hang down revolution sensor harness toward outside so as not to disturb installation of control valve with TCM.**
- **Adjust A/T assembly harness connector of control valve with TCM to terminal hole of transmission case.**

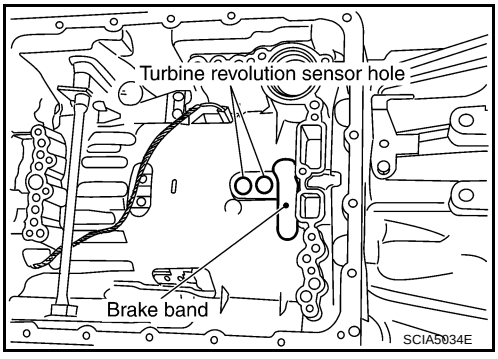

- **Assemble it so that manual valve cutout is engaged with manual plate projection.**

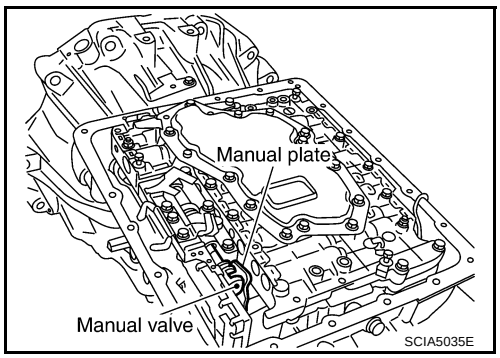

h. Install bolts A, B and C to control valve with TCM.
   - ⇦: Front

Bolt symbol	Length mm (in)	Number of bolts
A	42 (1.65)	5
B	55 (2.17)	6
C	40 (1.57)	1

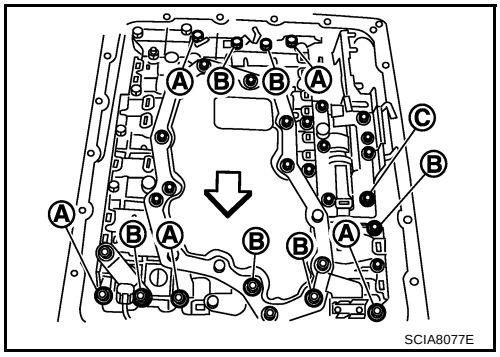

i. Tighten bolt 1, 2 and 3 temporarily to prevent dislocation. After that tighten them in order (1 → 2 → 3), and then tighten other bolts to the specified torque. Refer to AT-255, "Components" .
   - ⇦: Front

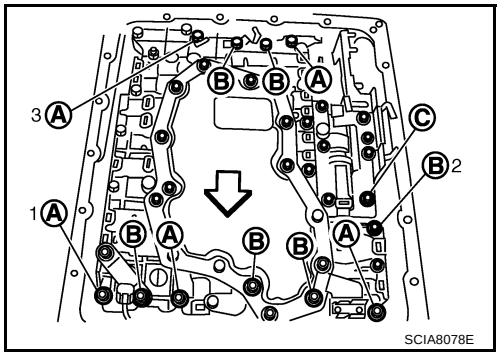

10. Connect A/T fluid temperature sensor 2 connector (A).
11. Securely fasten terminal cord assembly and A/T fluid temperature sensor 2 harness with terminal clips.
    - ⬅: Terminal clip (4)

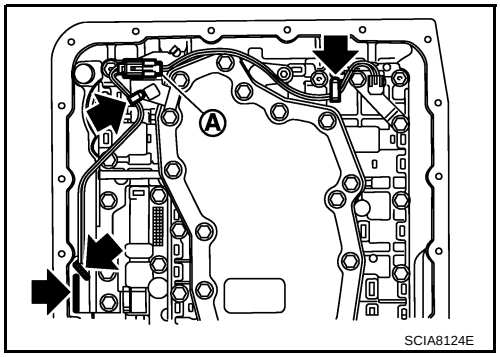

12. Connect revolution sensor connector.

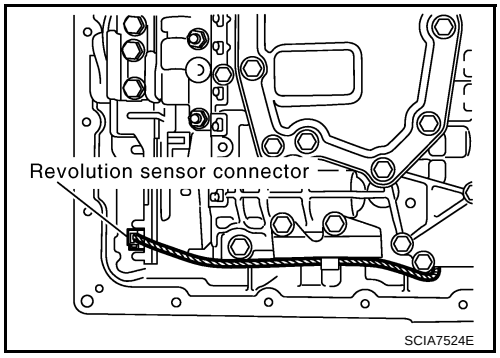

13. Securely fasten revolution sensor harness with terminal clip.

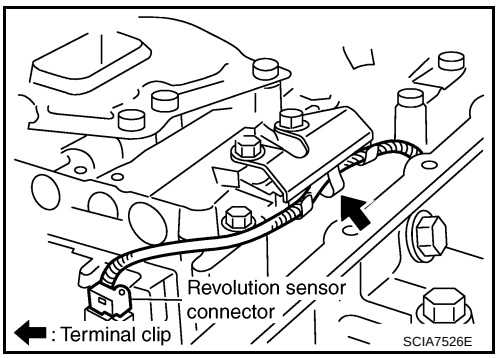

14. Pull down A/T assembly harness connector.

CAUTION:

Be careful not to damage connector.

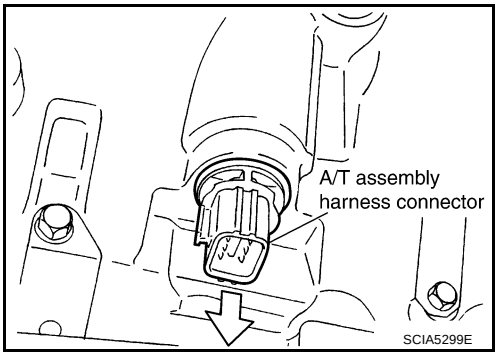

15. Install snap ring to A/T assembly harness connector.

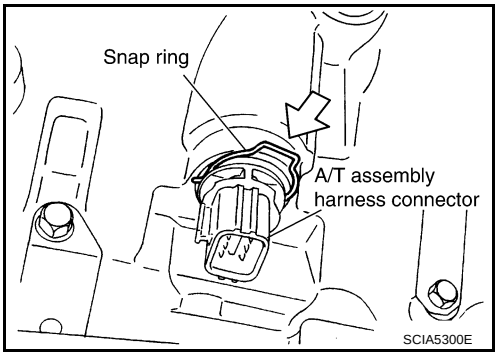

16. Install magnets in oil pan.

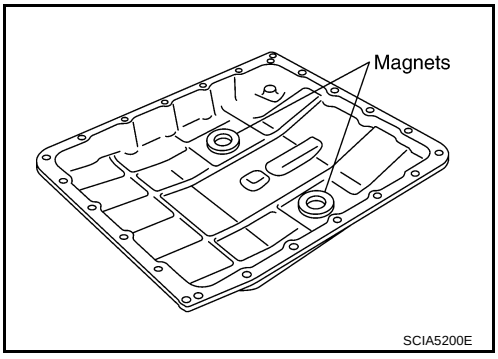

17. Install oil pan to transmission case.

a. Install oil pan gasket to transmission case.

CAUTION:

- **Do not reuse oil pan gasket.**
- **Install it in the direction to align hole positions.**
- **Complete remove all moisture, oil and old gasket, etc. from oil pan gasket mounting surface.**

b. Install oil pan (2) and clips (1) to transmission case.

CAUTION:

- **Install it so that drain plug (3) comes to the position as shown in the figure.**
- **Be careful not to pinch harnesses.**
- **Complete remove all moisture, oil and old gasket, etc. from oil pan mounting surface.**

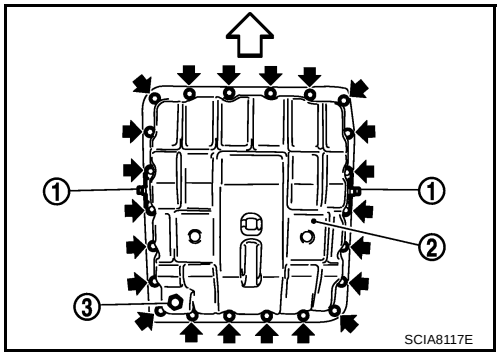

c. Tighten oil pan mounting bolts to the specified torque in numerical order shown in the figure after temporarily tightening them. Refer AT-255, "Components" .

CAUTION:

Do not reuse oil pan mounting bolts.

18. Install drain plug to oil pan, and then tighten drain plug to the specified torque. Refer to AT-255, "Components" .

CAUTION:

Do not reuse drain plug gasket.

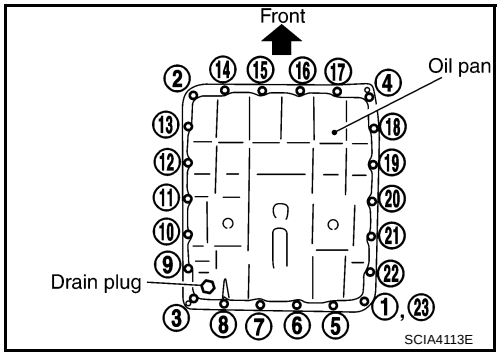

19. Install torque converter.

a. Pour ATF into torque converter.

- **Approximately 2 liter (2-1/8 US qt, 1-3/4 Imp qt) of ATF is required for a new torque converter.**
- **When reusing old torque converter, add the same amount of ATF as was drained.**

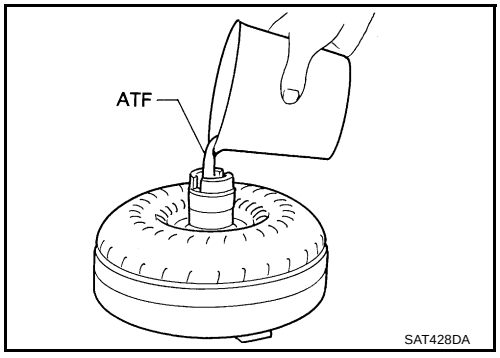

b. Install torque converter while aligning notches of torque converter with notches of oil pump.

CAUTION:

Install torque converter while rotating it.

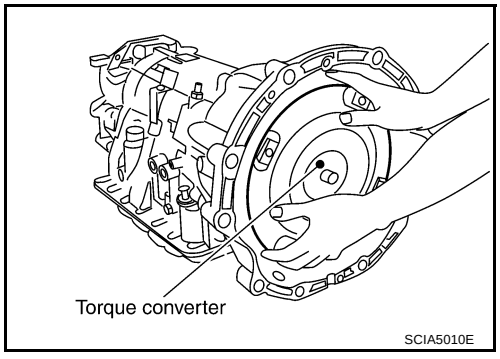

c. Measure distance “A” to check that torque converter is in proper position.

Distance “A”: 25.0 mm (0.98 in) or more

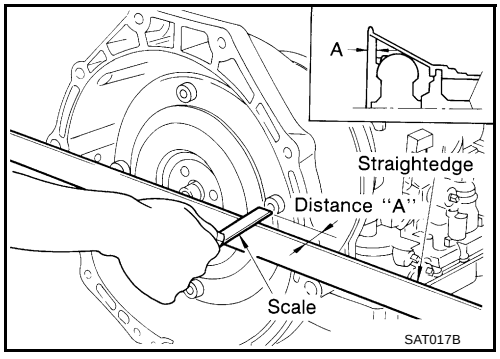

SERVICE DATA AND SPECIFICATIONS (SDS)

PFP:00030

General Specifications

NCS000JE

Applied model		VQ35DE engine
Automatic transmission model		RE5R05A
Transmission model code number		98X4C
Stall torque ratio		1.7:1
Transmission gear ratio	1st	3.842
	2nd	2.353
	3rd	1.529
	4th	1.000
	5th	0.839
	Reverse	2.765
Recommended fluid		NISSAN Matic J ATF*1
Fluid capacity		10.3 liter (10-7/8 US qt, 9-1/8 Imp qt)

CAUTION:

- **Use only Genuine NISSAN Matic J ATF. Do not mix with other fluid.**
- **Using ATF other than Genuine NISSAN Matic J ATF will deteriorate in driveability and A/T durability, and may damage the A/T, which is not covered by the warranty.**

*1: Refer to MA-10, "Fluids and Lubricants" .

Vehicle Speed at Which Gear Shifting Occurs

NCS000JF

Throttle position	Vehicle speed km/h (MPH)							
	D1 →D2	D2 →D3	D3 →D4	D4 →D5	D5 →D4	D4 →D3	D3 →D2	D2 →D1
Full throttle	51 - 55 (32 - 34)	83 - 91 (52 - 57)	129 - 139 (80 - 86)	193 - 203 (120 - 126)	189 - 199 (117 - 124)	111- 121 (69 - 75)	67 - 75 (42 - 47)	26 - 30 (16 - 19)
Half throttle	42 - 46 (26 - 29)	68 - 74 (42 - 46)	107 - 115 (67 - 71)	139 - 147 (86 - 91)	107 - 115 (67 - 71)	64 - 72 (40 - 45)	40 - 46 (25 - 29)	9 - 13 (6 - 8)

- At half throttle, the accelerator opening is 4/8 of the full opening.

Vehicle Speed at Which Lock-up Occurs/Releases

NCS000JG

Throttle position	Vehicle speed km/h (MPH)	
	Lock-up ON	Lock-up OFF
Closed throttle	54 - 62 (34 - 39)	51 - 59 (32 - 37)
Half throttle	166 - 174 (103 - 108)	132 - 140 (82 - 87)

- At closed throttle, the accelerator opening is less than 1/8 condition. (Closed throttle position signal: OFF)
- At half throttle, the accelerator opening is 4/8 of the full opening.

Stall Speed

NCS000JH

Stall speed	2,650 - 2,950 rpm

Line Pressure

NCS000JI

Engine speed	Line pressure kPa (kg/cm^2 , psi)	
	"R" position	"D" and "M" positions
At idle speed	425 - 465 (4.3 - 4.7, 62 - 67)	379 - 428 (3.9 - 4.4, 55 - 62)
At stall speed	1,605 - 1,950 (16.4 - 19.9, 233 - 283)	1,310 - 1,500 (13.4 - 15.3, 190 - 218)

A/T Fluid Temperature Sensor

NCS000JJ

Name	Condition	CONSULT-II “DATA MONITOR” (Approx.)	Resistance (Approx.)
ATF TEMP SE 1	0°C (32°F)	3.3 V	15 kΩ
	20°C (68°F)	2.7 V	6.5 kΩ
	80°C (176°F)	0.9 V	0.9 kΩ
ATF TEMP SE 2	0°C (32°F)	3.3 V	10 kΩ
	20°C (68°F)	2.5 V	4 kΩ
	80°C (176°F)	0.7 V	0.5 kΩ

Turbine Revolution Sensor

NCS000JK

Name	Condition	Data (Approx.)
Turbine revolution sensor 1	When running at 50 km/h (31 MPH) in 4th speed with the closed throttle position signal OFF.	1.3 kHz
Turbine revolution sensor 2	When moving at 20 km/h (12 MPH) in 1st speed with the closed throttle position signal OFF.	

Vehicle Speed Sensor A/T (Revolution Sensor)

NCS000JL

Name	Condition	Data (Approx.)
Revolution sensor	When moving at 20 km/h (12 MPH).	185 Hz

Reverse Brake

NCS000JM

Model code number		98X4C
Number of drive plates		6
Number of driven plates		6
Clearance mm (in)	Standard	0.7 - 1.1 (0.028 - 0.043)

Total End Play

NCS000JN

Total end play mm (in)	0.25 - 0.55 (0.0098 - 0.0217)