SECTION TM
TRANSAXLE & TRANSMISSION

CONTENTS

6MT: FS6R31A

FUNCTION DIAGNOSIS 6

M/T SYSTEM 6
System Diagram 6
System Description 6

COMPONENT DIAGNOSIS 8

BACK-UP LAMP SWITCH 8
Component Parts Location 8
Component Inspection 8

PARK/NEUTRAL POSITION SWITCH 9
Component Parts Location 9
Component Inspection 9

SYMPTOM DIAGNOSIS 10

NOISE, VIBRATION AND HARSHNESS (NVH) TROUBLESHOOTING 10
NVH Troubleshooting Chart 10

PRECAUTION 11

PRECAUTIONS 11
Service Notice or Precautions for Manual Transmission 11

PREPARATION 12

PREPARATION 12
Special Service Tools 12
Commercial Service Tools 14

ON-VEHICLE MAINTENANCE 16

GEAR OIL 16
Exploded View 16
Draining 16
Refilling 16
Inspection 16

ON-VEHICLE REPAIR 17

REAR OIL SEAL 17
Exploded View 17
Removal and Installation 17

SHIFT CONTROL 18
Exploded View 18
Removal and Installation 18
Inspection 23

AIR BREATHER HOSE 24
Exploded View 24
Removal and Installation 24

REMOVAL AND INSTALLATION 25

TRANSMISSION ASSEMBLY 25
Exploded View 25
Removal and Installation 25

DISASSEMBLY AND ASSEMBLY 29

TRANSMISSION ASSEMBLY 29
Exploded View 29
Disassembly 34
Assembly 43

MAIN DRIVE GEAR 55
Exploded View 55
Disassembly 55
Assembly 55
Inspection 56

MAINSHAFT AND GEAR 58
Exploded View 58
Disassembly 58
Assembly 58
Inspection 63

COUNTER SHAFT AND GEAR 66
Exploded View 66
Disassembly 66

Assembly 66
Inspection 68

REVERSE IDLER SHAFT AND GEAR 72
Exploded View 72
Disassembly 72
Assembly 72
Inspection 72

SHIFT FORK AND FORK ROD 73
Exploded View 73
Disassembly 73
Assembly 73
Inspection 73

SERVICE DATA AND SPECIFICATIONS (SDS) 74

SERVICE DATA AND SPECIFICATIONS (SDS) 74
General Specification 74
End Play 75
Baulk Ring Clearance 75

5AT: RE5R05A

BASIC INSPECTION 76

DIAGNOSIS AND REPAIR WORK FLOW 76
Work Flow 76
Diagnostic Work Sheet 77

FUNCTION DIAGNOSIS 79

A/T CONTROL SYSTEM 79
System Diagram 79
System Description 80
Component Parts Location 87
Component Description 89

SHIFT MECHANISM 91
Cross-Sectional View 91
System Diagram 92
System Description 92
Component Parts Location 103
Component Description 105

SHIFT LOCK SYSTEM 106
System Description 106
Component Parts Location 107
Component Description 107

ON BOARD DIAGNOSTIC (OBD) SYSTEM .. 108
Diagnosis Description 108

DIAGNOSIS SYSTEM (TCM) 111
Diagnosis Description 111
CONSULT-III Function (TRANSMISSION) 112

COMPONENT DIAGNOSIS 118

U1000 CAN COMM CIRCUIT 118
Description 118
DTC Logic 118
Diagnosis Procedure 118

P0615 START SIGNAL 119
Description 119
DTC Logic 119
Diagnosis Procedure 119

P0700 TCM 121
Description 121
DTC Logic 121
Diagnosis Procedure 121

P0705 PARK/NEUTRAL POSITION SWITCH.. 122
Description 122
DTC Logic 122
Diagnosis Procedure 122

P0717 TURBINE REVOLUTION SENSOR 124
Description 124
DTC Logic 124
Diagnosis Procedure 124

P0720 VEHICLE SPEED SENSOR A/T (REVOLUTION SENSOR) 125
Description 125
DTC Logic 125
Diagnosis Procedure 126

P0725 ENGINE SPEED SIGNAL 128
Description 128
DTC Logic 128
Diagnosis Procedure 128

P0731 A/T 1ST GEAR FUNCTION 130
Description 130
DTC Logic 130
Diagnosis Procedure 131

P0732 A/T 2ND GEAR FUNCTION 132
Description 132
DTC Logic 132
Diagnosis Procedure 133

P0733 A/T 3RD GEAR FUNCTION 134
Description 134
DTC Logic 134
Diagnosis Procedure 135

P0734 A/T 4TH GEAR FUNCTION 136
Description 136
DTC Logic 136
Diagnosis Procedure 137

P0735 A/T 5TH GEAR FUNCTION 138
Description 138
DTC Logic 138
Diagnosis Procedure 139

P0740 TORQUE CONVERTER CLUTCH SOLENOID VALVE 140

Description 140
DTC Logic 140
Diagnosis Procedure 140

P0744 A/T TCC S/V FUNCTION (LOCK -UP).. 141
Description 141
DTC Logic 141
Diagnosis Procedure 141

P0745 LINE PRESSURE SOLENOID VALVE. 142
Description 142
DTC Logic 142
Diagnosis Procedure 142

P1705 THROTTLE POSITION SENSOR 143
Description 143
DTC Logic 143
Diagnosis Procedure 143

P1710 A/T FLUID TEMPERATURE SENSOR. 144
Description 144
DTC Logic 144
Diagnosis Procedure 144
Component Inspection (A/T fluid temperature sensor 1) 146
Component Inspection (A/T fluid temperature sensor 2) 146

P1721 VEHICLE SPEED SENSOR MTR 147
Description 147
DTC Logic 147
Diagnosis Procedure 147

P1730 A/T INTERLOCK 148
Description 148
DTC Logic 148
Judgment of A/T Interlock 148
Diagnosis Procedure 148

P1731 A/T 1ST ENGINE BRAKING 149
Description 149
DTC Logic 149
Diagnosis Procedure 149

P1752 INPUT CLUTCH SOLENOID VALVE .. 150
Description 150
DTC Logic 150
Diagnosis Procedure 150

P1757 FRONT BRAKE SOLENOID VALVE ... 151
Description 151
DTC Logic 151
Diagnosis Procedure 151

P1762 DIRECT CLUTCH SOLENOID VALVE. 152
Description 152
DTC Logic 152
Diagnosis Procedure 152

P1767 HIGH AND LOW REVERSE CLUTCH SOLENOID VALVE 153
Description 153
DTC Logic 153
Diagnosis Procedure 153

P1772 LOW COAST BRAKE SOLENOID VALVE 154
Description 154
DTC Logic 154
Diagnosis Procedure 154

P1774 LOW COAST BRAKE SOLENOID VALVE FUNCTION 155
Description 155
DTC Logic 155
Diagnosis Procedure 155

P1815 MANUAL MODE SWITCH 157
Description 157
DTC Logic 157
Diagnosis Procedure 157
Component Inspection (Manual Mode Switch) 161
Component Inspection (Paddle Shifter) 162

MAIN POWER SUPPLY AND GROUND CIRCUIT 163
Description 163
Diagnosis Procedure 163

SHIFT POSITION INDICATOR CIRCUIT 165
Description 165
Component Function Check 165
Diagnosis Procedure 165

SHIFT LOCK SYSTEM 166
Description 166
Wiring Diagram - A/T SHIFT LOCK SYSTEM - 166
Component Function Check 169
Diagnosis Procedure 170
Component Inspection (Shift lock solenoid) 172
Component Inspection (Shift lock relay) 172
Component Inspection (Stop lamp switch) 172

SELECTOR LEVER POSITION INDICATOR . 174
Description 174
Component Function Check 174
Diagnosis Procedure 174
Component Inspection 176

ECU DIAGNOSIS 177

TCM 177
Reference Value 177
Wiring Diagram - A/T CONTROL SYSTEM - 179
Fail-Safe 184
DTC Inspection Priority Chart 186
DTC Index 186

SYMPTOM DIAGNOSIS 188

SYSTEM SYMPTOM 188
Symptom Table 188

PRECAUTION 210

PRECAUTIONS 210
Precaution for Supplemental Restraint System (SRS) "AIR BAG" and "SEAT BELT PRE-TENSIONER" 210
On Board Diagnosis (OBD) System of A/T and Engine 210
General Precautions 210
Service Notice or Precaution 211

PREPARATION 212

PREPARATION 212
Special Service Tool 212
Commercial Service Tool 213

ON-VEHICLE MAINTENANCE 214

A/T FLUID 214
Inspection 214
Changing 215

A/T FLUID COOLER 216
Cleaning 216
Inspection 218

STALL TEST 219
Inspection and Judgment 219

LINE PRESSURE TEST 220
Inspection and Judgment 220

ROAD TEST 222
Description 222
Check Before Engine Is Started 222
Check at Idle 222
Cruise Test - Part 1 223
Cruise Test - Part 2 224
Cruise Test - Part 3 224

A/T POSITION 226
Inspection and Adjustment 226

ON-VEHICLE REPAIR 227

CONTROL DEVICE 227
Exploded View 227
Removal and Installation 227
Inspection and Adjustment 228

CONTROL ROD 229
Exploded View 229
Removal and Installation 229
Inspection and Adjustment 229

PADDLE SHIFTER 230
Exploded View 230
Removal and Installation 230

CONTROL VALVE WITH TCM 232
Exploded View 232
Removal and Installation 232
Inspection 240

A/T FLUID TEMPERATURE SENSOR 2 241
Exploded View 241
Removal and Installation 241
Inspection 244

PARKING COMPONENTS 245
Exploded View 245
Removal and Installation 245
Inspection 251

REAR OIL SEAL 252
Exploded View 252
Removal and Installation 252
Inspection 253

REVOLUTION SENSOR 254
Exploded View 254
Removal and Installation 254
Inspection 258

AIR BREATHER HOSE 260
Exploded View 260
Removal and Installation 260

A/T FLUID COOLER TUBE 261
Exploded View 261
Removal and Installation 261
Inspection 262

REMOVAL AND INSTALLATION 263

TRANSMISSION ASSEMBLY 263
Exploded View 263
Removal and Installation 263
Inspection 265

DISASSEMBLY AND ASSEMBLY 266

TRANSMISSION ASSEMBLY 266
Exploded View 266
Oil Channel 271
Location of Adjusting Shims, Needle Bearings, Thrust Washers and Snap Rings 272
Disassembly 273
Assembly 288
Inspection 308

OIL PUMP 310
Exploded View 310
Disassembly 310
Assembly 311

FRONT SUN GEAR, 3RD ONE-WAY CLUTCH 313
Exploded View 313
Disassembly 313
Assembly 314
Inspection 314

FRONT CARRIER, INPUT CLUTCH, REAR INTERNAL GEAR 315
Exploded View 315
Disassembly 316
Assembly 317
Inspection 319

MID SUN GEAR, REAR SUN GEAR, HIGH AND LOW REVERSE CLUTCH HUB 320
Exploded View 320
Disassembly 320
Assembly 322
Inspection 324

HIGH AND LOW REVERSE CLUTCH 325
Exploded View 325
Disassembly 325
Assembly 325
Inspection 326

DIRECT CLUTCH 327
Exploded View 327
Disassembly 327
Assembly 327
Inspection 328

SERVICE DATA AND SPECIFICATIONS (SDS) 329

SERVICE DATA AND SPECIFICATIONS (SDS) 329
General Specification 329
Vehicle Speed at Which Gear Shifting Occurs 329
Vehicle Speed at Which Lock-up Occurs/Releases 329
Stall Speed 329
Line Pressure 330
Turbine Revolution Sensor 330
Vehicle Speed Sensor A/T (Revolution Sensor) 330
Reverse Brake 330
Total End Play 330
Torque Converter 330

FUNCTION DIAGNOSIS

M/T SYSTEM

System Diagram

INFOID:0000000001732856

CROSS-SECTIONAL VIEW

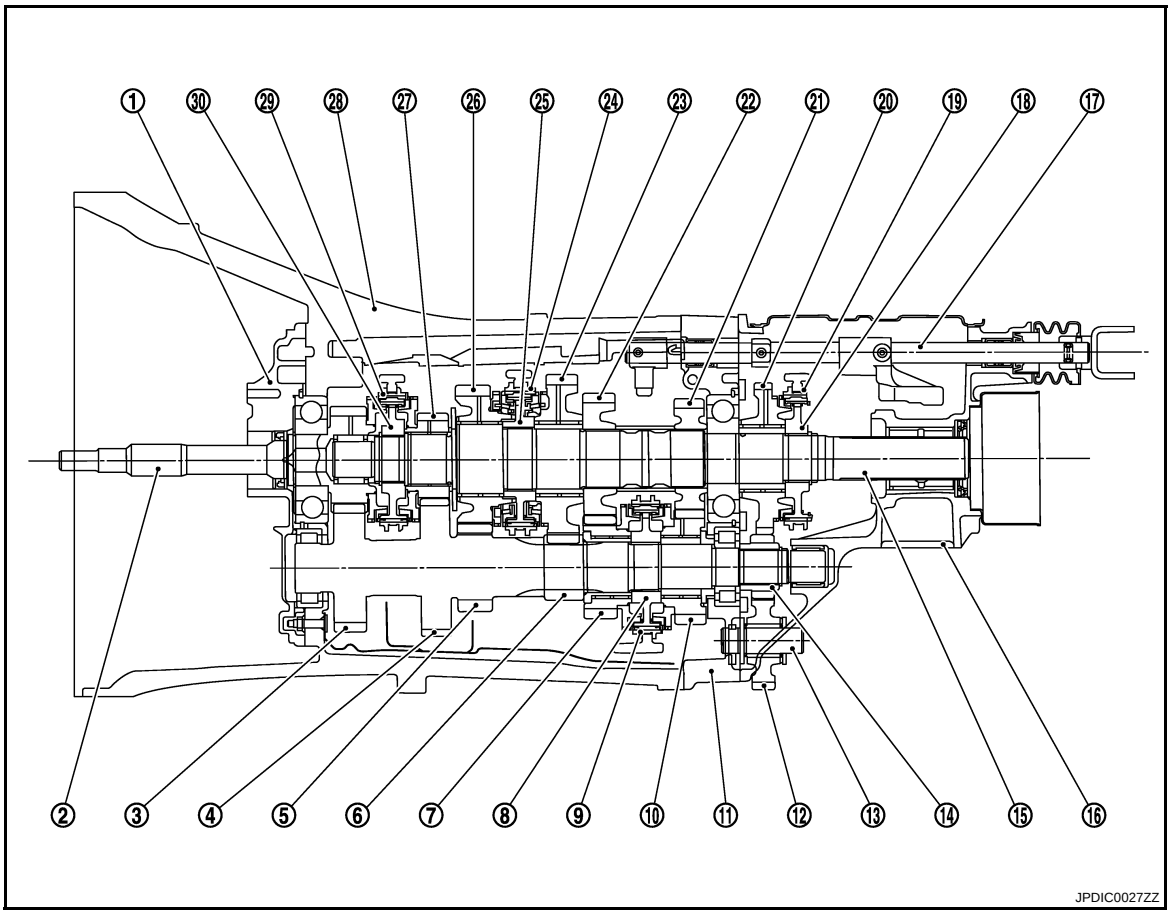

1. Front cover	2. Main drive gear	3. Counter shaft
4. 6th counter gear	5. 2nd counter gear	6. 1st counter gear
7. 3rd counter gear	8. 3rd-4th synchronizer hub	9. 3rd-4th coupling sleeve
10. 4th counter gear	11. Adapter plate	12. Reverse idler gear
13. Reverse idler shaft	14. Reverse counter gear	15. Mainshaft
16. Rear extension	17. Striking rod	18. Reverse synchronizer hub
19. Reverse coupling sleeve	20. Reverse main gear	21. 4th main gear
22. 3rd main gear	23. 1st main gear	24. 1st-2nd coupling sleeve
25. 1st-2nd synchronizer hub	26. 2nd main gear	27. 6th main gear
28. Transmission case	29. 5th-6th coupling sleeve	30. 5th-6th synchronizer hub

System Description

INFOID:0000000001732857

DOUBLE-CONE SYNCHRONIZER

The 4th gear is equipped with a double-cone synchronizer to reduce the operating force of the control lever.

TRIPLE-CONE SYNCHRONIZER

The 1st, 2nd and 3rd gears are equipped with a triple-cone synchronizer to reduce the operating force of the control lever.

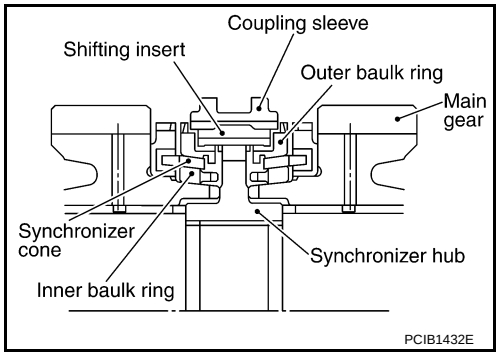

COMPONENT DIAGNOSIS

BACK-UP LAMP SWITCH

Component Parts Location

INFOID:0000000001732858

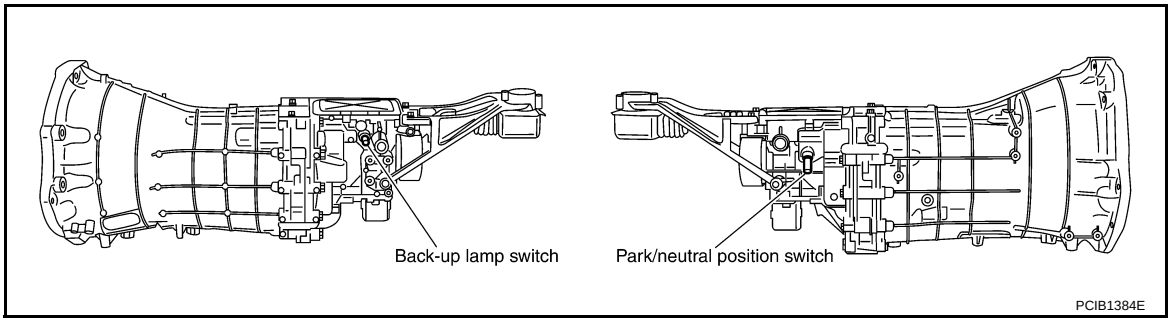

Component Inspection

INFOID:0000000001732859

1. CHECK BACK-UP LAMP SWITCH

Check continuity between back-up lamp switch terminals with control lever turned to 1st to 6th and reverse position.

Connector	Terminals		Gear position	Continuity
F56	1	2	Reverse	Existed
			Except reverse	Not existed

Is the inspection result normal?

YES >> INSPECTION END
NO >> Replace back up lamp switch. Refer to TM-29, "Exploded View".

PARK/NEUTRAL POSITION SWITCH

Component Parts Location

INFOID:0000000001732860

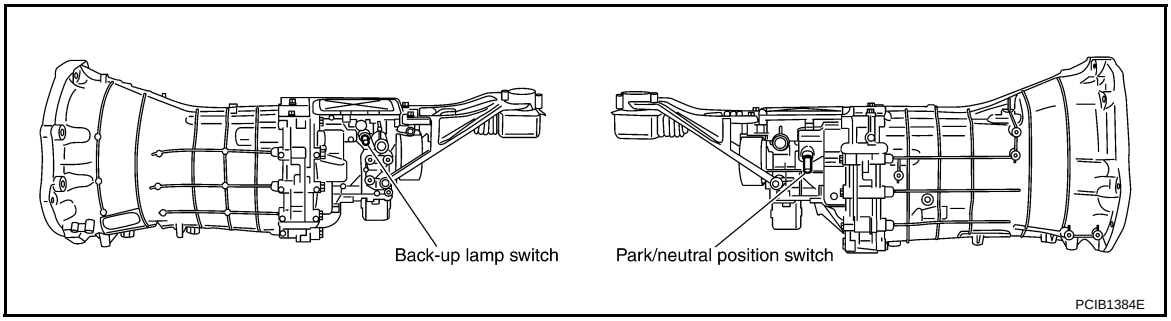

Component Inspection

INFOID:0000000001732861

1. CHECK PARK/NEUTRAL POSITION (PNP) SWITCH

Check continuity between park/neutral position (PNP) switch terminals with control lever turned to 1st to 6th and reverse position.

Connector	Terminals		Gear position	Continuity
F55	1	2	Neutral	Existed
			Except neutral	Not existed

Is the inspection result normal?

YES >> INSPECTION END
NO >> Replace park/neutral position (PNP) switch. Refer to TM-29, "Exploded View".

SYMPTOM DIAGNOSIS

NOISE, VIBRATION AND HARSHNESS (NVH) TROUBLESHOOTING

NVH Troubleshooting Chart

INFOID:0000000001732862

Use the chart below to help you find the cause of the symptom. The numbers indicate the order of the inspection. If necessary, repair or replace these parts.

Reference		TM-16			TM-29		TM-18	TM-29		TM-29			
SUSPECTED PARTS (Possible cause)		OIL (Oil level is low.)	OIL (Wrong oil.)	OIL (Oil level is high.)	GASKET (Damaged)	OIL SEAL (Worn or damaged)	SHIFT CONTROL LINKAGE (Worn)	CHECK PLUG RETURN SPRING AND CHECK BALL (Worn or damaged)	SHIFT FORK (Worn)	GEAR (Worn or damaged)	BEARING (Worn or damaged)	BAULK RING (Worn or damaged)	INSERT SPRING (Damaged)
Symptoms	Noise	1	2							3	3		
	Oil leakage		3	1	2	2							
	Hard to shift or will not shift		1	1			2					2	2
	Jumps out of gear						1	1	2	2			

PRECAUTION

PRECAUTIONS

Service Notice or Precautions for Manual Transmission

INFOID:0000000001732863

CAUTION:

- **If transmission assembly is removed from the vehicle, always replace CSC (Concentric Slave Cylinder) body and CSC tube. Return CSC body insert to original position to remove transmission assembly. Dust on clutch disc sliding parts may damage seal of CSC body and may cause clutch fluid leakage.**
- **Never reuse transmission oil, once it has been drained.**
- **Check oil level or replace oil with vehicle on level ground.**
- **During removal or installation, keep inside of transmission clear of dust or dirt.**
- **Check for the correct installation status prior to removal or disassembly. If matching marks are required, be certain they do not interfere with the function of the parts they are applied.**
- **In principle, tighten bolts or nuts gradually in several steps working diagonally from inside to outside. If tightening sequence is specified, observe it.**
- **Never damage sliding surfaces and mating surfaces.**
- **Never hold control lever housing to prevent bushing of control lever housing from deformation when moving transmission assembly.**

PREPARATION

PREPARATION

Special Service Tools

INFOID:0000000001732864

The actual shapes of Kent-Moore tools may differ from those of special service tools illustrated here.

Tool number (Kent-Moore No.) Tool name	Description
KV381054S0 (J-34286) Puller 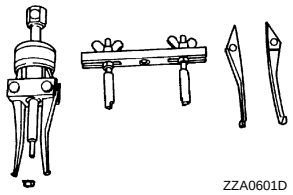 ZZA0601D	Removing rear oil seal
ST33400001 (J-26082) Drift a: 60 mm (2.36 in) dia. b: 47 mm (1.85 in) dia. 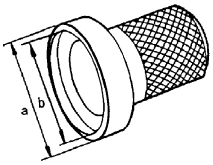 ZZA0814D	Installing rear oil seal
ST22490000 (—) Adapter setting plate a: 156 mm (6.14 in) b: 220 mm (8.66 in) 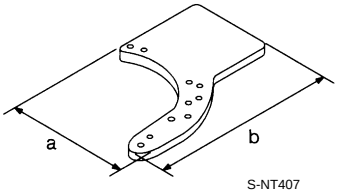 S-NT407	Holding a adapter plate
ST33200000 (J-26082) Drift a: 60 mm (2.36 in) dia. b: 44.5 mm (1.752 in) dia. 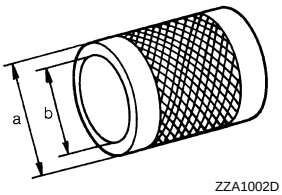 ZZA1002D	Installing counter rear bearing
KV32103300 (J-46529) Press plate a: 73 mm (2.87 in) 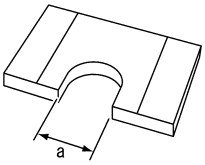 PCIB0165J	Installing reverse synchronizer assembly
ST01530000 (—) Drift a: 50 mm (1.97 in) dia. b: 41 mm (1.61 in) dia. 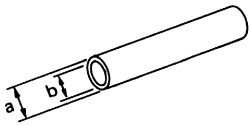 ZZA0534D	Installing reverse synchronizer assembly

Tool number (Kent-Moore No.) Tool name	Description
ST23860000 (—) Drift a: 38 mm (1.50 in) dia. b: 33 mm (1.30 in) dia. 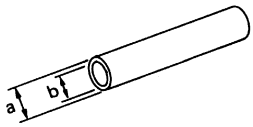 ZZA0534D	Installing reverse counter gear
KV38102100 (J-25803-01) Drift a: 44 mm (1.73 in) dia. b: 36 mm (1.42 in) dia. c: 24.5 mm (0.965 in) dia. 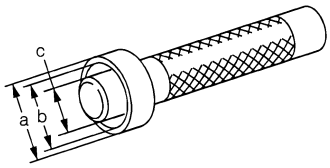 ZZA1046D	Installing front cover oil seal
ST33061000 (J-8107-2) Drift a: 28.5 mm (1.122 in) dia. b: 38 mm (1.50 in) dia. 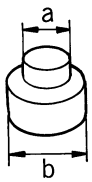 ZZA1023D	Installing striking rod oil seal
KV32102700 (—) Drift a: 48.6 mm (1.913 in) dia. b: 41.6 mm (1.638 in) dia. 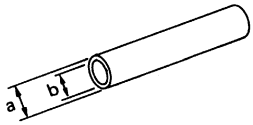 ZZA0534D	Installing main drive gear bearing
ST30911000 (—) Inserter a: 98 mm (3.86 in) dia. b: 40.5 mm (1.594 in) dia. 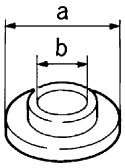 ZZA0920D	• Installing 5th-6th synchronizer assembly • Installing mainshaft bearing • Installing reverse main gear bushing • Installing 3rd gear bushing • Installing 3rd-4th synchronizer assembly
ST27861000 (—) Support ring a: 62 mm (2.44 in) dia. b: 52 mm (2.05 in) dia. 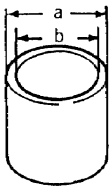 ZZA0832D	• Installing 1st-2nd synchronizer assembly • Installing 1st gear bushing
ST30022000 (—) Inserter a: 110 mm (4.33 in) dia. b: 46 mm (1.81 in) dia. 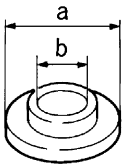 ZZA0920D	• Installing 3rd main gear • Installing 4th main gear

Tool number (Kent-Moore No.) Tool name	Description
KV40100630 (J-26092) Inserter a: 67.5 mm (2.657 in) dia. b: 38.5 mm (1.516 in) dia. 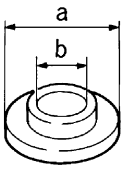 ZZA0920D	Installing 4th counter gear thrust washer
ST30032000 (J-26010-01) Inserter a: 80 mm (3.15 in) dia. b: 31 mm (1.22 in) dia. 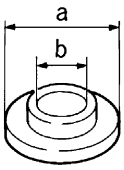 ZZA0920D	Installing counter rear bearing inner race
ST30031000 (J-22912-01) Puller 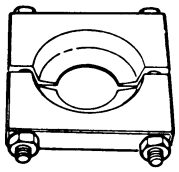 ZZA0537D	Measuring wear of inner baulk ring

Commercial Service Tools

INFOID:0000000001732865

Tool name	Description
Puller 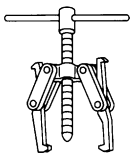 NT077	• Removing reverse main gear • Removing reverse synchronizer assembly • Removing reverse counter gear
Puller 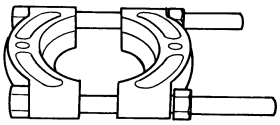 ZZB0823D	Removing each bearing, gear and bushing

Tool name	Description
Pin punch a: 6.0 mm (0.24 in) dia. 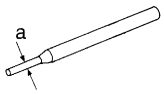 NT410	Removing and installing each retaining pin
Power tool 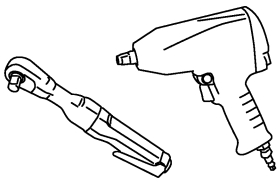 PBIC0190E	Loosening bolts and nuts

ON-VEHICLE MAINTENANCE

GEAR OIL

Exploded View

INFOID:0000000001732866

Refer to TM-29, "Exploded View".

Draining

INFOID:0000000001732867

1. Start the engine and let it run to warm up transmission.
2. Stop the engine. Remove drain plug and then drain gear oil.
3. Set a gasket on drain plug and install it to transmission case.
   CAUTION:
   Never reuse gasket.
4. Tighten drain plug to the specified torque. Refer to TM-29, "Exploded View".

Refilling

INFOID:0000000001732868

1. Remove filler plug (1). Fill with new gear oil to transmission as shown in the figure.

   Oil grade and viscosity : **Refer to MA-10, "Fluids and Lubricants".**

   Oil capacity : **Refer to TM-74, "General Specification".**

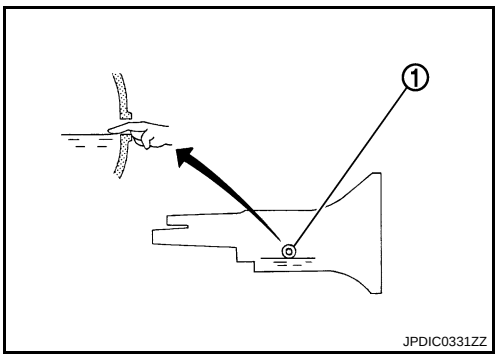

2. After refilling gear oil, check oil level. Refer to TM-16, "Inspection".
3. Set a gasket on filler plug and then install it to transmission case.
   CAUTION:
   Never reuse gasket.
4. Tighten filler plug to the specified torque. Refer to TM-29, "Exploded View".

Inspection

INFOID:0000000001732869

LEAKAGE

Make sure that gear oil is not leaking from transmission or around it.

LEVEL

1. Remove filler plug (1).
2. Check oil level from filler plug mounting hole as shown in the figure.
   CAUTION:
   Never start engine while checking oil level.
3. Set a gasket on filler plug and then install it to transmission case.
   CAUTION:
   Never reuse gasket.
4. Tighten filler plug to the specified torque. Refer to TM-29, "Exploded View".

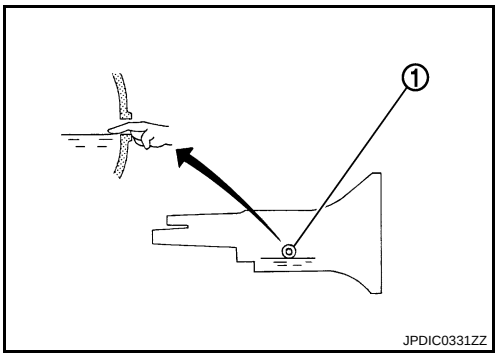

ON-VEHICLE REPAIR

REAR OIL SEAL

Exploded View

INFOID:0000000001732870

Refer to TM-29, "Exploded View".

Removal and Installation

INFOID:0000000001732871

REMOVAL

1. Remove propeller shaft assembly. Refer to DLN-7, "Removal and Installation".
2. Remove rear oil seal using a puller [SST: KV381054S0 (J-34286)].

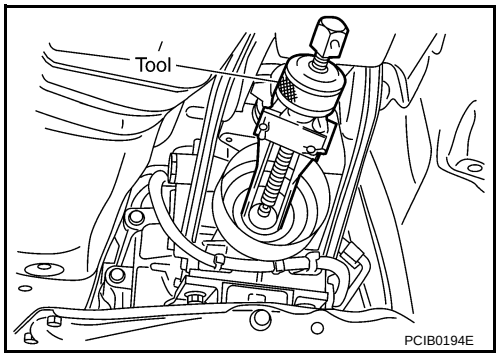

INSTALLATION

1. Apply multi-purpose grease to lip of rear oil seal (1). Drive in rear oil seal to rear extension using the drift (A) [SST: ST33400001 (J-26082)].

   Dimension "H" : 1.2 - 2.2 mm (0.047 - 0.087 in)

   CAUTION:
   - **Never reuse rear oil seal.**
   - **When installing, never incline rear oil seal.**
2. Install propeller shaft assembly. Refer to DLN-7, "Removal and Installation".

   CAUTION:
   - **If lubricant leak has occurred during the repair work, check oil level after finishing work. Refer to TM-16, "Inspection".**

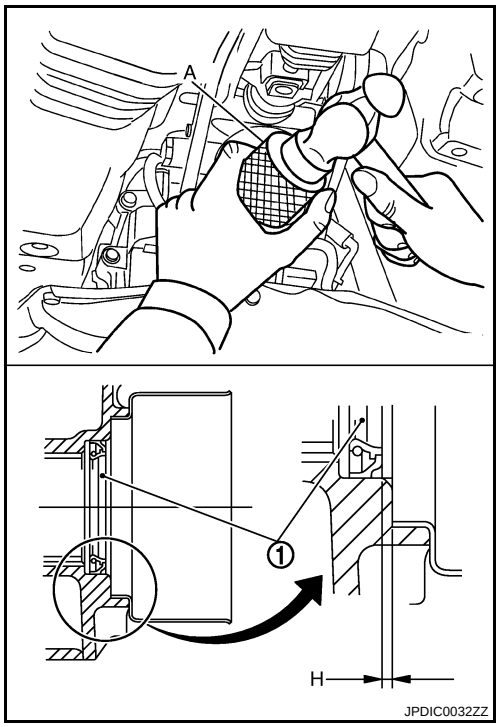

SHIFT CONTROL

Exploded View

INFOID:0000000001732872

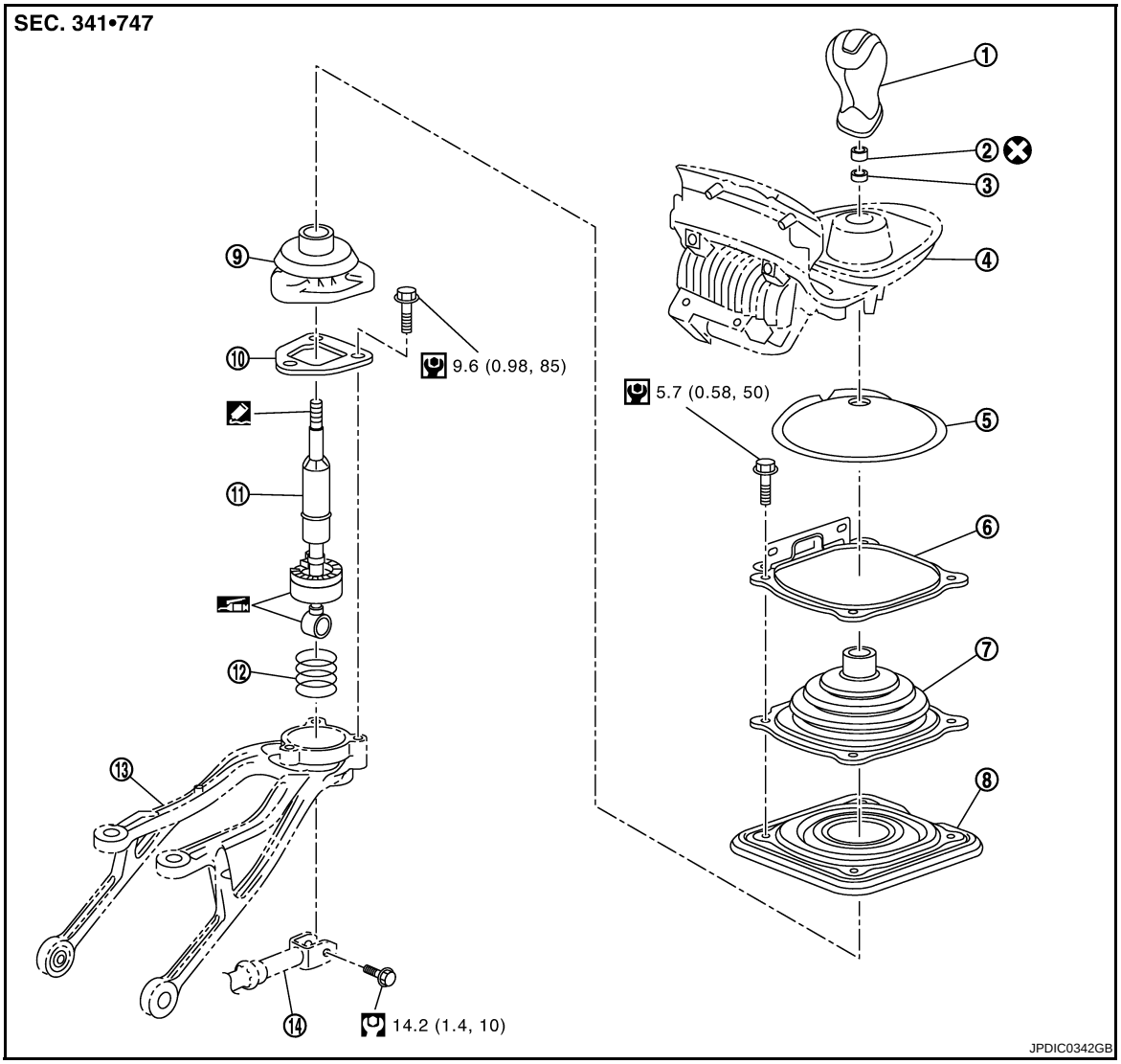

1.	Shift knob	2.	Insulator	3.	Seat
4.	Console finisher assembly	5.	Felt	6.	Hole cover
7.	Control lever boot B	8.	Hole insulator	9.	Control lever boot A
10.	Guide plate	11.	Control lever assembly	12.	Control lever spring
13.	Control lever housing	14.	Control rod		

: Apply multi-purpose grease.

: Apply Genuine Medium Strength Thread Locking Sealant or an equivalent. Refer to GI-15, "Recommended Chemical Products and Sealants".

Refer to GI-4, "Components" for symbols not described on the above.

Removal and Installation

INFOID:0000000001732873

REMOVAL

1. Remove shift knob with the following procedure.

a. Release metal clips on console finisher assembly. Refer to IP-24, "Removal and Installation".

b. Lift console finisher assembly and then set a suitable pliers to control lever assembly.
CAUTION:
Put waste cloth (A) between a suitable pliers and control lever assembly to avoid damaging control lever assembly.

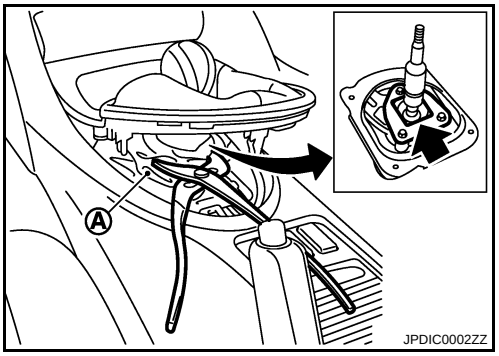

c. Set a suitable pliers to shift knob.
CAUTION:
Put waste cloth (A) between a suitable pliers and shift knob to avoid damaging shift knob.

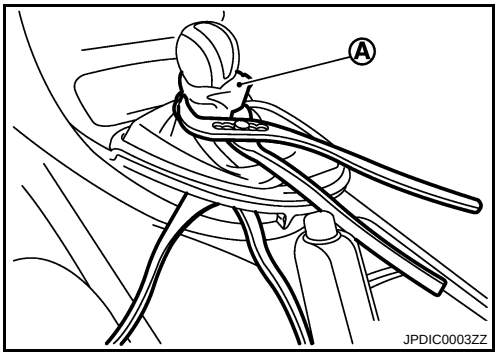

d. Keeping control lever assembly in place with a suitable pliers, loosen shift knob with a suitable pliers.
NOTE:
Remove shift knob from control lever assembly keeping a suitable pliers in place because a certain power to turn shift knob is still necessary even after adhesive is peeled.

e. Remove shift knob from control lever assembly.

2. Remove insulator and seat from control lever assembly.
3. Remove console finisher assembly.
4. Remove center console assembly. Refer to IP-24, "Removal and Installation".

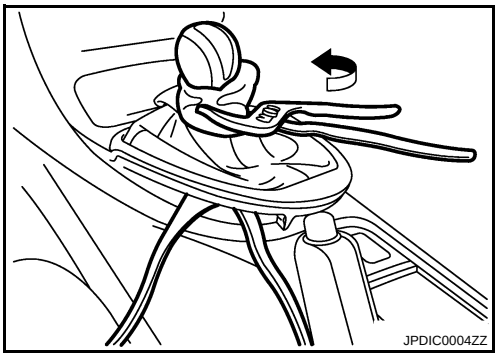

5. Remove felt.

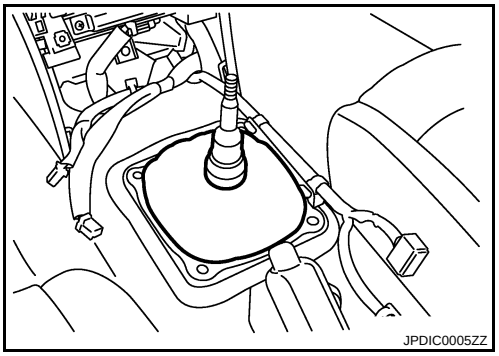

6. Release boot from control lever housing. Then remove control rod mounting bolt and then separate control lever assembly and control rod.

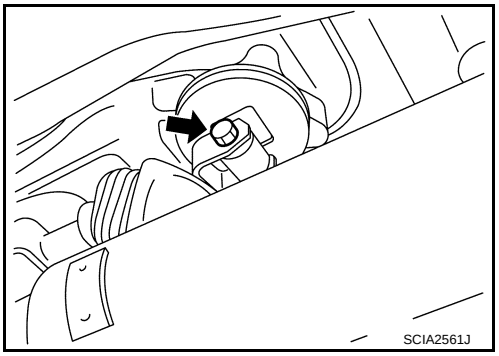

7. Remove hole cover mounting bolts and then remove hole cover.

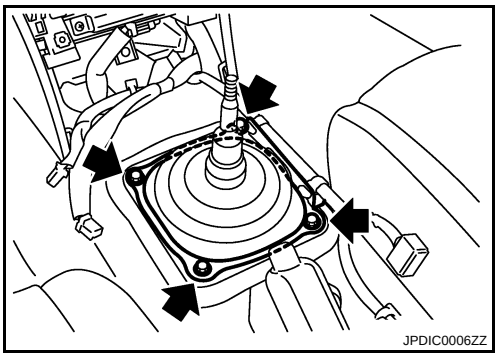

8. Remove control lever boot B and hole insulator.

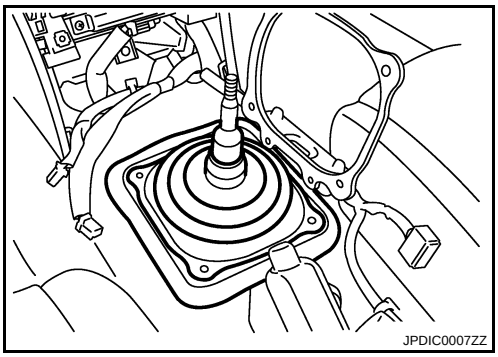

9. Remove control lever boot A.

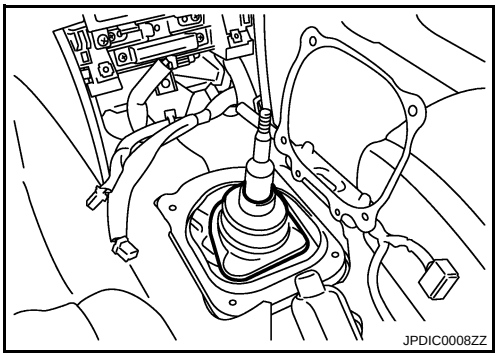

10. Remove guide plate mounting bolts and then remove control lever assembly and control lever spring from control lever housing.
CAUTION:
Restrain guide plate while doing this because there is a danger control lever assembly will fly out of control lever housing.

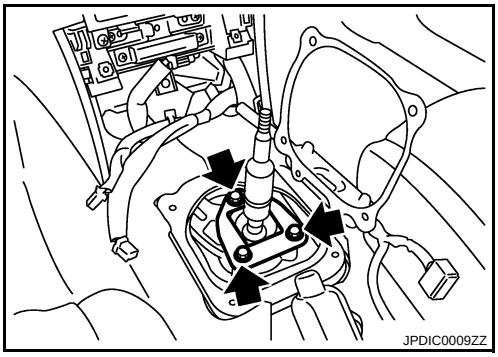

INSTALLATION

1. Set control lever spring, control lever assembly, and guide plate to control lever housing and then temporarily tightening guide plate mounting bolts.
CAUTION:
Restrain guide plate while doing this because there is a danger control lever assembly will fly out of control lever housing.

2. Install control lever assembly to control rod and then tighten bolt to the specified torque.
3. Install boot to control lever housing.
   CAUTION:
   Fit the boot to the groove on the control lever housing.

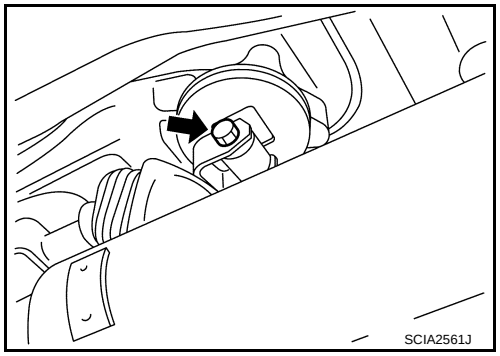

4. Install guide plate with the following procedure.
   a. After shifting control lever assembly into 6th gear, push it toward reverse gear (to the right) until it comes to a stop.
   b. At the point where control lever assembly stops, bring guide plate closer until guide plate stopper contacts control lever assembly claw and then temporarily tighten mounting bolt A.

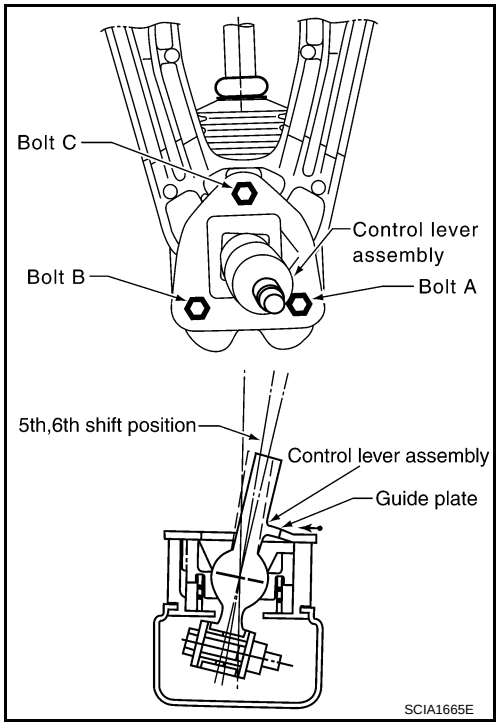

   c. After shifting control lever assembly into 5th gear, push it toward reverse gear (to the right) until it comes to a stop.
   d. At the point where control lever assembly stops, bring guide plate closer until guide plate stopper contacts control lever assembly claw and then tighten mounting bolt C to the specified torque.
   e. Tighten guide plate mounting bolts A and B to the specified torque.

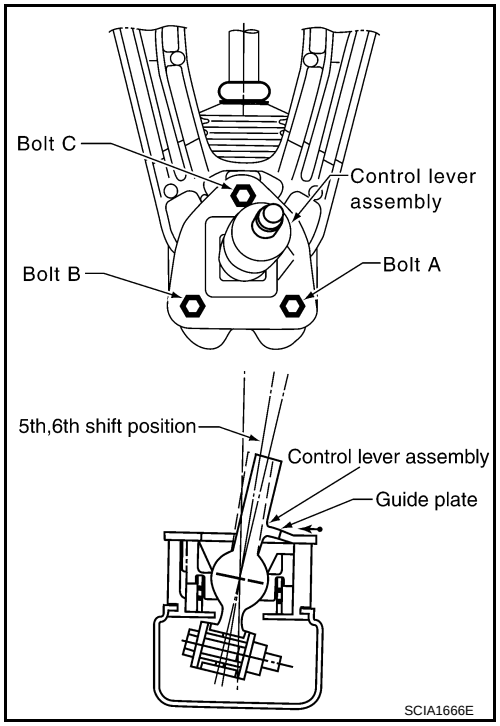

5. Install control lever boot A.
   CAUTION:
   Fit the control lever boot A to the groove on the control lever housing.

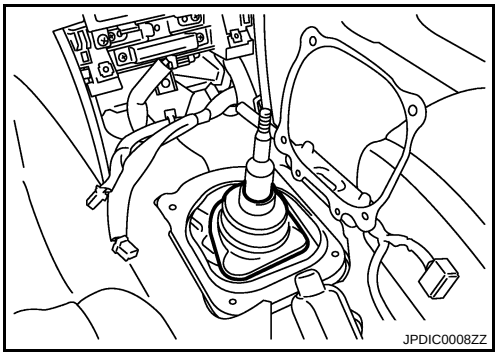

6. Install hole insulator and control lever boot B.

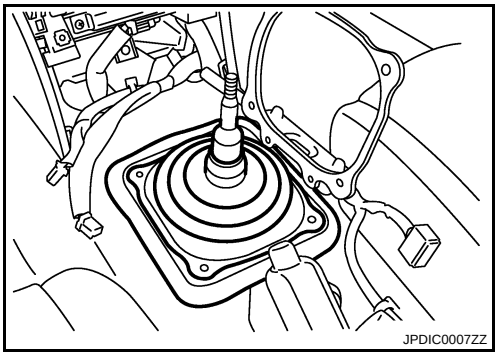

7. Install hole cover and then tighten hole cover mounting bolts to the specified torque.

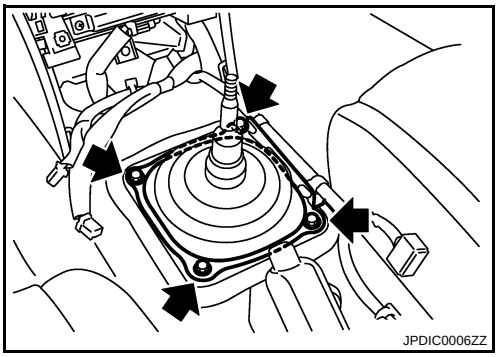

8. Install felt.
9. Install center console assembly. Refer to IP-24, "Removal and Installation".
10. Install console finisher assembly. Refer to IP-24, "Removal and Installation".

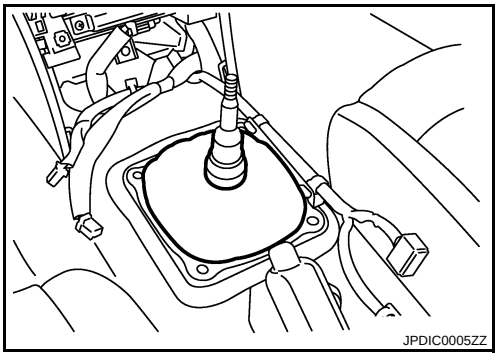

11. Install seat and insulator to control lever assembly.
    CAUTION:
    - **Be careful with the orientation of seat.**
    - **Never reuse insulator.**
12. Apply thread locking sealant to control lever assembly threads and then install shift knob.
    - **Use Genuine Medium Strength Thread Locking Sealant or an equivalent. Refer to GI-15, "Recommended Chemical Products and Sealants".**

    CAUTION:

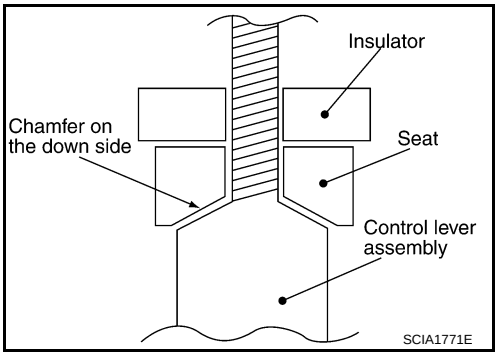

Remove the remaining adhesive on control lever assembly and shift knob threads.

13. Put shift knob in the correct position as the following indicates.

a. When tightening shift knob, if shift knob comes to the proper position within 1/2 turn from the position at which resistance begins to be felt, tighten it 1 more turn to set it in the proper position.

A : Proper position
B : Start position on reaction force
⇦ : Vehicle front

b. If it takes more than 1/2 turn from the position at which resistance begins to be felt, tighten it to set it in the proper position.
CAUTION:
- **Never adjust shift knob with loosing.**
- **After adjusting to the proper position, until 30 minutes pass, never operate the shift intensely such as screwing or turning shift knob to opposite direction since a locking sealant because stiff.**

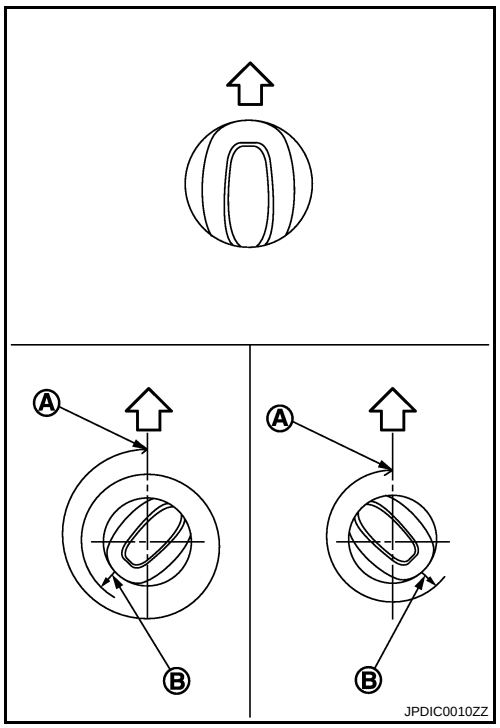

Inspection

INFOID:0000000001732874

After installing, confirm the following items:
- When control lever assembly is shifted to each position, make sure there is no binding or disconnection in each boot.
- When shifted to each position, make sure there is no noise, binding, and backlash. Especially when control lever assembly is shifted to 5th, 6th without pressing downward, check for binding.
- When control lever assembly is shifted to 1st-2nd side and 5th-6th side, confirm control lever assembly returns to neutral position smoothly.
- In any position other than reverse, confirm that control lever assembly can be pressed downward.
- With control lever assembly pressed downward, confirm that it can be shifted to reverse.
- When shifted from reverse to neutral position, confirm control lever assembly returns to neutral position smoothly with spring power.
- Without control lever assembly pressed downward, confirm that it cannot be shifted to reverse.

AIR BREATHER HOSE

Exploded View

INFOID:0000000001732875

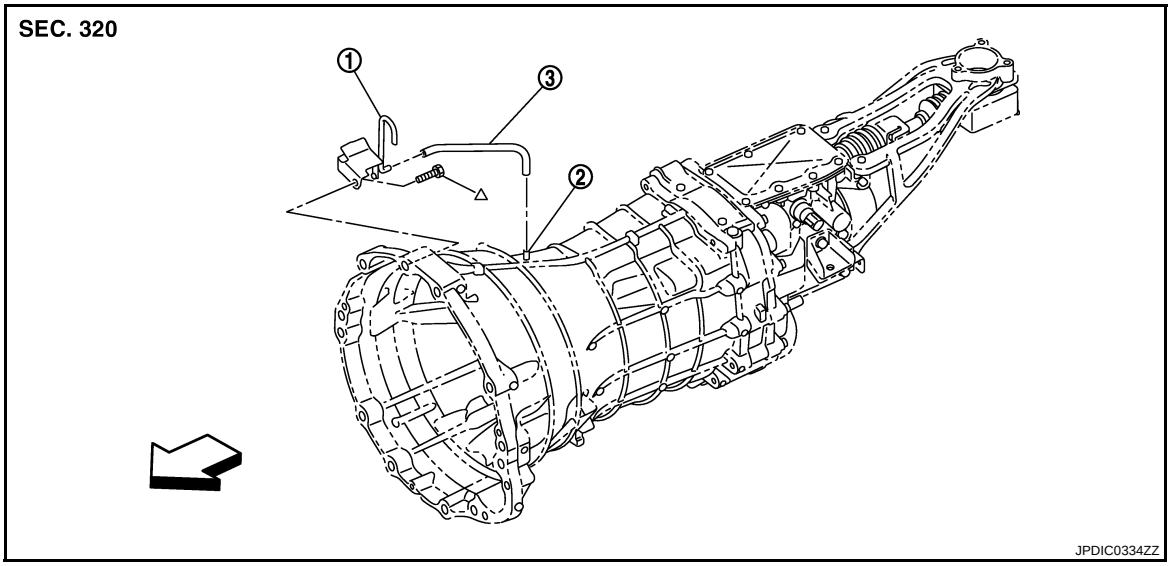

1. Air breather tube
2. Breather tube
3. Air breather hose

⇦: Vehicle front

△: For the tightening torque, refer to TM-25, "Removal and Installation".

Refer to GI-4, "Components" for symbols not described on the above.

Removal and Installation

INFOID:0000000001732876

REMOVAL

Refer to the figure for removal procedure.

INSTALLATION

Refer to the figure for installation procedure.

CAUTION:

- **Make sure there are no pinched or restricted areas on the air breather hose caused by bending or winding when installing it.**
- **Be sure to insert air breather hose into breather tube until hose end reaches the tube's base.**
- **Be sure to insert air breather hose into breather until hose end reaches the breather's base.**

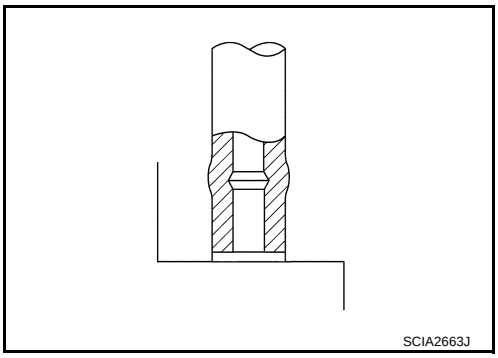

REMOVAL AND INSTALLATION

TRANSMISSION ASSEMBLY

Exploded View

INFOID:0000000001732877

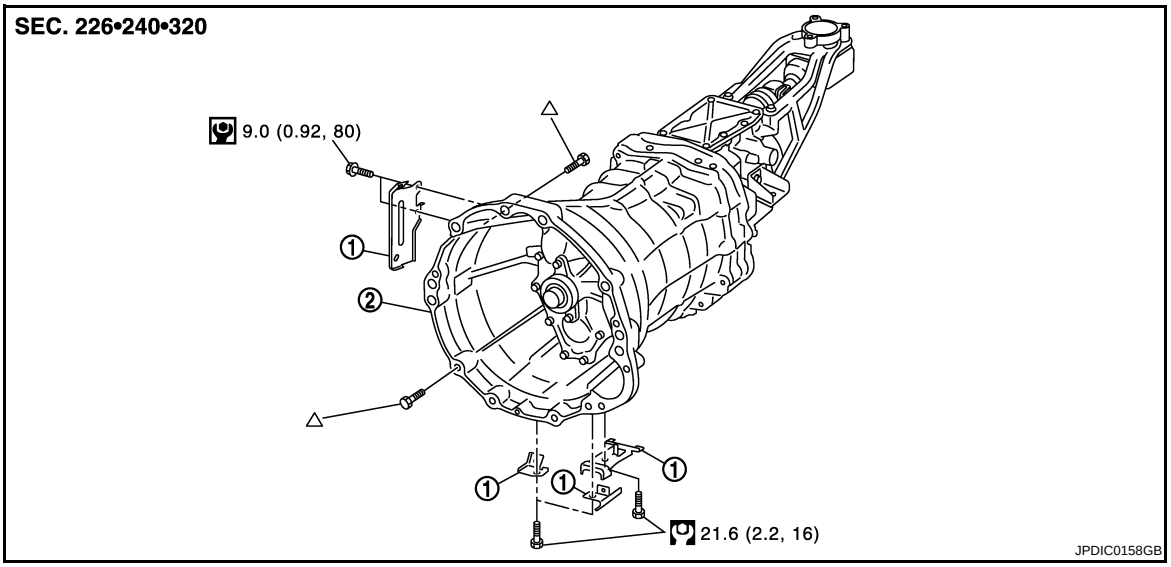

1. Harness bracket
2. Transmission assembly

△: For the bolt mounting positions, refer to TM-25, "Removal and Installation".

Refer to GI-4, "Components" for symbols not described on the above.

CAUTION:

If transmission assembly is removed from the vehicle, always replace CSC (Concentric Slave Cylinder) body and CSC tube. Return CSC body insert to original position to remove transmission assembly. Dust on clutch disc sliding parts may damage seal of CSC body and may cause clutch fluid leakage.

Removal and Installation

INFOID:0000000001732878

CAUTION:

If transmission assembly is removed from the vehicle, always replace CSC (Concentric Slave Cylinder) body and CSC tube. Return CSC body insert to original position to remove transmission assembly. Dust on clutch disc sliding parts may damage seal of CSC body and may cause clutch fluid leakage.

REMOVAL

1. Disconnect the battery cable from the negative terminal.
2. Remove exhaust mounting bracket. Refer to EX-6, "Removal and Installation".
3. Remove suspension member stay. Refer to FSU-24, "Removal and Installation".
4. Remove exhaust front tube, center muffler, and main muffler. Refer to EX-6, "Removal and Installation".
5. Remove propeller shaft assembly. Refer to DLN-7, "Removal and Installation".
   NOTE:
   Insert a suitable plug into rear oil seal of transmission assembly after removing propeller shaft assembly.
6. Remove control lever assembly with the following procedure.

a. Remove control rod mounting bolt and then separate control lever assembly from control rod.

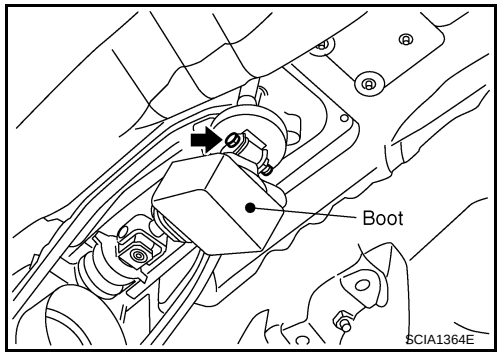

b. Remove console finisher assembly as shown in the figure. Refer to IP-24, "Removal and Installation".

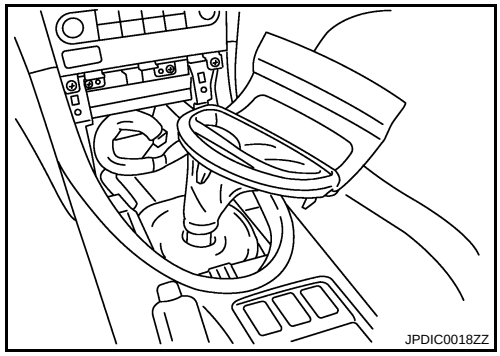

c. Remove felt as shown in the figure.

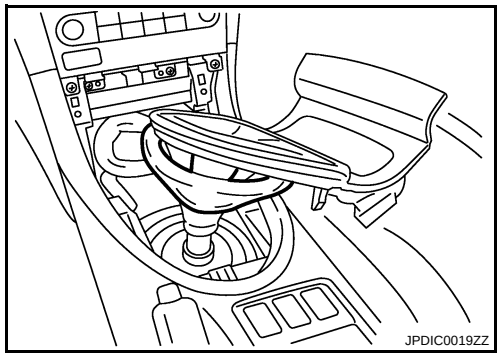

d. Remove center console assembly to remove hole cover as shown in the figure. Refer to IP-24, "Removal and Installation".

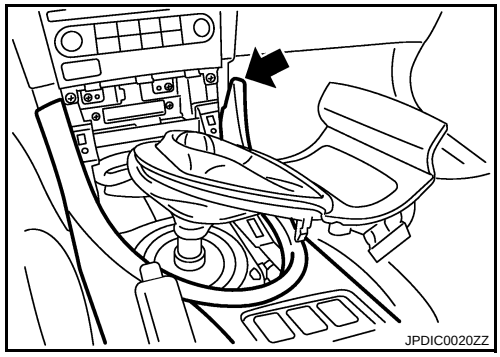

e. Remove hole cover.

f. Remove control lever boot B, hole insulator, and control lever boot A.

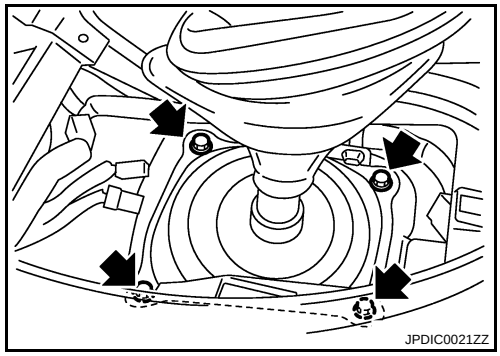

g. Remove guide plate mounting bolts and then remove control lever assembly and control lever spring from control lever housing.

CAUTION:
Restrain guide plate while doing this because there is a danger control lever assembly will fly out of control lever housing.

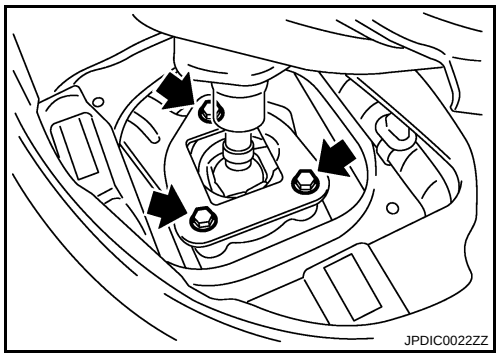

7. Remove clutch tube (1), clutch hose (2), and lock plate (3). Refer to CL-14, "Removal and Installation".

⇦ : Vehicle front

CAUTION:
- **Keep painted surface on the body or other parts free of clutch fluid. If it spills, wipe up immediately and wash the affected area with water.**
- **Never depress clutch pedal during removal procedure.**

NOTE:
Insert a suitable plug into clutch hose and CSC (Concentric Slave Cylinder) tube after removing clutch tube.

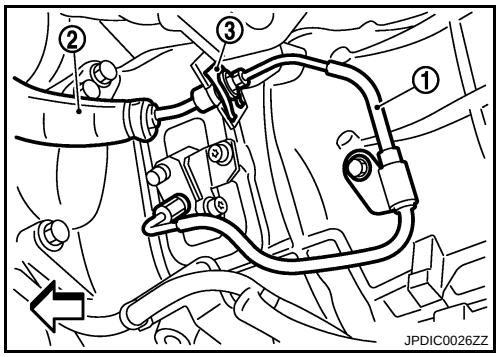

8. Remove crankshaft position sensor. Refer to EM-111, "Disassembly and Assembly".

CAUTION:
- **Handle carefully to avoid dropping and shocks.**
- **Never disassemble.**
- **Never allow metal powder to adhere to magnetic part at sensor tip.**
- **Never place sensors in a location where they are exposed to magnetism.**

9. Remove starter motor. Refer to STR-16, "Removal and Installation".
10. Remove rear plate cover. Refer to EM-42, "Removal and Installation".
11. Disconnect park/neutral position (PNP) switch harness connector.
12. Disconnect heated oxygen sensor 2 (bank 1) and heated oxygen sensor 2 (bank 2) harness connectors. Refer to EX-6, "Removal and Installation".
13. Remove harness brackets.

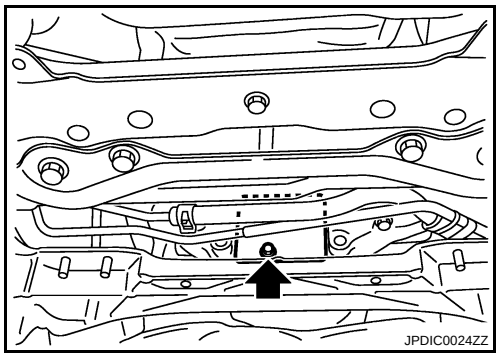

14. Set a suitable jack to the transmission assembly.

CAUTION:
When setting a suitable jack, be careful so that it does not contact with the switch.

15. Remove engine mounting insulator (rear) mounting nuts. Refer to EM-67, "Removal and Installation".
16. Remove rear engine mounting member. Refer to EM-67, "Removal and Installation".
17. Remove engine and transmission mounting bolts with power tool.
18. Lower a suitable jack to the position where the back-up lamp switch harness connector can be disconnect. Then disconnect back-up lamp switch harness connector.

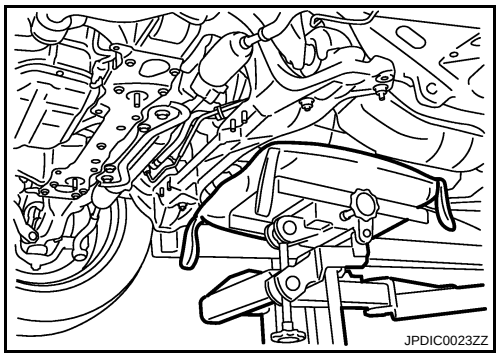

19. Remove transmission assembly from the vehicle.

CAUTION:

- **Secure transmission assembly to a suitable jack while removing it.**
- **The transmission assembly must not interfere with the three way catalyst (right bank) and three way catalyst (left bank).**
- **The transmission assembly must not interfere with the wire harnesses and clutch hose.**
- **Never hold control lever housing to prevent bushing of control lever housing from deformation when moving transmission assembly.**

20. Remove CSC (Concentric Slave Cylinder) body and CSC tube. Refer to CL-15, "Removal and Installation".

    CAUTION:

    If transmission assembly is removed from the vehicle, always replace CSC (Concentric Slave Cylinder) body and CSC tube. Return CSC body insert to original position to remove transmission assembly. Dust on clutch disc sliding parts may damage seal of CSC body and may cause clutch fluid leakage.
21. Remove dynamic damper. Refer to EM-67, "Removal and Installation".

INSTALLATION

Note the following, and install in the reverse order of removal.

- Tighten transmission assembly mounting bolts to the specified torque. The figure is the view from the vehicle forward.

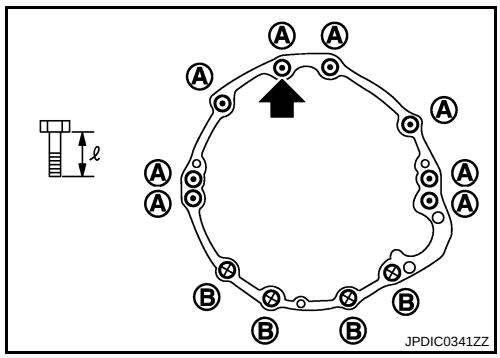

: Transmission to engine

: Engine to transmission

: With air breather tube

Bolt symbol	A	B
Quantity	8	4
Bolt length " ℓ " mm (in)	65 (2.56)	35 (1.38)
Tightening torque N·m (kg-m, ft-lb)	75 (7.7, 55)	46.6 (4.8, 34)

CAUTION:

- **The transmission assembly must not interfere with the three way catalyst (right bank) and three way catalyst (left bank).**
- **The transmission assembly must not interfere with the wire harnesses and clutch hose.**
- **When installing transmission assembly, never bring main drive gear into contact with clutch cover.**
- **Never hold control lever housing to prevent bushing of control lever housing from deformation when moving transmission assembly.**

- Refer to CL-15, "Removal and Installation" for CSC (Concentric Slave Cylinder) body and CSC tube installation procedure.
- Refer to CL-14, "Removal and Installation" for clutch tube and clutch hose installation procedure.
- Refer to TM-18, "Removal and Installation" for control lever assembly installation procedure.
- After installation, check for oil leakage and oil level. Refer to TM-16, "Inspection".
- If flywheel is removed, align dowel pin with the smallest hole of flywheel. Refer to EM-111, "Disassembly and Assembly".

DISASSEMBLY AND ASSEMBLY

TRANSMISSION ASSEMBLY

Exploded View

INFOID:0000000001732879

CASE AND EXTENSION

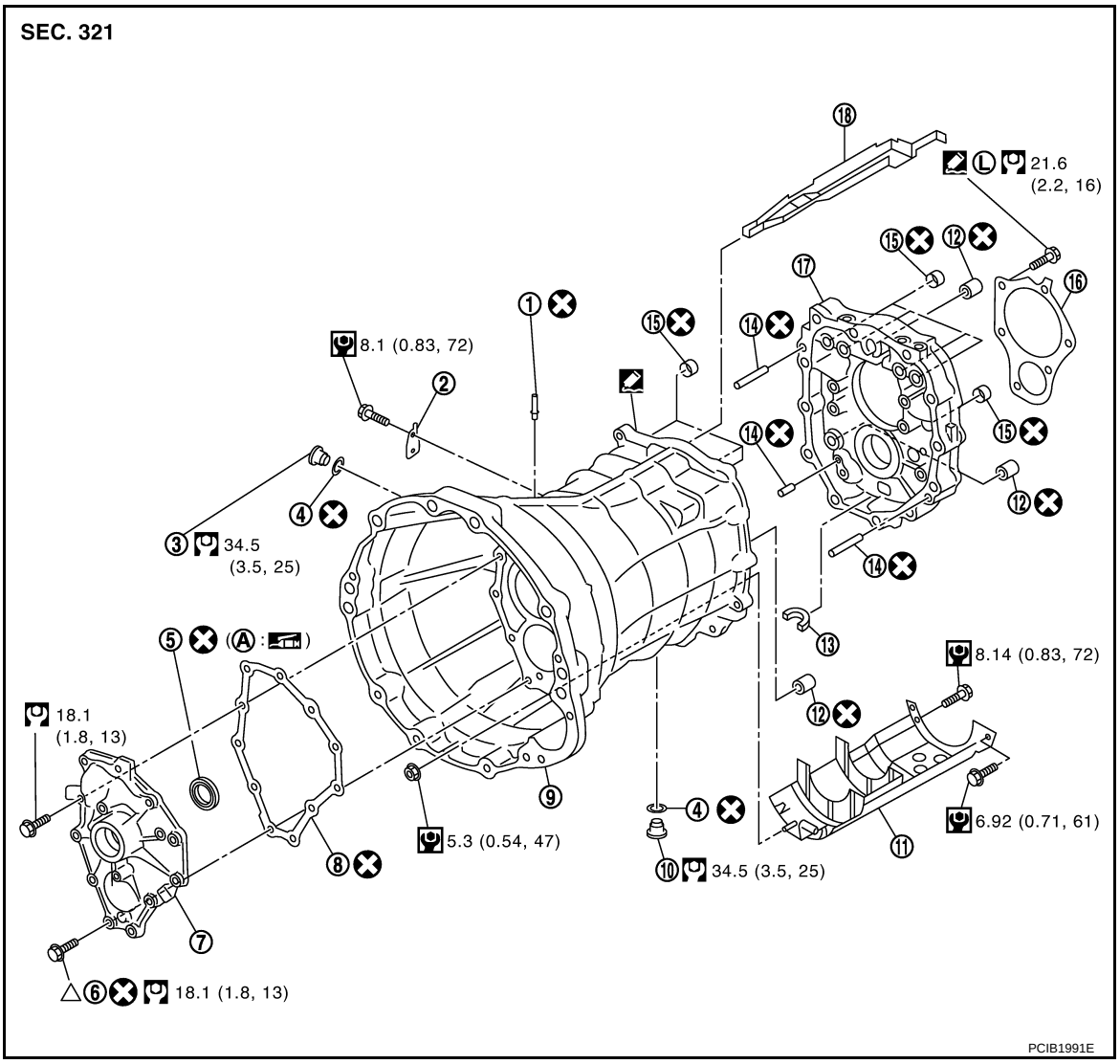

1.	Breather tube	2.	Bracket	3.	Filler plug
4.	Gasket	5.	Front cover oil seal	6.	Sealing bolt
7.	Front cover	8.	Front cover gasket	9.	Transmission case
10.	Drain plug	11.	Baffle plate	12.	Sliding ball bearing
13.	Magnet	14.	Dowel pin	15.	Bushing
16.	Mainshaft bearing retainer	17.	Adapter plate	18.	Oil gutter
A.	Seal lip				

: Apply multi-purpose grease.

: Apply Genuine Silicone RTV or an equivalent. Refer to GI-15, "Recommended Chemical Products and Sealants".

: Apply Genuine Medium Strength Thread Locking Sealant or an equivalent. Refer to GI-15, "Recommended Chemical Products and Sealants".

△: For the bolt mounting positions, refer to TM-43, "Assembly".

Refer to GI-4, "Components" for symbols not described on the above.

SEC. 321

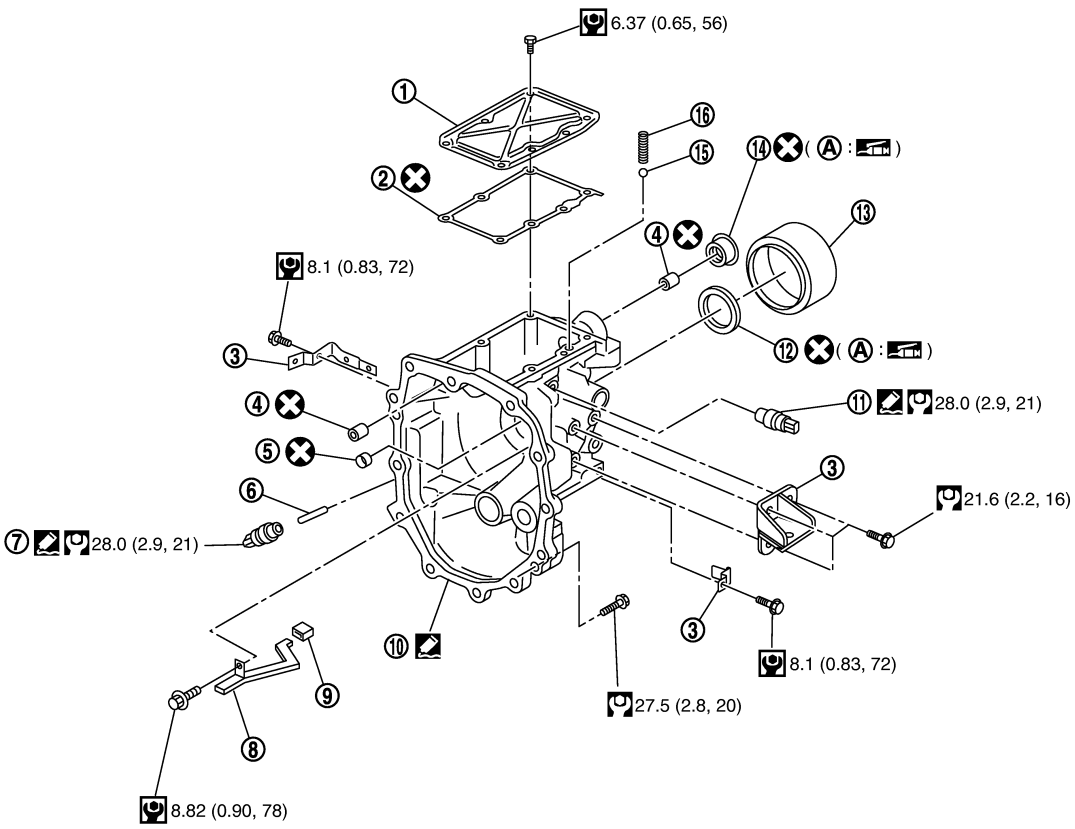

1.	Rear extension upper cover	2.	Rear extension upper cover gasket	3.	Bracket
4.	Sliding ball bearing	5.	Bushing	6.	Plunger
7.	Park/Neutral position (PNP) switch	8.	Rear extension oil gutter	9.	Cap
10.	Rear extension	11.	Back-up lamp switch	12.	Rear oil seal
13.	Rear extension dust cover	14.	Striking rod oil seal	15.	Check ball
16.	Check select spring				
A.	Seal lip				

: Apply multi-purpose grease.

: Apply Genuine Silicone RTV or an equivalent. Refer to GI-15, "Recommended Chemical Products and Sealants".

Refer to GI-4, "Components" for symbols not described on the above.

SHAFT AND GEAR

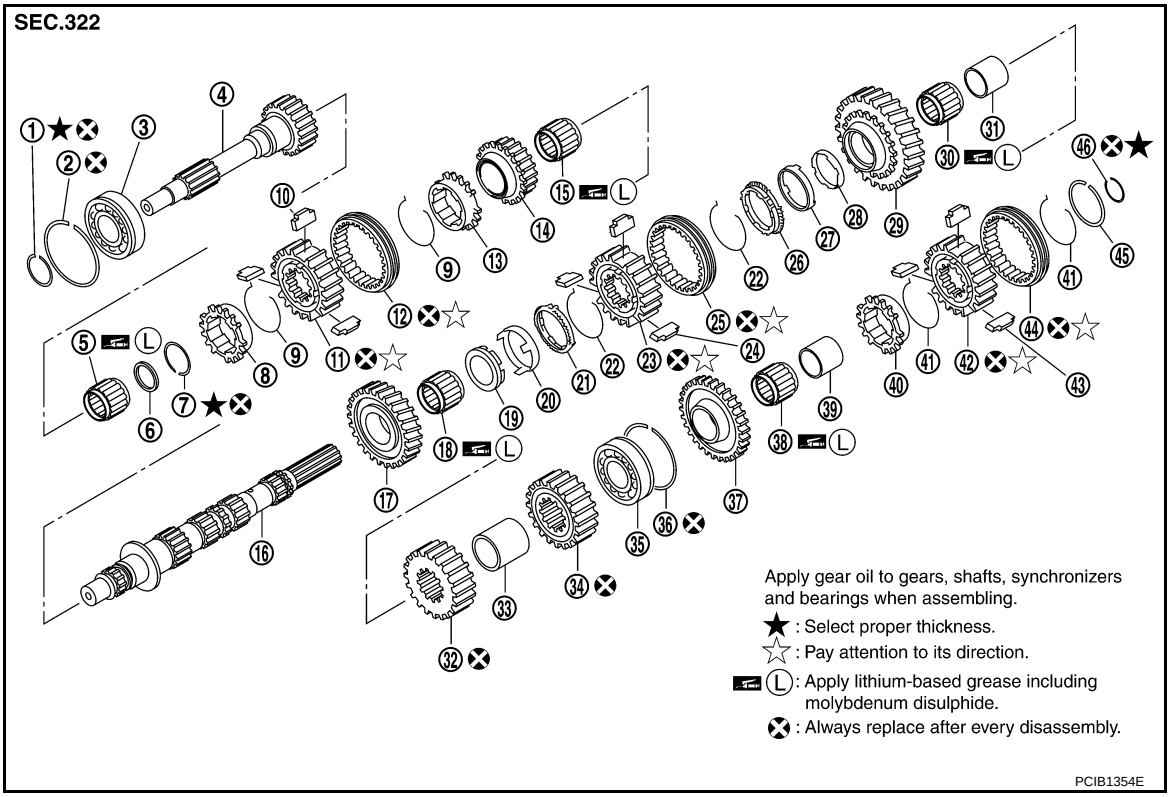

1. Snap ring	2. Snap ring	3. Main drive gear bearing
4. Main drive gear	5. Main pilot bearing	6. Pilot bearing spacer
7. Snap ring	8. 5th baulk ring	9. 5th-6th spread spring
10. 5th-6th shifting insert	11. 5th-6th synchronizer hub	12. 5th-6th coupling sleeve
13. 6th baulk ring	14. 6th main gear	15. 6th needle bearing
16. Mainshaft	17. 2nd main gear	18. 2nd needle bearing
19. 2nd inner baulk ring	20. 2nd synchronizer cone	21. 2nd outer baulk ring
22. 1st-2nd spread spring	23. 1st-2nd synchronizer hub	24. 1st-2nd shifting insert
25. 1st-2nd coupling sleeve	26. 1st outer baulk ring	27. 1st synchronizer cone
28. 1st inner baulk ring	29. 1st main gear	30. 1st needle bearing
31. 1st gear bushing	32. 3rd main gear	33. 3rd-4th main spacer
34. 4th main gear	35. Mainshaft bearing	36. Snap ring
37. Reverse main gear	38. Reverse main needle bearing	39. Reverse main gear bushing
40. Reverse baulk ring	41. Reverse spread spring	42. Reverse synchronizer hub
43. Reverse shifting insert	44. Reverse coupling sleeve	45. Snap ring
46. Snap ring		

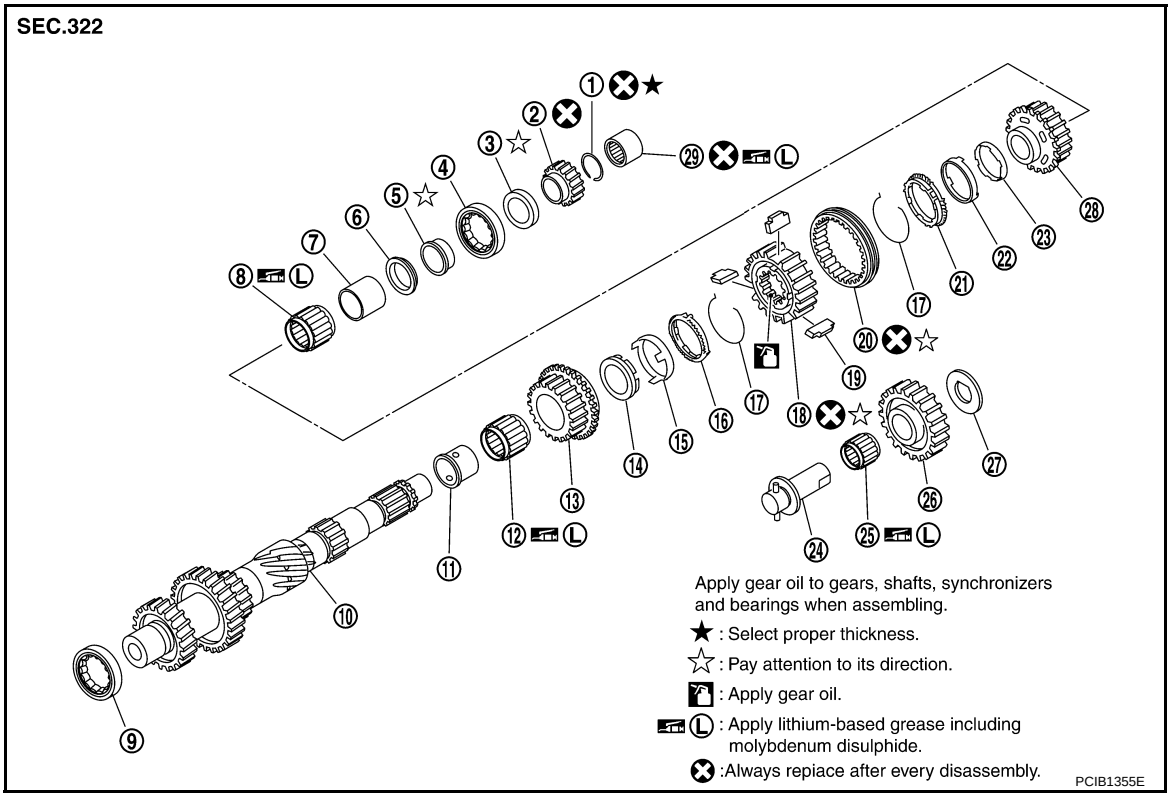

1. Snap ring	2. Reverse counter gear	3. Counter rear bearing spacer
4. Counter rear bearing	5. Counter rear bearing inner race	6. 4th counter gear thrust washer
7. 4th gear bushing	8. 4th needle bearing	9. Counter front bearing
10. Counter shaft	11. 3rd gear bushing	12. 3rd needle bearing
13. 3rd counter gear	14. 3rd inner baulk ring	15. 3rd synchronizer cone
16. 3rd outer baulk ring	17. 3rd-4th spread spring	18. 3rd-4th synchronizer hub
19. 3rd-4th shifting insert	20. 3rd-4th coupling sleeve	21. 4th outer baulk ring
22. 4th synchronizer cone	23. 4th inner baulk ring	24. Reverse idler shaft
25. Reverse idler needle bearing	26. Reverse idler gear	27. Reverse idler thrust washer
28. 4th counter gear	29. Counter end bearing	

SHIFT FORK AND FORK ROD

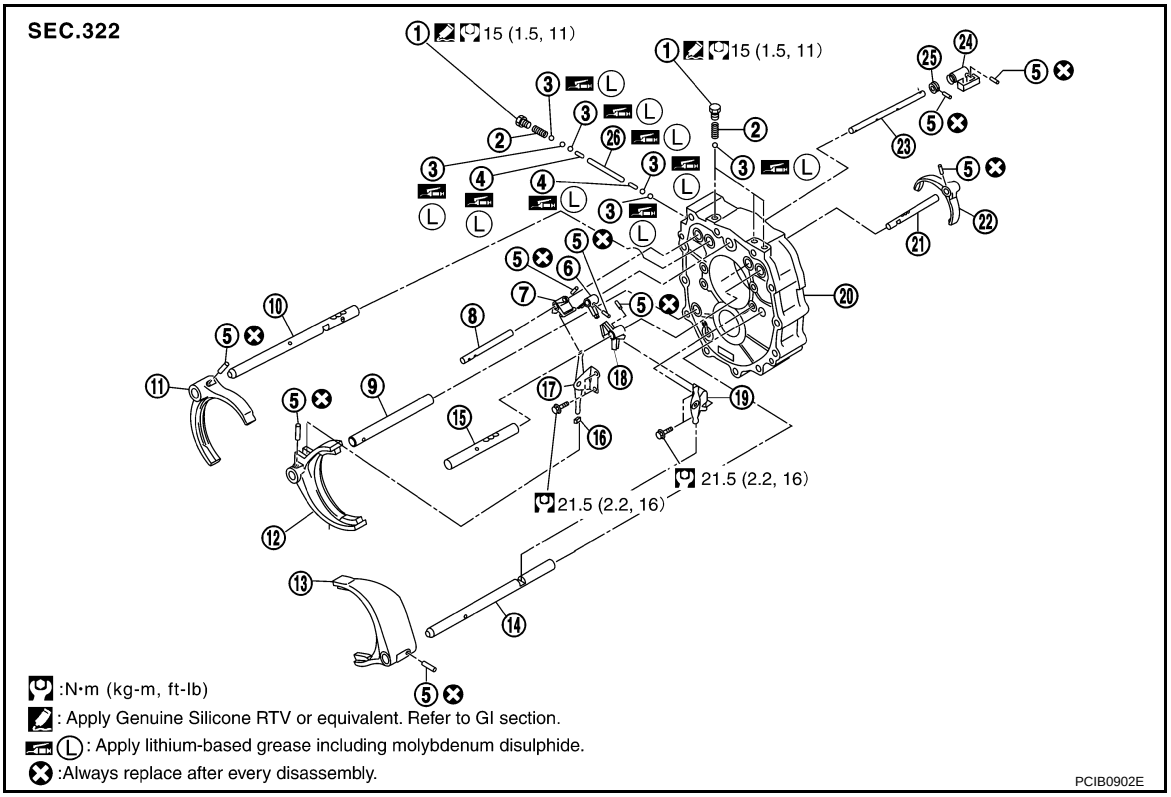

1. Check ball plug
2. Check ball spring
3. Check ball
4. Interlock pin
5. Retaining pin
6. Striking lever
7. 3rd-4th fork rod bracket
8. 3rd-4th fork rod
9. 3rd-4th fork rod (reversal side)
10. 1st-2nd fork rod
11. 1st-2nd shift fork
12. 3rd-4th shift fork
13. 5th-6th shift fork
14. 5th-6th fork rod (reversal side)
15. 5th-6th fork rod
16. Shifter cap
17. 3rd-4th control lever
18. 5th-6th fork rod bracket
19. 5th-6th control lever
20. Adapter plate
21. Reverse fork rod
22. Reverse shift fork
23. Striking rod
24. Low/high control lever
25. Stopper ring
26. Interlock plunger

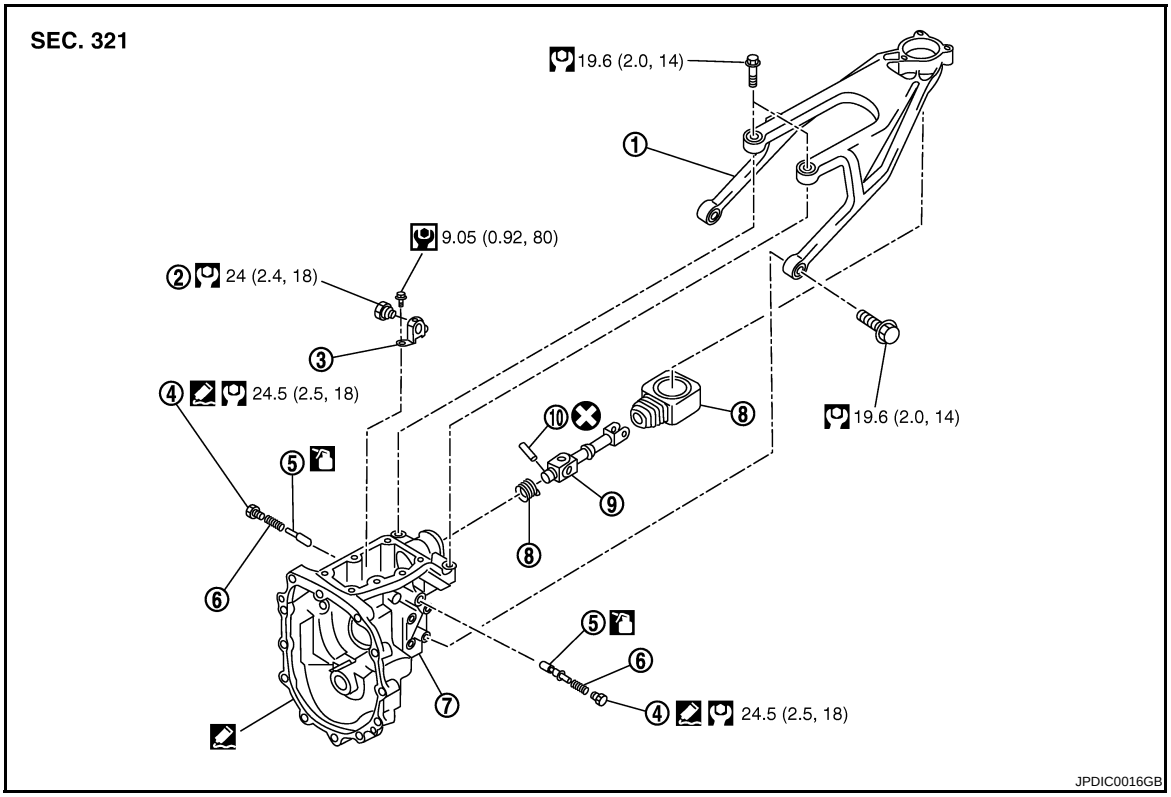

1. Control lever housing	2. Check shift pin	3. Control bracket
4. Return spring plug	5. Return spring plunger	6. Return spring
7. Rear extension	8. Boot	9. Control rod
10. Retaining pin		

: Apply gear oil.

: Apply Genuine Silicone RTV or an equivalent. Refer to GI-15, "Recommended Chemical Products and Sealants".

Refer to GI-4, "Components" for symbols not described on the above.

Disassembly

INFOID:0000000001732880

CASE AND EXTENSION

1. Remove rear extension upper cover mounting bolts.
2. Remove rear extension upper cover and rear extension upper cover gasket from rear extension.

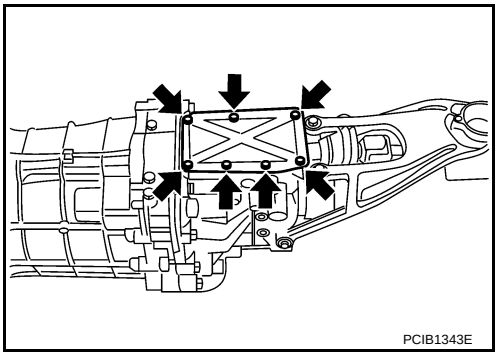

3. Remove check select spring and check ball from rear extension.

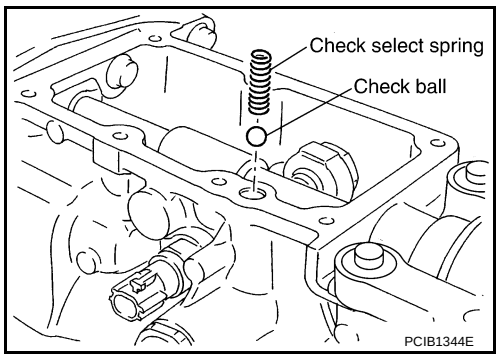

4. Remove retaining pin using a pin punch and then remove control rod and boots.
5. Remove park/neutral position (PNP) switch, plunger, and back-up lamp switch from rear extension.

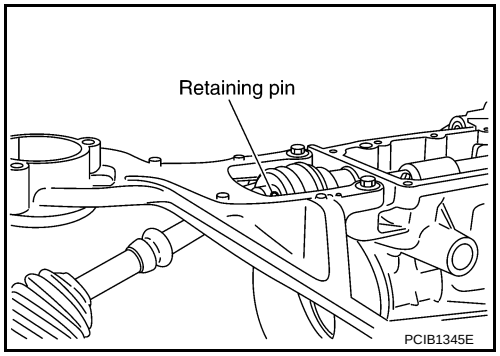

6. Remove control bracket mounting bolts and then remove check shift pin and control bracket as one unit from rear extension.

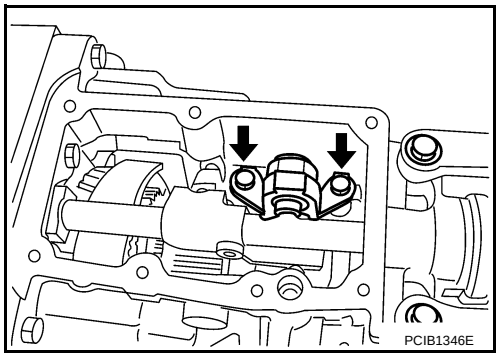

7. Remove right and left return spring plugs and then remove return springs and return spring plungers from rear extension.
   CAUTION:
   Return spring and return spring plunger have different lengths for right and left sides. Identify right and left side and then store.
8. Remove bracket mounting bolts and then remove brackets from rear extension.

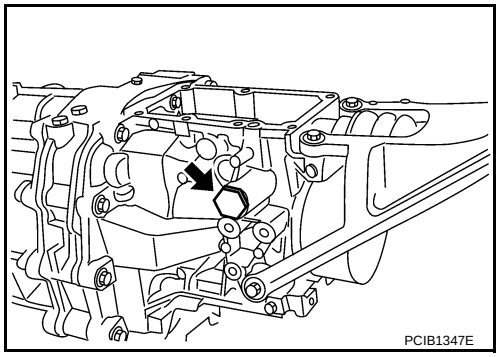

9. Remove rear oil seal from rear extension using a puller [SST: KV381054S0 (J-34286)].
   CAUTION:
   Never damage rear extension.

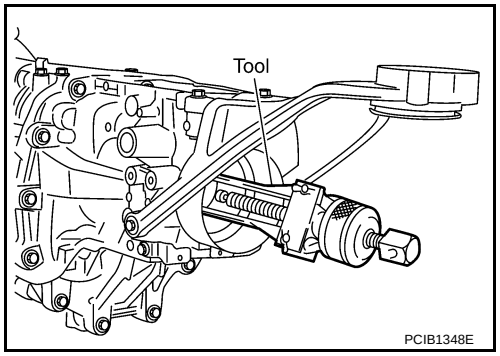

10. Remove rear extension mounting bolts and then remove rear extension assembly using a soft hammer.
    CAUTION:
    Never hold control lever housing to prevent bushing of control lever housing from deformation when moving transmission assembly.
11. Remove control lever housing mounting bolts and then remove control lever housing from rear extension.
12. Remove striking rod oil seal from rear extension.
    CAUTION:
    Never damage rear extension.
13. Remove rear extension oil gutter and cap from rear extension.
14. Remove reverse idler thrust washer, reverse idler gear and reverse idler needle bearing from reverse idler shaft.
15. Remove reverse idler shaft from adapter plate.

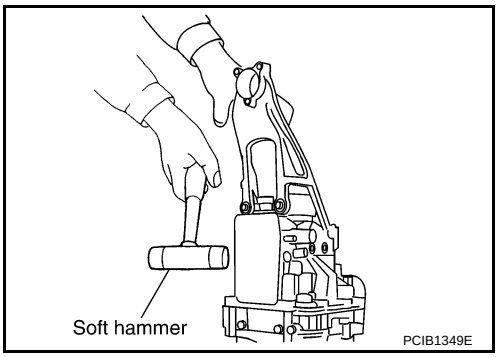

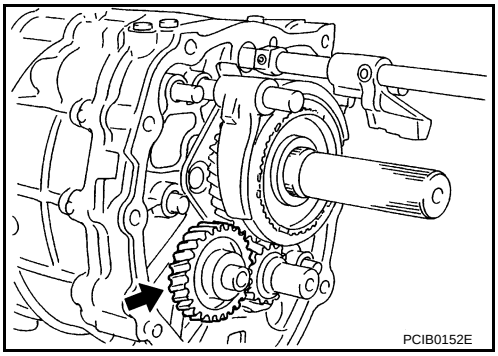

16. Remove front cover mounting bolts (⬅) and sealing bolts (1).
17. Remove front cover and front cover gasket from transmission case.

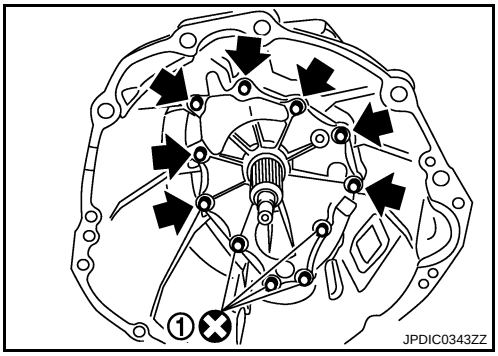

18. Remove front cover oil seal from front cover assembly using a flat-bladed screwdriver.
    CAUTION:
    Never damage front cover mating surface.

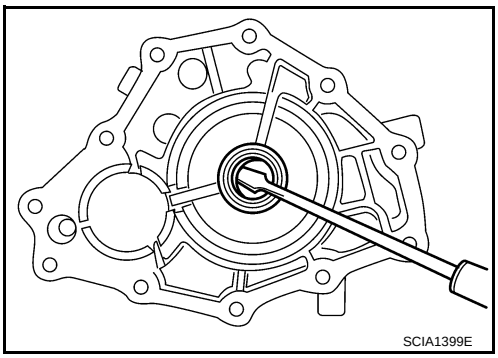

19. Remove baffle plate mounting nut from transmission case.

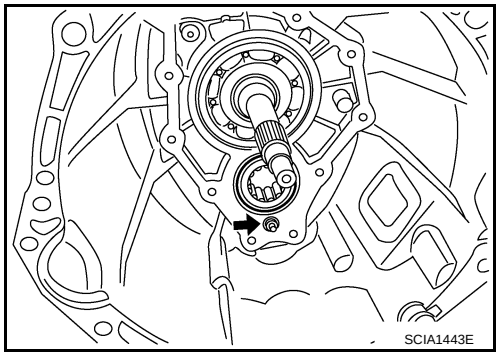

20. Remove snap ring from main drive gear bearing using snap ring pliers.

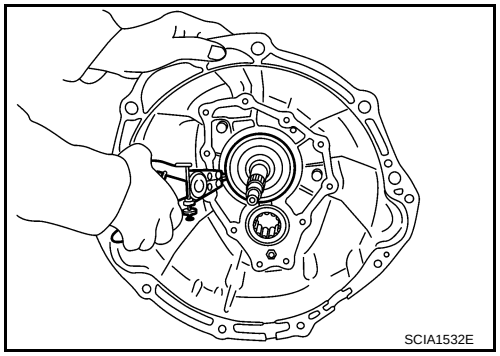

21. Using a soft hammer to carefully tap mainshaft and counter shaft from transmission case side and then separate adapter plate and transmission case.

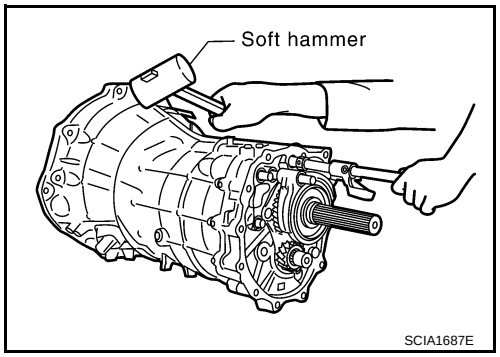

22. Remove counter front bearing from transmission case.
23. Remove oil gutter and breather tube from transmission case.
24. Remove filler plug, drain plug, and gaskets from transmission case.
25. Remove bracket mounting bolt and then remove bracket from transmission case.

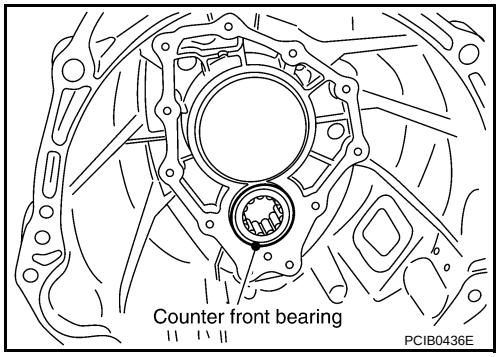

SHIFT FORK AND FORK ROD

1. Install adapter setting plate [SST: ST22490000 (—)] to adapter plate and then fixing in adapter setting plate using a vise.
   CAUTION:
   Never directly secure the surface in a vise.

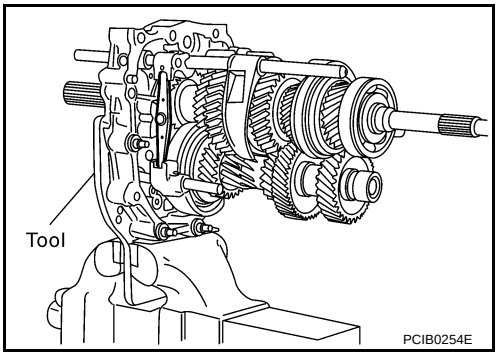

2. Remove baffle plate mounting bolts and then remove baffle plate from adapter plate.

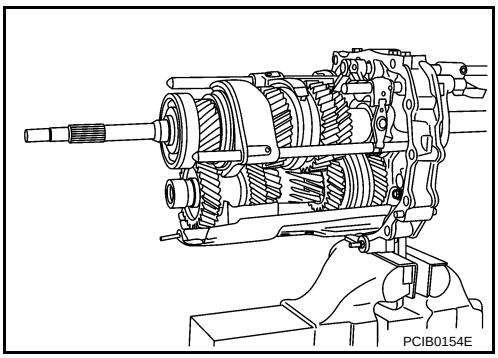

3. Remove retaining pin using a pin punch and then remove striking lever and striking rod.

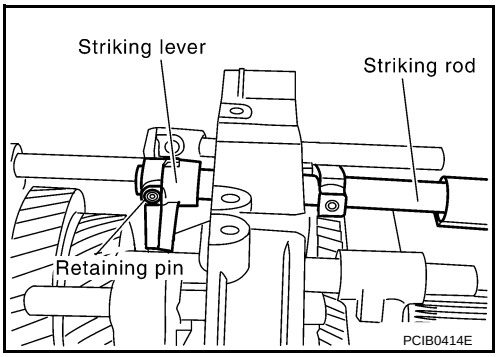

4. Remove check ball plugs and then remove check ball springs and check balls from adapter plate.

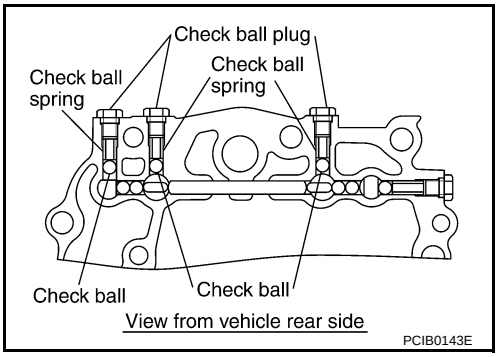

5. Remove 3rd-4th control lever mounting bolts and then remove 3rd-4th control lever and shifter cap.
   CAUTION:
   Never lose shifter cap.

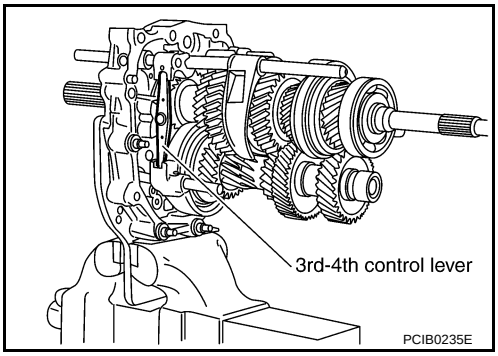

6. Remove check ball plug and then remove check ball spring and check ball from adapter plate.

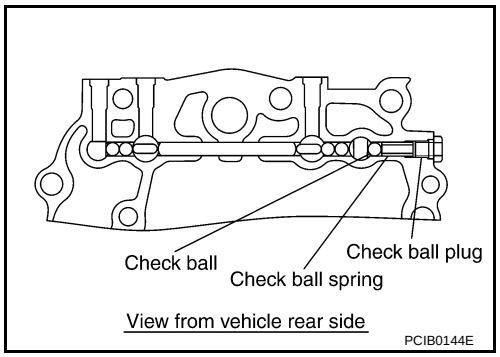

7. Remove retaining pin using a pin punch and then remove 3rd-4th fork rod bracket and 3rd-4th fork rod.

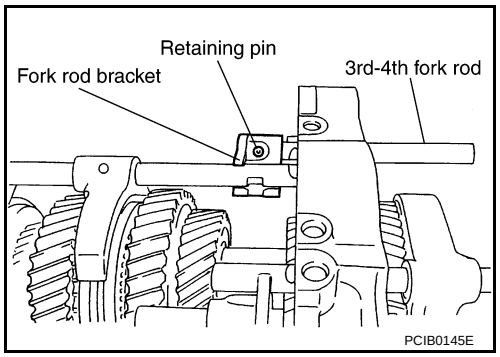

8. Remove retaining pin using a pin punch and then remove 3rd-4th shift fork and 3rd-4th fork rod (reversal side).

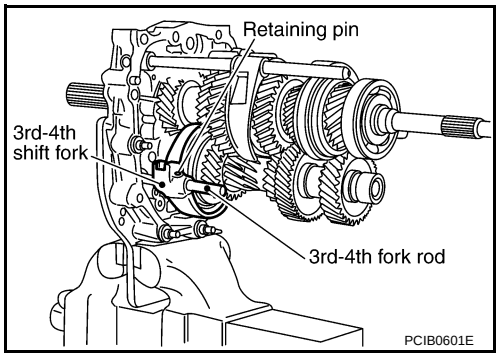

9. Remove check balls and interlock pin from adapter plate.

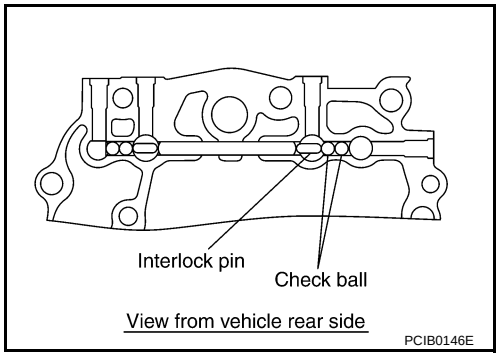

10. Remove retaining pin using a pin punch and then remove 1st-2nd shift fork and 1st-2nd fork rod.

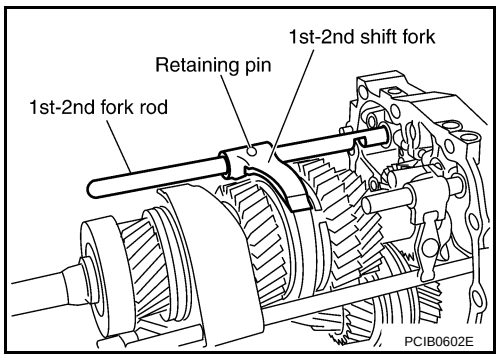

11. Remove interlock plunger and interlock pin from adapter plate.

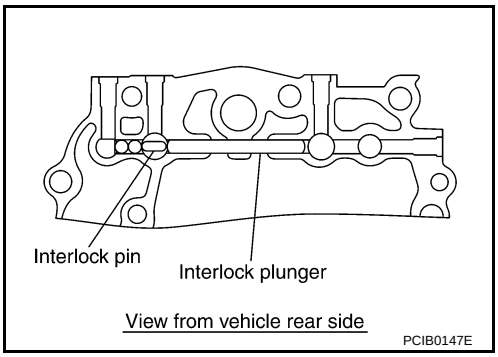

12. Remove retaining pin using a pin punch and then remove reverse shift fork and reverse fork rod.

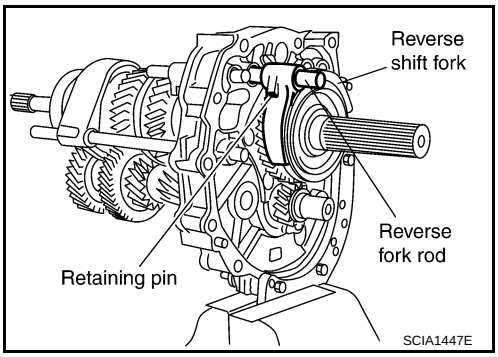

13. Remove check balls from adapter plate.

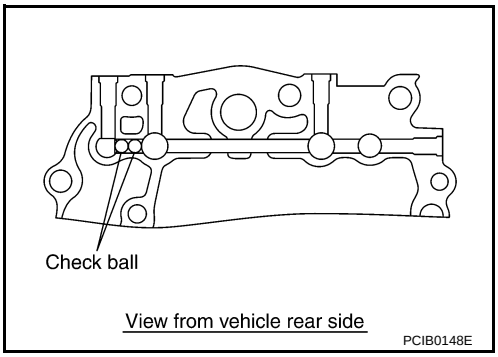

14. Remove 5th-6th control lever mounting bolts and then remove 5th-6th control lever from adapter plate.

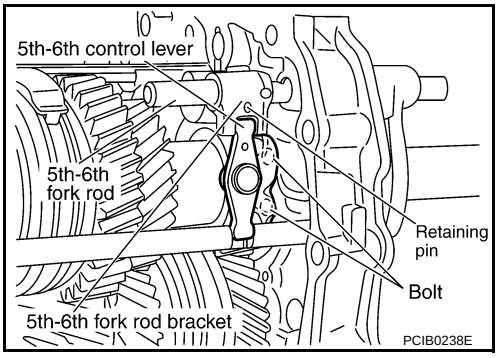

15. Remove retaining pin using a pin punch and then remove 5th-6th fork rod bracket and 5th-6th fork rod.

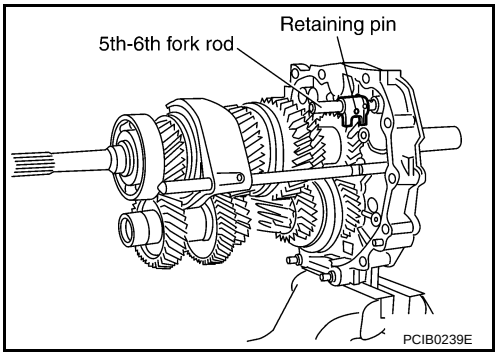

16. Remove retaining pin using a pin punch and then remove 5th-6th fork rod (reversal side) and 5th-6th shift fork.

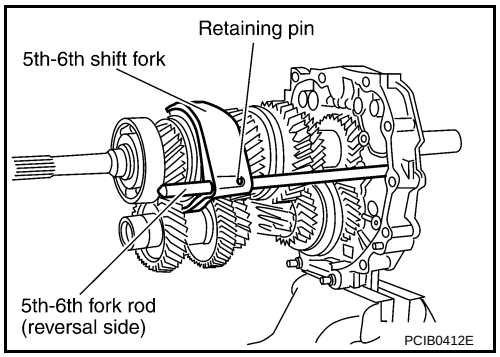

SHAFT AND GEAR

1. Before disassembly, measure end play for each position. If the end play is outside the specifications, disassemble and inspect.
   - Mainshaft

     End play standard value : Refer to TM-75, "End Play".

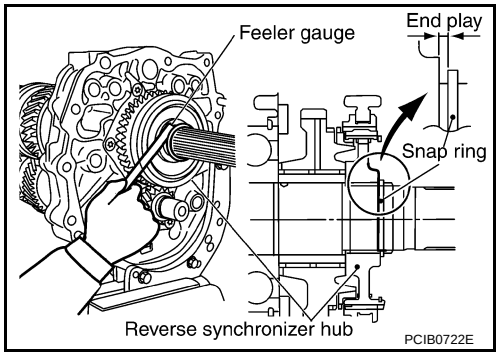

   - Counter shaft

     End play standard value : Refer to TM-75, "End Play".

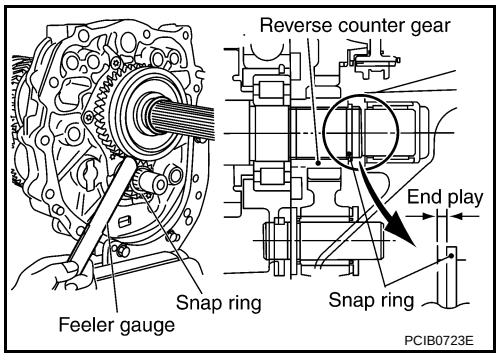

2. After removing snap ring and reverse coupling snap ring, using a puller to remove reverse main gear and reverse synchronizer assembly.
3. Remove reverse main needle bearing.

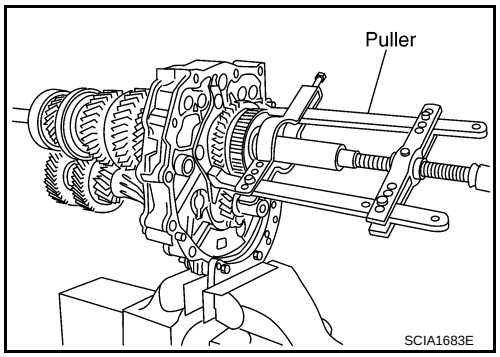

4. After removing snap ring, using the puller to remove reverse counter gear and counter rear bearing spacer.

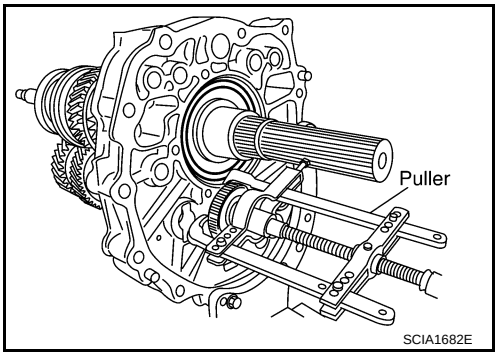

5. Remove mainshaft bearing retainer mounting bolts and then remove mainshaft bearing retainer.

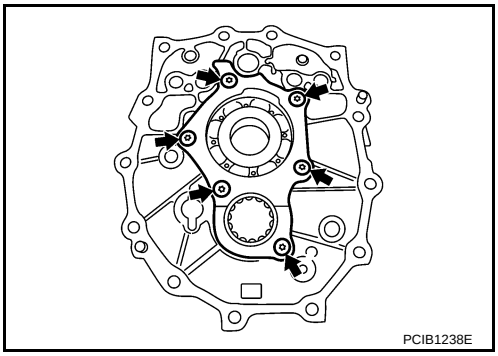

6. Remove snap ring from mainshaft bearing.

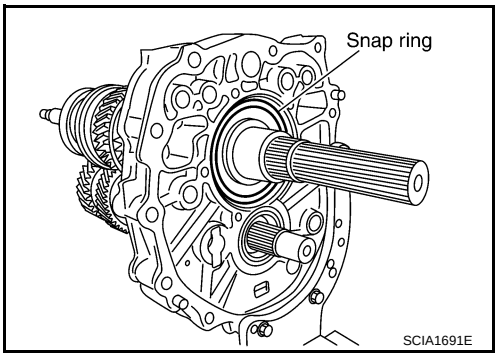

7. Carefully tap mainshaft with a plastic hammer and then remove mainshaft assembly, main drive gear assembly and counter shaft assembly from adapter plate.
8. Remove main pilot bearing, pilot bearing spacer and 5th baulk ring.

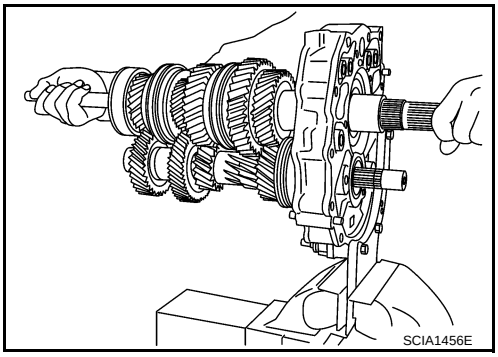

9. Remove counter rear bearing from adapter plate.
10. Remove magnet from adapter plate.

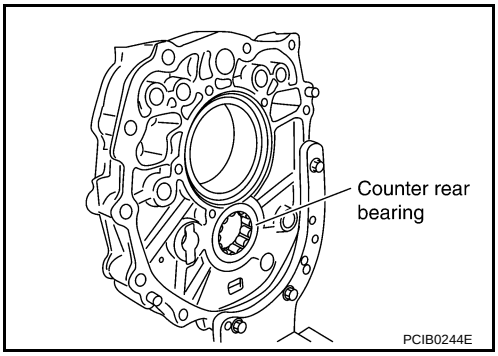

Assembly

INFOID:0000000001732881

SHAFT AND GEAR

1. Install main drive gear assembly, mainshaft assembly and counter gear assembly according to the following.

a. Install main pilot bearing, pilot bearing spacer and 5th baulk ring to main drive gear.

b. Install main drive gear assembly, mainshaft assembly, and counter shaft assembly combined in one unit to adapter plate using brass bar.

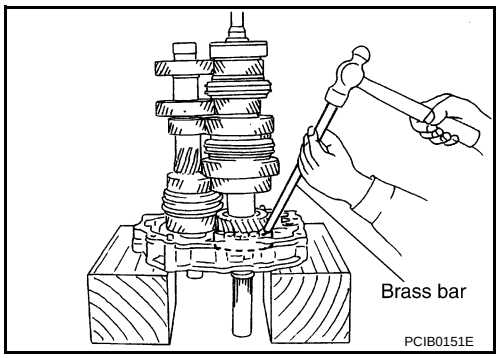

2. Install the adapter setting plate to adapter plate and then fixing in adapter setting plate using a vise.
CAUTION:
Never directly secure the surface in a vise.
3. Install magnet to adapter plate.

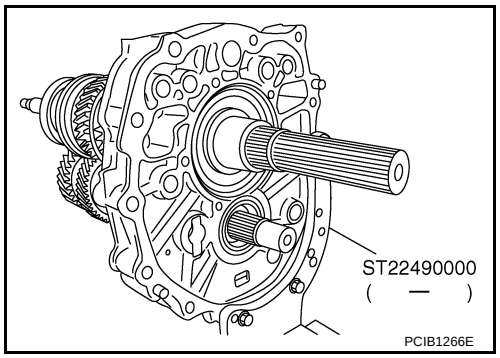

4. Install snap ring to mainshaft bearing.
CAUTION:
Never reuse snap ring.

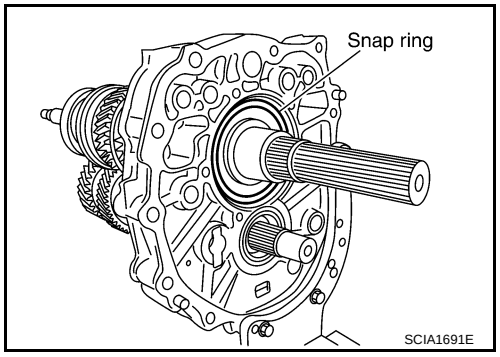

5. Install counter rear bearing onto adapter plate using the drift.
CAUTION:
Replace counter rear bearing inner race, counter rear bearing and counter rear bearing spacer as a set.

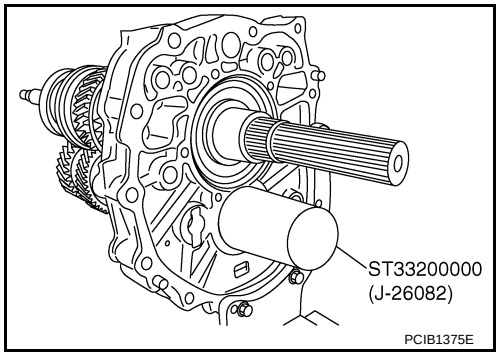

6. Apply thread locking sealant to the end of bolts (first 3 to 4 threads).
   - **Use Genuine Medium Strength Thread Locking Sealant or an equivalent. Refer to GI-15, "Recommended Chemical Products and Sealants".**

   CAUTION:
   Remove old sealant and oil adhering to threads.
7. Install bolts into mainshaft bearing retainer and tighten bolts to the specified torque.

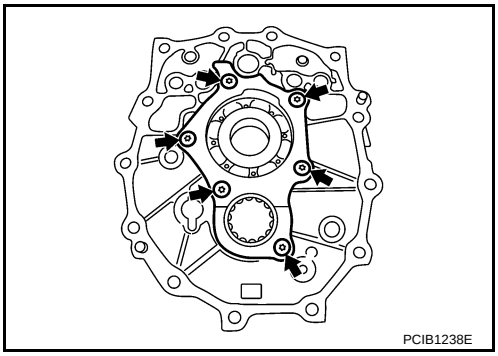

8. Install reverse coupling sleeve and reverse shifting inserts into reverse synchronizer hub.
   CAUTION:
   - **Install reverse coupling sleeve with the flat flange on the rear side.**
   - **Never reuse reverse coupling sleeve and reverse synchronizer hub.**
   - **Replace reverse coupling sleeve and reverse synchronizer hub as a set.**

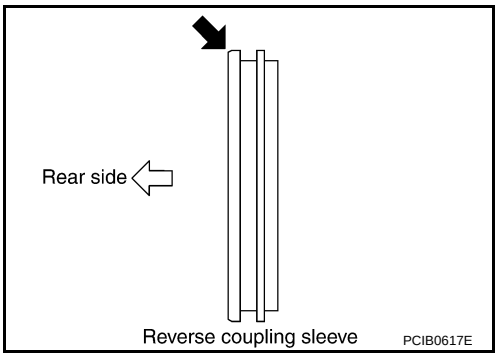

9. Install reverse spread springs in reverse shifting inserts.
   CAUTION:
   - **Never install reverse spread spring hook onto the same reverse shifting insert.**

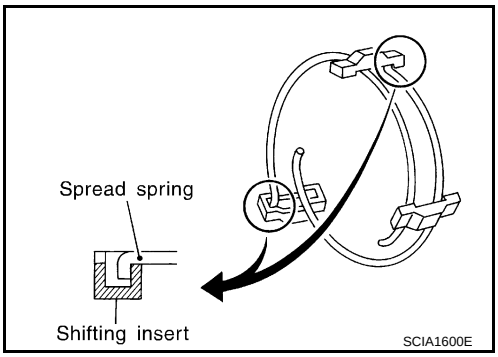

   - **Be careful with the shape of 1st-2nd, 3rd-4th and 5th-6th shifting insert to avoid misassembly.**

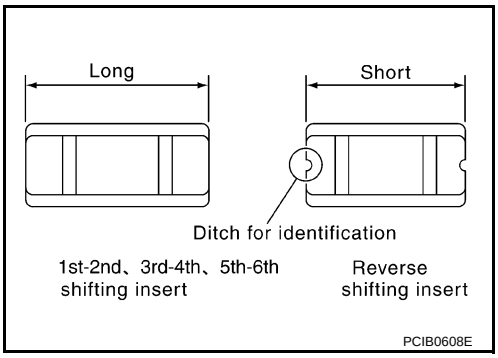

10. Install snap ring to reverse synchronizer hub.
    CAUTION:

- **Never align snap ring notch with synchronizer hub groove when assembling.**
- **Never reuse snap ring.**

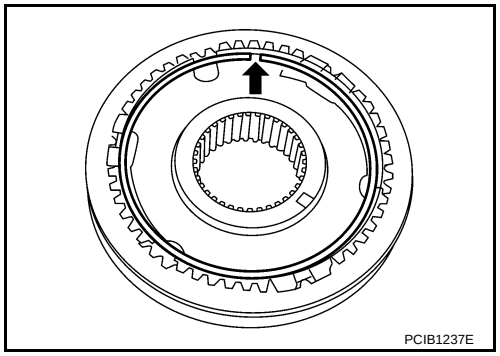

11. Apply recommended grease to reverse main needle bearing.
12. After installing reverse main gear bushing, reverse main needle bearing, reverse main gear and reverse baulk ring onto main-shaft using the press plate (A) [SST: KV32103300 (J-46529)] and drift (B) [SST: ST01530000 (—)] and a press to press fit reverse synchronizer assembly.

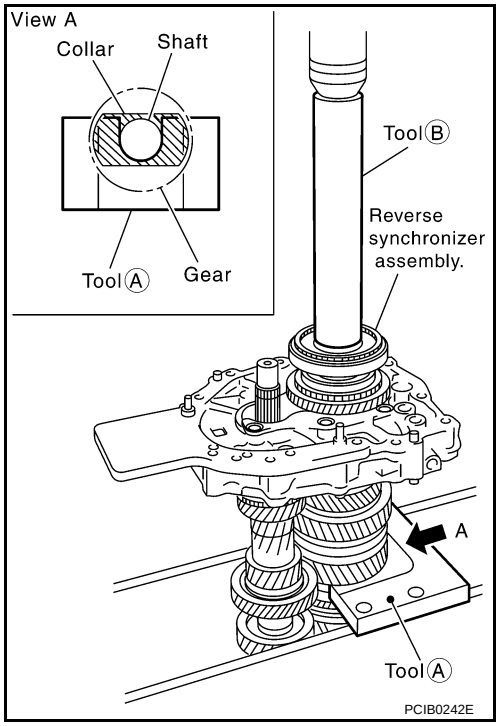

CAUTION:
When installing, face the side with three ditches to the front side.

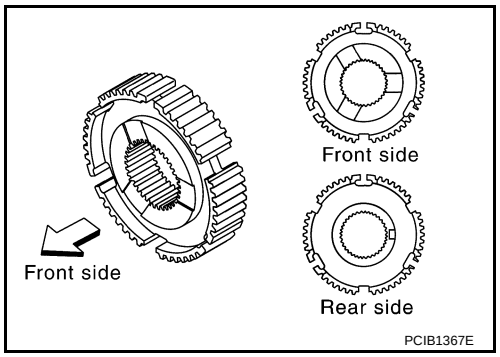

NOTE:

Reverse baulk ring has three spaces that two gear teeth are missing, and each space has small ditch for identification as shown in the figure.

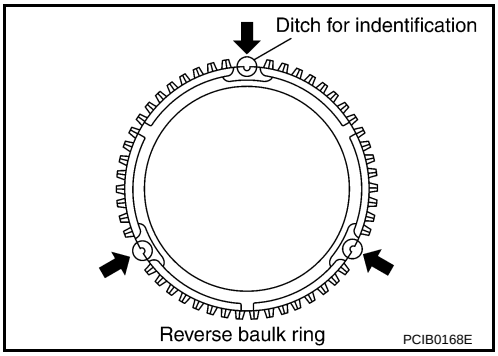

13. Select and install a snap ring so that the end play comes within the standard value.

End play standard value : Refer to TM-75, "End Play".

CAUTION:
Never reuse snap ring.

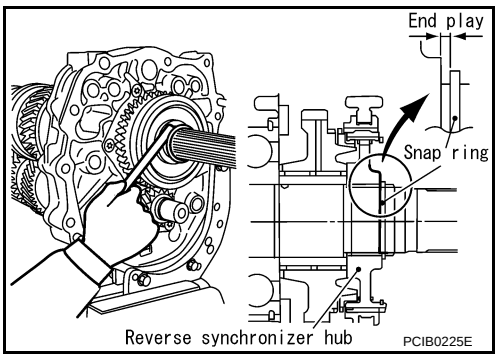

14. After installing counter rear bearing spacer, press and fit reverse counter gear onto counter shaft with drift [SST: ST23860000 (—)] and press.

CAUTION:
- **Never reuse reverse counter gear.**
- **When installing counter rear bearing spacer, identification ditch should face to the rear side.**
- **Replace counter rear bearing inner race, counter rear bearing and counter rear bearing spacer as a set.**

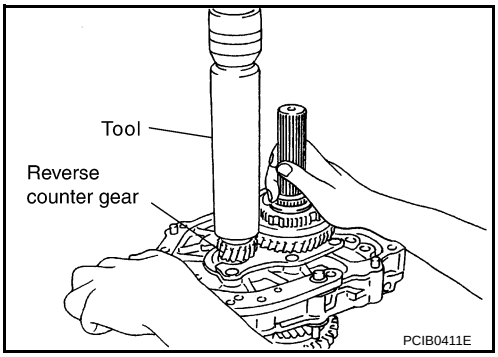

15. Select and install a snap ring so that the end play comes within the standard value.

End play standard value : Refer to TM-75, "End Play".

CAUTION:
Never reuse snap ring.

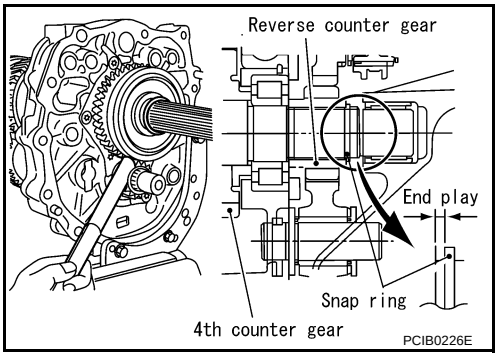

SHIFT FORK AND FORK ROD

1. Install 5th-6th shift fork to 5th-6th coupling sleeve.
2. Install 5th-6th fork rod (reversal side) to 5th-6th shift fork.
3. Using a pin punch to tap retaining pin into 5th-6th shift fork.
   CAUTION:
   Never reuse retaining pin.

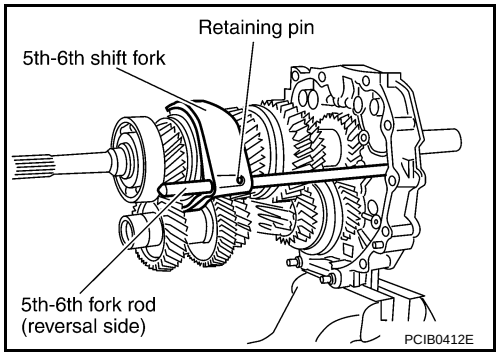

4. Install 5th-6th fork rod to adapter plate.
5. Install 5th-6th fork rod bracket to 5th-6th fork rod.
6. Using a pin punch to tap retaining pin into 5th-6th fork rod bracket.
   CAUTION:
   Never reuse retaining pin.

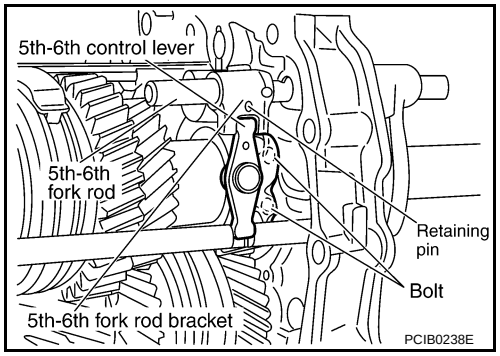

7. Install 5th-6th control lever to adapter plate and then tighten mounting bolts to the specified torque.
   CAUTION:
   Set the projection upward.

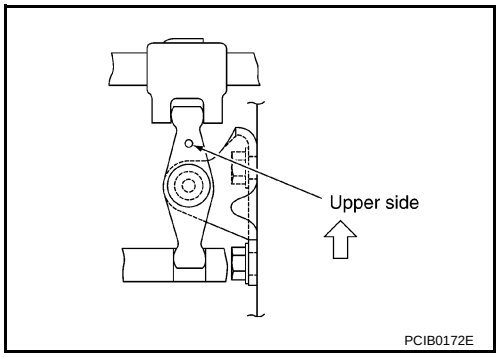

8. Apply recommended grease check balls and then install check balls to adapter plate.

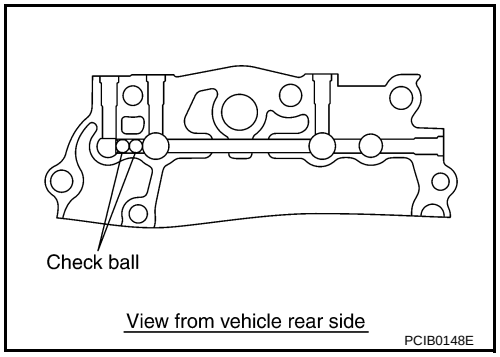

9. Install reverse shift fork to reverse coupling sleeve.
10. Install reverse fork rod to reverse shift fork.
11. Using a pin punch to tap retaining pin into reverse shift fork.
    CAUTION:
    Never reuse retaining pin.

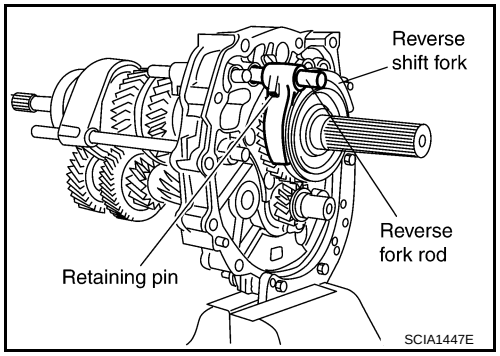

12. Apply recommended grease to interlock pin and interlock plunger.
13. Install interlock pin and interlock plunger to adapter plate.

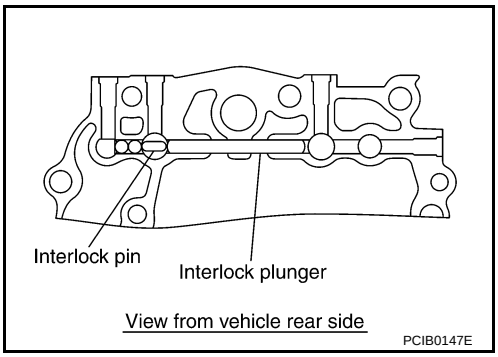

14. Install 1st-2nd shift fork to 1st-2nd coupling sleeve.
15. Install 1st-2nd fork rod to 1st-2nd shift fork.
16. Using a pin punch to tap retaining pin into 1st-2nd shift fork.
    CAUTION:
    Never reuse retaining pin.

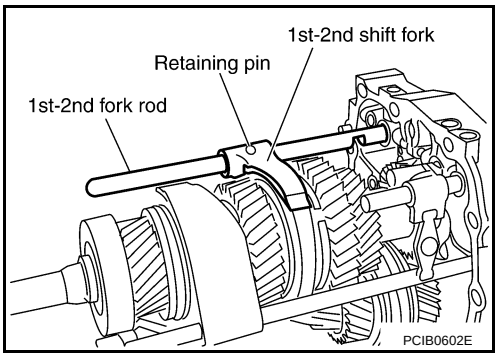

17. Install 3rd-4th shift fork to 3rd-4th coupling sleeve.
18. Install 3rd-4th fork rod (reversal side) to 3rd-4th shift fork.
19. Using a pin punch to tap retaining pin into 3rd-4th shift fork (reversal side).
    CAUTION:
    Never reuse retaining pin.

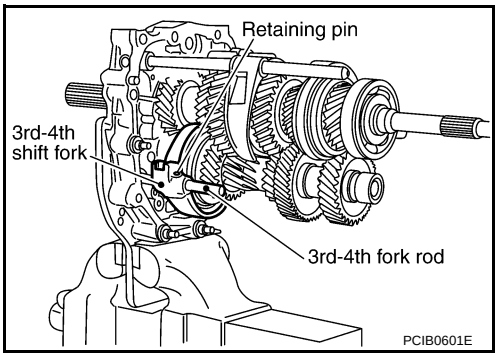

20. Apply recommended grease to interlock pin and check balls.
21. Install interlock pin and check balls to adapter plate.

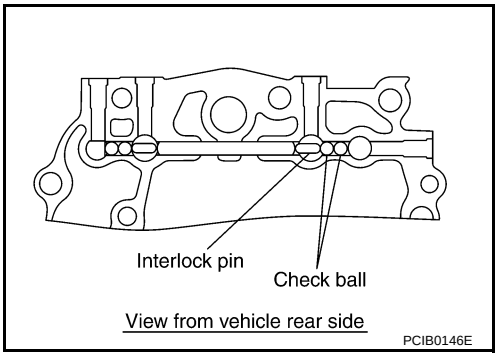

22. Install 3rd-4th fork rod to adapter plate.
23. Install 3rd-4th fork rod bracket to 3rd-4th fork rod.
24. Using a pin punch to tap retaining pin into 3rd-4th fork rod bracket.
    CAUTION:
    Never reuse retaining pin.

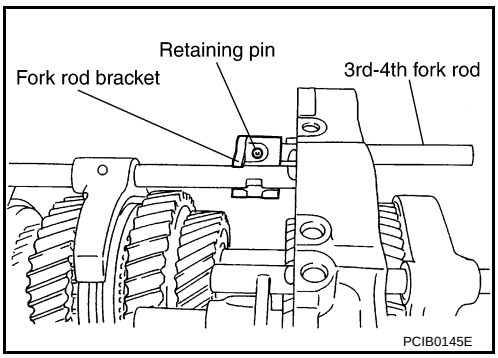

25. Apply recommended grease to check ball and then install check ball and check ball spring into adapter plate.
26. Apply recommended sealant to threads of check ball plugs and then tighten check ball plug to the specified torque.
    - **Use Genuine Silicone RTV or an equivalent. Refer to GI-15, "Recommended Chemical Products and Sealants".**

    CAUTION:
    Remove old sealant and oil adhering to threads.

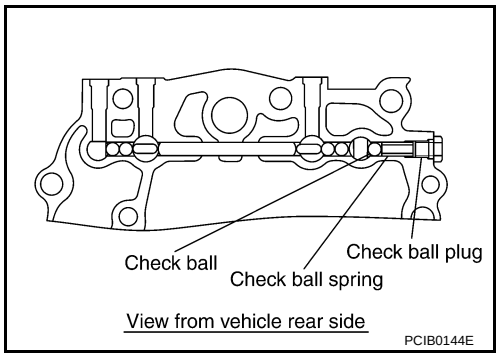

27. Install 3rd-4th control lever to adapter plate and then tighten mounting bolts to the specified torque.

    CAUTION:
    - **Make sure the top and bottom are oriented correctly.**
    - **Never drop shifter cap.**

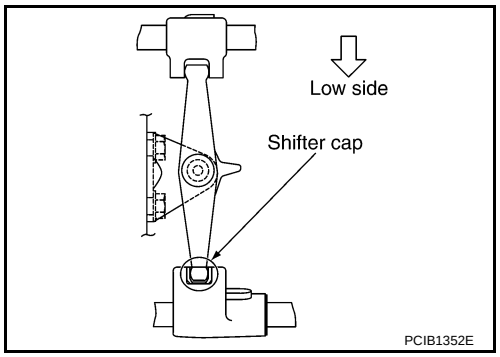

28. Apply recommended grease to check ball and then install check balls and check ball springs into adapter plate.
29. Apply recommended sealant to threads of check ball plugs and then tighten check ball plugs to the specified torque.
    - **Use Genuine Silicone RTV or an equivalent. Refer to GI-15, "Recommended Chemical Products and Sealants".**

    CAUTION:
    Remove old sealant and oil adhering to threads.

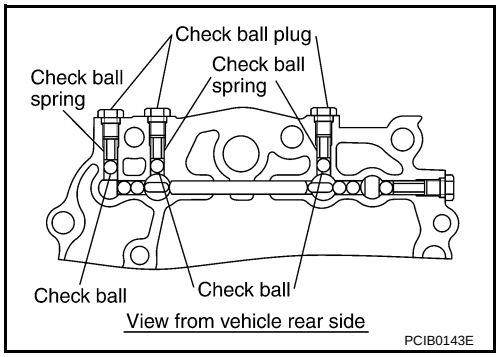

30. Install striking rod to adapter plate.
31. Install striking lever to striking rod.
32. Using a pin punch to tap retaining pin into striking lever.

    CAUTION:
    Never reuse retaining pin.

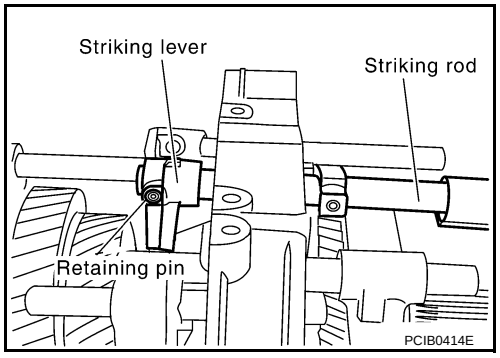

33. Install baffle plate to adapter plate and then tighten mounting bolts to the specified torque.

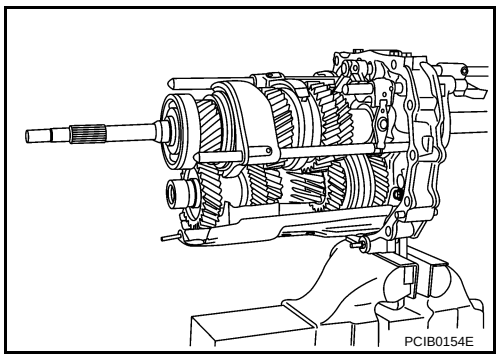

CASE AND EXTENSION

1. Install counter front bearing to transmission case.
2. Install oil gutter to transmission case.
3. Install breather tube to transmission case.
   CAUTION:
   Never reuse breather tube.

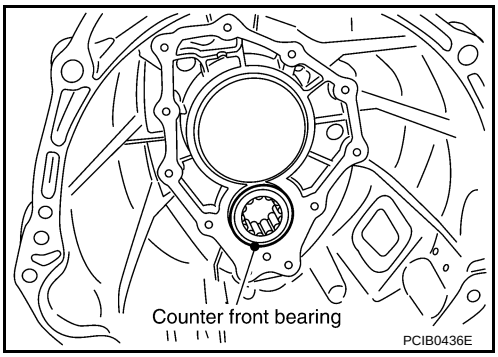

4. Apply recommended sealant to transmission case adapter plate mounting surface as shown in the figure.
   - **Use Genuine Silicone RTV or an equivalent. Refer to GI-15, "Recommended Chemical Products and Sealants".**

   CAUTION:
   Remove old sealant adhering to the mounting surfaces. Also remove any moisture, oil, or foreign material adhering to both mounting surfaces.

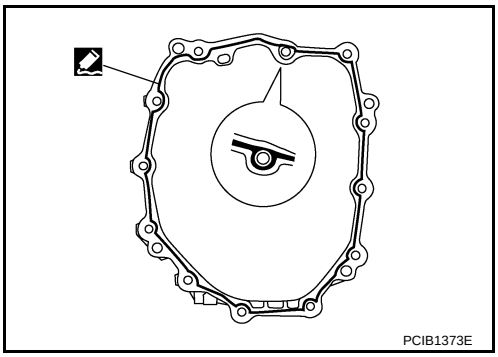

5. Place adapter plate in transmission case using a soft hammer to tap adapter plate to install it into transmission case.

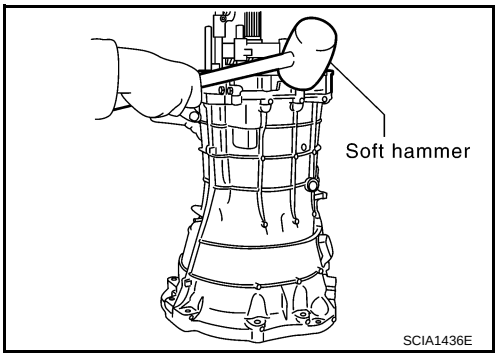

6. Install snap ring to main drive gear bearing using snap ring pliers.
   CAUTION:
   Never reuse snap ring.

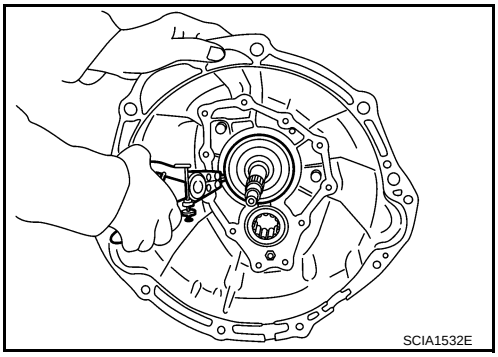

7. Tighten baffle plate mounting nut to the specified torque.

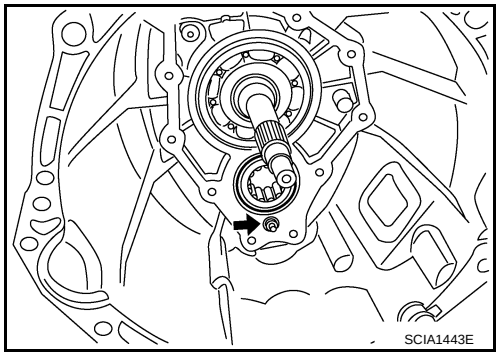

8. Apply multi-purpose grease to lip of front cover oil seal (1).
9. Install front cover oil seal to front cover using the drift (A) [SST: KV38102100 (J-25803-01)].

Dimension "H" : 8.55 - 9.55 mm (0.3366 - 0.3760 in)

CAUTION:
- **Never reuse front cover oil seal.**
- **When installing, never incline front cover oil seal.**

10. Install front cover according to the following.

a. Install front cover gasket and front cover to transmission case.

CAUTION:
- **Never reuse front cover gasket.**
- **Never damage front cover oil seal.**
- **Remove any moisture, oil, or foreign material adhering to both mating surfaces.**

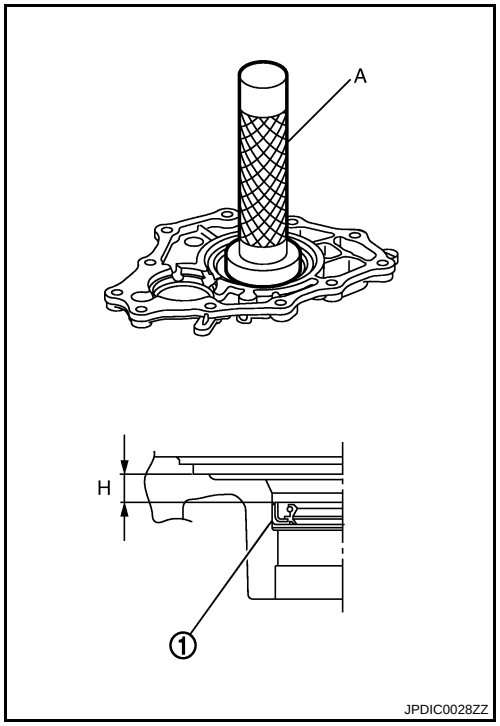

b. Temporary tightening mounting bolt (⬅) and sealing bolt (1).

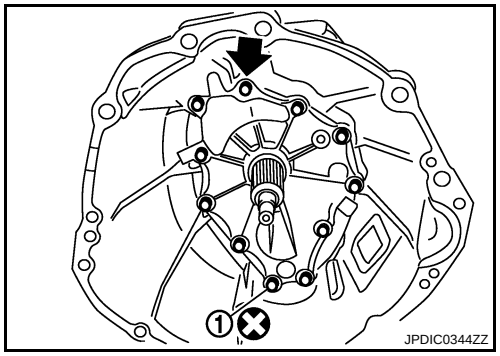

c. Temporary tightening remaining mounting bolts (⬅) and sealing bolts (1).

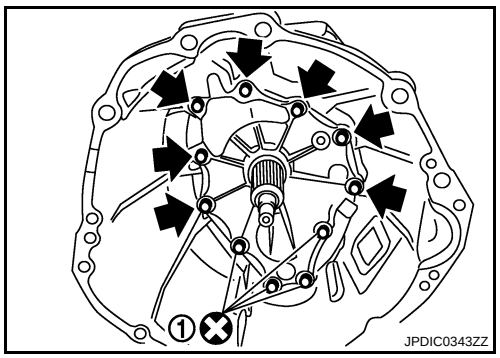

d. Tighten mounting bolts (⬅) and sealing bolts (1) to the specified torque in order as shown on the figure.

11. Install rear extension oil gutter and cap to rear extension and then tighten mounting bolt to specified torque.
12. Install bracket to transmission case and then tighten mounting bolt to specified torque.
13. Apply recommended grease to reverse idler needle bearing.
14. Install reverse idler shaft, reverse idler needle bearing, reverse idler gear and reverse idler thrust washer to adapter plate.

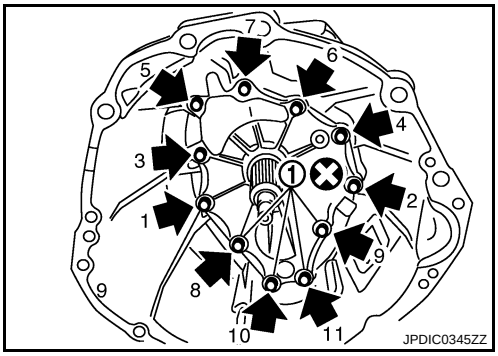

15. Apply multi-purpose grease to striking rod oil seal lip.
    CAUTION:
    Never reuse striking rod oil seal.
16. Install striking rod oil seal to rear extension using the drift [SST: ST33061000 (J-8107-2)].
    CAUTION:
    When installing, never incline striking rod oil seal.

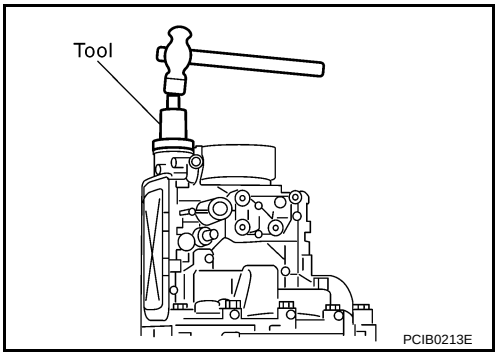

17. Apply multi-purpose grease to lip of rear oil seal (1).
    CAUTION:
    Never reuse rear oil seal.
18. Install rear oil seal to rear extension using the drift [SST: ST33400001 (J-26082)].

    Dimension "H" : 1.2 - 2.2 mm (0.047 - 0.087 in)

    CAUTION:
    When installing, never incline rear oil seal.

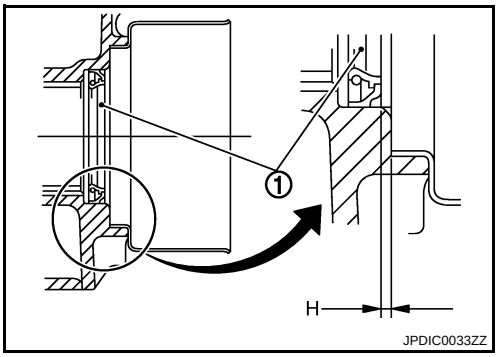

19. Apply recommended sealant to adapter plate rear extension mounting surface as shown in the figure.
    - **Use Genuine Silicone RTV or an equivalent. Refer to GI-15, "Recommended Chemical Products and Sealants".**

    CAUTION:
    Remove old sealant adhering to the mounting surfaces. Also remove any moisture, oil, or foreign material adhering to both mounting surfaces.

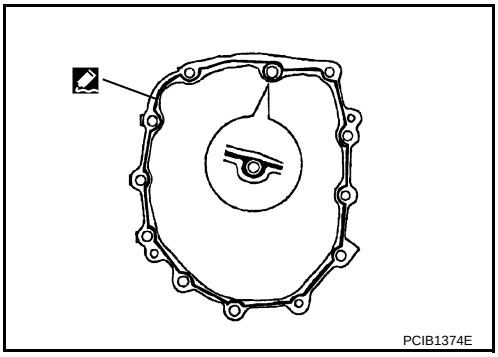

20. Install rear extension to adapter plate and then tighten mounting bolts to the specified torque in order as shown on the figure.
    CAUTION:
    Never damage rear oil seal and striking rod oil seal.
21. Install control lever housing to rear extension and then tighten mounting bolts to the specified torque.
    CAUTION:
    Never hold control lever housing to prevent bushing of control lever housing from deformation when moving transmission assembly.

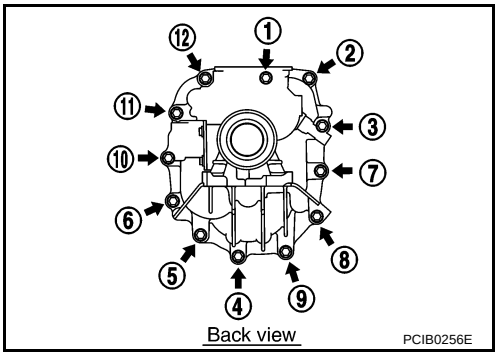

22. Apply gear oil to return spring plungers.
23. Install return spring plungers and return springs into rear extension.

Region	Return spring identification mark	Plunger groove
RH	Brown	No
LH	Blue	Yes

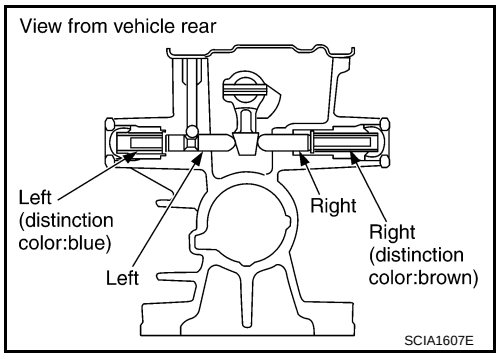

CAUTION:
The right and left return springs and return spring plungers are different, so make sure they are installed correctly.

24. Apply recommended sealant to threads of return spring plugs and then tighten return spring plugs to the specified torque.
    - **Use Genuine Silicone RTV or an equivalent. Refer to GI-15, "Recommended Chemical Products and Sealants".**

    CAUTION:
    Remove old sealant and oil adhering to threads.

25. Install shift check pin as a one unit with control bracket to rear extension and then tighten mounting bolts to the specified torque.
26. Install plunger to rear extension and then screwing park/neutral position (PNP) switch and back-up lamp switch to rear extension with 1 - 2 pitches.
27. Apply recommended sealant to threads of switches and tighten switches to the specified torque.
    - **Use Genuine Silicone RTV or an equivalent. Refer to GI-15, "Recommended Chemical Products and Sealants".**

    CAUTION:
    Remove old sealant and oil adhering to threads.

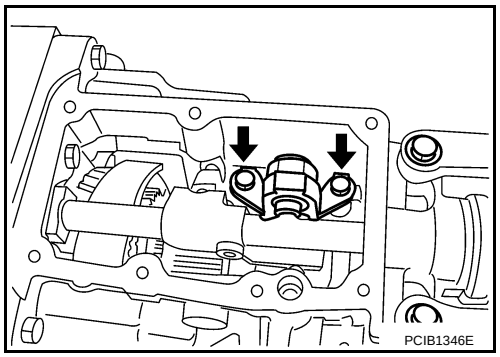

28. Install brackets to rear extension and then tighten bracket mounting bolts to the specified torque.
29. Install boot and control rod to striking rod.
30. Install the retaining pin into the control rod using a pin punch. Then fit the boot to the striking rod oil seal and the groove on the control rod.

    CAUTION:
    Never reuse retaining pin.

31. Install boot to control rod.

    CAUTION:
    Fit the boot to the groove on the control rod.

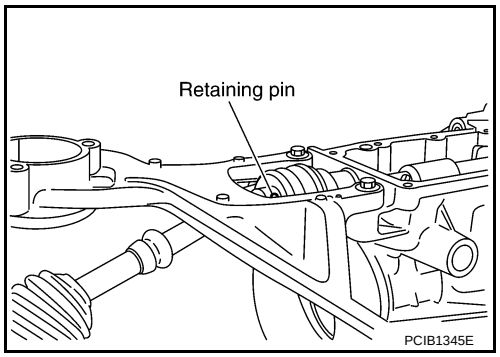

32. Install check ball and check select spring into rear extension.
33. Install rear extension upper cover gasket and rear extension upper cover to rear extension.

    CAUTION:
    - **Never reuse rear extension upper cover gasket.**
    - **Avoid tangling check select spring.**

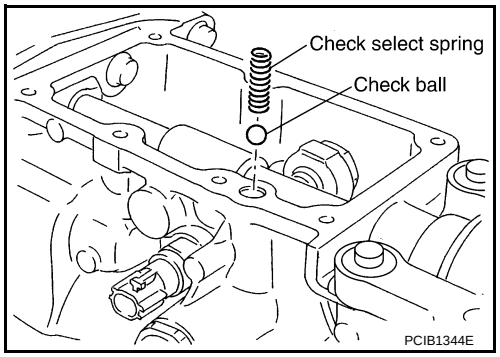

34. Tighten rear extension upper cover bolts to the specified torque in order as shown on the figure.
35. Install gasket to drain plug and then install it to transmission case. Tighten drain plug to the specified torque.
    CAUTION:
    Never reuse gasket.
36. Install gasket to filler plug and then install it to transmission case. Tighten filler plug to the specified torque.
    CAUTION:
    - **Never reuse gasket.**
    - **After oil is filled, tighten filler plug to specified torque.**

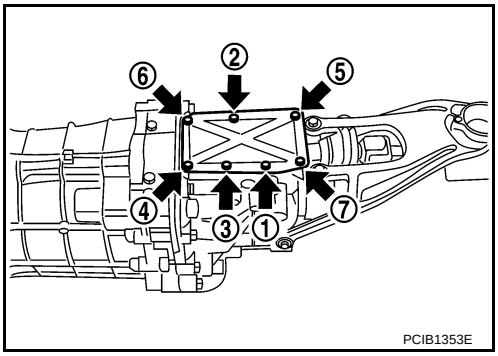

MAIN DRIVE GEAR

Exploded View

INFOID:0000000001732882

Refer to TM-29, "Exploded View".

Disassembly

INFOID:0000000001732883

1. Before disassembly, measure end play. If the end play is outside the specifications, disassemble and inspect.

End play standard value : Refer to TM-75, "End Play".

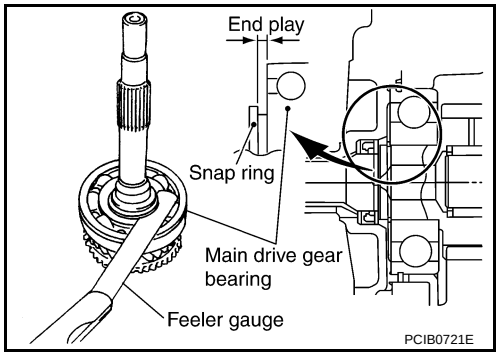

2. Remove snap ring from main drive gear using snap ring pliers.

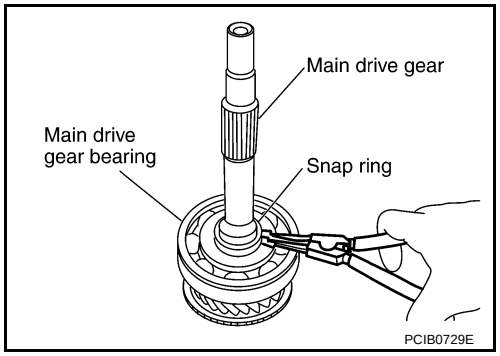

3. Set a puller on main drive gear bearing, and remove main drive gear bearing from main drive gear using a press.

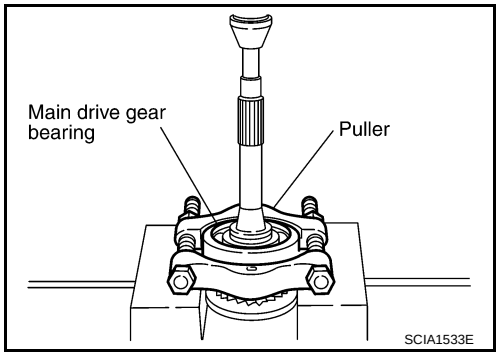

Assembly

INFOID:0000000001732884

1. Using the drift [SST: KV32102700 (—)] and a press to press fit main drive gear bearing onto main drive gear.

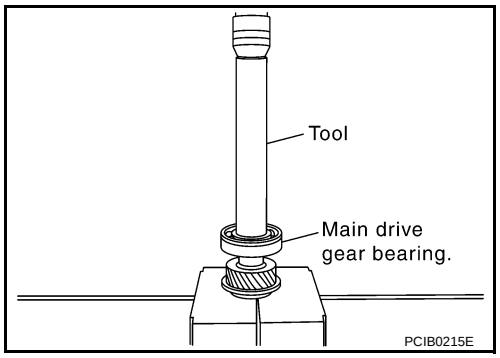

2. Select and install a snap ring to main drive gear bearing so that the end play comes within the standard value.

   End play standard value : Refer to TM-75, "End Play".

   CAUTION:
   Never reuse snap ring.
3. Apply recommended grease to main pilot bearing.
4. Install main pilot bearing, pilot bearing spacer and 5th baulk ring to main drive gear.

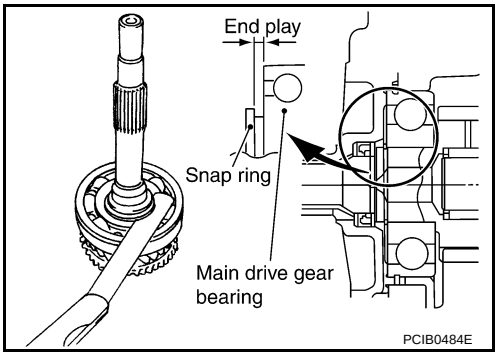

Inspection

INFOID:0000000001732885

MAIN DRIVE GEAR

If the contact surface on main drive gear, etc. has damage, peeling, abrasion, dent, bent, or any other damage, replace the components.

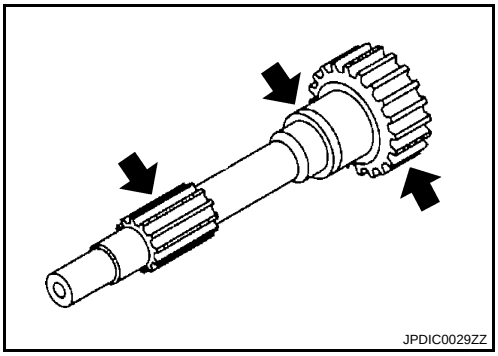

SYNCHRONIZER

Baulk Ring

- If the cam surface on baulk ring or contact surface on insert has damage or excessive wear, replace with a new one.

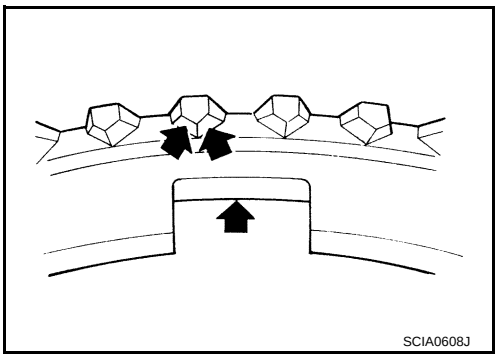

Baulk Ring Clearance for Single Cone Synchronizer (5th)

- Push baulk ring on the cone, and measure the clearance between baulk ring and cone. If the measurement is below limit, replace it with a new one.

Clearance

Standard value	**: Refer to TM-75, "Baulk Ring Clearance".**
Limit value	**: Refer to TM-75, "Baulk Ring Clearance".**

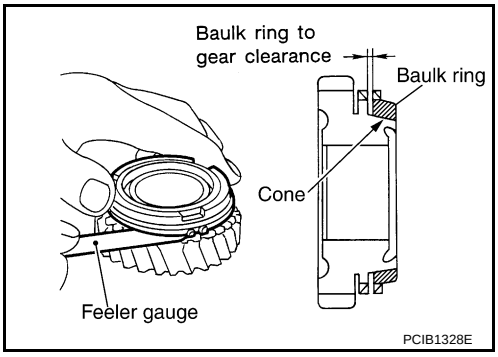

BEARING

If the bearing does not rotate smoothly or the contact surface on ball or race is damaged or peeled, replace with new ones.

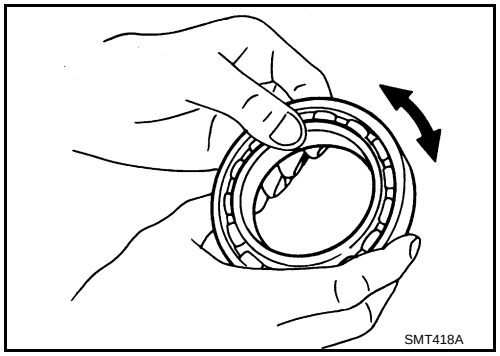

MAINSHAFT AND GEAR

Exploded View

INFOID:0000000001732886

Refer to TM-29, "Exploded View".

Disassembly

INFOID:0000000001732887

1. Using a press to remove reverse main gear bushing, mainshaft bearing and 4th main gear.
2. Remove 3rd-4th main spacer.

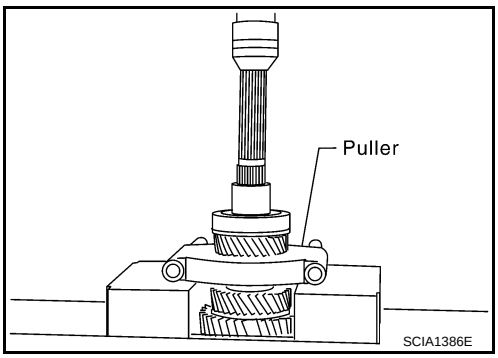

3. Using a press to remove 1st main gear and 3rd main gear.
   CAUTION:
   Never damage baulk ring.
4. Remove 1st needle bearing.

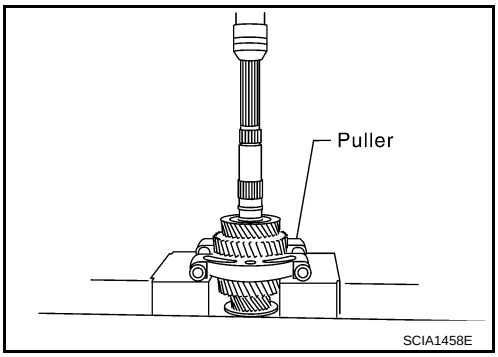

5. Using a press to remove 1st gear bushing, 1st-2nd synchronizer assembly and 2nd main gear.
   CAUTION:
   Be aware that when using the press, if mainshaft gear positioner catches on the V-block, etc., mainshaft could be damaged.
6. Remove 2nd needle bearing.

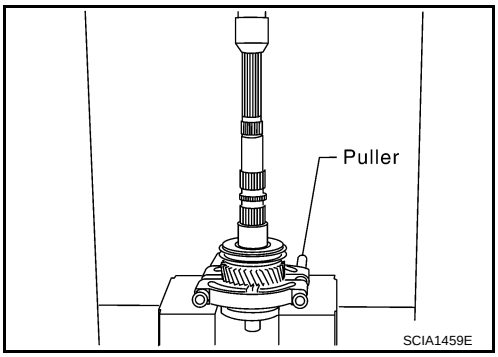

7. After removing snap ring, using a press to remove 6th main gear and 5th-6th synchronizer assembly.
8. Remove 6th needle bearing.

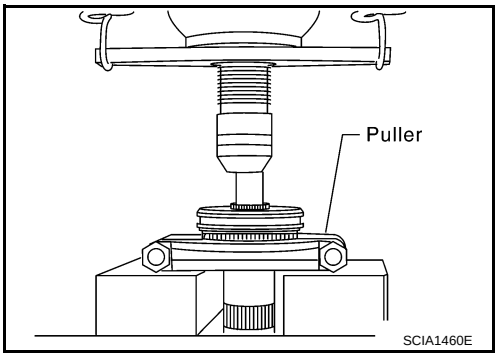

Assembly

INFOID:0000000001732888

1. Install 5th-6th coupling sleeve and 5th-6th shifting inserts in 5th-6th synchronizer hub.
   CAUTION:

- **Install 5th-6th coupling sleeve with the large chamfer on the rear side.**
- **Never reuse 5th-6th coupling sleeve and 5th-6th synchronizer hub.**
- **Replace 5th-6th coupling sleeve and 5th-6th synchronizer hub as a set.**

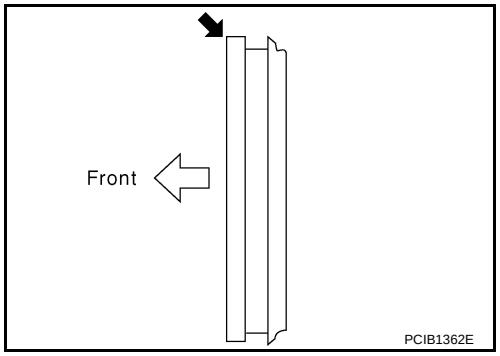

2. Install 5th-6th spread springs in 5th-6th shifting inserts.

CAUTION:

- **Never install 5th-6th spread spring hook onto the same 5th-6th shifting insert.**

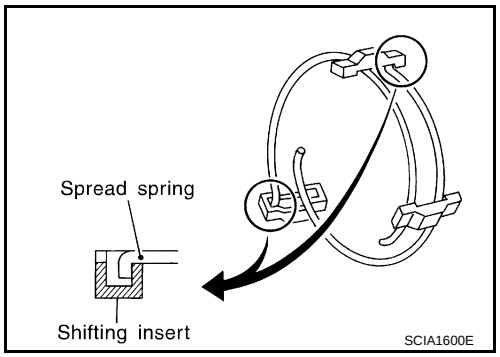

- **Be careful with the shape of reverse shifting insert to avoid misassembly.**

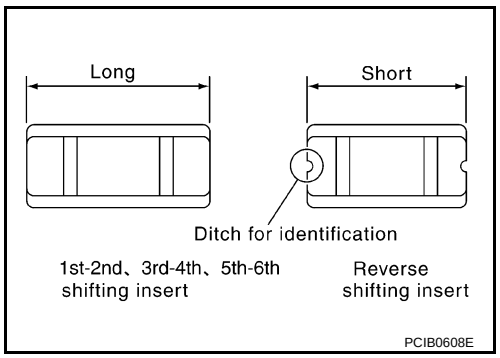

3. Apply recommended grease to 6th needle bearing.
4. Install 6th needle bearing, 6th main gear and 6th baulk ring on mainshaft and then using an inserter [SST: ST30911000 (—)] and a press to press fit 5th-6th synchronizer assembly.

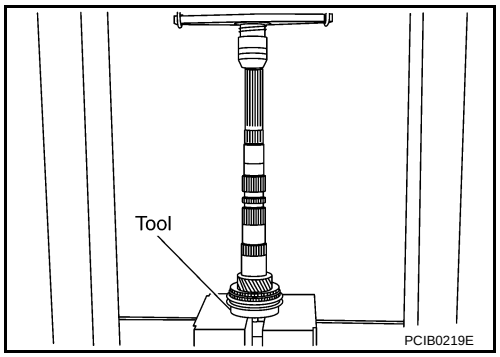

CAUTION:

- **When press fitting, install with the side having the three boss edge oil grooves facing the rear side.**

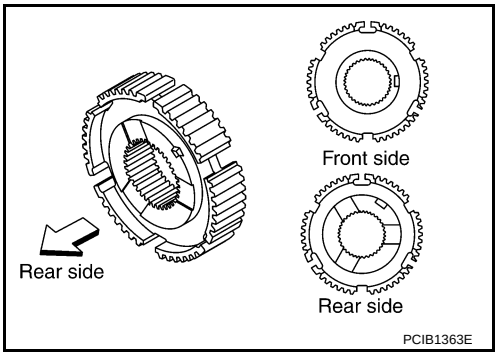

NOTE:
5th and 6th baulk rings have three spaces that four gear teeth are missing as shown in the figure.

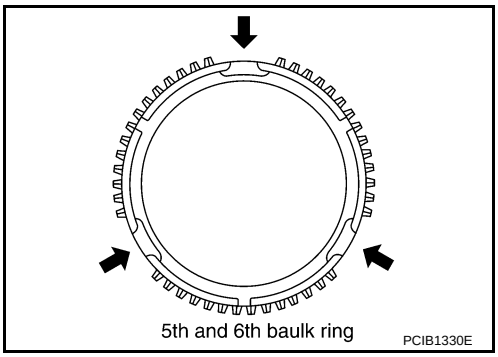

5. Select and install a snap ring so that the end play comes within the standard value.

   End play : Refer to TM-75, "End Play".

   CAUTION:
   Never reuse snap ring.

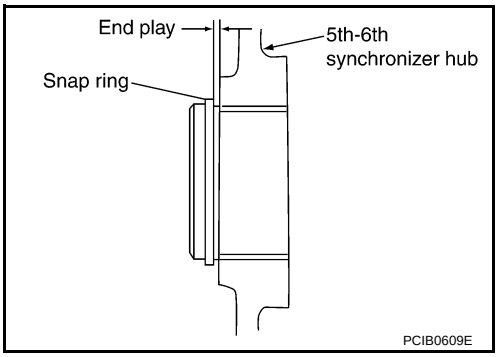

6. Install 1st-2nd coupling sleeve and 1st-2nd shifting inserts into 1st-2nd synchronizer hub.
   CAUTION:
   - **Install 1st-2nd coupling sleeve with the thicker flange faced the front side.**
   - **Never reuse 1st-2nd coupling sleeve and 1st-2nd synchronizer hub.**
   - **Replace 1st-2nd coupling sleeve and 1st-2nd synchronizer hub as a set.**

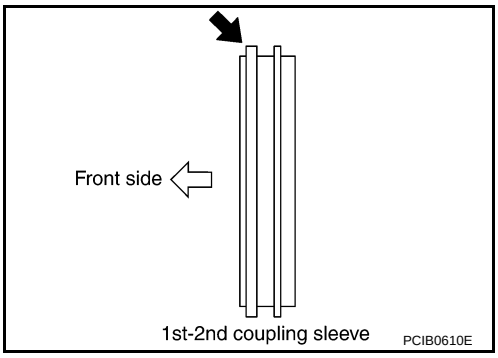

7. Install 1st-2nd spread springs in 1st-2nd shifting inserts.
   CAUTION:

- **Never install 1st-2nd spread spring hook onto the same 1st-2nd shifting insert.**

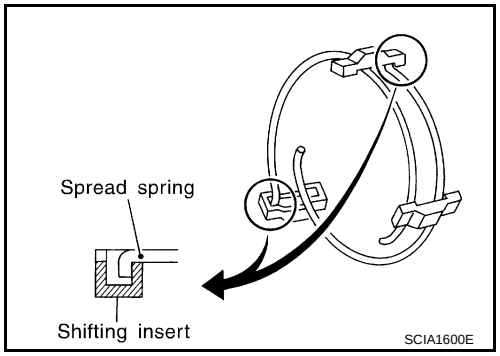

- **Be careful with the shape of reverse shifting insert to avoid misassembly.**

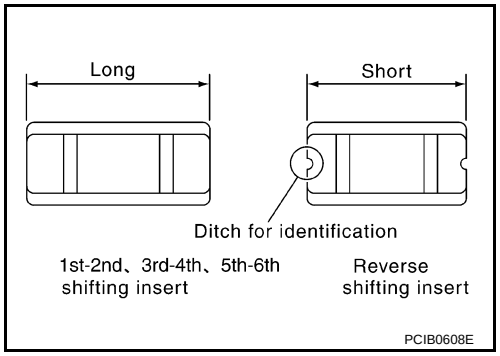

8. Apply recommended grease to 2nd needle bearing.
9. Install 2nd main gear, 2nd needle bearing, 2nd inner baulk ring, 2nd synchronizer cone and 2nd outer baulk ring on mainshaft and then using a support ring [SST: ST27861000 (—)] and a press to press fit 1st-2nd synchronizer assembly.

CAUTION:

- **Replace 2nd inner baulk ring, 2nd synchronizer cone and 2nd outer baulk ring as a set.**

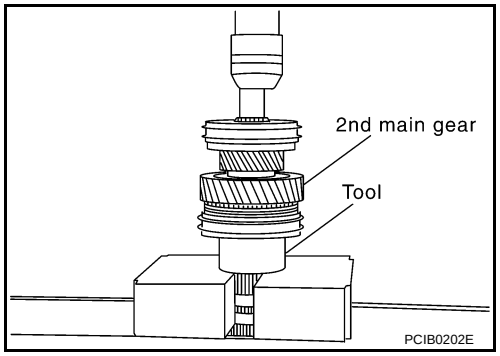

- **When press fitting, install with the side having the three boss edge oil grooves facing the front side.**

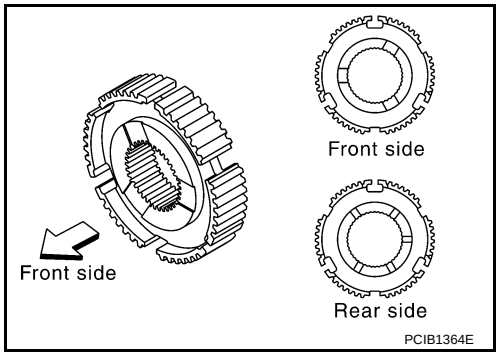

NOTE:

1st baulk ring has three spaces that four gear tooth is missing and 2nd baulk ring has three spaces that two gear teeth are missing.

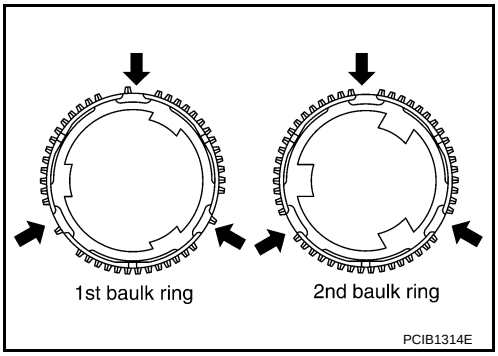

10. Using a support ring [SST: ST27861000 (—)] and a press to press fit 1st gear bushing.

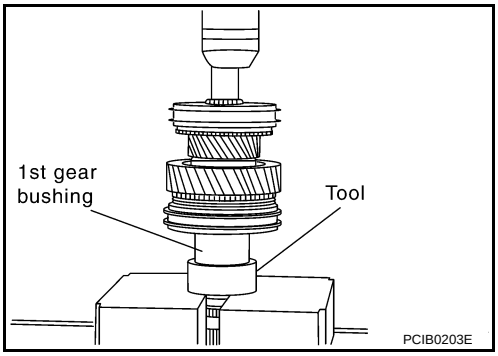

11. Apply recommended grease to 1st needle bearing.
12. Install 1st outer baulk ring, 1st synchronizer cone, 1st inner baulk ring, 1st needle bearing and 1st main gear on mainshaft and then using the inserter [SST: ST30022000 (—)] and a press to press fit 3rd main gear.
    CAUTION:
    - **Never reuse 3rd main gear.**
    - **Replace 1st outer baulk ring, 1st synchronizer cone and 1st inner baulk ring as a set.**

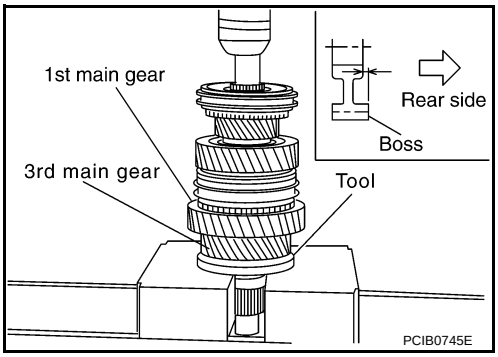

13. Install 3rd-4th main spacer on mainshaft and then using the inserter [SST: ST30022000 (—)] and a press to press fit 4th main gear.
    CAUTION:
    - **Never reuse 4th main gear.**
    - **When installing, set boss to rear side.**

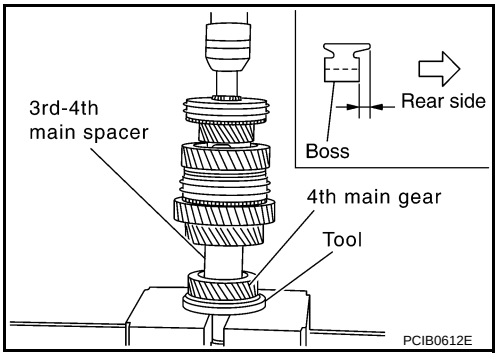

14. Using the inserter and a press to press fit mainshaft bearing onto mainshaft.

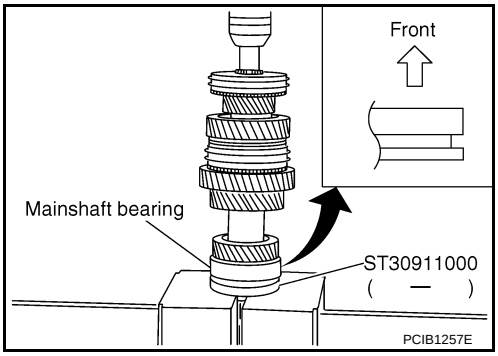

15. Using the inserter [SST: ST30911000 (—)] and a press to press fit reverse main gear bushing onto mainshaft.

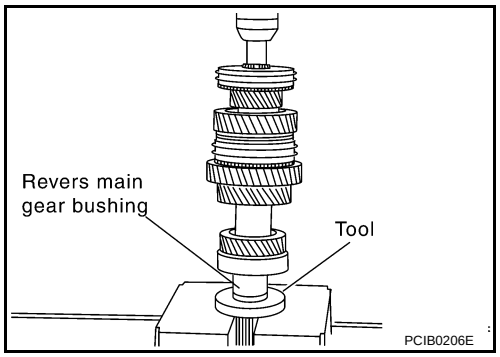

INFOID:0000000001732889

Inspection

MAINSHAFT AND GEAR

If the contact surface on each gear and mainshaft, etc. has damage, peeling, abrasion, dent, bent, or any other damage, replace the components.

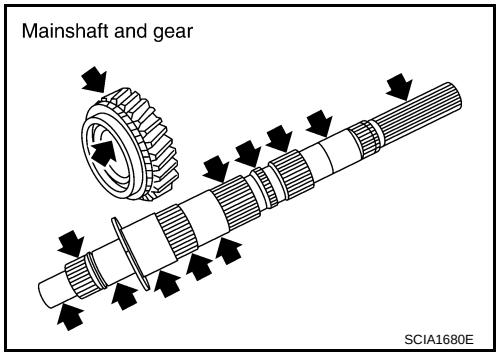

SYNCHRONIZER

Synchronizer Hub and Coupling Sleeve

- If the contact surface on coupling sleeve, synchronizer hub and shifting insert has damage or abrasion, replace the components.
- Coupling sleeve and synchronizer hub shall move smoothly.

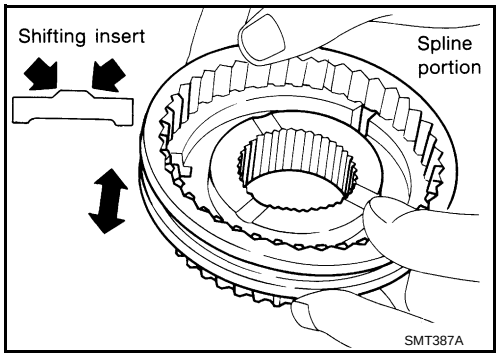

Baulk Ring and Spread Spring

- If the cam surface on baulk ring or contact surface on insert has damage or excessive wear, replace with a new one.
- If spread spring is damaged, replace with a new one.

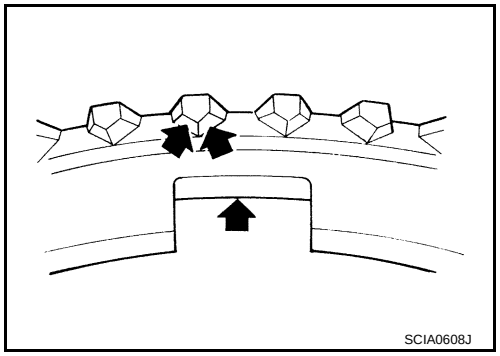

Baulk Ring Clearance for Single Cone Synchronizer (6th and Reverse)

- Push baulk ring on the cone and measure the clearance between baulk ring and cone. If the measurement is below limit, replace it with a new one.

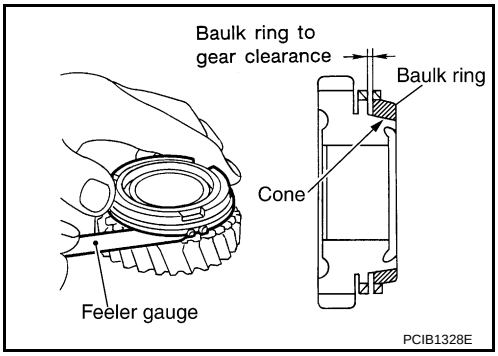

Clearance

Standard value : **Refer to TM-75, "Baulk Ring Clearance".**

Limit value : **Refer to TM-75, "Baulk Ring Clearance".**

Baulk Ring Clearance for Triple Cone Synchronizer (1st and 2nd)

- Check the clearance between outer baulk ring (1), synchronizer cone (2), and inner baulk ring (3) as follows.

CAUTION:

The clearances "A", "B" and "C" are controlled with outer baulk ring, synchronizer cone, and inner baulk ring as a set. Replace them as a set if the clearances are outside the limit value.

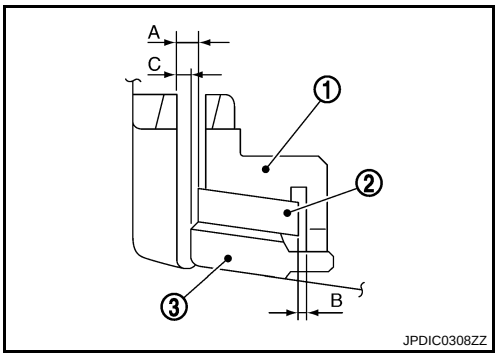

1. Measure the clearance "A" at 2 points or more diagonally opposite using a feeler gauge (B) when pressing outer baulk ring (1), synchronizer cone (2), and inner baulk ring (3) toward gear taper cone (C). And then calculate mean value.

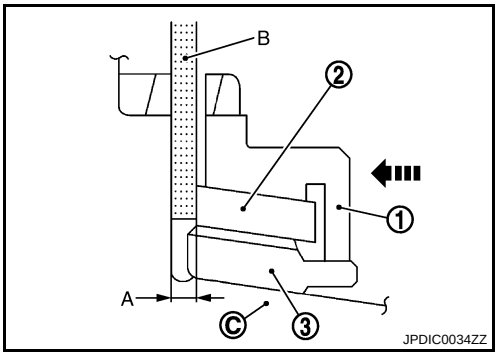

Clearance "A"

Standard value : **Refer to TM-75, "Baulk Ring Clearance".**

Limit value : **Refer to TM-75, "Baulk Ring Clearance".**

2. Measure the clearance "B" at 2 points or more diagonally opposite using a feeler gauge (A). And then calculate mean value.

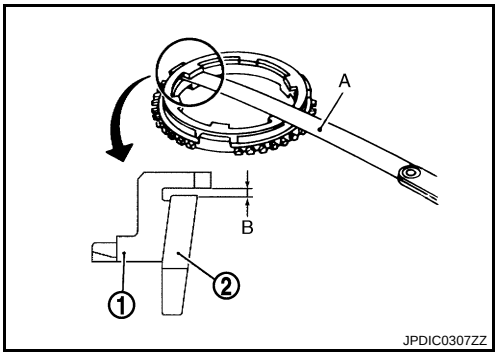

1 : Outer baulk ring

2 : Synchronizer cone

Clearance "B"

Standard value : **Refer to TM-75, "Baulk Ring Clearance".**

Limit value : **Refer to TM-75, "Baulk Ring Clearance".**

3. Measure the clearance “C” at 2 points or more diagonally opposite using a feeler gauge (A) when pressing outer baulk ring (1), synchronizer cone (2), and inner baulk ring (3) toward gear taper cone (B). And then calculate mean value.

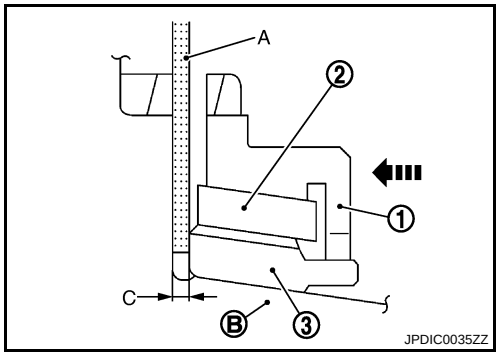

Clearance “C”

Standard value : Refer to TM-75, "Baulk Ring Clearance".

Limit value : Refer to TM-75, "Baulk Ring Clearance".

Bearing

If the bearing does not rotate smoothly or the contact surface on ball or race is damaged or peeled, replace with new ones.

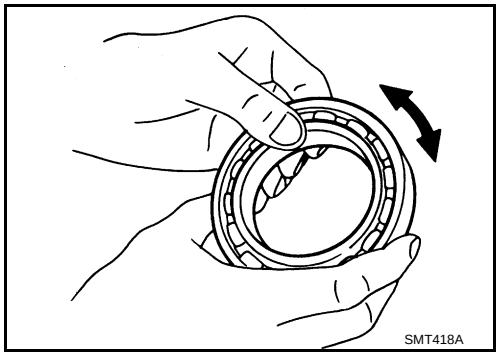

COUNTER SHAFT AND GEAR

Exploded View

INFOID:0000000001732890

Refer to TM-29, "Exploded View".

Disassembly

INFOID:0000000001732891

1. Using a press to remove 3rd counter gear, 3rd-4th synchronizer assembly, 4th counter gear, 4th needle bearing, 4th gear bushing, 4th counter gear thrust washer and counter rear bearing inner race.
2. Remove 3rd needle bearing.

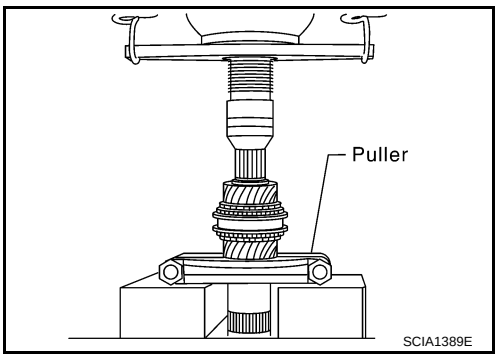

3. Using a press to remove 3rd gear bushing.
   CAUTION:
   Never use oil hole of 3rd gear bushing when press out.

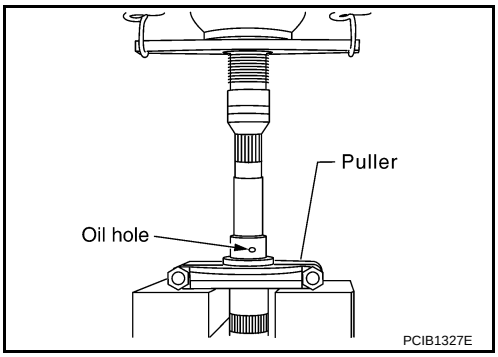

Assembly

INFOID:0000000001732892

1. Using the inserter [SST: ST30911000 (—)] and a press to press fit 3rd gear bushing onto counter shaft.

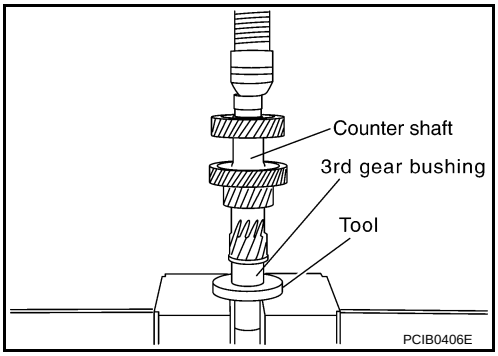

2. Install 3rd-4th coupling sleeve and 3rd-4th shifting inserts into 3rd-4th synchronizer hub.
   CAUTION:
   - **Install 3rd-4th coupling sleeve with the thicker flange faced the front side.**
   - **Never reuse 3rd-4th coupling sleeve and 3rd-4th synchronizer hub.**
   - **Replace 3rd-4th coupling sleeve and 3rd-4th synchronizer hub as a set.**

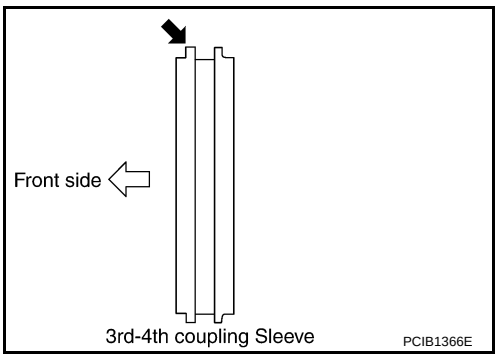

3. Install 3rd-4th spread springs in 3rd-4th shifting inserts.

CAUTION:

- **Never install 3rd-4th spread spring hook onto the same 3rd-4th shifting insert.**

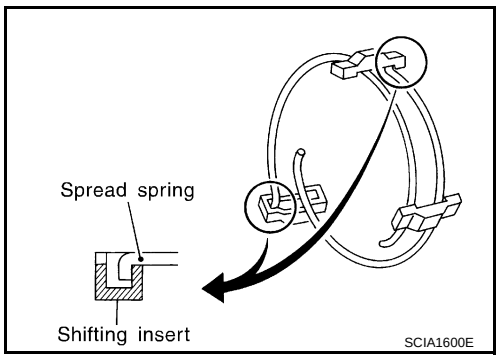

- **Be careful with the shape of reverse shifting insert to avoid misassembly.**

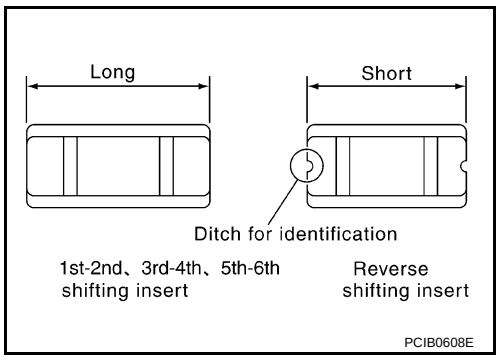

4. Apply recommended grease to 3rd needle bearing.
5. Apply gear oil to the hole spline press fitting side of 3rd-4th synchronizer hub.
6. Install 3rd needle bearing, 3rd counter gear, 3rd inner baulk ring, 3rd synchronizer cone and 3rd outer baulk ring on counter shaft and then using the inserter [SST: ST30911000 (—)] and a press to press fit 3rd-4th synchronizer assembly.

CAUTION:

Replace 3rd inner baulk ring, 3rd synchronizer cone and 3rd outer baulk ring as a set.

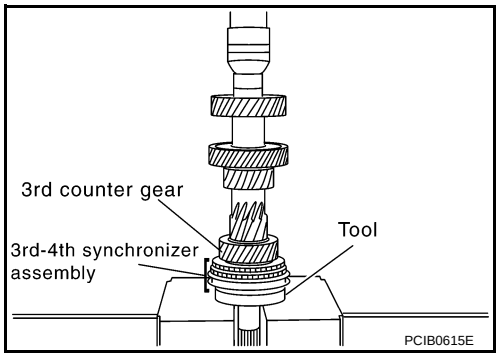

NOTE:

4th baulk ring has three spaces that one gear tooth is missing but 3rd baulk ring doesn't.

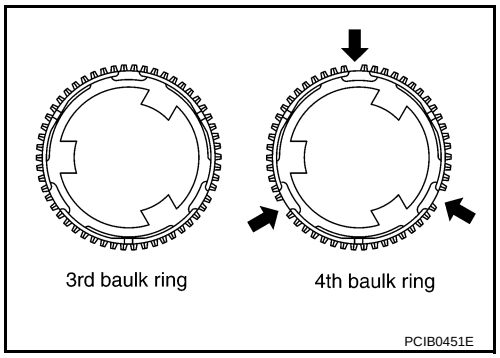

7. Apply recommended grease to 4th needle bearing.
8. Install 4th outer baulk ring, 4th synchronizer cone, 4th inner baulk ring, 4th needle bearing and 4th counter gear onto counter shaft and then using the inserter [SST: KV40100630 (J-26092)] and a press to press fit 4th gear bushing and 4th counter gear thrust washer.
   CAUTION:
   Replace 4th outer baulk ring, 4th synchronizer cone and 4th inner baulk ring as a set.

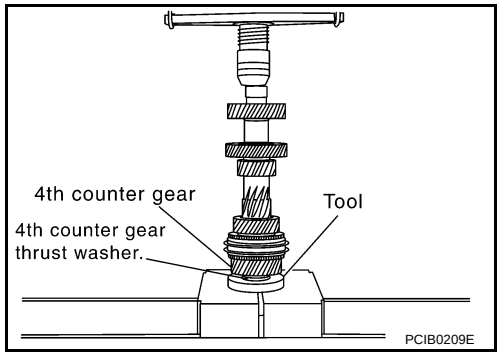

9. Using the inserter [SST: ST30032000 (J-26010-01)] and a press to press fit counter rear bearing inner race onto counter shaft.
   CAUTION:
   Replace counter rear bearing inner race, counter rear bearing and counter rear bearing spacer as a set.

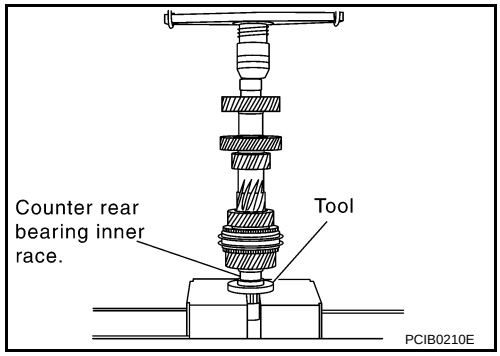

Inspection

INFOID:0000000001732893

COUNTER SHAFT AND GEAR

If the contact surface on each gear and counter shaft, etc. has damage, peeling, abrasion, dent, bent, or any other damage, replace the components.

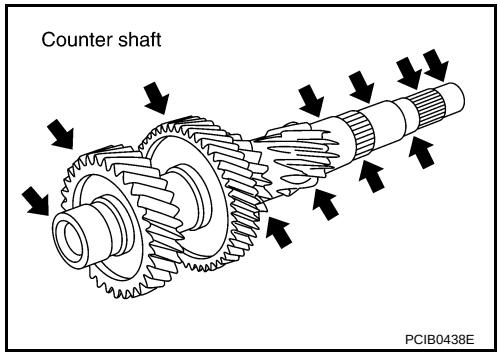

SYNCHRONIZER

Synchronizer Hub and Coupling Sleeve

- If the contact surface on coupling sleeve, synchronizer hub, and shifting insert has damage or abrasion, replace the components.
- Coupling sleeve and synchronizer hub shall move smoothly.

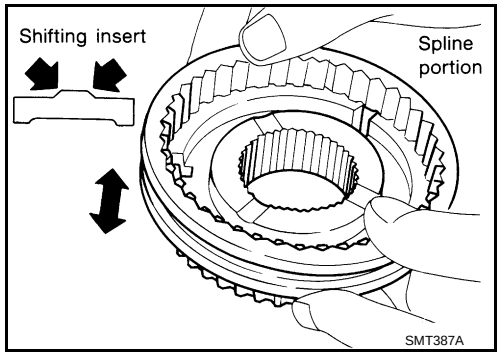

Baulk Ring and Spread Spring

- If the cam surface on baulk ring or contact surface on insert has damage or excessive wear, replace with a new one.
- If spread spring is damaged, replace with a new one.

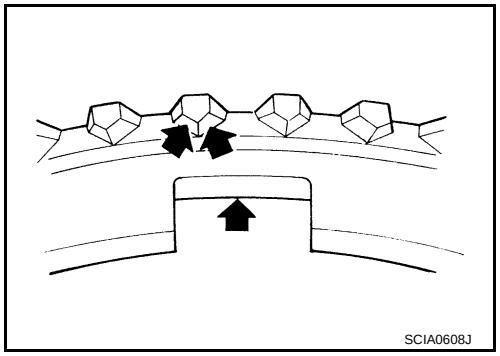

Baulk Ring Clearance for Double Cone Synchronizer (4th)

- Check the clearance between outer baulk ring (1), synchronizer cone (2), and inner baulk ring (3) as follows.

CAUTION:
The clearances "A" and "B" are controlled with outer baulk ring, synchronizer cone, and inner baulk ring as a set. Replace them as a set if the clearances are outside the limit value.

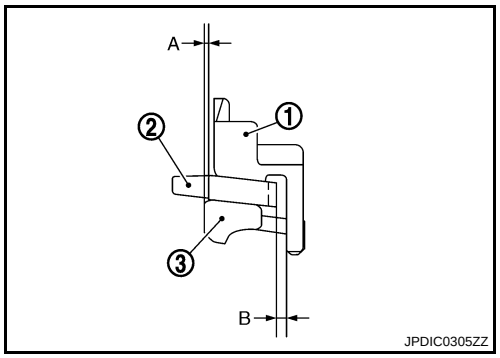

1. Measure the clearance "A" at 2 points or more diagonally opposite using a dial indicator (B) and puller (C) [SST: ST30031000 (J-22912-01)]. And then calculate mean value.

   1 : Inner baulk ring
   2 : Synchronizer cone

   Clearance "A"

   Standard value : **Refer to TM-75, "Baulk Ring Clearance".**

   Limit value : **Refer to TM-75, "Baulk Ring Clearance".**

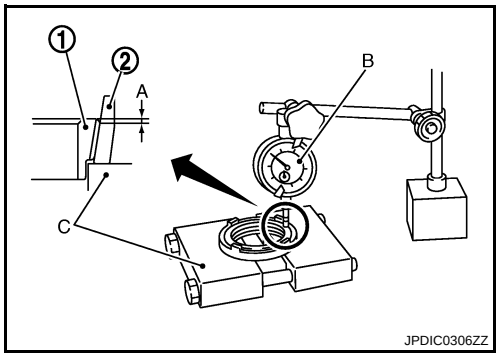

2. Measure the clearance "B" at 2 points or more diagonally opposite using a feeler gauge (A). And then calculate mean value.

   1 : Outer baulk ring
   2 : Synchronizer cone

   Clearance "B"

   Standard value : **Refer to TM-75, "Baulk Ring Clearance".**

   Limit value : **Refer to TM-75, "Baulk Ring Clearance".**

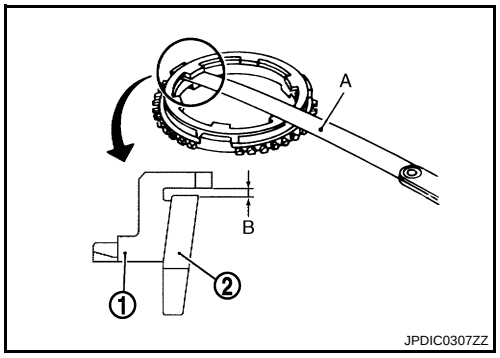

Baulk Ring Clearance for Triple Cone Synchronizer (3rd)

- Check the clearance between outer baulk ring (1), synchronizer cone (2), and inner baulk ring (3) as follows.

CAUTION:
The clearances "A", "B" and "C" are controlled with outer baulk ring, synchronizer cone, and inner baulk ring as a set. Replace them as a set if the clearances are outside the limit value.

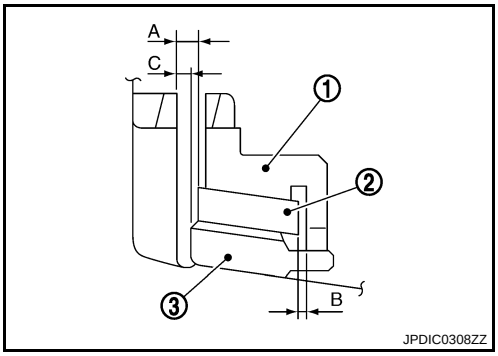

1. Measure the clearance "A" at 2 points or more diagonally opposite using a feeler gauge (B) when pressing outer baulk ring (1), synchronizer cone (2), and inner baulk ring (3) toward gear taper cone (C). And then calculate mean value.

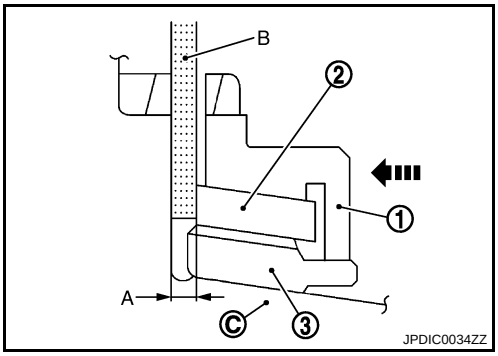

Clearance "A"

Standard value : **Refer to TM-75, "Baulk Ring Clearance".**

Limit value : **Refer to TM-75, "Baulk Ring Clearance".**

2. Measure the clearance "B" at 2 points or more diagonally opposite using a feeler gauge (A). And then calculate mean value.

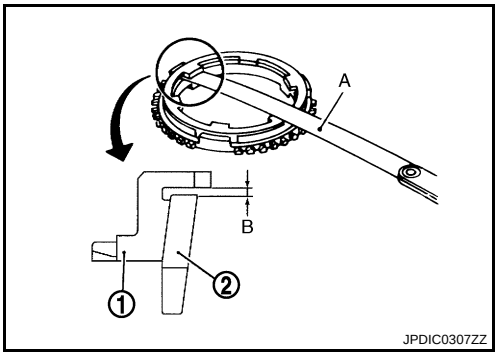

1 : Outer baulk ring
2 : Synchronizer cone

Clearance "B"

Standard value : **Refer to TM-75, "Baulk Ring Clearance".**

Limit value : **Refer to TM-75, "Baulk Ring Clearance".**

3. Measure the clearance "C" at 2 points or more diagonally opposite using a feeler gauge (A) when pressing outer baulk ring (1), synchronizer cone (2), and inner baulk ring (3) toward gear taper cone (B). And then calculate mean value.

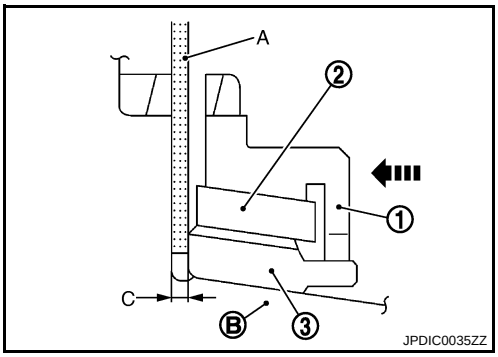

Clearance "C"

Standard value : **Refer to TM-75, "Baulk Ring Clearance".**

Limit value : **Refer to TM-75, "Baulk Ring Clearance".**

BEARING

If the bearing does not rotate smoothly or the contact surface on ball or race is damaged or peeled, replace with new ones.

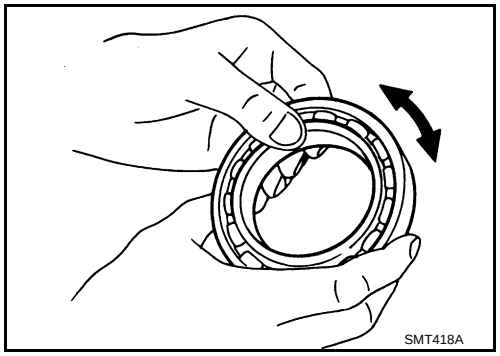

REVERSE IDLER SHAFT AND GEAR

Exploded View

INFOID:0000000001732894

Refer to TM-29, "Exploded View".

Disassembly

INFOID:0000000001732895

Remove reverse idler thrust washer, reverse idler gear and reverse idler needle bearing from reverse idler shaft.

Assembly

INFOID:0000000001732896

Assembly in the reverse order of disassembly.

CAUTION:

Apply recommended grease to reverse idler needle bearing.

Inspection

INFOID:0000000001732897

REVERSE IDLER SHAFT AND GEAR

If the contact surface on reverse idler gear and reverse idler shaft has damage, peeling, abrasion, dent, bent, or any other damage, replace the components.

BEARING

If the bearing does not rotate smoothly or the contact surface on roller or race is damaged or peeled, replace with new ones.

SHIFT FORK AND FORK ROD

Exploded View

INFOID:0000000001732898

Refer to TM-29, "Exploded View".

Disassembly

INFOID:0000000001732899

Refer to TM-34, "Disassembly" for disassembly procedure.

Assembly

INFOID:0000000001732900

Refer to TM-43, "Assembly" for assembly procedure.

Inspection

INFOID:0000000001732901

If the contact surface on striking lever, fork rod, shift fork, etc. has excessive wear, abrasion, bend, or any other damage, replace the components.

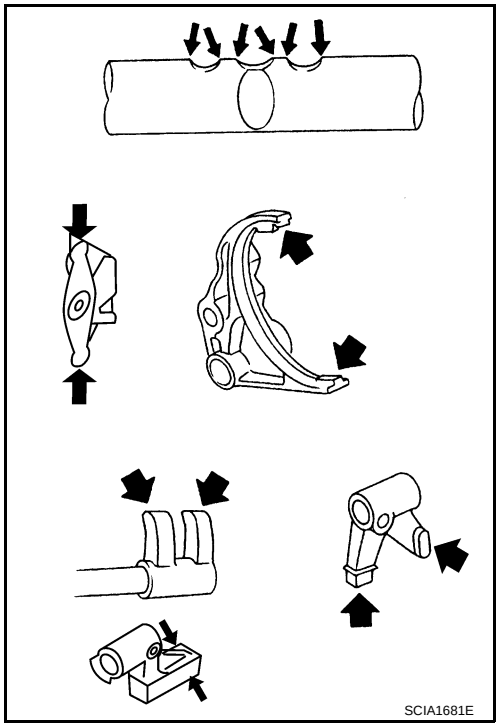

SERVICE DATA AND SPECIFICATIONS (SDS)

SERVICE DATA AND SPECIFICATIONS (SDS)

General Specification

INFOID:0000000001732902

Engine type		VQ37VHR
Transmission		FS6R31A
Model code number		JK400
Number of speed		6
Shift pattern		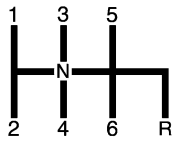 SCIA0955E
Synchromesh type		Warner
Gear ratio	1st	3.794
	2nd	2.324
	3rd	1.624
	4th	1.271
	5th	1.000
	6th	0.794
	Reverse	3.446
Main gear (Number of teeth)	Drive	26
	1st	37
	2nd	34
	3rd	33
	4th	31
	6th	31
	Reverse	42
Counter shaft gear (Number of teeth)	Drive	32
	1st	12
	2nd	18
	3rd	25
	4th	30
	6th	48
	Reverse	15
Reverse idler gear (Number of teeth)		26
Oil capacity	ℓ (US pt, Imp pt)	Approx. 2.93 (6-1/4, 5-1/8)
Remarks	Reverse synchronizer	Installed
	Double cone synchronizer	4th
	Triple cone synchronizer	1st, 2nd, and 3rd

End Play

INFOID:0000000001732903

Unit: mm (in)

Item	Standard value
Counter shaft	0 - 0.10 (0 - 0.004)
Main drive gear	0 - 0.10 (0 - 0.004)
Mainshaft	0 - 0.10 (0 - 0.004)

Baulk Ring Clearance

INFOID:0000000001732904

Unit: mm (in)

Measurement point		Standard value	Limit value
4th (Double-cone synchronizer) 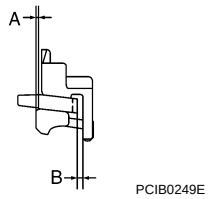 	Clearance between synchronizer cone and inner baulk ring end face “A”	0.50 - 0.70 (0.020 - 0.028)	0.3 (0.012)
	Clearance between outer baulk ring pawl and synchronizer cone “B”	0.85 - 1.35 (0.033 -0.053)	0.7 (0.028)
1st, 2nd, and 3rd (Triple-cone synchronizer) 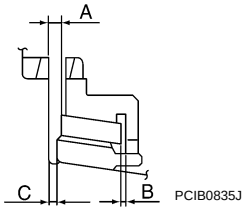 	Clearance between synchronizer cone and clutch gear end face “A”	1st: 0.65 - 1.25 (0.026 - 0.049) 2nd: 0.60 - 1.30 (0.024 - 0.051) 3rd: 0.60 - 1.30 (0.024 - 0.051)	0.3 (0.012) 0.3 (0.012) 0.3 (0.012)
	Clearance between outer baulk ring pawl and synchronizer cone “B”	0.85 - 1.35 (0.033 - 0.053)	0.7 (0.028)
	Clearance between inner baulk ring and clutch gear end face “C”	1st: 0.80 - 1.2 (0.031 - 0.047) 2nd: 0.75 - 1.25 (0.030 - 0.049) 3rd: 0.75 - 1.25 (0.030 - 0.049)	0.3 (0.012) 0.3 (0.012) 0.3 (0.012)
5th and 6th		0.70 - 1.35 (0.028 - 0.053)	0.5 (0.020)
Reverse		0.75 - 1.20 (0.030 - 0.047)	0.5 (0.020)

BASIC INSPECTION

DIAGNOSIS AND REPAIR WORK FLOW

Work Flow

INFOID:0000000001672103

INTRODUCTION

The TCM receives a signal from the vehicle speed sensor, accelerator pedal position sensor (throttle position sensor) or PNP switch. Then provides shift control or lock-up control via A/T solenoid valves. The TCM also communicates with the ECM by means of a signal transmitted from sensing elements used with the OBD-related parts of the A/T system for malfunction-diagnostic purposes. The TCM is capable of diagnosing malfunctioning parts while the ECM can store malfunctions in its memory.
Input and output signals must always be correct and stable in the operation of the A/T system. The A/T system must be in good operating condition and be free of valve seizure, solenoid valve malfunction, etc.

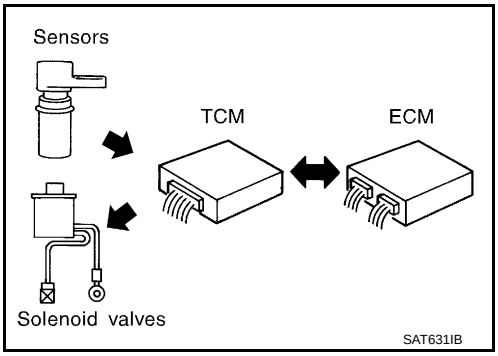

It is much more difficult to diagnose an error that occurs intermittently rather than continuously. Most intermittent errors are caused by poor electric connections or improper wiring. In this case, careful checking of suspected circuits may help prevent the replacement of good parts.
A visual check may not find the cause of the errors. A road test with CONSULT-III (or GST) or a circuit tester connected should be performed. Follow the “DETAILED FLOW”.

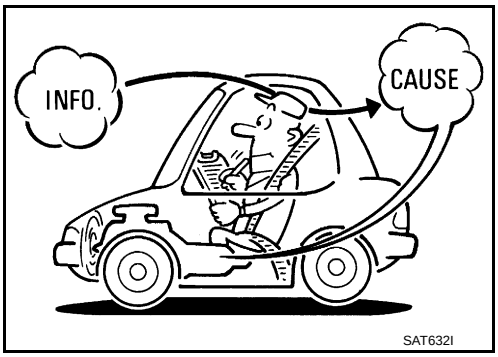

Before undertaking actual checks, take a few minutes to talk with the customer who has the driveability complaint. The customer can supply good information about such errors, especially intermittent ones. Find out what symptoms are present and under what conditions they occur. A “Diagnostic work sheet” as shown in the example (Refer to TM-77) should be used.
Start your diagnosis by looking for “conventional” errors first. This will help troubleshoot driveability errors on an electronically controlled engine vehicle.
Also check related Service bulletins.

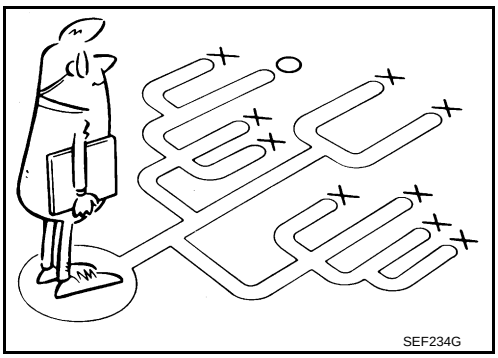

DETAILED FLOW

1. COLLECT THE INFORMATION FROM THE CUSTOMER

Get the detailed information from the customer about the symptom (the condition and the environment when the incident/malfunction occurred) using diagnosis worksheet. Refer to TM-77, "Diagnostic Work Sheet".

>> GO TO 2.

2. CHECK SYMPTOM 1

Check the following items based on the information obtained from the customer.
- Fail-safe. Refer to TM-184, "Fail-Safe".
- A/T fluid inspection. Refer to TM-214, "Inspection".
- Stall test. Refer to TM-219, "Inspection and Judgment".
- Line pressure test. Refer to TM-220, "Inspection and Judgment".

>> GO TO 3.

3. CHECK DTC

1. Check DTC.
2. Perform the following procedure if DTC is detected.

- Record DTC.
- Erase DTC. Refer to TM-108, "Diagnosis Description".

Is any DTC detected?

YES >> GO TO 4.
NO >> GO TO 6.

4. PERFORM DIAGNOSTIC PROCEDURE

Perform “Diagnosis Procedure” for the displayed DTC.

>> GO TO 5.

5. PERFORM DTC CONFIRMATION PROCEDURE

Perform “DTC CONFIRMATION PROCEDURE” for the displayed DTC.

Is any DTC detected?

YES >> GO TO 4.
NO >> GO TO 6.

6. CHECK SYMPTOM 2

Try to confirm the symptom described by the customer.

Is any malfunction present?

YES >> GO TO 7.
NO >> INSPECTION END

7. ROAD TEST

Perform “ROAD TEST”. Refer to TM-222, "Description".

>> GO TO 8.

8. CHECK SYMPTOM 3

Try to confirm the symptom described by the customer.

Is any malfunction present?

YES >> GO TO 2.
NO >> INSPECTION END

Diagnostic Work Sheet

INFOID:0000000001672104

INFORMATION FROM CUSTOMER

KEY POINTS

- **WHAT**..... Vehicle and A/T model
- **WHEN**..... Date, Frequencies
- **WHERE**..... Road conditions
- **HOW**..... Operating conditions, Symptoms

Customer name MR/MS	Model and Year	VIN
Trans. Model	Engine	Mileage
Malfunction Date	Manuf. Date	In Service Date
Frequency	❏ Continuous ❏ Intermittent (times a day)	

Symptoms	❏ Vehicle does not move. (❏ Any position ❏ Particular position)	
	❏ No up-shift (❏ 1st → 2nd ❏ 2nd → 3rd ❏ 3rd → 4th ❏ 4th → 5th)	
	❏ No down-shift (❏ 5th → 4th ❏ 4th → 3rd ❏ 3rd → 2nd ❏ 2nd → 1st)	
	❏ Lock-up malfunction	
	❏ Shift point too high or too low.	
	❏ Shift shock or slip (❏ N → D ❏ N → R ❏ Lock-up ❏ Any drive position)	
	❏ Noise or vibration	
	❏ No kick down	
	❏ No pattern select	
	❏ Others ( )	
A/T CHECK indicator lamp	❏ Continuously lit	❏ Not lit
Malfunction indicator lamp (MIL)	❏ Continuously lit	❏ Not lit

DIAGNOSTIC WORK SHEET

1	❏ Read the item on cautions concerning fail-safe and understand the customer's complaint.			TM-184
2	❏ A/T fluid inspection, stall test and line pressure test			
		❏ A/T fluid inspection		TM-214
			❏ Leak (Repair leak location.) ❏ State ❏ Amount	
		❏ Stall test		TM-219
			❏ Torque converter one-way clutch ❏ Front brake ❏ High and low reverse clutch ❏ Low coast brake ❏ Forward brake ❏ Reverse brake ❏ Forward one-way clutch	❏ 1st one-way clutch ❏ 3rd one-way clutch ❏ Engine ❏ Line pressure low ❏ Except for input clutch and direct clutch, clutches and brakes OK
		❏ Line pressure test - Suspected part:		TM-220
3	❏ Perform self-diagnosis. — Check detected items to repair or replace malfunctioning part.			TM-112
4	❏ Perform road test.			
	5-1	❏ Check before engine is started		TM-222
	5-2	❏ Check at idle		TM-222
	5-3	Cruise test	❏ Part 1	TM-223
			❏ Part 2	TM-224
			❏ Part 3	TM-224
	❏ Check malfunction phenomena to repair or replace malfunctioning part after completing all road tests. Refer to TM-188, "Symptom Table".			
5	❏ Drive vehicle to check that the malfunction phenomenon has been resolved.			
6	❏ Erase the results of the self-diagnosis from the TCM and the ECM.			TM-108

FUNCTION DIAGNOSIS

A/T CONTROL SYSTEM

System Diagram

INFOID:0000000001672105

Without Paddle Shifter

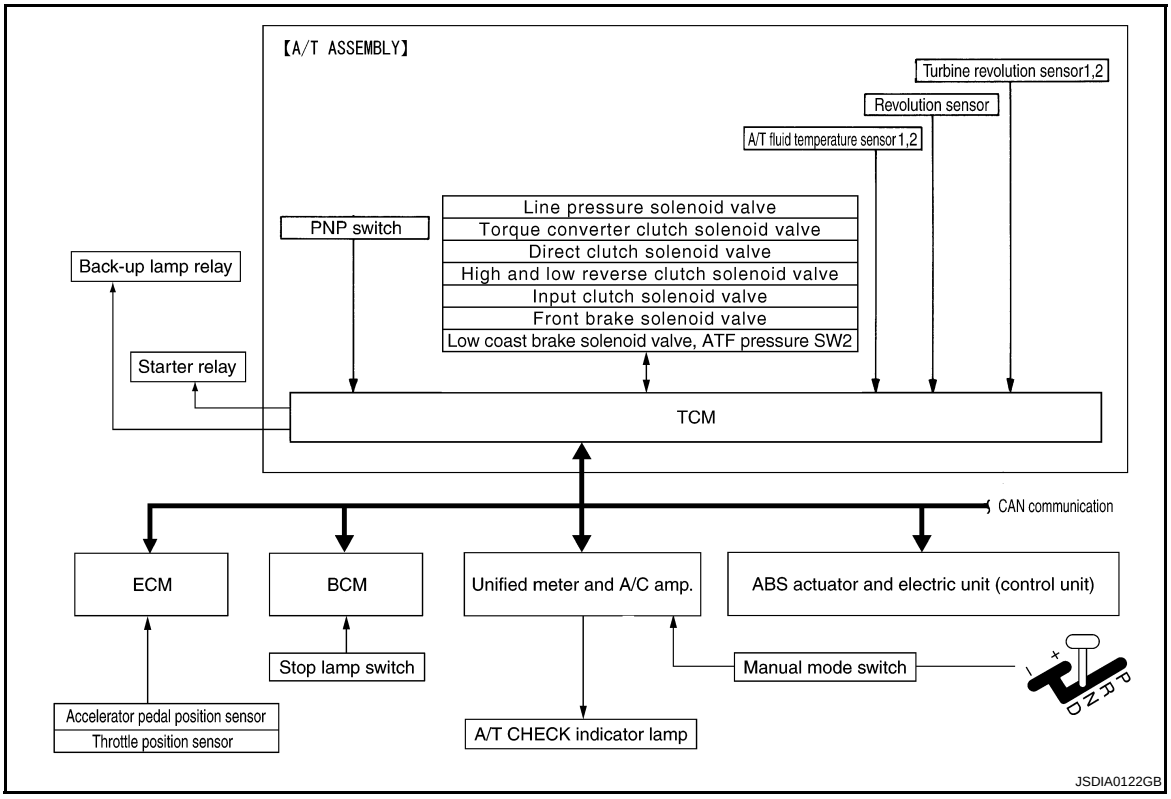

With Paddle Shifter

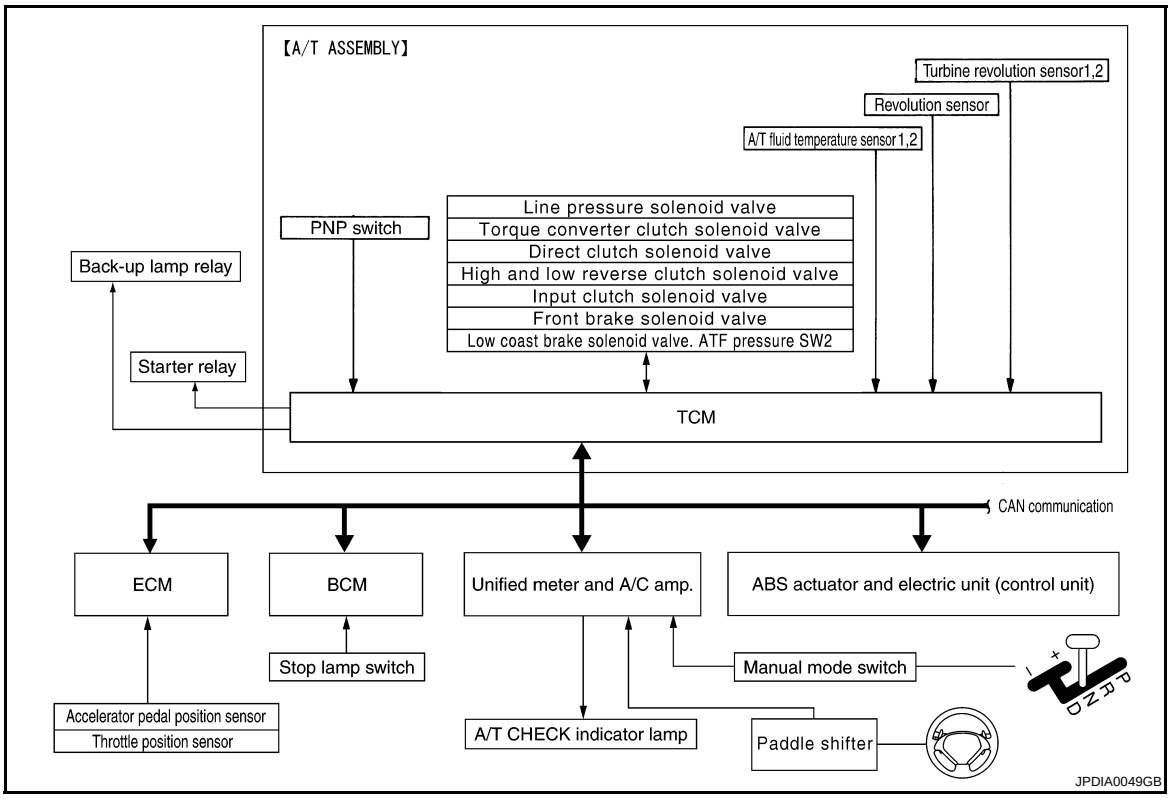

System Description

INFOID:0000000001672106

The A/T senses vehicle operating conditions through various sensors or signals. It always controls the optimum shift position and reduces shifting and lock-up shocks.

TCM FUNCTION

The function of the TCM is to:
- Receive input signals transmitted from various switches and sensors.
- Determine required line pressure, shifting point, lock-up operation, engine brake operation, etc.
- Transmit required output signals to the respective solenoids.

SENSORS (or SIGNALS)		TCM		ACTUATORS
PNP switch Accelerator pedal position signal Closed throttle position signal Wide open throttle position signal Engine speed signal A/T fluid temperature sensor Revolution sensor Vehicle speed signal Manual mode switch signal Stop lamp switch signal Turbine revolution sensor ATF pressure switch	⇒	Shift control Line pressure control Lock-up control Engine brake control Timing control Fail-safe control Self-diagnosis CONSULT-III communication line Duet-EA control CAN system	⇒	Input clutch solenoid valve Direct clutch solenoid valve Front brake solenoid valve High and low reverse clutch solenoid valve Low coast brake solenoid valve Torque converter clutch solenoid valve Line pressure solenoid valve A/T CHECK indicator lamp Back-up lamp relay Starter relay

Input/Output Signal of TCM

Control item			Line pressure control	Vehicle speed control	Shift control	Lock-up control	Engine brake control	Fail-safe function *3	Self-diagnostics function
Input	Accelerator pedal position signal*5		X	X	X	X	X	X	X
	Vehicle speed sensor A/T (revolution sensor)		X	X	X	X	X	X	X
	Vehicle speed sensor MTR*1, *5							X	
	Closed throttle position signal*5			X*2	X	X		X	X*4
	Wide open throttle position signal*5							X	X*4
	Turbine revolution sensor 1			X		X	X	X	X
	Turbine revolution sensor 2 (for 4th speed only)			X		X	X	X	X
	Engine speed signals*5		X	X	X	X	X	X	X
	Stop lamp switch signal*5			X	X	X			X*4
	A/T fluid temperature sensors 1, 2		X	X	X	X		X	X
	ASCD or ICC sensor integrated unit	Operation signal*5		X	X	X			
		Overdrive cancel signal(*5)		X					

Control item		Line pressure control	Vehicle speed control	Shift control	Lock-up control	Engine brake control	Fail-safe function *3	Self-diagnostics function
Output	Direct clutch solenoid		X	X			X	X
	Input clutch solenoid		X	X			X	X
	High and low reverse clutch solenoid		X	X			X	X
	Front brake solenoid		X	X			X	X
	Low coast brake solenoid (ATF pressure switch 2)		X	X		X	X	X
	Line pressure solenoid	X	X	X	X	X	X	X
	TCC solenoid				X		X	X
	Self-diagnostics table*6							X
	Starter relay						X	X

- *1: Spare for vehicle speed sensor·A/T (revolution sensor)
- *2: Spare for accelerator pedal position signal
- *3: If these input and output signals are different, the TCM triggers the fail-safe function.
- *4: Used as a condition for starting self-diagnostics; if self-diagnostics are not started, it is judged that there is some kind of error.
- *5: Input by CAN communications.
- *6: Output by CAN communications.

CAN COMMUNICATION

CAN (Controller Area Network) is a serial communication line for real-time application. It is an on-vehicle multiplex communication line with high data communication speed and excellent error detection ability. Many electronic control units are equipped onto a vehicle, and each control unit shares information and links with other control units during operation (not independently). In CAN communication, control units are connected with 2 communication lines (CAN-H line, CAN-L line) allowing a high rate of information transmission with less wiring. Each control unit transmits/receives data but selectively reads required data only. Refer to LAN-25, "CAN Communication Signal Chart".

LINE PRESSURE CONTROL

- When an input torque signal equivalent to the engine drive force is transmitted from the ECM to the TCM, the TCM controls the line pressure solenoid valve.
- This line pressure solenoid controls the pressure regulator valve as the signal pressure and adjusts the pressure of the operating oil discharged from the oil pump to the line pressure most appropriate to the driving state.

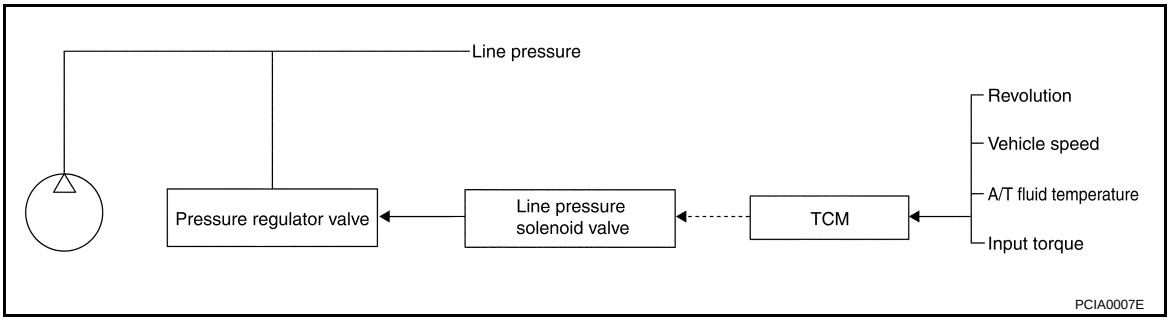

Line Pressure Control is Based On The TCM Line Pressure Characteristic Pattern

- The TCM has stored in memory a number of patterns for the optimum line pressure characteristic for the driving state.
- In order to obtain the most appropriate line pressure characteristic to meet the current driving state, the TCM controls the line pressure solenoid current value and thus controls the line pressure.

Normal Control

- Each clutch is adjusted to the necessary pressure to match the engine drive force.

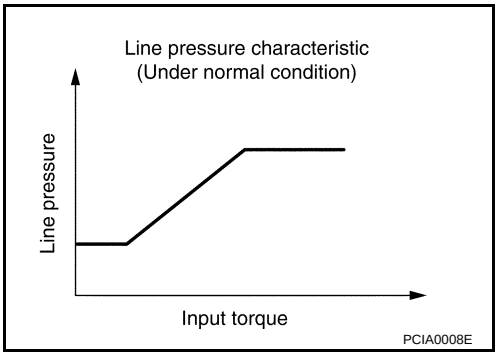

Back-up Control (Engine Brake)

- When the select operation is performed during driving and the A/T is shifted down, the line pressure is set according to the vehicle speed.

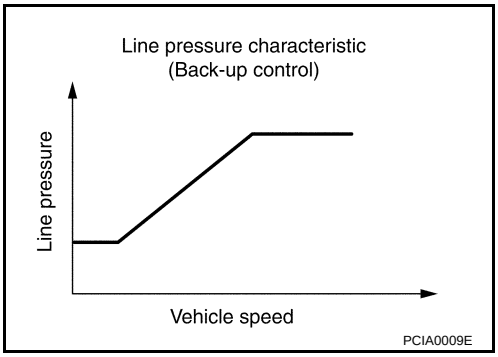

During Shift Change

- The necessary and adequate line pressure for shift change is set. For this reason, line pressure pattern setting corresponds to input torque and gearshift selection. Also, line pressure characteristic corresponds to engine speed, during engine brake operation.

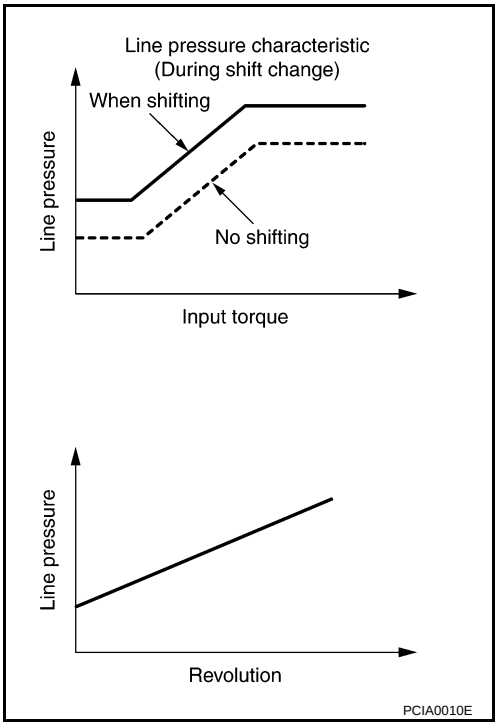

At Low Fluid Temperature

- When the A/T fluid temperature drops below the prescribed temperature, in order to speed up the action of each friction element, the line pressure is set higher than the normal line pressure characteristic.

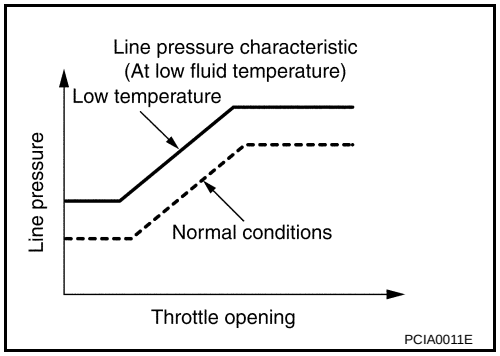

SHIFT CONTROL

The clutch pressure control solenoid is controlled by the signals from the switches and sensors. Thus, the clutch pressure is adjusted to be appropriate to the engine load state and vehicle driving state. It becomes possible to finely control the clutch hydraulic pressure with high precision and a smoother shift change characteristic is attained.

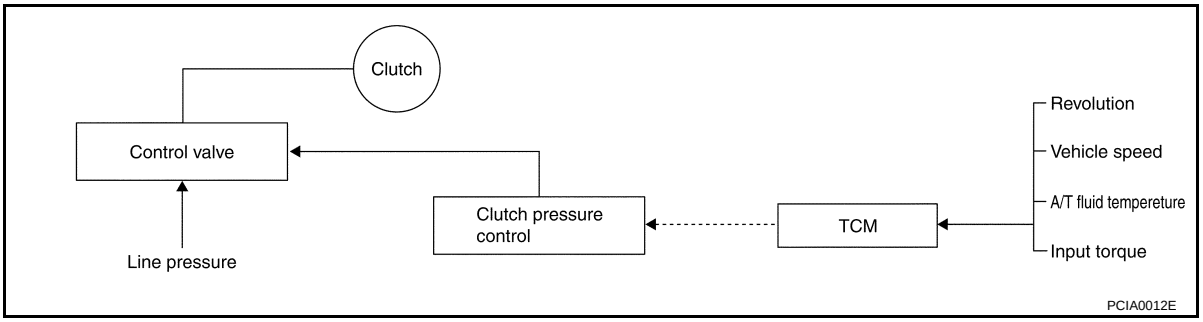

Shift Change

The clutch is controlled with the optimum timing and oil pressure by the engine speed, engine torque information, etc.

Shift Change System Diagram

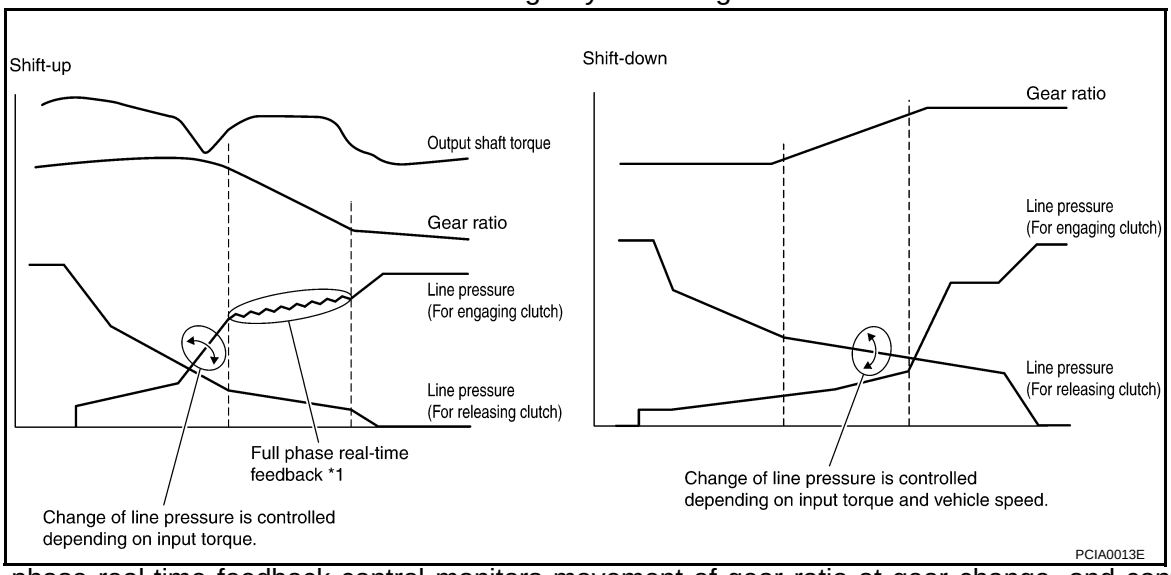

*1: Full phase real-time feedback control monitors movement of gear ratio at gear change, and controls oil pressure in real-time to achieve the best gear ratio.

Blipping Control

This system makes transmission clutch engage readily by controlling (synchronizing) engine revolution according to the (calculation of) engine revolution after shifting down.

- “BLIPPING CONTROL” functions.
  - When downshifting by accelerator pedal depression at “D” position.
  - When downshifting under the manual mode.
- TCM selects “BLIPPING CONTROL” or “NORMAL SHIFT CONTROL” according to the gear position, the selector lever position, the engine torque and the speed when accelerating by pedal depression.

- Revolution control demand signal is transmitted from TCM to ECM under “BLIPPING CONTROL”.
- TCM synchronizes engine revolution according to the revolution control demand signal.

Shift Change System Diagram

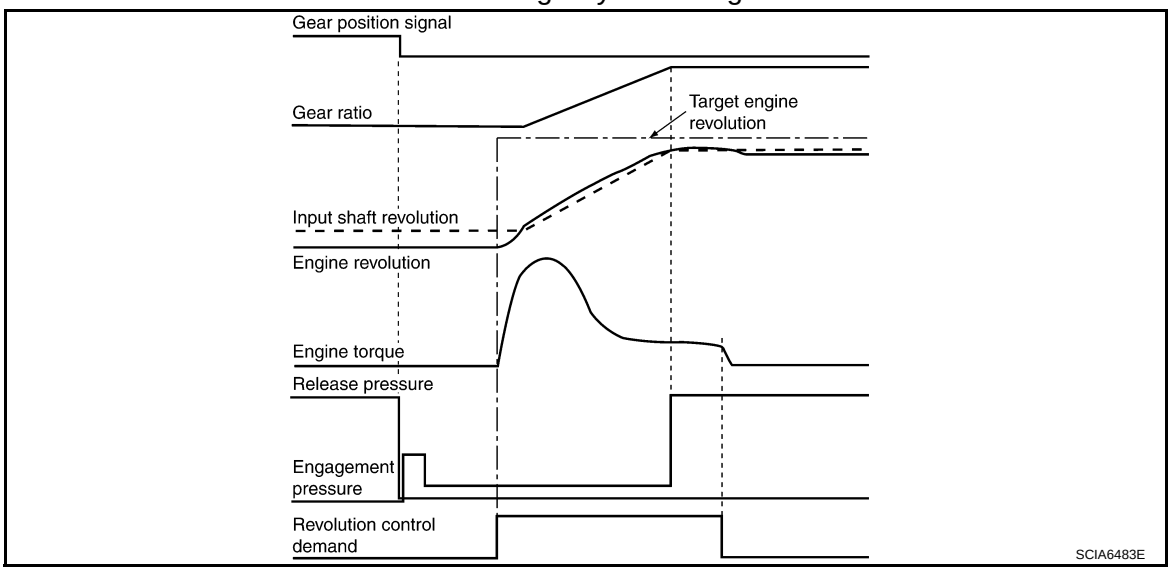

ASC (Adoptive Shift Control)

ASC automatically shifts or hold at the 2nd, 3rd or 4th gear on certain roads (up/down slope and curve) and driving condition.

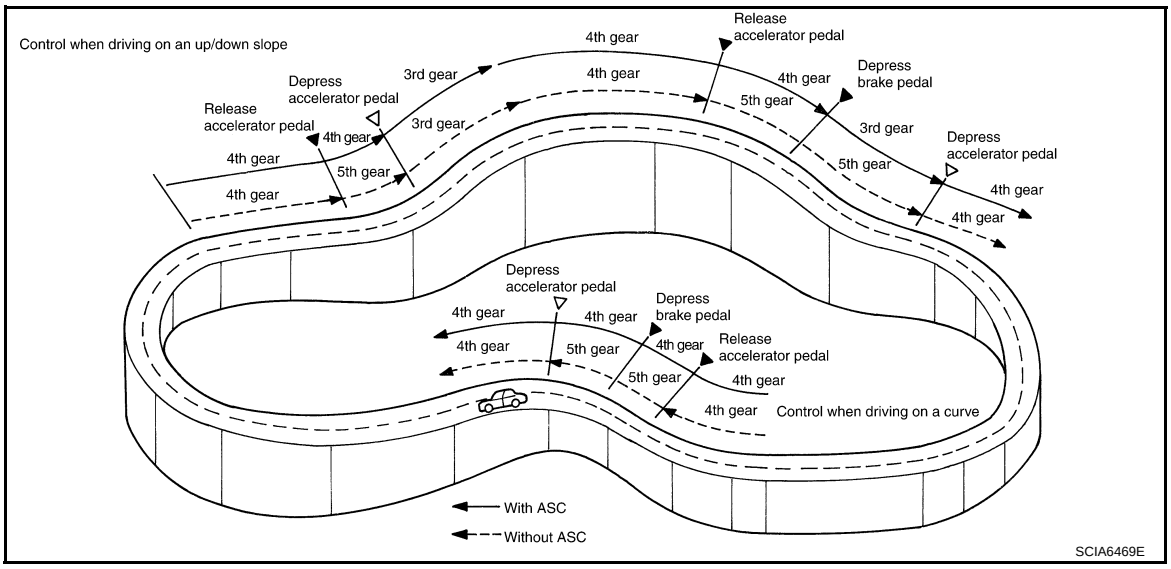

When Driving On an Up/Down Slope

- ASC judges up/down slope according to engine torque data transmitted from the ECM and vehicle speed. Holding gear at the 3rd or 4th on an up-slope prevents shift hunting and controls the vehicle to gain optimum driving force. On a down-slope, automatic shift-down to the 3rd or 4th gear controls to gain optimum engine brake.

When Driving On a Curve

- TCM receives the lateral G sensor signal from the ABS actuator control unit. It locks the gear to the 3rd or 4th position in moderate cornering or to the 2nd position in sharp cornering based on this signal. This prevents any upshift and kickdown during cornering, maintaining smooth vehicle travel.

DS Mode

- Changes to the shift schedule that mainly utilizes the high engine speed zone when ASC is active.
- DS mode can be switched according to the following method.
- When the selector lever is in the “D” position, shifting the selector lever to manual shift gate enables switching to DS mode.
- When in DS mode, shifting the selector lever to the main gate enables to cancel DS mode.

- After switching to manual mode with paddle shifter, switching to DS mode can not be enabled even when the selector lever is shifted to the manual gate. (With paddle shifter)

LOCK-UP CONTROL

The torque converter clutch piston in the torque converter is engaged to eliminate torque converter slip to increase power transmission efficiency.
The torque converter clutch control valve operation is controlled by the torque converter clutch solenoid valve, which is controlled by a signal from TCM, and the torque converter clutch control valve engages or releases the torque converter clutch piston.

Lock-up operation condition table

Selector lever	"D" position			"M" position			
Gear position	5	4	3	5	4	3	2
Lock-up	×	×	×	×	×	×	×
Slip lock-up	×	×	×	–	–	–	–

Torque Converter Clutch Control Valve Control
Lock-up control system diagram

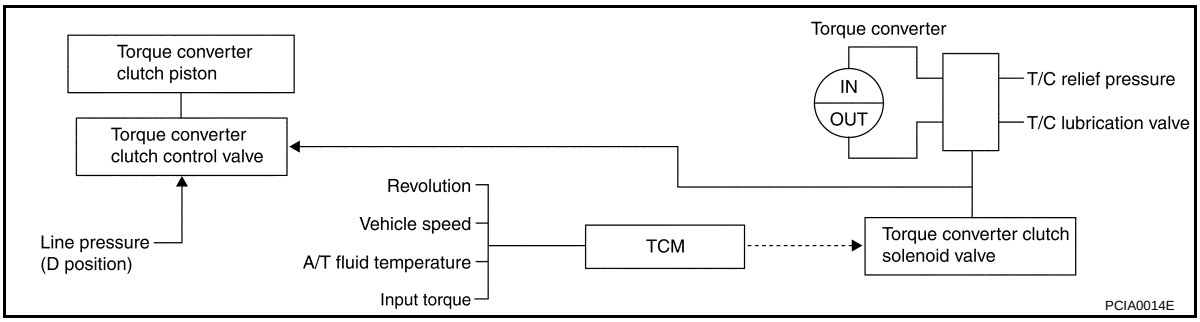

Lock-up Released
- In the lock-up released state, the torque converter clutch control valve is set into the unlocked state by the torque converter clutch solenoid and the lock-up apply pressure is drained.
  In this way, the torque converter clutch piston is not coupled.

Lock-up Applied
- In the lock-up applied state, the torque converter clutch control valve is set into the locked state by the torque converter clutch solenoid and lock-up apply pressure is generated.
  In this way, the torque converter clutch piston is pressed and coupled.

Smooth Lock-up Control
When shifting from the lock-up released state to the lock-up applied state, the current output to the torque converter clutch solenoid is controlled with the TCM. In this way, when shifting to the lock-up applied state, the torque converter clutch is temporarily set to the half-clutched state to reduce the shock.

Half-clutched State
- The current output from the TCM to the torque converter clutch solenoid is varied to steadily increase the torque converter clutch solenoid pressure.
  In this way, the lock-up apply pressure gradually rises and while the torque converter clutch piston is put into half-clutched states, the torque converter clutch piston operating pressure is increased and the coupling is completed smoothly.

Slip Lock-up Control
- In the slip region, the torque converter clutch solenoid current is controlled with the TCM to put it into the half-clutched state. This absorbs the engine torque fluctuation and lock-up operates from low speed.
  This raises the fuel efficiency for 3rd, 4th and 5th gears at both low speed and when the accelerator has a low degree of opening.

ENGINE BRAKE CONTROL

- The forward one-way clutch transmits the drive force from the engine to the rear wheels. But the reverse drive from the rear wheels is not transmitted to the engine because the one-way clutch is idling.
  Therefore, the low coast brake solenoid is operated to prevent the forward one-way clutch from idling and the engine brake is operated in the same manner as conventionally.

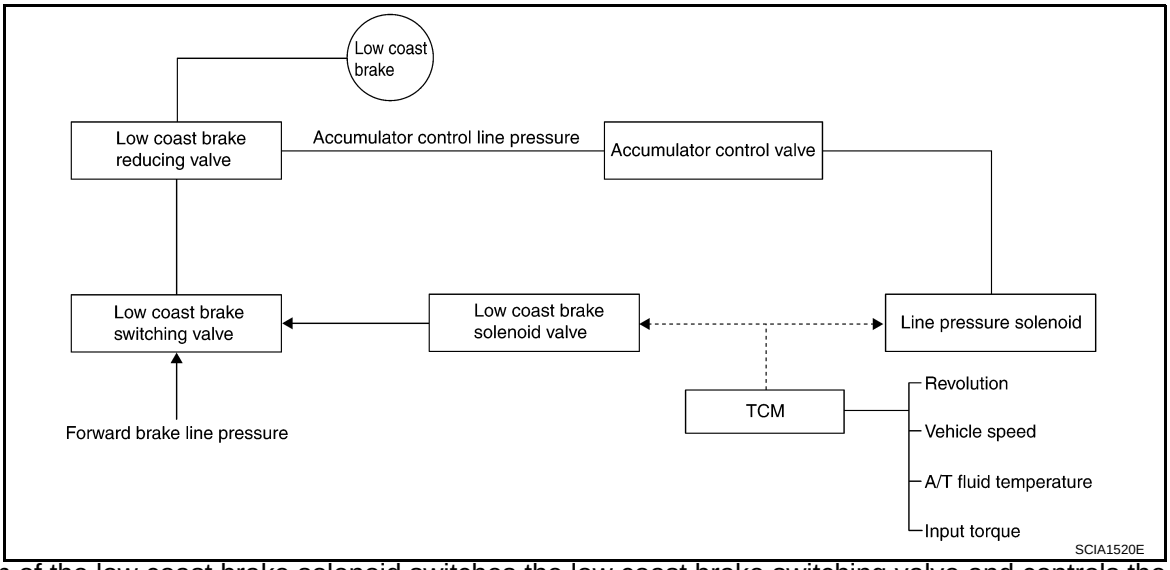

- The operation of the low coast brake solenoid switches the low coast brake switching valve and controls the coupling and releasing of the low coast brake.
  The low coast brake reducing valve controls the low coast brake coupling force.

Component Parts Location

INFOID:0000000001672107

Without Paddle Shifter

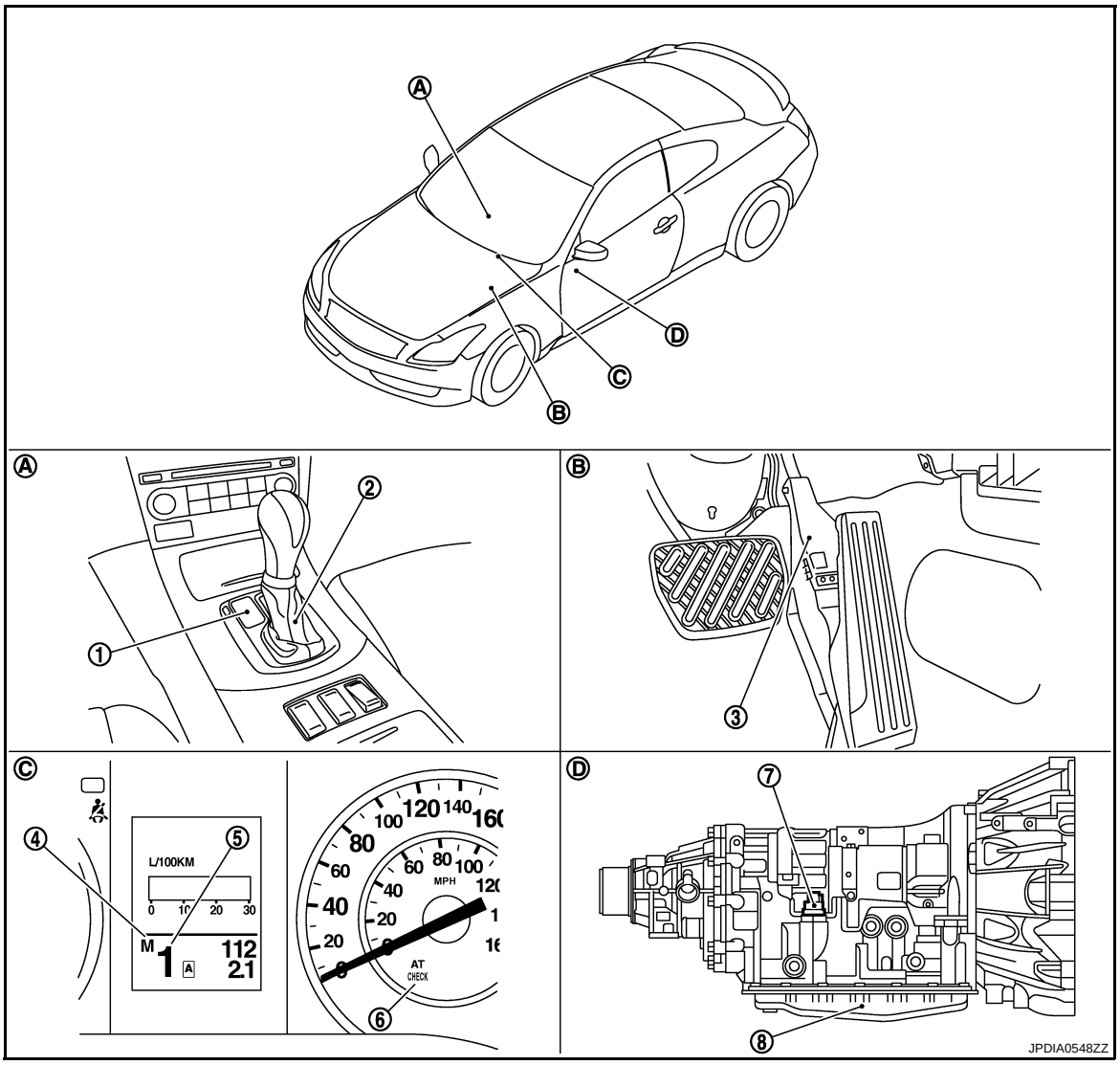

1. Selector lever position indicator	2. A/T control device	3. Accelerator pedal position sensor
4. Manual mode indicator	5. Shift position indicator	6. A/T CHECK indicator lamp
7. A/T assembly harness connector	8. Control valve with TCM*1	
A. Center console	B. Accelerator pedal	C. Combination meter
D. A/T assembly		

*1: Control valve with TCM is included in A/T assembly.

NOTE:

- The following components are included in A/T control device (2).
- Manual mode select switch
- Manual mode position select switch
- Shift position switch
- The following components are included in control valve with TCM (8).
- TCM
- Turbine revolution sensor 1, 2
- Revolution sensor
- A/T fluid temperature sensor 1, 2
- PNP switch
- Line pressure solenoid valve

- Torque converter clutch solenoid valve
- Direct clutch solenoid valve
- High and low reverse clutch solenoid valve
- Input clutch solenoid valve
- Front brake solenoid valve
- Low coast brake solenoid valve
- ATF pressure switch 2

With Paddle Shifter

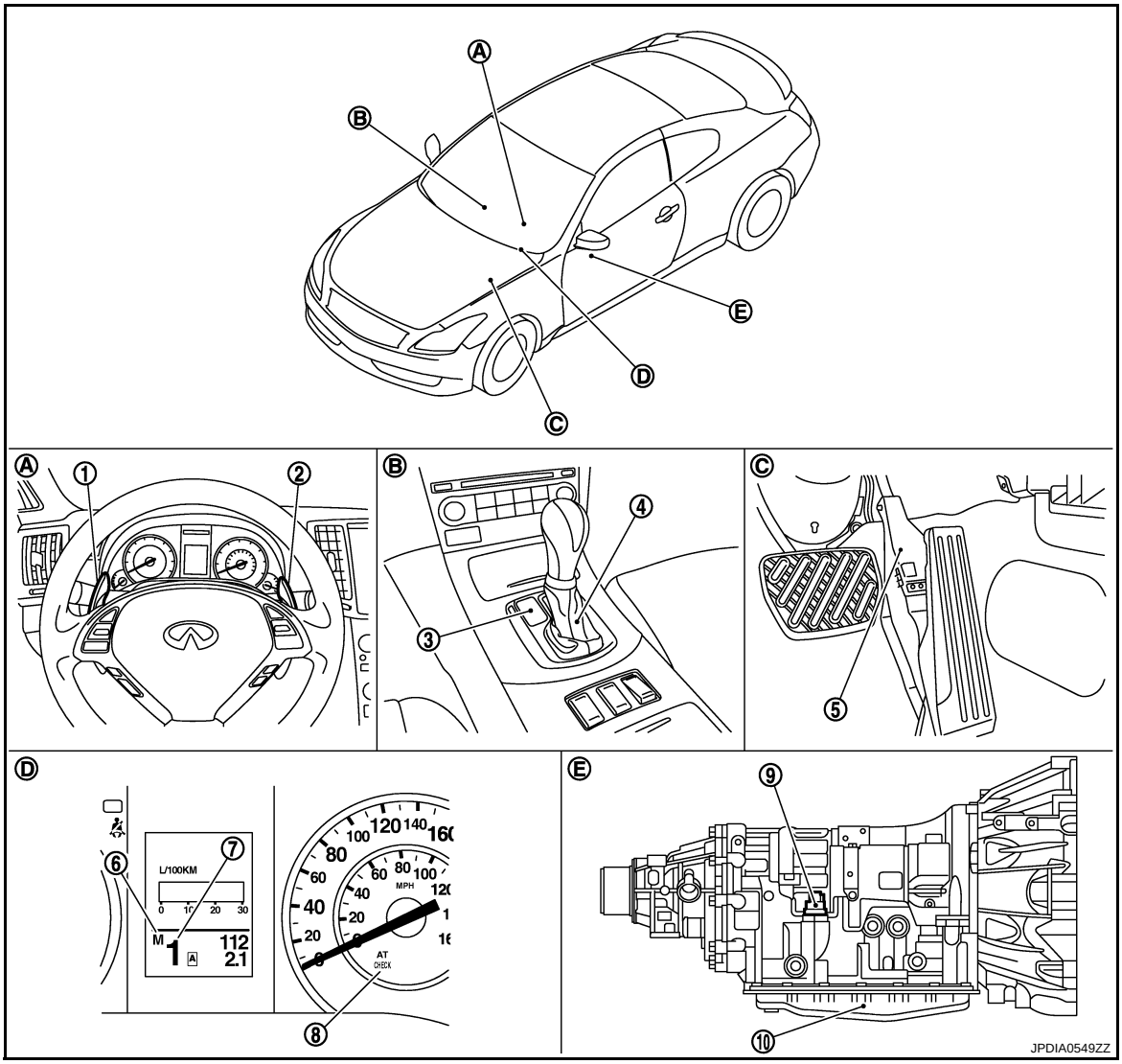

1.	Paddle shifter (shift-down)	2.	Paddle shifter (shift-up)	3.	Selector lever position indicator
4.	A/T control device	5.	Accelerator pedal position sensor	6.	Manual mode indicator
7.	Shift position indicator	8.	A/T CHECK indicator lamp	9.	A/T assembly harness connector
10.	Control valve with TCM*1				
A.	Steering wheel	B.	Center console	C.	Accelerator pedal
D.	Combination meter	E.	A/T assembly		

*1: Control valve with TCM is included in A/T assembly.

NOTE:

- The following components are included in A/T control device (4).
- Manual mode select switch
- Manual mode position select switch
- Shift position switch
- The following components are included in control valve with TCM (10).

- TCM
- Turbine revolution sensor 1, 2
- Revolution sensor
- A/T fluid temperature sensor 1, 2
- PNP switch
- Line pressure solenoid valve
- Torque converter clutch solenoid valve
- Direct clutch solenoid valve
- High and low reverse clutch solenoid valve
- Input clutch solenoid valve
- Front brake solenoid valve
- Low coast brake solenoid valve
- ATF pressure switch 2

Component Description

INFOID:0000000001672108

A/T ASSEMBLY

Name	Function
TCM	TM-121, "Description"
PNP switch	TM-122, "Description"
Vehicle speed sensor A/T (Revolution sensor)	TM-125, "Description"
Turbine revolution sensor 1	TM-124, "Description"
Turbine revolution sensor 2	
A/T fluid temperature sensor 1	TM-144, "Description"
A/T fluid temperature sensor 2	
Input clutch solenoid valve	TM-150, "Description"
Front brake solenoid valve	TM-151, "Description"
Direct clutch solenoid valve	TM-152, "Description"
High and low reverse clutch solenoid valve	TM-153, "Description"
Low coast brake solenoid valve	TM-154, "Description"
ATF pressure switch 2 (LC/B)	Detects any malfunction in the low coast brake hydraulic pressure. When it detects any malfunction, it puts the system into fail-safe mode.
Torque converter regulator valve	In order to prevent the pressure supplied to the torque converter from being excessive, the line pressure is adjusted to the optimum pressure (torque converter operating pressure).
Pressure regulator valve Pressure regulator plug Pressure regulator sleeve	Adjusts the oil discharged from the oil pump to the optimum pressure (line pressure) for the driving state.
Front brake control valve	When the front brake is coupled, adjusts the line pressure to the optimum pressure (front brake pressure) and supplies it to the front brake. (In 1st, 2nd, 3rd, and 5th gears, adjusts the clutch pressure.)
Accumulator control valve	Adjusts the pressure (accumulator control pressure) acting on the accumulator piston and low coast reducing valve to the pressure appropriate to the driving state.
Pilot valve A	Adjusts the line pressure and produces the constant pressure (pilot pressure) required for line pressure control, shift change control, and lock-up control.
Pilot valve B	Adjusts the line pressure and produces the constant pressure (pilot pressure) required for shift change control.
Low coast brake switching valve	During engine braking, supplies the line pressure to the low coast brake reducing valve.
Low coast brake reducing valve	When the low coast brake is coupled, adjusts the line pressure to the optimum pressure (low coast brake pressure) and supplies it to the low coast brake.
N-R accumulator	Produces the stabilizing pressure for when N-R is selected.

Name	Function
Direct clutch piston switching valve	Operates in 4th gear and switches the direct clutch coupling capacity.
High and low reverse clutch control valve	When the high and low reverse clutch is coupled, adjusts the line pressure to the optimum pressure (high and low reverse clutch pressure) and supplies it to the high and low reverse clutch. (In 1st, 3rd, 4th and 5th gears, adjusts the clutch pressure.)
Input clutch control valve	When the input clutch is coupled, adjusts the line pressure to the optimum pressure (input clutch pressure) and supplies it to the input clutch. (In 4th and 5th gears, adjusts the clutch pressure.)
Direct clutch control valve	When the direct clutch is coupled, adjusts the line pressure to the optimum pressure (direct clutch pressure) and supplies it to the direct clutch. (In 2nd, 3rd, and 4th gears, adjusts the clutch pressure.)
TCC control valve TCC control plug TCC control sleeve	Switches the lock-up to operating or released. Also, by performing the lock-up operation transiently, lock-up smoothly.
Torque converter lubrication valve	Operates during lock-up to switch the torque converter, cooling, and lubrication system oil passage.
Cool bypass valve	Allows excess oil to bypass cooler circuit without being fed into it.
Line pressure relief valve	Discharges excess oil from line pressure circuit.
N-D accumulator	Produces the stabilizing pressure for when N-D is selected.
Manual valve	Transmits line pressure to each circuit according to the select position. The circuits to which the line pressure is not transmitted drain.

EXCEPT A/T ASSEMBLY

Name	Function
Accelerator pedal position sensor	TM-143, "Description"
Throttle position sensor	
Manual mode switch	TM-157, "Description"
Paddle shifter	TM-157, "Description"
Starter relay	TM-119, "Description"

SHIFT MECHANISM

Cross-Sectional View

INFOID:0000000001672109

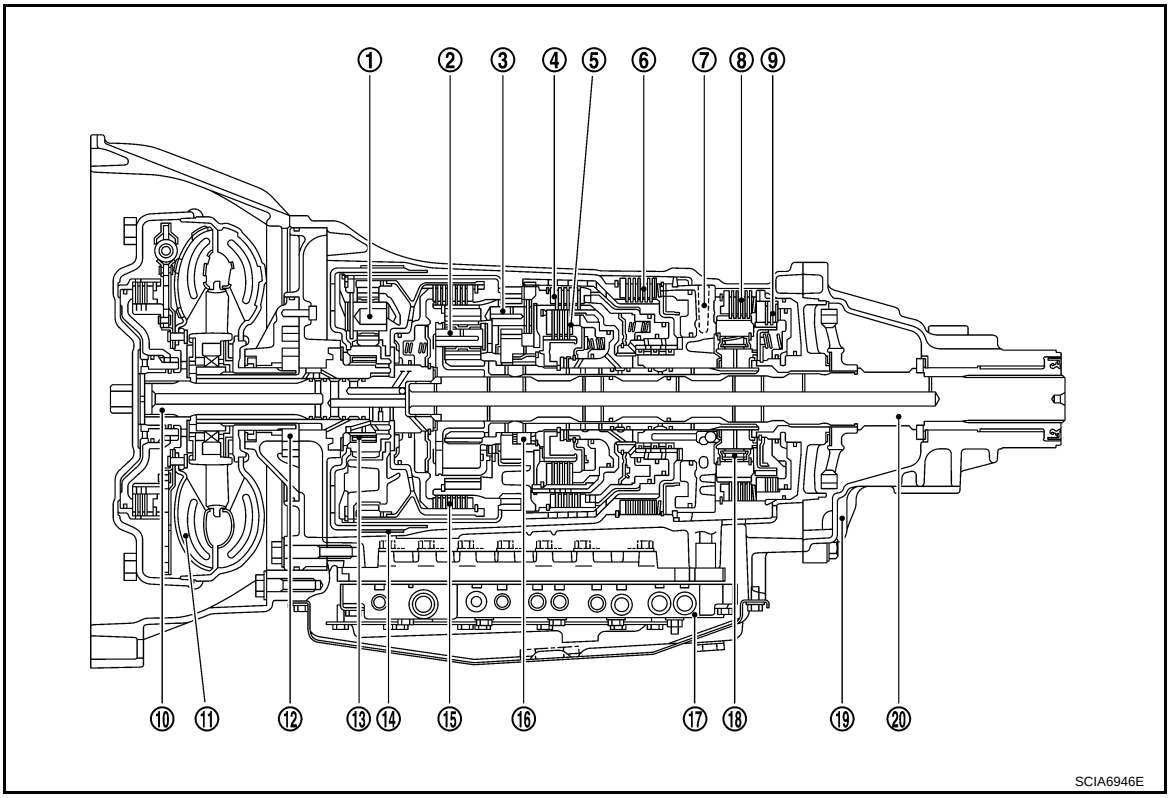

1. Front planetary gear
2. Mid planetary gear
3. Rear planetary gear
4. Direct clutch
5. High and low reverse clutch
6. Reverse brake
7. Drum support
8. Forward brake
9. Low coast brake
10. Input shaft
11. Torque converter
12. Oil pump
13. 3rd one-way clutch
14. Front brake
15. Input clutch
16. 1st one-way clutch
17. Control valve with TCM
18. Forward one-way clutch
19. Rear extension
20. Output shaft

System Diagram

INFOID:0000000001672110

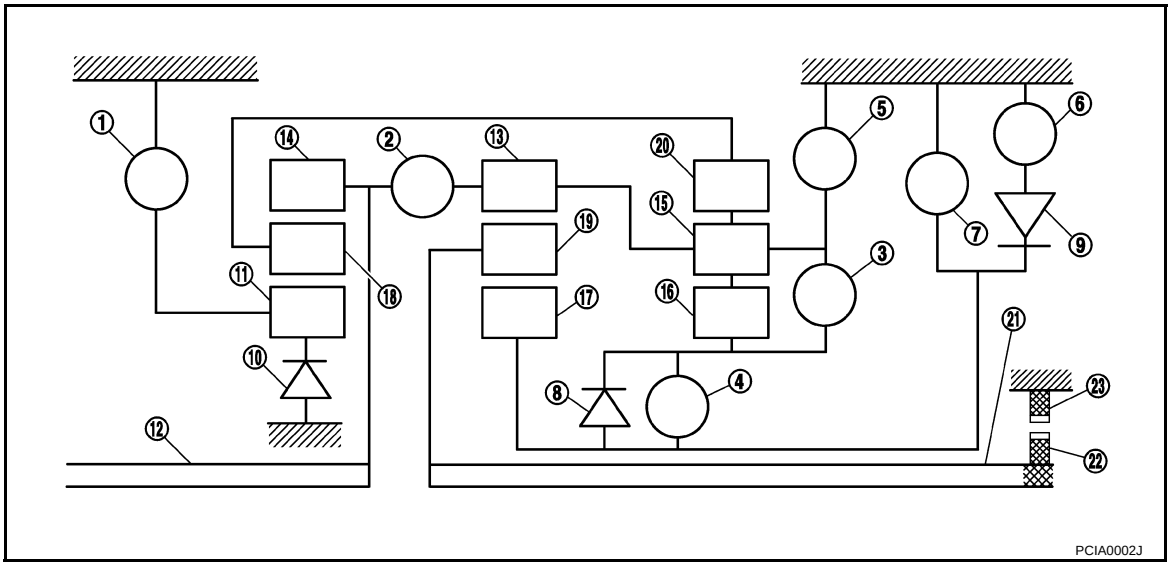

1. Front brake
2. Input clutch
3. Direct clutch
4. High and low reverse clutch
5. Reverse brake
6. Forward brake
7. Low coast brake
8. 1st one-way clutch
9. Forward one-way clutch
10. 3rd one-way clutch
11. Front sun gear
12. Input shaft
13. Mid internal gear
14. Front internal gear
15. Rear carrier
16. Rear sun gear
17. Mid sun gear
18. Front carrier
19. Mid carrier
20. Rear internal gear
21. Output shaft
22. Parking gear
23. Parking pawl

System Description

INFOID:0000000001672111

DESCRIPTION

With the use of three sets of planetary gears, A/T enables 5-speed transmission for forward and 1-speed transmission for backward, depending on the combination of 3 sets of multiple-disc clutches, 3 sets of multiple-disc brakes, a brake band, and 3 sets of one-way clutches.

CLUTCH AND BAND CHART

Shift position		I/C	HLR/C	D/C	R/B	FR/B	LC/B	Fwd/B	1st OWC	Fwd OWC	3rd OWC	Remarks
P			△			△						PARK POSITION
R			○		○	○			◎		◎	REVERSE POSITION
N			△			△						NEUTRAL POSITION
D,DS	1 st		△ *			△	△ **	○	◎	◎	◎	Automatic shift 1↔2↔3↔4↔5
	2 nd			○		△		○		◎	◎	
	3 rd		○	○		○		△	◇		◎	
	4 th	○	○	○				△	◇			
	5 th	○	○			○		△	◇		◇	
M5	5 th	○	○			○		△	◇		◇	Locks* (held stationary) in 5th gear
M4	4 th	○	○	○				△	◇			Locks* (held stationary) in 4th gear
M3	3 rd		○	○		○		△	◇		◎	Locks* (held stationary) in 3rd gear
M2	2 nd			○		○	○	○		◎	◎	Locks* (held stationary) in 2nd gear
M1	1 st		○			○	○	○	◎	◎	◎	Locks* (held stationary) in 1st gear

* : Down shift automatically according to the vehicle speed.

○ – Operates
◎ – Operates during “progressive” acceleration.
◇ – Operates and affects power transmission while coasting.
△ – Line pressure is applied but does not affect power transmission.
△ * – Operates under conditions shown in illustration ①.
△ ** – Operates under conditions shown in illustration ②. Delay control is applied during D(4,3,2,1) → N shift

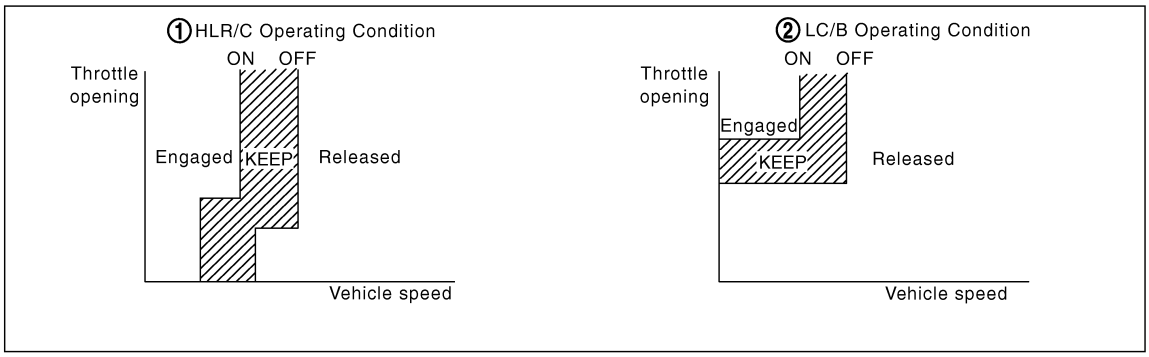

JPDIA0096GB

POWER TRANSMISSION

“N” Position

Since both the forward brake and the reverse brake are released, torque from the input shaft drive is not transmitted to the output shaft.

“P” Position

- The same as for the “N” position, both the forward brake and the reverse brake are released, so torque from the input shaft drive is not transmitted to the output shaft.
- The parking pawl linked with the selector lever meshes with the parking gear and fastens the output shaft mechanically.

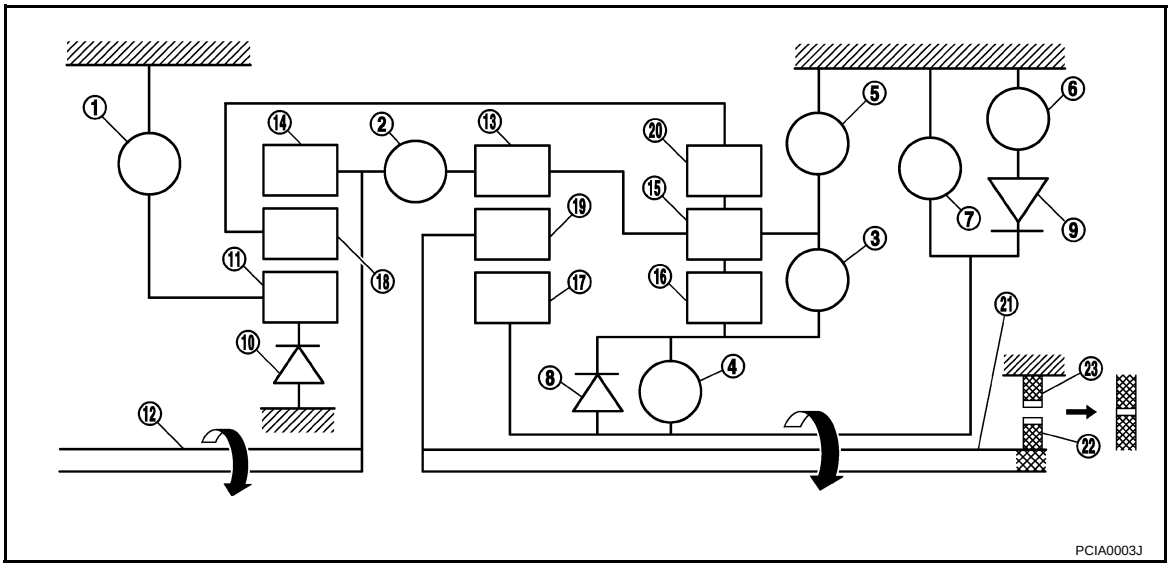

1. Front brake	2. Input clutch	3. Direct clutch
4. High and low reverse clutch	5. Reverse brake	6. Forward brake
7. Low coast brake	8. 1st one-way clutch	9. Forward one-way clutch
10. 3rd one-way clutch	11. Front sun gear	12. Input shaft
13. Mid internal gear	14. Front internal gear	15. Rear carrier
16. Rear sun gear	17. Mid sun gear	18. Front carrier
19. Mid carrier	20. Rear internal gear	21. Output shaft
22. Parking gear	23. Parking pawl	

“D_1” and “DS_1” Position

- The forward brake and the forward one-way clutch regulate reverse rotation of the mid sun gear.
- The 1st one-way clutch regulates reverse rotation of the rear sun gear.
- The 3rd one-way clutch regulates reverse rotation of the front sun gear.
- During deceleration, the mid sun gear turns forward, so the forward one-way clutch idles and the engine brake is not activated.

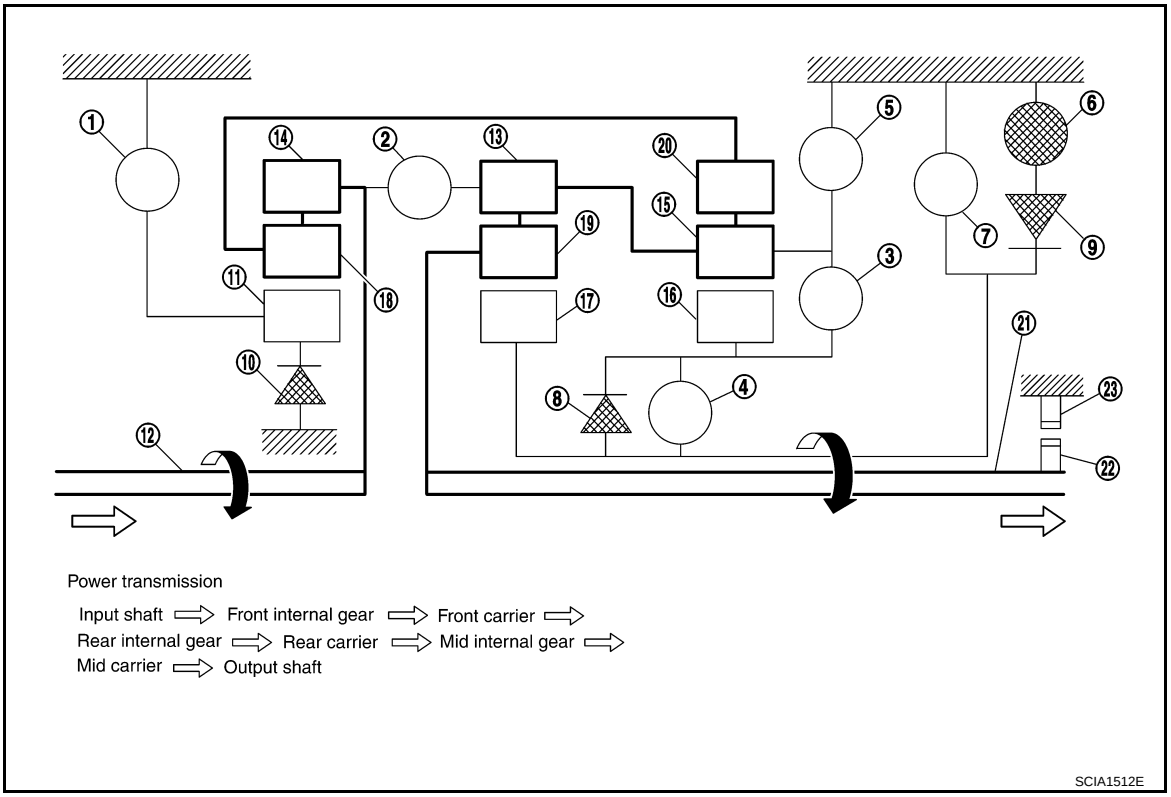

1.	Front brake	2.	Input clutch	3.	Direct clutch
4.	High and low reverse clutch	5.	Reverse brake	6.	Forward brake
7.	Low coast brake	8.	1st one-way clutch	9.	Forward one-way clutch
10.	3rd one-way clutch	11.	Front sun gear	12.	Input shaft
13.	Mid internal gear	14.	Front internal gear	15.	Rear carrier
16.	Rear sun gear	17.	Mid sun gear	18.	Front carrier
19.	Mid carrier	20.	Rear internal gear	21.	Output shaft
22.	Parking gear	23.	Parking pawl		

“M1” Position
- The front brake fastens the front sun gear.
- The forward brake and the forward one-way clutch regulate reverse rotation of the mid sun gear.
- High and low reverse clutch connects the rear sun gear and the mid sun gear.
- The low coast brake fastens the mid sun gear.
- During deceleration, the low coast brake regulates forward rotation of the mid sun gear and the engine brake functions.

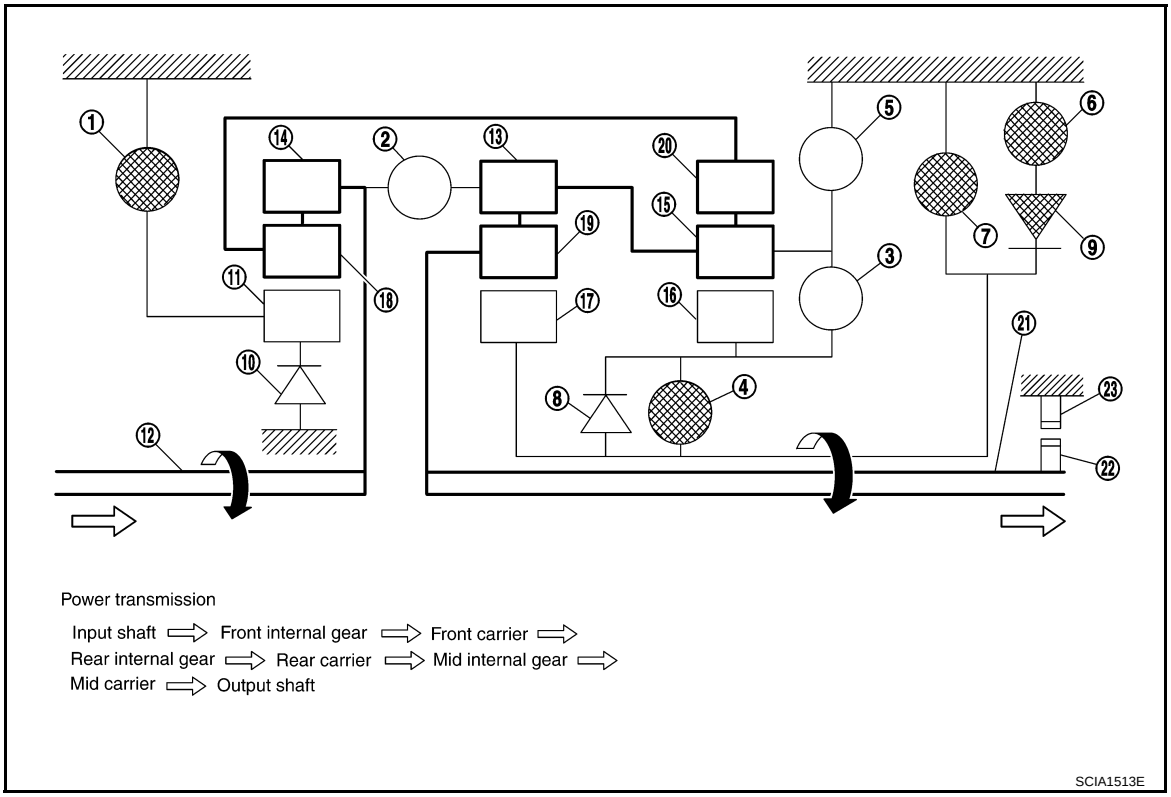

1. Front brake	2. Input clutch	3. Direct clutch
4. High and low reverse clutch	5. Reverse brake	6. Forward brake
7. Low coast brake	8. 1st one-way clutch	9. Forward one-way clutch
10. 3rd one-way clutch	11. Front sun gear	12. Input shaft
13. Mid internal gear	14. Front internal gear	15. Rear carrier
16. Rear sun gear	17. Mid sun gear	18. Front carrier
19. Mid carrier	20. Rear internal gear	21. Output shaft
22. Parking gear	23. Parking pawl	

"D2" and "DS2" Position

- The forward brake and the forward one-way clutch regulate reverse rotation of the mid sun gear.
- The 3rd one-way clutch regulates reverse rotation of the front sun gear.
- The direct clutch is coupled, and the rear carrier and rear sun gear are connected.
- During deceleration, the mid sun gear turns forward, so the forward one-way clutch idles and engine brake is not activated.

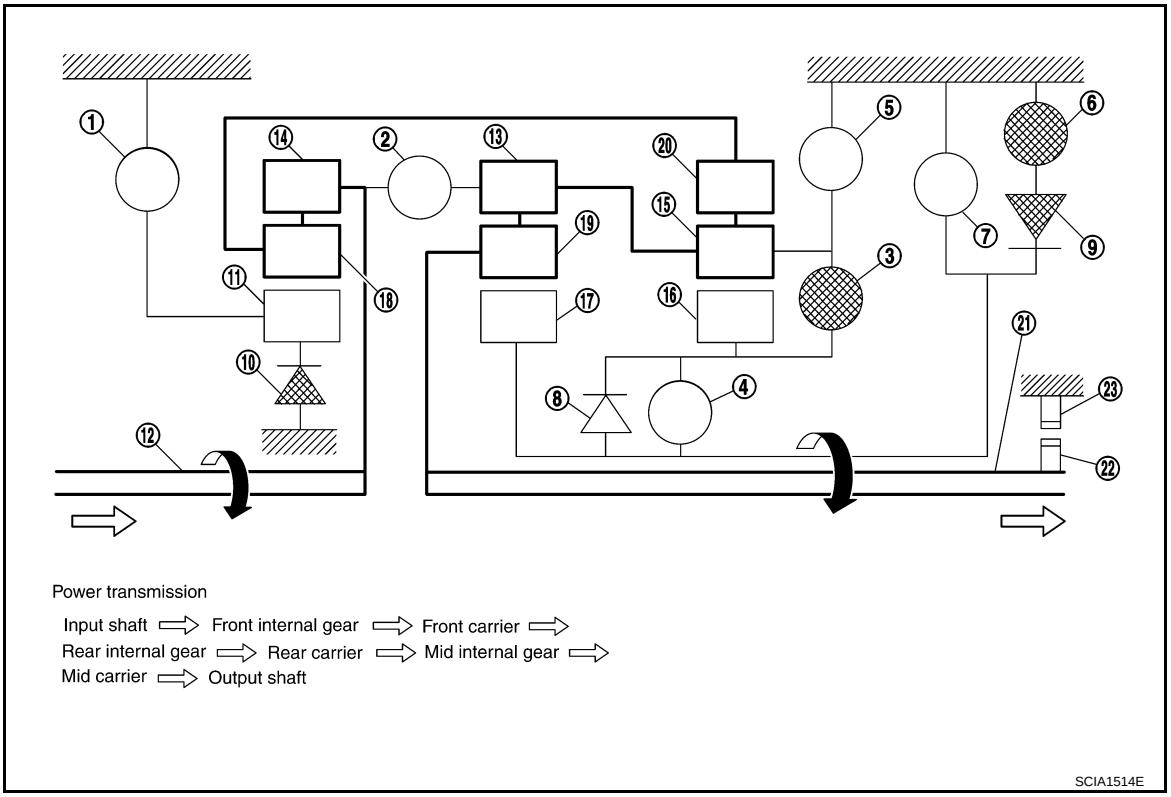

1.	Front brake	2.	Input clutch	3.	Direct clutch
4.	High and low reverse clutch	5.	Reverse brake	6.	Forward brake
7.	Low coast brake	8.	1st one-way clutch	9.	Forward one-way clutch
10.	3rd one-way clutch	11.	Front sun gear	12.	Input shaft
13.	Mid internal gear	14.	Front internal gear	15.	Rear carrier
16.	Rear sun gear	17.	Mid sun gear	18.	Front carrier
19.	Mid carrier	20.	Rear internal gear	21.	Output shaft
22.	Parking gear	23.	Parking pawl		

“M2” Position
- The front brake fastens the front sun gear.
- The forward brake and the forward one-way clutch regulate reverse rotation of the mid sun gear.
- The direct clutch is coupled, and the rear carrier and rear sun gear are connected.
- The low coast brake fastens the mid sun gear.
- During deceleration, the low coast brake regulates forward rotation of the mid sun gear and the engine brake functions.

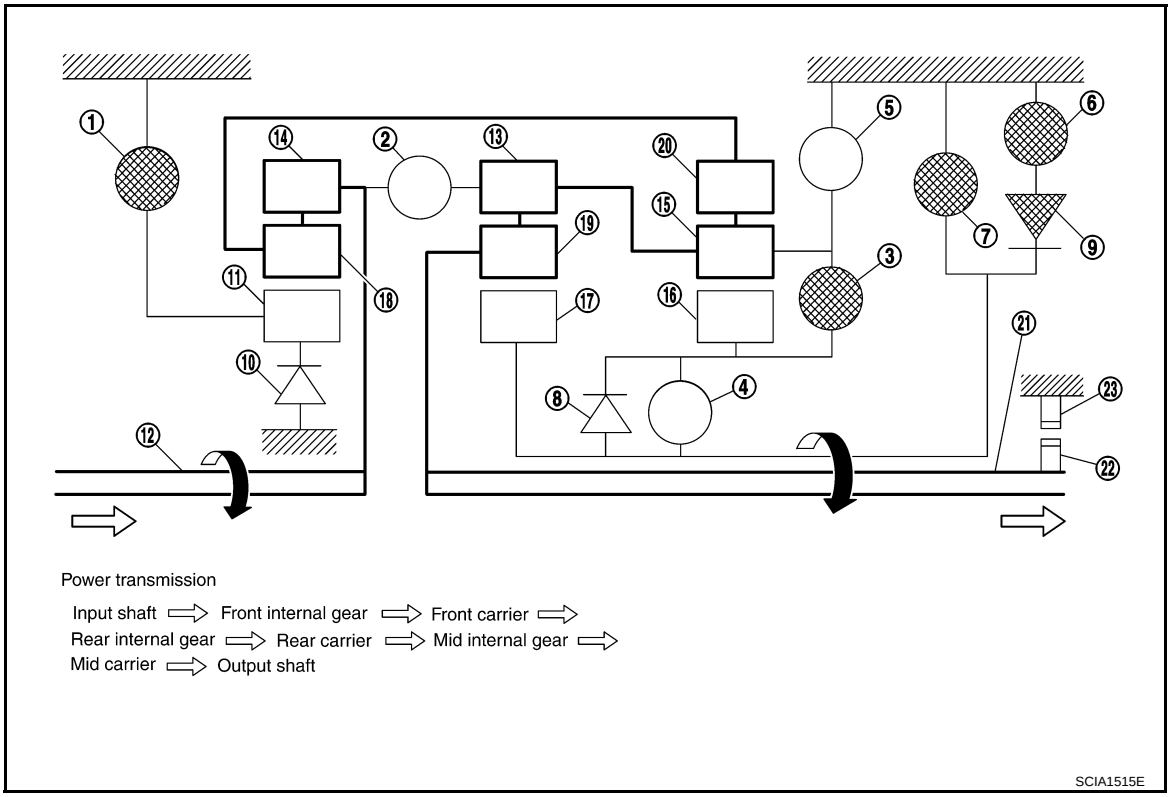

1.	Front brake	2.	Input clutch	3.	Direct clutch
4.	High and low reverse clutch	5.	Reverse brake	6.	Forward brake
7.	Low coast brake	8.	1st one-way clutch	9.	Forward one-way clutch
10.	3rd one-way clutch	11.	Front sun gear	12.	Input shaft
13.	Mid internal gear	14.	Front internal gear	15.	Rear carrier
16.	Rear sun gear	17.	Mid sun gear	18.	Front carrier
19.	Mid carrier	20.	Rear internal gear	21.	Output shaft
22.	Parking gear	23.	Parking pawl		

“D3”, “DS3” and “M3” Positions
- The front brake fastens the front sun gear.
- The direct clutch is coupled, and the rear carrier and rear sun gear are connected.
- The high and low reverse clutch is coupled, and the mid sun gear and rear sun gear are connected.

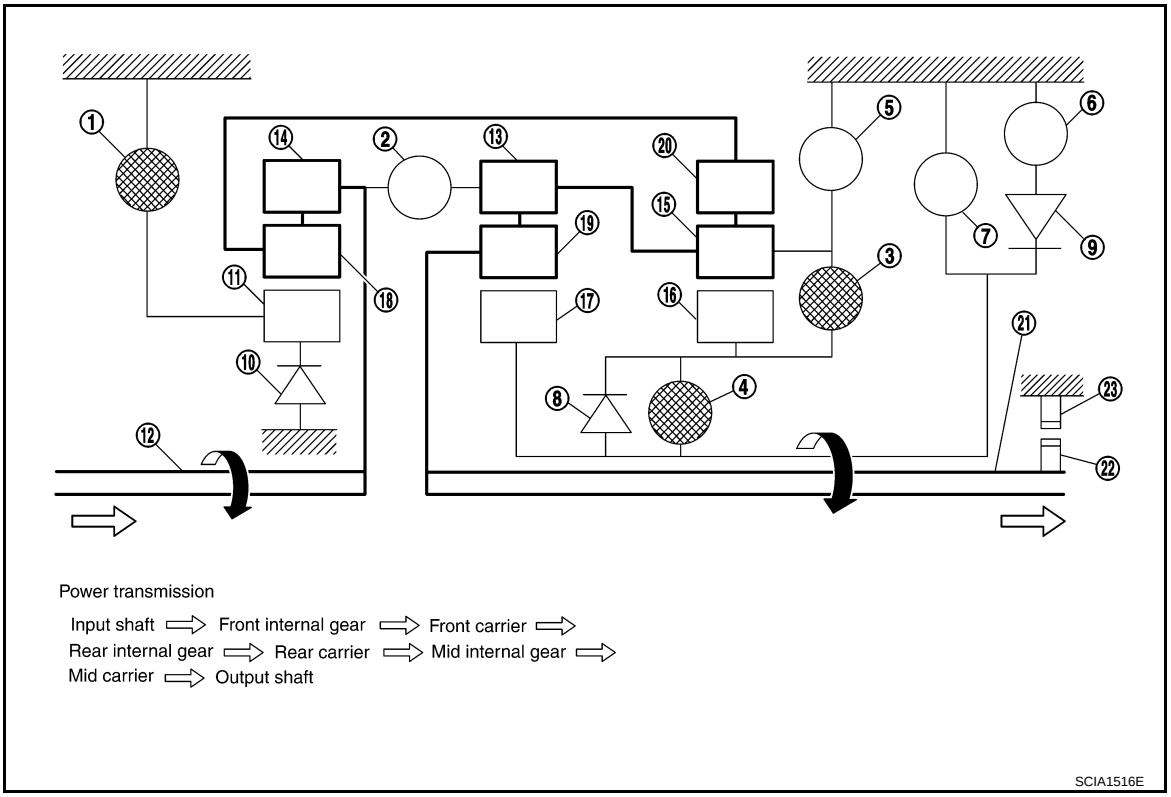

1.	Front brake	2.	Input clutch	3.	Direct clutch
4.	High and low reverse clutch	5.	Reverse brake	6.	Forward brake
7.	Low coast brake	8.	1st one-way clutch	9.	Forward one-way clutch
10.	3rd one-way clutch	11.	Front sun gear	12.	Input shaft
13.	Mid internal gear	14.	Front internal gear	15.	Rear carrier
16.	Rear sun gear	17.	Mid sun gear	18.	Front carrier
19.	Mid carrier	20.	Rear internal gear	21.	Output shaft
22.	Parking gear	23.	Parking pawl		

“D4”, “DS4” and “M4” Positions

- The direct clutch is coupled, and the rear carrier and rear sun gear are connected.
- The high and low reverse clutch is coupled, and the mid sun gear and rear sun gear are connected.
- The input clutch is coupled, and the front internal gear and mid internal gear are connected.
- The drive power is conveyed to the front internal gear, mid internal gear, and rear carrier and the three planetary gears rotate forward as one unit.

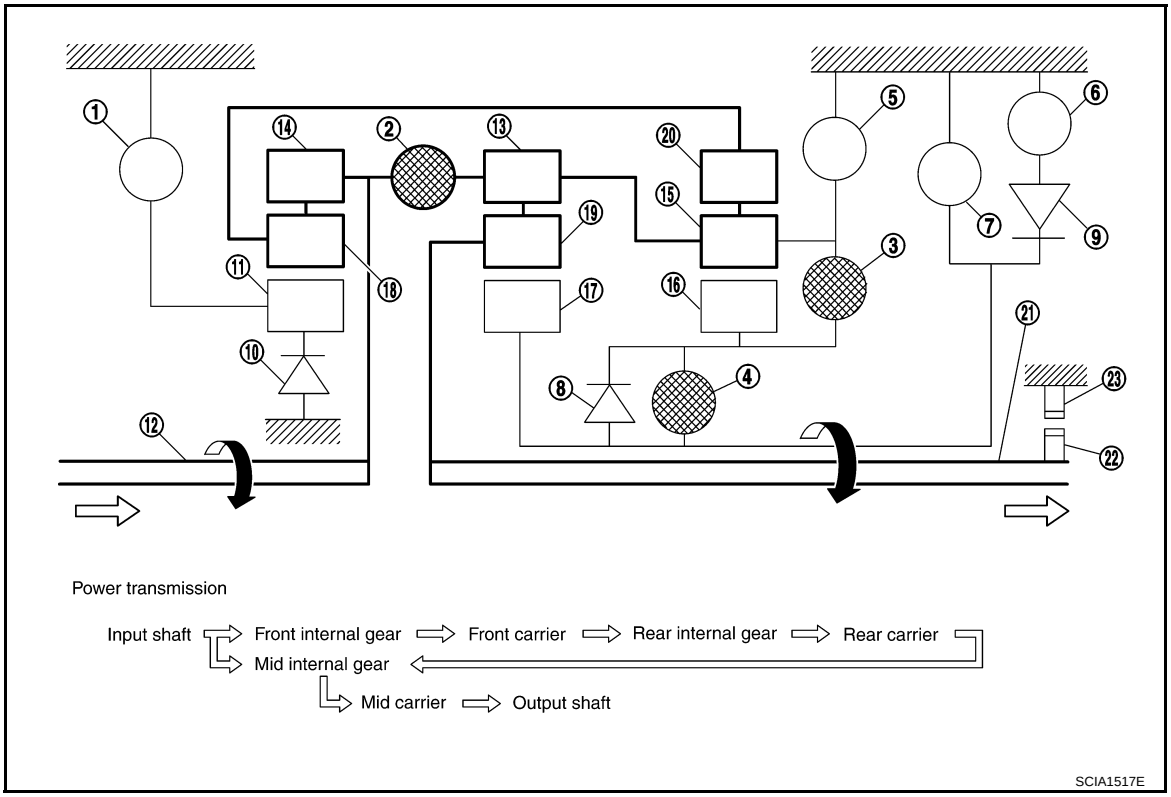

1. Front brake	2. Input clutch	3. Direct clutch
4. High and low reverse clutch	5. Reverse brake	6. Forward brake
7. Low coast brake	8. 1st one-way clutch	9. Forward one-way clutch
10. 3rd one-way clutch	11. Front sun gear	12. Input shaft
13. Mid internal gear	14. Front internal gear	15. Rear carrier
16. Rear sun gear	17. Mid sun gear	18. Front carrier
19. Mid carrier	20. Rear internal gear	21. Output shaft
22. Parking gear	23. Parking pawl	

“D5”, “DS5” and “M5” Positions
- The front brake fastens the front sun gear.
- The input clutch is coupled, and the front internal gear and mid internal gear are connected.
- The high and low reverse clutch is coupled, and the mid sun gear and rear sun gear are connected.

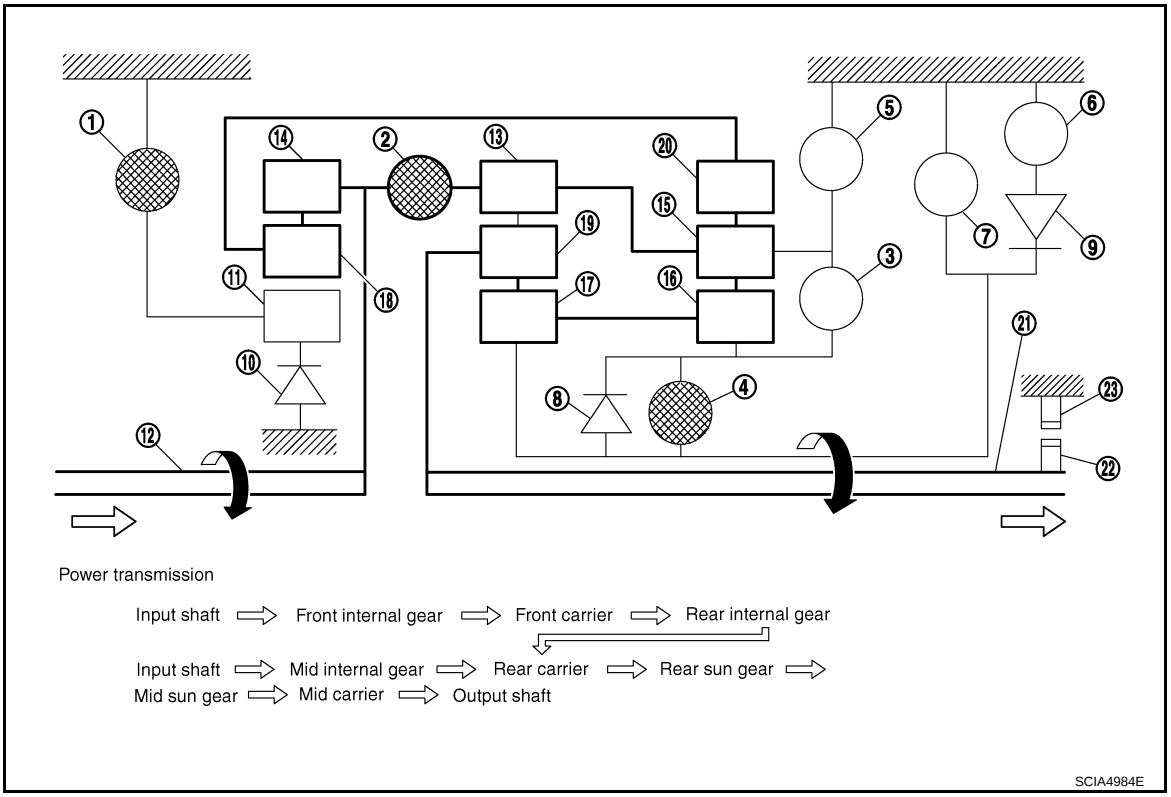

1.	Front brake	2.	Input clutch	3.	Direct clutch
4.	High and low reverse clutch	5.	Reverse brake	6.	Forward brake
7.	Low coast brake	8.	1st one-way clutch	9.	Forward one-way clutch
10.	3rd one-way clutch	11.	Front sun gear	12.	Input shaft
13.	Mid internal gear	14.	Front internal gear	15.	Rear carrier
16.	Rear sun gear	17.	Mid sun gear	18.	Front carrier
19.	Mid carrier	20.	Rear internal gear	21.	Output shaft
22.	Parking gear	23.	Parking pawl		

“R” Position
- The front brake fastens the front sun gear.
- The high and low reverse clutch is coupled, and the mid sun gear and rear sun gear are connected.
- The reverse brake fastens the rear carrier.

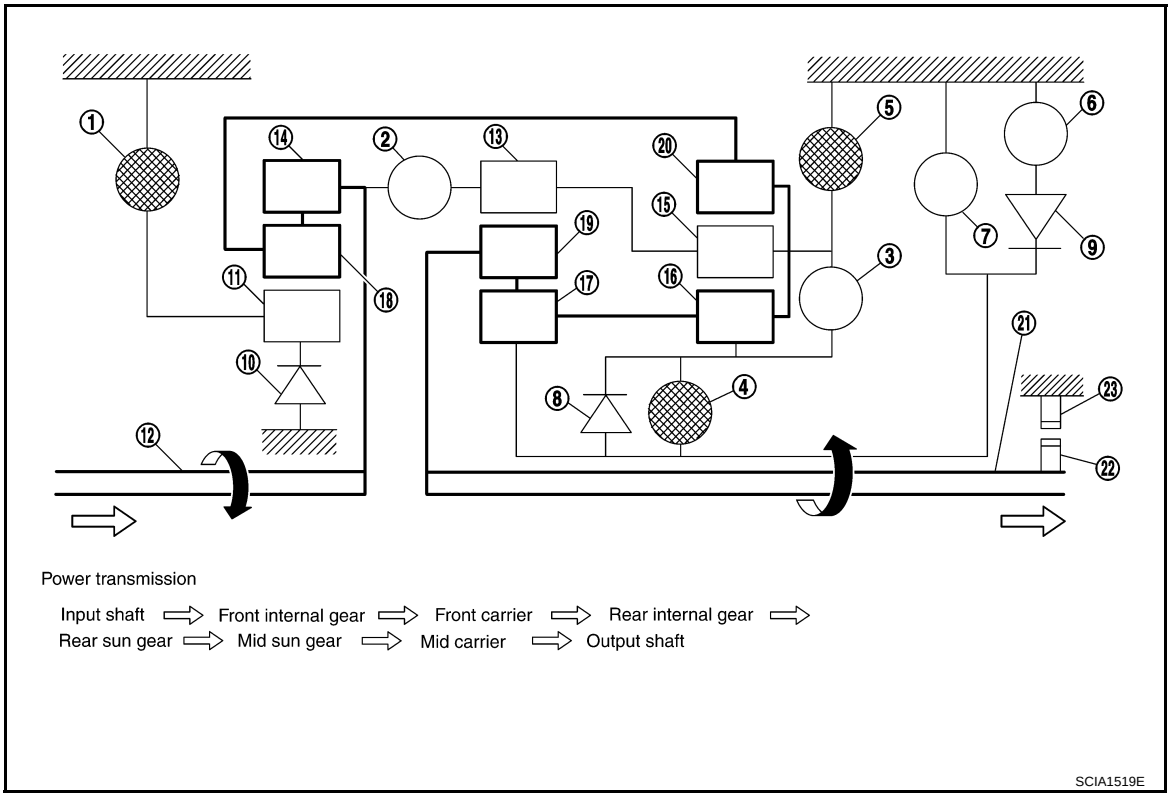

1. Front brake
2. Input clutch
3. Direct clutch
4. High and low reverse clutch
5. Reverse brake
6. Forward brake
7. Low coast brake
8. 1st one-way clutch
9. Forward one-way clutch
10. 3rd one-way clutch
11. Front sun gear
12. Input shaft
13. Mid internal gear
14. Front internal gear
15. Rear carrier
16. Rear sun gear
17. Mid sun gear
18. Front carrier
19. Mid carrier
20. Rear internal gear
21. Output shaft
22. Parking gear
23. Parking pawl

Component Parts Location

INFOID:0000000001733792

Without Paddle Shifter

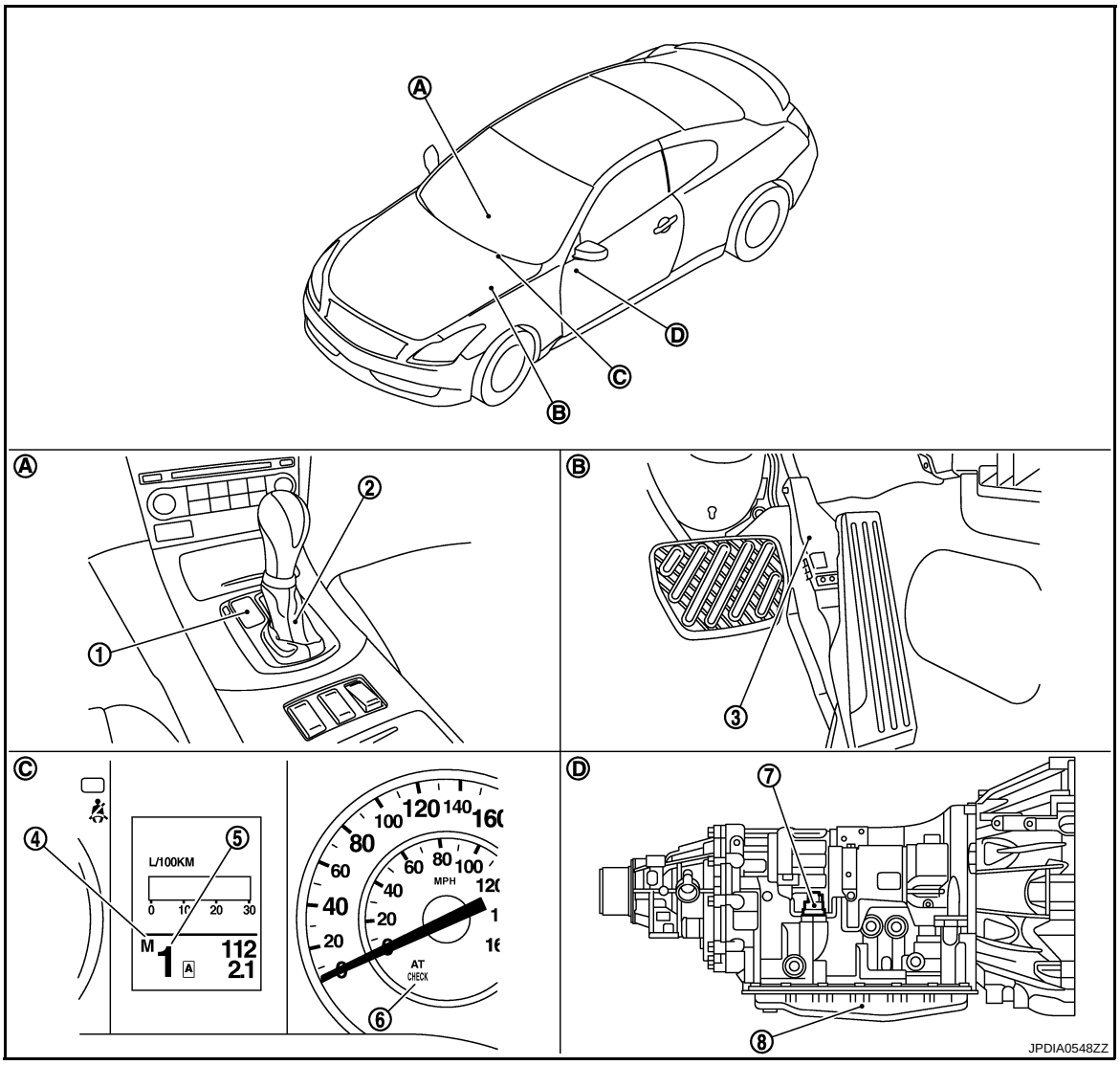

1. Selector lever position indicator	2. A/T control device	3. Accelerator pedal position sensor
4. Manual mode indicator	5. Shift position indicator	6. A/T CHECK indicator lamp
7. A/T assembly harness connector	8. Control valve with TCM*1	
A. Center console	B. Accelerator pedal	C. Combination meter
D. A/T assembly		

*1: Control valve with TCM is included in A/T assembly.

NOTE:

- The following components are included in A/T control device (2).
- Manual mode select switch
- Manual mode position select switch
- Shift position switch
- The following components are included in control valve with TCM (8).
- TCM
- Turbine revolution sensor 1, 2
- Revolution sensor
- A/T fluid temperature sensor 1, 2
- PNP switch
- Line pressure solenoid valve

- Torque converter clutch solenoid valve
- Direct clutch solenoid valve
- High and low reverse clutch solenoid valve
- Input clutch solenoid valve
- Front brake solenoid valve
- Low coast brake solenoid valve
- ATF pressure switch 2

With Paddle Shifter

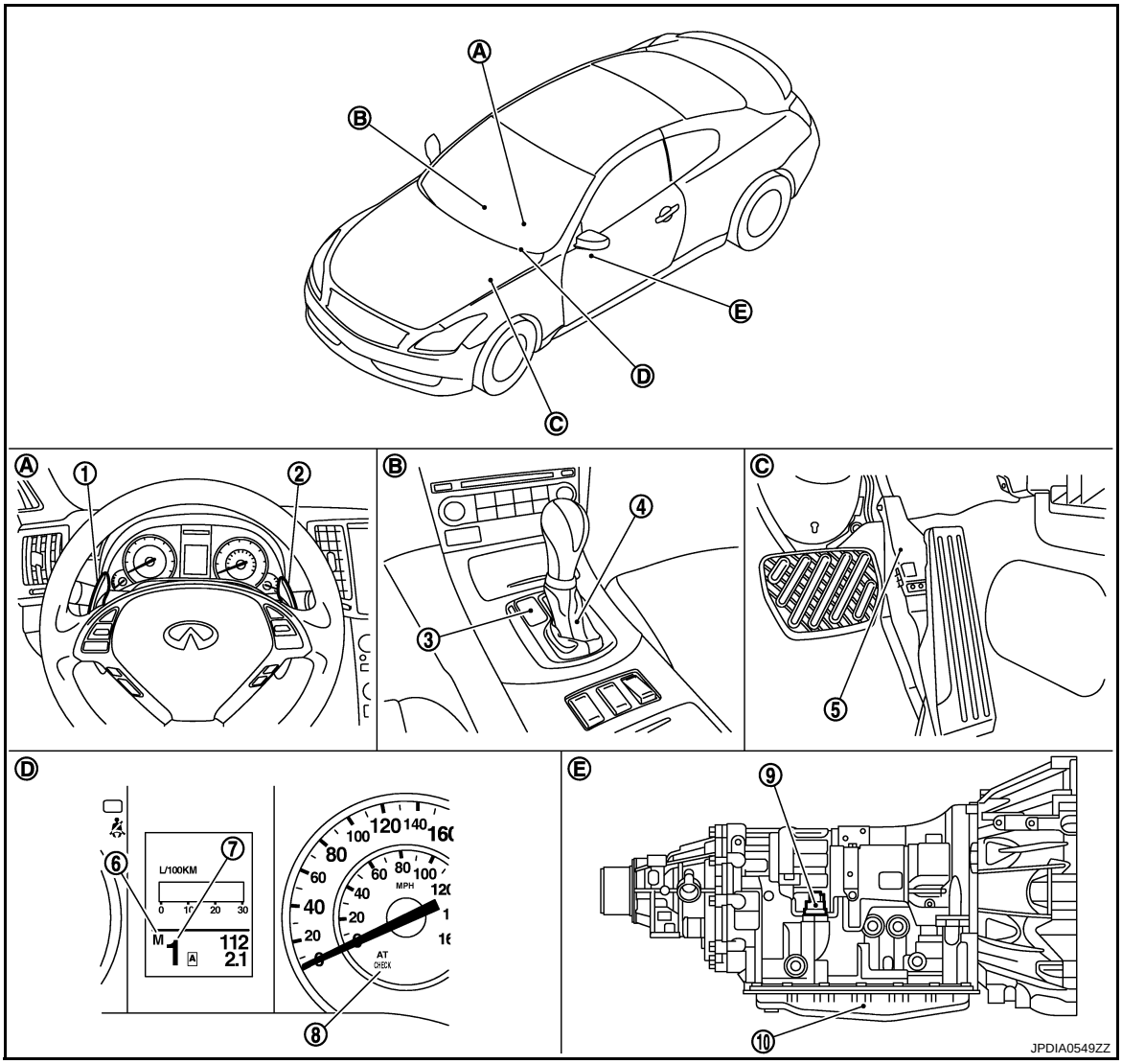

1.	Paddle shifter (shift-down)	2.	Paddle shifter (shift-up)	3.	Selector lever position indicator
4.	A/T control device	5.	Accelerator pedal position sensor	6.	Manual mode indicator
7.	Shift position indicator	8.	A/T CHECK indicator lamp	9.	A/T assembly harness connector
10.	Control valve with TCM*1				
A.	Steering wheel	B.	Center console	C.	Accelerator pedal
D.	Combination meter	E.	A/T assembly		

*1: Control valve with TCM is included in A/T assembly.

NOTE:

- The following components are included in A/T control device (4).
- Manual mode select switch
- Manual mode position select switch
- Shift position switch
- The following components are included in control valve with TCM (10).

- TCM
- Turbine revolution sensor 1, 2
- Revolution sensor
- A/T fluid temperature sensor 1, 2
- PNP switch
- Line pressure solenoid valve
- Torque converter clutch solenoid valve
- Direct clutch solenoid valve
- High and low reverse clutch solenoid valve
- Input clutch solenoid valve
- Front brake solenoid valve
- Low coast brake solenoid valve
- ATF pressure switch 2

Component Description

INFOID:0000000001672113

Name of the Part (Abbreviation)	Function
Front brake (FR/B)	Fastens the front sun gear.
Input clutch (I/C)	Connects the input shaft, the front internal gear and the mid internal gear.
Direct clutch (D/C)	Connects the rear carrier and the rear sun gear.
High and low reverse clutch (HLR/C)	Connects the mid sun gear and the rear sun gear.
Reverse brake (R/B)	Fastens the rear carrier.
Forward brake (Fwd/B)	Fastens the mid sun gear.
Low coast brake (LC/B)	Fastens the mid sun gear.
1st one-way clutch (1st OWC)	Allows the rear sun gear to turn freely forward relative to the mid sun gear but fastens it for reverse rotation.
Forward one-way clutch (Fwd OWC)	Allows the mid sun gear to turn freely in the forward direction but fastens it for reverse rotation.
3rd one-way clutch (3rd OWC)	Allows the front sun gear to turn freely in the forward direction but fastens it for reverse rotation.
Torque converter	Amplifies driving force the engine, and transmits it to transmission input shaft.
Oil pump	Driven by the engine, oil pump supplies oil to torque converter, control valve assembly, and each lubricating system.

SHIFT LOCK SYSTEM

System Description

INFOID:0000000001672114

The selector lever cannot be shifted from the “P” position unless the brake pedal is depressed while the ignition switch is ON.
The shift lock is unlocked by the shift lock unit that is activated when the ignition switch is ON and the stop lamp switch is turned ON (brake pedal is depressed).
Therefore, the shift lock unit receives no ON signal and the shift lock remains locked if the above conditions are not fulfilled. (However, a shift operation is allowed if the shift lock release button is pressed.)

SHIFT LOCK OPERATION AT “P” POSITION

When Brake Pedal Is Not Depressed (No Shift Operation Allowed)

The shift lock solenoid (A) inside the shift lock unit is not energized if the brake pedal is not depressed while the ignition switch is ON.
The lock plate (B) lowers according to the downward movement of the position pin (C) when the selector button (D) is pressed, and presses only slider B (E) into the shift lock unit. Slider A (F) located below the lock plate prevents the downward movement of the lock plate with the spring force. The selector lever cannot be shifted from the “P” position for this reason.
However, slider A is forcibly pressed into the shift lock unit, allowing the selector lever to shift if the shift lock release button is pressed.

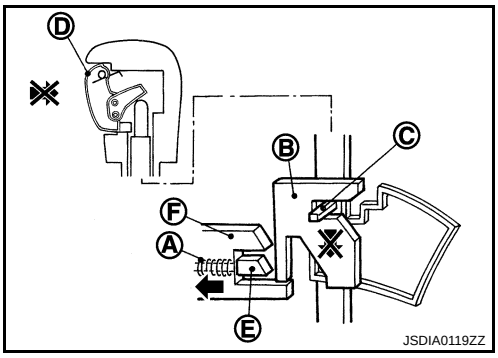

When Brake Pedal Is Depressed (Shift Operation Allowed)

The shift lock solenoid (A) inside the shift lock unit is energized and the relative positions of sliders A (B) and B (C) are maintained when the brake pedal is depressed while the ignition switch is ON.
The lock plate (D) lowers according to the downward movement of the position pin (E), thrusting away sliders A and B, when the selector button (F) is pressed.
The position pin lowers to the position that allows shift operation for this reason. As a result, the selector lever can be shifted out of the P position.

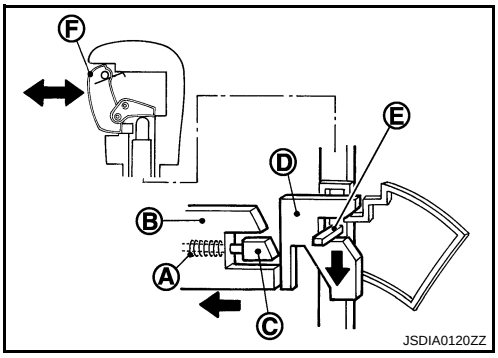

OPERATION AT OTEHER THAN “P” POSITION

The shift lock function will not operate at any position other than “P” because the lock plate (A) is only set for the “P” position. Accordingly, the selector lever can be shifted to any position regardless of the brake operation.
The position pin (B) enters the “P” position thrusting away the lock plate when the selector lever is shifted to the “P” position. Then, the shift mechanism is locked when the selector button (C) is released.

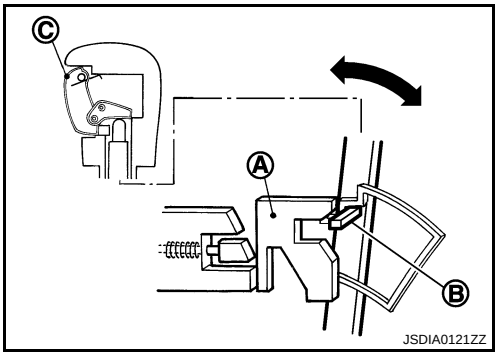

“P” POSITION RETAINING MECHANISM (IGNITION SWITCH LOCK)

When ignition switch is not in the ON position, power is not applied to the shift lock solenoid in the shift lock unit. This causes shift lock state, and then “P” position is retained.
When an actuating system in the shift lock unit has a malfunction, selector lever is unable to operate from the “P” position even when pressing the brake pedal with the ignition switch ON. However, when pressing the shift lock release button, slider A is forcibly pressed into the shift lock unit. This allows shift lock to be released and selector lever enables the select operation from the “P” position.

CAUTION:

Do not use the shift lock release button except when the select lever is inoperative even when pressing the brake pedal with the ignition switch ON.

Component Parts Location

INFOID:0000000001672115

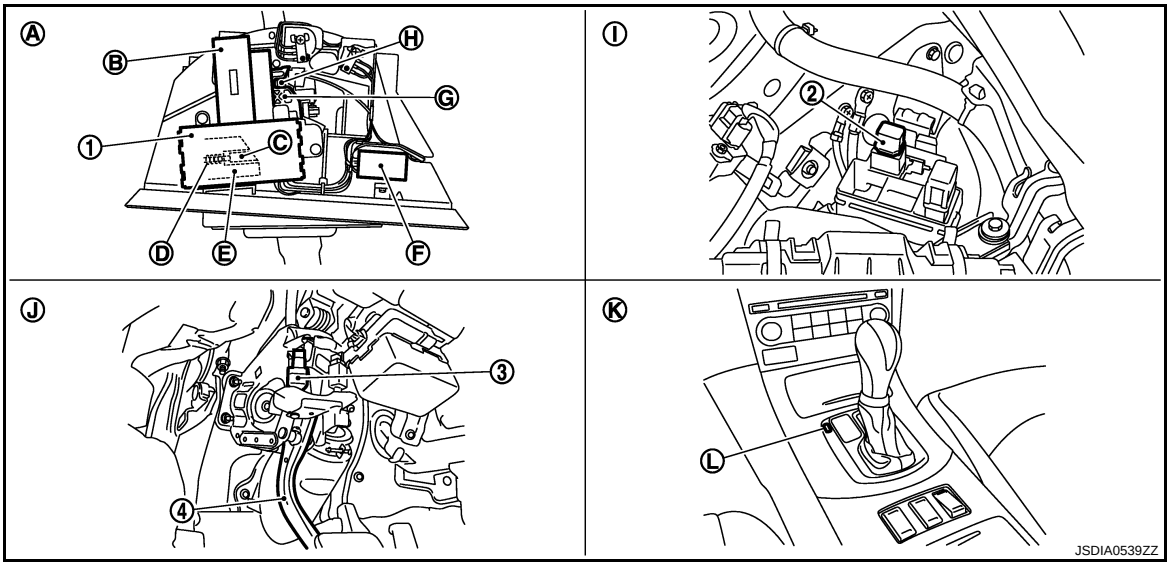

1. Shift lock unit	2. Shift lock relay	3. Stop lamp switch
4. Brake pedal		
A. Control device assembly	B. Shift lock release button	C. Slider B
D. Shift lock solenoid	E. Slider A	F. A/T device harness connector
G. Lock plate	H. Position pin	I. Engine room LH
J. Brake pedal, upper	K. A/T console finisher	L. Shift lock cover *

*: Shift lock release button becomes operative by removing shift lock cover.

Component Description

INFOID:0000000001672116

Component			Function
Control device assembly	Shift lock unit	Shift lock solenoid	TM-166, "Description"
		Lock plate	The lock plate restricts the position pin stroke by selector button operation according to the shift lock unit status.
		Shift lock release button	Pressing the shift lock release button cancels the shift lock forcibly.
	Position pin		The position pin, linking with the selector button, restricts the selector lever movement.
Shift lock relay			TM-166, "Description"
Stop lamp switch			

ON BOARD DIAGNOSTIC (OBD) SYSTEM

Diagnosis Description

INFOID:0000000001672117

DESCRIPTION

The A/T system has two self-diagnostic systems.
The first is the emission-related on board diagnostic system (OBD-II) performed by the TCM in combination with the ECM. The malfunction is indicated by the MIL (malfunction indicator lamp) and is stored as a DTC in the ECM memory but not the TCM memory.
The second is the TCM original self-diagnosis indicated by the A/T CHECK indicator lamp. The malfunction is stored in the TCM memory. The detected items are overlapped with OBD-II self-diagnostic items. For detail, refer to TM-112, "CONSULT-III Function (TRANSMISSION)".

OBD-II FUNCTION

The ECM provides emission-related on board diagnostic (OBD-II) functions for the A/T system. One function is to receive a signal from the TCM used with OBD-related parts of the A/T system. The signal is transmitted to the ECM when a malfunction occurs in the corresponding OBD-related part. The other function is to indicate a diagnostic result by means of the MIL (malfunction indicator lamp) on the instrument panel. Sensors, switches and solenoid valves are used as sensing elements.
The MIL automatically illuminates in “One or Two Trip Detection Logic” when a malfunction is sensed in relation to A/T system parts.

ONE OR TWO TRIP DETECTION LOGIC OF OBD-II

One Trip Detection Logic

If a malfunction is sensed during the first test drive, the MIL illuminates and the ECM memory stores the malfunction as a DTC. The TCM is not provided with such a memory function.

Two Trip Detection Logic

When a malfunction is sensed during the first test drive, it is stored in the ECM memory as a 1st trip DTC (diagnostic trouble code) or 1st trip freeze frame data. At this point, the MIL does not illuminate. — 1st trip
If the same malfunction as that experienced during the first test drive is sensed during the second test drive, the MIL will illuminate. — 2nd trip
The “trip” in the “One or Two Trip Detection Logic” means a driving mode in which self-diagnosis is performed during vehicle operation.

OBD-II DIAGNOSTIC TROUBLE (DTC)

How to Read DTC and 1st Trip DTC

DTC and 1st trip DTC can be read by the following methods.
(with CONSULT-III or GST) CONSULT-III or GST (Generic Scan Tool) Examples: P0705, P0720 etc.
These DTC are prescribed by SAE J2012.
(CONSULT-III also displays the malfunctioning component or system.)

- **1st trip DTC No. is the same as DTC No.**
- **Output of the diagnostic trouble code indicates that the indicated circuit has a malfunction. However, in case of the Mode II and GST, they do not indicate whether the malfunction is still occurring or occurred in the past and returned to normal.**
  CONSULT-III can identify them as shown below, therefore, CONSULT-III (if available) is recommended.

Freeze Frame Data and 1st Trip Freeze Frame Data

The ECM has a memory function, which stores the driving condition such as fuel system status, calculated load value, engine coolant temperature, short term fuel trim, long term fuel trim, engine speed and vehicle speed at the moment the ECM detects a malfunction.
Data which are stored in the ECM memory, along with the 1st trip DTC, are called 1st trip freeze frame data, and the data, stored together with the DTC data, are called freeze frame data and displayed on CONSULT-III or GST. The 1st trip freeze frame data can only be displayed on the CONSULT-III screen, not on the GST. For detail, refer to EC-120, "CONSULT-III Function".
Only one set of freeze frame data (either 1st trip freeze frame data of freeze frame data) can be stored in the ECM. 1st trip freeze frame data is stored in the ECM memory along with the 1st trip DTC. There is no priority for 1st trip freeze frame data and it is updated each time a different 1st trip DTC is detected. However, once freeze frame data (2nd trip detection/MIL on) is stored in the ECM memory, 1st trip freeze frame data is no

longer stored. Remember, only one set of freeze frame data can be stored in the ECM. The ECM has the following priorities to update the data.

Priority	Items	
1	Freeze frame data	Misfire — DTC: P0300 - P0306 Fuel Injection System Function — DTC: P0171, P0172, P0174, P0175
2		Except the above items (Includes A/T related items)
3	1st trip freeze frame data	

Both 1st trip freeze frame data and freeze frame data (along with the DTC) are cleared when the ECM memory is erased.

How to Erase DTC

The diagnostic trouble code can be erased by CONSULT-III, GST or ECM DIAGNOSTIC TEST MODE as described following.

- **If the battery cable is disconnected from the terminal, the DTC will be lost within 24 hours.**
- **When you erase the DTC, using CONSULT-III or GST is easier and quicker than switching the mode selector on the ECM.**

The following emission-related diagnostic information is cleared from the ECM memory when erasing DTC related to OBD-II. For details, refer to EC-552, "DTC Index".

- **Diagnostic trouble codes (DTC)**
- **1st trip diagnostic trouble codes (1st trip DTC)**
- **Freeze frame data**
- **1st trip freeze frame data**
- **System readiness test (SRT) codes**
- **Test values**

How to Erase DTC (With CONSULT-III)

1. The emission related diagnostic information in the TCM and ECM can be erased by selecting “All Erase” in the “Description” of “FINAL CHECK” mode with CONSULT-III.

How to Erase DTC (With GST)

1. If the ignition switch stays ON after repair work, be sure to turn ignition switch OFF once. Wait at least 10 seconds and then turn it ON (engine stopped) again.
2. Perform “Erase Self-diagnosis”TM-111, "Diagnosis Description".
3. Perform “How to Erase DTC (WITH GST)”. Refer to EC-107, "Diagnosis Description".

How to Erase DTC (No tools)

1. If the ignition switch stays ON after repair work, be sure to turn ignition switch OFF once. Wait at least 10 seconds and then turn it ON (engine stopped) again.
2. Perform “Erase Self-diagnosis”TM-111, "Diagnosis Description".
3. Perform “How to Erase DTC (No tools)”. Refer to EC-107, "Diagnosis Description".

OBD-II SELF-DIAGNOSTIC PROCEDURE (WITH GST)

Refer to EC-129, "Diagnosis Tool Function".

OBD-II SELF-DIAGNOSTIC PROCEDURE (NO TOOLS)

Refer to “MALFUNCTION INDICATOR LAMP (MIL)”. Refer to EC-107, "Diagnosis Description".

MALFUNCTION INDICATOR LAMP (MIL)

Description

- The MIL is located on the combination meters.

1. The MIL will light up when the ignition switch is turned ON without the engine running. This is a bulb check. If the MIL does not light up, refer to EC-503, "Component Function Check".
2. When the engine is started, the MIL should go off.
   If the MIL remains on, the on board diagnostic system has detected engine system malfunction.

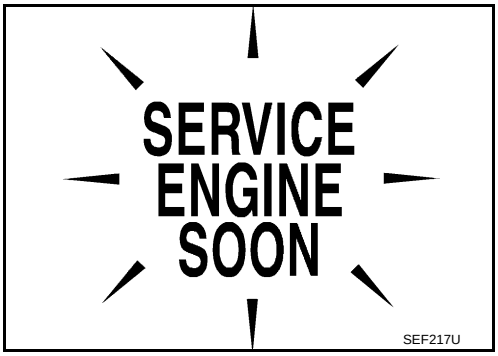

DIAGNOSIS SYSTEM (TCM)

Diagnosis Description

INFOID:0000000001672118

TCM SELF-DIAGNOSTIC PROCEDURE (NO TOOLS)

Description

As a method for locating the suspected circuit, when the self-diagnostics start signal is input, the memory for the malfunction location is output and the A/T CHECK indicator lamp flashes to display the corresponding DTC.

Operation Procedure

1. Start the engine with selector lever in “P” position. Warm engine to normal operating temperature.
2. Turn ignition switch ON and OFF at least twice, then leave it in the OFF position.
3. Wait 10 seconds.
4. Turn ignition switch ON. (Do not start engine.)
5. Check A/T CHECK indicator lamp comes on for about 2 seconds.
   CAUTION:
   If A/T CHECK indicator lamp does not come on, refer to TM-188, "Symptom Table".
6. Turn ignition switch OFF.
7. Keep pressing shift lock release button.
8. Shift the selector lever from “P” to “D” position.
9. Release accelerator pedal. (Set the closed throttle position signal ON.)
10. Depress brake pedal. (Stop lamp switch signal ON.)
11. Turn ignition switch ON. (Do not start engine.)
12. Wait 3 seconds.
13. Shift the selector lever to the manual shift gate side. (Manual mode signal ON.)
14. Release brake pedal. (Stop lamp switch signal ON.)
15. Shift the selector lever to “D” position. (Manual mode signal OFF.)
16. Depress brake pedal. (Stop lamp switch signal ON.)
17. Release brake pedal. (Stop lamp switch signal OFF.)
18. Depress accelerator pedal fully and release it.
19. Check A/T CHECK indicator lamp. Refer to “Judgment Self-diagnosis Code”.
    CAUTION:
    If the system does not go into self-diagnosis, refer to TM-188, "Symptom Table".

Judgment Self-diagnosis Coed

If there is a malfunction, the lamp lights up for the time corresponding to the suspect circuit.

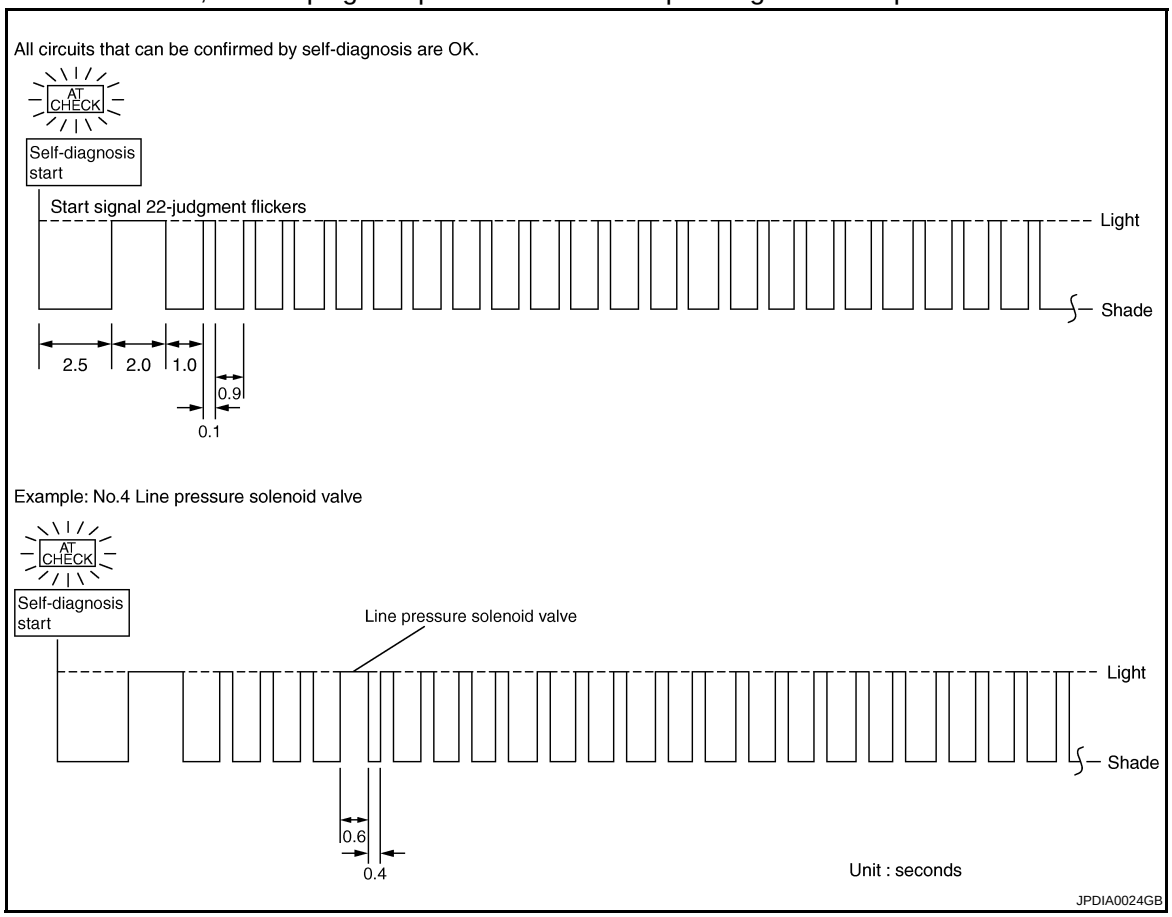

No.	Malfunctioning item	No.	Malfunctioning item
1	Revolution sensor TM-125	12	A/T interlock TM-148
2	Direct clutch solenoid valve TM-152	13	A/T 1st engine braking TM-149
3	Torque converter clutch solenoid valve TM-140, TM-141	14	Start signal TM-119
4	Line pressure solenoid valve TM-142	15	Accelerator pedal position sensor TM-143
5	Input clutch solenoid valve TM-150	16	Engine speed signal TM-128
6	Front brake solenoid valve TM-151	17	CAN communication line TM-118
7	Low coast brake solenoid valve TM-154, TM-155	18	1st gear function TM-130
8	High and low reverse clutch solenoid valve TM-153	19	2nd gear function TM-132
9	PNP switch TM-122	20	3rd gear function TM-134
10	A/T fluid temperature sensor TM-144	21	4th gear function TM-136
11	Turbine revolution sensor TM-124	22	5th gear function TM-138

Erase Self-diagnosis

In order to make it easier to find the cause of hard-to-duplicate malfunctions, malfunction information is stored into the control unit as necessary during use by the user. This memory is not erased no matter how many times the ignition switch is turned ON and OFF.

However, this information is erased by turning ignition switch OFF after performing self-diagnostics or by erasing the memory using the CONSULT-III.

CONSULT-III Function (TRANSMISSION)

INFOID:0000000001672119

CONSULT-III APPLICATION ITEMS

Diagnostic test mode	Function
Work support	This mode enables a technician to adjust some devices faster and more accurately by following the indications on CONSULT-III.
Self-diagnostic results	Self-diagnostic results can be read and erased quickly.
Data monitor	Input/Output data in the ECU can be read.
CAN diagnostic support monitor	The results of transmit/receive diagnosis of CAN communication can be read.
DTC work support	The operating condition to confirm Diagnostic Trouble Codes can be selected.
ECU part number	TCM part number can be read.

SELF-DIAGNOSTIC RESULTS

Display Items List

X: Applicable, —: Not applicable

Items (CONSULT-III screen terms)	TCM self-diagnosis	OBD-II (DTC)	Reference page
	"TRANSMISSION" with CONSULT-III	MIL*1, "ENGINE" with CONSULT-III or GST	
CAN COMM CIRCUIT	U1000	U1000	TM-118
STARTER RELAY/CIRC	P0615	—	TM-119
TCM	P0700	P0700	TM-121
PNP SW/CIRC	P0705	P0705	TM-122
TURBINE REV S/CIRC	P0717	P0717	TM-124
VEH SPD SEN/CIR AT	P0720	P0720	TM-125
ENGINE SPEED SIG	P0725	P0725	TM-128
A/T 1ST GR FNCTN	P0731	P0731	TM-130
A/T 2ND GR FNCTN	P0732	P0732	TM-132
A/T 3RD GR FNCTN	P0733	P0733	TM-134
A/T 4TH GR FNCTN	P0734	P0734	TM-136
A/T 5TH GR FNCTN	P0735	P0735	TM-138
TCC SOLENOID/CIRC	P0740	P0740	TM-140
A/T TCC S/V FNCTN	P0744	P0744*2	TM-141
L/PRESS SOL/CIRC	P0745	P0745	TM-142
TP SEN/CIRC A/T	P1705	—	TM-143
ATF TEMP SEN/CIRC	P1710	P0710	TM-144
VEH SPD SE/CIR-MTR	P1721	—	TM-147
A/T INTERLOCK	P1730	P1730	TM-148
A/T 1ST E/BRAKING	P1731	—	TM-149
I/C SOLENOID/CIRC	P1752	P1752	TM-150
FR/B SOLENOID/CIRC	P1757	P1757	TM-151
D/C SOLENOID/CIRC	P1762	P1762	TM-152
HLR/C SOL/CIRC	P1767	P1767	TM-153
LC/B SOLENOID/CIRC	P1772	P1772	TM-154
LC/B SOLENOID FNCT	P1774	P1774	TM-155
MANU MODE SW/CIRC	P1815	—	TM-157
NO DTC IS DETECTED FURTHER TESTING MAY BE REQUIRED	X	X	—

- *1: Refer to TM-108, "Diagnosis Description".

- *2: These malfunctions cannot be displayed MIL if another malfunction is assigned to MIL.

DATA MONITOR

Display Items List

X: Standard, —: Not applicable, ▼: Option

Monitored item (Unit)	Monitor Item Selection			Remarks
	ECU INPUT SIGNALS	MAIN SIGNALS	SELECTION FROM ITEM	
VHCL/S SE-A/T (km/h)	X	X	▼	Revolution sensor
VHCL/S SE-MTR (km/h)	X	—	▼	—
ACCELE POSI (0.0/8)	X	—	▼	Accelerator pedal position signal
THROTTLE POSI (0.0/8)	X	X	▼	Degree of opening for accelerator recognized by the TCM. For fail-safe operation, the specific value used for control is displayed.
ENGINE SPEED (rpm)	X	X	▼	—
TURBINE REV (rpm)	X	X	▼	—
OUTPUT REV (rpm)	X	X	▼	—
GEAR RATIO	—	X	▼	—
TC SLIP SPEED (rpm)	—	X	▼	Difference between engine speed and torque converter input shaft speed.
F SUN GR REV (rpm)	—	—	▼	—
F CARR GR REV (rpm)	—	—	▼	—
ATF TEMP SE 1 (V)	X	—	▼	—
ATF TEMP SE 2 (V)	X	—	▼	—
ATF TEMP 1 (°C)	—	X	▼	Temperature of A/T fluid in the oil pan.
ATF TEMP 2 (°C)	—	X	▼	Temperature of A/T fluid at the exit of torque converter.
BATTERY VOLT (V)	X	—	▼	—
TCC SOLENOID (A)	—	X	▼	—
LINE PRES SOL (A)	—	X	▼	—
I/C SOLENOID (A)	—	X	▼	—
FR/B SOLENOID (A)	—	X	▼	—
D/C SOLENOID (A)	—	X	▼	—
HLR/C SOL (A)	—	X	▼	—
TCC SOL MON (A)	—	—	▼	—
L/P SOL MON (A)	—	—	▼	—
I/C SOL MON (A)	—	—	▼	—
FR/B SOL MON (A)	—	—	▼	—
D/C SOL MON (A)	—	—	▼	—
HLR/C SOL MON (A)	—	—	▼	—
C/V CLB ID1	—	—	▼	—

Monitored item (Unit)	Monitor Item Selection			Remarks
	ECU INPUT SIGNALS	MAIN SIGNALS	SELECTION FROM ITEM	
C/V CLB ID2	—	—	▼	—
C/V CLB ID3	—	—	▼	—
UNIT CLB ID1	—	—	▼	—
UNIT CLB ID2	—	—	▼	—
UNIT CLB ID3	—	—	▼	—
TRGT GR RATIO	—	—	▼	—
TRGT PRES TCC (kPa)	—	—	▼	—
TRGT PRES L/P (kPa)	—	—	▼	—
TRGT PRES I/C (kPa)	—	—	▼	—
TRGT PRE FR/B (kPa)	—	—	▼	—
TRGT PRES D/C (kPa)	—	—	▼	—
TRG PRE HLR/C (kPa)	—	—	▼	—
SHIFT PATTERN	—	—	▼	—
VEHICLE SPEED (km/h)	—	X	▼	Vehicle speed recognized by the TCM.
CLSD THL POS (On/Off)	X	—	▼	Signal input with CAN communications.
W/O THL POS (On/Off)	X	—	▼	
GEAR	—	X	▼	Gear position recognized by the TCM updated after gear-shifting.
ATF PRES SW 1 (On/Off)	X	X	▼	—
ATF PRES SW 2 (On/Off)	X	X	▼	(for LC/B solenoid)
ATF PRES SW 3 (On/Off)	X	X	▼	—
ATF PRES SW 5 (On/Off)	X	X	▼	—
ATF PRES SW 6 (On/Off)	X	X	▼	—
PNP SW 1 (On/Off)	X	—	▼	—
PNP SW 2 (On/Off)	X	—	▼	—
PNP SW 3 (On/Off)	X	—	▼	—
PNP SW 4 (On/Off)	X	—	▼	—
SLCT LVR POSI	—	X	▼	Selector lever position is recognized by the TCM. For fail-safe operation, the specific value used for control is displayed.
MANU MODE SW (On/Off)	X	—	▼	—
NON M-MODE SW (On/Off)	X	—	▼	—
UP SW LEVER (On/Off)	X	—	▼	—
DOWN SW LEVER (On/Off)	X	—	▼	—
SFT UP ST SW (On/Off)	—	—	▼	—
SFT DWN ST SW (On/Off)	—	—	▼	—

Monitored item (Unit)	Monitor Item Selection			Remarks
	ECU INPUT SIGNALS	MAIN SIGNALS	SELECTION FROM ITEM	
ABS SIGNAL (On/Off)	—	—	▼	—
ACC OD CUT (On/Off)	—	—	▼	Not mounted but displayed.
ACC SIGNAL (On/Off)	—	—	▼	
TCS GR/P KEEP (On/Off)	—	—	▼	—
TCS SIGNAL 2 (On/Off)	—	—	▼	—
TCS SIGNAL 1 (On/Off)	—	—	▼	—
ON OFF SOL (On/Off)	—	—	▼	LC/B solenoid
ON OFF SOL MON (On/Off)	—	—	▼	LC/B solenoid
P POSI IND (On/Off)	—	—	▼	—
R POSI IND (On/Off)	—	—	▼	—
N POSI IND (On/Off)	—	—	▼	—
D POSI IND (On/Off)	—	—	▼	—
4TH POSI IND (On/Off)	—	—	▼	—
3RD POSI IND (On/Off)	—	—	▼	—
2ND POSI IND (On/Off)	—	—	▼	—
1ST POSI IND (On/Off)	—	—	▼	—
MANU MODE IND (On/Off)	—	—	▼	—
POWER M LAMP (On/Off)	—	—	▼	—
F-SAFE IND/L (On/Off)	—	—	▼	—
ATF WARN LAMP (On/Off)	—	—	▼	Not mounted but displayed.
BACK-UP LAMP (On/Off)	—	—	▼	—
STARTER RELAY (On/Off)	—	—	▼	—
PNP SW3 MON (On/Off)	—	—	▼	—
DRV CST JUDGE	—	—	▼	—
START RLY MON	—	—	▼	—
NEXT GR POSI	—	—	▼	—
SHIFT MODE	—	—	▼	—
MANU GR POSI	—	—	▼	—
1 POSITION SW (On/Off)	X	—	▼	—
OD CONT SW (On/Off)	X	—	▼	Not mounted but displayed.
HOLD SW (On/Off)	X	—	▼	
BRAKESW (On/Off)	X	—	▼	Stop lamp switch
POWERSHIFT SW (On/Off)	X	—	▼	Not mounted but displayed.
ASCD-OD CUT (On/Off)	—	—	▼	—

Monitored item (Unit)	Monitor Item Selection			Remarks
	ECU INPUT SIGNALS	MAIN SIGNALS	SELECTION FROM ITEM	
ASCD-CRUISE (On/Off)	—	—	▼	—
DS RANGE (On/Off)	X	—	▼	—

DTC WORK SUPPORT

Display Items List

DTC work support item	Description	Check item
1ST GR FUNCTN P0731	Following items for “1st gear function” can be confirmed. • Self-diagnosis status (whether the diagnosis is being performed or not) • Self-diagnostic results (OK or NG)	• Input clutch solenoid valve • Front brake solenoid valve • Direct clutch solenoid valve • High and low reverse clutch solenoid valve • Each clutch • Hydraulic control circuit
2ND GR FUNCTN P0732	Following items for “2nd gear function” can be confirmed. • Self-diagnosis status (whether the diagnosis is being performed or not) • Self-diagnostic results (OK or NG)	
3RD GR FUNCTN P0733	Following items for “3rd gear function” can be confirmed. • Self-diagnosis status (whether the diagnosis is being performed or not) • Self-diagnostic results (OK or NG)	
4TH GR FUNCTN P0734	Following items for “4th gear function” can be confirmed. • Self-diagnosis status (whether the diagnosis is being performed or not) • Self-diagnostic results (OK or NG)	
5TH GR FUNCTN P0735	Following items for “5th gear function” can be confirmed. • Self-diagnosis status (whether the diagnosis is being performed or not) • Self-diagnostic results (OK or NG)	

COMPONENT DIAGNOSIS

U1000 CAN COMM CIRCUIT

Description

INFOID:0000000001672120

CAN (Controller Area Network) is a serial communication line for real-time application. It is an on-vehicle multiplex communication line with high data communication speed and excellent malfunction detection ability. Many electronic control units are equipped onto a vehicle, and each control unit shares information and links with other control units during operation (not independently). In CAN communication, control units are connected with 2 communication lines (CAN-H line, CAN-L line) allowing a high rate of information transmission with less wiring. Each control unit transmits/receives data but selectively reads required data only.

DTC Logic

INFOID:0000000001672121

DTC DETECTION LOGIC

DTC	Item (CONSULT-III screen terms)	A/T CHECK indicator lamp judgment flicker	Diagnostic item is detected when...	Possible cause
U1000	CAN COMM CIRCUIT	17th	TCM is not transmitting or receiving CAN communication signal for 2 seconds or more.	• Harness or connectors (CAN communication line is open or shorted.) • TCM

DTC CONFIRMATION PROCEDURE

NOTE:

If “DTC CONFIRMATION PROCEDURE” has been previously performed, always turn ignition switch OFF. Then wait at least 10 seconds before performing the next test.

1. CHECK DTC DETECTION

With CONSLULT-III

1. Start the engine.
2. Run engine for at least 6 consecutive seconds at idle speed.
3. Perform “SELF-DIAG RESULTS” mode for “TRANSMISSION”.

With GST

Follow the procedure “With CONSULT-III”

Is “U1000 CAN COMM CIRCUIT” detected?

YES >> Go to TM-118, "Diagnosis Procedure".
NO >> Check intermittent incident. Refer to GI-38, "Intermittent Incident".

Diagnosis Procedure

INFOID:0000000001672122

1. CHECK CAN COMMUNICATION CIRCUIT

With CONSULT-III

1. Start the engine.
2. Perform “SELF-DIAG RESULTS” mode for “TRANSMISSION”.

Is “U1000 CAN COMM CIRCUIT” detected?

YES >> Go to LAN section. Refer to LAN-16, "Trouble Diagnosis Flow Chart".
NO >> Check intermittent incident. Refer to GI-38, "Intermittent Incident".

P0615 START SIGNAL

Description

INFOID:0000000001672123

TCM prohibits cranking other than at “P” or “N” position.

DTC Logic

INFOID:0000000001672124

DTC DETECTION LOGIC

DTC	Item (CONSULT-III screen terms)	A/T CHECK indicator lamp judgment flicker	Diagnostic item is detected when...	Possible cause
P0615	STARTER RELAY/CIRC	14th	If this signal is ON other than in “P” or “N” position, this is judged to be a malfunction. (And if it is OFF in “P” or “N” position, this too is judged to be a malfunction.	• Harness or connectors (Starter relay and TCM circuit is open or shorted.) • Starter relay circuit

DTC CONFIRMATION PROCEDURE

NOTE:
If “DTC CONFIRMATION PROCEDURE” has been previously performed, always turn ignition switch OFF. Then wait at least 10 seconds before performing the next test.

1. CHECK DTC DETECTION

With CONSULT-III

1. Shift the selector lever in “P” or “N” position.
2. Turn ignition switch ON and wait for at least 2 seconds.
3. Perform “SELF-DIAG RESULTS” mode for “TRANSMISSION”.

Is “P0615 STARTER RELAY/CIRC” detected?

YES >> Go to TM-119, "Diagnosis Procedure".
NO >> Check intermittent incident. Refer to GI-38, "Intermittent Incident".

Diagnosis Procedure

INFOID:0000000001672125

1. CHECK STARTER RELAY SIGNAL

1. Turn ignition switch ON.
2. Check voltage between IPDM E/R connector terminal and ground.

IPDM E/R connector			Condition	Voltage (Approx.)
Connector	Terminal			
E5	30	Ground	Selector lever in “P” and “N” position.	Battery voltage
			Selector lever in other position.	0 V

Is the inspection result normal?

YES >> Check starter relay circuit. Refer to STR-9, "Wiring Diagram - STARTING SYSTEM -".
NO >> GO TO 2.

2. CHECK HARNESS BETWEEN A/T ASSEMBLY AND IPDM E/R (STEP 1)

1. Turn ignition switch OFF.
2. Disconnect A/T assembly connector and IPDM E/R connector.
3. Check the continuity between A/T assembly vehicle side harness connector terminal and IPDM E/R vehicle side harness connector terminal.

A/T assembly vehicle side harness connector		IPDM E/R vehicle side harness connector		Continuity
Connector	Terminal	Connector	Terminal	
F51	9	E5	30	Existed

Is the inspection result normal?

YES >> GO TO 3.
NO >> Repair or replace damaged parts.

3. CHECK HARNESS BETWEEN A/T ASSEMBLY AND IPDM E/R (STEP 2)

Check the continuity between A/T assembly vehicle side harness connector terminal and ground.

A/T assembly vehicle side harness connector		Ground	Continuity
Connector	Terminal		
F51	9		Not existed

Is the inspection result normal?

YES >> GO TO 4.
NO >> Repair or replace damaged parts.

4. DETECT MALFUNCTIONING ITEM (STEP 1)

Check the following.
- Check terminals of A/T assembly harness connector and IPDM E/R connector for damage.
- Check connector for loose connection.

Is the inspection result normal?

YES >> GO TO 5.
NO >> Repair or replace damaged parts.

5. CHECK TERMINAL CORD ASSEMBLY

1. Remove control valve with TCM. Refer to TM-232, "Exploded View".
2. Disconnect TCM connector.
3. Check continuity between A/T assembly harness connector terminal and TCM connector terminal.

A/T assembly harness connector		TCM connector		Continuity
Connector	Terminal	Connector	Terminal	
F51	9	F151	8	Existed

Is the inspection result normal?

YES >> GO TO 6.
NO >> Repair or replace damaged parts.

6. DETECT MALFUNCTIONING ITEM (STEP 2)

Check the following.
- Check terminals of TCM connector and harness cladding for damage.
- Check connector for loose connection.

Is the inspection result normal?

YES >> Replace the control valve with TCM. Refer to TM-232, "Exploded View"
NO >> Repair or replace damaged parts.

P0700 TCM

Description

INFOID:0000000001672126

The TCM consists of a microcomputer and connectors for signal input and output and for power supply. The TCM controls the A/T.

DTC Logic

INFOID:0000000001672127

DTC DETECTION LOGIC

DTC	Item (CONSULT-III screen terms)	A/T CHECK indicator lamp judgment flicker	Diagnostic item is detected when...	Possible cause
P0700	TCM	—	TCM is malfunctioning.	TCM

DTC CONFIRMATION PROCEDURE

NOTE:
If "DTC CONFIRMATION PROCEDURE" has been previously performed, always turn ignition switch OFF. Then wait at least 10 seconds before performing the next test.

1. CHECK DTC DETECTION

With CONSULT-III

1. Start the engine.
2. Run engine for at least 2 consecutive seconds at idle speed.
3. Perform "SELF-DIAG RESULTS" mode for "TRANSMISSION".

With GST

Follow the procedure "With CONSULT-III".

Is "P0700 TCM" detected?

YES >> Go to TM-121, "Diagnosis Procedure".
NO >> Check intermittent incident. Refer to GI-38, "Intermittent Incident".

Diagnosis Procedure

INFOID:0000000001672128

1. CHECK DTC

With CONSULT-III

1. Turn ignition switch ON.
2. Select "SELF-DIAG RESULTS" mode for "TRANSMISSION".
3. Touch "ERASE".
4. Turn ignition switch OFF and wait for at least 10 seconds.
5. Check the DTC again. Refer to TM-121, "DTC Logic"

Is "P0700 TCM" detected again?

YES >> Replace the control valve with TCM. Refer to TM-232, "Exploded View".
NO >> Check intermittent incident. Refer to GI-38, "Intermittent Incident".

P0705 PARK/NEUTRAL POSITION SWITCH

Description

INFOID:0000000001672129

- The park/neutral position (PNP) switch includes the transmission range switch.
- The transmission range switch detects the selector lever position and transmits a signal to the TCM.

DTC Logic

INFOID:0000000001672130

DTC DETECTION LOGIC

DTC	Item (CONSULT-III screen terms)	A/T CHECK indicator lamp judgment flicker	Diagnostic item is detected when...	Possible cause
P0705	PNP SW/CIRC	9th	• PNP switch 1 – 4 signals input with impossible pattern. • P position is detected from N position without any other position being detected in between.	• Harness or connectors [Park/neutral position (PNP) switches 1, 2, 3, 4 and TCM circuit is open or shorted.] • Park/neutral position (PNP) switches 1, 2, 3 and 4

DTC CONFIRMATION PROCEDURE

CAUTION:
Always drive vehicle at a safe speed.
NOTE:
If "DTC CONFIRMATION PROCEDURE" has been previously performed, always turn ignition switch OFF. Then wait at least 10 seconds before performing the next test.

1. CHECK DTC DETECTION

With CONSULT-III

1. Start the engine.
2. Select "DATA MONITOR".
3. Drive vehicle and maintain the following conditions for least 2 consecutive seconds.

ACCELE POSI : More than 1.0/8

With GST

Follow the procedure "With CONSULT-III".

Is "P0705 PNP SW/CIRC" detected?

YES >> Go to TM-122, "Diagnosis Procedure".
NO >> Check intermittent incident. Refer to GI-38, "Intermittent Incident".

Diagnosis Procedure

INFOID:0000000001672131

1. CHECK TCM POWER SUPPLY AND GROUND CIRCUIT

Check TCM power supply and ground circuit. Refer to TM-163, "Diagnosis Procedure".

Is the inspection result normal?

YES >> GO TO 2.
NO >> Repair or replace damaged parts.

2. CHECK SUB-HARNESS

1. Remove control valve with TCM. Refer to TM-232, "Exploded View".
2. Disconnect park/neutral position switch connector and TCM connector.
3. Check continuity between park/neutral position switch connector terminals and TCM connector terminals.

Park/neutral position switch connector		TCM connector		Continuity
Connector	Terminal	Connector	Terminal	

F154	1	F152	13	Existed
	2		11	
	3		12	
	5		14	

Is the inspection result normal?

YES >> GO TO 3.
NO >> Repair or replace damaged parts.

3. DETECT MALFUNCTIONING ITEM

Check the following.
- Check terminals of park/neutral position switch connector and TCM connector, and harness cladding for damage.
- Check connector for loose connection.

Is the inspection result normal?

YES >> Replace the control valve with TCM. Refer to TM-232, "Exploded View".
NO >> Repair or replace damaged parts.

P0717 TURBINE REVOLUTION SENSOR

Description

INFOID:0000000001672132

The turbine revolution sensor detects input shaft rpm (revolutions per minute). It is located on the input side of the A/T. Monitors revolution of sensor 1 and sensor 2 for non-standard conditions.

DTC Logic

INFOID:0000000001672133

DTC DETECTION LOGIC

DTC	Item (CONSULT-III screen terms)	A/T CHECK indicator lamp judgment flicker	Diagnostic item is detected when...	Possible cause
P0717	TURBINE REV S/CIRC	11th	• TCM does not receive the proper voltage signal from the sensor. • TCM detects an irregularity only at position of 4th gear for turbine revolution sensor 2.	• Harness or connectors (Sensor circuit is open or shorted.) • Turbine revolution sensor 1 and/or 2

DTC CONFIRMATION PROCEDURE

CAUTION:
Always drive vehicle at a safe speed.
NOTE:
If "DTC CONFIRMATION PROCEDURE" has been previously performed, always turn ignition switch OFF. Then wait at least 10 seconds before performing the next test.

1. CHECK DTC DETECTION

With CONSULT-III

1. Start the engine.
2. Select "DATA MONITOR".
3. Drive vehicle and maintain the following conditions for at least 5 consecutive seconds.

VHCL/S SE-A/T	**: 40 km/h (25 MPH) or more**
ACCELE POSI	**: More than 0.5/8**
ENGINE SPEED	**: 1,500 rpm or more**
SLCT LVR POSI	**: "D" position**
GEAR (Turbine revolution sensor 1)	**: "4" or "5" position**
GEAR (Turbine revolution sensor 2)	**: All positions**
Driving location	**: Driving the vehicle uphill (increased engine load) will help maintain the driving conditions required for this test.**

With GST

Follow the procedure "With CONSULT-III".

Is "P0717 TURBINE REV S/CIRC" detected?

YES >> Go to TM-124, "Diagnosis Procedure".
NO >> Check intermittent incident. Refer to GI-38, "Intermittent Incident".

Diagnosis Procedure

INFOID:0000000001672134

1. CHECK TCM POWER SUPPLY AND GROUND CIRCUIT

Check TCM power supply and ground circuit. Refer to TM-163, "Diagnosis Procedure".

Is the inspection result normal?

YES >> Replace the control valve with TCM. Refer to TM-232, "Exploded View".
NO >> Repair or replace damaged parts.

P0720 VEHICLE SPEED SENSOR A/T (REVOLUTION SENSOR)

Description

INFOID:0000000001672135

The revolution sensor detects the revolution of the parking gear and emits a pulse signal. The pulse signal is transmitted to the TCM which converts it into vehicle speed.

DTC Logic

INFOID:0000000001672136

DTC DETECTION LOGIC

DTC	Item (CONSULT-III screen terms)	A/T CHECK indicator lamp judgment flicker	Diagnostic item is detected when...	Possible cause
P0720	VEH SPD SEN/CIR AT	1st	• Signal from vehicle speed sensor A/T (revolution sensor) not input due to cut line or the like. • Unexpected signal input during running. • After ignition switch is turned ON, unexpected signal input from vehicle speed sensor MTR before the vehicle starts moving.	• Harness or connectors (Sensor circuit is open or shorted.) • Revolution sensor • Vehicle speed sensor MTR

DTC COMFIRMATION PROCEDURE

CAUTION:
- **Always drive vehicle at a safe speed.**
- **Be careful not to rev engine into the red zone on the tachometer.**

NOTE:
If "DTC CONFIRMATION PROCEDURE" has been previously performed, always turn ignition switch OFF. Then wait at least 10 seconds before performing the next test.

1. CHECK REVOLUTION SENSOR AND VEHICLE SPEED SENSOR MTR

With CONSULT-III
1. Start the engine.
2. Select "DATA MONITOR".
3. Drive vehicle and check for an increase of "VHCL/S SE-A/T" value in response to "VHCL/S SE-MTR" value.

VHCL/S SE-A/T	**: Approximately matches the speedometer reading.**
VHCL/S SE-MTR	**: Approximately matches the speedometer reading.**

Are "VHCL/S SE-A/T" and "VHCL/S SE-MTR" values correct?

YES >> GO TO 2.
NO >> Go to TM-126, "Diagnosis Procedure".

2. CHECK DTC DETECTION 1

With CONSULT-III
1. Select "DATA MONITOR".
2. Drive vehicle and maintain the following conditions for at least 5 consecutive seconds.

VHCL/S SE-A/T	**: 30 km/h (19 MPH) or more**
ACCELE POSI	**: More than 1.0/8**
SLCT LVR POSI	**: "D" position**
Drive location	**: Driving the vehicle uphill (increased engine load) will help maintain the driving conditions required for this test.**

With GST

Follow the procedure “With CONSULT-III”.

Is “P0720 VEH SPD SEN/CIR AT” detected?

YES >> Go to TM-126, "Diagnosis Procedure".
NO >> GO TO 3.

3. CHECK DTC DETECTION 2

With CONSULT-III

1. Select “DATA MONITOR”.
2. Drive vehicle and maintain the following conditions for at least 5 consecutive seconds.

ACCELE POSI	**: More than 1.0/8**
ENGINE SPEED	**: 3,500 rpm or more**
SLCT LVR POSI	**: “D” position**
Drive location	**: Driving the vehicle uphill (increased engine load) will help maintain the driving conditions required for this test.**

With GST

Follow the procedure “With CONSULT-III”.

Is “P0720 VEH SPD SEN/CIR AT” detected?

YES >> Go to TM-126, "Diagnosis Procedure".
NO >> Check intermittent incident. Refer to GI-38, "Intermittent Incident".

Diagnosis Procedure

INFOID:0000000001672137

1. CHECK TCM POWER SUPPLY AND GROUND CIRCUIT

Check TCM power supply and ground circuit. Refer to TM-163, "Diagnosis Procedure".

Is the inspection result normal?

YES >> GO TO 2.
NO >> Repair or replace damaged parts.

2. CHECK SUB-HARNESS

1. Remove control valve with TCM. Refer to TM-232, "Exploded View".
2. Disconnect park/neutral position switch connector and TCM connector.
3. Check continuity between park/neutral position switch connector terminals and TCM connector terminals.

Park/neutral position switch connector		TCM connector		Continuity
Connector	Terminal	Connector	Terminal	
F154	8	F152	20	Existed
	9		17	
	10		16	

Is the inspection result normal?

YES >> GO TO 3.
NO >> Repair or replace damaged parts.

3. DETECT MALFUNCTIONING ITEM

Check the following.

- Check terminals of park/neutral position switch connector and TCM connector, and harness cladding for damage.
- Check connector for loose connection.

Is the inspection result normal?

YES >> GO TO 4.
NO >> Repair or replace damaged parts.

4. REPLACE THE REVOLUTION SENSOR AND CHECK DTC

1. Replace the revolution sensor. Refer to TM-254, "Exploded View".
2. Perform “DTC CONFIRMATION PROCEDURE”. Refer to TM-125, "DTC Logic".

Is the inspection result normal?

YES >> INSPECTION END
NO >> Replace the control valve with TCM. Refer to TM-232, "Exploded View".

P0725 ENGINE SPEED SIGNAL

Description

INFOID:0000000001672138

The engine speed signal is transmitted from the ECM to the TCM with CAN communication line.

DTC Logic

INFOID:0000000001672139

DTC DETECTION LOGIC

DTC	Item (CONSULT-III screen terms)	A/T CHECK indicator lamp judgment flicker	Diagnostic item is detected when...	Possible cause
P0725	ENGINE SPEED SIG	16th	TCM does not receive the CAN communication signal from the ECM.	Harness or connectors (ECM to TCM circuit is open or shorted.)

DTC CONFIRMATION PROCEDURE

CAUTION:
Always drive vehicle at a safe speed.
NOTE:
If "DTC CONFIRMATION PROCEDURE" has been previously performed, always turn ignition switch OFF. Then wait at least 10 seconds before performing the next test.

1. CHECK DTC DETECTION

With CONSULT-III

1. Start the engine.
2. Select "DATA MONITOR".
3. Drive vehicle and maintain the following conditions for at least 10 consecutive seconds.

VHCL/S SE-A/T	**: 10 km/h (6 MPH) or more**
ACCELE POSI	**: More than 1.0/8**
SLCT LVR POSI	**: "D" position**:

With GST

Follow the procedure "With CONSULT-III".

Is "P0725 ENGINE SPEED SIG" detected?

YES >> Go to TM-128, "Diagnosis Procedure".
NO >> Check intermittent incident. Refer to GI-38, "Intermittent Incident".

Diagnosis Procedure

INFOID:0000000001672140

1. CHECK DTC OF ECM

With CONSULT-III

1. Turn ignition switch ON.
2. Perform "SELF-DIAG RESULTS" mode for "ENGINE".

Is the inspection result normal?

YES >> GO TO 2.
NO >> Check DTC detected item. Refer to EC-120, "CONSULT-III Function".

2. CHECK DTC OF TCM

With CONSULT-III

1. Perform "SELF-DIAG RESULTS" mode for "TRANSMISSION".

Is the inspection result normal?

YES >> GO TO 3.
NO >> Check DTC detected item. Refer to TM-112, "CONSULT-III Function (TRANSMISSION)".

3. CHECK THE IGNITION SIGNAL CIRCUIT

1. Start the engine.

2. Select “DATA MONITOR”.
3. Check for engine speed change corresponding to “ACCELE POSI” while monitoring “ENGINE SPEED”.

Item name	Condition	Value
ENGINE SPEED	Engine running	Closely matches the tachometer reading.
ACCELE POSI	Released accelerator pedal.	0.0/8
	Fully depressed accelerator pedal	8.0/8

Is the inspection result normal?

YES >> GO TO 4.
NO >> Check ignition signal circuit. Refer to EC-498, "Description".

4. CHECK TCM POWER SUPPLY AND GROUND CIRCUIT

Check TCM power supply and ground circuit. Refer to TM-163, "Diagnosis Procedure".

Is the inspection result normal?

YES >> Replace the control valve with TCM. Refer to TM-232, "Exploded View".
NO >> Repair or replace damaged parts.

P0731 A/T 1ST GEAR FUNCTION

Description

INFOID:0000000001672141

This malfunction is detected when the A/T does not shift into 1st gear position as instructed by TCM. This is not only caused by electrical malfunction (circuits open or shorted) but by mechanical malfunction such as control valve sticking, improper solenoid valve operation, etc.

DTC Logic

INFOID:0000000001672142

DTC DETECTION LOGIC

DTC	Item (CONSULT-III screen terms)	A/T CHECK indicator lamp judgment flicker	Diagnostic item is detected when...	Possible cause
P0731	A/T 1ST GR FNCTN	18th	TCM detects any inconsistency in the actual gear ratio.	• Input clutch solenoid valve • Front brake solenoid valve • Direct clutch solenoid valve • High and low reverse clutch solenoid valve • Each clutch • Hydraulic control circuit

DTC CONFIRMATION PROCEDURE

CAUTION:

Always drive vehicle at a safe speed.

NOTE:

If "DTC CONFIRMATION PROCEDURE" has been previously performed, always turn ignition switch OFF. Then wait at least 10 seconds before performing the next test.

1. CHECK ATF TEMPERATURE

With CONSULT-III

1. Start the engine.
2. Select "DATA MONITOR".
3. Check ATF temperature is in the following range.

ATF TEMP 1	**: 20°C – 140°C**

With GST

1. Start the engine.
2. Drive vehicle for approximately 5 minutes in urban areas, GO TO 2.

Is ATF temperature within specified range?

YES >> GO TO 2.
NO >> Drive vehicle to warm ATF or stop engine to cool ATF.

2. CHECK SYMPTOM 1

With CONSULT-III

1. Select "1ST GR FNCTN P0731" of "DTC WORK SUPPORT".
2. Drive vehicle and maintain the following conditions.

MANU MODE SW	**: ON**
GEAR	**: "1" position**
ACCELE POSI	**: 0.6/8 or more**
VEHICLE SPEED	**: 10 km/h (6 MPH) or more**
ENGINE SPEED	**: TURBINE REV – 50 rpm or more**
TURBINE REV	**: 300 rpm or more**

3. Keep the current driving status for at least 5 consecutive seconds if CONSULT-III screen changes from "OUT OF CONDITION" to "TESTING".
   CAUTION:
   If "TESTING" does not appear on CONSULT-III for a long time, select "SELF-DIAG RESULTS". In case a 1st trip DTC other than "P0731" is shown, refer to "SELF-DIAGNOSTIC RESULTS". Refer to TM-112, "CONSULT-III Function (TRANSMISSION)".

With GST

1. Drive vehicle and maintain the following conditions for at least 5 consecutive seconds.

Manual mode switch	**: ON**
Gear position	**: "1" position**
Accelerator opening	**: 0.6/8 or more**
Vehicle speed	**: 10 km/h (6 MPH) or more**

2. Check DTC.

Is "STOP VEHICLE" or "COMPLETED RESULT NG" displayed? / Is "P0731" detected?

YES-1 >> "STOP VEHICLE": GO TO 3.
YES-2 >> "COMPLETED RESULT NG": Go to TM-131, "Diagnosis Procedure".
YES-3 >> "P0731" is detected: Go to TM-131, "Diagnosis Procedure".
NO >> Check intermittent incident. Refer to GI-38, "Intermittent Incident".

3. CHECK SYMPTOM 2

With CONSULT-III

1. Stop vehicle.
2. Drive vehicle in "D" position allowing it to shift from 1st to 5th gear and check shift timing and shift shock.

Is the inspection result normal?

YES >> Check intermittent incident. Refer to GI-38, "Intermittent Incident".
NO >> Confirm malfunction phenomena by "ROAD TEST" to repair malfunctioning part. Refer to TM-222, "Description".

Diagnosis Procedure

INFOID:0000000001672143

1. CHECK TCM POWER SUPPLY AND GROUND CIRCUIT

Check TCM power supply and ground circuit. Refer to TM-163, "Diagnosis Procedure".

Is the inspection result normal?

YES >> GO TO 2.
NO >> Repair or replace damaged parts.

2. REPLACE CONTROL VALVE WITH TCM

1. Replace control valve with TCM. Refer to TM-232, "Exploded View".
2. Perform "DTC CONFIRMATION PROCEDURE". Refer to TM-130, "DTC Logic".

Is the inspection result normal?

YES >> INSPECTION END
NO >> Confirm malfunction phenomena by "ROAD TEST" to repair malfunctioning part. Refer to TM-222, "Description".

P0732 A/T 2ND GEAR FUNCTION

Description

INFOID:0000000001672144

This malfunction is detected when the A/T does not shift into 2nd gear position as instructed by TCM. This is not only caused by electrical malfunction (circuits open or shorted) but by mechanical malfunction such as control valve sticking, improper solenoid valve operation, etc.

DTC Logic

INFOID:0000000001672145

DTC DETECTION LOGIC

DTC	Item (CONSULT-III screen terms)	A/T CHECK indicator lamp judgment flicker	Diagnostic item is detected when...	Possible cause
P0732	A/T 2ND GR FNCTN	19th	TCM detects any inconsistency in the actual gear ratio.	• Input clutch solenoid valve • Front brake solenoid valve • Direct clutch solenoid valve • High and low reverse clutch solenoid valve • Each clutch • Hydraulic control circuit

DTC CONFIRMATION PROCEDURE

CAUTION:

Always drive vehicle at a safe speed.

NOTE:

If "DTC CONFIRMATION PROCEDURE" has been previously performed, always turn ignition switch OFF. Then wait at least 10 seconds before performing the next test.

1. CHECK ATF TEMPERATURE

With CONSULT-III

1. Start the engine.
2. Select "DATA MONITOR".
3. Check ATF temperature is in the following range.

ATF TEMP 1	**: 20°C – 140°C**

With GST

1. Start the engine.
2. Drive vehicle for approximately 5 minutes in urban areas, GO TO 2.

Is ATF temperature within specified range?

YES >> GO TO 2.
NO >> Drive vehicle to warm ATF or stop engine to cool ATF.

2. CHECK SYMPTOM 1

With CONSULT-III

1. Select "2ND GR FNCTN P0732" of "DTC WORK SUPPORT".
2. Drive vehicle and maintain the following conditions.

MANU MODE SW	**: ON**
GEAR	**: "2" position**
ACCELE POSI	**: 0.6/8 or more**
VEHICLE SPEED	**: 10 km/h (6 MPH) or more**
ENGINE SPEED	**: TURBINE REV – 50 rpm or more**
TURBINE REV	**: 300 rpm or more**

3. Keep the current driving status for at least 5 consecutive seconds if CONSULT-III screen changes from "OUT OF CONDITION" to "TESTING".
   CAUTION:
   If "TESTING" does not appear on CONSULT-III for a long time, select "SELF-DIAG RESULTS". In case a 1st trip DTC other than "P0732" is shown, refer to "SELF-DIAGNOSTIC RESULTS". Refer to TM-112, "CONSULT-III Function (TRANSMISSION)".

With GST

1. Drive vehicle and maintain the following conditions for at least 5 consecutive seconds.

Manual mode switch	**: ON**
Gear position	**: "2" position**
Accelerator opening	**: 0.6/8 or more**
Vehicle speed	**: 10 km/h (6 MPH) or more**

2. Check DTC.

Is "STOP VEHICLE" or "COMPLETED RESULT NG" displayed? / Is "P0732" detected?

YES-1 >> "STOP VEHICLE": GO TO 3.
YES-2 >> "COMPLETED RESULT NG": Go to TM-133, "Diagnosis Procedure".
YES-3 >> "P0732" is detected: Go to TM-133, "Diagnosis Procedure".
NO >> Check intermittent incident. Refer to GI-38, "Intermittent Incident".

3. CHECK SYMPTOM 2

With CONSULT-III

1. Stop vehicle.
2. Drive vehicle in "D" position allowing it to shift from 1st to 5th gear and check shift timing and shift shock.

Is the inspection result normal?

YES >> Check intermittent incident. Refer to GI-38, "Intermittent Incident".
NO >> Confirm malfunction phenomena by "ROAD TEST" to repair malfunctioning part. Refer to TM-222, "Description".

Diagnosis Procedure

INFOID:0000000001672146

1. CHECK TCM POWER SUPPLY AND GROUND CIRCUIT

Check TCM power supply and ground circuit. Refer to TM-163, "Diagnosis Procedure".

Is the inspection result normal?

YES >> GO TO 2.
NO >> Repair or replace damaged parts.

2. REPLACE CONTROL VALVE WITH TCM

1. Replace control valve with TCM. Refer to TM-232, "Exploded View".
2. Perform "DTC CONFIRMATION PROCEDURE". Refer to TM-132, "DTC Logic".

Is the inspection result normal?

YES >> INSPECTION END
NO >> Confirm malfunction phenomena by "ROAD TEST" to repair malfunctioning part. Refer to TM-222, "Description".

P0733 A/T 3RD GEAR FUNCTION

Description

INFOID:0000000001672147

This malfunction is detected when the A/T does not shift into 3rd gear position as instructed by TCM. This is not only caused by electrical malfunction (circuits open or shorted) but by mechanical malfunction such as control valve sticking, improper solenoid valve operation, etc.

DTC Logic

INFOID:0000000001672148

DTC DETECTION LOGIC

DTC	Item (CONSULT-III screen terms)	A/T CHECK indicator lamp judgment flicker	Diagnostic item is detected when...	Possible cause
P0733	A/T 3RD GR FNCTN	20th	TCM detects any inconsistency in the actual gear ratio.	• Input clutch solenoid valve • Front brake solenoid valve • Direct clutch solenoid valve • High and low reverse clutch solenoid valve • Each clutch • Hydraulic control circuit

DTC CONFIRMATION PROCEDURE

CAUTION:

Always drive vehicle at a safe speed.

NOTE:

If "DTC CONFIRMATION PROCEDURE" has been previously performed, always turn ignition switch OFF. Then wait at least 10 seconds before performing the next test.

1. CHECK ATF TEMPERATURE

With CONSULT-III

1. Start the engine.
2. Select "DATA MONITOR".
3. Check ATF temperature is in the following range.

ATF TEMP 1	**: 20°C – 140°C**

With GST

1. Start the engine.
2. Drive vehicle for approximately 5 minutes in urban areas, GO TO 2.

Is ATF temperature within specified range?

YES >> GO TO 2.
NO >> Drive vehicle to warm ATF or stop engine to cool ATF.

2. CHECK SYMPTOM 1

With CONSULT-III

1. Select "3RD GR FNCTN P0733" of "DTC WORK SUPPORT".
2. Drive vehicle and maintain the following conditions.

MANU MODE SW	**: ON**
GEAR	**: "3" position**
ACCELE POSI	**: 0.6/8 or more**
VEHICLE SPEED	**: 10 km/h (6 MPH) or more**
ENGINE SPEED	**: TURBINE REV – 50 rpm or more**
TURBINE REV	**: 300 rpm or more**

3. Keep the current driving status for at least 5 consecutive seconds if CONSULT-III screen changes from "OUT OF CONDITION" to "TESTING".
   CAUTION:
   If "TESTING" does not appear on CONSULT-III for a long time, select "SELF-DIAG RESULTS". In case a 1st trip DTC other than "P0733" is shown, refer to "SELF-DIAGNOSTIC RESULTS". Refer to TM-112, "CONSULT-III Function (TRANSMISSION)".

With GST

1. Drive vehicle and maintain the following conditions for at least 5 consecutive seconds.

Manual mode switch	**: ON**
Gear position	**: "3" position**
Accelerator opening	**: 0.6/8 or more**
Vehicle speed	**: 10 km/h (6 MPH) or more**

2. Check DTC.

Is "STOP VEHICLE" or "COMPLETED RESULT NG" displayed? / Is "P0733" detected?

YES-1 >> "STOP VEHICLE": GO TO 3.
YES-2 >> "COMPLETED RESULT NG": Go to TM-135, "Diagnosis Procedure".
YES-3 >> "P0733" is detected: Go to TM-135, "Diagnosis Procedure".
NO >> Check intermittent incident. Refer to GI-38, "Intermittent Incident".

3. CHECK SYMPTOM 2

With CONSULT-III

1. Stop vehicle.
2. Drive vehicle in "D" position allowing it to shift from 1st to 5th gear and check shift timing and shift shock.

Is the inspection result normal?

YES >> Check intermittent incident. Refer to GI-38, "Intermittent Incident".
NO >> Confirm malfunction phenomena by "ROAD TEST" to repair malfunctioning part. Refer to TM-222, "Description".

Diagnosis Procedure

INFOID:0000000001672149

1. CHECK TCM POWER SUPPLY AND GROUND CIRCUIT

Check TCM power supply and ground circuit. Refer to TM-163, "Diagnosis Procedure".

Is the inspection result normal?

YES >> GO TO 2.
NO >> Repair or replace damaged parts.

2. REPLACE CONTROL VALVE WITH TCM

1. Replace control valve with TCM. Refer to TM-232, "Exploded View".
2. Perform "DTC CONFIRMATION PROCEDURE". Refer to TM-134, "DTC Logic".

Is the inspection result normal?

YES >> INSPECTION END
NO >> Confirm malfunction phenomena by "ROAD TEST" to repair malfunctioning part. Refer to TM-222, "Description".

P0734 A/T 4TH GEAR FUNCTION

Description

INFOID:0000000001672150

This malfunction is detected when the A/T does not shift into 4th gear position as instructed by TCM. This is not only caused by electrical malfunction (circuits open or shorted) but by mechanical malfunction such as control valve sticking, improper solenoid valve operation, etc.

DTC Logic

INFOID:0000000001672151

DTC DETECTION LOGIC

DTC	Item (CONSULT-III screen terms)	A/T CHECK indicator lamp judgment flicker	Diagnostic item is detected when...	Possible cause
P0734	A/T 4TH GR FNCTN	21st	TCM detects any inconsistency in the actual gear ratio.	• Input clutch solenoid valve • Front brake solenoid valve • Direct clutch solenoid valve • High and low reverse clutch solenoid valve • Each clutch • Hydraulic control circuit

DTC CONFIRMATION PROCEDURE

CAUTION:

Always drive vehicle at a safe speed.

NOTE:

If "DTC CONFIRMATION PROCEDURE" has been previously performed, always turn ignition switch OFF. Then wait at least 10 seconds before performing the next test.

1. CHECK ATF TEMPERATURE

With CONSULT-III

1. Start the engine.
2. Select "DATA MONITOR".
3. Check ATF temperature is in the following range.

ATF TEMP 1	**: 20°C – 140°C**

With GST

1. Start the engine.
2. Drive vehicle for approximately 5 minutes in urban areas, GO TO 2.

Is ATF temperature within specified range?

YES >> GO TO 2.
NO >> Drive vehicle to warm ATF or stop engine to cool ATF.

2. CHECK SYMPTOM 1

With CONSULT-III

1. Select "4TH GR FNCTN P0734" of "DTC WORK SUPPORT".
2. Drive vehicle and maintain the following conditions.

MANU MODE SW	**: ON**
GEAR	**: "4" position**
ACCELE POSI	**: 0.6/8 or more**
VEHICLE SPEED	**: 10 km/h (6 MPH) or more**
ENGINE SPEED	**: TURBINE REV – 50 rpm or more**
TURBINE REV	**: 300 rpm or more**

3. Keep the current driving status for at least 5 consecutive seconds if CONSULT-III screen changes from "OUT OF CONDITION" to "TESTING".
   CAUTION:
   If "TESTING" does not appear on CONSULT-III for a long time, select "SELF-DIAG RESULTS". In case a 1st trip DTC other than "P0734" is shown, refer to "SELF-DIAGNOSTIC RESULTS". Refer to TM-112, "CONSULT-III Function (TRANSMISSION)".

With GST

1. Drive vehicle and maintain the following conditions for at least 5 consecutive seconds.

Manual mode switch	**: ON**
Gear position	**: "4" position**
Accelerator opening	**: 0.6/8 or more**
Vehicle speed	**: 10 km/h (6 MPH) or more**

2. Check DTC.

Is "STOP VEHICLE" or "COMPLETED RESULT NG" displayed? / Is "P0734" detected?

YES-1 >> "STOP VEHICLE": GO TO 3.
YES-2 >> "COMPLETED RESULT NG": Go to TM-137, "Diagnosis Procedure".
YES-3 >> "P0734" is detected: Go to TM-137, "Diagnosis Procedure".
NO >> Check intermittent incident. Refer to GI-38, "Intermittent Incident".

3. CHECK SYMPTOM 2

With CONSULT-III

1. Stop vehicle.
2. Drive vehicle in "D" position allowing it to shift from 1st to 5th gear and check shift timing and shift shock.

Is the inspection result normal?

YES >> Check intermittent incident. Refer to GI-38, "Intermittent Incident".
NO >> Confirm malfunction phenomena by "ROAD TEST" to repair malfunctioning part. Refer to TM-222, "Description".

Diagnosis Procedure

INFOID:0000000001672152

1. CHECK TCM POWER SUPPLY AND GROUND CIRCUIT

Check TCM power supply and ground circuit. Refer to TM-163, "Diagnosis Procedure".

Is the inspection result normal?

YES >> GO TO 2.
NO >> Repair or replace damaged parts.

2. REPLACE CONTROL VALVE WITH TCM

1. Replace control valve with TCM. Refer to TM-232, "Exploded View".
2. Perform "DTC CONFIRMATION PROCEDURE". Refer to TM-136, "DTC Logic".

Is the inspection result normal?

YES >> INSPECTION END
NO >> Confirm malfunction phenomena by "ROAD TEST" to repair malfunctioning part. Refer to TM-222, "Description".

P0735 A/T 5TH GEAR FUNCTION

Description

INFOID:0000000001672153

This malfunction is detected when the A/T does not shift into 5th gear position as instructed by TCM. This is not only caused by electrical malfunction (circuits open or shorted) but by mechanical malfunction such as control valve sticking, improper solenoid valve operation, etc.

DTC Logic

INFOID:0000000001672154

DTC DETECTION LOGIC

DTC	Item (CONSULT-III screen terms)	A/T CHECK indicator lamp judgment flicker	Diagnostic item is detected when...	Possible cause
P0735	A/T 5TH GR FNCTN	22nd	TCM detects any inconsistency in the actual gear ratio.	• Input clutch solenoid valve • Front brake solenoid valve • Direct clutch solenoid valve • High and low reverse clutch solenoid valve • Each clutch • Hydraulic control circuit

DTC CONFIRMATION PROCEDURE

CAUTION:

Always drive vehicle at a safe speed.

NOTE:

If "DTC CONFIRMATION PROCEDURE" has been previously performed, always turn ignition switch OFF. Then wait at least 10 seconds before performing the next test.

1. CHECK ATF TEMPERATURE

With CONSULT-III

1. Start the engine.
2. Select "DATA MONITOR".
3. Check ATF temperature is in the following range.

ATF TEMP 1	**: 20°C – 140°C**

With GST

1. Start the engine.
2. Drive vehicle for approximately 5 minutes in urban areas, GO TO 2.

Is ATF temperature within specified range?

YES >> GO TO 2.
NO >> Drive vehicle to warm ATF or stop engine to cool ATF.

2. CHECK SYMPTOM 1

With CONSULT-III

1. Select "5TH GR FNCTN P0735" of "DTC WORK SUPPORT".
2. Drive vehicle and maintain the following conditions.

MANU MODE SW	**: ON**
GEAR	**: "5" position**
ACCELE POSI	**: 0.6/8 or more**
VEHICLE SPEED	**: 10 km/h (6 MPH) or more**
ENGINE SPEED	**: TURBINE REV – 50 rpm or more**
TURBINE REV	**: 300 rpm or more**

3. Keep the current driving status for at least 5 consecutive seconds if CONSULT-III screen changes from "OUT OF CONDITION" to "TESTING".
   CAUTION:
   If "TESTING" does not appear on CONSULT-III for a long time, select "SELF-DIAG RESULTS". In case a 1st trip DTC other than "P0735" is shown, refer to "SELF-DIAGNOSTIC RESULTS". Refer to TM-112, "CONSULT-III Function (TRANSMISSION)".

With GST

1. Drive vehicle and maintain the following conditions for at least 5 consecutive seconds.

Manual mode switch	**: ON**
Gear position	**: "5" position**
Accelerator opening	**: 0.6/8 or more**
Vehicle speed	**: 10 km/h (6 MPH) or more**

2. Check DTC.

Is "STOP VEHICLE" or "COMPLETED RESULT NG" displayed? / Is "P0735" detected?

YES-1 >> "STOP VEHICLE": GO TO 3.
YES-2 >> "COMPLETED RESULT NG": Go to TM-139, "Diagnosis Procedure".
YES-3 >> "P0735" is detected: Go to TM-139, "Diagnosis Procedure".
NO >> Check intermittent incident. Refer to GI-38, "Intermittent Incident".

3. CHECK SYMPTOM 2

With CONSULT-III

1. Stop vehicle.
2. Drive vehicle in "D" position allowing it to shift from 1st to 5th gear and check shift timing and shift shock.

Is the inspection result normal?

YES >> Check intermittent incident. Refer to GI-38, "Intermittent Incident".
NO >> Confirm malfunction phenomena by "ROAD TEST" to repair malfunctioning part. Refer to TM-222, "Description".

Diagnosis Procedure

INFOID:0000000001672155

1. CHECK TCM POWER SUPPLY AND GROUND CIRCUIT

Check TCM power supply and ground circuit. Refer to TM-163, "Diagnosis Procedure".

Is the inspection result normal?

YES >> GO TO 2.
NO >> Repair or replace damaged parts.

2. REPLACE CONTROL VALVE WITH TCM

1. Replace control valve with TCM. Refer to TM-232, "Exploded View"
2. Perform "DTC CONFIRMATION PROCEDURE". Refer to TM-138, "DTC Logic".

Is the inspection result normal?

YES >> INSPECTION END.
NO >> Confirm malfunction phenomena by "ROAD TEST" to repair malfunctioning part. Refer to TM-222, "Description".

P0740 TORQUE CONVERTER CLUTCH SOLENOID VALVE

Description

INFOID:0000000001672156

- The torque converter clutch solenoid valve is activated, with the gear in D3, D4, D5, M2, M3, M4 and M5 by the TCM in response to signals transmitted from the vehicle speed sensor and accelerator pedal position sensor (throttle position sensor). Torque converter clutch piston operation will then be controlled.
- Lock-up operation, however, is prohibited when A/T fluid temperature is too low.
- When the accelerator pedal is depressed (less than 1.0/8) in lock-up condition, the engine speed should not change abruptly. If there is a big jump in engine speed, there is no lock-up.

DTC Logic

INFOID:0000000001672157

DTC DETECTION LOGIC

DTC	Item (CONSULT-III screen terms)	A/T CHECK indicator lamp judgment flicker	Diagnostic item is detected when...	Possible cause
P0740	TCC SOLENOID/CIRC	3rd	Normal voltage not applied to solenoid due to cut line, short, or the like.	• Harness or connectors (Solenoid circuit is open or shorted.) • Torque converter clutch solenoid valve

DTC CONFIRMATION PROCEDURE

CAUTION:
Always drive vehicle at a safe speed.
NOTE:
If "DTC CONFIRMATION PROCEDURE" has been previously performed, always turn ignition switch OFF. Then wait at least 10 seconds before performing the next test.

1. CHECK DTC DETECTION

With CONSULT-III

1. Start the engine.
2. Select "DATA MONITOR".
3. Drive vehicle and maintain the following conditions for at least 5 consecutive seconds.

VHCL/S SE-A/T	**: 80 km/h (50 MPH) or more**
ACCELE POSI	**: 0.5/8 – 1.0/8**
SLCT LVR POSI	**: "D" position**
Drive location	**: Driving the vehicle uphill (increased engine load) will help maintain the driving conditions required for this test.**

With GST

Follow the procedure "With CONSULT-III".

Is "P0740 TCC SOLENOID/CIRC" detected?

YES >> Go to TM-140, "Diagnosis Procedure".
NO >> Check intermittent incident. Refer to GI-38, "Intermittent Incident".

Diagnosis Procedure

INFOID:0000000001672158

1. CHECK TCM POWER SUPPLY AND GROUND CIRCUIT

Check TCM power supply and ground circuit. Refer to TM-163, "Diagnosis Procedure".

Is the inspection result normal?

YES >> Replace the control valve with TCM. Refer to TM-232, "Exploded View".
NO >> Repair or replace damaged parts.

P0744 A/T TCC S/V FUNCTION (LOCK -UP)

Description

INFOID:0000000001672159

This malfunction is detected when the A/T does not shift into 5th gear position or the torque converter clutch does not lock-up as instructed by the TCM. This is not only caused by electrical malfunction (circuits open or shorted) but also by mechanical malfunction such as control valve sticking, improper solenoid valve operation, etc.

DTC Logic

INFOID:0000000001672160

DTC DETECTION LOGIC

DTC	Item (CONSULT-III screen terms)	A/T CHECK indicator lamp judgment flicker	Diagnostic item is detected when...	Possible cause
P0744	A/T TCC S/V FUNTN	3rd	• A/T cannot perform lock-up even if electrical circuit is good. • TCM detects as irregular by comparing difference value with slip rotation.	• Harness or connectors (Sensor circuit is open or shorted.) • Torque converter clutch solenoid valve • Hydraulic control circuit

DTC CONFIRMATION PROCEDURE

CAUTION:
Always drive vehicle at a safe speed.
NOTE:
If "DTC CONFIRMATION PROCEDURE" has been previously performed, always turn ignition switch OFF. Then wait at least 10 seconds before performing the next test.

1. CHECK DTC DETECTION

With CONSULT-III

1. Start the engine.
2. Select "DATA MONITOR".
3. Drive vehicle and maintain the following conditions for at least 30 consecutive seconds.

ACCELE POSI	**: More than 1.0/8**
SLCT LVR POSI	**: "D" position**
TCC SOLENOID	**: 0.4 – 0.6 A**
VEHICLE SPEED	**: 80 km/h (50 MPH) or more**
Driving location	**: Driving the vehicle uphill (increased engine load) will help maintain the driving conditions required for this test.**

With GST

Follow the procedure "With CONSULT-III".

Is "P0744 A/T TCC S/V FUNTN" detected?

YES >> Go to TM-141, "Diagnosis Procedure".
NO >> Check intermittent incident. Refer to GI-38, "Intermittent Incident".

Diagnosis Procedure

INFOID:0000000001672161

1. CHECK TCM POWER SUPPLY AND GROUND CIRCUIT

Check TCM power supply and ground circuit. Refer to TM-163, "Diagnosis Procedure".

Is the inspection result normal?

OK >> Replace the control valve with TCM. Refer to TM-232, "Exploded View".
NG >> Repair or replace damaged parts.

P0745 LINE PRESSURE SOLENOID VALVE

Description

INFOID:0000000001672162

The line pressure solenoid valve regulates the oil pump discharge pressure to suit the driving condition in response to a signal transmitted from the TCM.

DTC Logic

INFOID:0000000001672163

DTC DETECTION LOGIC

DTC	Item (CONSULT-III screen terms)	A/T CHECK indicator lamp judgment flicker	Diagnostic item is detected when...	Possible cause
P0745	L/PRESS COL/CIRC	4th	• Normal voltage not applied to solenoid due to cut line, short, or the like. • TCM detects as irregular by comparing target value with monitor value.	• Harness or connectors (Sensor circuit is open or shorted.) • Line pressure solenoid valve

DTC CONFIRMATION PROCEDURE

NOTE:
If "DTC CONFIRMATION PROCEDURE" has been previously performed, always turn ignition switch OFF. Then wait at least 10 seconds before performing the next test.

1. CHECK DTC DETECTION

With CONSULT-III

1. Start the engine and wait for at least 5 seconds.
2. Perform "SELF-DIAG RESULTS" mode for "TRANSMISSION".

With GST

Follow the procedure "With CONSULT-III".

Is "P0745 L/PRESS SOL/CIRC" detected?

YES >> Go to TM-142, "Diagnosis Procedure".
NO >> Check intermittent incident. Refer to GI-38, "Intermittent Incident".

Diagnosis Procedure

INFOID:0000000001672164

1. CHECK TCM POWER SUPPLY AND GROUND CIRCUIT

Check TCM power supply and ground circuit. Refer to TM-163, "Diagnosis Procedure".

Is the inspection result normal?

YES >> Replace the control valve with TCM. Refer to TM-232, "Exploded View".
NO >> Repair or replace damaged parts.

P1705 THROTTLE POSITION SENSOR

Description

INFOID:0000000001672165

Electric throttle control actuator consists of throttle control motor, accelerator pedal position sensor, throttle position sensor, etc. The actuator transmits a signal to the ECM, and ECM transmits signals to TCM with CAN communication.

DTC Logic

INFOID:0000000001672166

DTC DETECTION LOGIC

DTC	Item (CONSULT-III screen terms)	A/T CHECK indicator lamp judgment flicker	Diagnostic item is detected when...	Possible cause
P1705	TP SEN/CIRC A/T	15th	TCM does not receive the proper accelerator pedal position signals (input by CAN communication) from ECM.	Harness or connectors (Sensor circuit is open or shorted.)

DTC CONFIRMATION PROCEDURE

NOTE:
If "DTC CONFIRMATION PROCEDURE" has been previously performed, always turn ignition switch OFF. Then wait at least 10 seconds before performing the next test.

1. CHECK DTC DETECTION

With CONSULT-III
1. Start the engine and let it idle for 1 second.
2. Perform "SELF-DIAG RESULTS" mode for "TRANSMISSION".

Is "P1705 TP SEN/CIRC A/T" detected?

YES >> Go to TM-143, "Diagnosis Procedure".
NO >> Check intermittent incident. Refer to GI-38, "Intermittent Incident".

Diagnosis Procedure

INFOID:0000000001672167

1. CHECK DTC OF ECM

With CONSULT-III
1. Turn ignition switch ON.
2. Perform "SELF-DIAG RESULTS" mode for "ENGINE".

Is any DTC detected?

YES >> GO TO 2.
NO >> Check DTC detected item. Refer to EC-120, "CONSULT-III Function".

2. CHECK DTC OF TCM

With CONSULT-III
Perform "SELF-DIAG RESULTS" mode for "TRANSMISSION".

Is any DTC detected?

YES >> GO TO 3.
NO >> Check DTC detected item. Refer to TM-112, "CONSULT-III Function (TRANSMISSION)".

3. CHECK TCM POWER SUPPLY AND GROUND CIRCUIT

Check TCM power supply and ground circuit. Refer to TM-163, "Diagnosis Procedure".

Is the inspection result normal?

YES >> Replace the control valve with TCM. Refer to TM-232, "Exploded View".
NO >> Repair or replace damaged parts.

P1710 A/T FLUID TEMPERATURE SENSOR

Description

INFOID:0000000001672168

The A/T fluid temperature sensor detects the A/T fluid temperature and transmits a signal to the TCM.

DTC Logic

INFOID:0000000001672169

DTC DETECTION LOGIC

DTC	Item (CONSULT-III screen terms)	A/T CHECK indicator lamp judgment flicker	Diagnostic item is detected when...	Possible cause
P1710	ATF TEMP SEN/CIRC	10th	While running, the A/T fluid temperature sensor signal voltage is excessively high or low.	• Harness or connectors (Sensor circuit is open or shorted.) • A/T fluid temperature sensors 1 and/or 2

DTC CONFIRMATION PROCEDURE

CAUTION:
Always drive vehicle at a safe speed.
NOTE:
If "DTC CONFIRMATION PROCEDURE" has been previously performed, always turn ignition switch OFF. Then wait at least 10 seconds before performing the next test.

1. CHECK DTC DETECTION

With CONSULT-III

1. Start the engine.
2. Select "DATA MONITOR".
3. Drive vehicle and maintain the following conditions for at least 10 minutes (total). (It is not necessary to maintain continuously.)

VHCL/S SE-A/T	**: 10 km/h (6 MPH) or more**
ACCELE POSI	**: More than 1.0/8**
SLCT LVR POSI	**: "D" position**

With GST

Follow the procedure "With CONSULT-III".

Is "P1710 ATF TEMP SEN/CIRC" detected?

YES >> Go to TM-144, "Diagnosis Procedure".
NO >> Check intermittent incident. Refer to GI-38, "Intermittent Incident".

Diagnosis Procedure

INFOID:0000000001672170

1. CHECK A/T FLUID TEMPERATURE SENSOR 1 SIGNAL

With CONSULT-III

1. Start the engine.
2. Select "DATA MONITOR".
3. Check "ATF TEMP SE 1" and "ATF TEMP SE 2" values.

Item name	Condition °C (°F)	Value (Approx.)
ATF TEMP SE 1	0 (32) – 20 (68) – 80 (176)	3.3 – 2.7 – 0.9 V
ATF TEMP SE 2	0 (32) – 20 (68) – 80 (176)	3.3 – 2.5 – 0.7 V

Which item is abnormal?

ATF TEMP SE 1>>GO TO 2.
ATF TEMP SE 2>>GO TO 5.

2. CHECK A/T FLUID TEMPERATURE SENSOR 1

1. Remove control valve with TCM. Refer to TM-232, "Exploded View".
2. Disconnect park/neutral position switch connector.
3. Check A/T fluid temperature sensor 1. Refer to TM-146, "Component Inspection (A/T fluid temperature sensor 1)".

Is the inspection result normal?

YES >> GO TO 3.
NO >> Repair or replace damaged parts. Refer to TM-232, "Exploded View".

3. CHECK SUB-HARNESS

1. Disconnect TCM connector.
2. Check continuity between park/neutral position switch connector terminals and TCM connector terminals.

Park/neutral position switch connector		TCM connector		Continuity
Connector	Terminal	Connector	Terminal	
F154	6	F152	19	Existed
	7		18	Existed

Is the inspection result normal?

YES >> GO TO 4.
NO >> Repair or replace damaged parts.

4. DETECT MALFUNCTIONING ITEM

Check the following.
- Check terminals of park/neutral position switch connector and TCM connector, and harness cladding for damage.
- Check connector for loose connection.

Is the inspection result normal?

YES >> GO TO 8.
NO >> Repair or replace damaged parts.

5. CHECK A/T FLUID TEMPERATURE SENSOR 2

1. Remove A/T fluid temperature sensor 2. Refer to TM-241, "Exploded View".
2. Check A/T fluid temperature sensor 2. Refer to TM-146, "Component Inspection (A/T fluid temperature sensor 2)".

Is the inspection result normal?

YES >> GO TO 6.
NO >> Repair or replace damaged parts. Refer to TM-241, "Exploded View".

6. CHECK TERMINAL CORD ASSEMBLY

1. Remove control valve with TCM. Refer to TM-232, "Exploded View".
2. Disconnect TCM connector.
3. Check continuity between A/T fluid temperature sensor 2 connector terminals and TCM connector terminals.

A/T fluid temperature sensor 2 connector		TCM connector		Continuity
Connector	Terminal	Connector	Terminal	
F156	1	F151	3	Existed
	2		5	Existed

Is the inspection result normal?

YES >> GO TO 7.
NO >> Replace open circuit or short to ground and short to power in harness or connectors.

7. DETECT MALFUNCTIONING ITEM

Check the following.
- Check terminals of A/T fluid temperature sensor 2 connector and TCM connector, and harness cladding for damage.
- Check connector for loose connection.

Is the inspection result normal?

YES >> GO TO 8.
NO >> Repair or replace damaged parts.

8. CHECK TCM POWER SUPPLY AND GROUND CIRCUIT

Check TCM power supply and ground circuit. Refer to TM-163, "Diagnosis Procedure".

Is the inspection result normal?

YES >> Replace the control valve with TCM. Refer to TM-232, "Exploded View".
NO >> Repair or replace damaged parts.

Component Inspection (A/T fluid temperature sensor 1)

INFOID:0000000001672171

1. CHECK A/T FLUID TEMPERATURE SENSOR 1

Check resistance between park/neutral position switch connector terminals.

Park/neutral position switch connector			Temperature °C (°F)	Resistance (Approx.)
Connector	Terminal			
F154	6	7	0 (32)	15 kΩ
			20 (68)	6.5 kΩ
			80 (176)	0.9 kΩ

Is the inspection result normal?

YES >> INSPECTION END
NO >> Replace control valve with TCM. Refer to TM-232, "Exploded View".

Component Inspection (A/T fluid temperature sensor 2)

INFOID:0000000001672172

1. CHECK A/T FLUID TEMPERATURE SENSOR 2

Check resistance between A/T fluid temperature sensor 2 connector terminals.

A/T fluid temperature sensor 2 connector			Temperature °C (°F)	Resistance (Approx.)
Connector	Terminal			
F156	1	2	0 (32)	10 kΩ
			20 (68)	4 kΩ
			80 (176)	0.5 kΩ

Is the inspection result normal?

YES >> INSPECTION END
NO >> Replace the A/T fluid temperature sensor 2. Refer to TM-241, "Exploded View".

P1721 VEHICLE SPEED SENSOR MTR

Description

INFOID:0000000001672173

The vehicle speed sensor·MTR signal is transmitted from unified meter and A/C amp. to TCM by CAN communication line. The signal functions as an auxiliary device to the revolution sensor when it is malfunctioning. The TCM will then use the vehicle speed sensor·MTR signal.

DTC Logic

INFOID:0000000001672174

DTC DETECTION LOGIC

DTC	Item (CONSULT-III screen terms)	A/T CHECK indicator lamp judgment flicker	Diagnostic item is detected when...	Possible cause
P1721	VEH SPD SE/CIR-MTR	—	• Signal (CAN communication) from vehicle speed sensor MTR not input due to cut line or the like. • Unexpected signal input during running.	Harness or connectors (Sensor circuit is open or shorted.)

DTC CONFIRMATION PROCEDURE

CAUTION:
Always drive vehicle at a safe speed.
NOTE:
If "DTC CONFIRMATION PROCEDURE" has been previously performed, always turn ignition switch OFF. Then wait at least 10 seconds before performing the next test.

1. CHECK DTC DETECTION

With CONSULT-III

1. Start the engine.
2. Select "DATA MONITOR".
3. Drive vehicle and maintain the following conditions for at least 5 consecutive seconds.

VHCL/S SE-MTR	**: 30 km/h (19 MPH) or more**
ACCELE POSI	**: 1.0/8 or less**

Is "P1721 VEH SPD SE/CIR-MTR" detected?

YES >> Go to TM-147, "Diagnosis Procedure".
NO >> Check intermittent incident. Refer to GI-38, "Intermittent Incident".

Diagnosis Procedure

INFOID:0000000001672175

1. CHECK DTC OF UNIFIED METER AND A/C AMP.

Perform "SELF-DIAG RESULTS" mode for "METER/M&A".

Is the inspection result normal?

YES >> GO TO 2.
NO >> Check DTC detected item. Refer to MWI-37, "CONSULT-III Function (METER/M&A)".

2. CHECK TCM POWER SUPPLY AND GROUND CIRCUIT

Check TCM power supply and ground circuit. Refer to TM-163, "Diagnosis Procedure".

Is the inspection result normal?

YES >> Replace the control valve with TCM. Refer to TM-232, "Exploded View".
NO >> Repair or replace damaged parts.

P1730 A/T INTERLOCK

Description

INFOID:0000000001672176

Fail-safe function to detect interlock conditions.

DTC Logic

INFOID:0000000001672177

DTC DETECTION LOGIC

DTC	Item (CONSULT-III screen terms)	A/T CHECK indicator lamp judgment flicker	Diagnostic item is detected when...	Possible cause
P1730	A/T INTERLOCK	12th	Except during shift change, the gear position and ATF pressure switch states are monitored and comparative judgment made.	• Harness or connectors (Solenoid and switch circuit is open or shorted.) • Low coast brake solenoid valve • ATF pressure switch 2

NOTE:
When the vehicle is driven fixed in 2nd gear, a turbine revolution sensor malfunction is displayed, but this is not a turbine revolution sensor malfunction.

DTC CONFIRMATION PROCEDURE

NOTE:
If "DTC CONFIRMATION PROCEDURE" has been previously performed, always turn ignition switch OFF. Then wait at least 10 seconds before performing the next test.

1. CHECK DTC DETECTION

With CONSULT-III

1. Start the engine.
2. Select "DATA MONITOR".
3. Drive vehicle and maintain the following conditions for at least 2 consecutive seconds.

SLCT LVR POSI : "D" position

With GST

Follow the procedure "With CONSULT-III".

Is "P1730 A/T INTERLOCK" detected?

YES >> Go to TM-148, "Diagnosis Procedure".
NO >> Check intermittent incident. Refer to GI-38, "Intermittent Incident".

Judgment of A/T Interlock

INFOID:0000000001672178

Refer to TM-184, "Fail-Safe".

Diagnosis Procedure

INFOID:0000000001672179

1. CHECK TCM POWER SUPPLY AND GROUND CIRCUIT

Check TCM power supply and ground circuit. Refer to TM-163, "Diagnosis Procedure".

Is the inspection result normal?

YES >> Replace the control valve with TCM. Refer to TM-232, "Exploded View".
NO >> Repair or replace damaged parts.

P1731 A/T 1ST ENGINE BRAKING

Description

INFOID:0000000001672180

Fail-safe function to prevent sudden decrease in speed by engine brake other than at M1 position.

DTC Logic

INFOID:0000000001672181

DTC DETECTION LOGIC

DTC	Item (CONSULT-III screen terms)	A/T CHECK indicator lamp judgment flicker	Diagnostic item is detected when...	Possible cause
P1731	A/T 1ST E/BRAKING	13th	ATF pressure switch 2 and solenoid current is monitor and if a pattern is detected having engine braking 1st gear other than in the M1 position, a malfunction is detected.	• Harness or connectors (Sensor circuit is open or shorted.) • Low coast brake solenoid valve • ATF pressure switch 2

DTC CONFIRMATION PROCEDURE

NOTE:
If "DTC CONFIRMATION PROCEDURE" has been previously preformed, always turn ignition switch OFF. Then wait at least 10 seconds before performing the next test.

1. CHECK DTC DETECTION

With CONSULT-III

1. Start the engine.
2. Select "DATA MONITOR".
3. Drive vehicle and maintain the following conditions for at least 2 consecutive seconds.

ENGINE SPEED	**: 1,200 rpm**
GEAR	**: "1" position**
MANU MODE SW	**: ON**

Is "P1731 A/T 1ST E/BRAKING" detected?

YES >> Go to TM-149, "Diagnosis Procedure".
NO >> Check intermittent incident. Refer to GI-38, "Intermittent Incident".

Diagnosis Procedure

INFOID:0000000001672182

1. CHECK TCM POWER SUPPLY AND GROUND CIRCUIT

Check TCM power supply and ground circuit. Refer to TM-163, "Diagnosis Procedure".

Is the inspection result normal?

YES >> Replace the control valve with TCM. Refer to TM-232, "Exploded View".
NO >> Repair or replace damaged parts.

P1752 INPUT CLUTCH SOLENOID VALVE

Description

INFOID:0000000001672183

- The Input clutch solenoid valve is controlled by the TCM in response to signals transmitted from the PNP switch, vehicle speed sensor and accelerator pedal position sensor (throttle position sensor). Gears will then be shifted to the optimum position.
- The Input clutch solenoid valve controls the input clutch control valve in response to a signal transmitted from the TCM.

DTC Logic

INFOID:0000000001672184

DTC DETECTION LOGIC

DTC	Item (CONSULT-III screen terms)	A/T CHECK indicator lamp judgment flicker	Diagnostic item is detected when...	Possible cause
P1752	I/C SOLENOID/CIRC	5th	• Normal voltage not applied to solenoid due to cut line, short, or the like. • TCM detects as irregular by comparing target value with monitor value.	• Harness or connectors (Solenoid circuit is open or shorted.) • Input clutch solenoid valve

DTC CONFIRMATION PROCEDURE

CAUTION:

Always drive vehicle at a safe speed.

NOTE:

If "DTC CONFIRMATION PROCEDURE" has been previously performed, always turn ignition switch OFF. Then wait at least 10 seconds before performing the next test.

1. CHECK DTC DETECTION

With CONSULT-III

1. Start the engine.
2. Select "DATA MONITOR".
3. Drive vehicle and maintain the following conditions for at least 5 consecutive seconds.

ACCELE POSI	**: 1.5/8 – 2.0/8**
GEAR	**: "3"⇒"4" (I/C ON/OFF)**
SLCT LVR POSI	**: "D" position**
Driving location	**: Driving the vehicle uphill (increased engine load) will help maintain the driving conditions required for this test.**

With GST

Follow the procedure "With CONSULT-III".

Is "P1752 I/C SOLENOID/CIRC" detected?

YES >> Go to TM-150, "Diagnosis Procedure".
NO >> Check intermittent incident. Refer to GI-38, "Intermittent Incident".

Diagnosis Procedure

INFOID:0000000001672185

1. CHECK TCM POWER SUPPLY AND GROUND CIRCUIT

Check TCM power supply and ground circuit. Refer to TM-163, "Diagnosis Procedure".

Is the inspection result normal?

YES >> Replace the control valve with TCM. Refer to TM-232, "Exploded View".
NO >> Repair or replace damaged parts.

P1757 FRONT BRAKE SOLENOID VALVE

Description

INFOID:0000000001672186

- The front brake solenoid valve is controlled by the TCM in response to signals transmitted from the PNP switch, vehicle speed sensor and accelerator pedal position sensor (throttle position sensor). Gears will then be shifted to the optimum position.
- The front brake solenoid valve controls the front brake control valve in response to a signal transmitted from the TCM.

DTC Logic

INFOID:0000000001672187

DTC DETECTION LOGIC

DTC	Item (CONSULT-III screen terms)	A/T CHECK indicator lamp judgment flicker	Diagnostic item is detected when...	Possible cause
P1757	FR/B SOLENOID/CIRC	6th	• Normal voltage not applied to solenoid due to cut line, short, or the like. • TCM detects as irregular by comparing target value with monitor value.	• Harness or connectors (Solenoid circuit is open or shorted.) • Front brake solenoid valve

DTC CONFIRMATION PROCEDURE

CAUTION:

Always drive vehicle at a safe speed.

NOTE:

If "DTC CONFIRMATION PROCEDURE" has been previously performed, always turn ignition switch OFF. Then wait at least 10 seconds before performing the next test.

1. CHECK DTC DETECTION

With CONSULT-III

1. Start the engine.
2. Select "DATA MONITOR".
3. Drive vehicle and maintain the following conditions for at least 5 consecutive seconds.

ACCELE POSI	**: 1.5/8 – 2.0/8**
GEAR	**: "3"⇒"4" (FR/B ON/OFF)**
SLCT LVR POSI	**: "D" position**
Drive location	**: Driving the vehicle uphill (increased engine load) will help maintain the driving conditions required for this test.**

With GST

Follow the procedure "With CONSULT-III".

Is "P1757 FR/B SOLENOID/CIRC" detected?

YES >> Go to TM-151, "Diagnosis Procedure".
NO >> Check intermittent incident. Refer to GI-38, "Intermittent Incident".

Diagnosis Procedure

INFOID:0000000001672188

1. CHECK TCM POWER SUPPLY AND GROUND CIRCUIT

Check TCM power supply and ground circuit. Refer to TM-163, "Diagnosis Procedure".

Is the inspection result normal?

YES >> Replace the control valve with TCM. Refer to TM-232, "Exploded View".
NO >> Repair or replace damaged parts.

P1762 DIRECT CLUTCH SOLENOID VALVE

Description

INFOID:0000000001672189

- The direct clutch solenoid valve is controlled by the TCM in response to signals transmitted from the PNP switch, vehicle speed sensor and accelerator pedal position sensor (throttle position sensor). Gears will then be shifted to the optimum position.
- The direct clutch solenoid valve controls the direct clutch control valve in response to a signal transmitted from the TCM.

DTC Logic

INFOID:0000000001672190

DTC DETECTION LOGIC

DTC	Item (CONSULT-III screen terms)	A/T CHECK indicator lamp judgment flicker	Diagnostic item is detected when...	Possible cause
P1762	D/C SOLENOID/CIRC	2nd	• Normal voltage not applied to solenoid due to cut line, short, or the like. • TCM detects as irregular by comparing target value with monitor value.	• Harness or connectors (Solenoid circuit is open or shorted.) • Direct clutch solenoid valve

DTC CONFIRMATION PROCEDURE

CAUTION:

Always drive vehicle at a safe speed.

NOTE:

If "DTC CONFIRMATION PROCEDURE" has been previously performed, always turn ignition switch OFF. Then wait at least 10 seconds before performing the next test.

1. CHECK DTC DETECTION

With CONSUTL-III

1. Start the engine.
2. Select "DATA MONITOR".
3. Drive vehicle and maintain the following conditions for at least 5 consecutive seconds.

ACCELE POSI	**: 1.5/8 – 2.0/8**
GEAR	**: "1"⇒"2" (D/C ON/OFF)**
SLCT LVR POSI	**: "D" position**
Driving location	**: Driving the vehicle uphill (increased engine load) will help maintain the driving conditions required for this test.**

With GST

Follow the procedure "With CONSULT-III".

Is "P1762 D/C SOLENOID/CIRC" detected?

YES >> Go to TM-152, "Diagnosis Procedure".
NO >> Check intermittent incident. Refer to GI-38, "Intermittent Incident".

Diagnosis Procedure

INFOID:0000000001672191

1. CHECK TCM POWER SUPPLY AND GROUND CIRCUIT

Check TCM power supply and ground circuit. Refer to TM-163, "Diagnosis Procedure".

Is the inspection result normal?

YES >> Replace the control valve with TCM. Refer to TM-232, "Exploded View".
NO >> Repair or replace damaged parts.

P1767 HIGH AND LOW REVERSE CLUTCH SOLENOID VALVE

Description

INFOID:0000000001672192

- The high and low reverse clutch solenoid valve is controlled by the TCM in response to signals transmitted from the PNP switch, vehicle speed sensor and accelerator pedal position sensor (throttle position sensor). Gears will then be shifted to the optimum position.
- The high and low reverse clutch solenoid valve controls the high and low reverse clutch control valve in response to a signal transmitted from the TCM.

DTC Logic

INFOID:0000000001672193

DTC DETECTION LOGIC

DTC	Item (CONSULT-III screen terms)	A/T CHECK indicator lamp judgment flicker	Diagnostic item is detected when...	Possible cause
P1767	HLR/C SOL/CIRC	8th	• Normal voltage not applied to solenoid due to cut line, short, or the like. • TCM detects as irregular by comparing target value with monitor value.	• Harness or connectors (Solenoid circuit is open or shorted.) • High and low reverse clutch solenoid valve

DTC CONFIRMATION PROCEDURE

CAUTION:

Always drive vehicle at a safe speed.

NOTE:

If "DTC CONFIRMATION PROCEDURE" has been previously performed, always turn ignition switch OFF. Then wait at least 10 seconds before performing the next test.

1. CHECK DTC DETECTION

With CONSULT-III

1. Start the engine.
2. Select "DATA MONITOR".
3. Drive vehicle and maintain the following conditions for at least 5 consecutive seconds.

ACCELE POSI	**: 1.5/8 – 2.0/8**
GEAR	**: "2"⇒"3" (HLR/C ON/OFF)**
SLCT LVR POSI	**: "D" position**
Driving location	**: Driving the vehicle uphill (increased engine load) will help maintain the driving conditions required for this test.**

With GST

Follow the procedure "With CONSULT-III".

Is "P1767 HLR/C SOL/CIRC" detected?

YES >> Go to TM-153, "Diagnosis Procedure".
NO >> Check intermittent incident. Refer to GI-38, "Intermittent Incident".

Diagnosis Procedure

INFOID:0000000001672194

1. CHECK TCM POWER SUPPLY AND GROUND CIRCUIT

Check TCM power supply and ground circuit. Refer to TM-163, "Diagnosis Procedure".

Is the inspection result normal?

YES >> Replace the control valve with TCM. Refer to TM-232, "Exploded View".
NO >> Repair or replace damaged parts.

P1772 LOW COAST BRAKE SOLENOID VALVE

Description

INFOID:0000000001672195

- The low coast brake solenoid valve is turned ON or OFF by the TCM in response to signals transmitted from the PNP switch, vehicle speed sensor and accelerator pedal position sensor (throttle position sensor). Gears will then be shifted to the optimum position.
- The low coast brake solenoid valve controls the low coast brake switching valve in response to a signal transmitted from the TCM.

DTC Logic

INFOID:0000000001672196

DTC DETECTION LOGIC

DTC	Item (CONSULT-III screen terms)	A/T CHECK indicator lamp judgment flicker	Diagnostic item is detected when...	Possible cause
P1772	LC/B SOLENOID/CIRC	7th	Normal voltage not applied to solenoid due to cut line, short, or the like.	• Harness or connectors (Solenoid circuit is open or shorted.) • Low coast brake solenoid valve

DTC CONFIRMATION PROCEDURE

CAUTION:

Always drive vehicle at a safe speed.

NOTE:

If "DTC CONFIRMATION PROCEDURE" has been previously performed, always turn ignition switch OFF. Then wait at least 10 seconds before performing the next test.

1. CHECK DTC DETECTION

With CONSULT-III

1. Start the engine.
2. Select "DATA MONITOR".
3. Drive vehicle and maintain the following conditions for at least 5 consecutive seconds.

GEAR	**: "1" or "2" (LC/B ON/OFF)**
MANU MODE SW	**: ON**

With GST

Follow the procedure "With CONSULT-III".

Is "P1772 LC/B SOLENOID/CIRC" detected?

YES >> Go to TM-154, "Diagnosis Procedure".
NO >> Check intermittent incident. Refer to GI-38, "Intermittent Incident".

Diagnosis Procedure

INFOID:0000000001672197

1. CHECK TCM POWER SUPPLY AND GROUND CIRCUIT

Check TCM power supply and ground circuit. Refer to TM-163, "Diagnosis Procedure".

Is the inspection result normal?

YES >> Replace the control valve with TCM. Refer to TM-232, "Exploded View".
NO >> Repair or replace damaged parts.

P1774 LOW COAST BRAKE SOLENOID VALVE FUNCTION

Description

INFOID:0000000001672198

- Low coast brake solenoid valve is turned ON or OFF by the TCM in response to signals transmitted from the PNP switch, vehicle speed sensor and accelerator pedal position sensor (throttle position sensor). Gears will then be shifted to the optimum position.
- This is not only caused by electrical malfunction (circuits open or shorted) but also by mechanical malfunction such as control valve sticking, improper solenoid valve operation.

DTC Logic

INFOID:0000000001672199

DTC DETECTION LOGIC

DTC	Item (CONSULT-III screen terms)	A/T CHECK indicator lamp judgment flicker	Diagnostic item is detected when...	Possible cause
P1774	LC/B SOLENOID FNCT	7th	• TCM detects an improper voltage drop when it tries to operate the solenoid valve. • Condition of ATF pressure switch 2 is different from monitor value, and relation between gear position and actual gear ratio is irregular.	• Harness or connectors (Solenoid and switch circuit is open or shorted.) • Low coast brake solenoid valve • ATF pressure switch 2

DTC CONFIRMATION PROCEDURE

CAUTION:
Always drive vehicle at a safe speed.
NOTE:
If "DTC CONFIRMATION PROCEDURE" has been previously performed, always turn ignition switch OFF. Then wait at least 10 seconds before performing the next test.

1. CHECK DTC DETECTION

With CONSULT-III

1. Start the engine.
2. Select "DATA MONITOR".
3. Drive vehicle and maintain the following conditions.

GEAR	**: "1" or "2" (LC/B ON/OFF)**
MANU MODE SW	**: ON**

4. Stop vehicle and perform step 3 again.
5. Stop vehicle.
6. Turn ignition switch OFF, then perform step 1 to 4 again.

With GST

Follow the procedure "With CONSULT-III".

Is "P1774 LC/B SOLENOID FNCT" detected?

YES >> Go to TM-155, "Diagnosis Procedure".
NO >> Check intermittent incident. Refer to GI-38, "Intermittent Incident".

Diagnosis Procedure

INFOID:0000000001672200

1. CHECK TCM POWER SUPPLY AND GROUND CIRCUIT

Check TCM power supply and ground circuit. Refer to TM-163, "Diagnosis Procedure".

Is the inspection result normal?

YES >> Replace the control valve with TCM. Refer to TM-232, "Exploded View".

NO >> Repair or replace damaged parts.

P1815 MANUAL MODE SWITCH

Description

INFOID:0000000001672201

Manual mode switch is installed in A/T device. It transmits manual mode switch, shift up and shift down switch signals to unified meter and A/C amp. Then unified meter and A/C amp. transmits signals to TCM with CAN communication.
Paddle shifter transmits shift up and shift down switch signals to unified meter and A/C amp. Then unified meter and A/C amp. transmits signals to TCM with CAN communication. (With paddle shifter)
TCM transmits the switch signals to unified meter and A/C amp. by CAN communication line. Then manual mode switch position is indicated on the A/T indicator. For inspection, refer to TM-165.

DTC Logic

INFOID:0000000001672202

DTC DETECTION LOGIC

DTC	Item (CONSULT-III screen terms)	A/T CHECK indicator lamp judgment flicker	Diagnostic item is detected when...	Possible cause
P1815	MANU MODE SW/CIRC	—	• TCM monitors manual mode, non manual mode, up or down switch signal, and detects as irregular when impossible input pattern occurs 2 second or more. • When shift up/down signal of paddle shifter continuously remains ON for 60 seconds. (With paddle shifter)	• Harness or connectors (These switches circuit is open or shorted.) • Manual mode select switch (Into control device) • Manual mode position select switch (Into control device) • Paddle shifter*1

*1: With paddle shifter

DTC CONFIRMATION PROCEDURE

CAUTION:
Always drive vehicle at a safe speed.
NOTE:
If "DTC CONFIRMATION PROCEDURE" has been previously performed, always turn ignition switch OFF. Then wait at least 10 seconds before performing the next test.

1. CHECK DTC DETECTION

With CONSULT-III
1. Start the engine.
2. Select "DATA MONITOR".
3. Drive vehicle and maintain the following conditions for at least 2 consecutive seconds.

MANU MODE SW : ON

Is "P1815 MANU MODE SW/CIRC" detected?

YES >> Go to TM-157, "Diagnosis Procedure".
NO >> Check intermittent incident. Refer to GI-38, "Intermittent Incident".

Diagnosis Procedure

INFOID:0000000001672203

1. CHECK MANUAL MODE SWITCH CIRCUIT

With CONSULT-III
1. Turn ignition switch ON.
2. Select "DATA MONITOR".
3. Check the On/Off operations of each monitor item.

Item	Monitor Item	Condition	Status
Manual mode switch	MANU MODE SW	Manual shift gate position (neutral)	On
		Other than the above	Off
	NON M-MODE SW	Manual shift gate position	Off
		Other than the above	On
	UP SW LEVER	Selector lever: UP (+ side)	On
		Other than the above	Off
	DOWN SW LEVER	Selector lever: DOWN (– side)	On
		Other than the above	Off
Paddle shifter*	SFT UP ST SW	Paddle shifter: UP (+ side)	On
		Other than the above	Off
	SFT DWN ST SW	Paddle shifter: DOWN (– side)	On
		Other than the above	Off

*: With paddle shifter

Without CONSULT-III

Drive the vehicle in the manual mode and shift the select lever and paddle shifter* to “UP (+ side)” or “DOWN (– side)” side (1st ⇔ 5th gear). Check that the meter indicator coincides with the actual gear position.
*: With paddle shifter

Which item is abnormal?

Manual mode switch>>GO TO 2.
Paddle shifter>>GO TO 9.

2. CHECK MANUAL MODE SWITCH CIRCUIT

1. Turn ignition switch OFF.
2. Disconnect A/T device connector.
3. Turn ignition switch ON.
4. Check voltage between A/T device vehicle side harness connector terminals.

A/T device vehicle side harness connector			Voltage (Approx.)
Connector	Terminal		
M137	1	4	Battery voltage
	2		
	3		
	5		

Is the inspection result normal?

YES >> GO TO 3.
NO >> GO TO 5.

3. CHECK MANUAL MODE SWITCH

Check manual mode switch. Refer to TM-161, "Component Inspection (Manual Mode Switch)".

Is the inspection result normal?

YES >> GO TO 4.
NO >> Repair or replace damaged parts.

4. CHECK MALFUNCTIONING ITEM

Check the following.
- Check terminals of A/T device harness connector and harness cladding for damage.
- Check connector for loose connection.

Is the inspection result normal?

YES >> GO TO 17.

NO >> Repair or replace damaged parts.

5. CHECK GROUND CIRCUIT

Check continuity between A/T device vehicle side harness connector terminal and ground.

A/T device vehicle side harness connector		Ground	Continuity
Connector	Terminal		
M137	4		Existed

Is the inspection result normal?

YES >> GO TO 6.
NO >> Repair or replace damaged parts.

6. CHECK POWER SOURCE CIRCUIT

Check voltage between A/T device vehicle side harness connector terminals and ground.

A/T device vehicle side harness connector		Ground	Voltage (Approx.)
Connector	Terminal		
M137	1	Ground	Battery voltage
	2		
	3		
	5		

Is the inspection result normal?

YES >> GO TO 16.
NO >> GO TO 7.

7. CHECK HARNESS BETWEEN A/T DEVICE AND UNIFIED METER AND A/C AMP. (STEP 1)

1. Turn ignition switch OFF.
2. Disconnect unified meter and A/C amp. connector.
3. Check continuity between A/T device vehicle side harness connector terminals and unified meter and A/C amp. vehicle side harness connector terminals.

A/T device vehicle side harness connector		Unified meter and A/C amp. vehicle side harness connector		Continuity
Connector	Terminal	Connector	Terminal	
M137	1	M66	10	Existed
	2		25	
	3		5	
	5		11	

Is the inspection result normal?

YES >> GO TO 8.
NO >> Repair or replace damaged parts.

8. CHECK HARNESS BETWEEN A/T DEVICE AND UNIFIED METER AND A/C AMP. (STEP 2)

Check continuity between A/T device vehicle side harness connector terminals and ground.

A/T device vehicle side harness connector		Ground	Continuity
Connector	Terminal		
M137	1	Ground	Not existed
	2		
	3		
	5		

Is the inspection result normal?

YES >> GO TO 16.
NO >> Repair or replace damaged parts.

9. CHECK PADDLE SHIFTER CIRCUIT

1. Turn ignition switch OFF.
2. Disconnect paddle shifter connector.
3. Turn ignition switch ON.
4. Check voltage between paddle shifter vehicle side harness connector terminals.

Paddle shifter vehicle side harness connector			Voltage (Approx.)
Connector	Terminal		
M32	3	1	Battery voltage
M39	3	1	

Is the inspection result normal?

YES >> GO TO 10.
NO >> GO TO 12.

10. CHECK PADDLE SHIFTER

Check paddle shifter. Refer to TM-162, "Component Inspection (Paddle Shifter)".

Is the inspection result normal?

YES >> GO TO 11.
NO >> Repair or replace damaged parts.

11. CHECK MALFUNCTIONING ITEM

Check the following.
- Check terminals of paddle shifter connector for damage.
- Check connector for loose connection.

Is the inspection result normal?

YES >> GO TO 17.
NO >> Repair or replace damaged parts.

12. CHECK GROUND CIRCUIT

Check continuity between paddle shifter vehicle side harness connector terminals and ground.

Paddle shifter vehicle side harness connector		Ground	Continuity
Connector	Terminal		
M32	1		Existed
M39	1		

Is the inspection result normal?

YES >> GO TO 13.
NO >> Repair or replace damaged parts.

13. CHECK POWER SOURCE CIRCUIT

Check voltage between paddle shifter vehicle side harness connector terminals and ground.

paddle shifter vehicle side harness connector		Ground	Voltage (Approx.)
Connector	Terminal		
M32	3		Battery voltage
M39	3		

Is the inspection result normal?

YES >> GO TO 16.
NO >> GO TO 14.

14. CHECK HARNESS BETWEEN PADDLE SHIFTER AND UNIFIED METER AND A/C AMP. (STEP 1)

1. Turn ignition switch OFF.

2. Disconnect unified meter and A/C amp. connector.
3. Check continuity between paddle shifter vehicle side harness connector terminals and unified meter and A/C amp. vehicle side harness connector terminals.

Paddle shifter vehicle side harness connector		Unified meter and A/C amp. vehicle side harness connector		Continuity
Connector	Terminal	Connector	Terminal	
M32	3	M66	26	Existed
M39	3		6	

Is the inspection result normal?

YES >> GO TO 15.
NO >> Repair or replace damaged parts.

15. CHECK HARNESS BETWEEN PADDLE SHIFTER AND UNIFIED METER AND A/C AMP. (STEP 2)

Check continuity between paddle shifter vehicle side harness connector terminals and ground.

Paddle shifter vehicle side harness connector		Ground	Continuity
Connector	Terminal		
M32	3		Not existed
M39	3		

Is the inspection result normal?

YES >> GO TO 16.
NO >> Repair or replace damaged parts.

16. CHECK MALFUNCTIONING ITEM

Check the following.
- Check terminals of unified meter and A/C amp. connector for damage.
- Check connector for loose connection.

Is the inspection result normal?

YES >> GO TO 17.
NO >> Repair or replace damaged parts.

17. CHECK UNIFIED METER AND A/C AMP.

1. Reconnect all the connectors.
2. Turn ignition switch ON.
3. Select “M RANGE SW”, “NM RANGE SW”, “AT SFT UP SW”, “AT SFT DWN SW”, “ST SFT UP SW”* and “ST SFT DWN SW”* on “DATA MONITOR” mode for “METER/M&A”, and check the On/Off operations of each monitor item. Refer to MWI-83, "Reference Value".
   *: With paddle shifter

Is the inspection result normal?

YES >> GO TO 18.
NO >> Replace unified meter and A/C amp. Refer to MWI-162, "Exploded View".

18. CHECK TCM POWER SUPPLY AND GROUND CIRCUIT

Check TCM power supply and ground circuit. Refer to TM-163, "Diagnosis Procedure".

Is the inspection result normal?

YES >> Replace the control valve with TCM. Refer to TM-232, "Exploded View".
NO >> Repair or replace damaged parts.

Component Inspection (Manual Mode Switch)

INFOID:0000000001672204

1. CHECK MANUAL MODE SWITCH

Check continuity between terminals.

A/T device harness connector			Condition	Continuity
Connector	Terminal			
M137	1	4	Selector lever: Manual (Neutral)	Existed
			Other than the above	Not existed
	2		Selector lever: DOWN (– side)	Existed
			Other than the above	Not existed
	3		Selector lever: UP (+ side)	Existed
			Other than the above	Not existed
	5		Selector lever: Auto	Existed
			Other than the above	Not existed

Is the inspection result normal?

YES >> INSPECTION END
NO >> Repair or replace damaged parts. Refer to TM-227, "Exploded View".

Component Inspection (Paddle Shifter)

INFOID:0000000001672205

1. CHECK PADDLE SHIFTER

Check continuity between terminals.

Paddle shifter (shift-up) connector			Condition	Continuity
Connector	Terminal			
M39	1	3	UP (+ side)	Existed
			Other than the above	Not existed

Paddle shifter (shift-down) connector			Condition	Continuity
Connector	Terminal			
M32	1	3	DOWN (– side)	Existed
			Other than the above	Not existed

Is the inspection result normal?

YES >> INSPECTION END
NO >> Replace damaged parts. Refer to TM-230, "Exploded View".

MAIN POWER SUPPLY AND GROUND CIRCUIT

Description

INFOID:0000000001672206

Supply power to TCM.

Diagnosis Procedure

INFOID:0000000001672207

1. CHECK TCM POWER SOURCE

1. Turn ignition switch OFF.
2. Disconnect A/T assembly harness connector.
3. Turn ignition switch ON.
4. Check voltage between A/T assembly vehicle side harness connector terminals.

A/T assembly vehicle side harness connector			Voltage (Approx.)
Connector	Terminal		
F51	1	5	Battery voltage
		10	
	2	5	
		10	
	6	5	
		10	

Is the inspection result normal?

YES >> GO TO 4.
NO >> GO TO 2.

2. CHECK TCM GROUND CIRCUIT

Check continuity between A/T assembly vehicle side harness connector terminals and ground.

A/T assembly vehicle side harness connector		Ground	Continuity
Connector	Terminal		
F51	5		Existed
	10		

Is the inspection result normal?

YES >> GO TO 3.
NO >> Repair or replace damaged parts.

3. CHECK TCM POWER SOURCE CIRCUIT

Check voltage between A/T assembly vehicle side harness connector terminals and ground.

A/T assembly vehicle side harness connector		Ground	Voltage (Approx.)
Connector	Terminal		
F51	1		Battery voltage
	2		
	6		

Is the inspection result normal?

YES >> GO TO 4.
NO >> Check the following. If NG, repair or replace damaged parts.
- Harness for short or open between battery and A/T assembly vehicle side harness connector terminals 1, 2.
- Harness for short or open between ignition switch and A/T assembly vehicle side harness connector terminal 6.
- 10A fuse (No. 36, located in the fuse, fusible link and relay box)

- 10A fuse (No. 43, located in the IPDM E/R)
- Push-button ignition switch. Refer to PG-50, "Wiring Diagram - IGNITION POWER SUPPLY -".

4. DETECT MALFUNCTIONING ITEM (STEP 1)

Check the following.
- Check terminals of A/T assembly connector for damage.
- Check connector for loose connection.

Is the inspection result normal?

YES >> GO TO 5.
NO >> Repair or replace damaged parts.

5. CHECK TERMINAL CORD ASSEMBLY

1. Remove control valve with TCM. Refer to TM-232, "Exploded View".
2. Disconnect TCM connector.
3. Check continuity between A/T assembly harness connector terminals and TCM connector terminals.

A/T assembly harness connector		TCM connector		Continuity
Connector	Terminal	Connector	Terminal	
F51	1	F151	9	Existed
	2		10	
	6		4	
	5	F153	21	
	10		22	

Is the inspection result normal?

YES >> GO TO 6.
NO >> Repair or replace damaged parts.

6. DETECT MALFUNCTIONING ITEM (STEP 2)

Check the following.
- Check terminals of TCM connector and harness cladding for damage.
- Check connector for loose connection.

Is the inspection result normal?

YES >> INSPECTION END
NO >> Repair or replace damaged parts.

SHIFT POSITION INDICATOR CIRCUIT

Description

INFOID:0000000001672208

TCM transmit the switch signals to unified meter and A/C amp. by CAN communication line. Then manual mode switch position is indicated on the shift position indicator.

Component Function Check

INFOID:0000000001672209

1. CHECK A/T INDICATOR

1. Start the engine.
2. Drive vehicle in the manual mode, and confirm that the actual gear position and the meter's indication of the position mutually coincide when the selector lever is shifted to the “UP (+ side)” or “DOWN (– side)” side (1st ⇔ 5th gear).

Is the inspection result normal?

YES >> INSPECTION END
NO >> Go to TM-165, "Diagnosis Procedure".

Diagnosis Procedure

INFOID:0000000001672210

1. CHECK INPUT SIGNALS

With CONSULT-III

1. Start the engine.
2. Select “GEAR” on “DATA MONITOR” and read out the value.
3. Drive vehicle in the manual mode, and confirm that the actual gear position and the meter's indication of the position mutually coincide when the selector lever is shifted to the “UP (+ side)” or “DOWN (– side)” side (1st ⇔ 5th gear).

Is the inspection result normal?

YES >> INSPECTION END
NO-1 >> The actual gear position does not change, or shifting into the manual mode is not possible (no gear shifting in the manual mode possible). Or the shift position indicator is not indicated.
- Check manual mode switch. Refer to TM-161, "Component Inspection (Manual Mode Switch)".
- Check A/T main system (Fail-safe function actuated).
  - Perform “SELF-DIAG RESULTS” mode for “TRANSMISSION”. Refer to TM-112, "CONSULT-III Function (TRANSMISSION)".

NO-2 >> The actual gear position changes, but the shift position indicator is not indicated.
- Perform “SELF-DIAG RESULTS” mode for “TRANSMISSION”. Refer to TM-112, "CONSULT-III Function (TRANSMISSION)".

NO-3 >> The actual gear position and the indication on the shift position indicator do not coincide.
- Perform “SELF-DIAG RESULTS” mode for “TRANSMISSION”. Refer to TM-112, "CONSULT-III Function (TRANSMISSION)".

NO-4 >> Only a specific position or positions is/are not indicated on the shift position indicator.
- Check the unified meter and A/C amp. Refer to MWI-4, "Work flow".

SHIFT LOCK SYSTEM

Description

INFOID:0000000001672211

Shift lock system circuit consists of the following part.

Component	Function
Shift lock solenoid	Activated by the ignition switch and stop lamp signals, it holds the relative positions of sliders A and B.
Shift lock relay	Current flow to stop lamp switch allows shift lock solenoid contact ON, and then power is applied to shift lock solenoid.
Stop lamp switch	Depressing the brake pedal turns ON the stop lamp switch and energizes the shift lock relay.

Wiring Diagram - A/T SHIFT LOCK SYSTEM -

INFOID:0000000001672212

Click here to view the eWD.

A/T SHIFT LOCK SYSTEM

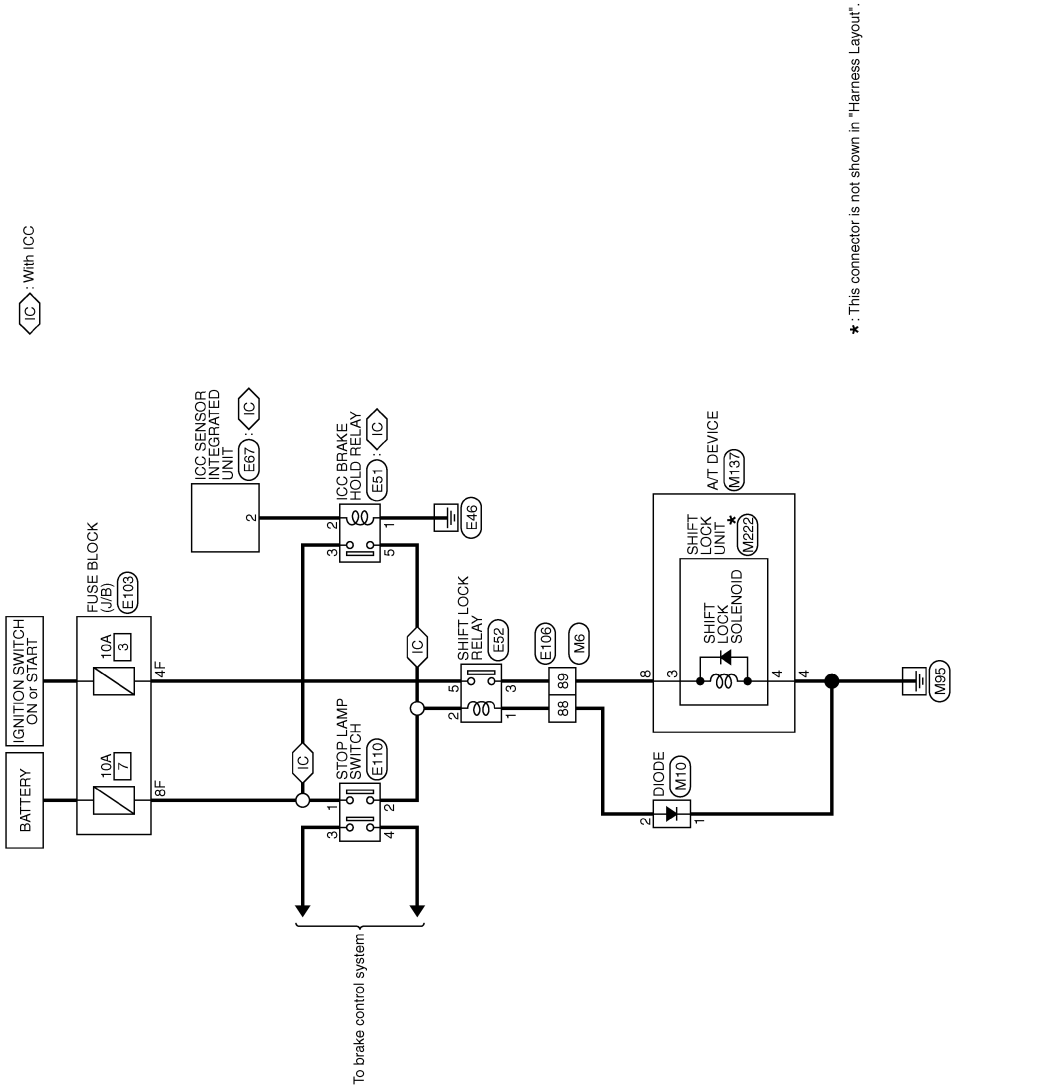

2007/05/18

JCDWA0126GE

A/T SHIFT LOCK SYSTEM

Connector No.	E51
Connector Name	ICC BRAKE HOLD RELAY
Connector Type	MS02FL-M2

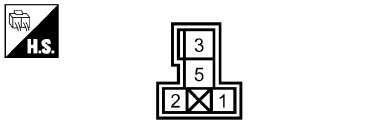

Terminal No.	Color of Wire	Signal Name [Specification]
1	B	–
2	V	–
3	R	–
5	P	–

Connector No.	E52
Connector Name	SHIFT LOCK RELAY
Connector Type	MS02FL-M2

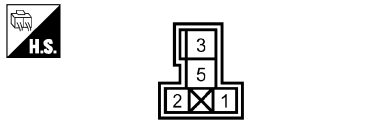

Terminal No.	Color of Wire	Signal Name [Specification]
1	GR	–
2	P	–
3	W	–
5	Y	–

Connector No.	E67
Connector Name	ICC SENSOR INTEGRATED UNIT
Connector Type	RS06FB-PR

Terminal No.	Color of Wire	Signal Name [Specification]
2	V	BRK LMP RLY

Connector No.	E103
Connector Name	FUSE BLOCK (J/B)
Connector Type	NS16FW-CS

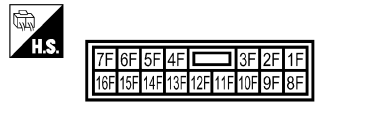

Terminal No.	Color of Wire	Signal Name [Specification]
4F	G	–
8F	L	–

Connector No.	E106
Connector Name	WIRE TO WIRE
Connector Type	TH80FW-CS16-TM4

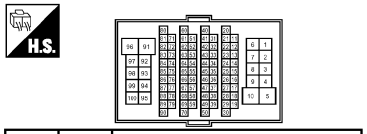

Terminal No.	Color of Wire	Signal Name [Specification]
88	GR	–
89	W	–

Connector No.	E110
Connector Name	STOP LAMP SWITCH
Connector Type	M04FW-LC

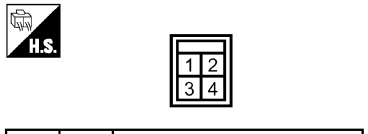

Terminal No.	Color of Wire	Signal Name [Specification]
1	L	–
2	W	–
3	L	–
4	SB	–

Connector No.	M6
Connector Name	WIRE TO WIRE
Connector Type	TH80MW-CS16-TM4

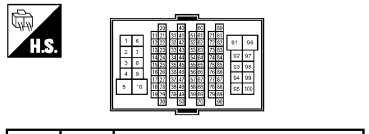

Terminal No.	Color of Wire	Signal Name [Specification]
88	L	–
89	SB	–

Connector No.	M10
Connector Name	DIODE
Connector Type	24335_C9902

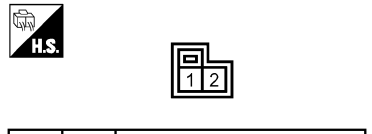

Terminal No.	Color of Wire	Signal Name [Specification]
1	GR	–
2	L	–

JCDWA0127GE

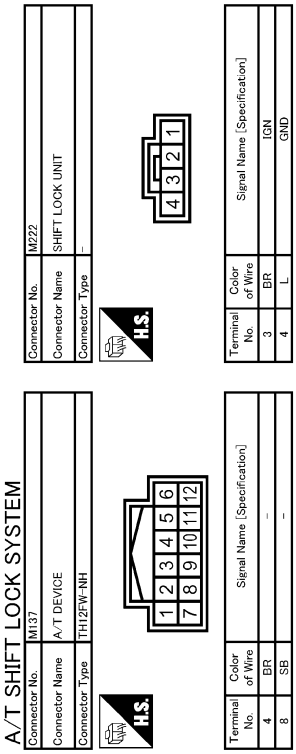

JCDWA0128GE

Component Function Check

INFOID:0000000001672213

1. CHECK A/T SHIFT LOCK OPERATION

1. Turn ignition switch ON.
2. Shift the selector lever to the “P” position.
3. Attempt to shift the selector lever to any other position with the brake pedal released.

Can the selector lever be shifted to any other position?

YES >> Go to TM-170, "Diagnosis Procedure".
NO >> GO TO 2.

2. CHECK A/T SHIFT LOCK OPERATION

Attempt to shift the selector lever to any other position with the brake pedal depressed.

Can the selector lever be shifted to any other position?

YES >> INSPECTION END
NO >> Go to TM-170, "Diagnosis Procedure".

Diagnosis Procedure

INFOID:0000000001672214

1. CHECK SELECTOR LEVER POSITION

Check the selector lever position for damage. Refer to TM-226, "Inspection and Adjustment".

Is the inspection result normal?

YES >> GO TO 2.
NO >> Adjust control linkage. Refer to TM-226, "Inspection and Adjustment".

2. CHECK POWER SOURCE

1. Turn ignition switch OFF.
2. Disconnect shift lock relay.
3. Check voltage between shift lock relay harness connector terminal and ground.

Shift lock relay harness connector		Ground	Condition	Voltage (Approx.)
Connector	Terminal			
E52	2		Depressed brake pedal.	Battery voltage
			Released brake pedal.	0 V

Is the inspection result normal?

YES >> GO TO 7.
NO-1 >> When pressing the brake pedal, the voltage is 0 V: GO TO 3.
NO-2 >> When releasing the brake pedal, the voltage is battery voltage: GO TO 5.

3. CHECK POWER SOURCE

1. Disconnect stop lamp switch connector.
2. Check voltage between stop lamp switch vehicle side harness connector terminal and ground.

Stop lamp switch vehicle side harness connector		Ground	Voltage (Approx.)
Connector	Terminal		
E110	1		Battery voltage

Is the inspection result normal?

YES >> GO TO 4.
NO >> Check the following. If NG, repair or replace damaged parts.
- 10 A fuse [No. 7, located in the fuse block (J/B)]
- Harness for short to ground or open between battery and stop lamp switch vehicle side harness connector terminal 1
- Harness for short to ground between battery and ICC brake hold relay vehicle side harness connector terminal 3. (With ICC)

4. CHECK STOP LAMP SWITCH

Check stop lamp switch. Refer to TM-172, "Component Inspection (Stop lamp switch)".

Is the inspection result normal?

YES >> Check the following. If NG, repair or replace damaged parts.
- Harness for short to ground or open between stop lamp switch vehicle side harness connector terminal 2 and shift lock relay vehicle side harness connector terminal 2.
- Harness for short to ground between stop lamp switch vehicle side harness connector terminal 2 and ICC brake hold relay vehicle side harness connector terminal 5. (With ICC)

NO >> Repair or replace damaged parts.

5. CHECK STOP LAMP SWITCH

Check stop lamp switch. Refer to TM-172, "Component Inspection (Stop lamp switch)".

Is the inspection result normal?

YES-1 >> Without ICC: Repair or replace harness between stop lamp switch and shift lock relay.
YES-2 >> With ICC: GO TO 6.
NO >> Repair or replace damaged parts.

6. CHECK DTC WITH ICC

With CONSULT-III

Check the DTC of “ICC”. Refer to CCS-23, "CONSULT-III Function (ICC)".

Is any malfunction detected?

YES >> Check the DTC detected item. Refer to CCS-23, "CONSULT-III Function (ICC)".
NO >> Repair or replace harness between stop lamp switch and shift lock relay.

7. CHECK GROUND CIRCUT

Check continuity between shift lock relay vehicle side harness connector terminal and ground.

Shift lock relay vehicle side harness connector		Ground	Continuity
Connector	Terminal		
E52	1		Existed

Is the inspection result normal?

YES >> GO TO 8.
NO >> Repair or replace damaged parts.

8. CHECK SHIFT LOCK RELAY

Check shift lock relay. Refer to TM-172, "Component Inspection (Shift lock relay)".

Is the inspection result normal?

YES >> GO TO 9.
NO >> Repair or replace damaged parts.

9. CHECK POWER SOURCE

1. Turn ignition switch ON.
2. Check voltage between shift lock relay vehicle side harness connector terminal and ground.

Shift lock relay vehicle side harness connector		Ground	Voltage (Approx.)
Connector	Terminal		
E52	5		Battery voltage

Is the inspection result normal?

YES >> GO TO 10.
NO >> Check the following. If NG, repair or replace damaged parts.
- 10 A fuse [No. 3, located in the fuse block (J/B)]
- Harness for short to ground or open between ignition switch and shift lock relay vehicle side harness connector terminal 5

10. CHECK GROUND CIRCUIT

1. Turn ignition switch OFF.
2. Disconnect A/T device connector.
3. Check continuity between A/T device vehicle side harness connector terminal and ground.

A/T device vehicle side harness connector		Ground	Continuity
Connector	Terminal		
M137	4		Existed

Is the inspection result normal?

YES >> GO TO 11.

NO >> Repair or replace damaged parts.

11. CHECK SHIFT LOCK SOLENOID

Check shift lock solenoid. Refer to TM-172, "Component Inspection (Shift lock solenoid)".

Is the inspection result normal?

YES >> Check the following. If NG, repair or replace damaged parts.
- Harness for short to ground, short to power or open between shift lock relay vehicle side harness connector terminal 3 and A/T device vehicle side harness connector terminal 8
- Harness for short to ground, short to power or open between A/T device harness conductor terminal 8 and shift lock unit harness connector terminal 3
- Harness for open between A/T device harness conductor terminal 4 and shift lock unit harness connector terminal 4

NO >> Repair or replace damaged parts.

Component Inspection (Shift lock solenoid)

INFOID:0000000001672215

1. CHECK SHIFT LOCK SOLENOID

1. Remove shift lock unit. Refer to TM-227, "Exploded View".
2. Apply voltage to terminals 3 and 4 of shift lock unit connector, and then check that shift lock solenoid is activated.
   CAUTION:
   Connect the fuse between the terminals when applying the voltage.

(+) (fuse)		(–)		Condition	Status
Shift lock unit connector					
Connector	Terminal	Connector	Terminal		
M222	3	M222	4	Apply 12 V direct current between terminals 3 and 4.	Shift lock solenoid operates

Can the lock plate be moved up and down?

YES >> INSPECTION END
NO >> Replace shift lock unit. Refer to TM-227, "Exploded View".

Component Inspection (Shift lock relay)

INFOID:0000000001672216

1. CHECK SHIFT LOCK RELAY

Check continuity between shift lock relay terminal 3 and 5.
CAUTION:
Connect the fuse between the terminals when applying the voltage.

Shift lock relay connector			Condition	Continuity
Connector	Terminal			
E52	3	5	Apply 12 V direct current between terminals 1 and 2.	Existed
			OFF	Not existed

Is the inspection result normal?

YES >> INSPECTION END
NO >> Replace shift lock relay.

Component Inspection (Stop lamp switch)

INFOID:0000000001672217

1. CHECK STOP LAMP SWITCH

Check continuity between stop lamp switch connector terminal 1 and 2.

Stop lamp switch connector			Condition	Continuity
Connector	Terminal			
E110	1	2	Brake pedal depressed	Existed
			Brake pedal not depressed	Not existed

Is the inspection result normal?

YES >> INSPECTION END
NO >> Replace stop lamp switch. Refer to BR-19, "Exploded View".

SELECTOR LEVER POSITION INDICATOR

Description

INFOID:0000000001672218

Displays selector lever position.

Component Function Check

INFOID:0000000001838106

1.CHECK SELECTOR LEVER POSITION INDICATOR (STEP 1)

1. Turn ignition switch ON.
2. Check that each position indicator lamp of the selector lever position indicator turns on when shifting the selector lever from “P” to “DS” position.

Is the inspection result normal?

YES >> GO TO 2.
NO >> Go to TM-174, "Diagnosis Procedure".

2.CHECK SELECTOR LEVER POSITION INDICATOR (STEP 2)

Check that the night illumination of the selector lever position indicator turns on when setting the lighting switch in 1st position.

Is the inspection result normal?

YES >> INSPECTION END
NO >> Go to TM-174, "Diagnosis Procedure".

Diagnosis Procedure

INFOID:0000000001837082

1.CHECK MALFUNCTIONING ITEM

Which item is abnormal?

Position indicator lamp>>GO TO 2.
Illumination lamp>>GO TO 7.

2.CHECK POWER SOURCE

1. Turn ignition switch OFF.
2. Disconnect A/T device connector.
3. Turn ignition switch ON.
4. Check voltage between A/T device vehicle side harness connector terminals.

A/T device vehicle side harness connector			Voltage (Approx.)
Connector	Terminal	Terminal	
M137	10	4	Battery voltage

Is the inspection result normal?

YES >> GO TO 5.
NO >> GO TO 3.

3.CHECK GROUND CIRCUIT

Check continuity between A/T device vehicle side harness connector terminal and ground.

A/T device vehicle side harness connector		Ground	Continuity
Connector	Terminal		
M137	4		Existed

Is the inspection result normal?

YES >> GO TO 4.
NO >> Repair or replace damaged parts.

4.CHECK POWER SOURCE CIRCUIT

Check voltage between A/T device vehicle side harness connector terminal and ground.

A/T device vehicle side harness connector		Ground	Voltage (Approx.)
Connector	Terminal		
M137	10		Battery voltage

Is the inspection result normal?

YES >> Check the following.
- Check terminals of BCM connector and A/T device harness connector for damage.
- Check connector for loose connection.

NO >> Check BCM. Refer to BCS-43, "Reference Value".

5. CHECK SHIFT POSITION SWITCH

Check continuity between A/T device harness connector terminals and selector lever position indicator connector terminals.

A/T device harness connector		selector lever position indicator connector		Condition	Continuity
Connector	Terminal	Connector	Terminal		
M137	4	M221	7	Selector lever in “D” position.	Existed
			9	Selector lever in “DS” position.	
	10		2	Selector lever in “N” position.	
			3	Selector lever in “D” position.	
			4	Selector lever in “R” position.	
			5	Selector lever in “P” position.	
			6	—	

Is the inspection result normal?

YES >> GO TO 6.

NO >> Repair or replace damaged parts. Refer to TM-227, "Exploded View".

6. CHECK SELECTOR LEVER POSITION INDICATOR

Check selector lever position indicator. Refer to TM-176, "Component Inspection".

Is the inspection result normal?

YES >> Check the following.
- Check terminals of A/T device harness connector and selector lever position indicator connector for damage.
- Check connector for loose connection.

NO >> Repair or replace damaged parts. Refer to TM-227, "Exploded View".

7. CHECK POWER SOURCE

1. Turn ignition switch OFF.
2. Disconnect A/T device connector.
3. Turn ignition switch ON.
4. Check voltage between A/T device vehicle side harness connector terminals.

A/T device vehicle side harness connector			Condition	Voltage (Approx.)
Connector	Terminal	Terminal		
M137	7	9	Lighting switch 1ST	Battery voltage

Is the inspection result normal?

YES >> GO TO 8.

NO >> Check illumination circuit. Refer to INL-37, "Wiring Diagram - ILLUMINATION -".

8. CHECK SHIFT POSITION SWITCH

Check continuity between A/T device harness connector terminals and selector lever position indicator connector terminals.

A/T device harness connector		selector lever position indicator connector		Continuity
Connector	Terminal	Connector	Terminal	
M137	7	M221	10	Existed
	9		11	

Is the inspection result normal?

YES >> GO TO 9.
NO >> Repair or replace damaged parts. Refer to TM-227, "Exploded View".

9. CHECK SELECTOR LEVER POSITION INDICATOR

Check selector lever position indicator. Refer to TM-176, "Component Inspection".

Is the inspection result normal?

YES >> Check the following.
- Check terminals of A/T device harness connector and selector lever position indicator connector for damage.
- Check connector for loose connection.

NO >> Repair or replace damaged parts. Refer to TM-227, "Exploded View".

Component Inspection

INFOID:0000000001672219

1. CHECK SELECTOR LEVER POSITION INDICATOR

Check that selector lever position indicator lamps turn on.

CAUTION:

Connect the fuse between the terminals when applying the voltage.

(+) (fuse)		(–)		Condition	Status
Selector lever position indicator connector					
Connector	Terminal	Connector	Terminal		
M221	2	M221	7	Apply 12 V direct current between terminals 2 and 7.	“N” position indicator lamp turns on.
	3		7	Apply 12 V direct current between terminals 3 and 7.	“D” position indicator lamp turns on.
	4		7	Apply 12 V direct current between terminals 4 and 7.	“R” position indicator lamp turns on.
	5		7	Apply 12 V direct current between terminals 5 and 7.	“P” position indicator lamp turns on.
	6		9	Apply 12 V direct current between terminals 6 and 9.	“M” mode indicator lamp turns on.
	10		11	Apply 12 V direct current between terminals 10 and 11.	Illumination lamp turns on.

Is the inspection result normal?

YES >> INSPECTION END
NO >> Replace the malfunctioning part. Refer to TM-227, "Exploded View".

ECU DIAGNOSIS

TCM

Reference Value

INFOID:0000000001672220

VALUES ON DIAGNOSIS TOOL

NOTE:

1. The CONSULT-III electrically displays shift timing and lock-up timing (that is, operation timing of each solenoid).
   Check for time difference between actual shift timing and the CONSULT-III display. If the difference is noticeable, mechanical parts (except solenoids, sensors, etc.) may be malfunctioning. Check mechanical parts using applicable diagnostic procedures.
2. Shift schedule (which implies gear position) displayed on CONSULT-III and that indicated in Service Manual may differ slightly. This occurs because of the following reasons:

- Actual shift schedule has more or less tolerance or allowance
- Shift schedule indicated in Service Manual refers to the point where shifts start
- Gear position displayed on CONSULT-III indicates the point where shifts are completed

3. Display of solenoid valves on CONSULT-III changes at the start of shifting, while gear position is displayed upon completion of shifting (which is computed by TCM).

CONSULT-III MONITOR ITEM

Item name	Condition	Value / Status (Approx.)
VHCL/S SE-A/T	During driving	Approximately matches the speedometer reading.
VHCL/S SE-MTR	During driving	Approximately matches the speedometer reading.
ACCELE POSI	Released accelerator pedal.	0.0/8
	Fully depressed accelerator pedal.	8.0/8
CLSD THL POS	Released accelerator pedal.	On
	Fully depressed accelerator pedal.	Off
W/O THL POS	Fully depressed accelerator pedal.	On
	Released accelerator pedal.	Off
BRAKE SW	Depressed brake pedal.	On
	Released brake pedal.	Off
GEAR	During driving	1, 2, 3, 4, 5
ENGINE SPEED	Engine running	Closely matches the tachometer reading.
TURBINE REV	During driving (lockup ON)	Approximately matches the engine speed.
ATF TEMP SE 1	0°C (32° F) – 20°C (68°F) – 80°C (176°F)	3.3 – 2.7 – 0.9 V
ATF TEMP SE 2	0°C (32° F) – 20°C (68°F) – 80°C (176°F)	3.3 – 2.5 – 0.7 V
ATF TEMP 1	Ignition switch ON	Temperature of ATF in the oil pan is indicated
ATF TEMP 2	Ignition switch ON	Temperature of ATF at the exit of torque converter is indicated.
ATF PRES SW 2	Low coast brake engaged. Refer to TM-92.	On
	Low coast brake disengaged. Refer to TM-92.	Off

Item name	Condition	Value / Status (Approx.)
SLCT LVR POSI	Selector lever in “N” and “P” positions	N/P
	Selector lever in “R” position	R
	Selector lever in “D” position	D
	Selector lever in “M” position: 5th gear	5
	Selector lever in “M” position: 4th gear	4
	Selector lever in “M” position: 3rd gear	3
	Selector lever in “M” position: 2nd gear	2
	Selector lever in “M” position: 1st gear	1
MANU MODE SW	Manual shift gate position (neutral)	On
	Other than the above	Off
NON M-MODE SW	Manual shift gate position	Off
	Other than the above	On
UP SW LEVER	Selector lever: UP (+ side)	On
	Other than the above	Off
DOWN SW LEVER	Selector lever: DOWN (– side)	On
	Other than the above	Off
SFT UP ST SW	Paddle shifter: UP (+ side)	On
	Other than the above	Off
SFT DWN ST SW	Paddle shifter: DOWN (– side)	On
	Other than the above	Off
TCC SOLENOID	Slip lock-up is active	0.2 – 0.4 A
	Lock-up is active	0.4 – 0.6 A
	Other than the above	0 – 0.05 A
LINE PRES SOL	During driving	0.2 – 0.6 A
FR/B SOLENOID	Front brake engaged. Refer to TM-92.	0.6 – 0.8 A
	Front brake disengaged. Refer to TM-92.	0 – 0.05 A
I/C SOLENOID	Input clutch disengaged. Refer to TM-92.	0.6 – 0.8 A
	Input clutch engaged. Refer to TM-92.	0 – 0.05 A
D/C SOLENOID	Direct clutch disengaged. Refer to TM-92.	0.6 – 0.8 A
	Direct clutch engaged. Refer to TM-92.	0 – 0.05 A
HLR/C SOL	High and low reverse clutch disengaged. Refer to TM-92.	0.6 – 0.8 A
	High and low reverse clutch engaged. Refer to TM-92.	0 – 0.05 A
ON OFF SOL	Low coast brake engaged. Refer to TM-92.	On
	Low coast brake disengaged. Refer to TM-92.	Off
STARTER RELAY	Selector lever in “N” and “P” positions.	On
	Selector lever in “R” and “D” positions.	Off
VEHICLE SPEED	During driving	Approximately matches the speedometer reading.

TERMINAL LAYOUT

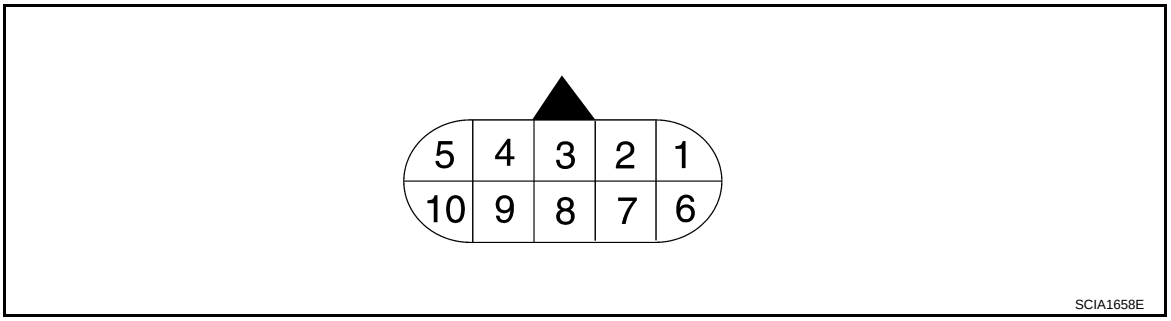

PHYSICAL VALUES

Terminal (Wire color)		Description		Condition		Value (Approx.)
+	–	Signal name	Input/ Output			
1 (BR)	Ground	Power supply (Memory back-up)	Input	Always		Battery voltage
2 (BR)	Ground	Power supply (Memory back-up)	Input	Always		Battery voltage
3 (L)	—	CAN-H	Input/ Output	—		—
4 (V)	—	K-line (CONSULT-III signal)	Input/ Output	—		—
5 (B)	Ground	Ground	Output	Always		0 V
6 (Y)	Ground	Power supply	Input	Ignition switch ON		Battery voltage
				Ignition switch OFF		0 V
7 (R)	Ground	Back-up lamp relay	Input	Ignition switch ON	Selector lever in “R” position.	0 V
					Selector lever in other positions.	Battery voltage
8 (P)	—	CAN-L	Input/ Output	—		—
9 (GR)	Ground	Starter relay	Output	Ignition switch ON	Selector lever in “N” and “P” positions.	Battery voltage
					Selector lever in other positions.	0 V
10 (B)	Ground	Ground	Output	Always		0 V

Wiring Diagram - A/T CONTROL SYSTEM -

INFOID:0000000001672221

Click here to view the eWD.

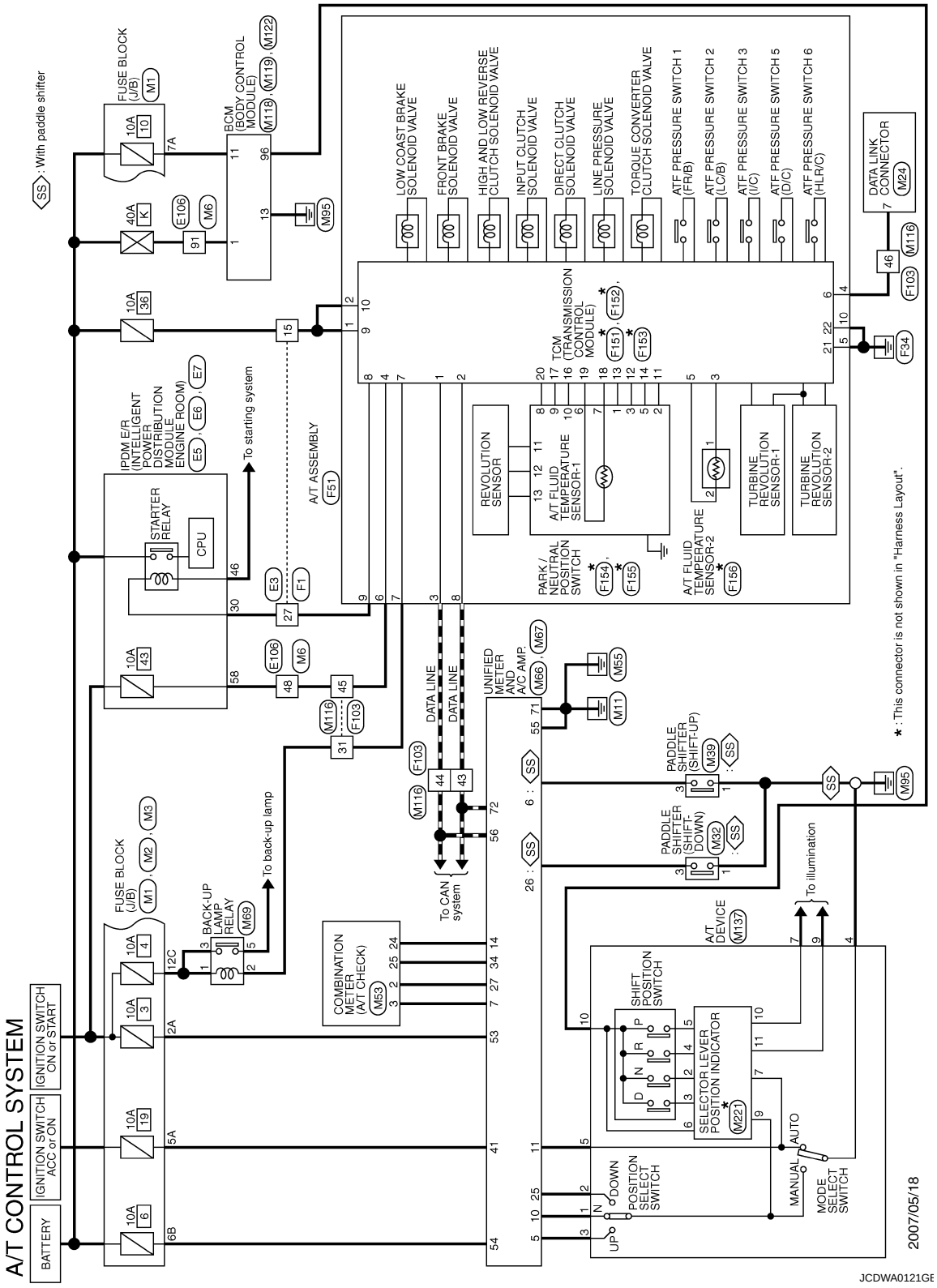
A/T CONTROL SYSTEM
BATTERY
IGNITION SWITCH ACC or ON
IGNITION SWITCH ON or START
FUSE BLOCK (J/B)
BCM (BODY CONTROL MODULE)
IPDM E/R (INTELLIGENT POWER DISTRIBUTION MODULE ENGINE ROOM)
STARTER RELAY
CPU
To starting system
A/T ASSEMBLY
BACK-UP LAMP RELAY
To back-up lamp
COMBINATION METER (A/T CHECK)
To CAN system
DATA LINE
UNIFIED METER AND A/C AMP.
PADDLE SHIFTER (SHIFT-UP)
PADDLE SHIFTER (SHIFT-DOWN)
To illumination
A/T DEVICE
SHIFT POSITION SWITCH
SELECTOR LEVER POSITION INDICATOR
POSITION SELECT SWITCH
MODE SELECT SWITCH
AUTO
MANUAL
UP
DOWN
REVOLUTION SENSOR
A/T FLUID TEMPERATURE SENSOR-1
PARK / NEUTRAL POSITION SWITCH
A/T FLUID TEMPERATURE SENSOR-2
TURBINE REVOLUTION SENSOR-1
TURBINE REVOLUTION SENSOR-2
TCM (TRANSMISSION CONTROL MODULE)
LOW COAST BRAKE SOLENOID VALVE
FRONT BRAKE SOLENOID VALVE
HIGH AND LOW REVERSE CLUTCH SOLENOID VALVE
INPUT CLUTCH SOLENOID VALVE
DIRECT CLUTCH SOLENOID VALVE
LINE PRESSURE SOLENOID VALVE
TORQUE CONVERTER CLUTCH SOLENOID VALVE
ATF PRESSURE SWITCH 1 (FR/B)
ATF PRESSURE SWITCH 2 (LC/B)
ATF PRESSURE SWITCH 3 (I/C)
ATF PRESSURE SWITCH 5 (D/C)
ATF PRESSURE SWITCH 6 (HLR/C)
DATA LINK CONNECTOR
SS : With paddle shifter
* : This connector is not shown in "Harness Layout".
2007/05/18
JCDWA0121GE

A/T CONTROL SYSTEM

Connector No.	E3
Connector Name	WIRE TO WIRE
Connector Type	SAA36MB-RS8-SHZ8

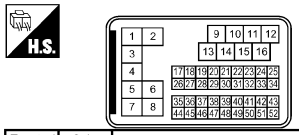

Terminal No.	Color of Wire	Signal Name [Specification]
15	R	–
27	GR	–

Connector No.	E5
Connector Name	IPDM E/R (INTELLIGENT POWER DISTRIBUTION MODULE ENGINE ROOM)
Connector Type	TH20FW-CS12-M4-1V

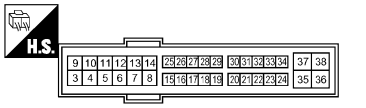

Terminal No.	Color of Wire	Signal Name [Specification]
30	GR	–

Connector No.	E6
Connector Name	IPDM E/R (INTELLIGENT POWER DISTRIBUTION MODULE ENGINE ROOM)
Connector Type	TH08FW-NH

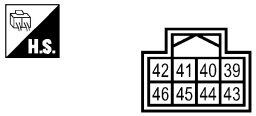

Terminal No.	Color of Wire	Signal Name [Specification]
46	P	–

Connector No.	E7
Connector Name	IPDM E/R (INTELLIGENT POWER DISTRIBUTION MODULE ENGINE ROOM)
Connector Type	TH20FW-CS12-M4

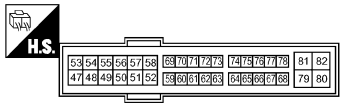

Terminal No.	Color of Wire	Signal Name [Specification]
58	L	–

Connector No.	E106
Connector Name	WIRE TO WIRE
Connector Type	TH80FW-CS16-TM4

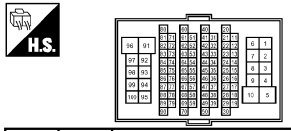

Terminal No.	Color of Wire	Signal Name [Specification]
48	L	–
91	W	–

Connector No.	F1
Connector Name	WIRE TO WIRE
Connector Type	SAA36FB-RS8-SHZ8

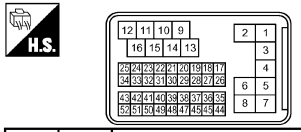

Terminal No.	Color of Wire	Signal Name [Specification]
15	BR	–
27	GR	–

Connector No.	F51
Connector Name	A/T ASSEMBLY
Connector Type	RK10FG-DGY

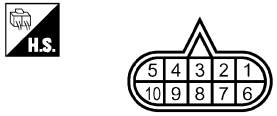

Terminal No.	Color of Wire	Signal Name [Specification]
1	BR	–
2	BR	–
3	L	–
4	V	–
5	B	–
6	Y	–
7	R	–
8	P	–
9	GR	–
10	B	–

Connector No.	F103
Connector Name	WIRE TO WIRE
Connector Type	TK36FW-NS10

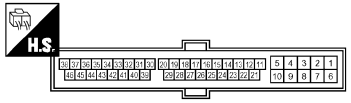

Terminal No.	Color of Wire	Signal Name [Specification]
31	R	–
43	P	–
44	L	–
45	Y	–
46	V	–

JCDWA0122GE

A/T CONTROL SYSTEM

Connector No.	F151
Connector Name	TCM (TRANSMISSION CONTROL MODULE)
Connector Type	SP10FBGY

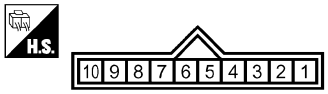

Terminal No.	Color of Wire	Signal Name [Specification]
1	BR	CAN-H
2	L/Y	CAN-L
3	W/Y	ATF SENS2-
4	R	VIGN
5	W/R	ATF SENS2+
6	L	K LINE
7	O	REV LAMP RLY
8	G	START RLY
9	W	STANDBY SUPPLY-1
10	GR	STANDBY SUPPLY-2

Connector No.	F152
Connector Name	TCM (TRANSMISSION CONTROL MODULE)
Connector Type	SP10FAG

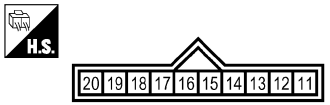

Terminal No.	Color of Wire	Signal Name [Specification]
11	W	INH-SW4
12	GR	INH-SW2
13	BR	INH-SW1
14	L	INH-SW3
16	B	REV SEN GND
17	R	REV SEN VOUT
18	O	ATF SNS1-
19	G	ATF SNS1+
20	Y	REV SEN VIN

Connector No.	F153
Connector Name	TCM (TRANSMISSION CONTROL MODULE)
Connector Type	SP02F

Terminal No.	Color of Wire	Signal Name [Specification]
21	B	POWER GND-1
22	Y	POWER GND-2

Connector No.	F154
Connector Name	PARK/NEUTRAL POSITION SWITCH
Connector Type	SP10FBGY

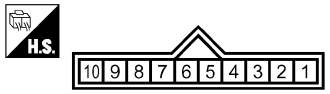

Terminal No.	Color of Wire	Signal Name [Specification]
1	BR	S1
2	W	S4
3	GR	S2
5	L	S3
6	G	–
7	O	–
8	Y	C1
9	R	C2
10	B	C3

Connector No.	F155
Connector Name	PARK/NEUTRAL POSITION SWITCH
Connector Type	A03FW

Terminal No.	Color of Wire	Signal Name [Specification]
11	L	GND
12	W	VOUT
13	R	VCC

Connector No.	F156
Connector Name	A/T FLUID TEMPERATURE SENSOR-2
Connector Type	SP02F

Terminal No.	Color of Wire	Signal Name [Specification]
1	W/Y	–
2	W/R	–

Connector No.	M1
Connector Name	FUSE BLOCK (J/B)
Connector Type	NS06FW-M2

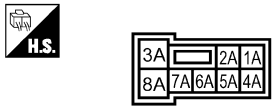

Terminal No.	Color of Wire	Signal Name [Specification]
2A	G	–
5A	L	–
7A	R	–

Connector No.	M2
Connector Name	FUSE BLOCK (J/B)
Connector Type	NS10FW-CS

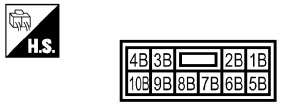

Terminal No.	Color of Wire	Signal Name [Specification]
6B	Y	–

JCDWA0123GE

A/T CONTROL SYSTEM

Connector No.	M3
Connector Name	FUSE BLOCK (J/B)
Connector Type	NS12FW-CS

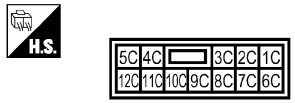

Terminal No.	Color of Wire	Signal Name [Specification]
12C	R	–

Connector No.	M6
Connector Name	WIRE TO WIRE
Connector Type	TH80MW-CS16-TM4

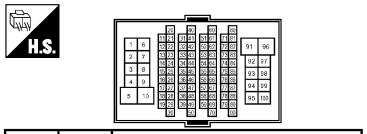

Terminal No.	Color of Wire	Signal Name [Specification]
48	G	–
91	W	–

Connector No.	M24
Connector Name	DATA LINK CONNECTOR
Connector Type	BD16FW

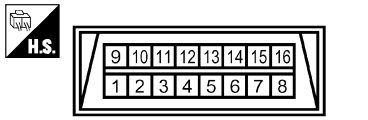

Terminal No.	Color of Wire	Signal Name [Specification]
7	V	–

Connector No.	M32
Connector Name	PADDLE SHIFTER (SHIFT-DOWN)
Connector Type	A03FW

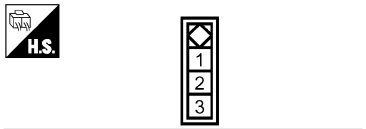

Terminal No.	Color of Wire	Signal Name [Specification]
1	W	–
3	G	–

Connector No.	M39
Connector Name	PADDLE SHIFTER (SHIFT-UP)
Connector Type	A04FW

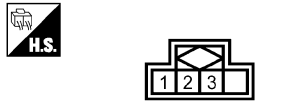

Terminal No.	Color of Wire	Signal Name [Specification]
1	P	–
3	O	–

Connector No.	M53
Connector Name	COMBINATION METER
Connector Type	SAB40FW

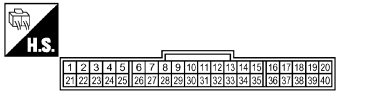

Terminal No.	Color of Wire	Signal Name [Specification]
2	LG	COMM (METER->AMP.)
3	GR	COMM (AMP.->METER)
24	BR	COMM (LCD->AMP.)
25	Y	COMM (AMP.->LCD)

Connector No.	M66
Connector Name	UNIFIED METER AND A/C AMP.
Connector Type	TH40FW-NH

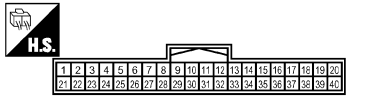

Terminal No.	Color of Wire	Signal Name [Specification]
5	L	SHIFT UP SW
6	O	PADDLE UP
7	GR	COMM (AMP.->METER)
10	W	MANUAL MODE SW
11	G	AUTO MODE SW
14	BR	COMM (LCD->AMP.)
25	V	SHIFT DOWN SW
26	G	PADDLE DOWN
27	LG	COMM (METER->AMP.)
34	Y	COMM (AMP.->LCD)

Connector No.	M67
Connector Name	UNIFIED METER AND A/C AMP.
Connector Type	TH32FW-NH

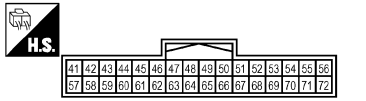

Terminal No.	Color of Wire	Signal Name [Specification]
41	L	ACC
53	W	IGN
54	Y	BAT
55	B	GND
56	L	CAN-H
71	GR	GND
72	P	CAN-L

JCDWA0124GE

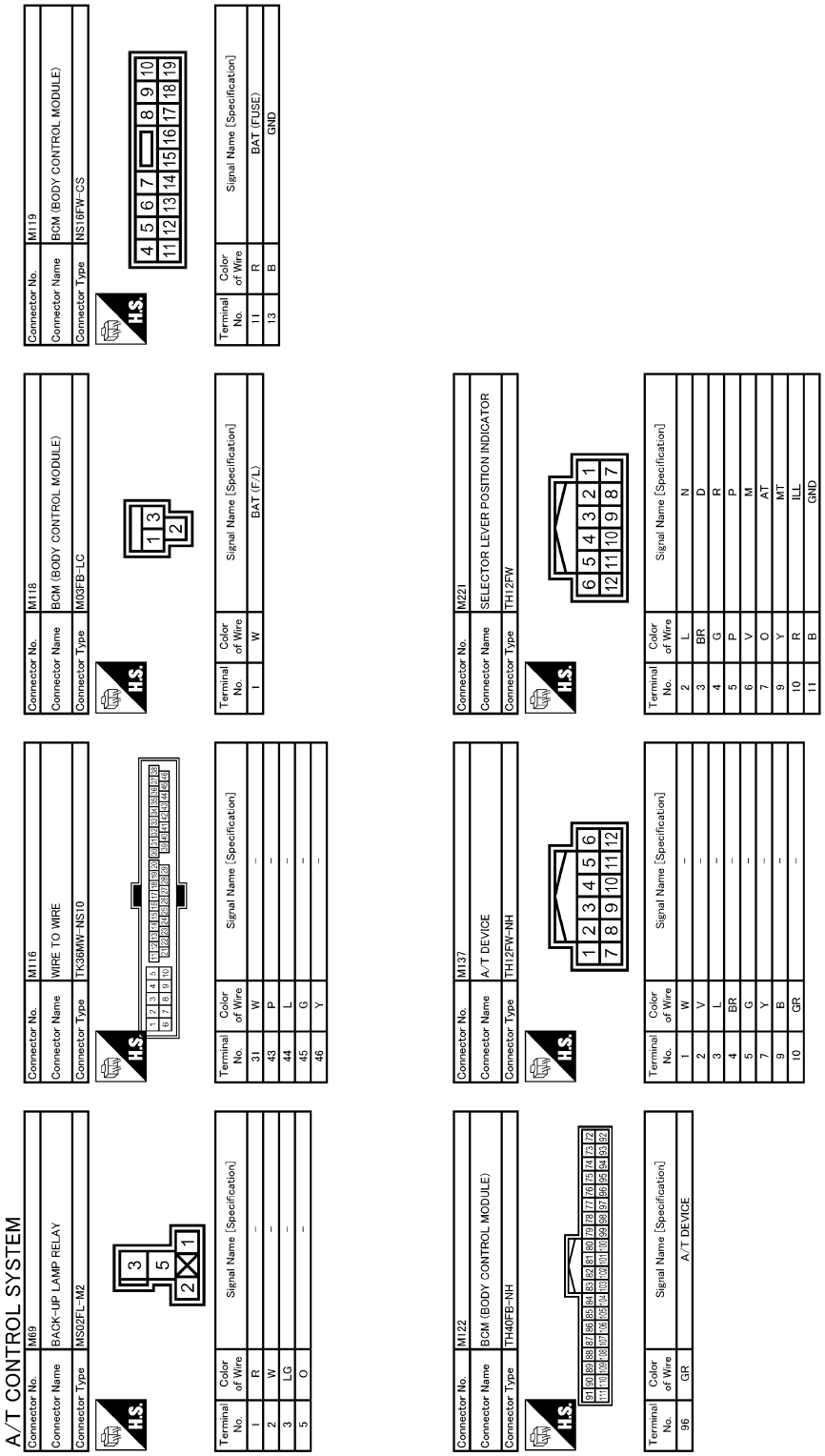

JCDWA0125GE

Fail-Safe

INFOID:0000000001672222

The TCM has an electrical fail-safe mode. This mode makes it possible to operate even if there is an error in a main electronic control input/output signal circuit.
In fail-safe mode, even if the selector lever is in “D” or “M” mode, the A/T is fixed in 2nd, 4th and 5th (depending on the breakdown position), so the customer should feel “slipping” or “poor acceleration”.
Even when the electronic circuits are normal, under special conditions (for example, when slamming on the brake with the wheels spinning markedly and stopping the tire rotation), the A/T can go into fail-safe mode. If

this happens, switch OFF the ignition switch for 10 seconds. Then switch it ON again to return to the normal shift pattern. When the customer's vehicle has returned to normal, handle according to the “Work Flow” (Refer to TM-76, "Work Flow").

FAIL-SAFE FUNCTION

If any malfunction occurs in a sensor or solenoid, this function controls the A/T to make driving possible.

Vehicle Speed Sensor

Signals are input from two systems - from vehicle speed sensor A/T (revolution sensor) installed on the A/T and from unified meter and A/C amp. so normal driving is possible even if there is a malfunction in one of the systems. If vehicle speed sensor A/T (revolution sensor) has unusual cases, 5th gear and manual mode are prohibited.

Accelerator Pedal Position Sensor

If there is a malfunction in one of the systems, the accelerator opening angle is controlled by ECM according to a pre-determined accelerator angle to make driving possible. If there are malfunctions in tow systems, the engine speed is fixed by ECM to a pre-determined engine speed to make driving possible.

Throttle Position Sensor

If there is a malfunction in one of the systems, the accelerator opening angle is controlled by ECM according to a pre-determined accelerator angle to make driving possible. If there are malfunctions in tow systems, the accelerator opening angle is controlled by the idle signal transmitted from the ECM which is based on input indicating either idle condition or off-idle condition (pre-determined accelerator opening) in order to make driving possible.

PNP Switch

In the unlikely event that a malfunction signal enters the TCM, the position indicator is switched OFF, the starter relay is switched OFF (starter is disabled), the back-up lamp relay switched OFF (back-up lamp is OFF) and the position is fixed to the “D” position to make driving possible.

Starter Relay

The starter relay is switched OFF. (Starter is disabled.)

A/T Interlock

- If there is an A/T interlock judgment malfunction, the A/T is fixed in 2nd gear to make driving possible.
  NOTE:
  When the vehicle is driven fixed in 2nd gear, a turbine revolution sensor malfunction is displayed, but this is not a turbine revolution sensor malfunction.
- When interlock is detected at the 3rd gear or more, it is locked at the 2nd gear.

A/T 1st Engine Braking

When there is an A/T first gear engine brake judgment malfunction, the low coast brake solenoid is switched OFF to avoid the engine brake operation.

Line Pressure Solenoid

The solenoid is switched OFF and the line pressure is set to the maximum hydraulic pressure to make driving possible.

Torque Converter Clutch Solenoid

The solenoid is switched OFF to release the lock-up.

Low Coast Brake Solenoid

When a malfunction (electrical or functional) occurs, in order to make driving possible. If the solenoid is ON, the A/T is held in 2nd gear. If the solenoid is OFF, the A/T is held in 4th gear. (Engine brake is not applied in 1st and 2nd gear.)

Input Clutch Solenoid

If a malfunction (electrical or functional) occurs with the solenoid either ON or OFF, the A/T is held in 4th gear to make driving possible.

Direct Clutch Solenoid

If a malfunction (electrical or functional) occurs with the solenoid either ON or OFF, the A/T is held in 4th gear to make driving possible.

Front Brake Solenoid

If a malfunction (electrical or functional) occurs with the solenoid ON, in order to make driving possible. The A/T is held in 5th gear. If the solenoid is OFF, the A/T is in 4th gear.

High and Low Reverse Clutch Solenoid
If a (electrical or functional) malfunction occurs with the solenoid either ON or OFF, the A/T is held in 4th gear to make driving possible.

Turbine Revolution Sensor 1 or 2
The control is the same as if there were no turbine revolution sensors, 5th gear and manual mode are prohibited.

DTC Inspection Priority Chart

INFOID:0000000001672223

If some DTCs are displayed at the same time, perform inspections one by one based on the following priority chart.
NOTE:
If DTC “U1000 CAN COMM CIRCUT” is displayed with other DTC, first perform the trouble diagnosis for “DTC U1000 CAN COMMUNICATION LINE”. Refer to TM-118, "Description".

Priority	Detected items (DTC)
1	U1000 CAN communication line
2	Except above

DTC Index

INFOID:0000000001672224

NOTE:
If DTC “U1000” is displayed with other DTC, first perform the trouble diagnosis for “DTC U1000 CAN COMMUNICATION LINE”. Refer to TM-118, "Description".

DTC		Items (CONSULT-III screen terms)	Reference page
OBD-II	Except OBD-II		
MIL*1, “ENGINE” with CONSULT-III or GST*2	CONSULT-III only “TRANSMISSION”		
—	P0615	STARTER RELAY/CIRC	TM-119
P0700	P0700	TCM	TM-121
P0705	P0705	PNP SW/CIRC	TM-122
P0710	P1710	ATF TEMP SEN/CIRC	TM-144
P0717	P0717	TURBINE REV S/CIRC	TM-124
P0720	P0720	VEH SPD SEN/CIR AT	TM-125
P0725	P0725	ENGINE SPEED SIG	TM-128
P0731	P0731	A/T 1ST GR FNCTN	TM-130
P0732	P0732	A/T 2ND GR FNCTN	TM-132
P0733	P0733	A/T 3RD GR FNCTN	TM-134
P0734	P0734	A/T 4TH GR FNCTN	TM-136
P0735	P0735	A/T 5TH GR FNCTN	TM-138
P0740	P0740	TCC SOLENOID/CIRC	TM-140
P0744	P0744	A/T TCC S/V FNCTN	TM-141
P0745	P0745	L/PRESS SOL/CIRC	TM-142
—	P1705	TP SEN/CIRC A/T	TM-143
—	P1721	VEH SPD SE/CIR-MTR	TM-147
P1730	P1730	A/T INTERLOCK	TM-148
—	P1731	A/T 1ST E/BRAKING	TM-149
P1752	P1752	I/C SOLENOID/CIRC	TM-150
P1757	P1757	FR/B SOLENOID/CIRC	TM-151

DTC		Items (CONSULT-III screen terms)	Reference page
OBD-II	Except OBD-II		
MIL*1, "ENGINE" with CONSULT-III or GST*2	CONSULT-III only "TRANSMISSION"		
P1762	P1762	D/C SOLENOID/CIRC	TM-152
P1767	P1767	HLR/C SOL/CIRC	TM-153
P1772	P1772	LC/B SOLENOID/CIRC	TM-154
P1774	P1774	LC/B SOLENOID FNCT	TM-155
—	P1815	MANU MODE SW/CIRC	TM-157
U1000	U1000	CAN COMM CIRCUIT	TM-118

*1: Refer to TM-108, "Diagnosis Description".

*2: These numbers are prescribed by SAE J2012.

SYMPTOM DIAGNOSIS

SYSTEM SYMPTOM

Symptom Table

INFOID:0000000001672225

- The diagnostics item numbers show the sequence for inspection. Inspect in order from item 1.
- Overhaul and inspection inside the A/T only if A/T fluid condition is NG. Refer to TM-214, "Inspection".

No.	Item	Symptom	Condition	Diagnostic item	Reference page
1	Shift Shock	Large shock. (“N”→ “D” position)	ON vehicle	1. Engine idle speed	EC-17
				2. Engine speed signal	TM-128
				3. Accelerator pedal position sensor	TM-143
				4. A/T position	TM-226
				5. A/T fluid temperature sensor	TM-144
				6. Front brake solenoid valve	TM-151
				7. CAN communication line	TM-118
				8. A/T fluid level and state	TM-214
				9. Line pressure test	TM-220
				10. Control valve with TCM	TM-232
			OFF vehicle	11. Forward brake (Parts behind drum support is impossible to perform inspection by disassembly. Refer to TM-91, "Cross-Sectional View".	TM-273
2		Shock is too large when changing D_1→ D_2 or M1 → M2.	ON vehicle	1. Accelerator pedal position sensor	TM-143
				2. A/T position	TM-226
				3. Direct clutch solenoid valve	TM-152
				4. CAN communication line	TM-118
				5. Engine speed signal	TM-128
				6. Turbine revolution sensor	TM-124
				7. Vehicle speed sensor A/T and vehicle speed sensor MTR	TM-125, TM-147
				8. A/T fluid level and state	TM-214
				9. Control valve with TCM	TM-232
			OFF vehicle	10. Direct clutch	TM-327

No.	Item	Symptom	Condition	Diagnostic item	Reference page
3	Shift Shock	Shock is too large when changing D2→ D3 or M2 → M3.	ON vehicle	1. Accelerator pedal position sensor	TM-143
				2. A/T position	TM-226
				3. High and low reverse clutch solenoid valve	TM-153
				4. CAN communication line	TM-118
				5. Engine speed signal	TM-128
				6. Turbine revolution sensor	TM-124
				7. Vehicle speed sensor A/T and vehicle speed sensor MTR	TM-125, TM-147
				8. A/T fluid level and state	TM-214
				9. Control valve with TCM	TM-232
			OFF vehicle	10. High and low reverse clutch	TM-325
4		Shock is too large when changing D3→ D4 or M3 → M4.	ON vehicle	1. Accelerator pedal position sensor	TM-143
				2. A/T position	TM-226
				3. Input clutch solenoid valve	TM-150
				4. CAN communication line	TM-118
				5. Engine speed signal	TM-128
				6. Turbine revolution sensor	TM-124
				7. Vehicle speed sensor A/T and vehicle speed sensor MTR	TM-125, TM-147
				8. A/T fluid level and state	TM-214
				9. Control valve with TCM	TM-232
			OFF vehicle	10. Input clutch	TM-315
5		Shock is too large when changing D4→ D5 orM4 → M5.	ON vehicle	1. Accelerator pedal position sensor	TM-143
				2. A/T position	TM-226
				3. Front brake solenoid valve	TM-151
				4. CAN communication line	TM-118
				5. Engine speed signal	TM-128
				6. Turbine revolution sensor	TM-124
				7. Vehicle speed sensor A/T and vehicle speed sensor MTR	TM-125, TM-147
				8. A/T fluid level and state	TM-214
				9. Control valve with TCM	TM-232
			OFF vehicle	10. Front brake (brake band)	TM-266
				11. Input clutch	TM-315

No.	Item	Symptom	Condition	Diagnostic item	Reference page
6	Shift Shock	Shock is too large for downshift when accelerator pedal is depressed.	ON vehicle	1. Accelerator pedal position sensor	TM-143
				2. A/T position	TM-226
				3. CAN communication line	TM-118
				4. Engine speed signal	TM-128
				5. Turbine revolution sensor	TM-124
				6. Vehicle speed sensor A/T and vehicle speed sensor MTR	TM-125, TM-147
				7. A/T fluid level and state	TM-214
				8. Control valve with TCM	TM-232
			OFF vehicle	9. Front brake (brake band)	TM-266
				10. Input clutch	TM-315
				11. High and low reverse clutch	TM-325
				12. Direct clutch	TM-327
7		Shock is too large for upshift when accelerator pedal is released.	ON vehicle	1. Accelerator pedal position sensor	TM-143
				2. A/T position	TM-226
				3. Engine speed signal	TM-128
				4. CAN communication line	TM-118
				5. Turbine revolution sensor	TM-124
				6. Vehicle speed sensor A/T and vehicle speed sensor MTR	TM-125, TM-147
				7. A/T fluid level and state	TM-214
				8. Control valve with TCM	TM-232
			OFF vehicle	9. Front brake (brake band)	TM-266
				10. Input clutch	TM-315
				11. High and low reverse clutch	TM-325
				12. Direct clutch	TM-327
8		Shock is too large for lock-up.	ON vehicle	1. Accelerator pedal position sensor	TM-143
				2. A/T position	TM-226
				3. Engine speed signal	TM-128
				4. CAN communication line	TM-118
				5. Turbine revolution sensor	TM-124
				6. Vehicle speed sensor A/T and vehicle speed sensor MTR	TM-125, TM-147
				7. Torque converter clutch solenoid valve	TM-140
				8. A/T fluid level and state	TM-214
				9. Control valve with TCM	TM-232
			OFF vehicle	10. Torque converter	TM-308

No.	Item	Symptom	Condition	Diagnostic item	Reference page
9	Shift Shock	Shock is too large during engine brake.	ON vehicle	1. Accelerator pedal position sensor	TM-143
				2. A/T position	TM-226
				3. CAN communication line	TM-118
				4. A/T fluid level and state	TM-214
				5. Control valve with TCM	TM-232
			OFF vehicle	6. Front brake (brake band)	TM-266
				7. Input clutch	TM-315
				8. High and low reverse clutch	TM-325
				9. Direct clutch	TM-327
10	No Up Shift	Gear does not change from $D_1 \rightarrow D_2$ or from $M1 \rightarrow M2$.	ON vehicle	1. A/T fluid level and state	TM-214
				2. Vehicle speed sensor A/T and vehicle speed sensor MTR	TM-125, TM-147
				3. Direct clutch solenoid valve	TM-152
				4. Line pressure test	TM-220
				5. CAN communication line	TM-118
				6. Control valve with TCM	TM-232
			OFF vehicle	7. Direct clutch	TM-327
11		Gear does not change from $D_2 \rightarrow D_3$ or from $M2 \rightarrow M3$.	ON vehicle	1. A/T fluid level and state	TM-214
				2. Vehicle speed sensor A/T and vehicle speed sensor MTR	TM-125, TM-147
				3. High and low reverse clutch solenoid valve	TM-153
				4. Line pressure test	TM-220
				5. CAN communication line	TM-118
				6. Control valve with TCM	TM-232
			OFF vehicle	7. High and low reverse clutch	TM-325
12		Gear does not change from $D_3 \rightarrow D_4$ or from $M3 \rightarrow M4$.	ON vehicle	1. A/T fluid level and state	TM-214
				2. Vehicle speed sensor A/T and vehicle speed sensor MTR	TM-125, TM-147
				3. Input clutch solenoid valve	TM-150
				4. Front brake solenoid valve	TM-151
				5. Line pressure test	TM-220
				6. CAN communication line	TM-118
				7. Control valve with TCM	TM-232
			OFF vehicle	8. Input clutch	TM-315
13	No Up Shift	Gear does not change from $D_4 \rightarrow D_5$ or from $M4 \rightarrow M5$.	ON vehicle	1. A/T fluid level and state	TM-214
				2. Vehicle speed sensor A/T and vehicle speed sensor MTR	TM-125, TM-147
				3. Front brake solenoid valve	TM-151
				4. Direct clutch solenoid valve	TM-152
				5. Turbine revolution sensor	TM-124
				6. Line pressure test	TM-220
				7. CAN communication line	TM-118
				8. Control valve with TCM	TM-232
			OFF vehicle	9. Front brake (brake band)	TM-266
				10. Input clutch	TM-315

No.	Item	Symptom	Condition	Diagnostic item	Reference page
14	No Down Shift	In “D” or “M” position, does not downshift to 4th gear.	ON vehicle	1. A/T fluid level and state	TM-214
				2. Vehicle speed sensor A/T and vehicle speed sensor MTR	TM-125, TM-147
				3. Front brake solenoid valve	TM-151
				4. Direct clutch solenoid valve	TM-152
				5. CAN communication line	TM-118
				6. Line pressure test	TM-220
				7. Control valve with TCM	TM-232
			OFF vehicle	8. Front brake (brake band)	TM-266
				9. Input clutch	TM-315
15		In “D” or “M” position, does not downshift to 3rd gear.	ON vehicle	1. A/T fluid level and state	TM-214
				2. Vehicle speed sensor A/T and vehicle speed sensor MTR	TM-125, TM-147
				3. Input clutch solenoid valve	TM-150
				4. Front brake solenoid valve	TM-151
				5. CAN communication line	TM-118
				6. Line pressure test	TM-220
				7. Control valve with TCM	TM-232
			OFF vehicle	8. Input clutch	TM-315
16		In “D” or “M” position, does not downshift to 2nd gear.	ON vehicle	1. A/T fluid level and state	TM-214
				2. Vehicle speed sensor A/T and vehicle speed sensor MTR	TM-125, TM-147
				3. High and low reverse clutch solenoid valve	TM-153
				4. CAN communication line	TM-118
				5. Line pressure test	TM-220
				6. Control valve with TCM	TM-232
			OFF vehicle	7. High and low reverse clutch	TM-325
17	No Down Shift	In “D” or “M” position, does not downshift to 1st gear.	ON vehicle	1. A/T fluid level and state	TM-214
				2. Vehicle speed sensor A/T and vehicle speed sensor MTR	TM-125, TM-147
				3. Direct clutch solenoid valve	TM-152
				4. CAN communication line	TM-118
				5. Line pressure test	TM-220
				6. Control valve with TCM	TM-232
			OFF vehicle	7. Direct clutch	TM-327

No.	Item	Symptom	Condition	Diagnostic item	Reference page
18	Slips/Will Not Engage	When “D” or “M” position, remains in 1st gear.	ON vehicle	1. A/T fluid level and state	TM-214
				2. Vehicle speed sensor A/T and vehicle speed sensor MTR	TM-125, TM-147
				3. Direct clutch solenoid valve	TM-152
				4. Line pressure test	TM-220
				5. CAN communication line	TM-118
				6. Control valve with TCM	TM-232
			OFF vehicle	7. 3rd one-way clutch	TM-313
				8. 1st one-way clutch	TM-320
				9. Gear system	TM-266
				10. Reverse brake	TM-273
				11. Forward one-way clutch (Parts behind drum support is impossible to perform inspection by disassembly. Refer to TM-91, "Cross-Sectional View".)	TM-273
				12. Forward brake (Parts behind drum support is impossible to perform inspection by disassembly. Refer to TM-91, "Cross-Sectional View".)	TM-273
19		When “D” or “M” position, remains in 2nd gear.	ON vehicle	1. A/T fluid level and state	TM-214
				2. Vehicle speed sensor A/T and vehicle speed sensor MTR	TM-125, TM-147
				3. Low coast brake solenoid valve	TM-154
				4. Line pressure test	TM-220
				5. CAN communication line	TM-118
				6. Control valve with TCM	TM-232
			OFF vehicle	7. 3rd one-way clutch	TM-313
				8. Gear system	TM-266
				9. Direct clutch	TM-327
				10. Forward brake (Parts behind drum support is impossible to perform inspection by disassembly. Refer to TM-91, "Cross-Sectional View".)	TM-273

No.	Item	Symptom	Condition	Diagnostic item	Reference page
20	Slips/Will Not Engage	When “D” or “M” position, remains in 3rd gear.	ON vehicle	1. A/T fluid level and state	TM-214
				2. Vehicle speed sensor A/T and vehicle speed sensor MTR	TM-125, TM-147
				3. Line pressure test	TM-220
				4. CAN communication line	TM-118
				5. Control valve with TCM	TM-232
			OFF vehicle	6. 3rd one-way clutch	TM-313
				7. Gear system	TM-266
				8. High and low reverse clutch	TM-325
				9. Forward one-way clutch (Parts behind drum support is impossible to perform inspection by disassembly. Refer to TM-91, "Cross-Sectional View".)	TM-273
				10. Forward brake (Parts behind drum support is impossible to perform inspection by disassembly. Refer to TM-91, "Cross-Sectional View".)	TM-273
21		When “D” or “M” position, remains in 4th gear.	ON vehicle	1. A/T fluid level and state	TM-214
				2. Vehicle speed sensor A/T and vehicle speed sensor MTR	TM-125, TM-147
				3. Input clutch solenoid valve	TM-150
				4. Direct clutch solenoid valve	TM-152
				5. High and low reverse clutch solenoid valve	TM-153
				6. Low coast brake solenoid valve	TM-154
				7. Front brake solenoid valve	TM-151
				8. Line pressure test	TM-220
				9. CAN communication line	TM-118
				10. Control valve with TCM	TM-232
			OFF vehicle	11. Input clutch	TM-315
				12. Gear system	TM-266
				13. High and low reverse clutch	TM-325
				14. Direct clutch	TM-327
22		When “D” or “M” position, remains in 5th gear.	ON vehicle	1. A/T fluid level and state	TM-214
				2. Vehicle speed sensor A/T and vehicle speed sensor MTR	TM-125, TM-147
				3. Front brake solenoid valve	TM-151
				4. Line pressure test	TM-220
				5. CAN communication line	TM-118
				6. Control valve with TCM	TM-232
			OFF vehicle	7. Front brake (brake band)	TM-266
				8. Input clutch	TM-315
				9. Gear system	TM-266
				10. High and low reverse clutch	TM-325

No.	Item	Symptom	Condition	Diagnostic item	Reference page
23	Slips/Will Not Engage	Vehicle cannot take off from D1.	ON vehicle	1. A/T fluid level and state	TM-214
				2. Accelerator pedal position sensor	TM-143
				3. Line pressure test	TM-220
				4. CAN communication line	TM-118
				5. Control valve with TCM	TM-232
			OFF vehicle	6. Torque converter	TM-308
				7. Oil pump assembly	TM-310
				8. 3rd one-way clutch	TM-313
				9. 1st one-way clutch	TM-320
				10. Gear system	TM-266
				11. Reverse brake	TM-273
				12. Forward one-way clutch (Parts behind drum support is impossible to perform inspection by disassembly. Refer to TM-91, "Cross-Sectional View".)	TM-273
				13. Forward brake (Parts behind drum support is impossible to perform inspection by disassembly. Refer to TM-91, "Cross-Sectional View".)	TM-273
24		Does not lock-up.	ON vehicle	1. A/T fluid level and state	TM-214
				2. Line pressure test	TM-220
				3. Engine speed signal	TM-128
				4. Turbine revolution sensor	TM-124
				5. Torque converter clutch solenoid valve	TM-140
				6. CAN communication line	TM-118
				7. Control valve with TCM	TM-232
			OFF vehicle	8. Torque converter	TM-308
				9. Oil pump assembly	TM-310
25		Does not hold lock-up condition.	ON vehicle	1. A/T fluid level and state	TM-214
				2. Line pressure test	TM-220
				3. Engine speed signal	TM-128
				4. Turbine revolution sensor	TM-124
				5. Torque converter clutch solenoid valve	TM-308
				6. CAN communication line	TM-118
				7. Control valve with TCM	TM-232
			OFF vehicle	8. Torque converter	TM-308
				9. Oil pump assembly	TM-310
26		Lock-up is not released.	ON vehicle	1. A/T fluid level and state	TM-214
				2. Line pressure test	TM-220
				3. Engine speed signal	TM-128
				4. Turbine revolution sensor	TM-124
				5. Torque converter clutch solenoid valve	TM-140
				6. CAN communication line	TM-118
				7. Control valve with TCM	TM-232
			OFF vehicle	8. Torque converter	TM-308
				9. Oil pump assembly	TM-310

No.	Item	Symptom	Condition	Diagnostic item	Reference page
27	Slips/Will Not Engage	No shock at all or the clutch slips when vehicle changes speed D1 → D2 or M1 → M2.	ON vehicle	1. A/T fluid level and state	TM-214
				2. Vehicle speed sensor A/T and vehicle speed sensor MTR	TM-125, TM-147
				3. Direct clutch solenoid valve	TM-152
				4. CAN communication line	TM-118
				5. Line pressure test	TM-220
				6. Control valve with TCM	TM-232
			OFF vehicle	7. Torque converter	TM-308
				8. Oil pump assembly	TM-310
				9. 3rd one-way clutch	TM-313
				10. Gear system	TM-266
				11. Direct clutch	TM-327
				12. Forward brake (Parts behind drum support is impossible to perform inspection by disassembly. Refer to TM-91, "Cross-Sectional View".)	TM-273
28		No shock at all or the clutch slips when vehicle changes speed D2 → D3 or M2 → M3.	ON vehicle	1. A/T fluid level and state	TM-214
				2. Vehicle speed sensor A/T and vehicle speed sensor MTR	TM-125, TM-147
				3. High and low reverse clutch solenoid valve	TM-153
				4. CAN communication line	TM-118
				5. Line pressure test	TM-220
				6. Control valve with TCM	TM-232
			OFF vehicle	7. Torque converter	TM-308
				8. Oil pump assembly	TM-310
				9. 3rd one-way clutch	TM-313
				10. Gear system	TM-266
				11. High and low reverse clutch	TM-325
				12. Forward one-way clutch (Parts behind drum support is impossible to perform inspection by disassembly. Refer to TM-91, "Cross-Sectional View".)	TM-273
				13. Forward brake (Parts behind drum support is impossible to perform inspection by disassembly. Refer to TM-91, "Cross-Sectional View".)	TM-273
29		No shock at all or the clutch slips when vehicle changes speed D3 → D4 or M3 → M4.	ON vehicle	1. A/T fluid level and state	TM-214
				2. Vehicle speed sensor A/T and vehicle speed sensor MTR	TM-125, TM-147
				3. Input clutch solenoid valve	TM-150
				4. Front brake solenoid valve	TM-151
				5. CAN communication line	TM-118
				6. Line pressure test	TM-220
				7. Control valve with TCM	TM-232
			OFF vehicle	8. Torque converter	TM-308
				9. Oil pump assembly	TM-310
				10. Input clutch	TM-315
				11. Gear system	TM-266
				12. High and low reverse clutch	TM-325
				13. Direct clutch	TM-327

No.	Item	Symptom	Condition	Diagnostic item	Reference page
30	Slips/Will Not Engage	No shock at all or the clutch slips when vehicle changes speed D4 → D5 or M4 → M5.	ON vehicle	1. A/T fluid level and state	TM-214
				2. Vehicle speed sensor A/T and vehicle speed sensor MTR	TM-125, TM-147
				3. Front brake solenoid valve	TM-151
				4. Direct clutch solenoid valve	TM-152
				5. CAN communication line	TM-118
				6. Line pressure test	TM-220
				7. Control valve with TCM	TM-232
			OFF vehicle	8. Torque converter	TM-308
				9. Oil pump assembly	TM-310
				10. Front brake (brake band)	TM-266
				11. Input clutch	TM-315
				12. Gear system	TM-266
				13. High and low reverse clutch	TM-325
31		When accelerator pedal is depressed and speed is shifted to D5→ D4 or M5 → M4 the engine idles or the A/T slips.	ON vehicle	1. A/T fluid level and state	TM-214
				2. Vehicle speed sensor A/T and vehicle speed sensor MTR	TM-125, TM-147
				3. Front brake solenoid valve	TM-151
				4. Direct clutch solenoid valve	TM-152
				5. CAN communication line	TM-118
				6. Line pressure test	TM-220
				7. Control valve with TCM	TM-232
			OFF vehicle	8. Torque converter	TM-308
				9. Oil pump assembly	TM-310
				10. Input clutch	TM-315
				11. Gear system	TM-266
				12. High and low reverse clutch	TM-325
				13. Direct clutch	TM-327

No.	Item	Symptom	Condition	Diagnostic item	Reference page
32	Slips/Will Not Engage	When accelerator pedal is depressed and speed is shifted to D4→ D3 or M4 → M3 the engine idles or the A/T slips.	ON vehicle	1. A/T fluid level and state	TM-214
				2. Vehicle speed sensor A/T and vehicle speed sensor MTR	TM-125, TM-147
				3. Input clutch solenoid valve	TM-150
				4. Front brake solenoid valve	TM-151
				5. CAN communication line	TM-118
				6. Line pressure test	TM-220
				7. Control valve with TCM	TM-232
			OFF vehicle	8. Torque converter	TM-308
				9. Oil pump assembly	TM-310
				10. 3rd one-way clutch	TM-313
				11. Gear system	TM-266
				12. High and low reverse clutch	TM-325
				13. Forward one-way clutch (Parts behind drum support is impossible to perform inspection by disassembly. Refer to TM-91, "Cross-Sectional View".)	TM-273
				14. Forward brake (Parts behind drum support is impossible to perform inspection by disassembly. Refer to TM-91, "Cross-Sectional View".)	TM-273
33		When accelerator pedal is depressed and speed is shifted to D3→ D2 or M3 → M2 the engine idles or the A/T slips.	ON vehicle	1. A/T fluid level and state	TM-214
				2. Vehicle speed sensor A/T and vehicle speed sensor MTR	TM-125, TM-147
				3. High and low reverse clutch solenoid valve	TM-153
				4. Direct clutch solenoid valve	TM-152
				5. CAN communication line	TM-118
				6. Line pressure test	TM-220
				7. Control valve with TCM	TM-232
			OFF vehicle	8. Torque converter	TM-308
				9. Oil pump assembly	TM-310
				10. 3rd one-way clutch	TM-313
				11. Gear system	TM-266
				12. Direct clutch	TM-327
				13. Forward brake (Parts behind drum support is impossible to perform inspection by disassembly. Refer to TM-91, "Cross-Sectional View".)	TM-273

No.	Item	Symptom	Condition	Diagnostic item	Reference page
34	Slips/Will Not Engage	When accelerator pedal is depressed and speed is shifted to D2→ D1 or M2 → M1 the engine idles or the A/T slips.	ON vehicle	1. A/T fluid level and state	TM-214
				2. Vehicle speed sensor A/T and vehicle speed sensor MTR	TM-125, TM-147
				3. Direct clutch solenoid valve	TM-152
				4. CAN communication line	TM-118
				5. Line pressure test	TM-220
				6. Control valve with TCM	TM-232
			OFF vehicle	7. Torque converter	TM-308
				8. Oil pump assembly	TM-310
				9. 3rd one-way clutch	TM-313
				10. 1st one-way clutch	TM-320
				11. Gear system	TM-266
				12. Reverse brake	TM-273
				13. Forward one-way clutch (Parts behind drum support is impossible to perform inspection by disassembly. Refer to TM-91, "Cross-Sectional View".)	TM-273
				14. Forward brake (Parts behind drum support is impossible to perform inspection by disassembly. Refer to TM-91, "Cross-Sectional View".)	TM-273
35		With selector lever in “D” position, acceleration is extremely poor.	ON vehicle	1. A/T fluid level and state	TM-214
				2. Line pressure test	TM-220
				3. Accelerator pedal position sensor	TM-143
				4. CAN communication line	TM-118
				5. PNP switch	TM-122
				6. A/T position	TM-226
				7. Control valve with TCM	TM-232
			OFF vehicle	8. Torque converter	TM-308
				9. Oil pump assembly	TM-310
				10. 1st one-way clutch	TM-320
				11. Gear system	TM-266
				12. Reverse brake	TM-273
				13. Forward one-way clutch (Parts behind drum support is impossible to perform inspection by disassembly. Refer to TM-91, "Cross-Sectional View".)	TM-273
				14. Forward brake (Parts behind drum support is impossible to perform inspection by disassembly. Refer to TM-91, "Cross-Sectional View".)	TM-273

No.	Item	Symptom	Condition	Diagnostic item	Reference page
36	Slips/Will Not Engage	With selector lever in “R” position, acceleration is extremely poor.	ON vehicle	1. A/T fluid level and state	TM-214
				2. Line pressure test	TM-220
				3. Accelerator pedal position sensor	TM-143
				4. High and low reverse clutch solenoid valve	TM-153
				5. CAN communication line	TM-118
				6. PNP switch	TM-122
				7. A/T position	TM-226
				8. Control valve with TCM	TM-232
			OFF vehicle	9. Gear system	TM-266
				10. Output shaft	TM-273
				11. Reverse brake	TM-273
37		While starting off by accelerating in 1st, engine races or slippage occurs.	ON vehicle	1. A/T fluid level and state	TM-214
				2. Line pressure test	TM-220
				3. Accelerator pedal position sensor	TM-143
				4. CAN communication line	TM-118
				5. Control valve with TCM	TM-232
			OFF vehicle	6. Torque converter	TM-308
				7. Oil pump assembly	TM-310
				8. 3rd one-way clutch	TM-313
				9. 1st one-way clutch	TM-320
				10. Gear system	TM-266
				11. Reverse brake	TM-273
				12. Forward one-way clutch (Parts behind drum support is impossible to perform inspection by disassembly. Refer to TM-91, "Cross-Sectional View".)	TM-273
				13. Forward brake (Parts behind drum support is impossible to perform inspection by disassembly. Refer to TM-91, "Cross-Sectional View".)	TM-273
38		While accelerating in 2nd, engine races or slippage occurs.	ON vehicle	1. A/T fluid level and state	TM-214
				2. Line pressure test	TM-220
				3. Accelerator pedal position sensor	TM-143
				4. CAN communication line	TM-118
				5. Direct clutch solenoid valve	TM-152
				6. Control valve with TCM	TM-232
			OFF vehicle	7. Torque converter	TM-308
				8. Oil pump assembly	TM-310
				9. 3rd one-way clutch	TM-313
				10. Gear system	TM-266
				11. Direct clutch	TM-327
				12. Forward brake (Parts behind drum support is impossible to perform inspection by disassembly. Refer to TM-91, "Cross-Sectional View".)	TM-273

No.	Item	Symptom	Condition	Diagnostic item	Reference page
39	Slips/Will Not Engage	While accelerating in 3rd, engine races or slippage occurs.	ON vehicle	1. A/T fluid level and state	TM-214
				2. Line pressure test	TM-220
				3. Accelerator pedal position sensor	TM-143
				4. CAN communication line	TM-118
				5. High and low reverse clutch solenoid valve	TM-153
				6. Control valve with TCM	TM-232
			OFF vehicle	7. Torque converter	TM-308
				8. Oil pump assembly	TM-310
				9. 3rd one-way clutch	TM-313
				10. Gear system	TM-266
				11. High and low reverse clutch	TM-325
				12. Forward one-way clutch (Parts behind drum support is impossible to perform inspection by disassembly. Refer to TM-91, "Cross-Sectional View".)	TM-273
				13. Forward brake (Parts behind drum support is impossible to perform inspection by disassembly. Refer to TM-91, "Cross-Sectional View".)	TM-273
40		While accelerating in 4th, engine races or slippage occurs.	ON vehicle	1. A/T fluid level and state	TM-214
				2. Line pressure test	TM-220
				3. Accelerator pedal position sensor	TM-143
				4. CAN communication line	TM-118
				5. Input clutch solenoid valve	TM-150
				6. Control valve with TCM	TM-232
			OFF vehicle	7. Torque converter	TM-308
				8. Oil pump assembly	TM-310
				9. Input clutch	TM-315
				10. Gear system	TM-266
				11. High and low reverse clutch	TM-325
				12. Direct clutch	TM-327
41		While accelerating in 5th, engine races or slippage occurs.	ON vehicle	1. A/T fluid level and state	TM-214
				2. Line pressure test	TM-220
				3. Accelerator pedal position sensor	TM-143
				4. CAN communication line	TM-118
				5. Front brake solenoid valve	TM-151
				6. Control valve with TCM	TM-232
			OFF vehicle	7. Torque converter	TM-308
				8. Oil pump assembly	TM-310
				9. Front brake (brake band)	TM-266
				10. Input clutch	TM-315
				11. Gear system	TM-266
				12. High and low reverse clutch	TM-325

No.	Item	Symptom	Condition	Diagnostic item	Reference page
42	Slips/Will Not Engage	Slips at lock-up.	ON vehicle	1. A/T fluid level and state	TM-214
				2. Line pressure test	TM-220
				3. Engine speed signal	TM-128
				4. Turbine revolution sensor	TM-124
				5. Torque converter clutch solenoid valve	TM-140
				6. CAN communication line	TM-118
				7. Control valve with TCM	TM-232
			OFF vehicle	8. Torque converter	TM-308
				9. Oil pump assembly	TM-310
43		No creep at all.	ON vehicle	1. A/T fluid level and state	TM-214
				2. Line pressure test	TM-220
				3. Accelerator pedal position sensor	TM-143
				4. Direct clutch solenoid valve	TM-152
				5. PNP switch	TM-122
				6. CAN communication line	TM-118
				7. A/T position	TM-226
				8. Control valve with TCM	TM-232
			OFF vehicle	9. Torque converter	TM-308
				10. Oil pump assembly	TM-310
				11. 1st one-way clutch	TM-320
				12. Gear system	TM-266
				13. Reverse brake	TM-273
				14. Direct clutch	TM-327
				15. Forward one-way clutch (Parts behind drum support is impossible to perform inspection by disassembly. Refer to TM-91, "Cross-Sectional View".)	TM-273
				16. Forward brake (Parts behind drum support is impossible to perform inspection by disassembly. Refer to TM-91, "Cross-Sectional View".)	TM-273
44		Vehicle cannot run in all positions.	ON vehicle	1. A/T fluid level and state	TM-214
				2. Line pressure test	TM-220
				3. PNP switch	TM-122
				4. A/T position	TM-226
				5. Control valve with TCM	TM-232
			OFF vehicle	6. Oil pump assembly	TM-310
				7. Gear system	TM-266
				8. Output shaft	TM-273

No.	Item	Symptom	Condition	Diagnostic item	Reference page
45	Slips/Will Not Engage	With selector lever in “D” position, driving is not possible.	ON vehicle	1. A/T fluid level and state	TM-214
				2. Line pressure test	TM-220
				3. PNP switch	TM-122
				4. A/T position	TM-226
				5. Control valve with TCM	TM-232
			OFF vehicle	6. Torque converter	TM-308
				7. Oil pump assembly	TM-310
				8. 1st one-way clutch	TM-320
				9. Gear system	TM-266
				10. Reverse brake	TM-273
				11. Forward one-way clutch (Parts behind drum support is impossible to perform inspection by disassembly. Refer to TM-91, "Cross-Sectional View".)	TM-273
				12. Forward brake (Parts behind drum support is impossible to perform inspection by disassembly. Refer to TM-91, "Cross-Sectional View".)	TM-273
46		With selector lever in “R” position, driving is not possible.	ON vehicle	1. A/T fluid level and state	TM-214
				2. Line pressure test	TM-220
				3. PNP switch	TM-122
				4. A/T position	TM-226
				5. Control valve with TCM	TM-232
			OFF vehicle	6. Gear system	TM-266
				7. Output shaft	TM-273
				8. Reverse brake	TM-273
47	Does Not Change	Does not change M5 → M4.	ON vehicle	1. PNP switch	TM-122
				2. A/T fluid level and state	TM-214
				3. A/T position	TM-226
				4. Manual mode switch	TM-157
				5. CAN communication line	TM-118
				6. Control valve with TCM	TM-232
			OFF vehicle	7. Front brake (brake band)	TM-266

No.	Item	Symptom	Condition	Diagnostic item	Reference page
48	Does Not Change	Does not change M4 → M3.	ON vehicle	1. PNP switch	TM-122
				2. A/T fluid level and state	TM-214
				3. A/T position	TM-226
				4. Manual mode switch	TM-157
				5. CAN communication line	TM-118
				6. Control valve with TCM	TM-232
			OFF vehicle	7. Front brake (brake band)	TM-266
				8. Input clutch	TM-315
49		Does not change M3 → M2.	ON vehicle	1. PNP switch	TM-122
				2. A/T fluid level and state	TM-214
				3. A/T position	TM-226
				4. Manual mode switch	TM-157
				5. CAN communication line	TM-118
				6. Control valve with TCM	TM-232
			OFF vehicle	7. Front brake (brake band)	TM-266
				8. Input clutch	TM-315
				9. High and low reverse clutch	TM-325
50		Does not change M2 → M1.	ON vehicle	1. PNP switch	TM-122
				2. A/T fluid level and state	TM-214
				3. A/T position	TM-226
				4. Manual mode switch	TM-157
				5. CAN communication line	TM-118
				6. Control valve with TCM	TM-232
			OFF vehicle	7. Input clutch	TM-315
				8. High and low reverse clutch	TM-325
				9. Direct clutch	TM-327
51		Cannot be changed to manual mode.	ON vehicle	1. Manual mode switch	TM-157
				2. Turbine revolution sensor	TM-124
				3. CAN communication line	TM-118

No.	Item	Symptom	Condition	Diagnostic item	Reference page
52	Others	Shift point is high in “D” position.	ON vehicle	1. Vehicle speed sensor A/T and vehicle speed sensor MTR	TM-125, TM-147
				2. Accelerator pedal position sensor	TM-143
				3. CAN communication line	TM-118
				4. A/T fluid temperature sensor	TM-144
				5. Control valve with TCM	TM-232
53		Shift point is low in “D” position.	ON vehicle	1. Vehicle speed sensor A/T and vehicle speed sensor MTR	TM-125, TM-147
				2. Accelerator pedal position sensor	TM-143
				3. CAN communication line	TM-118
				4. Control valve with TCM	TM-232
54		Judder occurs during lock-up.	ON vehicle	1. A/T fluid level and state	TM-214
				2. Engine speed signal	TM-128
				3. Turbine revolution sensor	TM-124
				4. Vehicle speed sensor A/T and vehicle speed sensor MTR	TM-125, TM-147
				5. Accelerator pedal position sensor	TM-143
				6. CAN communication line	TM-118
				7. Torque converter clutch solenoid valve	TM-140
				8. Control valve with TCM	TM-232
			OFF vehicle	9. Torque converter	TM-308
55		Strange noise in “R” position.	ON vehicle	1. A/T fluid level and state	TM-214
				2. Engine speed signal	TM-128
				3. CAN communication line	TM-118
				4. Control valve with TCM	TM-232
			OFF vehicle	5. Torque converter	TM-308
				6. Oil pump assembly	TM-310
				7. Gear system	TM-266
				8. High and low reverse clutch	TM-325
				9. Reverse brake	TM-273
56		Strange noise in “N” position.	ON vehicle	1. A/T fluid level and state	TM-214
				2. Engine speed signal	TM-128
				3. CAN communication line	TM-118
				4. Control valve with TCM	TM-232
			OFF vehicle	5. Torque converter	TM-308
				6. Oil pump assembly	TM-310
				7. Gear system	TM-266

No.	Item	Symptom	Condition	Diagnostic item	Reference page
57	Others	Strange noise in “D” position.	ON vehicle	1. A/T fluid level and state	TM-214
				2. Engine speed signal	TM-128
				3. CAN communication line	TM-118
				4. Control valve with TCM	TM-232
			OFF vehicle	5. Torque converter	TM-308
				6. Oil pump assembly	TM-310
				7. Gear system	TM-266
				8. Forward brake (Parts behind drum support is impossible to perform inspection by disassembly. Refer to TM-91, "Cross-Sectional View".)	TM-273
58		Vehicle does not de-celerate by engine brake.	ON vehicle	1. PNP switch	TM-122
				2. A/T fluid level and state	TM-214
				3. A/T position	TM-226
				4. Manual mode switch	TM-157
				5. CAN communication line	TM-118
				6. Control valve with TCM	TM-232
			OFF vehicle	7. Input clutch	TM-315
				8. High and low reverse clutch	TM-325
				9. Direct clutch	TM-327
59		Engine brake does not work M5 → M4.	ON vehicle	1. PNP switch	TM-122
				2. A/T fluid level and state	TM-214
				3. A/T position	TM-226
				4. Manual mode switch	TM-157
				5. CAN communication line	TM-118
				6. Control valve with TCM	TM-232
			OFF vehicle	7. Front brake (brake band)	TM-266
60		Engine brake does not work M4 → M3.	ON vehicle	1. PNP switch	TM-122
				2. A/T fluid level and state	TM-214
				3. A/T position	TM-226
				4. Manual mode switch	TM-157
				5. CAN communication line	TM-118
				6. Control valve with TCM	TM-232
			OFF vehicle	7. Front brake (brake band)	TM-266
				8. Input clutch	TM-315

No.	Item	Symptom	Condition	Diagnostic item	Reference page
61	Others	Engine brake does not work M3 → M2.	ON vehicle	1. PNP switch	TM-122
				2. A/T fluid level and state	TM-214
				3. A/T position	TM-226
				4. Manual mode switch	TM-157
				5. CAN communication line	TM-118
				6. Control valve with TCM	TM-232
			OFF vehicle	7. Front brake (brake band)	TM-266
				8. Input clutch	TM-315
				9. High and low reverse clutch	TM-325
62		Engine brake does not work M2 → M1.	ON vehicle	1. PNP switch	TM-122
				2. A/T fluid level and state	TM-214
				3. A/T position	TM-226
				4. Manual mode switch	TM-157
				5. CAN communication line	TM-118
				6. Control valve with TCM	TM-232
			OFF vehicle	7. Input clutch	TM-315
				8. High and low reverse clutch	TM-325
				9. Direct clutch	TM-327
63		Maximum speed low.	ON vehicle	1. A/T fluid level and state	TM-214
				2. Line pressure test	TM-220
				3. Accelerator pedal position sensor	TM-143
				4. CAN communication line	TM-118
				5. Direct clutch solenoid valve	TM-152
				6. Control valve with TCM	TM-232
			OFF vehicle	7. Torque converter	TM-308
				8. Oil pump assembly	TM-310
				9. Input clutch	TM-315
				10. Gear system	TM-266
				11. High and low reverse clutch	TM-325
				12. Direct clutch	TM-327
				13. Forward one-way clutch (Parts behind drum support is impossible to perform inspection by disassembly. Refer to TM-91, "Cross-Sectional View".)	TM-273
				14. Forward brake (Parts behind drum support is impossible to perform inspection by disassembly. Refer to TM-91, "Cross-Sectional View".)	TM-273
64		Extremely large creep.	ON vehicle	1. Engine idle speed	EC-17
				2. CAN communication line	TM-118
			OFF vehicle	3. Torque converter	TM-308

No.	Item	Symptom	Condition	Diagnostic item	Reference page
65	Others	With selector lever in “P” position, vehicle does not enter parking condition or, with selector lever in another position, parking condition is not cancelled.	ON vehicle	1. PNP switch	TM-122
				2. A/T position	TM-226
			OFF vehicle	3. Parking components	TM-245
66		Vehicle runs with A/T in “P” position.	ON vehicle	1. PNP switch	TM-122
				2. A/T fluid level and state	TM-214
				3. A/T position	TM-226
				4. Control valve with TCM	TM-232
			OFF vehicle	5. Parking components	TM-245
				6. Gear system	TM-266
67		Vehicle runs with A/T in “N” position.	ON vehicle	1. PNP switch	TM-122
				2. A/T fluid level and state	TM-214
				3. A/T position	TM-226
				4. Control valve with TCM	TM-232
			OFF vehicle	5. Input clutch	TM-315
				6. Gear system	TM-266
				7. Direct clutch	TM-327
				8. Reverse brake	TM-273
				9. Forward one-way clutch (Parts behind drum support is impossible to perform inspection by disassembly. Refer to TM-91, "Cross-Sectional View".)	TM-273
				10. Forward brake (Parts behind drum support is impossible to perform inspection by disassembly. Refer to TM-91, "Cross-Sectional View".)	TM-273
68		Engine does not start in “N” or “P” position.	ON vehicle	1. Push-button ignition switch and starter	PG-50, STR-9
				2. A/T position	TM-226
				3. PNP switch	TM-122
69		Engine starts in positions other than “N” or “P”.	ON vehicle	1. Push-button ignition switch and starter	PG-50, STR-9
				2. A/T position	TM-226
				3. PNP switch	TM-122
70		Engine stall.	ON vehicle	1. A/T fluid level and state	TM-214
				2. Engine speed signal	TM-128
				3. Turbine revolution sensor	TM-124
				4. Torque converter clutch solenoid valve	TM-140
				5. CAN communication line	TM-118
				6. Control valve with TCM	TM-232
			OFF vehicle	7. Torque converter	TM-308

No.	Item	Symptom	Condition	Diagnostic item	Reference page
71	Others	Engine stalls when selector lever shifted “N” →“D” or “R”.	ON vehicle	1. A/T fluid level and state	TM-214
				2. Engine speed signal	TM-128
				3. Turbine revolution sensor	TM-124
				4. Torque converter clutch solenoid valve	TM-140
				5. CAN communication line	TM-118
				6. Control valve with TCM	TM-232
			OFF vehicle	7. Torque converter	TM-308
72		Engine speed does not return to idle.	ON vehicle	1. A/T fluid level and state	TM-214
				2. Direct clutch solenoid valve	TM-152
				3. Front brake solenoid valve	TM-151
				4. Accelerator pedal position sensor	TM-143
				5. Vehicle speed sensor A/T and vehicle speed sensor MTR	TM-125, TM-147
				6. CAN communication line	TM-118
				7. Control valve with TCM	TM-232
			OFF vehicle	8. Front brake (brake band)	TM-266
				9. Direct clutch	TM-327
73		A/T CHECK indicator lamp does not come on.	ON vehicle	1. CAN communication line	TM-118
				2. Combination meters	MWI-6
				3. Unified meter and A/C amp.	
				4. TCM power supply and ground	TM-163
74		Unable to perform self-diagnosis.	ON vehicle	1. CAN communication line	TM-118
				2. PNP switch	TM-122
				3. Manual mode switch	TM-157
				4. Closed throttle and wide open throttle position signal	EC-466
				5. Stop lamp switch signal	SEC-58
75		When brake pedal is depressed with ignition switch ON, selector lever cannot be shifted from “P” position to other position.	ON vehicle	1. Stop lamp switch	TM-166
				2. Shift lock relay	
				3. Shift lock solenoid	
76		When brake pedal is not depressed with ignition switch ON, selector lever can be shifted from “P” position to other position.	ON vehicle	1. Stop lamp switch	TM-166
				2. ICC brake hold relay (with ICC)	
				3. ICC sensor integrated unit (with ICC)	
				4. Shift lock relay	
				5. Shift lock solenoid	

PRECAUTION

PRECAUTIONS

Precaution for Supplemental Restraint System (SRS) "AIR BAG" and "SEAT BELT PRE-TENSIONER"

INFOID:0000000001907604

The Supplemental Restraint System such as “AIR BAG” and “SEAT BELT PRE-TENSIONER”, used along with a front seat belt, helps to reduce the risk or severity of injury to the driver and front passenger for certain types of collision. This system includes seat belt switch inputs and dual stage front air bag modules. The SRS system uses the seat belt switches to determine the front air bag deployment, and may only deploy one front air bag, depending on the severity of a collision and whether the front occupants are belted or unbelted.
Information necessary to service the system safely is included in the “SRS AIRBAG” and “SEAT BELT” of this Service Manual.

WARNING:

- **To avoid rendering the SRS inoperative, which could increase the risk of personal injury or death in the event of a collision which would result in air bag inflation, all maintenance must be performed by an authorized NISSAN/INFINITI dealer.**
- **Improper maintenance, including incorrect removal and installation of the SRS, can lead to personal injury caused by unintentional activation of the system. For removal of Spiral Cable and Air Bag Module, see the “SRS AIRBAG”.**
- **Do not use electrical test equipment on any circuit related to the SRS unless instructed to in this Service Manual. SRS wiring harnesses can be identified by yellow and/or orange harnesses or harness connectors.**

On Board Diagnosis (OBD) System of A/T and Engine

INFOID:0000000001672227

The ECM has an on board diagnostic system. It will light up the malfunction indicator lamp (MIL) to warn the driver of a malfunction causing emission deterioration.

CAUTION:

- **Be sure to turn the ignition switch OFF and disconnect the battery cable from the negative terminal before any repair or inspection work. The open/short circuit of related switches, sensors, solenoid valves, etc. will cause the MIL to light up.**
- **Be sure to connect and lock the connectors securely after work. A loose (unlocked) connector will cause the MIL to light up due to an open circuit. (Be sure the connector is free from water, grease, dirt, bent terminals, etc.)**
- **Be sure to route and secure the harnesses properly after work. Interference of the harness with a bracket, etc. may cause the MIL to light up due to a short circuit.**
- **Be sure to connect rubber tubes properly after work. A misconnected or disconnected rubber tube may cause the MIL to light up due to a malfunction of the EVAP system or fuel injection system, etc.**
- **Be sure to erase the unnecessary malfunction information (repairs completed) from the TCM and ECM before returning the vehicle to the customer.**

General Precautions

INFOID:0000000001672228

- **Turn ignition switch OFF and disconnect the battery cable from the negative terminal before connecting or disconnecting the A/T assembly harness connector. Because battery voltage is applied to TCM even if ignition switch is turned OFF.**

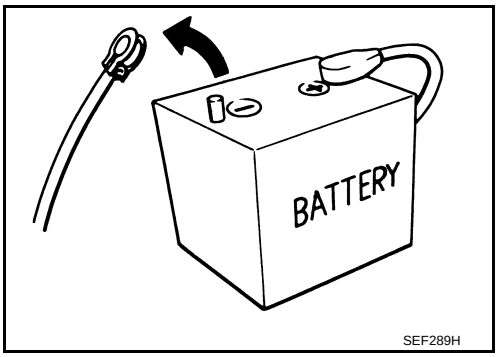

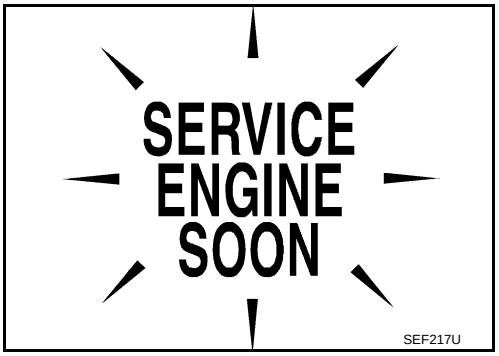

- **Perform "DTC (Diagnostic Trouble Code) CONFIRMATION PROCEDURE" after performing each TROUBLE DIAGNOSIS. If the repair is completed DTC should not be displayed in the "DTC CONFIRMATION PROCEDURE".**
- Always use the specified brand of ATF. Refer to MA-10, "Fluids and Lubricants".
- Use lint-free paper not cloth rags during work.
- Dispose of the waste oil using the methods prescribed by law, ordinance, etc. after replacing the ATF.
- Before proceeding with disassembly, thoroughly clean the outside of the transmission. It is important to prevent the internal parts from becoming contaminated by dirt or other foreign matter.
- Disassembly should be done in a clean work area.
- Use lint-free paper or towels for wiping parts clean. Common shop rags can leave fibers that could interfere with the operation of the transmission.
- Place disassembled parts in order for easier and proper assembly.
- All parts should be carefully cleaned with a general purpose, non-flammable solvent before inspection or reassembly.
- Gaskets, seals and O-rings should be replaced any time the A/T is disassembled.
- It is very important to perform functional tests whenever they are indicated.
- The valve body contains precision parts and requires extreme care when parts are removed and serviced. Place disassembled valve body parts in order for easier and proper assembly. Care will also prevent springs and small parts from becoming scattered or lost.
- Properly installed valves, sleeves, plugs, etc. will slide along bores in valve body under their own weight.
- Before assembly, apply a coat of recommended ATF to all parts. Apply petroleum jelly to protect O-rings and seals, or hold bearings and washers in place during assembly. Do not use grease.
- Extreme care should be taken to avoid damage to O-rings, seals and gaskets when assembling.
- Clean or replace ATF cooler if excessive foreign material is found in oil pan or clogging strainer. Refer to TM-211, "Service Notice or Precaution".
- Refill the transmission with new ATF after overhaul.
- When the A/T drain plug is removed, only some of the ATF is drained. Old ATF will remain in torque converter and ATF cooling system.
  Always follow the procedures under "Inspection" and "Changing" when changing ATF. Refer to TM-214, "Inspection", TM-215, "Changing".

Service Notice or Precaution

INFOID:0000000001672229

ATF COOLER SERVICE

If ATF contains frictional material (clutches, bands, etc.), or if an A/T is repaired, overhauled, or replaced, inspect and clean the A/T fluid cooler mounted in the radiator or replace the radiator. Flush cooler lines using cleaning solvent and compressed air after repair. For A/T fluid cooler cleaning procedure, refer to TM-216, "Cleaning". For radiator replacement, refer to CO-14, "Exploded View".

OBD-II SELF-DIAGNOSIS

- A/T self-diagnosis is performed by the TCM in combination with the ECM. The results can be read through the blinking pattern of the A/T CHECK indicator or the malfunction indicator lamp (MIL). Refer to the table on "SELF-DIAGNOSTIC RESULTS" for the indicator used to display each self-diagnostic result. Refer to TM-112, "CONSULT-III Function (TRANSMISSION)".
- The self-diagnostic results indicated by the MIL are automatically stored in both the ECM and TCM memories.
  Always perform the procedure on "How to Erase DTC" to complete the repair and avoid unnecessary blinking of the MIL. Refer to TM-111, "Diagnosis Description".

For details of OBD-II, refer to EC-107, "Diagnosis Description".

- **Certain systems and components, especially those related to OBD, may use the new style slide-locking type harness connector. For description and how to disconnect, refer to PG-86, "Description".**

PREPARATION

PREPARATION

Special Service Tool

INFOID:0000000001672230

The actual shapes of Kent-Moore tools may differ from those of special service tools illustrated here.

Tool number (Kent-Moore No.) Tool name	Description
ST2505S001 (J-34301-C) Oil pressure gauge set 1. ST25051001 (—) Oil pressure gauge 2. ST25052000 (—) Hose 3. ST25053000 (—) Joint pipe 4. ST25054000 (—) Adapter 5. ST25055000 (—) Adapter 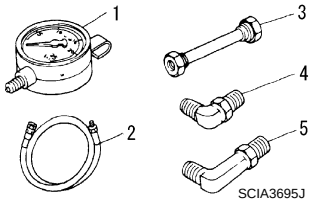	Measuring line pressure
KV31103600 (J-45674) Joint pipe adapter (With ST25054000) 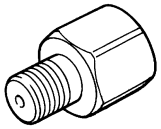	Measuring line pressure
ST33400001 (J-26082) Drift a: 60 mm (2.36 in) dia. b: 47 mm (1.85 in) dia. 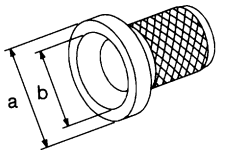	• Installing rear oil seal • Installing oil pump housing oil seal
KV31102400 (J-34285 and J-34285-87) Clutch spring compressor a: 320 mm (12.60 in) b: 174 mm (6.85 in) 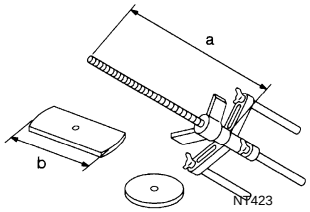	Installing reverse brake return spring retainer
ST25850000 (J-25721-A) Sliding hammer a: 179 mm (7.05 in) b: 70 mm (2.76 in) c: 40 mm (1.57 in) d: M12X1.75P 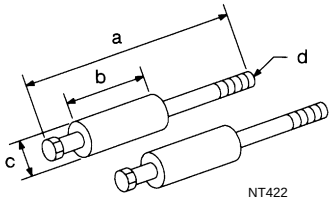	Remove oil pump assembly

Commercial Service Tool

INFOID:0000000001672231

Tool name	Description
Power tool 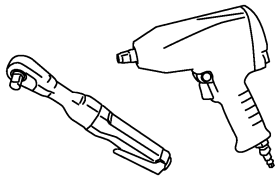 PBIC0190E	Loosening bolts and nuts
Drift a: 22 mm (0.87 in) dia. 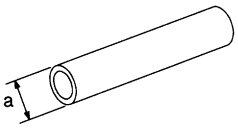 NT083	Installing manual shaft oil seals
Pin punch a: 4 mm (0.16 in) dia. 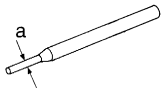 NT410	Remove retaining pin

ON-VEHICLE MAINTENANCE

A/T FLUID

Inspection

INFOID:0000000001672232

A/T FLUID LEAKAGE AND A/T FLUID LEVEL CHECK

1. Warm up engine.
2. Check for A/T fluid leakage.
3. Before driving, A/T fluid level can be checked at A/T fluid temperatures of 30 to 50°C (86 to 122°F) using “COLD” range on A/T fluid level gauge as follows.

a. Park vehicle on level surface and set parking brake.
b. Start engine and move selector lever through each gear position. Leave selector lever in “P” position.
c. Check A/T fluid level with engine idling.

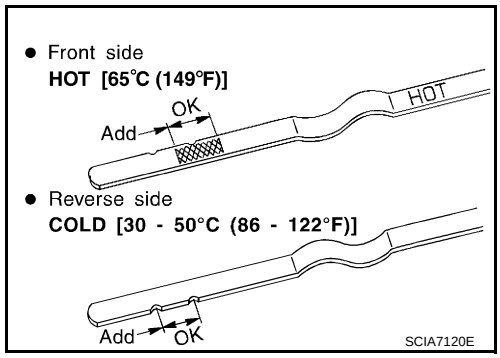

d. Remove A/T fluid level gauge and wipe clean with lint-free paper.
CAUTION:
When wiping away the A/T fluid level gauge, always use lint-free paper, not a cloth one.
e. Re-insert A/T fluid level gauge into A/T fluid charging pipe as far as it will go.
CAUTION:
Firmly fix the A/T fluid level gauge to the A/T fluid charging pipe using a stopper attached.
f. Remove A/T fluid level gauge and note reading. If reading is at low side of range, add ATF to the A/T fluid charging pipe.
CAUTION:
Do not overfill.

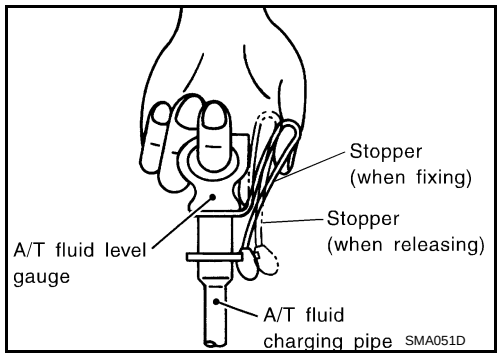

4. Drive vehicle for approximately 5 minutes in urban areas.
5. Make the A/T fluid temperature approximately 65°C (149°F).
NOTE:
A/T fluid level will be greatly affected by temperature as shown in figure. Therefore, be certain to perform operation while checking data with CONSULT-III.

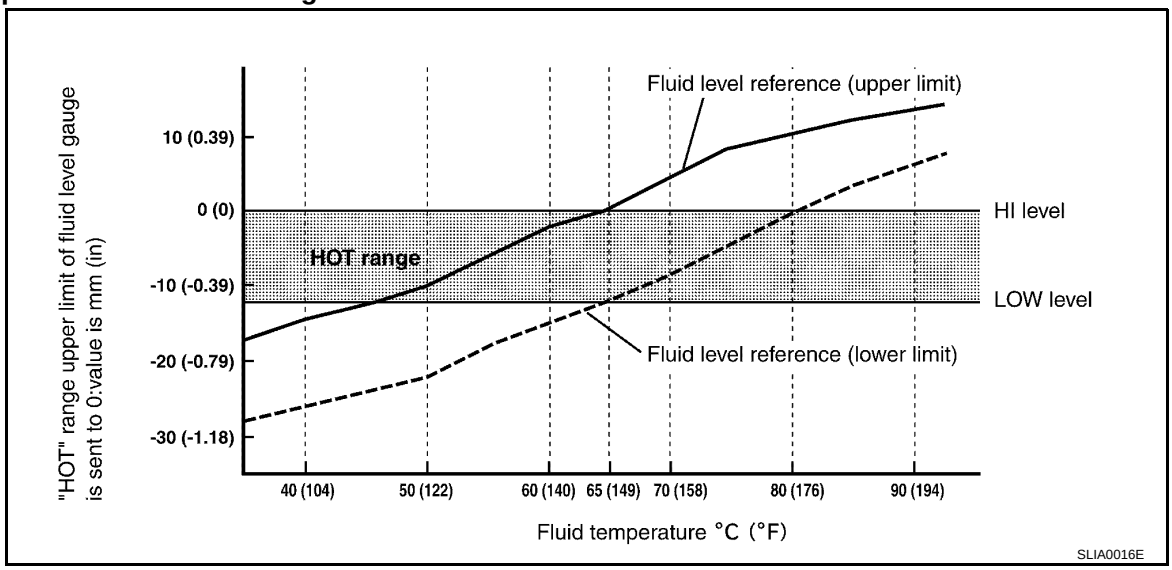

a. Connect CONSULT-III to data link connector.
b. Select “DATA MONITOR” mode for “TRANSMISSION”.
c. Read out the value of “ATF TEMP 1”.
6. Re-check A/T fluid level at A/T fluid temperatures of approximately 65°C (149°F) using “HOT” range on A/T fluid level gauge.
   CAUTION:
   - **When wiping away the A/T fluid level gauge, always use lint-free paper, not a cloth one.**
   - **Firmly fix the A/T fluid level gauge to the A/T fluid charging pipe using a stopper attached.**
7. Install the removed A/T fluid level gauge in the A/T fluid charging pipe.

A/T FLUID CONDITION CHECK

Check the A/T fluid condition.

Fluid condition	Conceivable Cause	Required Operation
Varnished (viscous varnish state)	Clutch, brake scorched	Replace the ATF and check the A/T main unit and the vehicle for malfunctions (wire harnesses, cooler pipes, etc.)
Milky white or cloudy	Water in the fluid	Replace the ATF and check for places where water is getting in.
Large amount of metal powder mixed in	Unusual wear of sliding parts within A/T	Replace the ATF and check for improper operation of the A/T.

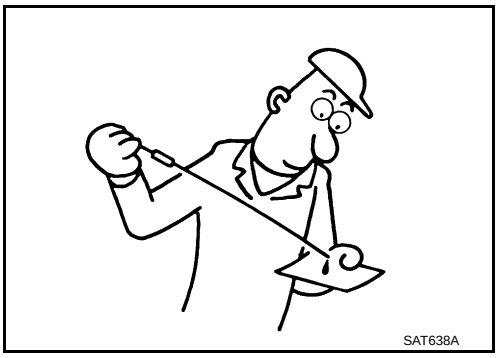

Changing

INFOID:0000000001672233

1. Warm up ATF.
2. Stop engine.
3. Drain ATF from drain plug and refill with new ATF. Always refill same volume with drained ATF.
   - To replace the ATF, pour in new ATF at the A/T fluid charging pipe with the engine idling and at the same time drain the old ATF from the radiator cooler hose return side.
   - When the color of the ATF coming out is about the same as the color of the new ATF, the replacement is complete. The amount of new ATF to use should be 30 to 50% increase of the stipulated amount.

   ATF : **Refer to TM-329, "General Specification".**
   Fluid capacity : **Refer to TM-329, "General Specification".**

   CAUTION:
   - **Use only Genuine NISSAN Matic J ATF. Do not mix with other ATF.**
   - **Using ATF other than Genuine NISSAN Matic J ATF will cause deterioration in driveability and A/T durability, and may damage the A/T, which is not covered by the NISSAN new vehicle limited warranty.**
   - **When filling ATF, be careful not to scatter heat generating parts such as exhaust.**
   - **Do not reuse drain plug gasket.**

   Drain plug - tightening torque : **Refer to TM-232, "Exploded View".**
4. Run engine at idle speed for 5 minutes.
5. Check A/T fluid level and condition. Refer to TM-214, "Inspection". If ATF is still dirty, repeat step 2. through 5.
6. Install the removed A/T fluid level gauge into A/T fluid charging pipe.

A/T FLUID COOLER

Cleaning

INFOID:0000000001672234

Whenever an A/T is replaced, the A/T fluid cooler mounted in the radiator must be inspected and cleaned. Metal debris and friction material, if present, can become trapped in the A/T fluid cooler. This debris can contaminate the newly serviced A/T or, in severe cases, can block or restrict the flow of ATF. In either case, malfunction of the newly serviced A/T may result.
Debris, if present, may build up as ATF enters the cooler inlet. It will be necessary to back flush the cooler through the cooler outlet in order to flush out any built up debris.

CLEANING PROCEDURE

1. Position an oil pan under the A/T inlet and outlet cooler hoses.
2. Identify the inlet and outlet fluid cooler hoses.
3. Disconnect the A/T fluid cooler inlet and outlet rubber hoses from the steel cooler tubes or by-pass valve.
   NOTE:
   Replace the cooler hoses if rubber material from the hose remains on the tube fitting.
4. Allow any ATF that remains in the cooler hoses to drain into the oil pan.

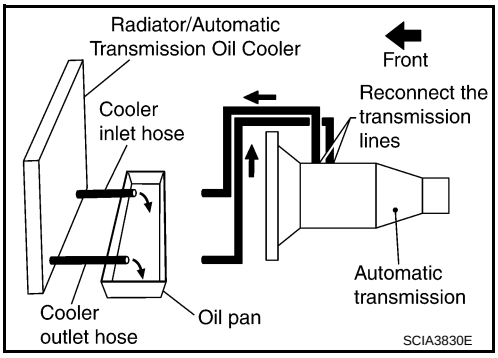

5. Insert the extension adapter hose of a can of Transmission Cooler Cleaner (Nissan P/N 999MP-AM006) into the cooler outlet hose.
   CAUTION:
   - **Wear safety glasses and rubber gloves when spraying the Transmission Cooler Cleaner.**
   - **Spray Transmission Cooler Cleaner only with adequate ventilation.**
   - **Avoid contact with eyes and skin.**
   - **Do not breath vapors or spray mist.**
6. Hold the hose and can as high as possible and spray Transmission Cooler Cleaner in a continuous stream into the cooler outlet hose until ATF flows out of the cooler inlet hose for 5 seconds.

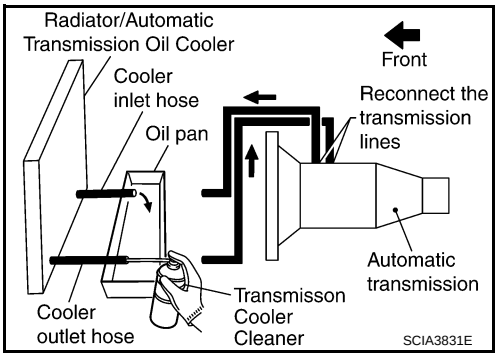

7. Insert the tip of an air gun into the end of the cooler outlet hose.
8. Wrap a shop rag around the air gun tip and of the cooler outlet hose.
9. Blow compressed air regulated to 5 to 9 kg/cm^2 (70 to 130 psi) through the cooler outlet hose for 10 seconds to force out any remaining ATF.
10. Repeat steps 5 through 9 three additional times.
11. Position an oil pan under the banjo bolts that connect the A/T fluid cooler steel lines to the A/T.
12. Remove the banjo bolts.

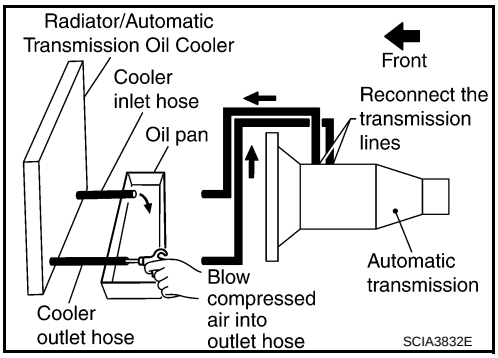

13. Flush each steel line from the cooler side back toward the A/T by spraying Transmission Cooler Cleaner in a continuous stream for 5 seconds.
14. Blow compressed air regulated to 5 to 9 kg/cm^2 (70 to 130 psi) through each steel line from the cooler side back toward the A/T for 10 seconds to force out any remaining ATF.
15. Ensure all debris is removed from the steel cooler lines.
16. Ensure all debris is removed from the banjo bolts and fittings.
17. Perform “DIAGNOSIS PROCEDURE”.

DIAGNOSIS PROCEDURE

NOTE:
Insufficient cleaning of the cooler inlet hose exterior may lead to inaccurate debris identification.

1. Position an oil pan under the A/T inlet and outlet cooler hoses.
2. Clean the exterior and tip of the cooler inlet hose.
3. Insert the extension adapter hose of a can of Transmission Cooler Cleaner (Nissan P/N 999MP-AM006) into the cooler outlet hose.
   CAUTION:
   - **Wear safety glasses and rubber gloves when spraying the Transmission Cooler Cleaner.**
   - **Spray Transmission Cooler Cleaner only with adequate ventilation.**
   - **Avoid contact with eyes and skin.**
   - **Do not breath vapors or spray mist.**
4. Hold the hose and can as high as possible and spray Transmission Cooler Cleaner in a continuous stream into the cooler outlet hose until ATF flows out of the cooler inlet hose for 5 seconds.

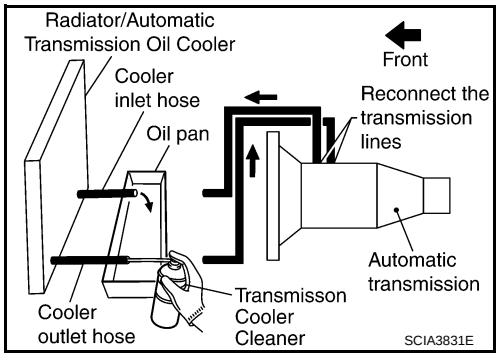

5. Tie a common white, basket-type coffee filter to the end of the cooler inlet hose.

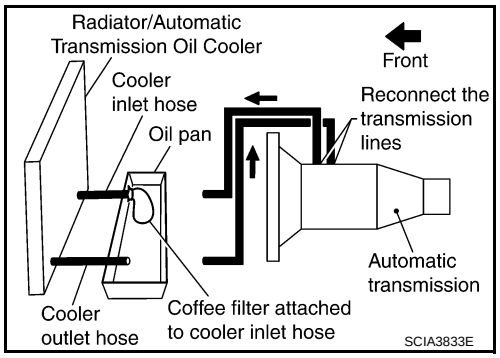

6. Insert the tip of an air gun into the end of the cooler outlet hose.
7. Wrap a shop rag around the air gun tip and end of cooler outlet hose.
8. Blow compressed air regulated to 5 to 9 kg/cm^2 (70 to130 psi) through the cooler outlet hose to force any remaining ATF into the coffee filter.
9. Remove the coffee filter from the end of the cooler inlet hose.
10. Perform “INSPECTION PROCEDURE”.

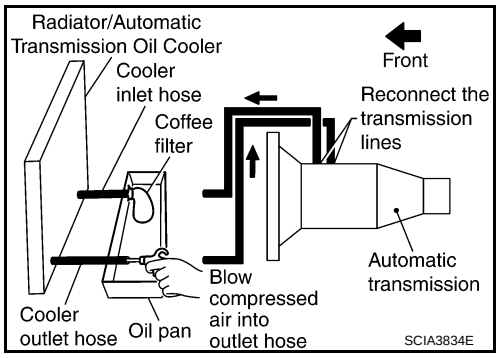

INSPECTION PROCEDURE

1. Inspect the coffee filter for debris.

a. If small metal debris less than 1 mm (0.040 in) in size or metal powder is found in the coffee filter, this is normal. If normal debris is found, the A/T fluid cooler/radiator can be re-used and the procedure is ended.

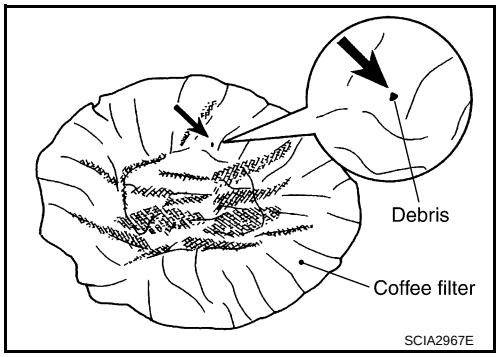

b. If one or more pieces of debris are found that are over 1 mm (0.040 in) in size and/or peeled clutch facing material is found in the coffee filter, the A/T fluid cooler is not serviceable. The A/T fluid cooler/radiator must be replaced and the inspection procedure is ended. Refer to CO-14, "Exploded View".

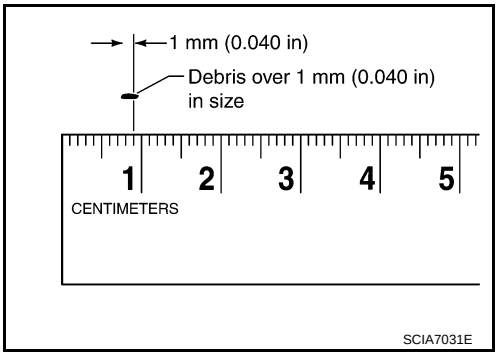

Inspection

INFOID:0000000001672235

After performing all procedures, ensure that all remaining oil is cleaned from all components.

STALL TEST

Inspection and Judgment

INFOID:0000000001672236

INSPECTION

1. Inspect the amount of engine oil. Replenish the engine oil if necessary.
2. Drive for about 10 minutes to warm up the vehicle so that the A/T fluid temperature is 50 to 80°C (122 to 176°F). Inspect the amount of ATF. Replenish if necessary.
3. Securely engage the parking brake so that the tires do not turn.
4. Start the engine, apply foot brake, and place selector lever in “D” position.
5. Gradually press down the accelerator pedal while holding down the foot brake.
6. Quickly read off the stall speed, then quickly remove your foot from the accelerator pedal.
   CAUTION:
   Do not hold down the accelerator pedal for more than 5 seconds during this test.

   Stall speed : Refer to TM-329, "Stall Speed".
7. Shift the selector lever to the “N” position.
8. Cool down the ATF.
   CAUTION:
   Run the engine at idle for at least 1 minute.
9. Repeat steps 5 through 8 with selector lever in “R” position.

JUDGMENT OF STALL TEST

	Selector lever position		Possible location of malfunction
	“D” and “M”	“R”	
Stall speed	H	O	• Forward brake • Forward one-way clutch • 1st one-way clutch • 3rd one-way clutch
	O	H	• Reverse brake
	L	L	• Engine and torque converter one-way clutch
	H	H	• Line pressure low

O: Stall speed within standard value position

H: Stall speed higher than standard value

L: Stall speed lower than standard value

Stall test standard value position

Does not shift-up “D” or “M” position 1 → 2	Slipping in 2nd, 3rd or 4th gear	Direct clutch slippage
Does not shift-up “D” or “M” position 2 → 3	Slipping in 3rd, 4th or 5th gear	High and low reverse clutch slippage
Does not shift-up “D” or “M” position 3 → 4	Slipping in 4th or 5th gear	Input clutch slippage
Does not shift-up “D” or “M” position 4 → 5	Slipping in 5th gear	Front brake slippage

LINE PRESSURE TEST

Inspection and Judgment

INFOID:0000000001672237

INSPECTION

Line Pressure Test Port

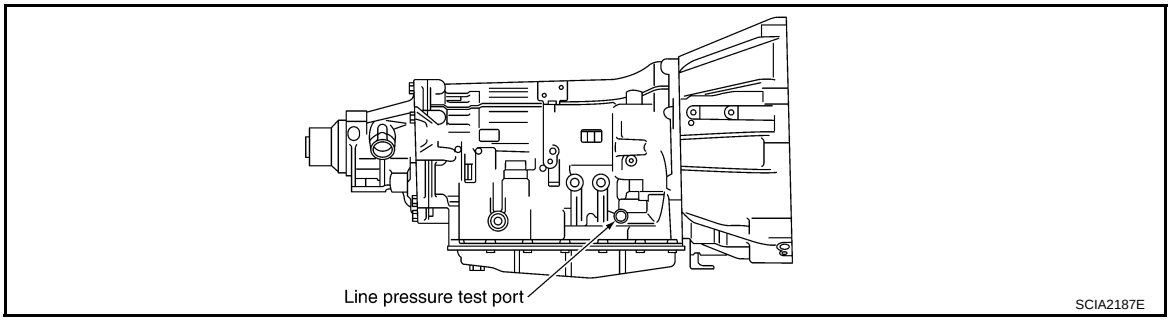

Line Pressure Test Procedure

1. Inspect the amount of engine oil and replenish if necessary.
2. Drive the car for about 10 minutes to warm it up so that the ATF reaches in range of 50 to 80°C (122 to 176°F). Then inspect the amount of ATF and replenish if necessary.
   NOTE:
   The A/T fluid temperature rises in range of 50 to 80°C (122 to 176°F) during 10 minutes of driving.
3. After warming up remove the oil pressure detection plug and install the oil pressure gauge [SST: ST2505S001(J-34301-C)].
   CAUTION:
   When using the oil pressure gauge, be sure to use the O-ring attached to the oil pressure detection plug.
4. Securely engage the parking brake so that the tires do not turn.
5. Start the engine, then measure the line pressure at both idle and the stall speed.
   CAUTION:
   - **Keep the brake pedal pressed all the way down during measurement.**
   - **When measuring the line pressure at the stall speed, refer to TM-219, "Inspection and Judgment".**

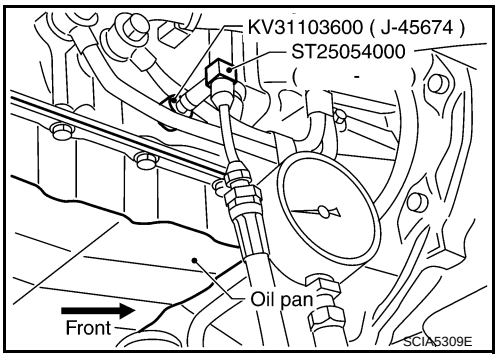

LINE PRESSURE : Refer to TM-330, "Line Pressure".

6. Install the oil pressure detection plug and tighten to the specified torque after the measurements are complete. Refer to TM-266, "Exploded View".
   CAUTION:
   - **Do not reuse O-ring.**
   - **Apply ATF to O-ring.**

JUDGMENT OF LINE PRESSURE TEST

Judgment		Possible cause
Idle speed	Low for all positions (“P”, “R”, “N”, “D”, “M”)	Possible causes include malfunctions in the pressure supply system and low oil pump output. For example • Oil pump wear • Pressure regulator valve or plug sticking or spring fatigue • Oil strainer ⇒ oil pump ⇒ pressure regulator valve passage oil leak • Engine idle speed too low
	Only low for a specific position	Possible causes include an oil pressure leak in a passage or device related to the position after the pressure is distributed by the manual valve.
	High	Possible causes include a sensor malfunction or malfunction in the line pressure adjustment function. For example • Accelerator pedal position signal malfunction • A/T fluid temperature sensor malfunction • Line pressure solenoid malfunction (sticking in OFF state, filter clog, cut line) • Pressure regulator valve or plug sticking
Stall speed	Oil pressure does not rise higher than the oil pressure for idle.	Possible causes include a sensor malfunction or malfunction in the pressure adjustment function. For example • Accelerator pedal position signal malfunction • TCM breakdown • Line pressure solenoid malfunction (shorting, sticking in ON state) • Pressure regulator valve or plug sticking • Pilot valve sticking or pilot filter clogged
	The pressure rises, but does not enter the standard position.	Possible causes include malfunctions in the pressure supply system and malfunction in the pressure adjustment function. For example • Accelerator pedal position signal malfunction • Line pressure solenoid malfunction (sticking, filter clog) • Pressure regulator valve or plug sticking • Pilot valve sticking or pilot filter clogged
	Only low for a specific position	Possible causes include an oil pressure leak in a passage or device related to the position after the pressure is distributed by the manual valve.

ROAD TEST

Description

INFOID:0000000001672238

- The road test inspects overall performance of the A/T and analyzes possible malfunction causes.
- The road test is performed out in the following three stages.

1. TM-222, "Check Before Engine Is Started".
2. TM-222, "Check at Idle".
3. Cruise test
   - TM-223, "Cruise Test - Part 1"
   - TM-224, "Cruise Test - Part 2"
   - TM-224, "Cruise Test - Part 3"

   CAUTION:
   Always drive vehicle at a safe speed.

- Check the test procedure and inspection items before beginning the road test.
- Test all inspection items until the symptom is uncovered. Diagnose NG items when all road tests are complete.

Check Before Engine Is Started

INFOID:0000000001672239

1. CHECK A/T CHECK INDICATOR LAMP

1. Park vehicle on level surface.
2. Shift the selector lever to “P” position.
3. Turn ignition switch OFF and wait at least 10 seconds.
4. Turn ignition switch ON. (Do not start engine.)

Does A/T CHECK indicator lamp light up for about 2 seconds?

YES >> Go to TM-222, "Check at Idle".
NO >> Stop the road test and go to TM-188, "Symptom Table".

Check at Idle

INFOID:0000000001672240

1. CHECK STARTING THE ENGINE

1. Park vehicle on level surface.
2. Shift the selector lever to “P” or “N” position.
3. Turn ignition switch OFF.
4. Start the engine.

Does the engine start?

YES >> GO TO 2.
NO >> Stop the road test and go to TM-188, "Symptom Table".

2. CHECK STARTING THE ENGINE

1. Turn ignition switch ON. (Do not start engine.)
2. Shift the selector lever to “D”, “M” or “R” position.
3. Start the engine.

Does the engine start in any positions?

YES >> Stop the road test and go to TM-188, "Symptom Table".
NO >> GO TO 3.

3. CHECK “P” POSITION FUNCTIONS

1. Shift the selector lever to “P” position.
2. Turn ignition switch OFF.
3. Release the parking brake.
4. Push the vehicle forward or backward.
5. Engage the parking brake.

When you push the vehicle while disengaging the parking brake, does it move?

YES >> Record the malfunction, GO TO 4.
NO >> GO TO 4.

4. CHECK "N" POSITION FUNCTIONS

1. Start the engine.
2. Shift the selector lever to "N" position.
3. Release the parking brake.

Does vehicle move forward or backward?

YES >> Record the malfunction, GO TO 5.
NO >> GO TO 5.

5. CHECK SHIFT SHOCK

1. Engage the brake.
2. Shift the selector lever to "D" position.

When the A/T is shifted from "N" to "D", is there an excessive shock?

YES >> Record the malfunction, GO TO 6.
NO >> GO TO 6.

6. CHECK "R" POSITION FUNCTIONS

1. Shift the selector lever to "R" position.
2. Release the brake for 4 to 5 seconds.

Does the vehicle creep backward?

YES >> GO TO 7.
NO >> Record the malfunction, GO TO 7.

7. CHECK "D" POSITION FUNCTIONS

Inspect whether the vehicle creeps forward when the A/T is put into the "D" position.

Does the vehicle creep forward in the "D" position?

YES >> Go to TM-223, "Cruise Test - Part 1".
NO >> Record the malfunction and go to TM-223, "Cruise Test - Part 1".

Cruise Test - Part 1

INFOID:0000000001672241

1. CHECK STARTING OUT FROM D_1

1. Drive the vehicle for about 10 minutes to warm up the engine oil and ATF.
   Appropriate temperature for the ATF: 50 to 80°C (122 to 176°F)
2. Park the vehicle on a level surface.
3. Shift the selector lever to "D" position.
4. Press the accelerator pedal about half-way down to accelerate the vehicle.

With CONSULT-III

Read the value of "GEAR" with "DATA MONITOR" mode.

Starts from D_1?

YES >> GO TO 2.
NO >> Record the malfunction, GO TO 2.

2. CHECK SHIFT-UP

Depress the accelerator pedal about half-way and inspect if the vehicle shifts up ($D_1 \rightarrow D_2 \rightarrow D_3 \rightarrow D_4 \rightarrow D_5$) at the appropriate speed. Refer to TM-329, "Vehicle Speed at Which Gear Shifting Occurs".

With CONSULT-III

Read the value of "GEAR", "ACCELE POSI" and "VEHCLE SPEED" with "DATA MONITOR" mode.

Is the inspection result normal?

YES >> GO TO 3.
NO >> Record the malfunction, GO TO 3.

3. CHECK LOCK-UP

When releasing accelerator pedal (closed throttle position signal OFF) from D_5, check lock-up from D_5 to L/U. Refer to TM-329, "Vehicle Speed at Which Lock-up Occurs/Releases".

With CONSULT-III

Select "TCC SOLENOID" with "DATA MONITOR" mode. Refer to TM-177, "Reference Value"

Does it lock-up?

YES >> GO TO 4.
NO >> Record the malfunction, GO TO 4.

4. CHECK LOCK-UP HOLD

Check hold lock-up.

With CONSULT-III

Select “TCC SOLENOID” with “DATA MONITOR” mode. Refer to TM-177, "Reference Value".

Does it maintain lock-up status?

YES >> GO TO 5.
NO >> Record the malfunction, GO TO 5.

5. CHECK LOCK-UP RELEASE

Check lock-up cancellation by depressing brake pedal lightly to decelerate.

With CONSULT-III

Select “TCC SOLENOID” with “DATA MONITOR” mode. Refer to TM-177, "Reference Value".

Does lock-up cancel?

YES >> GO TO 6.
NO >> Record the malfunction, GO TO 6.

6. CHECK SHIFT-DOWN $D_5 \rightarrow D_4$

Decelerate by pressing lightly on the brake pedal.

With CONSULT-III

Read the value of “GEAR” and “ENGINE SPEED” with “DATA MONITOR” mode.

When the A/T shift-down $D_5 \rightarrow D_4$, does the engine speed drop smoothly back to idle?

YES >> 1. Stop the vehicle.
2. Go to TM-224, "Cruise Test - Part 2".
NO >> Record the malfunction and go to TM-224, "Cruise Test - Part 2".

Cruise Test - Part 2

INFOID:0000000001672242

1. CHECK SHIFT-UP

Depress the accelerator pedal down all the way and inspect whether or not the A/T shifts up ($D_1 \rightarrow D_2 \rightarrow D_3$) at the correct speed. Refer to TM-329, "Vehicle Speed at Which Gear Shifting Occurs".

With CONSULT-III

Read the value of “GEAR”, “ACCELE POSI” and “VEHCLE SPEED” with “DATA MONITOR” mode.

Is the inspection result normal?

YES >> GO TO 2.
NO >> Record the malfunction, GO TO 2.

2. CHECK SHIFT-UP $D_3 \rightarrow D_4$ AND ENGINE BRAKE

When the A/T changes speed $D_3 \rightarrow D_4$, release the accelerator pedal.

With CONSULT-III

Read the value of “GEAR” with “DATA MONITOR” mode.

Does the A/T shift-up $D_3 \rightarrow D_4$ and apply the engine brake?

YES >> 1. Stop the vehicle.
2. Go to TM-224, "Cruise Test - Part 3".
NO >> Record the malfunction and go to TM-224, "Cruise Test - Part 3".

Cruise Test - Part 3

INFOID:0000000001672243

1. MANUAL MODE FUNCTION

Shift the selector lever to manual mode from “D” position.

Does it switch to manual mode?

YES >> GO TO 2.

NO >> Record the malfunction, GO TO 2.

2. CHECK SHIFT-DOWN

During manual mode driving, is downshift from M5 → M4 → M3 → M2 → M1 performed?

With CONSULT-III

Read the value of “GEAR” and “ENGINE SPEED” with “DATA MONITOR” mode.

Is the inspection result normal?

YES >> GO TO 3.
NO >> Record the malfunction, GO TO 3.

3. CHECK ENGINE BRAKE

Check engine brake.

Does engine braking effectively reduce speed in M1 position?

YES >> Check malfunction phenomena to repair or replace malfunctioning part. Refer to TM-188, "Symptom Table".
NO >> 1. Record the malfunction.
2. Check malfunction phenomena to repair or replace malfunctioning part. Refer to TM-188, "Symptom Table".

A/T POSITION

Inspection and Adjustment

INFOID:0000000001672244

INSPECTION

1. Place selector lever in “P” position, and turn ignition switch ON (engine stop).
2. Check that selector lever can be shifted to other than “P” position when brake pedal is depressed. Also check that selector lever can be shifted from “P” position only when brake pedal is depressed.
3. Shift the selector lever and check for excessive effort, sticking, noise or rattle.
4. Confirm that the selector lever stops at each position by feeling the engagement when it is moved through all the positions. Check whether or not the actual position the selector lever matches the position shown by the shift position indicator and the A/T body.
5. The method of operating the lever to individual positions correctly is shown in the figure.
6. When selector button is pressed in “P”, “R”, or “N” position without applying forward/backward force to selector lever, check button operation for sticking.
7. Confirm that the back-up lamps illuminate only when lever is placed in the “R” position. Confirm that the back-up lamps does not illuminate when selector lever is pushed against “R” position in the “P” or “N” position.
8. Confirm that the engine can only be started with the selector lever in the “P” and “N” positions. (With selector lever in the “P” position, engine can be started even when selector lever is moved forward and backward.)

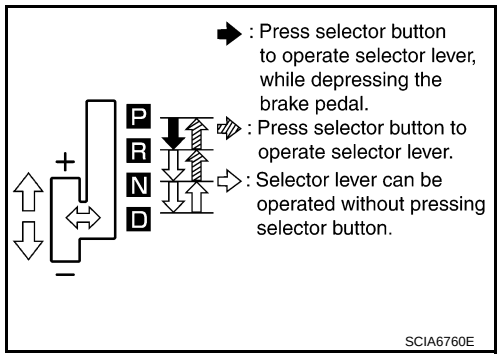

9. Make sure that A/T is locked completely in “P” position.
10. When selector lever is set to manual shift gate, make sure that manual mode is displayed on combination meter.
    Shift the selector lever to “+” and “–” sides, and check that set shift position changes.

ADJUSTMENT

1. Loosen nut (⬅) of pivot pin (1).
2. Place PNP switch and selector lever in “P” position.
3. While pressing lower lever (A) toward rear of vehicle (in “P” position direction), tighten nut (⬅) to specified torque. Refer to TM-227, "Exploded View".

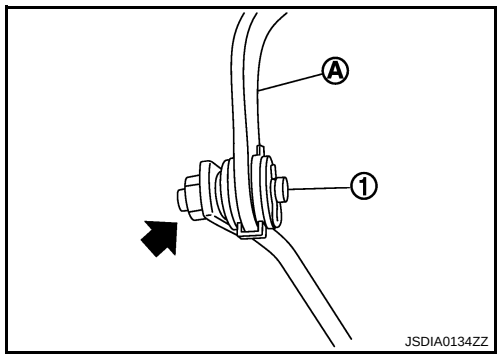

ON-VEHICLE REPAIR

CONTROL DEVICE

Exploded View

INFOID:0000000001672246

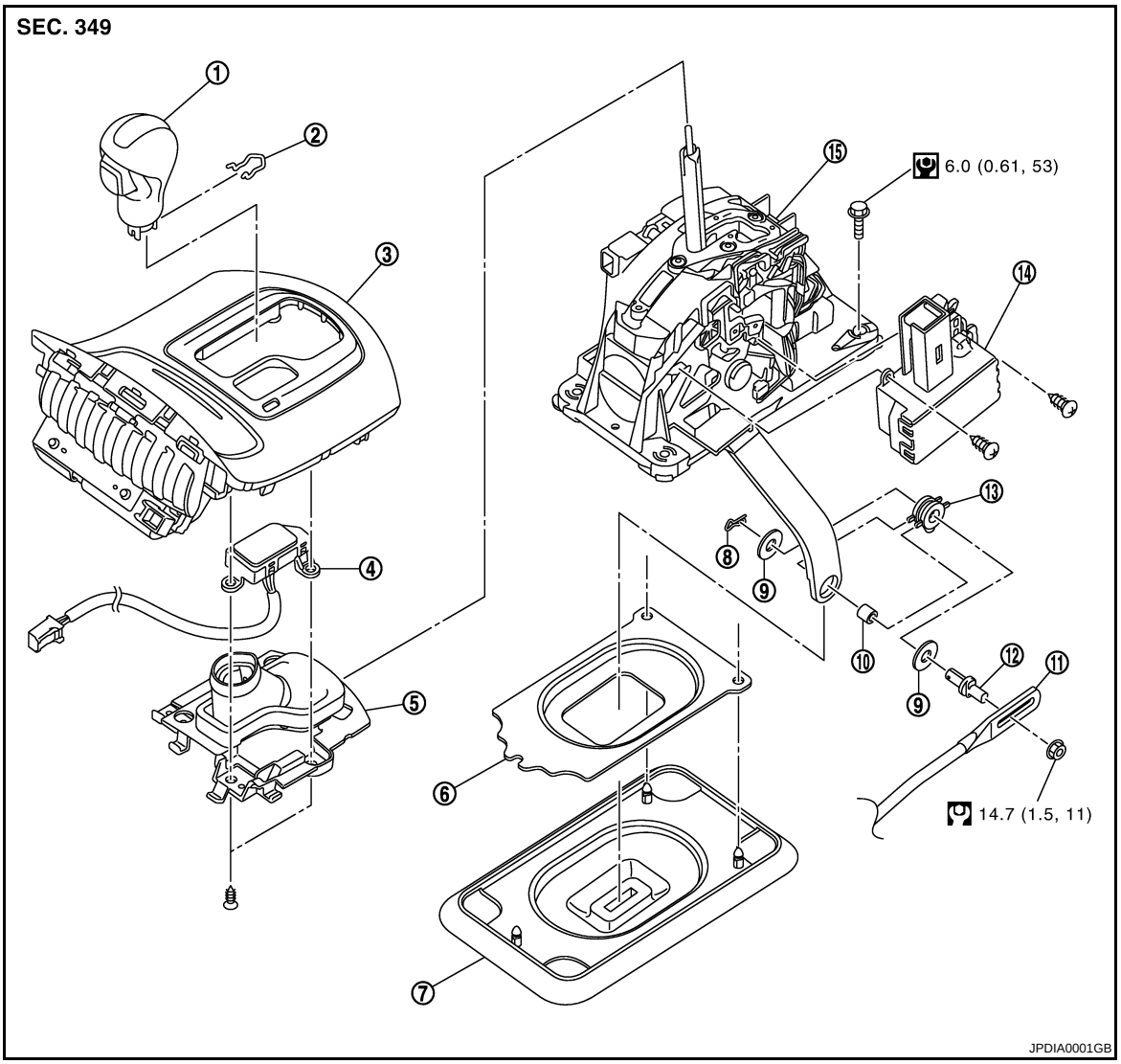

1.	Selector lever knob	2.	Lock pin	3.	Console finisher
4.	Selector lever position indicator	5.	Insert finisher	6.	Dust cover plate
7.	Dust cover	8.	Snap pin	9.	Plain washer
10.	Collar	11.	Control rod	12.	Pivot pin
13.	Insulator	14.	Shift lock unit	15.	Control device assembly

Refer to GI-4, "Components" for symbols in the figure.

Removal and Installation

INFOID:0000000001672247

REMOVAL

1. Disconnect lower lever of control device and control rod.
2. Shift the selector lever to “N” position.

3. Remove knob cover (A) below selector lever downward.
4. Pull lock pin (1) out of selector lever knob (2).
5. Remove selector lever knob (2).
6. Remove console finisher assembly, rear upper console assembly and console front bracket. Refer to IP-23, "Exploded View".
7. Disconnect A/T device harness connector.
8. Remove control device assembly.

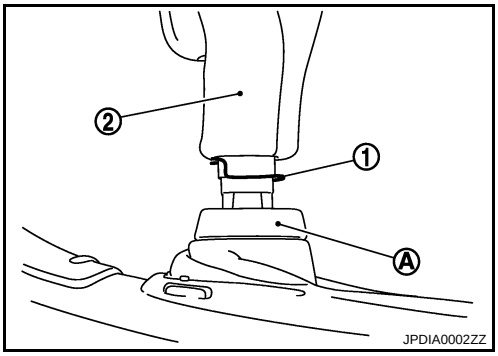

9. Remove the following parts if necessary.

a. Selector lever position indicator

i. Remove the cigarette lighter harness connector (A) from the console finisher assembly.

⬅ : Screw

ii. Remove the insert finisher (1) from the console finisher.

iii. Remove the selector lever position indicator.

b. Shift lock unit

i. Remove the shift lock unit from the control device assembly.

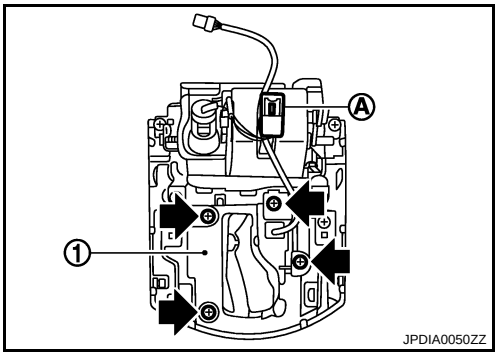

INSTALLATION

Install in the reverse order of removal.

Inspection and Adjustment

INFOID:0000000001672248

ADJUSTMENT AFTER INSTALLATION

Adjust the A/T positions after installing the control device. Refer to TM-226, "Inspection and Adjustment".

INSPECTION AFTER INSTALLATION

Check the A/T positions after adjusting the A/T positions. Refer to TM-226, "Inspection and Adjustment".

CONTROL ROD

Exploded View

INFOID:0000000001672252

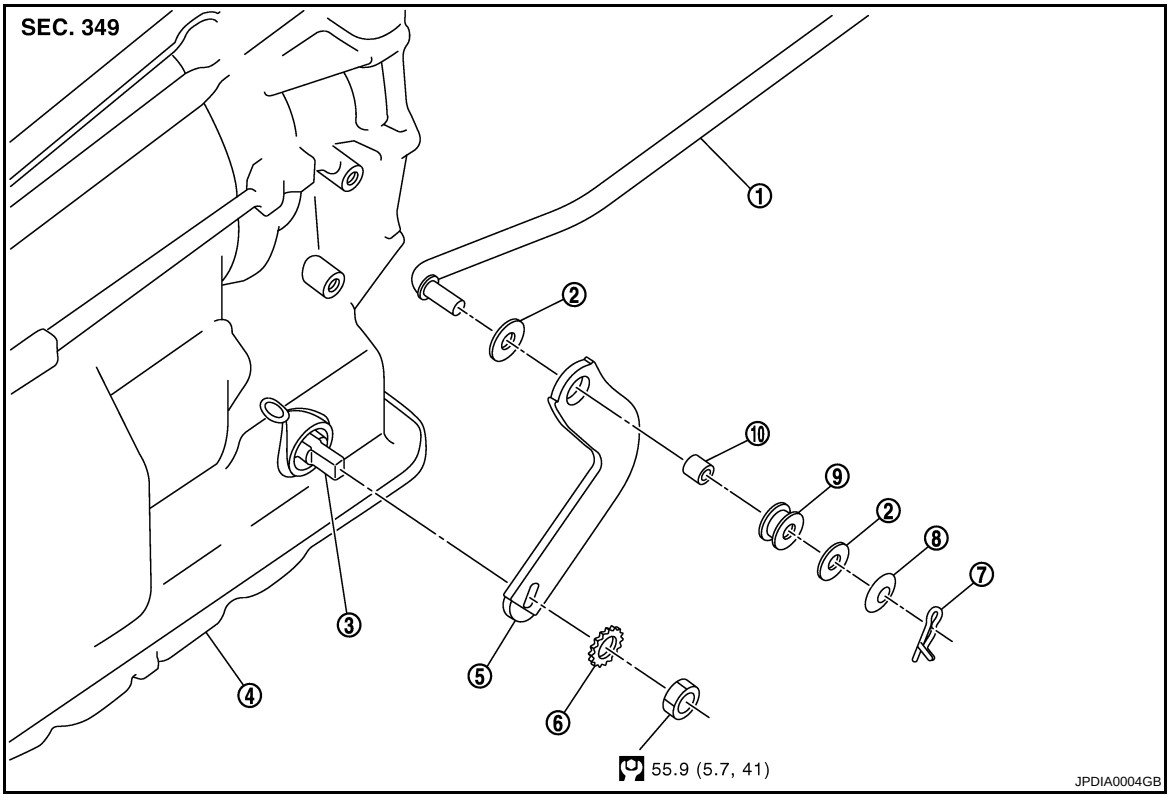

1.	Control rod	2.	Plain washer	3.	Manual shaft
4.	A/T assembly	5.	Manual lever	6.	Washer
7.	Snap pin	8.	Conical washer	9.	Insulator
10.	Collar				

Refer to GI-4, "Components" for symbols in the figure.

Removal and Installation

INFOID:0000000001672253

REMOVAL

1. Disconnect control device and control rod. Refer to TM-227, "Exploded View".
2. Remove manual lever from A/T assembly.
3. Remove control rod from manual lever.

INSTALLATION

Install in the reverse order of removal.

Inspection and Adjustment

INFOID:0000000001672254

ADJUSTMENT AFTER INSTALLATION

Adjust A/T positions after installing control rod. Refer to TM-226, "Inspection and Adjustment".

INSPECTION AFTER INSTALLATION

Check A/T positions after adjusting A/T positions. Refer to TM-226, "Inspection and Adjustment".

PADDLE SHIFTER

Exploded View

INFOID:0000000001672258

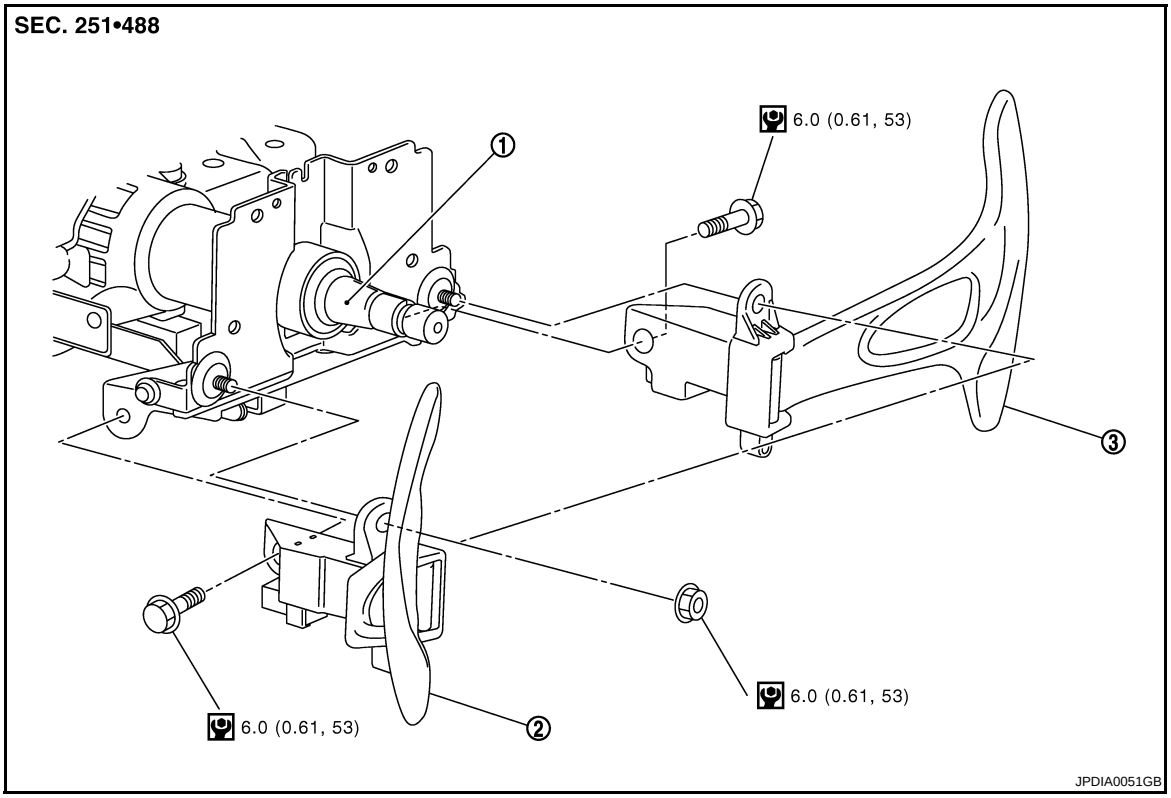

1. Steering column assembly
2. Paddle shifter (shift-down)
3. Paddle shifter (shift-up)

Refer to GI-4, "Components" for symbols in the figure.

Removal and Installation

INFOID:0000000001672259

REMOVAL

1. Park the vehicle on a level surface.
2. Remove the driver air bag module. Refer to SR-4, "Exploded View".
3. Remove the steering wheel. Refer to ST-15, "Exploded View".
4. Remove the column cover. Refer to IP-11, "Exploded View".

5. Remove the vehicle harness connector (C) and (D) from paddle shifter.

   A : Side of paddle shifter (shift-down)
   B : Side of paddle shifter (shift-up)

6. Remove the paddle shifter mounting bolts (E) and nuts (F).
7. Remove the paddle shifter from the steering column assembly.

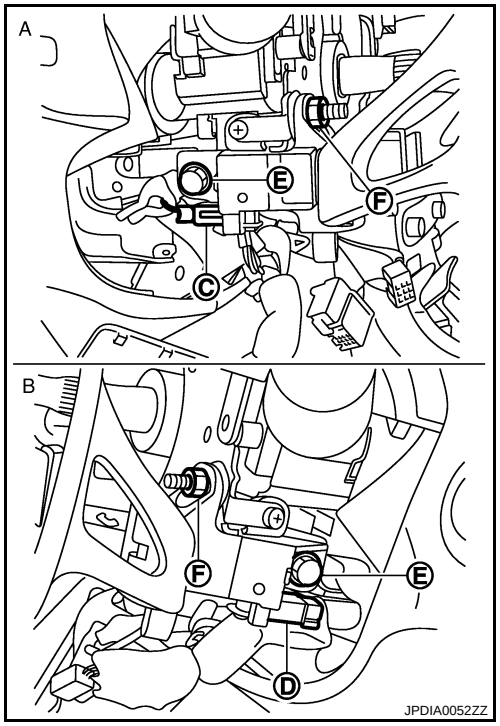

INSTALLATION

Install in the reverse order of removal.

CONTROL VALVE WITH TCM

Exploded View

INFOID:0000000001672260

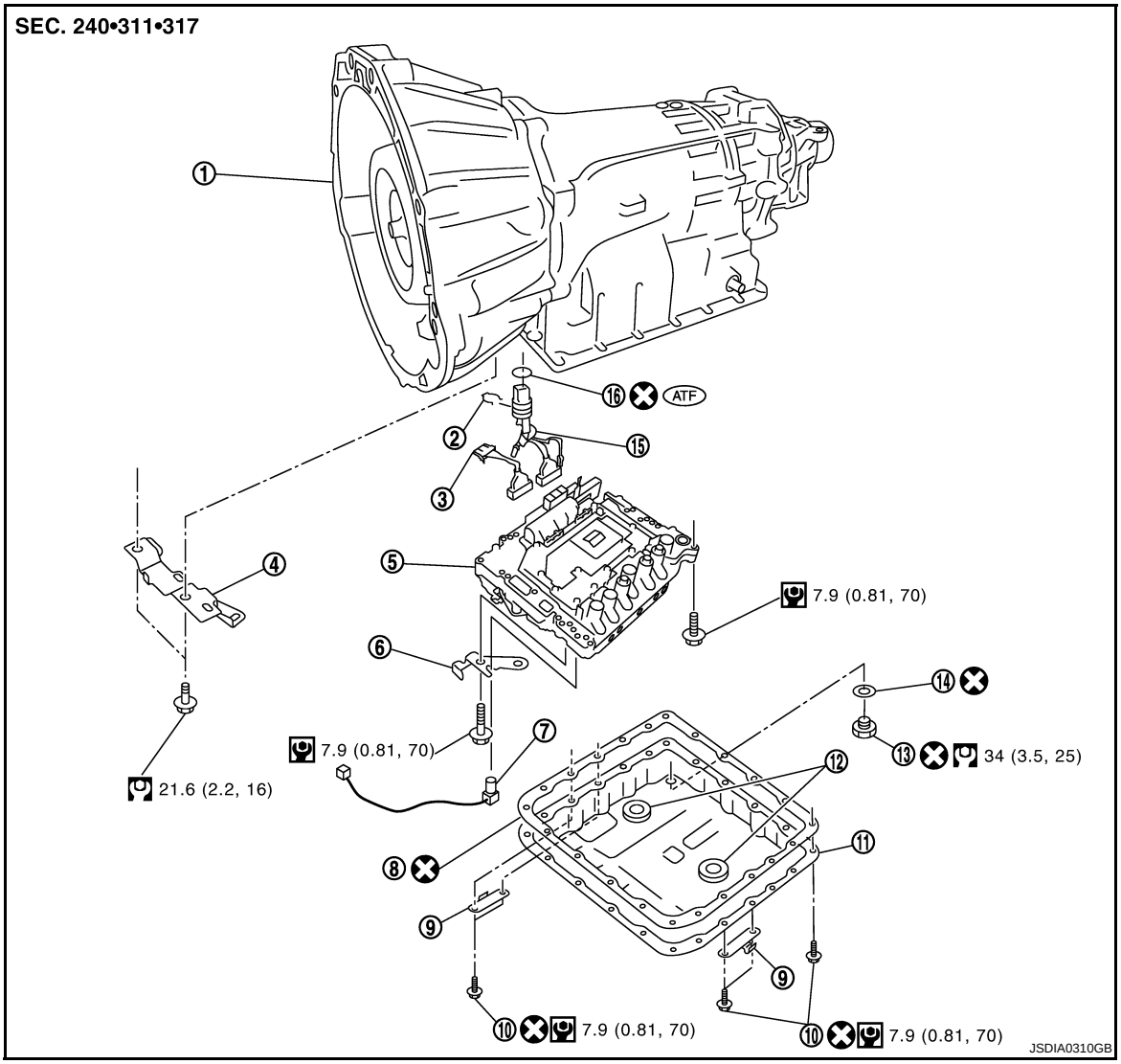

1. A/T	2. Snap ring	3. Sub-harness
4. Bracket	5. Control valve with TCM	6. Bracket
7. A/T fluid temperature sensor 2	8. Oil pan gasket	9. Clip
10. Oil pan mounting bolt	11. Oil pan	12. Magnet
13. Drain plug	14. Drain plug gasket	15. Terminal cord assembly
16. O-ring		

Refer to GI-4, "Components" for symbols in the figure.

Removal and Installation

INFOID:0000000001672261

REMOVAL

1. Disconnect the battery cable from the negative terminal.
2. Drain ATF through drain plug.
3. Remove exhaust mounting bracket. Refer to EX-5, "Exploded View".

4. Disconnect heated oxygen sensor 2 harness connectors (A).

⇦ : Vehicle front

⬅ : Bolt

5. Remove heated oxygen sensor 2 harness (B) from clips (1).
6. Remove bracket (2) from transmission assembly.
7. Disconnect A/T assembly harness connector.

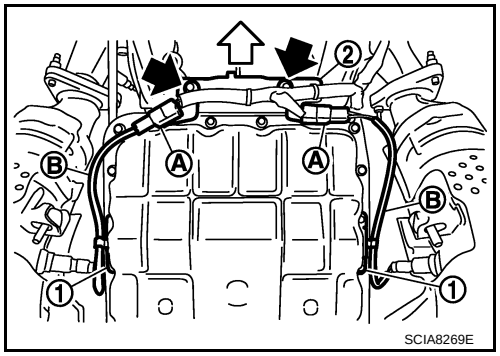

8. Remove snap ring (1) from A/T assembly harness connector (A).

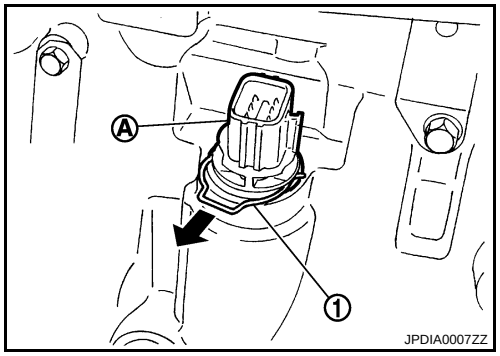

9. Push A/T assembly harness connector (A).
CAUTION:
Be careful not to damage connector.

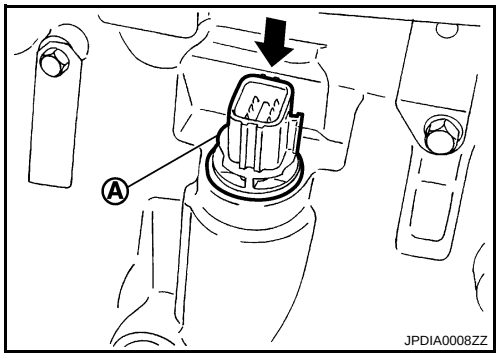

10. Remove clips (1).

3 : Drain plug

⇦ : Vehicle front

⬅ : Oil pan mounting bolt

11. Remove oil pan (2) and oil pan gasket.

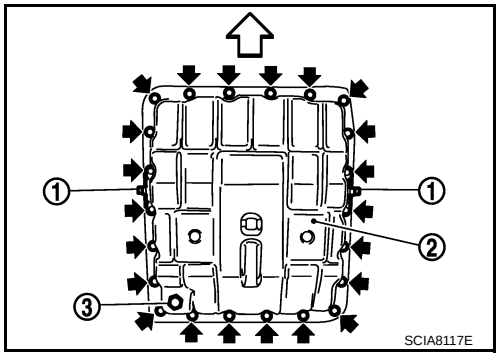

12. Remove magnets (1) from oil pan.

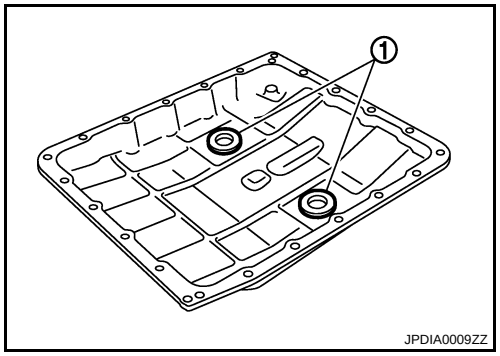

13. Disconnect A/T fluid temperature sensor 2 connector (A).
    CAUTION:
    Be careful not to damage connector.
14. Disengage terminal clips (⬅).

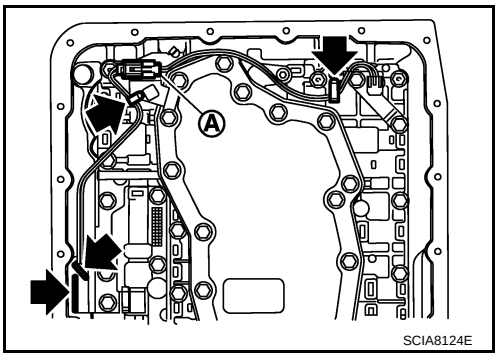

15. Disconnect revolution sensor connector (A).
    CAUTION:
    Be careful not to damage connector.
16. Disengage terminal clip (⬅).

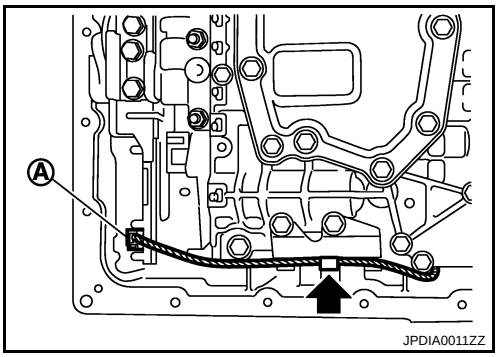

17. Remove bolts A, B and C from control valve with TCM.

    ⇦ : Vehicle front

Bolt symbol	Length mm (in)	Number of bolts
A	42 (1.65)	5
B	55 (2.17)	6
C	40 (1.57)	1

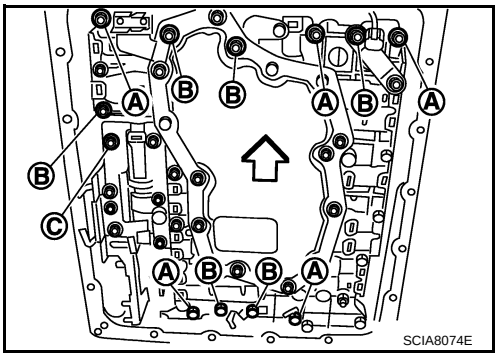

18. Remove control valve with TCM from transmission case.
    CAUTION:
    When removing, be careful with the manual valve (1) notch and manual plate (2) height. Remove it vertically.

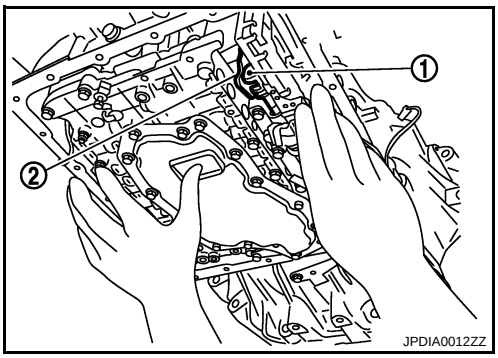

19. Remove A/T fluid temperature sensor 2 (1) with bracket (2) from control valve with TCM.

    ⬅ : Bolt

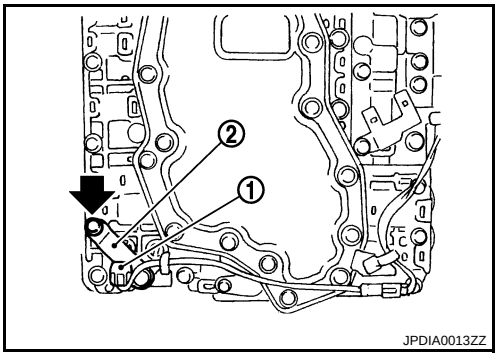

20. Remove bracket (1) from A/T fluid temperature sensor 2 (2).

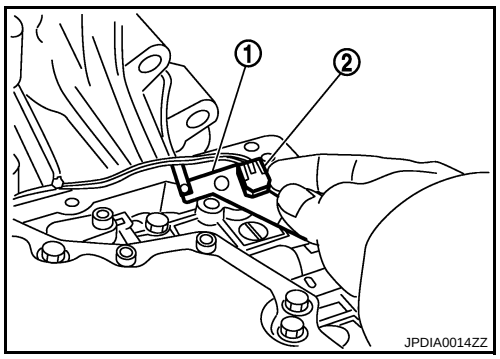

21. Remove O-ring (1) from A/T assembly harness connector (A).

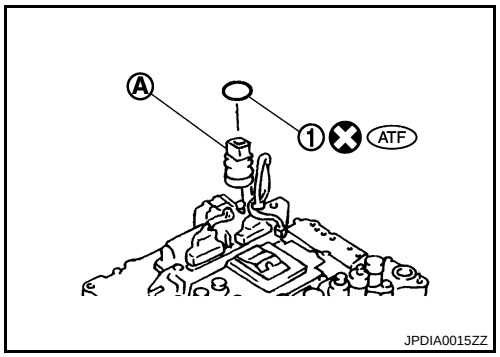

22. Disconnect TCM connectors (A) and (B).
CAUTION:
Be careful not to damage connectors.

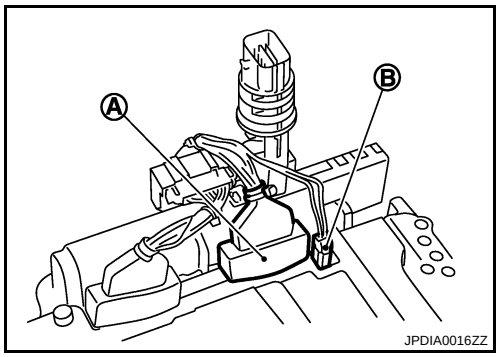

23. Remove A/T assembly harness connector (A) from control valve with TCM using flat-blade screwdriver (B).

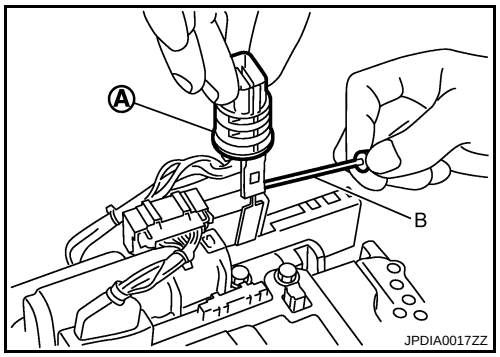

24. Disconnect TCM connector (A) and park/neutral position switch connector (B).
CAUTION:
Be careful not to damage connectors.

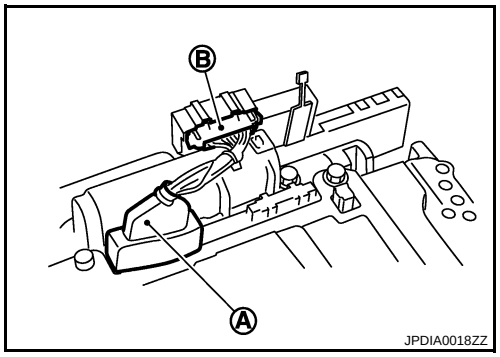

INSTALLATION

1. Connect TCM connector (A) and park/neutral position switch connector (B).

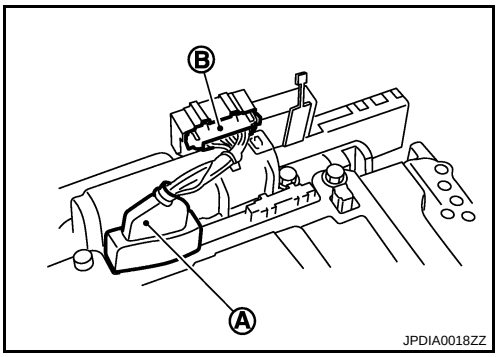

2. Install A/T assembly harness connector (A) to control valve with TCM.

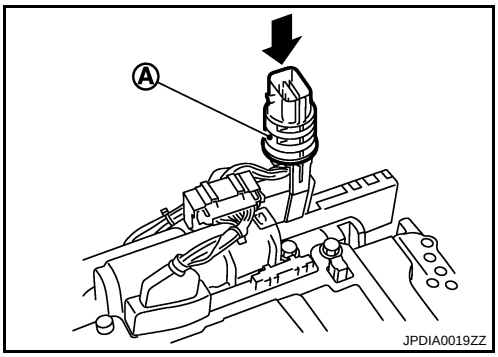

3. Connect TCM connectors (A) and (B).

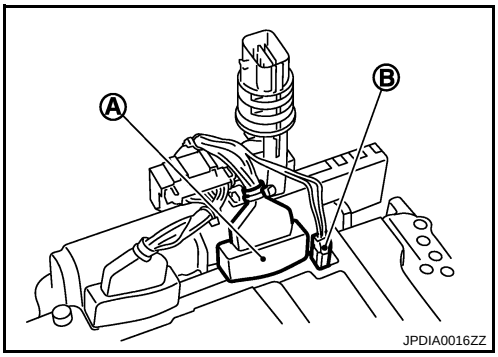

4. Install new O-ring (1) in A/T assembly harness connector (A).

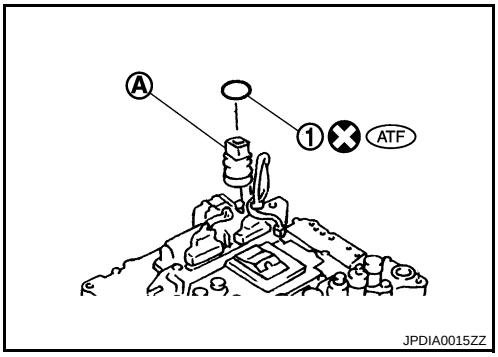

5. Install bracket (1) to A/T fluid temperature sensor 2 (2).

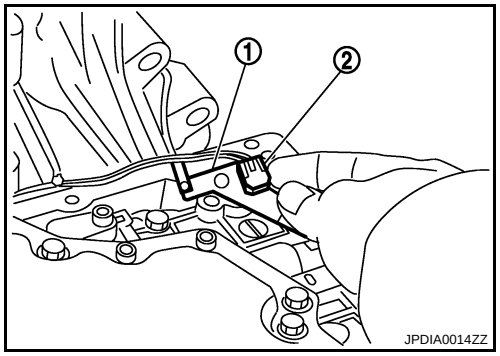

6. Install A/T fluid temperature sensor 2 (1) with bracket (2) in control valve with TCM. Tighten A/T fluid temperature sensor 2 bolt to the specified torque.

⬅ : Bolt

CAUTION:
Adjust bolt hole of bracket to bolt hole of control valve with TCM.

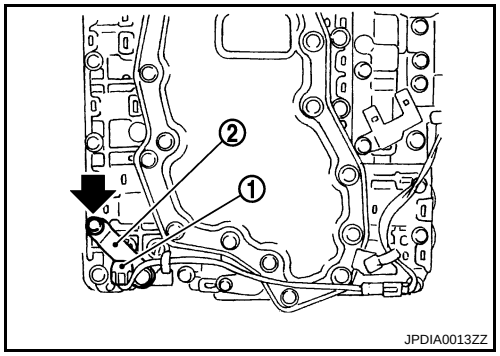

7. Install control valve with TCM in transmission case.

CAUTION:
- **Make sure that turbine revolution sensor securely installs turbine revolution sensor hole (B).**

A : Brake band

- **Hang down revolution sensor harness toward outside so as not to disturb installation of control valve with TCM.**
- **Adjust A/T assembly harness connector of control valve with TCM to terminal hole of transmission case.**

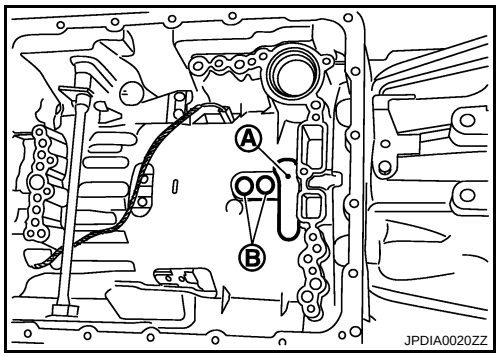

- **Assemble it so that manual valve (1) cutout is engaged with manual plate (2) projection.**

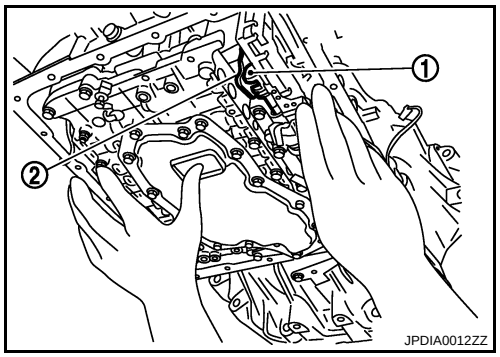

8. Install bolts A, B and C in control valve with TCM.

⇦ : Vehicle front

Bolt symbol	Length mm (in)	Number of bolts
A	42 (1.65)	5
B	55 (2.17)	6
C	40 (1.57)	1

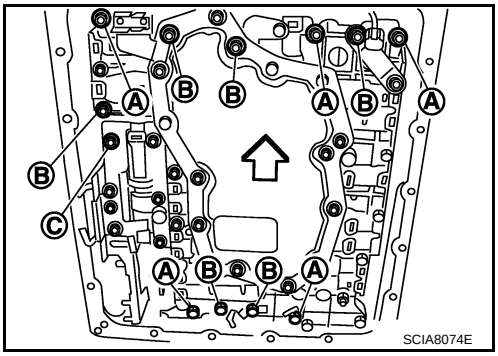

9. Tighten bolt 1, 2 and 3 temporarily to prevent dislocation. After that tighten them in order (1 → 2 → 3), and then tighten other bolts. Tighten control valve with TCM bolts to the specified torque.

⇦ : Vehicle front

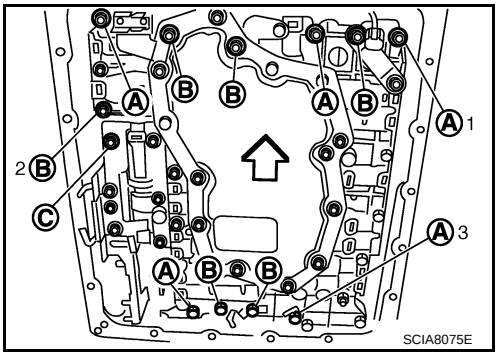

10. Connect A/T fluid temperature sensor 2 connector (A).
11. Engage terminal cord assembly and A/T fluid temperature sensor 2 harness with terminal clips (⬅).

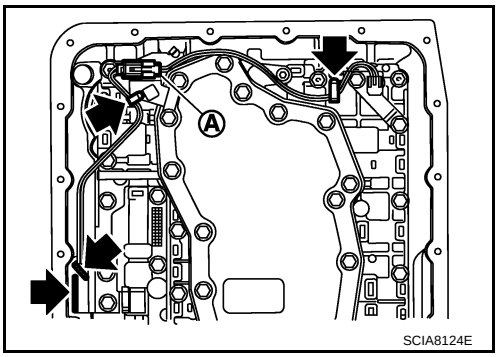

12. Connect revolution sensor connector (A).
13. Engage revolution sensor harness with terminal clip (⬅).

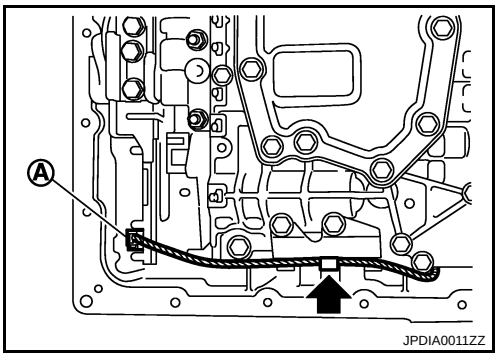

14. Install magnets (1) in oil pan.
15. Install oil pan gasket to oil pan.
    CAUTION:
    - **Do not reuse oil pan gasket.**
    - **Install it in the direction to align hole positions.**
    - **Completely remove all moisture, oil and old gasket, etc. from oil pan gasket mounting surface.**

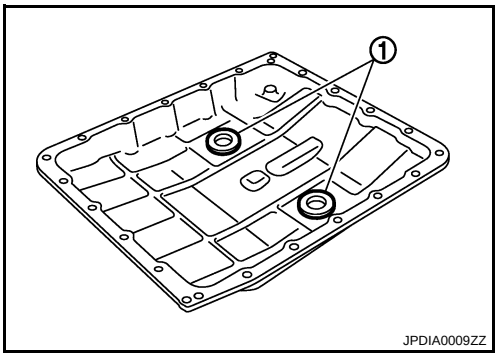

16. Install oil pan (2) (with oil pan gasket) and clips (1) to transmission case.

    ⇦ : Vehicle front

    ⬅ : Oil pan mounting bolt

    CAUTION:
    - **Install it so that drain plug (3) comes to the position as shown in the figure.**
    - **Be careful not to pinch harnesses.**
    - **Completely remove all moisture, oil and old gasket, etc. from oil pan mounting surface.**

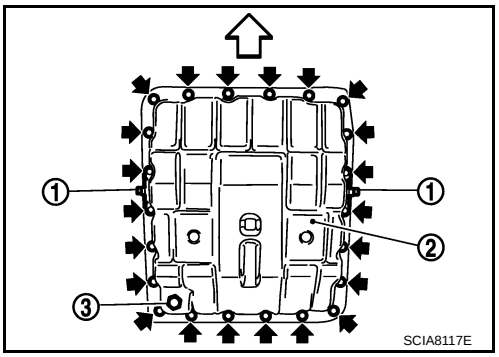

17. Tighten oil pan mounting bolts to the specified torque in numerical order shown in the figure after temporarily tightening them. Tighten oil pan mounting bolts to the specified torque.

    ⇦ : Vehicle front

    CAUTION:
    Do not reuse oil pan mounting bolts.

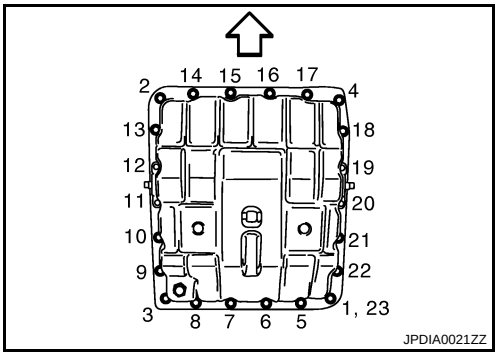

18. Install drain plug to oil pan. Tighten drain plug to the specified torque.
    CAUTION:
    Do not reuse drain plug gasket.

19. Pull up A/T assembly harness connector (A).
    CAUTION:
    Be careful not to damage connector.

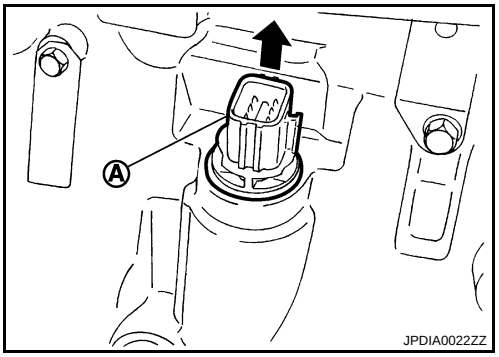

20. Install snap ring (1) to A/T assembly harness connector (A).
21. Connect A/T assembly harness connector.

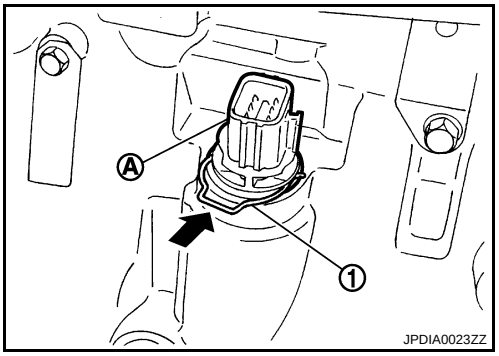

22. Install bracket (2) to transmission assembly.

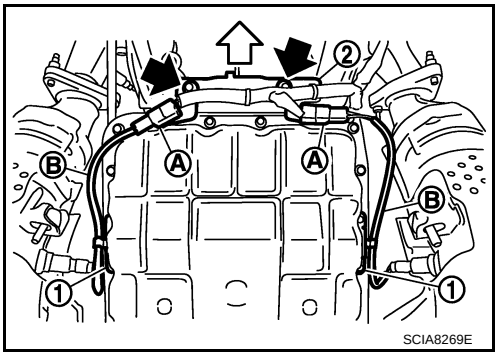

⇦ : Vehicle front

⬅ : Bolt

23. Install heated oxygen sensor 2 harness (B) to clips (1).
24. Connect heated oxygen sensor 2 harness connector (A).
25. Install exhaust mounting bracket. Refer to EX-5, "Exploded View".
26. Pour ATF into A/T assembly. Refer to TM-215, "Changing".
27. Connect the battery cable to the negative terminal.

Inspection

INFOID:0000000001672262

INSPECTION AFTER REMOVAL

Check foreign materials in oil pan to help determine causes of malfunction. If the ATF is very dark, smells burned, or contains foreign particles, the frictional material (clutches, band) may need replacement. A tacky film that will not wipe clean indicates varnish build up. Varnish can cause valves, servo, and clutches to stick and can inhibit pump pressure.

- **If frictional material is detected, perform A/T fluid cooler cleaning. Refer to TM-216, "Cleaning".**

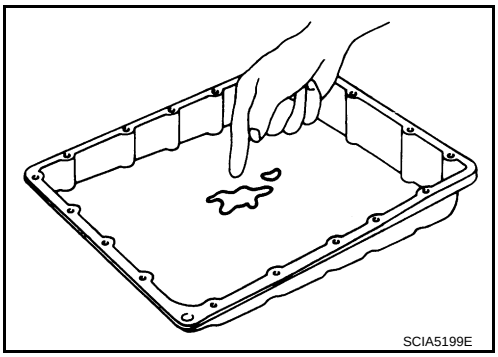

INSPCTION AFTER INSTALLATION

Check for A/T fluid leakage and A/T fluid level after completing installation. Refer to TM-214, "Inspection".

A/T FLUID TEMPERATURE SENSOR 2

Exploded View

INFOID:0000000001672263

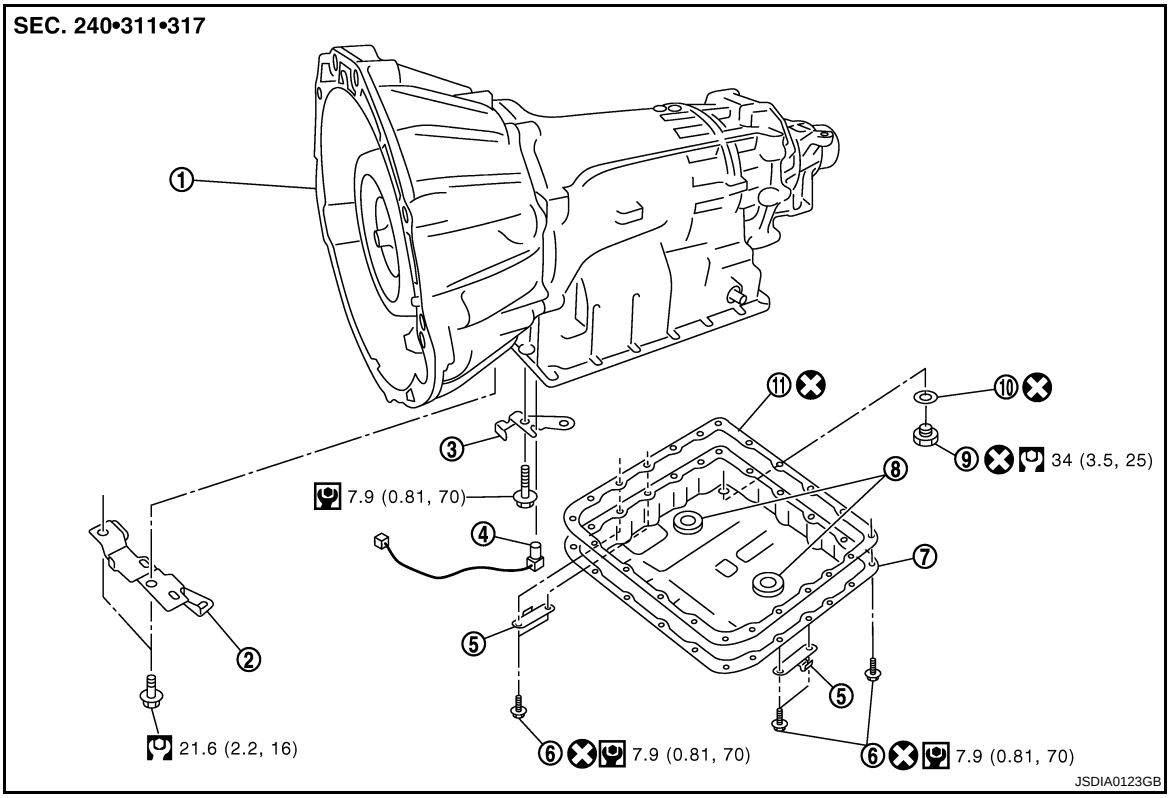

1. A/T	2. Bracket	3. Bracket
4. A/T fluid temperature sensor 2	5. Clip	6. Oil pan mounting bolt
7. Oil pan	8. Magnet	9. Drain plug
10. Drain plug gasket	11. Oil pan gasket	

Refer to GI-4, "Components" for symbols in the figure.

Removal and Installation

INFOID:0000000001672264

REMOVAL

1. Disconnect the battery cable from the negative terminal.
2. Drain ATF through drain plug.
3. Remove exhaust mounting bracket. Refer to EX-5, "Exploded View".
4. Disconnect heated oxygen sensor 2 harness connectors (A).

⇦ : Vehicle front

⬅ : Bolt

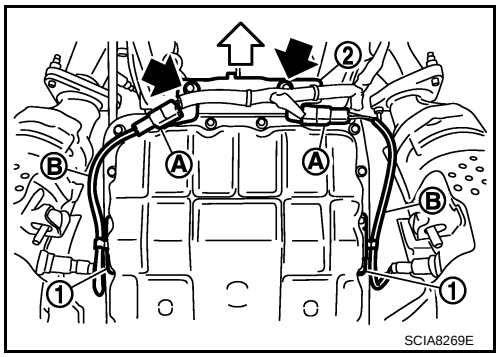

5. Remove heated oxygen sensor 2 harness (B) from clips (1).
6. Remove bracket (2) from transmission assembly.

7. Remove clips (1).

3 : Drain plug
⇦ : Vehicle front
⬅ : Oil pan mounting bolt

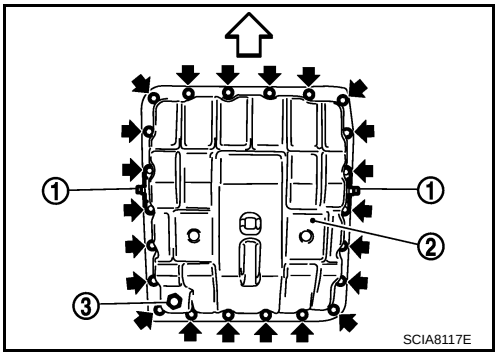

8. Remove oil pan (2) and oil pan gasket.

9. Remove magnets (1) from oil pan.

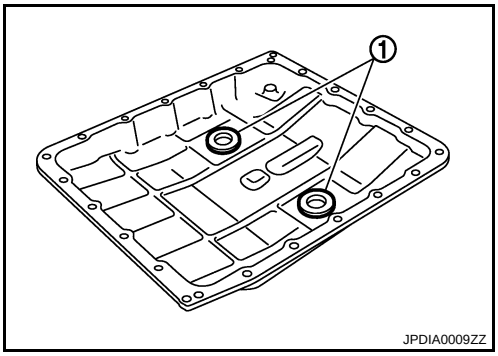

10. Disconnect A/T fluid temperature sensor 2 connector (A).
CAUTION:
Be careful not to damage connector.
11. Disengage terminal clip (⬅).

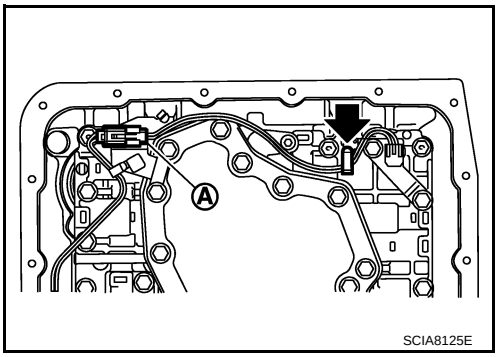

12. Remove A/T fluid temperature sensor 2 (1) with bracket (2) from control valve with TCM.

⬅ : Bolt

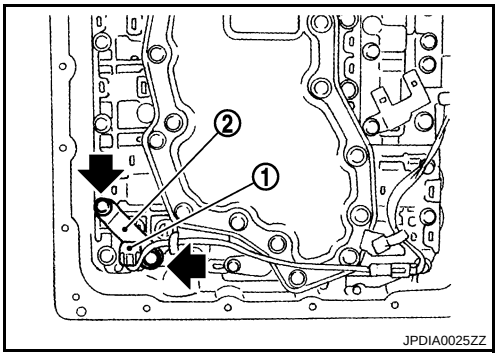

13. Remove bracket (1) from A/T fluid temperature sensor 2 (2).

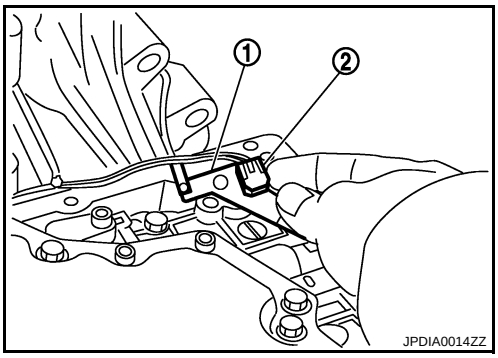

INSTALLATION

1. Install bracket (1) to A/T fluid temperature sensor 2 (2).

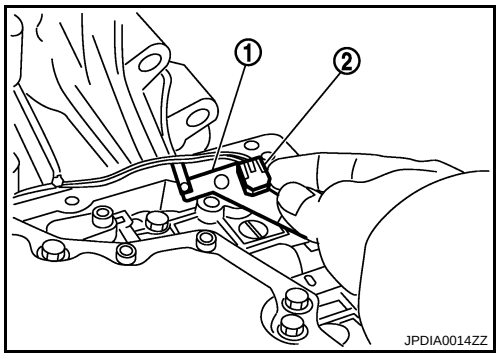

2. Install A/T fluid temperature sensor 2 (1) with bracket (2) in control valve with TCM. Tighten A/T fluid temperature sensor 2 bolts to the specified torque.

⬅ : Bolt

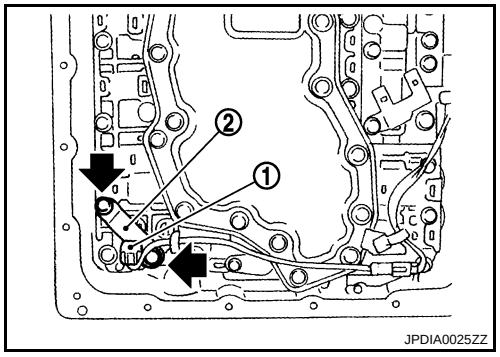

3. Connect A/T fluid temperature sensor 2 connector (A).
4. Engage A/T fluid temperature sensor 2 harness with terminal clip (⬅).

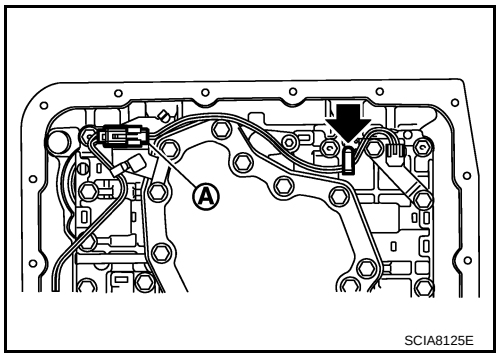

5. Install magnets (1) in oil pan.
6. Install oil pan gasket to oil pan.

CAUTION:
- **Do not reuse oil pan gasket.**
- **Install it in the direction to align hole positions.**
- **Completely remove all moisture, oil and old gasket, etc. from oil pan gasket mounting surface.**

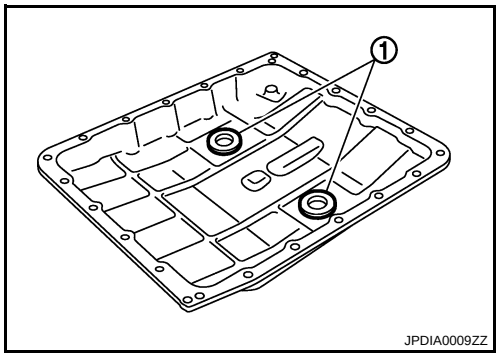

7. Install oil pan (2) (with oil pan gasket) and clips (1) to transmission case.

   ⇦ : Vehicle front

   ⬅ : Oil pan mounting bolt

   CAUTION:
   - **Install it so that drain plug (3) comes to the position as shown in the figure.**
   - **Be careful not to pinch harnesses.**
   - **Completely remove all moisture, oil and old gasket, etc. from oil pan mounting surface.**

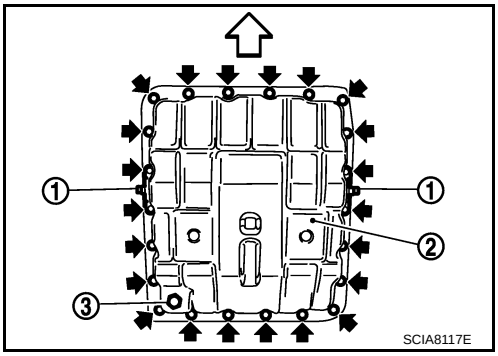

8. Tighten oil pan mounting bolts to the specified torque in numerical order shown in the figure after temporarily tightening them. Tighten oil pan mounting bolts to the specified torque.

   ⇦ : Vehicle front

   CAUTION:
   Do not reuse oil pan mounting bolts.

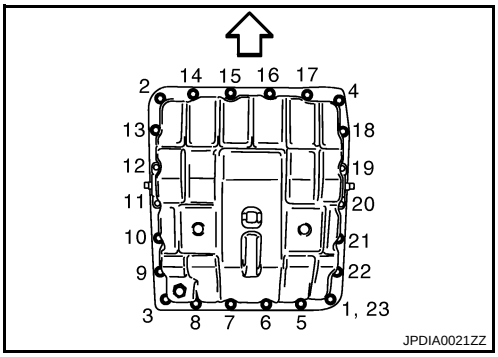

9. Install drain plug to oil pan. Tighten drain plug to the specified torque.
   CAUTION:
   Do not reuse drain plug gasket.
10. Install bracket (2) to transmission assembly.

    ⇦ : Vehicle front

    ⬅ : Bolt

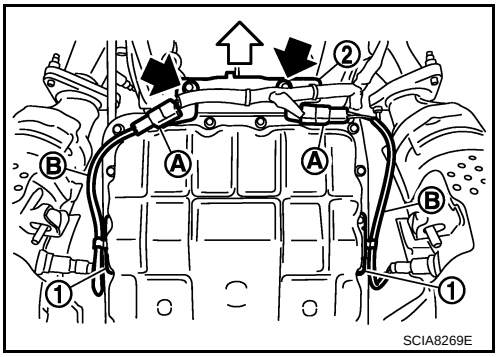

11. Install heated oxygen sensor 2 harness (B) to clips (1).
12. Connect heated oxygen sensor 2 harness connector (A).
13. Install exhaust mounting bracket. Refer to EX-5, "Exploded View".
14. Pour ATF into A/T assembly. Refer to TM-215, "Changing".
15. Connect the battery cable to the negative terminal.

Inspection

INFOID:0000000001672265

INSPECTION AFTER REMOVAL

Check foreign materials in oil pan to help determine causes of malfunction. If the ATF is very dark, smells burned, or contains foreign particles, the frictional material (clutches, band) may need replacement. A tacky film that will not wipe clean indicates varnish build up. Varnish can cause valves, servo, and clutches to stick and can inhibit pump pressure.

- **If frictional material is detected, perform A/T fluid cooler cleaning. Refer to TM-216, "Cleaning".**

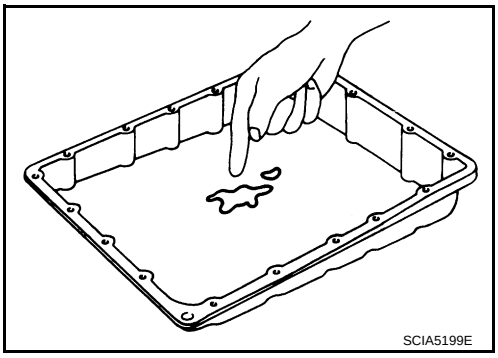

INSPECTION AFTER INSTALLATION

Check for A/T fluid leakage and A/T fluid level after completing installation. Refer to TM-214, "Inspection".

PARKING COMPONENTS

Exploded View

INFOID:0000000001672266

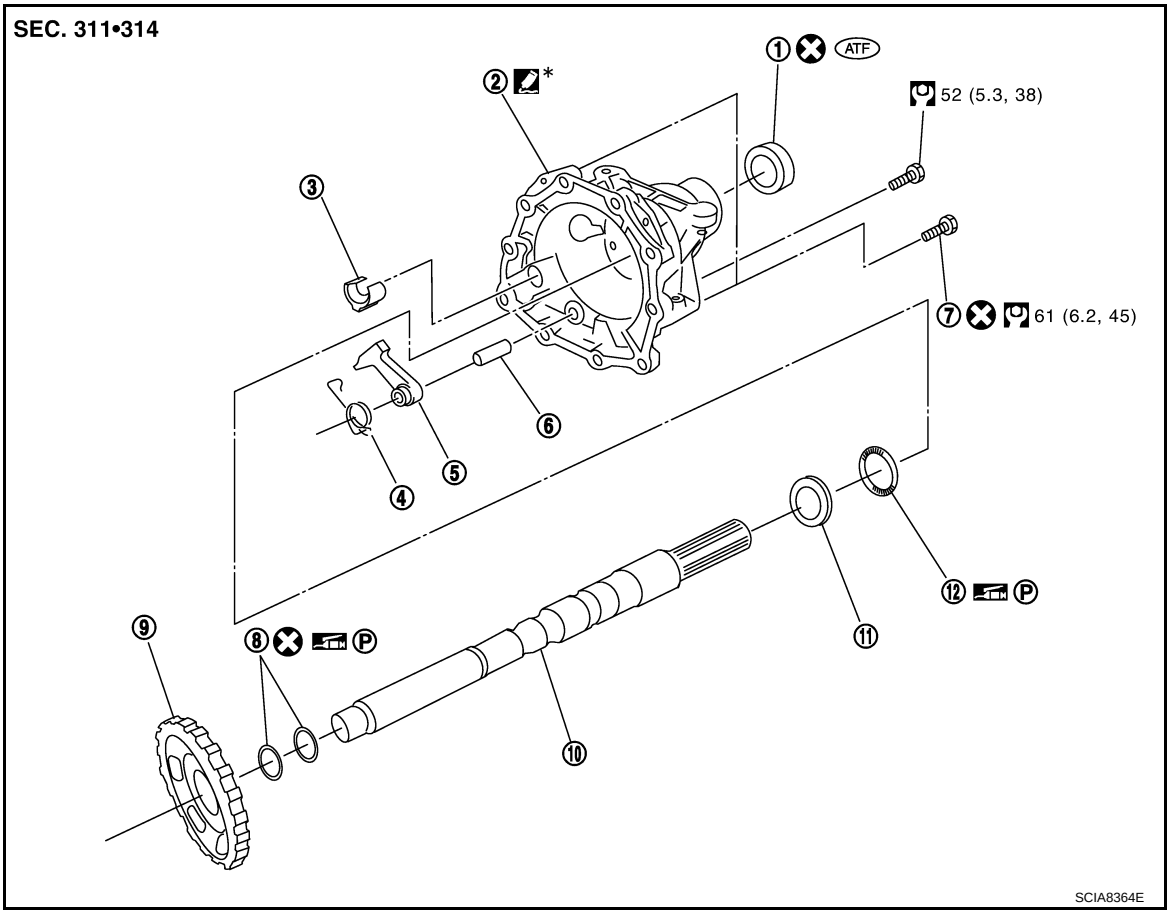

1.	Rear oil seal	2.	Rear extension	3.	Parking actuator support
4.	Return spring	5.	Parking pawl	6.	Pawl shaft
7.	Self-sealing bolt	8.	Seal ring	9.	Parking gear
10.	Output shaft	11.	Bearing race	12.	Needle bearing

*: Apply Genuine Anaerobic Liquid Gasket or equivalent. Refer to GI-15, "Recommended Chemical Products and Sealants".

Refer to GI-4, "Components" for symbols not described on the above.

Removal and Installation

INFOID:0000000001672267

REMOVAL

1. Drain ATF through drain plug.
2. Remove exhaust front tube and center muffler with power tool. Refer to EX-5, "Exploded View".
3. Remove rear propeller shaft. Refer to DLN-14, "Exploded View".
4. Remove control rod. Refer to TM-229, "Exploded View".
5. Support A/T assembly with a transmission jack.
   CAUTION:
   When setting transmission jack, be careful not to allow it to collide against the drain plug.
6. Remove rear engine mounting member with power tool. Refer to EM-67, "Exploded View".
7. Remove engine mounting insulator (rear). Refer to EM-67, "Exploded View".

8. Remove tightening bolts for rear extension assembly and transmission case.

   1 : Self-sealing bolt
   A : Bolt

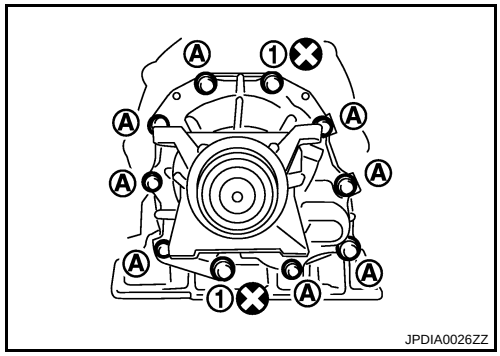

9. Tap rear extension assembly with a soft hammer (A).

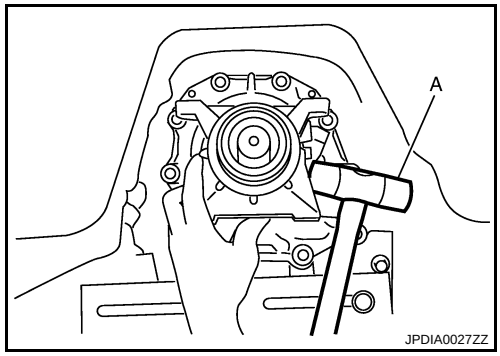

10. Remove rear extension assembly (with needle bearing) from transmission case.

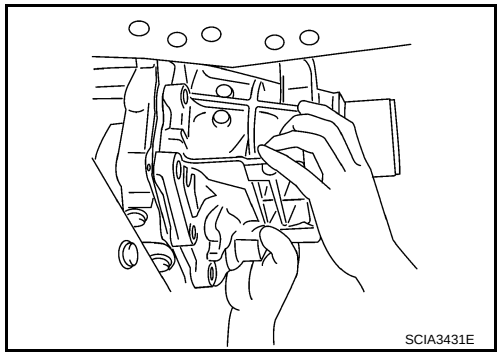

11. Remove bearing race (1) from output shaft (2).

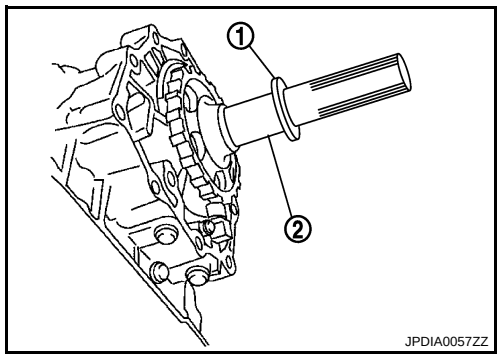

12. Remove output shaft (1) from transmission case by rotating left/right.

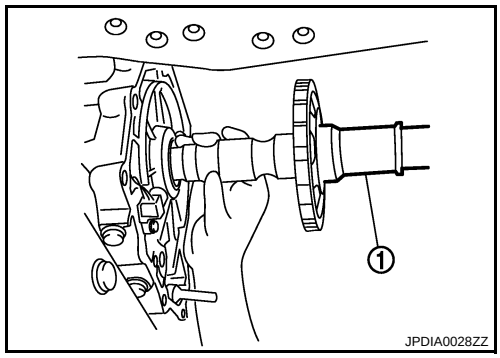

13. Remove parking gear (1) from output shaft (2).

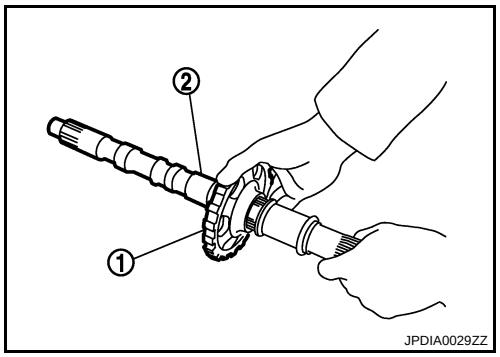

14. Remove seal rings (1) from output shaft.

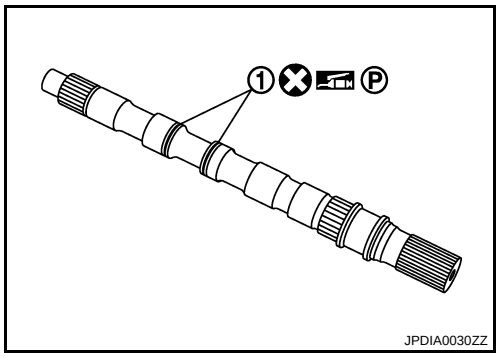

15. Remove needle bearing (1) from rear extension.

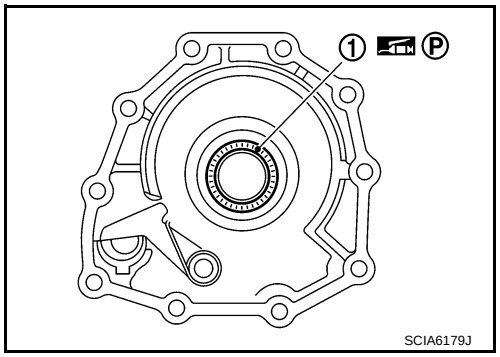

16. Remove parking actuator support (1) from rear extension.

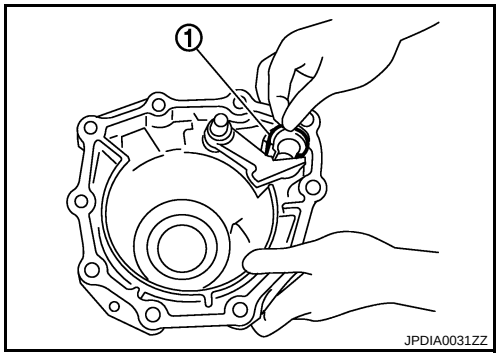

17. Remove parking pawl (with return spring) (1) and pawl shaft (2) from rear extension.

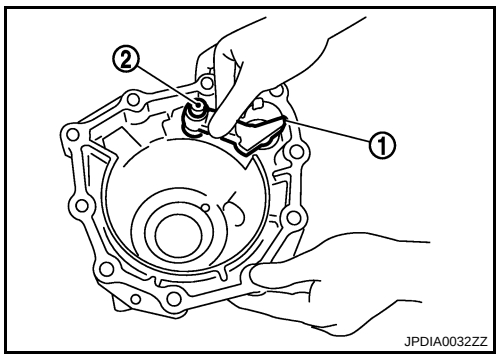

18. Remove return spring (1) from parking pawl (2).

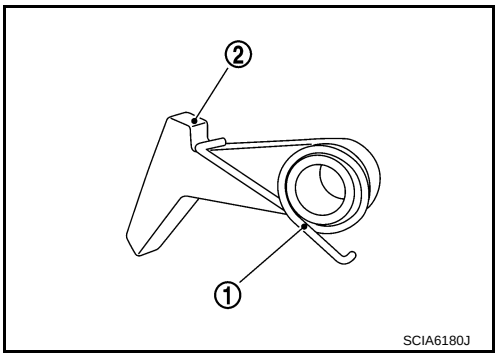

19. Remove rear oil seal (1) from rear extension using flat-blade screwdriver (A).
CAUTION:
Be careful not to scratch rear extension.

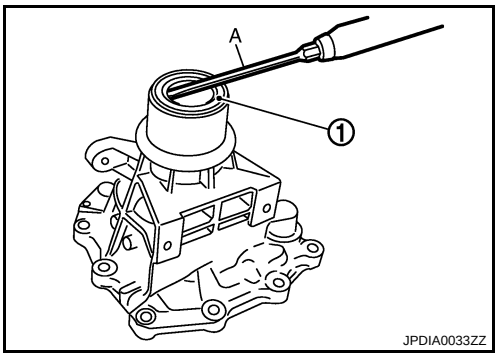

INSTALLATION

1. As shown in the figure, use a drift [SST: ST33400001 (J-26082)] (A) to drive rear oil seal into the rear extension until it is flush.
CAUTION:
- **Do not reuse rear oil seal.**
- **Apply ATF to rear oil seal.**

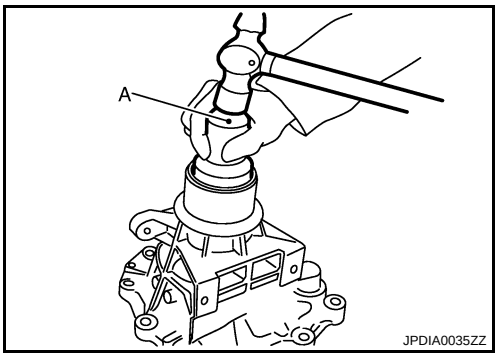

2. Install return spring (1) to parking pawl (2).

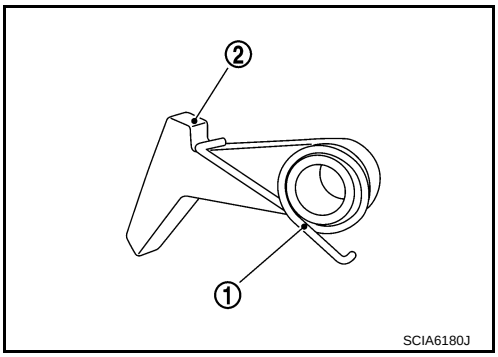

3. Install parking pawl (with return spring) (1) and pawl shaft (2) to rear extension.

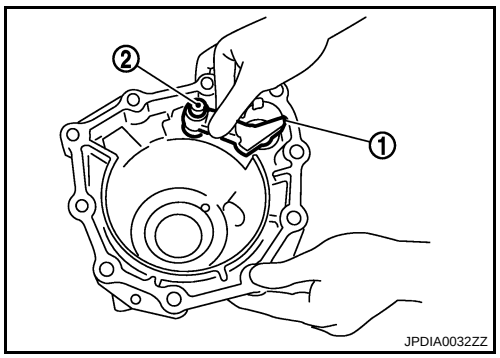

4. Install parking actuator support (1) to rear extension.

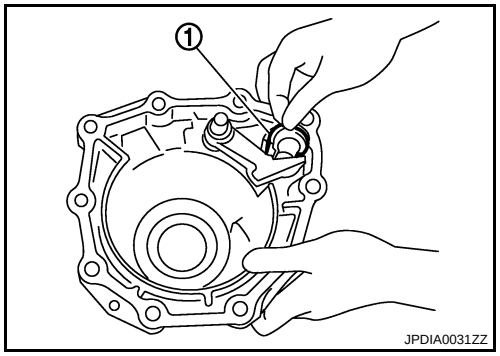

5. Install bearing (1) to rear extension.
CAUTION:
Check the direction of needle bearing. Refer to TM-272, "Location of Adjusting Shims, Needle Bearings, Thrust Washers and Snap Rings".

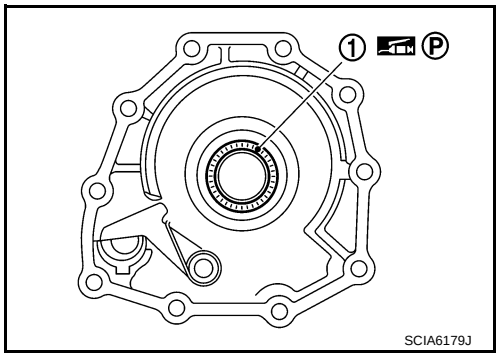

6. Install seal rings (1) to output shaft.

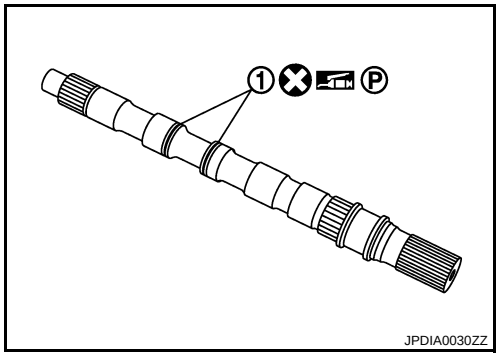

7. Install parking gear (1) to output shaft (2).

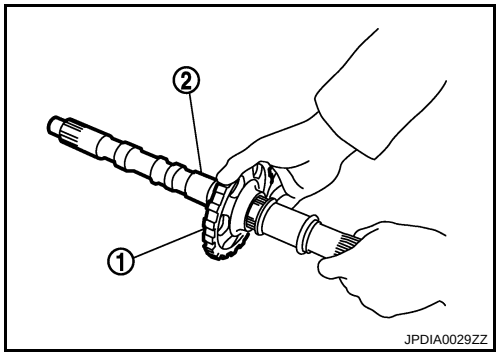

8. Install output shaft (1) in transmission case.

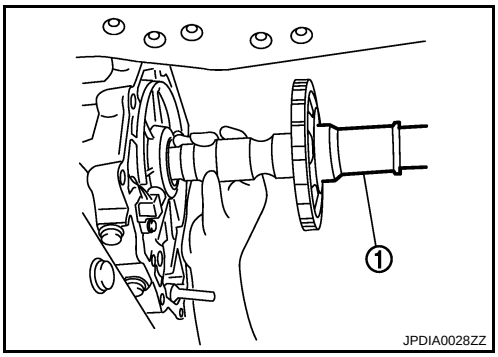

9. Install bearing race (1) to output shaft (2).

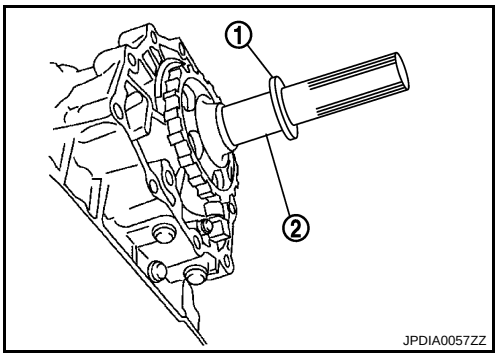

10. Apply recommended sealant (Genuine Anaerobic Liquid Gasket or equivalent. Refer to GI-15, "Recommended Chemical Products and Sealants".) to rear extension assembly as shown in the figure.

A	**: Start and finish point shall be in the center of two bolts.**
B	**: 3 – 5 mm (0.12 – 0.20 in)**
Sealant width (C)	**: 1.0 – 2.0 mm (0.04 – 0.08 in)**
Sealant height (C)	**: 0.4 – 1.0 mm (0.016 – 0.04 in)**

CAUTION:
Completely remove all moisture, oil and old sealant, etc. from the transmission case and rear extension assembly mounting surfaces.

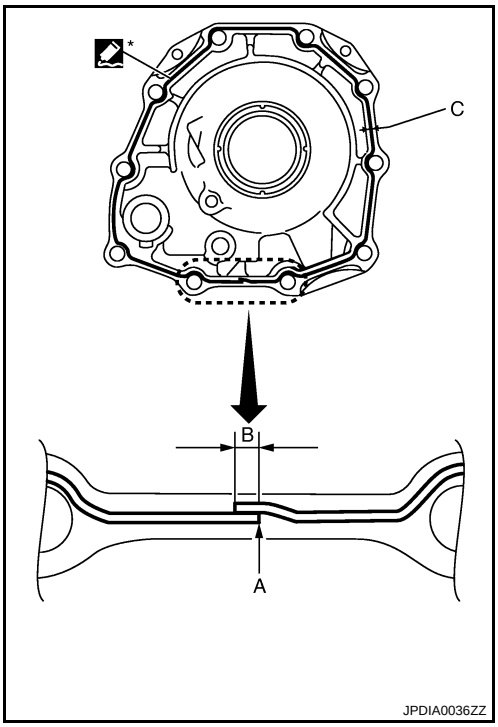

11. Install rear extension assembly (with needle bearing) to transmission case.
CAUTION:
Insert the tip of parking rod between the parking pawl and the parking actuator support when assembling the rear extension assembly.

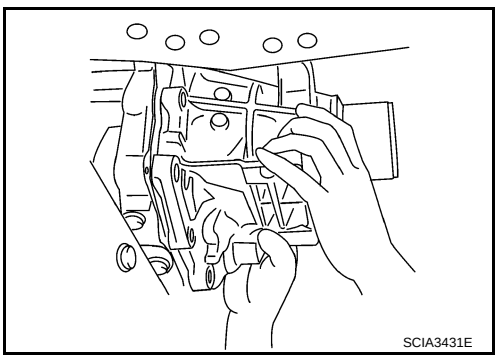

12. Tighten rear extension assembly bolts to the specified torque.

    1 : Self-sealing bolt
    A : Bolt

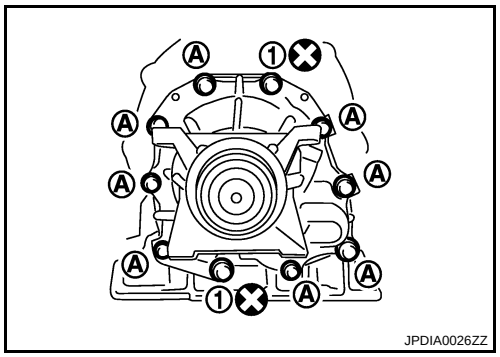

13. Install engine mounting insulator (rear). Refer to EM-67, "Exploded View".
14. Install rear engine mounting member. Refer to EM-67, "Exploded View".
15. Install control rod. Refer to TM-229, "Exploded View".
16. Install rear propeller shaft. Refer to DLN-14, "Exploded View".
17. Install exhaust front tube and center muffler. Refer to EX-5, "Exploded View".
18. Install drain plug to oil pan. Tighten a necessary drain plug with specified torque. Refer to TM-232, "Exploded View".
    CAUTION:
    Do not reuse drain plug gasket.
19. Pour ATF into A/T assembly. Refer to TM-215, "Changing".

Inspection

INFOID:0000000001672268

INSPECTION AFTER REMOVAL

If the contact surface on parking actuator support (1), parking pawl (2) and etc. has excessive wear, abrasion, bend, or any other damage, replace the components.

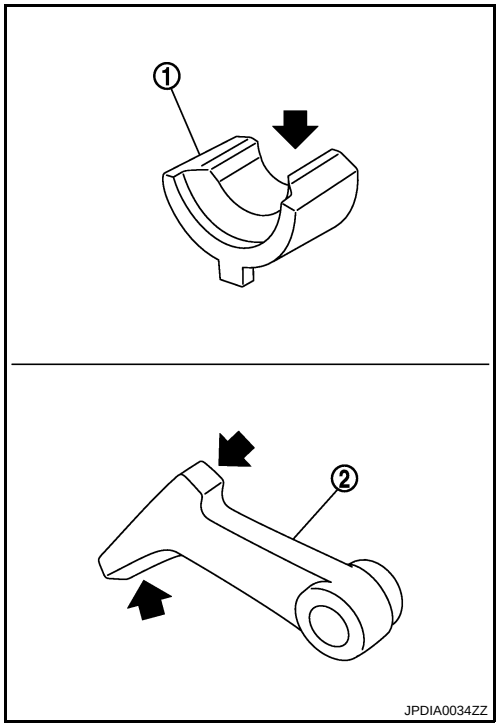

INSPECTION AFTER INSTALLATION

Check the following item after completing installation.
- A/T fluid leakage and A/T fluid level. Refer to TM-214, "Inspection".
- A/T position. Refer toTM-226, "Inspection and Adjustment".

REAR OIL SEAL

Exploded View

INFOID:0000000001672269

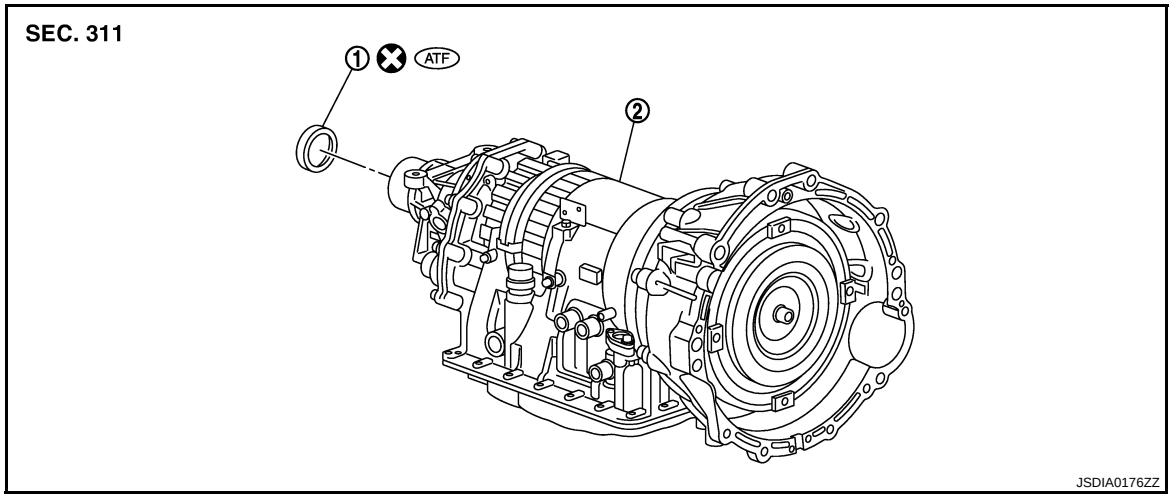

1. Rear oil seal
2. A/T

Refer to GI-4, "Components" for symbols in the figure.

Removal and Installation

INFOID:0000000001672270

REMOVAL

1. Remove exhaust front tube and center muffler with power tool. Refer to EX-5, "Exploded View".
2. Remove heat insulator.
3. Remove rear propeller shaft. Refer to DLN-14, "Exploded View".
4. Remove rear oil seal (1) using a flat-bladed screwdriver (A).
   CAUTION:
   Be careful not to scratch rear extension assembly.

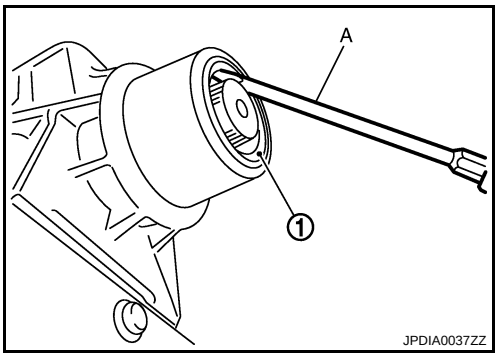

INSTALLATION

1. As shown in the figure, use the drift [SST: ST33400001 (J-26082)] (A) to drive rear oil seal into rear extension assembly until it is flush.
   CAUTION:
   - **Do not reuse rear oil seal.**
   - **Apply ATF to rear oil seal.**
2. Install rear propeller shaft. Refer to DLN-14, "Exploded View".
3. Install heat insulator.
4. Install exhaust front tube and center muffler. Refer to EX-5, "Exploded View".

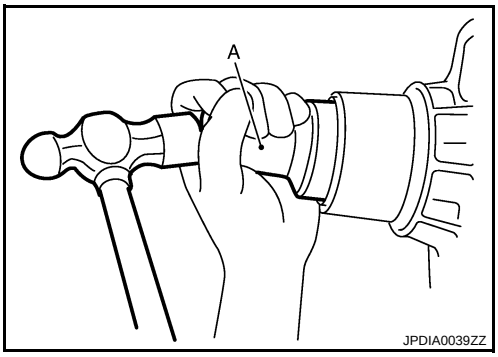

Inspection

INFOID:0000000001672271

INSPECTION AFTER INSTALLATION

Check A/T fluid leakage and A/T fluid level after completing installation. Refer to TM-214, "Inspection".

REVOLUTION SENSOR

Exploded View

INFOID:0000000001672275

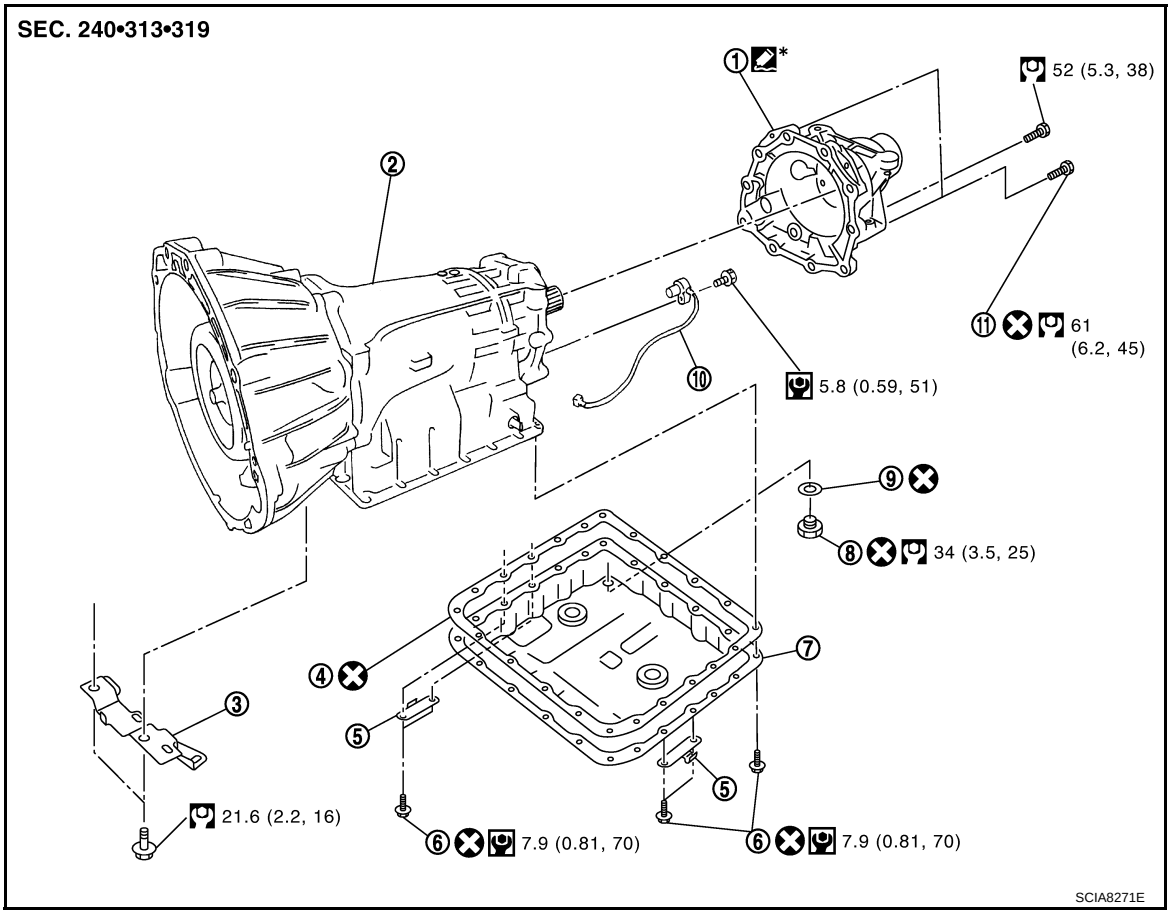

1.	Rear extension	2.	A/T	3.	Bracket
4.	Oil pan gasket	5.	Clip	6.	Oil pan mounting bolt
7.	Oil pan	8.	Drain plug	9.	Drain plug gasket
10.	Revolution sensor	11.	Self-sealing bolt		

*: Apply Genuine Anaerobic Liquid Gasket or equivalent. Refer to GI-15, "Recommended Chemical Products and Sealants".

Refer to GI-4, "Components" for symbols not described on the above.

Removal and Installation

INFOID:0000000001672276

REMOVAL

1. Disconnect the battery cable from the negative terminal.
2. Drain ATF through drain plug.
3. Remove exhaust front tube and center muffler with power tool. Refer to EX-5, "Exploded View".
4. Remove heat insulator.
5. Remove rear propeller shaft. Refer to DLN-14, "Exploded View".
6. Remove control rod. Refer to TM-229, "Exploded View".
7. Remove exhaust mounting bracket. Refer to EX-5, "Exploded View".

8. Disconnect heated oxygen sensor 2 harness connectors (A).

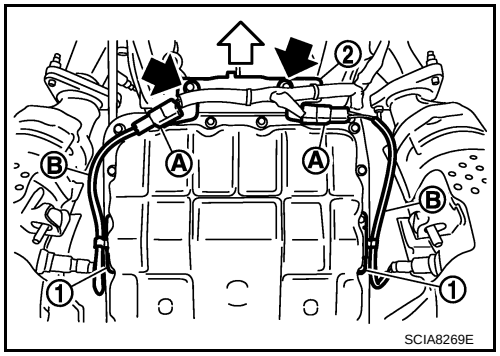

⇦ : Vehicle front

⬅ : Bolt

9. Remove heated oxygen sensor 2 harness (B) from clips (1).
10. Remove bracket (2) from transmission assembly.

11. Remove clips (1).

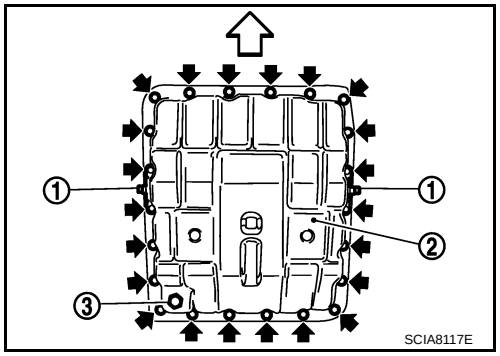

3 : Drain plug

⇦ : Vehicle front

⬅ : Oil pan mounting bolt

12. Remove oil pan (2) and oil pan gasket.
13. Support A/T assembly with a transmission jack.
CAUTION:
When setting transmission jack, place wooden blocks to prevent from damaging control valve with TCM and transmission case.
14. Remove rear engine mounting member with power tool. Refer to TM-263, "Exploded View".
15. Remove engine mounting insulator (rear). Refer to TM-263, "Exploded View".
16. Remove tightening bolts for rear extension assembly and transmission case.

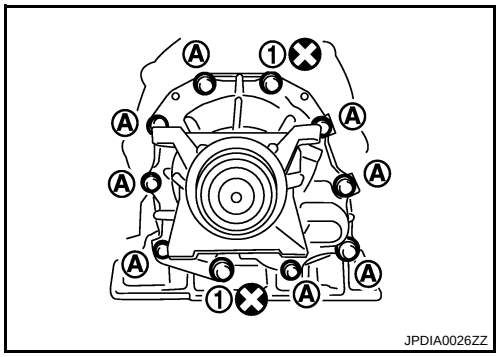

1 : Self-sealing bolt

A : Bolt

17. Tap rear extension assembly with a soft hammer (A).

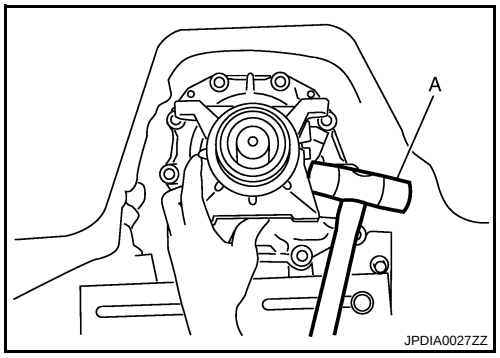

18. Remove rear extension assembly (with needle bearing) from transmission case.

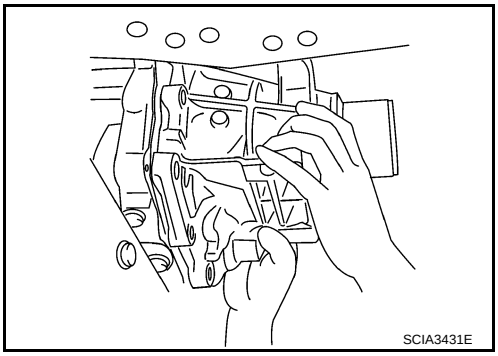

19. Disconnect revolution sensor connector (A).
    CAUTION:
    Be careful not to damage connector
20. Disengage terminal clip (⬅).

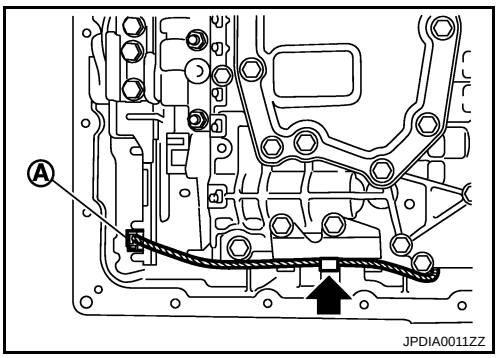

21. Remove revolution sensor (1) from transmission case.

    ⬅ : Bolt

    CAUTION:
    - **Do not subject it to impact by dropping or hitting it.**
    - **Do not disassemble.**
    - **Do not allow metal filings, etc. to get on the sensor's front edge magnetic area.**
    - **Do not place in an area affected by magnetism.**

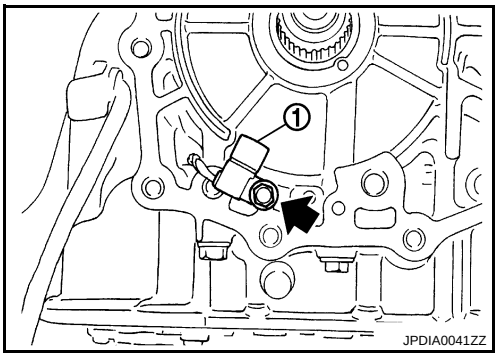

INSTALLATION

1. Install revolution sensor (1) in transmission case. Tighten a necessary bolt for revolution sensor with specified torque.

   ⬅ : Bolt

   CAUTION:
   - **Do not subject it to impact by dropping or hitting it.**
   - **Do not disassemble.**
   - **Do not allow metal filings, etc. to get on the sensor's front edge magnetic area.**
   - **Do not place in an area affected by magnetism.**

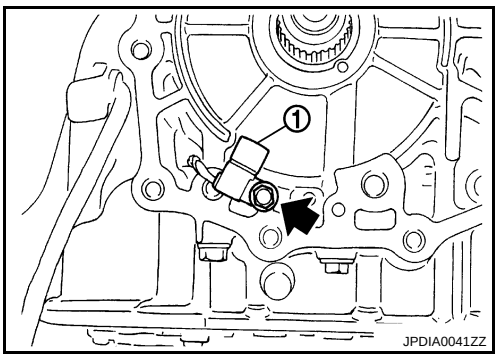

2. Connect revolution sensor connector (A).
3. Engage revolution sensor harness with clip (⬅).

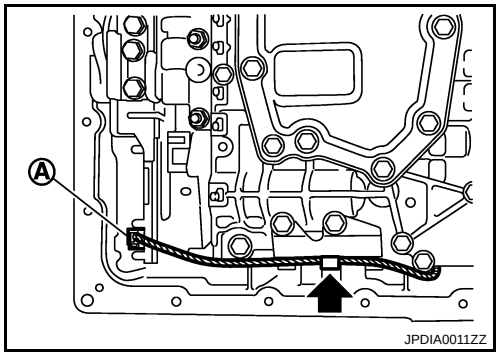

4. Apply recommended sealant (Genuine Anaerobic Liquid Gasket or equivalent. Refer to GI-15, "Recommended Chemical Products and Sealants".) to rear extension assembly as shown in the figure.

A	**: Start and finish point shall be in the center of two bolts.**
B	**: 3 – 5 mm (0.12 – 0.20 in)**
Sealant width (C)	**: 1.0 –2.0 mm (0.04 – 0.08 in)**
Sealant height (C)	**: 0.4 – 1.0 mm (0.016 – 0.04 in)**

CAUTION:
Completely remove all moisture, oil and old sealant, etc. from transmission case and rear extension assembly mounting surfaces.

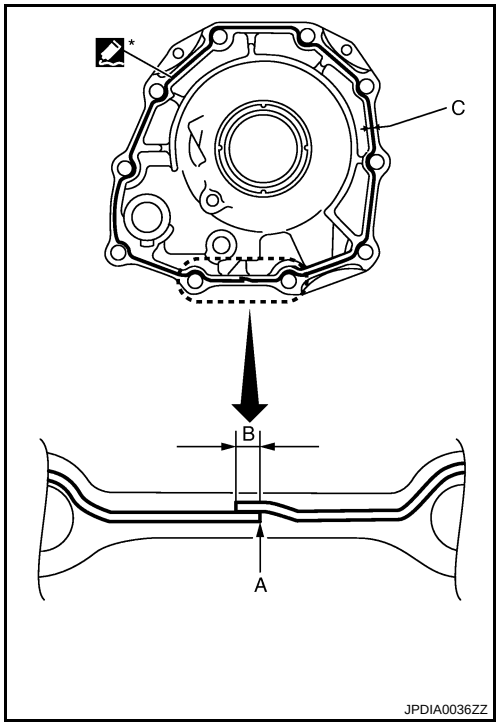

5. Install rear extension assembly (with needle bearing) to transmission case.
CAUTION:
Insert the tip of parking rod between the parking pole and the parking actuator support when assembling the rear extension assembly.

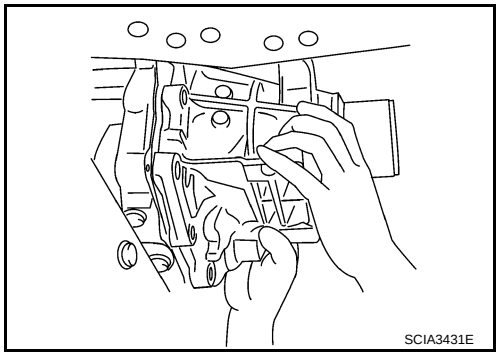

6. Tighten rear extension assembly bolts to the specified torque.

1 : Self-searing bolt
A : Bolt

7. Install rear engine mounting member. Refer to TM-263, "Exploded View".
8. Install oil pan gasket to oil pan.
CAUTION:
- **Do not reuse oil pan gasket.**
- **Install it in the direction to align hole positions.**

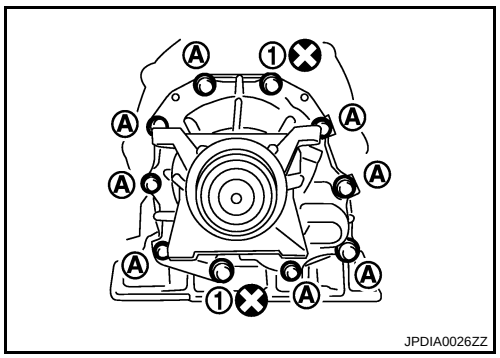

- **Completely remove all moisture, oil and old gasket, etc. from oil pan gasket mounting surface.**

9. Install oil pan (2) (with oil pan gasket) and clips (1) to transmission case.

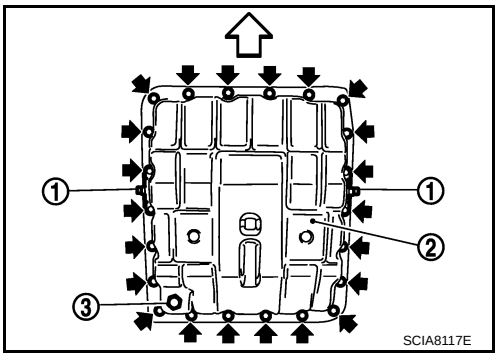

⇦ : Vehicle front

⬅ : Oil pan mounting bolt

CAUTION:
- **Install it so that drain plug (3) comes to the position as shown in the figure.**
- **Be careful not to pinch harnesses.**
- **Completely remove all moisture, oil and old gasket, etc. from oil pan mounting surface.**

10. Tighten oil pan mounting bolts to the specified torque in numerical order shown in the figure after temporarily tightening them. Tighten necessary oil pan mounting bolts with specified torque.

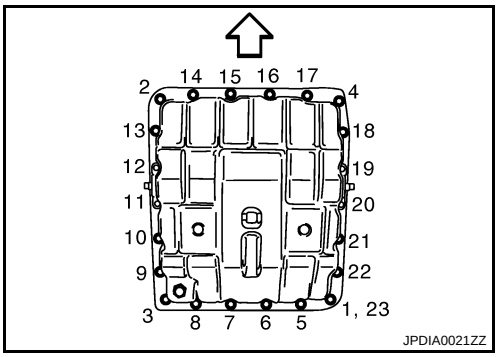

⇦ : Vehicle front

CAUTION:
Do not reuse oil pan mounting bolts.

11. Install drain plug to oil pan. Tighten a necessary drain plug with specified torque.
CAUTION:
Do not reuse drain plug gasket.
12. Install bracket (2) to transmission assembly.

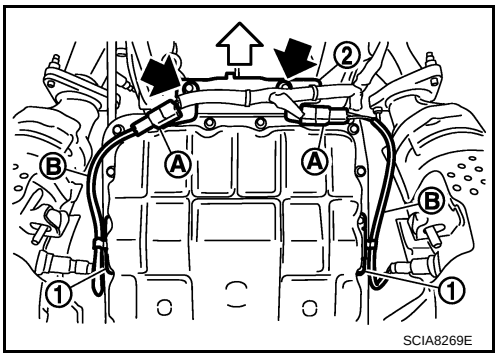

⇦ : Vehicle front

⬅ : Bolt

13. Install heated oxygen sensor 2 harness (B) to clips (1).
14. Connect heated oxygen sensor 2 harness connector (A).
15. Install exhaust mounting bracket. Refer to EX-5, "Exploded View".
16. Install control rod. Refer to TM-229, "Exploded View".
17. Install rear propeller shaft. Refer to DLN-14, "Exploded View".
18. Install heat insulator.
19. Install exhaust front tube and center muffler. Refer to EX-5, "Exploded View".
20. Pour ATF into A/T assembly. Refer to TM-215, "Changing".
21. Connect the battery cable to the negative terminal.

Inspection

INFOID:0000000001672277

INSPECTION AFTER REMOVAL

Check foreign materials in oil pan to help determine causes of malfunction. If the ATF is very dark, smells burned, or contains foreign particles, the frictional material (clutches, band) may need replacement. A tacky film that will not wipe clean indicates varnish build up. Varnish can cause valves, servo, and clutches to stick and can inhibit pump pressure.

- **If frictional material is detected, perform A/T fluid cooler cleaning. Refer to TM-216, "Cleaning".**

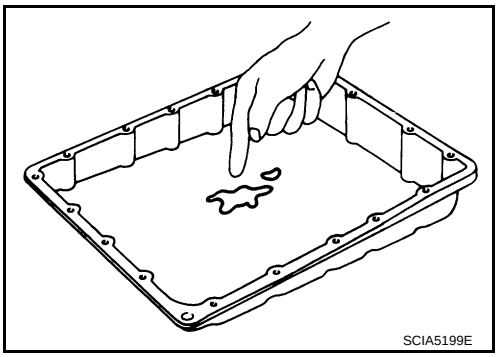

INSPECTION AFTER INSTALLATION

Check the following item after completing installation.

- A/T fluid leakage and A/T fluid level. Refer to TM-214, "Inspection".
- A/T position. Refer toTM-226, "Inspection and Adjustment".

AIR BREATHER HOSE

Exploded View

INFOID:0000000001672278

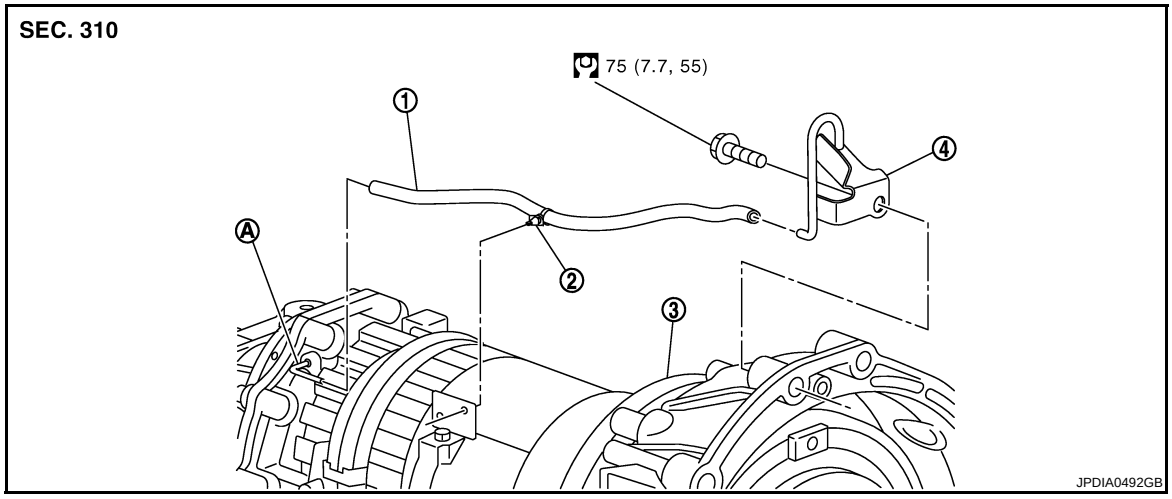

1. Air breather hose
2. Clip
3. A/T assembly
4. Air breather vent

A. Air breather tube

Refer to GI-4, "Components" for symbols in the figure.

Removal and Installation

INFOID:0000000001672279

REMOVAL

1. Remove air cleaner case (RH). Refer to EM-26, "Exploded View".
2. Remove exhaust front tube and center muffler with power tool. Refer to EX-5, "Exploded View".
3. Remove exhaust mounting bracket. Refer to EX-5, "Exploded View".
4. Remove three way catalyst (right bank). Refer to EX-5, "Exploded View".
5. Remove air breather hose and air breather vent.

INSTALLATION

Note the following, and install in the reverse order of removal.

CAUTION:

- **When installing an air breather hose, do not to crush or block by folding or bending the hose.**
- **When inserting an air breather hose to the air breather tube, be sure to insert it fully until its end reaches the tube bend “R” portion.**
- **Install air breather hose to air breather tube and air breather vent so that the paint mark is facing upward.**
- **Ensure clips are securely installed to brackets when installing A/T breather hose to brackets.**

A/T FLUID COOLER TUBE

Exploded View

INFOID:0000000001672282

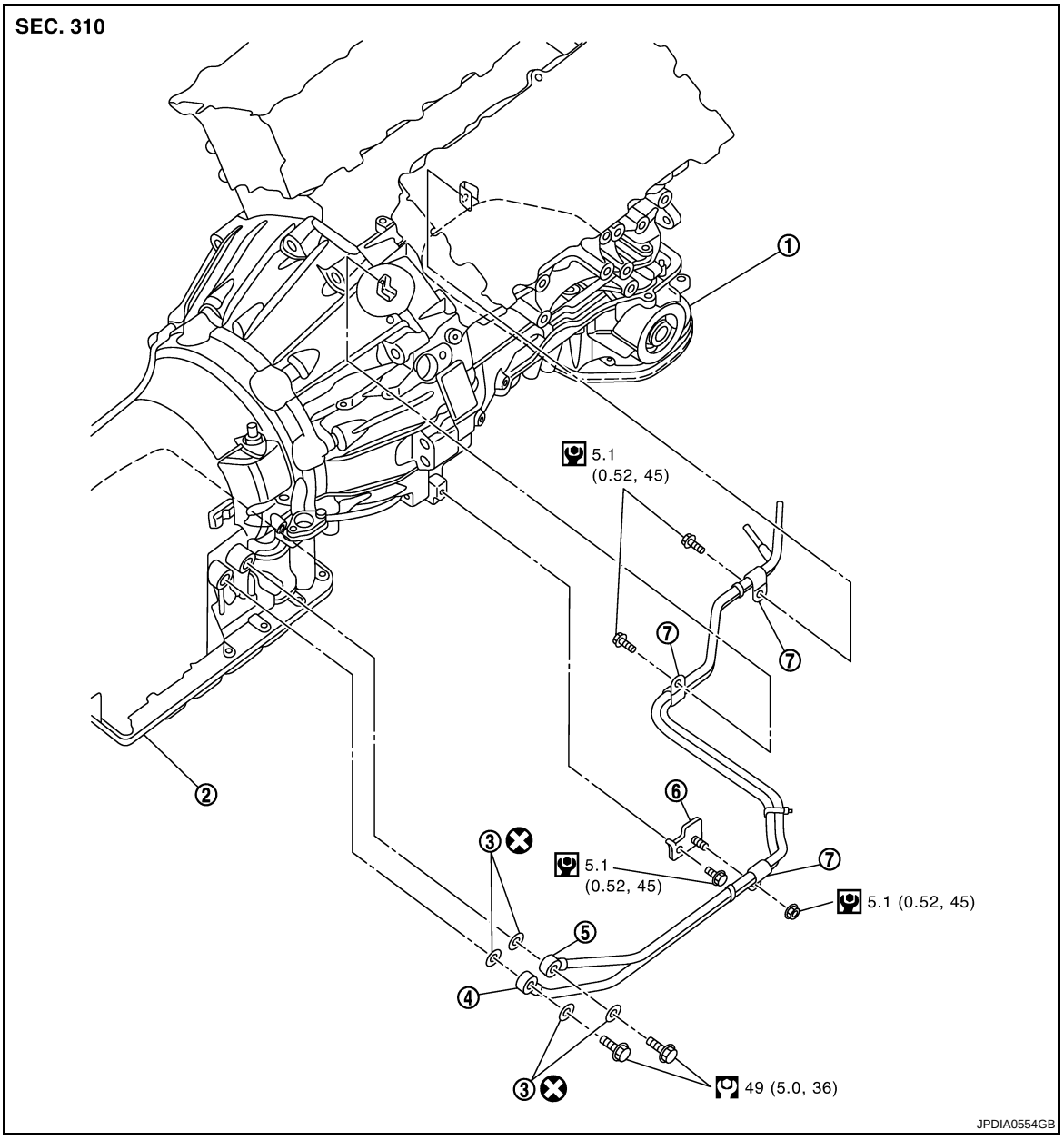

1. Engine assembly
2. A/T assembly
3. Copper washer
4. A/T fluid cooler tube
5. A/T fluid cooler tube
6. Bracket
7. Clip

Refer to GI-4, "Components" for symbols in the figure.

Removal and Installation

INFOID:0000000001672283

REMOVAL

1. Remove the engine lower cover with power tool. Refer to EXT-29, "Exploded View".
2. Remove the exhaust mounting bracket. Refer to EX-5, "Exploded View".
3. Remove the suspension member stay. Refer to FSU-23, "Exploded View".
4. Pull out the A/T fluid cooler hose from the A/T fluid cooler tube. Refer to CO-14, "Exploded View"

5. Remove the A/T fluid cooler tube from the A/T assembly and engine assembly.
6. Remove the stabilizer bar. Refer to FSU-23, "Exploded View".
7. Loosen the lower mounting nuts for the engine mounting insulators (RH and LH). Refer to EM-67, "Exploded View".
8. Set a jack to the engine assembly and slightly lift the engine assembly.
   CAUTION:
   Do not pull the harnesses, hoses, etc. excessively.
9. Remove the A/T fluid cooler tube from the vehicle.
   CAUTION:
   Be careful not to bend A/T fluid cooler tube.

INSTALLATION

Install in the reverse order of removal.

Inspection

INFOID:0000000001672284

INSPECTION AFTER INSTALLATION

Check for A/T fluid leakage and A/T fluid level after completing installation. Refer to TM-214, "Inspection".

REMOVAL AND INSTALLATION

TRANSMISSION ASSEMBLY

Exploded View

INFOID:0000000001672288

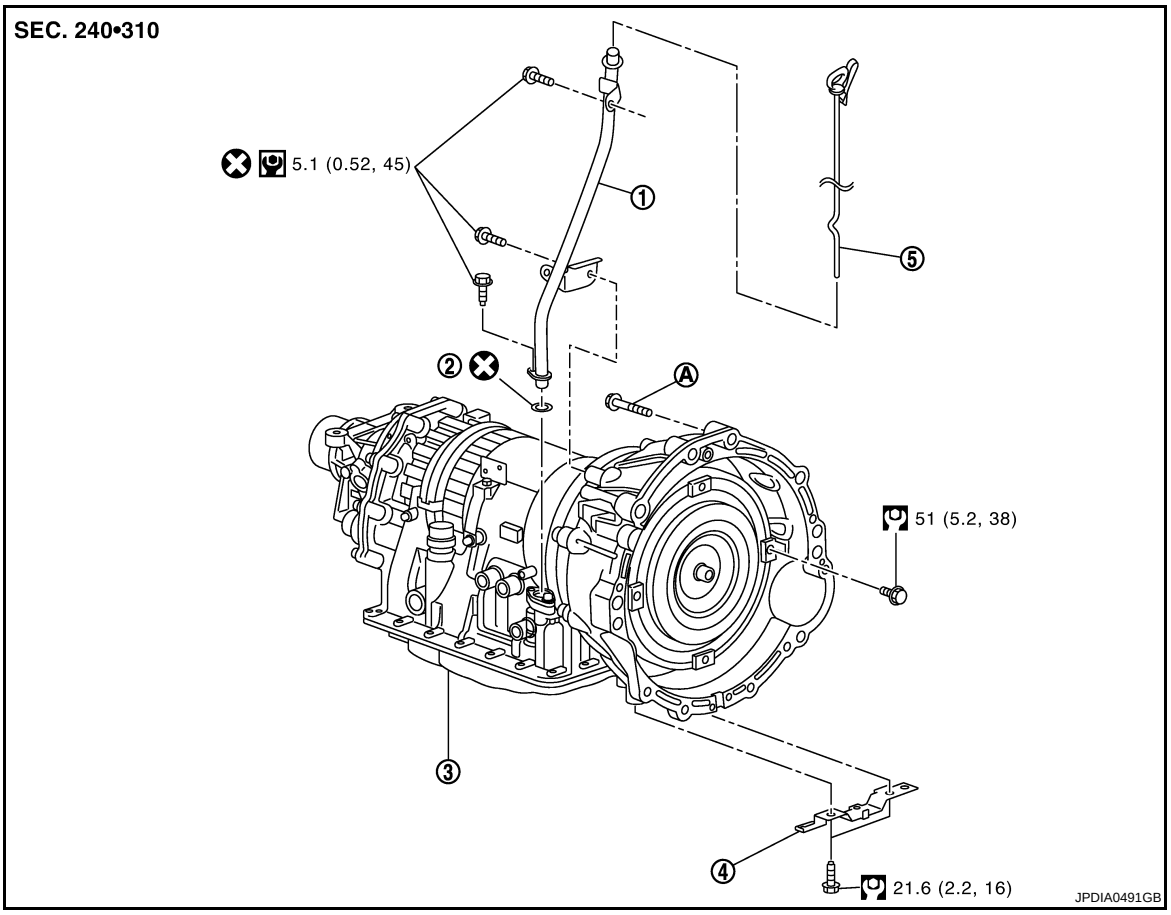

1. A/T fluid charging pipe	2. O-ring	3. A/T assembly
4. Bracket	5. A/T fluid level gauge	
A. For tightening torque, refer to TM-263, "Removal and Installation".		

Refer to GI-4, "Components" for symbols in the figure.

Removal and Installation

INFOID:0000000001672289

REMOVAL

CAUTION:

- **When removing the A/T assembly from engine, first remove the crankshaft position sensor (POS) from the A/T assembly.**
- **Be careful not to damage sensor edge.**

1. Disconnect the battery cable from the negative terminal.
2. Remove A/T fluid level gauge.
3. Remove air cleaner case (RH). Refer to EM-26, "Exploded View".
4. Remove engine lower cover with power tool. Refer to EXT-29, "Exploded View".
5. Remove exhaust front tube and center muffler with power tool. Refer to EX-5, "Exploded View".
6. Remove heat insulator.
7. Remove rear propeller shaft. Refer to DLN-14, "Exploded View".
8. Remove suspension member stay. Refer to FSU-23, "Exploded View".

9. Remove exhaust mounting bracket. Refer to EX-5, "Exploded View".
10. Disconnect heated oxygen sensor 2 harness connectors (A).

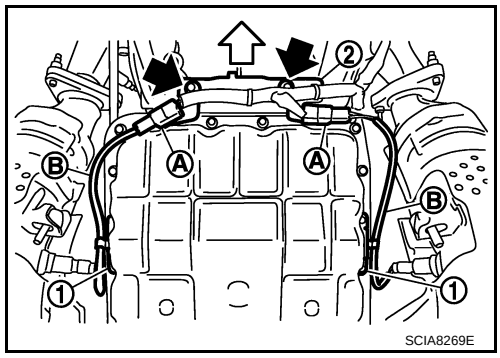

⇦ : Vehicle front

⬅ : Bolt

11. Remove heated oxygen sensor 2 harness (B) from clips (1).
12. Remove bracket (2) from transmission assembly.
13. Remove control rod. Refer to TM-229, "Exploded View".
14. Remove crankshaft position sensor (POS) from A/T assembly. Refer to EM-110, "Exploded View".
    CAUTION:
    - **Do not subject it to impact by dropping or hitting it.**
    - **Do not disassemble.**
    - **Do not allow metal filings, etc. to get on the sensor's front edge magnetic area.**
    - **Do not place in an area affected by magnetism.**
15. Remove starter motor. Refer to STR-15, "Exploded View".
16. Remove rear plate cover. Refer to EM-42, "Exploded View".
17. Turn crankshaft, and remove the four tightening bolts for drive plate and torque converter.
    CAUTION:
    When turning the crankshaft, turn it clockwise as viewed from the front of the engine.

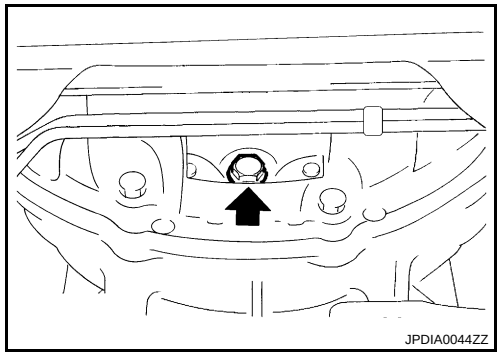

18. Support A/T assembly with a transmission jack.
    CAUTION:
    When setting the transmission jack, be careful not to allow it to collide against the drain plug.
19. Remove rear engine mounting member with power tool. Refer to EM-67, "Exploded View".
20. Remove engine mounting insulator (rear). Refer to EM-67, "Exploded View".
21. Remove dynamic damper. Refer to EM-67, "Exploded View".
22. Disconnect A/T assembly harness connector.
23. Remove air breather hose. Refer to TM-260, "Exploded View".
24. Remove A/T fluid charging pipe from A/T assembly.
25. Remove O-ring from A/T fluid charging pipe.
26. Disconnect fluid cooler tube from A/T assembly. Refer to TM-261, "Exploded View".
27. Plug up openings such as the A/T fluid charging pipe hole, etc.
28. Remove bolts fixing A/T assembly to engine assembly with power tool.
29. Remove A/T assembly from vehicle.
    CAUTION:
    - **Secure torque converter to prevent it from dropping.**
    - **Secure A/T assembly to a transmission jack.**

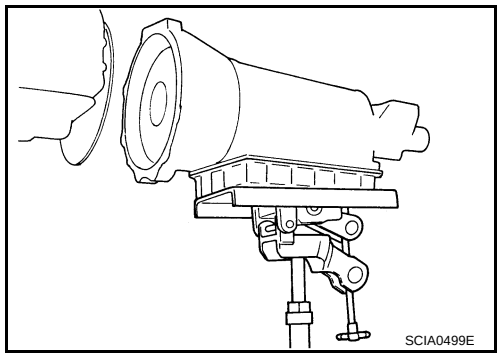

INSTALLATION

Note the following, and Install in the reverse order of removal.

- When installing A/T assembly to the engine assembly, be sure to check distance (A) to ensure it is within the reference value limit.

B : Scale
C : Straightedge

Distance (A) : Refer to TM-330, "Torque Converter"

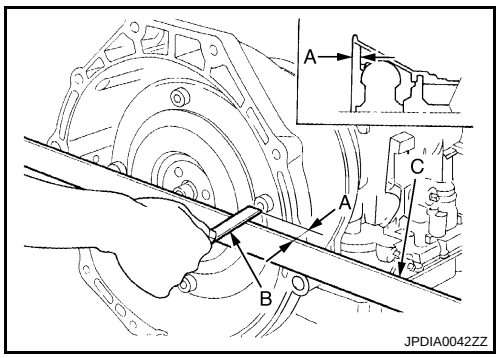

- When installing A/T assembly to the engine assembly, attach the fixing bolts in accordance with the following standard.

	Transmission to engine	Engine to transmission
Bolt No.	A	B
Number of bolts	8	4
Bolt length mm (in)	65 (2.56)	35 (1.38)
Tightening torque N·m (kg-m, ft-lb)	75 (7.7, 55)	46.6 (4.8, 34)

*: Tightening the bolt with air breather vent.

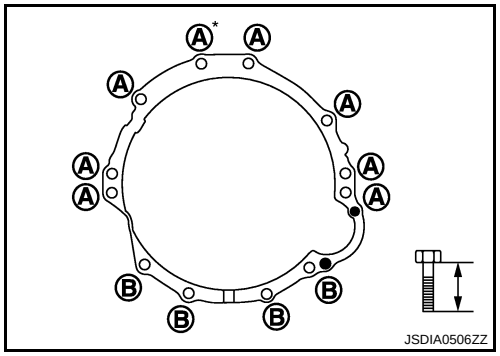

- Align the positions of tightening bolts for drive plate with those of the torque converter, and temporarily tighten the bolts. Then, tighten the bolts with the specified torque.

CAUTION:
- **When turning crankshaft, turn it clockwise as viewed from the front of the engine.**
- **When tightening the tightening bolts for the torque converter after fixing the crankshaft pulley bolts, be sure to confirm the tightening torque of the crankshaft pulley mounting bolts. Refer to EM-48, "Exploded View".**
- **Rotate crankshaft several turns and check to be sure that A/T rotates freely without binding after converter is installed to drive plate.**

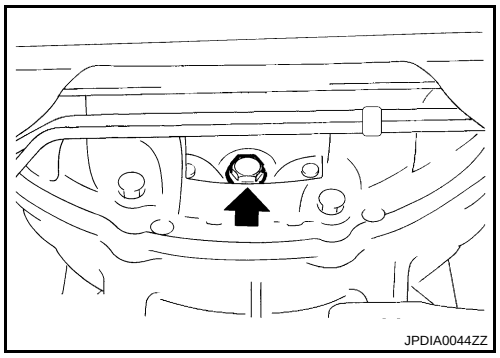

- Install crankshaft position sensor (POS). Refer to EM-110, "Exploded View".

Inspection

INFOID:0000000001672290

INSPECTION AFTER INSTALLATION

Check the following item after completing installation.
- A/T fluid leakage and A/T fluid level. Refer to TM-214, "Inspection".
- A/T position. Refer to TM-226, "Inspection and Adjustment".

DISASSEMBLY AND ASSEMBLY

TRANSMISSION ASSEMBLY

Exploded View

INFOID:0000000001672294

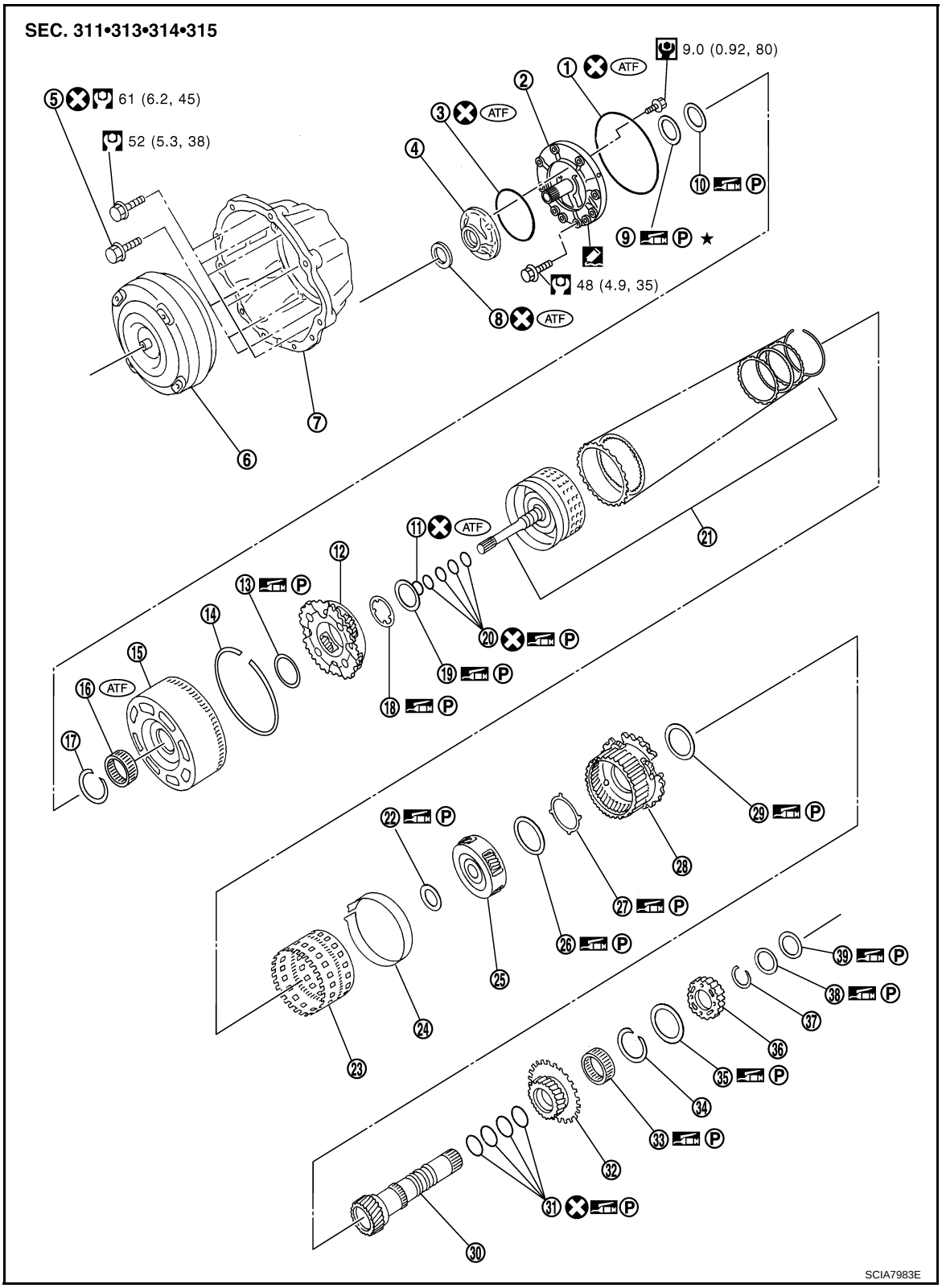

1.	O-ring	2.	Oil pump cover	3.	O-ring
4.	Oil pump housing	5.	Self-sealing bolt	6.	Torque converter
7.	Converter housing	8.	Oil pump housing oil seal	9.	Bearing race
10.	Needle bearing	11.	O-ring	12.	Front carrier assembly
13.	Needle bearing	14.	Snap ring	15.	Front sun gear
16.	3rd one-way clutch	17.	Snap ring	18.	Bearing race
19.	Needle bearing	20.	Seal ring	21.	Input clutch assembly
22.	Needle bearing	23.	Rear internal gear	24.	Brake band
25.	Mid carrier assembly	26.	Needle bearing	27.	Bearing race
28.	Rear carrier assembly	29.	Needle bearing	30.	Mid sun gear
31.	Seal ring	32.	Rear sun gear	33.	1st one-way clutch
34.	Snap ring	35.	Needle bearing	36.	High and low reverse clutch hub
37.	Snap ring	38.	Bearing race	39.	Needle bearing

: Apply Genuine RTV silicone sealant or equivalent. Refer to GI-15, "Recommended Chemical Products and Sealants".

Refer to GI-4, "Components" for symbols not described on the above.

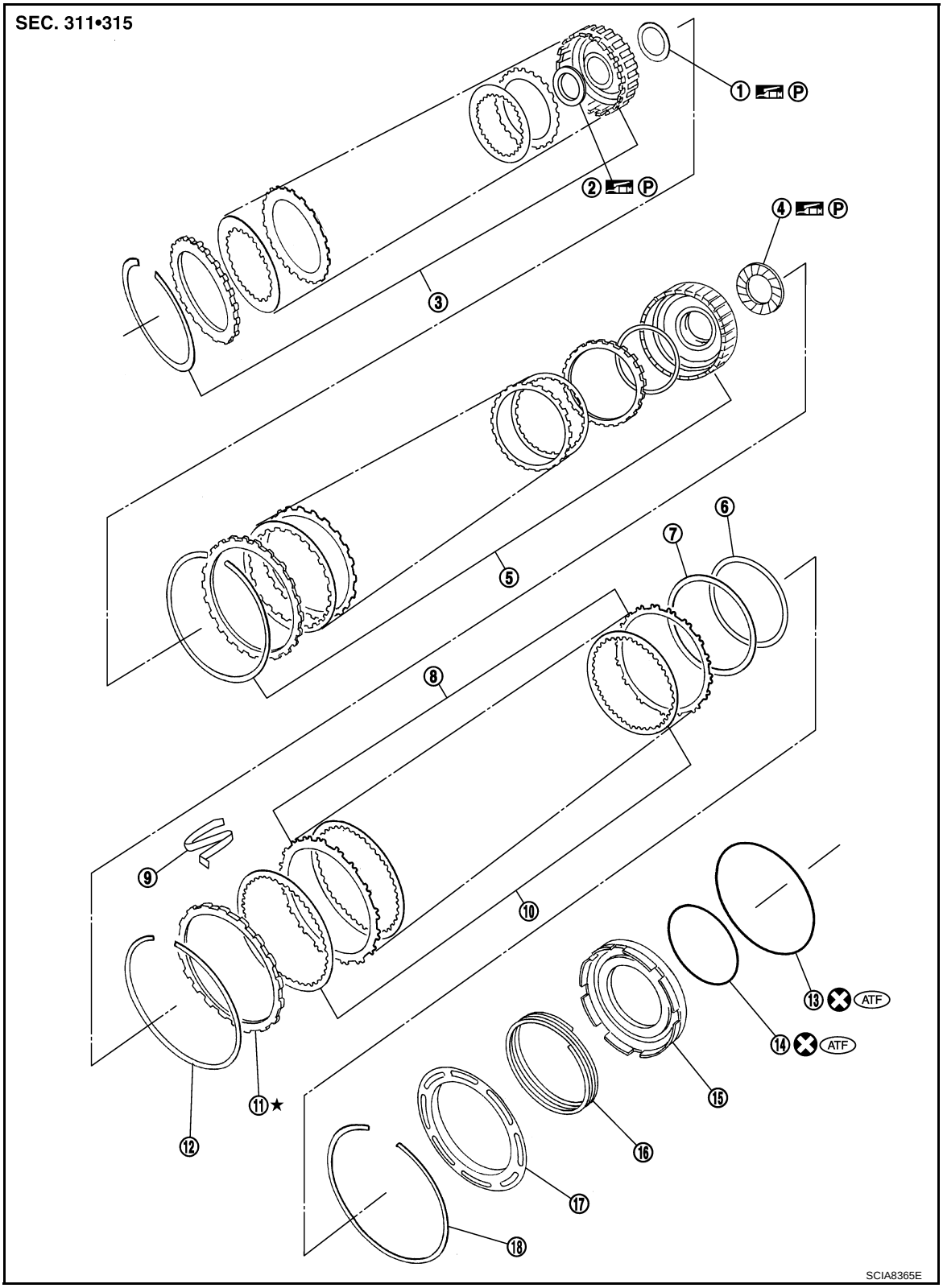

1. Needle bearing
2. Bearing race
3. High and low reverse clutch assembly
4. Needle bearing
5. Direct clutch assembly
6. Reverse brake dish plate
7. Reverse brake dish plate
8. Reverse brake driven plate
9. N-spring
10. Reverse brake drive plate
11. Reverse brake retaining plate
12. Snap ring
13. D-ring
14. D-ring
15. Reverse brake piston

16. Return spring
17. Spring retainer
18. Snap ring

Refer to GI-4, "Components" for symbols in the figure.

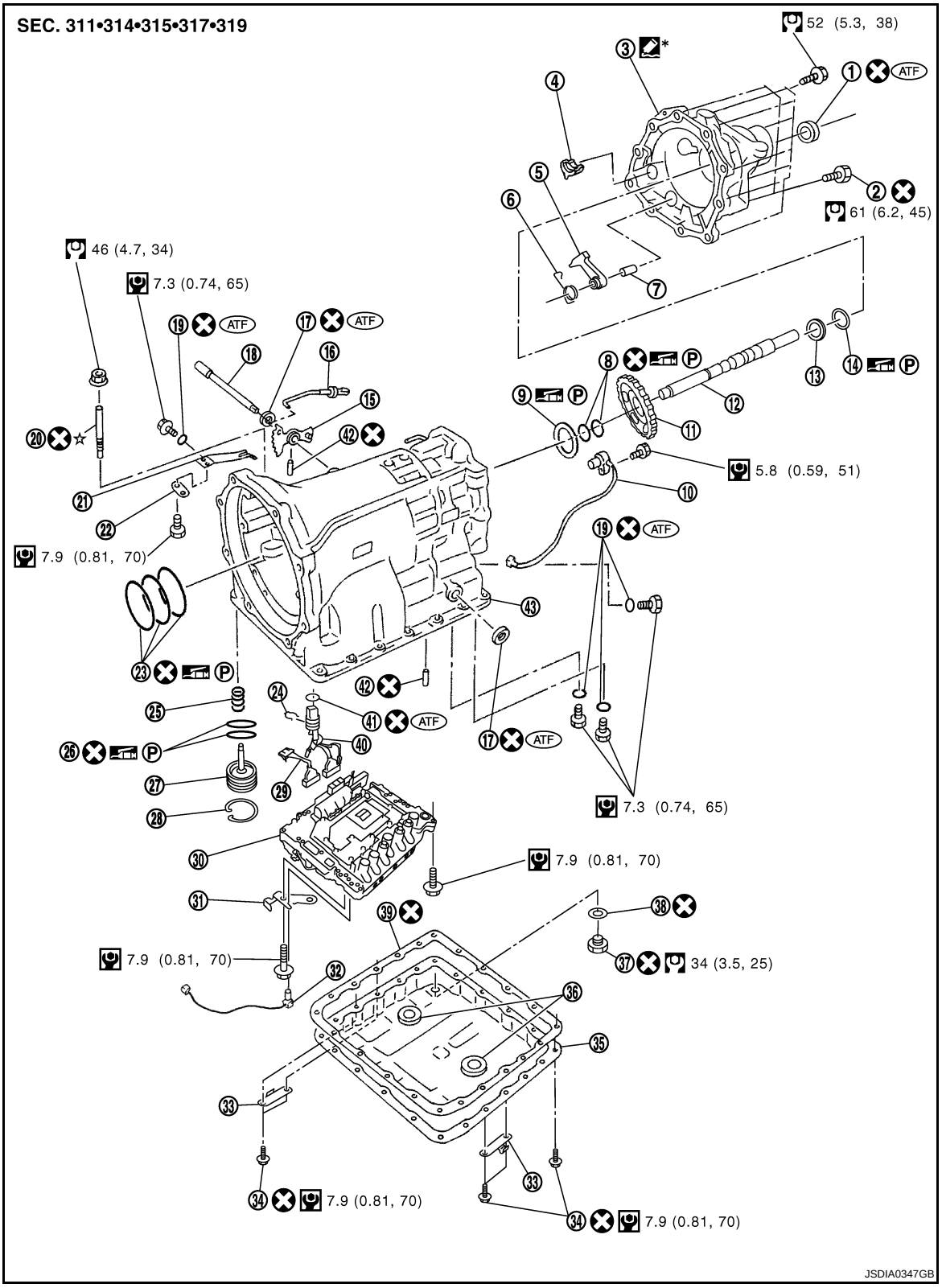

1.	Rear oil seal	2.	Self-sealing bolt	3.	Rear extension
4.	Parking actuator support	5.	Parking pawl	6.	Return spring
7.	Pawl shaft	8.	Seal ring	9.	Needle bearing
10.	Revolution sensor	11.	Parking gear	12.	Output shaft

13.	Bearing race	14.	Needle bearing	15.	Manual plate
16.	Parking rod	17.	Manual shaft oil seal	18.	Manual shaft
19.	O-ring	20.	Band servo anchor end pin	21.	Detent spring
22.	Spacer	23.	Seal ring	24.	Snap ring
25.	Return spring	26.	O-ring	27.	Servo assembly
28.	Snap ring	29.	Sub-harness	30.	Control valve with TCM
31.	Bracket	32.	A/T fluid temperature sensor 2	33.	Clip
34.	Oil pan mounting bolt	35.	Oil pan	36.	Magnet
37.	Drain plug	38.	Drain plug gasket	39.	Oil pan gasket
40.	Terminal cord assembly	41.	O-ring	42.	Retaining pin
43.	Transmission case				

*: Apply Genuine Anaerobic Liquid Gasket or equivalent. Refer to GI-15, "Recommended Chemical Products and Sealants".

Refer to GI-4, "Components" for symbols not described on the above.

Oil Channel

INFOID:0000000001672295

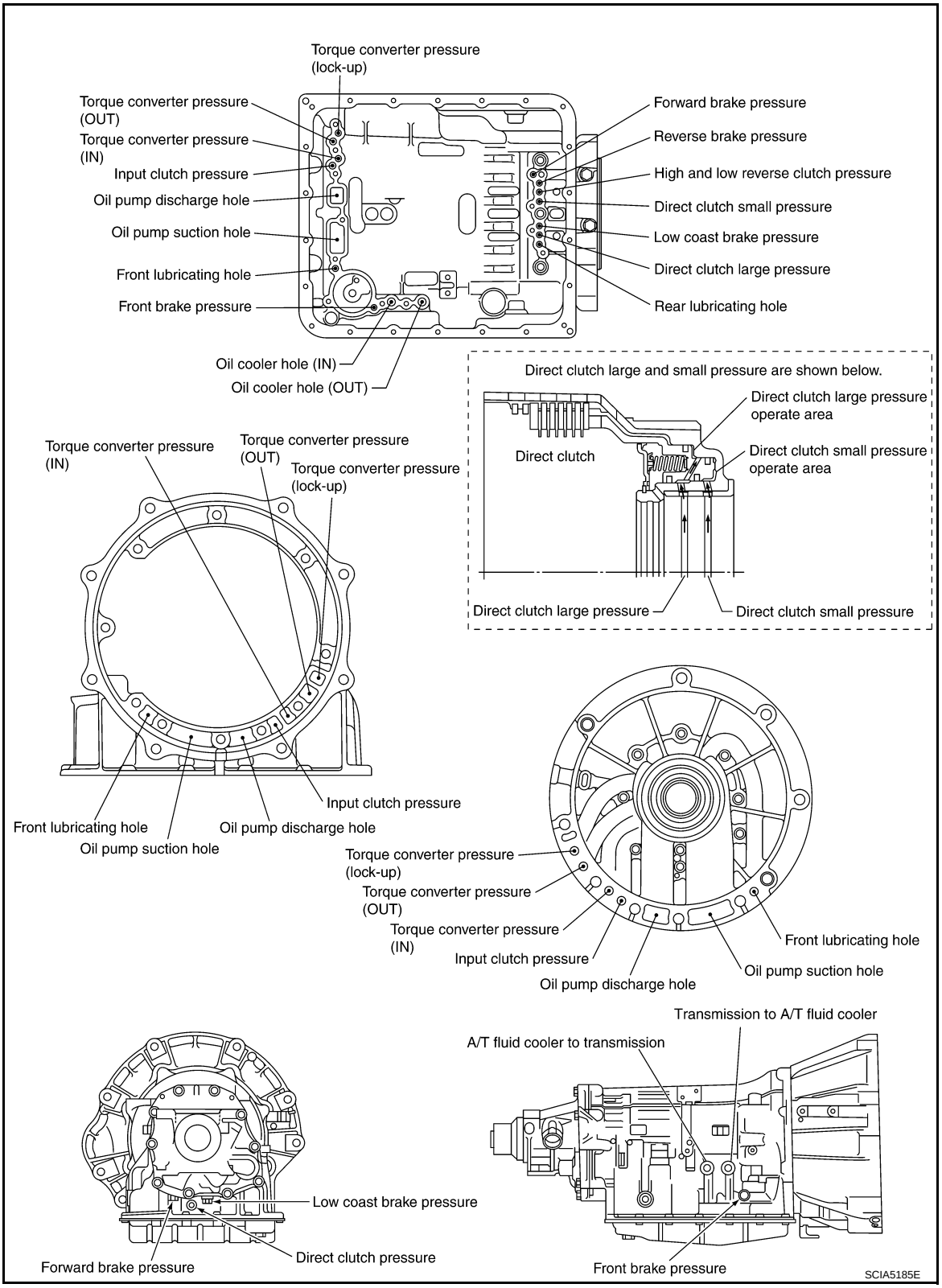

Location of Adjusting Shims, Needle Bearings, Thrust Washers and Snap Rings

INFOID:0000000001672296

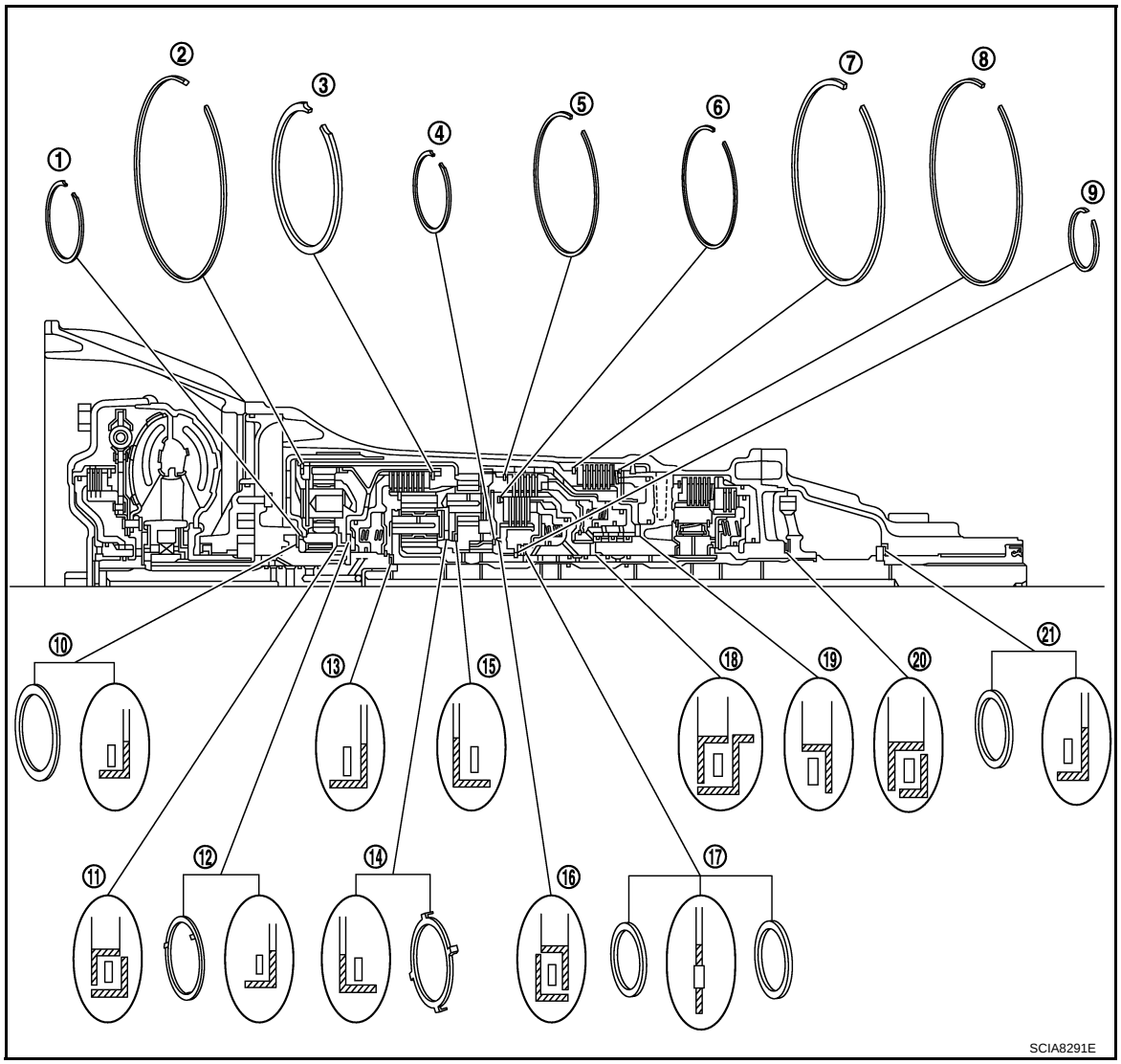

Snap ring		Needle bearing	
Item number	Outer diameter mm (in)	Item number	Outer diameter mm (in)
1	67.5 (2.657)	10	80 (3.149)
2	182.4 (7.181)	11	77 (3.031)
3	171.5 (6.751)	12	77 (3.031)
4	70.5 (2.776)	13	47 (1.850)
5	169 (6.653)	14	84 (3.307)
6	134.3 (5.287)	15	84 (3.307)
7	180.5 (7.106)	16	92 (3.622)
8	181 (7.125)	17	60 (2.362)
9	48.4 (1.906)	18	63 (2.480)
—	—	19	92 (3.622)
—	—	20	65 (2.559)
—	—	21	60 (2.362)

Disassembly

INFOID:0000000001672297

CAUTION:
Do not disassemble parts behind Drum Support. Refer to TM-91, "Cross-Sectional View".

1. Drain ATF through drain plug.
2. Remove torque converter by holding it firmly and turning while pulling straight out.

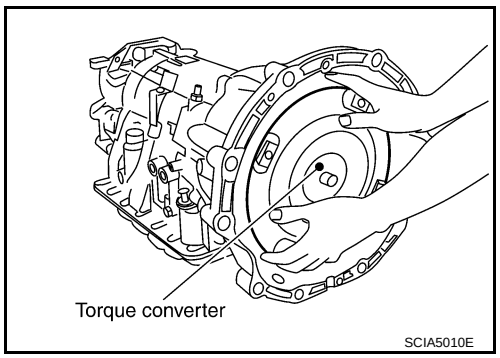

3. Remove tightening bolts (⬅) for converter housing and transmission case.
4. Remove converter housing from transmission case.
   CAUTION:
   Be careful not to scratch converter housing.

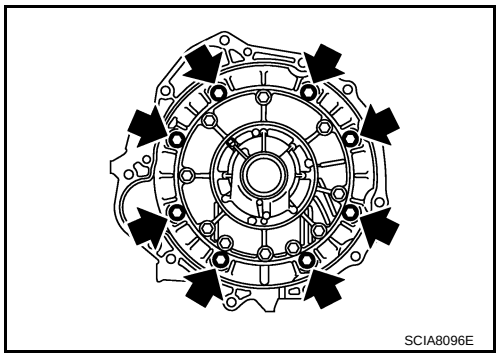

5. Remove O-ring from input clutch assembly.

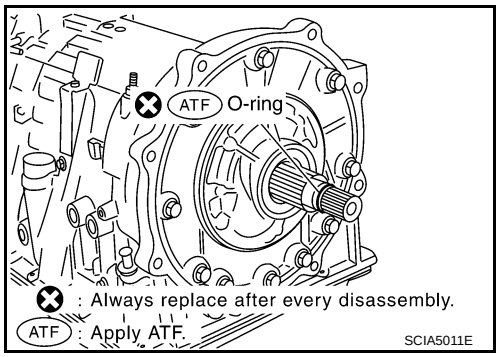

6. Remove tightening bolts for oil pump assembly and transmission case.

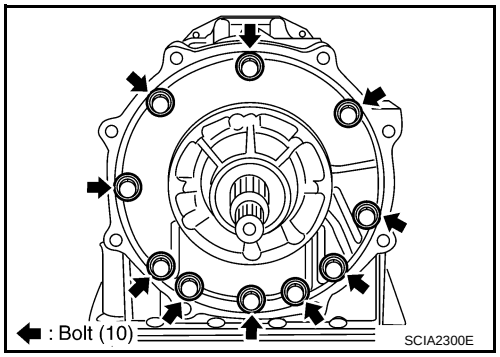

7. Attach the sliding hammers to oil pump assembly and extract it evenly from transmission case.
   CAUTION:
   - **Fully tighten the sliding hammer screws.**
   - **Make sure that bearing race is installed to the oil pump assembly edge surface.**

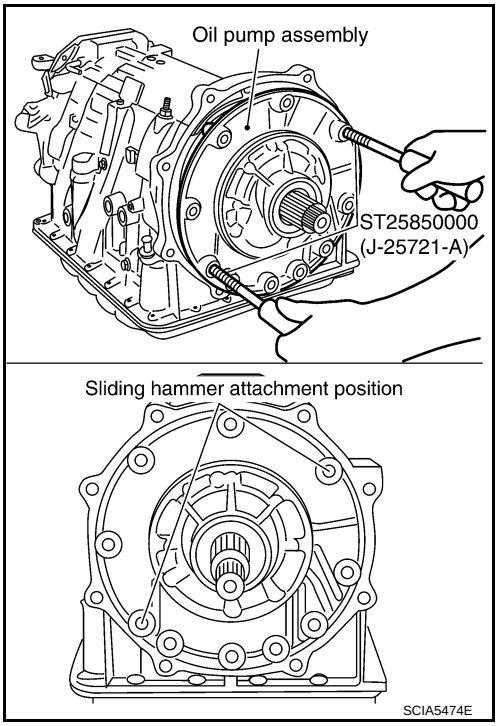

8. Remove O-ring from oil pump assembly.

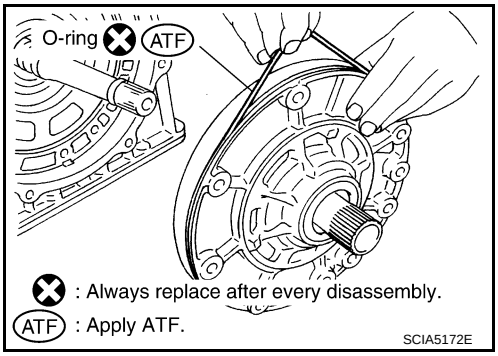

9. Remove bearing race from oil pump assembly.

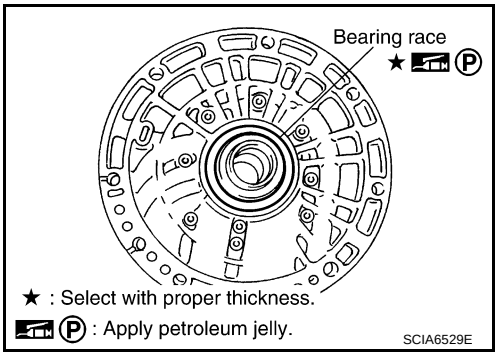

10. Remove needle bearing from front sun gear.

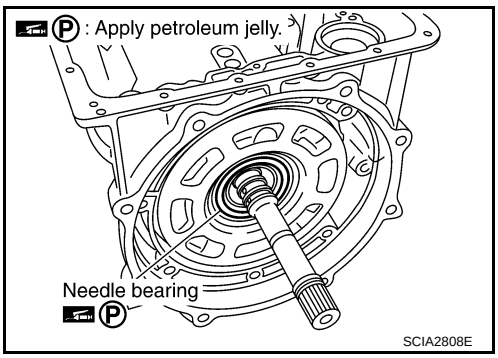

11. Remove front sun gear assembly from front carrier assembly.
NOTE:
Remove front sun gear by rotating left/right.

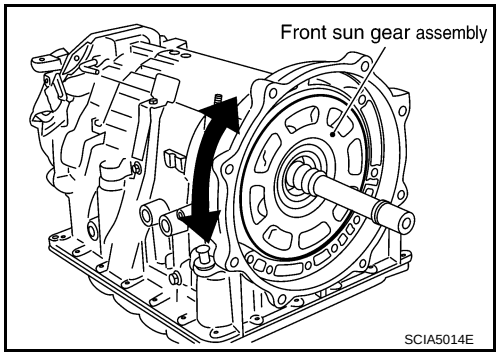

12. Remove seal rings from input clutch assembly.

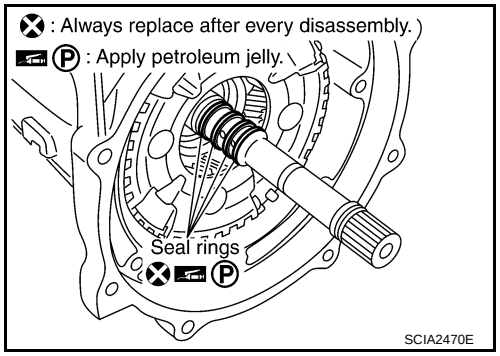

13. Remove front carrier assembly from rear carrier assembly. (With input clutch assembly and rear internal gear.)
CAUTION:
Be careful to remove it with needle bearing.

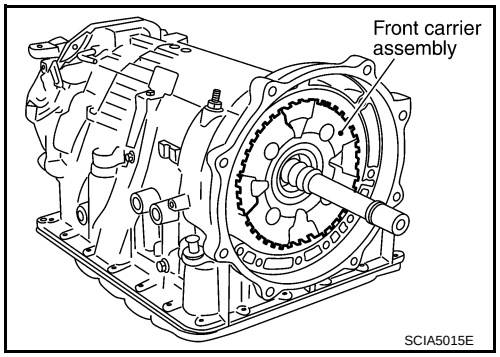

14. Loosen lock nut and remove band servo anchor end pin from transmission case.

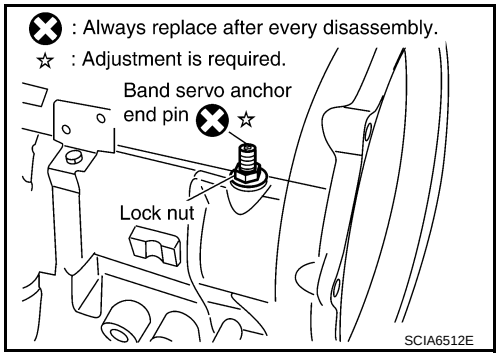

15. Remove brake band from transmission case.

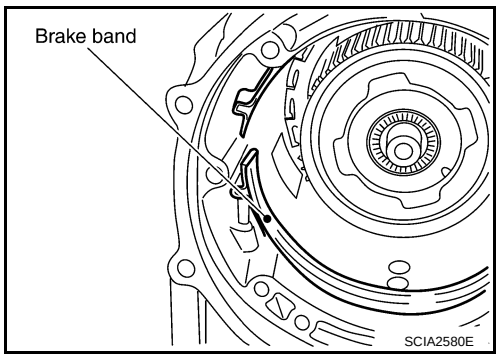

- **To prevent brake linings from cracking or peeling, do not stretch the flexible band unnecessarily. When removing the brake band, always secure it with a clip as shown in the figure at right.**
  Leave the clip in position after removing the brake band.
- **Check brake band facing for damage, cracks, wear or burns.**

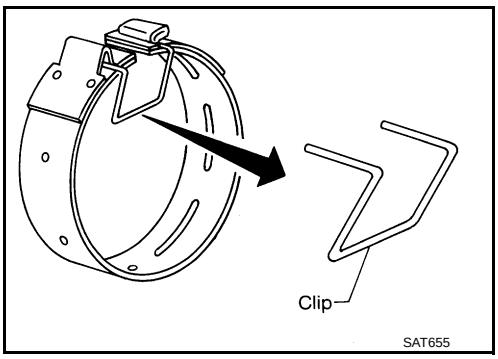

16. Remove mid carrier assembly and rear carrier assembly as a unit.

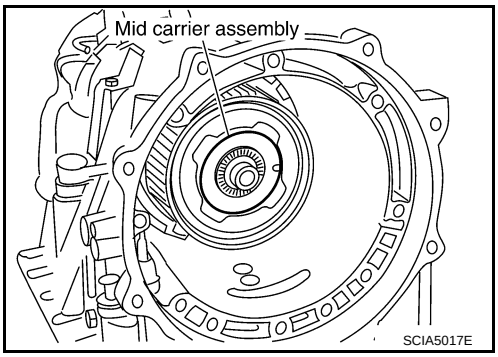

17. Remove mid carrier assembly from rear carrier assembly.

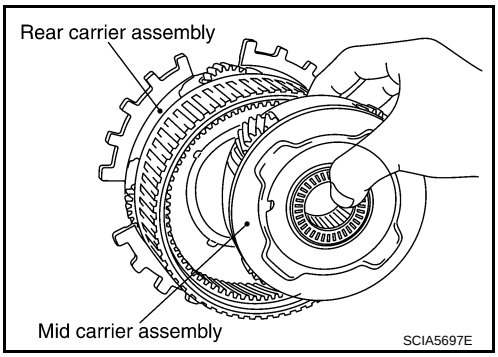

18. Remove needle bearing (front side) from mid carrier assembly.

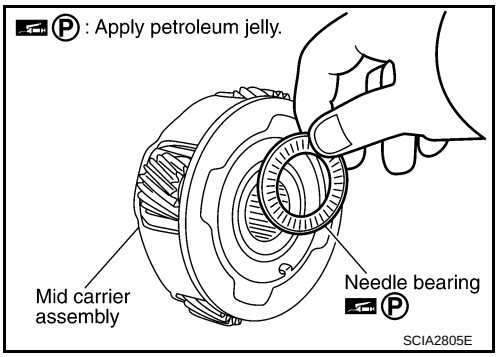

19. Remove needle bearing (rear side) from mid carrier assembly.

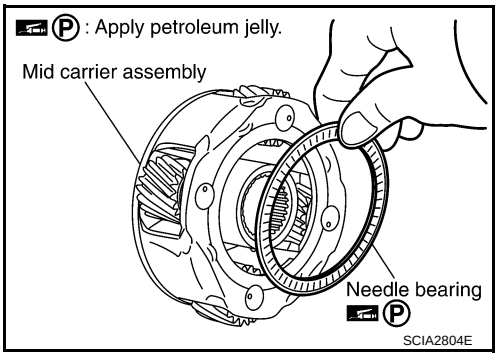

20. Remove bearing race from rear carrier assembly.

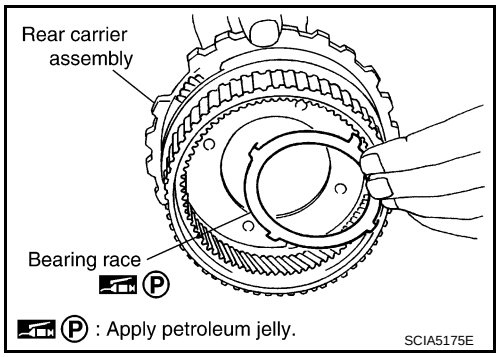

21. Remove needle bearing from rear carrier assembly.

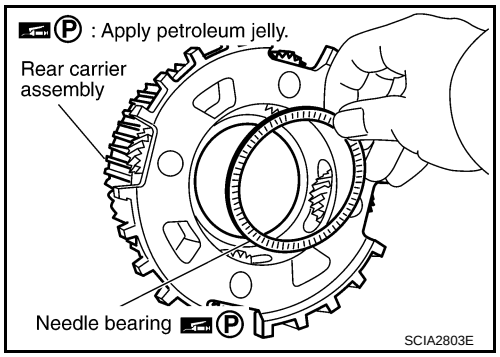

22. Remove mid sun gear assembly, rear sun gear assembly and high and low reverse clutch hub as a unit.
CAUTION:
Be careful to remove then with bearing race and needle bearing.

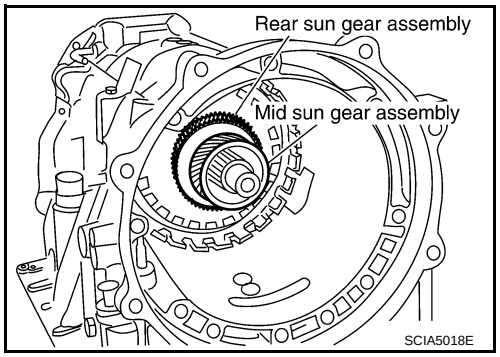

23. Remove high and low reverse clutch assembly from direct clutch assembly.
CAUTION:
Make sure that needle bearing is installed to the high and low reverse clutch assembly edge surface.

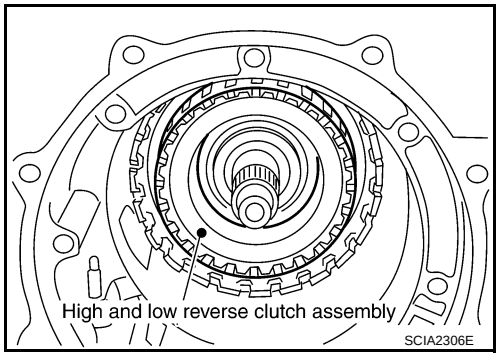

24. Remove direct clutch assembly from reverse brake.

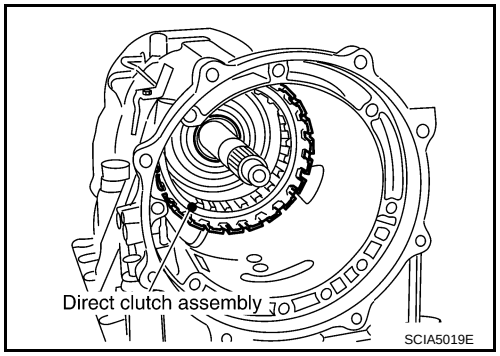

25. Remove needle bearing from drum support.

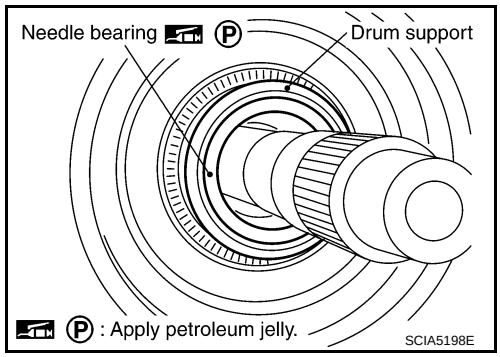

26. Remove snap ring (1) from A/T assembly harness connector (A).

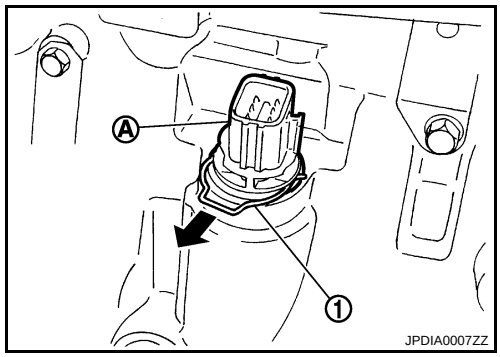

27. Push A/T assembly harness connector (A).
CAUTION:
Be careful not to damage connector.

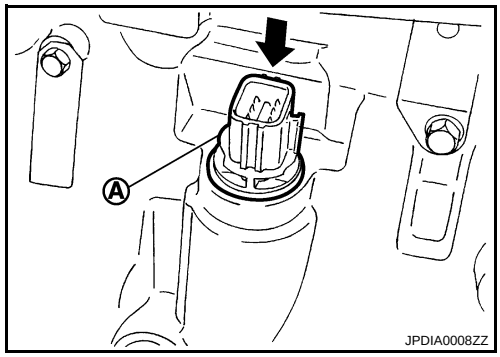

28. Remove clips (1).

3 : Drain plug
⇦ : Front
⬅ : Oil pan mounting bolt

29. Remove oil pan (2) and oil pan gasket.

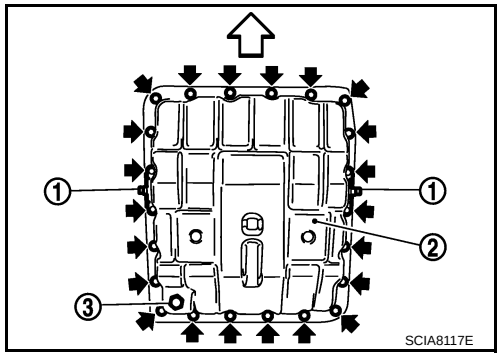

30. Remove magnets (1) from oil pan.

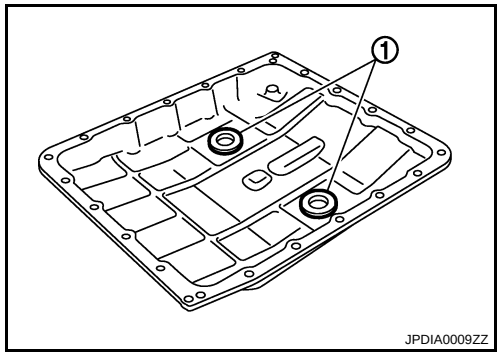

31. Disconnect A/T fluid temperature sensor 2 connector (A).
CAUTION:
Be careful not to damage connector.
32. Disengage terminal clips (⬅).

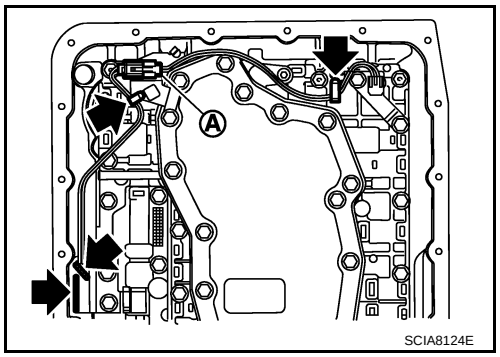

33. Disconnect revolution sensor connector (A).
CAUTION:
Be careful not to damage connector.
34. Disengage terminal clip (⬅).

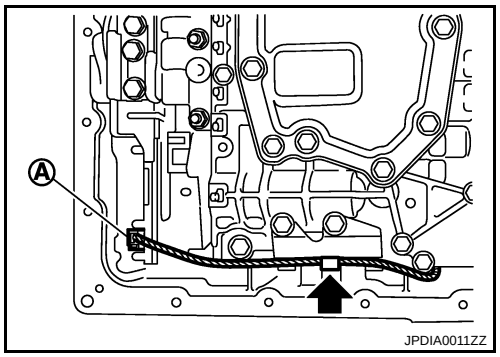

35. Remove bolts A, B and C from control valve with TCM.

⇦ : Front

Bolt symbol	Length mm (in)	Number of bolts
A	42 (1.65)	5
B	55 (2.17)	6
C	40 (1.57)	1

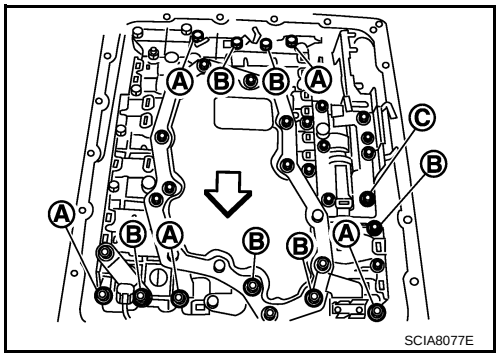

36. Remove control valve with TCM from transmission case.
CAUTION:
When removing, be careful with the manual valve notch and manual plate height. Remove it vertically.

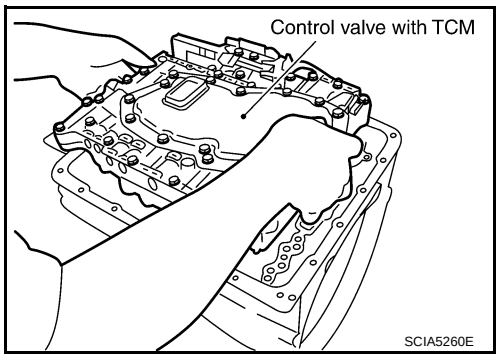

37. Remove A/T fluid temperature sensor 2 (1) with bracket (2) from control valve with TCM.

⬅ : Bolt

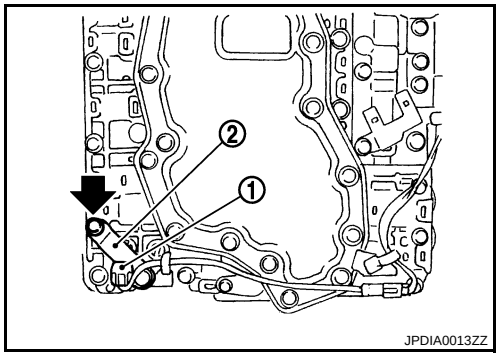

38. Remove bracket (1) from A/T fluid temperature sensor 2 (2).

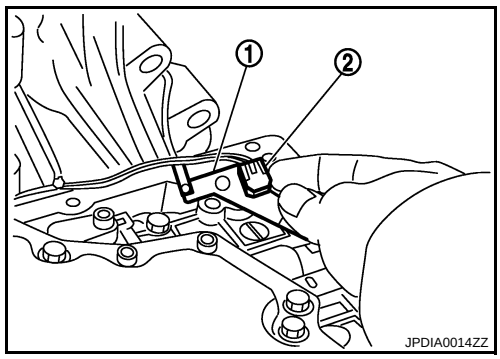

39. Remove O-ring (1) from A/T assembly harness connector (A).

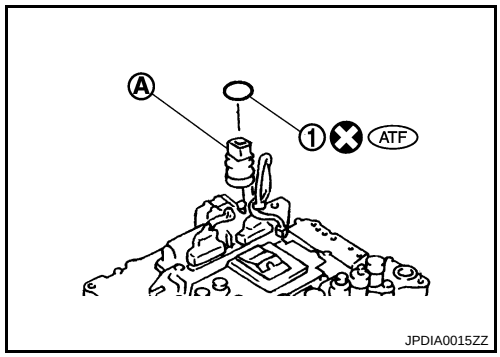

40. Disconnect TCM connectors (A) and (B).
CAUTION:
Be careful not to damage connectors.

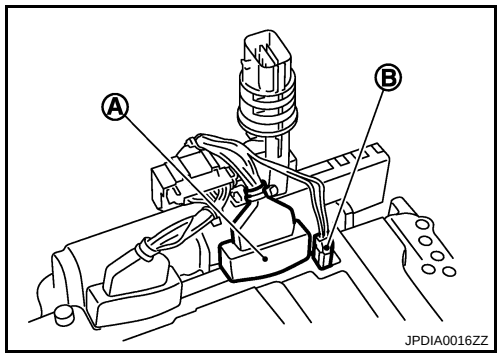

41. Remove A/T assembly harness connector (A) from control valve with TCM using a flat-bladed screwdriver (B).

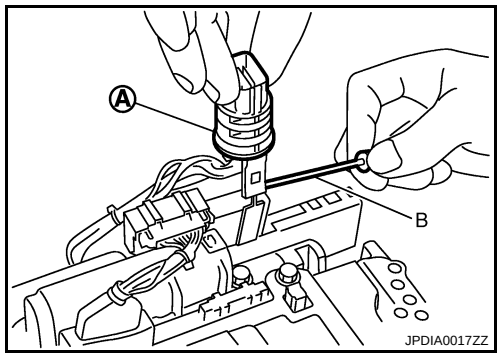

42. Disconnect TCM connector (A) and park/neutral position switch connector (B).
CAUTION:
Be careful not to damage connectors.

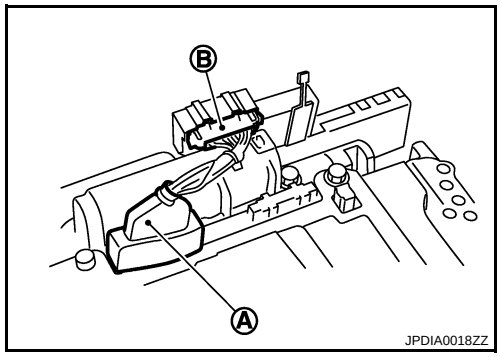

43. Remove tightening bolts for rear extension assembly and transmission case.

    1 : Self-sealing bolt
    A : Bolt

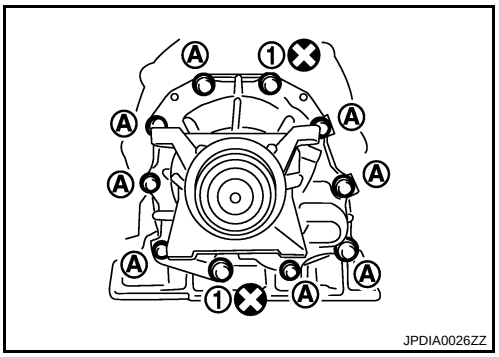

44. Tap rear extension assembly with a soft hammer.

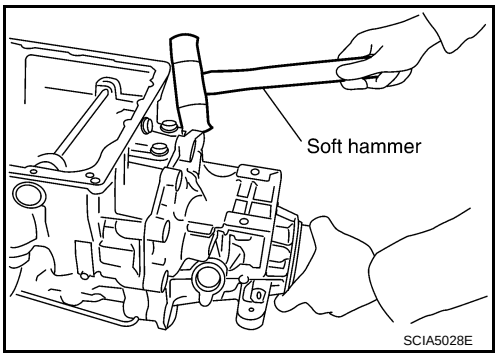

45. Remove rear extension assembly from transmission case. (With needle bearing).

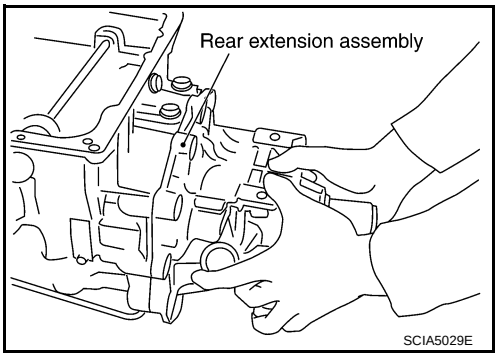

46. Remove bearing race from output shaft.

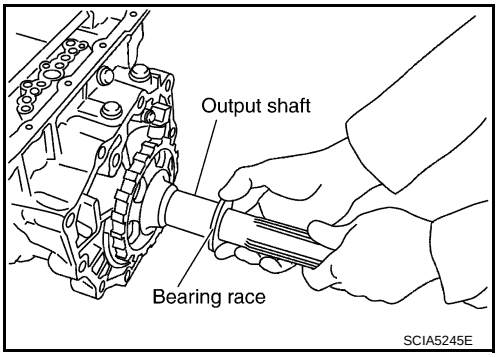

47. Remove output shaft from transmission case by rotating left/right.

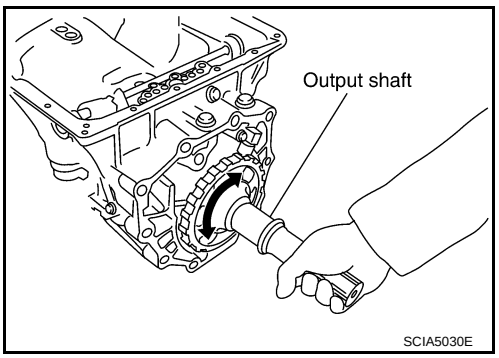

48. Remove parking gear (1) from output shaft (2).

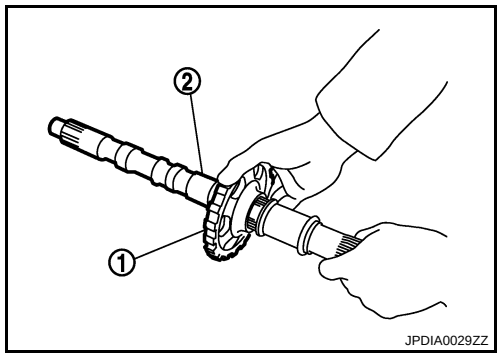

49. Remove seal rings (1) from output shaft.

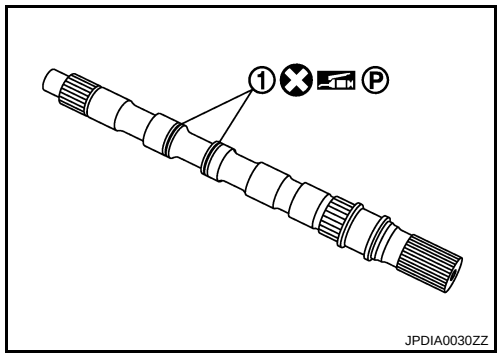

50. Remove needle bearing from transmission case.

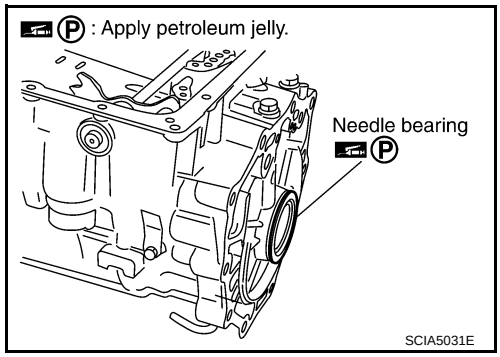

51. Remove revolution sensor from transmission case.
CAUTION:
- **Do not subject it to impact by dropping or hitting it.**
- **Do not disassemble.**
- **Do not allow metal filings, etc. to get on the sensor's front edge magnetic area.**
- **Do not place in an area affected by magnetism.**

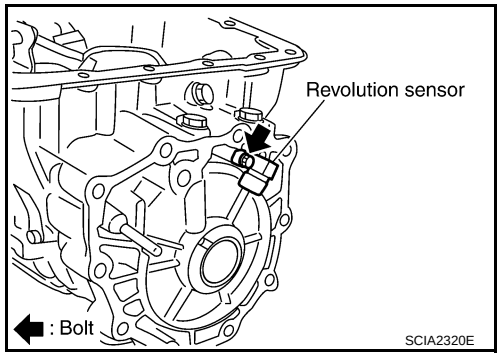

52. Remove reverse brake snap ring (fixing plate) using 2 flat-bladed screwdrivers.
NOTE:
Press out snap ring from the transmission case oil pan side gap using a flat-bladed screwdriver, and remove it using a another screwdriver.

53. Remove reverse brake retaining plate from transmission case.
- **Check facing for burns, cracks or damage. If necessary, replace the plate.**

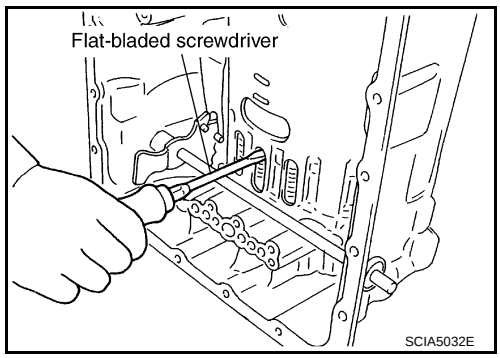

54. Remove N-spring from transmission case.

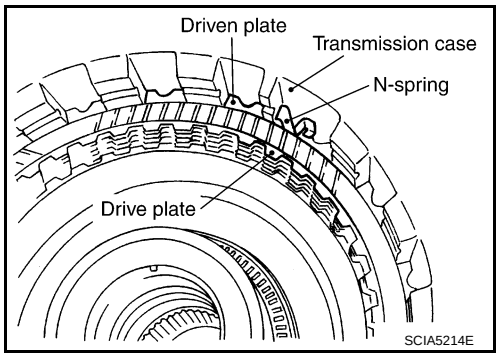

55. Remove reverse brake drive plates, driven plates, dish plates and retaining plate transmission case.
    - **Check facing for burns, cracks or damage. If necessary, replace the plate.**

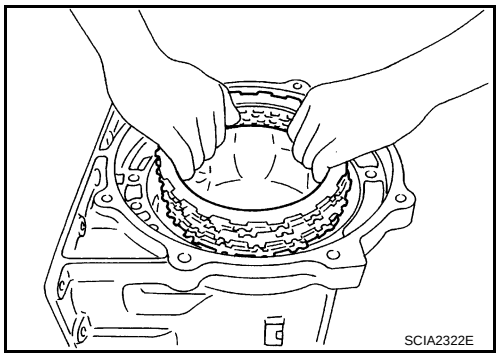

56. Remove snap ring (fixing spring retainer) using a flat-bladed screwdriver.

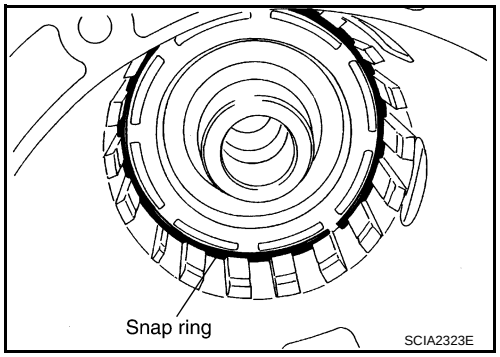

57. Remove spring retainer and return spring from transmission case.

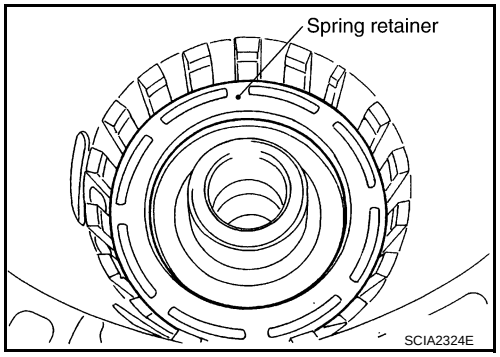

58. Remove seal rings from drum support.

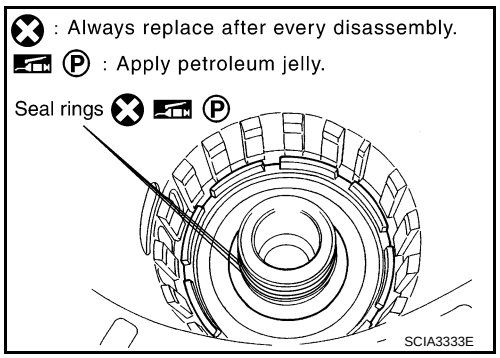

59. Remove needle bearing from drum support edge surface.

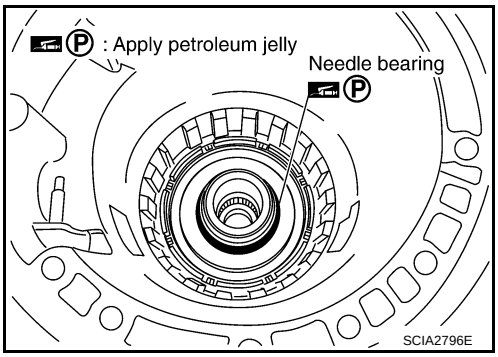

60. Remove reverse brake piston from transmission case with compressed air. Refer to TM-271, "Oil Channel".
CAUTION:
Care should be taken not to abruptly blow air. It makes pistons incline, as the result, it becomes hard to disassemble the pistons.

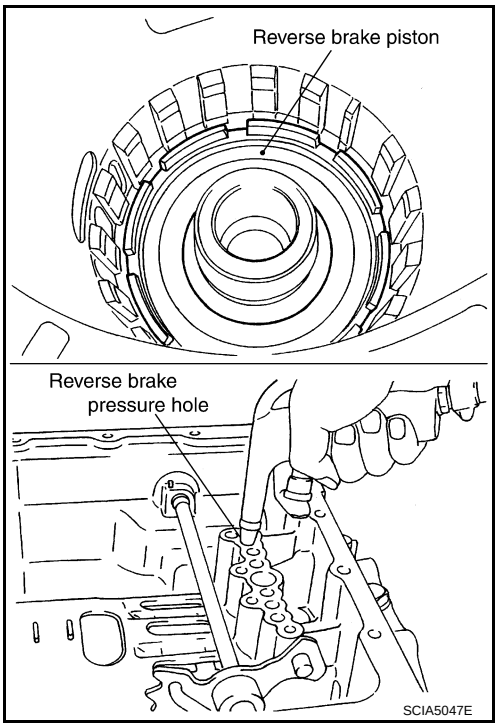

61. Remove D-rings from reverse brake piston.

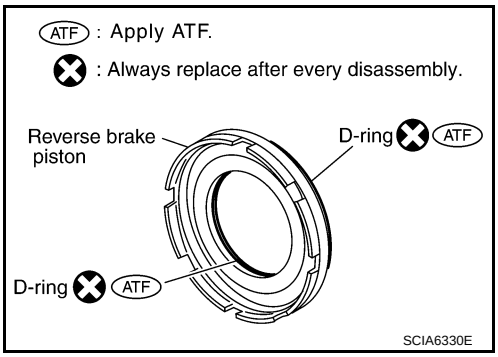

62. Use a pin punch [4 mm (0.16 in) dia. commercial service tool] to knock out retaining pin.

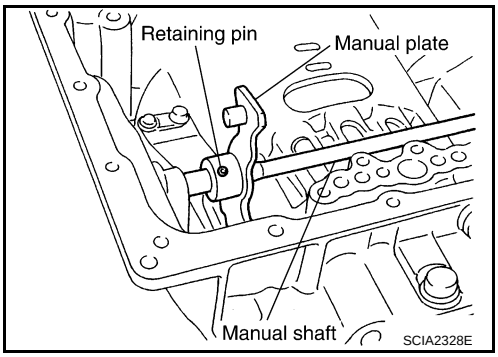

63. Remove manual shaft retaining pin with pair of nippers.

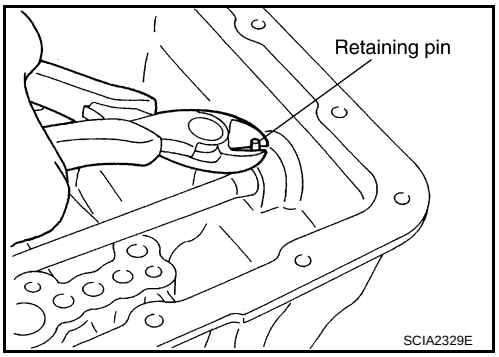

64. Remove manual plate (with parking rod) from manual shaft.

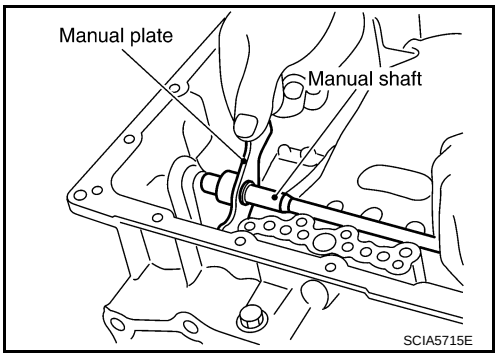

65. Remove parking rod from manual plate.

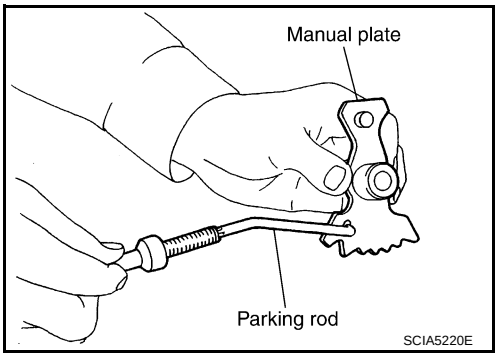

66. Remove manual shaft from transmission case.

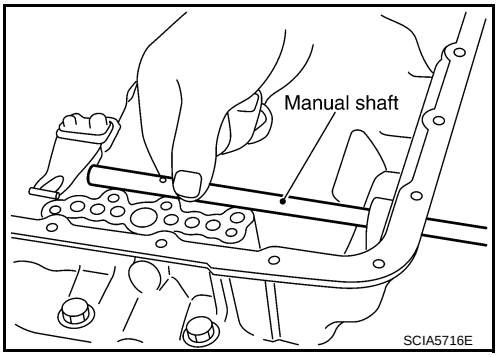

67. Remove manual shaft oil seals using a flat-bladed screwdriver.
CAUTION:
Be careful not to scratch transmission case.

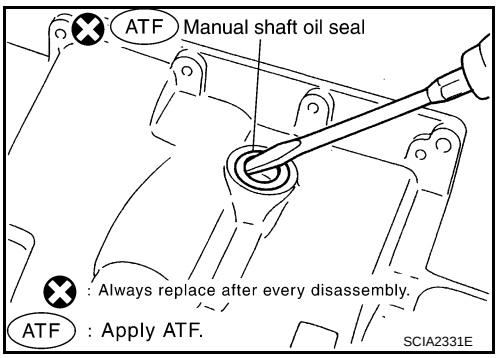

68. Remove detent spring and spacer from transmission case.

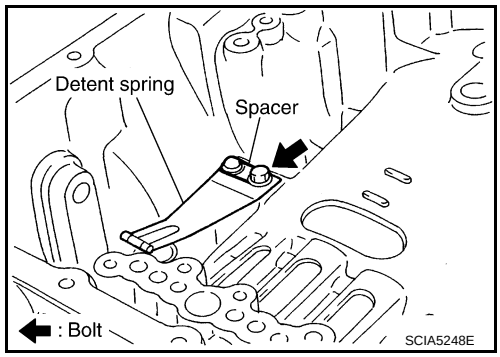

69. Using pair of snap ring pliers, remove snap ring from transmission case.

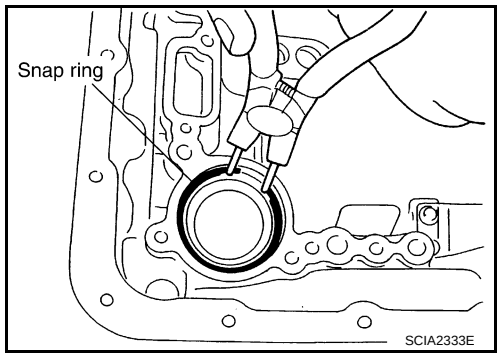

70. Remove servo assembly (with return spring) from transmission case.

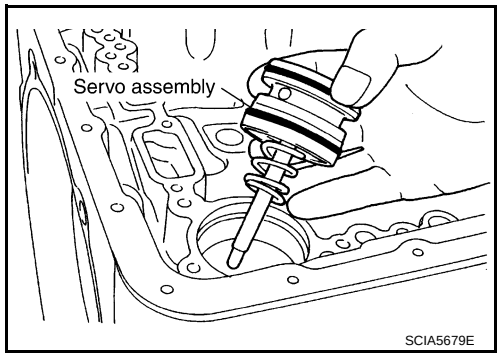

71. Remove return spring from servo assembly.

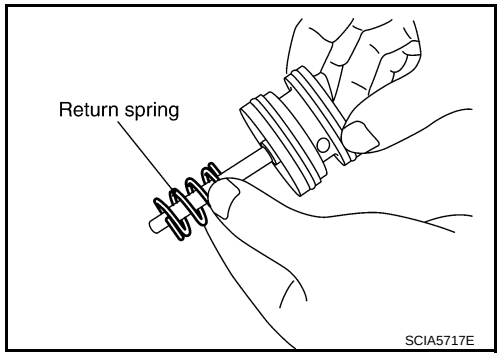

72. Remove O-rings from servo assembly.

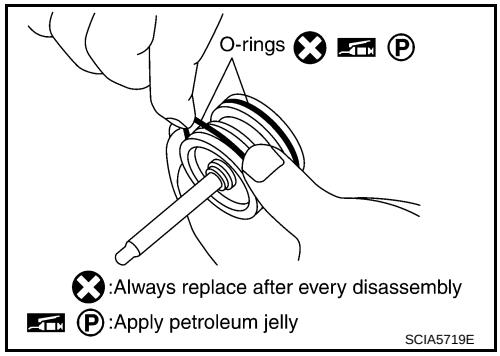

73. Remove needle bearing (1) from rear extension.

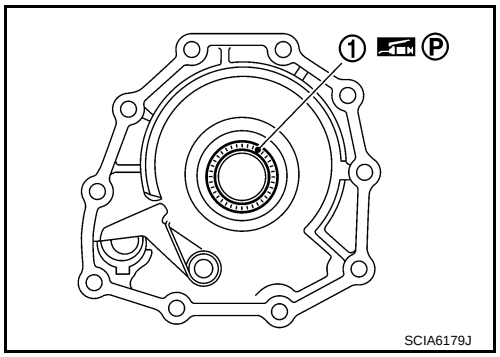

74. Remove parking actuator support from rear extension.

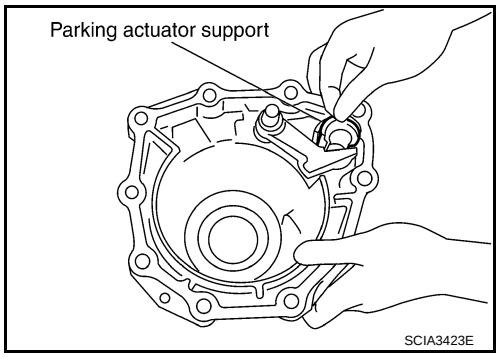

75. Remove parking pawl (with return spring) and pawl shaft from rear extension.

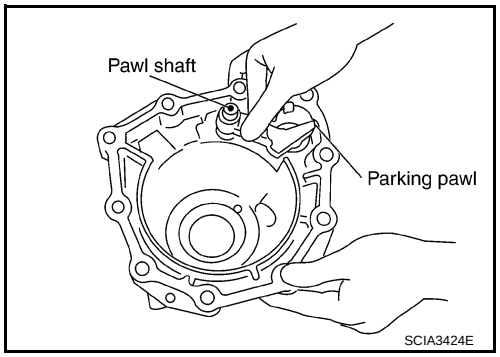

76. Remove return spring (1) from parking pawl (2).

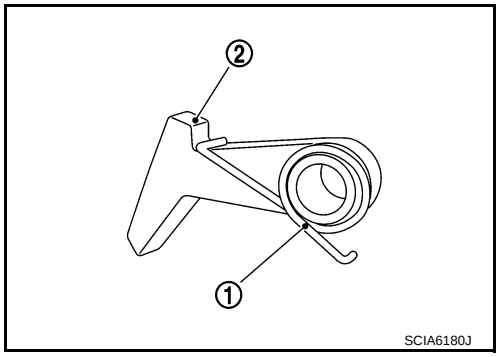

77. Remove rear oil seal (1) from rear extension using flat-bladed screwdrivers (A).
CAUTION:
Be careful not to scratch rear extension.

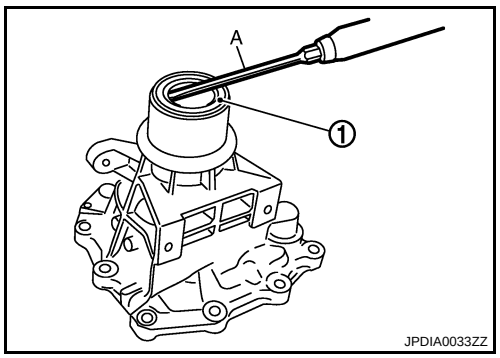

Assembly

INFOID:0000000001672298

1. As shown in the figure, use a drift [22 mm (0.87 in) dia. commercial service tool] to drive manual shaft oil seals into the transmission case until it is flush.
   CAUTION:
   - **Do not reuse manual shaft oil seals.**
   - **Apply ATF to manual shaft oil seals.**

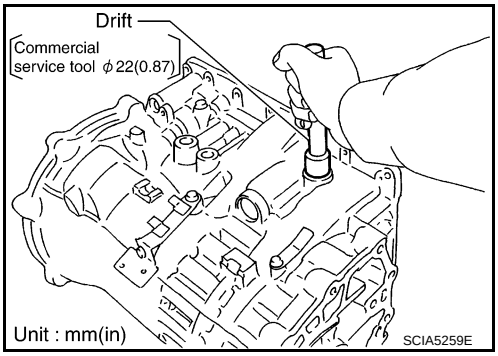

2. Install detent spring and spacer in transmission case. Tighten detent spring and spacer bolt to the specified torque.

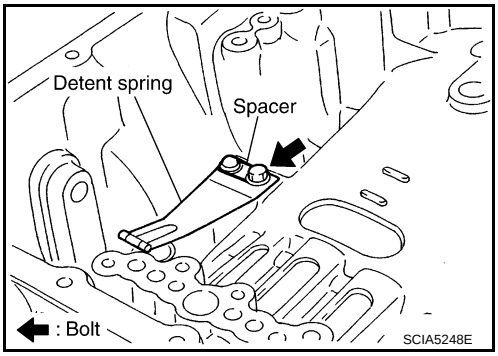

3. Install manual shaft to transmission case.

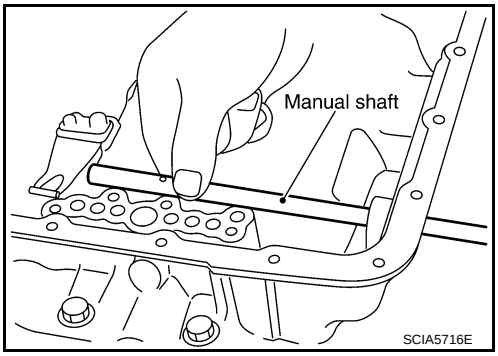

4. Install parking rod to manual plate.

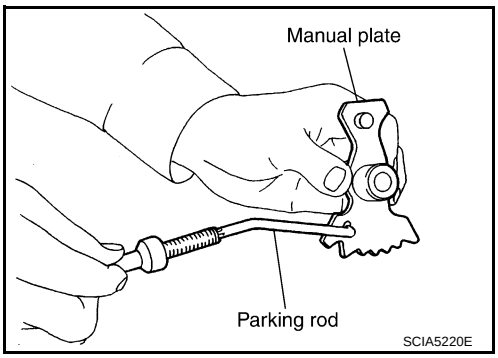

5. Install manual plate (with parking rod) to manual shaft.

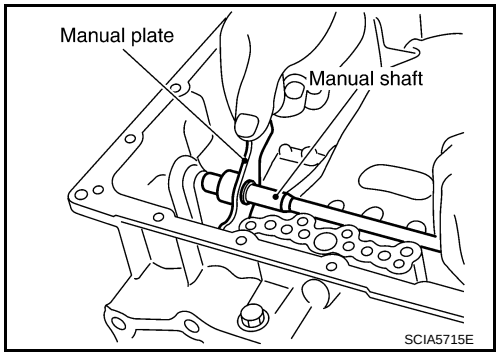

6. Install retaining pin into the manual plate and manual shaft.
a. Fit pinhole of the manual plate to pinhole of the manual shaft with a pin punch.
b. Use a hammer to tap the retaining pin into the manual plate.
CAUTION:
Drive retaining pin to 2±0.5 mm (0.08±0.020 in) over the manual plate.

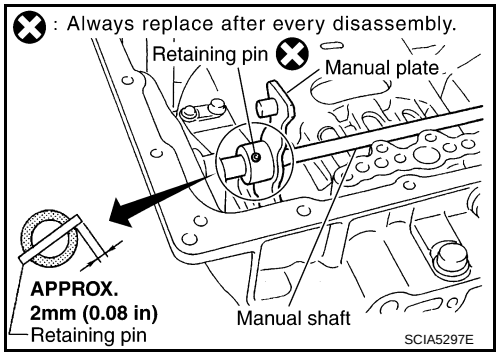

7. Install retaining pin into the transmission case and manual shaft.
a. Fit pinhole of the transmission case to pinhole of the manual shaft with a pin punch.
b. Use a hammer to tap the retaining pin into the transmission case.
CAUTION:
Drive retaining pin to 5±1 mm (0.20±0.04 in) over the transmission case.

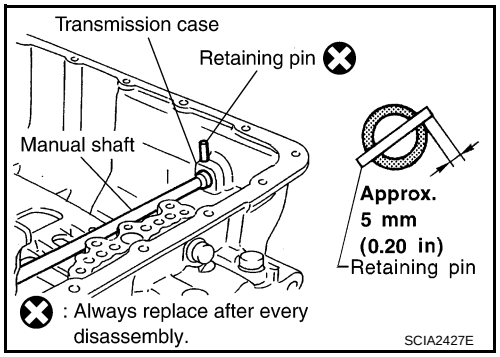

8. Install O-rings to servo assembly.

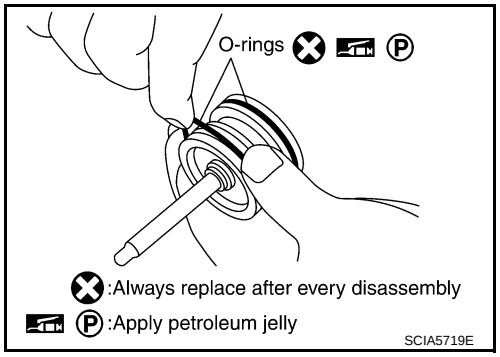

9. Install return spring to servo assembly.

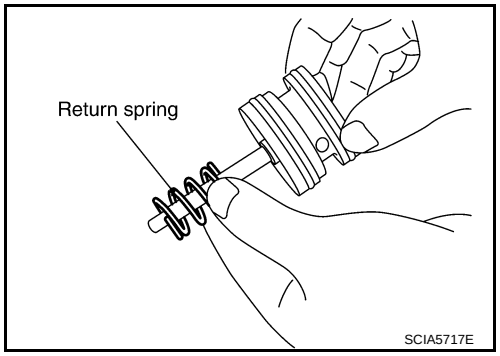

10. Install servo assembly in transmission case.

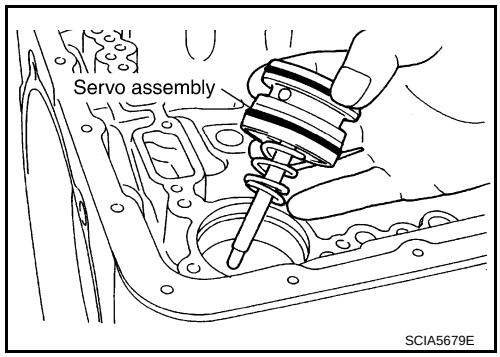

11. Using a pair of snap ring pliers, install snap ring to transmission case.

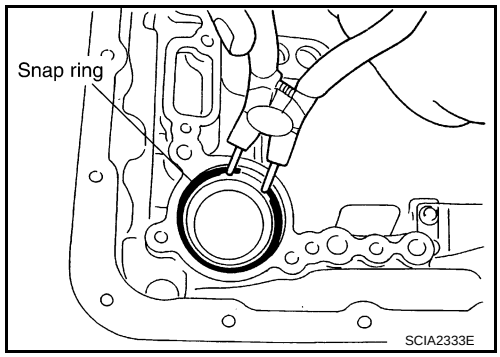

12. Install D-rings in reverse brake piston.

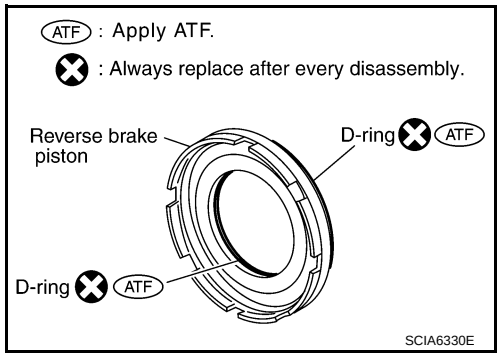

13. Install reverse brake piston in transmission case.

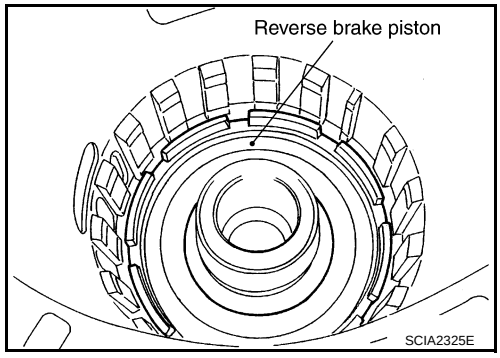

14. Install needle bearing to drum support edge surface.
CAUTION:
Check the direction of needle bearing. Refer to TM-272, "Location of Adjusting Shims, Needle Bearings, Thrust Washers and Snap Rings".

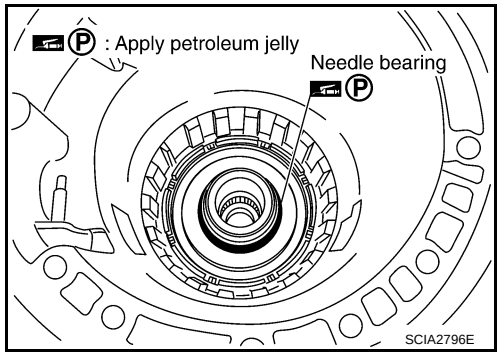

15. Install seal rings to drum support.

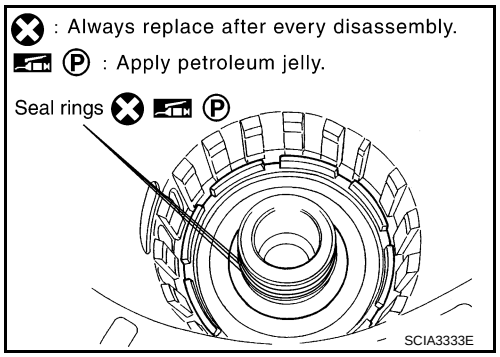

16. Install spring retainer and return spring in transmission case.

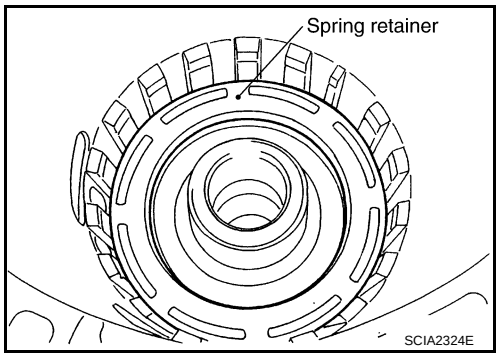

17. Set the SST on spring retainer and install snap ring (fixing spring retainer) in transmission case while compressing return spring.
CAUTION:
Securely assemble them using a flat-bladed screwdriver so that snap ring tension is slightly weak.

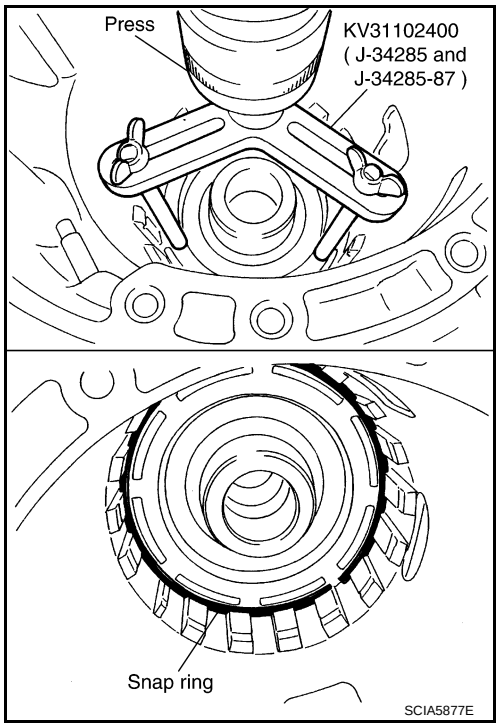

18. Install reverse brake drive plates, driven plates, dish plates and retaining plate in transmission case.

1	: Snap ring
2	: Retaining plate
3	: Drive plate
4	: Driven plate
5	: Dish plate
6 / 6	: Drive plate / Driven plate

CAUTION:

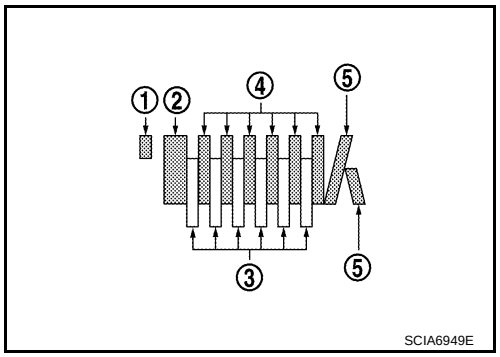

Check order of plates.

19. Assemble N-spring.
20. Install reverse brake retaining plate in transmission case.

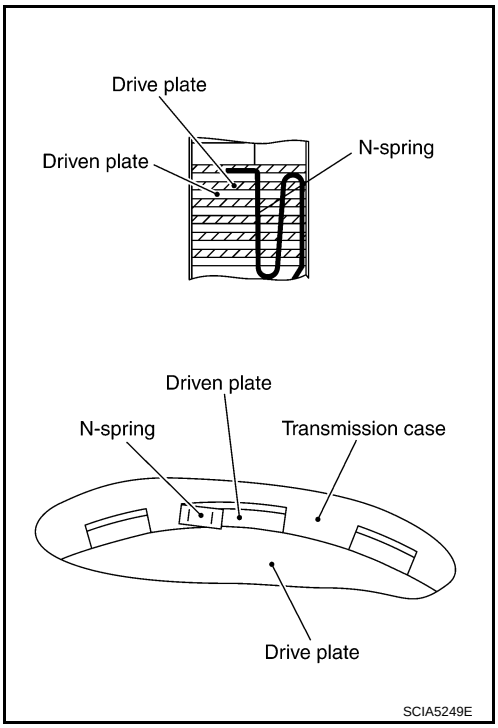

21. Install snap ring in transmission case.

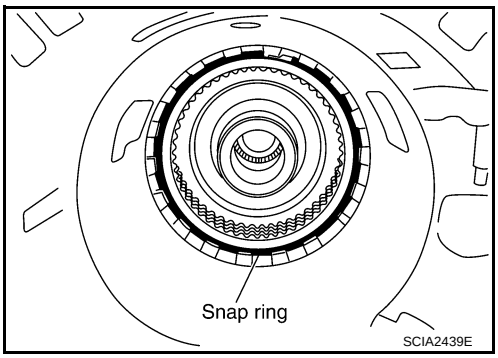

22. Measure clearance between retaining plate and snap ring. If not within specified clearance, select proper retaining plate.

Specified clearance "A"

Standard: TM-330, "Reverse Brake".

Retaining plate: Refer to TM-330, "Reverse Brake"

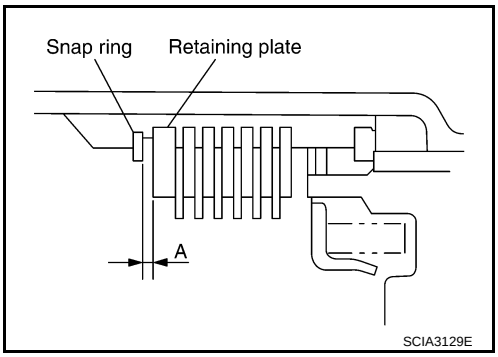

23. Install needle bearing to transmission case.
CAUTION:
Check the direction of needle bearing. Refer to TM-272, "Location of Adjusting Shims, Needle Bearings, Thrust Washers and Snap Rings".

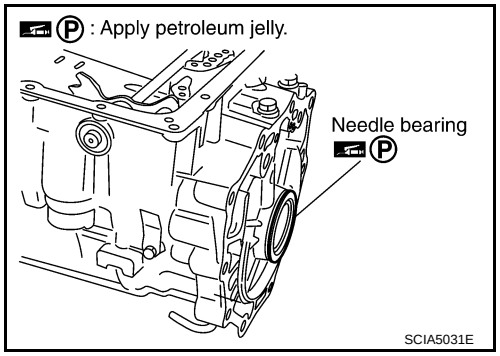

24. Install revolution sensor to transmission case. Tighten revolution sensor bolt to the specified torque.
CAUTION:
- **Do not subject it to impact by dropping or hitting it.**
- **Do not disassemble.**
- **Do not allow metal filings, etc. to get on the sensor's front edge magnetic area.**
- **Do not place in an area affected by magnetism.**

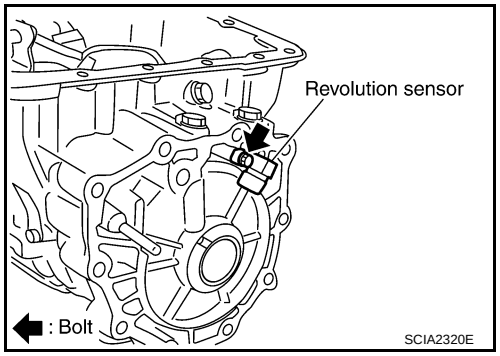

25. As shown in the figure, use the drift to drive rear oil seal into the rear extension until it is flush.
CAUTION:
- **Do not reuse rear oil seal.**
- **Apply ATF to rear oil seal.**

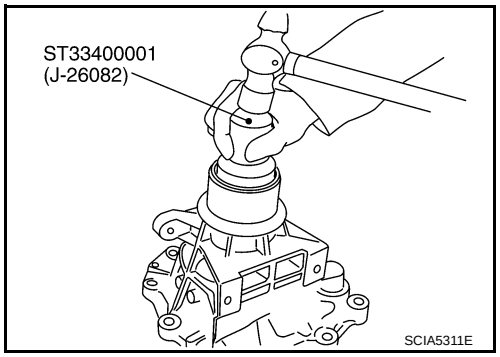

26. Install return spring (1) to parking pawl (2).

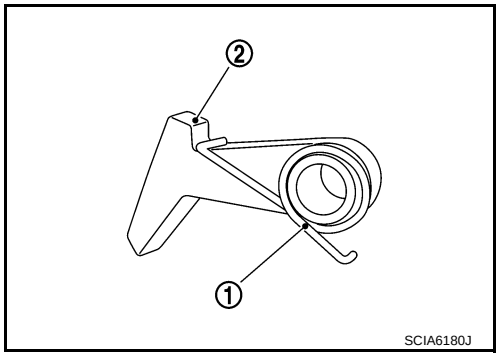

27. Install parking pawl (with return spring) and pawl shaft to rear extension.

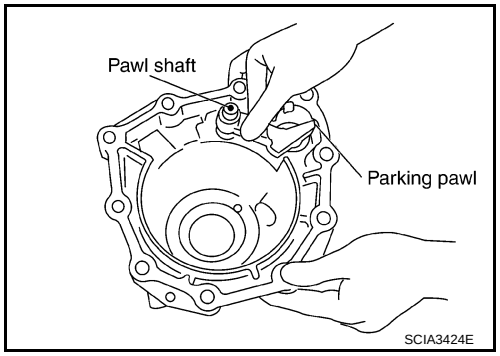

28. Install parking actuator support from rear extension.

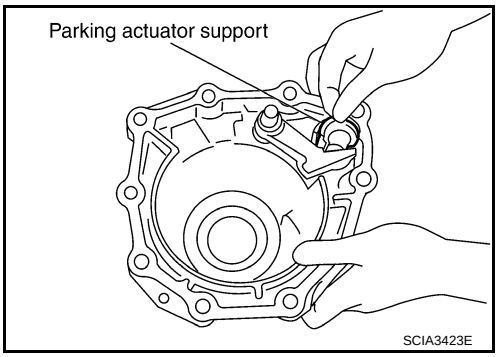

29. Install needle bearing (1) to rear extension.
CAUTION:
Check the direction of needle bearing. Refer to TM-272, "Location of Adjusting Shims, Needle Bearings, Thrust Washers and Snap Rings".

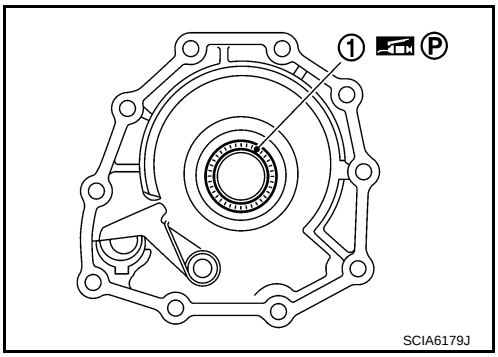

30. Install seal rings (1) to output shaft.

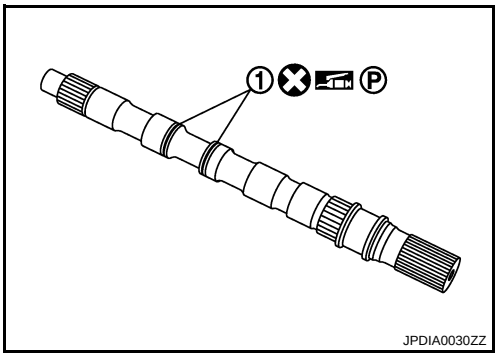

31. Install parking gear (1) to output shaft (2).

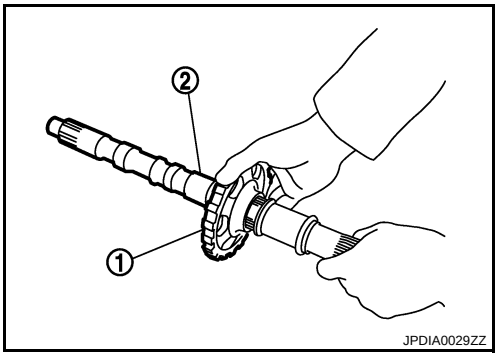

32. Install output shaft in transmission case.
CAUTION:
Be careful not to mistake front for rear because both sides look similar. (Thinner end is front side.)

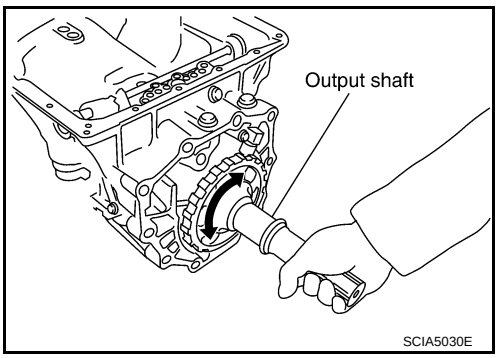

33. Install bearing race to output shaft.

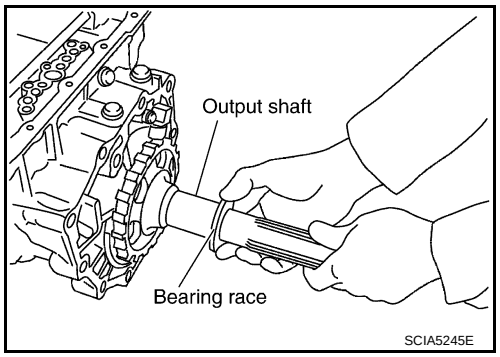

34. Apply recommended sealant (Genuine Anaerobic Liquid Gasket or equivalent. Refer to GI-15, "Recommended Chemical Products and Sealants".) to rear extension assembly as shown in the figure.

A	**: Start and finish point shall be in the center of two bolts.**
B	**: 3 – 5 mm (0.12 – 0.20 in)**
Sealant width (C)	**: 1.0 – 2.0 mm (0.04 – 0.08 in)**
Sealant height (C)	**: 0.4 – 1.0 mm (0.016 – 0.04 in)**

CAUTION:
Completely remove all moisture, oil and old sealant, etc. from the transmission case and rear extension assembly mounting surfaces.

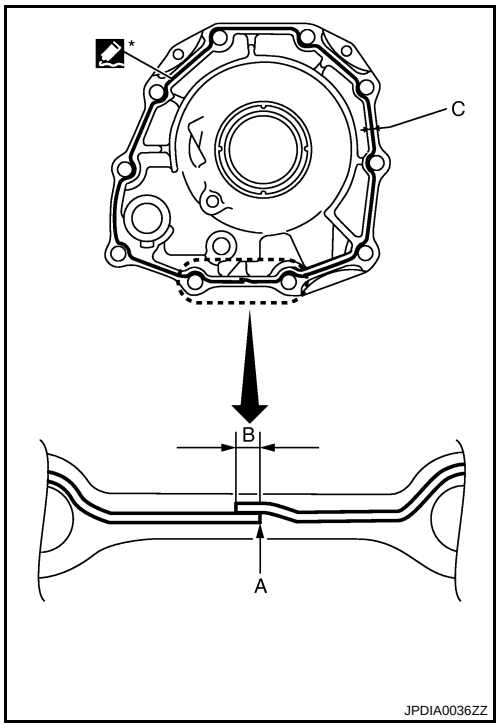

35. Install rear extension assembly to transmission case.
CAUTION:
Insert the tip of parking rod between the parking pawl and the parking actuator support when assembling the rear extension assembly.

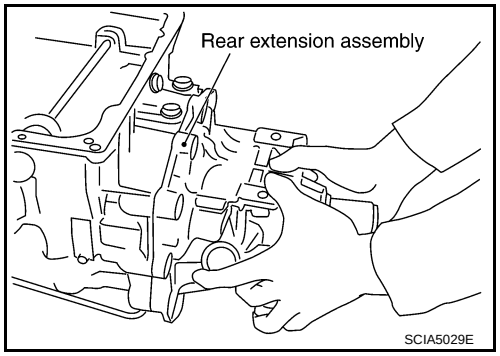

36. Tighten rear extension assembly bolts to the specified torque.

1 : Self-sealing bolt
A : Bolt

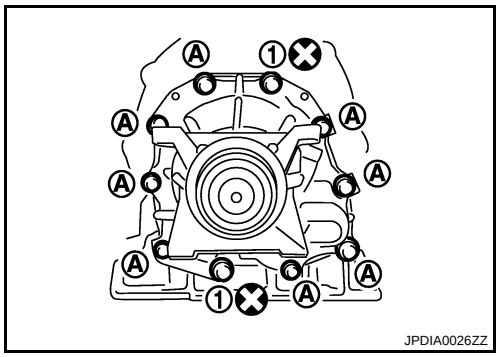

37. Install needle bearing in drum support.
CAUTION:
Check the direction of needle bearing. Refer to TM-272, "Location of Adjusting Shims, Needle Bearings, Thrust Washers and Snap Rings".

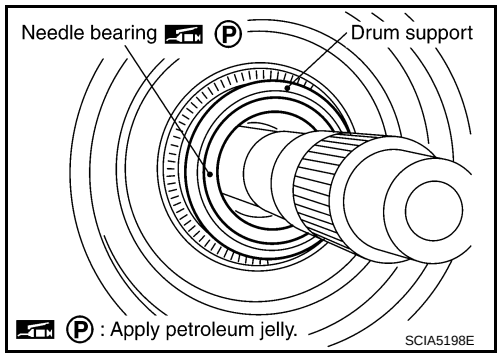

38. Install direct clutch assembly in reverse brake.
CAUTION:
Make sure that drum support edge surface and direct clutch inner boss edge surface come to almost same place.

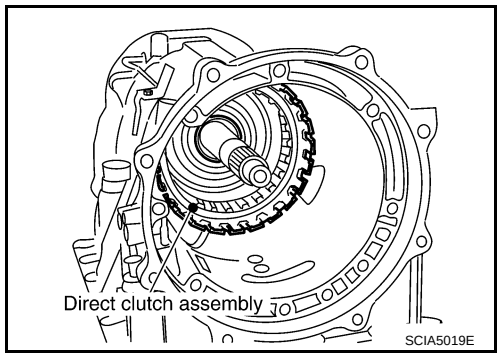

39. Install high and low reverse clutch assembly in direct clutch.

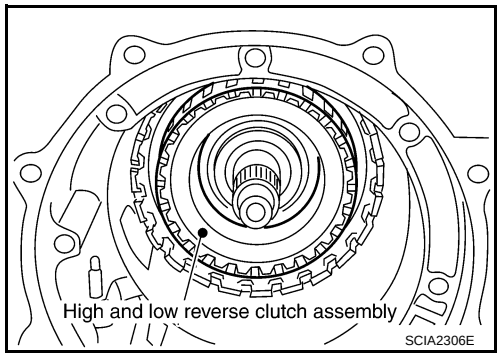

40. Using a flat-bladed screwdriver, align the drive plate.

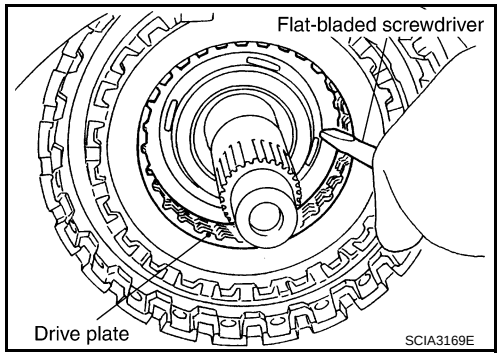

41. Install high and low reverse clutch hub, mid sun gear assembly and rear sun gear assembly as a unit.

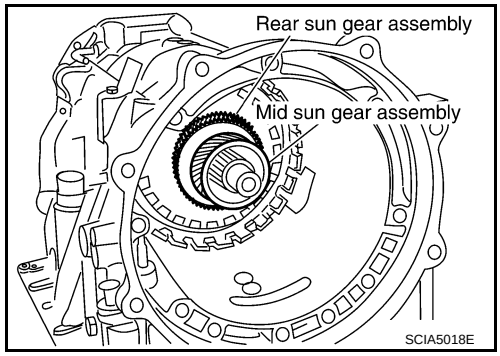

CAUTION:
Make sure that portion "A" of high and low reverse clutch drum protrudes approximately 2 mm (0.08 in) beyond portion "B" of rear sun gear.

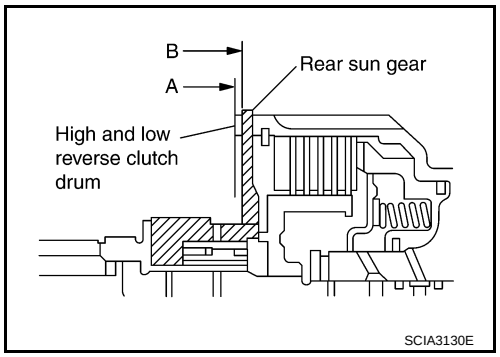

42. Install needle bearing in rear carrier assembly.
CAUTION:
Check the direction of needle bearing. Refer to TM-272, "Location of Adjusting Shims, Needle Bearings, Thrust Washers and Snap Rings".

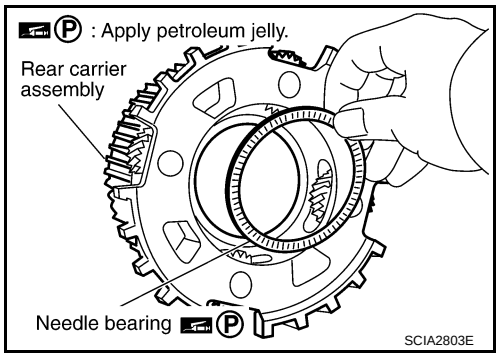

43. Install bearing race in rear carrier assembly.
CAUTION:
Check the direction of needle bearing. Refer to TM-272, "Location of Adjusting Shims, Needle Bearings, Thrust Washers and Snap Rings".

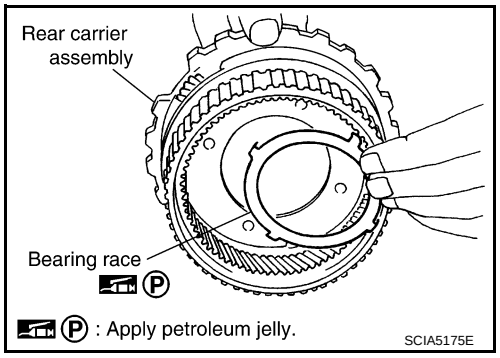

44. Install rear carrier assembly in direct clutch drum.

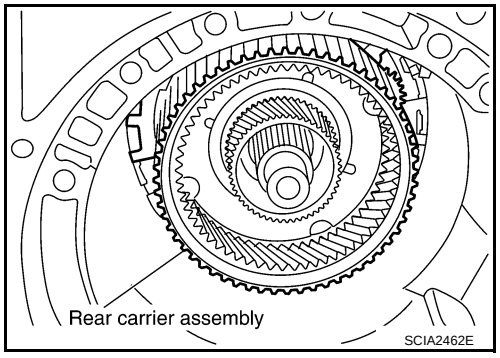

45. Install needle bearing (rear side) to mid carrier assembly.
CAUTION:
Check the direction of needle bearing. Refer to TM-272, "Location of Adjusting Shims, Needle Bearings, Thrust Washers and Snap Rings".

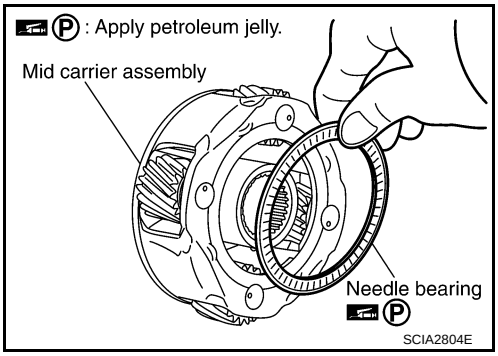

46. Install needle bearing (front side) to mid carrier assembly.
CAUTION:
Check the direction of needle bearing. Refer to TM-272, "Location of Adjusting Shims, Needle Bearings, Thrust Washers and Snap Rings".

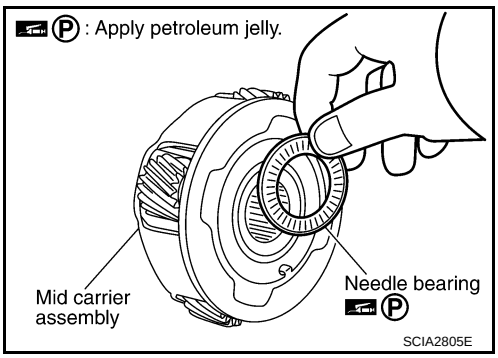

47. Install mid carrier assembly in rear carrier assembly.

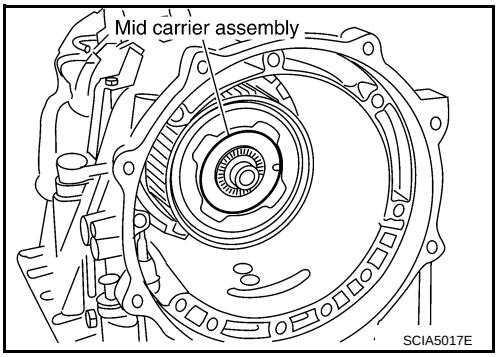

48. Install front carrier assembly, input clutch assembly and rear internal gear as a unit.

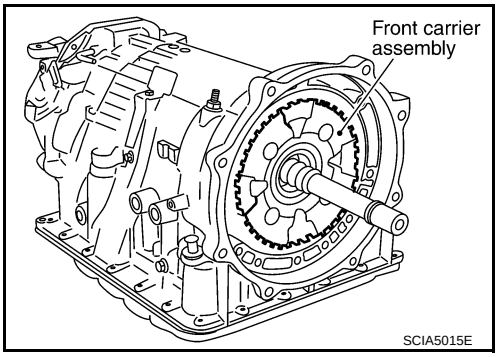

49. Install seal rings in input clutch assembly.

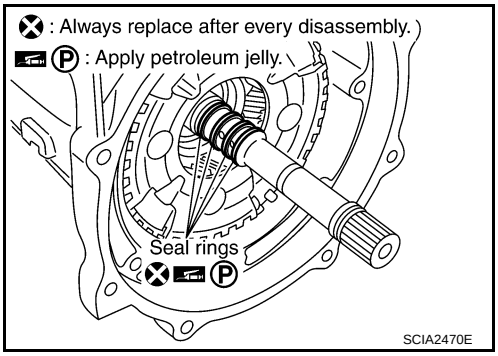

50. Install band servo anchor end pin and lock nut in transmission case.

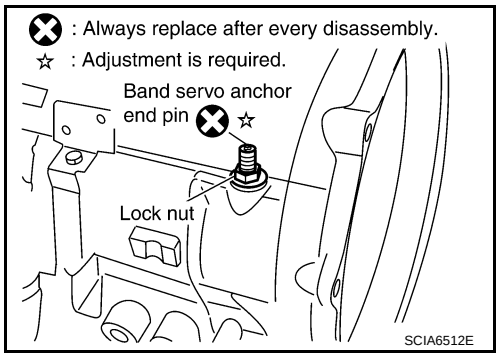

51. Install brake band in transmission case.
CAUTION:
Assemble it so that identification to avoid incorrect installation faces servo side.

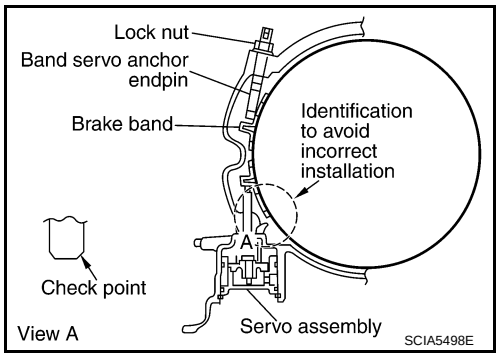

52. Install front sun gear to front carrier assembly.
CAUTION:
Apply ATF to front sun gear bearing and 3rd one-way clutch end bearing.

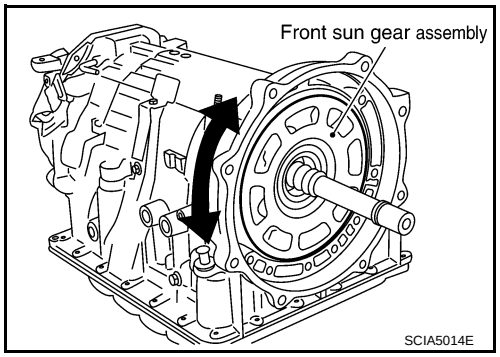

53. Install needle bearing to front sun gear.
CAUTION:
Check the direction of needle bearing. Refer to TM-272, "Location of Adjusting Shims, Needle Bearings, Thrust Washers and Snap Rings".

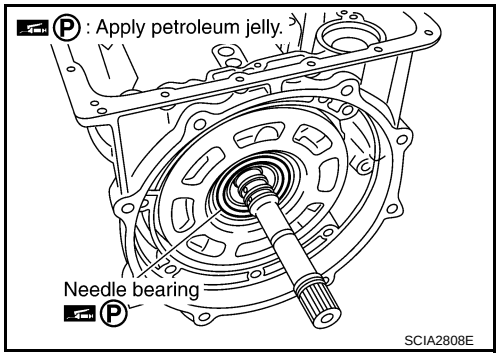

54. Adjust brake band tilting using a clip so that brake band contacts front sun gear drum evenly.

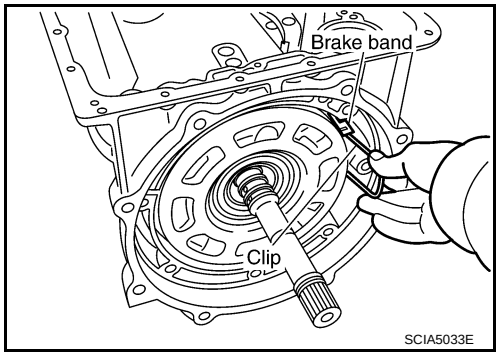

55. Adjust brake band.
a. Loosen lock nut.
b. Tighten band servo anchor end pin to specified torque.

: 5.0 N·m (0.51 kg-m, 44 in-lb)

c. Back of band servo anchor end pin three turns.
d. Holding band servo anchor end pin, tighten lock nut to the specified torque.

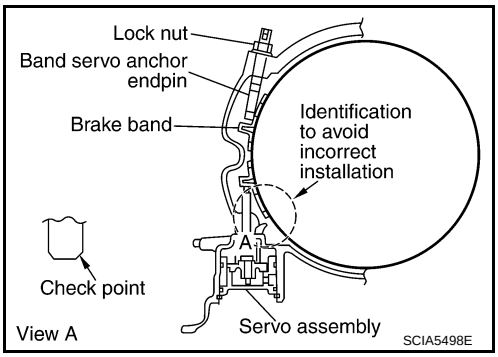

56. Adjustment of total end play.
- Measure clearance between front sun gear and bearing race for oil pump cover.
- Select proper thickness of bearing race so that end play is within specifications.

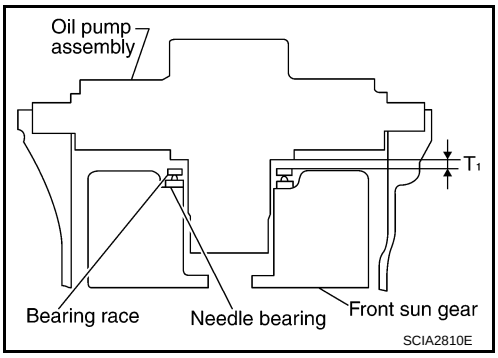

a. Measure dimensions “K” and “L” and then calculate dimension “J”.

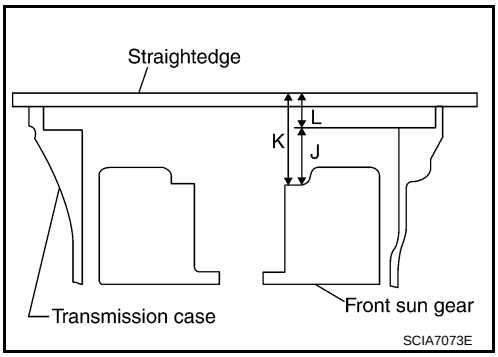

i. Measure dimension “K”.

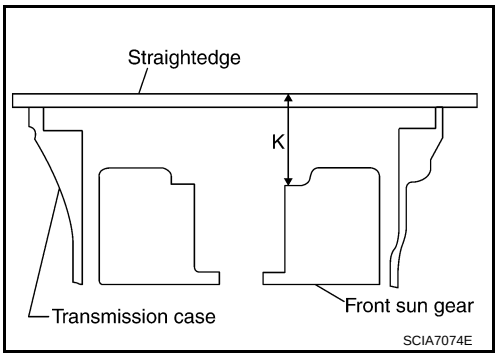

ii. Measure dimension “L”.

iii. Calculate dimension “J”.

“J” : Distance between oil pump fitting surface of transmission case and needle bearing mating surface of front sun gear.

J = K – L

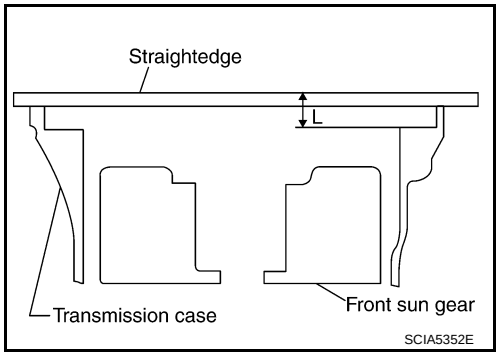

b. Measure dimensions “M_1” and “M_2” and then calculate dimension “M”.

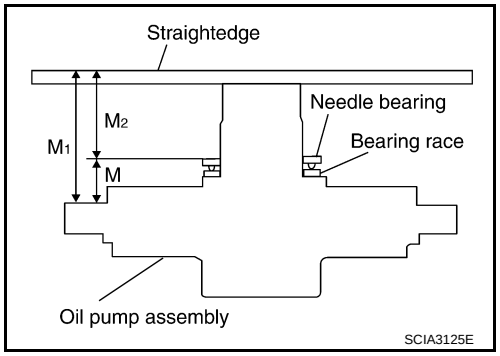

i. Place bearing race and needle bearing on oil pump assembly.

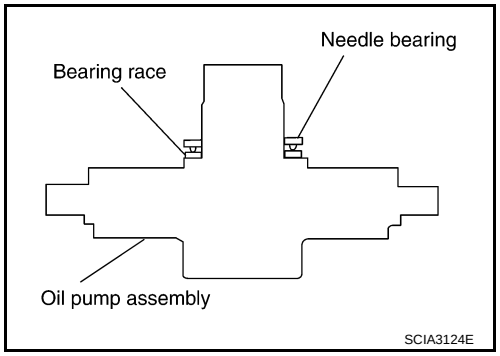

ii. Measure dimension “M_1”.

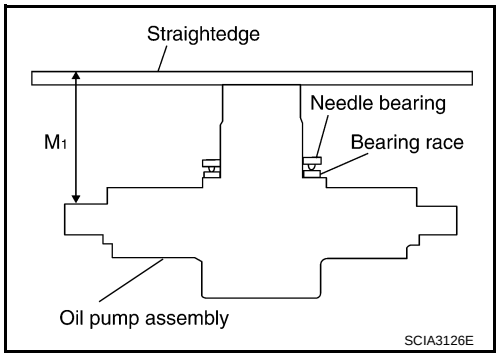

iii. Measure dimension “M_2”.

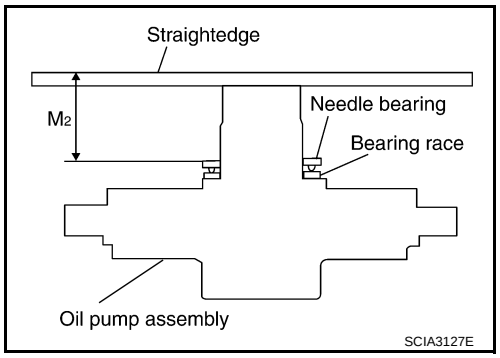

iv. Calculate dimension “M”.

“M” : Distance between transmission case fitting surface of oil pump and needle bearing on oil pump.

$M = M_1 - M_2$

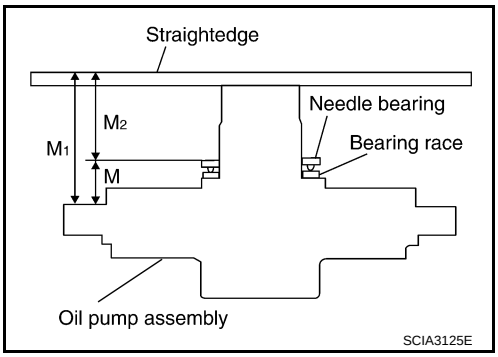

c. Adjust total end play “T_1”.

$T_1 = J - M$

Total end play “T_1” : Refer to TM-330, "Total End Play".

- Select proper thickness of bearing race so that total end play is within specifications.

Bearing races : Refer to TM-330, "Total End Play".

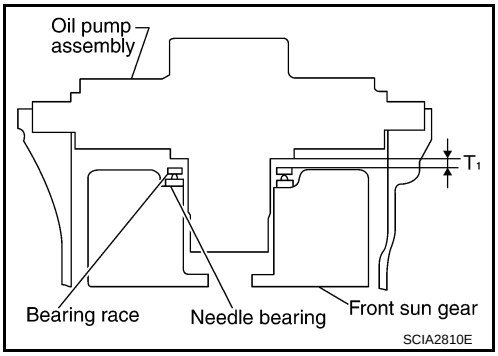

57. Install O-ring to oil pump assembly.

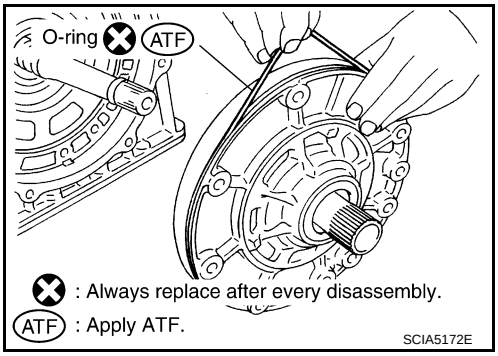

58. Install bearing race to oil pump assembly.

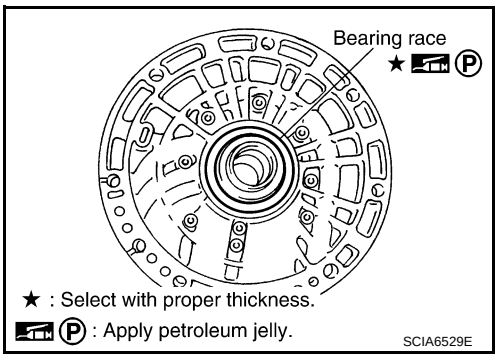

59. Install oil pump assembly in transmission case.
CAUTION:
Apply ATF to oil pump bearing.

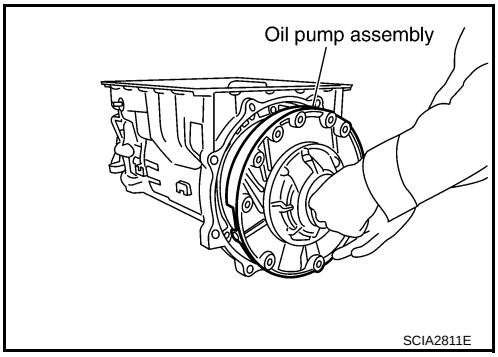

60. Apply recommended sealant (Genuine RTV Silicone Sealant or equivalent. Refer to GI-15, "Recommended Chemical Products and Sealants".) to oil pump assembly as shown in the figure.
CAUTION:
Completely remove all moisture, oil and old sealant, etc. from the oil pump mounting bolts and oil pump mounting bolt mounting surfaces.

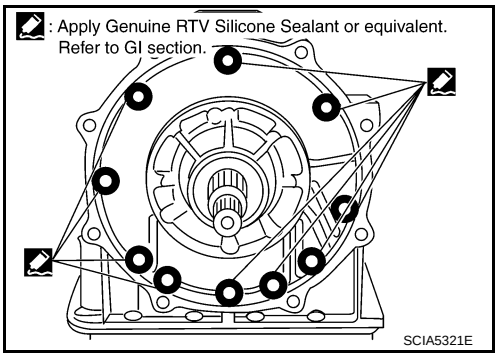

61. Tighten oil pump bolts to the specified torque.
CAUTION:
Apply ATF to oil pump bushing.

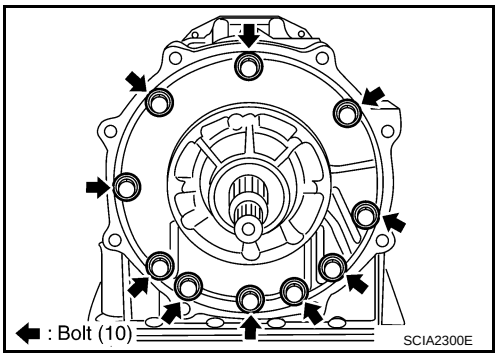

62. Install O-ring to input clutch assembly.

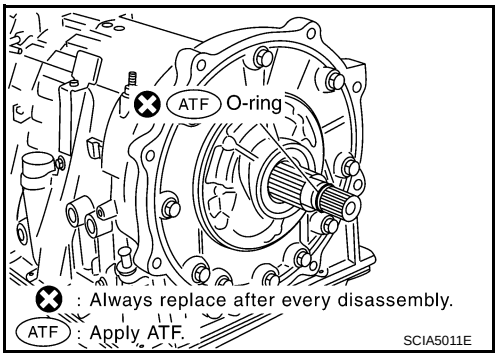

63. Install converter housing to transmission case, and then tighten converter housing bolts (A) and self-sealing bolt (B) to the specified torque.

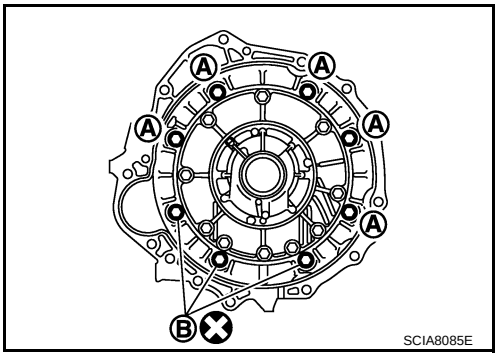

64. Make sure that brake band (A) does not close turbine revolution sensor hole (B).

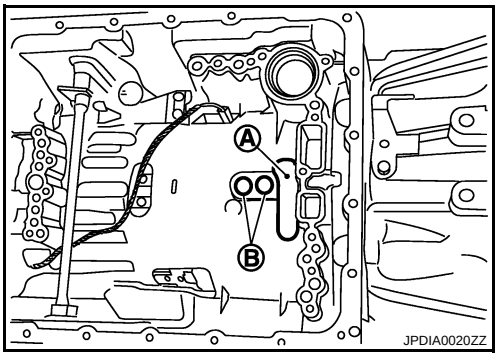

65. Connect TCM connector (A) and park/neutral position switch connector (B).

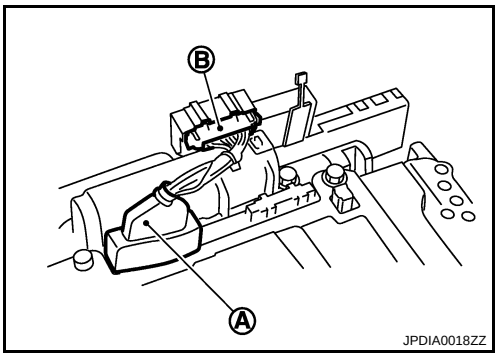

66. Install A/T assembly harness connector (A) to control valve with TCM.

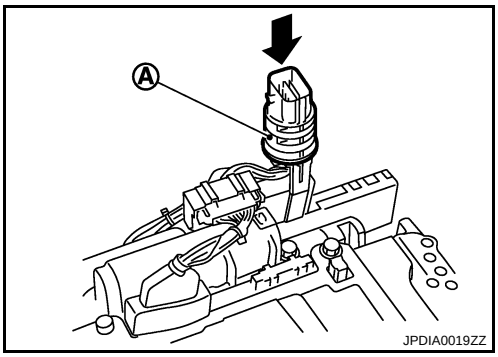

67. Connect TCM connectors (A) and (B).

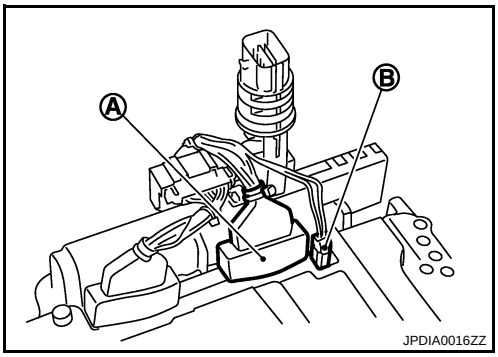

68. Install O-ring (1) to A/T assembly harness connector (A).

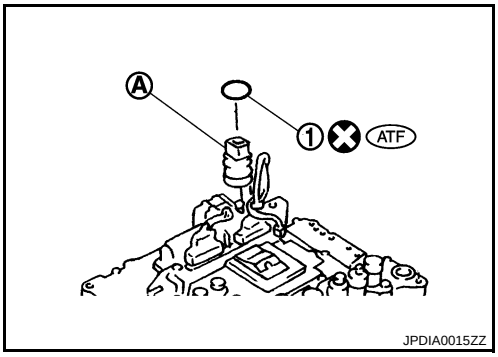

69. Install bracket (1) to A/T fluid temperature sensor 2 (2).

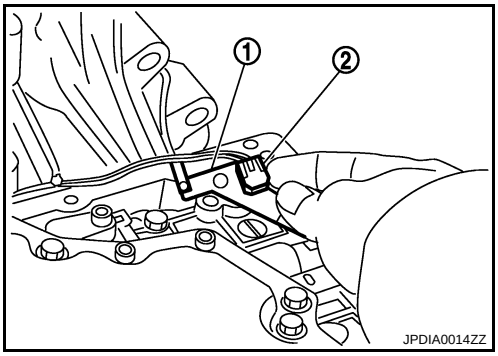

70. Install A/T fluid temperature sensor 2 (1) [with bracket (2)] in control valve with TCM. Tighten A/T fluid temperature sensor 2 bolt to the specified torque.
CAUTION:
Adjust bolt hole of bracket to bolt hole of control valve.

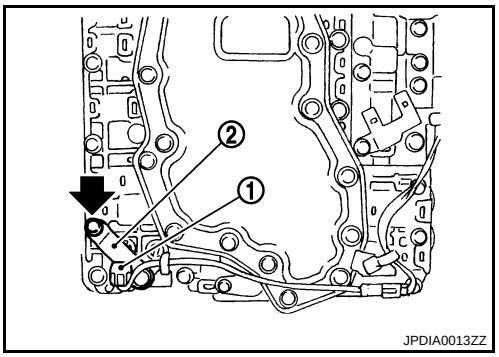

71. Install control valve with TCM in transmission case.
CAUTION:
- **Make sure that turbine revolution sensor securely installs turbine revolution sensor hole (B).**

A : Brake band

- **Hang down revolution sensor harness toward outside so as not to disturb installation of control valve with TCM.**
- **Adjust A/T assembly harness connector of control valve with TCM to terminal hole of transmission case.**

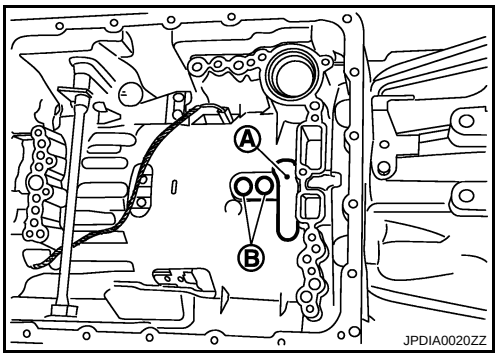

- **Assemble it so that manual valve cutout is engaged with manual plate projection.**

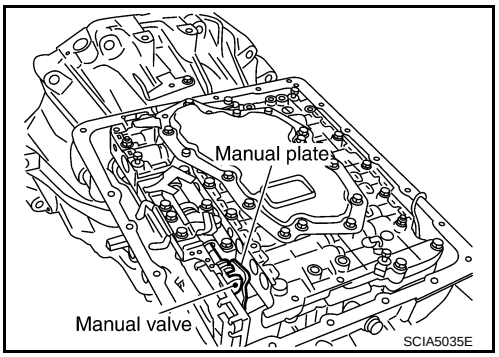

72. Install bolts A, B and C to control valve with TCM.

⇦ : Front

Bolt symbol	Length mm (in)	Number of bolts
A	42 (1.65)	5
B	55 (2.17)	6
C	40 (1.57)	1

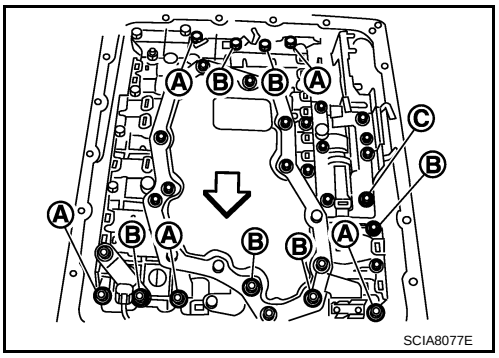

73. Tighten bolt 1, 2 and 3 temporarily to prevent dislocation. After tightening them in order (1 → 2 → 3), tighten other bolts. Tighten control valve bolts to the TCM with specified torque.

⇦ : Front

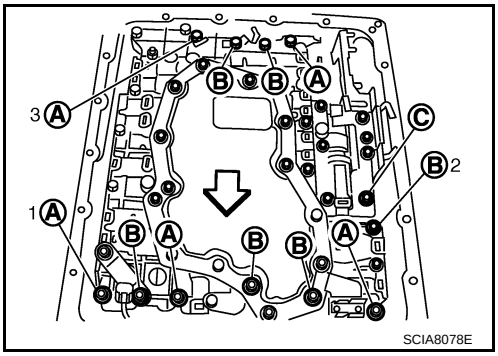

74. Connect A/T fluid temperature sensor 2 connector (A).
75. Engage terminal cord assembly and A/T fluid temperature sensor 2 harness with terminal clips (⬅).

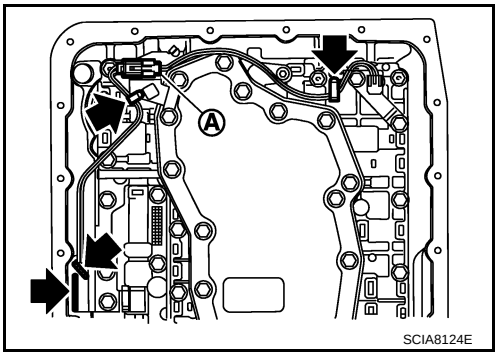

76. Connect revolution sensor connector (A).
77. Engage revolution sensor harness with terminal clip (⬅).

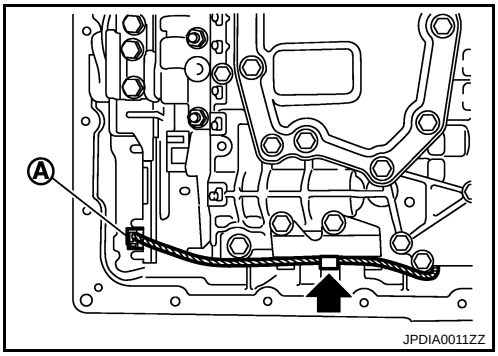

78. Pull down A/T assembly harness connector.
CAUTION:
Be careful not to damage connector.

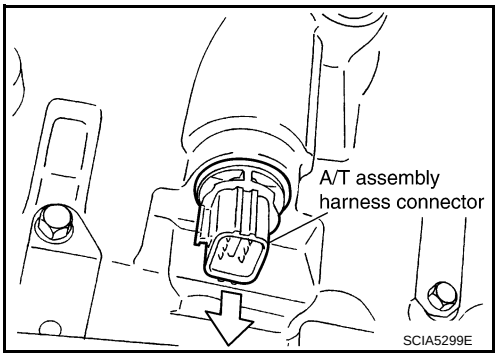

79. Install snap ring to A/T assembly harness connector.

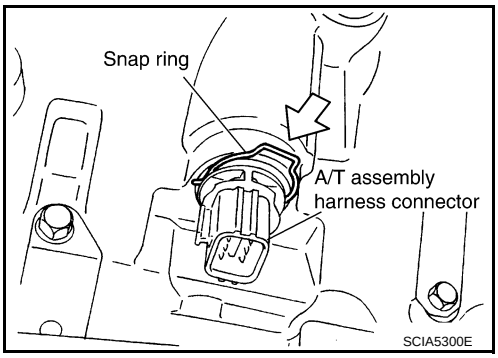

80. Install magnets (1) in oil pan.

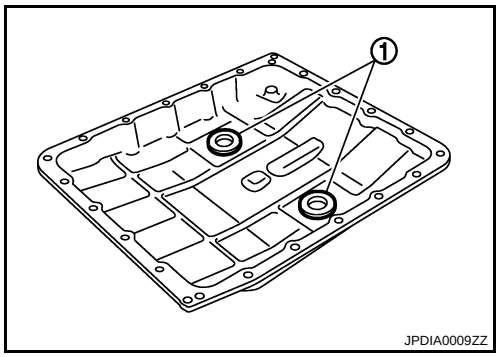

81. Install oil pan gasket to transmission case.
CAUTION:
- **Do not reuse oil pan gasket.**
- **Install it in the direction to align hole positions.**
- **Completely remove all moisture, oil and old gasket, etc. from oil pan gasket mounting surface.**

82. Install oil pan (2) and clips (1) to transmission case.

⇦ : Front

⬅ : Oil pan mounting bolt

CAUTION:
- **Install it so that drain plug (3) comes to the position as shown in the figure.**
- **Be careful not to pinch harnesses.**
- **Completely remove all moisture, oil and old gasket, etc. from oil pan mounting surface.**

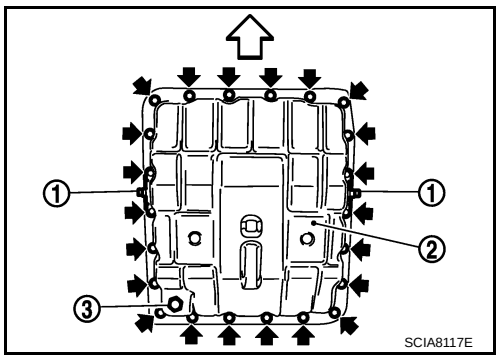

83. Tighten oil pan mounting bolts to the specified torque in numerical order shown in the figure after temporarily tightening them. Tighten oil pan mounting bolts to the specified torque.

⇦ : Front

CAUTION:
Do not reuse oil pan mounting bolts.

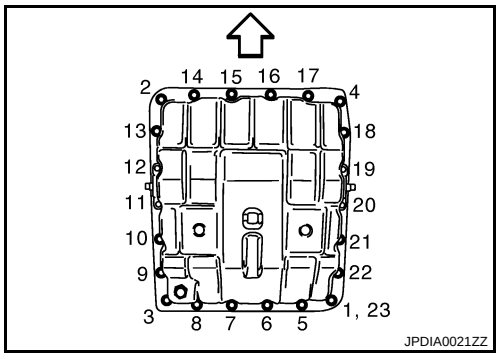

84. Install drain plug to oil pan. Tighten drain plug to the specified torque.
CAUTION:
Do not reuse drain plug gasket.

85. Pour ATF into torque converter.
- **Approximately 2 liter (2-1/8 US qt, 1-3/4 Imp qt) of ATF is required for a new torque converter.**
- **When reusing old torque converter, add the same amount of ATF as was drained.**

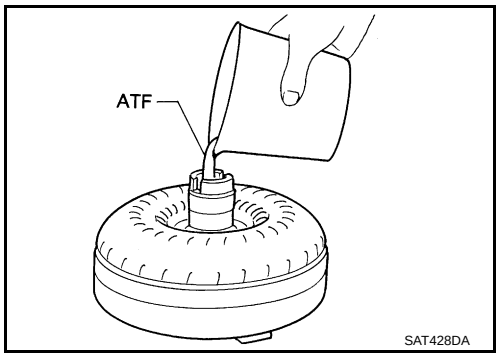

86. Install torque converter while aligning notches of torque converter with notches of oil pump.
CAUTION:
Install torque converter while rotating it.

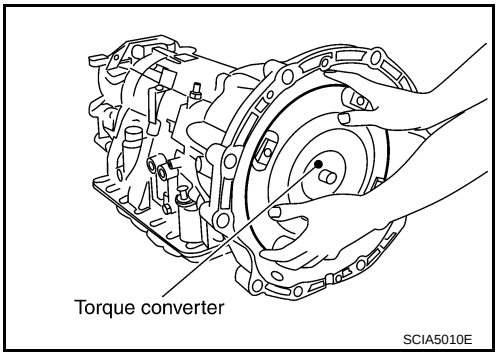

87. Measure distance (A) to make sure that torque converter is in proper position.

B : Scale
C : Straightedge

Distance (A) : Refer to TM-330, "Torque Converter".

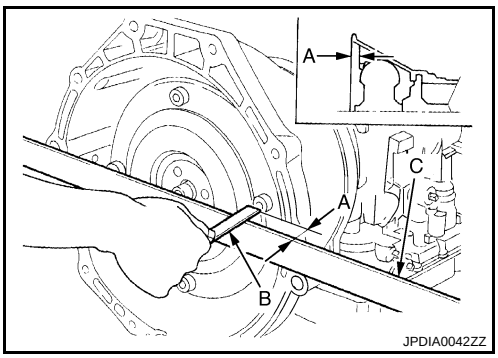

Inspection

INFOID:0000000001672299

INSPECTION AFTER REMOVAL

- Check foreign materials in oil pan to help determine causes of malfunction. If the ATF is very dark, smells burned, or contains foreign particles, the frictional material (clutches, band) may need replacement. A tacky film that will not wipe clean indicates varnish build up. Varnish can cause valves, servo, and clutches to stick and can inhibit pump pressure.
- **If frictional material is detected, perform A/T fluid cooler cleaning. Refer to TM-216, "Cleaning".**

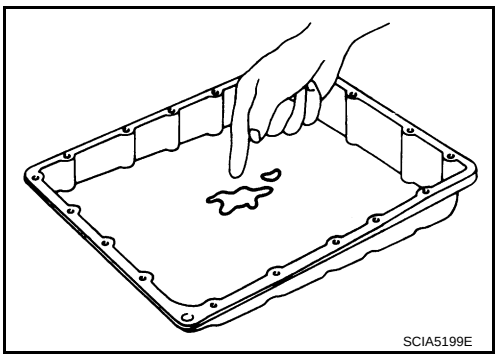

- Check torque converter one-way clutch using a check tool as shown at figure.

1. Insert a check tool into the groove of bearing support built into one-way clutch outer race.
2. When fixing bearing support with a check tool, rotate one-way clutch spline using a screwdriver.
3. Make sure that inner race rotates clockwise only. If not, replace torque converter assembly.

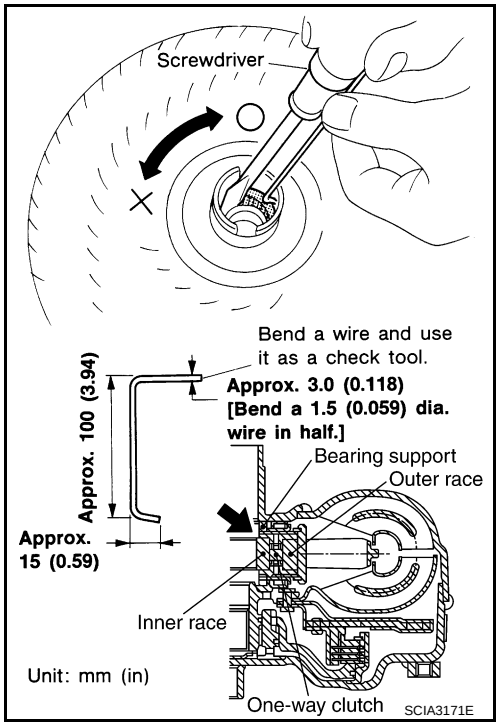

OIL PUMP

Exploded View

INFOID:0000000001672300

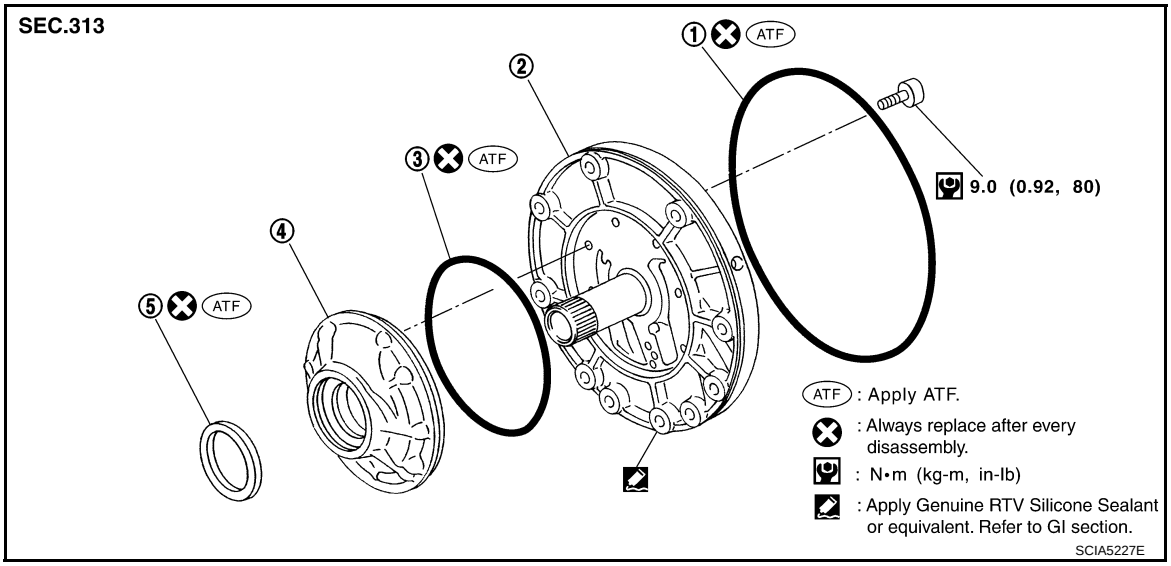

1. O-ring
2. Oil pump cover
3. O-ring
4. Oil pump housing
5. Oil pump housing oil seal

Disassembly

INFOID:0000000001672301

1. Remove oil pump housing from oil pump cover.

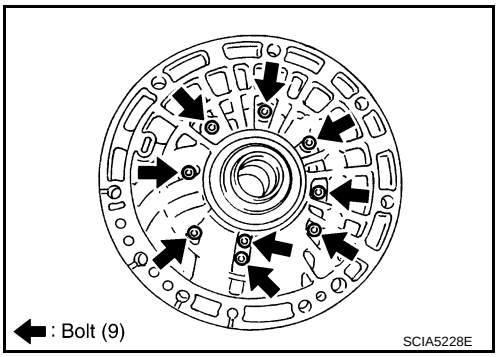

2. Remove oil pump housing oil seal using a flat-bladed screwdriver.
   CAUTION:
   Be careful not to scratch oil pump housing.

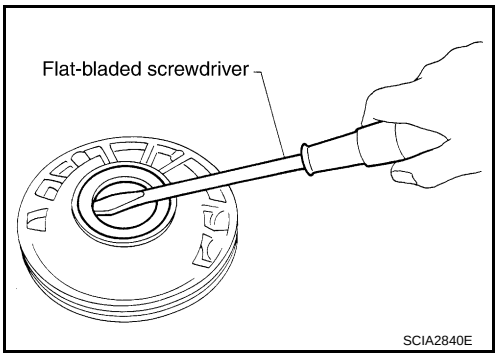

3. Remove O-ring from oil pump housing.

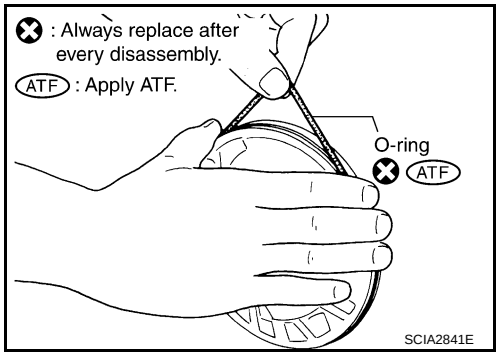

4. Remove O-ring from oil pump cover.

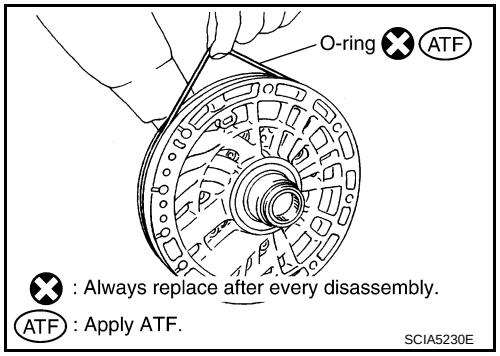

Assembly

INFOID:0000000001672302

1. Install O-ring to oil pump cover.

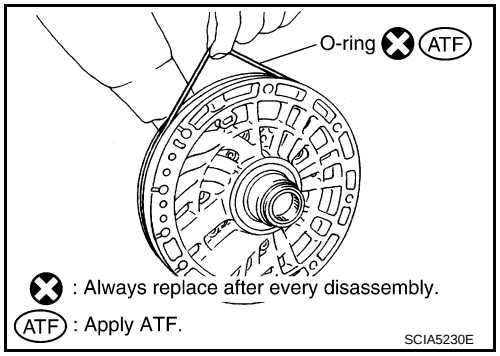

2. Install O-ring to oil pump housing.

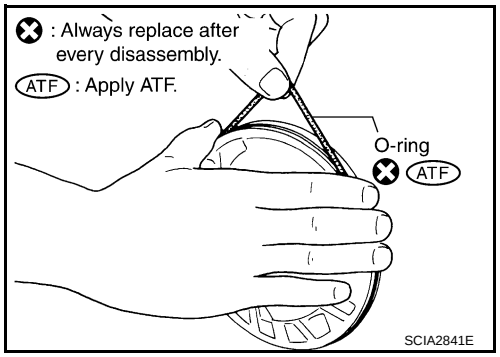

3. Using the drift, install oil pump housing oil seal to the oil pump housing until it is flush.
   CAUTION:
   - **Do not reuse oil seal.**
   - **Apply ATF to oil seal.**

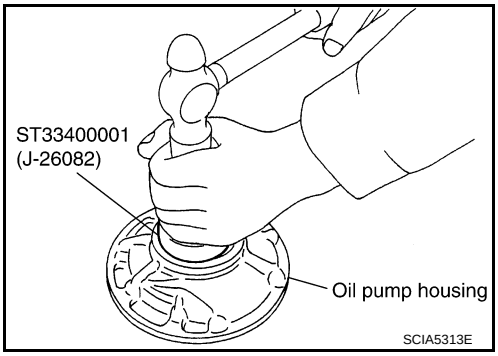

4. Install oil pump housing to oil pump cover.
5. Tighten bolts (⬅) to the specified torque in numerical order shown in the figure after temporarily tightening them.

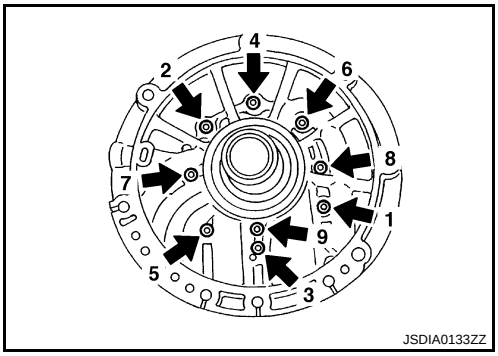

FRONT SUN GEAR, 3RD ONE-WAY CLUTCH

Exploded View

INFOID:0000000001672303

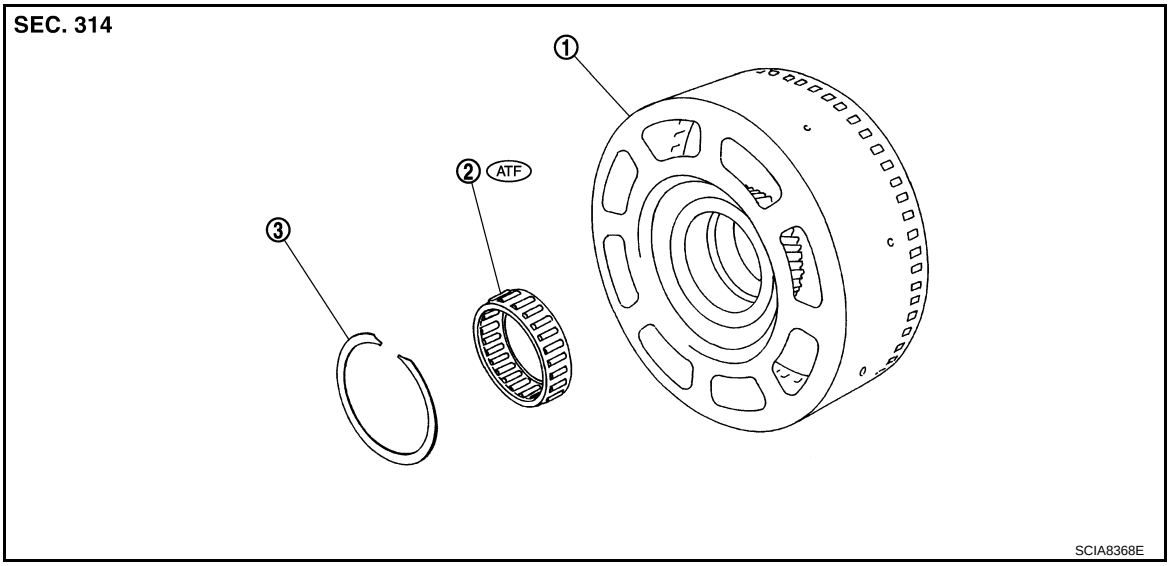

1. Front sun gear
2. 3rd one-way clutch
3. Snap ring

Refer to GI-4, "Components" for symbols in the figure.

Disassembly

INFOID:0000000001672304

1. Using a flat-bladed screwdriver, remove snap ring from front sun gear.

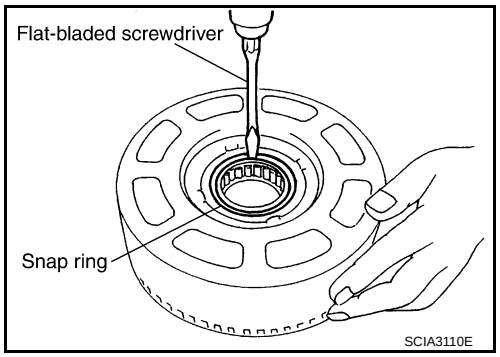

2. Remove 3rd one-way clutch from front sun gear.

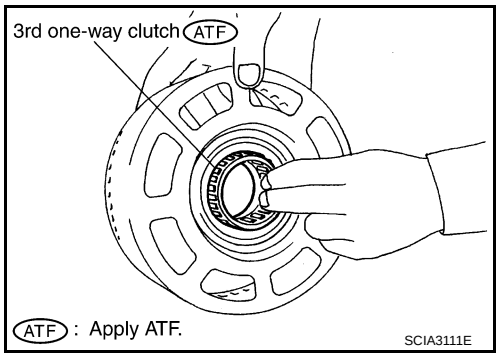

Assembly

INFOID:0000000001672305

1. Install 3rd one-way clutch in front sun gear.

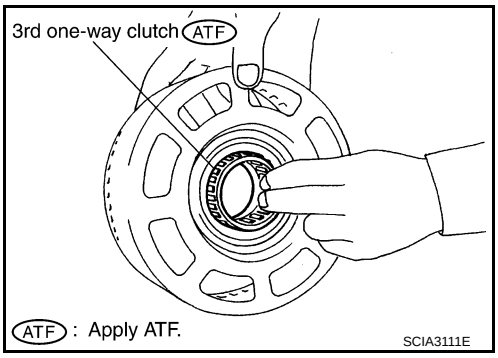

2. Using a flat-bladed screwdriver, install snap ring in front sun gear.

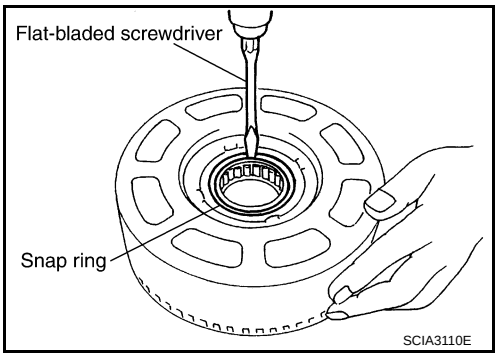

3. Check operation of 3rd one-way clutch.

a. Hold oil pump assembly and turn front sun gear.

b. Check 3rd one-way clutch for correct locking and unlocking directions.
CAUTION:
If not as shown in figure, check installation direction of 3rd one-way clutch.

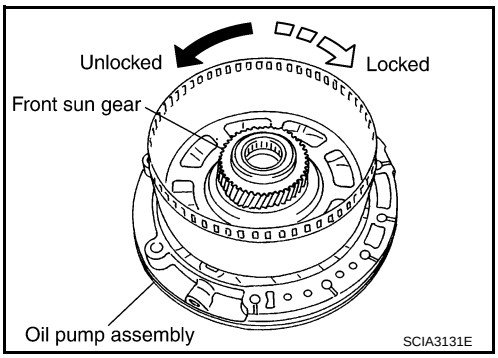

Inspection

INFOID:0000000001672306

- 3rd One-way Clutch
  Check frictional surface for wear or damage.
  CAUTION:
  If necessary, replace the 3rd one-way clutch.
- Front Sun Gear Snap Ring
  Check for deformation, fatigue or damage.
  CAUTION:
  If necessary, replace the snap ring.
- Front Sun Gear
  Check for deformation, fatigue or damage.
  CAUTION:
  If necessary, replace the front sun gear.

FRONT CARRIER, INPUT CLUTCH, REAR INTERNAL GEAR

Exploded View

INFOID:0000000001672307

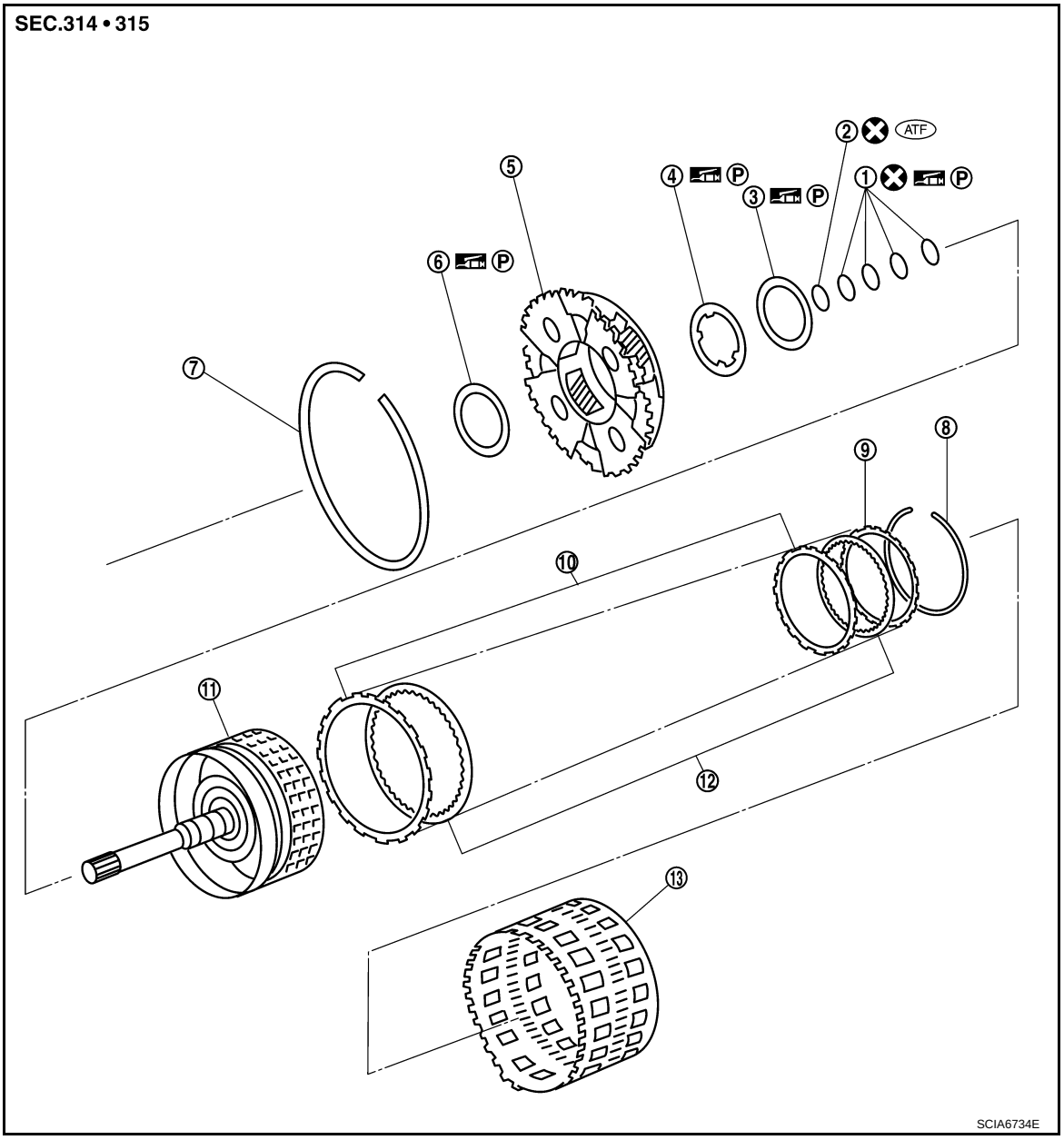

1.	Seal ring	2.	O-ring	3.	Needle bearing
4.	Bearing race	5.	Front carrier assembly	6.	Needle bearing
7.	Snap ring	8.	Snap ring	9.	Retaining plate
10.	Driven plate	11.	Input clutch drum	12.	Drive plate
13.	Rear internal gear				

Refer to GI-4, "Components" for symbols in the figure.

Disassembly

INFOID:0000000001672308

1. Compress snap ring using 2 flat-bladed screwdrivers.
2. Remove front carrier assembly and input clutch assembly from rear internal gear.
3. Remove front carrier assembly from input clutch assembly.

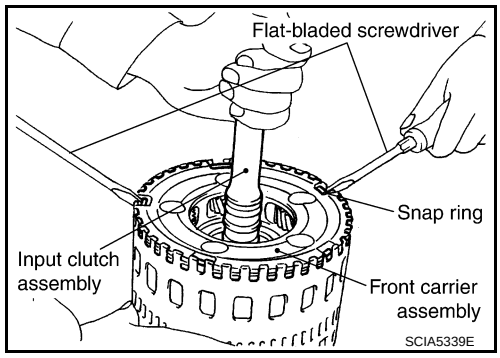

4. Remove bearing race from front carrier assembly.

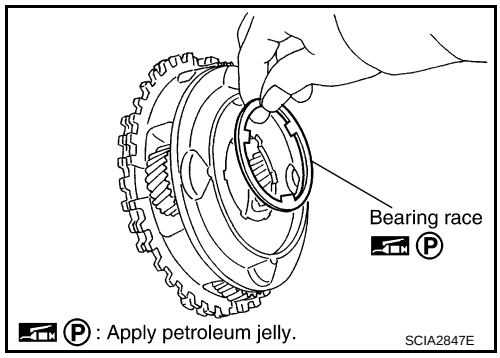

5. Remove needle bearing from front carrier assembly.

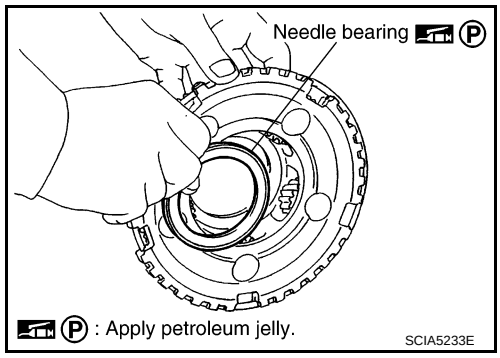

6. Remove snap ring from front carrier assembly.
   CAUTION:
   Do not expand snap ring excessively.

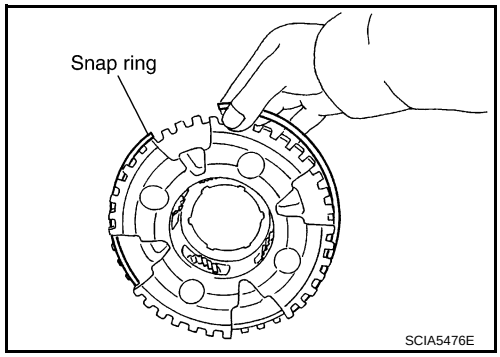

7. Remove O-ring and seal rings from input clutch assembly.

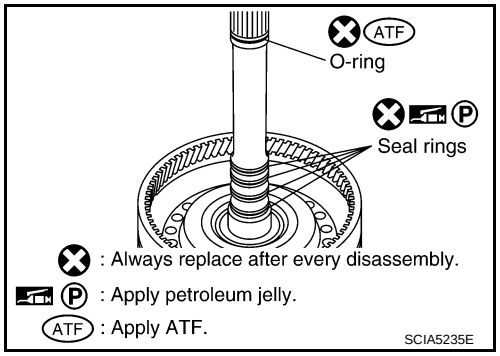

8. Remove needle bearing from input clutch assembly.

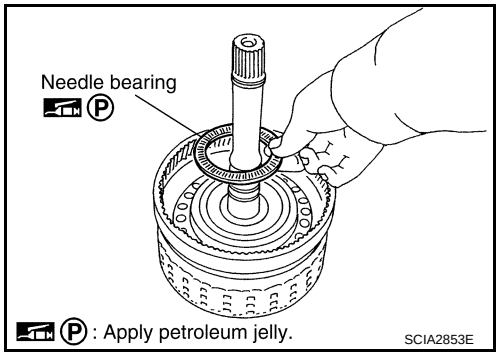

9. Using a flat-bladed screwdriver, remove snap ring from input clutch drum.
10. Remove drive plates, driven plates and retaining plate from input clutch drum.

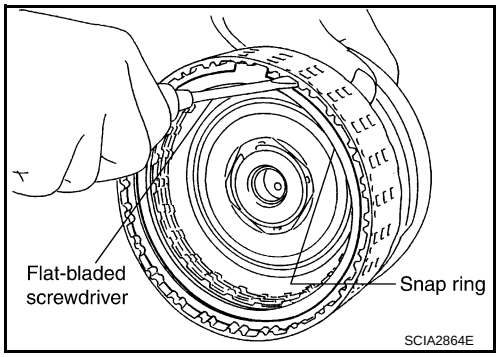

Assembly

INFOID:0000000001672309

1. Install drive plates, driven plates and retaining plate in input clutch drum.

1	: Snap ring
2	: Retaining plate
3	: Drive plate
4	: Driven plate
7 /7	: Drive plate / Driven plate

CAUTION:
Check order of plates.

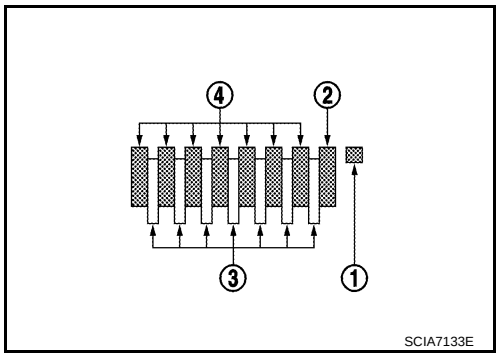

2. Using a flat-bladed screwdriver, install snap ring in input clutch drum.

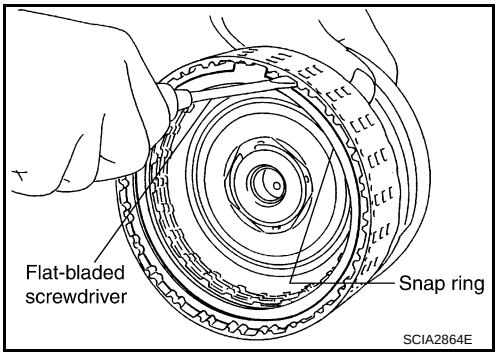

3. Install needle bearing in input clutch assembly.
CAUTION:
Check the direction of needle bearing. Refer to TM-272, "Location of Adjusting Shims, Needle Bearings, Thrust Washers and Snap Rings".

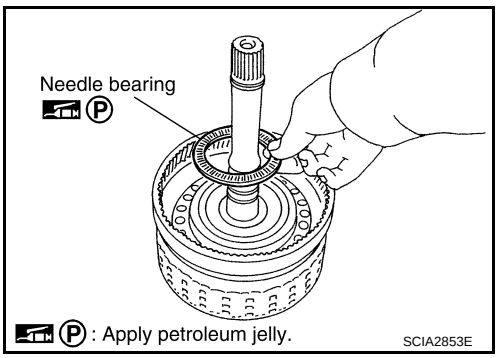

4. Install O-ring and seal rings in input clutch assembly.

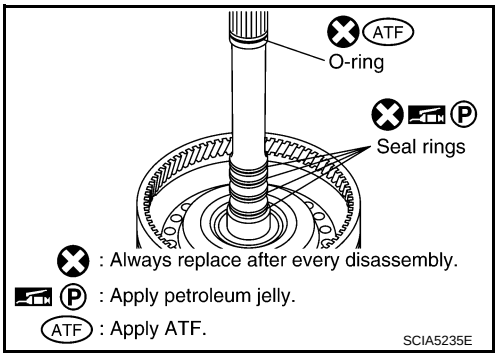

5. Install snap ring to front carrier assembly.
CAUTION:
Do not expand snap ring excessively.

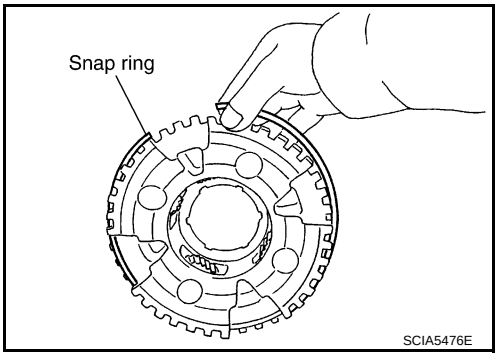

6. Install needle bearing in front carrier assembly.
CAUTION:
Check the direction of needle bearing. Refer to TM-272, "Location of Adjusting Shims, Needle Bearings, Thrust Washers and Snap Rings".

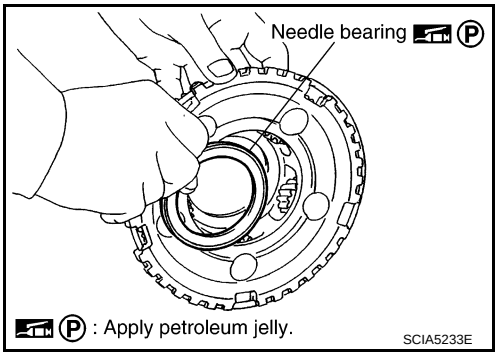

7. Install bearing race in front carrier assembly.
8. Install front carrier assembly to input clutch assembly.

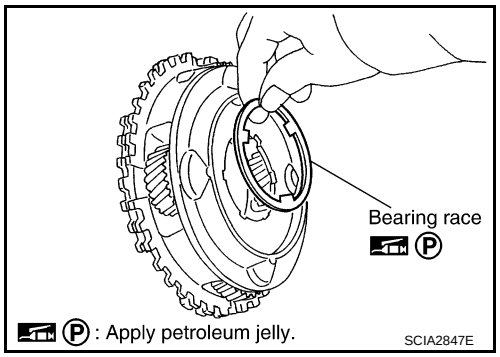

9. Compress snap ring using 2 flat-bladed screwdrivers.
10. Install front carrier assembly and input clutch assembly to rear internal gear.

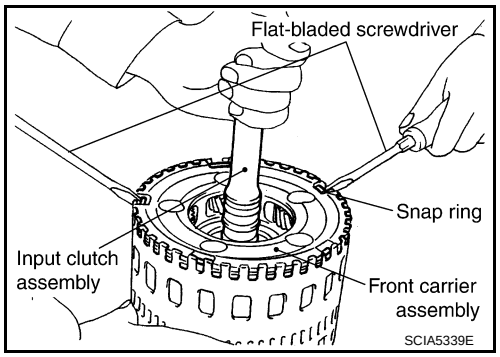

Inspection

INFOID:0000000001672310

- Front Carrier Snap Ring
  Check for deformation, fatigue or damage.
  CAUTION:
  If necessary, replace the snap ring.
- Input Clutch Snap Ring
  Check for deformation, fatigue or damage.
  CAUTION:
  If necessary, replace the input clutch assembly.
- Input Clutch Drum
  Check for deformation, fatigue or damage or burns.
  CAUTION:
  If necessary, replace the input clutch assembly.
- Input Clutch Drive Plates
  Check facing for burns, cracks or damage.
  CAUTION:
  If necessary, replace the input clutch assembly.
- Input Clutch Retaining Plate and Driven Plates
  Check facing for burns, cracks or damage.
  CAUTION:
  If necessary, replace the input clutch assembly.
- Front Carrier
  Check for deformation, fatigue or damage.
  CAUTION:
  If necessary, replace the front carrier assembly.
- Rear Internal Gear
  Check for deformation, fatigue or damage.
  CAUTION:
  If necessary, replace the rear internal gear.

MID SUN GEAR, REAR SUN GEAR, HIGH AND LOW REVERSE CLUTCH HUB

Exploded View

INFOID:0000000001672311

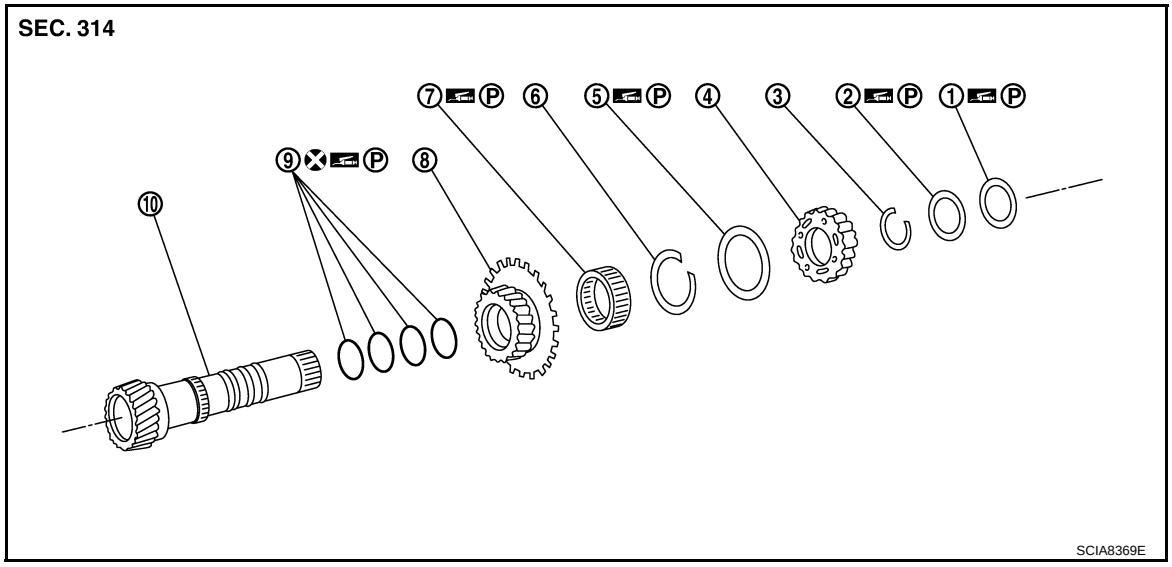

1. Needle bearing
2. Bearing race
3. Snap ring
4. High and low reverse clutch hub
5. Needle bearing
6. Snap ring
7. 1st one-way clutch
8. Rear sun gear
9. Seal ring
10. Mid sun gear

Refer to GI-4, "Components" for symbols in the figure.

Disassembly

INFOID:0000000001672312

1. Remove needle bearing and bearing race from high and low reverse clutch hub.

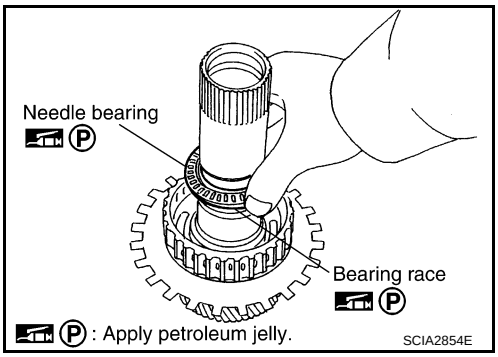

2. Using pair of snap ring pliers, remove snap ring from mid sun gear assembly.
   CAUTION:
   Do not expand snap ring excessively.

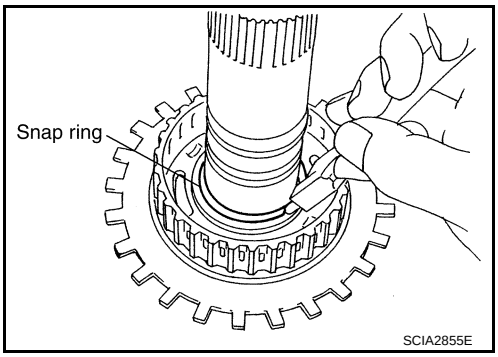

3. Remove high and low reverse clutch hub from mid sun gear assembly.

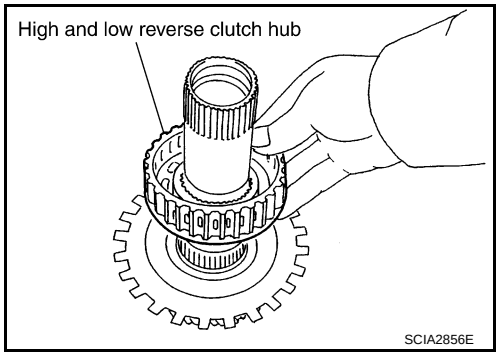

4. Remove needle bearing from high and low reverse clutch hub.

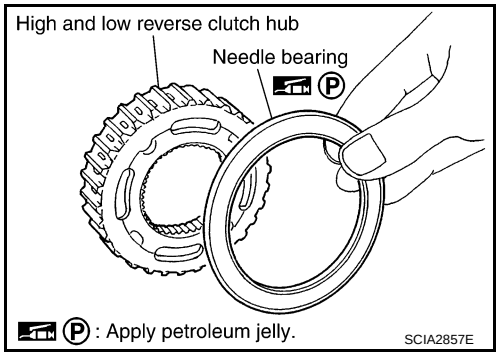

5. Remove rear sun gear assembly from mid sun gear assembly.

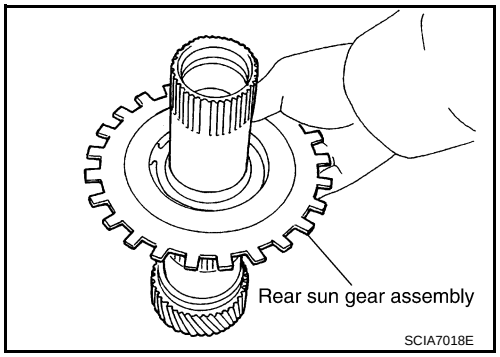

6. Using a flat-bladed screwdriver, remove snap ring from rear sun gear.

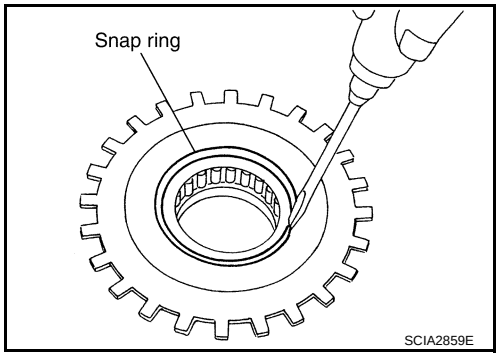

7. Remove 1st one-way clutch from rear sun gear.

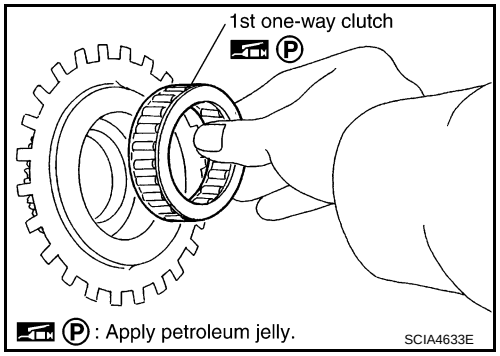

8. Remove seal rings from mid sun gear.

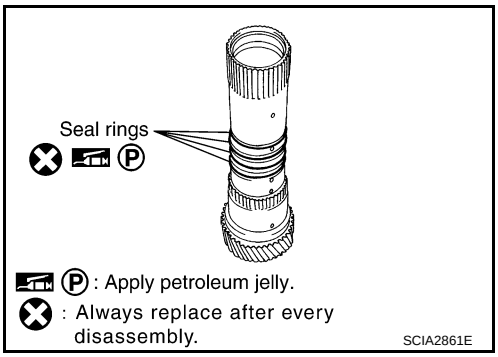

Assembly

INFOID:0000000001672313

1. Install seal rings to mid sun gear.

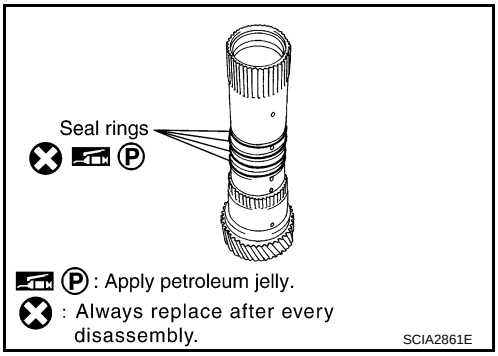

2. Install 1st one-way clutch to rear sun gear.

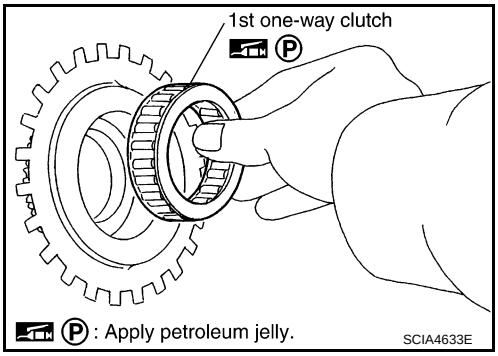

3. Using a flat-bladed screwdriver, install snap ring to rear sun gear.

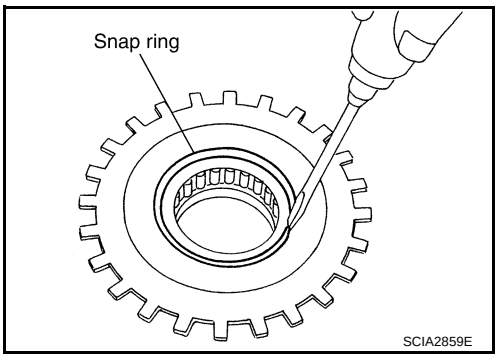

4. Install rear sun gear assembly to mid sun gear assembly.

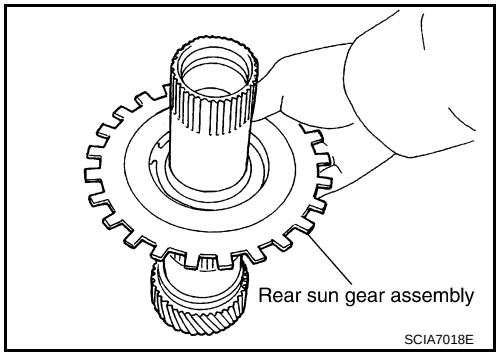

5. Install needle bearing to high and low reverse clutch hub.
CAUTION:
Check the direction of needle bearing. Refer to TM-272, "Location of Adjusting Shims, Needle Bearings, Thrust Washers and Snap Rings".

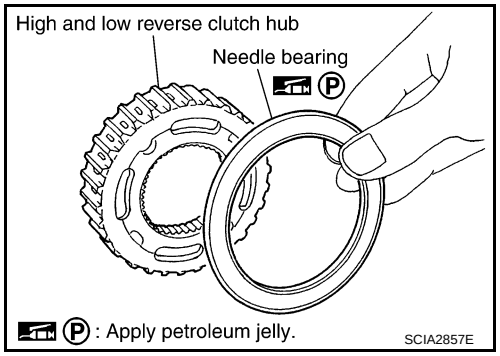

6. Install high and low reverse clutch hub to mid sun gear assembly.

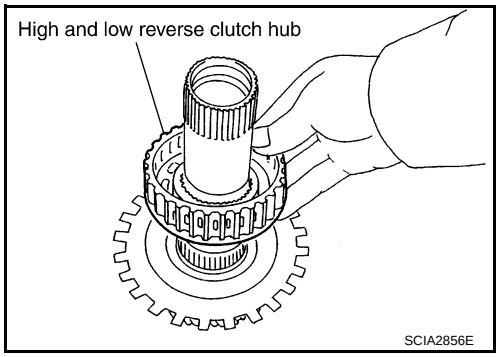

7. Using pair of snap ring pliers, install snap ring to mid sun gear assembly.
CAUTION:
Do not expand snap ring excessively.

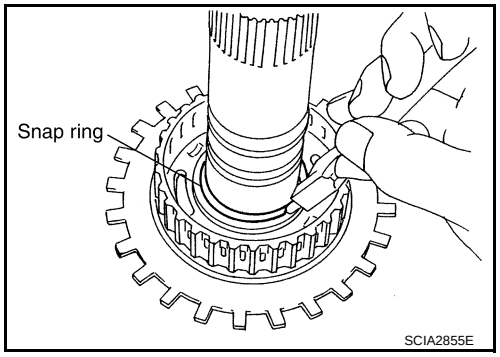

8. Check operation of 1st one-way clutch.
a. Hold mid sun gear and turn rear sun gear.
b. Check 1st one-way clutch for correct locking and unlocking directions.
CAUTION:
If not as shown in the figure, check installation direction of 1st one-way clutch.

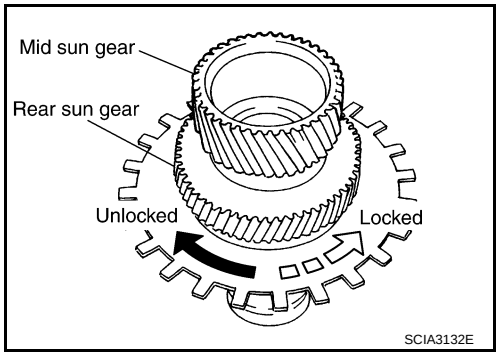

9. Install needle bearing and bearing race to high and low reverse clutch hub.
   CAUTION:
   Check the direction of needle bearing. Refer to TM-272, "Location of Adjusting Shims, Needle Bearings, Thrust Washers and Snap Rings".

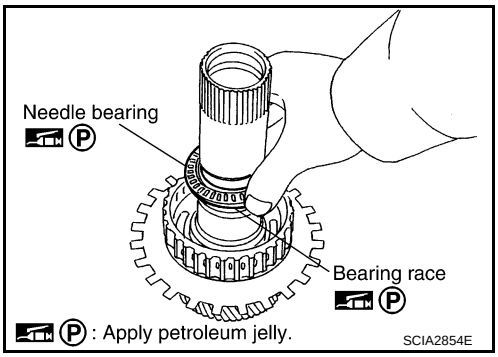

Inspection

INFOID:0000000001672314

- High and Low Reverse Clutch Hub Snap Ring, Rear Sun Gear Snap Ring
  Check for deformation, fatigue or damage.
  CAUTION:
  If necessary, replace the snap ring.
- 1st One-way Clutch
  Check frictional surface for wear or damage.
  CAUTION:
  If necessary, replace the 1st one-way clutch.
- Mid Sun Gear
  Check for deformation, fatigue or damage.
  CAUTION:
  If necessary, replace the mid sun gear.
- Rear Sun Gear
  Check for deformation, fatigue or damage.
  CAUTION:
  If necessary, replace the rear sun gear.
- High and Low Reverse Clutch Hub
  Check for deformation, fatigue or damage.
  CAUTION:
  If necessary, replace the high and low reverse clutch hub.

HIGH AND LOW REVERSE CLUTCH

Exploded View

INFOID:0000000001672315

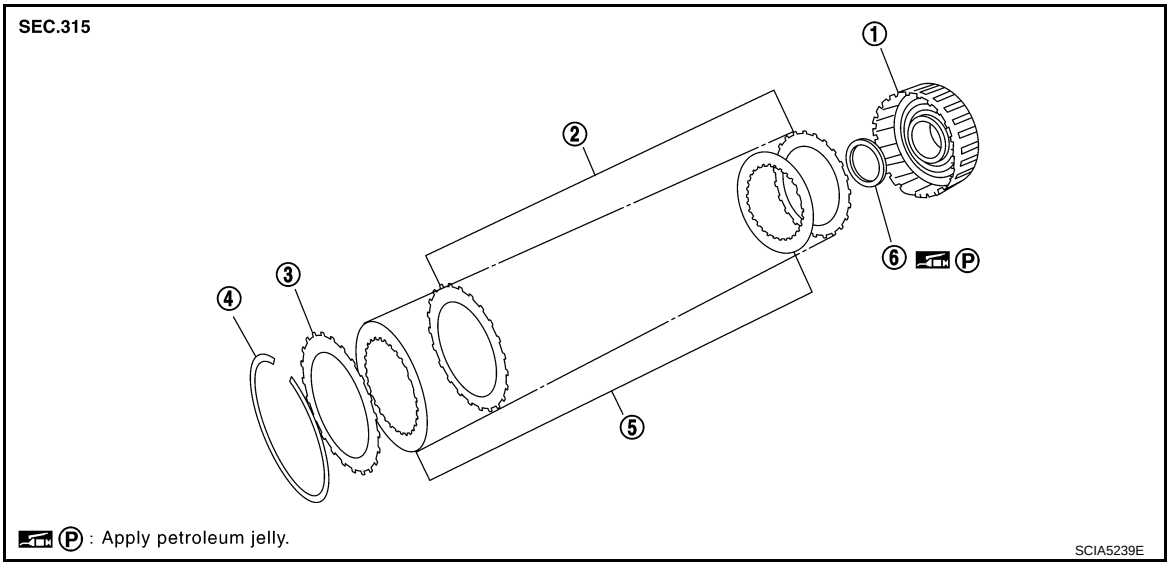

1. High and low reverse clutch drum
2. Driven plate
3. Retaining plate
4. Snap ring
5. Drive plate
6. Bearing race

Disassembly

INFOID:0000000001672316

1. Remove bearing race from high and low reverse clutch drum.

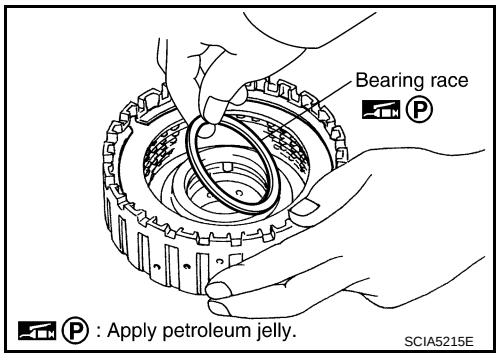

2. Using a flat-bladed screwdriver, remove snap ring from high and low reverse clutch drum.
3. Remove drive plates, driven plates and retaining plate from high and low reverse clutch drum.

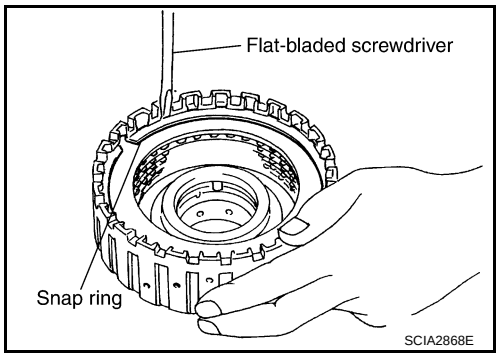

Assembly

INFOID:0000000001672317

1. Install drive plates, driven plates and retaining plate in high and low reverse clutch drum.
CAUTION:

Check the order of plates.

1	: Snap ring
2	: Retaining plate
3	: Drive plate
4	: Driven plate
4/4	: Drive plate / Driven plate

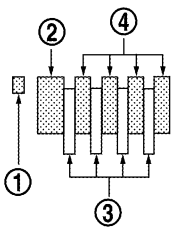

SCIA6735E

2. Using a flat-bladed screwdriver, install snap ring in high and low reverse clutch drum.

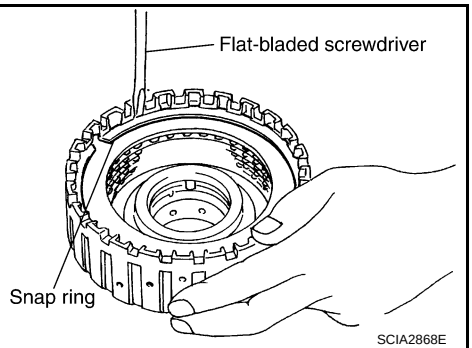

SCIA2868E

3. Install bearing race to high and low reverse clutch drum.
CAUTION:
Check the direction of needle bearing. Refer to TM-272, "Location of Adjusting Shims, Needle Bearings, Thrust Washers and Snap Rings".

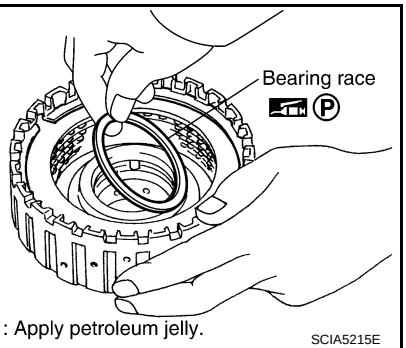

SCIA5215E

Inspection

INFOID:0000000001672318

Check the following, and replace transmission assembly if necessary.
- High and Low Reverse Clutch Snap Ring
  Check for deformation, fatigue or damage.
- High and Low Reverse Clutch Drive Plates
  Check facing for burns, cracks or damage.
- High and Low Reverse Clutch Retaining Plate and Driven Plates
  Check facing for burns, cracks or damage.

DIRECT CLUTCH

Exploded View

INFOID:0000000001672319

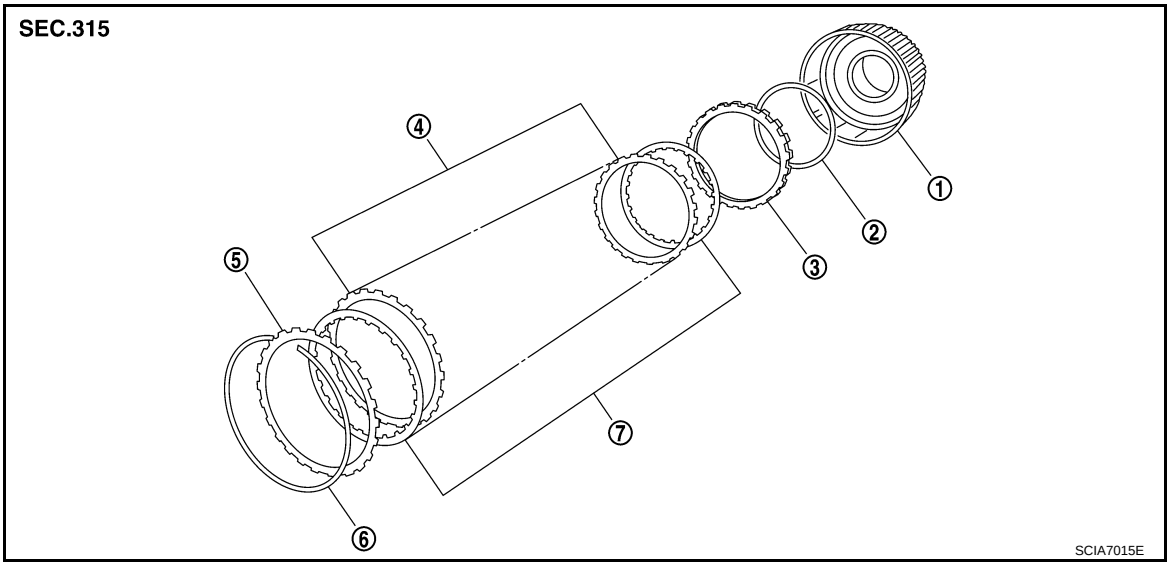

1. Direct clutch drum
2. Dish plate
3. Retaining plate
4. Driven plate
5. Retaining plate
6. Snap ring
7. Drive plate

Disassembly

INFOID:0000000001672320

1. Using a flat-bladed screwdriver, remove snap ring from direct clutch drum.
2. Remove drive plates, driven plates, dish plate and retaining plates from direct clutch drum.

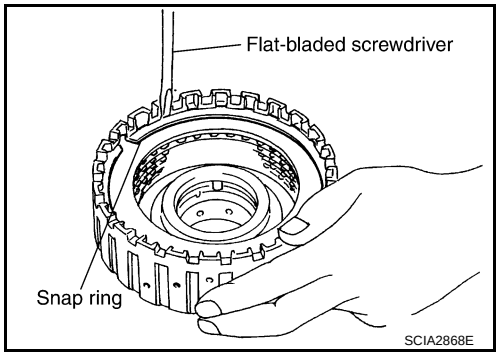

Assembly

INFOID:0000000001672321

1. Install drive plates, driven plates, dish plate and retaining plates in direct clutch drum.
   CAUTION:
   Check the order of plates.

1	: Snap ring
2	: Retaining plate
3	: Drive plate
4	: Driven plate
5	: Dish plate
5 / 4	: Drive plate / Driven plate

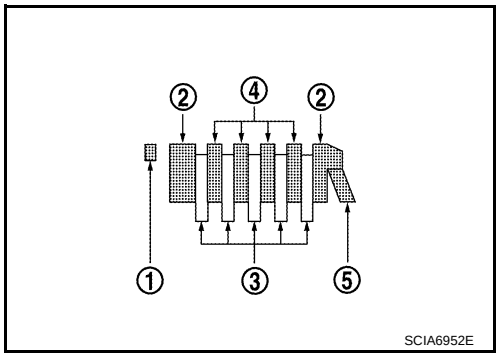

2. Using a flat-bladed screwdriver, install snap ring in direct clutch drum.

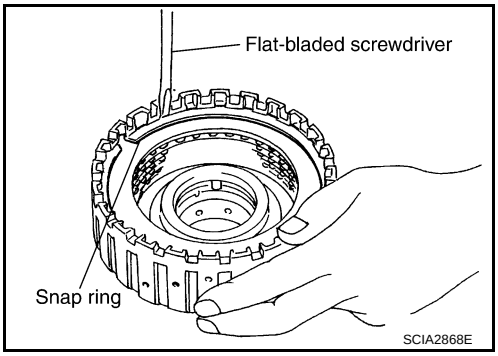

Inspection

INFOID:0000000001672322

Check the following, and replace direct clutch assembly if necessary.

- Direct Clutch Snap Ring
  Check for deformation, fatigue or damage.
- Direct Clutch Drive Plates and Driven Plates
  Check facing for burns, cracks or damage.
- Direct Clutch Dish Plate and Retaining Plates
  Check facing for burns, cracks or damage.

SERVICE DATA AND SPECIFICATIONS (SDS)

SERVICE DATA AND SPECIFICATIONS (SDS)

General Specification

INFOID:0000000001672323

Applied model		VQ37VHR engine
Automatic transmission model		RE5R05A
Transmission model code number		97X3C
Stall torque ratio		1.81 : 1
Transmission gear ratio	1st	3.842
	2nd	2.353
	3rd	1.529
	4th	1.000
	5th	0.839
	Reverse	2.765
Recommended fluid		Genuine NISSAN Matic J ATF*1
Fluid capacity		10.3 liter (10-7/8 US qt, 9-1/8 Imp qt)*2

CAUTION:
- **Use only Genuine NISSAN Matic J ATF. Do not mix with other fluid.**
- **Using ATF other than Genuine NISSAN Matic J ATF will cause deterioration of driveability and A/T durability, and may damage the A/T, which is not covered by the NISSAN new vehicle limited warranty.**

- *1: Refer to MA-10, "Fluids and Lubricants".
- *2: The fluid capacity is the reference value. Check the fluid level with A/T fluid level gauge.

Vehicle Speed at Which Gear Shifting Occurs

INFOID:0000000001672324

Throttle position	Vehicle speed km/h (MPH)							
	$D_1 \rightarrow D_2$	$D_2 \rightarrow D_3$	$D_3 \rightarrow D_4$	$D_4 \rightarrow D_5$	$D_5 \rightarrow D_4$	$D_4 \rightarrow D_3$	$D_3 \rightarrow D_2$	$D_2 \rightarrow D_1$
Full throttle	58 – 62 (36 – 39)	95 – 103 (59 – 64)	149 – 159 (93 – 99)	214 – 224 (133 – 139)	210 – 220 (131 – 137)	139 – 149 (86 – 93)	81 – 89 (50 – 55)	32 – 36 (20 – 22)
Half throttle	47 – 51 (29 – 32)	75 – 81 (47 – 50)	105 – 113 (65 – 70)	140 – 148 (87 – 92)	100 – 108 (62 – 67)	56 – 64 (35 – 40)	26 – 32 (16 – 20)	8 – 12 (5 – 7)

- At half throttle, the accelerator opening is 4/8 of the full opening.

Vehicle Speed at Which Lock-up Occurs/Releases

INFOID:0000000001672325

Throttle position	Vehicle speed km/h (MPH)	
	Lock-up ON	Lock-up OFF
Closed throttle	40 – 48 (25 – 30)	19 – 27 (12 – 17)
Half throttle	140 – 148 (87 – 92)	67 – 75 (42 – 47)

- At closed throttle, the accelerator opening is less than 1/8 condition. (Closed throttle position signal OFF)
- At half throttle, the accelerator opening is 4/8 of the full opening.

Stall Speed

INFOID:0000000001672326

Stall speed	2,650 – 2,950 rpm

Line Pressure

INFOID:0000000001672327

Engine speed	Line pressure kPa (kg/cm^2, psi)	
	"R" position	"D" and "M" positions
At idle speed	425 – 465 (4.3 – 4.7, 62 – 67)	379 – 428 (3.9 – 4.4, 55 – 62)
At stall speed	1,605 – 1,950 (16.4 – 19.9, 233 – 283)	1,310 – 1,500 (13.4 – 15.3, 190 – 218)

Turbine Revolution Sensor

INFOID:0000000001672328

Name	Condition	Data (Approx.)
Turbine revolution sensor 1	When running at 50 km/h (31 MPH) in 4th speed witch the closed throttle position signal OFF.	1.3 kHz
Turbine revolution sensor 2	When running at 20 km/h (12 MPH) in 1st speed witch the closed throttle position signal OFF.	

Vehicle Speed Sensor A/T (Revolution Sensor)

INFOID:0000000001672329

Name	Condition	Data (Approx.)
Revolution sensor	When running at 20 km/h (12 MPH).	185 Hz

Reverse Brake

INFOID:0000000001672330

Model code number		97X3C
Number of drive plates		6
Number of driven plates		6
Clearance mm (in)	Standard	0.7 – 1.1 (0.028 – 0.043)
Thickness of retaining plates		Thickness mm (in)
		4.2 (0.165) 4.4 (0.173) 4.6 (0.181) 4.8 (0.189) 5.0 (0.197) 5.2 (0.205)

Total End Play

INFOID:0000000001672331

Total end play mm (in)	0.25 – 0.55 (0.0098 – 0.0217)

BEARING RACE FOR ADJUSTING TOTAL END PLAY

Thickness mm (in)
0.8 (0.031) 1.0 (0.039) 1.2 (0.047) 1.4 (0.055) 1.6 (0.063) 1.8 (0.071)

Torque Converter

INFOID:0000000001672332

Distance between end of converter housing and torque converter mm (in)	25.0 (0.98) or more