SECTION EI
EXTERIOR & INTERIOR

CONTENTS

PRECAUTIONS

PFP:00001

Precautions for Supplemental Restraint System (SRS) “AIR BAG” and “SEAT BELT PRE-TENSIONER”

AIS002EV

The Supplemental Restraint System such as “AIR BAG” and “SEAT BELT PRE-TENSIONER”, used along with a front seat belt, helps to reduce the risk or severity of injury to the driver and front passenger for certain types of collision. This system includes seat belt switch inputs and dual stage front air bag modules. The SRS system uses the seat belt switches to determine the front air bag deployment, and may only deploy one front air bag, depending on the severity of a collision and whether the front occupants are belted or unbelted.
Information necessary to service the system safely is included in the SRS and SB section of this Service Manual.

WARNING:

- **To avoid rendering the SRS inoperative, which could increase the risk of personal injury or death in the event of a collision which would result in air bag inflation, all maintenance must be performed by an authorized NISSAN/INFINITI dealer.**
- **Improper maintenance, including incorrect removal and installation of the SRS, can lead to personal injury caused by unintentional activation of the system. For removal of Spiral Cable and Air Bag Module, see the SRS section.**
- **Do not use electrical test equipment on any circuit related to the SRS unless instructed to in this Service Manual. SRS wiring harnesses can be identified by yellow and/or orange harnesses or harness connectors.**

Precautions

AIS001IA

- When removing or disassembling any part, be careful not to damage or deform it. Protect parts, which may get in the way with cloth.
- When removing parts with a screwdriver or other tool, protect parts by wrapping them with vinyl or tape.
- Keep removed parts protected with cloth.
- If a clip is deformed or damaged, replace it.
- If an unreusable part is removed, replace it with a new one.
- Tighten bolts and nuts firmly to the specified torque.
- After re-assembly has been completed, make sure each part functions correctly.
- Remove stains in the following way.

Water-soluble stains:
Dip a soft cloth in warm water, and then squeeze it tightly. After wiping the stain, wipe with a soft dry cloth.
Oil stain:
Dissolve a synthetic detergent in warm water (density of 2 to 3% or less), dip the cloth, then clean off the stain with the cloth. Next, dip the cloth in fresh water and squeeze it tightly. Then clean off the detergent completely. Then wipe the area with a soft dry cloth.

- Do not use any organic solvent, such as thinner or benzine.

PREPARATION

PFP:00002

Special Service Tools

AIS001IB

The actual shapes of Kent-Moore tools may differ from those of special service tools illustrated here.

Tool number (Kent-Moore No.) Tool name		Description
(J-39570) Chassis ear	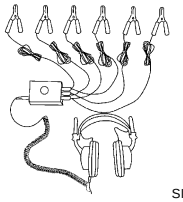 SIIA0993E	Locating the noise
(J-43980) NISSAN Squeak and Rattle Kit	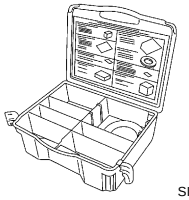 SIIA0994E	Repairing the cause of noise

Commercial Service Tool

AIS001IC

Tool name		Description
Engine ear	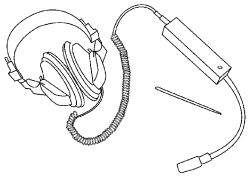 SIIA0995E	Locating the noise

SQUEAK AND RATTLE TROUBLE DIAGNOSES

PFP:00000

Work Flow

AIS001ID

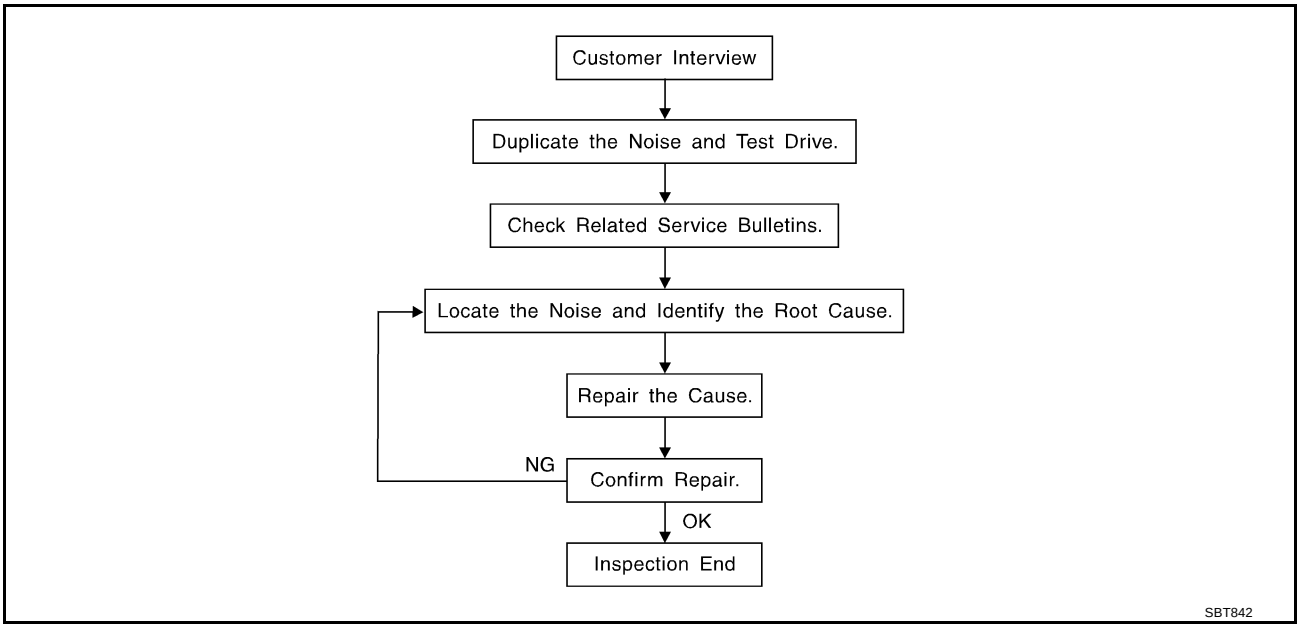

CUSTOMER INTERVIEW

Interview the customer if possible, to determine the conditions that exist when the noise occurs. Use the Diagnostic Worksheet during the interview to document the facts and conditions when the noise occurs and any customer's comments; refer to EI-9, "Diagnostic Worksheet" . This information is necessary to duplicate the conditions that exist when the noise occurs.

- The customer may not be able to provide a detailed description or the location of the noise. Attempt to obtain all the facts and conditions that exist when the noise occurs (or does not occur).
- If there is more than one noise in the vehicle, be sure to diagnose and repair the noise that the customer is concerned about. This can be accomplished by test driving the vehicle with the customer.
- After identifying the type of noise, isolate the noise in terms of its characteristics. The noise characteristics are provided so the customer, service adviser and technician are all speaking the same language when defining the noise.
- Squeak —(Like tennis shoes on a clean floor)
  Squeak characteristics include the light contact/fast movement/brought on by road conditions/hard surfaces=higher pitch noise/softer surfaces=lower pitch noises/edge to surface=chirping
- Creak—(Like walking on an old wooden floor)
  Creak characteristics include firm contact/slow movement/twisting with a rotational movement/pitch dependent on materials/often brought on by activity.
- Rattle—(Like shaking a baby rattle)
  Rattle characteristics include the fast repeated contact/vibration or similar movement/loose parts/missing clip or fastener/incorrect clearance.
- Knock —(Like a knock on a door)
  Knock characteristics include hollow sounding/sometimes repeating/often brought on by driver action.
- Tick—(Like a clock second hand)
  Tick characteristics include gentle contacting of light materials/loose components/can be caused by driver action or road conditions.
- Thump—(Heavy, muffled knock noise)
  Thump characteristics include softer knock/dead sound often brought on by activity.
- Buzz—(Like a bumble bee)
  Buzz characteristics include high frequency rattle/firm contact.
- Often the degree of acceptable noise level will vary depending upon the person. A noise that you may judge as acceptable may be very irritating to the customer.
- Weather conditions, especially humidity and temperature, may have a great effect on noise level.

DUPLICATE THE NOISE AND TEST DRIVE

If possible, drive the vehicle with the customer until the noise is duplicated. Note any additional information on the Diagnostic Worksheet regarding the conditions or location of the noise. This information can be used to duplicate the same conditions when you confirm the repair.
If the noise can be duplicated easily during the test drive, to help identify the source of the noise, try to duplicate the noise with the vehicle stopped by doing one or all of the following:

1) Close a door.
2) Tap or push/pull around the area where the noise appears to be coming from.
3) Rev the engine.
4) Use a floor jack to recreate vehicle “twist”.
5) At idle, apply engine load (electrical load, half-clutch on M/T model, drive position on A/T model).
6) Raise the vehicle on a hoist and hit a tire with a rubber hammer.

- Drive the vehicle and attempt to duplicate the conditions the customer states exist when the noise occurs.
- If it is difficult to duplicate the noise, drive the vehicle slowly on an undulating or rough road to stress the vehicle body.

CHECK RELATED SERVICE BULLETINS

After verifying the customer concern or symptom, check ASIST for Technical Service Bulletins (TSBs) related to that concern or symptom.
If a TSB relates to the symptom, follow the procedure to repair the noise.

LOCATE THE NOISE AND IDENTIFY THE ROOT CAUSE

1. Narrow down the noise to a general area. To help pinpoint the source of the noise, use a listening tool (Chassis Ear: J-39570, Engine Ear and mechanics stethoscope).
2. Narrow down the noise to a more specific area and identify the cause of the noise by:

- removing the components in the area that you suspect the noise is coming from.
  Do not use too much force when removing clips and fasteners, otherwise clips and fastener can be broken or lost during the repair, resulting in the creation of new noise.
- tapping or pushing/pulling the component that you suspect is causing the noise.
  Do not tap or push/pull the component with excessive force, otherwise the noise will be eliminated only temporarily.
- feeling for a vibration with your hand by touching the component(s) that you suspect is (are) causing the noise.
- placing a piece of paper between components that you suspect are causing the noise.
- looking for loose components and contact marks.
  Refer to EI-7, "Generic Squeak and Rattle Troubleshooting"

REPAIR THE CAUSE

- If the cause is a loose component, tighten the component securely.
- If the cause is insufficient clearance between components:
  - separate components by repositioning or loosening and retightening the component, if possible.
  - insulate components with a suitable insulator such as urethane pads, foam blocks, felt cloth tape or urethane tape. A Nissan Squeak and Rattle Kit (J43980) is available through your authorized Nissan Parts Department.

CAUTION:
Do not use excessive force as many components are constructed of plastic and may be damaged.
Always check with the Parts Department for the latest parts information.
The following materials are contained in the Nissan Squeak and Rattle Kit (J43980). Each item can be ordered separately as needed.
URETHANE PADS [1.5 mm (0.059 in) thick]
Insulates connectors, harness, etc.
76268-9E005: 100 × 135 mm (3.94 × 5.31 in)/76884-71L01: 60 × 85 mm (2.36 × 3.35 in)/76884-71L02: 15 × 25 mm (0.59 × 0.98 in)
INSULATOR (Foam blocks)
Insulates components from contact.Can be used to fill space behind a panel.
73982-9E000: 45 mm (1.77 in) thick, 50 × 50 mm (1.97 × 1.97 in)/73982-50Y00: 10 mm (0.39 in) think, 50 × 50 mm (1.97 × 1.97 in)

INSULATOR (Light foam block)
80845-71L00: 30 mm (1.18 in) thick, 30 × 50 mm (1.18 × 1.97 in)
FELT CLOTH TAPE
Used to insulate where movement does not occur.Ideal for instrument panel applications.
68370-4B000: 15 × 25 mm (0.59 × 0.98 in) pad/68239-13E00: 5 mm (0.20 in) wide tape roll
The following materials, not found in the kit, can also be used to repair squeaks and rattles.
UHMW (TEFLON) TAPE
Insulates where slight movement is present. Ideal for instrument panel applications.
SILICONE GREASE
Used in of UHMW tape that will be visible or not fit.
Note: Will only last a few months.
SILICONE SPRAY
Use when grease cannot be applied.
DUCT TAPE
Use to eliminate movement.

CONFIRM THE REPAIR

Confirm that the cause of a noise is repaired by test driving the vehicle. Operate the vehicle under the same conditions as when the noise originally occurred. Refer to the notes on the Diagnostic Worksheet.

Generic Squeak and Rattle Troubleshooting

AIS001IE

Refer to Table of Contents for specific component removal and installation information.

INSTRUMENT PANEL

Most incidents are caused by contact and movement between:

1. The cluster lid A and instrument panel
2. Acrylic lens and combination meter housing
3. Instrument panel to front pillar garnish
4. Instrument panel to windshield
5. Instrument panel mounting pins
6. Wiring harnesses behind the combination meter
7. A/C defroster duct and duct joint

These incidents can usually be located by tapping or moving the components to duplicate the noise or by pressing on the components while driving to stop the noise. Most of these incidents can be repaired by applying felt cloth tape or silicone spray (in hard to reach areas). Urethane pads can be used to insulate wiring harness.

CAUTION:
Do not use silicone spray to isolate a squeak or rattle. If you saturate the area with silicone, you will not be able to recheck the repair.

CENTER CONSOLE

Components to pay attention to include:

1. Shiftier assembly cover to finisher
2. A/C control unit and cluster lid C
3. Wiring harnesses behind audio and A/C control unit

The instrument panel repair and isolation procedures also apply to the center console.

DOORS

Pay attention to the:

1. Finisher and inner panel making a slapping noise
2. Inside handle escutcheon to door finisher
3. Wiring harnesses tapping
4. Door striker out of alignment causing a popping noise on starts and stops

Tapping or moving the components or pressing on them while driving to duplicate the conditions can isolate many of these incidents. You can usually insulate the areas with felt cloth tape or insulator foam blocks from the Nissan Squeak and Rattle Kit (J-43980) to repair the noise.

TRUNK

Trunk noises are often caused by a loose jack or loose items put into the trunk by the owner.
In addition look for:

1. Trunk lid dumpers out of adjustment
2. Trunk lid striker out of adjustment
3. The trunk lid torsion bars knocking together
4. A loose license plate or bracket

Most of these incidents can be repaired by adjusting, securing or insulating the item(s) or component(s) causing the noise.

SUNROOF/HEADLINING

Noises in the sunroof/headlining area can often be traced to one of the following:

1. Sunroof lid, rail, linkage or seals making a rattle or light knocking noise
2. Sunvisor shaft shaking in the holder
3. Front or rear windshield touching headlining and squeaking

Again, pressing on the components to stop the noise while duplicating the conditions can isolate most of these incidents. Repairs usually consist of insulating with felt cloth tape.

SEATS

When isolating seat noise it's important to note the position the seat is in and the load placed on the seat when the noise is present. These conditions should be duplicated when verifying and isolating the cause of the noise.
Cause of seat noise include:

1. Headrest rods and holder
2. A squeak between the seat pad cushion and frame
3. The rear seatback lock and bracket

These noises can be isolated by moving or pressing on the suspected components while duplicating the conditions under which the noise occurs. Most of these incidents can be repaired by repositioning the component or applying urethane tape to the contact area.

UNDERHOOD

Some interior noise may be caused by components under the hood or on the engine wall. The noise is then transmitted into the passenger compartment.
Causes of transmitted underhood noise include:

1. Any component mounted to the engine wall
2. Components that pass through the engine wall
3. Engine wall mounts and connectors
4. Loose radiator mounting pins
5. Hood bumpers out of adjustment
6. Hood striker out of adjustment

These noise can be difficult to isolate since they cannot be reached from the interior of the vehicle. The best method is to secure, move or insulate one component at a time and test drive the vehicle. Also, engine RPM or load can be changed to isolate the noise. Repairs can usually be made by moving, adjusting securing, or insulating the component causing the noise.

Diagnostic Worksheet

AIS001IF

INFINITI®

SQUEAK & RATTLE DIAGNOSTIC WORKSHEET

Dear Infiniti Customer:
We are concerned about your satisfaction with your Infiniti vehicle. Repairing a squeak or rattle sometimes can be very difficult. To help us fix your Infiniti right the first time, please take a moment to note the area of the vehicle where the squeak or rattle occurs and under what conditions. You may be asked to take a test drive with a service advisor or technician to ensure we confirm the noise you are hearing.

I. WHERE DOES THE NOISE COME FROM? (circle the area of the vehicle)

The illustrations are for reference only, and may not reflect the actual configuration of your vehicle.

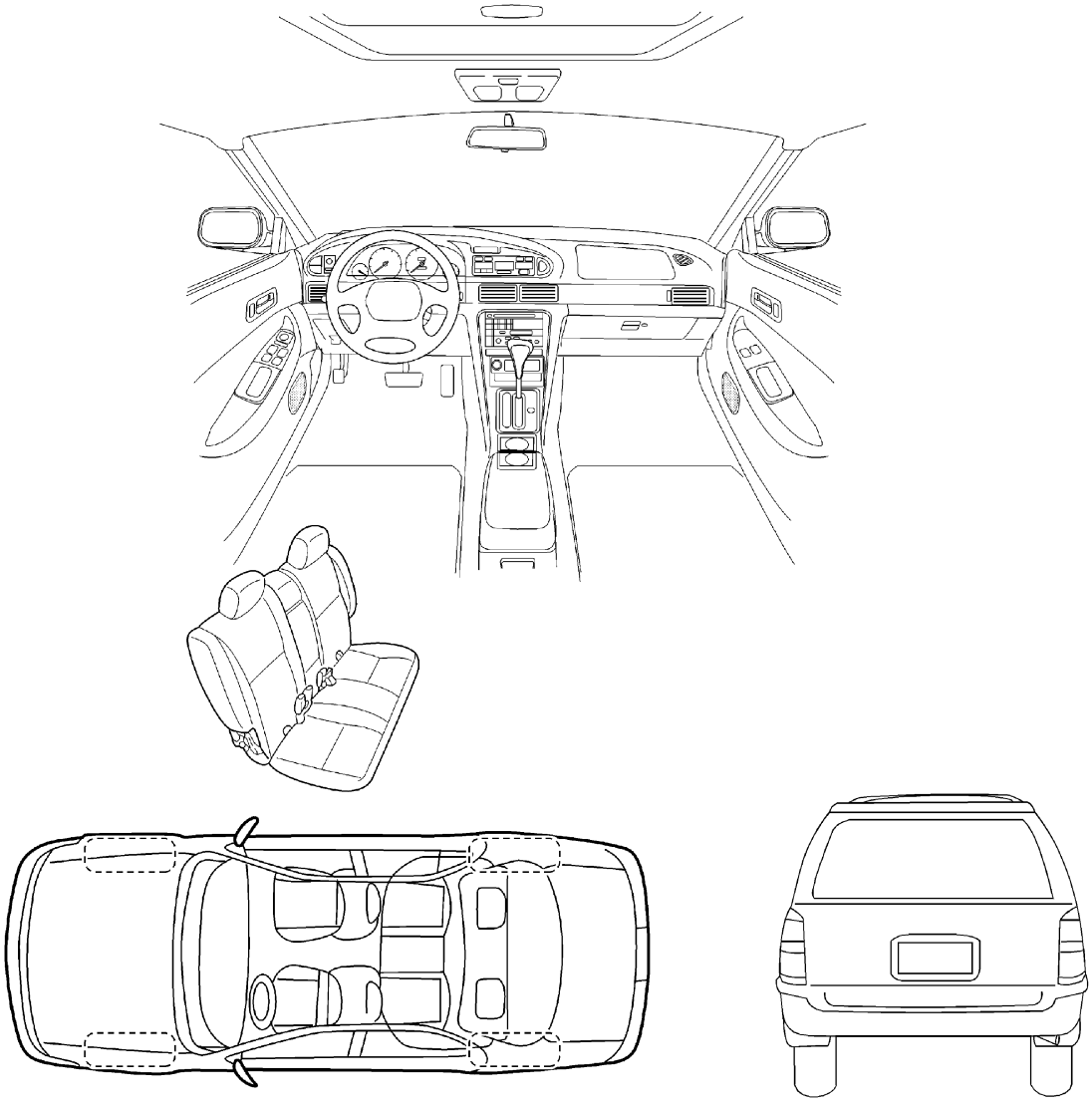

Continue to the back of the worksheet and briefly describe the location of the noise or rattle.
In addition, please indicate the conditions which are present when the noise occurs.

SBT860

SQUEAK & RATTLE DIAGNOSTIC WORKSHEET- page 2

Briefly describe the location where the noise occurs:

_____

_____

II. WHEN DOES IT OCCUR? (check the boxes that apply)

- ❑ anytime
- ❑ 1st time in the morning
- ❑ only when it is cold outside
- ❑ only when it is hot outside
- ❑ after sitting out in the sun
- ❑ when it is raining or wet
- ❑ dry or dusty conditions
- ❑ other: _____

III. WHEN DRIVING:

- ❑ through driveways
- ❑ over rough roads
- ❑ over speed bumps
- ❑ only at about ____ mph
- ❑ on acceleration
- ❑ coming to a stop
- ❑ on turns : left, right or either (circle)
- ❑ with passengers or cargo
- ❑ other: _____
- ❑ after driving ____ miles or ____ minutes

IV. WHAT TYPE OF NOISE?

- ❑ squeak (like tennis shoes on a clean floor)
- ❑ creak (like walking on an old wooden floor)
- ❑ rattle (like shaking a baby rattle)
- ❑ knock (like a knock on a door)
- ❑ tick (like a clock second hand)
- ❑ thump (heavy, muffled knock noise)
- ❑ buzz (like a bumble bee)

TO BE COMPLETED BY DEALERSHIP PERSONNEL
Test Drive Notes:

_____

_____

	YES	NO	Initials of person performing
Vehicle test driven with customer	❑	❑	_____
- Noise verified on test drive	❑	❑	
- Noise source located and repaired	❑	❑	_____
- Follow up test drive performed to confirm repair	❑	❑	_____

VIN: _____ Customer Name: _____

W.O. #: _____ Date: _____

This form must be attached to Work Order

SBT844

CLIP AND FASTENER

PFP:76906

Description

AIS001IG

- Clips and fasteners in EI section correspond to the following numbers and symbols.

- Replace any clips and/or fasteners which are damaged during removal or installation.

Symbol No.	Shapes	Removal & Installation
C101		**Removal:** Remove by bending up with flat-bladed screwdrivers or clip remover.
C103		**Removal:** Remove with a clip remover.
C203		**Removal:** Push center pin to catching position. (Do not remove center pin by hitting it.) Push Push **Installation:**
C205		**Removal:** Flat-bladed screwdriver Clip Finisher
C206		**Removal:**

SIIA0315E

Symbol No.	Shapes	Removal & Installation
CE103		**Removal:**
CF110	Clip A Clip B	**Removal:** Finisher Clip A Flat-bladed screwdrivers Clip B
CF118	Clip A Clip B (Grommet)	**Removal:** Flat-bladed screwdrivers Finisher Body panel Clip A Clip B (Grommet)
CR103		**Removal:** Holder portion of clip must be spread out to remove rod.
CS101		**Removal:** 1. Screw out with a Phillips screwdriver. 2. Remove female portion with flat-bladed screwdriver.

SIIA0316E

Symbol No.	Shapes	Removal & Installation	
CG101		**Removal:** Rotate 45° to remove **Removal:**	**Installation:**
CS102			
CS113		**Removal:** Disconnect upper connection of clip with a flat-bladed screwdriver, then remove clip while inserting a flat-bladed screwdriver between body panel and clip.	
C111			

SIIA0317E

FRONT BUMPER

PFP:F2022

Removal and Installation

AIS001IH

CAUTION:

Bumper fascia is made of plastic. Do not use excessive force and be sure to keep oil away from it.

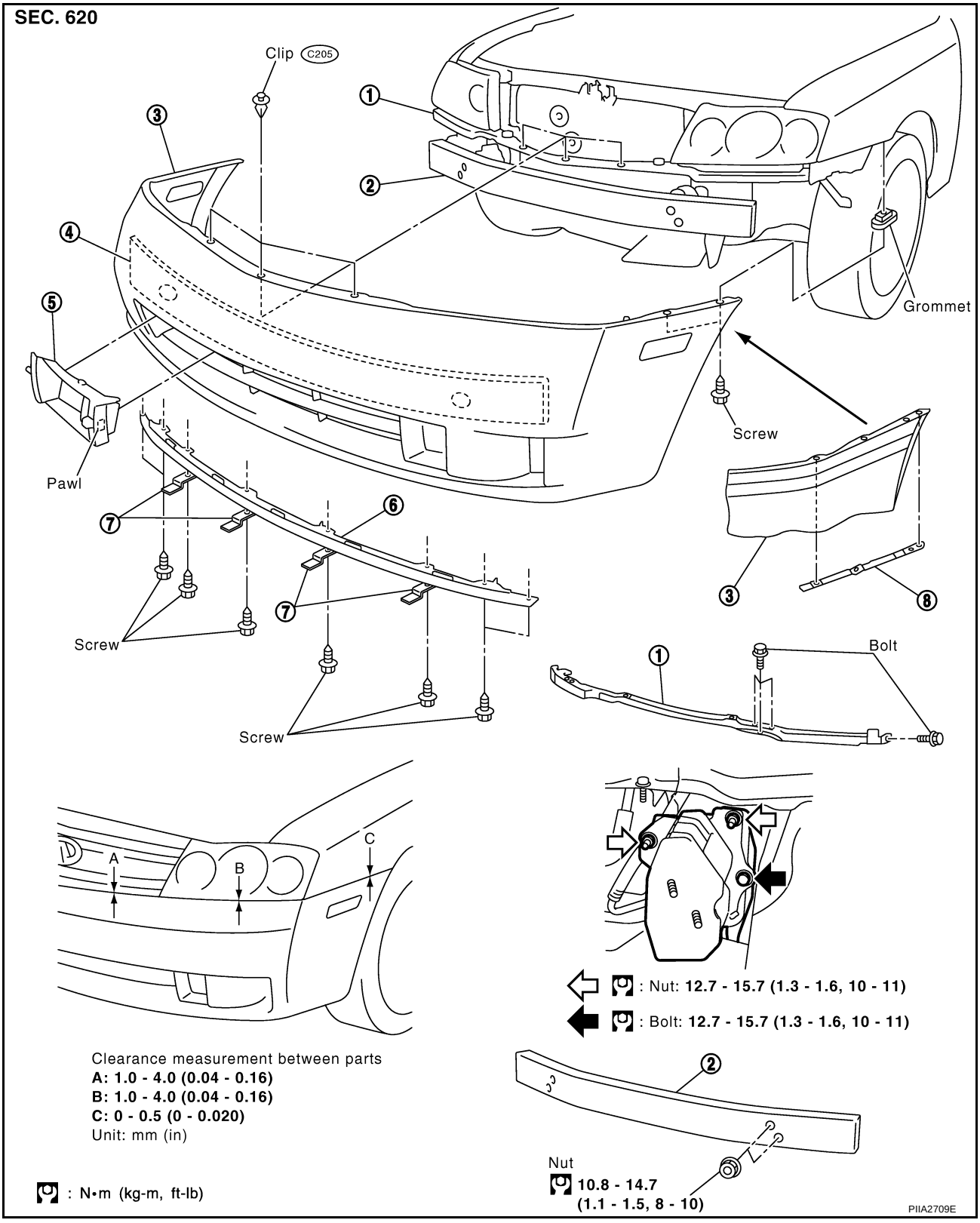

1. Bumper retainer upper
2. Bumper reinforcement
3. Bumper fascia

4. Energy absorber	5. ICC sensor cover	6. Front spoiler
7. Spoiler retainer	8. Bumper side bracket	

REMOVAL

1. Remove front grille. Refer to EI-19, "FRONT GRILLE" .
2. Remove bolts of engine undercover.
3. Remove front spoiler and spoiler retainer.
4. Remove bolts and clips of both right/left fender protectors (on front side). Refer to EI-21, "FENDER PROTECTOR" .
5. Remove screw of bumper fascia from both right/left front fenders.
6. Remove clips of bumper fascia from bumper retainer upper.
7. Disconnect fog lamp and front side marker lamp harness connector.
8. Remove bumper fascia.
9. Remove nuts of bumper reinforcement.
10. Remove bolts of bumper upper retainer.

INSTALLATION

Install in the reverse order of removal.

Removal of Bumper Side Brackets

Shave head of rivet with drill [4.0 to 4.5 mm (0.157 to 0.177 in) dia.]

Installation of Bumper Side Brackets

Install bracket to fascia firmly with hand riveter.

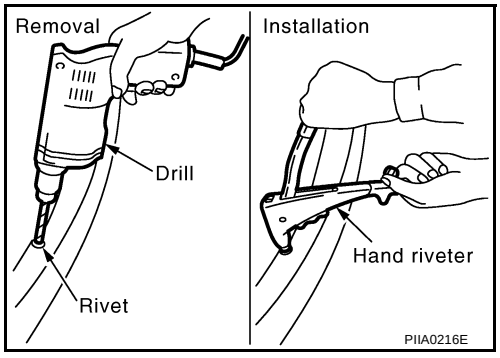

REAR BUMPER

PFP:H5022

Removal and Installation

AIS001II

CAUTION:
Bumper fascia is made of resin; do not apply pressure to or let oils contact its surface.

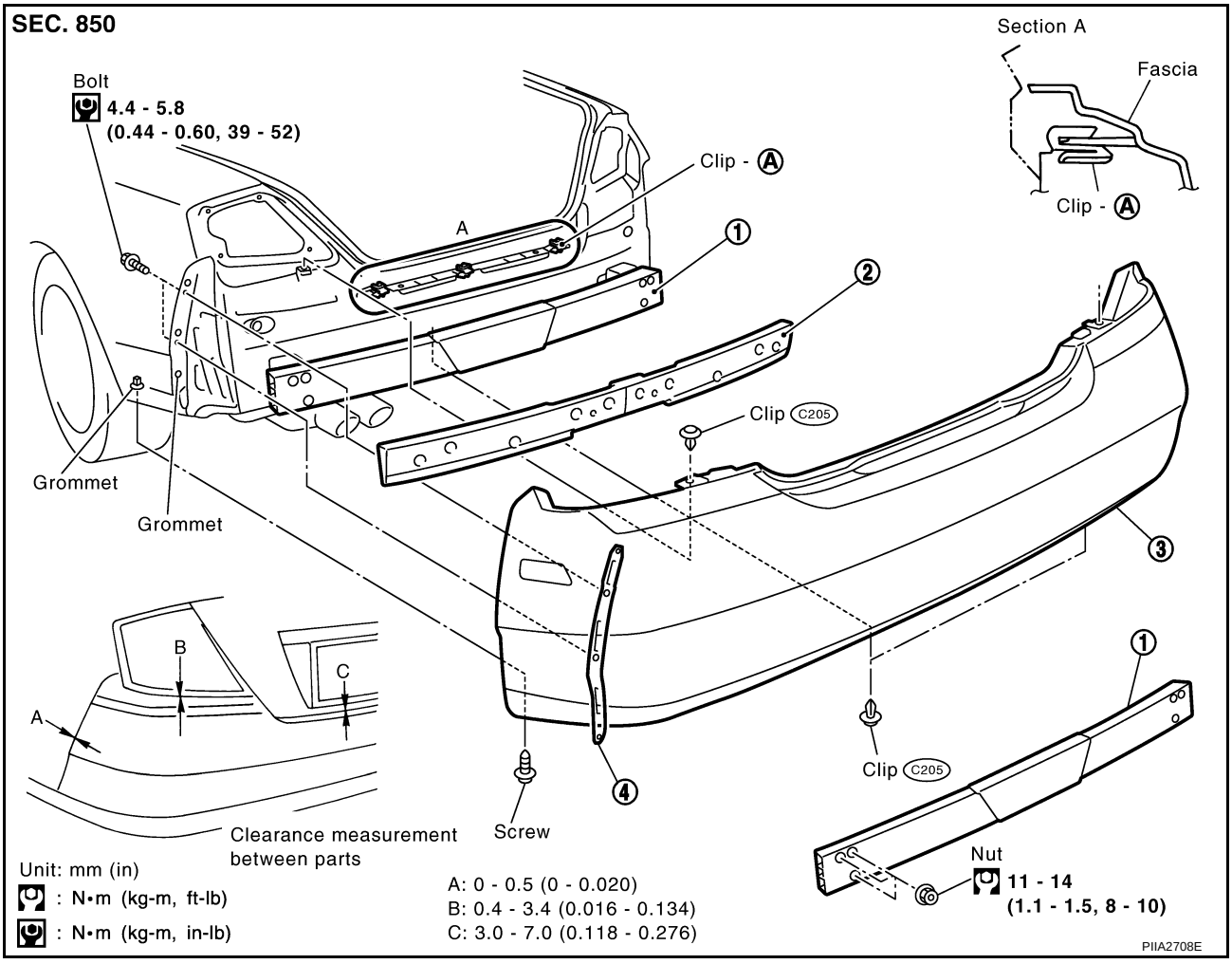

1. Bumper reinforcement
2. Energy absorber
3. Bumper fascia
4. Bumper side bracket

REMOVAL

1. Remove trunk room trim. Refer to EI-41, "TRUNK ROOM TRIM & TRUNK LID FINISHER" .
2. Remove rear combination lamp assembly. Refer to LT-123, "REAR COMBINATION LAMP" .
3. Remove screw of bumper fascia from both right/left rear fender.
4. Remove clips of bumper fascia upper portion.
5. Remove bolts of bumper fascia from both right/left rear fender.
6. Pull out center of bumper fascia, and remove bumper fascia from clips (A).
7. Remove bumper fascia.
8. Remove nuts of bumper reinforcement.

CAUTION:
To remove rear bumper molding, remove rear bumper center molding first, then rear bumper side molding, respectively.

INSTALLATION

Install in the reverse order of removal.

Removal of Bumper Side Brackets

Shave head of rivet with drill [4.0 to 4.5 mm (0.157 to 0.177 in) dia.]

Installation of Bumper Side Brackets

Install bracket to fascia firmly with hand rivetter.

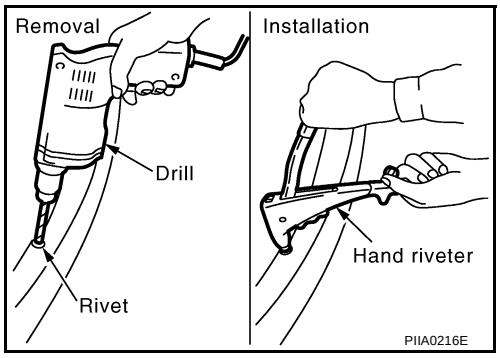

FRONT GRILLE

PFP:62310

Removal and Installation

AIS001IJ

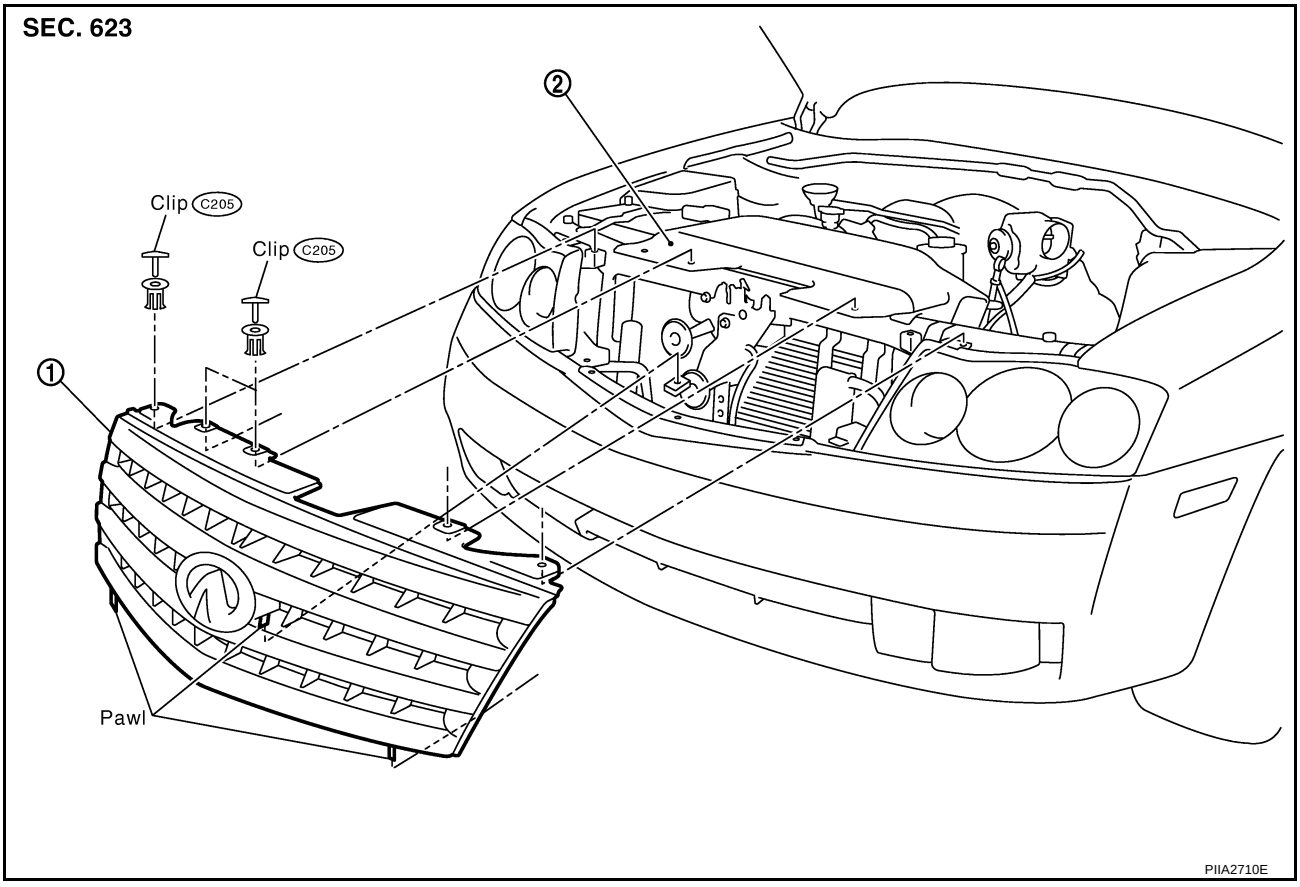

REMOVAL

1. Remove clips of front air cover.
2. Remove clips on upper side of front grille.
3. Pull out front grille from bumper fascia.

INSTALLATION

Install in the reverse order of removal.

COWL TOP

PFP:66100

Removal and Installation

AIS001IK

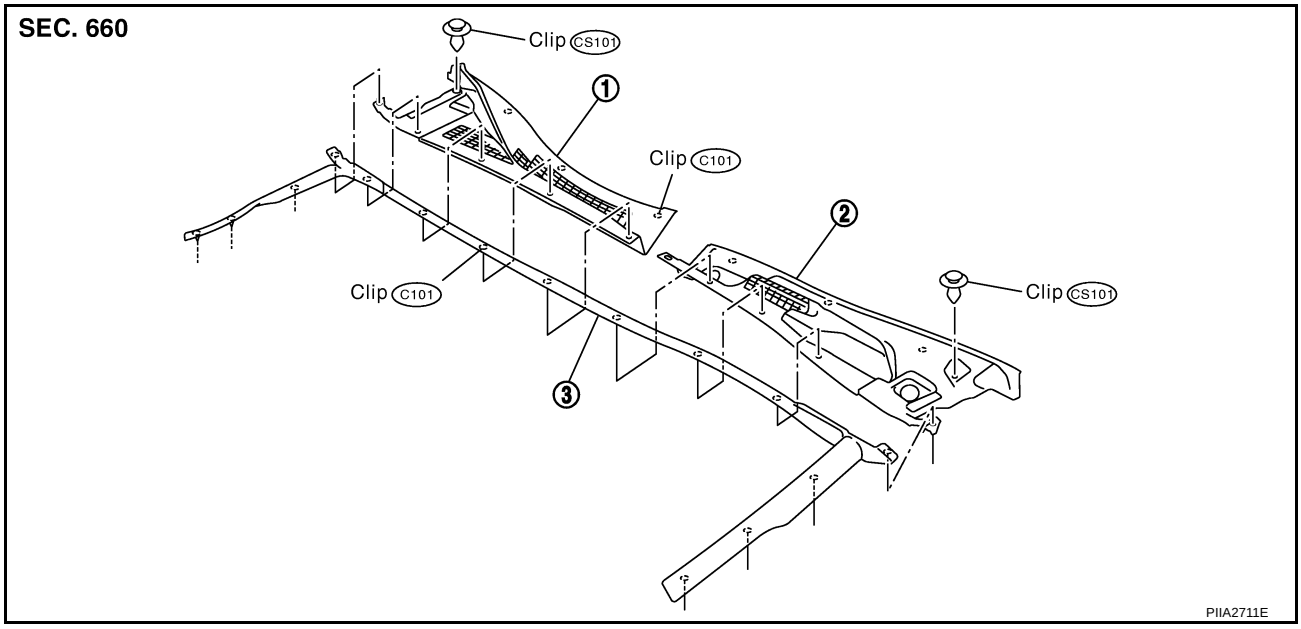

1. Cowl top cover (right)
2. Cowl top cover (left)
3. Cowl top seal rubber

REMOVAL

1. Remove right/left wiper arms. Refer to WW-21, "Removal and Installation of Front Wiper Motor and Linkage" .
2. Remove clips of cowl top seal rubber.
3. Remove clips of cowl top cover right and remove cowl top cover right.
4. Remove clips of cowl top cover left and remove cowl top cover left.

INSTALLATION

Install in the reverse order of removal.

FENDER PROTECTOR

PFP:63840

Removal and Installation

AIS001IL

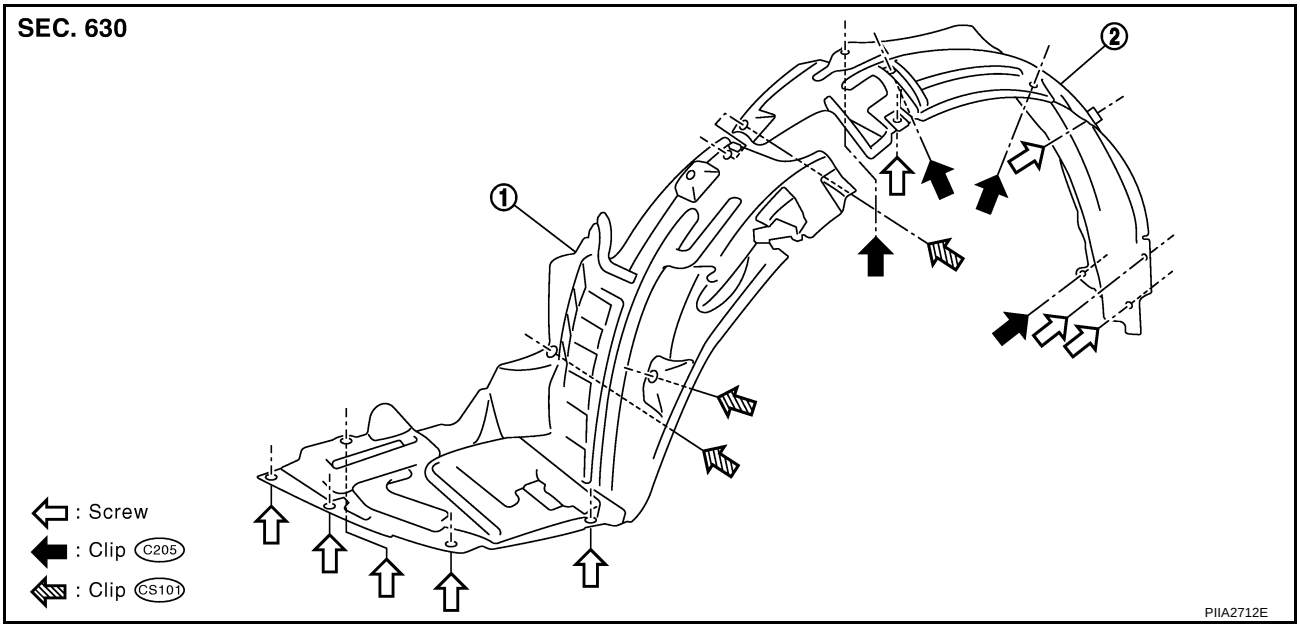

1. Fender protector (front)
2. Fender protector (rear)

REMOVAL

1. Remove screws of front portion fender protector (front).
2. Remove clips of arch portion fender protector (front and rear).
3. Remove screws of rear portion fender protector (rear).

INSTALLATION

Install in the reverse order of removal.

MUDGUARD

PFP:63854

Removal and Installation

AIS001IM

SEC. 767

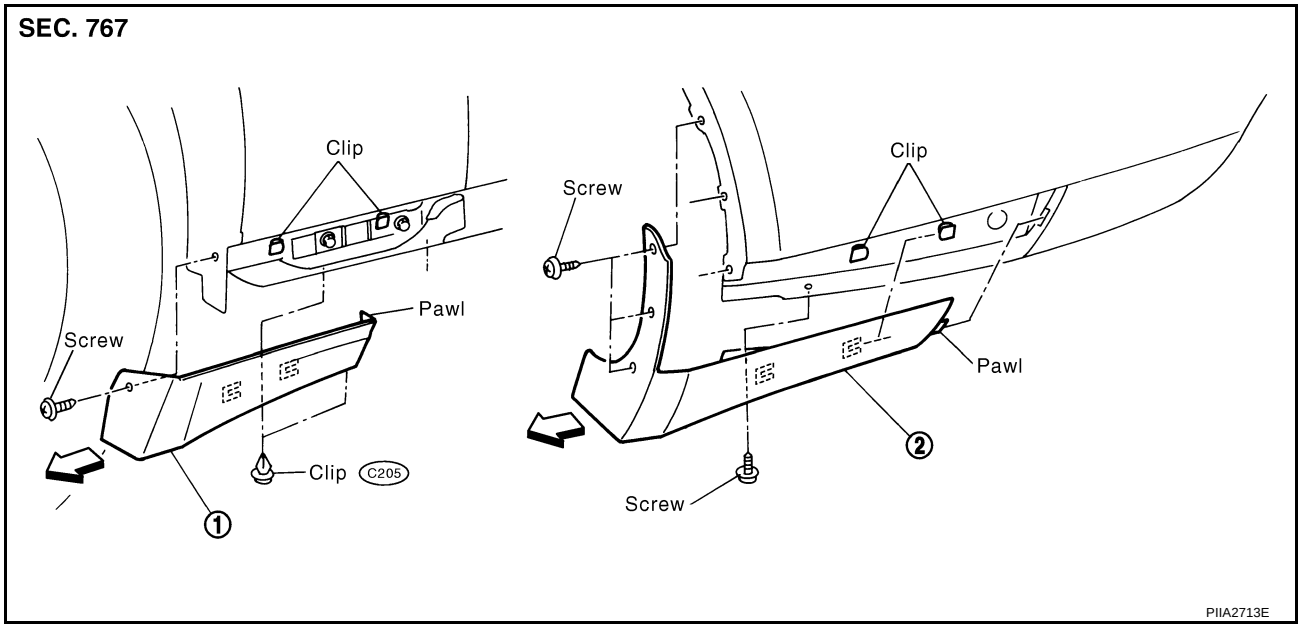

1. Mudguard front
2. Mudguard rear

MUDGUARD FRONT/REAR

Removal

1. Remove screws and clip of mudguard.
2. Pull out mudguard to of forward.

Installation

Install in the reverse order of removal.

WINDSHIELD MOLDING

PFP:72700

Removal and Installation

AIS001IN

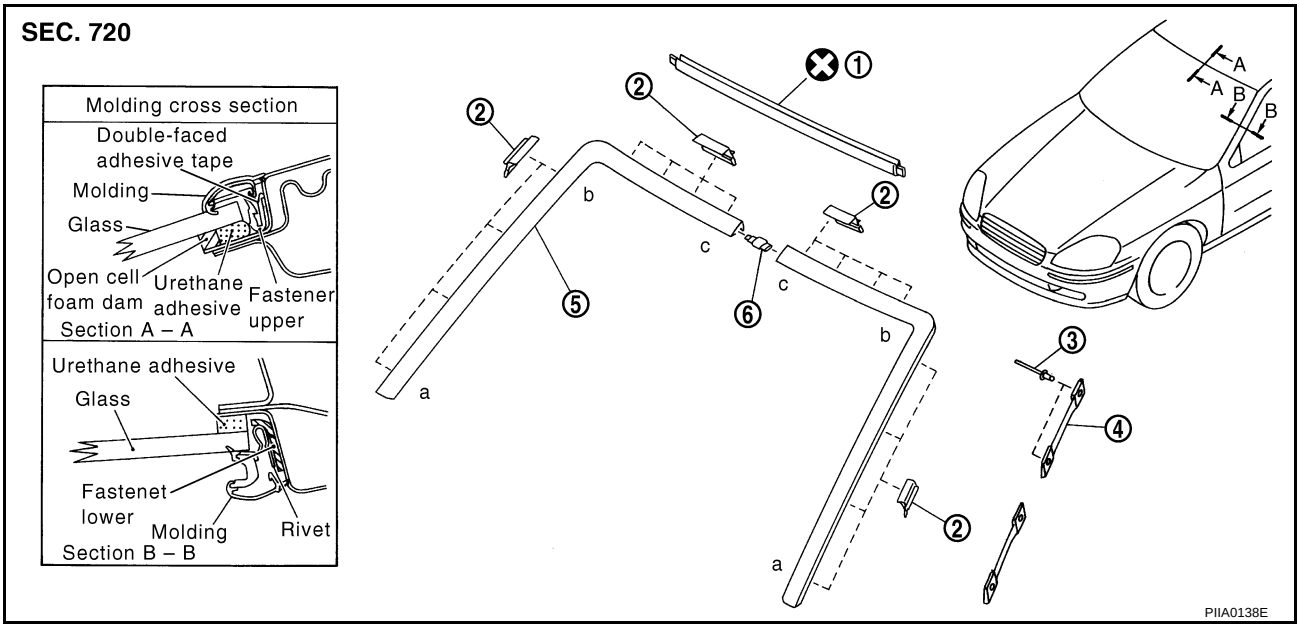

1. Fastener (upper)
2. Clip
3. Rivet
4. Fastener (lower)
5. Windshield molding
6. Joint

REMOVAL

1. Apply protective tape around outer circumference of windshield molding.
2. Disconnect clips in order of a and b. Pull upper part to outer side of vehicle.

INSTALLATION

1. Cut double-faced adhesive tape of fastener with cutter knife. Remove fastener (upper).
2. Remove any excess glue on windshield or flange with cutter knife.

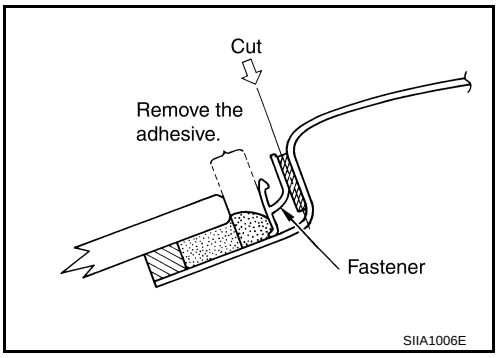

3. Remove remains of double-faced adhesive tape on flange with remover.

   CAUTION:
   Do not handle remover around fire or flame, or in closed areas.
4. Fix double-faced adhesive tape on new fastener on flange from center of vehicle to outer side with spatula.

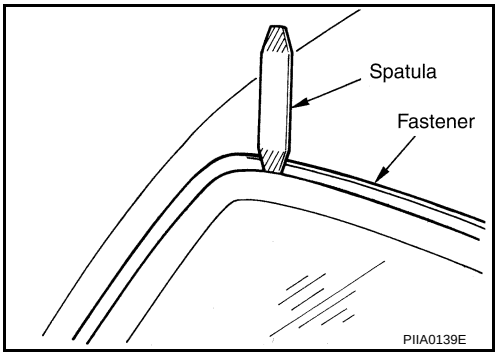

5. Connect clips in order of a and b.
6. Connect joint 6, then clips in order of b and c.

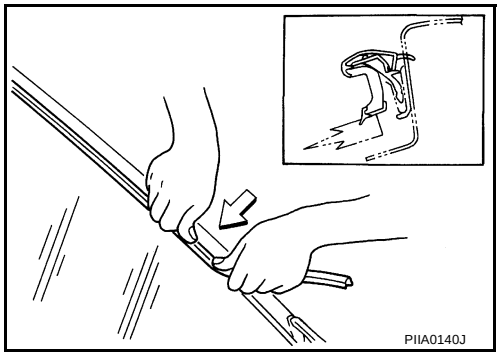

DRIP MOLDING

PFP:76810

Removal and Installation

AIS001IO

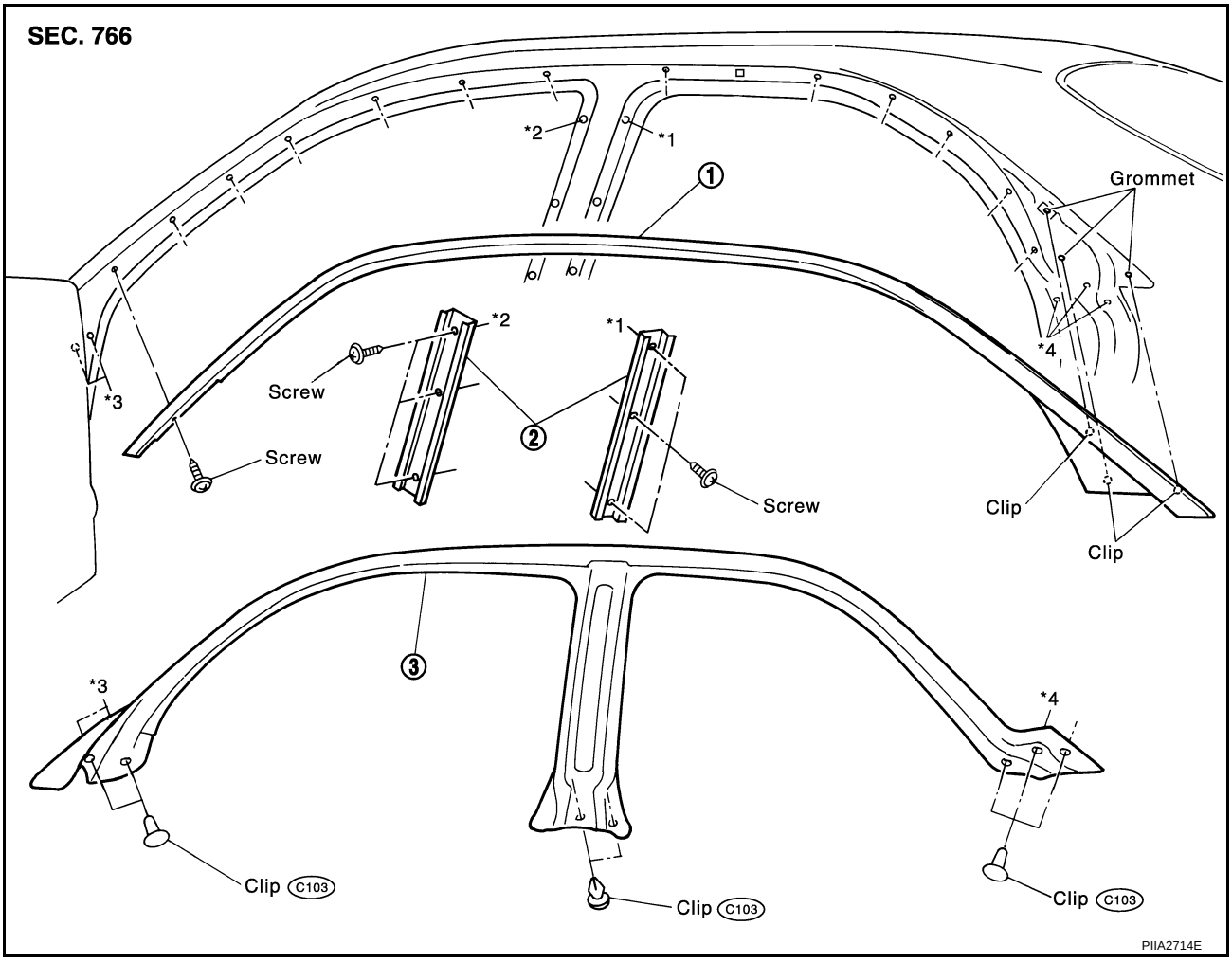

1. Drip molding
2. Retainer center
3. Body side weatherstrip

REMOVAL

1. Remove clips of body side weatherstrip, then remove body side weatherstrip.
2. Remove screws of retainer center, then remove retainer center.
3. Remove screw and clips of drip molding, then remove drip molding.

INSTALLATION

Install in the reverse order of removal.

CENTER PILLAR COVER

Removal

1. Lift and twist center pillar cover up from center pillar. Disconnect clips, and remove center pillar molding.

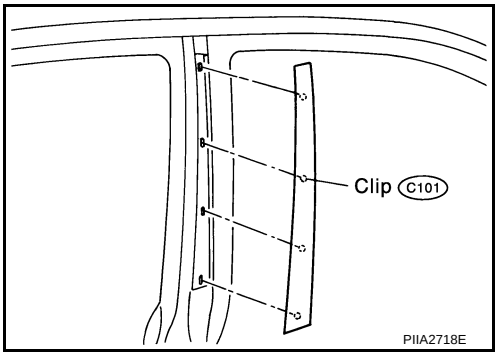

Installation

Install in the reverse order of removal.

DOOR OUTSIDE MOLDING

PFP:82820

Removal and Installation

AIS001IQ

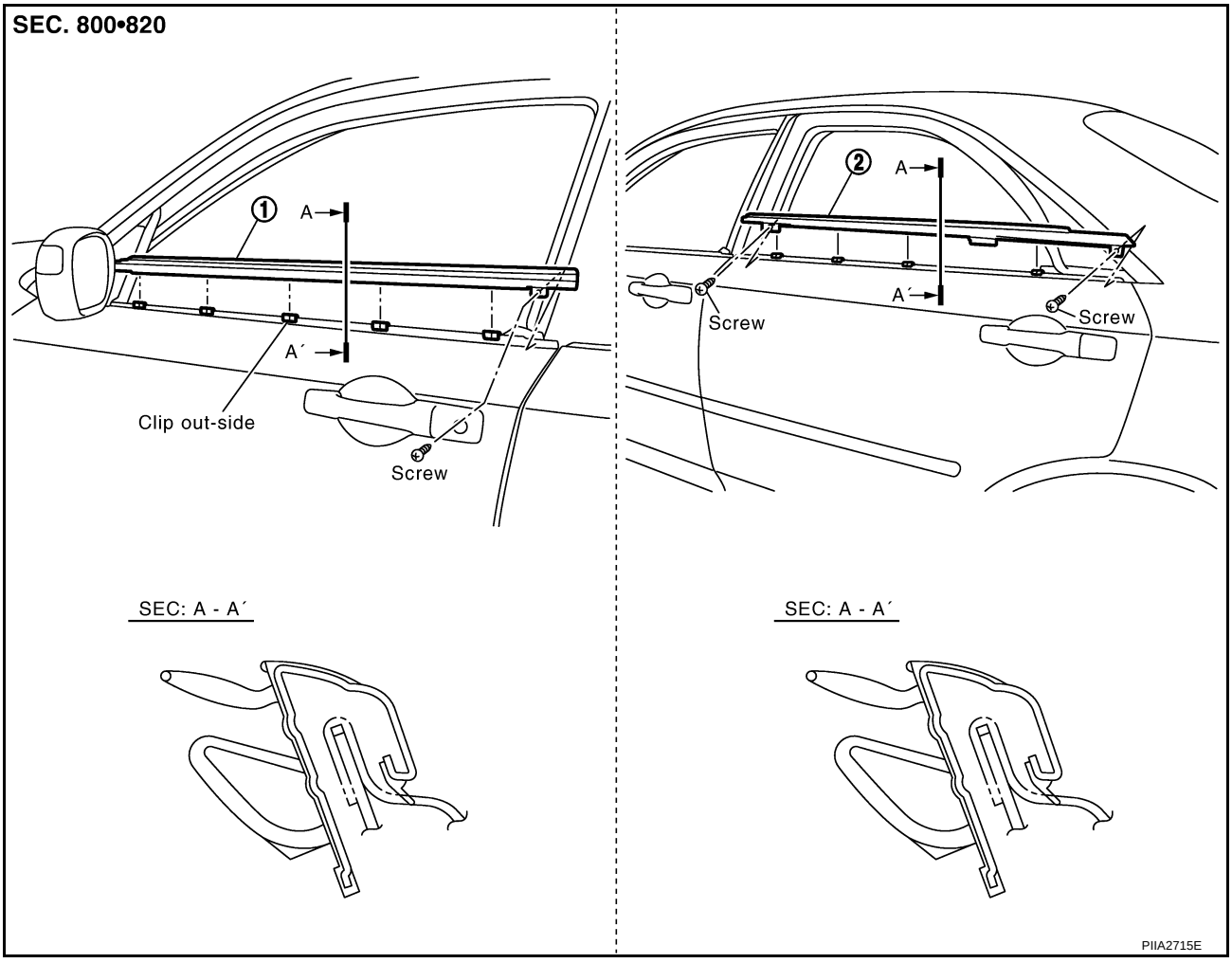

1. Front door outside molding
2. Rear door outside molding

FRONT DOOR OUTSIDE MOLDING

Removal

1. Open windows fully.
2. Remove screw of rear edge.
3. Lift and twist from rear side, disconnect clips from flange, and pull out molding to backward.

Installation

Install in the reverse order of removal.

REAR DOOR OUTSIDE MOLDING

Removal

1. Open windows fully.
2. Remove screws of front and rear edge.
3. Lift and twist from rear side, and disconnect clip from flange, and pull out molding to backward.

Installation

Install in the reverse order of removal.

DOOR OUTSIDE LOWER MOLDING

PFP:82877

Removal and Installation

AIS001NT

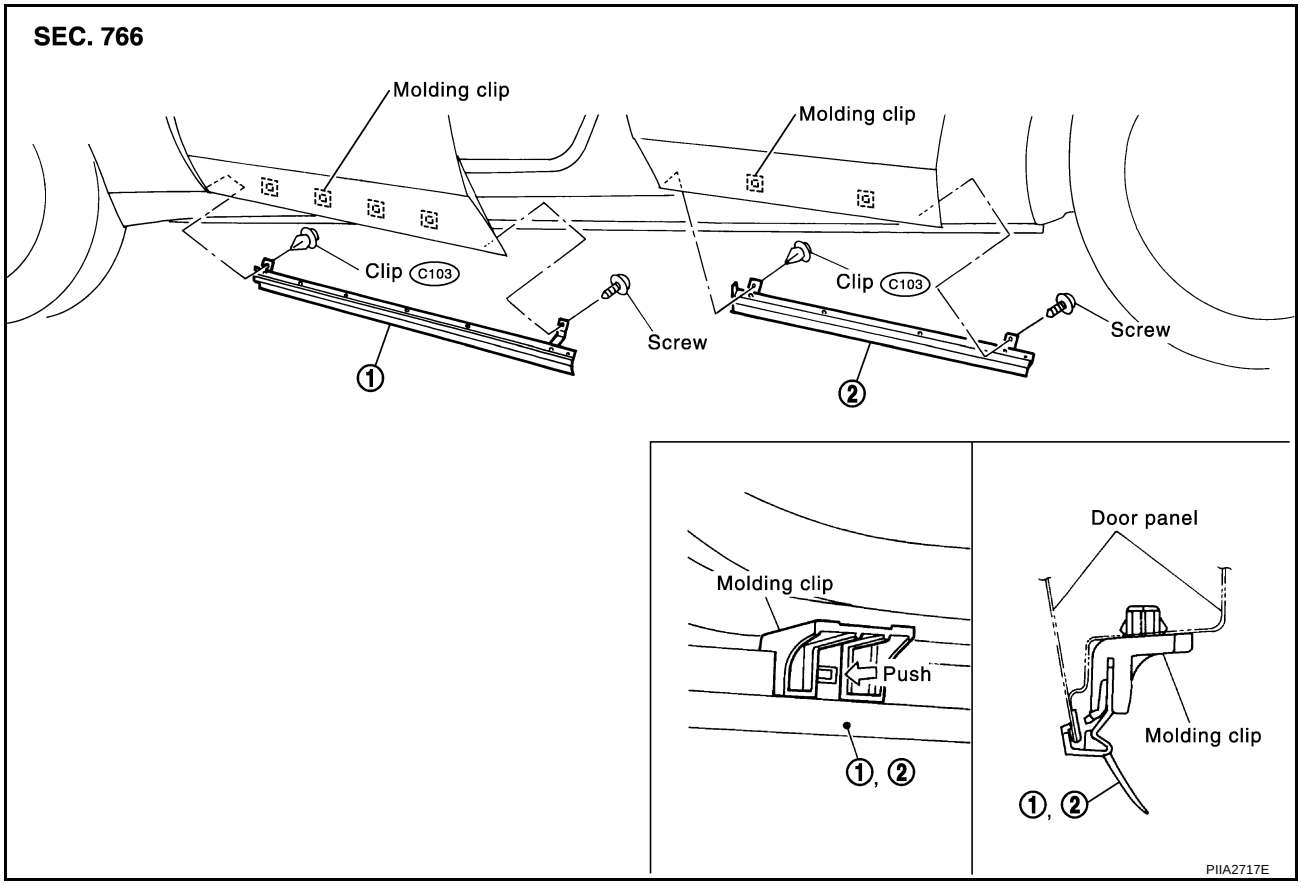

1. Front door outside lower molding
2. Rear door outside lower molding

REMOVAL

1. Open front and rear door.
2. Remove screws and clips of door outside lower molding.

INSTALLATION

Install in the reverse order of removal.

SIDE GUARD MOLDING

PFP:76840

Removal and Installation

AIS001IR

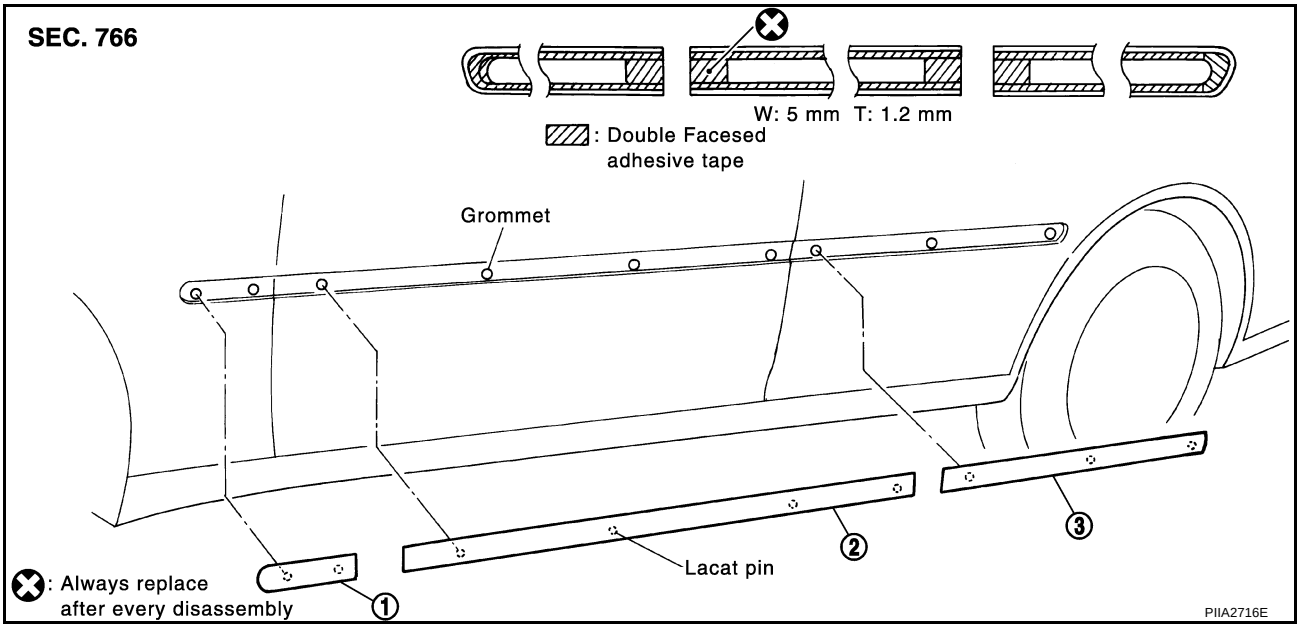

1. Side guard molding front
2. Side guard molding center
3. Side guard molding rear

REMOVAL

1. Apply masking tape around outer circumference of side guard molding.
2. Remove double-faced adhesive tapes with (wide) plastic lever. Disconnect clips and remove side guard molding.

INSTALLATION

1. Remove double-faced adhesive tape remaining on vehicle.
2. Clean contact surface of vehicle (to side guard molding), and install side guard molding to vehicle.

NOTE:

To re-use side guard molding, follow above steps 1 and 2 as well; clean surface after removing double-faced adhesive tape, apply new double-faced adhesive tape as shown in illustration, then install side guard molding to vehicle.

Double-faced adhesive tape	thickness: 6 mm (0.24 in) (upper side) thickness: 8 mm (0.31 in) (lower side)

CAUTION:

- **Do not let air between contact surfaces when installing.**
- **To secure contact, do not wash vehicle within 24 hours after installation.**

TRUNK LID FINISHER

PFP:84810

Removal and Installation

AIS001IS

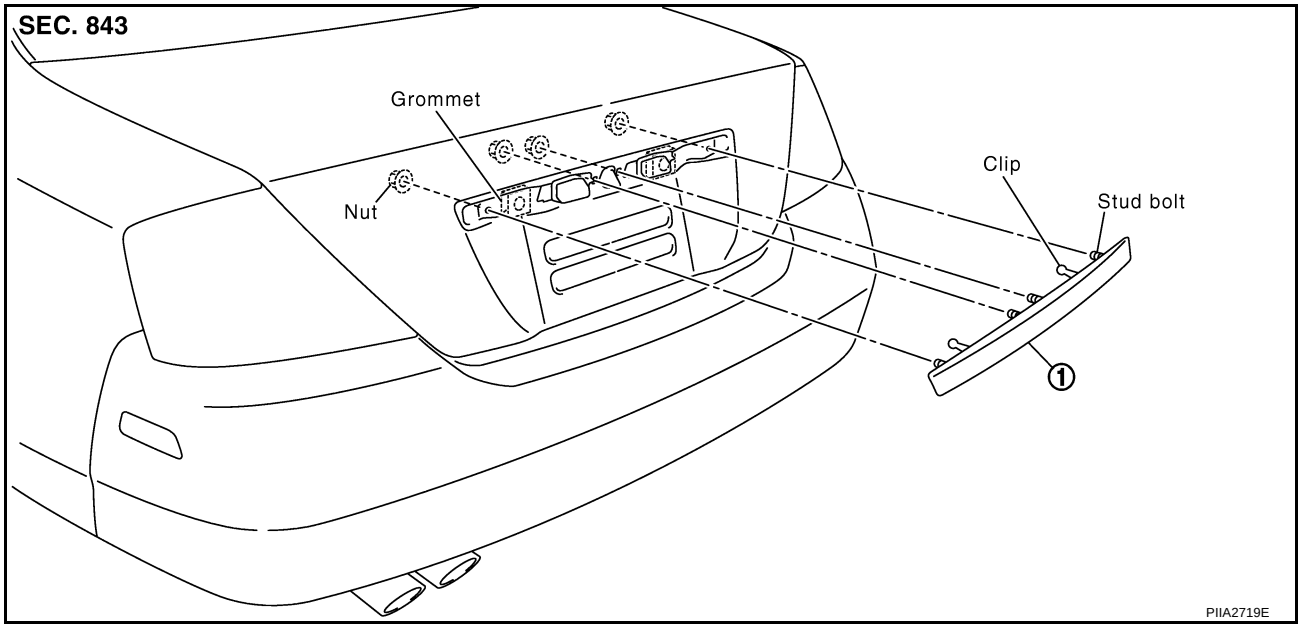

1. Trunk lid finisher

REMOVAL

1. Remove trunk lid finisher (inner).
2. Remove nuts and clips on trunk lid finisher.
3. Remove trunk lid finisher.

INSTALLATION

Install in the reverse order of removal.

DOOR FINISHER

PFP:80900

Removal and Installation

AIS001IT

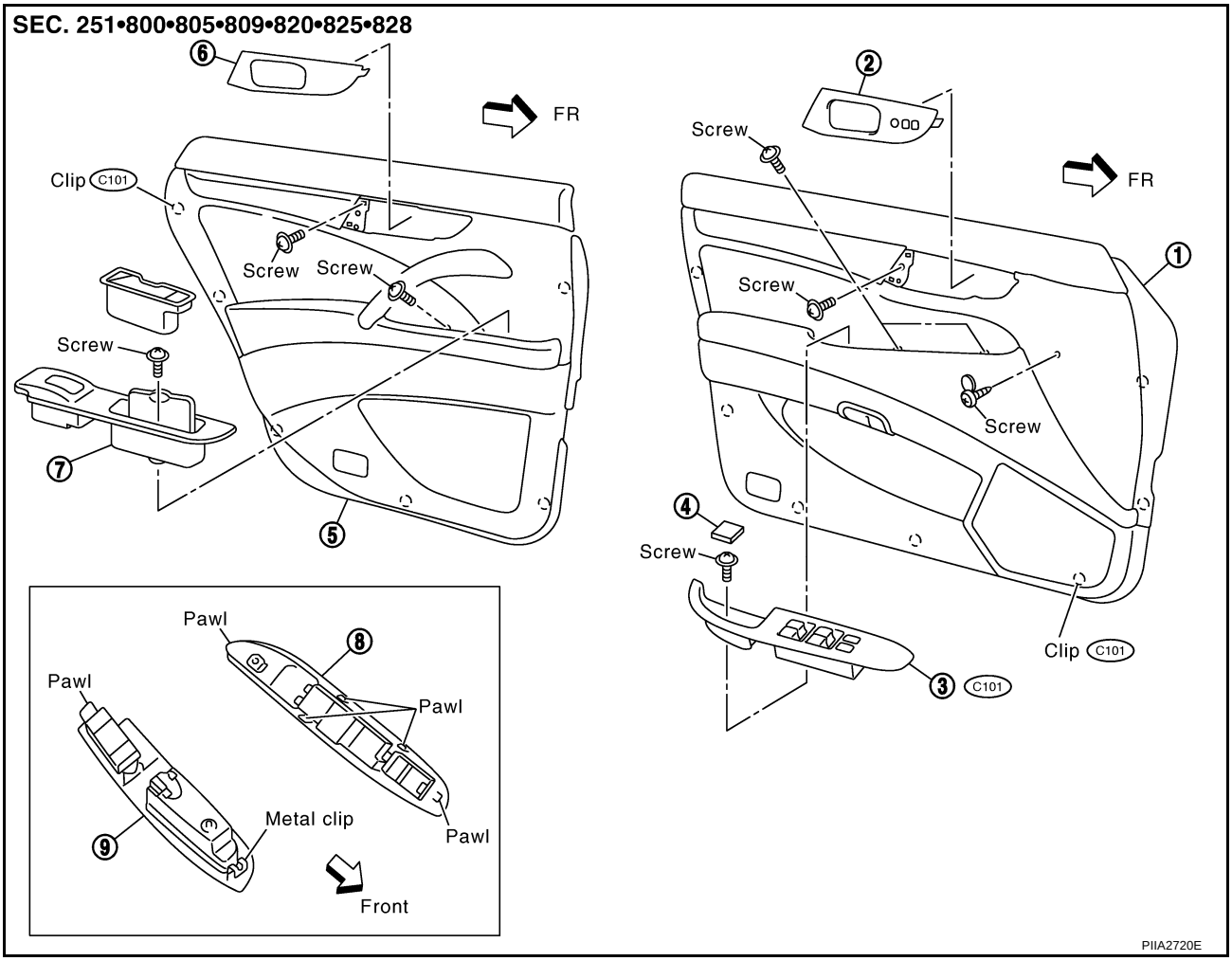

1.	Front door finisher	2.	Inside handle escutcheon (front)	3.	Power window main switch finisher
4.	Cap	5.	Rear door finisher	6.	Inside handle escutcheon (rear)
7.	Power window sub-switch (rear) finisher	8.	Power window main switch finisher (back side)	9.	Power window sub-switch (rear) finisher (back side)

FRONT DOOR FINISHER

Removal

1. Insert screw driver rolled with cloth or tapes into dip at rear of inside handle escutcheon, and pull it back to your side. Disconnect upper pawl, lower and front, and remove inside handle escutcheon.

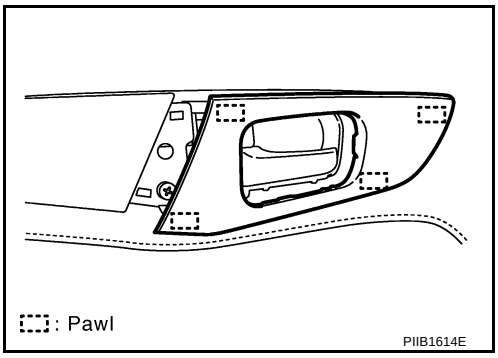

2. Remove cap and screw of power window main switch finisher.
3. Insert clip driver rolled with cloth into dip under power window main switch finisher, and lift up finisher. Insert your fingers between gaps, pull it back to your side and disconnect metal clips.
4. Disconnect power window main switch harness connector.

5. Remove screws of front door finisher.
6. Remove step lamp, and disconnect harness connectors.
7. Insert screw driver rolled with cloth into clips under door finisher, and disconnect clips.
8. Pull up door finisher, and remove connectors, inside handle cable and lock knob cable.

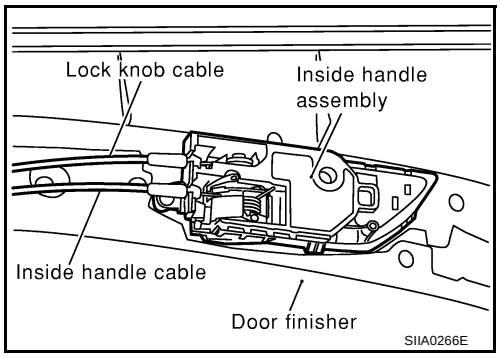

NOTE:
Insert screw driver rolled with cloth between panel on vehicle and clips (as indicated with arrow), and remove finisher.

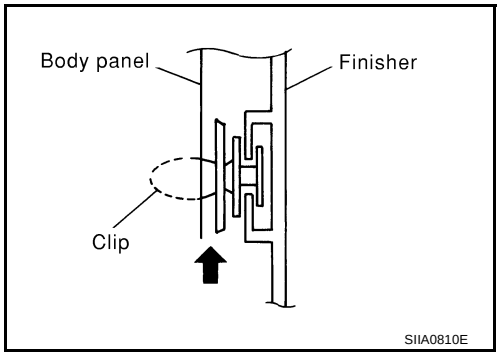

Installation

Install in the reverse over of removal.

CAUTION:
To install finisher, check if all clips are matched over holes of panel on vehicle, then push in.

REAR DOOR FINISHER

Removal

1. Insert screw driver rolled with cloth or tape into dip at rear of inside handle escutcheon, and pull it back to your side. Disconnect upper pawl, lower and front, and remove inside handle escutcheon.

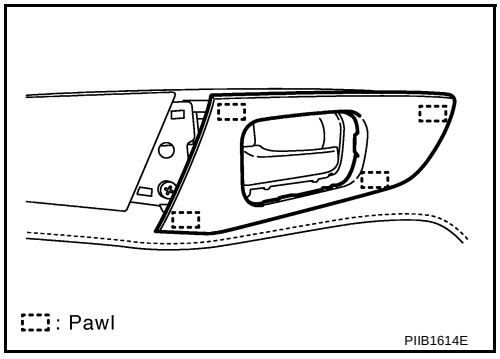

2. Remove ashtray and screw of power window sub switch (rear) finisher.
3. Insert screw driver rolled with cloth into dip under power window sub-switch (rear) finisher, and lift up finisher. Insert your fingers between gaps, pull it back to your side, and disconnect metal clips.
4. Disconnect power window sub-switch harness connector.
5. Remove screws of rear door finisher.
6. Remove step lamp, and disconnect harness connectors.
7. Insert screw driver rolled with cloth into clips under door finisher, and disconnect clips.

8. Pull up door finisher, and remove connectors, inside handle cable and lock knob cable.

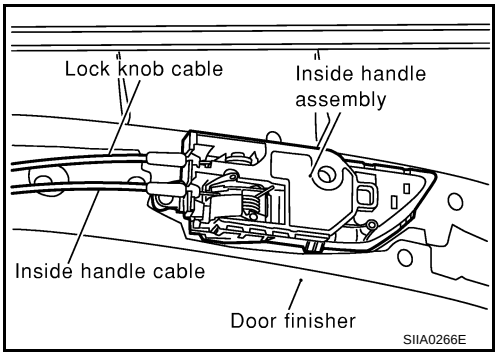

NOTE:
Insert screw driver rolled with cloth between panel on vehicle and clips (as indicated with arrow), and remove finisher.

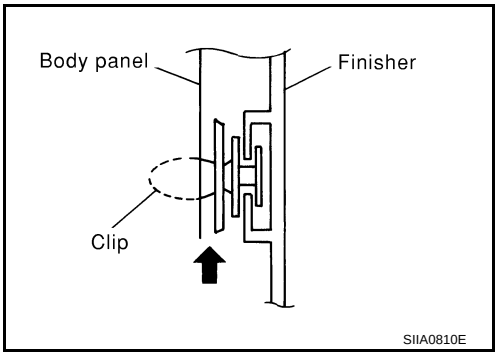

Installation

Install in the reverse over of removal.

CAUTION:
To install finisher, check if all clips are matched over holes of panel on vehicle, then push in.

BODY SIDE TRIM

PFP:76913

Removal and Installation

AIS001IV

CAUTION:

- **Wrap the tip of flat-bladed screwdriver with a cloth when removing metal clips from garnishes.**
- **When removing or installing body side welts, do not allow betel seal to come in contact with pillar garnish.**

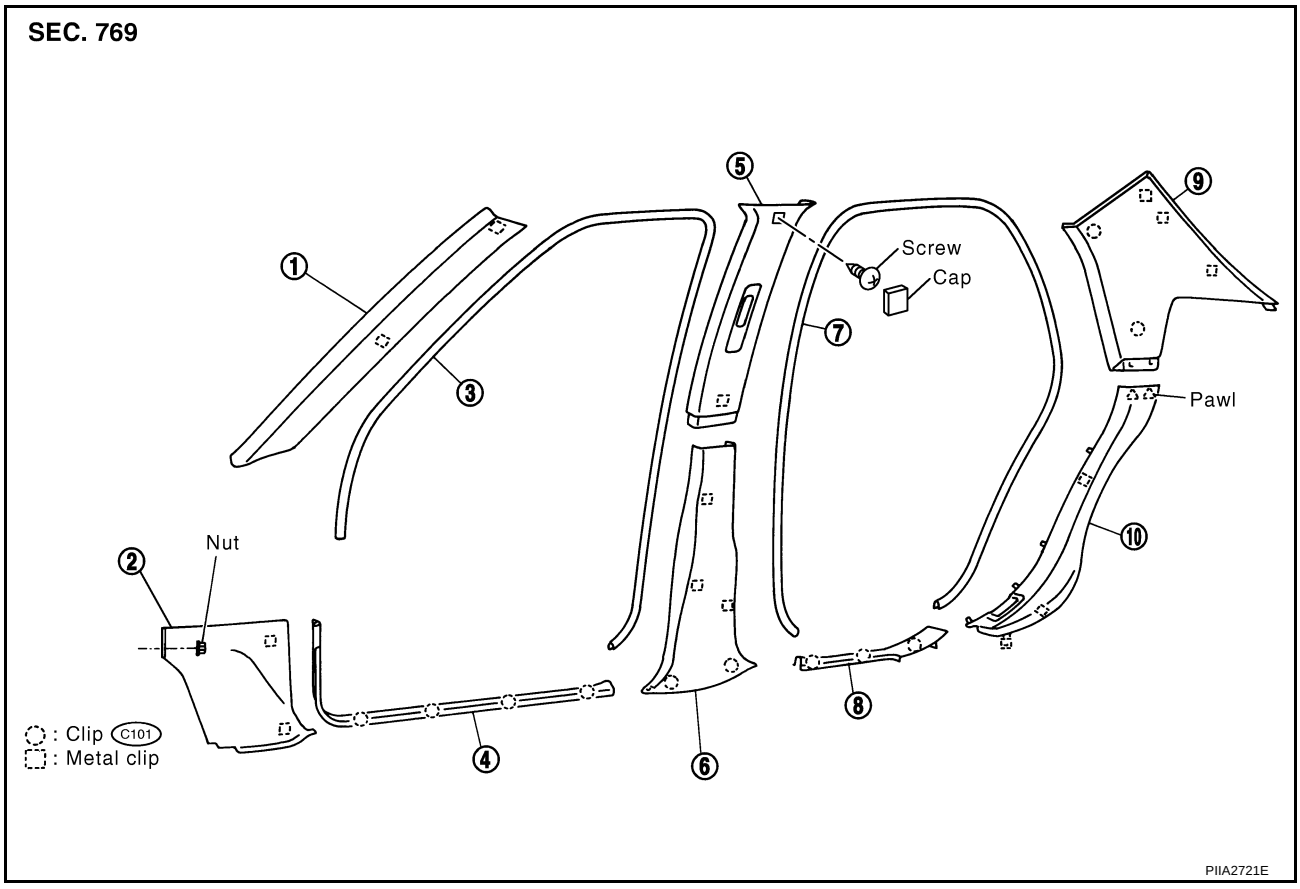

1. Front pillar garnish	2. Dash side finisher	3. Front body side welt
4. Front kicking plate	5. Center pillar finisher upper	6. Center pillar lower finisher lower
7. Rear body side welt	8. Rear kicking plate	9. Rear pillar finisher upper
10. Rear wheel house garnish		

FRONT PILLAR GARNISH

Removal

1. Remove body side welt.
2. Insert screw driver rolled with was cloth into clip under garnish and disconnect clips.
3. Remove front pillar garnish.

Installation

Install in the reverse order of removal.

CENTER PILLAR FINISHER LOWER

Removal

1. Remove front and rear kicking plate.
2. Remove front and rear body side welt.
3. Insert screw driver rolled with cloth into clips under finisher and disconnect clips.
4. Remove center pillar finisher lower.

Installation

Install in the reverse order of removal.

CENTER PILLAR FINISHER UPPER

Removal

1. Remove seat belt shoulder anchor. Refer to SB-4, "Removal and Installation of Front Seat Belt" .
2. Remove front and rear kicking plate.
3. Remove front and rear body side welt.
4. Insert screw driver rolled with cloth into clips under finisher and disconnect clips.
5. Remove center pillar finisher upper.

Installation

Install in the reverse order of removal.

REAR PILLAR FINISHER

Removal

1. Remove rear seat. Refer to SB-6, "Removal and Installation of Rear Seat Belt" .
2. Remove rear kicking plate.
3. Remove rear body side welt.
4. Insert screw driver rolled with cloth into clips under finisher and disconnect clips.
5. Remove rear pillar finisher.

Installation

Install in the reverse order of removal.

DASH SIDE FINISHER

Removal

1. Remove front kicking plate.
2. Remove front body side welt.
3. Insert screw driver rolled with cloth into clips under finisher and disconnect clips.
4. Remove dash side finisher.

Installation

Install in the reverse order of removal.

CAUTION:

To install, check if all clips are matched over holes of panel on vehicle, then push in.

REAR PARCEL SHELF FINISHER

PFP:79910

Removal and Installation

AIS001IW

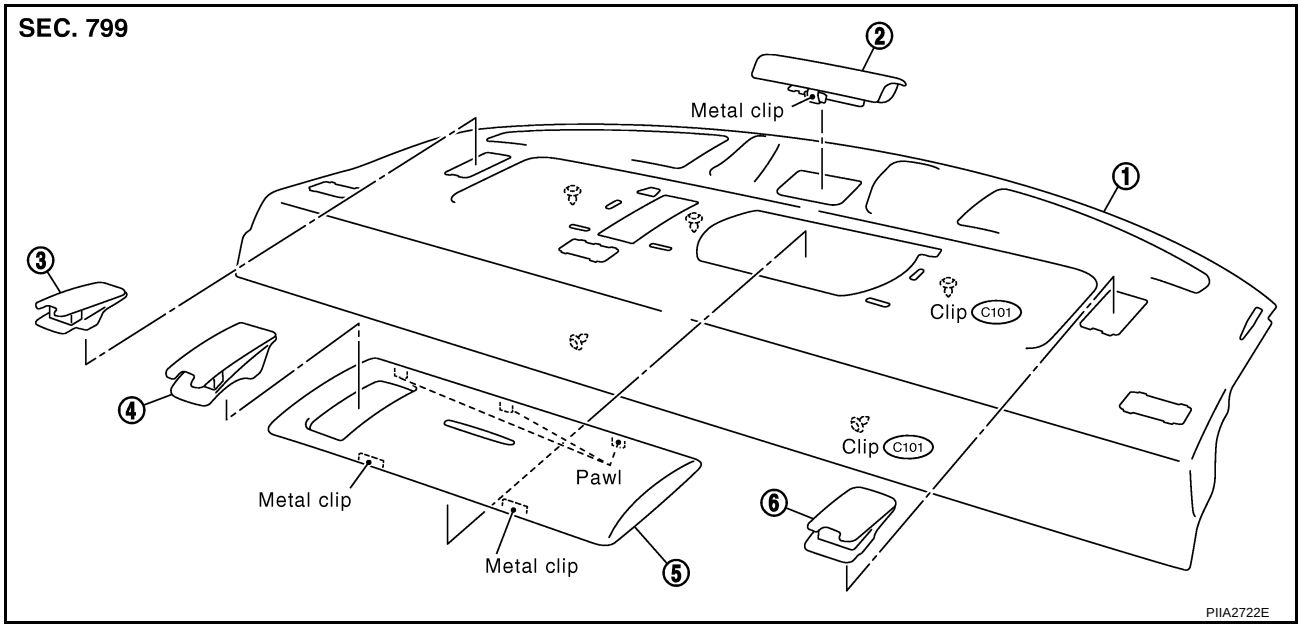

1.	Rear parcel shelf finisher	2.	High-mounted stop lamp	3.	Top tether strap child restraint cover (right)
4.	Top tether strap child restraint cover (center)	5.	Woofer grille	6.	Top tether strap child restraint cover (left)

REMOVAL

1. Remove rear seat. Refer to SE-133, "REAR SEAT" .
2. Remove rear seat belt floor anchor bolts. Refer to SB-6, "Removal and Installation of Rear Seat Belt" .
3. Remove rear pillar finisher. Refer to EI-34, "BODY SIDE TRIM" .
4. Remove high-mounted stop lamp, and disconnect harness connectors.
5. Remove woofer grille and top tether strap child restraint.
6. Remove seat belt escutcheon.
7. Remove clips, and remove rear parcel shelf finisher.

INSTALLATION

Install in the reverse order of removal.

CAUTION:

- **Confirm hooks of rear parcel shelf finisher are completely inserted into holes on vehicle side.**
- **Confirm clips are matched over holes on vehicle side, then push in.**

FLOOR TRIM

PFP:74902

Removal and installation

AIS001J0

SEC. 749

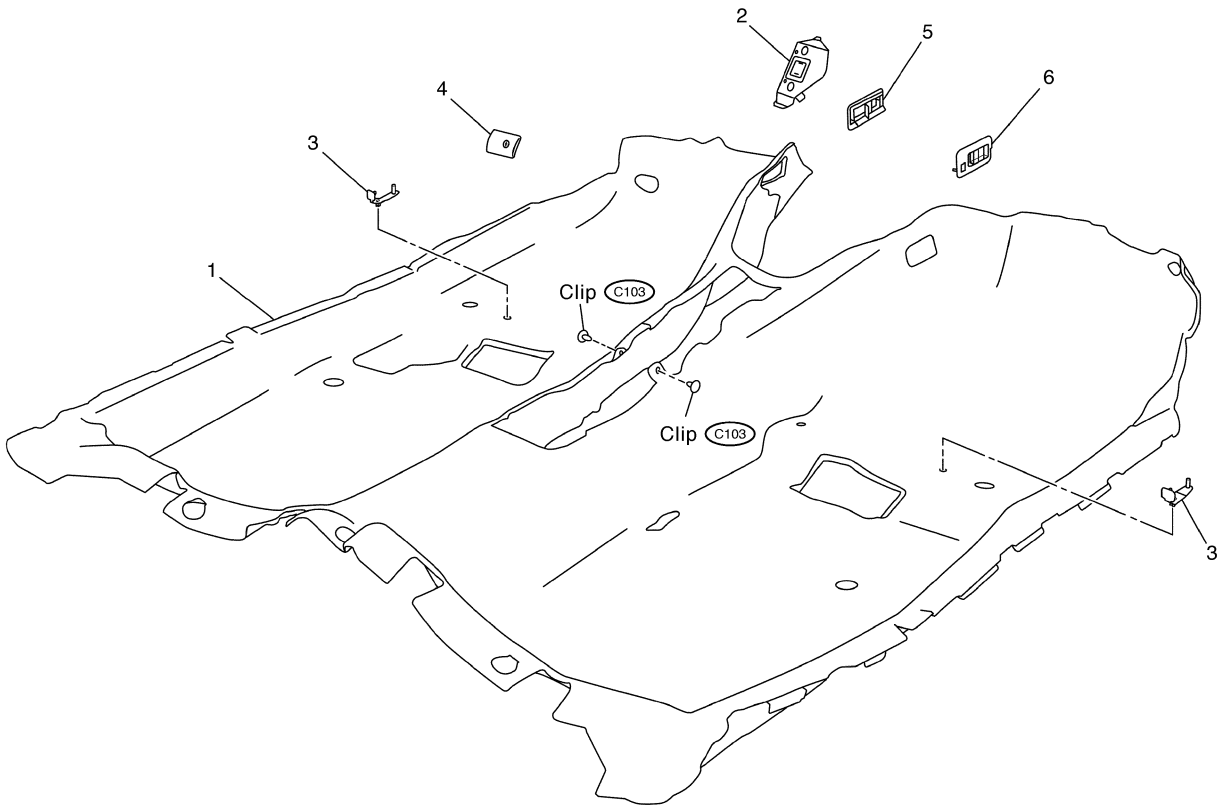

1. Floor carpet	2. Foot-rest	3. Carpet hook
4. Accelerator pedal stopper	5. Heater nozzle (left)	6. Heater nozzle (right)

REMOVAL

1. Remove front seat and rear seat. Refer to SE-127, "FRONT SEAT" and SE-133, "REAR SEAT" .
2. Remove center console and ashtray. Refer to IP-10, "Component Parts Drawing" .
3. Remove front and rear kicking plate. Refer to EI-34, "BODY SIDE TRIM" .
4. Remove front and rear body side welt. Refer to EI-34, "BODY SIDE TRIM" .
5. Remove center pillar finisher lower. Refer to EI-34, "BODY SIDE TRIM" .
6. Remove dash side finisher. Refer to EI-34, "BODY SIDE TRIM" .
7. Turn hexagon wrench in counterclockwise, and remove accelerator pedal stopper from stud bolts on vehicle.

   NOTE:
   To install, match holes of foot-rest over stud bolts on vehicle.

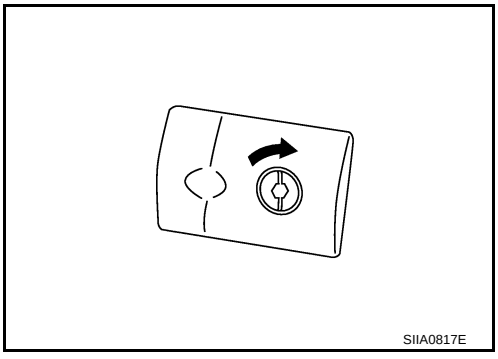

8. Remove heater nozzle.
9. Remove wheel house garnish inner.
10. Remove front seat belt ancker. Refer to SB-4, "Removal and Installation of Front Seat Belt" .

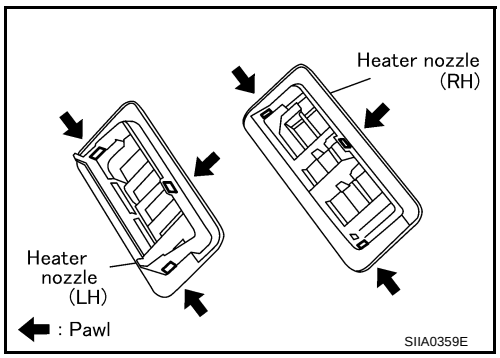

INSTALLATION

Install in the reverse order of removal.

FOOT-REST

Removal

1. Remove front kicking plate inner. Refer to EI-34, "BODY SIDE TRIM" .
2. Remove front body side welt. Refer to EI-34, "BODY SIDE TRIM" .
3. Remove dash side finisher. Refer to EI-34, "BODY SIDE TRIM" .
4. Turn up floor carpet on driver's seat.
5. Turn hexagon wrench to counterclockwise, and remove foot-rest from stud bolts on vehicle.

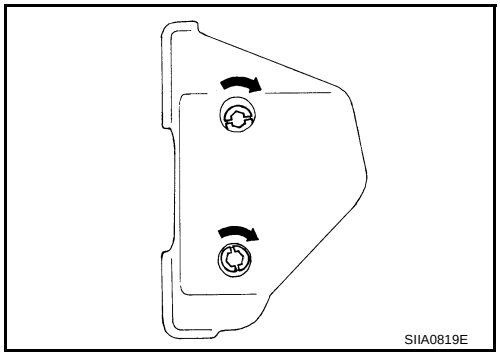

Installation

Install in the reverse order of removal.

HEADLINING

PFP:73910

Removal and Installation

AIS001J1

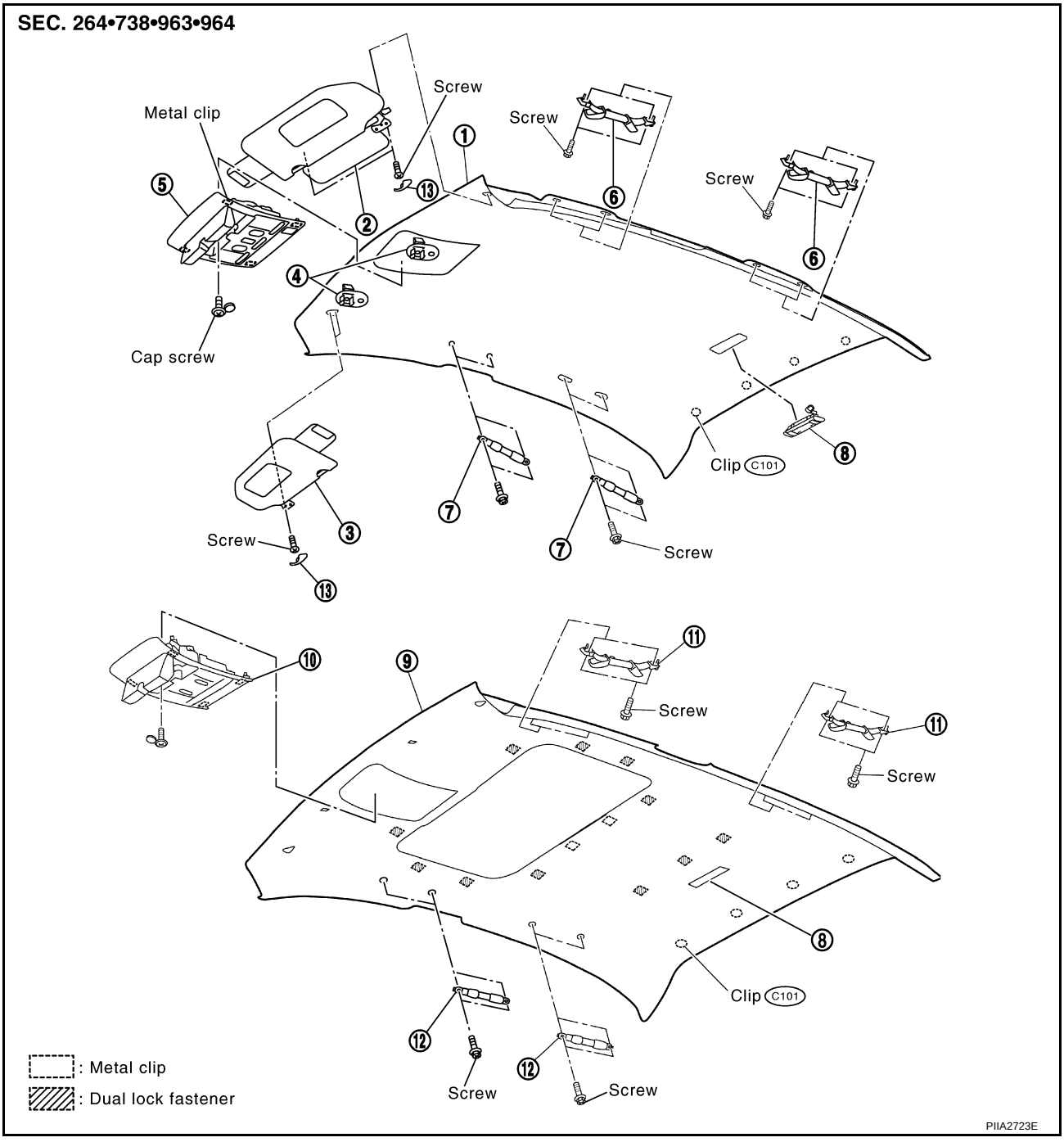

1. Headlining (standard)
2. Sunvisor (left)
3. Sunvisor (right)
4. Holder retainer
5. Map lamp
6. Assist grip (standard/left)
7. Assist grip (standard/right)
8. Personal lamp
9. Headlining (sunroof)
10. Map lamp and sunroof switch
11. Assist grip (sunroof/right)
12. Assist grip (sunroof/left)
13. Cover sunvisor

REMOVAL

1. Remove front and rear kicking plate. Refer to EI-34, "BODY SIDE TRIM" .
2. Remove body side welt. Refer to EI-34, "BODY SIDE TRIM" .
3. Remove front pillar and center pillar finisher. Refer to EI-34, "BODY SIDE TRIM" .
4. Remove assist grip.

NOTE:
To remove assist grip cover of sunroof and standard, disconnect pawls both on upper and lower parts, insert screw driver rolled with cloth, slide cover inward, and remove screws (one each for left and right).

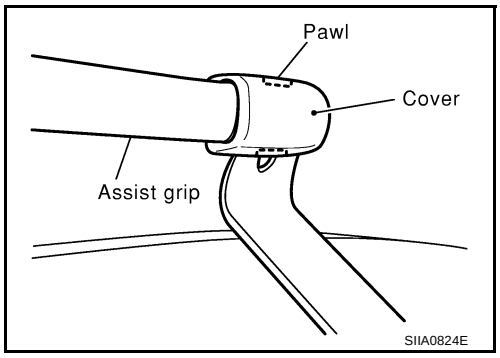

5. Remove glove box. Refer to IP-10, "Component Parts Drawing" .
6. Remove center consul box. Refer to IP-10, "Component Parts Drawing" .
7. Remove map lamp, disconnect harness connector.
8. Remove personal lamp, disconnect harness connector.

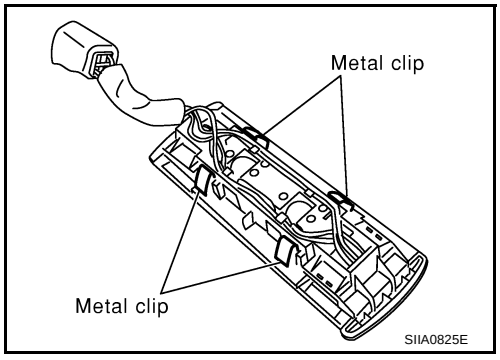

9. Remove sunvisor.
10. Slide headlining to front of vehicle, and disconnect hooks (if equipped with sunroof).

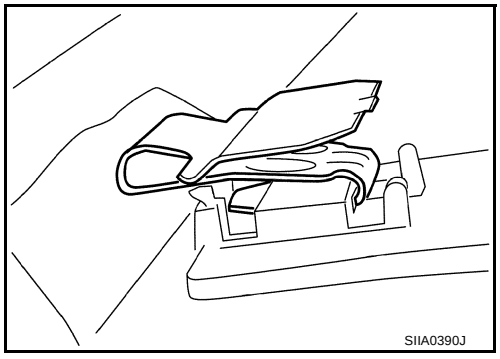

11. Disconnect clips at rear of head lining, and dual-lock fastener.
12. Slide front seat to the front, and set its seatback down backward.

13. Disconnect headlining, turn and remove from right front door.

CAUTION:
- **Always remove or install in a pair.**
- **Cover surroundings with waste to avoid scratches or damages.**
- **Do not bend head lining too hard.**

INSTALLATION

Install in the reverse order of removal.

TRUNK ROOM TRIM & TRUNK LID FINISHER

PFP:84920

Removal and Installation

AIS001J2

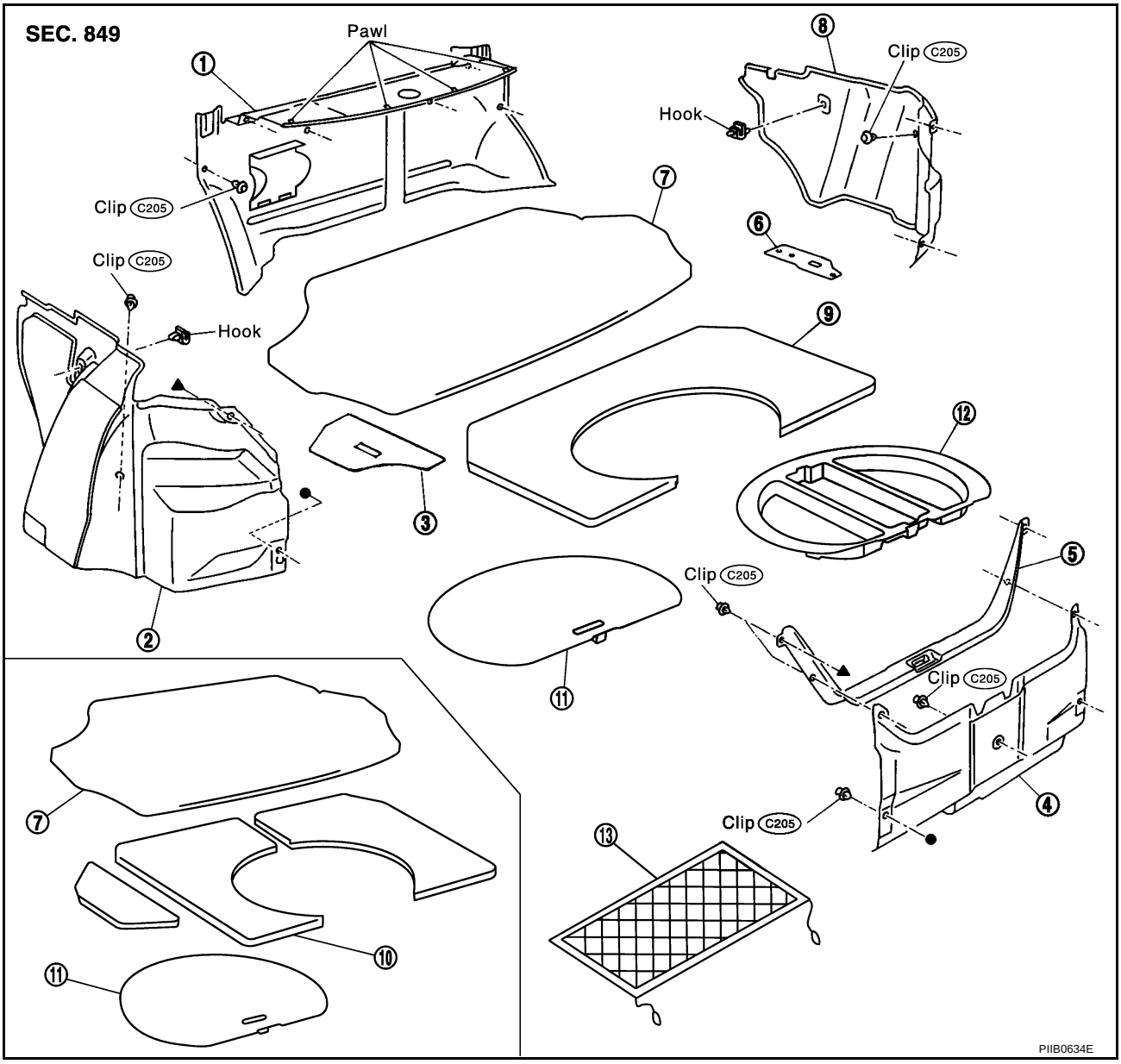

1. Trunk front finisher	2. Trunk side finisher (left)	3. Trunk floor board (left)
4. Trunk rear finisher	5. Trunk rear plate	6. Trunk floor board (right)
7. Trunk floor carpet	8. Trunk side finisher (right)	9. Felt trunk floor
10. Trunk floor spacer	11. Trunk floor board (center)	12. Spare tire cover
13. Net		

REMOVAL

1. Remove trunk floor carpet.
2. Remove trunk lid welt.
3. Remove clips of trunk rear plate and remove trunk rear plate.
4. Remove clips of trunk rear finisher and remove trunk rear finisher.
5. Remove clips of trunk front finisher, and disconnect pawl to pull.
6. Remove clip and hook of trunk side finisher, and remove trunk side finisher.

INSTALLATION

Install in the reverse order of removal.

TRUNK LID FINISHER INNER

Removal

1. Open trunk lid fully.
2. Remove clips of trunk lid finisher inner and remove trunk lid finisher inner.

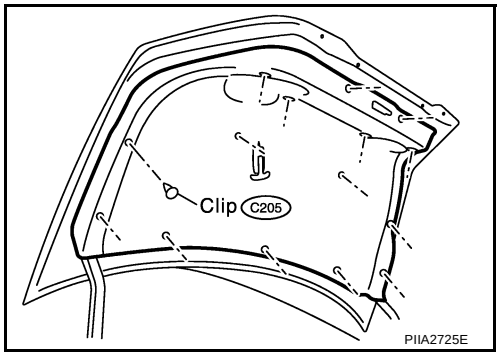

Installation

Install in the reverse order of removal.