SECTION FAX
FRONT AXLE

CONTENTS

PREPARATION 2
Special Service Tools 2
Commercial Service Tools 2
NOISE, VIBRATION AND HARSHNESS (NVH) TROUBLESHOOTING 3
NVH Troubleshooting Chart 3
FRONT WHEEL HUB AND KNUCKLE 4
On-Vehicle Inspection and Service 4
WHEEL BEARING INSPECTION 4
Removal and Installation 4
REMOVAL 4
INSPECTION AFTER REMOVAL 5
INSTALLATION 5
Disassembly and Assembly 6
DISASSEMBLY 6
ASSEMBLY 6
SERVICE DATA 8
Wheel Bearing 8

PREPARATION

PFP:00002

Special Service Tools

ADS0006A

The actual shapes of Kent-Moore tools may differ from those of special service tools illustrated here.

Tool number (Kent-Moore No.) Tool name		Description
ST36230000 (J25840-A) Sliding hammer	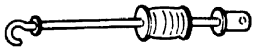 ZZA0803D	Removing wheel hub and bearing assembly
KV381 00300 (J 25523) Drift a: 54 mm (2.13 in) dia. b: 32 mm (1.26 in) dia.	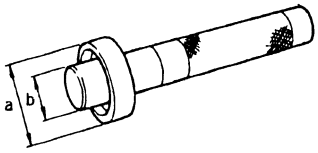 ZZA0539D	Removing wheel bearing
KV401 04710 (—) Drift a: 57 mm (2.24 in) dia. b: 47 mm (1.85 in) dia.	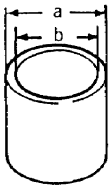 ZZA0832D	Removing wheel bearing
ST15310000 (J 25640-B) Drift a: 96 mm (3.78 in) b: 84 mm (3.31 in)	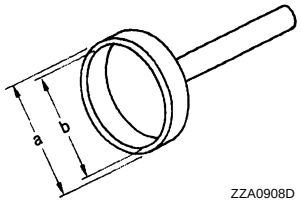 ZZA0908D	Installing ABS sensor rotor

Commercial Service Tools

ADS00088

Tool name		Description
Power tool	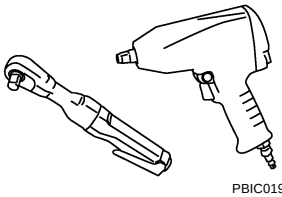 PBIC0190E	● Removing wheel nuts ● Removing brake caliper assembly ● Removing hub lock nut ● Removing splash guard

NOISE, VIBRATION AND HARSHNESS (NVH) TROUBLESHOOTING

PFP:00003

NVH Troubleshooting Chart

ADS0006B

Use chart below to help you find the cause of the symptom. If necessary, repair or replace these parts.

Reference page			FAX-4	—	FAX-4	NVH in WT section.	NVH in WT section.	NVH in PS section.
Possible cause and SUSPECTED PARTS			Improper installation, looseness	Parts interference	Wheel bearing damage	TIRES	ROAD WHEEL	STEERING
Symptom	FRONT AXLE	Noise	×	×		×	×	×
		Shake	×	×		×	×	×
		Vibration	×	×		×		×
		Shimmy	×	×		×	×	×
		Judder	×			×	×	×
		Poor quality ride or handling	×	×	×	×	×	

×: Applicable

FRONT WHEEL HUB AND KNUCKLE

PFP:40202

On-Vehicle Inspection and Service

ADS0006C

Check that the mounting conditions (looseness, back lash) of each component and component status (wear, damage) are normal.

WHEEL BEARING INSPECTION

- Move wheel hub in the axial direction by hand. Check that there is no looseness of wheel bearing.

  Standard value

  Axial end play limit : 0.05 mm (0.002 in) or less

- Rotate wheel hub and check that there is no unusual noise or other irregular conditions. If there are any irregular conditions, replace wheel bearings.

Removal and Installation

ADS0006D

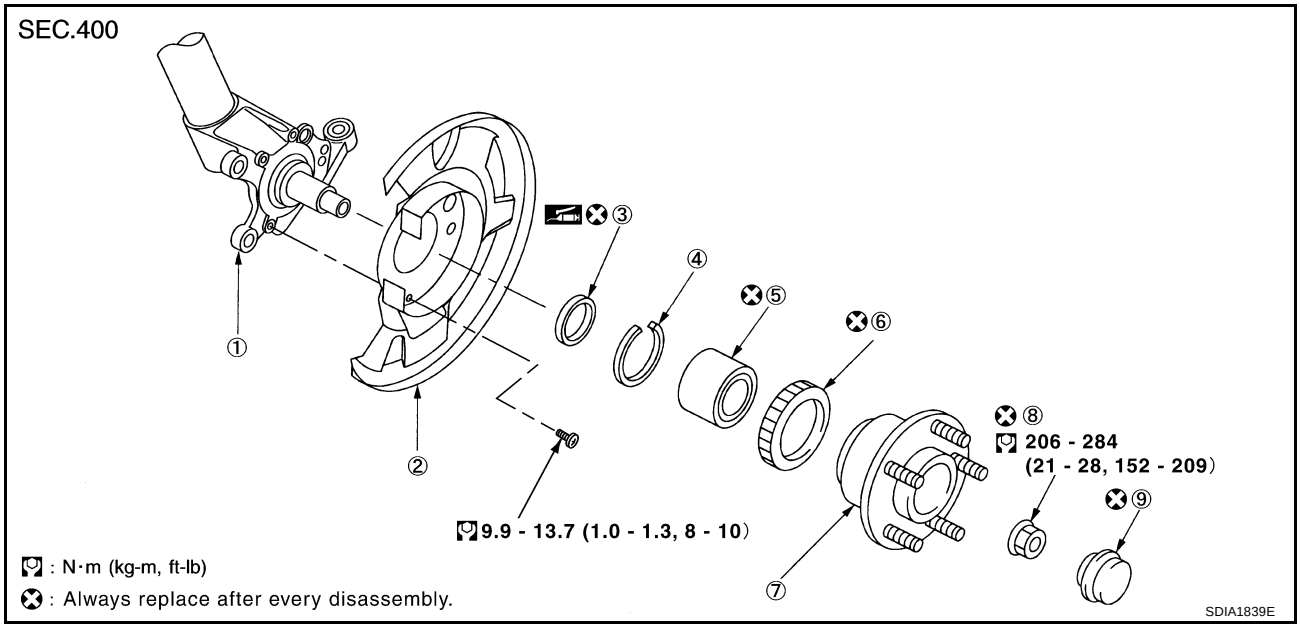

1.	Strut assembly	2.	Splash guard	3.	Grease seal
4.	Snap ring	5.	Wheel bearing	6.	ABS sensor rotor
7.	Wheel hub	8.	Lock nut	9.	Hub cap

REMOVAL

1. Remove tire with power tool.
2. Remove brake caliper with power tool. Hang it in a place where it will not interfere with work. Refer to BR-24, "FRONT DISC BRAKE" .

   CAUTION:
   Avoid depressing brake pedal while brake caliper is removed.
3. Remove disc rotor.
4. Use a hub cap pliers (suitable tool) to remove hub cap from wheel hub.
5. Pull up caulked area of lock nut with flat-bladed screwdriver.
6. Remove lock nut with power tool, then remove wheel hub and bearing assembly from strut assembly.

- When it is hard to remove wheel hub and bearing assembly from strut assembly due to burnout, use a sliding hammer (special service tool) for removal.

  Tool number : ST36230000 (J25840-A)

7. Remove fixing screws of splash guard with power tool, then remove splash guard from strut assembly.

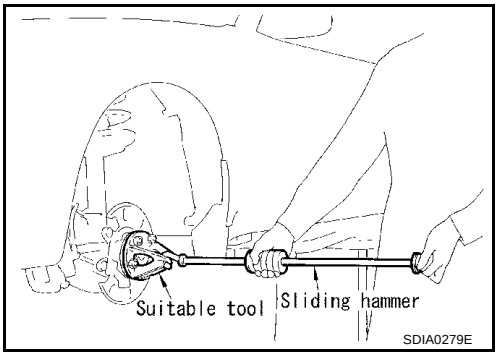

INSPECTION AFTER REMOVAL

Wheel Hub

- Inspect wheel hubs for damage, seizure, and corrosion. Also check wheel hubs for cracks (using a die test or other method). Replace if any irregular conditions are found.

Knuckle Spindle

- Inspect knuckle spindle for damage and corrosion. If any irregular conditions are found, replace strut assembly.

INSTALLATION

- Refer to FAX-4, "Removal and Installation" for tightening torque. Tighten in the reverse order of removal.

  CAUTION:
  Refer to component parts location and do not reuse non-reusable parts.

- Install hub cap using a suitable tool.

  CAUTION:
  Discard old hub cap; replace with new one.

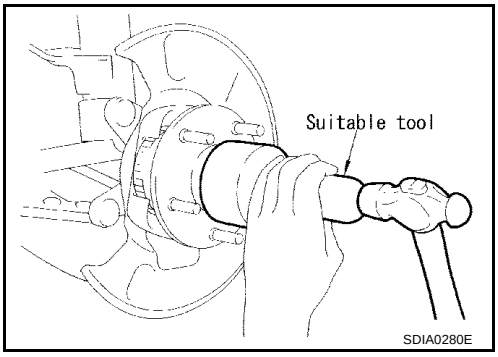

- If wheel bearing is replaced, measure hub rotating torque before hub cap installed.
  a: Turn wheel hub several times in both directions to seat wheel bearing correctly.
  b: Attach spring balance to wheel hub bolt as shown in the figure and pull it at a speed of 10 ± 2 rpm to measure rotation torque.

  Standard value

  Rotating torque:

  0.246 - 2.108 N·m (0.03 - 0.21 kg-m, 3 - 18 in-lb)

  Spring balance indication:

  4.0 - 37.2 N (0.41 - 3.79 kg, 0.9 - 8.4 lb)

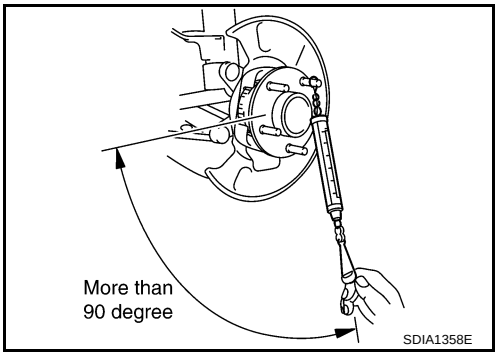

Disassembly and Assembly

ADS0006E

DISASSEMBLY

CAUTION:

Do not disassemble if wheel bearing has no trouble.

1. Use a flat-bladed screwdriver or similar tool to remove grease seal from wheel hub.
2. Using a puller (suitable tool), drift (suitable tool), and bearing replacer (suitable tool), press wheel hub out to remove from ABS sensor rotor.
3. Using a snap ring plier or similar tool to remove snap ring from wheel hub.

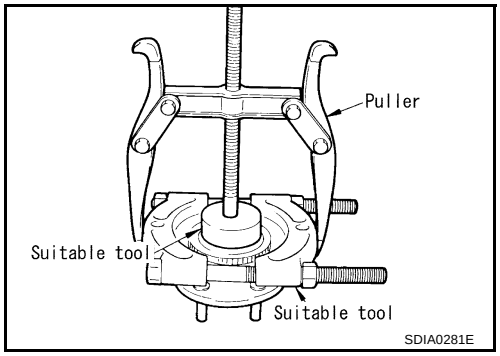

4. Using a drift (special service tool), press to remove wheel bearing from wheel hub.

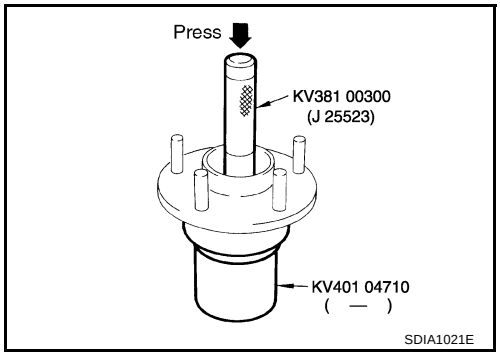

ASSEMBLY

1. Using a drift (suitable tool) as shown in the figure, press wheel bearing into wheel hub.

   CAUTION:
   - **Discard old wheel bearing; replace with new one.**
   - **Do not press inner race of wheel bearing assembly.**
   - **Do not apply oil or grease to mating surfaces of wheel bearing outer race and wheel hub.**

   NOTE:
   Final press load guideline 29,420 N (3,000 kg, 6,614 lb)

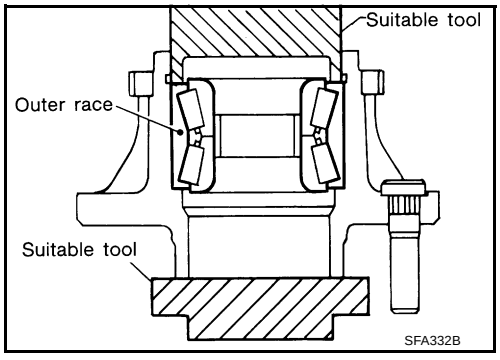

2. Using a drift (special service tool), press ABS sensor rotor into wheel hub.

   Tool number : ST15310000 (J 25640-B)

   CAUTION:
   Discard old ABS sensor rotor; replace with new one.
3. Using a snap ring plier or similar tool, install snap ring into wheel hub.

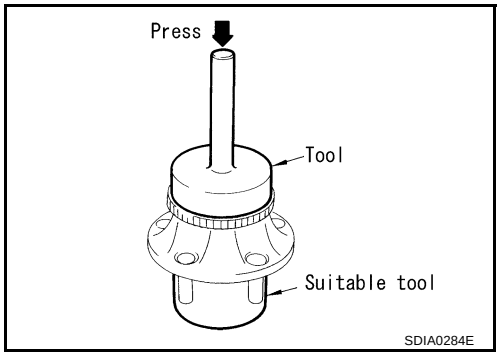

4. As shown in the figure, securely press-fit grease seal until hub end surface “N” and grease seal flange surface “M” are completely fitted.

   Pressure : 9,806 N (1,000 kg, 2,204 lb) or less.

   CAUTION:
   Discard old grease seal; replace with new one.

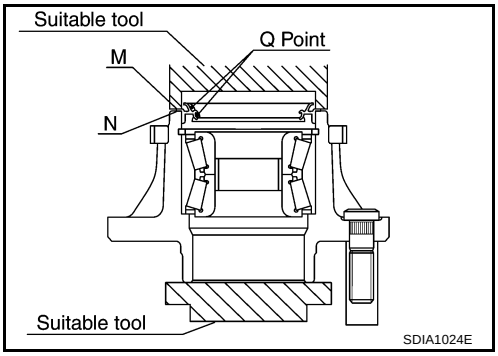

SERVICE DATA

PFP:00030

Wheel Bearing

ADS0006F

Axial end play limit	0.05 mm (0.002 in) or less
Rotating torque	0.246 - 2.108 N·m (0.03 - 0.21 kg-m, 3 - 18 in-lb)
Measurement of spring scale (Spring scale hooking position: wheel hub bolt)	4.0 - 37.2 N (0.41 - 3.79 kg, 0.9 - 8.4 lb)