SECTION SE
SEAT

CONTENTS

PRECAUTIONS

PFP:00001

Precautions for Supplemental Restraint System (SRS) “AIR BAG” and “SEAT BELT PRE-TENSIONER”

AIS001Q2

The Supplemental Restraint System such as “AIR BAG” and “SEAT BELT PRE-TENSIONER”, used along with a front seat belt, helps to reduce the risk or severity of injury to the driver and front passenger for certain types of collision. This system includes seat belt switch inputs and dual stage front air bag modules. The SRS system uses the seat belt switches to determine the front air bag deployment, and may only deploy one front air bag, depending on the severity of a collision and whether the front occupants are belted or unbelted.
Information necessary to service the system safely is included in the SRS and SB section of this Service Manual.

WARNING:

- **To avoid rendering the SRS inoperative, which could increase the risk of personal injury or death in the event of a collision which would result in air bag inflation, all maintenance must be performed by an authorized NISSAN/INFINITI dealer.**
- **Improper maintenance, including incorrect removal and installation of the SRS, can lead to personal injury caused by unintentional activation of the system. For removal of Spiral Cable and Air Bag Module, see the SRS section.**
- **Do not use electrical test equipment on any circuit related to the SRS unless instructed to in this Service Manual. SRS wiring harnesses can be identified by yellow and/or orange harnesses or harness connectors.**

Service Notice

AIS001JC

- When removing or installing various parts, place a cloth or padding onto the vehicle body to prevent scratches.
- Handle trim, molding, instruments, grille, etc. carefully during removing or installing. Be careful not to oil or damage them.
- Apply sealing compound where necessary when installing parts.
- When applying sealing compound, be careful that the sealing compound does not protrude from parts.
- When replacing any metal parts (for example body outer panel, members, etc.), be sure to take rust prevention measures.

Precautions for work

AIS001JE

- When removing or disassembling each component, be careful not to damage or deform it. If a component may be subject to interference, be sure to protect it with a cloth.
- When removing (disengaging) components with a screwdriver or similar tool, be sure to wrap the component with a cloth or vinyl tape to protect it.
- Protect the removed parts with a cloth and keep them.
- Replace a deformed or damaged clip.
- If a part is specified as a non-reusable part, always replace it with new one.
- Be sure to tighten bolts and nuts securely to the specified torque.
- After re-installation is completed, be sure to check that each part works normally.
- Follow the steps below to clean components.
  - Water soluble foul: Dip a soft cloth into lukewarm water, and wring the water out of the cloth to wipe the fouled area.
    Then rub with a soft and dry cloth.
  - Oily foul: Dip a soft cloth into lukewarm water with mild detergent (concentration: within 2 to 3%), and wipe the fouled area.
    Then dip a cloth into fresh water, and wring the water out of the cloth to wipe the detergent off. Then rub with a soft and dry cloth.
- Do not use organic solvent such as thinner, benzene, alcohol, and gasoline.
- For genuine leather seats, use a genuine leather seat cleaner.

Trouble diagnosis precaution

AIS001JF

- With the battery connected, if each local control unit (LCU) connector is left disconnected for at least 1 minute, the IVMS control unit stores a communication inactive malfunction. After reconnecting the connector, any of the following steps shall be done.
  "Disconnect the IVMS control unit BAT power supply"
  "using CONSULT-II, execute Erase memory".

PREPARATION

PFP:00002

Special Service Tools

AIS001JG

The actual shapes of Kent-Moore tools may differ from those of special service tools illustrated here.

Tool number (Kent-Moore No.) Tool name		Description
(J39570) Chassis ear	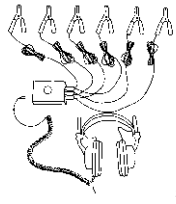 SIIA0993E	Location the noise
(J43980) NISSAN Squeak and Rattle Kit	 SIIA0994E	Repairing the cause of noise

Commercial Service Tools

AIS001JH

Tool name		Description
Engine ear	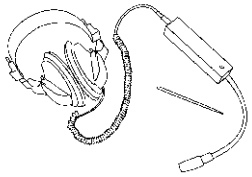 SIIA0995E	Location the noise
Power tool	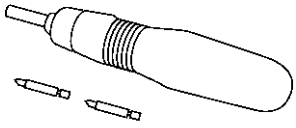 PBIC0191E	

SQUEAK AND RATTLE TROUBLE DIAGNOSES

PFP:00000

Work Flow

AIS001JI

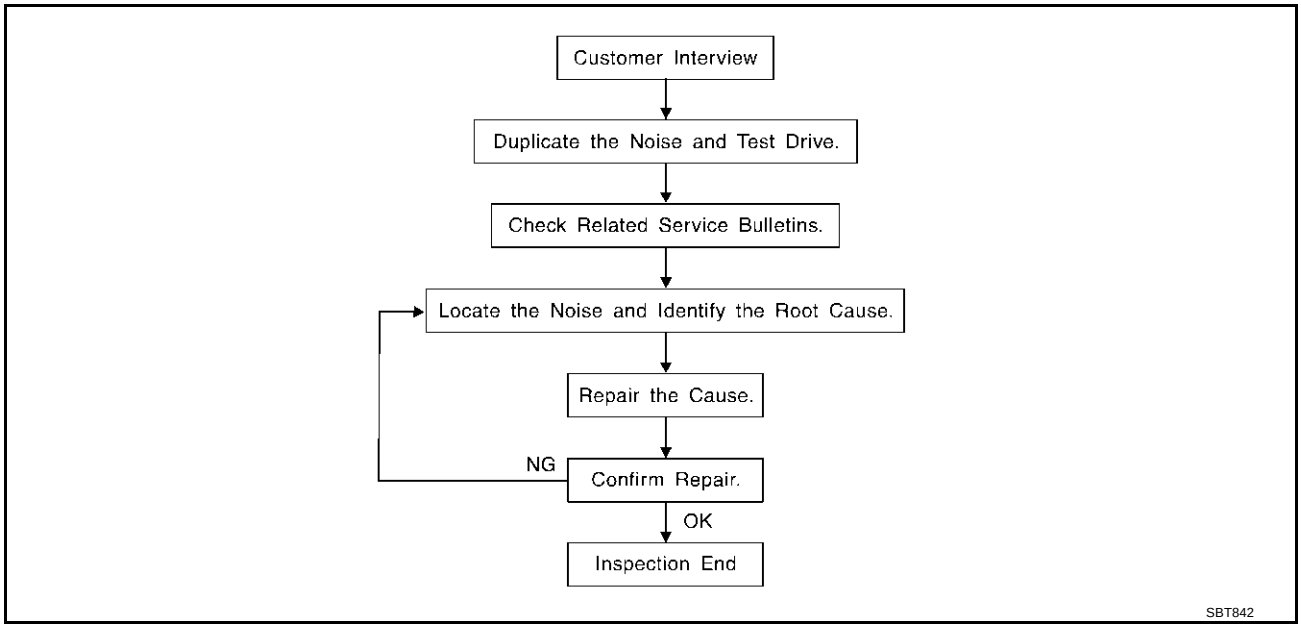

CUSTOMER INTERVIEW

Interview the customer if possible, to determine the conditions that exist when the noise occurs. Use the Diagnostic Worksheet during the interview to document the facts and conditions when the noise occurs and any customer's comments; refer to SE-10, "Diagnostic Worksheet" . This information is necessary to duplicate the conditions that exist when the noise occurs.

- The customer may not be able to provide a detailed description or the location of the noise. Attempt to obtain all the facts and conditions that exist when the noise occurs (or does not occur).
- If there is more than one noise in the vehicle, be sure to diagnose and repair the noise that the customer is concerned about. This can be accomplished by test driving the vehicle with the customer.
- After identifying the type of noise, isolate the noise in terms of its characteristics. The noise characteristics are provided so the customer, service adviser and technician are all speaking the same language when defining the noise.
- Squeak —(Like tennis shoes on a clean floor)
  Squeak characteristics include the light contact/fast movement/brought on by road conditions/hard surfaces=higher pitch noise/softer surfaces=lower pitch noises/edge to surface=chirping
- Creak—(Like walking on an old wooden floor)
  Creak characteristics include firm contact/slow movement/twisting with a rotational movement/pitch dependent on materials/often brought on by activity.
- Rattle—(Like shaking a baby rattle)
  Rattle characteristics include the fast repeated contact/vibration or similar movement/loose parts/missing clip or fastener/incorrect clearance.
- Knock —(Like a knock on a door)
  Knock characteristics include hollow sounding/sometimes repeating/often brought on by driver action.
- Tick—(Like a clock second hand)
  Tick characteristics include gentle contacting of light materials/loose components/can be caused by driver action or road conditions.
- Thump—(Heavy, muffled knock noise)
  Thump characteristics include softer knock/dead sound often drought on by activity.
- Buzz—(Like a bumble bee)
  Buzz characteristics include high frequency rattle/firm contact.
- Often the degree of acceptable noise level will vary depending upon the person. A noise that you may judge as acceptable may be very irritating to the customer.
- Weather conditions, especially humidity and temperature, may have a great effect on noise level.

DUPLICATE THE NOISE AND TEST DRIVE

If possible, drive the vehicle with the customer until the noise is duplicated. Note any additional information on the Diagnostic Worksheet regarding the conditions or location of the noise. This information can be used to duplicate the same conditions when you confirm the repair.
If the noise can be duplicated easily during the test drive, to help identify the source of the noise, try to duplicate the noise with the vehicle stopped by doing one or all of the following:

1) Close a door.
2) Tap or push/pull around the area where the noise appears to be coming from.
3) Rev the engine.
4) Use a floor jack to recreate vehicle "twist".
5) At idle, apply engine load (electrical load, half-clutch on M/T model, drive position on A/T model).
6) Raise the vehicle on a hoist and hit a tire with a rubber hammer.

- Drive the vehicle and attempt to duplicate the conditions the customer states exist when the noise occurs.
- If it is difficult to duplicate the noise, drive the vehicle slowly on an undulating or rough road to stress the vehicle body.

CHECK RELATED SERVICE BULLETINS

After verifying the customer concern or symptom, check ASIST for Technical Service Bulletins (TSBs) related to that concern or symptom.
If a TSB relates to the symptom, follow the procedure to repair the noise.

LOCATE THE NOISE AND IDENTIFY THE ROOT CAUSE

1. Narrow down the noise to a general area. To help pinpoint the source of the noise, use a listening tool (Chassis Ear: J39570, Engine Ear and mechanics stethoscope).
2. Narrow down the noise to a more specific area and identify the cause of the noise by:

- removing the components in the area that you suspect the noise is coming from.
  Do not use too much force when removing clips and fasteners, otherwise clips and fastener can be broken or lost during the repair, resulting in the creation of new noise.
- tapping or pushing/pulling the component that you suspect is causing the noise.
  Do not tap or push/pull the component with excessive force, otherwise the noise will be eliminated only temporarily.
- feeling for a vibration with your hand by touching the component(s) that you suspect is (are) causing the noise.
- placing a piece of paper between components that you suspect are causing the noise.
- looking for loose components and contact marks.
  Refer to SE-8, "Generic Squeak and Rattle Troubleshooting" .

REPAIR THE CAUSE

- If the cause is a loose component, tighten the component securely.
- If the cause is insufficient clearance between components:
  - separate components by repositioning or loosening and retightening the component, if possible.
  - insulate components with a suitable insulator such as urethane pads, foam blocks, felt cloth tape or urethane tape. A Nissan Squeak and Rattle Kit (J43980) is available through your authorized Nissan Parts Department.

CAUTION:
Do not use excessive force as many components are constructed of plastic and may be damaged.
Always check with the Parts Department for the latest parts information.
The following materials are contained in the Nissan Squeak and Rattle Kit (J43980). Each item can be ordered separately as needed.
URETHANE PADS [1.5 mm (0.059 in) thick]
Insulates connectors, harness, etc.
76268-9E005: 100 × 135 mm (3.94 × 5.31 in)/76884-71L01: 60 × 85 mm (2.36 × 3.35 in)/76884-71L02: 15 × 25 mm (0.59 × 0.98 in)
INSULATOR (Foam blocks)
Insulates components from contact. Can be used to fill space behind a panel.
73982-9E000: 45 mm (1.77 in) thick, 50 × 50 mm (1.97 × 1.97 in)/73982-50Y00: 10 mm (0.39 in) think, 50 × 50 mm (1.97 × 1.97 in)

INSULATOR (Light foam block)
80845-71L00: 30 mm (1.18 in) thick, 30 × 50 mm (1.18 × 1.97 in)
FELT CLOTHTAPE
Used to insulate where movement does not occur. Ideal for instrument panel applications.
68370-4B000: 15 × 25 mm (0.59 × 0.98 in) pad/68239-13E00: 5 mm (0.20 in) wide tape roll The following materials, not found in the kit, can also be used to repair squeaks and rattles.
UHMW (TEFLON) TAPE
Insulates where slight movement is present. Ideal for instrument panel applications.
SILICONE GREASE
Used in of UHMW tape that will be visible or not fit.
Note: Will only last a few months.
SILICONE SPRAY
Use when grease cannot be applied.
DUCT TAPE
Use to eliminate movement.

CONFIRM THE REPAIR

Confirm that the cause of a noise is repaired by test driving the vehicle. Operate the vehicle under the same conditions as when the noise originally occurred. Refer to the notes on the Diagnostic Worksheet.

Generic Squeak and Rattle Troubleshooting

AIS001JJ

Refer to Table of Contents for specific component removal and installation information.

INSTRUMENT PANEL

Most incidents are caused by contact and movement between:

1. The cluster lid A and instrument panel
2. Acrylic lens and combination meter housing
3. Instrument panel to front pillar garnish
4. Instrument panel to windshield
5. Instrument panel mounting pins
6. Wiring harnesses behind the combination meter
7. A/C defroster duct and duct joint

These incidents can usually be located by tapping or moving the components to duplicate the noise or by pressing on the components while driving to stop the noise. Most of these incidents can be repaired by applying felt cloth tape or silicon spray (in hard to reach areas). Urethane pads can be used to insulate wiring harness.

CAUTION:
Do not use silicone spray to isolate a squeak or rattle. If you saturate the area with silicone, you will not be able to recheck the repair.

CENTER CONSOLE

Components to pay attention to include:

1. Shifter assembly cover to finisher
2. A/C control unit and cluster lid C
3. Wiring harnesses behind audio and A/C control unit

The instrument panel repair and isolation procedures also apply to the center console.

DOORS

Pay attention to the:

1. Finisher and inner panel making a slapping noise
2. Inside handle escutcheon to door finisher
3. Wiring harnesses tapping
4. Door striker out of alignment causing a popping noise on starts and stops

Tapping or moving the components or pressing on them while driving to duplicate the conditions can isolate many of these incidents. You can usually insulate the areas with felt cloth tape or insulator foam blocks from the Nissan Squeak and Rattle Kit (J43980) to repair the noise.

TRUNK

Trunk noises are often caused by a loose jack or loose items put into the trunk by the owner.
In addition look for:

1. Trunk lid dumpers out of adjustment
2. Trunk lid striker out of adjustment
3. The trunk lid torsion bars knocking together
4. A loose license plate or bracket

Most of these incidents can be repaired by adjusting, securing or insulating the item(s) or component(s) causing the noise.

SUNROOF/HEADLINING

Noises in the sunroof/headlining area can often be traced to one of the following:

1. Sunroof lid, rail, linkage or seals making a rattle or light knocking noise
2. Sunvisor shaft shaking in the holder
3. Front or rear windshield touching headlining and squeaking

Again, pressing on the components to stop the noise while duplicating the conditions can isolate most of these incidents. Repairs usually consist of insulating with felt cloth tape.

SEATS

When isolating seat noise it's important to note the position the seat is in and the load placed on the seat when the noise is present. These conditions should be duplicated when verifying and isolating the cause of the noise.
Cause of seat noise include:

1. Headrest rods and holder
2. A squeak between the seat pad cushion and frame
3. The rear seat back lock and bracket

These noises can be isolated by moving or pressing on the suspected components while duplicating the conditions under which the noise occurs. Most of these incidents can be repaired by repositioning the component or applying urethane tape to the contact area.

UNDERHOOD

Some interior noise may be caused by components under the hood or on the engine wall. The noise is then transmitted into the passenger compartment.
Causes of transmitted underhood noise include:

1. Any component mounted to the engine wall
2. Components that pass through the engine wall
3. Engine wall mounts and connectors
4. Loose radiator mounting pins
5. Hood bumpers out of adjustment
6. Hood striker out of adjustment

These noise can be difficult to isolate since they cannot be reached from the interior of the vehicle. The best method is to secure, move or insulate one component at a time and test drive the vehicle. Also, engine RPM or load can be changed to isolate the noise. Repairs can usually be made by moving, adjusting securing, or insulating the component causing the noise.

Diagnostic Worksheet

AIS001JK

INFINITI

SQUEAK & RATTLE DIAGNOSTIC WORKSHEET

Dear Infiniti Customer:
We are concerned about your satisfaction with your Infiniti vehicle. Repairing a squeak or rattle sometimes can be very difficult. To help us fix your Infiniti right the first time, please take a moment to note the area of the vehicle where the squeak or rattle occurs and under what conditions. You may be asked to take a test drive with a service advisor or technician to ensure we confirm the noise you are hearing.

I. WHERE DOES THE NOISE COME FROM? (circle the area of the vehicle)

The illustrations are for reference only, and may not reflect the actual configuration of your vehicle.

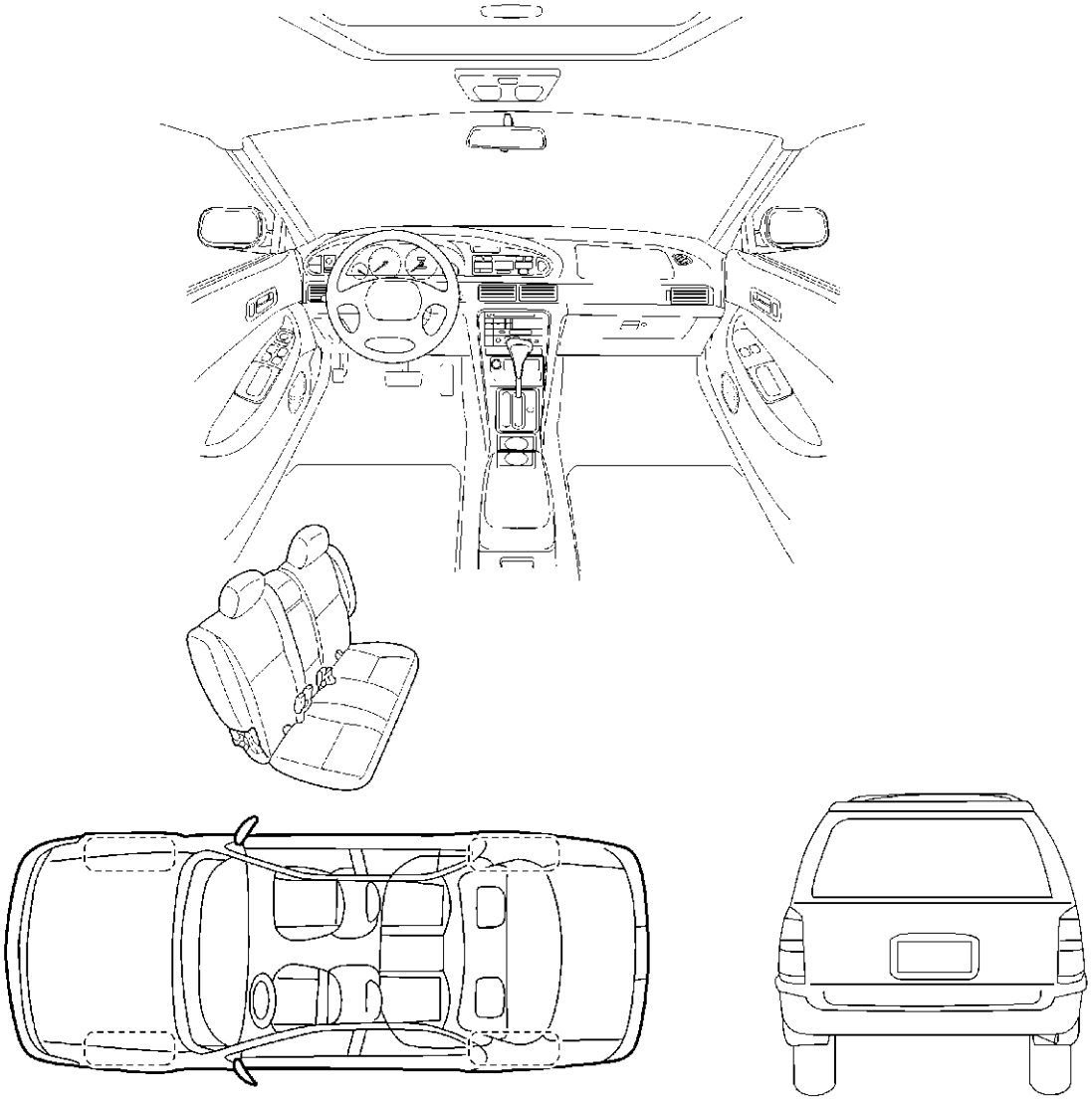

Continue to the back of the worksheet and briefly describe the location of the noise or rattle.
In addition, please indicate the conditions which are present when the noise occurs.

SBT860

SQUEAK & RATTLE DIAGNOSTIC WORKSHEET- page 2

Briefly describe the location where the noise occurs:

_____

_____

II. WHEN DOES IT OCCUR? (check the boxes that apply)

- ❏ anytime
- ❏ 1st time in the morning
- ❏ only when it is cold outside
- ❏ only when it is hot outside
- ❏ after sitting out in the sun
- ❏ when it is raining or wet
- ❏ dry or dusty conditions
- ❏ other: _____

III. WHEN DRIVING:

- ❏ through driveways
- ❏ over rough roads
- ❏ over speed bumps
- ❏ only at about ____ mph
- ❏ on acceleration
- ❏ coming to a stop
- ❏ on turns : left, right or either (circle)
- ❏ with passengers or cargo
- ❏ other: _____
- ❏ after driving ____ miles or ____ minutes

IV. WHAT TYPE OF NOISE?

- ❏ squeak (like tennis shoes on a clean floor)
- ❏ creak (like walking on an old wooden floor)
- ❏ rattle (like shaking a baby rattle)
- ❏ knock (like a knock on a door)
- ❏ tick (like a clock second hand)
- ❏ thump (heavy, muffled knock noise)
- ❏ buzz (like a bumble bee)

TO BE COMPLETED BY DEALERSHIP PERSONNEL
Test Drive Notes:

_____

_____

	YES	NO	Initials of person performing
Vehicle test driven with customer	❏	❏	_____
- Noise verified on test drive	❏	❏	
- Noise source located and repaired	❏	❏	_____
- Follow up test drive performed to confirm repair	❏	❏	_____

VIN: _____ Customer Name: _____

W.O. #: _____ Date: _____

This form must be attached to Work Order

SBT844

CLIP AND FASTENER

PFP:76906

Description

AIS001Q3

- Clips and fasteners in SE section correspond to the following numbers and symbols.
- Replace any clips and/or fasteners which are damaged during removal or installation.

Symbol No.	Shapes	Removal & Installation
C101 	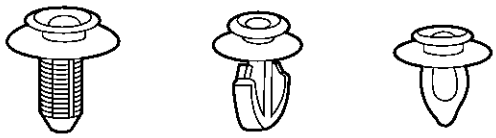	**Removal:** Remove by bending up with flat-bladed screwdrivers or clip remover. 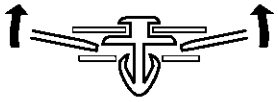
C103 	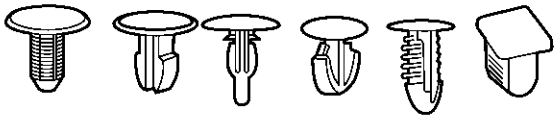	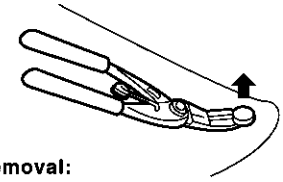 **Removal:** Remove with a clip remover. PIIA3432E

AUTOMATIC DRIVE POSITIONER

PFP:28491

Manual Operation

AIS002J0

The driving position (seat position, steering wheel position, door mirror position) can be adjusted with the power seat switch or ADP (Automatic Drive Positioned) steering switch.

NOTE:

- The seat and steering wheel position can be manually operated with the ignition switch OFF.
- The door mirrors can be manually operated with the ignition switch in either ACC or ON.

Automatic Operation

AIS002J1

Function	Description
Memory switch operation	The seat, steering wheel and door mirror move to the stored driving position by pushing memory switch.
Entry / Exiting function	
Return operation	At entry, the seat and steering wheel return from the exiting position to the previous driving position. before the turnout operation.
Turnout operation	At exit, the seat moves backward, and the steering wheel moves forward and upward.(turnout position)

NOTE:

- Disconnecting the battery erases the stored memory.
- After connecting the battery, insert the key into the ignition cylinder and turn the driver door switch ON (open)→OFF (close)→ON (open), the Entry / Exiting function becomes possible.

Auto operation stop conditions.	● When the vehicle speed becomes 7 km/h (4 MPH) or higher. ● When the manual switch is operated. ● When any two or more switches among the setting switch, memory switch 1, or 2 are pressed simultaneously. ● When the tilt sensor or telescoping sensor malfunction is detected. ● When the A/T selector lever is shifted to a position other than P-position.

NOTE:

During automatic operation, if the ignition switch is turned ON→START, the automatic operation is suspended. When the ignition switch returns to ON, it resumes.

System Description

AIS001JL

- The system automatically moves the driver seat and steering wheel to facilitate entry/exit to/from the vehicle by connecting the BCM (Body Control Module) to the driver seat control unit the multiple communication line. The BCM can also store the optimum driving positions (driver seat, steering wheel and door mirror position) for 2 people. If the driver is changes, one-touch operation allows changing to the other driving position.
- The settings (ON/OFF) of the automatic tilt steering wheel and sliding seat (Entry/exiting function) at entry/exit can be changed as desired, using the display unit in the center of the instrument panel.

FAIL–SAFE MODE

When the ignition switch is in the ON position, if any of the parts (indicated in the following chart) move more than the specified amount within a period "T2" when no "ON" input is sent from any of the switches (indicated in the following chart), or an output from the automatic drive positioner is not produced, an output malfunction is sensed. Motor operation will be suspended automatically, and all automatic operations will be ineffective. (In this case, the motor will not operate manually).

OPERATED PORTION	T2	Allowable measurement
Seat sliding	Approx. 2.5 sec.	Within 6 mm (0.24 in).
Seat reclining	Same as above	Change angel within 2.22°
Steering wheel	Same as above	Change angel within 1°

CANCEL OF FAIL-SAFE MODE

- The mode is cancelled when the selector lever is shifted to P-position from any other position.
- The mode can be cancelled with CONSULT–II.

MEMORY STORING

Store the 2 driving positions and shifts to the stored driving position with the memory switch.

PROCEDURE FOR STORING MEMORY

Adjust the position of driver's seat with manual set operations.

↓ Ignition switch "ON".

Touch set switch.	Indicator LEDs
	(1) Indicator LED for which driver's seat positions are already retained in memory illuminates for 5 seconds.
	(2) Indicator LED for which driver's seat positions are not entered in memory illuminates for 0.5 seconds.

↓ Within 5 seconds.

Press memory switch for which driver's seat positions are to be entered in memory for more than 0.5 seconds. (2 driver's seat positions can be memorized.)	Indicator LEDs
	(1) To modify driver's seat positions, press memory switch. Indicator LED will then go out for 0.5 seconds and then illuminate for 5 seconds.
	(2) To enter driver's seat positions in blank memory, indicator LED illuminates for 5 seconds after memory switch is pressed.

↓

END OF MEMORY SETTING

SEL592W

NOTE:
The memory switch can be reset within 0.5 seconds (0.5 is excluded) after the switch is pressed. If it is too late, press the setting switch and memory switch again.

MEMORY SWITCH OPERATION

SELECTING THE MEMORIZED POSITION

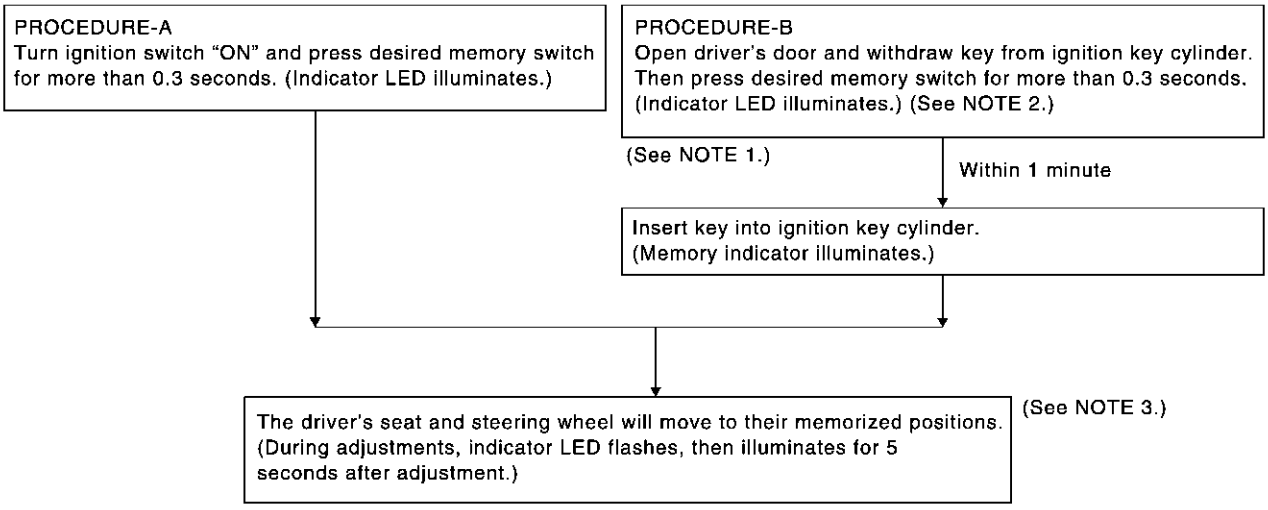

PIIA4467E

NOTE:

1. Do not sliding driver seat when Entry / Exiting vehicle setting as it will not operate. Refer to SE-36, "SETTING CHANGE FUNCTION" .
2. Automatic turnout operation will be performed.
3. The driver's seat position and steering adjustment (see the following Table) operate simultaneously in the order of priority.

Priority	Function	Priority	Function
1	Seat sliding, (door mirror–LH/RH)*	4	Seat reclining
2	Steering wheel telescoping	5	Seat lifter–FR
3	Steering wheel tilt	6	Seat lifter–RR

*: In conjunction with sliding the seat, the door mirrors are positioned vertically, and then horizontally (Procedure-A).
The mirror moves when the ignition switch is in ACC (Procedure-B)

RETURN OPERATION

When the seat and steering wheel are on the turnout positions, the following operation moves the seat and steering wheel to the previous position before the turnout operation.

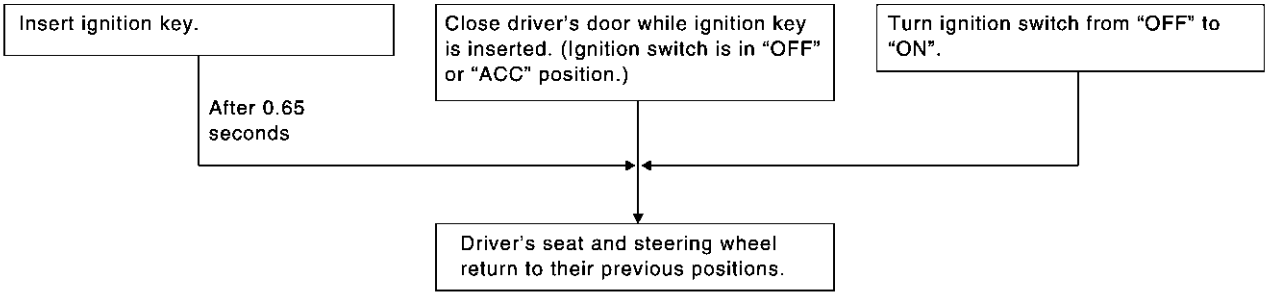

PIIA4468E

NOTE:
The seat sliding, steering wheel tilt, and telescoping return to the original positions simultaneously.

TURNOUT OPERATION

At exit, the seat and steering wheel are automatically moved to the turnout position.

- Seat: moves backward.
- Steering wheel: tilted upward and extended fully.

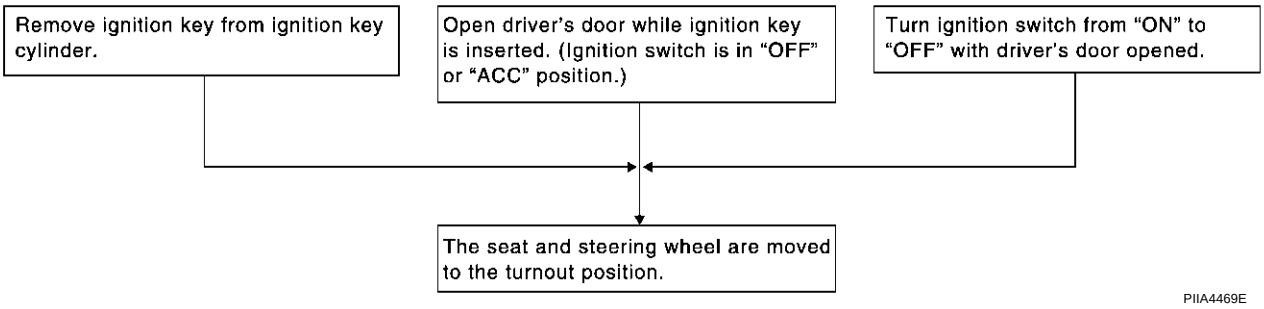

NOTE:
The seat sliding, steering wheel tilt, and telescoping are moved to the turnout position simultaneously.

Component Parts and Harness Connector Location

AIS001JM

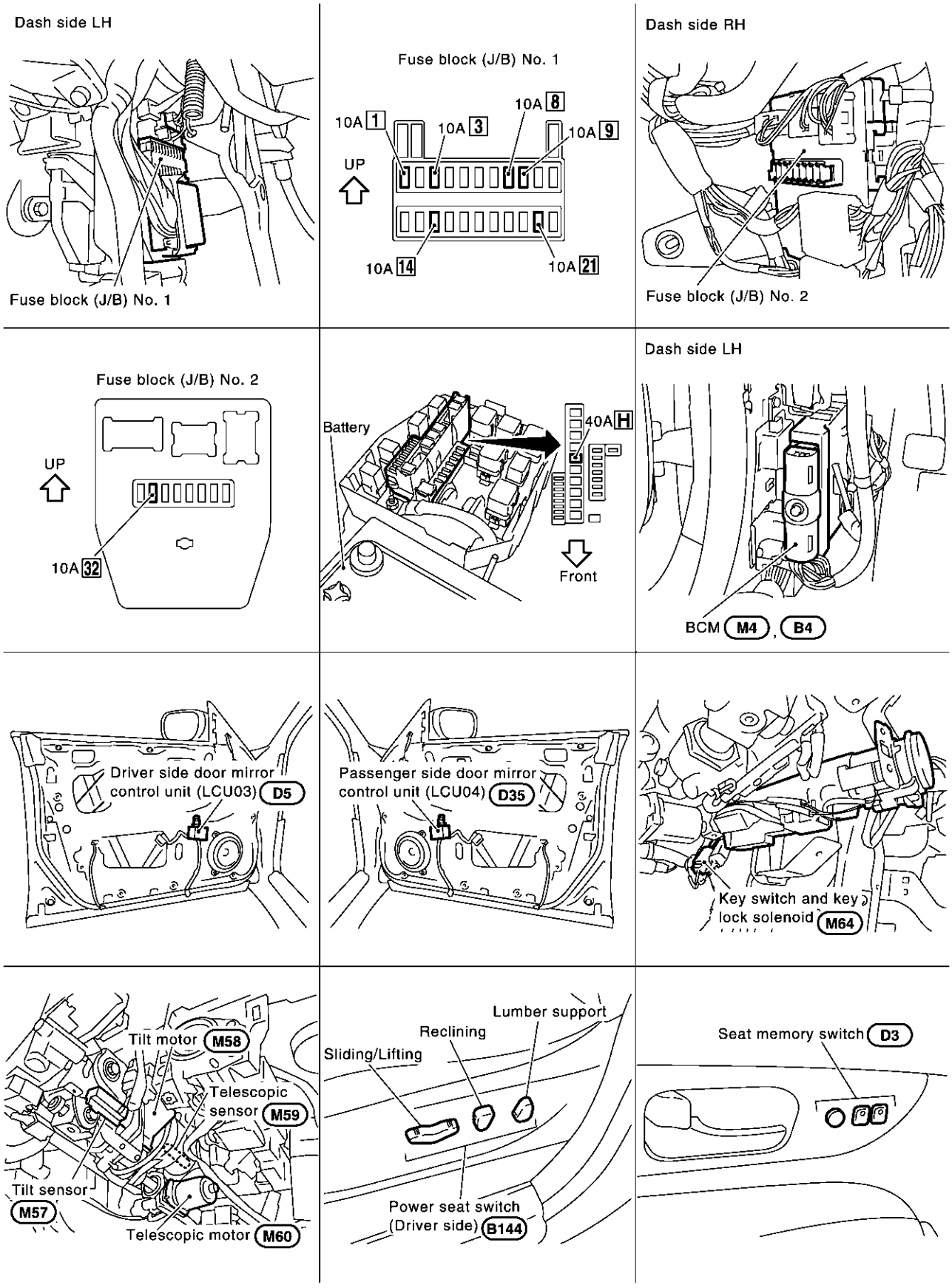

PIIA2900E

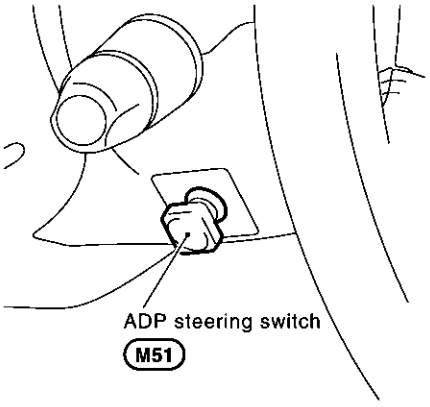
ADP steering switch
M51

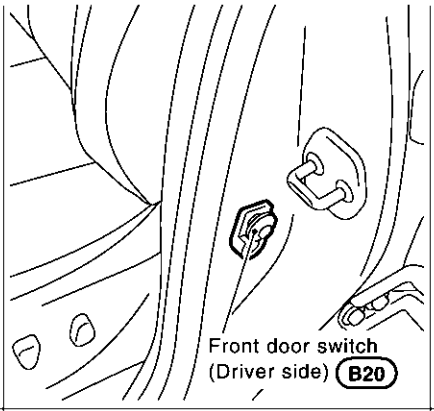
Front door switch
(Driver side) B20

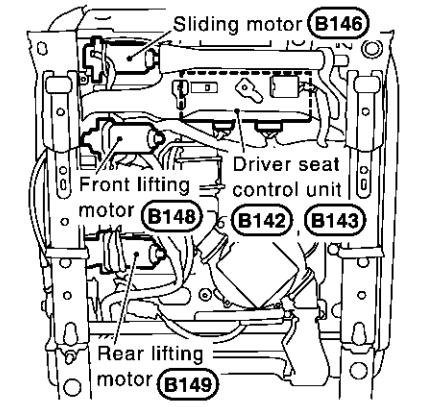
Sliding motor B146
Front lifting motor B148
Driver seat control unit
B142, B143
Rear lifting motor B149

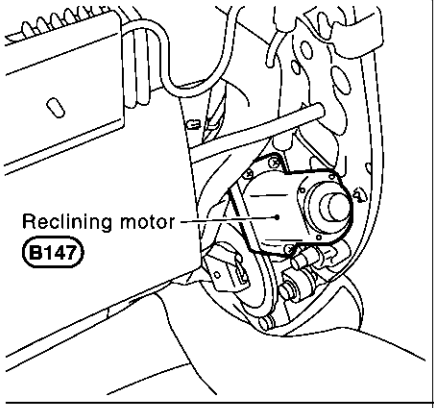
Reclining motor
B147

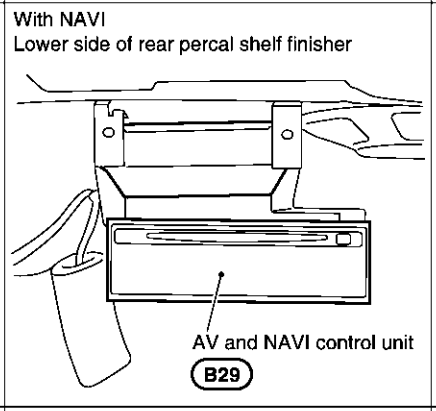
With NAVI
Lower side of rear percal shelf finisher
AV and NAVI control unit
B29

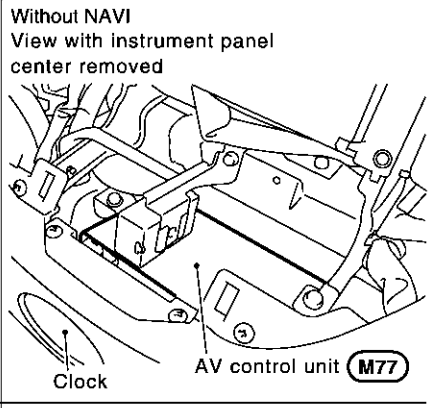
Without NAVI
View with instrument panel center removed
Clock
AV control unit M77

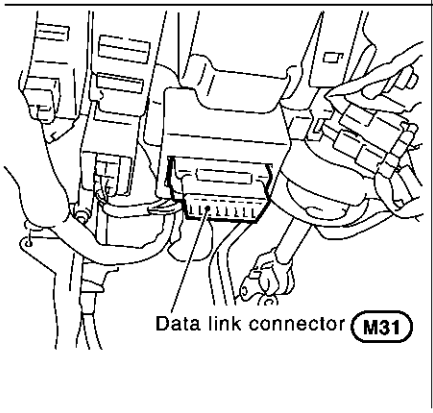
Data link connector M31

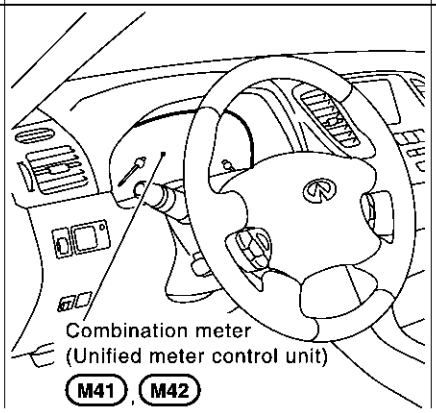
Combination meter
(Unified meter control unit)
M41, M42

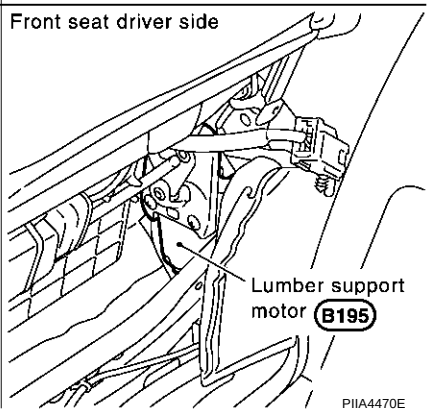
Front seat driver side
Lumber support motor B195
PIIA4470E

Schematic

AIS001JN

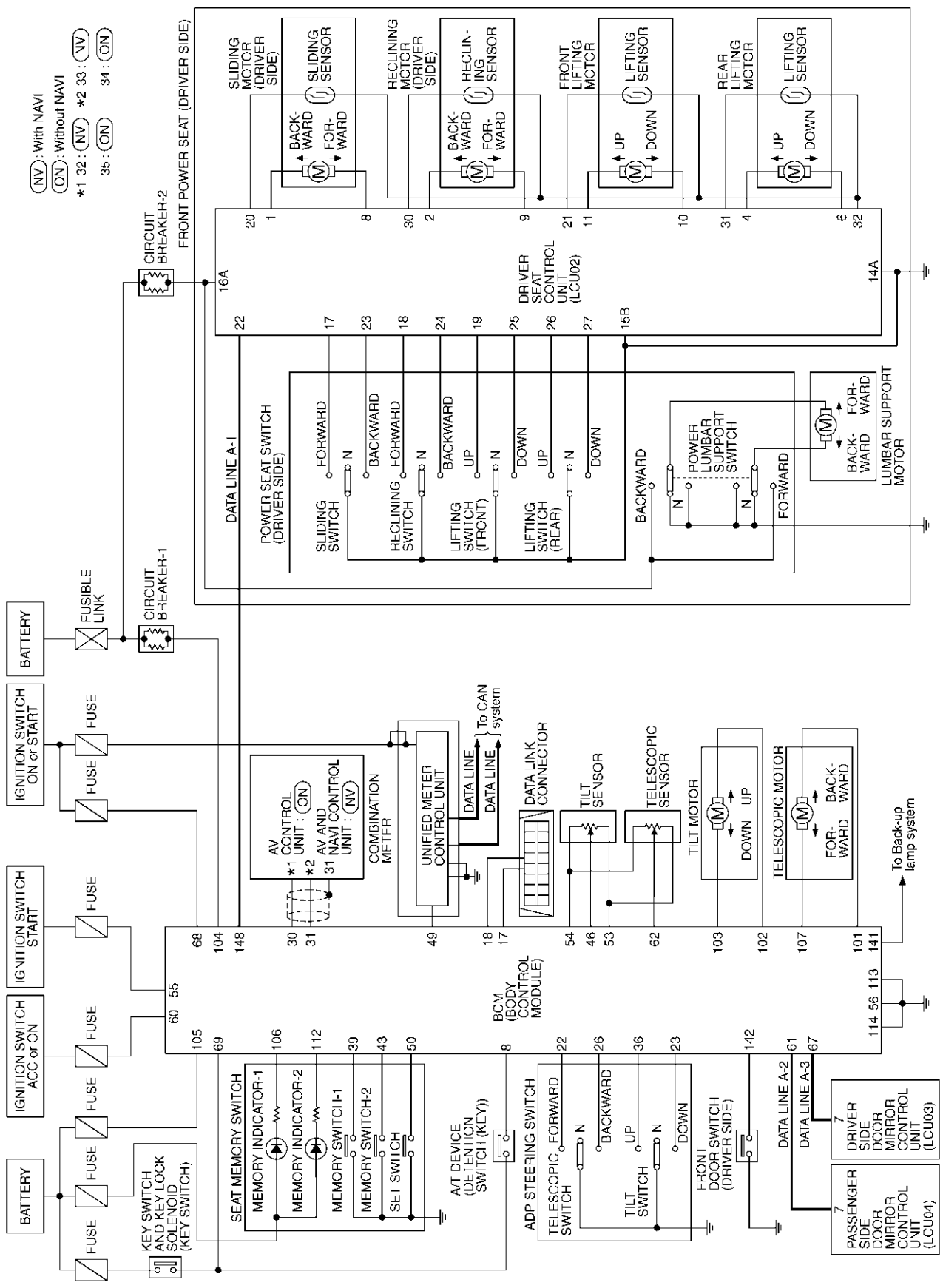

Wiring Diagram–AUT/DP–

AIS001JO

SE-AUT/DP-01

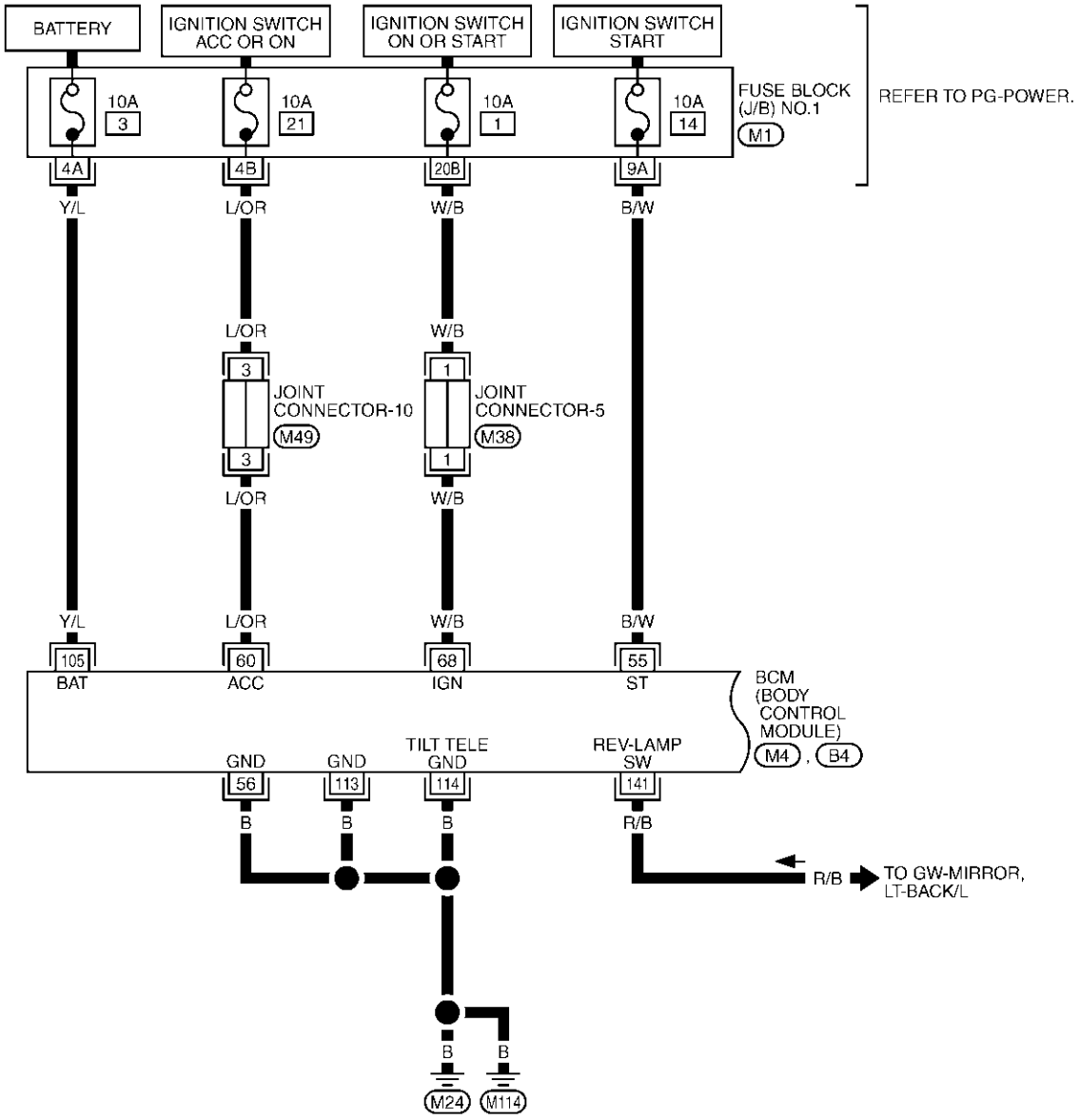

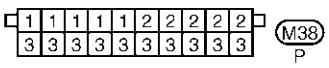

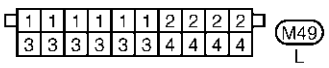

REFER TO THE FOLLOWING.

M1 -FUSE BLOCK-JUNCTION BOX (J/B) NO.1

M4 , B4 -ELECTRICAL UNITS

TIWA0240E

SE-AUT/DP-02

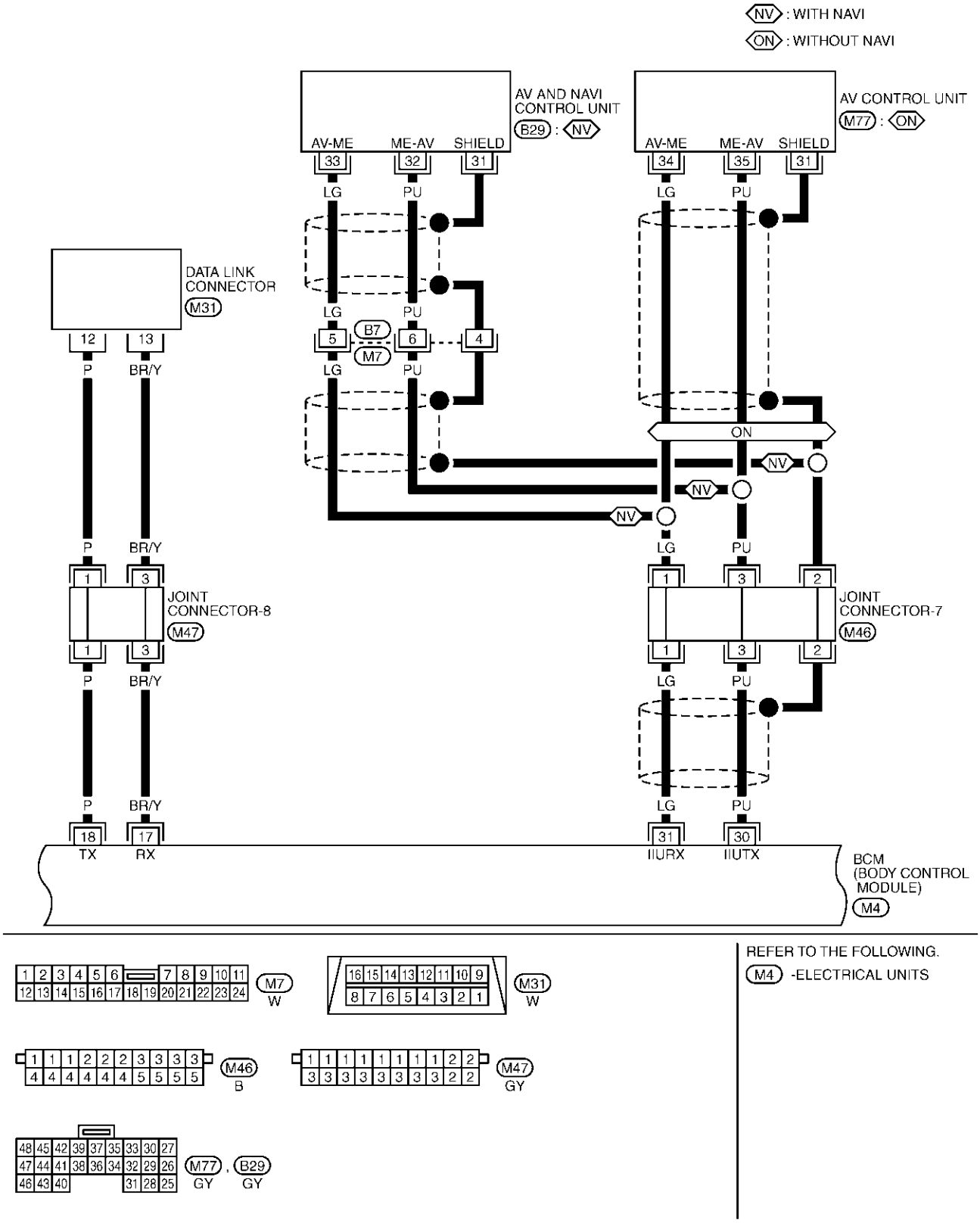
NV : WITH NAVI
ON : WITHOUT NAVI
AV AND NAVI CONTROL UNIT
B29 : NV
AV CONTROL UNIT
M77 : ON
AV-ME
ME-AV
SHIELD
33
32
31
34
35
LG
PU
DATA LINK CONNECTOR
M31
12
13
P
BR/Y
5
6
4
B7
M7
ON
NV
1
3
2
JOINT CONNECTOR-8
M47
JOINT CONNECTOR-7
M46
18
17
TX
RX
IIURX
IIUTX
BCM (BODY CONTROL MODULE)
M4
M7
W
M31
W
M46
B
M47
GY
M77
GY
B29
GY
REFER TO THE FOLLOWING.
M4 -ELECTRICAL UNITS
TIWA0241E

SE-AUT/DP-03

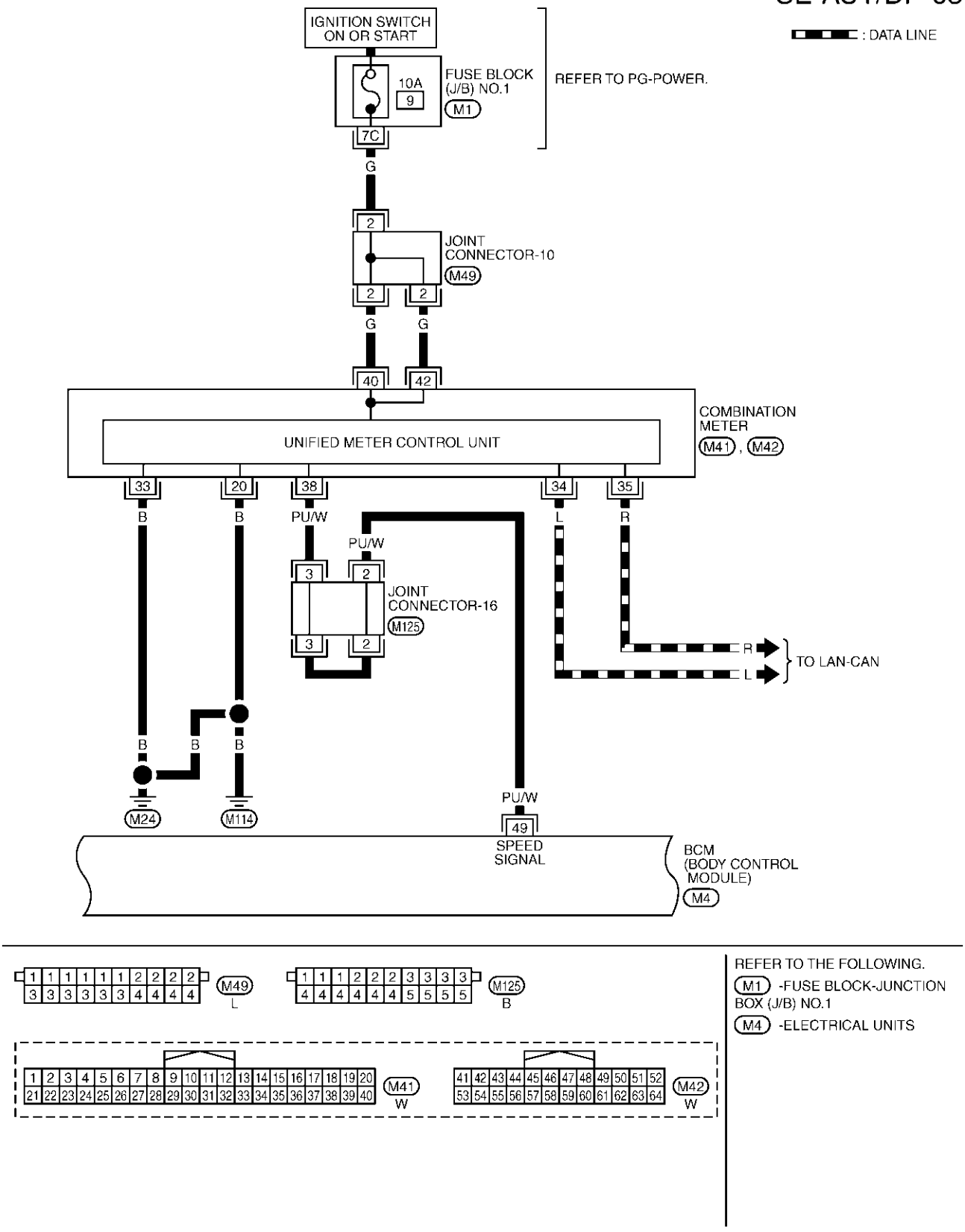

TIWA0242E

SE-AUT/DP-04

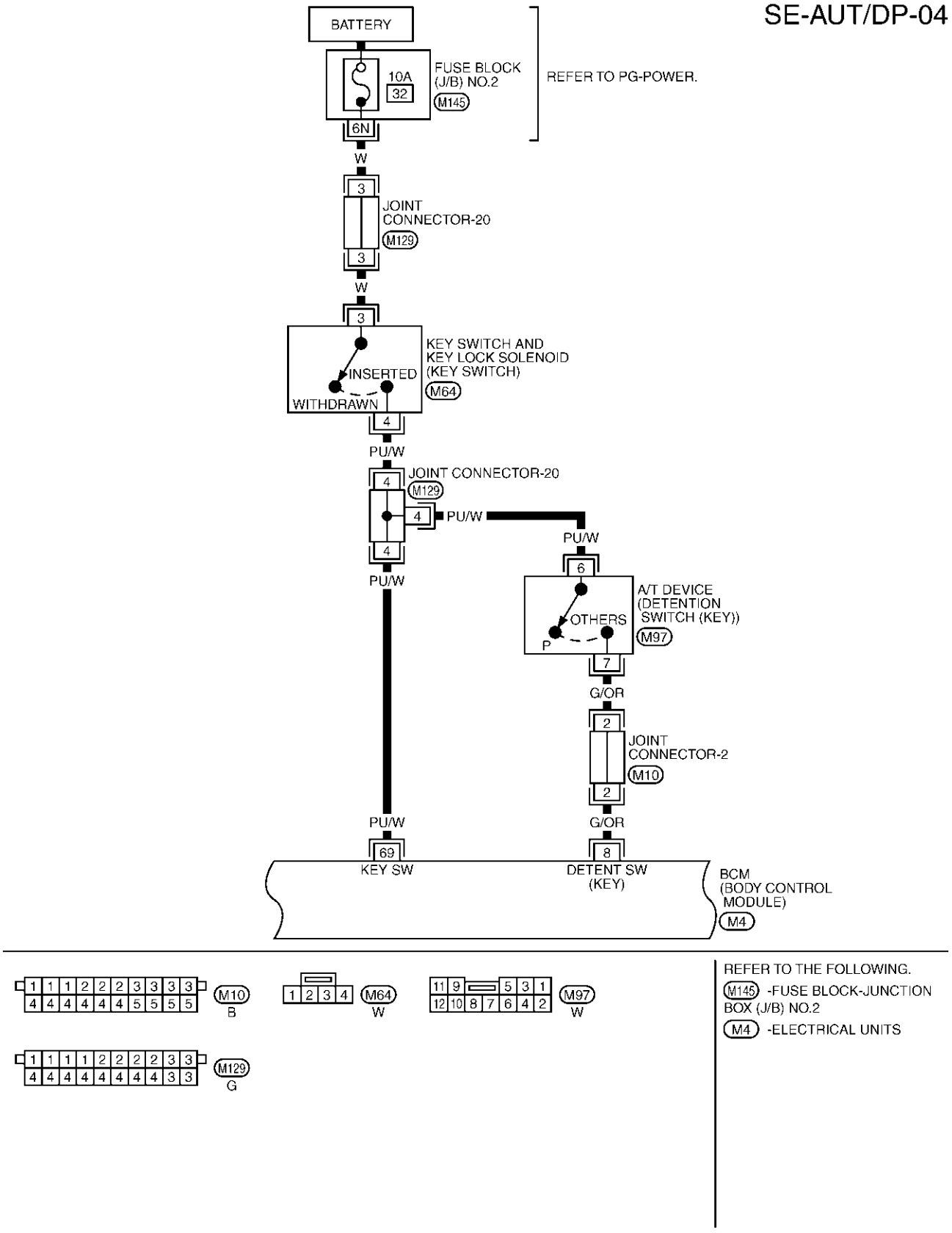
BATTERY
FUSE BLOCK (J/B) NO.2
10A
32
M145
6N
REFER TO PG-POWER.
W
3
JOINT CONNECTOR-20
M129
3
W
3
KEY SWITCH AND KEY LOCK SOLENOID (KEY SWITCH)
INSERTED
WITHDRAWN
M64
4
PU/W
JOINT CONNECTOR-20
4
M129
4
PU/W
4
PU/W
PU/W
6
A/T DEVICE (DETENTION SWITCH (KEY))
OTHERS
P
M97
7
G/OR
2
JOINT CONNECTOR-2
M10
2
PU/W
G/OR
69
8
KEY SW
DETENT SW (KEY)
BCM (BODY CONTROL MODULE)
M4
M10
B
M64
W
M97
W
M129
G
REFER TO THE FOLLOWING.
M145 -FUSE BLOCK-JUNCTION BOX (J/B) NO.2
M4 -ELECTRICAL UNITS
TIWA0243E

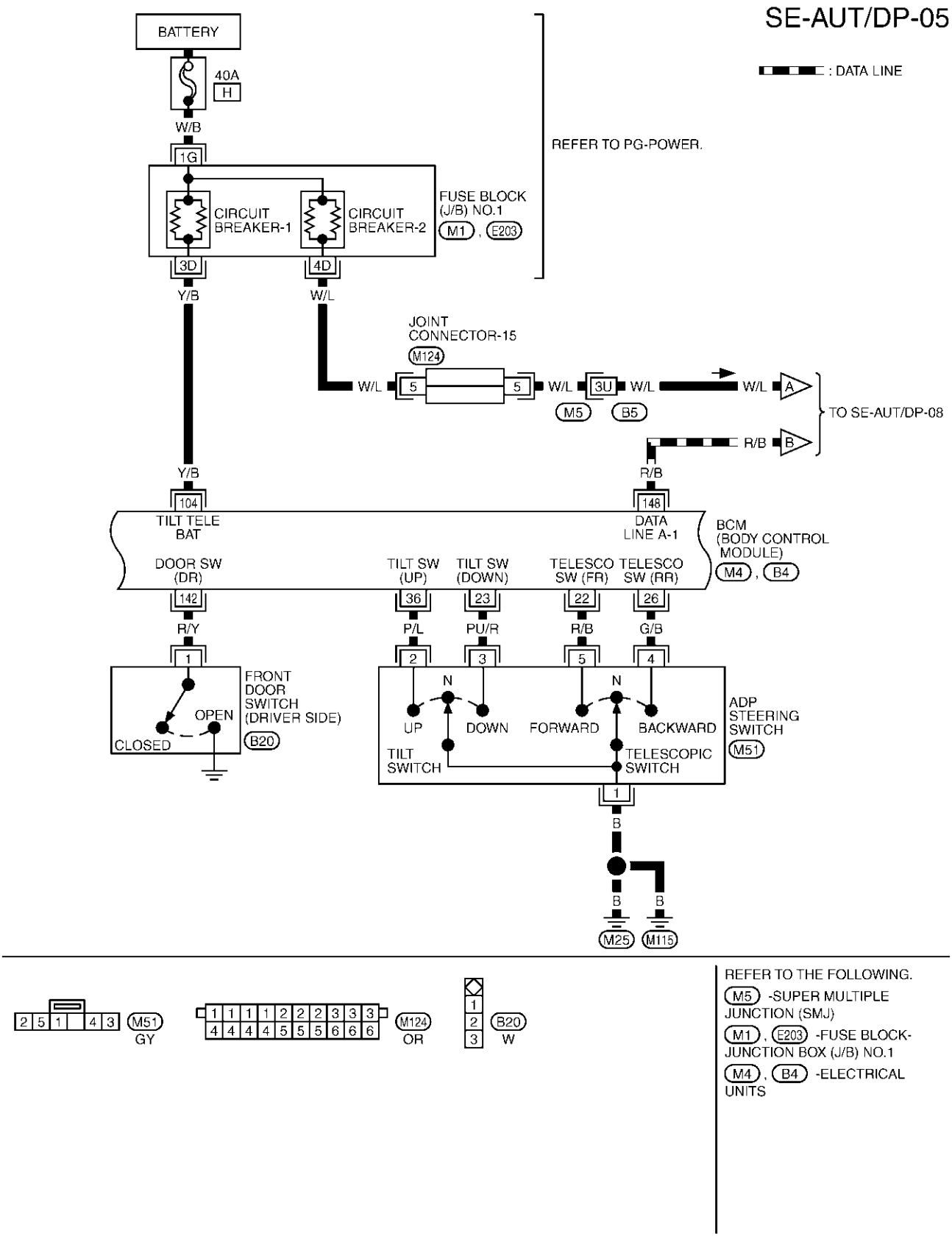
SE-AUT/DP-05
: DATA LINE
BATTERY
40A
H
W/B
1G
REFER TO PG-POWER.
CIRCUIT BREAKER-1
CIRCUIT BREAKER-2
FUSE BLOCK (J/B) NO.1
M1 , E203
3D
4D
Y/B
W/L
JOINT CONNECTOR-15
M124
W/L
5
5
W/L
3U
W/L
W/L
A
M5
B5
TO SE-AUT/DP-08
R/B
B
Y/B
R/B
104
148
TILT TELE BAT
DATA LINE A-1
BCM (BODY CONTROL MODULE)
M4 , B4
DOOR SW (DR)
TILT SW (UP)
TILT SW (DOWN)
TELESCO SW (FR)
TELESCO SW (RR)
142
36
23
22
26
R/Y
P/L
PU/R
R/B
G/B
1
2
3
5
4
FRONT DOOR SWITCH (DRIVER SIDE)
OPEN
CLOSED
B20
N
N
UP
DOWN
FORWARD
BACKWARD
TILT SWITCH
TELESCOPIC SWITCH
ADP STEERING SWITCH
M51
1
B
B
B
M25
M115
M51
GY
M124
OR
B20
W
REFER TO THE FOLLOWING.
M5 -SUPER MULTIPLE JUNCTION (SMJ)
M1 , E203 -FUSE BLOCK-JUNCTION BOX (J/B) NO.1
M4 , B4 -ELECTRICAL UNITS
TIWA0244E

SE-AUT/DP-06

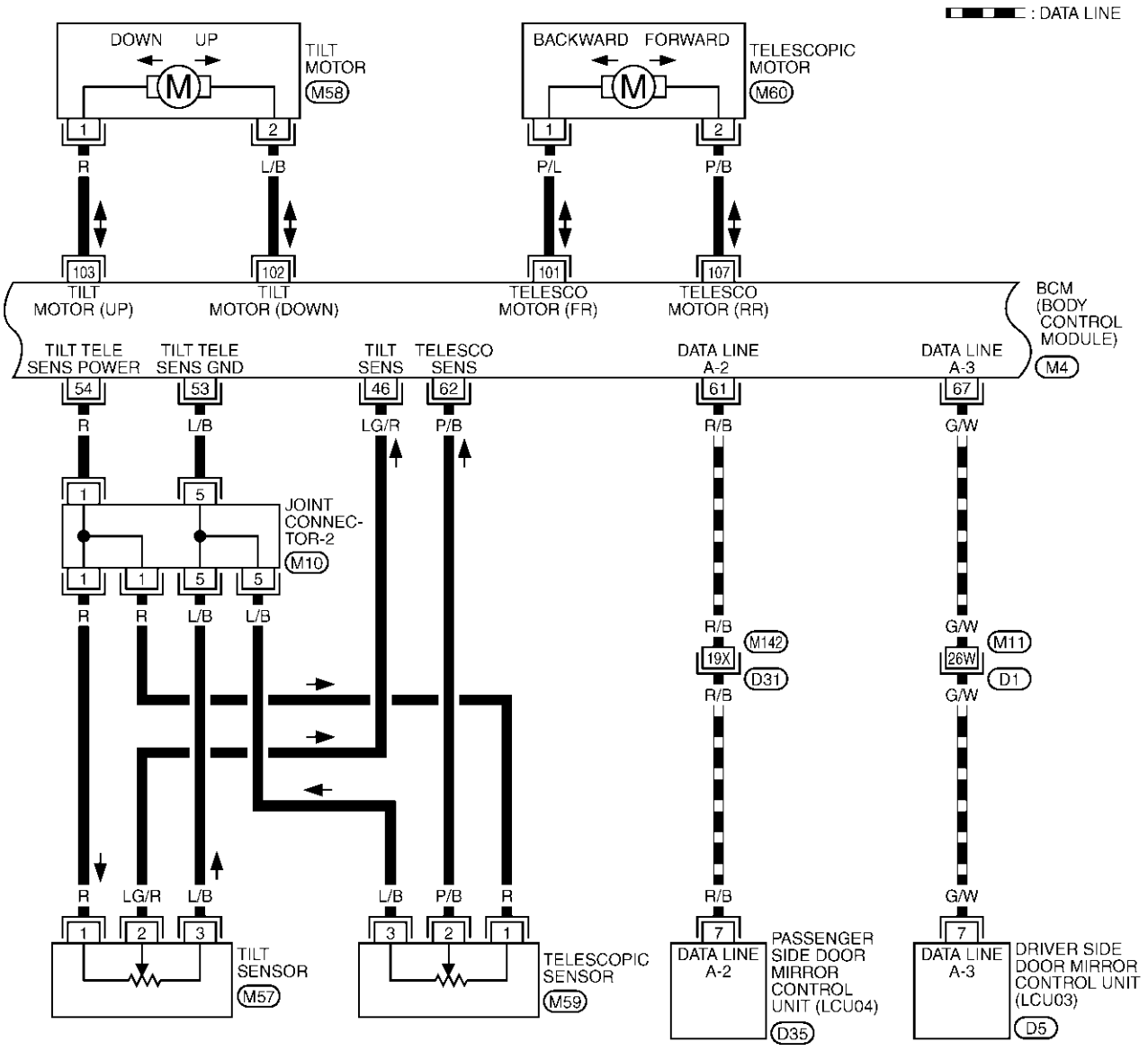

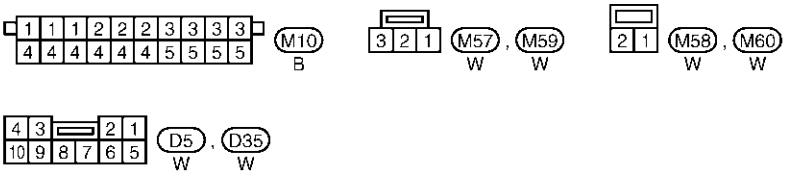

REFER TO THE FOLLOWING.

D1 , D31 -SUPER MULTIPLE JUNCTION (SMJ)

M4 -ELECTRICAL UNITS

TIWA0245E

SE-AUT/DP-07

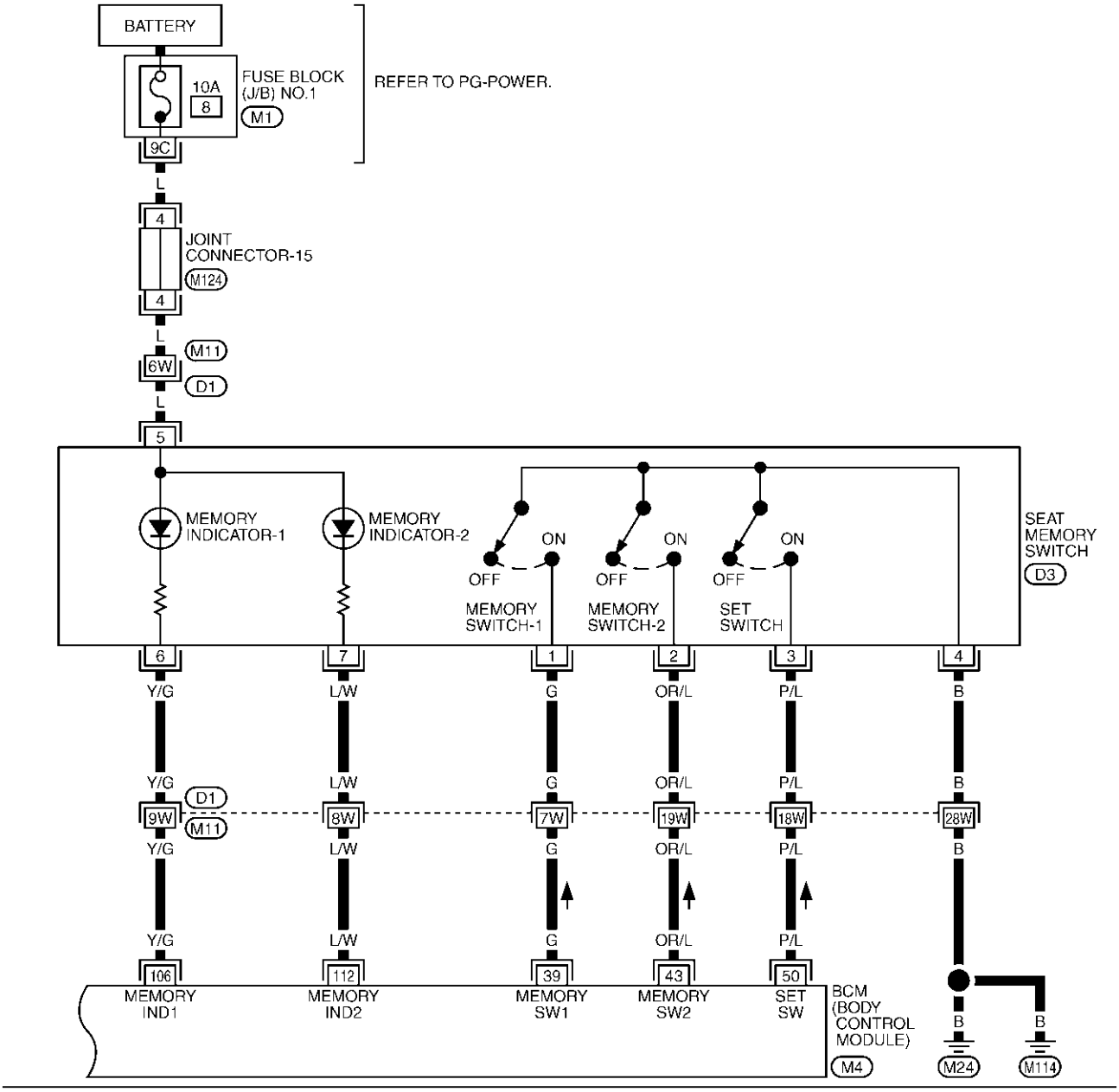

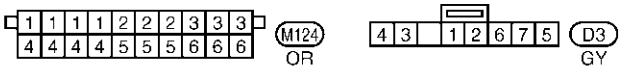

REFER TO THE FOLLOWING.

D1 -SUPER MULTIPLE JUNCTION (SMJ)

M1 -FUSE BLOCK-JUNCTION BOX (J/B) NO.1

M4 -ELECTRICAL UNITS

TIWA0246E

SE-AUT/DP-08

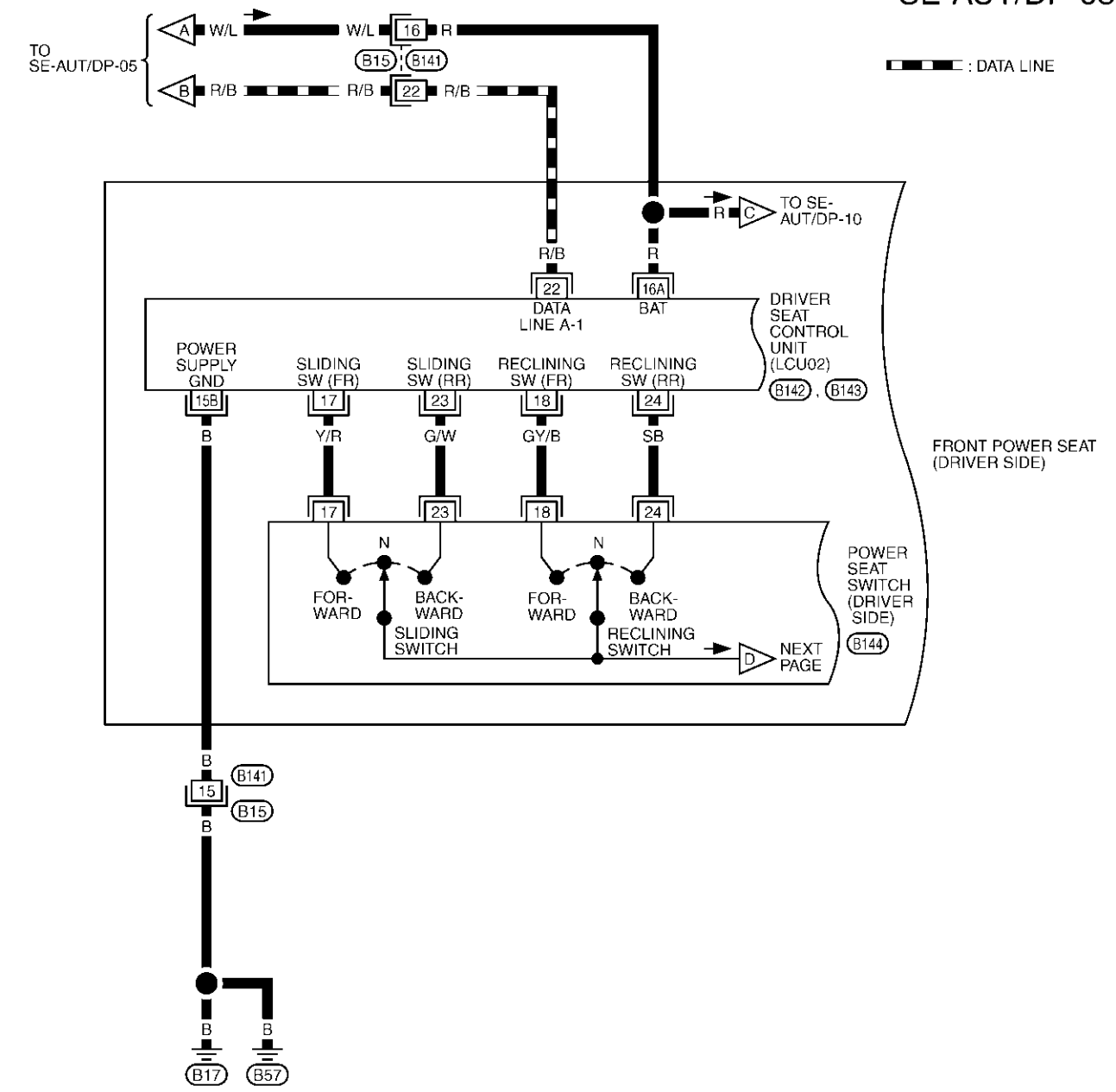

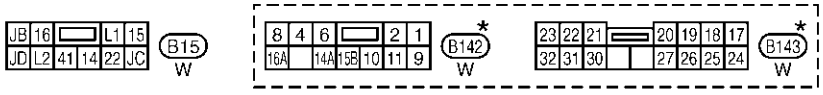

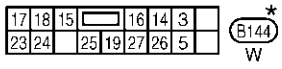

*: THIS CONNECTOR IS NOT SHOWN IN "HARNESS LAYOUT", PG SECTION.

TIWA0247E

SE-AUT/DP-09

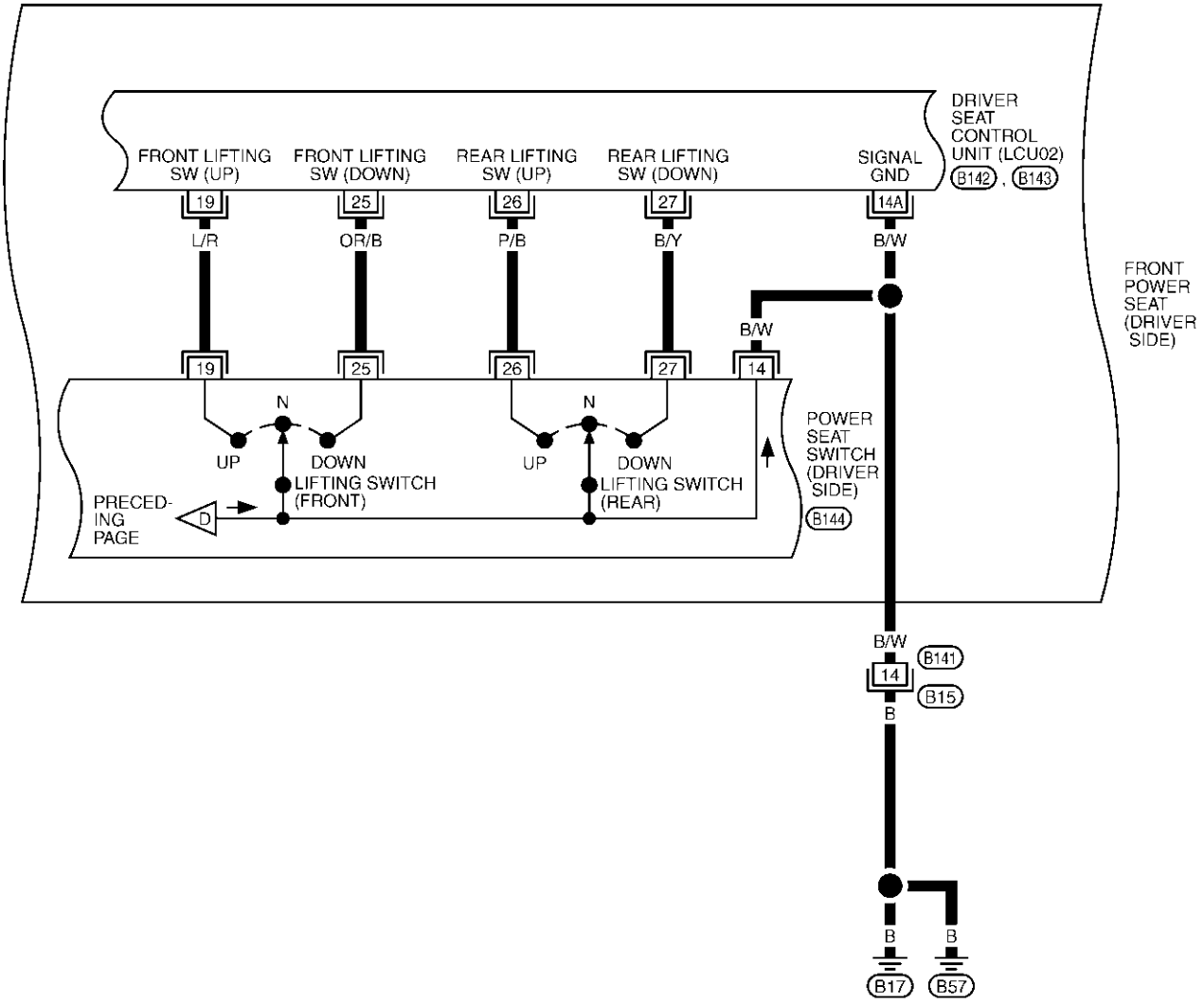

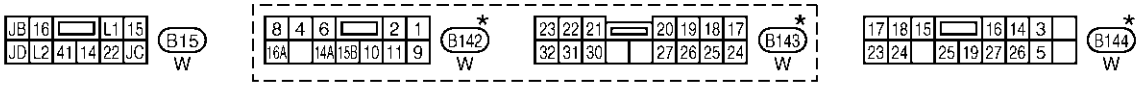

★: THIS CONNECTOR IS NOT SHOWN IN "HARNESS LAYOUT", PG SECTION.

TIWA0248E

SE-AUT/DP-10

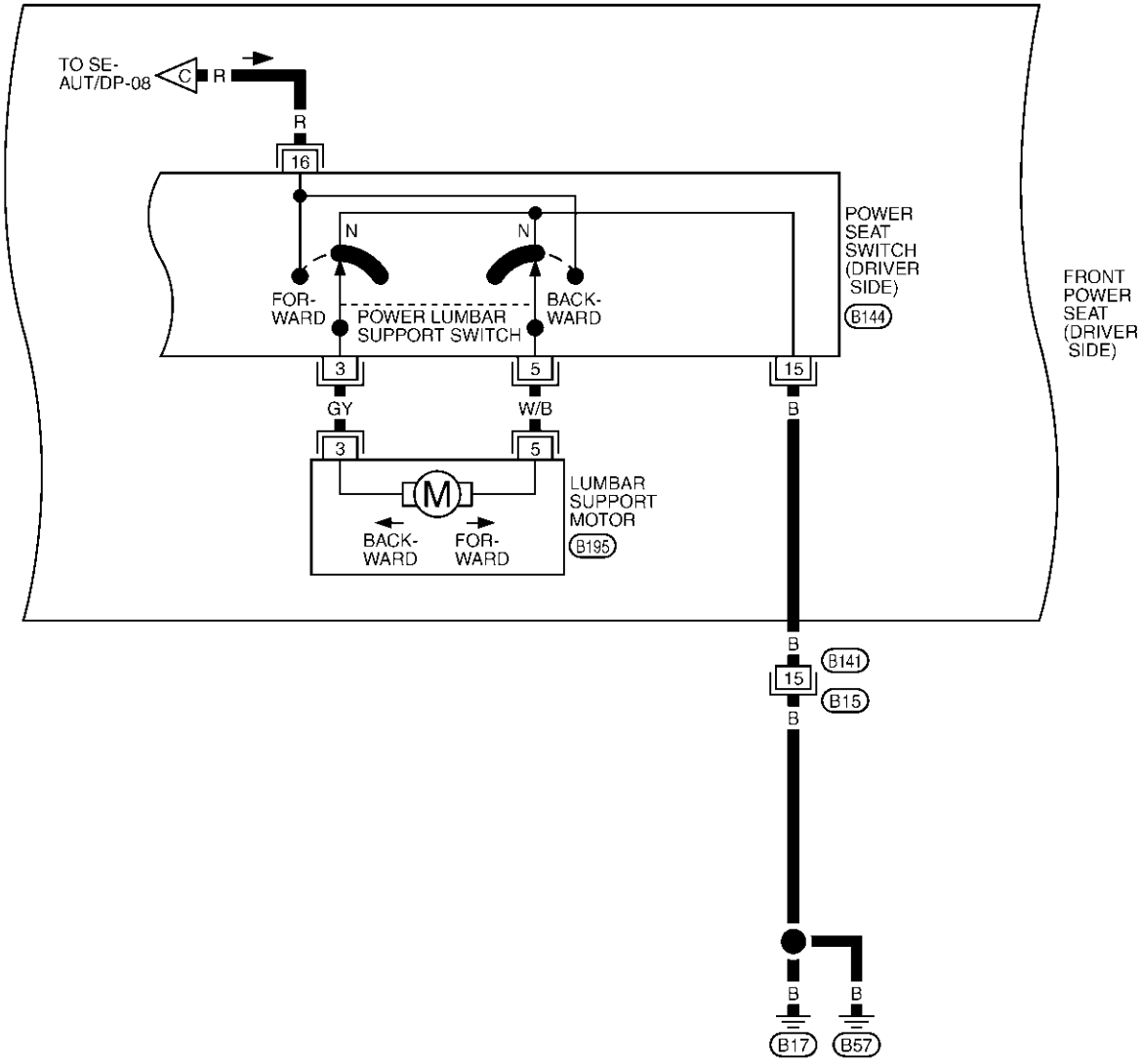

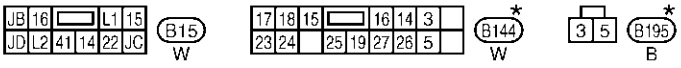

*: THIS CONNECTOR IS NOT SHOWN IN "HARNESS LAYOUT", PG SECTION.

TIWA0300E

SE-AUT/DP-11

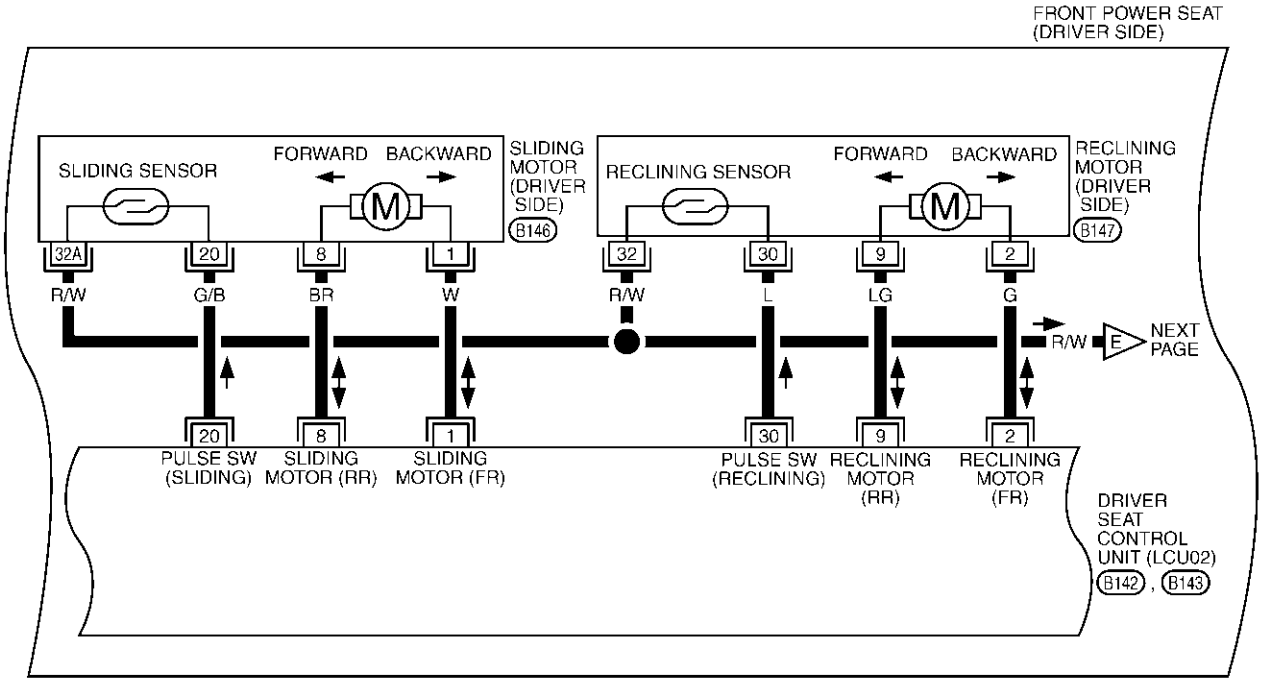

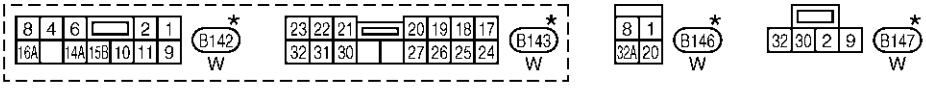

*: THIS CONNECTOR IS NOT SHOWN IN "HARNESS LAYOUT", PG SECTION.

TIWA0249E

SE-AUT/DP-12

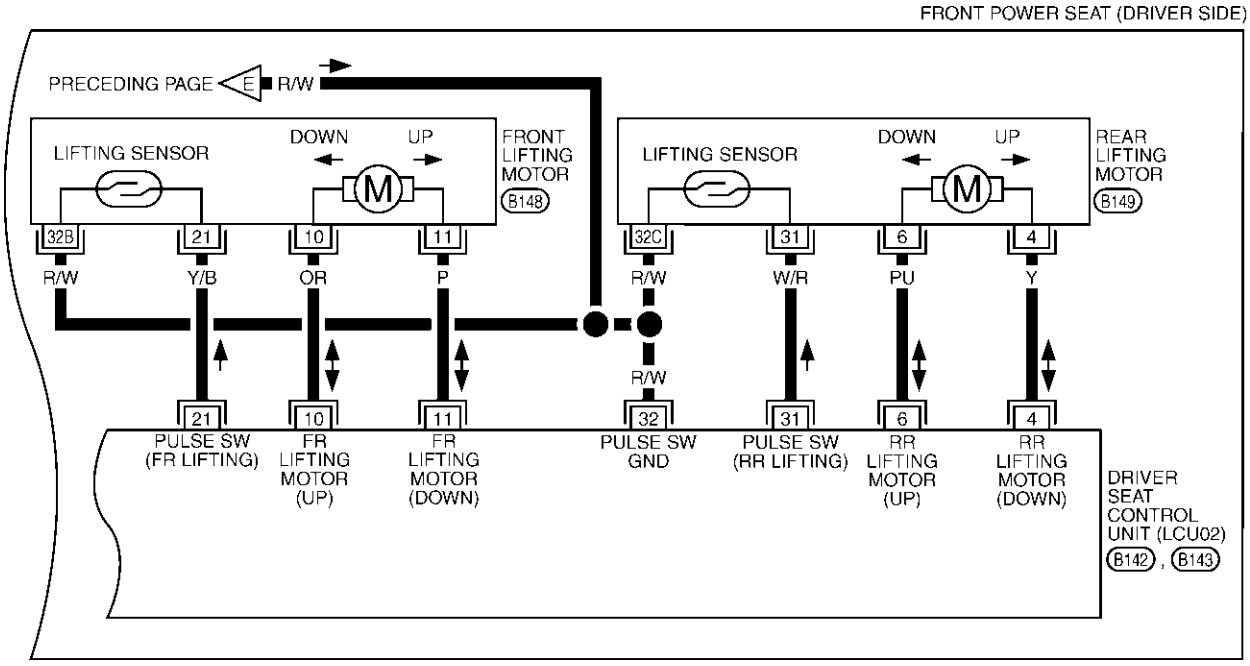

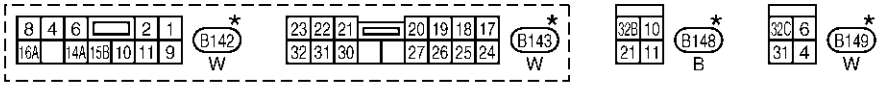

*: THIS CONNECTOR IS NOT SHOWN IN "HARNESS LAYOUT", PG SECTION.

TIWA0250E

Terminals and Reference Values for BCM

AIS001JP

Terminal	WIRE COLOR	ITEM	CONDITION		VOLTAGE (V) (Approx)
8	G/OR	Detente switch signal.	Selector lever in P-position.		0
			Selector lever in other than P-position. With ignition key in ignition key cylinder		Battery voltage
17	BR/Y	Data link (RX line)	—		—
18	P	Data link (TX line)	—		—
22	R/B	Telescopic switch FR signal	Telescoping switch	Forward operation (Motor operated)	0
				OFF	5
23	PU/R	Tilt switch DOWN signal	Tilt switch	DOWN operation (Motor operated)	0
				OFF	5
26	G/B	Telescopic switch RR signal	Telescoping switch	Backward operation (Motor operated)	0
				OFF	5
30	PU	Monitor line (TX)	—		—
31	LG	Monitor line (RX)	—		—
36	P/L	Tilt switch UP signal	Tilt switch	UP operation (Motor operated)	0
				OFF	5
39	G	Memory switch 1 signal	Memory switch 1	ON	0
				OFF	5
43	OR/L	Memory switch 2 signal	Memory switch 2	ON	0
				OFF	5
46	LG/R	Tilt sensor input/output	Tilt position, top		2
			Tilt position, bottom		4
49	PU/W	Vehicle speed signal (2-pulse)	When vehicle speed is approx. 40 km/h (25 MPH).		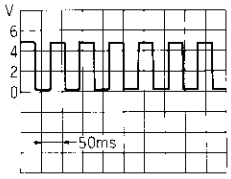 ELF1080D
50	P/L	Seat memory setting switch signal	Setting switch	ON	0
				OFF	5
53	L/B	Tilt and telescopic sensor ground	Ignition switch ON		0
54	R	Tilt and telescopic sensor power supply	Ignition switch OFF		5
55	B/W	IGN START power supply	Ignition switch START		Battery voltage
56	B	ground	Ignition switch ON		0
60	L/OR	ACC power supply	Ignition switch ACC		Battery voltage
61	R/B	Data link A-2	—		—
62	P/B	Telescopic sensor input/output	Telescoping position, top		2
			Telescoping position, bottom		4

Terminal	WIRE COLOR	ITEM	CONDITION		VOLTAGE (V) (Approx)
67	G/W	Data link A-3	—		—
68	W/B	IGN power supply	Ignition switch ON		Battery voltage
69	PU/W	Key-in detection switch signal	Insert the key (ON).		Battery voltage
			Remove the key (OFF).		0
101	P/L	Telescopic motor FR signal	Telescoping switch	ON (forward operation)	Battery voltage
				OFF	0
102	L/B	Tilt motor DOWN signal	Tilt switch	ON (DOWN operation)	Battery voltage
				OFF	0
103	R	Tilt motor UP signal	Tilt switch	ON (UP operation)	Battery voltage
				OFF	0
104	Y/B	Power supply for tilt and telescopic device	Ignition switch OFF		Battery voltage
105	Y/L	BAT power supply	Ignition switch OFF		Battery voltage
106	Y/G	Power seat memory indicator 1 signal	Indicator 1	ON	0
				OFF	Battery voltage
107	P/B	Telescopic motor RR signal.	Telescoping switch	ON (backward operation)	Battery voltage
				OFF	0
112	L/W	Power seat memory indicator 2 signal	Indicator 2	ON	0
				OFF	Battery voltage
113	B	Ground	Ignition switch ON		0
114	B	Ground for tilt and telescoping device	Ignition switch ON		0
142	R/Y	Driver door switch signal	Driver door open (ON)		0
			Driver door closed (OFF)		Battery voltage
148	R/B	Data line A–1	—		—

Terminals and Reference Values for Driver Seat Control Unit

AIS001JQ

TERMINAL	WIRE COLOR	ITEM	CONDITION		VOLTAGE (V) (Approx)
1	W	Sliding motor FR signal	Sliding switch	Forward operation (Motor operated)	Battery voltage
				OFF	0
2	G	Reclining motor FR signal	Reclining switch	Forward operation (Motor operated)	Battery voltage
				OFF	0
4	Y	Rear end lifter motor DOWN signal	Rear end lifter switch	DOWN operation (Motor operated)	Battery voltage
				OFF	0
6	PU	Rear end lifter motor UP signal	Rear end lifter switch	UP operation (Motor operated)	Battery voltage
				OFF	0
8	BR	Sliding motor RR signal	Sliding switch	Backward operation (Motor operated)	Battery voltage
				OFF	0

TERMI-NAL	WIRE COLOR	ITEM	CONDITION		VOLTAGE (V) (Approx)
9	LG	Reclining motor RR signal	Reclining switch	Backward operation (Motor operated)	Battery voltage
				OFF	0
10	OR	Front end lifter motor UP signal	Front end lifter switch	UP operation (Motor operated)	Battery voltage
				OFF	0
11	P	Front end lifter motor DOWN signal	Front end lifter switch	DOWN operation (Motor operated)	Battery voltage
				OFF	0
14A	B/W	Ground	Ignition switch ON		0
15B	B				
16A	R	BAT power supply	Ignition switch OFF		Battery voltage
17	Y/R	Sliding switch FR signal	Sliding switch	ON (forward operation)	0
				OFF	5
18	GY/B	Reclining switch FR signal	Reclining switch	ON (forward operation)	0
				OFF	5
19	L/R	Front end lifter switch UP input/output	Front end lifter switch	ON (UP operation)	0
				OFF	5
20	G/B	Sliding sensor signal	Sliding motor operation		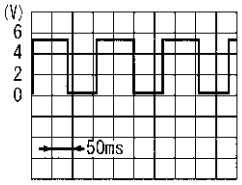 SIIA0690J
			Other than above.		0 or 5
21	Y/B	Front end lifter sensor signal	Front end lifter motor operation		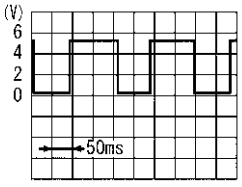 SIIA0691J
			Other than above.		0 or 5
22	R/B	Data line A–1	—		—
23	G/W	Sliding switch RR signal	Sliding switch	ON (backward operation)	0
				OFF	0 or 5
24	SB	Reclining switch RR signal	Reclining switch	ON (backward operation)	0
				OFF	0 or 5
25	OR/B	Front end lifter switch DOWN signal	Front end lifter switch	ON (DOWN operation)	0
				OFF	0 or 5
26	P/B	Rear end lifter switch UP signal	Rear end lifter switch	ON (UP operation)	0
				OFF	0 or 5

TERMI-NAL	WIRE COLOR	ITEM	CONDITION		VOLTAGE (V) (Approx)
27	B/Y	Rear end lifter switch DOWN signal	Rear end lifter switch	ON (DOWN operation)	0
				OFF	0 or 5
30	L	Reclining sensor signal	Reclining motor operation		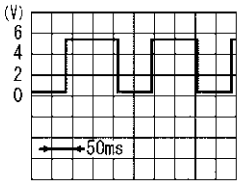 SIIA0692J
			Other than above.		0
31	W/R	Rear end lifter sensor signal	Rear end lifter motor operation		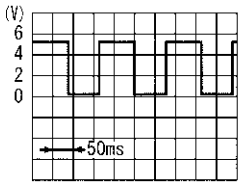 SIIA0693J
			Other than above.		0
32	R/W	Ground (sensor)	Ignition switch ON		0

Work Flow

AIS001JR

1. Check the symptom and customer's requests.
2. Understand the system description. Refer to SE-13, "System Description" .
3. Perform the preliminary check. Refer to SE-36, "Preliminary Check" .
4. Perform the communication diagnosis.
   With CONSULT–II, refer to SE-40, "IVMS Communication Diagnosis" .
   Without CONSULT–II, refer to SE-46, "COMMUNICATION DIAGNOSIS" .
   Is the communication diagnosis result OK?
   OK, GO TO 7.
   NG, GO TO 5.
5. Repair or replace depending on the diagnosis result.
6. Perform the communication diagnosis again.
   With CONSULT–II, refer to SE-40, "IVMS Communication Diagnosis" .
   Without CONSULT–II, refer to SE-46, "COMMUNICATION DIAGNOSIS" .
   Is the communication diagnosis result OK?
   OK, GO TO 7.
   NG, GO TO 5.
7. Perform the self-diagnosis.
   With CONSULT–II, refer to SE-43, "SELF-DIAGNOSIS RESULTS" .
   Without CONSULT–II, refer to SE-51, "ON BOARD DIAGNOSIS FOR AUTOMATIC DRIVE POSITIONER" .
   Is the self-diagnosis result OK?
   OK, GO TO 11.
   NG, GO TO 8.
8. Repair or replace depending on the self-diagnosis result.
9. Perform the self-diagnosis again.
   With CONSULT–II, refer to SE-43, "SELF-DIAGNOSIS RESULTS" .
   Without CONSULT–II, refer to SE-51, "ON BOARD DIAGNOSIS FOR AUTOMATIC DRIVE POSITIONER" .
   Is the self-diagnosis result OK?
   OK, GO TO 11.
   NG, GO TO 8.

10. Based on the trouble diagnosis chart, repair or replace the cause of the malfunction. Refer to SE-53, "Symptom Chart" .
11. Does the automatic drive positioned system operate normally?
    OK, GO TO 12.
    NG, GO TO 3.
12. Inspection end.

Preliminary Check

AIS001JS

SETTING CHANGE FUNCTION

The settings of the automatic driving position system can be changed, using CONSULT–II and the display unit in the center of the instrument panel.

Setting item	Content	CONSULT–II (WORK SUPPORT)	Display unit	Factory setting
EXITING OPERATION PART SET	The applied parts at exit can be selected from the following 4 modes.	Mode 1 Steering wheel and seat	—	×
		Mode 2 Steering wheel only		—
		Mode 3 Seat only		—
		Mode 4 No operation		—
Tilt Steering Wheel When Entry / Exiting Vehicle	Tilt of the steering wheel at entry and exit can be selected: ON (operated)–OFF (not operated)	—	ON: Indicator lamp ON	×
			OFF: Indicator lamp OFF	—
Sliding Driver Seat When Entry / Exiting Vehicle	The seat sliding turnout and return at entry/exit can be selected: ON (operated)–OFF (not operated)	—	ON: Indicator lamp ON	×
			OFF: Indicator lamp OFF	—

×: Applicable –: Not applicable

NOTE:

After the setting is registered, the new setting is effective, even if the battery is disconnected.

POWER SUPPLY AND GROUND CIRCUIT INSPECTION

1. CHECK FUSE

Check that any of the following fuses in the BCM are blown.

Unit	Terminal No.	Power source	Fuse No.
BCM	104	Battery power supply	H
	105		3
	60	ACC power supply	21
	55	START power supply	14
	68	IGN or STRAT power supply	1

NOTE:

Refer to SE-17, "Component Parts and Harness Connector Location" .

OK or NG

OK >> GO TO 2.
NG >> If fuse is blown, be sure to eliminate cause of problem before installing new fuse. Refer to SE-17, "Component Parts and Harness Connector Location" .

2. CHECK POWER SUPPLY CIRCUIT (BCM)

1. Disconnect BCM connector.
2. Check voltage between BCM and body ground.

Connector	Terminals (Wire color)		Power source	Condition	Voltage (V) (Approx)
	(+)	(–)			
M4	104 (Y/B), 105 (Y/L)	Ground	BAT power supply	Ignition switch OFF	Battery voltage
	60 (L/OR)	Ground	ACC or ON power supply	Ignition switch ACC	Battery voltage
	55 (B/W)	Ground	START power supply	Ignition switch START	Battery voltage
	68 (W/B)	Ground	IGN power supply	Ignition switch ON	Battery voltage

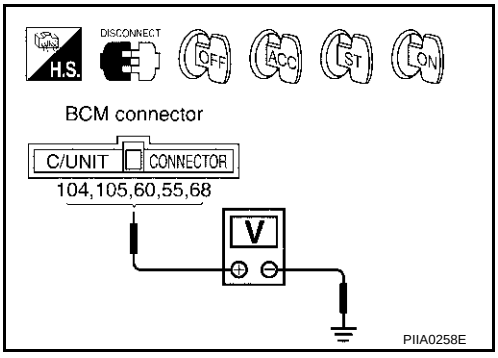

OK or NG

OK >> GO TO 3.
NG >> Check harness for open and short between BCM and fuse.

3. GROUND CIRCUIT INSPECTION (BCM).

Check continuity between BCM and body ground.

Connector	Terminals (Wire color)		Condition	Continuity
	(+)	(–)		
M4	56 (B)	Ground	Ignition switch OFF	Continuity should exist
	113 (B)	Ground	Ignition switch OFF	Continuity should exist
	114 (B)	Ground	Ignition switch OFF	Continuity should exist

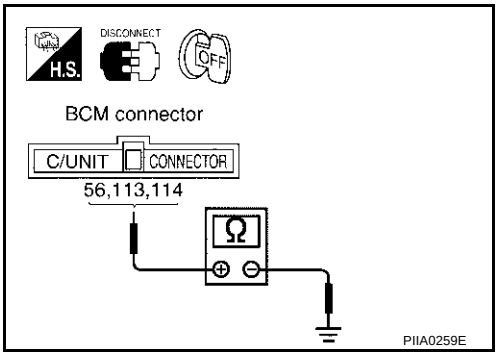

OK or NG

OK >> BCM circuit is OK. Check the driver seat control unit. GO TO 4.
NG >> Repair or replace the harness between BCM and ground.

4. CHECK POWER SUPPLY CIRCUIT (DRIVER SEAT CONTROL UNIT)

1. Turn ignition switch OFF.
2. Disconnect driver seat control unit connector.
3. Check voltage between driver seat control unit connector B142 terminal 16A (R) and body ground.

16A (R) – Ground :Battery voltage.

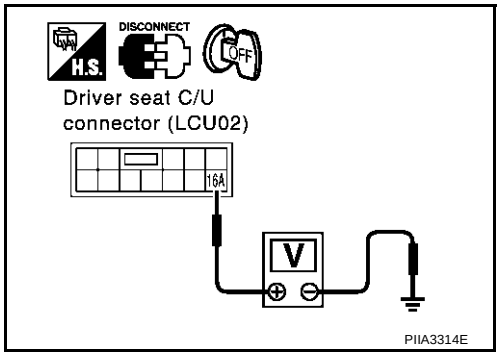

OK or NG

OK >> GO TO 5.

NG >> Repair or replace harness between driver seat control unit and fuse block (J/B) No. 1.

5. CHECK GROUND CIRCUIT (DRIVER SEAT CONTROL UNIT)

Check continuity between the driver seat control unit connector B142 terminal 14A (B/W), 15B (B) and body ground.

14A (B/W) – Ground :Continuity should exist.

15B (B) – Ground :Continuity should exist.

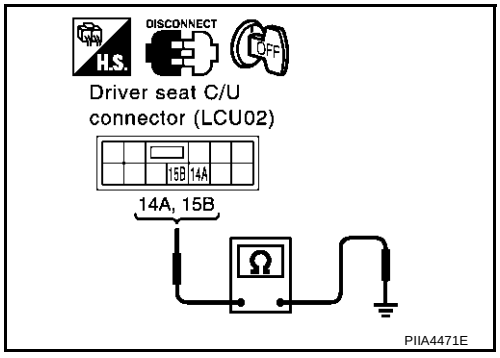

OK or NG

OK >> Driver seat control unit circuit is OK.

NG >> Repair or place harness between driver seat control unit (LCU 02) and body ground.

CONSULT-II Function

AIS001JT

CONSULT–II executes the following functions by combining data received and transmits command transmission via the communication line from the BCM. IVMS communication inspection, work support by part, self-diagnosis, data monitor, and active test display.

IVMS diagnosis items	Inspection item, self-diagnosis mode	Content
IVMS – COMM CHECK	IVMS– COMM DIAGNOSIS	Diagnoses a communication malfunction, inactive communication, and sleep malfunction in the communication line between the BCM and each LCU.
	WAKE– UP DIAGNOSIS	Diagnoses the wake-up signals output from each LCU.
AUTO DRIVE POSITIONER	WORK SUPPORT*	Changes the setting for each function.
	SELF– DIG RESULTS	Perform the self-diagnosis.
	DATA MONITOR	Displays the input data of the BCM and each LCU on real-time basis.
	ACTIVE TEST	Gives a drive signal to a load to check the operation.
BCM PART NUMBER		Displays BCM part No.

*: For setting seat and steering functions only.

CONSULT-II BASIC OPERATION PROCEDURE

1. Turn ignition switch “OFF”.
2. Connect “CONSULT-II” and CONSULT-II CONVERTER to data link connector.

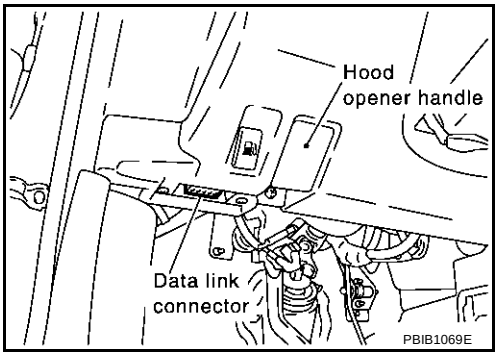

3. Turn ignition switch “ON”.
4. Touch “START(NISSAN BASED VHCL)”.

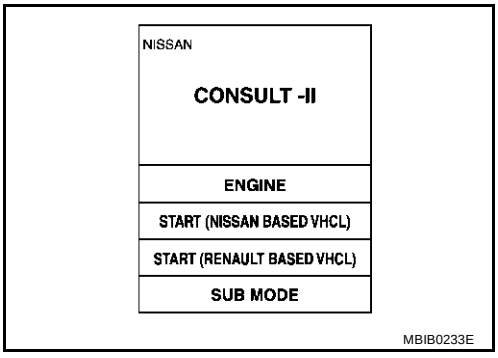

5. Touch “IVMS”on the “SELECT SYSTEM” screen.
   If “IVMS” is not indicated, go to GI-38, "CONSULT-II Data Link Connector (DLC) Circuit" .

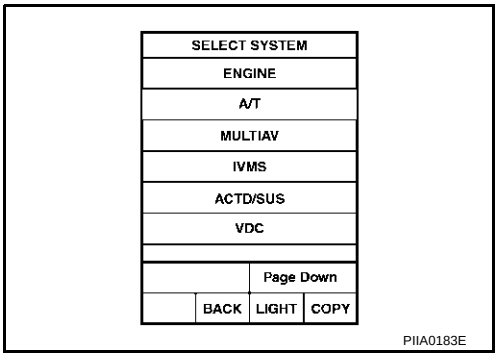

6. Check the model specification, and touch either “WITH SUNROOF” or “WITHOUT SUNROOF” on the “SELECT SYS COND” screen.
7. Touch “OK”. If the selection is wrong, touch “CANCEL”.
8. Select the desired part to be diagnosed on the “SELECT TEST ITEM” screen.

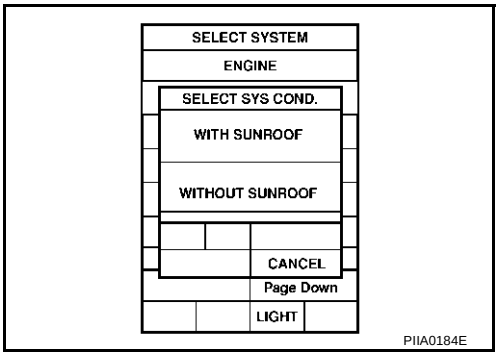

IVMS COMMUNICATION INSPECTION

IVMS contains the IVMS communication diagnosis and wake-up diagnosis.

IVMS Communication Diagnosis

- The function also stores the communication malfunction records and inactive communication records, and displays the data on the CONSULT–II screen. (malfunction record diagnosis.)

  NOTE:
  Sleep is a power saving function when a vehicle is stationary (all BCM related electrical equipment: OFF, and the timer: OFF).

Malfunction	CONSULT–II display item	Diagnosis content
Communication malfunction	COMM DATA	Communicating with each LCU is judged normal when communication is normally completed and when both transmitted data and received data are equal. In other cases, it is judged malfunctioning. If the communication is inactive, no diagnosis result is displayed.
Inactive communication	NO RESPONSE	Communicating with each LCU is judged normal when at least 1 communication is normally completed within 3 trials. In other cases, it is judged malfunctioning.
Sleep malfunction	SLEEP	Check that each LCU switches to sleep mode.
Communication malfunction*	PAST COMM DATA	The records when communication signal, malfunctions were continuously detected while the communication was normal are displayed, or a malfunction was detected during the sleep control in the past are displayed.
Inactive communication*	PAST NO RESPONSE	The records when inactive communications were continuously detected while the communication was normal are displayed.

*: Malfunction item record

Operation Procedure

1. Touch “IVMS-COMM CHECK” on “SELECT TEST ITEM”.
2. Touch “IVMS-COMM DIAGNOSIS” on the “SELECT DIAG ITEM” screen.
3. Touch “START” on the “IVMS-COMM DIAGNOSIS” screen to start the diagnosis.
4. After the diagnosis is completed, the malfunctioning system name is displayed.
5. When the malfunctioning items are displayed, touch “PRINT” to keep the records.
6. Touch “ERASE”.
7. Carry out the communication inspection again to check that any malfunctioning item is displayed.
8. Check the displayed items.

Wake-up Diagnosis.

The wake-up diagnosis is carried out when the BCM detects the wake-up signal from each local control unit (LCU). When the switch shown on the screen is operated as instructed, each local control unit (LCU) outputs the wake-up signal. If the BCM cannot detect the wake-up signal, it is judged malfunctioning. The malfunctioning local control unit (LCU) is displayed on the screen.

Operation Procedure

1. Touch “IVMS-COMM CHECK” on the “SELECT TEST ITEM” screen.
2. Touch “WAKE-UP DIAGNOSIS” on the “SELECT DIAG ITEM” screen.
3. Touch “START” on the “WAKE-UP DIAGNOSIS” screen to start the diagnosis.

4. Touch “NEXT” to select the local control unit (LCU) to be diagnosed.
5. Check that any malfunction is displayed. If necessary, touch “PRINT” to keep the record.
6. Carry out the inspection of the malfunctioning item.

Trouble Diagnosis Chart

Malfunctioning item	Display unit	CONSULT–II IVMS communication diagnosis content	Self-diagnosis trouble code No.	Malfunctioning system and reference
COMM DATA	One LCU is displayed.	POWER WINDOW C/U–DR "COMMDATA"	24	Replace the displayed LCU.
		DOOR MIRROR C/U–RH "COMMDATA"	27	
		DOOR MIRROR C/U–LH "COMMDATA"	37	
		POWER SEAT C/U–DR "COMMDATA"	47	
	Multiple LCUs are displayed.	BCM "COMMFAIL1","COMMFAIL2"	Displays in order of 24 →27→37→47 →and cycles from 24.	Communication system A: Refer to SE-42 .
NO RESPONSE	One LCU is displayed.	POWER WINDOW C/U–DR "NORESPONSE"	25	Communication system B: Refer to SE-42 .
		DOOR MIRROR C/U–RH "NORESPONSE"	28	
		DOOR MIRROR C/U–LH "NORESPONSE"	38	
		POWER SEAT C/U–DR "NORESPONSE"	48	
	Multiple LCUs are displayed.	BCM/HARNESS	Displays in order of 25→28→38→48 and cycles from 25.	Communication system C: Refer to SE-42 .
SLEEP malfunction	One LCU is displayed.	POWER WINDOW C/U–DR "SLEEP"	No self-diagnosis function	Replace the displayed LCU.
		DOOR MIRROR C/U–RH "SLEEP"		
		DOOR MIRROR C/U–LH "SLEEP"		
		POWER SEAT C/U–DR "SLEEP"		
	Multiple LCUs are displayed.	All the above control units are displayed.	No self-diagnosis function	Communication system A: Refer to SE-42 .

NOTE:

- For a specific local control unit (LCU), either “PAST COMM DATA” or “PAST NO RESPONSE” may be displayed instead of the above results.The data record, causes this, so erase the records.
  (The display only shows the incident records, they are not malfunctions caused during the diagnosis. One possible cause is that an intermittent incident occurred.)
- Follow the steps below to erase the memory.
  Carry out either disconnect BCM battery power supply or erase memory with CONSULT-II.
- With the battery connected, if the local control unit (LCU) connector is disconnected and left for approximately 1 minute, the BCM stores “NO RESPONSE” record.

COMMUNICATION SYSTEM A

1. CHECK BCM

Replace the BCM with a known-good one, and carry out the communication diagnosis. Refer to SE-40, "IVMS Communication Diagnosis" .

OK or NG

OK >> The harness and connector is checked, and it is normal, replace BCM
NG >> GO TO 2.

2. CHECK LCU

1. Replace with the previously installed BCM.
2. Replace the LCU with a known-good one, and carry out the communication diagnosis. Refer to SE-40, "IVMS Communication Diagnosis" .

OK or NG

OK >> The harness and connector is checked, and it is normal, replace LCU
NG >> Repair or replace harness between the LCU and BCM.

COMMUNICATION SYSTEM B

1. CHECK HARNESS CONNECTOR

Check terminals (at the control unit and harness) on the malfunctioning LCU for disconnection, bend, loose connection, and other malfunctions.

OK or NG

OK >> GO TO 2.
NG >> Repair the terminals and connectors.

2. CHECK LCU

Replace the malfunctioning LCU with a known-good one, and carry out the communication diagnosis. Refer to SE-40, "IVMS Communication Diagnosis" .

OK or NG

OK >> The harness and connector is checked, and it is normal, replace LCU
NG >> Repair the harness between the indicated LCU and BCM.

COMMUNICATION SYSTEM C

1. CHECK HARNESS CONNECTOR

Check terminals (at the control unit and harness) on BCM and LCU for disconnection, bend, loose connection, and other malfunctions.

OK or NG

OK >> GO TO 2.
NG >> Repair the terminals and connectors.

2. CHECK BCM

Replace the malfunctioning BCM with a known-good one, and carry out the communication diagnosis. Refer to SE-40, "IVMS Communication Diagnosis" .

OK or NG

OK >> The harness and connector is checked, and it is normal, replace BCM
NG >> Repair the harness between the LCU and BCM control.

WORK SUPPORT

Display Item List

Refer to SE-36, "SETTING CHANGE FUNCTION" .

SELF-DIAGNOSIS RESULTS

Display Item List

Malfunctioning system	Malfunction detecting condition	Diagnostic procedure	Reference page
SEAT SLIDE	When the sliding sensor pulse changes 2 times or less, while the sliding motor moves the seat backward for 2.5 seconds, and then forward for 2.5 seconds.	Seat sliding motor check Seat sliding sensor check	SE-55 SE-64
SEAT RECLINING	When the reclining sensor pulse changes 2 times or less, while the reclining motor moves the seat forward for 2.5 seconds, and then backward for 2.5 seconds.	Seat reclining motor check Seat reclining sensor check	SE-56 SE-65
SEAT LIFTER–FR	When the lifter sensor (front end) pulse changes 2 times or less, while the lifter motor (front end) moves the seat downward for 2.5 seconds, and then upward for 2.5 seconds.	Front lifting motor check Front end lifting sensor check	SE-57 SE-66
SEAT LIFTER–RR	When the lifter sensor (rear end) pulse changes 2 times or less, while the lifter motor (rear end) moves the seat downward for 2.5 seconds, and then upward for 2.5 seconds.	Rear lifting motor check Rear end lifting sensor check	SE-59 SE-67
STEERING TILT	,When the tilt sensor output voltage is 0.2V or less, while the tilt motor moves the steering wheel upward for 1 second, and then downward for 1 second.	Steering tilt motor check Steering tilt sensor check	SE-62 SE-70
STEERING TELESCO	When the telescoping sensor output voltage is 0.2V or less. while the telescope motor moves the steering wheel forward for 1 second, and then backward for 1 second,	Steering telescopic motor check Steering telescopic sensor check	SE-60 SE-69
DOOR MIRROR–LH·UP–DOWN DOOR MIRROR–LH·L–R	When LH door mirror sensor detects 0.2V or lower, or 4.5V or higher, for 0.5 seconds or more.	Mirror sensor check	GW-113
DOOR MIRROR–RH·UP–DOWN DOOR MIRROR–RH·L–R	When RH door mirror sensor detects 0.2V or lower, or 4.5V or higher, for 0.5 seconds or more.	Mirror sensor check	GW-113
VEHICLE SPEED SENSOR	When the vehicle speed is less than 7 km/h (4 MPH) for 15 seconds after the diagnosis for the seat and steering wheel is completed.	Vehicle speed sensor check	SE-74

Auto Drive Positioner Incident Memory

It stores the incident records of the input/output system related to the auto driving position system, and displays them on the CONSULT–II screen.

Malfunctioning system	Malfunction detecting condition	Diagnostic procedure	Reference page
SEAT SLIDE "PAST OUTPUT FAIL"	If the following conditions are met, the seat sliding output system is judged malfunctioning. If there is no manual input in the past or any auto operation output, and then within 2.5 seconds the sliding sensor receives an input signal showing that the seat has slid by 6 mm or more.	Seat sliding motor check Seat sliding sensor check	SE-55 SE-78
SEAT RECLINING "PAST OUTPUT FAIL"	If the following conditions are met, the seat reclining output system is judged malfunctioning. If there is no manual input in the past nor any auto operation output, and then within 2.5 seconds the reclining sensor receives an input signal showing that the seat has reclined by 1° or more.	Seat reclining motor check Seat reclining sensor check	SE-56 SE-80
STEERING TILT "PAST OUTPUT FAIL"	If the following conditions are met, the steering tilt output system is judged malfunctioning. If there is no manual input in the past nor any auto operation output, and then within 2.5 seconds the steering tilt sensor receives an input signal showing that the steering wheel is tilted by 1° or more.	Steering tilt motor check Steering tilt sensor check	SE-62 SE-70
DETENTION SW "PAST INPUT FAIL"	With the A/T selector lever in P-position (Detention switch OFF), if the vehicle speed of 7 km/h (4 MPH) or higher was input for at least 2 seconds, the detention switch input system is judged malfunctioning.	Detention switch check	SE-68
TELESCO SENSOR "PAST"	If the voltage value detected by the telescopic sensor was 0.1V or less, or 4.9 V or more, the telescoping sensor is judged malfunctioning.	steering telescopic sensor check	SE-69
TILT SENSOR "PAST"	If the voltage value detected by the tilt sensor was 0.1V or less, or 4.9 V or more, the tilt sensor is judged malfunctioning.	steering tilt sensor check	SE-70

DATA MONITOR

Display Item List

Monitor item [OPERATION or UNIT]		Contents
SLIDE SW–FR	"ON/OFF"	ON/OFF status judged from the sliding switch (FR) signal is displayed.
SLIDE SW–RR	"ON/OFF"	ON/OFF status judged from the sliding switch (RR) signal is displayed.
RECLIN SW–FR	"ON/OFF"	ON/OFF status judged from the reclining switch (FR) signal is displayed.
RECLIN SW–RR	"ON/OFF"	ON/OFF status judged from the reclining switch (RR) signal is displayed.
LIFT FR SW–UP	"ON/OFF"	ON/OFF status judged from the FR lifter switch (UP) signal is displayed.
LIFT FR SW–DN	"ON/OFF"	ON/OFF status judged from the FR lifter switch (DOWN) signal is displayed.
LIFT RR SW–UP	"ON/OFF"	ON/OFF status judged from the RR lifter switch (UP) signal is displayed.
LIFT RR SW–DN	"ON/OFF"	ON/OFF status judged from the RR lifter switch (DOWN) signal is displayed.
MIR CON SW–UP	"ON/OFF"	ON/OFF status judged from the door mirror remote control switch (UP) signal is displayed.
MIR CON SW–DN	"ON/OFF"	ON/OFF status judged from the door mirror remote control switch (DOWN) signal is displayed.
MIR CON SW–RH	"ON/OFF"	ON/OFF status judged from the door mirror remote control switch (RIGHT) signal is displayed.

Monitor item [OPERATION or UNIT]		Contents
MIR CON SW–LH	"ON/OFF"	ON/OFF status judged from the door mirror remote control switch (LEFT) signal s displayed.
MIR CHNG SW–R	"ON/OFF"	ON/OFF status judged from the door mirror remote control switch (switching to RIGHT) signal is displayed.
MIR CHNG SW–L	"ON/OFF"	ON/OFF status judged from the door mirror remote control switch (switching to LEFT) signal is displayed.
SET SW	"ON/OFF"	ON/OFF status judged from the setting switch signal is displayed.
TELESCO SW–FR	"ON/OFF"	ON/OFF status judged from the telescoping switch (FR) signal is displayed.
TELESCO SW–RR	"ON/OFF"	ON/OFF status judged from the telescoping switch (RR) signal is displayed.
TILT SW–UP	"ON/OFF"	ON/OFF status judged from the tilt switch (UP) signal is displayed.
TILT SW–DOWN	"ON/OFF"	ON/OFF status judged from the tilt switch (DOWN) signal is displayed.
MEMORY SW1	"ON/OFF"	ON/OFF status judged from the seat memory switch 1 signal is displayed.
MEMORY SW2	"ON/OFF"	ON/OFF status judged from the seat memory switch 2 signal is displayed.
CANCEL SW	"ON/OFF"	Setting status is displayed with the display unit: "Active (ON)/inactive (OFF)"
DOOR SW DR	"ON/OFF"	ON (Door open) / OFF (door closed) status judged from the driver door switch is displayed.
VHCL SPEED SE	"<7km/ >7km"	The present vehicle speed (less than 7 km/h (4 MPH), or 7 km/h (4 MPH) or higher) is displayed.
DETENT SW	"ON/OFF"	The selector lever position "ON (P position) / OFF (other than P position)" judged from the detention switch signal is displayed.
IGN ON SW	"ON/OFF"	Ignition key switch ON (IGN ON)/OFF (ignition switch START, ACC, or OFF) status judged from the ignition switch signal is displayed.
IGN ACC SW	"ON/OFF"	Ignition key switch ON (ACC or IGN ON)/ OFF (ignition switch START, or OFF) status judged from the ignition switch signal is displayed.
IGN START SW	"ON/OFF"	Ignition key switch ON (START, ON) /OFF (ignition switch IGN, ACC, or OFF) status judged from the ignition switch signal is displayed.
IGN KEY SW	"ON/OFF"	Key inserted (ON)/key removed (OFF) status judged from the key detection switch is displayed.
R POSITION SW	"ON/OFF"	R position (ON)/Other than R position of shift position signal from back–up lamp relay is displayed.
TILT SEN	"V"	The tilt position (voltage) judged from the tilt sensor signal is displayed.
TELESCO SEN	"V"	The telescoping position (voltage) judged from the telescoping sensor signal is displayed.
MIR/SE RH R–L	"ON/OFF"	ON (normal value)/OFF (abnormal value) *of voltage value judged from RH door mirror sensor output voltage (LH/RH) is displayed.
MIR/SE RH U–D	"ON/OFF"	ON (normal value)/OFF (abnormal value) *of voltage value judged from RH door mirror sensor output voltage (UP/DOWN) is displayed.
MIR/SE LH R–L	"ON/OFF"	ON (normal value)/OFF (abnormal value) *of voltage value judged from LH door mirror sensor output voltage (LH/RH) is displayed.
MIR/SE LH U–D	"ON/OFF"	ON (normal value)/OFF (abnormal value) *of voltage value judged from LH door mirror sensor output voltage (UP/DOWN) is displayed.
Voltage	"V"	Displays measured values by voltage probe.
Frequency	"ms,Hz,%"	Displays value measured with pulse probe.

*: Abnormal value indicates that the sensor output voltage is 0.2V or lower, or 4.5V or higher.

ACTIVE TEST

Display Item List

Test item	Description
TILT MOTOR	The tilt motor is activated by receiving the drive signal.
TELESCO MOTOR	The telescopic motor is activated by receiving the drive signal.

Test item	Description
SEAT SLIDE	The sliding motor is activated by receiving the drive signal.
SEAT RECLINING	The reclining motor is activated by receiving the drive signal.
SEAT LIFTER FR	The front end lifter motor is activated by receiving the drive signal.
SEAT LIFTER RR	The rear end lifter motor is activated by receiving the drive signal.
MEMORY SW INDCTR	The memory switch indicator is lit by receiving the drive signal.
MIRROR MOTOR RH	The RH mirror motor moves the mirror UP/DOWN and LEFT/RIGHT by receiving the drive signal.
MIRROR MOTOR LH	The LH mirror motor moves the mirror UP/DOWN and LEFT/RIGHT by receiving the drive signal.

On Board Diagnosis

AIS001JU

BCM can check each local unit (LCU), switches, loads, and malfunctions in communication with the self-diagnosis.

DIAGNOSIS ITEM

Diagnosis item	Description
Communication diagnosis	It can check the communication line between BCM and each LCU, and also each LCU, for a communication and malfunction.
Switch monitor	It can check the switch systems which send data to BCM and each LCU for a malfunction.
Self-diagnosis for auto drive positioner	Diagnosis malfunctions in each motor and sensor in the electrical load parts of the driver power seat system (sliding, reclining, and lifter [front/rear]), of the steering wheel system (tilt, telescoping), and of door mirror.

COMMUNICATION DIAGNOSIS

Check the communication between BCM and each local control unit (LCU).

Operation Procedure

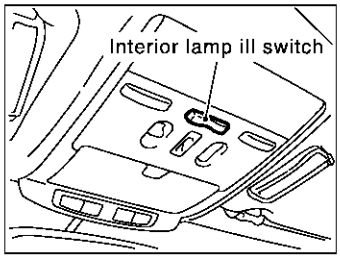

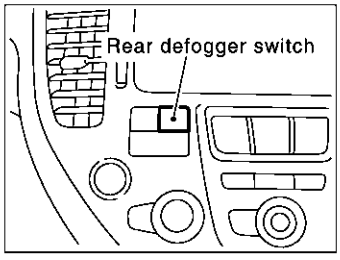

Close all doors.
↓
Turn the interior lamp ill switch to “NEUTRAL” position.
↓
Put the selector lever in “P” position.
↓
Turn the ignition switch ON.
↓
Turn the ignition switch from ON to ACC.
↓
Press the rear defogger switch 10 times or more within 10 seconds after the ignition switch is turned to ACC.
↓
Indicator lamps (map lamp and step lamp) illuminate and stay on for 5 seconds to carry out bulb check.
↓
Turn the ignition switch from ACC to ON while the indicator lamps are on.
↓
Diagnosis starts up.

PIIA2871E

Diagnosis Result Display

- The indicator lamps (the map lamp and step lamp) turn ON (illuminate) for 2 seconds and OFF (go off) for 2 seconds to indicate that the diagnosis has started, then indicate the diagnosis trouble code.
- To indicate the diagnosis trouble code, the indicator lamps illuminate or flash.
- At first, the lamps indicate the second place by ON/OFF with 0.5 second-interval, then OFF for 1.5 seconds. Next, they indicate the first place by ON/OFF with 0.5 second interval.

- If there are multiple malfunctioning parts, the lamps indicate them in sequence from the smallest diagnosis trouble code.
- The diagnosis results repeat until the diagnosis is cancelled.
- If a malfunction is indicated, carry out the communication diagnosis again to check that the same diagnosis trouble code is indicated.

Diagnosis Trouble Code Indication Example

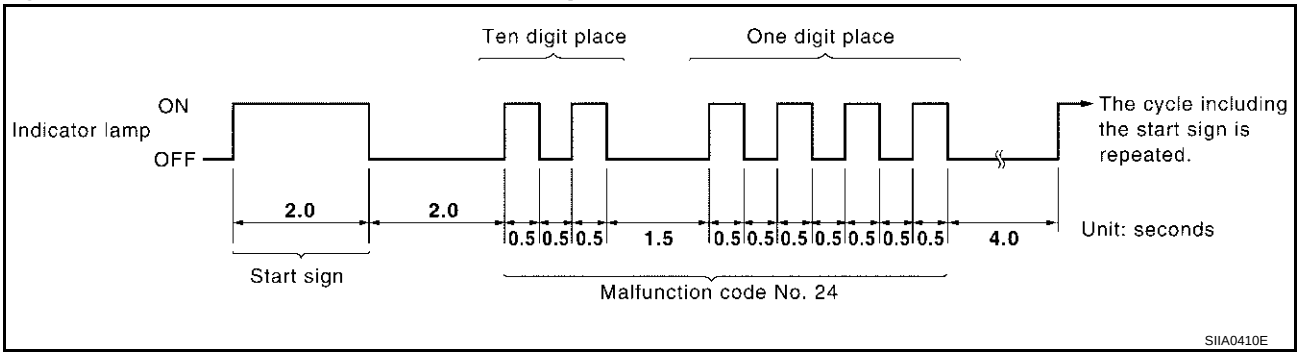

Trouble Diagnosis Chart

Malfunctioning item	Display unit	CONSULT–II IVMS communication diagnosis content	Self-diagnosis trouble code No.	Malfunctioning system and reference
COMM DATA	One LCU is displayed.	POWER WINDOW C/U–DR "COMMDATA"	24	Replace the displayed LCU.
		DOOR MIRROR C/U–RH "COMMDATA"	27	
		DOOR MIRROR C/U–LH "COMMDATA"	37	
		POWER SEAT C/U–DR "COMMDATA"	47	
	Multiple LCUs are displayed	BCM "COMMFAIL1","COMMFAIL2"	Displays in order of 24 →27→37→47 →and cycles from 24.	Communication system A: Refer to SE-48 .
NO RESPONSE	One LCU is displayed.	POWER WINDOW C/U–DR "NORESPONSE"	25	Communication system B: Refer to SE-48 .
		DOOR MIRROR C/U–RH "NORESPONSE"	28	
		DOOR MIRROR C/U–LH "NORESPONSE"	38	
		POWER SEAT C/U–DR "NORESPONSE"	48	
	Multiple LCUs are displayed	BCM/HARNESS	Displays in order of 25→28→38→48 and cycles from 25.	Communication system C: Refer to SE-49 .

Malfunctioning item	Display unit	CONSULT–II IVMS communication diagnosis content	Self-diagnosis trouble code No.	Malfunctioning system and reference
SLEEP malfunction	One LCU is displayed.	POWER WINDOW C/U–DR "SLEEP"	No self-diagnosis function	Replace the displayed LCU.
		DOOR MIRROR C/U–RH "SLEEP"		
		DOOR MIRROR C/U–LH "SLEEP"		
		POWER SEAT C/U–DR "SLEEP"		
	Multiple LCUs are displayed	All the above control units are displayed.	No self-diagnosis function	Communication system A: Refer to SE-48 .

NOTE:

- For a specific local control unit (LCU), either "PAST COMM DATA" or "PAST NO RESPONSE" may be displayed instead of the above results. This is caused by the data record, so erase the records.
  (The display only shows the incident records, they are not malfunctions caused during the diagnosis. One possible cause is that an reproducible incident occurred.)
- Follow the steps below to erase the memory.
  Carry out either disconnect BCM battery power supply or erase memory with CONSULT-II.
- With the battery connected, if the local control unit (LCU) connector is disconnected and left for approximately 1 minute, the BCM stores "NO RESPONSE" record.

Cancel Of Communication Diagnosis

If one of the following conditions is satisfied, the communication diagnosis is cancelled.

- When the ignition switch is turned OFF.
- The vehicle speed becomes 7 km/h (4 MPH) or higher.
- Ten minutes have passed since the diagnostic result indication start without no diagnosis cancel operation.

COMMUNICATION SYSTEM A

1. CHECK BCM

Replace the BCM with a known-good one, and carry out the communication diagnosis. Refer to SE-46, "COMMUNICATION DIAGNOSIS" .

OK or NG

OK >> Replace BCM
NG >> GO TO 2.

2. CHECK LCU

1. Replace with the previously installed BCM.
2. Replace the LCU with a known-good one, and carry out the communication diagnosis. Refer to SE-46, "COMMUNICATION DIAGNOSIS" .

OK or NG

OK >> Replace LCU
NG >> Repair the harness between the LCU and BCM.

COMMUNICATION SYSTEM B

1. CHECK HARNESS CONNECTOR

Check terminals (at the control unit and harness) on the malfunctioning LCU for disconnection, bend, poor connection and other malfunctions.

OK or NG

OK >> GO TO 2.
NG >> Repair the terminals and connectors.

2. CHECK LCU

Replace the malfunctioning LCU with a known-good one, and carry out the communication diagnosis. Refer to SE-46, "COMMUNICATION DIAGNOSIS" .

OK or NG

OK >> Replace LCU
NG >> Repair the harness between the indicated LCU and BCM.

COMMUNICATION SYSTEM C

1. CHECK HARNESS CONNECTOR

Check terminals (at the control unit and harness) on BCM and LCU for disconnection, bend, poor connection, and other malfunctions.

OK or NG

OK >> GO TO 2.
NG >> Repair the terminals and connectors.

2. CHECK BCM

Replace the malfunctioning BCM with a known-good one, and carry out the communication diagnosis. Refer to SE-46, "COMMUNICATION DIAGNOSIS" .

OK or NG

OK >> Replace BCM
NG >> Repair the harness between the LCU and BCM control.

SWITCH MONITOR

Perform the diagnosis for the switch system input to each control unit.

Operation Procedure

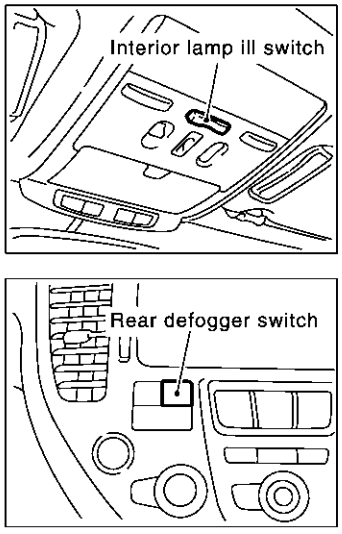

Close all doors.
↓
Turn the interior lamp ill switch to "NEUTRAL" position and put the selector lever in "P" position.
↓
Turn the ignition switch ON.
↓
Turn the ignition switch from ON to ACC.
↓
Press the rear defogger switch 10 times or more within 10 seconds after the ignition switch is turned to ACC.
↓
Indicator lamps (map lamp and step lamp) illuminate and stay on for 5 seconds to carry out bulb check.
↓
Turn the ignition switch from ACC to ON with the rear defogger switch held down while the indicator lamps are on.
↓
Diagnosis starts up.
↓
Operate the switch to be checked.

PIIA2869E

Diagnosis Result Display

- Detects the status change (switch ON/OFF operation) of the switch to be checked, and turns on/off the indicator lamps (the map lamp and step lamp). Also sounds the buzzer (the key remainder and light remainder) for 0.5 seconds.

- If a malfunction is detected, no indicator lamp and buzzer react.

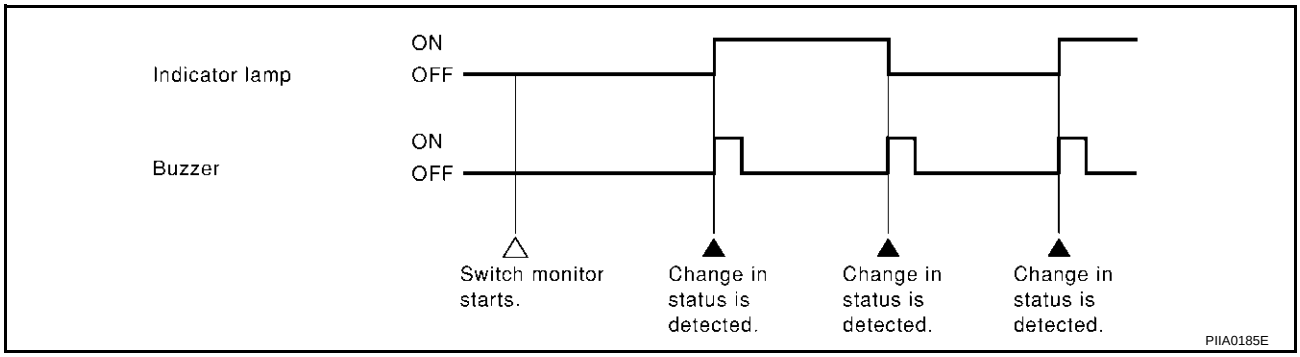

Diagnosis Item

The status of the switch (except the ignition switch, interior lamp switch, and map lamp switch) input to each control unit can be monitored.

Control unit	Item
BCM	Detente switch
	Steering wheel position switch (telescopic switch and tilt switch)
	Seat memory switch (memory switch 1, memory switch 2, and setting switch)
	Driver door switch
	Door mirror remote control switch
Driver seat control unit	Slide switch (FR/RR)
	Reclining switch (FR/RR)
	Front end lifting switch (UP/DOWN)
	Rear end lifting switch (UP/DOWN)

Cancel Of Switch Monitor

If one of the following conditions is satisfied, the switch monitor is cancelled.

- When the ignition switch is turned OFF.
- The vehicle speed becomes 7 km/h (4 MPH) or higher.

ON BOARD DIAGNOSIS FOR AUTOMATIC DRIVE POSITIONER

Check the operations of the auto drive positioner system.

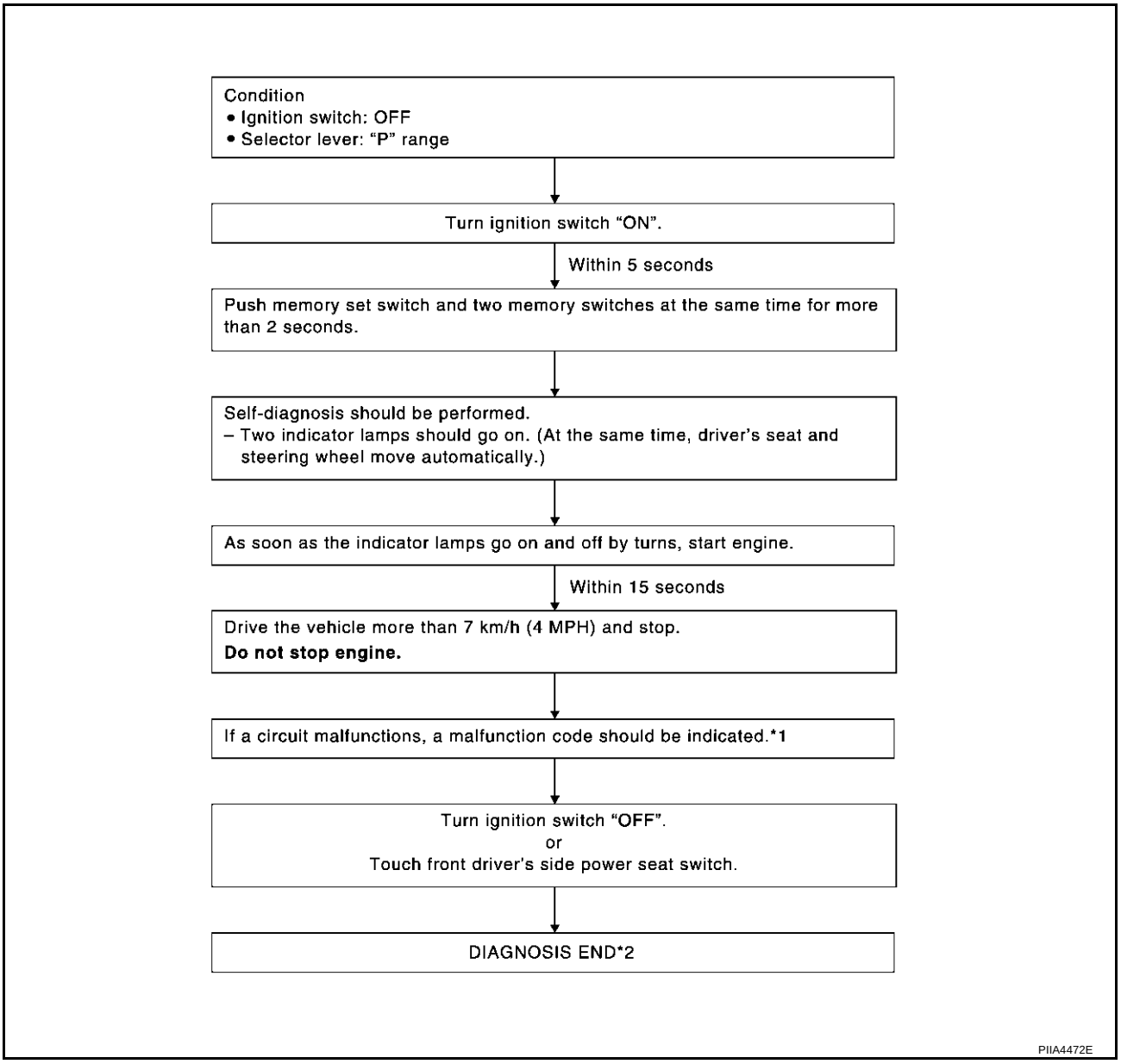

*1: If no malfunction is indicated, On board diagnosis for automatic drive positioner will end after the vehicle speed sensor diagnosis is performed.
*2: Diagnosis ends after self-diagnostic results have been indicated for 10 minutes if left unattended.

Diagnostic Result Display

- The malfunctioning items are indicated by how many times LEDs on the seat memory switches 1 and 2 flash simultaneously.

Code No.	Detected items	Indication of seat memory switches 1 and 2	Explanation
1	Seat sliding	IND1, IND2	While the seat motors are moving for 2.5 seconds, if the number of seat sliding/reclining/lifting sensor pulses changes 2 times or less, the seat device is determined to be malfunctioning.
2	Seat reclining	IND1, IND2	
3	Seat lifting front	IND1, IND2	
4	Seat lifting rear	IND1, IND2	
5	Steering telescopic	IND1, IND2	While the steering motors are moving, if the steering sensor output changes 0.2 volts or less, the steering device is determined to be malfunctioning.
6	Steering tilt	IND1, IND2	
7	Door mirrors (upper and lower)	IND1, IND2	When output voltage of either LH or RH door mirror sensor continues at less than 0.2V or more than 4.5V for 0.5 seconds or more, the door mirror is determined to be malfunctioning.
8	Door mirrors (LH and RH)	IND1, IND2	When output voltage of either LH or RH door mirror sensor continues at less than 0.2V or more than 4.5V for 0.5 seconds or more, the door mirror is determined to be malfunctioning.
9	Vehicle speed sensor circuit	IND1, IND2 T T 12 sec. (T: 0.5 sec.)	If the vehicle speed sensor output of less than 7 km/h (4 MPH) is detected, the vehicle speed sensor is determined to be malfunctioning.
–	No malfunction in the above items	SW1 IND SW2 IND 0.5 sec. 0.5 sec. 5 sec.	—

PIIA0190E

- If the vehicle speed is less than 7 km/h (4 MPH) for 15 seconds after the diagnosis for the seat and steering wheel systems were completed, the vehicle speed signal is judged malfunctioning.
- If LH door mirror is malfunctioning, only indicator lamp on the memory switch 1 flashes, and if RH door mirror is malfunctioning, only indicator lamp on the memory switch 2 flashes.
- When all the diagnosis are finished normally, the indicator lamps on the memory switches 1 and 2 go off after the vehicle speed signal diagnosis.
- If there are multiple malfunctioning parts, the lamps indicate them in sequence from the smallest diagnosis trouble code.
- The diagnosis results repeat until the diagnosis mode is cancelled.

Symptom Chart

AIS001JV

Symptom	Diagnoses / service procedure	Refer to page
A part of seat system does not operate (both automatically and manually).	1. Seat sliding motor circuit inspection	SE-55
	2. Seat reclining motor circuit inspection	SE-56
	3. Front end seat lifter motor circuit inspection	SE-66
	4. Rear end seat lifter motor circuit inspection	SE-67
	5. If the above systems are normal, replace the BCM	—
A part of steering wheel system does not operate (both automatically and manually).	1.Steering wheel telescopic motor circuit inspection	SE-60
	2. Steering wheel tilt motor circuit inspection	SE-62
	3. If the above systems are normal, replace the BCM	—
Door mirrors cannot be actuated by both automatic and manual.	1. Door mirror remote control switch (changeover switch) circuit inspection	GW-107
	2. Door mirror remote control switch (mirror switch) system inspection	GW-110
	3. If the above systems are normal, replace the BCM.	–
A part of seat system does not operate (only automatic operation).	1. Seat sliding sensor circuit inspection	SE-64
	2. Seat reclining sensor circuit inspection	SE-65
	3. Front end seat lifter sensor circuit inspection	SE-66
	4. Rear end seat lifter sensor circuit inspection	SE-67
	5. If the above systems are normal, replace the driver seat control unit	–
Door mirrors cannot be actuated in automatic mode.	1. R-position signal circuit inspection	GW-109
	2. Mirror sensor circuit inspection1	GW-113
	3. If the above systems are normal, replace the door mirror control unit.	–
All the automatic operations do not operate.	1. Detention switch circuit inspection	SE-68
	2. Telescopic sensor circuit inspection	SE-69
	3. Tilt sensor circuit inspection	SE-70
	4. Vehicle speed signal circuit inspection	SE-74
	5. If all the above systems are normal, replace the BCM	–
Seat or steering wheel memory does not work	1. Seat memory switch circuit inspection	SE-76
	2. If the above systems are normal, replace the BCM.	–
Only manual operation does not operate.	1. Seat sliding switch circuit inspection	SE-78
	2. Seat reclining switch circuit inspection	SE-80
	3. Front end seat lifter switch circuit inspection	SE-82
	4. Rear end seat lifter switch circuit inspection	SE-84
	5. Steering wheel telescoping switch circuit inspection	SE-86
	6. Steering wheel tilt switch circuit inspection	SE-88
	7. Door mirror remote control switch (mirror switch) circuit inspection	GW-110
	8. If all the above systems are normal, replace the driver seat control unit for the seat system, the BCM for the steering wheel system	–
Seat memory indicator lamps 1 and 2 do not illuminate.	1. Seat memory indicator lamp circuit inspection	SE-90
	2. If all the above systems are normal, replace the BCM.	–

Symptom	Diagnoses / service procedure	Refer to page
The entry / exiting does not operated when door is opened and closed. (The entry / exiting operates with key switch)	1. Driver door switch circuit inspection	SE-73
	2. If all the above systems are normal, replace the BCM.	–
Auto driving position system self-diagnosis does not work.(Without CONSULT-ll)	1. Detente switch circuit inspection	SE-68
	2. Key switch and key lock solenoid circuit inspection	SE-71
	3. Seat memory switch circuit inspection	SE-76
	4. Seat memory indicator lamp circuit inspection	SE-90
	5. Vehicle speed signal circuit inspection	SE-74
	6. If all the above systems are normal, retry the self-diagnosis. If the self-diagnosis are still disable, check the driver seat control unit connector and terminals for looseness and damage.	–
Lumber support motor does not operated.	1. Lumber support motor circuit inspection	SE-91

Seat Sliding Motor Circuit Inspection

AIS001JW

1. CHECK SEAT SLIDING MECHANISM

Check the following.

1. Operation malfunction caused by sliding rail deformation or pinched harness or other foreign materials
2. Operation malfunction caused by foreign materials adhered to the sliding motor or sliding rail connector rod
3. Operation malfunction and interference with other parts by poor installation.

OK or NG

OK >> GO TO 2.
NG >> Repair the malfunction part and check again.

2. CHECK FUNCTION

With CONSULT-II

Check operation with "SEAT SLIDE" in ACTIVE TEST.

Test item	Description
SEAT SLIDE	The sliding motor is activated by receiving the drive signal.

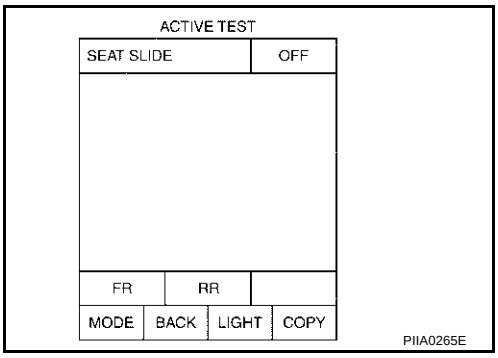

Without CONSULT-II

Perform the self-diagnosis. Refer to SE-51, "ON BOARD DIAGNOSIS FOR AUTOMATIC DRIVE POSITIONER" .

OK or NG

OK >> System is OK.
NG >> GO TO 3.

3. CHECK HARNESS CONTINUITY

1. Turn ignition switch OFF.
2. Disconnect driver seat control unit connector and sliding motor connector.
3. Check continuity between driver seat control unit connector B142 terminals 1 (W), 8 (BR) and sliding motor connector B146 terminals 1 (W), 8 (BR).

   1 (W) – 1 (W) : Continuity should exist.
   8 (BR) – 8 (BR) : Continuity should exist.

4. Check continuity between driver seat control unit connector B142 terminals 1, 8 and body ground.

   1 (W) – Ground :Continuity should not exist.
   8 (BR) – Ground :Continuity should not exist.

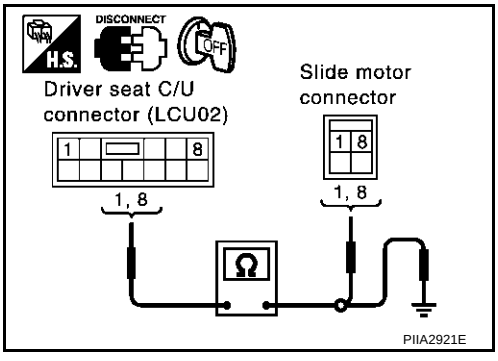

OK or NG

OK >> GO TO 4.
NG >> Repair or replace harness between driver seat control unit and sliding motor.

4. CHECK DRIVER SEAT CONTROL UNIT OUTPUT SIGNAL

1. Connect the driver seat control unit connector and sliding motor connector.
2. Check voltage between the driver seat control unit connector.

Connector	Terminals (Wire color)		Condition	Voltage (V) (Approx)
	(+)	(–)		
B142	1 (W)	8 (BR)	Sliding switch (FR operation)	Battery voltage
			Sliding switch OFF	0
	8 (BR)	1 (W)	Sliding switch (RR operation)	Battery voltage
			Sliding switch OFF	0

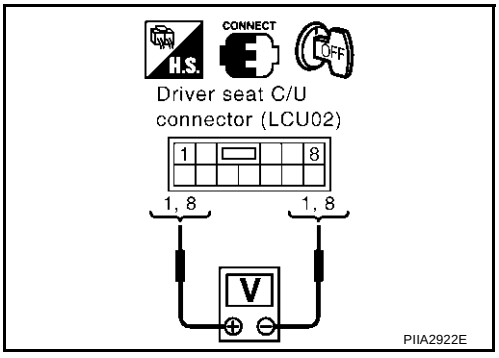

OK or NG

OK >> Replace sliding motor.
NG >> Replace driver seat control unit.

Seat Reclining Motor Circuit Inspection

AIS001JX

1. CHECK SEAT RECLINING MECHANISM

Check following.

1. Operation malfunction caused by an interference with the center pillar or center console.
2. Operation malfunction and interference with other parts by poor installation.

OK or NG

OK >> GO TO 2.
NG >> Repair the malfunction part and check again.

2. CHECK FUNCTIONAL

With CONSULT-II

Check operation with "SEAT RECLINING" in ACTIVE TEST.

Test item	Description
SEAT RECLINING	The reclining motor is activated by receiving the drive signal.

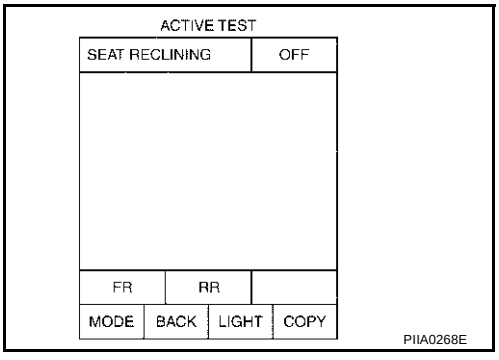

Without CONSULT-II

Perform the self-diagnosis. Refer to SE-51, "ON BOARD DIAGNOSIS FOR AUTOMATIC DRIVE POSITIONER" .

OK or NG

OK >> System is OK.
NG >> GO TO 3.

3. CHECK HARNESS CONTINUITY

1. Turn ignition switch OFF.
2. Disconnect driver seat control unit connector and reclining motor connector.
3. Check continuity between driver seat control unit connector B142 terminals 2 (G), 9 (LG) and reclining motor connector B147 terminals 2 (G), 9 (LG).

2 (G) – 2 (G) : Continuity should exist.
9 (LG) – 9 (LG) : Continuity should exist.

4. Check continuity between driver seat control unit connector B142 terminals 2 (G), 9 (LG) and body ground.

2 (G) – Ground :Continuity should not exist.
9 (LG) – Ground :Continuity should not exist.

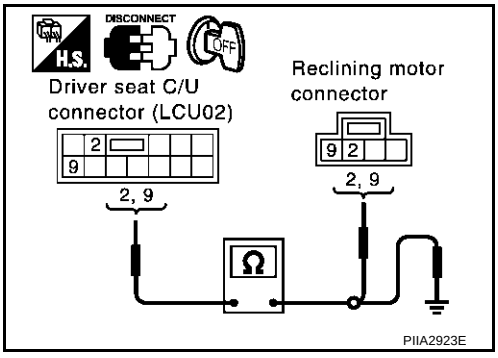

OK or NG

OK >> GO TO 4.
NG >> Repair or replace harness between driver seat control unit and reclining motor.

4. CHECK DRIVER SEAT CONTROL UNIT OUTPUT SIGNAL

1. Connect the driver seat control unit and reclining motor connector.
2. Check voltage between driver seat control unit connector.

Connector	Terminals (Wire color)		Condition	Voltage (V) (Approx)
	(+)	(–)		
B142	2 (G)	9 (LG)	Reclining switch (FR operation)	Battery voltage
			Reclining switch OFF	0
	9 (LG)	2 (G)	Reclining switch (RR operation)	Battery voltage
			Reclining switch OFF	0

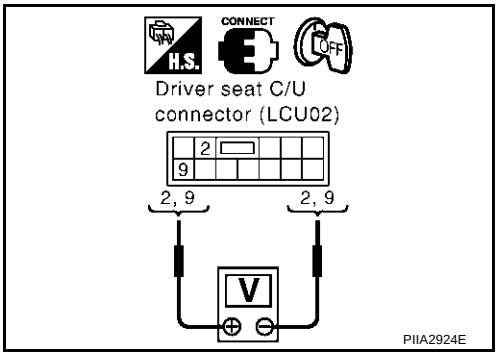

OK or NG

OK >> Replace reclining motor.
NG >> Replace driver seat control unit.

Front End Seat Lifting Motor Circuit Inspection

AIS001JY

1. CHECK FRONT END SEAT LIFTING MECHANISM

Check the following.

1. Operation malfunction caused by lifter mechanism deformation or pinched harness or other foreign materials.
2. Operation malfunction caused by foreign materials adhered to the lifter motor or lead screws.
3. Operation malfunction and interference with other parts by installation.

OK or NG

OK >> GO TO 2.
NG >> Repair the malfunctioning part and check again.

2. CHECK FUNCTION

With CONSULT-II

Check operation with "SEAT LIFTER FR" in ACTIVE TEST.

Test item	Description
SEAT LIFTER FR	The front end lifter motor is activated by receiving the drive signal.

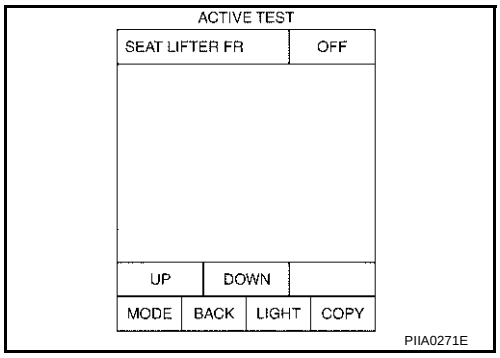

Without CONSULT-II

Carry out the self-diagnosis. Refer to SE-51, "ON BOARD DIAGNOSIS FOR AUTOMATIC DRIVE POSITIONER" .

OK or NG

OK >> System is OK.
NG >> GO TO 3.

3. CHECK HARNESS CONTINUITY

1. Turn ignition switch OFF,.
2. Disconnect driver seat control unit connector and front lifting motor connector.
3. Check continuity between driver seat control unit connector B142 and terminals 10 (OR), 11 (P) and front lifting motor connector B148 terminals 10 (OR), 11 (P).

   10 (OR) – 10 (OR) : Continuity should exist.
   11 (P) – 11 (P) : Continuity should exist.

4. Check continuity between driver seat control unit connector B142 and terminals 10 (OR), 11 (P) and body ground.

   10 (OR) – Ground :Continuity should not exist.
   11 (P) – Ground :Continuity should not exist.

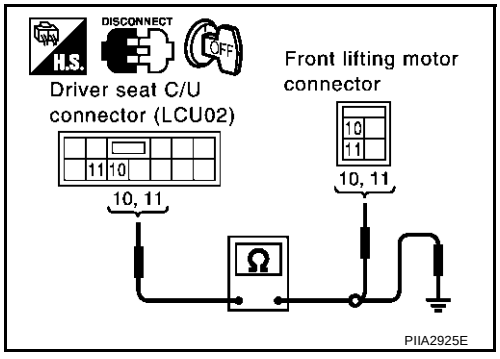

OK or NG

OK >> GO TO 4.
NG >> Repair or replace harness between driver seat control unit and front lifting motor.

4. CHECK DRIVER SEAT CONTROL UNIT OUTPUT SIGNAL

1. Connect the driver seat control unit connector and front lifting motor connector.
2. Check voltage between driver seat control unit connector.

Connector	Terminals (Wire color)		Condition	Voltage (V) (Approx)
	(+)	(–)		
B142	10 (OR)	11 (P)	Front end lifting switch (UP operation)	Battery voltage
			Front end lifting switch OFF	0
	11 (P)	10 (OR)	Front end lifting switch (DOWN operation)	Battery voltage
			Front end lifting switch OFF	0

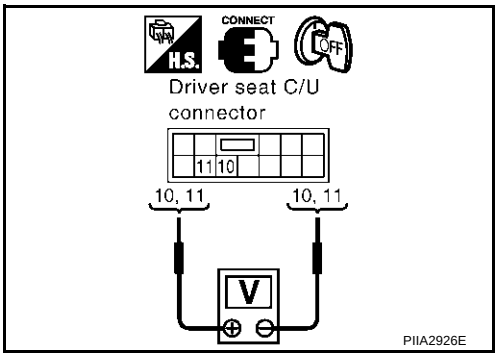

OK or NG

OK >> Replace front lifting motor.
NG >> Replace driver seat control unit.

Rear End Seat Lifting Motor Circuit Inspection

AIS001JZ

1. CHECK REAR END SEAT LIFTING MECHANISM

Check following items.

1. Operation malfunction caused by lifter mechanism deformation or pinched harness or other foreign materials.
2. Operation malfunction caused by foreign materials adhered to the lifter motor or lead screws.
3. Operation malfunction and interference with other parts by poor installation.

OK or NG

OK >> GO TO 2.
NG >> Repair the malfunctioning part and check again.

2. CHECK FUNCTION

With CONSULT-II

Check operation with "SEAT LIFTER RR" in ACTIVE TEST.

Test item	Description
SEAT LIFTER RR	The rear end lifter motor is activated by receiving the drive signal.

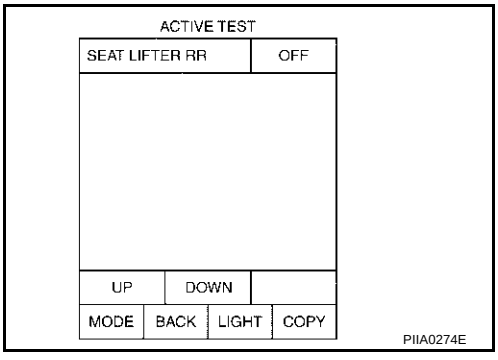

Without CONSULT-II

Carry out the self-diagnosis. Refer to SE-51, "ON BOARD DIAGNOSIS FOR AUTOMATIC DRIVE POSITIONER" .

OK or NG

OK >> System is OK.
NG >> GO TO 3.

3. CHECK HARNESS CONTINUITY

1. Turn ignition switch OFF.
2. Disconnect driver seat control unit connector and rear lifting motor connector.
3. Check continuity between driver seat control unit connector B142 terminals 4 (Y), 6 (PU) and lifting motor connector B149 terminals 4 (Y), 6 (PU).

4 (Y) – 4 (Y) : Continuity should exist.
6 (PU) – 6 (PU) : Continuity should exist.

4. Check continuity between driver seat control unit B142 terminals 4 (Y), 6 (PU) and body ground.

4 (Y) – Ground :Continuity should not exist.
6 (PU) – Ground :Continuity should not exist.

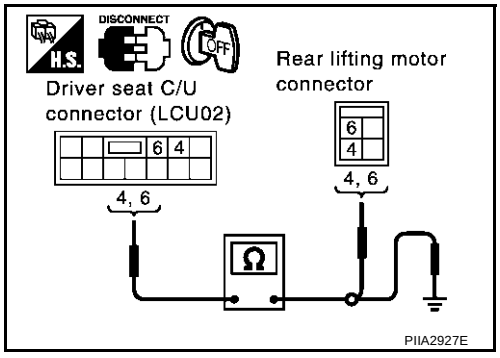

OK or NG

OK >> GO TO 4.
NG >> Repair or replace harness between driver seat control unit and rear lifting motor.

4. CHECK DRIVER SEAT CONTROL UNIT OUTPUT SIGNAL

1. Connect the connectors B142 for the driver seat control unit and rear lifting motor.
2. Check voltage between driver seat control unit connector.

Connector	Terminals (Wire color)		Condition	Voltage (V) (Approx)
	(+)	(–)		
B142	6 (PU)	4 (Y)	Rear end lifting switch (UP operation)	Battery voltage
			Rear end lifting switch OFF	0
	4 (Y)	6 (PU)	Rear end lifting switch (DOWN operation)	Battery voltage
			Rear end lifting switch OFF	0

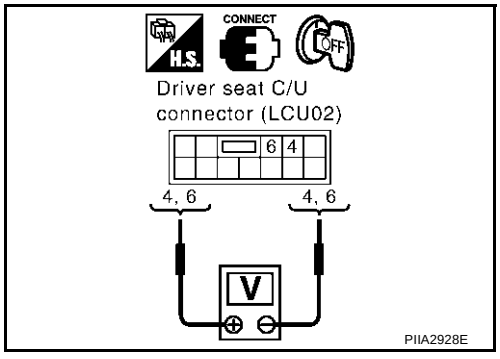

OK or NG

OK >> Replace rear lifting motor.
NG >> Replace driver seat control unit.

Steering Wheel Telescopic Motor Circuit Inspection

AIS001K0

1. CHECK STEERING WHEEL TELESCOPIC MECHANISM

Check following.

1. Operation malfunction caused by steering wheel telescopic mechanism deformation or pinched harness or other foreign materials.
2. Operation malfunction and interference with other parts by poor installation.

OK or NG

OK >> GO TO 2.
NG >> Repair the malfunctioning part and check again.

2. CHECK FUNCTION

With CONSULT-II

Check operation with "TELESCO MOTOR" in ACTIVE TEST.

Test item	Description
TELESCO MOTOR	The telescopic motor is activated by receiving the drive signal.

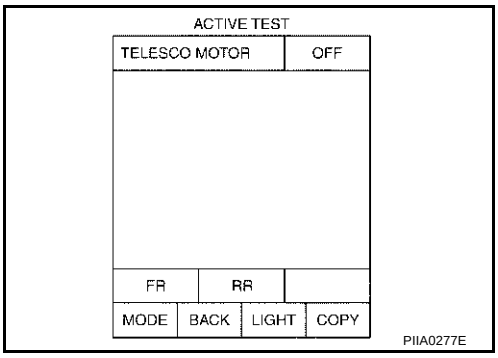

Without CONSULT-II

Carry out the self-diagnosis. Refer to SE-46, "On Board Diagnosis" .

OK or NG

OK >> System is OK.
NG >> GO TO 3.

3. CHECK HARNESS CONTINUITY

1. Turn ignition switch OFF.
2. Disconnect BCM and telescopic motor connector.
3. Check continuity between BCM connector M4 terminals 101, 107 and telescopic motor connector M60 terminals 1, 2.

   101 (P/L) – 1 (P/L) : Continuity should exist.
   107 (P/B) – 2 (P/B) : Continuity should exist.

4. Check continuity between BCM connector M4 terminals 101, 107 and body ground.

   101 (P/L) – Ground :Continuity should not exist.
   107 (P/B) – Ground :Continuity should not exist.

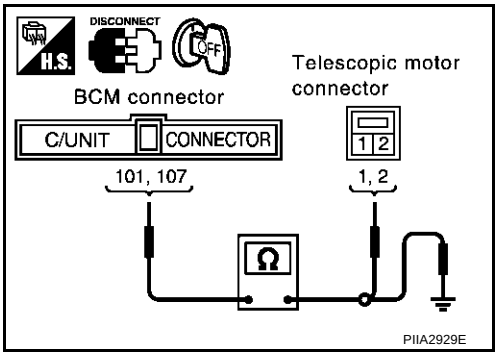

OK or NG

OK >> GO TO 4.
NG >> Repair or replace harness between BCM and telescopic motor.

4. CHECK BCM OUTPUT SIGNAL

1. Connect the BCM connector and telescopic motor connector.
2. Check voltage between BCM connector.

Connector	Terminals (Wire color)		Condition	Voltage (V) (Approx)
	(+)	(–)		
M4	101 (P/L)	107 (P/B)	Telescopic switch (FR operation)	Battery voltage
			Telescopic switch OFF	0
	107 (P/B)	101 (P/L)	Telescopic switch (RR operation)	Battery voltage
			Telescopic switch OFF	0

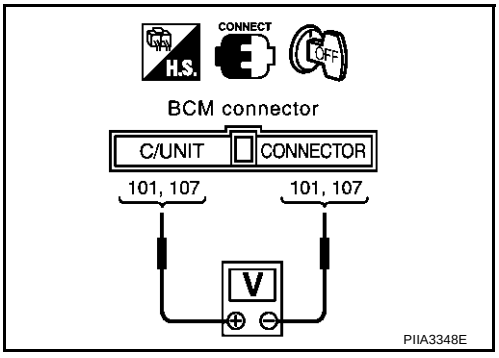

OK or NG

OK >> Replace telescopic motor.
NG >> Replace BCM.

Steering Wheel Tilt Motor Circuit Inspection

AIS001K1

1. CHECK STEERING WHEEL TILT MECHANISM

Check following.

1. Operation malfunction caused by steering wheel tilt mechanism deformation or pinched harness and other foreign materials.
2. Operation malfunction and interference with other parts by poor installation.

OK or NG

OK >> GO TO 2.
NG >> Repair the malfunctioning part.

2. CHECK FUNCTION

With CONSULT-II

Check operation with "TILT MOTOR" in ACTIVE TEST.

Test item	Description
TILT MOTOR	The tilt motor is activated by receiving the drive signal.

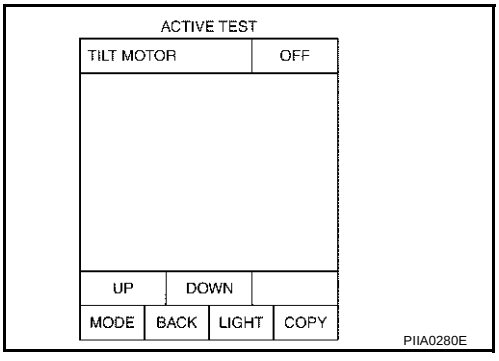

Without CONSULT-II

Carry out the self-diagnosis. Refer to SE-46, "On Board Diagnosis" .

OK or NG

OK >> System is OK.
NG >> GO TO 3.

3. CHECK HARNESS CONTINUITY

1. Turn ignition switch OFF.
2. Disconnect BCM connector and tilt motor connector.
3. Check continuity between BCM connector M4 terminals 102 (L/B), 103 (R) and tilt motor connector M58 terminals 1 (R), 2 (L/B).

   102 (L/B) – 2 (L/B) : Continuity should exist.
   103 (R) – 1 (R) : Continuity should exist.

4. Check continuity between BCM connector M4 terminals 102 (L/B), 103 (R) and body ground.

   102 (L/B) – Ground :Continuity should not exist.
   103 (R) – Ground :Continuity should not exist.

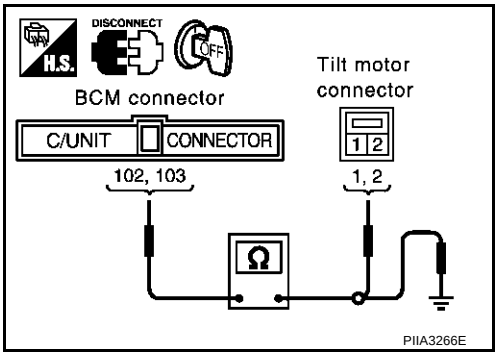

OK or NG

OK >> GO TO 4.
NG >> Repair or replace harness between BCM and tilt motor.

4. CHECK BCM OUTPUT SIGNAL

1. Connect BCM connector and tilt motor connector.
2. Check voltage between BCM connector.

Connector	Terminals (Wire color)		Condition	Voltage (V) (Approx)
	(+)	(–)		
M4	102 (L/B)	103 (R)	Tilt switch (DOWN operation)	Battery voltage
			Tilt switch OFF	0
	103 (R)	102 (L/B)	Tilt switch (UP operation)	Battery voltage
			Tilt switch OFF	0

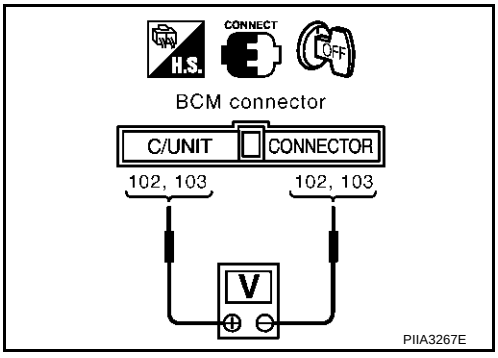

OK or NG

OK >> Replace tilt motor.
NG >> Replace BCM.

Seat Sliding Sensor Circuit Inspection

AIS001K2

1. CHECK SLIDING SENSOR INPUT/OUTPUT SIGNAL

1. Turn ignition switch OFF.
2. Check signal between driver seat control unit connector and body ground, with oscilloscope.

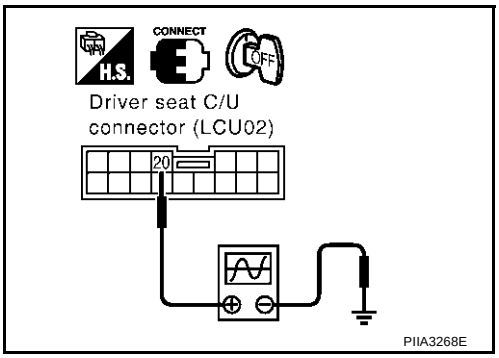

Connector	Terminals (Wire color)		Condition	Signal
	(+)	(–)		
B143	20 (G/B)	Ground	Sliding motor operation	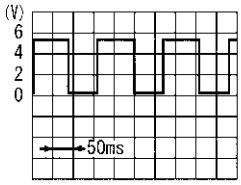 SIIA0690J

OK or NG

OK >> System is OK.
NG >> GO TO 2.

2. CHECK SLIDING SENSOR MECHANISM

Check the operation malfunction caused by sliding rail deformation or parts are loose.

OK or NG

OK >> GO TO 3.
NG >> Repair the malfunctioning parts.

3. CHECK HARNESS CONTINUITY

1. Disconnect driver seat control unit connector and sliding motor connector.
2. Check continuity between driver seat control unit connector B143 terminals 20 (G/B), 32 (R/W) and sliding motor B146 terminals 20 (G/B), 32A (R/W).

   20 (G/B) – 20 (G/B) : Continuity should exist.
   32 (R/W) – 32A (R/W) : Continuity should exist.

3. Check continuity between driver seat control unit B143 terminals 20 (G/B), 32 (R/W) and body ground.

   20 (G/B) – Ground :Continuity should not exist.
   32 (R/W) – Ground :Continuity should not exist.

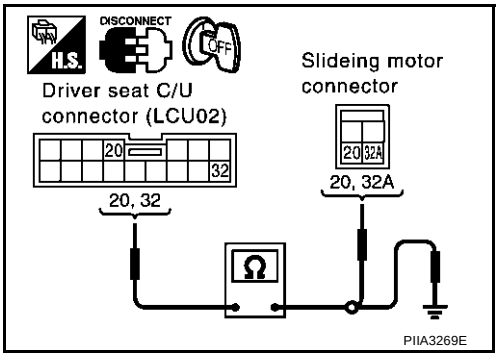

OK or NG

OK >> Replace sliding motor.
NG >> Repair or replace harness driver seat control unit and sliding motor.

Seat Reclining sensor Circuit Inspection

AIS001K3

1. CHECK RECLINING SENSOR INPUT/OUTPUT SIGNAL

1. Turn ignition switch OFF.
2. Check signal between driver seat control unit connector and body ground, with oscilloscope.

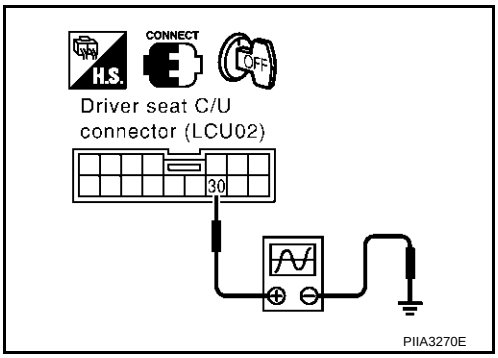

Connector	Terminals (Wire color)		Condition	Signal
	(+)	(–)		
B143	30 (L)	Ground	Reclining motor operation	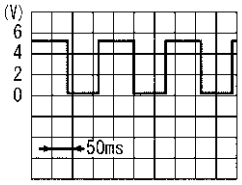

SIIA0693J

OK or NG

OK >> System is OK.
NG >> GO TO 2.

2. CHECK RECLINING SENSOR MECHANISM

Check the operation malfunction caused by reclining mechanism deformation or parts are loose.

OK or NG

OK >> GO TO 3.
NG >> Repair the malfunctioning parts.

3. CHECK HARNESS CONTINUITY

1. Disconnect driver seat control unit connector and reclining motor connector.
2. Check continuity between driver seat control unit connector B143 terminals 30 (L), 32 (R/W) and reclining motor connector B147 terminals 30 (L), 32 (R/W).

   30 (L) – 30 (L) : Continuity should exist.
   32 (R/W) – 32 (R/W) : Continuity should exist.

3. Check continuity between driver seat control unit connector B143 terminals 30, 32 and body ground.

   30 (L) – Ground :Continuity should not exist.
   32 (R/W) – Ground :Continuity should not exist.

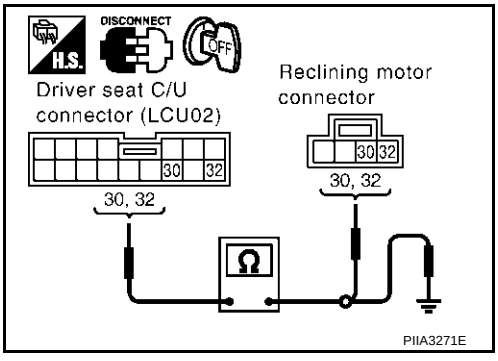

OK or NG

OK >> Replace reclining motor.
NG >> Repair or replace harness between driver seat control unit and reclining motor.

Front End Seat Lifting sensor Circuit Inspection

AIS001K4

1. CHECK FRONT END LIFTING SENSOR INPUT/OUTPUT SIGNAL

1. Turn ignition switch OFF.
2. Check signal between driver seat control unit connector and body ground, with oscilloscope.

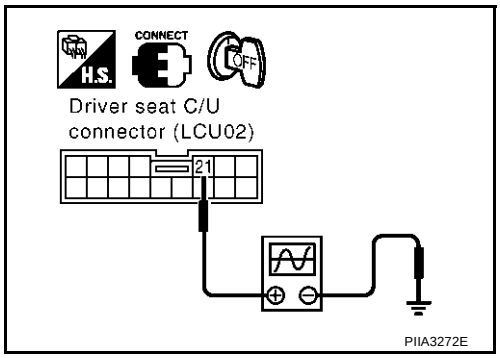

Connector	Terminals (Wire color)		Condition	Signal
	(+)	(–)		
B143	21 (Y/B)	Ground	Front lifting motor operation	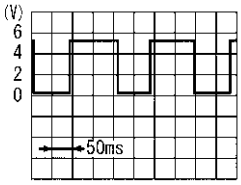 SIIA0691J

OK or NG

OK >> System is OK.
NG >> GO TO 2.

2. CHECK FRONT END LIFTING SENSOR MECHANISM

Check the operation malfunction caused by lifter mechanism deformation or parts are loose.

OK or NG

OK >> GO TO 3.
NG >> Repair the malfunctioning parts.

3. CHECK HARNESS CONTINUITY

1. Disconnect driver seat control unit connector and front lifting motor connector.
2. Check continuity between driver seat control unit connector B143 terminals 21 (Y/B), 32 (R/W) and front lifting motor connector B148 terminals 21 (Y/B), 32B (R/W).

   21 (Y/B) – 21 (Y/B) : Continuity should exist.
   32 (R/W) – 32B (R/W) : Continuity should exist.

3. Check continuity between driver seat control unit connector B143 terminals 21 (Y/B), 32 (R/W) and body ground.

   21 (Y/B) – Ground :Continuity should not exist.
   32 (R/W) – Ground :Continuity should not exist.

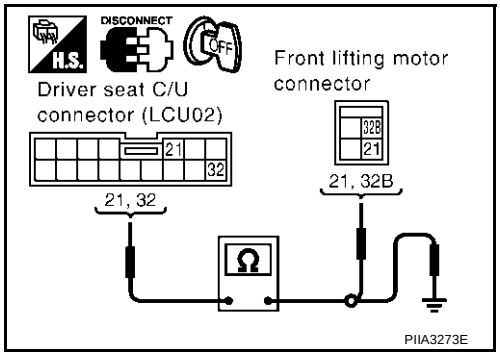

OK or NG

OK >> Replace front lifting motor.
NG >> Repair or replace harness between driver seat control unit and front lifting motor.

Rear End Lifting Sensor Circuit Inspection

AIS001K5

1. CHECK REAR END LIFTING SENSOR INPUT/OUTPUT SIGNAL

1. Turn ignition switch OFF.
2. Check signal between driver seat control unit connector body ground, with oscilloscope.

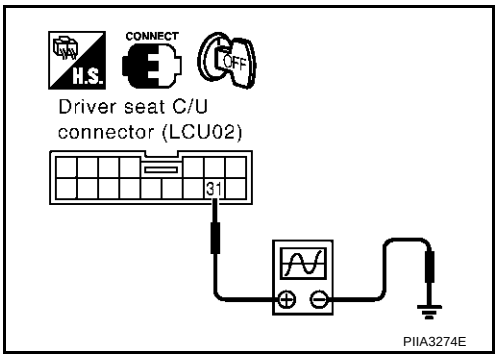

Connector	Terminals (Wire color)		Condition	Signal
	(+)	(–)		
B143	31 (W/R)	Ground	Rear lifting motor operation	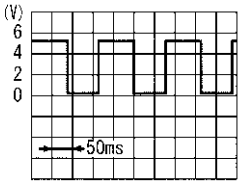 SIIA0693J

OK or NG

OK >> System is OK.
NG >> GO TO 2.

2. CHECK REAR END LIFTING SENSOR MECHANISM

Check the malfunction caused by lifter mechanism deformation or parts are loose.

OK or NG

OK >> GO TO 3.
NG >> Repair the malfunctioning parts.

3. CHECK HARNESS CONTINUITY

1. Disconnect driver seat control unit connector and rear lifting motor connector.
2. Check continuity between driver seat control unit connector B143 terminals 31 (W/R), 32 (R/W) and rear lifting motor connector B149 terminals 31 (W/R), 32C (R/W).

   31 (W/R) – 31 (W/R) : Continuity should exist.
   32 (R/W) – 32C (R/W) : Continuity should exist.

3. Check continuity between driver seat control unit connector B143 terminals 31 (W/R), 32 (R/W) and body ground.

   31 (W/R) – Ground :Continuity should not exist.
   32 (R/W) – Ground :Continuity should not exist.

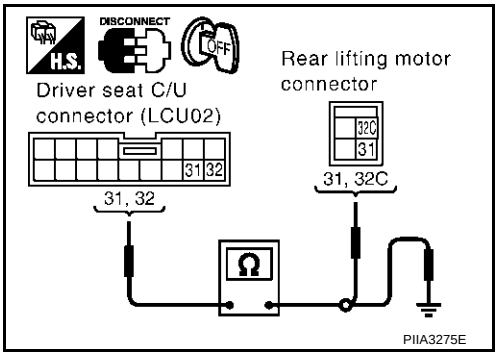

OK or NG

OK >> Replace rear lifting motor.
NG >> Repair or replace harness between driver seat control unit and rear lifting motor.

Detention Switch Circuit Inspection

AIS001K6

1. CHECK FUNCTION

With CONSULT-II

Check that when the A/T selector lever is in P-position, "DETENT SW" on the DATA MONITOR becomes ON.

Monitor item [OPERATION or UNIT]		Contents
DETENT SW	"ON/ OFF"	The selector lever position "P position (ON)/other than P position (OFF)" judged from the detente switch signal is displayed.

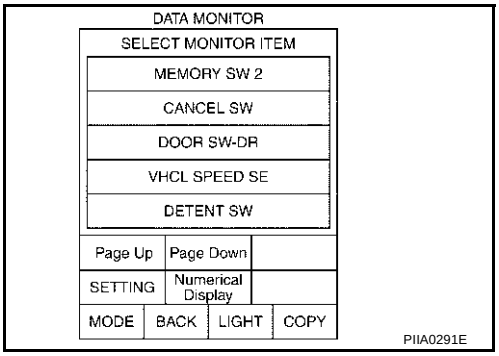

Without CONSULT-II

Carry out "SWITCH MONITOR" in the self-diagnosis function, and operate the A/T selector lever to check. Refer to SE-49 .

OK or NG

OK >> System is OK.
NG >> GO TO 2.

2. CHECK DETENTION SWITCH POWER SUPPLY CIRCUIT HARNESS

1. Turn ignition switch OFF.
2. Disconnect A/T device (detention switch) connector and "key switch and key lock solenoid" connector.
3. Check continuity harness between A/T device (detention switch) connectorM97 terminal 6 (PU/W) and key switch and key lock solenoid connector M64 terminal 4 (PU/W).

   6 (PU/W) – 4 (PU/W) : Continuity should exist.

4. Check continuity harness between A/T device (detention switch) connectorM97 terminal 6 (PU/W) and body ground.

   6 (PU/W) – Ground :Continuity should not exist.

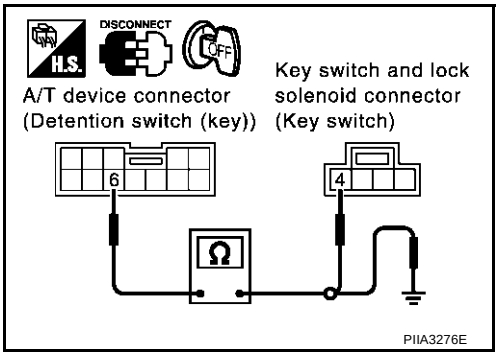

OK or NG

OK >> GO TO 3.
NG >> Repair or replace harness between A/T device (detention switch) and key switch and key lock solenoid.

3. CHECK DETENTION SWITCH

Check continuity between detection switch.

Connector	Terminals (Wire color)		Condition	Continuity
	(+)	(–)		
M97	6 (PU/W)	7 (G/OR)	P–position	Continuity should not exist
			Other than P–position	Continuity should exist

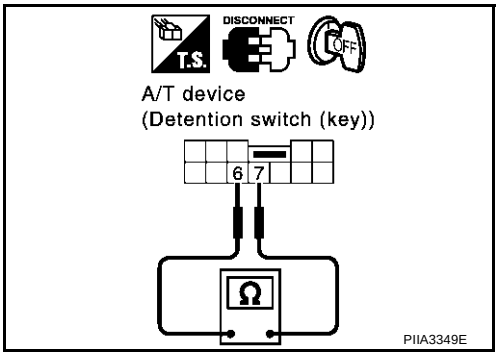

OK or NG

OK >> GO TO 4.
NG >> Replace detention switch.

4. CHECK DETENTION SWITCH SIGNAL HARNESS

1. Disconnect BCM connector.
2. Check continuity between BCM connector M4 terminal 8 (G/OR) and A/T device (detention switch) connector M97 terminal 7 (G/OR).

8 (G/OR) – 7(G/OR) : Continuity should exist.

3. Check continuity harness between BCM connector M4 terminal 8 (G/OR) and body ground.

8 (G/OR) – Ground : Continuity should not exist.

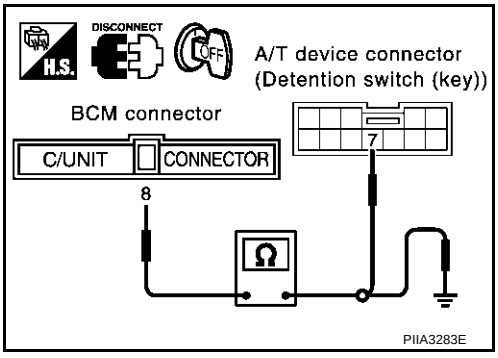

OK or NG

OK >> Replace BCM.
NG >> Repair or replace harness between BCM and A/T device (detention switch).

Telescopic Sensor Circuit Inspection

AIS001K7

1. CHECK FUNCTION

With CONSULT-II

Operate the telescopic switch with "TELESCO SEN" on the DATA MONITOR to check that the voltage changes.

Monitor item [OPERATION or UNIT]		Contents
TELESCO SEN	"V"	The telescoping position (voltage) judged from the telescoping sensor signal is displayed.

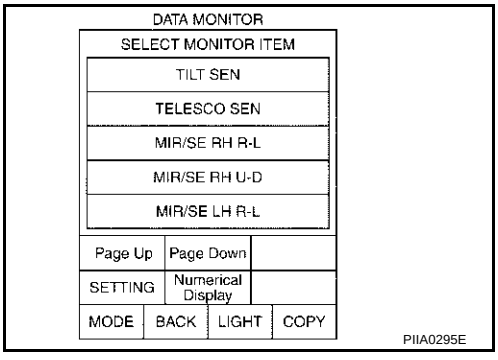

Without CONSULT-II

1. Turn ignition switch OFF.
2. Check voltage between BCM connector and body ground.

Connector	Terminals (Wire color)		Condition	Voltage (V) (Approx)
	(+)	(–)		
M4	62 (P/B)	Ground	Telescopic top position	2
			Telescopic bottom position	4

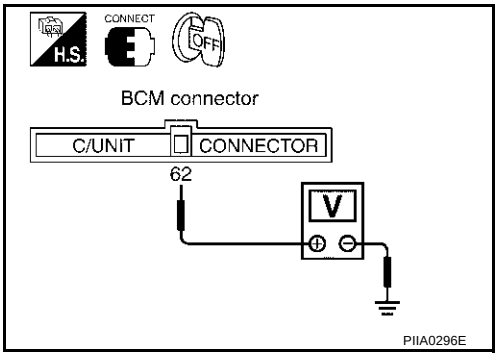

OK or NG

OK >> System is OK.
NG >> GO TO 2.

2. CHECK STEERING WHEEL TILT MECHANISM

Check the operation malfunction caused by steering wheel tilt mechanism deformation or parts are loose.

OK or NG

OK >> GO TO 3.
NG >> Repair the malfunctioning parts.

3. CHECK HARNESS CONTINUITY

1. Disconnect BCM and telescopic sensor connector.
2. Check continuity harness between BCM connector M4 terminals 53 (L/B), 54 (R), 62 (P/B) and telescopic sensor connector M59 terminals 1 (R), 2 (P/B), 3 (L/B).

53 (L/B) – 3 (L/B) : Continuity should exist.
54(R) – 1 (R) : Continuity should exist.
62 (P/B) – 2 (P/B) : Continuity should exist.

3. Check continuity harness between BCM connector M59 terminals 53 (L/B), 54 (R), 62 (P/B) and body ground.

53 (L/B) – Ground : Continuity should not exist.
54 (R) – Ground : Continuity should not exist.
62 (P/B) – Ground : Continuity should not exist.

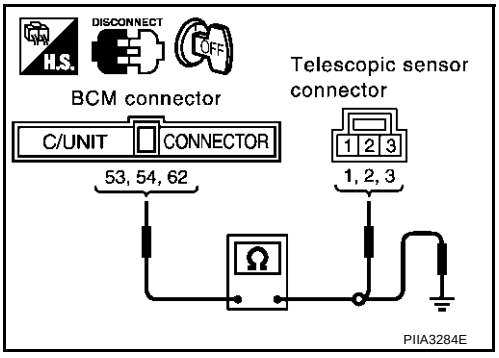

OK or NG

OK >> Replace telescopic sensor.
NG >> Repair or replace harness between BCM and telescopic sensor.

Tilt Sensor Circuit Inspection

AIS001K8

1. CHECK FUNCTION

With CONSULT-II

With "TILT SEN" on the DATA MONITOR, operate the tilt switch to check that the voltage changes.

Monitor item [OPERATION or UNIT]		Contents
TILT SEN	"V"	The tilt position (voltage) judged from the tilt sensor signal is displayed.

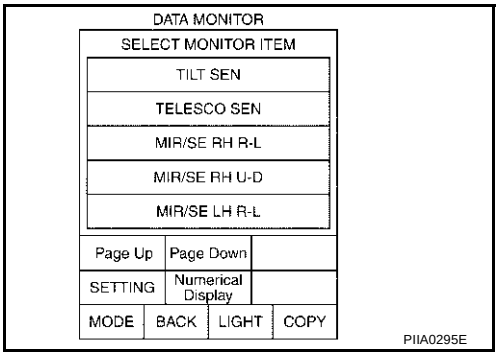

Without CONSULT-II

1. Turn ignition switch OFF.
2. Check voltage between BCM connector and body ground.

Connector	Terminals (Wire color)		Condition	Voltage (V) (Approx)
	(+)	(–)		
M4	46 (LG/R)	Ground	Tilt top position	2
			Tilt bottom position	4

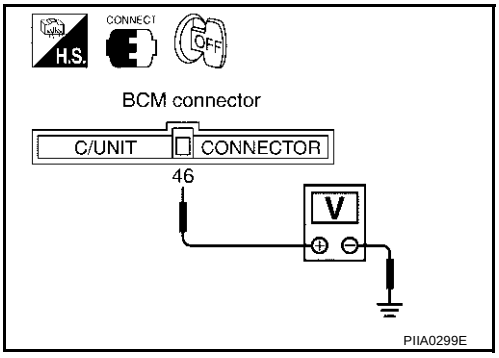

OK or NG

OK >> System is OK.
NG >> GO TO 2.

2. CHECK TILT STEERING MECHANISM

Check the operation malfunction caused by steering wheel tilt melanism deformation or parts are loose.

OK or NG

OK >> GO TO 3.
NG >> Repair the malfunctioning parts.

3. CHECK HARNESS

1. Disconnect BCM connector and tilt sensor connector.
2. Check continuity harness between BCM connector M4 terminals 46 (LG/R), 53 (L/B), 54 (R) and tilt sensor connector M57 terminals 1 (R), 2 (LG/R), 3 (L/B).

46 (LG/R) – 2 (LG/R) : Continuity should exist.
53 (L/B) – 3 (L/B) : Continuity should exist.
54 (R) – 1 (R) : Continuity should exist.

3. BCM connector M4 terminals 46 (LG/R), 53 (L/B), 54 (R) and body ground.

46 (LG/R) – Ground : Continuity should not exist.
53 (L/B) – Ground : Continuity should not exist.
54 (R) – Ground : Continuity should not exist.

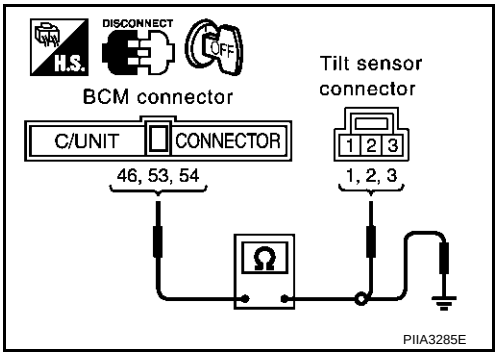

OK or NG

OK >> Replace tilt sensor.
NG >> Repair or replace harness between BCM and tilt sensor.

Key Switch and Key Lock Solenoid Circuit Inspection

AIS001K9

1. CHECK KEY SWITCH AND KEY LOCK SOLENOID

Connect the key switch and key lock solenoid connector M64.

With CONSULT-II

With "IGN KEY SW" on the DATA MONITOR, Check ON/OFF operation.

Monitor item [OPERATION or UNIT]		Contents
IGN KEY SW	"ON/OFF"	Key inserted (ON)/key removed (OFF) status judged from the key detection switch is displayed.

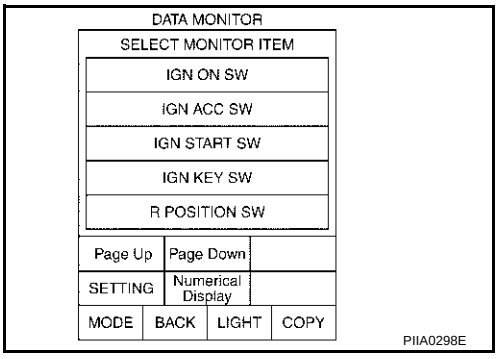

Without CONSULT-II

GO TO 2.

OK or NG

OK >> System is OK.
NG >> GO TO 2.

2. CHECK FUSE

Check if any of the following fuses is blown.

Unit	Terminal No.	Power source	Fuse No.
Fuse block (J/B) No. 2	6N	BAT power supply	32

NOTE:
Refer to SE-17, "Component Parts and Harness Connector Location" .

OK or NG

OK >> GO TO 3.
NG >> If fuse is blown, be sure to eliminate cause of problem before installing new fuse. Refer to SE-17, "Component Parts and Harness Connector Location" .

3. KEY SWITCH AND KEY LOCK SOLENOID POWER SUPPLY CIRCUIT INSPECTION

1. Turn ignition switch OFF,
2. Disconnect key switch connector and key lock solenoid connector.
3. Check voltage between key switch and key lock solenoid connector M64 terminal 3 (W) and body ground.

3 (W) – Ground : Battery voltage.

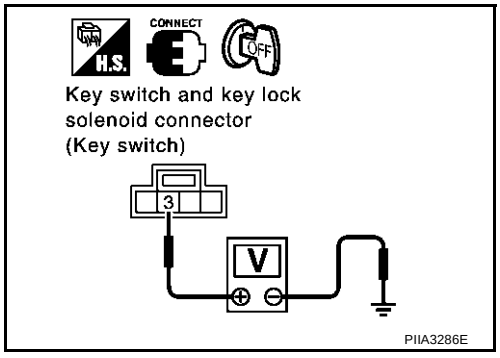

OK or NG

OK >> GO TO 4.
NG >> Check harness between key switch and key lock solenoid and fuse.

4. CHECK KEY SWITCH

Check continuity between key switch.

Connector	Terminals	Condition	Continuity
M64	3 – 4	Key is inserted in ignition key cylinder.	YES
		Key is removed from ignition key cylinder.	NO

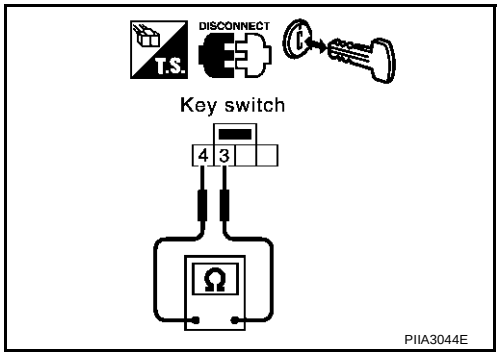

OK or NG

OK >> GO TO 5.
NG >> Replace key switch and key lock solenoid.

5. CHECK KEY SWITCH SIGNAL

Check voltage between BCM connector body ground.

Connector	Terminals (Wire color)		Condition	Voltage (V) (Approx)
	(+)	(–)		
M4	69 (PU/W)	ground	Remove the key	0
		ground	Insert the key	Battery voltage

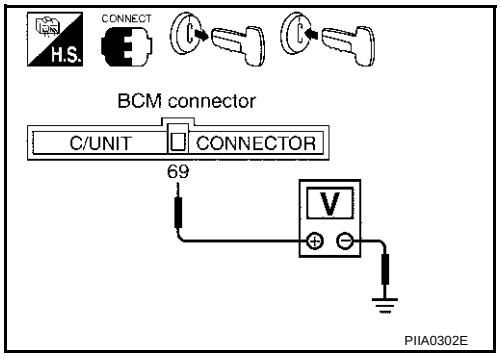

OK or NG

OK >> System is OK.
NG >> GO TO 6.

6. CHECK HARNESS CONTINUITY

1. Disconnect key switch and key lock solenoid connector and BCM connector.
2. Check continuity between key switch and key lock solenoid connector M64 terminal 4 (PU/W) and BCM connector M4 terminal 69 (PU/W).

   4 (PU/W) – 69 (PU/W) : Continuity should exist.

3. Check continuity between key switch and key lock solenoid connector M64 terminal 4 (PU/W) and body ground.

   4 (PU/W) – Ground : Continuity should not exist.

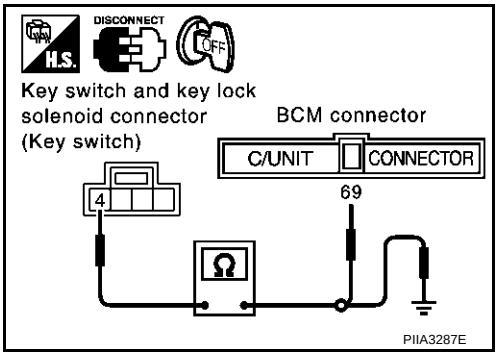

OK or NG

OK >> Check the harness and connector.
NG >> Repair or replace harness between key switch and key lock solenoid and BCM.

Front Door Switch (Driver Side) Circuit Inspection

AIS001KA

1. CHECK FUNCTION

With CONSULT-II

With "DOOR SW DR" on the DATA MONITOR, check ON/OFF operation when the driver door is open and closed.

Monitor item [OPERATION or UNIT]		Contents
DOOR SW DR	"ON/OFF"	Door open (ON)/door closed (OFF) status judged from the driver door switch is displayed.

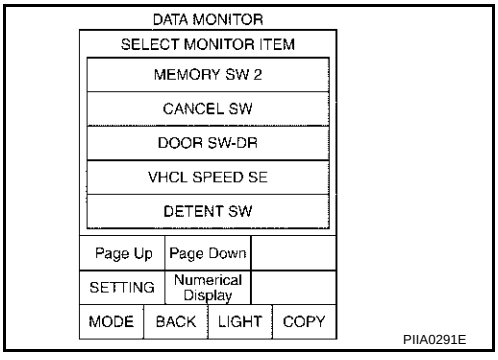

Without CONSULT-II

Carry out "SWITCH MONITOR" in the self-diagnosis function, and open and close the driver door to check. Refer to SE-49 .

OK or NG

OK >> System is OK.
NG >> GO TO 2.

2. CHECK FRONT DOOR SWITCH (DRIVER SIDE)

1. Turn ignition switch OFF.
2. Disconnect front door switch connector.
3. Check continuity between driver door switch connector and ground part of door switch.

Connec-tor	Terminals (Wire color)		Condition	Continuity
	(+)	(–)		
B20	1	Ground part of door switch	With the front door switch (driver side) pressed	NO
			With the front door switch (driver side) released	YES

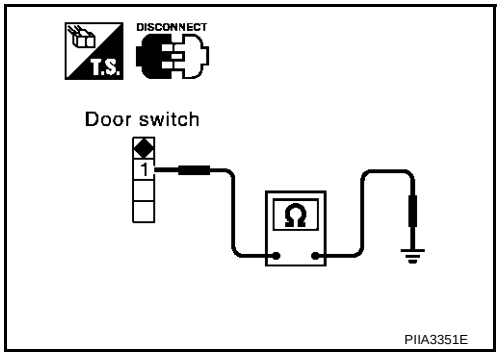

OK or NG

OK >> GO TO 3.
NG >> Replace driver door switch.

3. CHECK HARNESS CONTINUITY

1. Disconnect BCM connector.
2. Check continuity between BCM connector M4 terminal 142 (R/Y) and front door switch connector B20 terminal 1 (R/Y).

   142 (R/Y) – 1 (R/Y) : Continuity should exist.

3. Check continuity between BCM connector M4 terminal 142 (R/Y) and body ground.

   142 (R/Y) – Ground : Continuity should not exist.

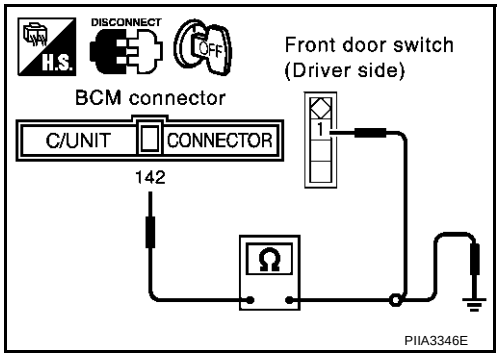

OK or NG

OK >> Replace BCM.
NG >> Repair or replace harness between BCM and front door switch (driver side).

Vehicle Speed Signal Inspection

AIS001KB

1. CHECK SYMPTOM

Check that the speedometer in the combination meter operates normally.

OK or NG

OK >> GO TO 2.
NG >> Check vehicle speed signal. Refer to DI-140, "Vehicle Speed Signal Inspection" .

2. CHECK FUNCTION

With CONSULT-II

With "VHCL SPEED SE" on the DATA MONITOR, Check vehicle speed signal.

Monitor item [OPERATION or UNIT]		Contents
VHCL SPEED SE	"<7km/ >7km"	The present vehicle speed (less than 7 km/h (4 MPH), or 7 km/h (4 MPH) or higher) is displayed.

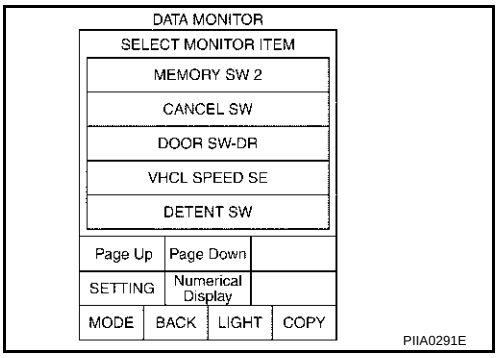

Without CONSULT-II

Carry out the self-diagnosis. Refer to SE-51, "ON BOARD DIAGNOSIS FOR AUTOMATIC DRIVE POSITIONER" .

OK or NG

OK >> System is OK.
NG >> GO TO 3.

3. CHECK VEHICLE SPEED INPUT/OUTPUT

1. Start the engine.
2. Check signal between BCM connector and body ground, with oscilloscope.

Connector	Terminals (Wire color) (+)	(–)	Condition	Signal
M4	49 (PU/W)	Ground	Vehicle speed is approx.40 km/h (25 MPH)	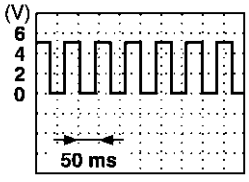

PIIA3279E

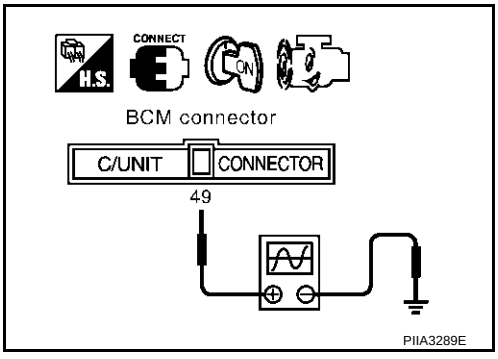

OK or NG

OK >> Replace BCM.
NG >> GO TO 4.

4. CHECK HARNESS CONTINUITY

1. Turn ignition switch OFF.
2. Disconnect BCM and combination meter connector.
3. Check continuity between BCM connector M4 terminal 49 (PU/W) and combination meter connector M41 terminal 38 (PU/W).

   49 (PU/W) – 38 (PU/W) : Continuity should exist.

4. Check continuity between BCM connector M4 terminal 49 (PU/W) and body ground.

   49 (PU/W) – Ground : Continuity should not exist.

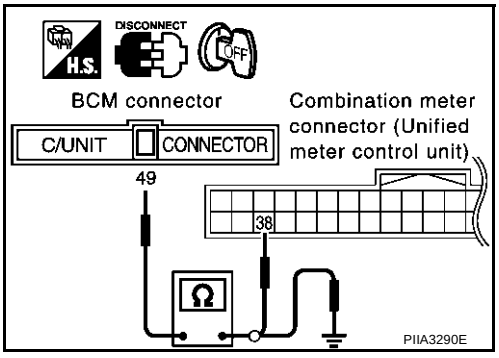

OK or NG

OK >> Check meter control unit, refer to DI-6, "COMBINATION METERS" .

NG >> Repair or replace harness between BCM and combination meter.

Seat Memory Switch Circuit Inspection

AIS001KC

1. CHECK FUNCTION

With CONSULT-II

With "SET SW, MEMORY SW1, MEMORY SW2" on the DATA MONITOR, operate the switch to check ON/OFF operation.

Monitor item [OPERATION or UNIT]		Contents
MEMORY SW1	"ON/OFF"	ON / OFF status judged from the seat memory switch 1 signal is displayed.
MEMORY SW2	"ON/OFF"	ON / OFF status judged from the seat memory switch 2 signal is displayed.
SET SW	"ON/OFF"	ON/OFF status judged from the setting switch signal is displayed.

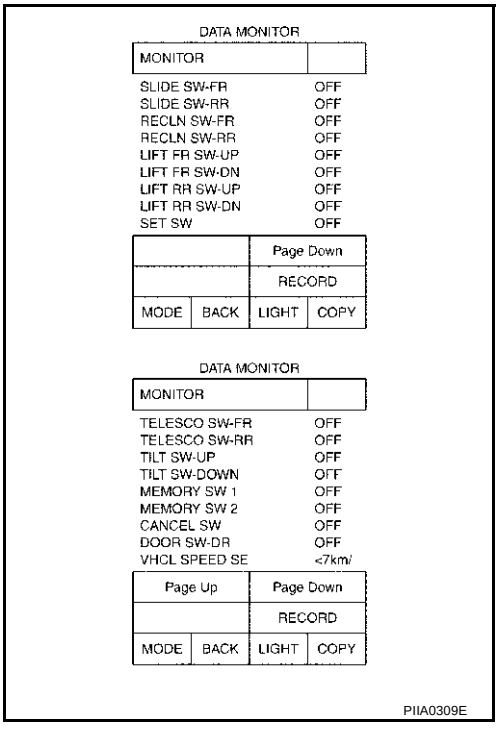

Without CONSULT-II

Carry out "switch monitor" in the self-diagnosis function, and operate "Setting switch, memory switch 1, memory switch 2" to check. Refer to SE-49, "SWITCH MONITOR" .

OK or NG

OK >> System is OK.

NG >> GO TO 2.

2. CHECK SEAT MEMORY SWITCH

1. Turn ignition switch OFF.
2. Disconnect seat memory switch connector.
3. Operate the setting switch and memory switch.
4. Check continuity between seat memory switch connector and body ground.

Terminals (Wire color)			Condition	Continuity
Con–nector	Terminal			
D3	3 (P/L)	4 (B)	Set switch: ON	Continuity should exist
			Set switch: OFF	Continuity should not exist
	1 (G)		Memory switch 1 ON	Continuity should exist
			Memory switch 1: OFF	Continuity should not exist.
	2 (OR/L)		Memory switch 2: ON	Continuity should exist
			Memory switch 2: OFF	Continuity should not exist.

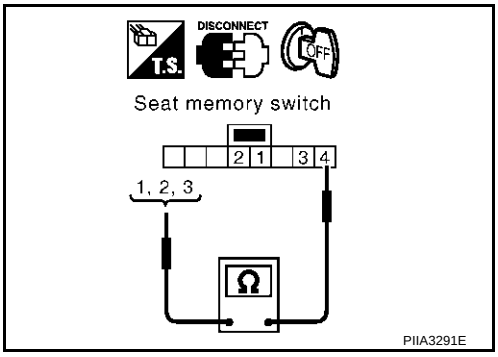

OK or NG

OK >> GO TO 3.
NG >> Replace seat memory switch.

3. CHECK HARNESS CONTINUITY

1. Disconnect BCM connector.
2. Check continuity between BCM connector M4 terminals 39 (G), 43 (OR/L), 50 (P/L) and seat memory switch connector D3 terminals 1 (G), 2 (OR/L), 3 (P/L).

   39 (G) – 1 (G) : Continuity should exist.
   43 (OR/L) – 2 (OR/L) : Continuity should exist.
   50 (P/L) – 3 (P/L) : Continuity should exist.

3. Check continuity between BCM connector M4 terminals 39 (G), 43 (OR/L), 50 (P/L) and body ground.

   39 (G) – Ground : Continuity should not exist.
   43 (OR/L) – Ground : Continuity should not exist.
   50 (P/L) – Ground : Continuity should not exist.

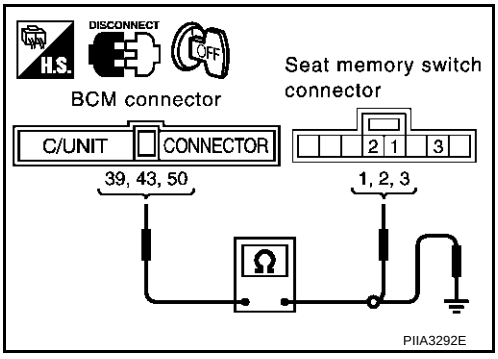

OK or NG

OK >> GO TO 4.
NG >> Repair or replace harness between BCM and seat memory switch.

4. CHECK SEAT MEMORY SWITCH GROUND CIRCUIT

Check continuity at harness between seat memory switch D3 terminal 4 (B) and body ground.

4 (B) – Ground : Continuity should exist.

OK or NG

OK >> Replace BCM.
NG >> Repair or replace harness between seat memory switch and body ground.

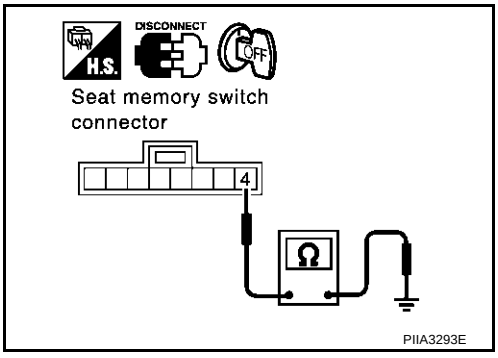

Seat Sliding Switch Circuit Inspection

AIS001KD

1. CHECK FUNCTION

With CONSULT-II

With "SLIDE SW–FR,SLIDE SWRR"RR" on the DATA MONITOR, operate the sliding switch to check ON/OFF operation.

Monitor item [OPERATION or UNIT]	Contents
SLIDE SW–FR "ON/OFF"	ON / OFF status judged from the sliding switch (FR) signal is displayed.
SLIDE SW–RR "ON/OFF"	ON / OFF status judged from the sliding switch (RR) signal is displayed.

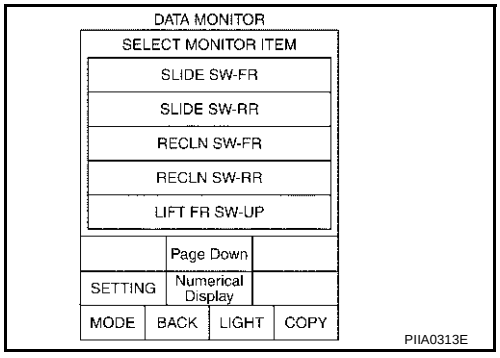

Without CONSULT-II

Carry out "SWITCH MONITOR" in the self-diagnosis function, and operate the sliding switch to check. Refer to SE-49, "SWITCH MONITOR" .

OK or NG

OK >> Replace the driver seat control unit.
NG >> GO TO 2.

2. CHECK SLIDING SWITCH INPUT/OUTPUT

1. Turn ignition switch OFF.
2. Check voltage between driver seat control unit connector and body ground.

Terminals (Wire color)			Condition	Voltage (V) (Approx)
Connector	Terminal (+)	Terminal (–)		
B143	17 (Y/R)	Ground	Sliding switch ON(FR operation)	0
			Sliding switch OFF	5
	23 (G/W)		Sliding switch ON(RR operation)	0
			Sliding switch OFF	5

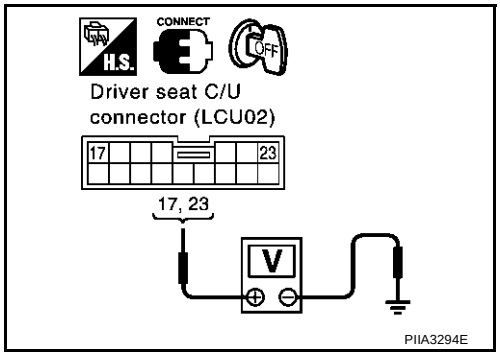

OK or NG

OK >> Syatem is OK.
NG >> GO TO 3.

3. CHECK HARNESS CONTINUITY

1. Disconnect driver seat control unit connector and power seat switch (driver side) connector .
2. Check continuity between driver seat control unit connector B143 terminals 17 (Y/R), 23 (G/W) and driver power seat switch connector B144 terminals 17 (Y/R), 23 (G/W).

   17 (Y/R) – 17 (Y/R) : Continuity should exist.
   23 (G/W) – 23 (G/W) : Continuity should exist.

3. Check continuity between driver seat control unit connector B143 terminals 17(Y/R), 23 (G/W) and body ground.

   17 (Y/R) – Ground : Continuity should not exist.
   23 (G/W) – Ground : Continuity should not exist.

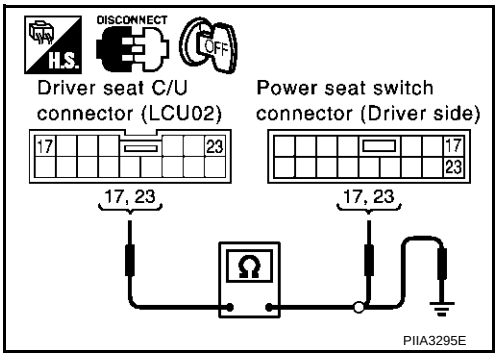

OK or NG

OK >> GO TO 4.
NG >> Repair or replace harness between driver seat control unit and power seat switch.

4. CHECK SLIDING SWITCH

Check continuity between driver seat switch.

Terminals (Wire color)			Condition	Continuity
Connector	Terminal (+)	Terminal (–)		
B143	17 (Y/R)	14 (B/W)	Sliding switch ON(FR operation)	Yes
			Sliding switch OFF	No
	23 (G/W)		Sliding switch ON(RR operation)	Yes
			Sliding switch OFF	No

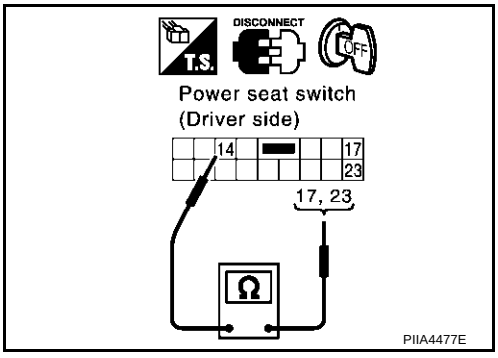

OK or NG

OK >> CO TO 5.
NG >> Replace driver power seat switch.

5. CHECK POWER SEAT SWITCH GROUND CIRCUIT

Check continuity between power seat switch (driver side) connector B144 terminal 14 (B/W) and body ground.

14 (B/W) – Ground : Continuity should exist.

OK or NG

OK >> Check the harness and connector.
NG >> Repair or replace harness between driver seat control unit and ground.

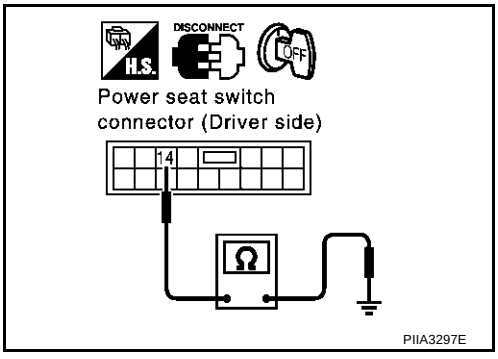

Seat Reclining Switch Inspection

AIS001KE

1. CHECK FUNCTION

With CONSULT-II

With "RECLINING SW–FR,RECLINING SWRR"RR" on the DATA MONITOR, operate the reclining switch to check ON/OFF operation.

Monitor item [OPERATION or UNIT]		Contents
RECLN SW –FR	"ON/ OFF"	ON / OFF status judged from the reclining switch (FR) signal is displayed.
RECLIN S W–RR	"ON/ OFF"	ON / OFF status judged from the reclining switch (RR) signal is displayed.

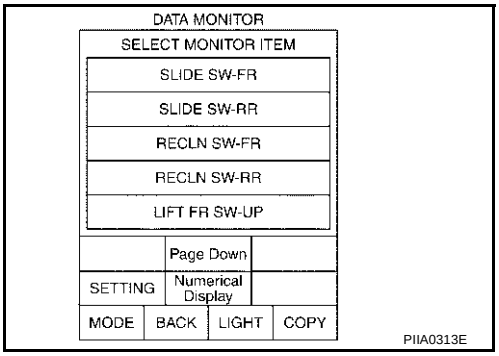

Without CONSULT-II

Carry out "SWITCH MONITOR" in the self-diagnosis function, and operate the reclining switch to check. Refer to SE-49, "SWITCH MONITOR" .

OK or NG

OK >> Replace the driver seat control unit.
NG >> GO TO 2

2. RECLINING SWITCH INPUT/OUTPUT INSPECTION

1. Turn ignition switch OFF.
2. Check voltage between driver seat control unit connector and body ground.

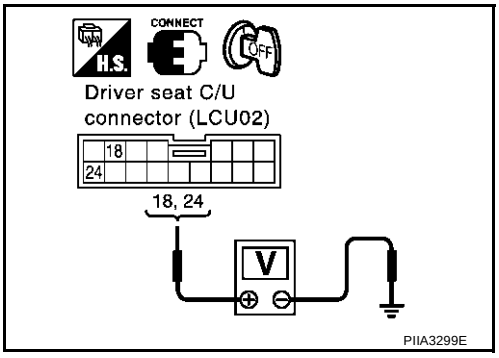

Terminals (Wire color)			Condition	Voltage (V) (Approx)
Connector	Terminal (+)	Terminal (–)		
B143	18 (GY/B)	Ground	Reclining switch ON (FR operation)	0
			Reclining switch OFF	5
	24 (SB)		Reclining switch ON (RR operation)	0
			Reclining switch OFF	5

OK or NG

OK >> System is OK.
NG >> GO TO 3.

3. CHECK HARNESS CONTINUITY

1. Disconnect driver seat control unit connector and power seat switch (driver side) connector.
2. Check continuity between driver seat control unit connector B143 terminals 18 (GY/B), 24 (SB) and power seat switch (driver side) connector B144 terminals 18 (GY/B), 24 (SB).

   18 (GY/B) – 18 (GY/B) :Continuity should exist.
   24 (SB) – 24 (SB) :Continuity should exist.

3. Check continuity between driver seat control unit connector B143 terminals 18 (GY/B), 24 (SB) and body ground.

   18 (GY/B) – Ground :Continuity should not exist.
   24 (SB) – Ground :Continuity should not exist.

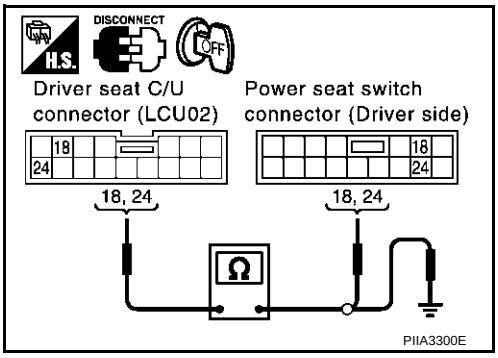

OK or NG

OK >> GO TO 4
NG >> Repair or replace harness between driver seat control unit and power seat switch.

4. RECLINING SWITCH INSPECTION

Check continuity between driver seat switch.

Terminals (Wire color)			Condition	Continuity
Connector	Terminal (+)	Terminal (–)		
B143	18 (GY/B)	14 (B/W)	Reclining switch ON (FR operation)	Yes
			Reclining switch OFF	No
	24 (SB)		Reclining switch ON (RR operation)	Yes
			Reclining switch OFF	No

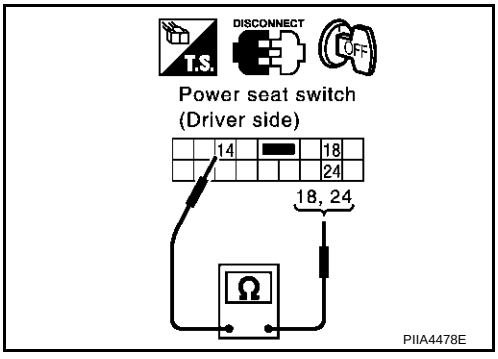

OK or NG

OK >> GO TO 5.
NG >> Replace power seat switch (driver side).

5. CHECK POWER SEAT SWITCH GROUND CIRCUIT

Check continuity between power seat switch B144 terminal 14 (B/W) and body ground.

14 (B/W) – Ground: : Continuity should exist.

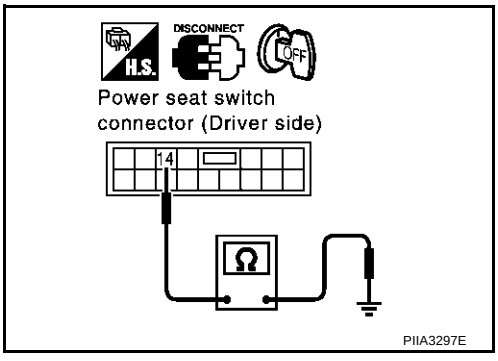

OK or NG

OK >> Check the harness and connector.
NG >> Repair or replace harness between power seat switch (driver side) and body ground.

Front End Seat Lifting Switch Circuit Inspection

AIS001KF

1. CHECK FUNCTION

With CONSULT-II

With "LIFT FR SW-UP, LIFT FR SW-DN" on the DATA MONITOR, operate the front lifting switch to check ON/OFF operation.

Monitor item [OPERATION or UNIT]	Contents
LIFT FR SW–DN "ON/OFF"	ON / OFF status judged from the FR lifter switch (DOWN) signal is displayed.
LIFT RR SW–UP "ON/OFF"	ON / OFF status judged from the RR lifter switch (UP) signal is displayed.

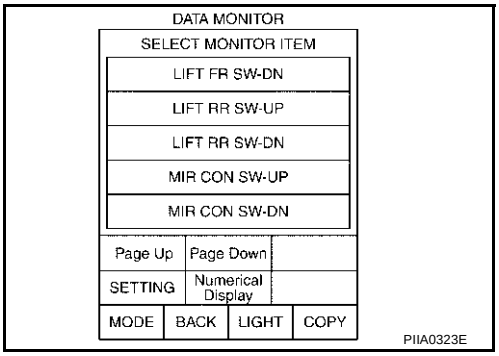

Without CONSULT-II

Carry out "SWITCH MONITOR" in the self-diagnosis function, and operate the front lifting switch to check. Refer to SE-49, "SWITCH MONITOR" .

OK or NG

OK >> Replace the driver seat control unit.
NG >> GO TO 2

2. CHECK FRONT END LIFTING SWITCH INPUT/OUTPUT

1. Turn ignition switch OFF.
2. Check voltage between driver seat control unit B143 and body ground.

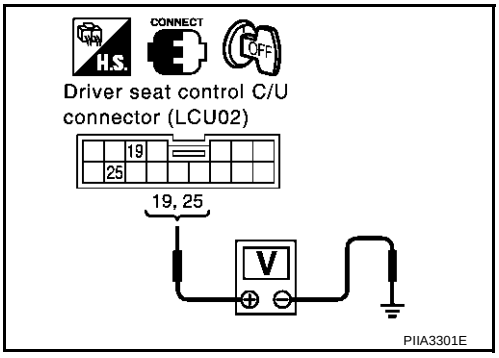

Connector	Terminals (Wire color) (+)	Terminals (Wire color) (–)	Condition	Voltage (V) (Approx)
B143	19 (L/R)	Ground	Front lifting switch ON (UP operation)	0
			Front lifting switch OFF	5
	25 (OR/B)		Front lifting switch ON (DOWN operation)	0
			Front lifting switch OFF	5

OK or NG

OK >> System is OK.
NG >> GO TO 3.

3. CHECK HARNESS CONTINUITY

1. Disconnect driver seat control unit connector and power seat switch (driver side) connector.
2. Check continuity between driver seat control unit connector B143 terminals 19 (L/R), 25 (OR/B) and driver seat switch connector B144 terminals 19 (L/R), 25 (OR/B).

   19 (L/R) – 19 (L/R) : Continuity should exist.
   25 (OR/B) – 25 (OR/B) : Continuity should exist.

3. Check continuity between driver seat control unit connector B143 terminals 19 (L/R), 25 (OR/B) and body ground

   19 (L/R) – Ground : Continuity should not exist.
   25 (OR/B) – Ground : Continuity should not exist.

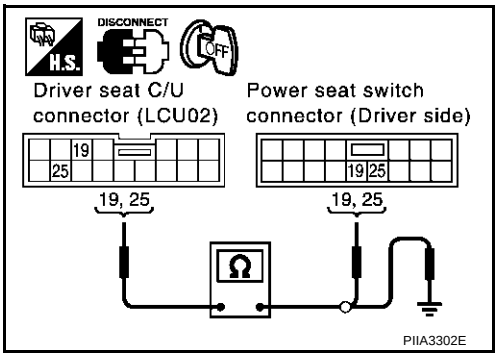

OK or NG

OK >> GO TO 4.
NG >> Repair or replace harness between driver seat control unit and power seat switch.

4. CHECK FRONT END LIFTING SWITCH

Check continuity between driver seat switch.

Connector	Terminals (Wire color)		Condition	Continuity
	(+)	(–)		
B143	19 (L/R)	14 (B/W)	Front lifting switch ON (UP operation)	Yes
			Front lifting switch OFF	No
	25 (OR/B)		Front lifting switch ON (DOWN operation)	Yes
			Front lifting switch OFF	No

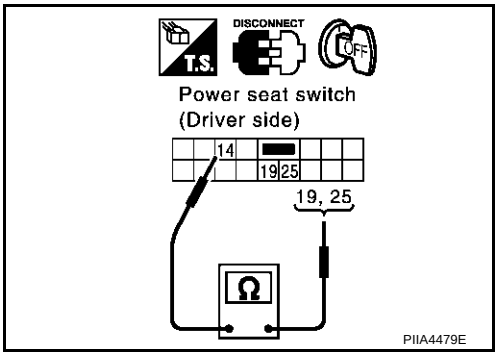

OK or NG

OK >> GO TO 5.
NG >> Replace driver power seat switch.

5. CHECK POWER SEAT SWITCH GROUND CIRCUIT

- Check continuity between power seat switch connector B144 terminal 14 (B/W) and body ground.

  14 (B/W) – Ground: : Continuity should exist.

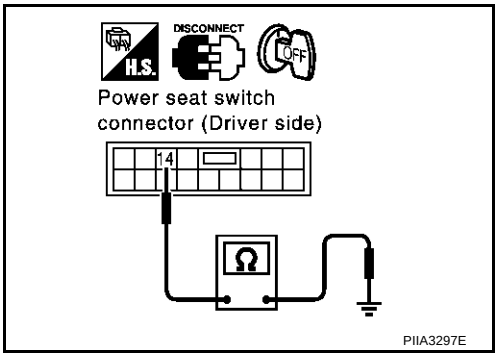

OK or NG

OK >> Check the harness and connector.
NG >> Repair or replace harness between power seat switch and body ground.

Rear End Seat Lifting switch Circuit Inspection

AIS001KG

1. CHECK FUNCTION

With CONSULT-II

With "LIFT RR SW-UP, LIFT RR SW-DN" on the DATA MONITOR, operate the rear lifting switch to check ON/OFF operation.

Monitor item [OPERATION or UNIT]		Contents
LIFT RR SW–UP	"ON/OFF"	Operation (ON)/open (OFF) status judged from the RR lifter switch (UP) signal is displayed.
LIFT RR SW–DN	"ON/OFF"	Operation (ON)/open (OFF) status judged from the RR lifter switch (DOWN) signal is displayed.

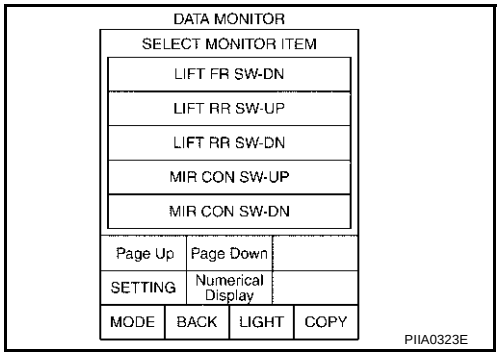

Without CONSULT-II

Carry out "SWITCH MONITOR" in the self-diagnosis function, and operate the rear lifting switch to check. Refer to SE-49, "SWITCH MONITOR" .

OK or NG

OK >> Replace the driver seat control unit.
NG >> GO TO 2

2. CHECK REAR END LIFTING SWITCH INPUT/OUTPUT

1. Turn ignition switch turn OFF.
2. Check voltage between driver seat control unit connector and body ground.

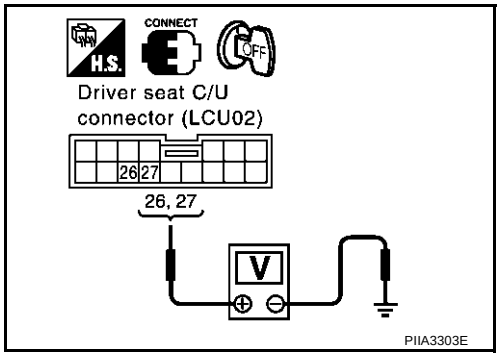

Connector	Terminals (Wire color) (+)	Terminals (Wire color) (–)	Condition	Voltage (V) (Approx)
B143	26 (P/B)	Ground	Rear lifting switch ON(UP operation)	0
			Rear lifting switch OFF	5
	27 (B/Y)		Rear lifting switch ON (DOWN operation)	0
			Rear lifting switch OFF	5

OK or NG

OK >> System is OK.
NG >> GO TO 3.

3. CHECK HARNESS CONTINUITY

1. Disconnect driver seat control unit connector and driver power seat switch connector.
2. Check continuity between driver seat control unit connector B143 terminals 26 (P/B), 27 (B/Y) and power seat switch (driver side) connector B144 terminals 26 (P/B), 27 (B/Y).

   26 (P/B) – 26 (P/B) : Continuity should exist.
   27 (B/Y) – 27 (P/Y) : Continuity should exist.

3. Check continuity between driver seat control unit connector B143 terminals 26 (P/B), 27 (B/Y) and body ground.

   26 (P/B) – Ground : Continuity should not exist.
   27 (B/Y) – Ground : Continuity should not exist.

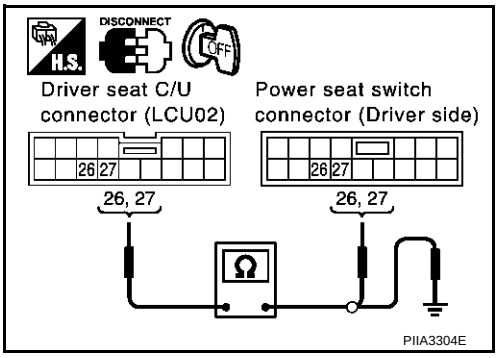

OK or NG

OK >> GO TO 4.
NG >> Repair or replace harness between driver seat control unit and driver power seat switch (driver side).

4. CHECK REAR END LIFTING SWITCH

Check continuity between driver seat switch.

Connector	Terminals (Wire color) (+)	Terminals (Wire color) (–)	Condition	Continuity
B143	26 (P/B)	14 (B/W)	Rear lifting switch ON(UP operation)	Yes
			Rear lifting switch OFF	No
	27 (B/Y)		Rear lifting switch ON (DOWN operation)	Yes
			Rear lifting switch OFF	No

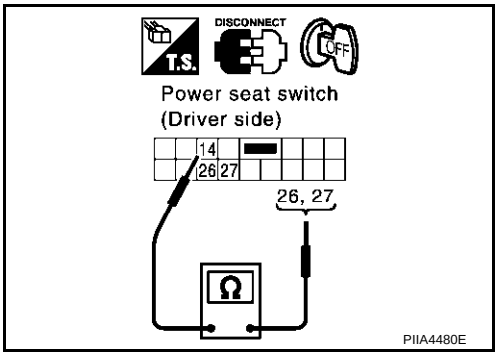

OK or NG

OK >> GO TO 5.
NG >> Replace power seat switch (driver side).

5. CHECK POWER SEAT SWITCH GROUND CIRCUIT

Check continuity between power seat switch connector B144 terminal 14 (B/W) and body ground.

14 (B/W) – Ground : Continuity should exist.

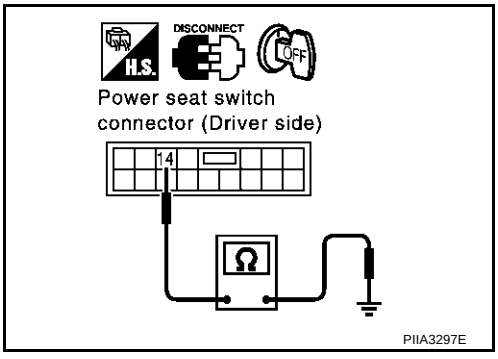

OK or NG

OK >> Check the harness and connector.
NG >> Repair or replace harness between power seat switch (driver side) and body ground.

Steering Wheel Telescopic Switch Inspection

AIS001KH

1. CHECK FUNCTION

With CONSULT-II

With "TELESCO SW–FR, TELESCO SWRR"RR" on the DATA MONITOR, operate the ADP steering switch to check ON/OFF operation.

Monitor item [OPERATION or UNIT]	Contents
TELESCO SW–FR "ON/OFF"	Operation (ON)/open (OFF) status judged from the telescoping switch (FR) signal is displayed.
TELESCO SW–RR "ON/OFF"	Operation (ON)/open (OFF) status judged from the telescoping switch (RR) signal is displayed.

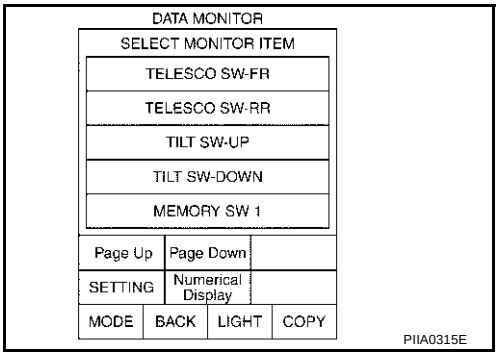

Without CONSULT-II

Carry out "SWITCH MONITOR" in the self-diagnosis function, and operate the ADP steering switch to check. Refer to SE-49 .

OK or NG

OK >> System is OK.
NG >> GO TO 2.

2. CHECK TELESCOPIC SWITCH INPUT/OUTPUT

Check voltage between BCM connector and body ground.

Connector	Terminals (Wire color) (+)	Terminals (Wire color) (–)	Condition	Voltage (V) (Approx)
M4	22 (R/B)	Ground	Telescopic switch ON (FR operation)	0
			Telescopic switch OFF	5
	26 (G/B)		Telescopic switch ON (RR operation)	0
			Telescopic switch OFF	5

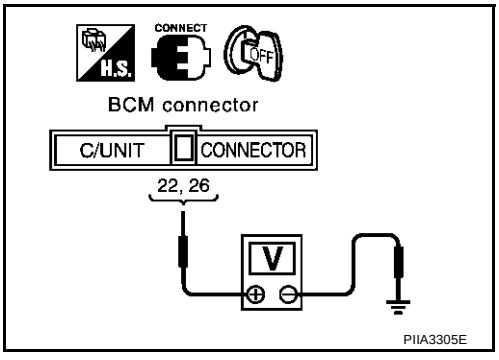

OK or NG

OK >> System is OK.
NG >> GO TO 3.

3. CHECK HARNESS CONTINUITY

1. Disconnect BCM connector and ADP steering switch connector.
2. Check continuity between BCM connector M4 terminals 22 (R/B), 26 (G/B) and ADP steering switch connector M51 terminals 4 (G/B), 5 (R/B).

   22 (R/B) – 5 (R/B) : Continuity should exist.
   26 (G/B) – 4 (G/B) : Continuity should exist.

3. Check continuity between BCM connector M4 terminals 22 (R/B), 26 (G/B) and body ground.

   22 (R/B) – Ground : Continuity should not exist.
   26 (G/B) – Ground : Continuity should not exist.

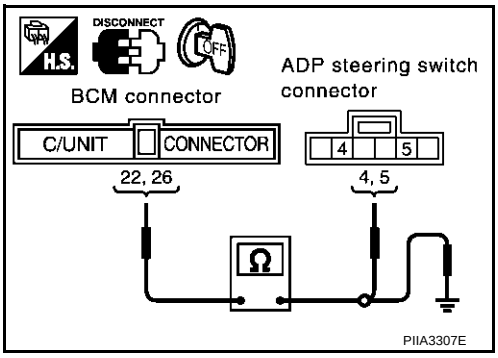

OK or NG

OK >> GO TO 4.
NG >> Repair or replace harness between BCM and ADP steering switch.

4. CHECK TELESCOPIC SWITCH

Check continuity between ADP steering switch.

Connector	Terminals (Wire color)		Condition	Continuity
	(+)	(–)		
M51	4 (G/B)	1 (B)	Telescopic switch ON (RR operation)	Yes
			Telescopic switch OFF	No
	5 (R/B)		Telescopic switch ON (FR operation)	Yes
			Telescopic switch OFF	No

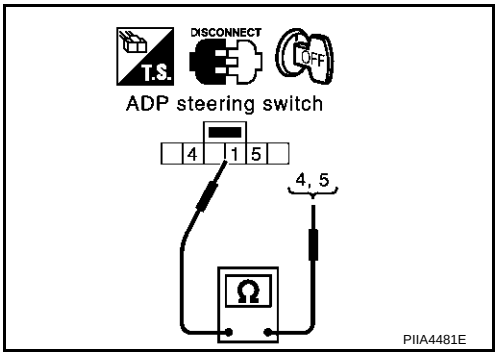

OK or NG

OK >> GO TO 5.
NG >> Replace ADP steering switch.

5. CHECK ADP STEERING SWITCH GROUND CIRCUIT

Check continuity between ADP steering switch connector M51 terminal 1 (B) and body ground.

1 (B) – Ground :Continuity should exist.

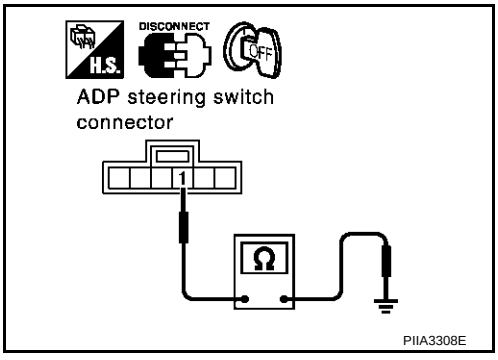

OK or NG

OK >> Check the harness and connector.
NG >> Replace or replace harness between ADP steering switch and body ground.

Steering Wheel Tilt Switch Inspection

AIS001KI

1. CHECK FUNCTION

With CONSULT-II

With "TILT SW–UP,TILT SWDOWN"WN" on the DATA MONITOR, operate the ADP steering switch to check ON/OFF operation.

Monitor item [OPERATION or UNIT]		Contents
TILT SW–UP	"ON/OFF"	Operation (ON)/open (OFF) status judged from the tilt switch (UP) signal is displayed.
TILT SW–DOWN	"ON/OFF"	Operation (ON)/open (OFF) status judged from the tilt switch (DOWN) signal is displayed.

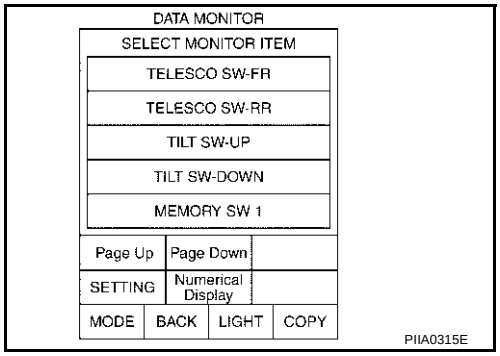

Without CONSULT-II

Carry out "SWITCH MONITOR" in the self-diagnosis function, and operate the ADP steering switch to check. Refer to SE-49, "SWITCH MONITOR" .

OK or NG

OK >> System is OK.
NG >> GO TO 2.

2. CHECK ADP STEERING SWITCH (TILT) INPUT/OUTPUT

1. Turn ignition switch turn OFF.
2. Check voltage between BCM connector and body ground.

Connector	Terminals (Wire color)		Condition	Voltage (V) (Approx)
	(+)	(–)		
M4 Ground	23 (PU/R)	Ground	Tilt switch ON (DOWN operation)	0
			Tilt switch OFF	5
	36 (P/L)		Tilt switch ON (UP operation)	0
			Tilt switch OFF	5

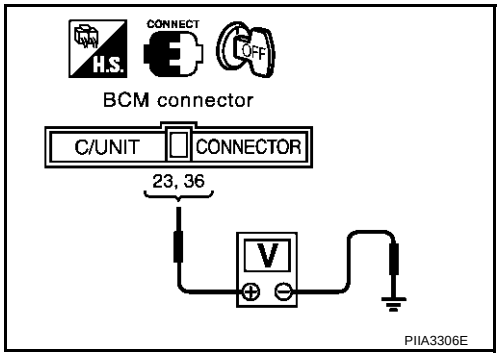

OK or NG

OK >> System is OK.
NG >> GO TO 3.

3. CHECK HARNESS CONTINUITY

1. Disconnect BCM connector and ADP steering switch connector.
2. Check continuity between BCM connector M4 terminals 23 (PU/R), 36 (P/L) and ADP steering switch connector M51 terminals 2 (P/L), 3 (PU/R).

   23 (PU/R) – 3 (PU/R) : Continuity should exist.
   36 (P/L) – 2 (P/L) : Continuity should exist.

3. Check continuity between BCM connector M4 terminals 23 (PU/R), 36 (P/L) and body ground.

   23 (PU/R) – Ground : Continuity should not exist.
   36 (P/L) – GRound : Continuity should not exist.

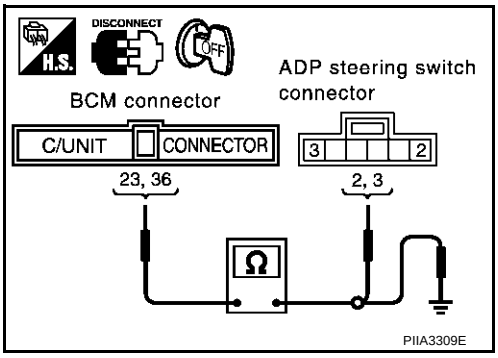

OK or NG

OK >> GO TO 4
NG >> Repair or replace harness between BCM and ADP steering switch

4. CHECK ADP STEERING SWITCH (TILT)

Check continuity between ADP steering switch.

Connector	Terminals (Wire color)		Condition	Continuity
	(+)	(–)		
M51	2 (P/L)	1 (B)	Tilt switch ON (UP operation)	Yes
			Tilt switch OFF	No
	3 (PU/R)		Tilt switch ON (DOWN operation)	Yes
			Tilt switch OFF	No

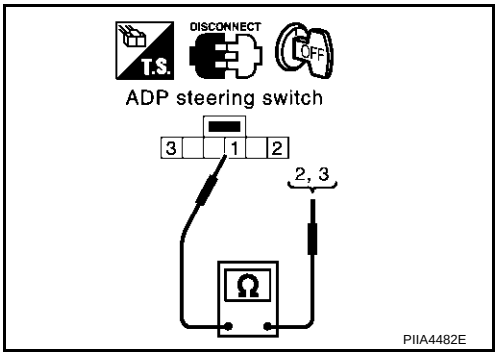

OK or NG

OK >> GO TO 5.
NG >> Replace ADP steering switch.

5. CHECK ADP STEERING SWITCH GROUND CIRCUIT

Check continuity between ADP steering switch connector M51 terminal 1 (B) and body ground.

1 (B) – Ground : Continuity should exist.

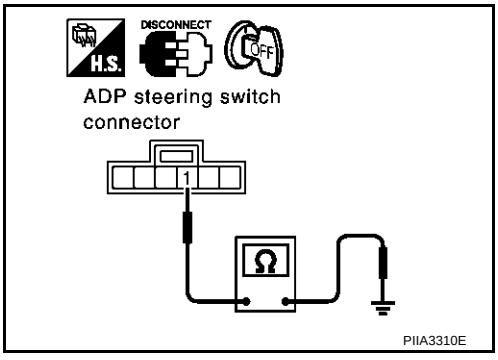

OK or NG

OK >> Check the harness and connector.
NG >> Repair or replace harness between ADP steering switch and body ground.

Seat Memory Indicator lamp System Inspection

AIS001KJ

1. CHECK FUNCTION

With CONSULT-II

With "MEMORY SW INDCTR" in ACTIVE TEST, Check operation.

Test item	Description
MEMORY SW INDCTR	The memory switch indicator is lit by receiving the drive signal.

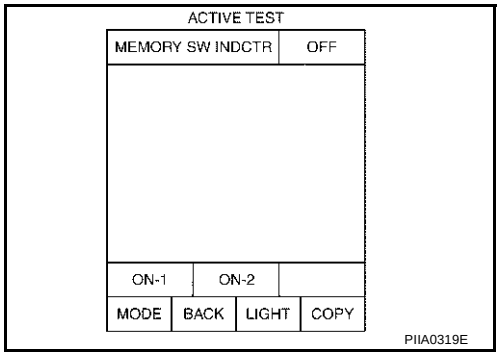

Without CONSULT-II

GO TO 2.

OK or NG

OK >> System is OK.
NG >> GO TO 2.

2. CHECK FUSE

Check if any of the following fuses for fuse block (J/B) are blown.

COMPONENT PARTS	TERMINAL NO. (SIGNAL)	AMPERE	FUSE NO.
Fuse block (J/B) No.1	9C (BAT power supply)	10A	#8

NOTE:

Refer to SE-17, "Component Parts and Harness Connector Location" .

OK or NG

OK >> GO TO 2.
NG >> If fuse is blown, be sure to eliminate cause of malfunction before installing new fuse, refer to SE-17, "Component Parts and Harness Connector Location" .

3. CHECK SEAT MEMORY SWITCH POWER SUPPLY CIRCUIT

1. Turn ignition switch OFF.
2. Disconnect seat memory switch connector.
3. Check voltage between seat memory switch connector D3 terminal 5 (L) and body ground.

5 (L) – Ground : Battery voltage

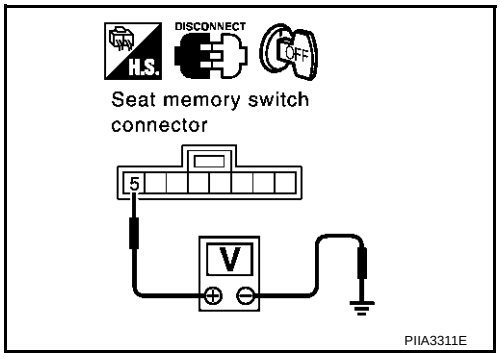

OK or NG

OK >> GO TO 4
NG >> Check following.

- 10A fuse [No. 8 located in the fuse block (J/B) No. 1]
- Harness for open short between seat memory switch and fuse.

4. CHECK HARNESS CONTINUITY

1. Disconnect BCM connector.
2. Check continuity between BCM connector M4 terminals 106 (Y/G), 112 (L/W) and seat memory switch connector D3 terminals 6 (Y/G), 7 (L/W).

   106 (Y/G) – 6 (Y/G) : Continuity should exist.
   112 (L/W) – 7 (L/W) : Continuity should exist.

3. Check continuity between BCM connector M4 terminals 106 (Y/G), 112 (L/W) and body ground.

   106 (Y/G) – Ground : Continuity should not exist.
   112 (L/W) – Ground : Continuity should not exist.

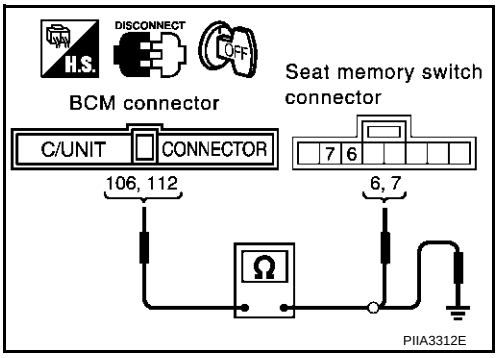

OK or NG

OK >> GO TO 5.
NG >> Repair or replace harness between BCM and memory switch.

5. CHECK SEAT MEMORY SWITCH INDICATOR SIGNAL

Check voltage between BCM connector M4 terminals 106 (Y/G), 112 (L/W) and body ground.

106 (Y/G) – Ground : Battery voltage.
112 (L/W) – Ground : Battery voltage.

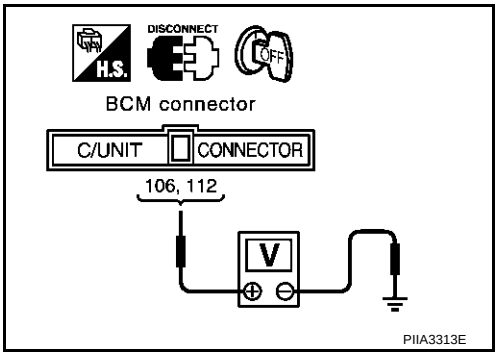

OK or NG

OK >> Replace BCM.
NG >> Replace seat memory switch.

Lumber Support Motor Circuit Inspection

AIS002CL

1. CHECK LUMBER SUPPORT SWITCH

1. Turn ignition switch OFF.
2. Disconnect front power seat switch (driver side) connector.
3. Check voltage between power seat switch (driver side) connector B144 terminal 16 (R) and body ground.

   16 (R) – Ground: : Battery voltage

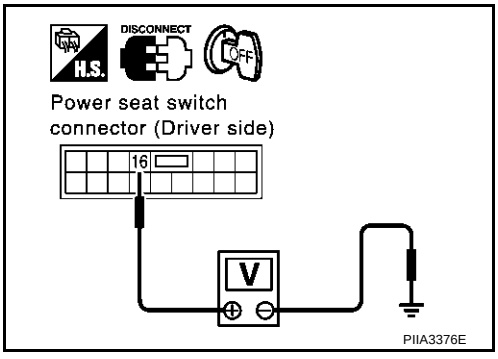

OK or NG

OK >> GO TO 2.
NG >> Repair or replace harness between fuse block (J/B) and power seat switch (Driver side).

2. CHECK LUMBER SUPPORT SWITCH

Check continuity power seat switch.

Con-nector	Terminal (+)	Terminal (–)	Condition	Continuity
B144	3	16	Lumber support switch forward.	Continuity should exist
		15	Lumber support switch backward.	Continuity should exist
	5	16	Lumber support switch backward.	Continuity should exist
		15	Lumber support switch forward.	Continuity should exist

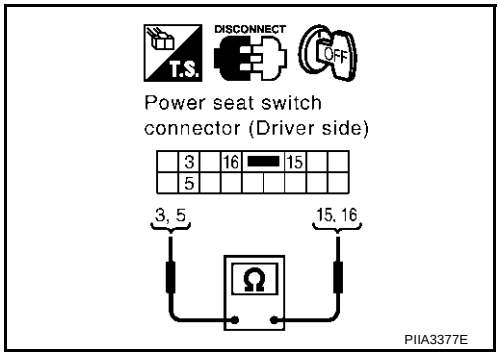

OK or NG

OK >> GO TO 3.
NG >> Replace power seat switch.

3. CHECK LUMBER SUPPORT MOTOR HARNESS

1. Disconnect lumber support motor connector.
2. Check continuity between power seat switch connector (driver side) B144 terminal 3 (GY), 5 (W/B) and lumber support motor connector B195 terminal 3 (GY), 5 (W/B).

   3 (GY) – 3 (GY) :Continuity should exist.
   5 (W/B) – 5 (W/B) :Continuity should exist.

3. Check continuity between power seat switch connector (driver side) B144 terminal 3 (GY), 5 (W/B) and body ground.

   3 (GY) – Ground :Continuity should not exist.
   5 (W/B) – Ground :Continuity should not exist.

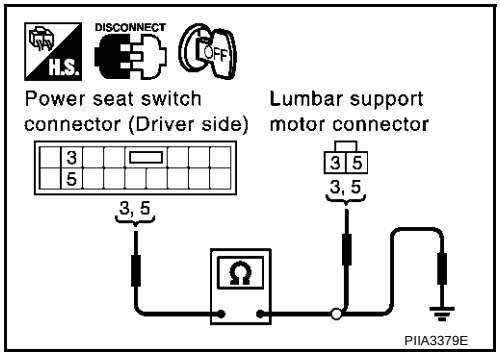

OK or NG

OK >> GO TO 4.
NG >> Repair or replace harness between power seat switch (driver side) and lumber support motor.

4. LUMBER SUPPORT SWITCH INSPECTION

Check continuity between power seat switch connector (driver side) B144 terminal 15 (B) and body ground.

15 (B) – Ground : Continuity should exist.

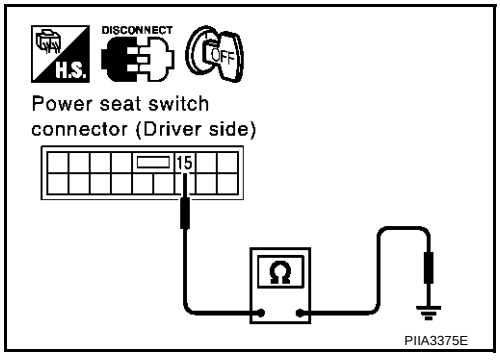

OK or NG

OK >> Replace rumbler support motor.
NG >> Repair or replace harness between power seat switch (driver side) and body ground.

POWER SEAT

PFP:87016

Schematic

AIS001KM

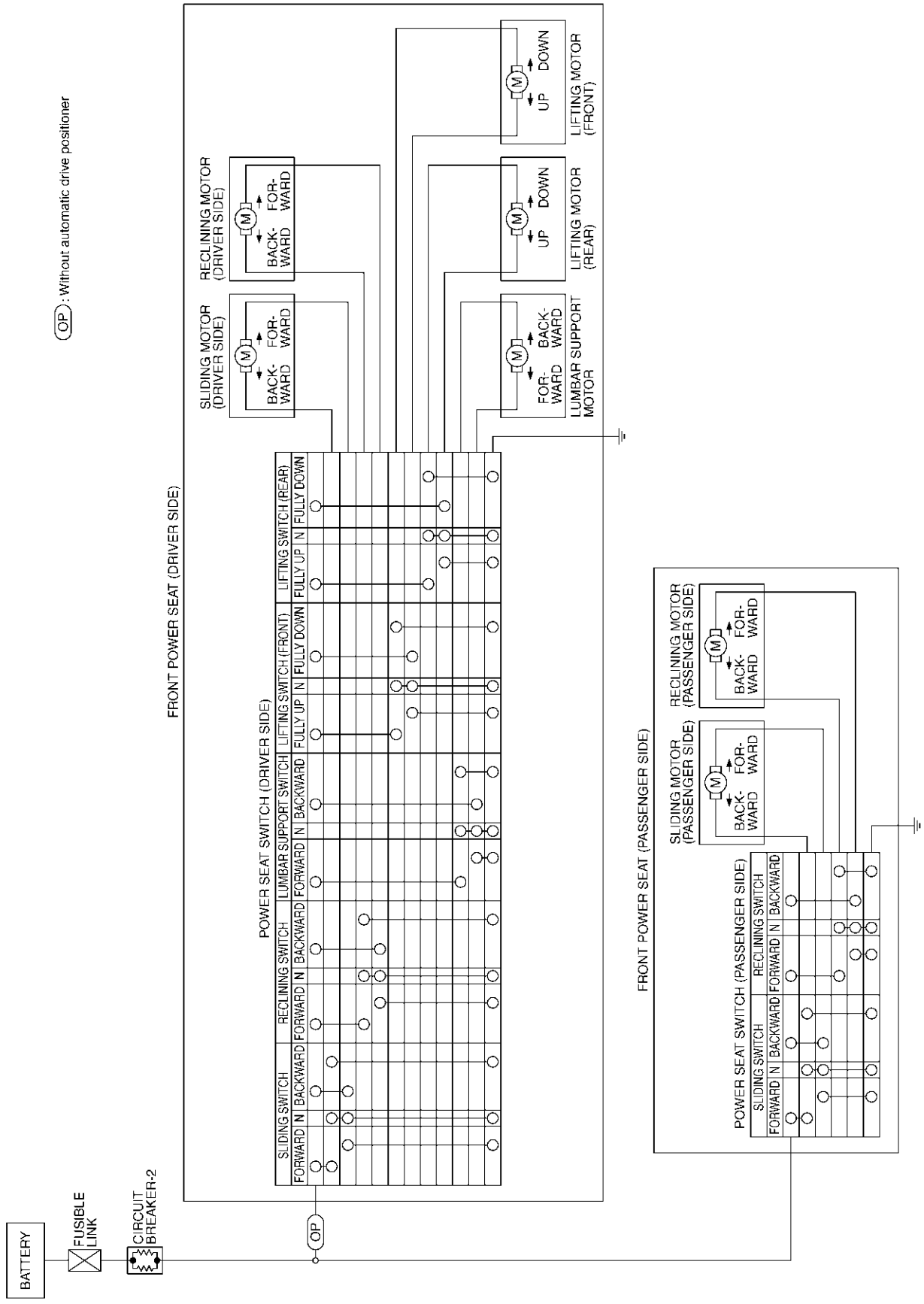

TIWA0235E

Wiring Diagram–SEAT–

AIS001KN

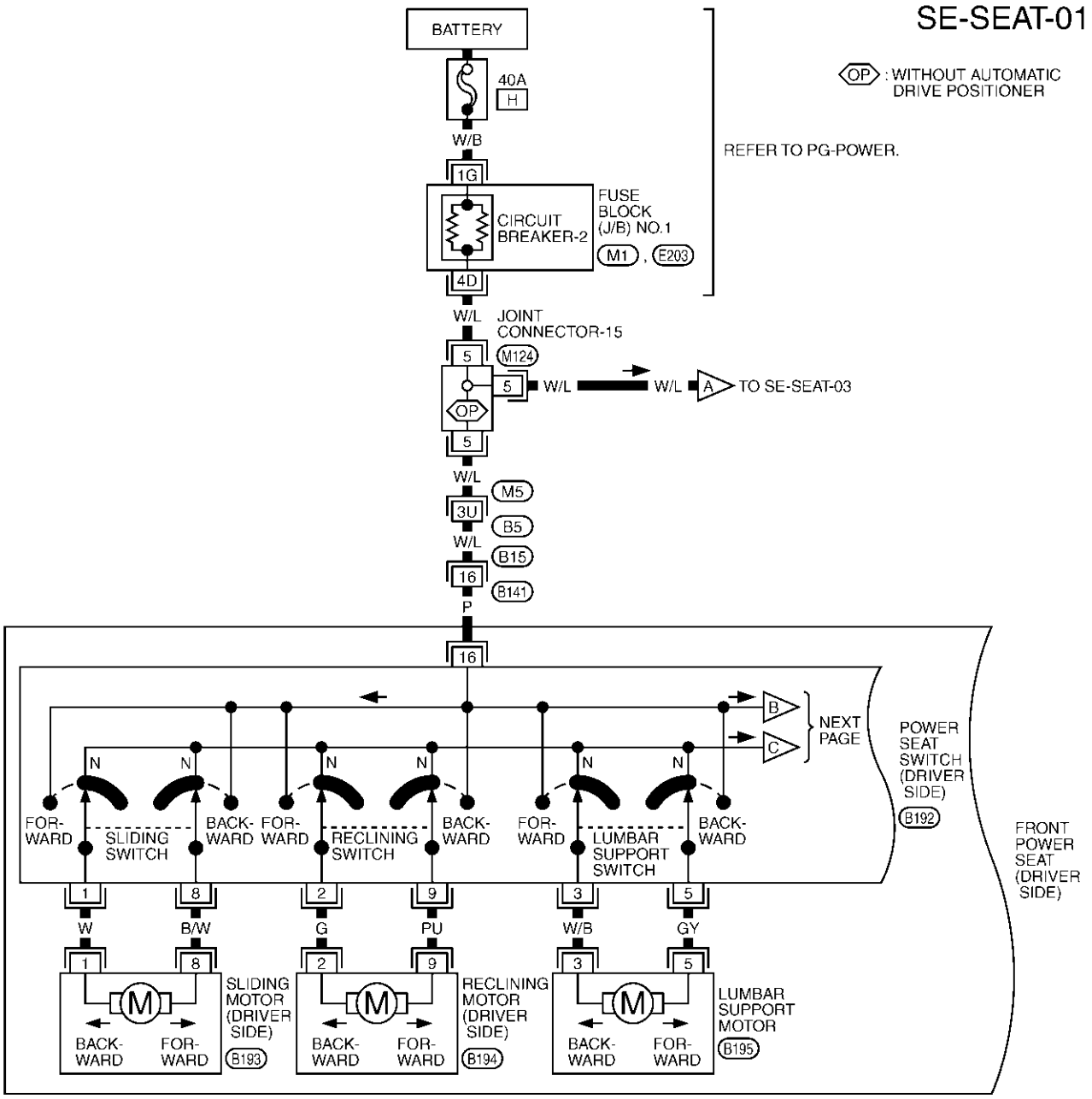

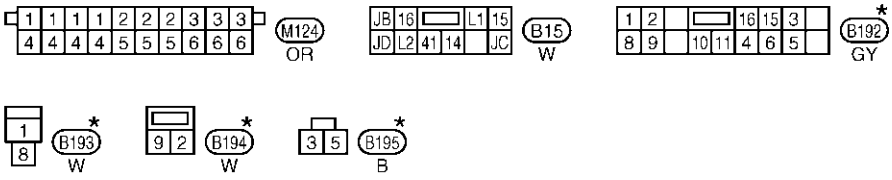

REFER TO THE FOLLOWING.

M5 -SUPER MULTIPLE JUNCTION (SMJ)

M1 , E203 -FUSE BLOCK-JUNCTION BOX (J/B) NO.1

*: THIS CONNECTOR IS NOT SHOWN IN "HARNESS LAYOUT", PG SECTION.

TIWA0236E

SE-SEAT-02

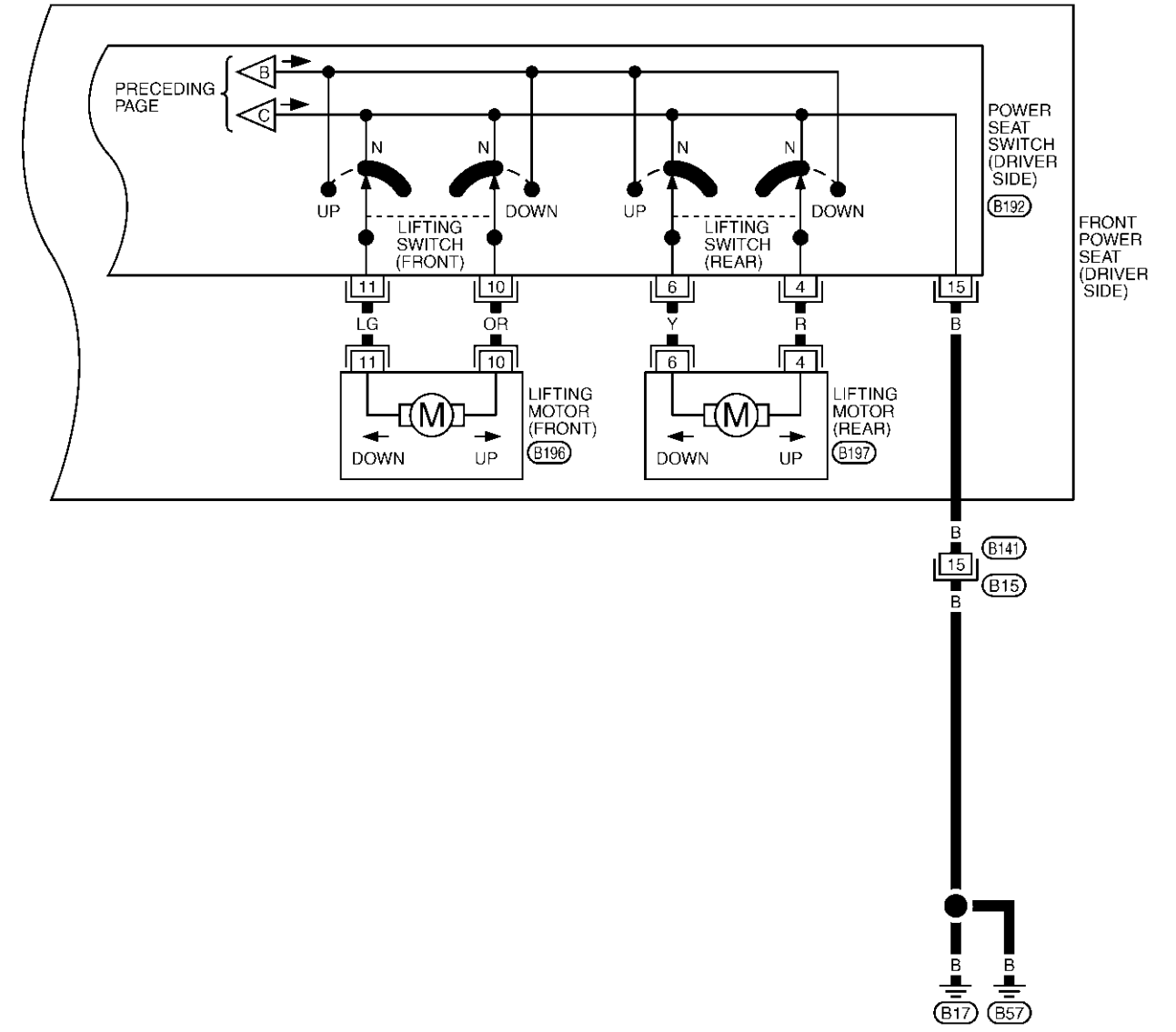

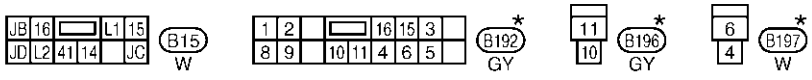

★: THIS CONNECTOR IS NOT SHOWN IN "HARNESS LAYOUT", PG SECTION.

TIWA0237E

SE-SEAT-03

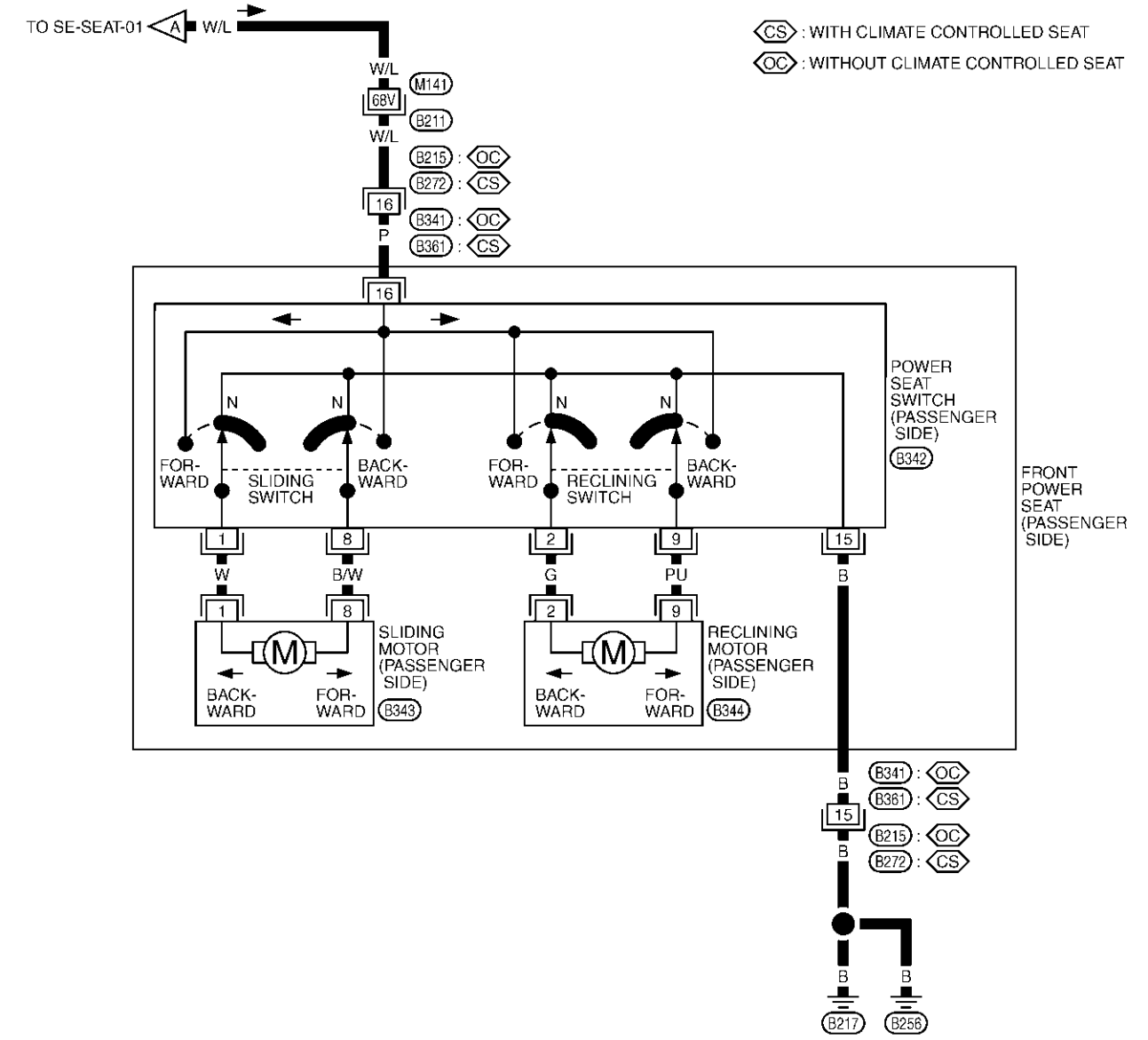

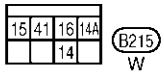

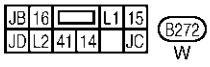

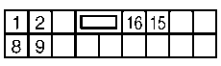

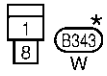

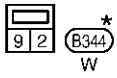

*: THIS CONNECTOR IS NOT SHOWN IN "HARNESS LAYOUT", PG SECTION.

REFER TO THE FOLLOWING.
B211 -SUPER MULTIPLE JUNCTION (SMJ)

TIWA0238E

CLIMATE CONTROLLED SEAT

PFP:870U6

System Description

AIS002BX

The climate controlled seat system is controlled by climate controlled seat control unit.
Heating and cooling are possible for a thermal electric device (heat conversion machine).

NOTE:

- The climate controlled seat system is downed when the temperature sensor set as the seat cushion and the seat back's thermal electric device machine detects 20 °C (68 °F) or more of mutual differences of temperature.
- In this case, by turning off ignition switch, system down is canceled and it can be reused by turning on ignition switch again.
- The climate controlled seat blower keep low speed for approximately 60 seconds after turning the temperature switch or the dial.

CAUTION:

- **The thermal electric device has the character in which, as for an opposite side. one side becomes high temperature at the time of low temperature.**
- **At the time of work, please turn OFF a switch, and carry it out after checking that the thermal electric device has got cold.**

Power is at all times supplied

- through 15A fuse [No. 71, and 72, located in the fuse fusible link and relay unit]
- to climate controlled seat relay terminals 5 and 7.

When the ignition switch turned to ON or START position,
Power is supplied

- through 10A fuse [No. 1, located in the fuse block (J/B)]
- to climate controlled seat relay terminal 2,and
- to climate controlled seat control unit (driver side and passenger side) terminal JB.

Then ground is supplied

- to climate controlled seat relay terminal 1,
- through body grounds E42, and E 62,

Then climate controlled seat relay is energized,
When climate controlled seat relay is turned to ON,
Power is supplied,

- through climate controlled seat relay terminal 3,
- to driver side climate controlled seat control unit terminal JD.

When climate controlled seat relay is turned to ON,
Power is supplied,

- through climate controlled seat relay terminal 6,
- to passenger side climate controlled seat control unit terminal JD.

When climate controlled switch select “HEAT”, ground is supply

- through climate controlled seat switch terminal J6,
- to climate controlled seat control unit terminal J6,
- through climate controlled seat switch terminal JCA,
- through body grounds B17 and B57.

Then, the climate controlled control unit receives climate controlled switch “HEAT” signal.
When climate controlled switch select “COOL”, ground is supply

- through climate controlled seat switch terminal J16,
- to climate controlled seat control unit terminal J16,
- through climate controlled seat switch terminal JCA,
- through body grounds B17 and B57.

Then, the climate controlled control unit receives climate controlled switch “COOL” signal.
When the climate controlled seat control unit receives climate controlled seat switch signal, power is supply

- to climate controlled seat temperature dial terminal J7,

- through climate controlled seat control unit terminal J7,

And then ground is supplied

- through climate controlled seat control unit terminal J15,
- to climate controlled seat temperature dial terminal J15,

Then, the climate controlled seat control unit receives climate controlled seat temperature dial signal.
When blower motor rotates, signal is transmitted

- to climate controlled seat control unit terminal J14,
- through climate controlled seat blower motor terminal J14.

This is climate controlled seat blower motor tachometer signal.
When climate controlled seat control unit receives climate controlled seat switch (HEAT, COOL) signal, climate controlled seat temperature dial signal and tachometer signal,
Power is supplied

- to climate controlled seat blower motor terminal J13,
- through climate controlled seat control unit terminal J13,

This is blower motor revolution control signal.
When blower motor receivers blower motor revolution control signal,
Power is supplied

- through climate controlled seat control unit terminal J10,
- to climate controlled seat blower motor terminal J10.

When number of rotations correspond signal,
Ground is supplied

- to climate controlled seat blower motor terminal J3,
- through climate controlled seat control unit terminal J3,
- through climate controlled seat control unit terminal JC,
- through body grounds B217 and B256.

Then motor revolution is controlled.
When the ignition switch turned to ON or START position,
Power is supplied

- to climate controlled seat cushion thermal electric device terminal J18,
- through climate controlled seat control unit terminal J18.

Then ground is supplied

- to climate controlled seat control unit terminal J17,
- through climate controlled seat cushion thermal electric device terminal J17,

Then the climate controlled seat control unit recognizes seat cushion thermal electric device sensor signal.
When climate controlled control unit recognizes climate controlled switch “HEAT” signal and, seat cushion thermal electric device sensor signal,
Power is supplied

- to climate controlled seat cushion thermal electric device terminal J1,
- through climate controlled seat control unit terminal J1,

Then ground is supplied

- through climate controlled seat cushion thermal electric device terminal J2,
- to climate controlled seat control unit terminal J2.
- through climate controlled seat control unit terminal JC,
- through body grounds B217 and B256.

When climate controlled control unit recognizes climate controlled switch “COOL” signal and, climate controlled seat cushion thermal electric device sensor signal,
Power is supplied

- to climate controlled seat cushion thermal electric device terminal J2,
- through climate controlled seat control unit terminal J2,

Then ground is supplied

- through climate controlled seat cushion thermal electric device terminal J1,
- to climate controlled seat control unit terminal J1.

- through climate controlled seat control unit terminal JC,
- through body grounds B217 and B256.

When the ignition switch turned to ON or START position,
Power is supplied

- to climate controlled seatback thermal electric device terminal J19,
- through climate controlled seat control unit terminal J19.

Then ground is supplied

- to climate controlled seat control unit terminal J20,
- through climate controlled seatback thermal electric device terminal J20.
- through climate controlled seat control unit terminal JC,
- through body grounds B217 and B256.

Then the climate controlled seat control unit recognizes seatback thermal electric device sensor signal.
When climate controlled control unit recognizes climate controlled switch “HEAT” signal and climate controlled seatback thermal electric device sensor signal,
Power is supplied

- to climate controlled seatback thermal electric device terminal J11,
- through climate controlled seat control unit terminal J11,

ground is supplied

- to climate controlled seat control unit terminal J12,
- through climate controlled seatback thermal electric device terminal J12,
- through climate controlled seat control unit terminal JC,
- through body grounds B217 and B256.

this climate controlled seatback thermal electric device generates heat wind is warmed.
When climate controlled control unit recognizes climate controlled switch “COOL” signal and climate controlled seatback thermal electric device sensor signal,
Power is supplied

- to climate controlled seatback thermal electric device terminal J12,
- through climate controlled seat control unit terminal J12,

ground is supplied

- to climate controlled seat control unit terminal J11,
- through climate controlled seatback thermal electric device terminal J11,
- through climate controlled seat control unit terminal JC,
- through body grounds B217 and B256.

When climate controlled switch selects “HEAT”,
Power is supplied

- to climate controlled seat switch terminal J4,
- through climate controlled seat control unit terminal J4.

Ground is supplied

- to the climate controlled seat switch terminal JCA,
- through body grounds B17 and B57

Then climate controlled seat switch “HEAT” indicator is energized.
When climate controlled switch select “COOL”,
Power is supplied

- to climate controlled seat switch terminal J4,
- through climate controlled seat control unit terminal J5,

Ground is supplied

- to the climate controlled seat switch terminal JCA,
- through body grounds B17 and B57.

Then climate controlled seat switch “COOL” indicator is energized.

Component Parts and Harness Connector Location

AIS002BY

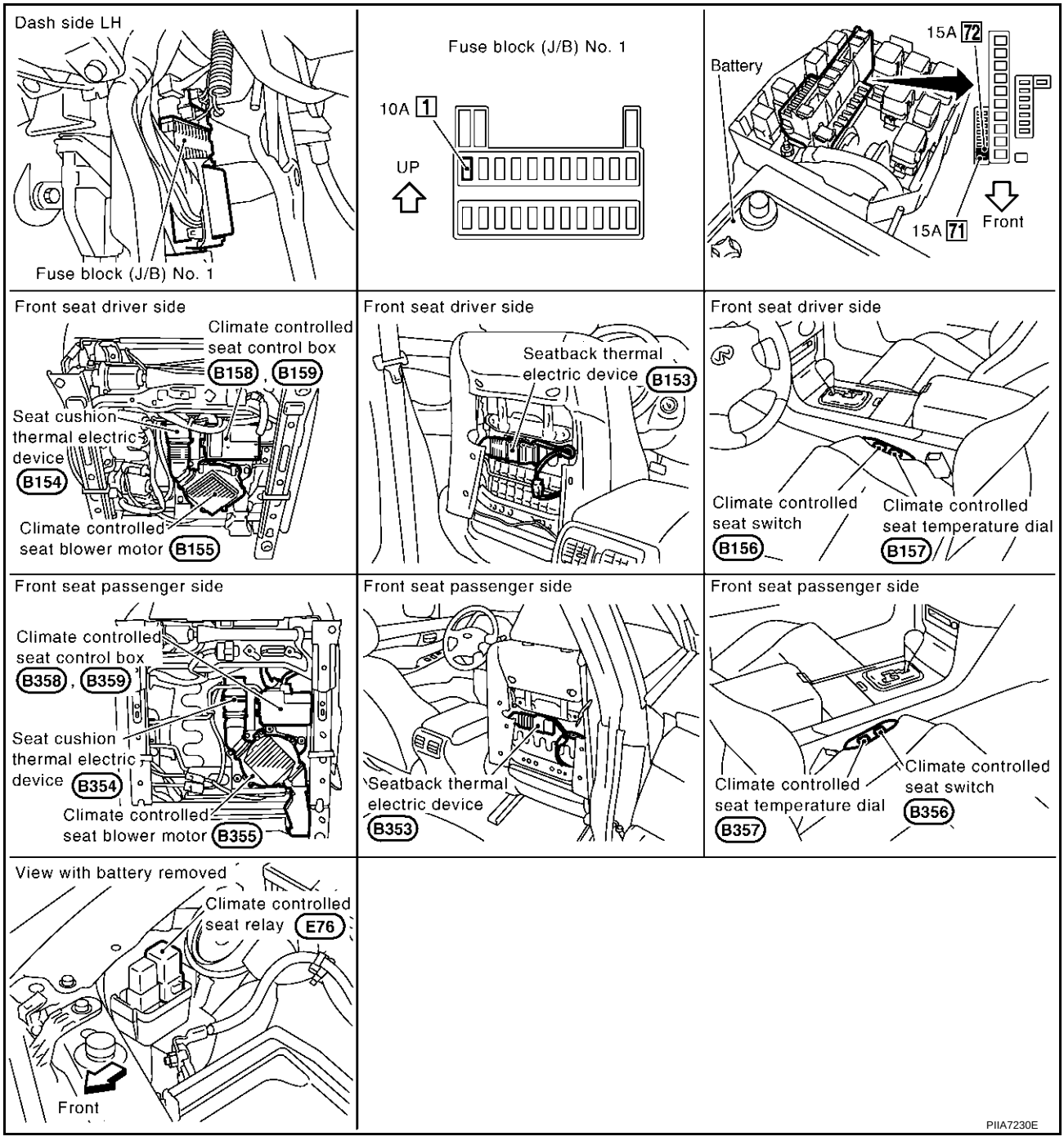

Schematic – AHEAT –

AIS002BZ

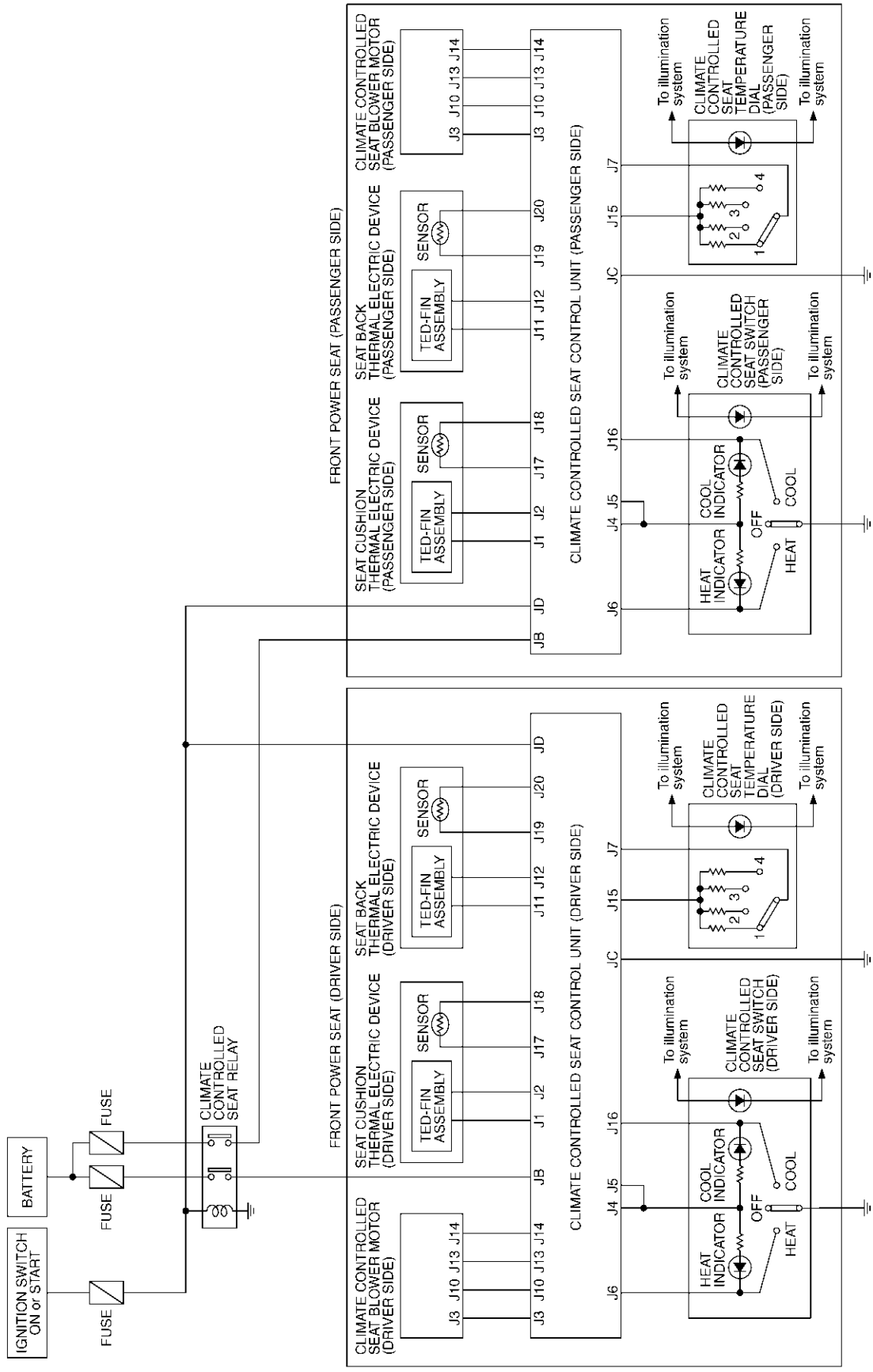

Wiring Diagram –AHEAT–

AIS002C0

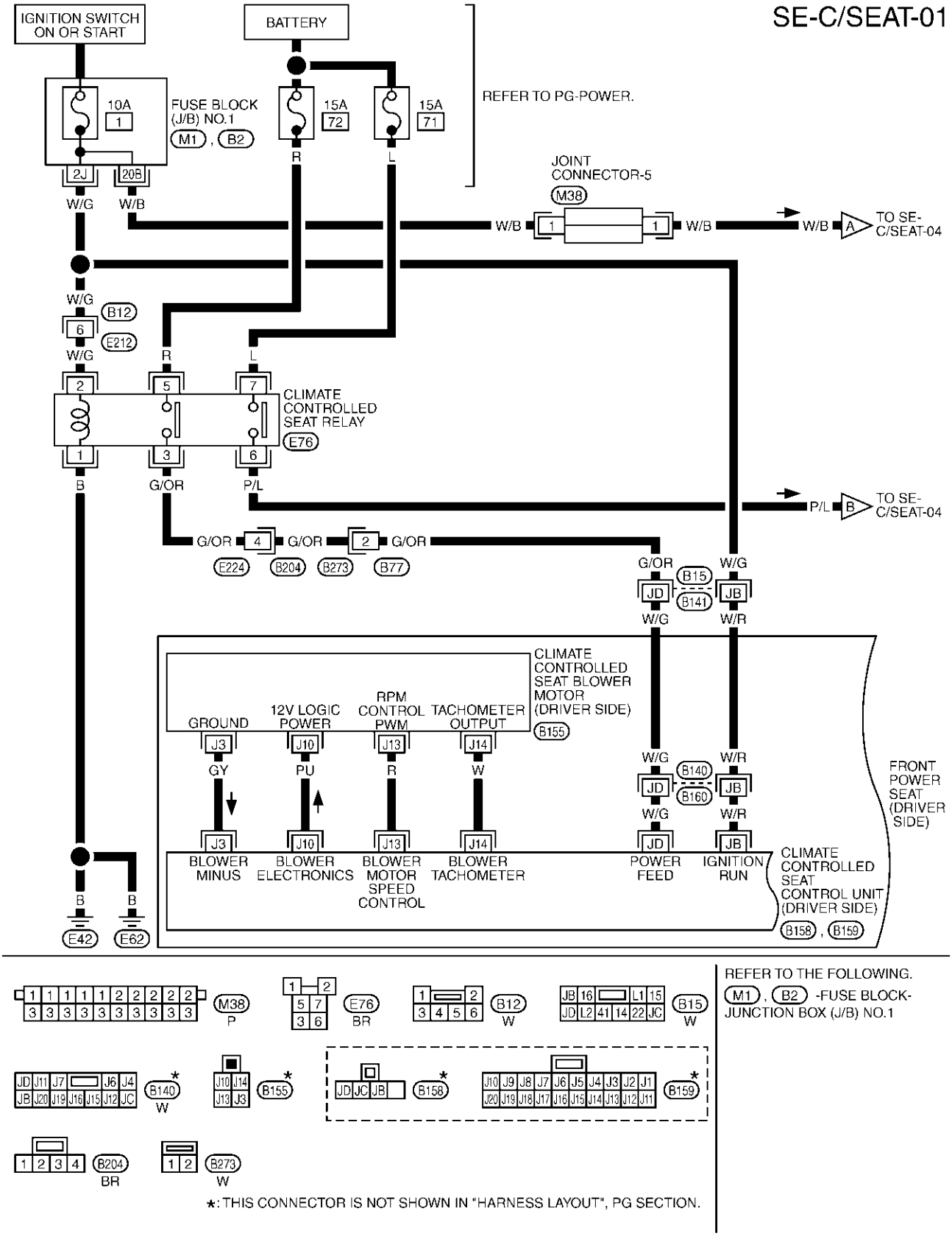

TIWA0262E

SE-C/SEAT-02

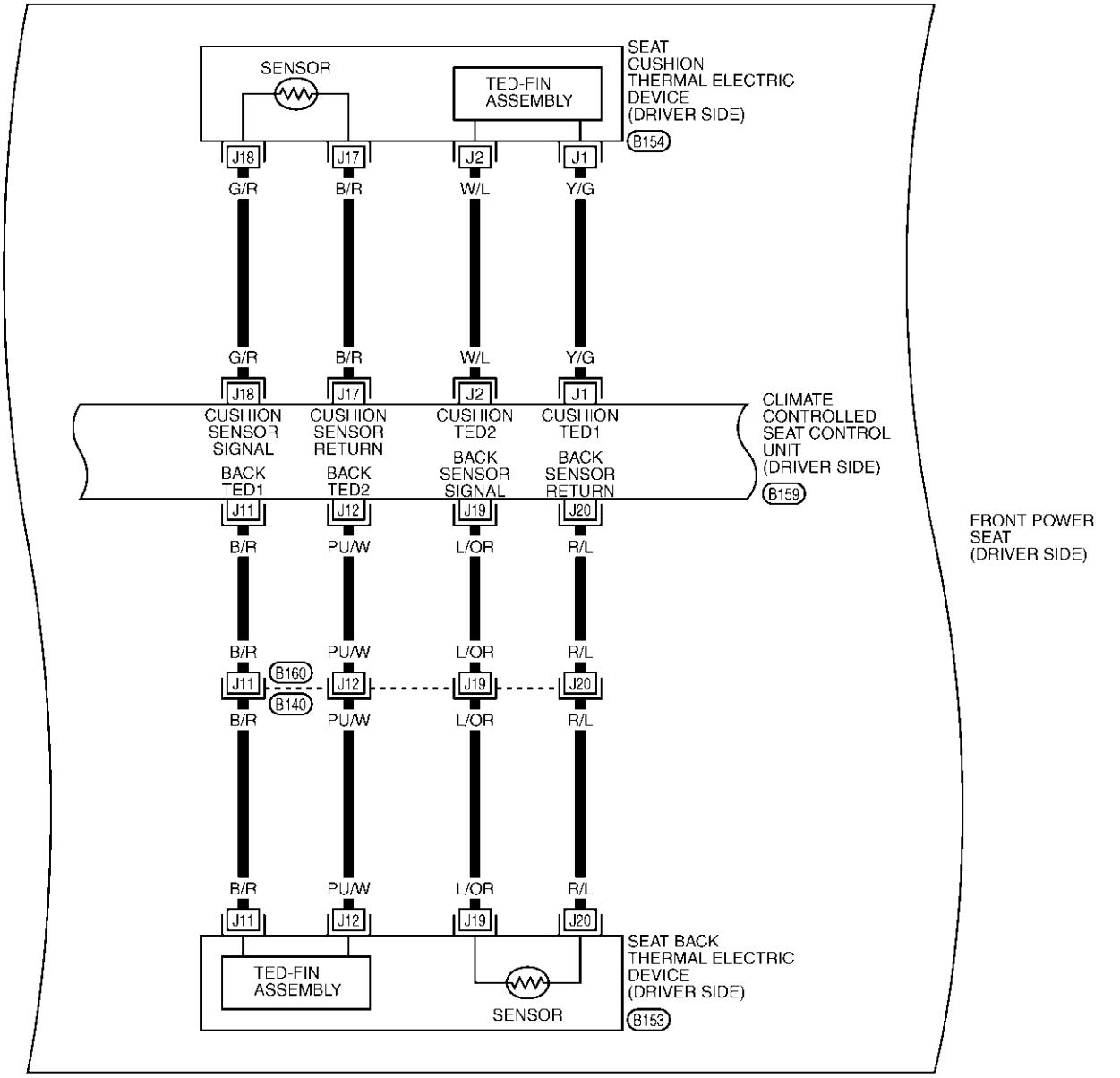

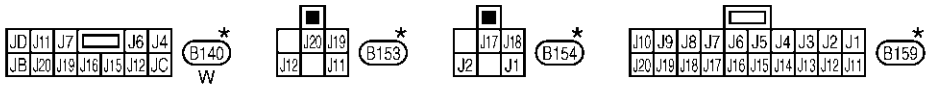

★: THIS CONNECTOR IS NOT SHOWN IN "HARNESS LAYOUT", PG SECTION.

TIWA0263E

SE-C/SEAT-03

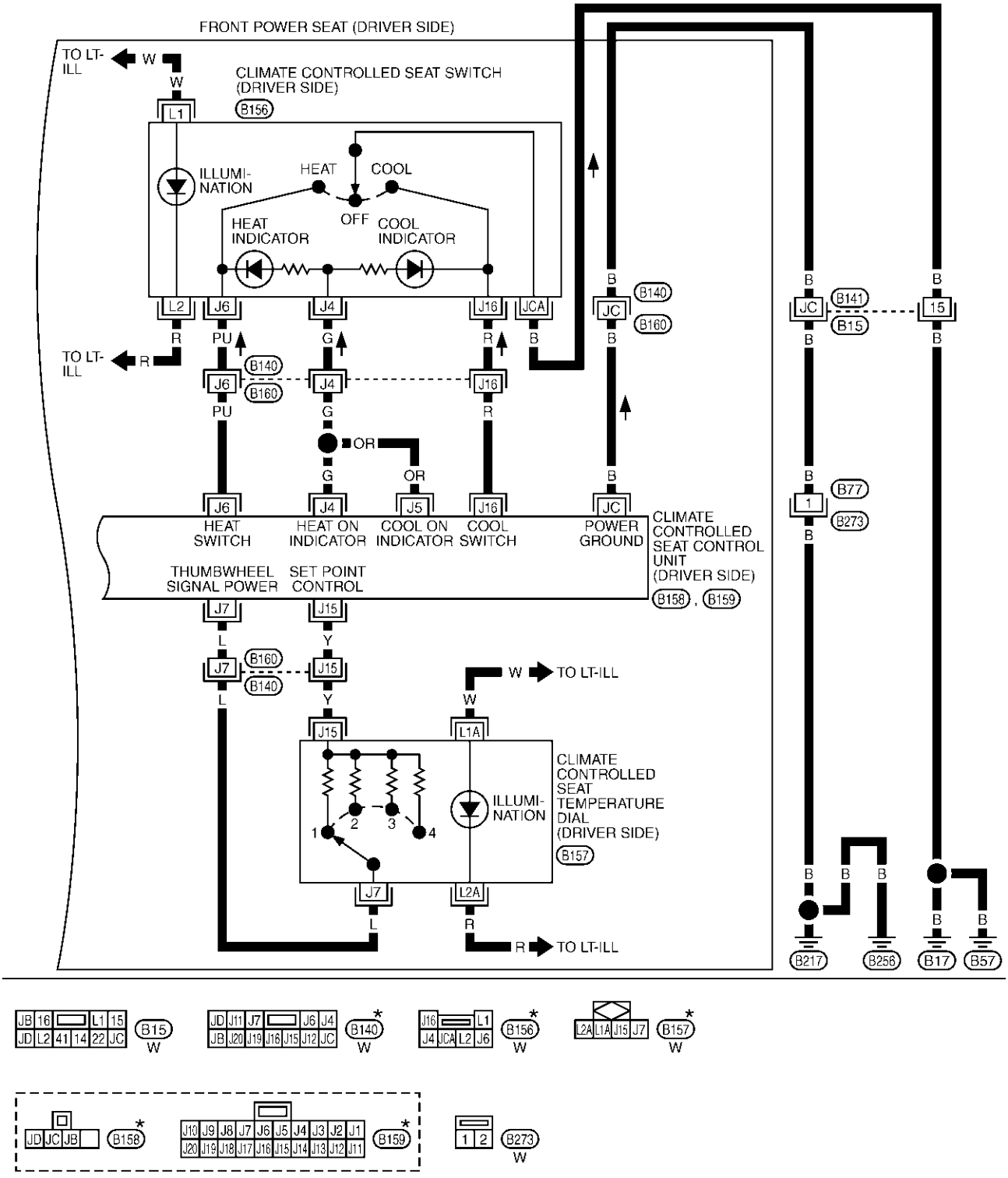

★: THIS CONNECTOR IS NOT SHOWN IN "HARNESS LAYOUT", PG SECTION.

TIWA0264E

SE-C/SEAT-04

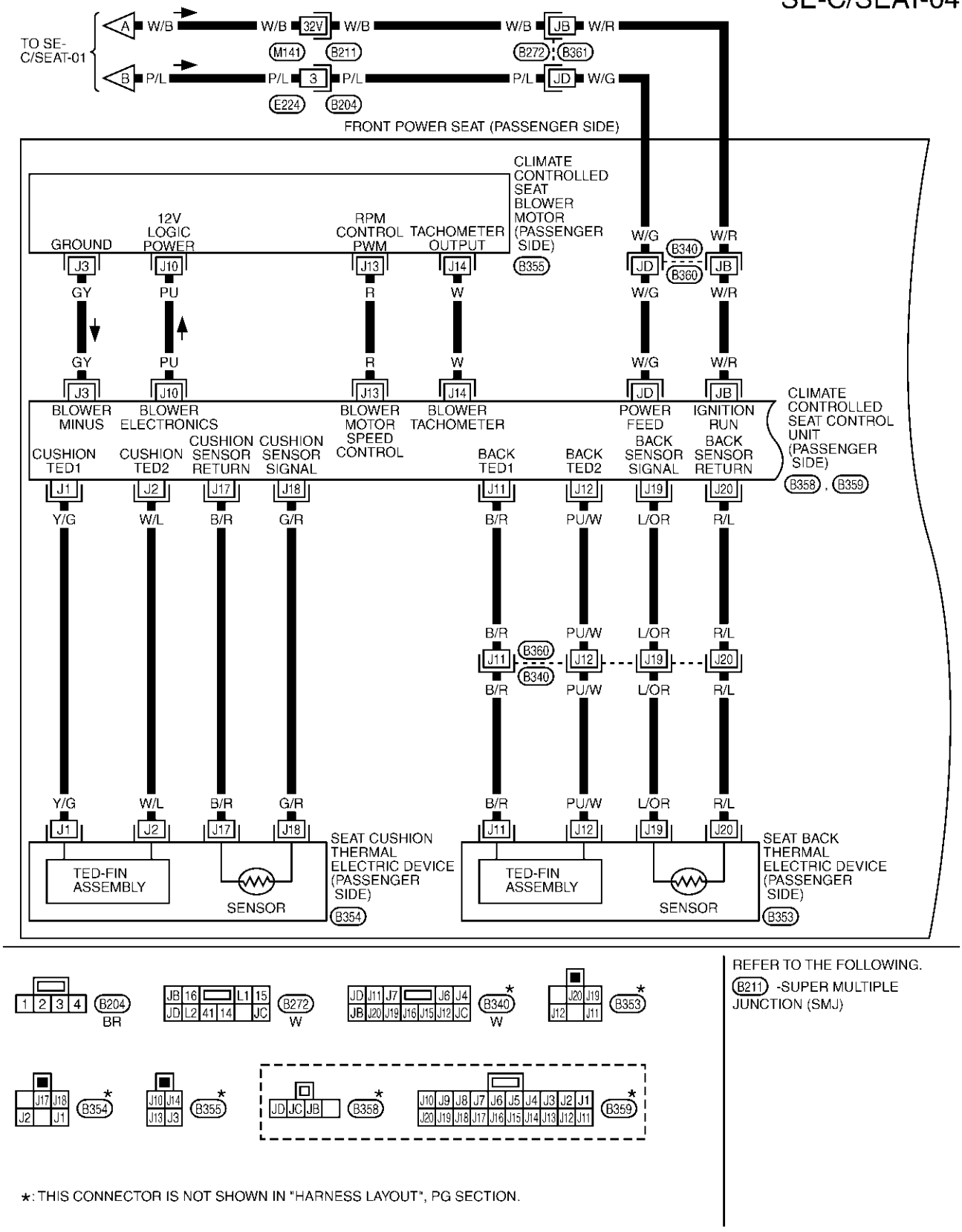

TIWA0265E

SE-C/SEAT-05

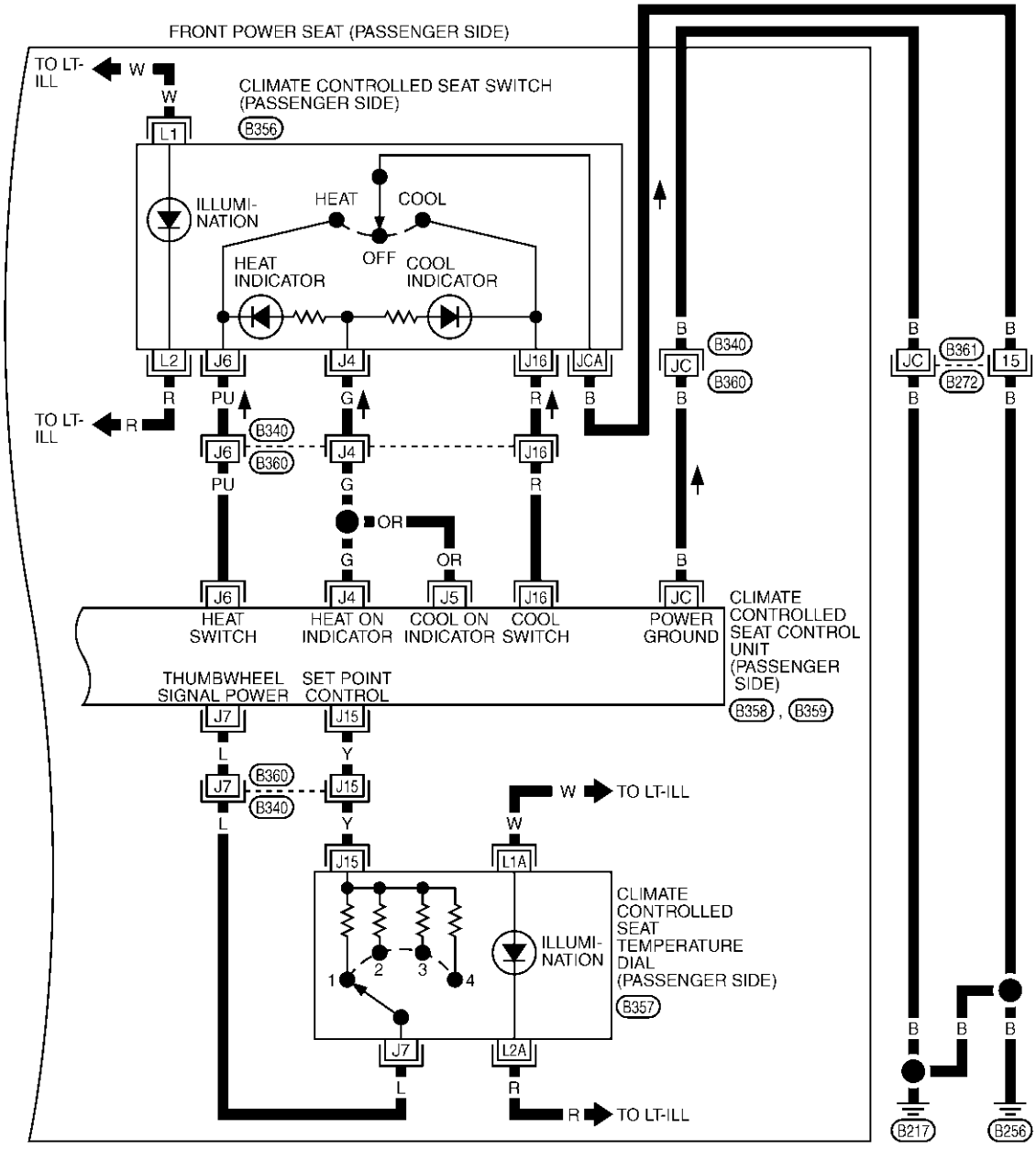

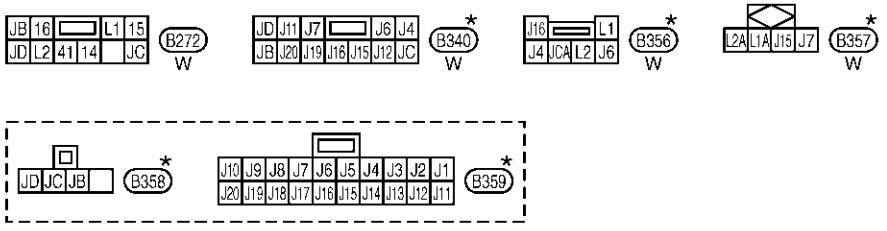

★: THIS CONNECTOR IS NOT SHOWN IN "HARNESS LAYOUT", PG SECTION.

TIWA0299E

Terminal and Reference Value for Climate Controlled Seat Control Unit

AIS002C1

TER-MINAL	WIRE COLOR	ITEM	CONDITION		VOLTAGE (V) (Approx.)
JB	W/R	IGN power supply	IGN ON or START		Battery voltage
JC	B	Ground	—		0
JD	W/G	IGN power supply	IGN ON or START		Battery voltage
J 1	Y/G	Seat cushion thermal electric device power supply (HEAT)	IGN ON or START	Climate controlled seat switch select “HEAT”	Battery voltage
				Climate controlled seat switch select “OFF”	0
J 2	W/L	Seat cushion thermal electric device power supply (COOL)	IGN ON or START	Climate controlled seat switch select “COOL”	Battery voltage
				Climate controlled seat switch select “OFF”	0
J3	GY	Climate controlled seat blower motor ground	—		0
J4	G	“HEAT” switch ON indicate	IGN ON or START Climate controlled seat switch select “HEAT”		Battery voltage
			IGN OFF		0
J5	OR	“COOL” switch ON indicator	IGN ON or START Climate controlled seat switch select “COOL”		Battery voltage
			IGN OFF		0
J6	PU	“HEAT” switch ON signal	IGN ON or START	Climate controlled seat switch select “HEAT”	0
				Climate controlled seat switch OFF	Battery voltage
J7	L	Climate controlled seat temperature dial power supply	Climate controlled seat temperature dial 1 – 4		7.1 – 11.4
J10	PU	Blower motor power supply	IGN ON or START	Climate controlled seat switch select “HEAT” or “COOL” Climate controlled seat temperature dial 1 – 4	6 – 12
				Climate controlled Seat switch select “OFF”	Battery voltage
J 11	B/R	Seatback thermal electric device power supply (HEAT)	IGN ON or START	Climate controlled seat switch select “HEAT”	Battery voltage
				Climate controlled seat switch select “OFF”	0
J 12	PU/W	Seatback thermal electric device power supply (COOL)	IGN ON or START	Climate controlled seat switch select “COOL”	Battery voltage
				Climate controlled seat switch select “OFF”	0
J 13	R	Blower motor speed control signal	IGN ON or START	Climate controlled seat switch select “HEAT” or “COOL” climate controlled seat temperature dial 1 – 4	6 – 12
				Climate controlled seat switch OFF	0
J14	W	Blower motor tachometer signal	IGN ON or START	Climate controlled seat switch select “HEAT” or “COOL”	5 – 7
				Climate controlled seat switch OFF	Battery voltage

TER-MINAL	WIRE COLOR	ITEM	CONDITION		VOLTAGE (V) (Approx.)
J15	Y	Climate controlled seat temperature dial signal	Climate controlled seat temperature dial 1 – 4		0 – 5
J16	R	“COOL” switch ON signal	IGN ON or START	climate controlled seat switch select “COOL”	0
				climate controlled seat switch OFF	Battery voltage
J17	B/R	Seat cushion thermal electric device sensor ground	IGN ON or START		0
J18	G/R	Seat cushion thermal electric device sensor signal	IGN ON or START		0.5 – 4
J19	L/OR	Seatback thermal electric device sensor signal	IGN ON or START		0.5 – 4
J20	R/L	Seatback thermal electric device sensor ground	IGN ON or START		0

Work Flow

AIS002C2

1. Check the symptom and customer's requests.
2. Understand the outline of system. Refer to SE-97, "System Description" .
3. According to the trouble diagnosis chart, repair or replace the cause of the malfunction. Refer to SE-109, "Trouble Diagnoses Symptom Chart" .
4. Does climate controlled seat operate normally? YES: GO TO 5, NO: GO TO 4.
5. INSPECTION END.

Trouble Diagnoses Symptom Chart

AIS002C4

- Check that other systems using the signal of the following systems operate normally.

Symptom	Diagnoses / service procedure	Refer to page
Climate controlled seat do not operate (Neither the driver' s side nor passenger's side operate).	1. Climate controlled seat relay power supply circuit inspection	SE-110
Driver side climate controlled seat do not operate (Passenger side is operate).	1. Driver side climate controlled seat control unit power supply circuit inspection	SE-111
	2. Climate controlled seat temperature dial circuit inspection	SE-117
	3. Climate controlled seat switch ground circuit inspection	SE-119
	4. Blower motor power supply circuit inspection	SE-124
	5. Replace blower motor assembly	–
Passenger side climate controlled seat do not operate (Driver side is operate)	1. Passenger side climate controlled seat control unit power supply circuit inspection	SE-113
	2. Climate controlled seat temperature dial circuit inspection	SE-117
	3. Climate controlled seat switch ground circuit inspection	SE-119
	4. Blower motor power supply circuit inspection	SE-124
	5. Replace blower motor assembly	–
Blower motor speed cannot adjust.	1. Climate controlled temperature dial inspection	SE-117
	2. Climate controlled seat control unit inspection	SE-126
	3. Replace blower motor assembly	—
The climate controlled seat dose not operates when the switch is done in “HEAT” (The wind rises when the switch is made (“COOL”).	1. Climate controlled seat “HEAT” switch circuit inspection	SE-115
The climate controlled seat dose not operates when the switch is done in “COOL” (The wind rises when the switch is made “HEAT”).	1. Climate controlled seat “COOL” switch circuit inspection	SE-116
When the climate controlled seat switch is turned on, operation stopped at once (When the climate controlled seat switch is mode “HEAT” or “COOL” after ignition switch is turned ON again, the motor operates).	1. Seat cushion Thermal electric device sensor circuit inspection	SE-121
	2. Seat cushion Thermal electric device circuit inspection	SE-120
	3. Seatback Thermal electric device sensor circuit inspection	SE-123
	4. Seatback Thermal electric device circuit inspection	SE-122
	5. Blower motor speed control circuit inspection	SE-125
	6. Blower motor tachometer signal circuit inspection	SE-126
	7. Replace Climate controlled seat control unit	–

NOTE:

- The climate controlled seat blower keep low speed for approximately 60 seconds after turning the switch or the climate controlled dial.
- The climate controlled seat system is downed when the temperature sensor set as the seat cushion and the seat back's thermal electric device machine detects 20 °C (68 °F) or more of mutual differences of temperature.

Climate Controlled Relay Power Supply Circuit Check

AIS002C5

1. CHECK FUSE

Check if any of the following fuses for Fuse block (J/B) are blown.

COMPONENT PARTS	TERMINAL NO. (SIGNAL)	AMPERE	FUSE NO.
Fuse block (J/B)	2J (IGN power supply)	10A	1

NOTE:

Refer to SE-100, "Component Parts and Harness Connector Location" .

OK or NG

OK >> GO TO 2.

NG >> If fuse is blown, be sure to eliminate cause of malfunction before installing new fuse, refer to SE-100, "Component Parts and Harness Connector Location" .

2. CHECK SEAT RELAY POWER SUPPLY CIRCUIT

1. Turn ignition switch OFF.
2. Disconnect climate controlled seat relay connector.
3. Check voltage between climate controlled seat relay connector E76 terminal 2 (W/G) and ground.

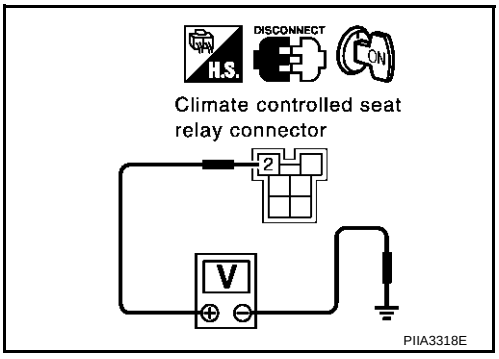

Con-nector	Terminal (Wire color)		Condition	Voltage (V) (Approx.)
	(+)	(–)		
E76	2 (W/G)	Ground	Turn ignition switch ON.	Battery voltage
			Turn ignition switch OFF.	0

OK or NG

OK >> GO TO 3.

NG >> Repair or replace harness between fuse block (J/B) and climate controlled seat relay.

3. CHECK CLIMATE CONTROLLED SEAT RELAY

Check continuity between climate controlled relay terminals 3 and 5, 6 and 7.

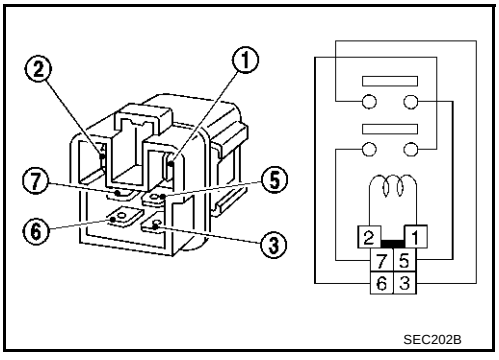

Terminal		Condition	Continuity
3	5	12V direct current supply between terminals 1 and 2	Yes
		No current supply	No
6	7	12V direct current supply between terminals 1 and 2	Yes
		No current supply	No

OK or NG

OK >> GO TO 4.

NG >> Replace climate controlled seat relay.

4. CHECK CLIMATE CONTROLLED SEAT CONTROL UNIT GROUND CIRCUIT

Check continuity between climate controlled seat relay connector E76 terminal 1 (B) and ground.

1 (B) – Ground **:Continuity should exist.**

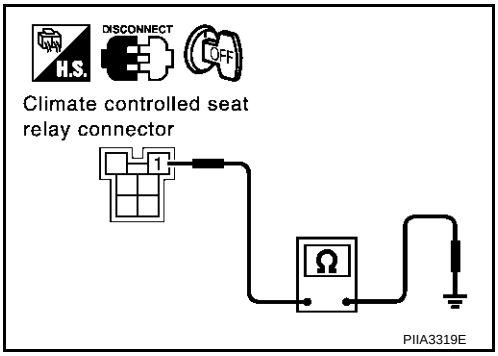

OK or NG

OK >> Climate controlled seat relay power supply circuit check is OK.

NG >> Repair or replace harness between climate controlled seat relay and body ground.

Driver Side Climate Controlled Seat Control Unit Power Supply and Ground Circuit Inspection

AIS002C6

1. CHECK FUSE

Check if any of the following fuses for Fuse, fusible link and relay unit (J/B) are blown.

COMPONENT PARTS	AMPERE	FUSE NO.
Fuse, fusible link and relay unit	15A	72

NOTE:

Refer to SE-100, "Component Parts and Harness Connector Location" .

OK or NG

OK >> GO TO 2.

NG >> If fuse is blown, be sure to eliminate cause of malfunction before installing new fuse, refer to SE-100, "Component Parts and Harness Connector Location" .

2. CHECK CLIMATE CONTROLLED SEAT CONTROL UNIT POWER SUPPLY CIRCUIT 1

1. Turn ignition switch OFF.
2. Remove climate controlled seat relay.
3. Check voltage between climate controlled seat relay connector E76 terminal 5 (R) and ground.

5 (R) – Ground **: Battery voltage**

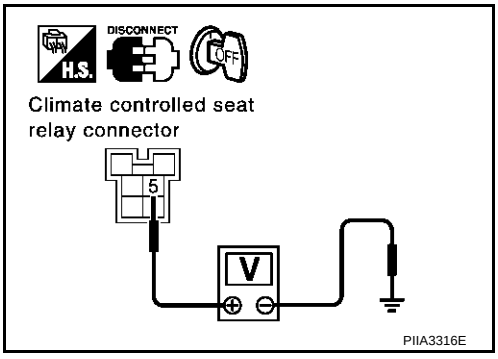

OK or NG

OK >> GO TO 3.

NG >> Repair or replace harness between fuse and climate controlled seat relay.

3. CHECK CLIMATE CONTROLLED SEAT RELAY

Check continuity between climate controlled seat relay terminals 3 and 5.

Terminal		Condition	Continuity
3	5	12V direct current supply between terminals 1 and 2	Yes
		No current supply	No

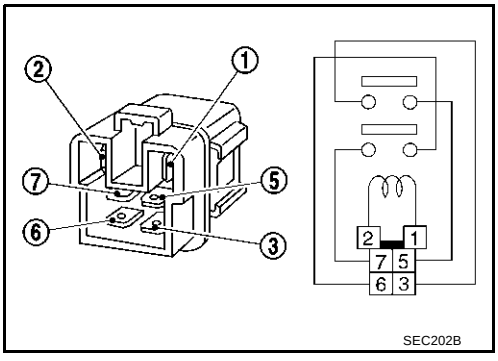

OK or NG

OK >> GO TO 4.

NG >> Replace climate controlled seat relay.

4. CHECK CLIMATE CONTROLLED SEAT CONTROL UNIT POWER SUPPLY CIRCUIT 2

1. Connect climate controlled seat relay.
2. Disconnect climate controlled seat control unit connector.
3. Turn ignition switch ON.
4. Check voltage between climate controlled seat control unit connector and ground.

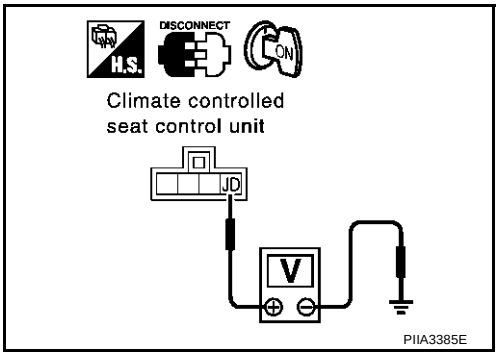

Connector	Terminal (Wire color)		Condition	Voltage (V) (Approx.)
	(+)	(–)		
B158	JD(W/G)	Ground	Turn ignition switch ON.	Battery voltage
			Turn ignition switch OFF.	0

OK or NG

OK >> GO TO 5.
NG >> Repair or replace harness between climate controlled seat relay and climate controlled seat control unit.

5. CHECK CLIMATE CONTROLLED SEAT CONTROL UNIT POWER SUPPLY CIRCUIT 3

Check voltage between climate controlled seat control unit connector and ground.

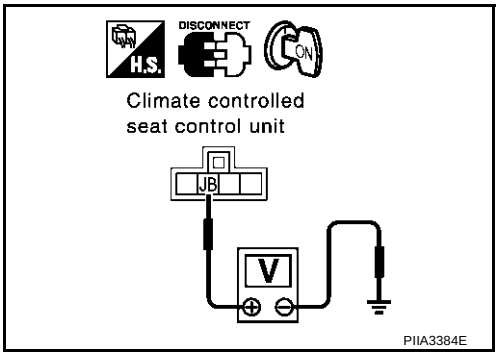

Connector	Terminal (Wire color)		Condition	Voltage (V) (Approx.)
	(+)	(–)		
B158	JB(W/R)	Ground	Turn ignition switch ON.	Battery voltage
			Turn ignition switch OFF.	0

OK or NG

OK >> GO TO 6.
NG >> Repair or replace harness between fuse block (J/B) and climate controlled seat control unit.

6. CHECK CLIMATE CONTROLLED SEAT CONTROL UNIT GROUND CIRCUIT

1. Turn ignition switch OFF.
2. Check continuity between climate controlled seat control unit connector B158 terminal JC (B) and ground.

JC (B) – Ground :Continuity should exist.

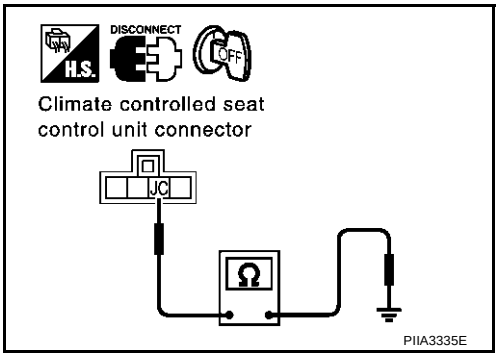

OK or NG

OK >> Driver side climate controlled seat control unit power supply and ground circuit check is OK.
NG >> Repair or replace harness between climate controlled seat control unit and ground.

Passenger Side Climate Controlled Seat Control Unit Power Supply Circuit Inspection

AIS002C7

1. CHECK FUSE

Check if any of the following fuses for Fuse, fusible link and relay unit block (J/B) are blown.

COMPONENT PARTS	AMPERE	FUSE NO.
Fuse, fusible link and relay unit	15A	71

NOTE:
Refer to SE-100, "Component Parts and Harness Connector Location" .

OK or NG

OK >> GO TO 2.
NG >> If fuse is blown, be sure to eliminate cause of malfunction before installing new fuse, refer to SE-100, "Component Parts and Harness Connector Location" .

2. CHECK CLIMATE CONTROLLED SEAT CONTROL UNIT POWER SUPPLY CIRCUIT1

1. Turn ignition switch OFF.
2. Disconnect climate controlled seat relay.
3. Check voltage between climate controlled seat relay connector E76 terminal 7 (L) and ground.

7 (L) – Ground : Battery voltage

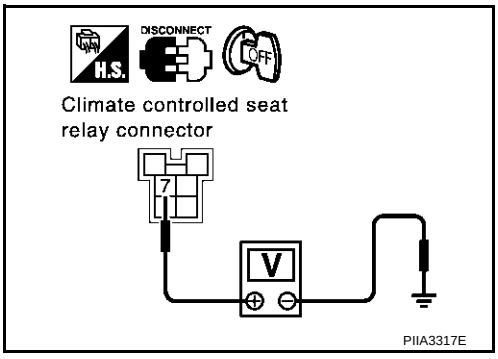

OK or NG

OK >> GO TO 3.
NG >> Repair or replace harness between fuse block (J/B) and climate controlled seat relay.

3. CHECK CLIMATE CONTROLLED SEAT RELAY

Check continuity between climate controlled seat relay terminals 6 and 7.

Terminal		Condition	Continuity
6	7	12V direct current supply between terminals 1 and 2	Yes
		No current supply	No

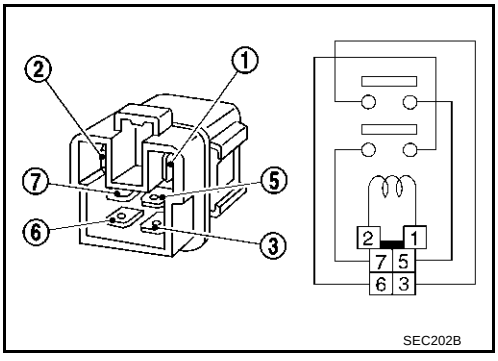

OK or NG

OK >> GO TO 4.
NG >> Replace climate controlled seat relay.

4. CHECK CLIMATE CONTROLLED SEAT CONTROL UNIT POWER SUPPLY CIRCUIT 2

1. Connect climate controlled seat relay.
2. Disconnect climate controlled seat control unit connector.
3. Turn ignition switch ON.
4. Check voltage between climate controlled seat control unit connector and ground.

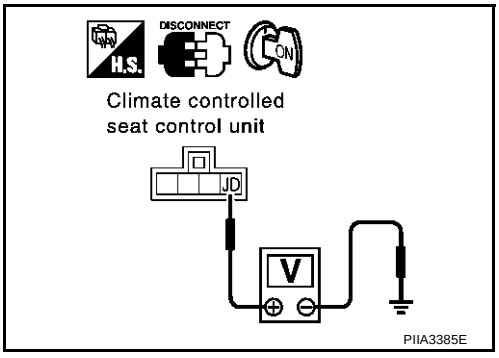

Connector	Terminal (Wire color)		Condition	Voltage (V) (Approx.)
	(+)	(–)		
B358	JD(W/G)	Ground	Turn ignition switch ON.	Battery voltage
			Turn ignition switch OFF.	0

OK or NG

OK >> GO TO 5.
NG >> Repair or replace harness between climate controlled seat relay and climate controlled seat control unit.

5. CHECK CLIMATE CONTROLLED SEAT CONTROL UNIT POWER SUPPLY CIRCUIT 3

Check voltage between climate controlled seat control unit connector and ground.

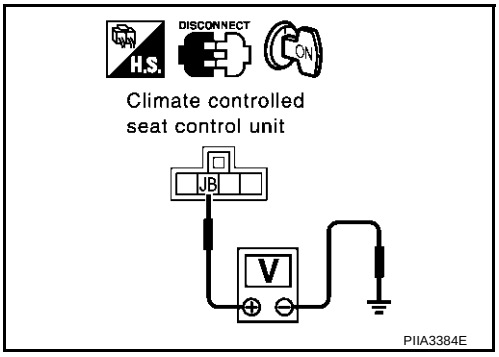

Connector	Terminal (Wire color)		Condition	Voltage (V) (Approx.)
	(+)	(–)		
B358	JB(W/R)	Ground	Turn ignition switch ON.	Battery voltage
			Turn ignition switch OFF.	0

OK or NG

OK >> GO TO 6.
NG >> Repair or replace harness between fuse block and climate controlled seat control unit.

6. CHECK CLIMATE CONTROLLED SEAT CONTROL UNIT GROUND CIRCUIT

1. Turn ignition switch OFF.
2. Check continuity between climate controlled seat control unit connector B358 terminal JC (B) and ground.

JC (B) – Ground :Continuity should exist.

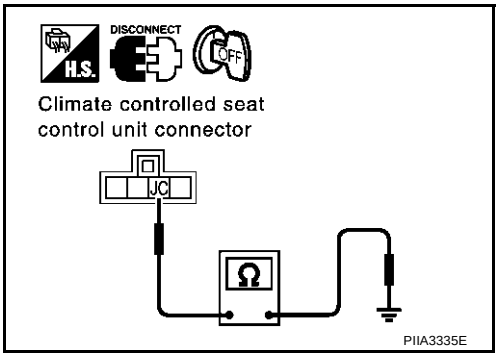

OK or NG

OK >> Passenger side climate controlled seat unit power supply and ground circuit check is OK.
NG >> Repair or replace harness between climate controlled seat control unit and ground.

Climate Controlled Seat “HEAT” Switch Circuit Inspection

AIS002C8

1. CHECK CLIMATE CONTROLLED SEAT HEAT SWITCH HARNESS CIRCUIT

1. Turn ignition switch OFF.
2. Disconnect climate controlled seat control unit and climate controlled seat switch connector.
3. Check continuity between climate controlled seat control unit connector B159 (driver side), B359 (passenger side) terminal J6 (PU) and climate controlled seat switch connector B156 (driver side), B356 (passenger side) terminal J6 (PU).

   J6 (PU) – J6 (PU) :Continuity should exist.

4. Check continuity between climate controlled seat control unit connector B159 (driver side), B359 (passenger side) terminal J6 (PU) and ground.

   J6 (PU) – Ground :Continuity should not exist.

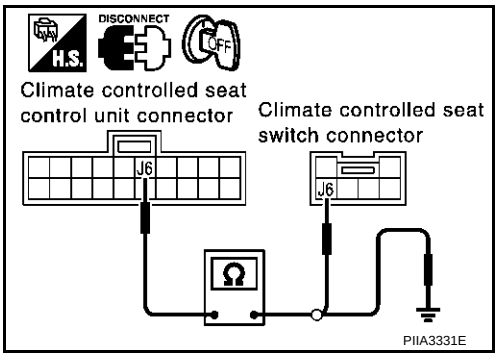

OK or NG

OK >> GO TO 2.
NG >> Repair or replace harness between climate controlled seat control unit and climate controlled seat switch.

2. CHECK CLIMATE CONTROLLED SEAT HEAT SWITCH POWER SUPPLY CIRCUIT

1. Connect climate controlled seat control unit connector and climate controlled seat switch.
2. Turn ignition switch ON.
3. Turn climate controlled seat switch “HEAT”.
4. Check voltage between climate controlled seat control unit connector and body ground.

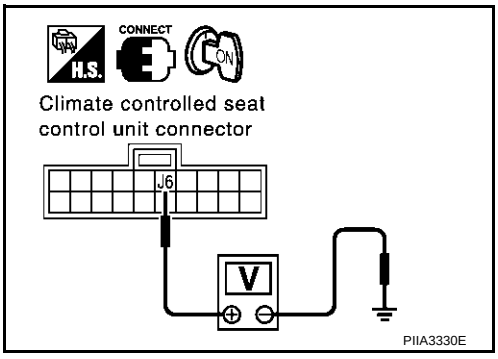

Connector	Terminal (Wire color)		Condition	Voltage (V) (Approx.)
	(+)	(–)		
B156 (Driver side), B356 (Passenger side)	J6 (PU)	Ground	Turn ignition switch ON. Turn climate controlled seat switch “HEAT”.	0
			Climate controlled seat switch OFF.	Battery voltage

OK or NG

OK >> Replace climate controlled seat control unit.
NG >> GO TO 3.

3. CHECK CLIMATE CONTROLLED SEAT TEMPERATURE DIAL

1. Turn ignition switch OFF.
2. Disconnect climate controlled seat switch connector.
3. Check continuity between climate controlled seat switch.

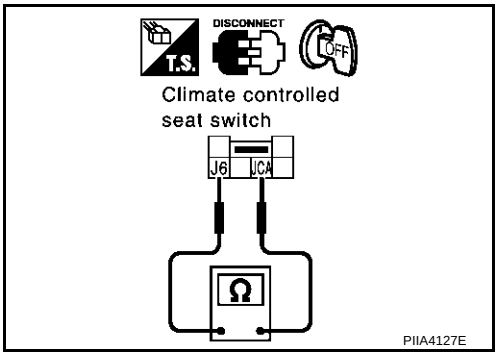

Terminal		Condition	Continuity
J6	JCA	Climate controlled seat switch HEAT position.	Yes
		Climate controlled seat switch OFF.	No

OK or NG

OK >> Check the condition of the harness and the connector.
NG >> Replace climate controlled seat switch.

Climate Controlled Seat “COOL” Switch Circuit Inspection

AIS002C9

1. CHECK CLIMATE CONTROLLED SEAT COOL SWITCH HARNESS CIRCUIT

1. Turn ignition switch OFF.
2. Disconnect climate controlled seat control unit and climate controlled seat switch connector.
3. Check continuity between climate controlled seat control unit connector B159 (driver side), B359 (passenger side) terminal J16 (R) and climate controlled seat switch connector B156 (driver side), B356 (passenger side) terminal J16 (R).

   J16 (R) – J16 (R) :Continuity should exist.

4. Check continuity between climate controlled seat control unit connector B159 (driver side), B359 (passenger side) terminal J16 (R) and ground.

   J16 (R) – Ground :Continuity should not exist.

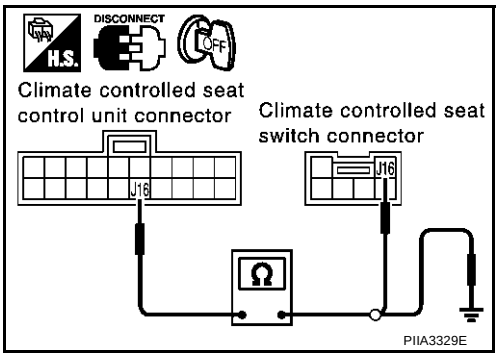

OK or NG

OK >> GO TO 2.
NG >> Repair or replace harness between climate controlled seat control unit and climate controlled seat switch.

2. CHECK CLIMATE CONTROLLED SEAT COOL SWITCH POWER SUPPLY CIRCUIT

1. Connect climate controlled seat control unit connector and climate controlled seat switch.
2. Turn ignition switch ON.
3. Turn climate controlled seat switch COOL.
4. Check voltage between climate controlled seat control unit connector and body ground.

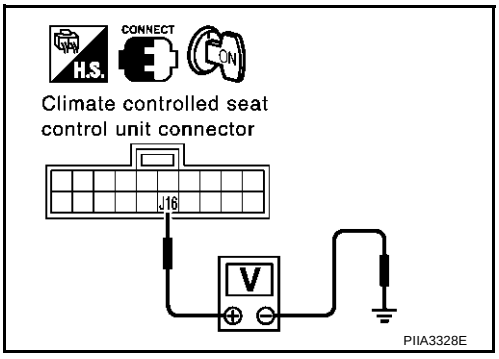

Connector	Terminal (Wire color)		Condition	Voltage (V) (Approx.)
	(+)	(–)		
B156 (Driver side), B356 (Passenger side)	J16 (R)	Ground	Turn ignition switch ON. Turn climate controlled seat switch COOL.	0
			Climate controlled seat switch OFF.	Battery voltage

OK or NG

OK >> Replace climate controlled seat control unit.
NG >> GO TO 3.

3. CHECK CLIMATE CONTROLLED SEAT TEMPERATURE DIAL

1. Turn ignition switch OFF.
2. Disconnect climate controlled seat switch connector.
3. Check continuity between climate controlled seat switch.

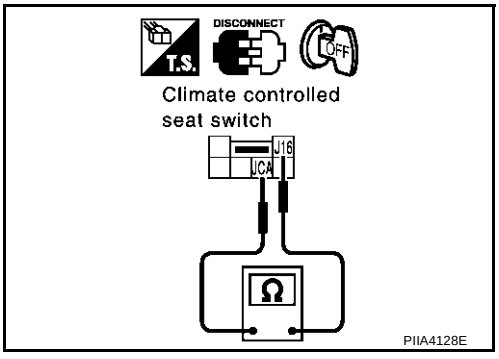

Terminal		Condition	Continuity
J16	JCA	Climate controlled seat switch COOL position.	Yes
		Climate controlled seat switch OFF.	No

OK or NG

OK >> Check the condition of the harness and the connector.
NG >> Replace climate controlled seat switch.

Climate Controlled Seat Temperature Dial Inspection

AIS002CA

1. CHECK CLIMATE CONTROLLED SEAT TEMPERATURE DIAL

1. Turn ignition switch OFF.
2. Disconnect climate controlled seat temperature dial connector.
3. Check continuity between climate controlled seat temperature dial.

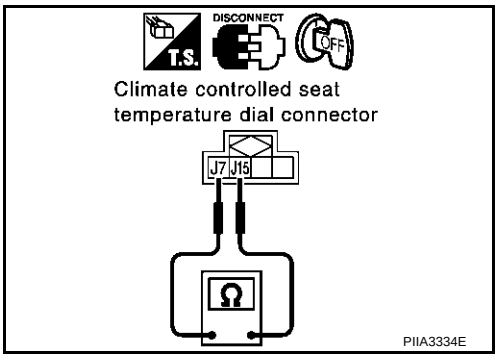

Terminal		Condition	Continuity Ω (Approx.)
J7	J15	Temperature dial 1st.	2370
		Temperature dial 2nd.	1100
		Temperature dial 3rd.	619
		Temperature dial 4th.	237

OK or NG

OK >> Climate controlled seat temperature dial check is OK.
NG >> Replace climate controlled seat temperature dial.

Climate Controlled Seat Temperature Dial Circuit Inspection

AIS002CB

1. CHECK CLIMATE CONTROLLED SEAT TEMPERATURE DIAL HARNESS

1. Turn ignition switch OFF.
2. Disconnect climate controlled seat control unit connector and climate controlled seat temperature dial connector.
3. Check continuity between climate controlled seat control unit connector B159 (driver side), B359 (passenger side) terminal J7 (L), J15 (Y) and climate controlled seat temperature dial connector B157 (driver side), B357 (passenger side) terminal J7 (L), J15 (Y).

   J7 (L) – J7 (L) :Continuity should exist.
   J15 (Y) – J15 (Y) :Continuity should exist.

4. Check continuity between climate controlled seat control unit connector B159 (driver side), B359 (passenger side) terminal J7 (L), J15 (Y) and ground.

   J7 (L) – Ground :Continuity should not exist.
   J15 (Y) – Ground :Continuity should not exist.

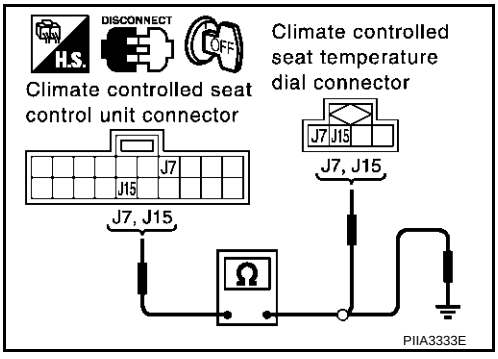

OK or NG

OK >> GO TO 2.
NG >> Repair or replace harness between climate controlled seat control unit and climate controlled seat temperature dial.

2. CHECK CLIMATE CONTROLLED SEAT TEMPERATURE DIAL POWER SUPPLY CIRCUIT

1. Connect climate controlled seat control unit connector and climate controlled seat temperature dial connector.
2. Turn ignition switch ON.
3. Check voltage between climate controlled seat control unit connector and ground.

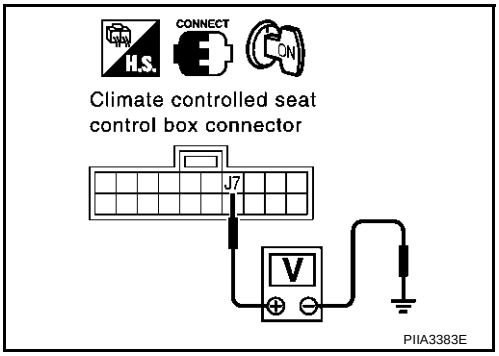

Connector	Terminal (Wire color)		Condition		Voltage (V) (Approx.)
	(+)	(–)			
B159 (Driver side), B359 (Passenger side)	J7(L)	Ground	Turn ignition switch ON.	temperature dial 1 – 4	7.1 – 11.4
			Turn ignition switch OFF.		0

OK or NG

OK >> Climate controlled seat temperature dial circuit check is OK.
NG >> When turn ignition ON and temperature dial adjust the following
- When voltage is 12V, GO TO3.
- When voltage is 0V, Replace climate controlled seat control unit.

3. CHECK CLIMATE CONTROLLED SEAT TEMPERATURE DIAL

1. Turn ignition switch OFF.
2. Disconnect climate controlled seat temperature dial connector.
3. Check continuity between climate controlled seat temperature dial.

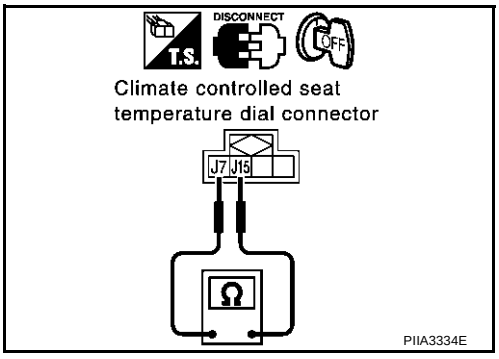

Terminal		Condition	Continuity Ω (Approx.)
J7	J15	Temperature dial 1st.	2370
		Temperature dial 2nd.	1100
		Temperature dial 3rd.	619
		Temperature dial 4th.	237

OK or NG

OK >> Replace climate controlled seat control unit.
NG >> Replace climate controlled seat temperature dial.

Climate Controlled Seat Switch Ground Circuit Inspection

AIS002CC

1. CHECK CLIMATE CONTROLLED SEAT SWITCH

1. Turn ignition switch OFF.
2. Disconnect climate controlled seat switch connector.
3. Check continuity between climate controlled seat switch.

Terminal		Condition	Continuity
J6	JCA	Climate controlled seat switch HEAT position.	Yes
		Climate controlled seat switch OFF.	No
J16		Climate controlled seat switch COOL position.	Yes
		Climate controlled seat switch OFF.	No

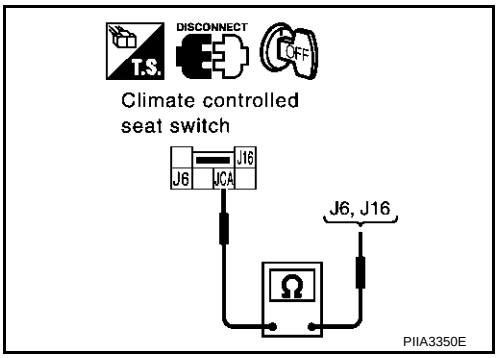

OK or NG

OK >> GO TO 2.
NG >> Replace climate controlled seat switch.

2. CHECK CLIMATE CONTROLLED SEAT SWITCH GROUND CIRCUIT

Check continuity between climate controlled seat switch connector B156 (driver side), B356 (passenger side) terminal JCA (B).

JCA (B) – Ground :Continuity should exist.

OK or NG

OK >> Climate controlled seat control circuit check is OK.
NG >> Repair or replace harness between climate controlled seat switch and body ground.

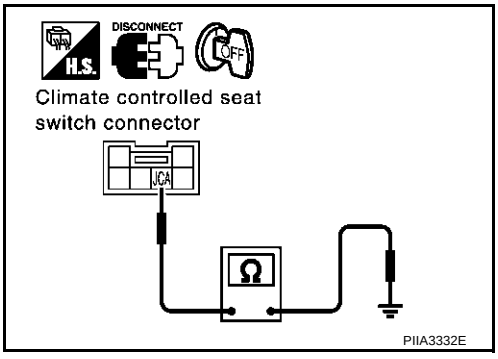

Seat Cushion Thermal Electric Device Circuit Inspection

AIS002CD

1. CHECK SEAT CUSHION THERMAL ELECTRIC DEVICE HARNESS

1. Turn ignition switch OFF.
2. Disconnect climate controlled seat control unit connector and seat cushion thermal electric device connector.
3. Check continuity between climate controlled seat control unit connector B159 (driver side), B359 (passenger side) terminal J1 (Y/G), J2 (W/L) and climate controlled seat temperature dial connector B154 (driver side), B354 (passenger side) terminal J1 (Y/G), J2 (W/L).

   J1 (Y/G) – J1 (Y/G) :Continuity should exist.

   J2 (W/L) – J2 (W/L) :Continuity should exist.

4. Check continuity between climate controlled seat control unit connector B159 (driver side), B359 (passenger side) terminal J1 (Y/G), J2 (W/L) and ground.

   J1 (Y/G) – Ground :Continuity should not exist.

   J2 (W/L) – Ground :Continuity should not exist.

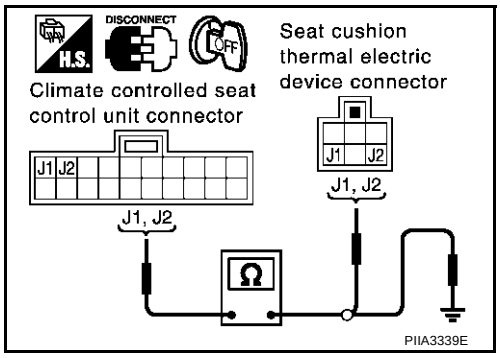

OK or NG

OK >> GO TO 2.

NG >> Repair or replace harness between climate controlled seat control unit and seat cushion thermal electric device.

2. CHECK SEAT CUSHION THERMAL ELECTRIC DEVICE POWER SUPPLY CIRCUIT POWER SUPPLY CIRCUIT

1. Connect climate controlled seat control unit connector.
2. Turn ignition switch ON.
3. Check voltage between climate controlled seat control unit connector and ground.

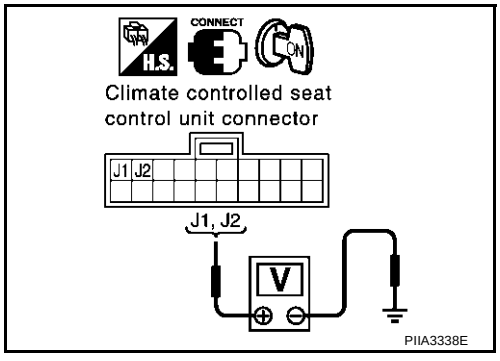

Connector	Terminal (Wire color)		Condition	Voltage (V) (Approx.)
	(+)	(–)		
B159 (Driver side), B359 (Passenger side)	J1(Y/G)	Ground	Turn ignition switch ON, climate controlled seat switch turn “HEAT”.	Battery voltage
			Turn ignition switch OFF.	0
	J2(WL)		Turn ignition switch ON, climate controlled seat switch turn “COOL”.	Battery voltage
			Turn ignition switch OFF.	0

OK or NG

OK >> Seat cushion Thelma electric device circuit check is OK.

NG >> Replace seat cushion thermal electric device.

Seat Cushion Thermal Electric Device Sensor Circuit Inspection

AIS002CE

1. CHECK SEAT CUSHION THERMAL ELECTRIC DEVICE HARNESS

1. Turn ignition switch OFF.
2. Disconnect climate controlled seat control unit connector and seat cushion thermal electric device connector.
3. Check continuity between climate controlled seat control unit connector B159 (driver side), B359 (passenger side) terminal J17 (B/R), J18 (G/R) and seat cushion thermal electric device dial connector B154 (driver side), B354 (passenger side) terminal J17 (B/R), J18 (G/R).

   J17 (B/R) – J17 (B/R) :Continuity should exist.

   J18 (G/R) – J18 (G/R) :Continuity should exist.

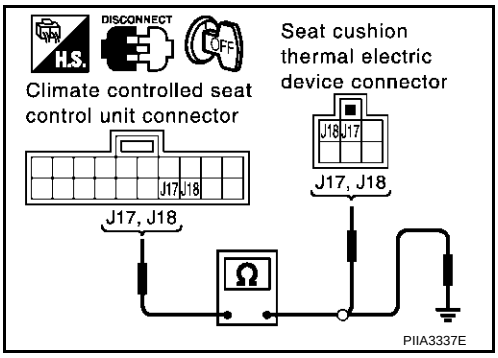

4. Check continuity between climate controlled seat control unit connector B159 (driver side), B359 (passenger side) terminal J17 (B/R), J18 (G/R) and ground.

   J17 (B/R) – Ground :Continuity should not exist.

   J18 (G/R) – Ground :Continuity should not exist.

OK or NG

OK >> GO TO 2.

NG >> Repair or replace harness between climate controlled seat control unit and seat cushion thermal electric device.

2. CHECK SEAT CUSHION THERMAL ELECTRIC DEVICE SENSOR

- Connect climate controlled seat control unit connector and seat cushion thermal electric device connector.
- Turn ignition switch ON.
- Check voltage between seat cushion thermal electric device connector B154 (driver side), B354 (passenger side) terminal J18 (G/R) and ground.

  J18 (G/R) – Ground : 0.5V – 4V (Approx.)

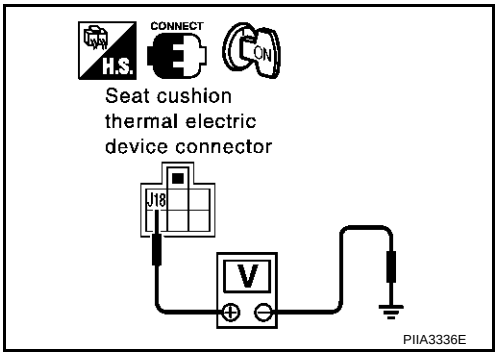

OK or NG

OK >> Seat cushion thermal electric device sensor circuit inspection is OK.

NG >> Replace seat cushion thermal electric device.

Seatback Thermal Electric Device Circuit Inspection

AIS002CF

1. CHECK SEATBACK THERMAL ELECTRIC DEVICE HARNESS

1. Turn ignition switch OFF.
2. Disconnect climate controlled seat control unit connector and seatback thermal electric device connector.
3. Check continuity between climate controlled seat control unit connector B159 (driver side), B359 (passenger side) terminal J11 (B/R), J12 (PU/W) and seatback thermal electric device connector B153 (driver side), B353 (passenger side) terminal J11 (B/R), J12 (PU/W).

   J11 (B/R) – J11 (B/R) :Continuity should exist.
   J12 (PU/W) – J12 (PU/W) :Continuity should exist.

4. Check continuity between climate controlled seat control unit connector B159 (driver side), B359 (passenger side) terminal J11 (B/R), J12 (PU/W) and ground.

   J11 (B/R) – Ground :Continuity should not exist.
   J12 (PU/W) – Ground :Continuity should not exist.

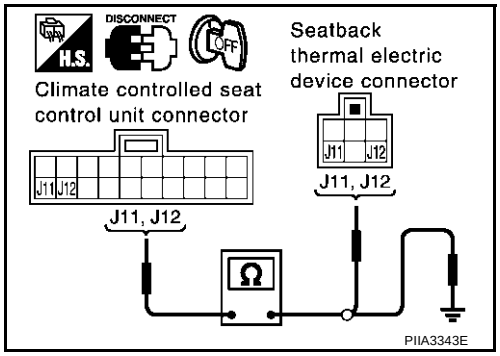

OK or NG

OK >> GO TO 2.
NG >> Repair or replace harness between climate controlled seat control unit and seatback thermal electric device.

2. CHECK SEATBACK THERMAL ELECTRIC DEVICE POWER SUPPLY CIRCUIT

1. Connect climate controlled seat control unit connector and seatback thermal electric device connector.
2. Turn ignition switch ON.
3. Check voltage between climate controlled seat control unit connector and ground.

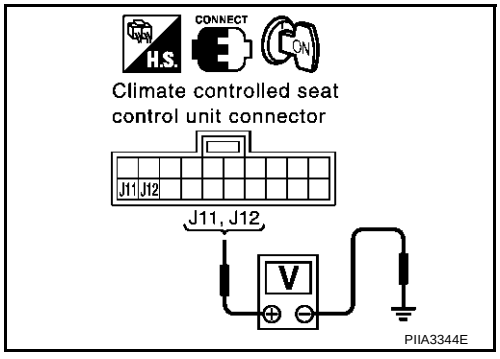

Connector	Terminal (Wire color)		Condition	Voltage (V) (Approx.)
	(+)	(–)		
B159 (Driver side), B359 (Passenger side)	J11(B/R)	Ground	Turn ignition switch ON, climate controlled seat switch turn “HEAT”.	Battery voltage
			Turn ignition switch OFF.	0
	J12 (PU/W)	Ground	Turn ignition switch ON, climate controlled seat switch turn “COOL”.	Battery voltage
			Turn ignition switch OFF.	0

OK or NG

OK >> Seatback thermal electric device circuit check is OK.
NG >> Replace seat cushion thermal electric device.

Seatback Thermal Electric Device Sensor Circuit Inspection

AIS002CG

1. CHECK SEATBACK THERMAL ELECTRIC DEVICE HARNESS

1. Turn ignition switch OFF.
2. Disconnect climate controlled seat control unit connector and seatback thermal electric device connector.
3. Check continuity between climate controlled seat control unit connector B159 (driver side), B359 (passenger side) terminal J19 (L/OR), J20 (R/L) and seatback thermal electric device connector B153 (driver side), B353 (passenger side) terminal J19 (L/OR), J20 (R/L).

   J19 (L/OR) – J19 (L/OR) :Continuity should exist.
   J20 (R/L) – J20 (R/L) :Continuity should exist.

4. Check continuity between climate controlled seat control unit connector B159 (driver side), B359 (passenger side) terminal J19 (L/OR), J20 (R/L) and ground.

   J19 (L/OR) – Ground :Continuity should not exist.
   J20 (R/L) – Ground :Continuity should not exist.

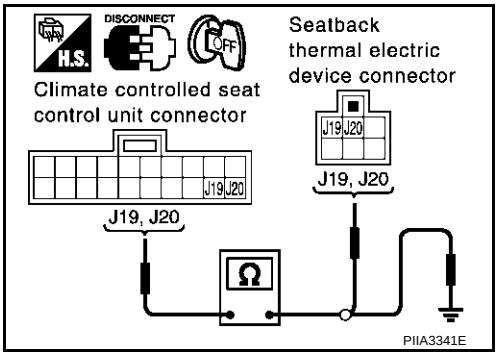

OK or NG

OK >> GO TO 2.
NG >> Repair or replace harness between climate controlled seat control unit and seatback thermal electric device.

2. CHECK SEAT CUSHION THERMAL ELECTRIC DEVICE SENSOR

1. Connect climate controlled seat control unit connector and seatback thermal electric device connector.
2. Turn ignition switch ON.
3. Check voltage between seat cushion thermal electric device connector B153 (driver side), B353 (passenger side) terminal J19 (L/OR) and ground.

   J19 (L/OR) – Ground : 0.5V – 4V (Approx)

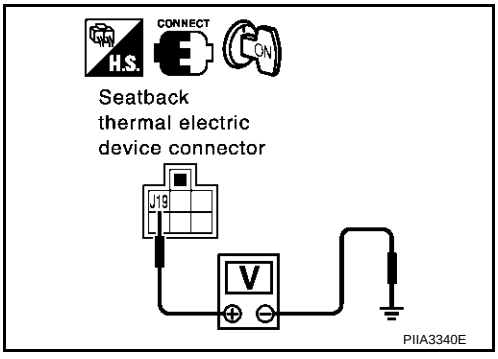

OK or NG

OK >> Seatback thermal electric device sensor circuit inspection is OK.
NG >> Replace seatback thermal electric device.

Blower Motor Power Supply Circuit Inspection

AIS002CH

1. CHECK BLOWER MOTOR HARNESS

1. Turn ignition switch OFF.
2. Disconnect climate controlled seat control unit and blower motor connector.
3. Check continuity between climate controlled seat control unit connector B159 (driver side), B359 (passenger side) terminal J10 (PU) and blower motor connector B155 (driver side), B355 (passenger side) terminal J10 (PU).

   J10 (PU) – J10 (PU) :Continuity should exist.

4. Check continuity between climate controlled seat control unit connector B159 (driver side), B359 (passenger side) terminal J10 (PU) and ground.

   J10 (PU) – Ground :Continuity should not exist.

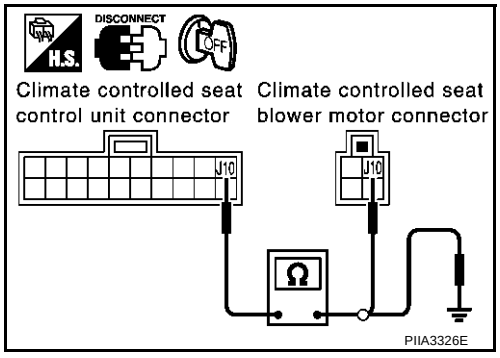

OK or NG

OK >> GO TO 2.
NG >> Repair or replace harness between climate controlled seat control unit and blower motor.

2. CHECK BLOWER MOTOR POWER SUPPLY CIRCUIT

1. Connect climate controlled seat control unit connector and blower motor connector.
2. Turn ignition switch ON.
3. Check voltage between climate controlled seat control unit connector and ground.

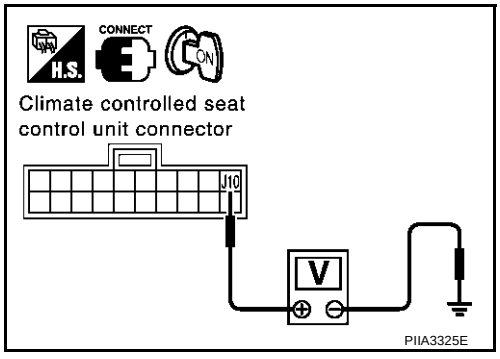

Connector	Terminal (Wire color)		Condition	Voltage (V) (Approx.)
	(+)	(–)		
B159 (Driver side), B359 (Passenger side)	J10(PU)	Ground	Turn ignition switch ON Climate controlled seat switch “HEAT” or “COOL”.	6 – 12
			Turn ignition switch OFF.	0

OK or NG

OK >> GO TO 3.
NG >> Replace climate controlled seat control unit.

3. CHECK BLOWER MOTOR GROUND HARNESS

1. Turn ignition switch OFF.
2. Disconnect climate controlled seat control unit connector and climate controlled blower motor connector.
3. Check continuity between climate controlled seat control unit connector B159 (driver side), B359 (passenger side) terminal J3 (GY) and climate controlled blower motor connector B155 (driver side), B355 (passenger side) terminal J3 (GY).

   J3 (GY) – J3 (GY) :Continuity should exist.

4. Check continuity between climate controlled seat control unit connector B159 (driver side), B359 (passenger side) terminal J3 (GY) and ground.

   J3 (GY) – Ground :Continuity should not exist.

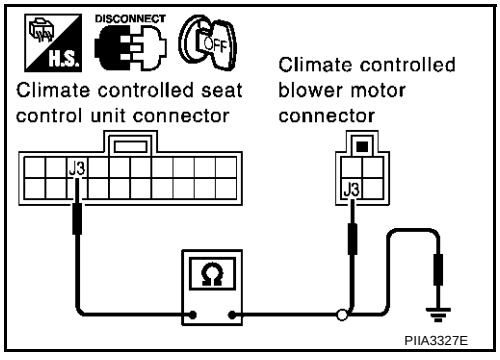

OK or NG

OK >> GO TO 4.
NG >> Repair or replace harness between climate controlled seat control unit and climate controlled blower motor.

4. CHECK BLOWER MOTOR GROUND HARNESS

1. Connect climate controlled seat control unit connector.
2. Check continuity between climate controlled seat control unit connector B159 (driver side), B359 (passenger side) terminal J 3 (GY) and climate controlled seat control unit connector B158 (driver side), B358 (passenger side) terminal JC (B).

J3 (GY) – JC (B) :Continuity should exist.

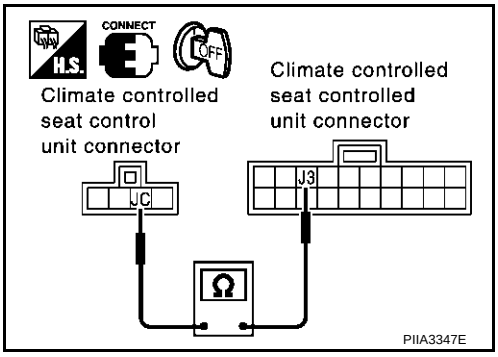

OK or NG

OK >> Blower motor circuit check is OK.
NG >> Replace climate controlled seat control unit.

Blower Motor Speed Control Circuit Inspection

AIS002CI

1. CHECK BLOWER MOTOR SPEED CONTROL SIGNAL CIRCUIT

1. Turn ignition switch ON.
2. Check voltage between climate controlled seat control unit connector and ground.

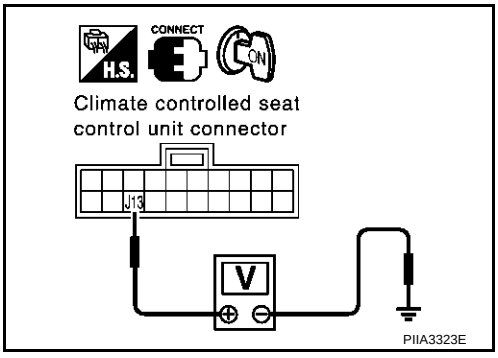

Connector	Terminal (Wire color)		Condition	Voltage (V) (Approx.)
	(+)	(–)		
B159 (Driver side), B359 (Passenger side)	J13(R)	Ground	Turn ignition switch ON Climate controlled seat switch “HEAT” or “COOL”.	6 – 12
			Turn ignition switch OFF.	0

OK or NG

OK >> GO TO 2.
NG >> Replace climate controlled seat control unit.

2. CHECK BLOWER MOTOR HARNESS

1. Turn ignition switch OFF.
2. Disconnect climate controlled seat control unit and climate controlled seat blower motor connector.
3. Check continuity between climate controlled seat control unit connector B159 (driver side), B359 (passenger side) terminal J13 (R) and climate controlled seat blower motor connector B155 (driver side), B355 (passenger side) terminal J13 (R).

J13 (R) – J13 (R) :Continuity should exist.

4. Check continuity between climate controlled seat control unit connector B159 (driver side), B359 (passenger side) terminal J13 (R) and ground.

J13 (R) – Ground :Continuity should not exist.

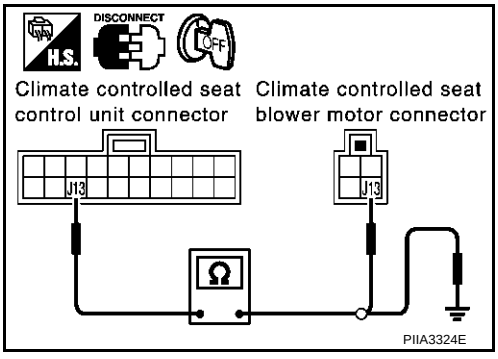

OK or NG

OK >> Blower motor control circuit check is OK.
NG >> Repair or replace harness between climate controlled seat control unit and blower motor.

Blower Motor Tachometer Signal Circuit Inspection

AIS002CJ

1. CHECK BLOWER MOTOR TACHOMETER SIGNAL CIRCUIT

1. Turn ignition switch ON.
2. Check voltage between climate controlled seat control unit connector and ground.

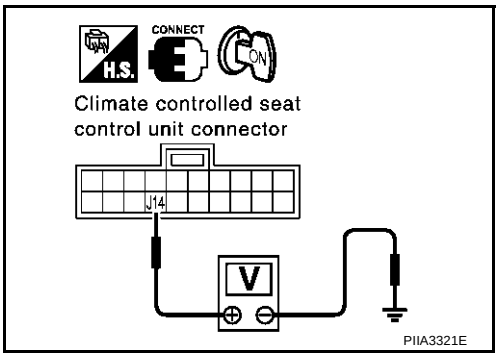

Connector	Terminal (Wire color)		Condition	Voltage (V) (Approx.)
	(+)	(–)		
B159 (Driver side), B359 (Passenger side)	J14(W)	Ground	Turn ignition switch ON Climate controlled seat switch “HEAT” or “COOL” temperature dial 1 – 4.	5 – 7
			Turn ignition switch OFF.	0

OK or NG

OK >> GO TO 2.
NG >> Replace climate controlled seat blower motor.

2. CHECK BLOWER MOTOR HARNESS

1. Turn ignition switch OFF.
2. Disconnect climate controlled seat control unit and climate controlled seat blower motor connector.
3. Check continuity between climate controlled seat control unit connector B159 (driver side), B359 (passenger side) terminal J14 (W) and climate controlled seat blower motor connector B155 (driver side), B355 (passenger side) terminal J14 (W).

   J14 (W) – J14 (W) :Continuity should exist.

4. Check continuity between climate controlled seat control unit connector B159 (driver side), B359 (passenger side) terminal J14 (W) and ground.

   J14 (W) – Ground :Continuity should not exist.

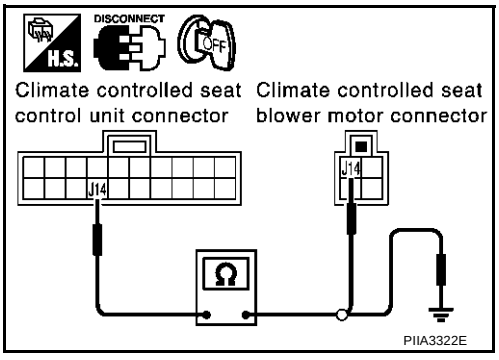

OK or NG

OK >> Blower motor tachometer signal circuit check is OK.
NG >> Repair or replace harness between climate controlled seat control unit and climate controlled seat blower motor.

Climate Controlled Seat Control Unit Inspection

AIS002N3

1. CHECK THE CLIMATE CONTROLLED SEAT CONTROL UNIT

Does the climate controlled seat operate normally the driver side or passenger side climate controlled seat control unit is exchanged.

OK or NG

OK >> Climate controlled seat control unit check is OK.
NG >> Replace climate controlled seat control unit.

FRONT SEAT

PFP:87000

Removal and Installation

AIS001KW

SEC. 870

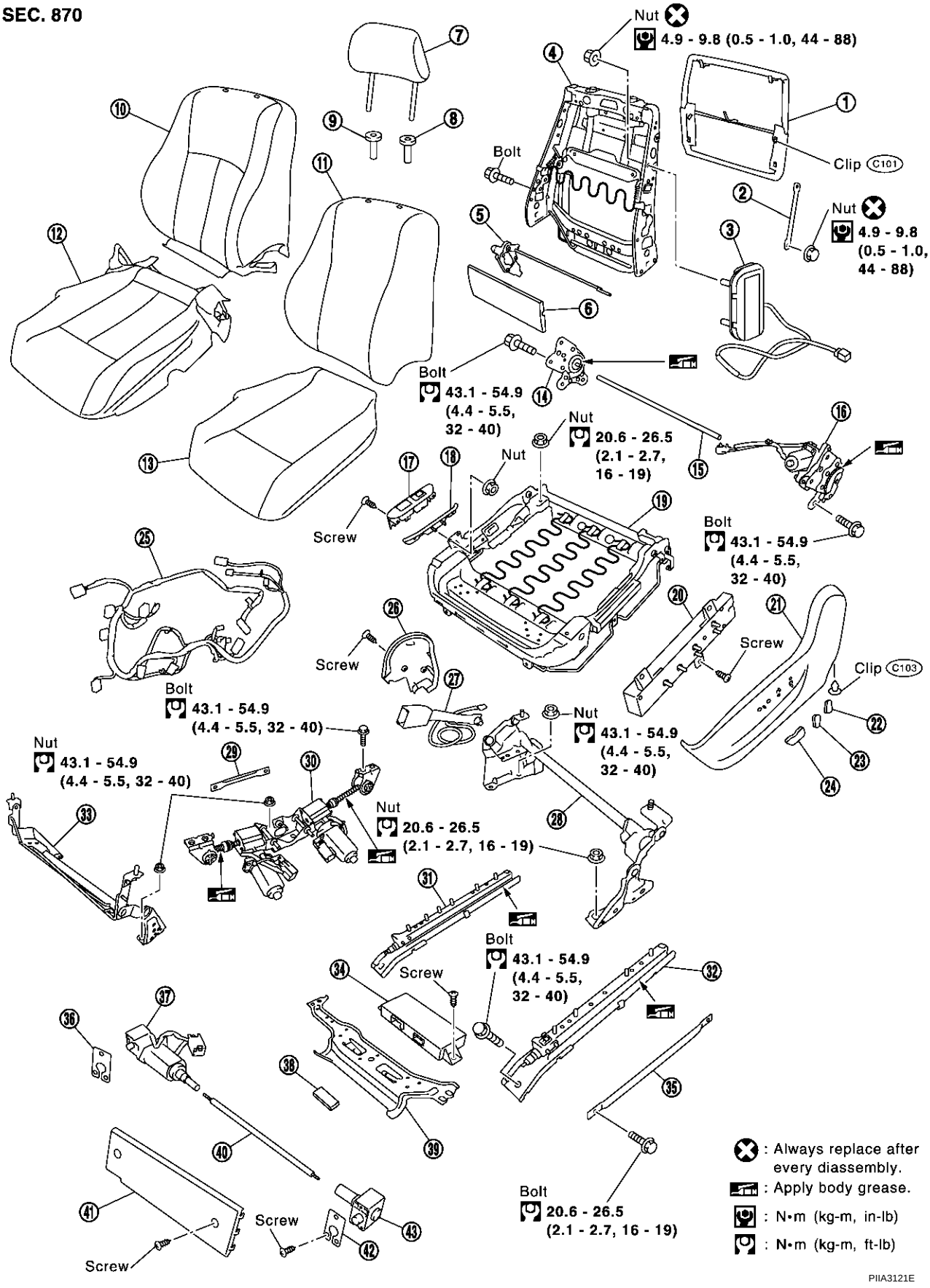

1. Seatback board
2. Inner stay
3. Side air bag module
4. Seatback frame
5. Lumber support link
6. Lumbar support plate
7. Headrest
8. Headrest holder (locked)
9. Headrest holder (free)
10. Seatback trim
11. Seatback pad
12. Seat cushion trim
13. Seat cushion pad
14. Reclining inner device
15. Reclining device rod
16. Reclining outer device
17. Climate controlled switch assembly
18. Climate controlled switch bracket
19. Seat cushion frame
20. Power seat switch
21. Seat cushion outer finisher
22. Lumbar support switch knob
23. Reclining switch knob
24. Slide–lifter switch knob
25. Power seat harness
26. Seat cushion inner finisher
27. Seat belt buckle
28. Seat lifter link rear bracket
29. Seat cushion inner rod
30. Lifter motor unit assembly
31. Inner sliding assembly
32. Outer sliding assembly
33. Seat lifter link front bracket
34. Driver seat control unit
35. Seat cushion outer rod
36. Sliding motor inner cover
37. Sliding motor (inner)
38. Sliding motor wire pad
39. Driver seat control unit bracket
40. Flexible wire
41. Seat cushion front finisher
42. Sliding motor outer cover
43. Sliding motor (outer)

CLIMATE CONTROLED SEAT

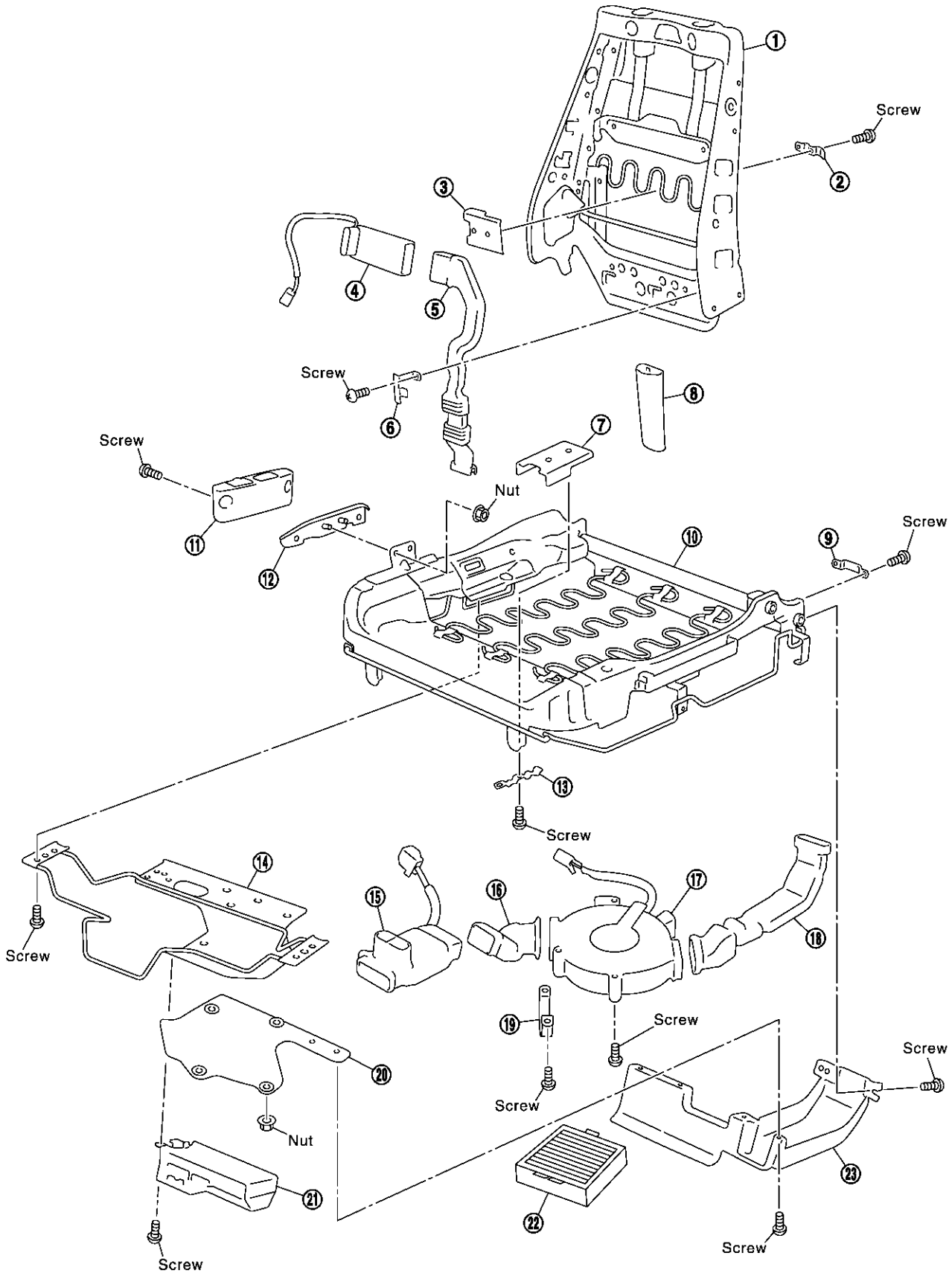

1.	Seatback frame	2.	Seatback outer bracket	3.	Seatback inner bracket
4.	Seatback thermal electric device	5.	Seatback duct	6.	Seatback duct upper bracket
7.	Seat cushion inner bracket	8.	Seatback duct cover	9.	Seatback duct lower bracket
10.	Seat cushion frame	11.	Climate controlled seat switch	12.	Climate controlled seat switch bracket
13.	Seat cushion outer bracket	14.	Seat cushion mounting upper bracket	15.	Seat cushion thermal electric device
16.	Seat cushion front duct	17.	Climate controlled seat blower motor	18.	Seat cushion rear duct
19.	Seat cushion duct lower bracket	20.	Seat cushion mounting lower bracket	21.	Climate controlled seat control unit
22.	Climate controlled seat filter	23.	Seat cushion rear duct protector		

REMOVAL

When removing or installing the seat trim, carefully handle it to keep dirt out and avoid damage.

CAUTION:

- **Before removing the front seat, turn the ignition switch off, disconnect both battery cables and wait and least 3 minutes.**
- **When checking the power seat circuit for continuity using a circuit tester, do not confuse its connector with the side air bag module connector. Such an error may cause the air bag to deploy.**
- **Do not drop, tilt, or bump the side air bag module installing in the seat. Always handle it with care.**

1. Remove the front leg cover and rear leg cover.(LH/RH)

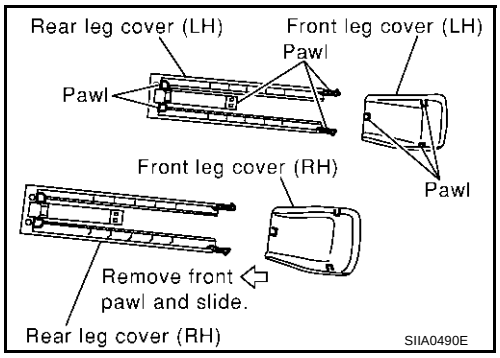

NOTE:

1. Slide the seat backward, and disconnect the front tabs on the front leg cover. Then move the cover toward the rear of the vehicle, and pull up to remove.
2. Slide the seat forward, then disengage the tabs on the front LH/RH of the rear leg cover and tabs engaged into the rail. Then pull the cover toward the rear of the vehicle.

2. Slide the seat until the body mounting bolts are visible and a tool can be inserted.

   NOTE:
   When disassembling the driver seat after removal, set the front/rear cushion lifter to the top position.
3. Disconnect both battery cables.
4. Remove the harness connector for the side air bag module.
5. Remove the body mounting bolts.
6. Remove the power seat harness connector and vehicle harness fixing clip out of the vehicle.

   NOTE:
   When removing and installing, using shop clothes, protect the parts from damage where it may interfere with others.

INSTALLATION

Install in the reverse order of removal.

NOTE:
Be sure to insert the rear end tab of the rear leg cover under the rail.

Disassembly and Assembly

AIS001KX

SEATBACK TRIM AND PAD

NOTE:
Be sure to set the front/rear cushion lifter to the top position.

1. Remove the seatback board from the back of the seatback.

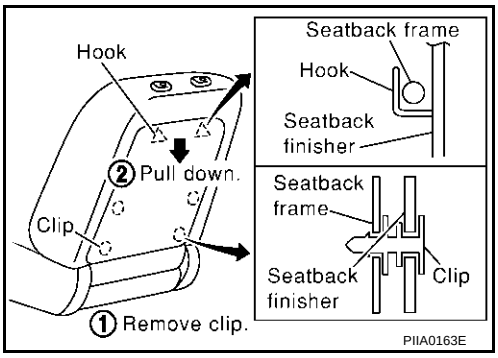

2. Remove the retainer.

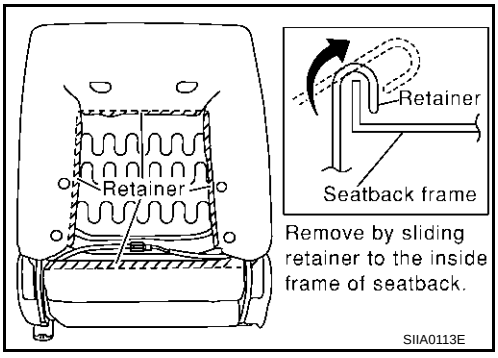

3. From the back of the seatback, press the headrest holder tab of the stay pipe hole to disengage. Then pull the headrest holder up to remove.

   NOTE:
   Before installing the headrest holder, check its orientation (front/rear and right/left).

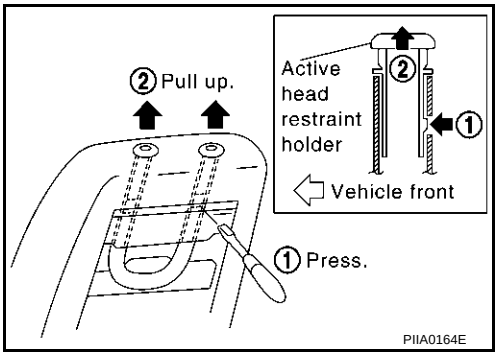

4. Remove the stay securing the inner cloth.

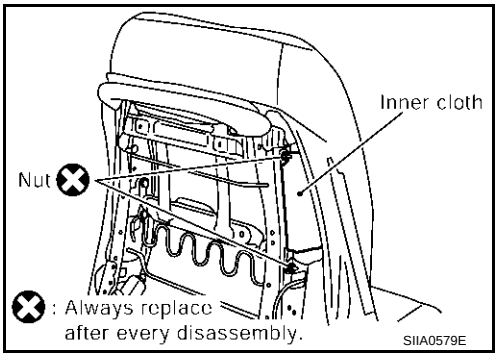

5. After removing the seatback trim and pad, remove the hog ring to separate the trim and pad.

REMOVAL OF SEATBACK ASSEMBLY

1. After completing the steps 1 and 2 of “Seatback trim and pad”, remove the harness connectors for the reclining motor and lumbar support motor (driver seat only).
2. Pull out the harness connector for the side air bag from the seat cushion.
3. Remove the reclining device mounting bolts on the seatback frame, and remove the seatback assembly.

   NOTE:
   When assembling the seatback frame, make sure that the reclining device are, and be sure to temporarily tighten the bolts, then tighten them finally.

INSTALLATION OF SEATBACK ASSEMBLY

Install in the reverse order of removal.

SEAT CUSHION TRIM AND PAD

1. Remove the seat cushion front finisher.
2. Remove the power seat switch knob.
3. Remove the seat cushion outer finisher.

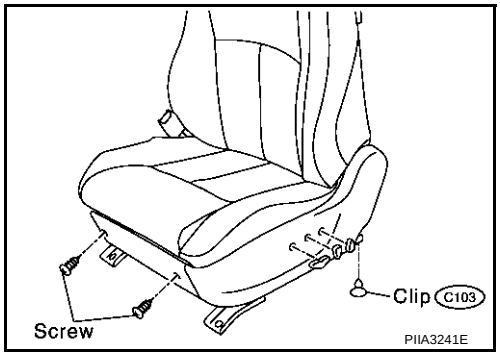

4. Remove the power seat switch assembly.
5. Partially pull off the trim at the rear of the seat cushion forward, and remove the hog rings on the seat cushion pad.

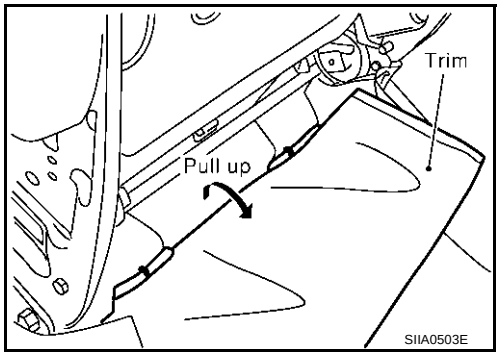

6. Remove the retainer on the seat cushion frame.
7. After removing the seat cushion trim and pad, remove the hog rings to separate the trim and pad.

CLIMATE CONTROLLED SEAT

Blower Filter Replacement

Put your hand behind front seat cushion, pull filter downward and remove it. Replace filter with a new one.

NOTE:

- When replacing, be sure to set the front/rear driver seat lifter to the top position.
- When installing, do not confuse up-down direction of the filter.

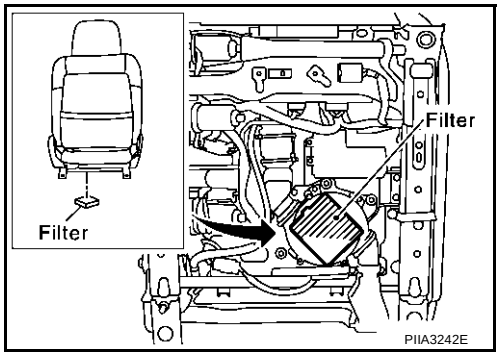

REAR SEAT

PFP:88300

Removal and Installation

AIS001KY

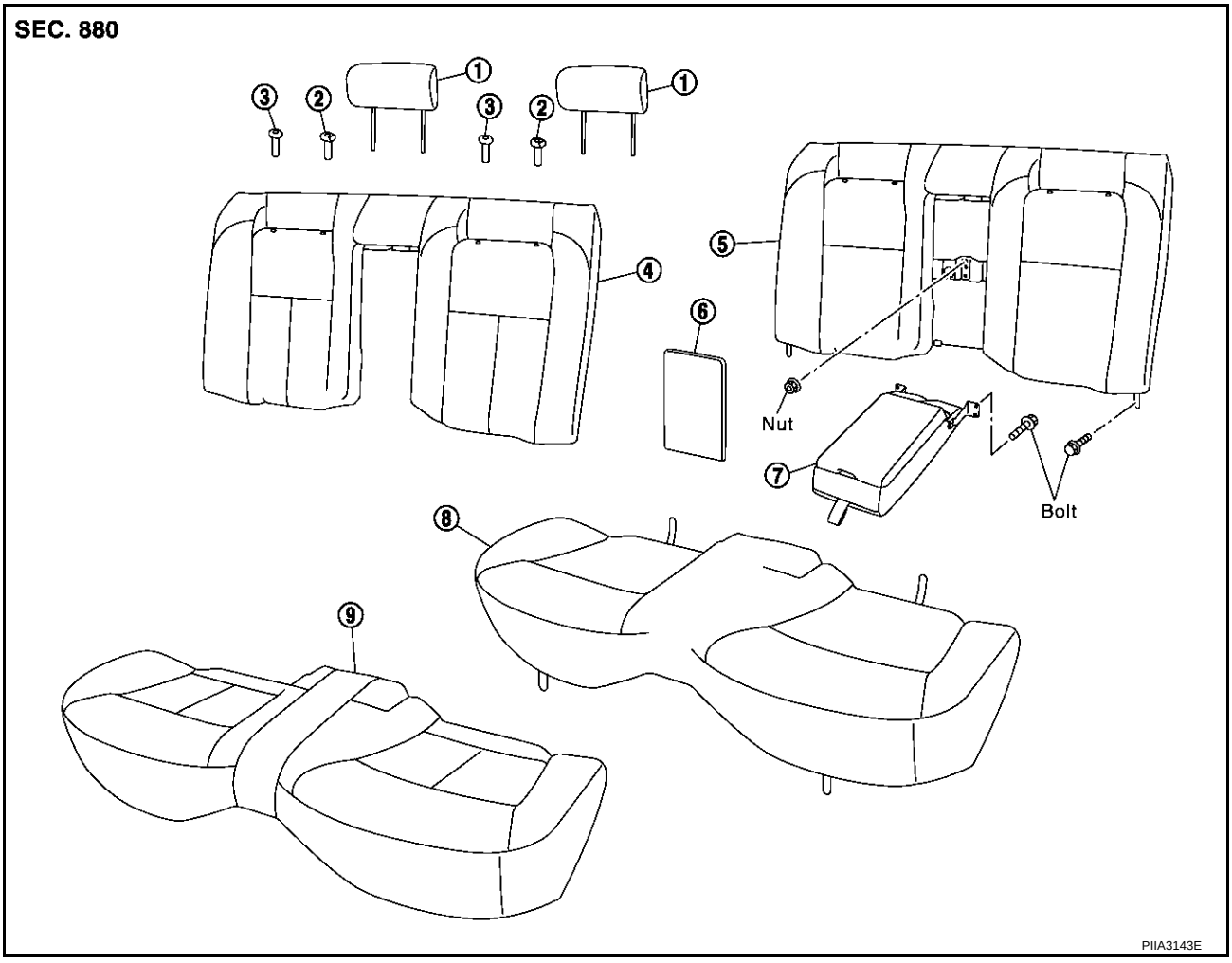

1. Headrest (LH/RH)
2. Headrest holder (locked)
3. Headrest holder (free)
4. Rear seatback trim
5. Rear seatback pad
6. Rear seatback board
7. Rear seat armrest
8. Rear seat cushion pad
9. Rear seat cushion trim

ARMREST ASSEMBLY

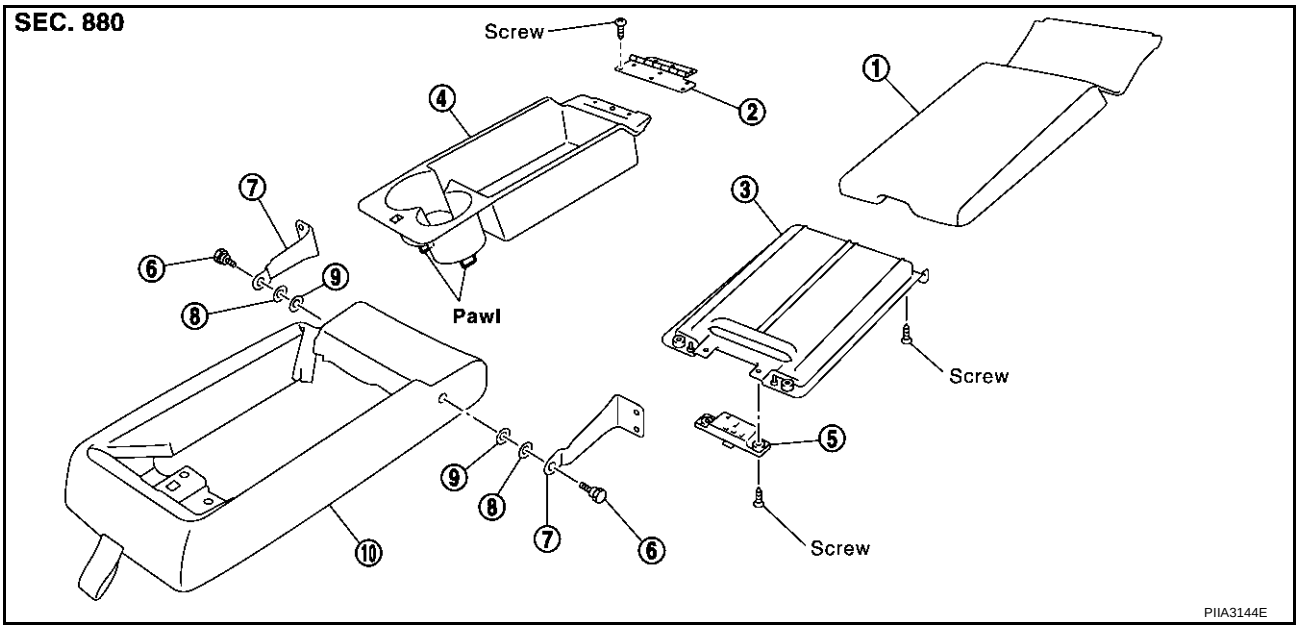

1. Armrest lid assembly
2. Lid hinge
3. Armrest lid finisher
4. Armrest tray box
5. Armrest lid lock
6. Special bolt
7. Armrest bracket
8. Plain washer
9. Plastic washer
10. Armrest frame & pad

REMOVAL

1. Pull the lock at the front bottom of the seat cushion forward, and pull the seat cushion upward to release the wire from the plastic hook, then pull the seat cushion forward to remove.

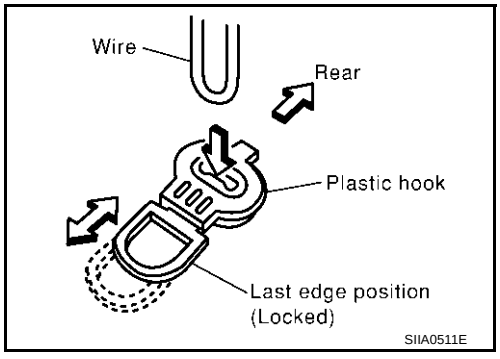

2. Partially remove the seatback board to disconnect and remove the nuts.
3. Remove the LH and RH screws on the seatback.
4. Slide the seatback upward and remove the seatback.
5. After removing, remove the hog ring to separate the trim and pad.

INSTALLATION

Install in the reverse order of removal.