SECTION BL

BODY, LOCK & SECURITY SYSTEM

CONTENTS

PRECAUTIONS

PFP:00001

Precautions for Supplemental Restraint System (SRS) “AIR BAG” and “SEAT BELT PRE-TENSIONER”

NIS001WA

The Supplemental Restraint System such as “AIR BAG” and “SEAT BELT PRE-TENSIONER”, used along with a front seat belt, helps to reduce the risk or severity of injury to the driver and front passenger for certain types of collision. This system includes seat belt switch inputs and dual stage front air bag modules. The SRS system uses the seat belt switches to determine the front air bag deployment, and may only deploy one front air bag, depending on the severity of a collision and whether the front occupants are belted or unbelted.
Information necessary to service the system safely is included in the SRS and SB section of this Service Manual.

WARNING:

- **To avoid rendering the SRS inoperative, which could increase the risk of personal injury or death in the event of a collision which would result in air bag inflation, all maintenance must be performed by an authorized NISSAN/INFINITI dealer.**
- **Improper maintenance, including incorrect removal and installation of the SRS, can lead to personal injury caused by unintentional activation of the system. For removal of Spiral Cable and Air Bag Module, see the SRS section.**
- **Do not use electrical test equipment on any circuit related to the SRS unless instructed to in this Service Manual. SRS wiring harnesses can be identified by yellow and/or orange harnesses or harness connectors.**

Precautions for Procedures without Cowl Top Cover

NIS001WB

When performing the procedure after removing cowl top cover, cover the lower end of windshield with urethane, etc.

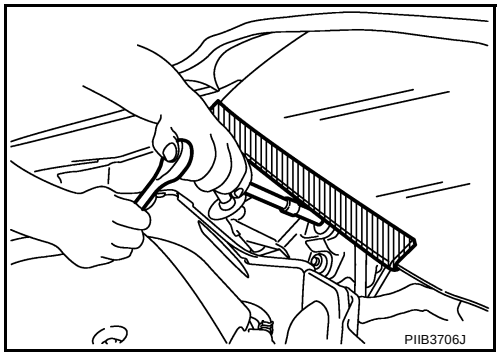

Precautions Necessary for Steering Wheel Rotation after Battery Disconnect

NIS001WC

NOTE:

- Before removing and installing any control units, first turn the push-button ignition switch to the LOCK position, then disconnect both battery cables.
- After finishing work, confirm that all control unit connectors are connected properly, then re-connect both battery cables.
- Always use CONSULT-II to perform self-diagnosis as a part of each function inspection after finishing work. If a DTC is detected, perform trouble diagnosis according to self-diagnosis results.

This vehicle is equipped with a push-button ignition switch and a steering lock unit.
If the battery is disconnected or discharged, the steering wheel will lock and cannot be turned.
If turning the steering wheel is required with the battery disconnected or discharged, follow the procedure below before starting the repair operation.

OPERATION PROCEDURE

1. Connect both battery cables.

   NOTE:
   Supply power using jumper cables if battery is discharged.
2. Carry the Intelligent Key or insert it to the key slot and turn the push-button ignition switch to ACC position. (At this time, the steering lock will be released.)
3. Disconnect both battery cables. The steering lock will remain released with both battery cables disconnected and the steering wheel can be turned.
4. Perform the necessary repair operation.

5. When the repair work is completed, re-connect both battery cables. With the brake pedal released, turn the push-button ignition switch from ACC position to ON position, then to LOCK position. (The steering wheel will lock when the push-button ignition switch is turned to LOCK position.)
6. Perform self-diagnosis check of all control units using CONSULT-II.

Precautions for Work

NIS001WD

- After removing and installing the opening/closing parts, be sure to carry out fitting adjustments to check their operational.
- Check the lubrication level, damage, and wear of each part. If necessary, grease or replace it.

PREPARATION

PFP:00002

Special Service Tools

NIS001WE

The actual shapes of Kent-Moore tools may differ from those of special service tools illustrated here.

Tool number (Kent-Moore No.) Tool name		Description
(J-39570) Chassis ear	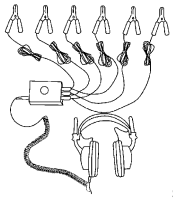 SIIA0993E	Locating the noise
(J-43980) NISSAN Squeak and Rattle Kit	 SIIA0994E	Repairing the cause of noise

Commercial Service Tools

NIS001WF

Tool name		Description
Engine ear	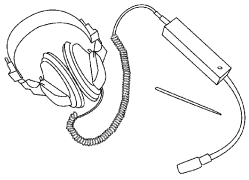 SIIA0995E	Locating the noise
Power tool	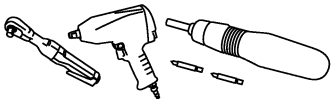 PIIB1407E	

SQUEAK AND RATTLE TROUBLE DIAGNOSIS

PFP:00000

Work Flow

NIS001WG

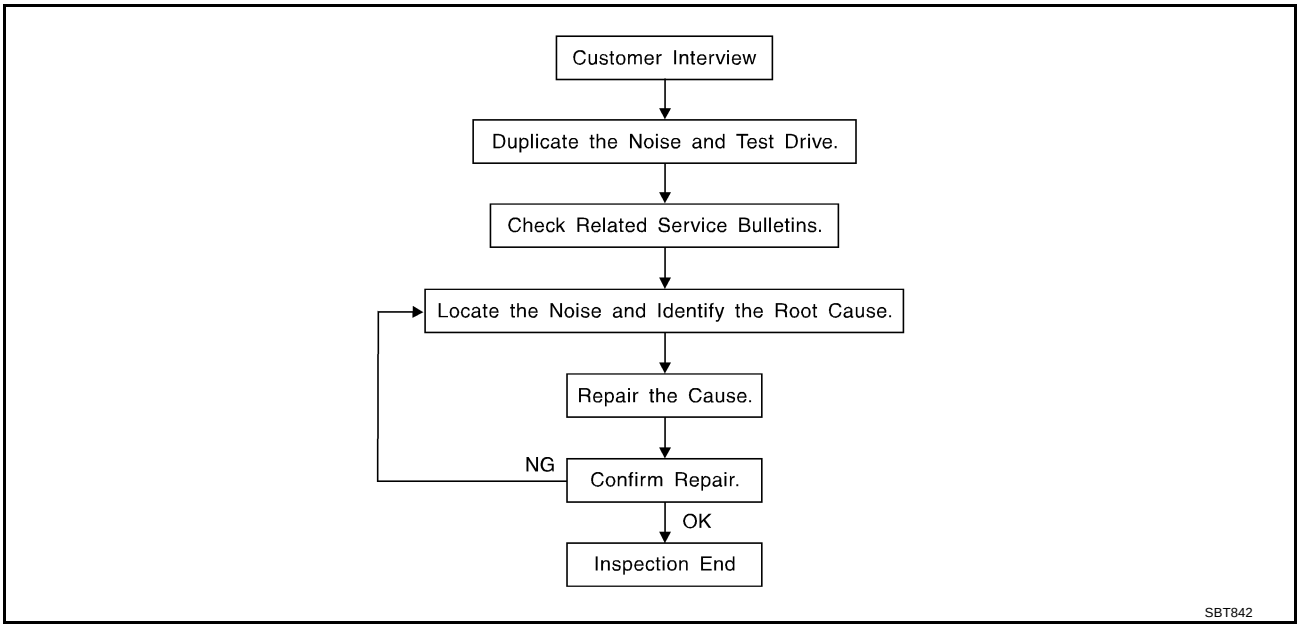

CUSTOMER INTERVIEW

Interview the customer if possible, to determine the conditions that exist when the noise occurs.Use the Diagnostic Worksheet during the interview to document the facts and conditions when the noise occurs and any customer's comments; refer to BL-13, "Diagnostic Worksheet" . This information is necessary to duplicate the conditions that exist when the noise occurs.

- The customer may not be able to provide a detailed description or the location of the noise. Attempt to obtain all the facts and conditions that exist when the noise occurs (or does not occur).
- If there is more than one noise in the vehicle, be sure to diagnose and repair the noise that the customer is concerned about. This can be accomplished by test driving the vehicle with the customer.
- After identifying the type of noise, isolate the noise in terms of its characteristics. The noise characteristics are provided so the customer, service adviser and technician are all speaking the same language when defining the noise.
- Squeak —(Like tennis shoes on a clean floor)
  Squeak characteristics include the light contact/fast movement/brought on by road conditions/hard surfaces=higher pitch noise/softer surfaces=lower pitch noises/edge to surface=chirping
- Creak—(Like walking on an old wooden floor)
  Creak characteristics include firm contact/slow movement/twisting with a rotational movement/pitch dependent on materials/often brought on by activity.
- Rattle—(Like shaking a baby rattle)
  Rattle characteristics include the fast repeated contact/vibration or similar movement/loose parts/missing clip or fastener/incorrect clearance.
- Knock —(Like a knock on a door)
  Knock characteristics include hollow sounding/sometimes repeating/often brought on by driver action.
- Tick—(Like a clock second hand)
  Tick characteristics include gentle contacting of light materials/loose components/can be caused by driver action or road conditions.
- Thump—(Heavy, muffled knock noise)
  Thump characteristics include softer knock/dead sound often brought on by activity.
- Buzz—(Like a bumble bee)
  Buzz characteristics include high frequency rattle/firm contact.
- Often the degree of acceptable noise level will vary depending upon the person. A noise that you may judge as acceptable may be very irritating to the customer.
- Weather conditions, especially humidity and temperature, may have a great effect on noise level.

DUPLICATE THE NOISE AND TEST DRIVE

If possible, drive the vehicle with the customer until the noise is duplicated. Note any additional information on the Diagnostic Worksheet regarding the conditions or location of the noise. This information can be used to duplicate the same conditions when you confirm the repair.
If the noise can be duplicated easily during the test drive, to help identify the source of the noise, try to duplicate the noise with the vehicle stopped by doing one or all of the following:

1) Close a door.
2) Tap or push/pull around the area where the noise appears to be coming from.
3) Rev the engine.
4) Use a floor jack to recreate vehicle “twist”.
5) At idle, apply engine load (electrical load, half-clutch on M/T model, drive position on A/T model).
6) Raise the vehicle on a hoist and hit a tire with a rubber hammer.

- Drive the vehicle and attempt to duplicate the conditions the customer states exist when the noise occurs.
- If it is difficult to duplicate the noise, drive the vehicle slowly on an undulating or rough road to stress the vehicle body.

CHECK RELATED SERVICE BULLETINS

After verifying the customer concern or symptom, check ASIST for Technical Service Bulletins (TSBs) related to that concern or symptom.
If a TSB relates to the symptom, follow the procedure to repair the noise.

LOCATE THE NOISE AND IDENTIFY THE ROOT CAUSE

1. Narrow down the noise to a general area. To help pinpoint the source of the noise, use a listening tool (Chassis Ear: J-39570, Engine Ear and mechanics stethoscope).
2. Narrow down the noise to a more specific area and identify the cause of the noise by:

- removing the components in the area that you suspect the noise is coming from.
  Do not use too much force when removing clips and fasteners, otherwise clips and fastener can be broken or lost during the repair, resulting in the creation of new noise.
- tapping or pushing/pulling the component that you suspect is causing the noise.
  Do not tap or push/pull the component with excessive force, otherwise the noise will be eliminated only temporarily.
- feeling for a vibration with your hand by touching the component(s) that you suspect is (are) causing the noise.
- placing a piece of paper between components that you suspect are causing the noise.
- looking for loose components and contact marks.
  Refer to BL-11, "Generic Squeak and Rattle Troubleshooting" .

REPAIR THE CAUSE

- If the cause is a loose component, tighten the component securely.
- If the cause is insufficient clearance between components:
  - separate components by repositioning or loosening and retightening the component, if possible.
  - insulate components with a suitable insulator such as urethane pads, foam blocks, felt cloth tape or urethane tape. A Nissan Squeak and Rattle Kit (J-43980) is available through your authorized Nissan Parts Department.

CAUTION:
Do not use excessive force as many components are constructed of plastic and may be damaged.

NOTE:
Always check with the Parts Department for the latest parts information.
The following materials are contained in the Nissan Squeak and Rattle Kit (J-43980). Each item can be ordered separately as needed.
URETHANE PADS [1.5 mm (0.059 in) thick]
Insulates connectors, harness, etc.
76268-9E005: 100 × 135 mm (3.94 × 5.31 in)/76884-71L01: 60 × 85 mm (2.36 × 3.35 in)/76884-71L02: 15 × 25 mm (0.59 × 0.98 in)
INSULATOR (Foam blocks)
Insulates components from contact. Can be used to fill space behind a panel.
73982-9E000: 45 mm (1.77 in) thick, 50 × 50 mm (1.97 × 1.97 in)/73982-50Y00: 10 mm (0.39 in) thick, 50 × 50 mm (1.97 × 1.97 in)

INSULATOR (Light foam block)
80845-71L00: 30 mm (1.18 in) thick, 30 × 50 mm (1.18 × 1.97 in)
FELT CLOTHTAPE
Used to insulate where movement does not occur. Ideal for instrument panel applications.
68370-4B000: 15 × 25 mm (0.59 × 0.98 in) pad/68239-13E00: 5 mm (0.20 in) wide tape roll
The following materials, not found in the kit, can also be used to repair squeaks and rattles.
UHMW (TEFLON) TAPE
Insulates where slight movement is present. Ideal for instrument panel applications.
SILICONE GREASE
Used in place of UHMW tape that will be visible or not fit. Will only last a few months.
SILICONE SPRAY
Use when grease cannot be applied.
DUCT TAPE
Use to eliminate movement.

CONFIRM THE REPAIR

Confirm that the cause of a noise is repaired by test driving the vehicle. Operate the vehicle under the same conditions as when the noise originally occurred. Refer to the notes on the Diagnostic Worksheet.

Generic Squeak and Rattle Troubleshooting

NIS001WH

Refer to Table of Contents for specific component removal and installation information.

INSTRUMENT PANEL

Most incidents are caused by contact and movement between:

1. The cluster lid A and instrument panel
2. Acrylic lens and combination meter housing
3. Instrument panel to front pillar garnish
4. Instrument panel to windshield
5. Instrument panel mounting pins
6. Wiring harnesses behind the combination meter
7. A/C defroster duct and duct joint

These incidents can usually be located by tapping or moving the components to duplicate the noise or by pressing on the components while driving to stop the noise. Most of these incidents can be repaired by applying felt cloth tape or silicon spray (in hard to reach areas). Urethane pads can be used to insulate wiring harness.

CAUTION:
Do not use silicone spray to isolate a squeak or rattle. If you saturate the area with silicone, you will not be able to recheck the repair.

CENTER CONSOLE

Components to pay attention to include:

1. Shifter assembly cover to finisher
2. A/C control unit and cluster lid C
3. Wiring harnesses behind audio and A/C control unit

The instrument panel repair and isolation procedures also apply to the center console.

DOORS

Pay attention to the:

1. Finisher and inner panel making a slapping noise
2. Inside handle escutcheon to door finisher
3. Wiring harnesses tapping
4. Door striker out of alignment causing a popping noise on starts and stops

Tapping or moving the components or pressing on them while driving to duplicate the conditions can isolate many of these incidents. You can usually insulate the areas with felt cloth tape or insulator foam blocks from the Nissan Squeak and Rattle Kit (J-43980) to repair the noise.

TRUNK

Trunk noises are often caused by a loose jack or loose items put into the trunk by the owner.
In addition look for:

1. Trunk lid dumpers out of adjustment
2. Trunk lid striker out of adjustment
3. The trunk lid torsion bars knocking together
4. A loose license plate or bracket

Most of these incidents can be repaired by adjusting, securing or insulating the item(s) or component(s) causing the noise.

SUNROOF/HEADLINING

Noises in the sunroof/headlining area can often be traced to one of the following:

1. Sunroof lid, rail, linkage or seals making a rattle or light knocking noise
2. Sunvisor shaft shaking in the holder
3. Front or rear windshield touching headlining and squeaking

Again, pressing on the components to stop the noise while duplicating the conditions can isolate most of these incidents. Repairs usually consist of insulating with felt cloth tape.

SEATS

When isolating seat noise it's important to note the position the seat is in and the load placed on the seat when the noise is present. These conditions should be duplicated when verifying and isolating the cause of the noise.
Cause of seat noise include:

1. Headrest rods and holder
2. A squeak between the seat pad cushion and frame
3. The rear seatback lock and bracket

These noises can be isolated by moving or pressing on the suspected components while duplicating the conditions under which the noise occurs. Most of these incidents can be repaired by repositioning the component or applying urethane tape to the contact area.

UNDERHOOD

Some interior noise may be caused by components under the hood or on the engine wall. The noise is then transmitted into the passenger compartment.
Causes of transmitted underhood noise include:

1. Any component mounted to the engine wall
2. Components that pass through the engine wall
3. Engine wall mounts and connectors
4. Loose radiator mounting pins
5. Hood bumpers out of adjustment
6. Hood striker out of adjustment

These noises can be difficult to isolate since they cannot be reached from the interior of the vehicle. The best method is to secure, move or insulate one component at a time and test drive the vehicle. Also, engine RPM or load can be changed to isolate the noise. Repairs can usually be made by moving, adjusting, securing, or insulating the component causing the noise.

Diagnostic Worksheet

NIS001WI

INFINITI®

SQUEAK & RATTLE DIAGNOSTIC WORKSHEET

Dear Infiniti Customer:
We are concerned about your satisfaction with your Infiniti vehicle. Repairing a squeak or rattle sometimes can be very difficult. To help us fix your Infiniti right the first time, please take a moment to note the area of the vehicle where the squeak or rattle occurs and under what conditions. You may be asked to take a test drive with a service advisor or technician to ensure we confirm the noise you are hearing.

I. WHERE DOES THE NOISE COME FROM? (circle the area of the vehicle)

The illustrations are for reference only, and may not reflect the actual configuration of your vehicle.

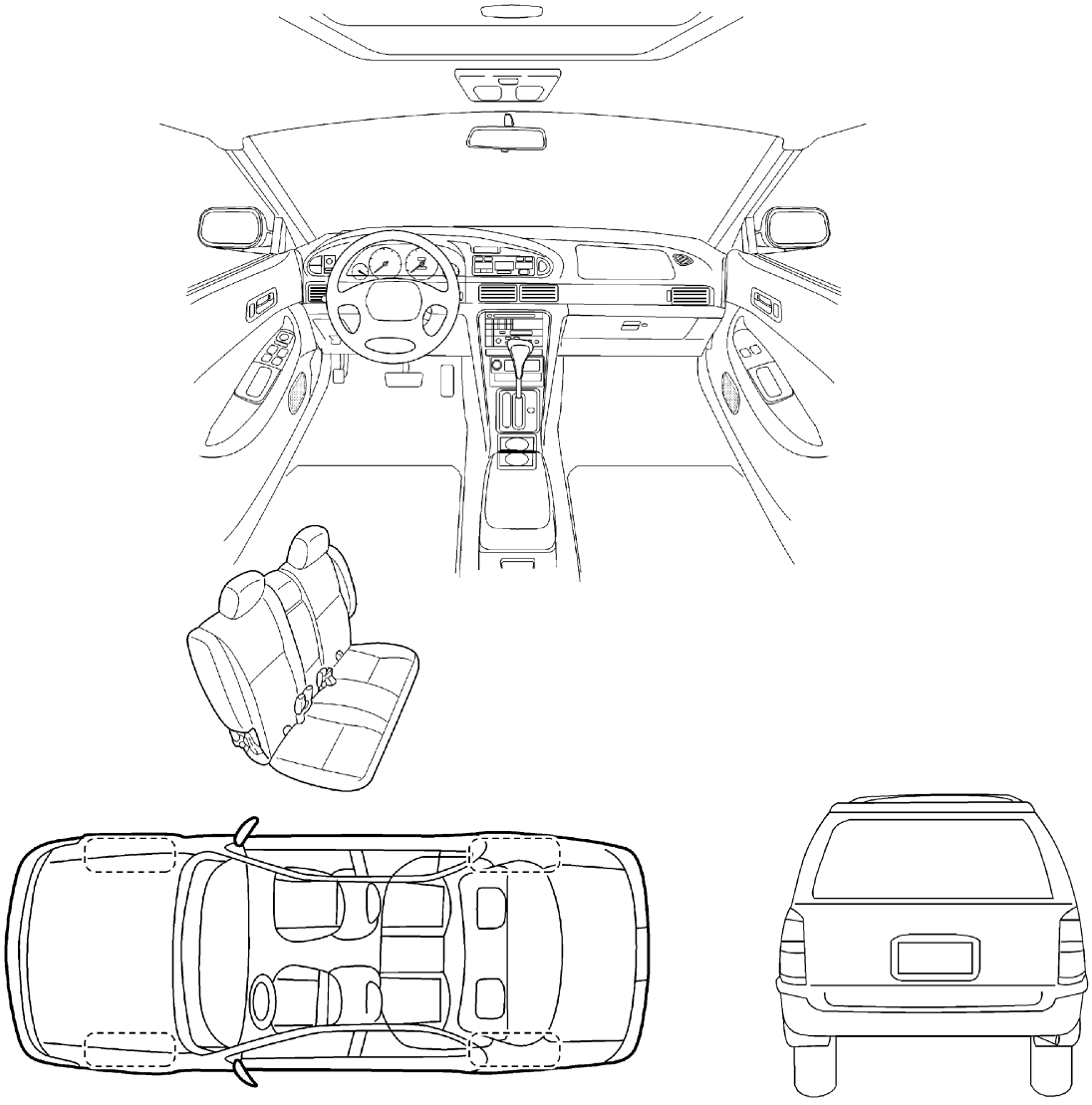

Continue to the back of the worksheet and briefly describe the location of the noise or rattle.
In addition, please indicate the conditions which are present when the noise occurs.

SBT860

SQUEAK & RATTLE DIAGNOSTIC WORKSHEET- page 2

Briefly describe the location where the noise occurs:

_____

_____

II. WHEN DOES IT OCCUR? (check the boxes that apply)

- ❑ anytime
- ❑ 1st time in the morning
- ❑ only when it is cold outside
- ❑ only when it is hot outside
- ❑ after sitting out in the sun
- ❑ when it is raining or wet
- ❑ dry or dusty conditions
- ❑ other: _____

III. WHEN DRIVING:

- ❑ through driveways
- ❑ over rough roads
- ❑ over speed bumps
- ❑ only at about ____ mph
- ❑ on acceleration
- ❑ coming to a stop
- ❑ on turns : left, right or either (circle)
- ❑ with passengers or cargo
- ❑ other: _____
- ❑ after driving ____ miles or ____ minutes

IV. WHAT TYPE OF NOISE?

- ❑ squeak (like tennis shoes on a clean floor)
- ❑ creak (like walking on an old wooden floor)
- ❑ rattle (like shaking a baby rattle)
- ❑ knock (like a knock on a door)
- ❑ tick (like a clock second hand)
- ❑ thump (heavy, muffled knock noise)
- ❑ buzz (like a bumble bee)

TO BE COMPLETED BY DEALERSHIP PERSONNEL
Test Drive Notes:

_____

_____

	YES	NO	Initials of person performing
Vehicle test driven with customer	❑	❑	_____
- Noise verified on test drive	❑	❑	
- Noise source located and repaired	❑	❑	_____
- Follow up test drive performed to confirm repair	❑	❑	_____

VIN: _____ Customer Name: _____

W.O. #: _____ Date: _____

This form must be attached to Work Order

SBT844

HOOD

PFP:F5100

Fitting Adjustment

NIS001WJ

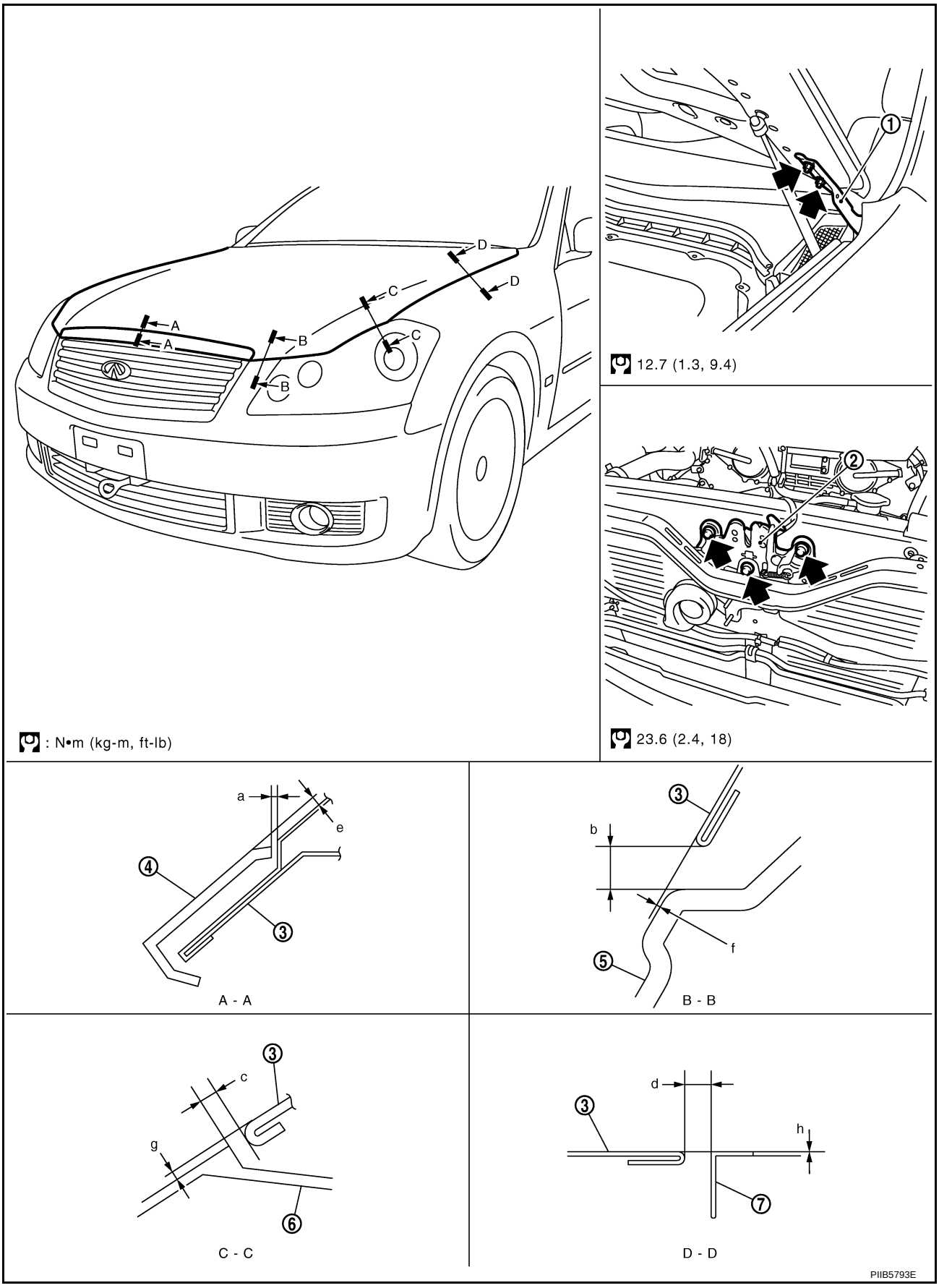

1. Hood hinge
2. Hood lock assembly
3. Hood assembly
4. Hood top molding
5. Bumper fascia assembly
6. Headlamp
7. Front fender

1. Check the clearance and the surface height between the hood and each part by visual and tactile feeling. (Fitting standard dimension in the table below should be satisfied.)

Parts			Standard	Parallelism (MAX)	Right/left clearance (MAX)
A – A	a	Clearance	0.5 - 1.2 (0.02 -0.05)	1.0 (0.04)	—
	e	Surface height	0.5 - 2.5 (0.02 - 0.10)	1.5 (0.06)	—
B – B	b	Clearance	1.5 - 5.5 (0.06 - 0.22)	—	2.5 (0.01)
	f	Surface height	-1.0 - 3.0 (-0.04 - 0.12)	—	2.0 (0.08)
C – C	c	Clearance	1.5 - 5.5 (0.06 - 0.22)	—	2.0 (0.08)
	g	Surface height	-1.0 - 3.0 (-0.40 - 0.12)	2.0 (0.08)	2.0 (0.08)
D – D	d	Clearance	2.0 - 5.0 (0.08 - 0.20)	1.0 (0.04)	1.5 (0.06)
	h	Surface height	-1.0 - 1.0 (-0.04 - 0.04)	1.0 (0.04)	1.5 (0.06)

* Unit: mm (in)

2. In case out of specification, adjust them according to the procedures shown below.
3. Remove the hood lock and adjust the height by rotating the bumper rubber until the hood becomes 1 to1.5 mm (0.04 to 0.059 in) lower than the fender.

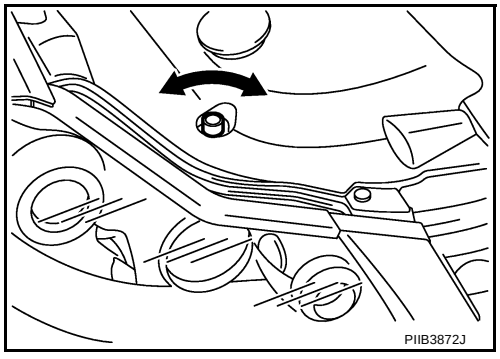

4. Temporarily tighten the hood lock, and position by engaging it with the hood striker. Check the lock and striker for looseness and adjust the clearance and evenness by the striker to satisfy the specification.
5. Adjust A and B shown in the figure to the following value with hood's own weight by dropping it from approx. 200 mm (7.87 in) height or the hood pressed lightly (approx. 29 N (3 kg)).

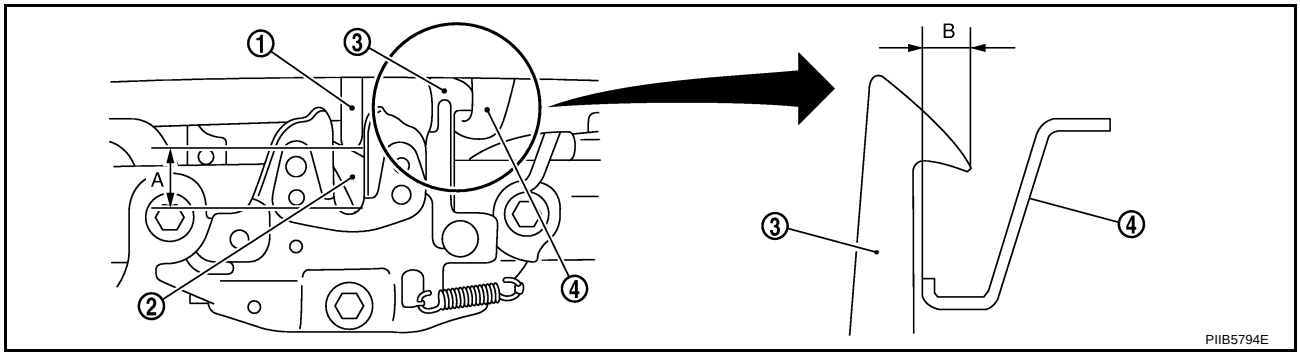

1. Hood striker
2. Primary latch
3. Secondary striker
4. Secondary latch

A : 20 mm (0.79 in)

B : 6.8 mm (0.27 in)

6. After adjustment tighten lock bolts to the specified torque.

Removal and Installation of Hood Assembly

NIS001WK

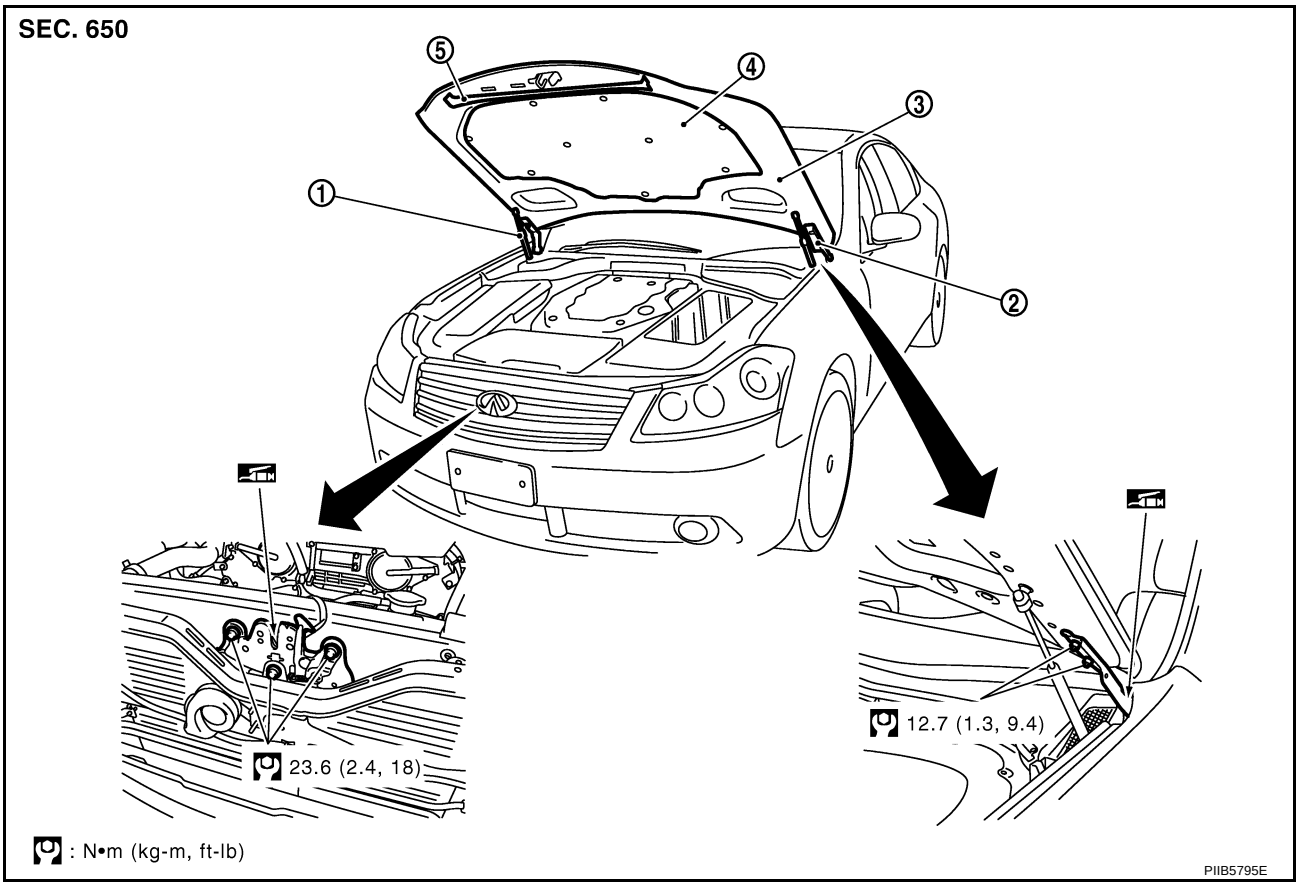

1. Hood stay
2. Hood hinge
3. Hood assembly
4. Hood insulator
5. Hood front sealing rubber

REMOVAL

1. Support the hood lock assembly with a proper material to prevent it from falling.

   WARNING:
   Body injury may occur if no supporting rod is holding the hood open when removing the hood stay.

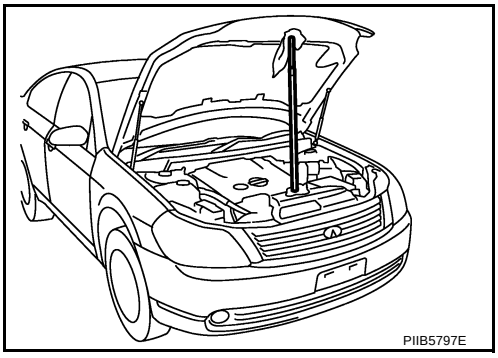

2. Remove stud balls on the hood stays at the hood side.
3. Remove the hinge mounting nuts on the hood to remove the hood assembly.

CAUTION:
Operate with two workers, because of its heavy weight.

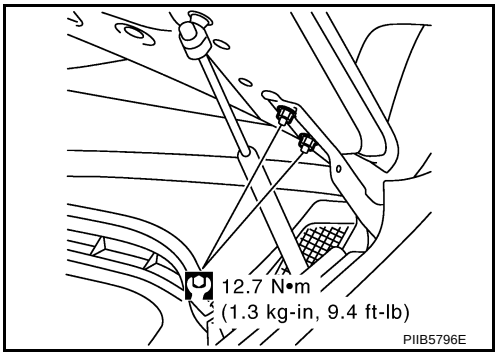

INSTALLETION

Install in the reverse order of removal.

CAUTION:

- **Before installing hood hinge, apply anticorrosive agent onto the mounting surface of the vehicle body.**
- **After installing, perform hood fitting adjustment. Refer to BL-15, "Fitting Adjustment" .**

Removal and Installation of Hood Lock Control

NIS001WL

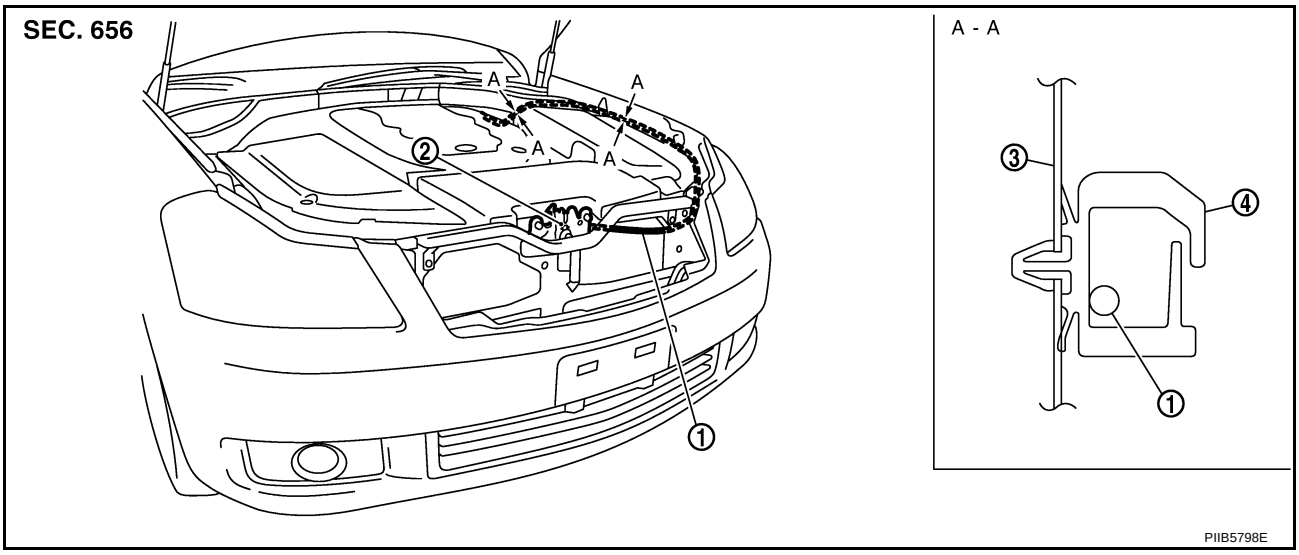

1. Hood lock cable
2. Hood lock assembly
3. Hood ledge reinforcement
4. Clip

REMOVAL

1. Remove the front grill. Refer to EI-16, "FRONT GRILLE" .
2. Remove the fender protector. Refer to EI-20, "FENDER PROTECTOR" .
3. Disconnect hood lock switch harness connector.

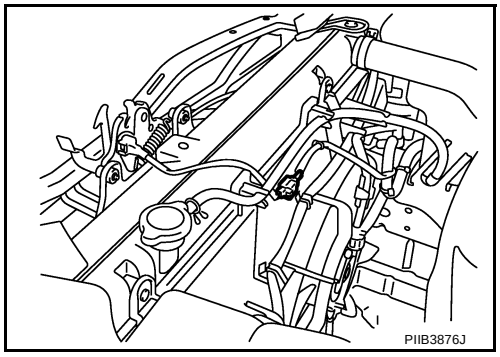

4. Remove the hood lock assembly mounting bolts.

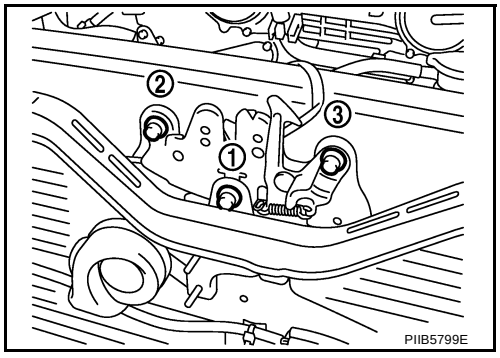

5. Disconnect the hood lock cable from the hood lock, and clip it from the hood ledge.

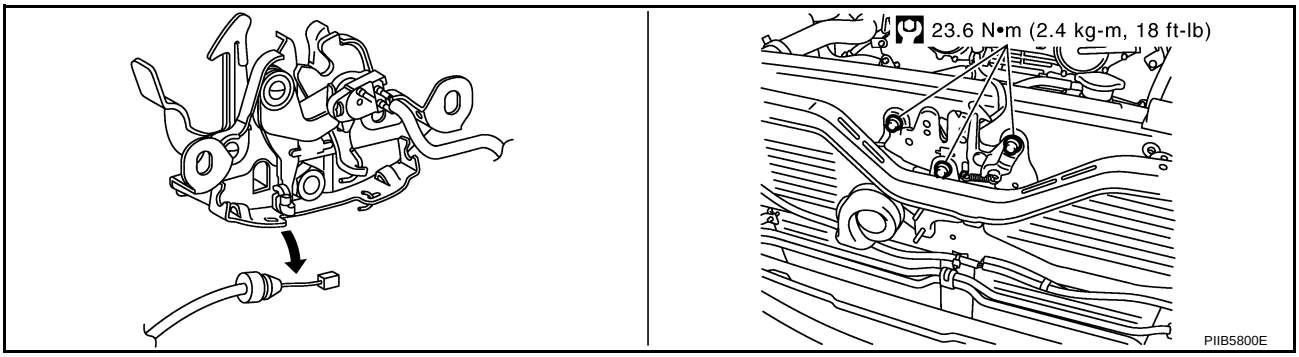

6. Remove the mounting screws with power tool, and remove the hood opener.
7. Remove the grommet on the dash board, and pull the hood lock cable toward the passenger compartment.

CAUTION:
While pulling, be careful not to damage (peeling) the outside of the hood lock cable.

INSTALLATION

1. Pull the hood lock cable through the panel hole to the engine compartment.

CAUTION:
Be careful not to bend the cable too much, keeping the radius 100 mm (3.94 in) or more.

2. Check that the cable is not offset from the positioning grommet, and push the grommet into the panel hole securely.
3. Apply the sealant to the grommet (at * mark) properly.

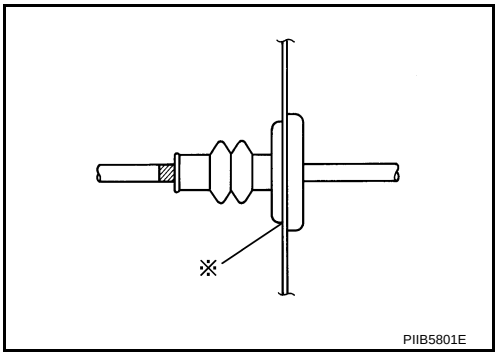

4. Install while pulling hood lock cable.
5. Install the hood lock cable securely to the lock.
6. Install hood lock assembly.

CAUTION:
- **After installing, hood fitting adjustment. Refer to BL-15, "Fitting Adjustment" .**
- **After installing, the check the hood lock control inspection Refer to BL-20, "Hood Lock Control Inspection" .**

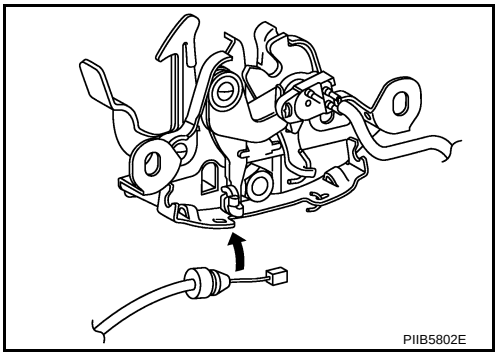

Hood Lock Control Inspection

NIS001WM

CAUTION:

If the hood lock cable is bent or deformed, replace it.

1. Check that the secondary latch is properly engaged with the secondary striker (B: 6.8 mm (0.268 in) shown in the figure) with hood's own weight.

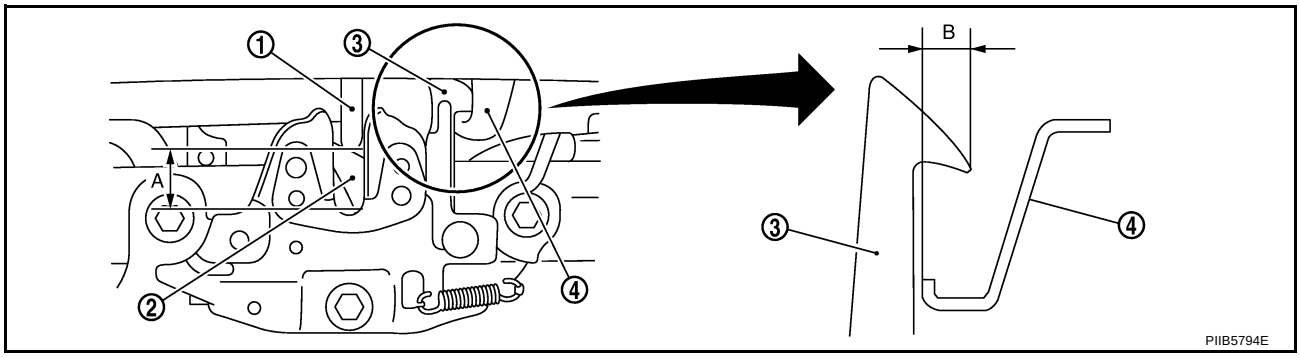

1. Hood striker
2. Primary latch
3. Secondary striker
4. Secondary latch

2. While operating the hood opener, carefully check that the front end of the hood is raised by approx. 20 mm (0.79 in). Also check that the hood opener returns to the original position.

3. Check that the hood opener operating is 294 N (30 kg) or below.
4. Install as static closing face of hood is 392 – 441 N·m (35– 44 kg-m).
5. Check the hood lock lubrication condition. If necessary, apply “body grease” to the points shown in the figure.

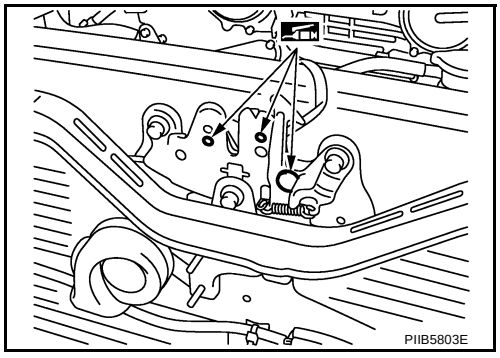

RADIATOR CORE SUPPORT

PFP:62500

Removal and Installation

NIS001WN

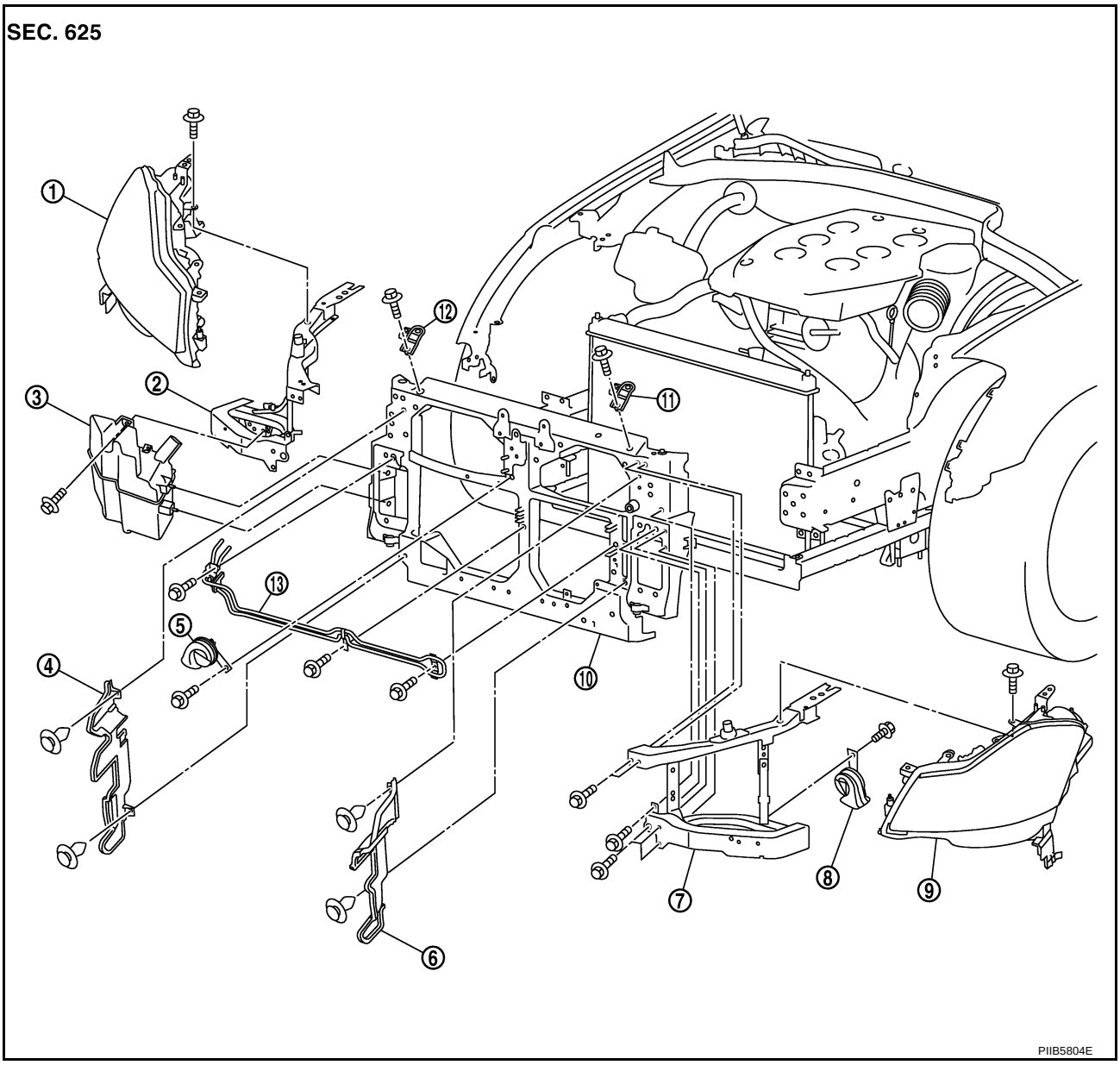

1. Headlamp (RH)	2. Radiator core support side (RH)	3. Washer tank
4. Air guide (RH)	5. Horn (High)	6. Air guide (LH)
7. Radiator core support side (LH)	8. Horn (Low)	9. Headlamp (LH)
10. Radiator core support center	11. Upper radiator bracket (LH)	12. Upper radiator bracket (RH)
13. Power steering tube assembly		

REMOVAL

1. Remove front bumper, bumper reinforcement. Refer to EI-14, "Removal and Installation" .
2. Remove headlamp (LH/RH). Refer to LT-41, "Removal and Installation" .
3. Remove air duct. Refer to EM-17, "Removal and Installation" (VQ35DE models), EM-177, "Removal and Installation" (VK45DE models).
4. Remove hood lock assembly, then remove hood lock cable. Refer to BL-18, "Removal and Installation of Hood Lock Control" .
5. Remove washer tank. Refer to WW-47, "Removal and Installation of Washer Tank" .
6. Remove ambient sensor. Refer to ATC-126, "Removal and Installation" .
7. Remove crash zone sensor. Refer to SRS-45, "Removal and Installation" .

8. Remove air guide (LH/RH).
9. Remove power steering tube assembly. Refer to PS-43, "Removal and Installation" .
10. Remove horn (High/Low). Refer to WW-54, "Removal and Installation" .
11. Remove mounting harness clip on radiator core support assembly, the harness is separate.
12. Remove ICC sensor integrated unit. Refer to ACS-69, "ICC Sensor Integrated Unit" .
13. Remove upper radiator bracket (LH/RH) with power tool.
14. Remove radiator core support side with power tool.

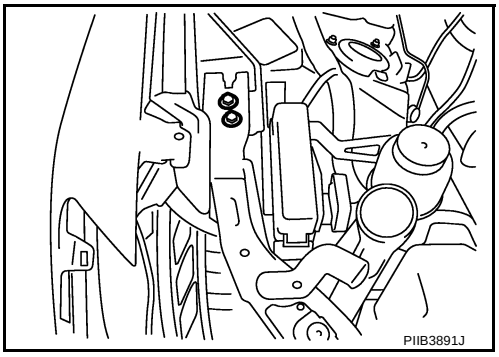

15. Remove radiator core support side (LH/RH) with power tool.

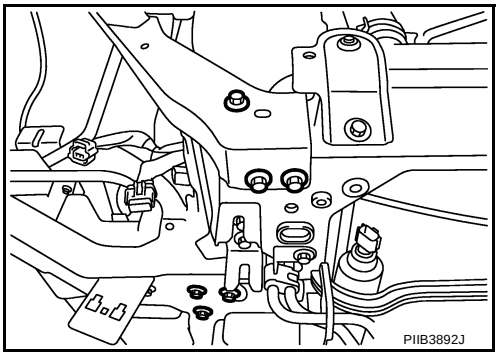

16. Remove radiator core support center.

    CAUTION:
    Put a wooden block under the radiator assembly to prevent the radiator assembly from falling.

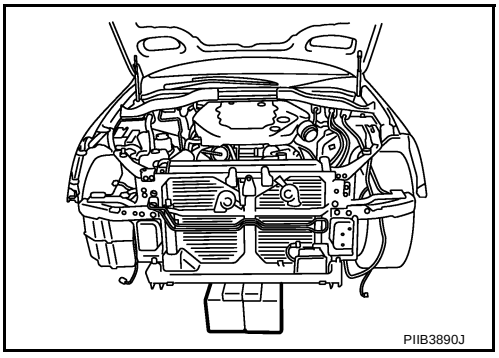

INSTALLATION

Install in the reverse order of removal.

FRONT FENDER

PFP:63100

Removal and Installation

NIS001WO

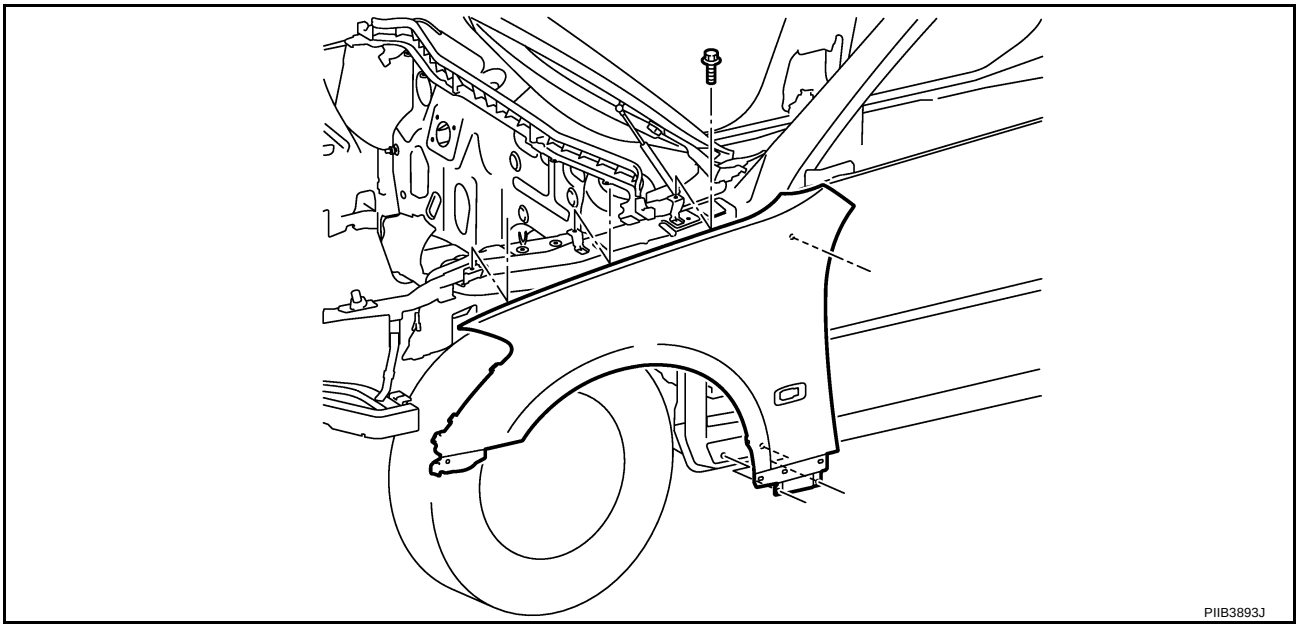

REMOVAL

1. Remove the front bumper. Refer to EI-11, "Removal and Installation" .
2. Remove the headlamp. Refer to LT-41, "Removal and Installation" .
3. Remove the turn signal lamp. Refer to LT-229, "Removal and Installation of Front Turn Signal Lamp" .
4. Remove the front fender protector. Refer to EI-20, "FENDER PROTECTOR" .
5. Remove the center mud guard. Refer toEI-22, "Removal and Installation" .
6. Remove the mounting bolt and remove the front fender.

CAUTION:

While removing use a shop cloth to protect body from damaging.

INSTALLATION

Install in the reverse order of removal.

CAUTION:

- **After installing, apply touch-up paint (the body color) onto the head of the front fender mounting bolts.**
- **After installing, check front fender adjustment. Refer to BL-15, "Fitting Adjustment" and BL-190, "Fitting Adjustment" .**

POWER DOOR LOCK SYSTEM

PFP:24814

Component Parts and Harness Connector Location

NIS001WP

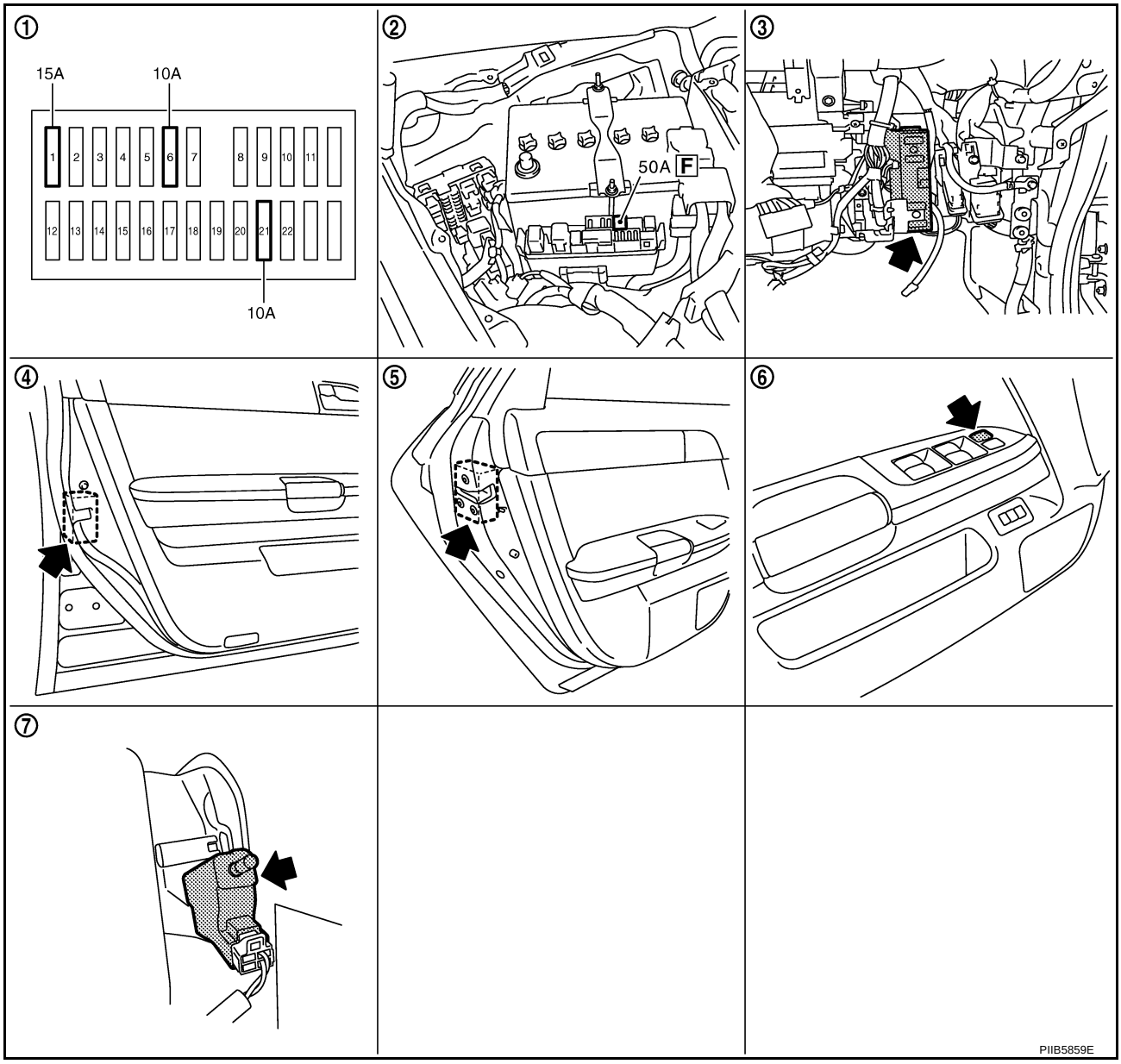

1. Fuse block (J / B) fuse layout
2. Fuse and fusible link box
3. BCM M1, M2, M3 (View with instrument lower panel RH removed)
4. Front door lock actuator (Driver side) D14
5. Rear door lock actuator LH D59
6. Power window main switch (door lock and unlock switch) D10, D11
7. Fuel lid lock actuator B125

System Description

NIS001WQ

Power is supplied at all times

- through 50A fusible link (letter **F** , located in the fuse and fusible link box).
- to BCM terminal 55,
- through 10A fuse [No. 21, located in the fuse block (J/B)]
- to BCM terminal 42.

When ignition switch is in ACC or ON position, power is supplied

- through 10A fuse [No. 6, located in fuse block (J/B)]
- to BCM terminal 11.

When ignition switch is in ON or START position, power is supplied

- through 15A fuse [No. 1, located in fuse block (J/B)]
- to BCM terminal 38.

Ground is supplied

- to BCM terminal 52
- through body grounds M16 and M70.

When the door is locked or unlocked with power window main switch (door lock and unlock switch), ground is supplied

- to CPU of power window main switch
- through power window main switch (door lock and unlock switch) terminal 17
- through grounds M16 and M70.

Then power window main switch (door lock and unlock switch) operation signal is sent.

- to BCM terminal 22
- from power window main switch (door lock and unlock switch) terminal 14

When the door is locked or unlocked with power window sub-switch (front passenger side) (door lock and unlock switch), ground is supplied

- to CPU of power window sub-switch
- through power window sub-switch (front passenger side) (door lock and unlock switch) terminal 11
- through grounds M16 and M70.

Then power window sub-switch (front passenger side) (door lock and unlock switch) operation signal is sent

- to BCM terminal 22
- from power window sub-switch (front passenger side) (door lock and unlock switch) terminal 16.

When the door is locked with front door key cylinder switch (driver side), ground is supplied

- to CPU of power window main switch
- through power window main switch (door lock and unlock switch) terminal 4
- through front door key cylinder switch (driver side) terminals 6 and 4
- through grounds M16 and M70.

Then front door key cylinder switch (driver side) operation signal (lock) is sent

- to BCM terminal 22
- from power window main switch (door lock and unlock switch) terminal 14

When the door is unlocked with front door key cylinder switch (driver side), ground is supplied

- to CPU of power window main switch
- through power window main switch (door lock and unlock switch) terminal 6
- through front door key cylinder switch (driver side) terminals 5 and 4
- through grounds M16 and M70.

Then front door key cylinder switch (driver side) operation signal (unlock) is sent

- to BCM terminal 22
- from power window main switch (door lock and unlock switch) terminal 14

BCM is connected to power window main switch and power window sub-switch as serial link.

DOOR LOCK ACTUATOR OPERATION

When door is locked with door lock and unlock switch, all door lock actuator is locked. Ground is supplied

- to BCM terminal 50
- through each door lock actuator terminals 2 and 1
- through BCM terminals 44 (driver side), 70 (passenger side) and 51 (rear door).

When door is unlocked with door lock and unlock switch, all door lock actuator is unlocked. Ground is supplied

- to BCM terminals 44 (driver side), 70 (passenger side) and 51 (rear door)
- through each door lock actuator terminals 1 and 2
- through BCM terminal 50.

FUEL LID OPERATION

When door is locked with door lock and unlock switch, fuel lid lock actuator is locked. Ground is supplied

- to BCM terminal 50
- through fuel lid lock actuator terminals 2 and 1
- through BCM terminal 51.

When door is unlocked with door lock and unlock switch, fuel lid lock actuator is unlocked. Ground is supplied

- to BCM terminal 51
- through fuel lid lock actuator terminals 1 and 2
- through BCM terminal 50.

In this condition, fuel lid can be opened if it is pushed.

OUTLINE

Functions Available by Operating the Door Lock and Unlock Switches on Driver's Door and Passenger's Door

- Interlocked with the locking operation of door lock and unlock switch, door lock actuators of all doors and fuel lid lock actuator are locked.
- Interlocked with the unlocking operation of door lock and unlock switch, door lock actuators of all doors and fuel lid lock actuator are unlocked.

Functions Available by Operating the Key Cylinder Switch on Driver's Door

- Interlocked with the locking operation of door key cylinder, door lock actuators of all doors and fuel lid lock actuator are locked.

Selective Unlock Operation

- When door key cylinder is unlocked, door lock actuator driver side and fuel lid lock actuator are unlocked.
- When door key cylinder is unlocked for the second time within 5 seconds after the first operation, door lock actuators on all doors are unlocked.

Select unlock operation mode can be changed using “DOOR LOCK-UNLOCK SET” mode in “WORK SUPPORT”. Refer to BL-83, "WORK SUPPORT" .

Key Reminder Door System

Refer to BL-50, "Key Reminder Function" .

CAN Communication System Description

NIS001WR

CAN (Controller Area Network) is a serial communication line for real time application. It is an on-vehicle multiplex communication line with high data communication speed and excellent error detection ability. Many electronic control units are equipped onto a vehicle, and each control unit shares information and links with other control units during operation (not independent). In CAN communication, control units are connected with 2 communication lines (CAN H line, CAN L line) allowing a high rate of information transmission with less wiring. Each control unit transmits/receives data but selectively reads required data only.

CAN Communication Unit

NIS001WS

Refer to LAN-34, "CAN Communication Unit" .

Schematic

NIS001WT

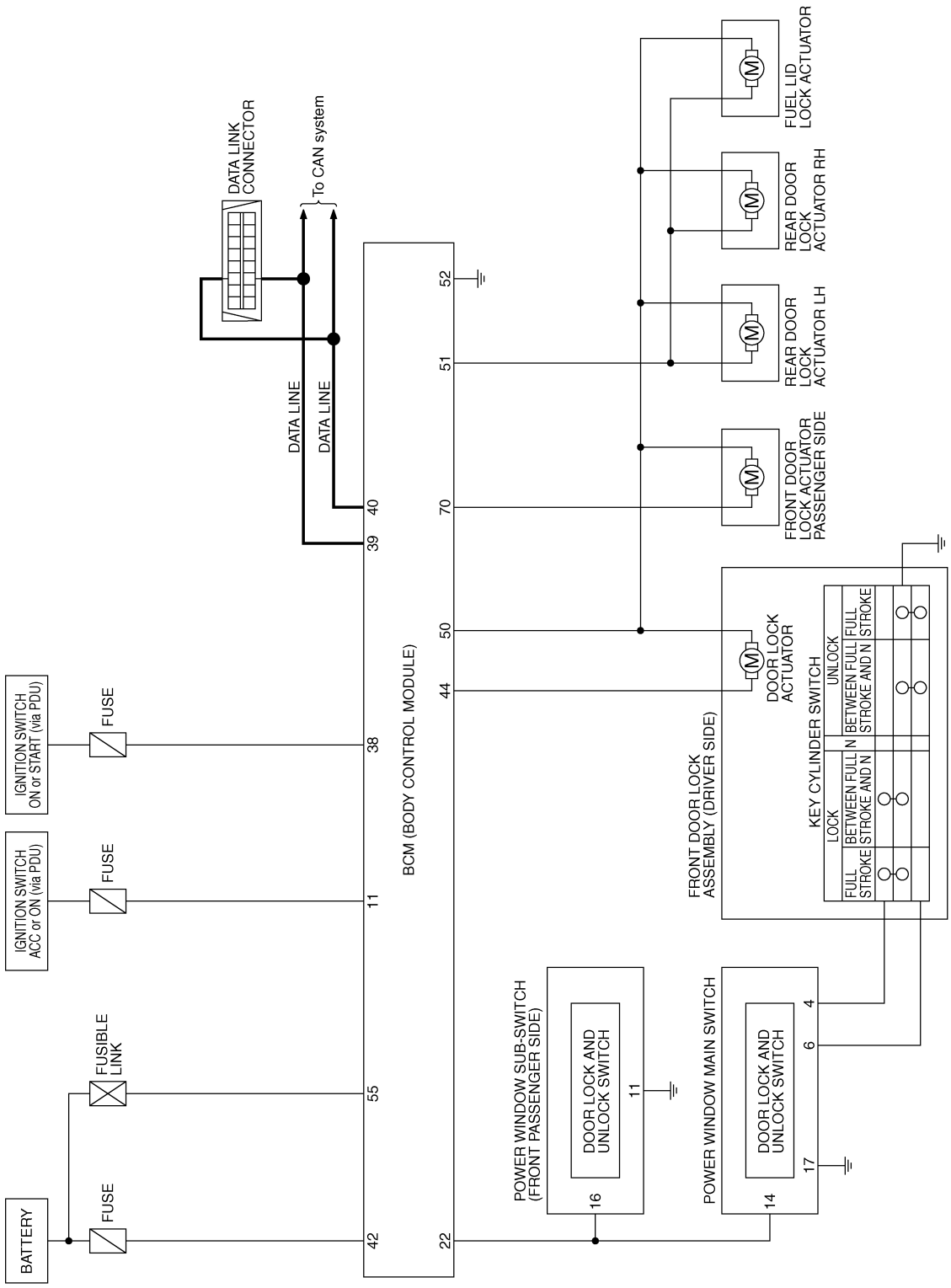

TIWT1285E

Wiring Diagram —D/LOCK—

NIS001WU

BL-D/LOCK-01

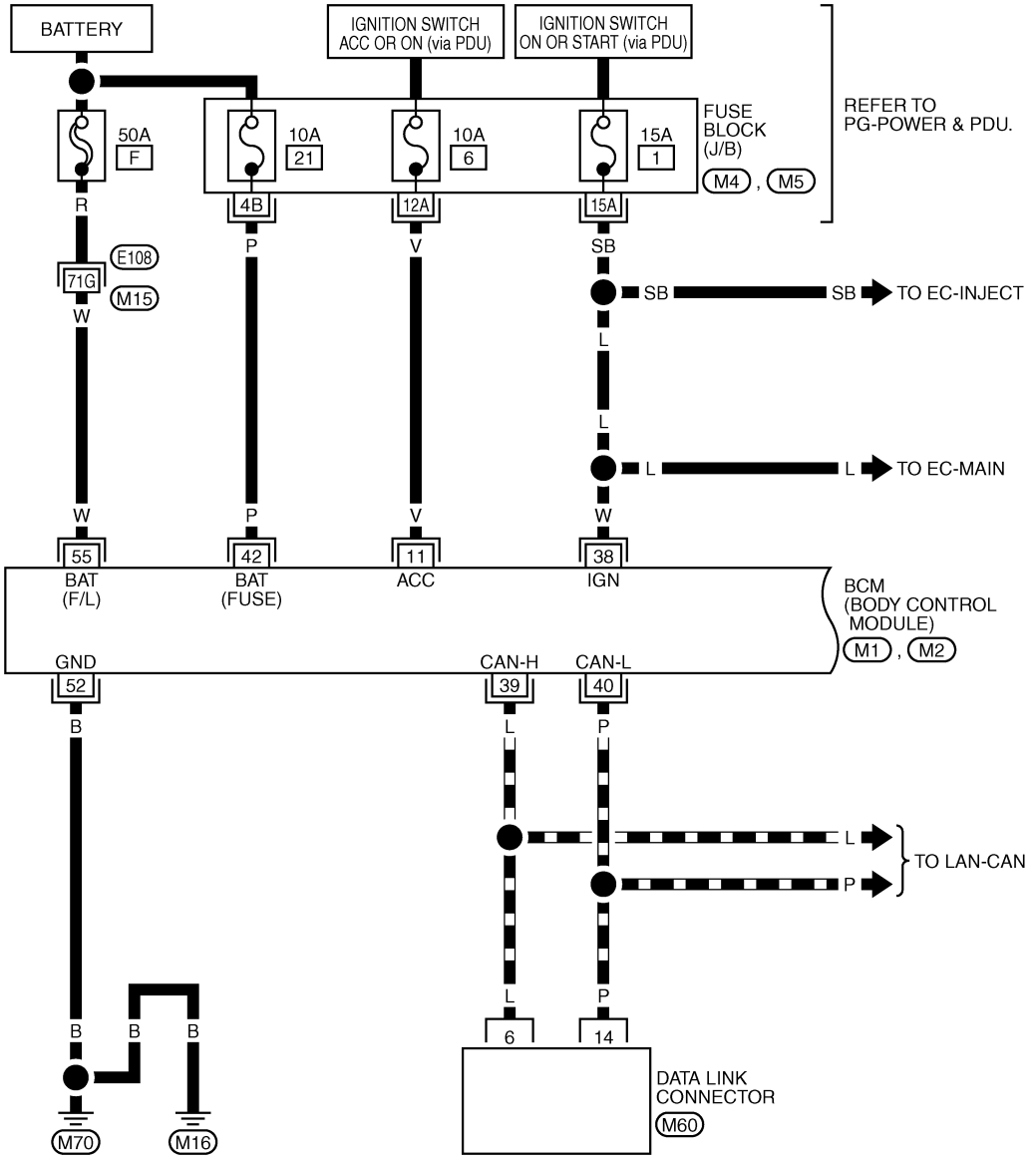

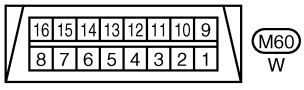

REFER TO THE FOLLOWING.

E108 -SUPER MULTIPLE JUNCTION (SMJ)

M4 , M5 -FUSE BLOCK-JUNCTION BOX (J/B)

M1 , M2 -ELECTRICAL UNITS

TIWT1286E

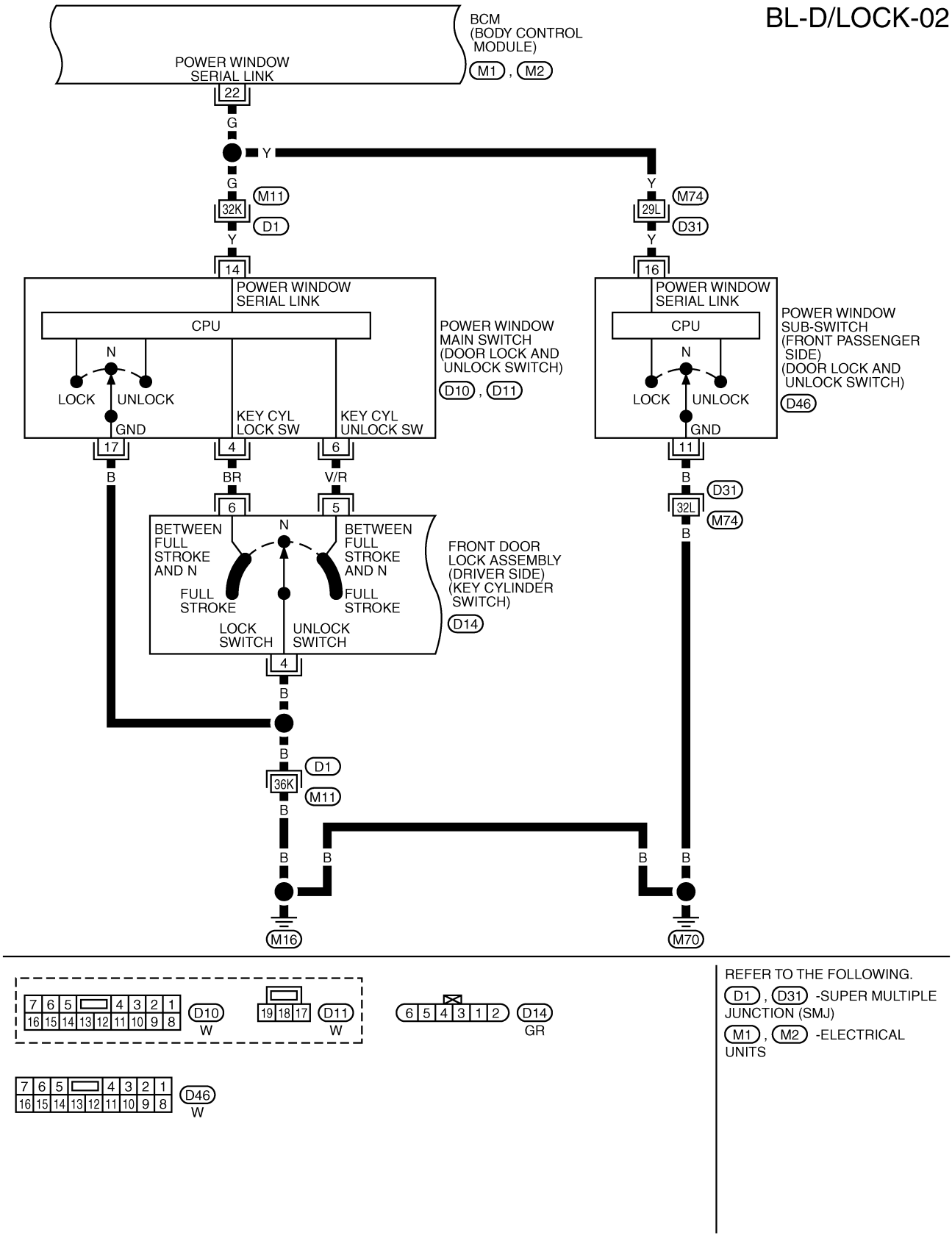
BL-D/LOCK-02
BCM
(BODY CONTROL
MODULE)
M1 , M2
POWER WINDOW
SERIAL LINK
22
G
Y
G
M11
32K
D1
Y
14
Y
M74
29L
D31
Y
16
POWER WINDOW
SERIAL LINK
CPU
N
LOCK
UNLOCK
GND
KEY CYL
LOCK SW
KEY CYL
UNLOCK SW
POWER WINDOW
MAIN SWITCH
(DOOR LOCK AND
UNLOCK SWITCH)
D10 , D11
POWER WINDOW
SUB-SWITCH
(FRONT PASSENGER
SIDE)
(DOOR LOCK AND
UNLOCK SWITCH)
D46
17
4
6
11
B
BR
V/R
B
D31
32L
M74
B
6
5
BETWEEN
FULL
STROKE
AND N
FULL
STROKE
LOCK
SWITCH
UNLOCK
SWITCH
FRONT DOOR
LOCK ASSEMBLY
(DRIVER SIDE)
(KEY CYLINDER
SWITCH)
D14
4
B
B
D1
36K
M11
B
B
B
B
B
M16
M70
D10
W
D11
W
D14
GR
D46
W
REFER TO THE FOLLOWING.
D1 , D31 -SUPER MULTIPLE
JUNCTION (SMJ)
M1 , M2 -ELECTRICAL
UNITS
TIWT1288E

BL-D/LOCK-03

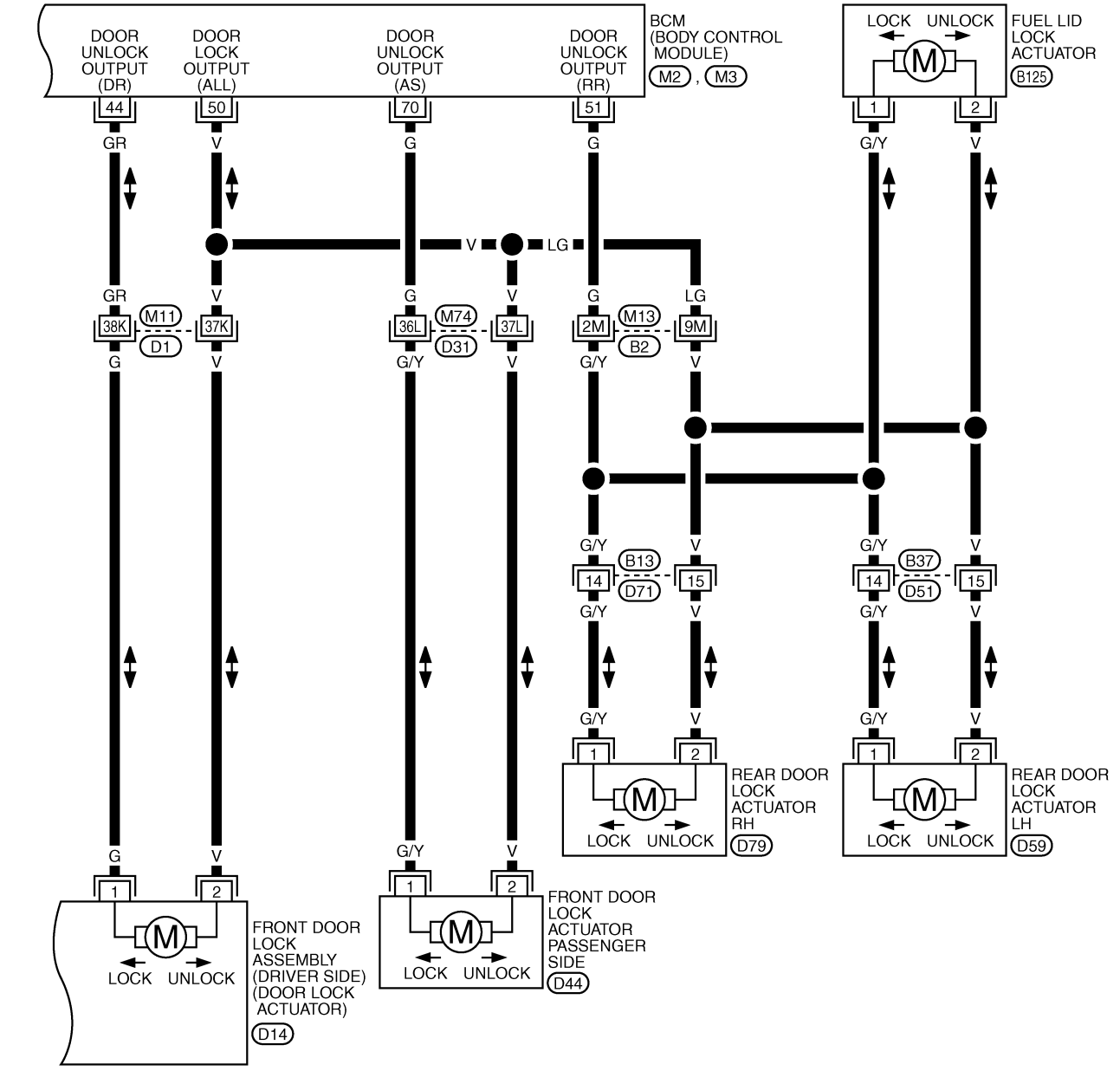

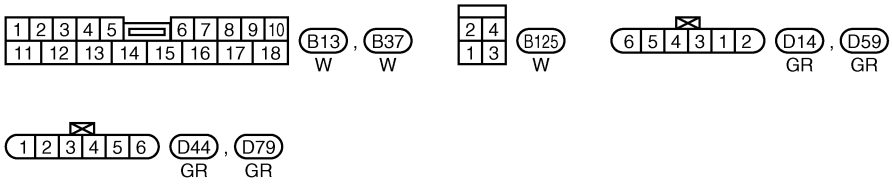

REFER TO THE FOLLOWING.
B2 , D1 , D31 -SUPER MULTIPLE JUNCTION (SMJ)
M2 , M3 -ELECTRICAL UNITS

TIWT1289E

Terminals and Reference Value of BCM

NIS001WV

Terminal	Wire color	Item	Condition	Voltage [V] (Approx.)
11	V	Ignition switch (ACC)	Ignition switch is in ACC position	Battery voltage
22	G	Power window serial link	Ignition switch ON	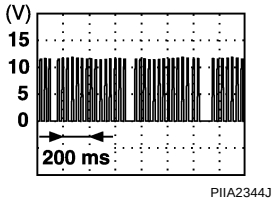
38	W	Ignition switch (ON)	Ignition switch is in ON or START position	Battery voltage
39	L	CAN H	—	—
40	P	CAN L	—	—
42	P	Battery source (Fuse)	—	Battery voltage
44	GR	Driver door lock actuator (unlock) signal	Door lock / unlock switch (Free → Unlock)	0 → Battery voltage → 0
50	V	Door lock actuator (lock) signal	Door lock / unlock switch (Free → Lock)	0 → Battery voltage → 0
51	G	Rear doors lock actuator and fuel lid lock actuator (unlock) signal	Door lock / unlock switch (Free → Unlock)	0 → Battery voltage → 0
52	B	Ground	—	0
55	W	Power source (Fusible link)	—	Battery voltage
70	G	Front door lock actuator (passenger side) lock signal	Door lock / unlock switch (Free → Unlock)	0 → Battery voltage → 0

Work Flow

NIS001WW

1. Check the symptom and customer's requests.
2. Understand the outline of system. Refer to BL-25, "System Description" .
3. According to the trouble diagnosis chart by symptom, repair or replace the cause of the malfunction. Refer to BL-34, "Trouble Diagnosis Chart by Symptom" .
4. Does power door lock system operate normally?
   YES: GO TO 5.
   NO: GO TO 3.
5. INSPECTION END

CONSULT-II Function (BCM)

NIS001WX

CONSULT-II can display each diagnostic item using the diagnostic test modes shown following.

BCM diagnosis part	Inspection item, self-diagnosis mode	Content
Door lock	DATA MONITOR	Displays the input data of BCM in real time basis.
	ACTIVE TEST	Give a drive signals to load to check the operation check.

CONSULT-II INSPECTION PROCEDURE

CAUTION:

If CONSULT-II is used with no connection of CONSULT-II CONVERTER, malfunction might be detected in self-diagnosis depending on control unit which carry out CAN communication.

1. Turn ignition switch “OFF”.
2. Connect “CONSULT-II” and “CONSULT-II CONVERTER” to the data link connector (1).

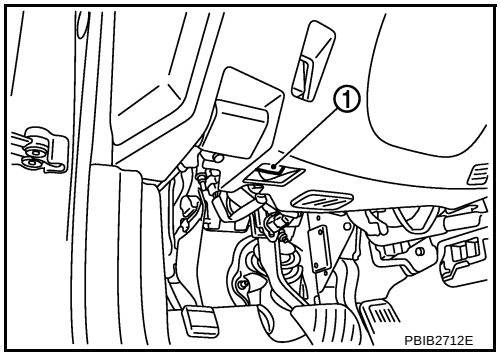

3. Turn ignition switch “ON”.
4. Touch “START”. (NISSAN BASED VHCL)

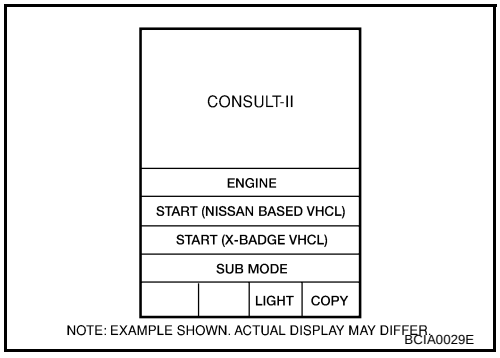

5. Touch “BCM” on “SELECT SYSTEM” screen.
   If “BCM” is not indicated, go to GI-40, "CONSULT-II Data Link Connector (DLC) Circuit" .

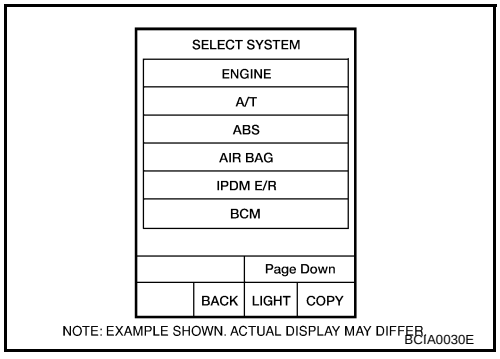

6. Touch “DOOR LOCK” on “SELECT TEST ITEM” screen.

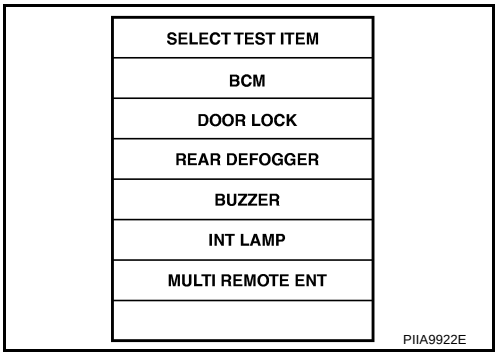

7. Select diagnosis mode.
“DATA MONITOR” and “ACTIVE TEST” are available.

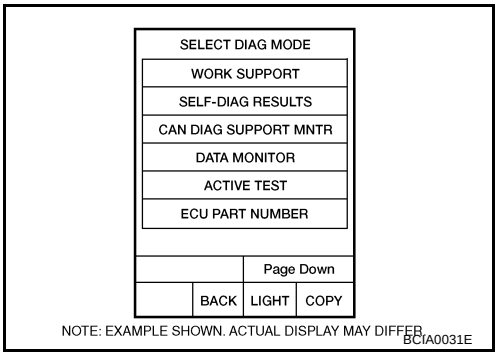

CONSULT-II APPLICATION ITEMS

Data Monitor

Monitor item	Content
IGN ON SW	Indicates [ON/OFF] condition of ignition switch in ON position.
KEY ON SW	Indicates [ON/OFF] condition of key switch.
CDL LOCK SW	Indicates [ON/OFF] condition of lock signal from door lock and unlock switch.
CDL UNLOCK SW	Indicates [ON/OFF] condition of unlock signal from door lock and unlock switch.
KEY CYL LK-SW	Indicates [ON/OFF] condition of lock signal from key cylinder.
KEY CYL UN-SW	Indicates [ON/OFF] condition of unlock signal from key cylinder.
DOOR SW-DR	Indicates [ON/OFF] condition of front door switch driver side.
DOOR SW-AS	Indicates [ON/OFF] condition of front door switch passenger side.
DOOR SW-RR	Indicates [ON/OFF] condition of rear door switch RH.
DOOR SW-RL	Indicates [ON/OFF] condition of rear door switch LH.
BACK DOOR SW	This is displayed even if it is not equipped.
I -KEY LOCK	Indicates [ON/OFF] condition of lock signal from Intelligent Key.
I - KEY UNLOCK	Indicates [ON/OFF] condition of unlock signal from Intelligent Key.
ACC ON SW	Indicates [ON/OFF] condition of ignition switch in ACC position
I - KEY DR UNLK	Indicates [ON/OFF] condition of unlock signal from door request switch (driver side)
I - KEY AS UNLK	Indicates [ON/OFF] condition of unlock signal from door request switch (passenger side)

Active Test

Test item in “DOOR LOCK”	Content
ALL LOCK	This test is able to check all door lock actuators lock operation. These actuators lock when “ALL LOCK” on CONSULT-II screen is touched.
DR UNLOCK	This test is able to check door lock actuator (driver side) unlock operation. This actuator unlock when “DR UNLOCK” on CONSULT-II screen is touched.
OTHER UNLOCK	This test is able to check all door lock actuators (except driver side) unlock operation. These actuators unlock when “OTHER UNLOCK” on CONSULT-II screen is touched.
ALL UNLOCK	This test is able to check all door lock actuators unlock operation. These actuators unlock when “ALL UNLOCK” on CONSULT-II screen is touched.
AS UNLOCK	This test is able to check door lock actuator (passenger side) unlock operation. This actuator unlock when “AS UNLOCK” on CONSULT-II screen is touched.

Trouble Diagnosis Chart by Symptom

NIS001WY

Always check the “Work Flow” before troubleshooting. Refer to BL-31, "Work Flow" .

Symptom	Diagnoses service procedure		Reference page
Power door lock does not operate with door lock and unlock switch.	1. Power supply and ground circuit check of BCM.		BL-35
	2. Check door lock and unlock switch.		BL-36
	3. Check door lock actuator (driver side)		BL-38
	4. Replace BCM.		BCS-17
Power door lock does not operate with door key cylinder operation. (Power door lock operate properly with door lock and unlock switch.)	1. Check front door key cylinder switch.		BL-42
	2. Replace power window main switch.		–
Specific door lock actuator does not operate.	1. Check door lock actuator.	Driver side	BL-38
		Passenger side	BL-39
		Rear LH	BL-40
		Rear RH	BL-40
	2. Replace BCM.		BCS-17
Selective unlock operation does not operate. (All other power door lock system is “OK”.)	1. Check select unlock mode. Select unlock mode can be changed. First check select unlock mode.		BL-83
	2. Replace BCM.		BCS-17
Fuel lid opener actuator does not operate. (All door lock actuators operates properly.)	Check fuel lid lock actuator.		BL-41

Power Supply and Ground Circuit Check of BCM

NIS001WZ

1. CHECK FUSE

Check the following fuse and fusible link.

- 50A fusible link (letter **F** , located in the fuse and fusible link box)
- 10A fuse [No.21, located in the fuse block (J/B)]
- 10A fuse [No.6, located in the fuse block (J/B)]
- 15A fuse [No.1, located in the fuse block (J/B)]

NOTE:
Refer to BL-24, "Component Parts and Harness Connector Location" .

OK or NG

OK >> GO TO 2.
NG >> If fuse is blown, be sure to eliminate cause of malfunction before installing new fuse, refer to PG-3, "POWER SUPPLY ROUTING CIRCUIT" .

2. CHECK POWER SUPPLY CIRCUIT

1. Turn ignition switch OFF.
2. Disconnect BCM connectors.
3. Check voltage between BCM and ground.

Terminals			Condition of ignition switch position	Voltage (V) (Approx.)
(+)		(–)		
BCM connector	Terminal			
M3	11	Ground	ACC	Battery voltage
	38		ON	
M4	42		OFF	
	55			

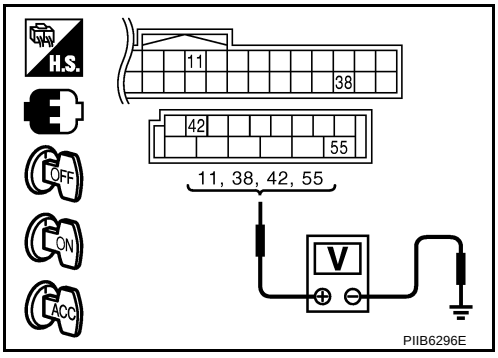

OK or NG

OK >> GO TO 3.
NG >> Repair or replace BCM power supply circuit.

3. CHECK GROUND CIRCUIT

Check continuity between BCM harness connector and ground.

BCM connector	Terminal		Continuity
M2	52	Ground	Yes

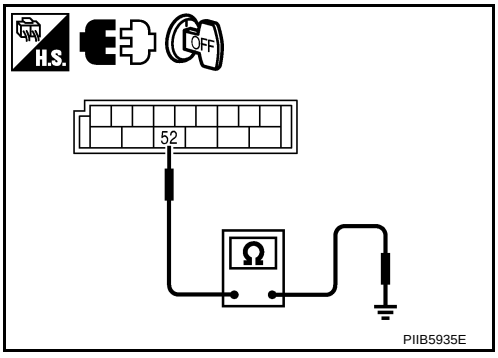

OK or NG

OK >> Power supply and ground circuit are OK.
NG >> Repair or replace BCM ground circuit.

Check Door Lock and Unlock Switch

NIS001X0

1. CHECK POWER WINDOW SWITCH OUTPUT SIGNAL

With CONSULT-II

Check (“CDL LOCK SW ”, “CDL UNLOCK SW”) in DATA MONITOR mode with CONSULT-II.

Monitor item	Condition	
CDL LOCK SW	LOCK	: ON
	UNLOCK	: OFF
CDL UNLOCK SW	LOCK	: OFF
	UNLOCK	: ON

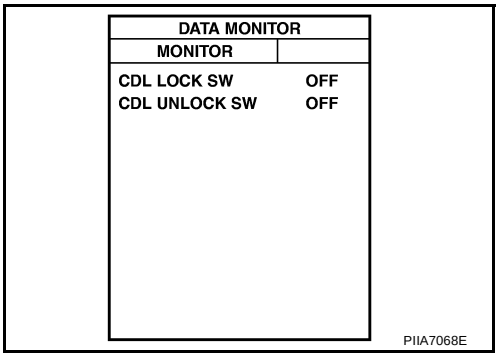

Without CONSULT-II

1. Remove key from ignition switch, and the door of driver side and passenger side is closed.
2. Check signal between BCM connector and ground with oscilloscope when door lock and unlock switch (driver side and passenger side) is turned “LOCK” or “UNLOCK”.
3. Make sure signals which are shown in the figure below can be detected during 10 second just after door lock and unlock switch (driver side and passenger side) is turned “LOCK” or “UNLOCK”.

Terminal			Signal (Reference value)
(+)		(–)	
BCM connector	Terminal		
M1	22	Ground	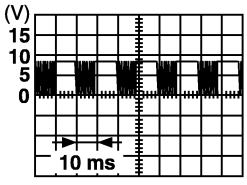 PIIA1297E

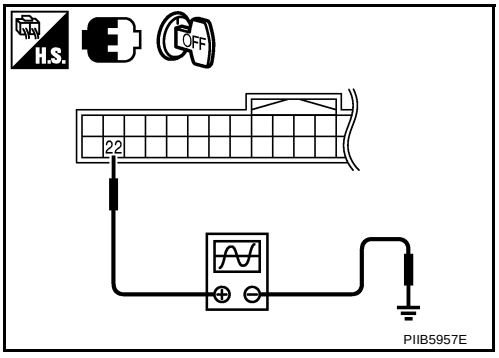

OK or NG

OK >> Door lock and unlock switch is OK.
NG >> GO TO 2.

2. CHECK POWER WINDOW SWITCH GROUND

1. Turn ignition switch OFF.
2. Disconnect power window main switch and front power window switch (passenger side) connector.
3. Check continuity between power window main switch connector and ground.

Power window main switch connector	Terminal		Continuity
D11	17	Ground	Yes

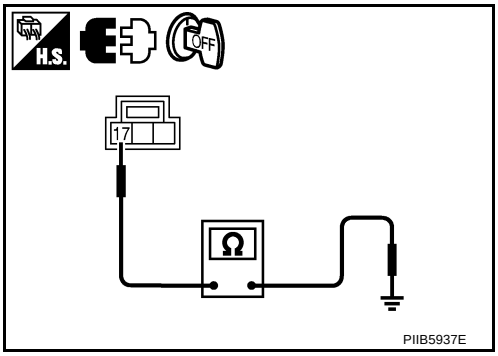

4. Check continuity between power window sub-switch (front passenger side) connector and ground.

Power window sub-switch (front passenger side) connector	Terminal		Continuity
D46	11	Ground	Yes

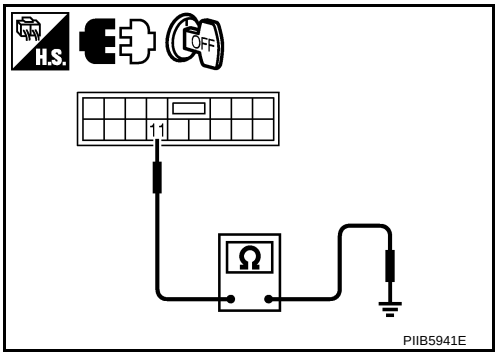

OK or NG

OK >> GO TO 3.
NG >> Repair or replace harness.

3. CHECK POWER WINDOW SERIAL LINK CIRCUIT

1. Disconnect BCM connector.
2. Check continuity between BCM connector and power window main switch connector.

A		B		Continuity
BCM connector	Terminal	Power window main switch connector	Terminal	
M1	22	D10	14	Yes

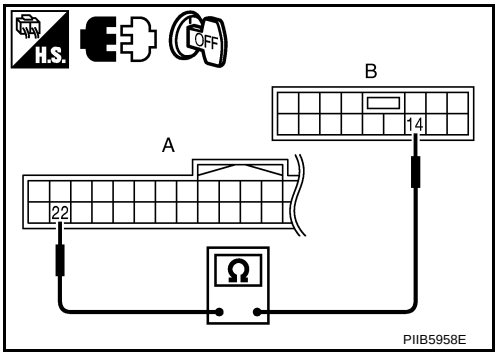

3. Check continuity between BCM connector and power window sub-switch (front passenger side) connector.

A		B		Continuity
BCM connector	Terminal	Power window sub- switch (front passenger side) connector	Terminal	
M1	22	D46	16	Yes

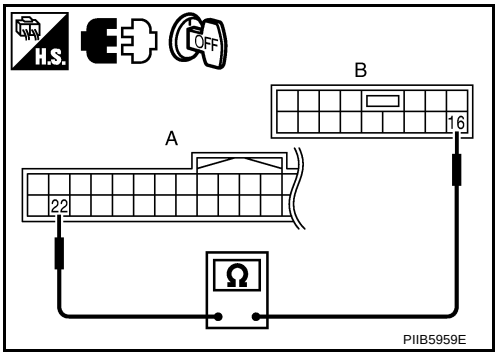

OK or NG

OK >> Replace power window main switch.
NG >> Repair or replace harness.

Check Door Lock Actuator/Driver Side

NIS001X1

1. CHECK OUTPUT SIGNAL

Check voltage between BCM connector and ground.

Terminals			Condition of door lock and unlock switch	Voltage (V) (Approx.)
(+)		(–)		
BCM connector	Terminal			
M2	50	Ground	Lock	0 → Battery voltage → 0
	44		Unlock	0 → Battery voltage → 0

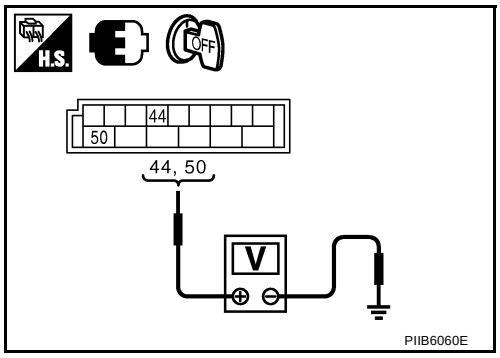

OK or NG

OK >> GO TO 2.
NG >> Replace BCM.

2. CHECK DOOR LOCK ACTUATOR CIRCUIT

1. Turn ignition switch OFF.
2. Disconnect BCM and front door lock actuator driver side connector.
3. Check continuity between BCM connector and front door lock actuator driver side connector.

A		B		Continuity
BCM connector	Terminal	Door lock actuator connector	Terminal	
M2	50	D14	2	Yes
	44		1	

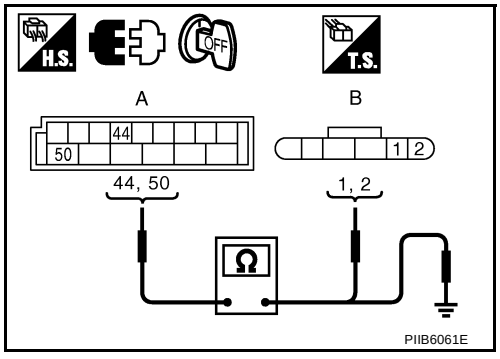

4. Check continuity between BCM connector and ground.

A			Continuity
BCM connector	Terminal		
M2	50	Ground	No
	44		

OK or NG

OK >> Replace front door lock actuator (driver side).
NG >> Repair or replace harness.

Check Door Lock Actuator/Passenger Side

NIS001X2

1. CHECK DOOR LOCK ACTUATOR SIGNAL

Check voltage between BCM connector and ground.

Terminals			Condition of door lock and unlock switch	Voltage (V) (Approx.)
(+)		(–)		
BCM connector	Terminal			
M2	50	Ground	Lock	0 → Battery voltage → 0
M3	70		Unlock	0 → Battery voltage → 0

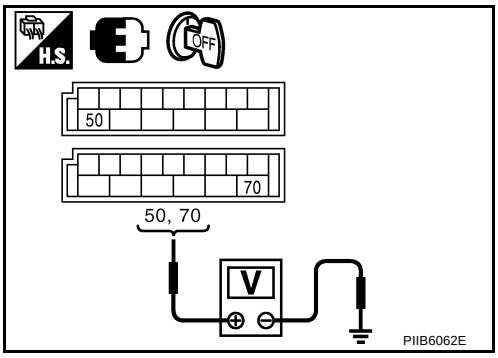

OK or NG

OK >> GO TO 2.
NG >> Replace BCM.

2. CHECK DOOR LOCK ACTUATOR CIRCUIT

1. Disconnect BCM and front door lock actuator passenger side connectors.
2. Check continuity between BCM connector and front door lock actuator passenger side.

A		B		Continuity
BCM connector	Terminal	Door lock actuator connector	Terminal	
M2	50	D44	2	Yes
M3	70		1	

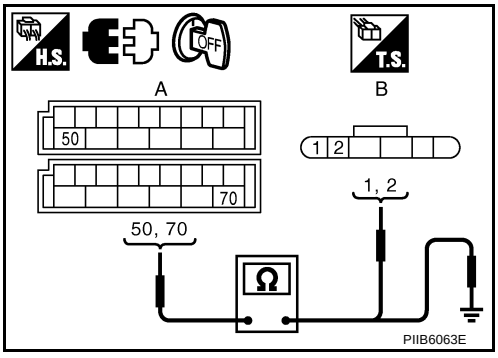

3. Check continuity between BCM connector and ground.

A			Continuity
BCM connector	Terminal		
M2	50	Ground	No
M3	70		

OK or NG

OK >> Replace front door lock actuator (passenger side).
NG >> Repair or replace harness.

Check Door Lock Actuator/Rear LH

NIS001X3

1. CHECK DOOR LOCK ACTUATOR SIGNAL

Check voltage between BCM connector and ground.

Terminals			Condition of door lock and unlock switch	Voltage (V) (Approx.)
(+)		(–)		
BCM connector	Terminal			
M2	50	Ground	Lock	0 → Battery voltage → 0
	51		Unlock	0 → Battery voltage → 0

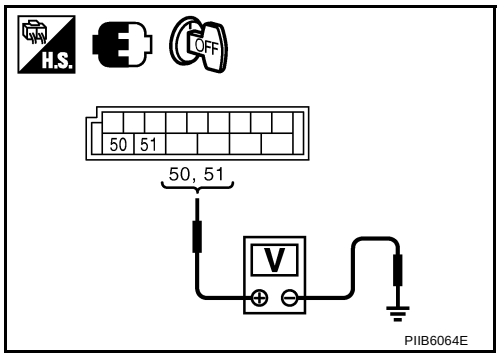

OK or NG

OK >> GO TO 2.
NG >> Replace BCM.

2. CHECK DOOR LOCK ACTUATOR CIRCUIT

1. Disconnect BCM and rear door lock actuator LH connectors.
2. Check continuity between BCM connector and rear door lock actuator LH connectors.

A		B		Continuity
BCM connector	Terminal	Door lock actuator connector	Terminal	
M2	50	D59	2	Yes
	51		1	

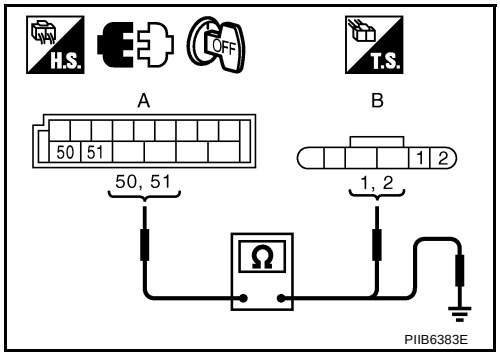

3. Check continuity between BCM connector and ground.

A			Continuity
BCM connector	Terminal		
M2	50	Ground	No
	51		

OK or NG

OK >> Replace door lock actuator/rear LH.
NG >> Repair or replace harness.

Check Door Lock Actuator/Rear RH

NIS001X4

1. CHECK DOOR LOCK ACTUATOR SIGNAL

Check voltage between BCM connector and ground.

Terminals			Condition of door lock and unlock switch	Voltage (V) (Approx.)
(+)		(–)		
BCM connector	Terminal			
M2	50	Ground	Lock	0 → Battery voltage → 0
	51		Unlock	0 → Battery voltage → 0

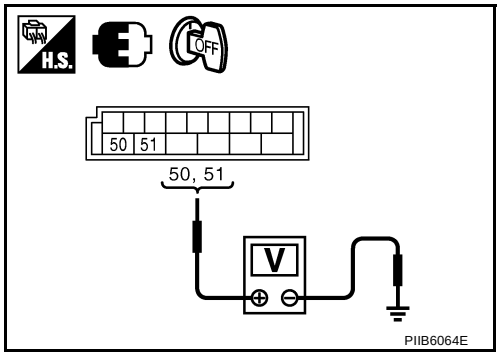

OK or NG

OK >> GO TO 2.
NG >> Replace BCM.

2. CHECK DOOR LOCK ACTUATOR CIRCUIT

1. Disconnect BCM and rear door lock actuator RH connectors.
2. Check continuity between BCM connector and rear door lock actuator RH connectors.

A		B		Continuity
BCM connector	Terminal	Door lock actuator connector	Terminal	
M2	50	D79	2	Yes
	51		1	

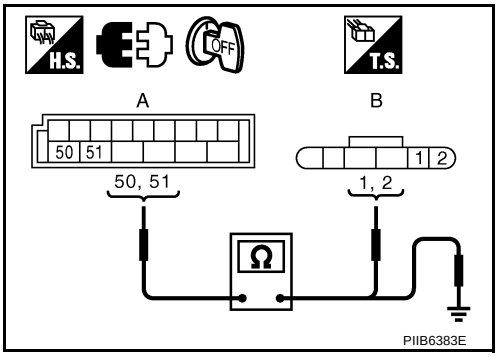

3. Check continuity between BCM connector and ground.

A			Continuity
BCM connector	Terminal		
M2	50	Ground	No
	51		

OK or NG

OK >> Replace door lock actuator/rear RH.
NG >> Repair or replace harness.

Check Fuel Lid Opener Actuator

NIS001X5

1. CHECK FUEL LID OPENER ACTUATOR CIRCUIT

1. Turn ignition switch OFF.
2. Disconnect BCM and fuel lid lock actuator connector.
3. Check continuity between BCM connector and fuel lid lock actuator connector.

A		B		Continuity
BCM connector	Terminal	Fuel lid lock actuator connector	Terminal	
M2	50	B125	2	Yes
	51		1	

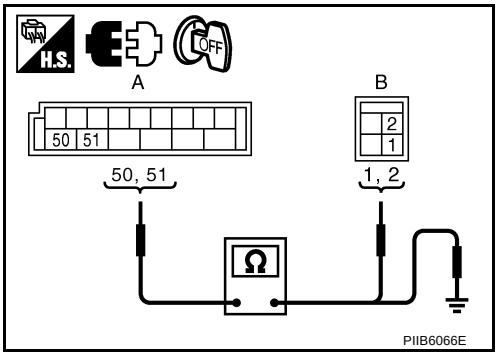

4. Check continuity between BCM connector and ground.

A			Continuity
BCM connector	Terminal		
M2	50	Ground	No
	51		

OK or NG

OK >> Replace fuel lid lock actuator.
NG >> Repair or replace harness.

Door Key Cylinder Switch Check

NIS001X6

1. CHECK DOOR KEY CYLINDER SWITCH INPUT SIGNAL

With CONSULT-II

Check (“KEY CYL LK-SW”, “KEY CYL UN-SW”) in “DATA MONITOR” mode for “POWER DOOR ROCK SYSTEM” with CONSULT-II.

Monitor item	Condition	
KEY CYL LK-SW	Lock	: ON
	Neutral / Unlock	: OFF
KEY CYL UN-SW	Unlock	: ON
	Neutral / Lock	: OFF

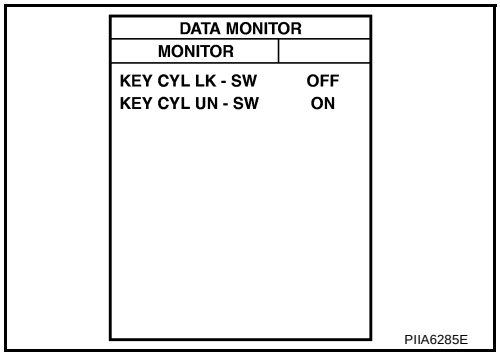

Without CONSULT-II

1. Turn ignition switch OFF.
2. Check voltage between power window main switch connector and ground.

Terminals			Key position	Voltage (V) (Approx.)
(+)		(–)		
Power window main switch connector	Terminal			
D10	4	Ground	Lock	0
			Neutral / Unlock	5
	6		Unlock	0
			Neutral / Lock	5

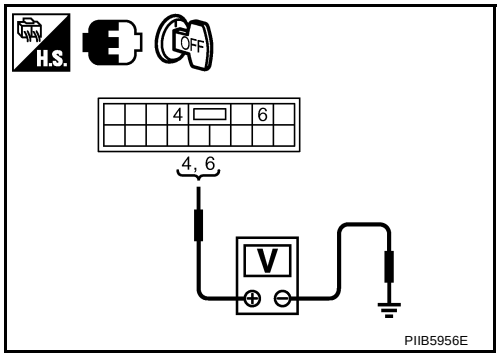

OK or NG

OK >> Key cylinder switch circuit is OK.
NG >> GO TO 2.

2. CHECK HARNESS CONTINUITY

1. Disconnect power window main switch and front door key lock assembly (driver side) connector.
2. Check continuity between power window main switch connector and front door lock assembly (driver side) connector.

A		B		Continuity
Power window main switch connector	Terminal	Front door lock assembly (driver side) connector	Terminal	
D10	4	D14	6	Yes
	6		5	

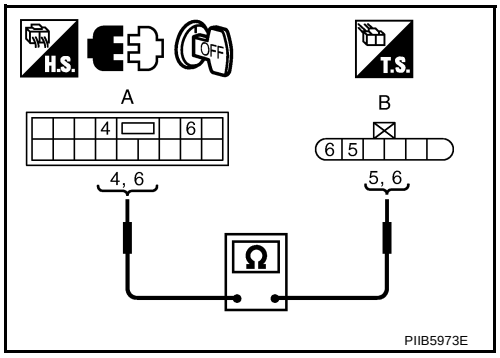

OK or NG

OK >> GO TO 3.
NG >> Repair or replace harness.

3. CHECK DOOR KEY CYLINDER SWITCH GROUND

Check continuity between front door lock assembly (driver side) connector ground.

Front door lock assembly (driver side) connector	Terminal		Continuity
D14	4	Ground	Yes

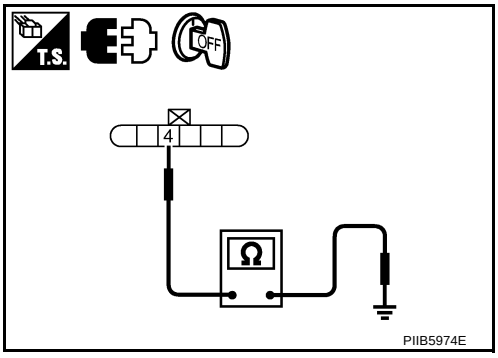

OK or NG

OK >> GO TO 4.
NG >> Repair or replace harness.

4. CHECK DOOR KEY CYLINDER SWITCH

Check front door lock assembly (driver side).

Terminal		Key position	Continuity
Front door lock assembly (driver side)			
5	4	Unlock	Yes
		Neutral / Lock	No
6		Lock	Yes
		Neutral / Unlock	No

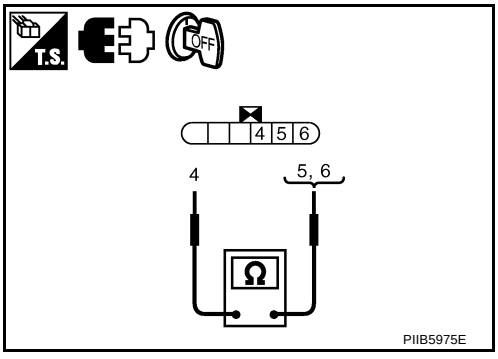

OK or NG

OK >> INSPECTION END.
NG >> Replace front door key cylinder (driver side) switch.

INTELLIGENT KEY SYSTEM

PFP:285e2

Component Parts and Harness Connector Location

NIS001X7

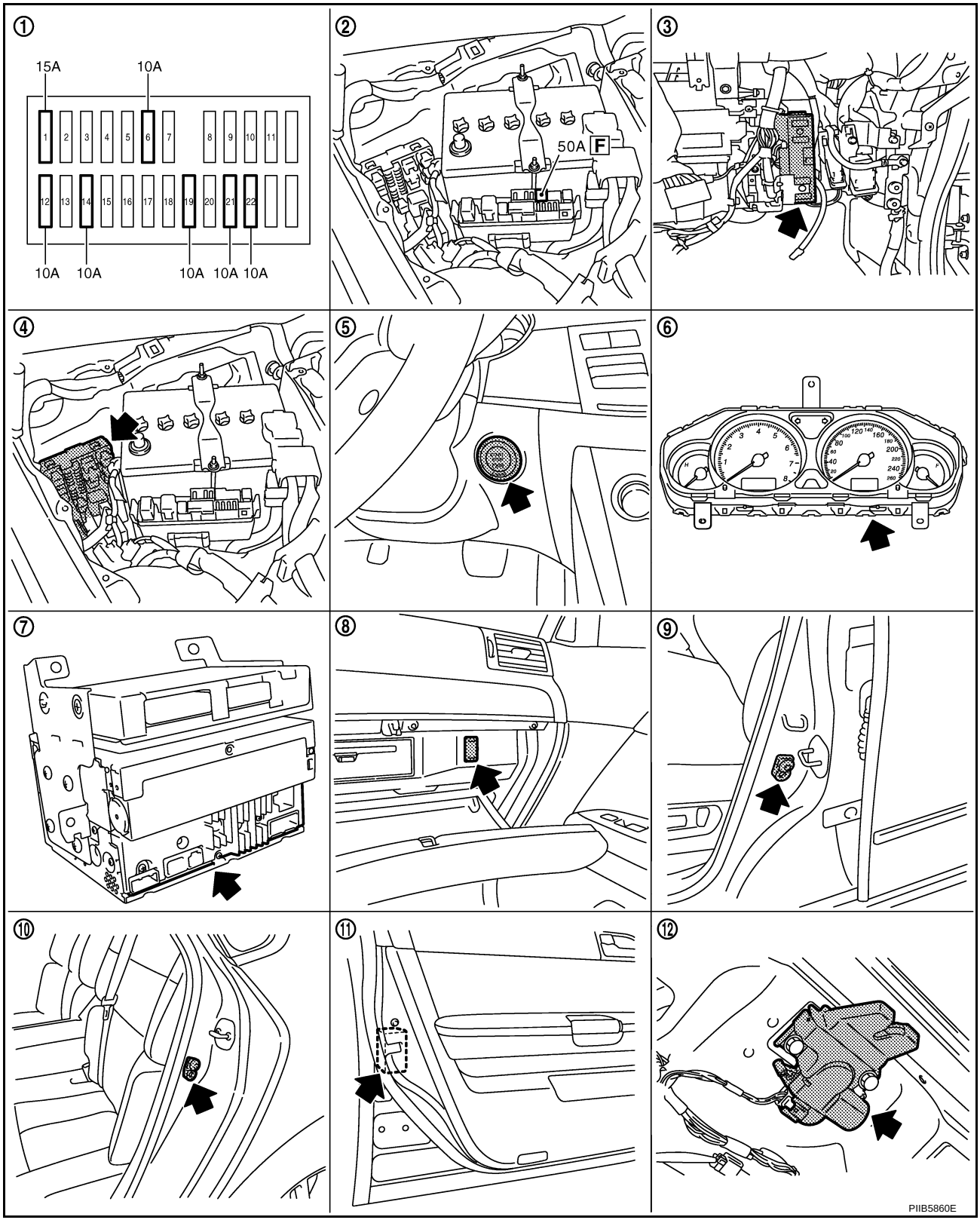

1. Fuse block (J/B) fuse layout
2. Fuse and fusible link box
3. BCM M1, M2, M3 (View with instrument lower panel RH removed)
4. IPDM E/R E9
5. Push-button ignition switch M27
6. Combination meter M52

7. Unified meter and A/C amp M64, M65
8. Trunk opener cancel switch M99
9. Front door switch (Driver side) B11
10. Rear door switch LH B53
11. Front door lock assembly D14 (Unlock sensor)
12. Trunk lid lock assembly T106 (Trunk room lamp switch)

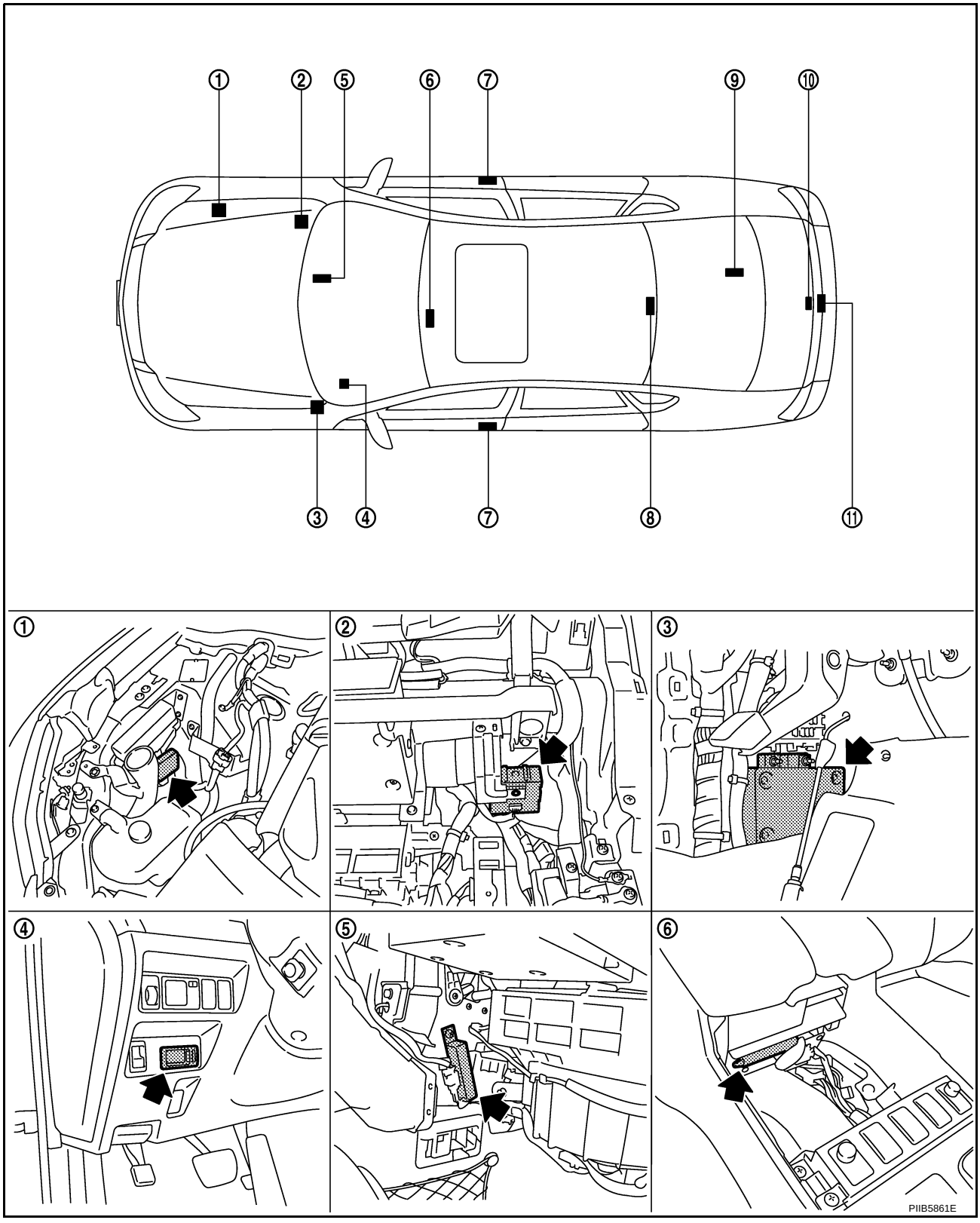
①
②
⑤
⑥
⑦
⑨
⑩
③
④
⑦
⑧
⑪
①
②
③
④
⑤
⑥
PIIB5861E

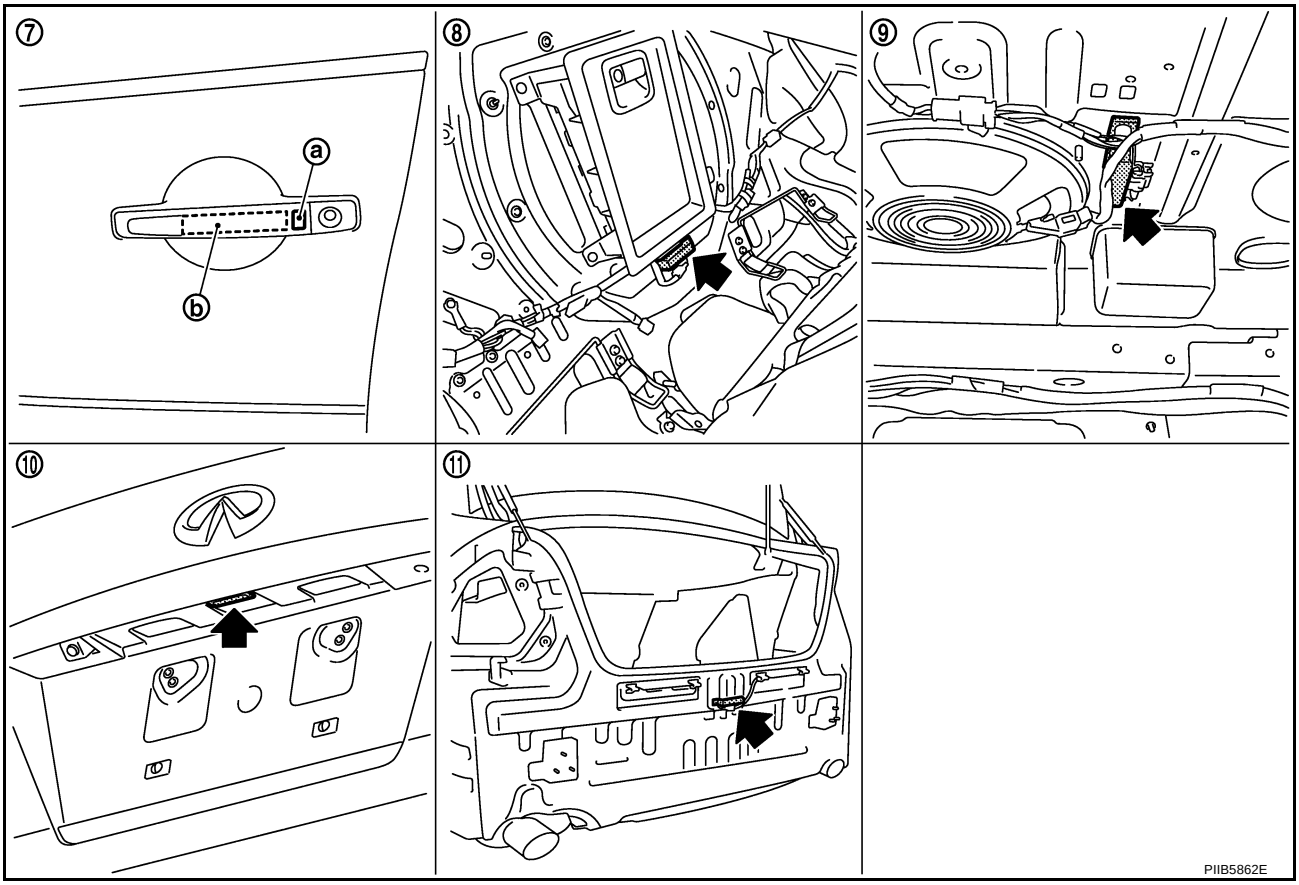

1. Warning buzzer E37 (Engine room)
2. Remote keyless entry receiver M89 (View with instrument lower panel RH removed)
3. Intelligent key unit M32, M33 (View with dash side finisher LH removed)
4. Key slot M14
5. Inside key antenna M83 (Instrument center)
6. Inside key antenna M142 (Console)
7. a: Request switch (Front outside handle) D15
   b: Outside key antenna D15
8. Inside key antenna B45 (Rear seat)
9. Inside key antenna B132 (Trunk room)
10. Trunk opener request switch T107
11. Outside key antenna B121 (Trunk room)

System Description

NIS001X8

- The Intelligent Key system is a system that makes it possible to lock and unlock the door locks (door lock/unlock function), open the trunk (trunk open function), and start the engine (engine start function) by carrying around the Intelligent Key (without some key operation), which operates based on the results of electronic ID verification using two-way communications between the Intelligent Key and the vehicle (Intelligent Key unit).

  CAUTION:
  The driver should always carry the Intelligent Key
- Operation of the remote controller buttons on the Intelligent Key also provides the same functions as the remote controller entry system. (Remote keyless entry functions)
- If an action that does not meet the operating conditions of the Intelligent Key system is taken, the buzzer goes off to inform the driver. (Warning chime functions)
- When a door lock is locked, unlocked or trunk open with request switch or remote controller button operation, the hazard lamps flash and the Intelligent Key warning buzzer or horn sounds (Hazard and buzzer/horn reminder function).
- Even if the Intelligent Key battery is completely discharged, the door locks can be locked and unlocked with the mechanical key built into the Intelligent Key, and then initiates engine by inserting Intelligent Key into key slot.
- The settings for each function can be changed with the CONSULT-II.
- If an Intelligent Key is lost, a new Intelligent Key can be registered. A maximum of 4 Intelligent Keys can be registered.
- It has been made possible to diagnose the system and register an Intelligent Key with the CONSULT-II.

DOOR LOCK/UNLOCK/TRUNK OPEN FUNCTION

Only when pressing the request switch, it is possible to lock and unlock the door and open the trunk by carrying around the Intelligent Key (without some key operation).

System Diagram

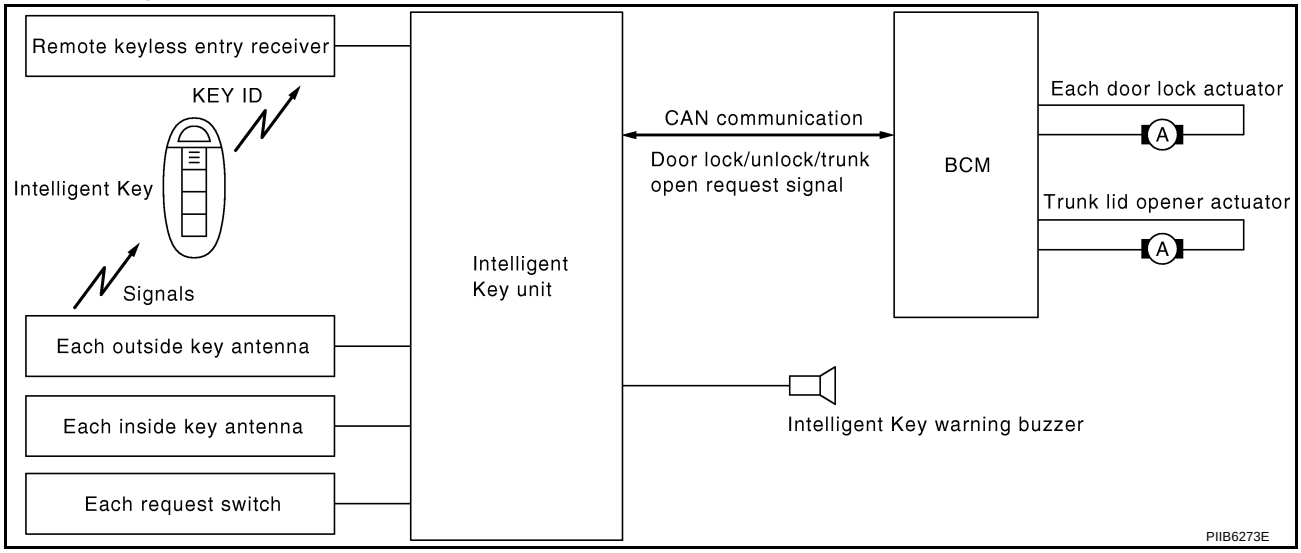

Operation Description/Door Lock/Unlock

- When the Intelligent Key unit detects that each door request switch is pressed, it starts the outside key antenna and inside key antenna corresponding to the pressed door request switch and sends the request signal to the Intelligent Key. And then, make sure that the Intelligent Key is near the door.
- If the Intelligent Key is within the outside key antenna detection area, it receives the request signal and sends the key ID signal to the Intelligent Key unit via remote keyless entry receiver.
- Intelligent Key unit receives the key ID signal and compares it with the registered key ID.
- If the key ID check result is OK, the Intelligent Key unit sends the door lock/unlock request signal to BCM (Body control module) via CAN communication line.
- Intelligent Key unit sends the door lock/unlock signal and sounds Intelligent Key buzzer warning (lock: 1 time, unlock: 2 times) at the same time.

- When BCM receives the door lock/unlock signal, it operates door lock actuator and flashes the hazard lamp (lock: 1 time, unlock: 2 times) at the same time as a reminder.

Operation Description/Trunk Open

- When the Intelligent Key unit detects that trunk open request switch is pressed, it starts the outside key antenna (trunk room) and inside key antenna corresponding to the pressed trunk open request switch and sends the request signal to the Intelligent Key. And then, make sure that the Intelligent Key is near the trunk.
- If the Intelligent Key is within the outside key antenna (trunk room) detection area, it receives the request signal and sends the key ID signal to the Intelligent Key unit via remote keyless entry receiver.
- Intelligent Key unit receives the key ID signal and compares it with the registered key ID.
- If the key ID check result is OK, the Intelligent Key unit sends trunk open request signal to BCM (Body control module) via CAN communication line.
- Intelligent Key unit sends the trunk open request signal and sounds Intelligent Key warning buzzer 4 times at the same time.
- When BCM receives the trunk open request signal, it operates the trunk lid opener actuator and opens the trunk.

Operation Condition

If the following conditions are not satisfied, door lock/unlock or trunk open operations are not performed even if the request switch is operated.

Each request switch operation	Operation condition
Lock operation	● All doors are closed ● Ignition switch is in OFF position ● Intelligent Key is out of key slot ● Intelligent Key is outside the vehicle ● Intelligent Key is within outside key antenna detection area
Unlock Operation	● Intelligent Key is outside the vehicle ● Intelligent Key is within outside key antenna detection area *
Trunk open operation	● Intelligent Key is within outside key antenna (trunk room) detection area* ● Trunk cancel switch is ON ● Key reminder functions operate (trunk)

*: Even with a registered Intelligent Key remain inside the vehicle, door locks can be unlock from outside of the vehicle with a spare Intelligent Key as long as key IDs are different.

Outside Key Antenna Detection Area

The outside key antenna detection area of door lock/unlock function is in the range of approximately 80 cm (31.50 in) surrounding the driver and passenger door handles (1). The outside key antenna detection area of trunk open function is in the range of approximately 80 cm (31.50 in) surrounding Trunk opener request switch (2). However, this operating range depends on the ambient conditions.

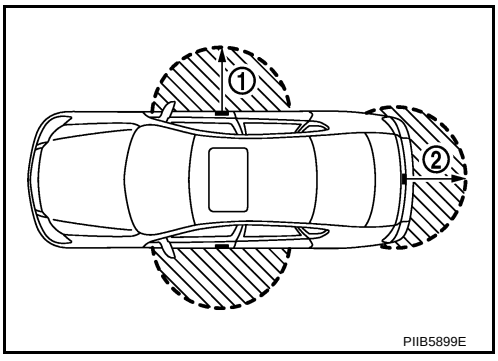

Key Reminder Function

Key reminder functions have the following 3 functions.

Key remainder function	Operation condition	Operation
Driver door close*	Right after driver side door is closed under the following conditions ● Door lock operation is performed ● Driver side door is opened ● Driver side door is in unlock state	All doors unlock
Door is open or closed	Right after all doors are closed under the following conditions ● Intelligent Key is inside the vehicle ● Any door is opened ● All doors are locked by door lock and unlock switch or door lock knob	● All doors unlock ● Honk Intelligent Key warning buzzer
Trunk is closed	Right after trunk is closed under the following conditions ● Intelligent Key is inside trunk room ● all doors are closed ● all doors are locked	● Trunk open ● Honk Intelligent Key warning buzzer

*:If the door closing impact shocks the door lock knob, or contacts against baggage with the door lock knob might activate the door locks accidentally but unlock operation will be perform at these cases.

CAUTION:

- **The above function operates when the Intelligent Key is inside the vehicle. However, there may be times when the Intelligent Key cannot be detected, and this function will not operate when the Intelligent Key is on the instrument panel, rear parcel shelf, or in the glove box. Also, this system sometimes does not operate if the Intelligent Key is in the door pocket for the open door.**
- **When the key reminder function is operated when the trunk is open/closed and the buzzers sound, if the following operations are performed, the key reminder function is cleared and buzzer sounds are stopped.**
  - **Remote controller door lock button operation of Intelligent Key**
  - **Remote controller door unlock button operation of Intelligent Key**
  - **When the trunk is closed, the Intelligent Key is not inside the vehicle**
  - **When any door is open**

Selective Unlock Function

When an LOCK signal is sent from door request switch (driver side or passenger side), all doors will be locked.
When an UNLOCK signal is sent from door request switch (driver side or passenger side) once, driver's door will be unlocked.
Then, if an UNLOCK signal is sent from door request switch (driver side and passenger side) again within 5 seconds, all other door will be unlocked.

Hazard and Buzzer Reminder Function

During lock, unlock, or trunk opening operation by each request switch, the hazard warning lamps and Intelligent Key warning buzzer will flashes or honk as a reminder.
When doors are locked, unlocked or trunk open by each request switch, Intelligent Key unit honks Intelligent Key warning buzzer as a reminder and sends hazard request signal to BCM via CAN communication line.
BCM flashes hazard warning lamps as a reminder.

Operating function of hazard and buzzer reminder

Operation	Hazard warning lamp flash	Intelligent Key warning buzzer honk
Unlock	Once	Once
Lock	Twice	Twice
Trunk open	—	Fourth

How to change hazard and buzzer reminder mode

With CONSULT-II

Hazard and buzzer reminder can be changed using “HAZARD ANSWER BACK”, “ANSWER BACK WITH I-KEY LOCK” and “ANSWER BACK WITH I-KEY UNLOCK” mode in “WORK SUPPORT”.Refer to BL-83, "WORK SUPPORT" .

Auto Door Lock Function

When all doors are locked, ignition switch is in OFF position and key switch is OFF (Intelligent Key is not inserted in key slot), doors are unlocked with door request switch
When Intelligent Key unit does not receive the following signals within 60 seconds, all doors are locked.

- Door switch is ON (door is opened)
- Door is locked
- Ignition switch is ON (ignition switch is pressed)
- Key switch is ON (Intelligent Key is inserted in key slot)

Auto door lock mode can be changed by “AUTO RELOCK TIMER” mode in “WORK SUPPORT”. Refer to BL-83, "WORK SUPPORT" .

Room Lamp Operation

When the following conditions are met:

- Condition of interior lamp switch is in DOOR position
- Door switch OFF (all the doors are closed)

Intelligent Key system turns on interior lamp (for 30 seconds) by receiving UNLOCK signal from door request switch. For detailed description, refer to LT-270, "ROOM LAMP TIMER OPERATION" .

List of Operation Related Parts

Parts marked with × are the parts related to operation.

Door lock/trunk open function	Intelligent Key	Key slot	Remote keyless entry receiver	Door switch	Trunk room lamp switch	Door request switch (Driver, Passenger)	Trunk opener request switch	Door lock actuator	Trunk lid opener actuator	Inside key antenna	Outside key antenna (Driver, Passenger)	Outside key antenna (Trunk)	Intelligent Key warning buzzer	Intelligent Key unit	CAN communication system	BCM	Hazard warning lamp	Trunk lid opener cancel switch	Push-button ignition switch
Door lock/unlock function by request switch	×	×	×	×		×		×		×	×			×	×	×			
Trunk open function by the trunk opener request switch	×	×	×		×		×		×	×		×		×	×	×		×	
Hazard and buzzer reminder function for door lock/unlock operation													×	×	×	×	×		
Buzzer reminder for trunk open operation													×	×	×	×			
Key reminder function	×	×	×	×		×		×		×	×	×	×	×	×	×	×		
Selective unlock function by request switch (Driver side)	×					×		×		×	×			×	×	×			
Selective unlock function by request switch (Passenger side)	×					×		×		×	×			×	×	×			
Auto door lock function	×	×		×		×		×						×	×	×			×

REMOTE KEYLESS ENTRY FUNCTIONS

The Intelligent Key has the same functions as the remote control entry system. Therefore, it can be used in the same manner as the remote controller by operating the door lock/unlock button and trunk open button.

System Diagram

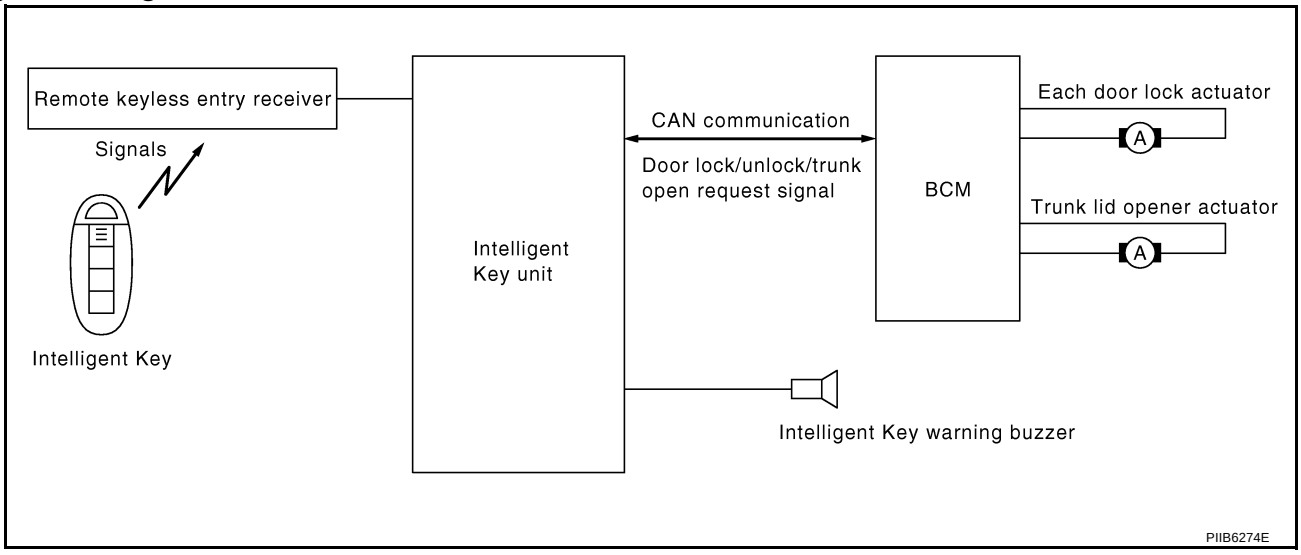

Operation Description/Door Lock/Unlock Function

- When door lock/unlock button of the Intelligent Key is pressed, lock signal or unlock signal is sent from Intelligent Key to Intelligent Key unit via remote keyless entry receiver.
- Intelligent Key unit sends the door lock/unlock request signal to BCM via CAN communication line.
- Intelligent Key unit sends the door lock/unlock signal to BCM.
- When BCM receives the door lock/unlock signal, it operates door lock actuator, flashes the hazard lamp (lock: 1 time, unlock: 2 times) and horn chirp signal to IPDM E/R at the same time as a reminder.
- IPDM E/R honks horn (lock: 1 time) as a reminder

Operation Description/Trunk Open Function

- When trunk button of the Intelligent Key is pressed, the trunk open signal is sent from the Intelligent Key to the Intelligent Key unit via remote keyless entry receiver.
- Intelligent Key unit sends trunk open request signal to BCM via CAN communication line.
- When BCM receives the trunk open request signal, it operates the trunk lid opener actuator and opens the trunk.

Operation Condition

Remote controller operation	Operation condition	Operation
Lock	● All doors closed	All doors lock
Unlock	● Intelligent Key is out of key slot	All doors unlock
Trunk open	● Press and hold the trunk open button for 0.5 second or more	Trunk open

Operation Area

- Operating Range
- To ensure the Intelligent Key works effectively, use within 100 cm range of each doors, however the operable range might be differ by surroundings.

Selective Unlock Function

When an LOCK signal is sent from Intelligent Key, all doors will be locked.
When an UNLOCK signal is sent from Intelligent Key once, driver's door will be unlocked.
Then, if an UNLOCK signal is sent from Intelligent Key again within 5 seconds, all other door will be unlocked.

Hazard and Horn Reminder Function

When doors are locked or unlocked by Intelligent Key, Intelligent Key unit sends hazard and horn request signal to BCM via CAN communication line.
BCM flashes hazard warning lamps as a reminder and sends horn chirp signal to IPDM E/R. IPDM E/R sounds horn as a reminder.
The hazard and horn reminder has a horn chirp mode (C mode) and a non-horn chirp mode (S mode).

Operating function of hazard and horn reminder

	C mode			S mode		
Intelligent Key operation	Lock	Unlock	Trunk open	Lock	Unlock	Trunk open
Hazard warning lamp flash	Twice	Once	—	Twice	—	—
Horn sound	Once	—	—	—	—	—

Hazard and horn reminder does not operate if any door switch is ON (any door is OPEN).

How to change hazard and horn reminder mode

With CONSULT-II

Hazard and horn reminder can be changed using “HORN WITH KEYLESS LOCK” and “HAZARD ANSWER BACK” mode in “WORK SUPPORT”.Refer to BL-83, "WORK SUPPORT" .

Without CONSULT-II

When LOCK and UNLOCK signals are sent from the Intelligent Key for more than 2 seconds at the same time, the hazard and horn reminder mode is changed and hazard warning lamp flashes and horn sounds as follows:

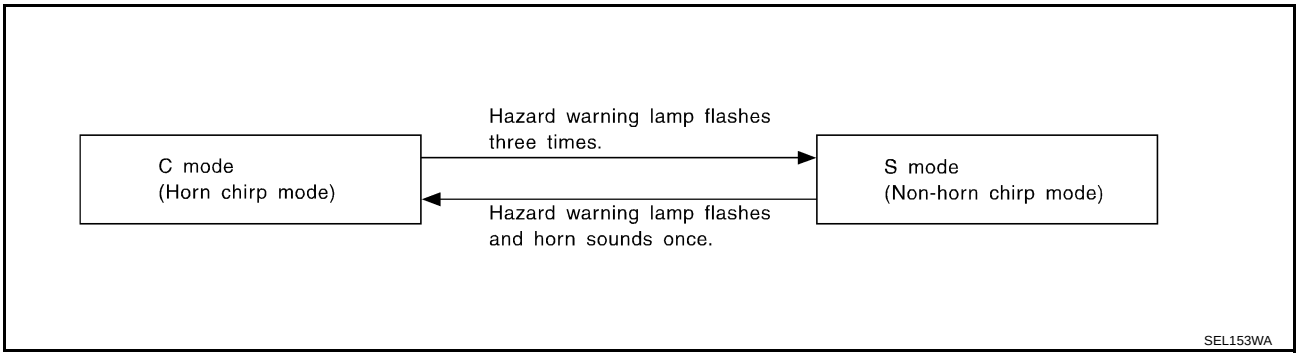

Auto Door Lock Function

When all doors are locked, ignition switch is OFF (ignition switch is not pressed) and key switch is OFF (Intelligent Key is not inserted in key slot), doors are unlocked with Intelligent Key button. When Intelligent Key unit does not receive the following signals within 30 seconds, all doors are locked.

- Door switch is ON (door is opened)
- Door is locked
- Ignition switch is ON
- Key switch is ON (Intelligent Key is inserted in key slot)

Auto door lock mode can be changed by “AUTO RELOCK TIMER” mode in “WORK SUPPORT”. Refer to BL-83, "WORK SUPPORT" .

Panic Alarm Function

When ignition switch is OFF (ignition switch is not pressed) and key switch is OFF (Intelligent Key is not inserted in key slot), Intelligent Key unit receives PANIC ALARM signal from Intelligent Key.
Intelligent Key unit sends alarm request signal to BCM via CAN communication line.
BCM turns on and off headlamp intermittently and sends theft warning horn signal to IPDM E/R. Then, IPDM E/R turns on and off horn intermittently.
The headlamp flashes and the horn sounds intermittently.
The alarm automatically turns off:

- After 25 seconds
- When Intelligent Key unit receives any signal from Intelligent Key
- When door request switch is pressed (Intelligent Key is within the outside key antenna detection area)

Panic alarm function mode can be changed by “PANIC ALARM DELAY” mode in “WORK SUPPORT”. Refer to BL-83, "WORK SUPPORT" .

Keyless Power Window Down (Open) Function

All power windows open when the unlock button on Intelligent Key is activated and kept pressed for more than 3 seconds with the ignition switch OFF. The windows keep opening if the unlock button is continuously pressed.
The power window opening stops when the following operations are performed:

- When the unlock button is kept pressed more than 15 seconds.
- When the ignition switch is turned ON while the power window opening is operated.
- When the unlock button is released.

While retained power operation activate, Keyless power window down (open) Function cannot be operated.
Keyless power window down operation mode can be changed by “P/W DOWN DELAY” mode in “WORK SUPPORT”. Refer to BL-83, "WORK SUPPORT" .

Room Lamp Illumination Operation

When the following conditions are met:

- Condition of interior lamp switch is in DOOR position
- Door switch OFF (all the doors are closed)

Intelligent Key system turns on interior lamp (for 30 seconds) by receiving UNLOCK signal from Intelligent Key. For detailed description, refer to LT-270, "ROOM LAMP TIMER OPERATION" .

List of Operation Related Parts

Parts marked with × are the parts related to operation.

Remote keyless entry functions	Intelligent Key	Key slot	Door request switch (Driver, Passenger)	Door switch	Trunk room lamp switch	Door lock actuator	Trunk lid opener actuator	Intelligent Key warning buzzer	Intelligent Key unit	CAN communication system	BCM	Combination meter	Hazard warning lamp	Horn	IPDM E/R	Head lamp
Door lock/unlock function by remote control button	×	×		×		×			×	×	×					
Trunk open function by remote control button	×	×			×		×		×	×	×					
Hazard and horn reminder function	×							×	×	×	×	×	×	×	×	
Selective unlock function	×			×		×			×	×	×					
Keyless power window down (open) function	×	×							×	×	×					
Auto door lock function	×	×		×					×	×	×					
Panic alarm function	×		×						×	×	×			×	×	×

ENGINE START FUNCTION

Refer to BL-127, "INTELLIGENT KEY SYSTEM/ENGINE START FUNCTION" .

WARNING FUNCTION

Operation Description

The warning function are as follows and are given to the user as warning information and warnings using combinations of Intelligent Key warning buzzer, KEY warning lamp, key slot illumination and combination meter display in combination meter.

- Intelligent Key system malfunction
- OFF position warning
- P position warning
- ACC warning
- Take away warning
- Door lock operation warning
- Key warning
- Intelligent Key insert information
- Engine start information
- Steering lock information
- Intelligent key low battery warning
- Key ID warning

Operation Condition

Once the following condition from below is established, alert or warning will be executed.

Warning/Information functions		Operation procedure
Intelligent Key system malfunction		When a malfunction is detected on Intelligent Key unit, “KEY” warning lamp will illuminates.
OFF position warning	For internal	● Ignition switch: ACC position. ● Door switch (driver side): ON (Door is open).
	For external	OFF position warning (For internal) is in active mode, driver side door has been closed. **NOTE:** OFF position (For external) active only when each of the sequence has occurred as below: P position warning → ACC warning → OFF position warning (For internal) → OFF position warning (For internal)
P position warning		● Shift position: Except P position ● Engine is running to stopped (Ignition switch is ON to ACC)
ACC warning		● During P position warning is in active mode, shift position has changed P position. ● Ignition switch: Except OFF position.
Take away warning	Door is open to close	● Ignition switch: Except OFF position. ● Door switch: ON to OFF (Door is open to close). ● Intelligent Key can not be detected inside the vehicle.
	Door is open	● Door switch: ON (Door is open) ● Key ID vilification every 5 seconds when registered Intelligent Key can not be detected inside the vehicle.
	Push-ignition switch operation	● Ignition switch: Except OFF position. ● Press ignition switch. ● Intelligent Key can not be detected inside the vehicle.
	Take away through window	● Engine is running. ● Key ID vilification every 30 seconds when registered Intelligent Key can not be detected inside the vehicle. ● After vehicle speed verification, the registered Intelligent Key can not be detect inside the vehicle.
	Intelligent Key is removed from key slot	● When Intelligent Key is removed from key slot, Intelligent Key can not be detected inside the vehicle.
Door lock operation warning	Request switch operation	When request switch is pushed (lock operation) under the following conditions. ● Door switch: ON (Any door is open). ● Intelligent Key is inside vehicle.
	Intelligent Key button operation	When Intelligent Key bottom is pushed (lock operation) under the following conditions. ● Door switch: ON (Any door is open). ● For 3 seconds after Intelligent Key is removed from key slot.
Key warning		● Ignition switch is OFF position. ● Driver side door switch: ON (Driver side door is open). ● Intelligent Key is inserted in key slot.
Intelligent Key insert information		● Door switch: ON to OFF (Door is open to close). ● Ignition switch: OFF to ON position. ● Intelligent Key is out of key slot. ● Intelligent Key can not be detected inside the vehicle.

Warning/Information functions		Operation procedure
Engine start information	Ignition switch is ON position	● Ignition switch: ON position. ● Shift position: P position ● Engine is stopped
	Ignition switch is except ON position	● Ignition switch: Except ON position. ● Shift position: P position ● Intelligent Key is inserted in key slot. ● Intelligent Key can be detected inside the vehicle.
Steering lock information		When steering lock can not be released after ignition switch is turned ON.
Intelligent Key low battery warning		When Intelligent Key is low battery, Intelligent Key unit is detected after ignition switch is turned ON.
Key ID warning		When registered Intelligent Key can not be detected inside the vehicle after ignition switch is turned ON.

Warning Method

The following table shows the alarm or warning methods with chime.
Meter display, “KEY” indicator or key slot illumination when the warning conditions are met.

Warning/Information functions		“KEY” warning lamp	Combination meter display	Key slot illumination	Warning chime	
					Combination meter buzzer	Intelligent Key warning buzzer
Intelligent Key system malfunction		Illuminate	—	—	—	—
OFF position warning	For internal	—	—	—	Activate	—
	For external	—	—	—	—	Activate
P position warning		—	 PIIB4765J	—	Activate	—
ACC warning		—	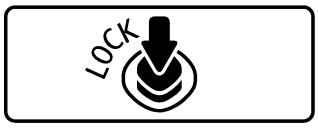 PIIB4766J	—	Activate	—
Take away warning	Door is open to close	—	 PIIB6452E	Flash	Activate	Activate
	Door is open	—		Flash	—	—
	Push-ignition switch operation	—		Flash	Activate	—
	Take away through window	—		Flash	Activate	—
	Intelligent Key is removed from key slot	—		Flash	—	—
Door lock operation warning	Request switch operation	—	—	—	—	Activate
	Intelligent Key operation	—	—	—	—	Activate

Warning/Information functions		"KEY" warning lamp	Combination meter display	Key slot illumination	Warning chime	
					Combination meter buzzer	Intelligent Key warning buzzer
Key warning		—	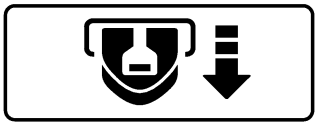 PIIB4769J	Flash	Activate	—
Intelligent Key insert information		—	 PIIB4768J	Flash	—	—
Engine start information	Ignition switch is ON position	—	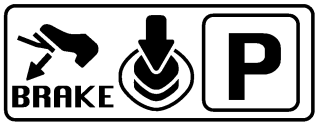 PIIB4771J	—	—	—
	Ignition switch is except ON position	—	 PIIB4770J	—	—	—
Steering lock information		—	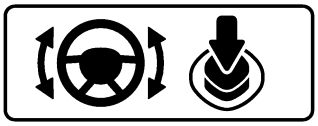 PIIB4772J	—	—	—
Intelligent Key low battery warning		—	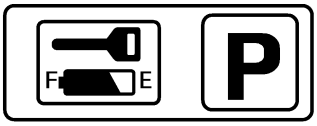 PIIB4774J	—	—	—
Key ID warning		—	 PIIB4773J	—	—	—

List of Operation Related Parts

Parts marked with × are the parts related to operation.

Warning function		Intelligent Key	Key slot	Ignition switch	Door switch	Door request switch	Inside key antenna	Outside key antenna	Intelligent Key warning buzzer	Combination meter warning buzzer	Intelligent Key unit	CAN communication system	BCM	Combination meter display	Key slot illumination	Park position switch	"KEY" warning lamp
Intelligent Key system malfunction											×	×					×
OFF position warning	For internal				×					×	×	×	×				
	For external				×				×		×	×	×				
P position warning				×						×	×	×		×		×	
ACC warning				×						×	×	×		×		×	
Take away warning	Door is open or close	×			×		×		×	×	×	×	×	×	×		
	Door is open	×			×		×				×	×	×	×	×		
	Push-ignition switch operation	×		×			×			×	×	×		×	×		
	Take away through window	×					×			×	×	×		×	×		
	Intelligent Key is removed from key slot	×	×				×				×	×		×	×		
Door lock operation warning		×	×		×	×	×	×	×		×	×	×				
Key warning		×	×		×					×	×	×	×	×	×		
Intelligent Key insert information		×	×	×	×		×				×	×	×	×	×		
Engine start information	Ignition switch is ON position	×	×	×			×				×	×		×		×	
	Ignition switch is except ON position	×	×	×			×				×	×		×			
Steering lock information				×							×	×		×			
Intelligent Key low battery warning		×					×				×	×		×			
Key ID warning		×	×	×			×				×	×		×			

CHANGE SETTINGS FUNCTION

The settings for each function can be changed with the CONSULT-II.

Changing Settings Using CONSULT-II

The settings for the Intelligent Key system functions can be changed using CONSULT-II (WORK SUPPORT). Refer to BL-83, "WORK SUPPORT" .

NOTE:
Once a function setting is changed, it will remain effective even if the battery is disconnected.

INTELLIGENT KEY REGISTRATION

Intelligent Key-ID registration is performed using the CONSULT-II.

CAUTION:

- **After a new Intelligent Key-ID is registered, be sure to check the function.**
- **When registering an additional Intelligent Key-ID, take any Intelligent Keys already registered and Intelligent Keys for any other vehicles out of the vehicle before starting.**

CONSULT-II can be used to check and delete Intelligent Key-IDs.
For future information, see Technical Bulletin.

STEERING LOCK UNIT REGISTRATION

Steering Lock Unit ID Registration

CAUTION:

- **The method for registering a steering lock unit ID depends on the status of the steering lock unit and Intelligent Key unit (new or old unit).**
- **After registration is completed, press ignition switch with an Intelligent Key in the vehicle so that it can be turned, and confirm that it cannot be turned even when ignition switch is pressed without an Intelligent Key in the vehicle.**

For future information, see Technical Bulletin.

CAN Communication System Description

NIS001X9

CAN (Controller Area Network) is a serial communication line for real time application. It is an on-vehicle multiplex communication line with high data communication speed and excellent error detection ability. Many electronic control units are equipped onto a vehicle, and each control unit shares information and links with other control units during operation (not independent). In CAN communication, control units are connected with 2 communication lines (CAN H line, CAN L line) allowing a high rate of information transmission with less wiring. Each control unit transmits/receives data but selectively reads required data only.

CAN Communication Unit

NIS001XA

Refer to LAN-34, "CAN Communication Unit" .

Schematic

NIS001XB

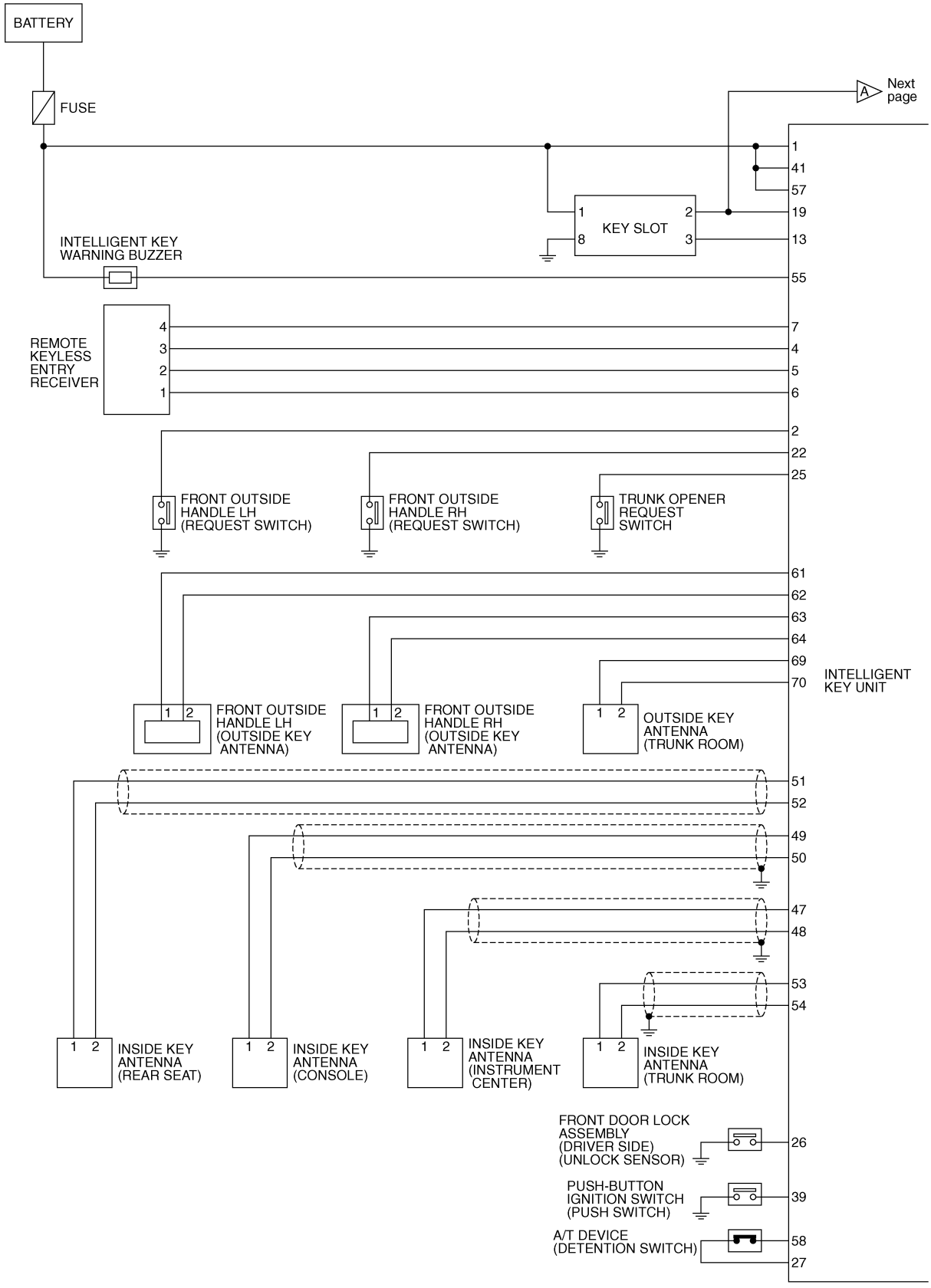

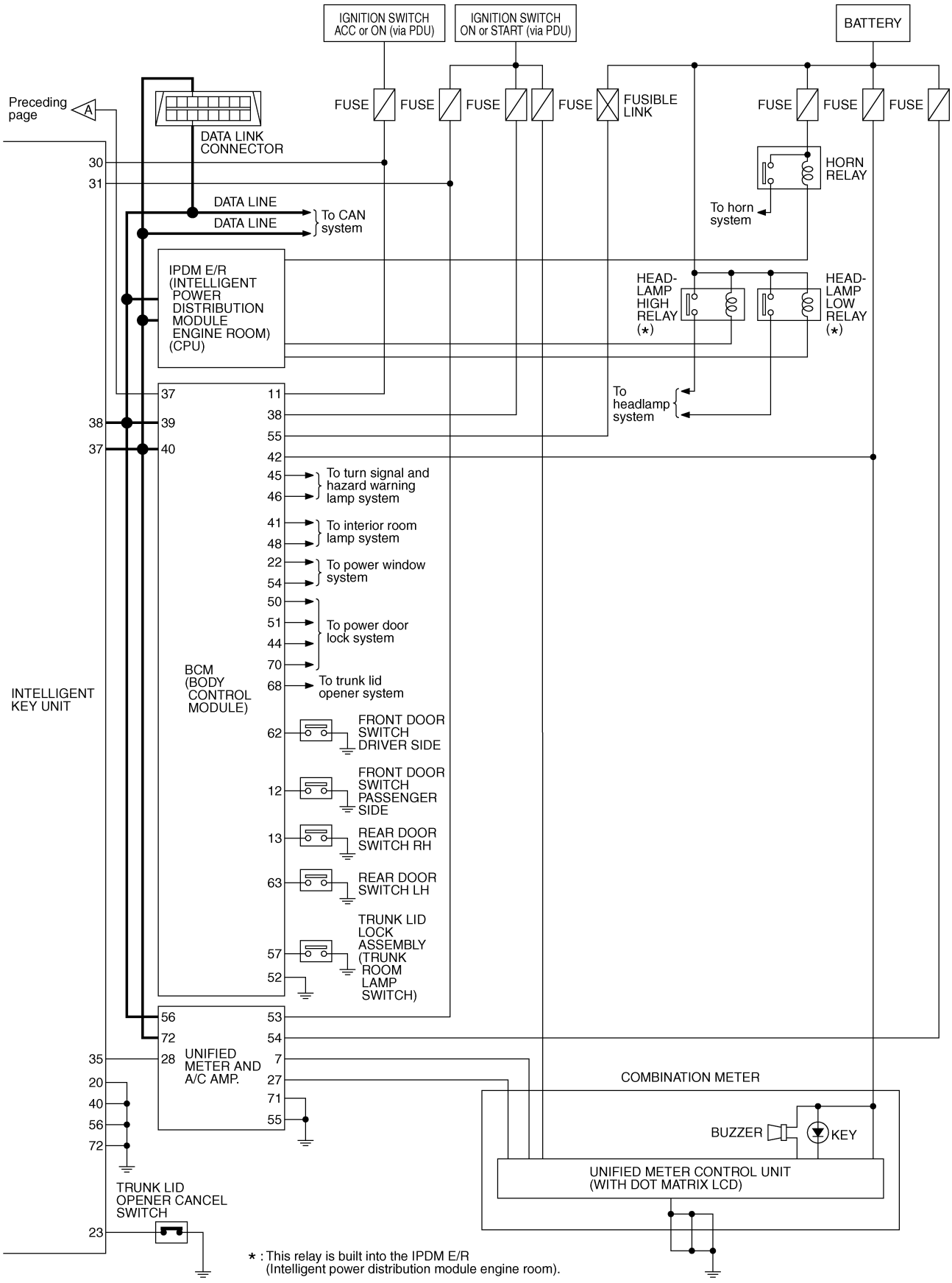
IGNITION SWITCH ACC or ON (via PDU)
IGNITION SWITCH ON or START (via PDU)
BATTERY
Preceding page
A
DATA LINK CONNECTOR
FUSE
FUSIBLE LINK
HORN RELAY
To horn system
DATA LINE
To CAN system
IPDM E/R (INTELLIGENT POWER DISTRIBUTION MODULE ENGINE ROOM) (CPU)
HEAD-LAMP HIGH RELAY (*)
HEAD-LAMP LOW RELAY (*)
To headlamp system
To turn signal and hazard warning lamp system
To interior room lamp system
To power window system
To power door lock system
To trunk lid opener system
BCM (BODY CONTROL MODULE)
INTELLIGENT KEY UNIT
FRONT DOOR SWITCH DRIVER SIDE
FRONT DOOR SWITCH PASSENGER SIDE
REAR DOOR SWITCH RH
REAR DOOR SWITCH LH
TRUNK LID LOCK ASSEMBLY (TRUNK ROOM LAMP SWITCH)
UNIFIED METER AND A/C AMP.
COMBINATION METER
BUZZER
KEY
UNIFIED METER CONTROL UNIT (WITH DOT MATRIX LCD)
TRUNK LID OPENER CANCEL SWITCH
* : This relay is built into the IPDM E/R (Intelligent power distribution module engine room).
TIWT1291E

Wiring Diagram — I/KEY—

NIS001XC

BL-I/KEY-01

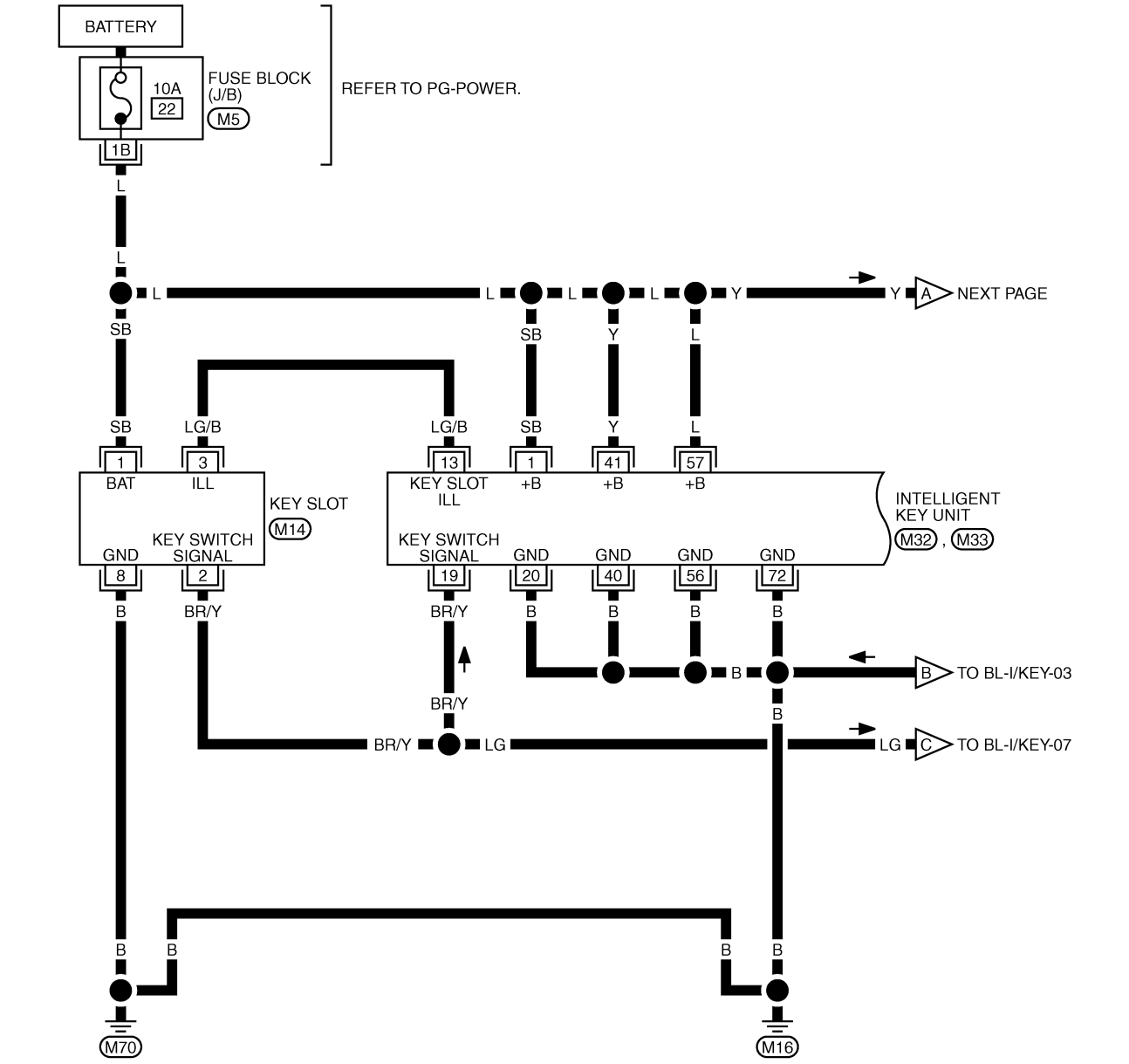

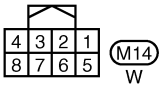

REFER TO THE FOLLOWING.
M5 -FUSE BLOCK-JUNCTION BOX (J/B)

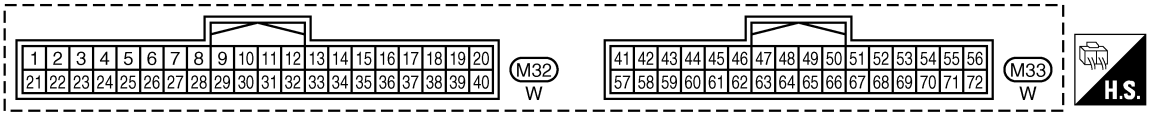

TIWT1292E

BL-I/KEY-02

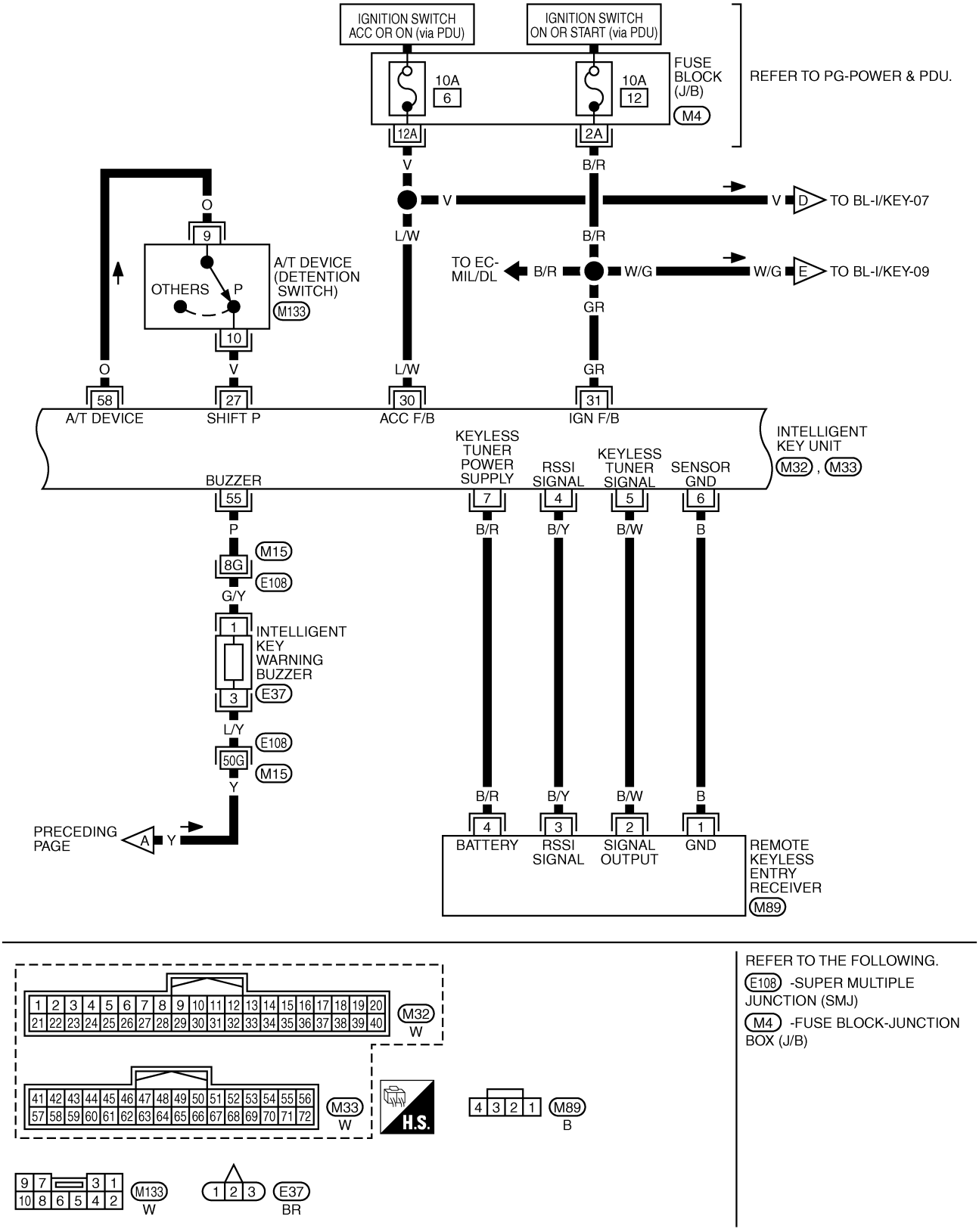

REFER TO THE FOLLOWING.

E108 -SUPER MULTIPLE JUNCTION (SMJ)

M4 -FUSE BLOCK-JUNCTION BOX (J/B)

TIWT1293E

BL-I/KEY-03

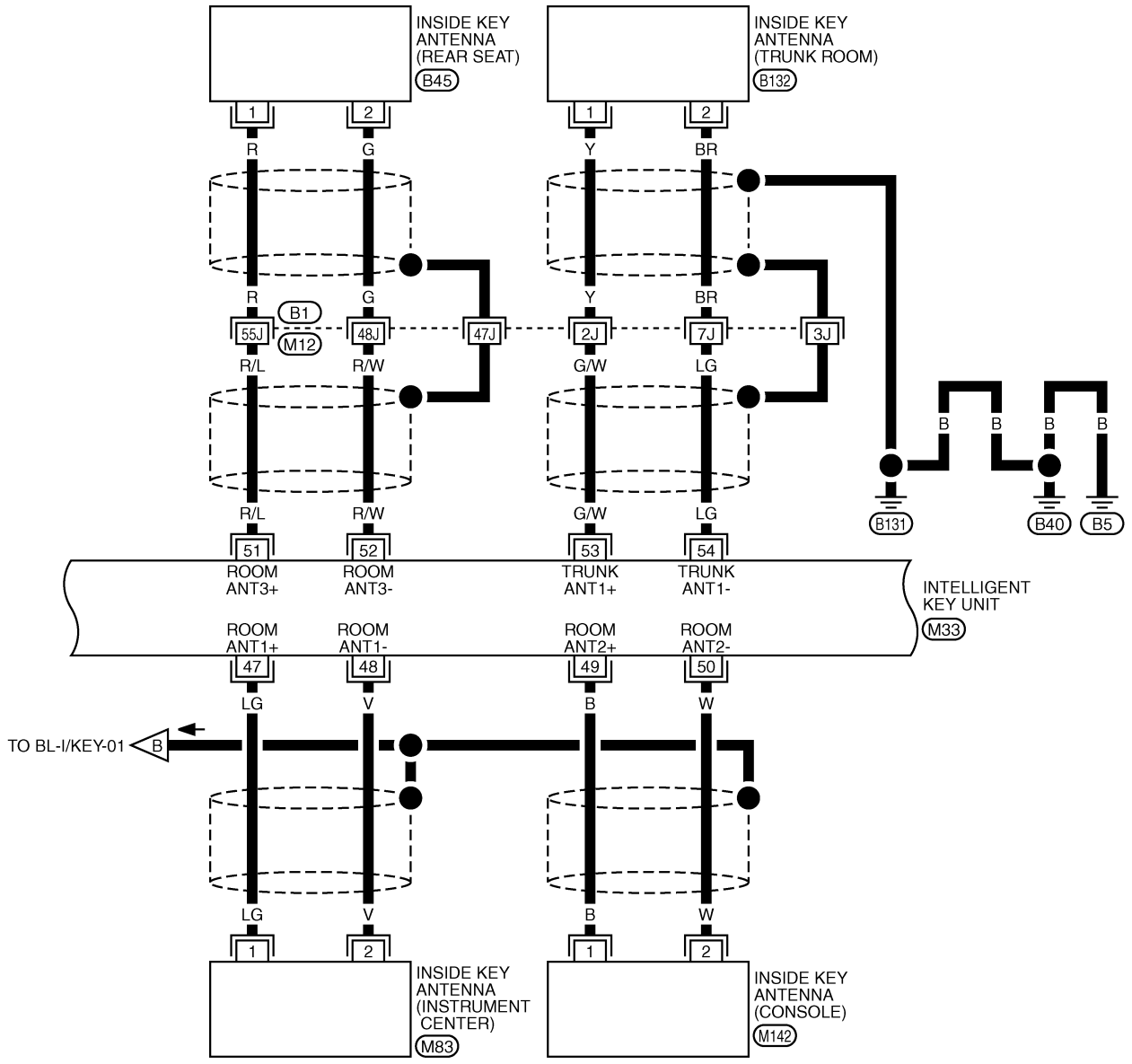

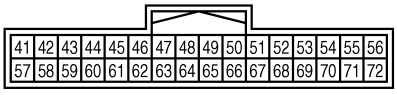

M33
W

2 1 M83 , M142 , B132
GR GR GR

1 2 B45
GR

REFER TO THE FOLLOWING.
B1 -SUPER MULTIPLE JUNCTION (SMJ)

TIWT1294E

BL-I/KEY-04

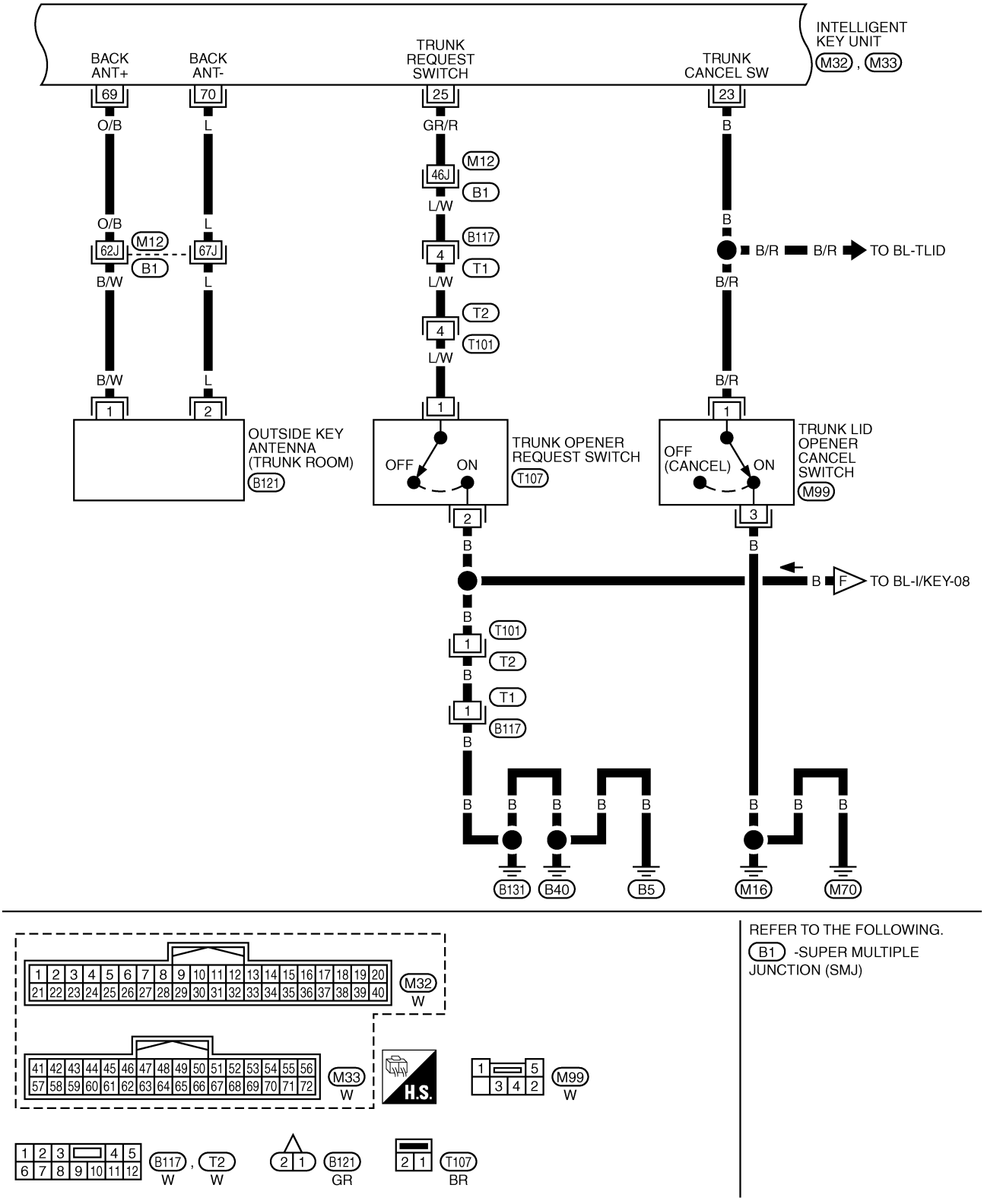
INTELLIGENT KEY UNIT
M32 , M33
BACK ANT+
BACK ANT-
TRUNK REQUEST SWITCH
TRUNK CANCEL SW
69
70
25
23
O/B
L
GR/R
B
M12
46J
B1
L/W
O/B
L
B117
B
62J
M12
67J
4
T1
B/R
B/R
TO BL-TLID
B1
B/W
L
L/W
B/R
T2
4
T101
L/W
B/W
L
B/R
1
2
1
1
OUTSIDE KEY ANTENNA (TRUNK ROOM)
B121
OFF
ON
TRUNK OPENER REQUEST SWITCH
T107
OFF (CANCEL)
ON
TRUNK LID OPENER CANCEL SWITCH
M99
2
3
B
B
B
F
TO BL-I/KEY-08
B
T101
1
T2
B
T1
1
B117
B
B
B
B
B
B
B
B
B131
B40
B5
M16
M70
REFER TO THE FOLLOWING.
B1 -SUPER MULTIPLE JUNCTION (SMJ)
M32
W
M33
W
H.S.
M99
W
B117 , T2
W
W
B121
GR
T107
BR
TIWT1295E

BL-I/KEY-05

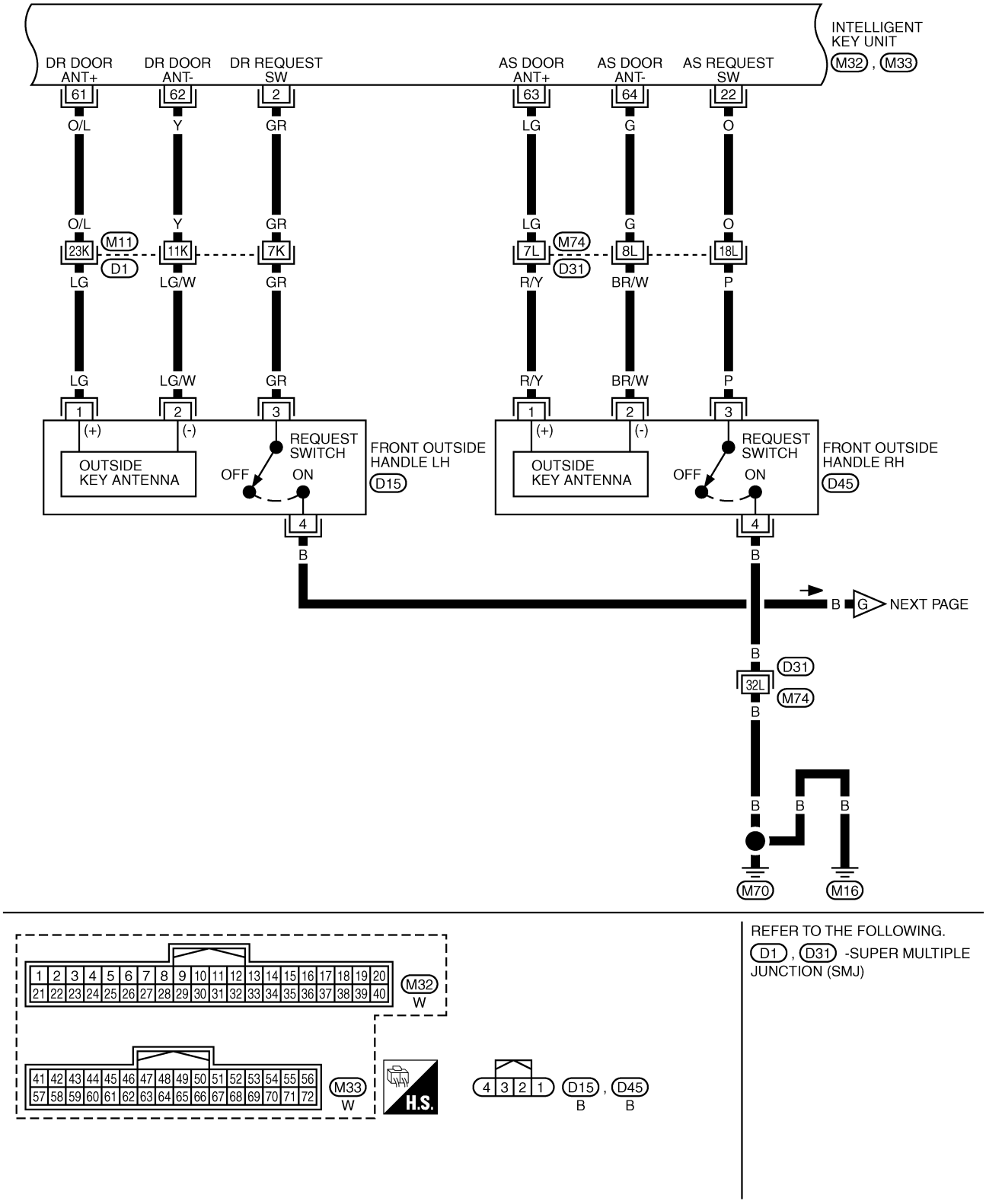
INTELLIGENT KEY UNIT
M32 , M33
DR DOOR ANT+
DR DOOR ANT-
DR REQUEST SW
AS DOOR ANT+
AS DOOR ANT-
AS REQUEST SW
61
62
2
63
64
22
O/L
Y
GR
LG
G
O
23K
M11
D1
11K
7K
7L
M74
D31
8L
18L
LG
LG/W
GR
R/Y
BR/W
P
1
2
3
(+)
(-)
OUTSIDE KEY ANTENNA
REQUEST SWITCH
OFF
ON
FRONT OUTSIDE HANDLE LH
D15
FRONT OUTSIDE HANDLE RH
D45
4
B
NEXT PAGE
32L
M70
M16
M32
W
M33
H.S.
D15 , D45
REFER TO THE FOLLOWING.
D1 , D31 -SUPER MULTIPLE JUNCTION (SMJ)
TIWT1296E

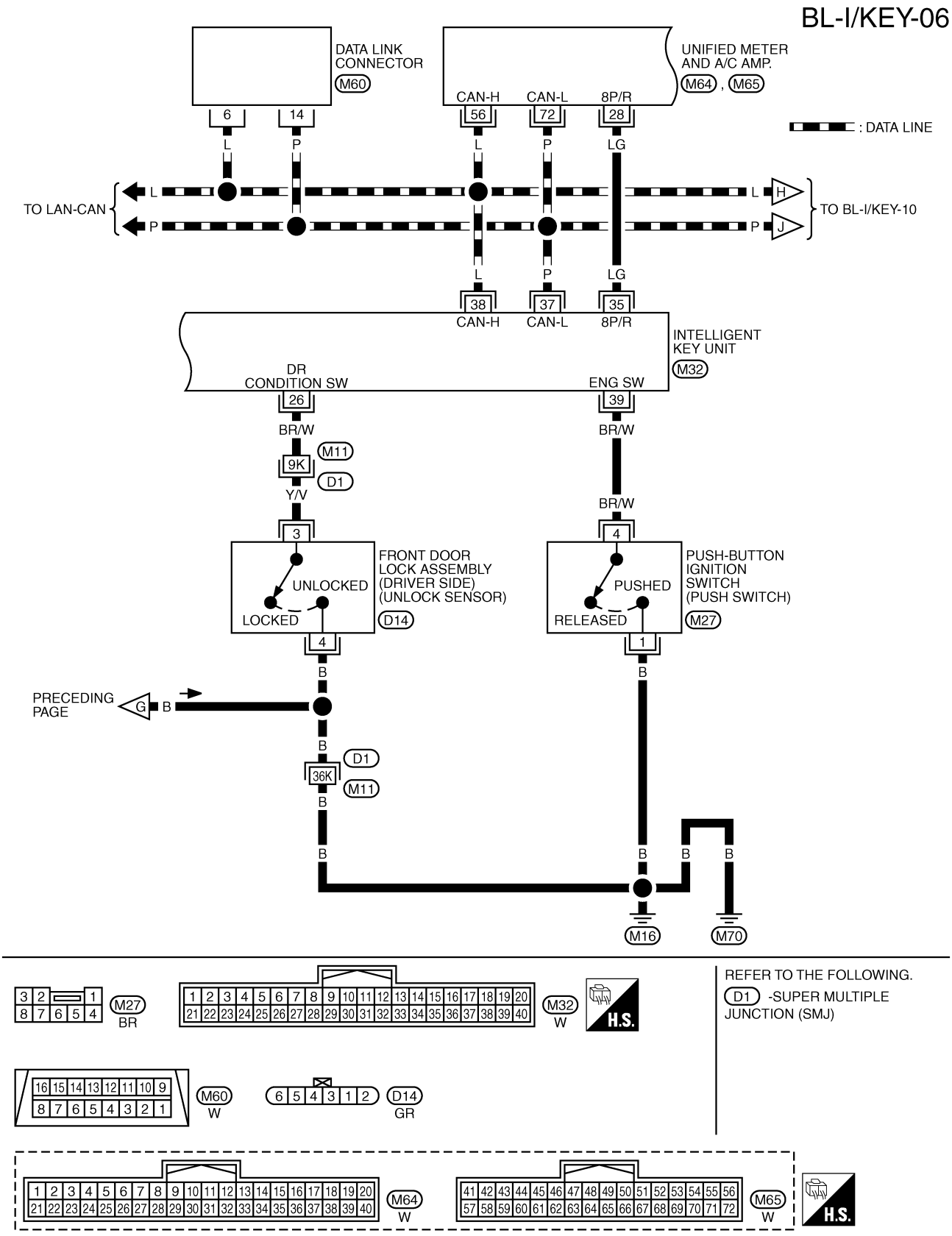
BL-I/KEY-06
DATA LINK CONNECTOR
M60
UNIFIED METER AND A/C AMP.
M64 , M65
CAN-H
CAN-L
8P/R
: DATA LINE
TO LAN-CAN
TO BL-I/KEY-10
INTELLIGENT KEY UNIT
M32
DR CONDITION SW
ENG SW
BR/W
Y/V
M11
D1
FRONT DOOR LOCK ASSEMBLY (DRIVER SIDE) (UNLOCK SENSOR)
UNLOCKED
LOCKED
D14
PUSH-BUTTON IGNITION SWITCH (PUSH SWITCH)
PUSHED
RELEASED
M27
PRECEDING PAGE
M16
M70
M27 BR
M32 W
H.S.
REFER TO THE FOLLOWING.
D1 -SUPER MULTIPLE JUNCTION (SMJ)
M60 W
D14 GR
M64 W
M65 W
TIWT1297E

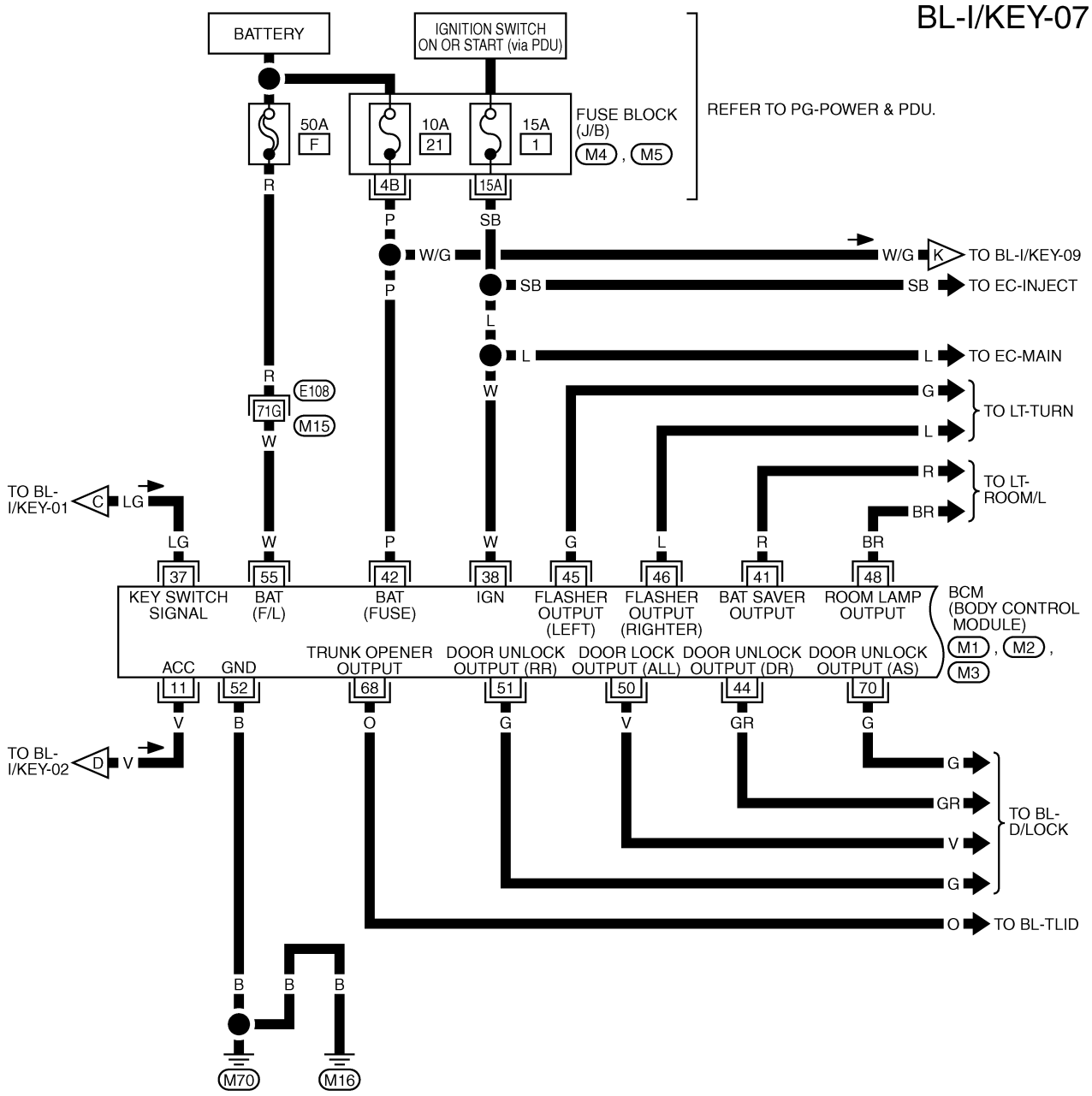

REFER TO THE FOLLOWING.
E108 -SUPER MULTIPLE JUNCTION (SMJ)
M4 , M5 -FUSE BLOCK-JUNCTION BOX (J/B)
M1 , M2 , M3 -ELECTRICAL UNITS

TIWT1298E

BL-I/KEY-08

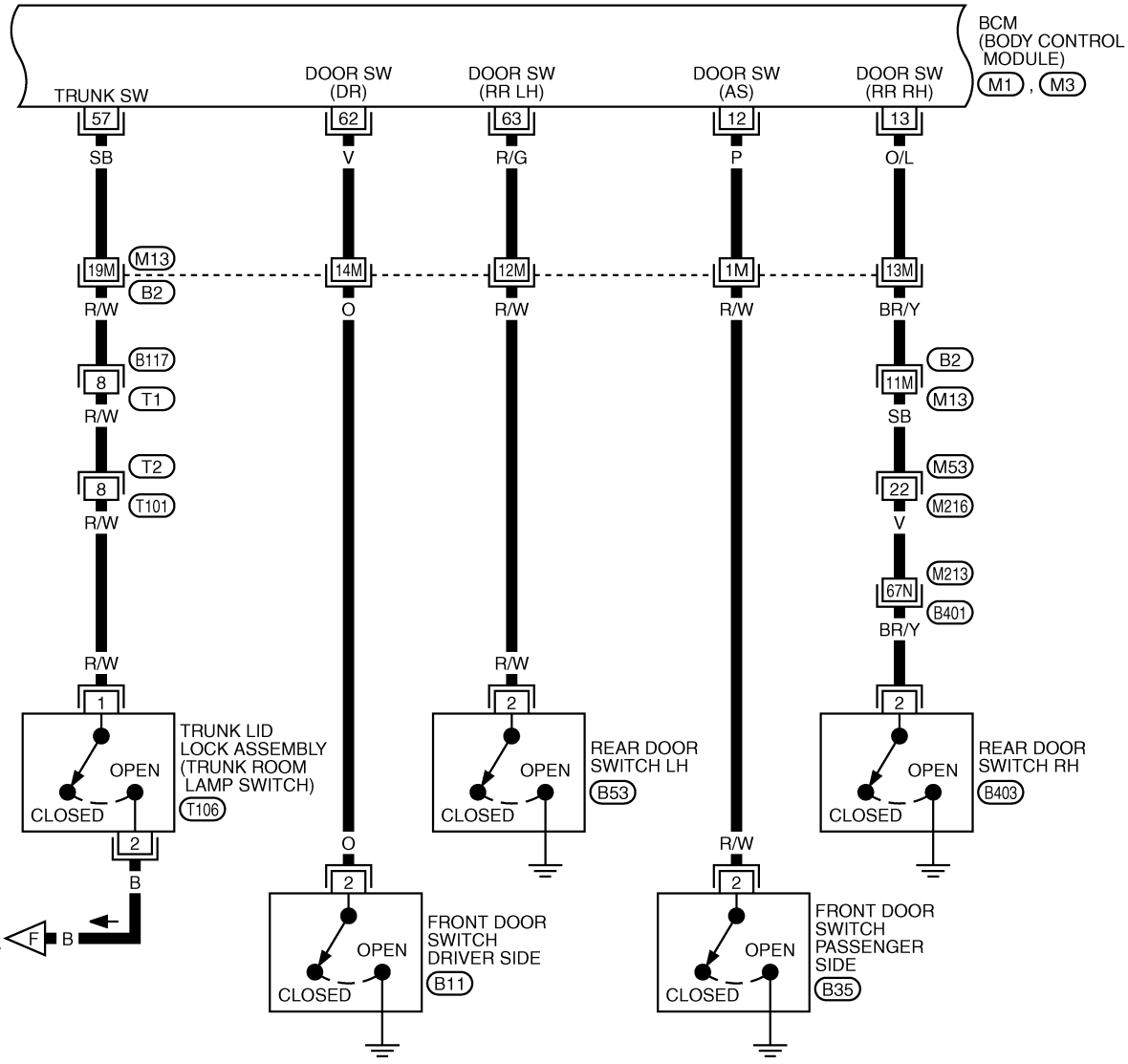

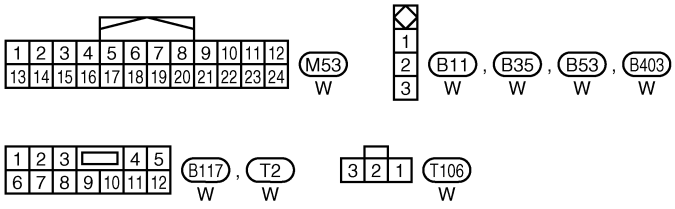

REFER TO THE FOLLOWING.

B2 , B401 -SUPER MULTIPLE JUNCTION (SMJ)

M1 , M3 -ELECTRICAL UNITS

TIWT1299E

BL-I/KEY-09

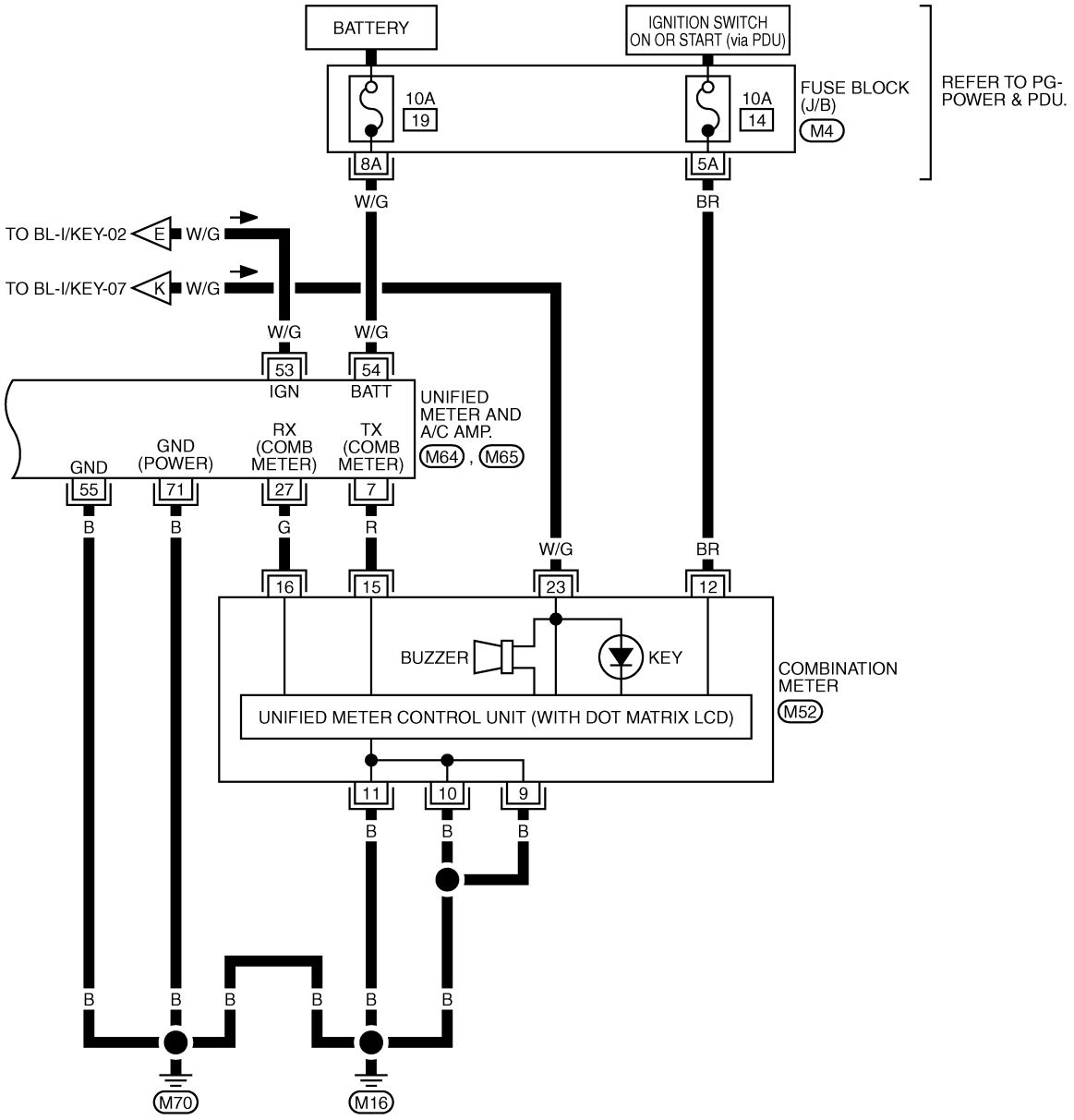

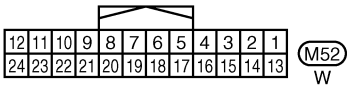

REFER TO THE FOLLOWING.
M4 -FUSE BLOCK-JUNCTION BOX (J/B)

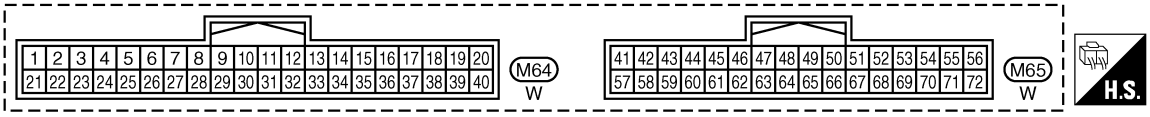

TIWT1300E

BL-I/KEY-10

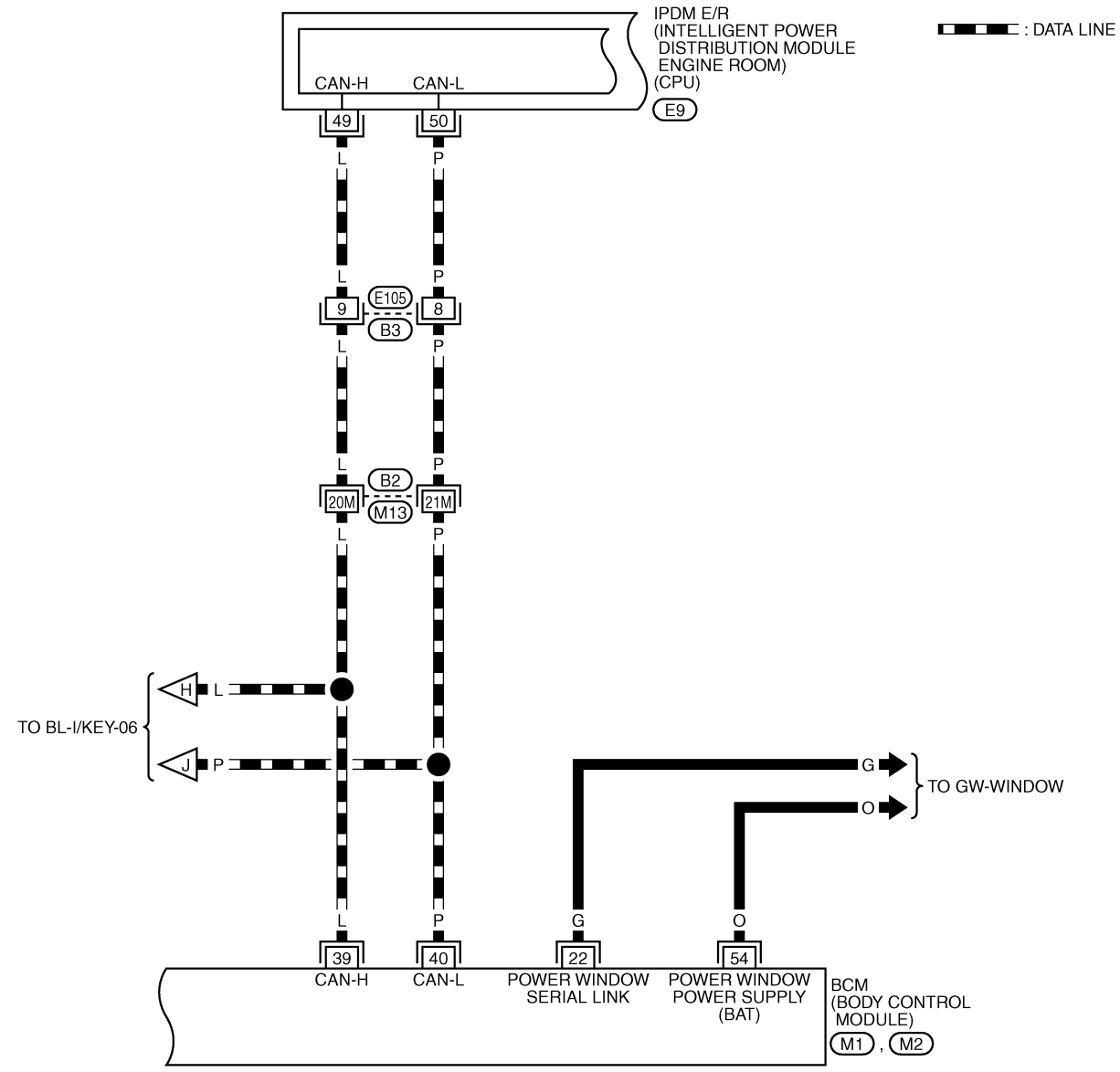

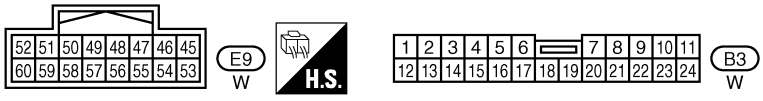

REFER TO THE FOLLOWING.

B2 -SUPER MULTIPLE JUNCTION (SMJ)

M1, M2 -ELECTRICAL UNITS

TIWT1321E

BL-I/KEY-11

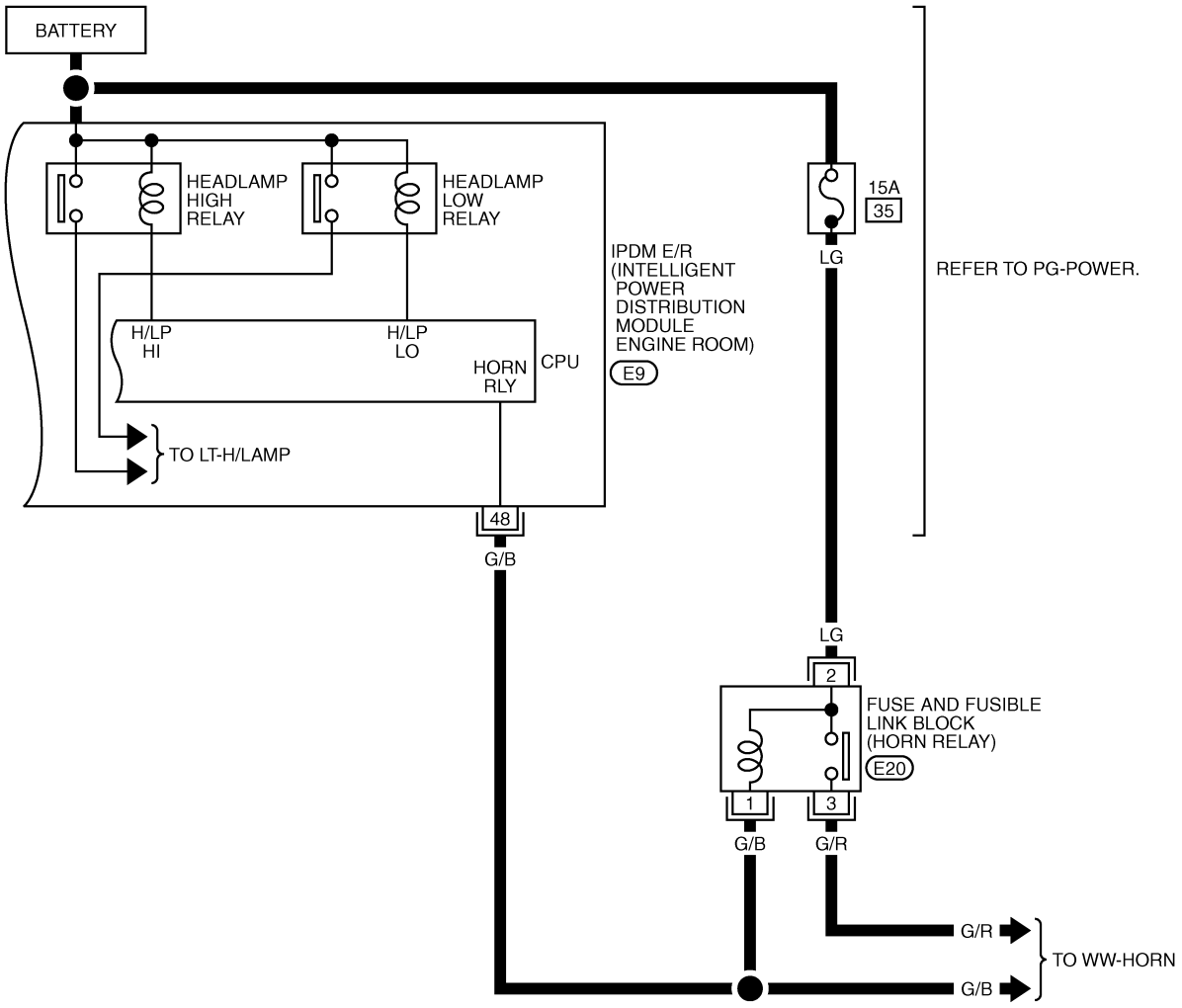

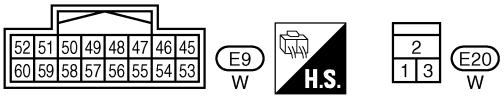

TIWT1405E

Terminals and Reference Value for Intelligent Key Unit

NIS001XD

Terminal	Wire Color	Item	Condition: Ignition Switch Position	Condition: Operation or Conditions	Voltage (V) Approx.
1	SB	Power source (Fuse)	—	—	Battery voltage
2	GR	Door request switch (driver side)	—	Press door request switch (driver side).	0
				Other than above	5
4	B/Y	Remote keyless entry receiver RSSI signal	LOCK	When Intelligent Key is in vehicle, press push-button ignition switch	0
				Other than above	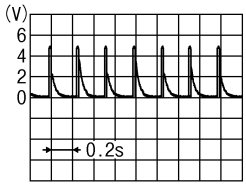 PIIB5657J
5	B/W	Remote keyless entry receiver signal	LOCK	Waiting state	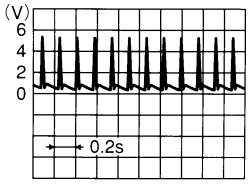 OCC3879D
				Any operation using Intelligent Key	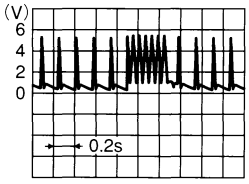 OCC3880D
6	B	Remote keyless entry receiver ground	—	—	0
7	B/R	Remote keyless entry receiver power supply	LOCK	—	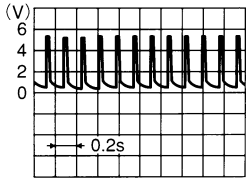 OCC3881D
13	LG/B	Key slot illumination signal	LOCK	Insert Intelligent Key into key slot and driver side door is open.	Illuminate: Battery voltage Does not illuminate: 0
				Remove Intelligent Key from key slot.	0
19	BR/Y	Key switch signal	LOCK	Insert Intelligent Key into key slot.	0
				Remove Intelligent Key from key slot.	Battery voltage
20	B	Ground	ON	—	0
22	O	Door request switch (passenger side)	—	Press door request switch (passenger side).	0
				Other than above	5
23	B	Trunk lid opener cancel switch	—	Trunk lid opener cancel switch is ON	0
				Trunk lid opener cancel switch is OFF (cancel)	5

Terminal	Wire Color	Item	Condition		Voltage (V) Approx.
			Ignition Switch Position	Operation or Conditions	
25	GR/R	Trunk opener request switch	—	Press trunk opener request switch.	0
				Other than above	5
26	BR/W	Unlock sensor (driver side)	—	Door (driver side) is locked.	Battery voltage
				Door (driver side) is unlocked.	0
27	V	P range switch	—	Selector lever is in “P” position.	0
				Other than above	Battery voltage
30	L/W	Ignition switch (ACC)	ACC	—	Battery voltage
31	GR	Ignition switch (ON)	ON	—	Battery voltage
35	LG	Vehicle speed signal	ON	At speedometer operation (vehicle speed approx. 40 km/h)	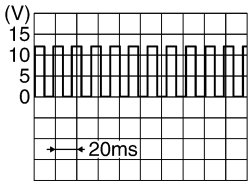 PKIA1935E
37	P	CAN-L	—	—	—
38	L	CAN-H	—	—	—
39	BR/W	Push-button ignition switch signal	—	Press push-button ignition switch	0
				Other than above	Battery voltage
40	B	Ground	ON	—	0
41	Y	Power souce (Fuse)	—	—	Battery voltage
47	LG	Inside key antenna (+) signal (Instrument centor)	LOCK	Any door open → all door close	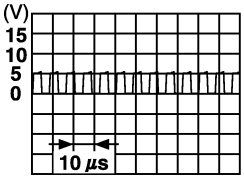 SIIA1910J
48	V	Inside key antenna (-) signal (Instrument centor)			
49	B	Inside key antenna (+) signal (Console)	LOCK	Any door open → all door close	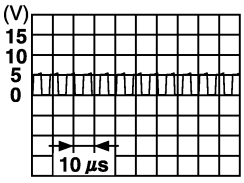 SIIA1910J
50	W	Inside key antenna (-) signal (Console)			
51	R/L	Inside key antenna (+) signal (Rear seat)	LOCK	Any door open → all door closed	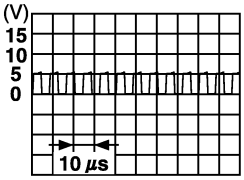 SIIA1910J
52	R/W	Inside key antenna (-) signal (Rear seat)			

Terminal	Wire Color	Item	Condition: Ignition Switch Position	Condition: Operation or Conditions		Voltage (V) Approx.
53	G/W	Inside key antenna (+) signal (Trunk room)	LOCK	Any door open → all door close		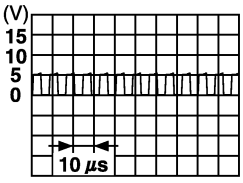 SIIA1910J
54	LG	Inside key antenna (-) signal (Trunk room)				
55	P	Intelligent Key warning buzzer	LOCK	Operate door request switch.	Buzzer OFF	Battery voltage
					Sound buzzer	0
56	B	Ground	ON	—		0
57	L	Power souce (Fuse)	—	—		Battery voltage
58	O	A/T device power supply	LOCK	Wake-up state (Open drive side door)		Battery voltage
				Sleep state (After 30 seconds or more since all doors are closed under the condition that the ignition switch is in the LOCK position)		0
61	O/L	Outside key antenna (+) signal (driver side)	LOCK	Press door request switch (driver side).		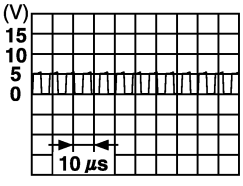 SIIA1910J
62	Y	Outside key antenna (-) signal (driver side)				
63	LG	Outside key antenna (+) signal (passenger side)	LOCK	Press door request switch (passenger side).		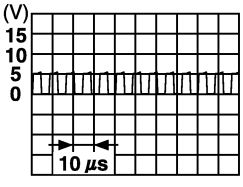 SIIA1910J
64	G	Outside key antenna (-) signal (passenger side)				
69	O/B	Outside key antenna (+) signal (Trunk room)	LOCK	Press trunk opener request switch.		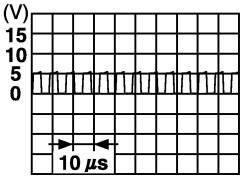 SIIA1910J
70	L	Outside key antenna (-) signal (Trunk room)				
72	B	Ground	ON			0

Terminals and Reference Value for BCM

NIS001XE

Terminal	Wire Color	Item	Condition	Voltage (V) Approx.
11	V	Ignition switch (ACC)	Ignition switch is in ACC or ON position	Battery voltage
12	P	Front door switch passenger side	Door open (ON) → Close (OFF)	0 → 8
13	O/L	Rear door switch RH	Door open (ON) → Close (OFF)	0 → Battery voltage
37	LG	Key switch signal	Insert Intelligent Key into key slot.	Battery voltage
			Remove Intelligent Key from key slot.	0
38	W	Ignition switch (ON)	Ignition switch is in ON or START position.	Battery voltage
39	L	CAN-H	—	—
40	P	CAN-L	—	—
42	P	Power supply (fuse)	—	Battery voltage
52	B	Ground	—	0
55	W	Power supply (Fusible link)	—	Battery voltage
57	SB	Trunk room lamp switch	Trunk lid open (ON) → Close (OFF)	0 → Battery voltage
62	V	Front door switch driver side	Door open (ON) → Close (OFF)	0 → Battery voltage
63	R/G	Rear door switch LH	Door open (ON) → Close (OFF)	0 → Battery voltage

*1: In the state that hazard reminder operates.
*2: In the state that room lamp switch is in “DOOR” position.

Terminals and Reference Value for IPDM E/R

NIS001XF

Terminal	Wire Color	Item	Condition	Voltage (V) Approx.	
48	G/B	Horn relay	Press panic alarm bottom.	Horn sounds.	0
				Horn does not sound.	Battery voltage
49	L	CAN-H	—	—	
50	P	CAN-L	—	—	

Trouble Diagnosis Procedure

NIS001XG

WORK FLOW

1. CHECK IN

CHECK IN.

>> GO TO 2.

2. GET SYMPTOMS

Listen to customer complaints request. (Get symptoms)

NOTE:
If customer reports a “No start” condition, request all Intelligent Keys to be brought to the dealer in case of Intelligent Key system malfunction.

Intelligent Key service request>>Refer to CONSULT-II operation manual.
Intelligent Key system is malfunctioning>>GO TO 3.

3. PERFORM SELF-DIAGNOSIS

Perform self-diagnosis of Intelligent Key system with CONSULT-II.

“SELF-DIAG RESULTS” are displayed>>GO TO BL-81, "SELF-DIAGNOSTIC RESULTS" .
“SELF-DIAG RESULTS” are not displayed>>GO TO 4.

4. CHECK FUNCTION OF INTELLIGENT KEY SYSTEM

Does all function of Intelligent Key system operate?

All function of Intelligent Key system does not operate>>GO TO BL-86, "ALL FUNCTIONS OF INTELLIGENT KEY SYSTEM DOES NOT OPERATE" .
Specific function of Intelligent Key system does not operate>>GO TO 5.

5. CHECK POWER DOOR LOCK OPERATION

Does door lock/unlock operation by door lock and unlock switch operate?

OK or NG

OK >> GO TO 6.
NG >> Refer to BL-24, "POWER DOOR LOCK SYSTEM" .

6. CHECK DOOR REQUEST SWITCH OPERATION

Does door lock/unlock operation by door request switch operate?

OK or NG

OK >> GO TO 7.
NG >> GO TO BL-86, "DOOR LOCK/UNLOCK FUNCTION MALFUNCTION" .

7. CHECK TRUNK OPEN OPERATION

Does the trunk open operation by the trunk opener switch operate?

OK or NG

OK >> GO TO 8.
NG >> Refer to BL-209, "TRUNK LID OPENER" .

8. CHECK TRUNK OPENER REQUEST SWITCH OPERATION

Does the trunk open operation by the trunk opener request switch operate?

OK or NG

OK >> GO TO 9.
NG >> GO TO BL-88, "TRUNK OPEN FUNCTION MALFUNCTION" .

9. CHECK REMOTE KEYLESS FUNCTION

Does the following operation by the Intelligent Key remote control button operate?

- Door lock/unlock function
- Trunk open function
- Panic alarm function

OK or NG

OK >> GO TO 10.
NG >> GO TO BL-87, "REMOTE KEYLESS ENTRY FUNCTION MALFUNCTION" .

10. CHECK POWER WINDOW OPERATION

Does power window operation by power window main switch operate?

OK or NG

OK >> GO TO 11.
NG >> Refer to GW-13, "POWER WINDOW SYSTEM" .

11. CHECK POWER WINDOW DOWN FUNCTION

Does power window down function by Intelligent Key remote control button operate?

OK or NG

OK >> GO TO 12.
NG >> GO TO BL-90, "POWER WINDOW DOWN FUNCTION MALFUNCTION" .

12. CHECK HAZARD AND BUZZER REMINDER FUNCTION BY REQUEST SWITCH

Does hazard and buzzer reminder function by the following switches operate?

- Door request switches
- Trunk opener request switch

OK or NG

OK >> GO TO 13.
NG >> GO TO BL-89, "HAZARD AND BUZZER REMINDER FUNCTION MALFUNCTION" .

13. CHECK HAZARD AND HORN REMINDER FUNCTION BY INTELLIGENT KEY BUTTON

Does hazard and horn reminder function by Intelligent Key button operate?

OK or NG

OK >> GO TO 14.
NG >> GO TO BL-89, "HAZARD AND HORN REMINDER FUNCTION MALFUNCTION" .

14. CHECK WARNING FUNCTION

Does warning function operate? Refer to BL-55, "WARNING FUNCTION" .

OK or NG

OK >> GO TO 15.
NG >> Refer to BL-90, "WARNING FUNCTION MALFUNCTION" .

15. CHECK OUT

CHECK OUT.

>> INSPECTION END

CONSULT-II Functions (INTELLIGENT KEY)

NIS001XH

CONSULT-II can display each diagnostic item using the diagnostic test modes as shown below.

Part to be diagnosed	Test item, Diagnosis mode	Description
Intelligent Key	WORK SUPPORT	Changes settings for each function.
	SELF-DIAG RESULTS	Intelligent Key unit performs CAN communication diagnosis.
	DATA MONITOR	Displays Intelligent Key unit input data in real time.
	CAN DIAGNOSTIC SUPPORT MONITOR	The results of transmit/receive diagnosis of CAN Communication can be read.
	ACTIVE TEST	Operation of electrical loads can be checked by sending driving signal to then.
	ECU PART NUMBER	Displays Intelligent Key unit part No.

CONSULT-II Inspection Procedure

NIS001XI

CAUTION:

If CONSULT-II is used with no connection CONSULT-II CONVERTER, malfunctions might be detected in self-diagnosis depending on control unit which performs CAN Communication.

BASIC OPERATION

1. Turn ignition switch OFF.
2. Connect CONSULT-II CONVERTER and CONSULT-II to data link connector (1).

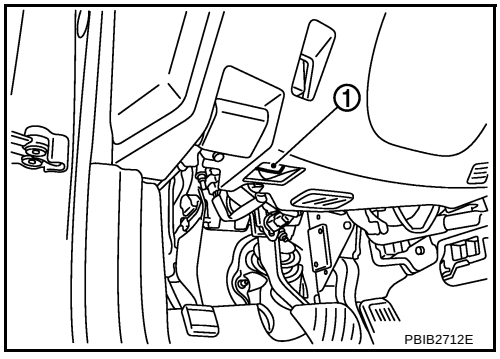

3. Turn ignition switch to ON.
4. Touch “START (NISSAN BASED VHCL)”.

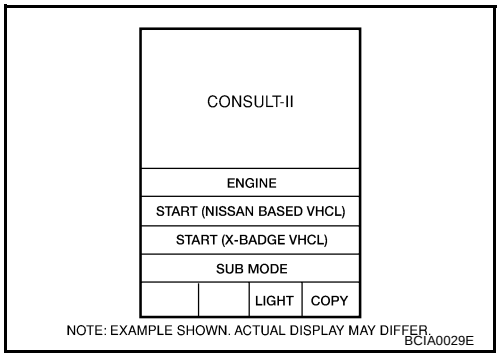

5. Touch “INTELLIGENT KEY” on “SELECT SYSTEM” screen.
If “INTELLIGENT KEY” is not indicated, go to GI-40, "CONSULT-II Data Link Connector (DLC) Circuit" .

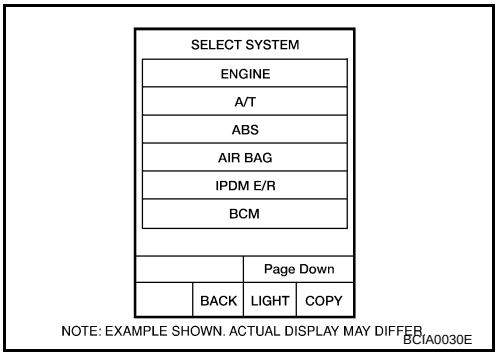

6. Select diagnosis mode. “WORK SUPPORT”, “SELF-DIAG RESULTS”, “CAN DIAG SUPPORT MNTR”, “DATA MONITOR”, “ACTIVE TEST” and “ECU PART NUMBER” are available.

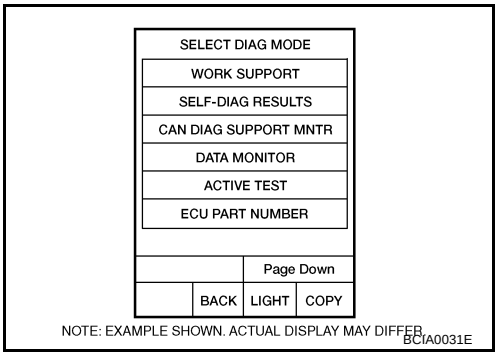

CONSULT-II Application Items

NIS001XJ

SELF-DIAGNOSTIC RESULTS

How to Read SELF-DIAGNOSTIC RESULTS

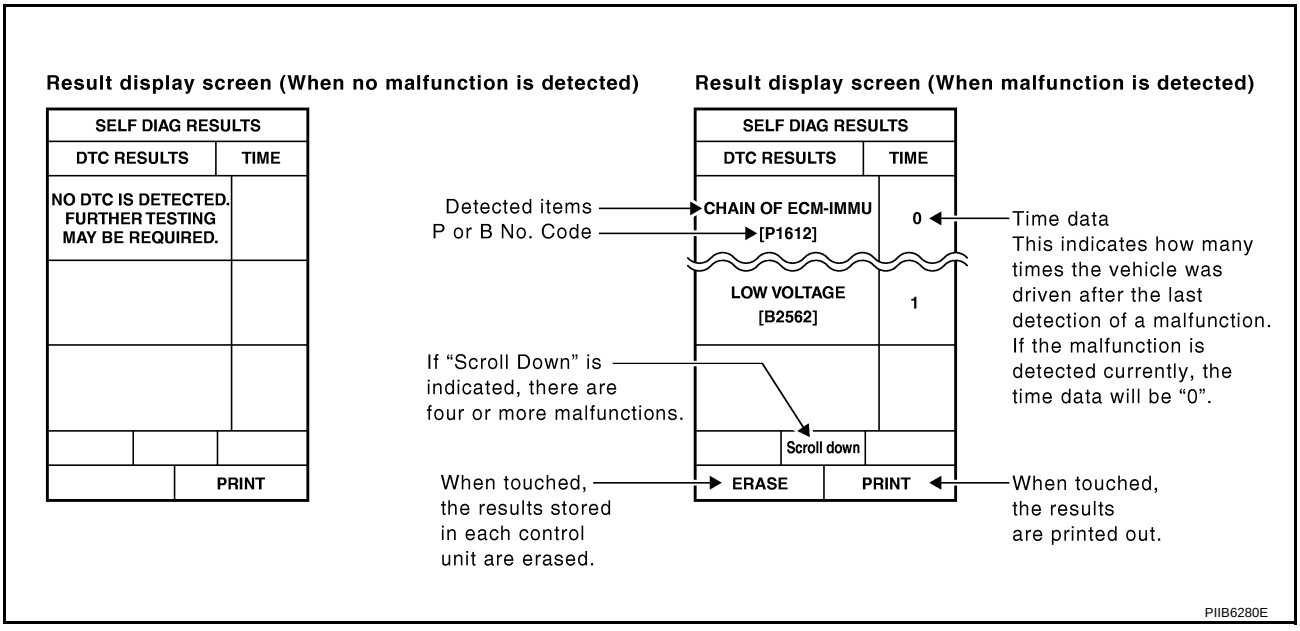

Suspect Systems [DTC]	Diagnostic item is detected when...	Repair work	Reference page
CAN COMM 1 [U1000]	Malfunction is detected in CAN communication	Perform CAN communication system inspection	BL-92
CAN COMM 2 [U1010]	Malfunction is detected in CAN communication caused by Intelligent Key unit internal malfunction	Replace Intelligent Key unit.	BL-92
STRG COMM 1 [B2013]	Communication malfunction with steering lock unit is detected	Check steering lock unit	BL-157
STEERING LOCK UNIT [B2551]	Even if the communication with steering lock unit is normally performed, the steering lock is malfunctioning	Replace steering lock unit	BL-159

Suspect Systems [DTC]	Diagnostic item is detected when...	Repair work	Reference page
INTELLIGENT KEY [B2552]	Internal malfunction is detected in Intelligent Key unit	Replace Intelligent Key unit.	BL-163
IGN POWER CIRCUIT [B2553]	It continues for 2 seconds or more that ON power supply input to Intelligent Key unit is excessively low when the power supply position is in ON position	Check Intelligent Key unit ON power supply input	BL-163
ACC POWER CIRCUIT [B2554]	It continues for 2 seconds or more that ACC power supply input to Intelligent Key unit is excessively low when the power supply position is in ACC or ON position	Check Intelligent Key unit ACC power supply input	BL-164
STOP LAMP CIRCUIT [B2555]	5V or less is detected at both the stop lamp switch signal input circuit that is input to Intelligent Key unit and the monitor input before stop lamp switch	Check stop lamp switch	BL-167
ENG START SW [B2556]	Condition that push-button ignition switch is pushed is detected continuously for 100 seconds or more	Check push-button ignition switch	BL-168
VEHICLE SPEED [B2557]	Some differences occur on one or more vehicle speed inputs of Intelligent Key unit	Check vehicle speed signal	BL-169
SHIFT POSITION [B2558]	● There is a difference between the shift position input via CAN communication and the P position input by detent switch ● Vehicle speed (5 km/h or more) is detected continuously for 10 seconds or more even if the shift position is detected in P position when the power supply position is in ON position	Check shift position input	BL-172
PDU [B2559]	Internal malfunction is detected in PDU	Replace PDU	BL-174
START POW SUP CIRC [B2560]	Though the engine start operation is not performed, starter relay in IPDM E/R is ON	Check starter power supply	BL-174
LOW VOLTAGE [B2562]	Battery power supply input to Intelligent Key unit (8.8V or less) is detected continuously for 1.5 seconds or more	Check battery low voltage	BL-177
HI VOLTAGE [B2563]	Battery power supply input to Intelligent Key unit (18V or more) is detected continuously for 90 seconds or more	Check for battery high voltage	BL-178
NATS MALFUNCTION [B2590]	Malfunction is detected in immobilizer system	Check (IVIS) NATS trouble diagnosis procedure	BL-248

CAUTION:

When CAN COMM 1 [U1000] and CAN COMM 2 [U1010] are displayed, give priority to performing trouble diagnosis.

DATA MONITOR

Monitor item	Content
DR REQ SW	Indicates [ON/OFF] condition of door request switch (driver side).
AS REQ SW	Indicates [ON/OFF] condition of door request switch (passenger side).
BD/TR REQ SW	Indicates [ON/OFF] condition of trunk opener request switch.
ON POS	Indicates [ON/OFF] condition of ignition switch in ON position.
ACC POS	Indicates [ON/OFF] condition of ignition switch in ACC position.
DOOR STAT SW	Indicates [ON/OFF] condition of door unlock sensor.
STOP LAMP SW	Indicates [ON/OFF] condition of stop lamp switch.
P RANGE SW	Indicates [ON/OFF] condition of park position switch.
TR CANCEL SW*	Indicates [ON/OFF] condition of trunk cancel switch.
DOOR LOCK SIG*	Indicates [ON/OFF] condition of door lock signal from Intelligent Key remote controller button.
DOOR UNLOCK SIG*	Indicates [ON/OFF] condition of door unlock signal from Intelligent Key remote controller button.
KEYLESS TRUNK*	Indicates [ON/OFF] condition of trunk open signal from Intelligent Key remote controller button.

Monitor item	Content
KEYLESS PANIC*	Indicates [ON/OFF] condition of panic alarm signal from Intelligent Key remote controller button.
DOOR SW DR*	Indicates [OPEN/CLOSE] condition of front door switch driver side from BCM via CAN communication line.
DOOR SW AS*	Indicates [OPEN/CLOSE] condition of front door switch passenger side from BCM via CAN communication line.
DOOR SW RR*	Indicates [OPEN/CLOSE] condition of rear door switch LH from BCM via CAN communication line.
DOOR SW RL*	Indicates [OPEN/CLOSE] condition of rear door switch RH from BCM via CAN communication line.
DOOR BK SW*	Indicates [OPEN/CLOSE] condition of back door switch from BCM via CAN communication line.
TRUNK SW*	Indicates [OPEN/CLOSE] condition of trunk room lamp switch from BCM via CAN communication line.
VEHICLE SPEED*	Indicates [km/h] condition of vehicle speed.

*: Select “SELECTION FROM MENU”.

WORK SUPPORT

Monitor item	Description
CONFIRM KEY FOB ID	It can be checked whether Intelligent Key ID code is registered or not in this mode.
TAKE OUT FROM WINDOW WARN	Take away warning chime (from window) mode can be changed to operate (ON) or not operate (OFF) with this mode. The operation mode will be changed when “CHANGE SETT” on CONSULT-II screen is touched.
LOW BAT OF KEY FOB WARN	Intelligent Key low battery warning mode can be changed to operate (ON) or not operate (OFF) with this mode. The operation mode will be changed when “CHANGE SETT” on CONSULT-II screen is touched.
ANSWER BACK FUNCTION	Hazard and buzzer reminder function mode can be changed to operate (ON) or not operate (OFF) with this mode. The operation mode will be changed when “CHANGE SETT” on CONSULT-II screen is touched.
SELECTIVE UNLOCK FUNCTION	Selective unlock function mode can be changed to operate (ON) or not operate (OFF) with this mode. The operation mode will be changed when “CHANGE SETT” on CONSULT-II screen is touched.
ANTI KEY LOCK IN FUNCTION	Key reminder function mode can be changed to operate (ON) or not operate (OFF) with this mode. The operation mode will be changed when “CHANGE SETT” on CONSULT-II screen is touched.
HORN WITH KEYLESS LOCK	Horn reminder function mode by Intelligent Key button can be changed to operate (ON) or not operate (OFF) with this mode. The operation mode will be changed when “CHANGE SETT” on CONSULT-II screen is touched.
HAZARD ANSWER BACK	Hazard reminder function mode can be selected from the following with this mode. The operation mode will be changed when “CHANGE SETT” on CONSULT-II screen is touched. ● LOCK ONLY: Door lock operation only ● UNLOCK ONLY: Door unlock operation only ● LOCK/UNLOCK: Lock/Unlock operation ● OFF: Non-operation
ANSWER BACK WITH I-KEY LOCK	Buzzer reminder function (lock operation) mode by door request switch (driver side and passenger side) can be selected from the following with this mode. The operation mode will be changed when “CHANGE SETT” on CONSULT-II screen is touched. ● HORN CHIRP: Sound horn ● BUZZER: Sound Intelligent Key warning buzzer ● OFF: Non-operation
ANSWER BACK WITH I-KEY UNLOCK	Buzzer reminder function (unlock operation) mode by door request switch can be changed to operate (ON) or not operate (OFF) with this mode.
AUTO RELOCK TIMER	Auto door lock timer mode can select the following with this mode. ● 1 min ● 5 min ● OFF: Non-operation

Monitor item	Description
PANIC ALARM DELAY	Panic alarm button's pressing time on Intelligent Key remote control button can be selected from the following with this mode. The operation mode will be changed when “CHANGE SETT” on CONSULT-II screen is touched. ● 0.5 sec ● 1.5 sec ● OFF: Non-operation
TRUNK/GLASS HATCH OPEN	Buzzer reminder function mode by trunk opener request switch can be changed to operate (ON) or not operate (OFF) with this mode. The operation mode will be changed when “CHANGE SETT” on CONSULT-II screen is touched.
TRUNK OPEN DELAY	Trunk button's pressing time on Intelligent Key button can be selected from the following with this mode. The operation mode will be changed when “CHANGE SETT” on CONSULT-II screen is touched. ● 0.5 sec ● 1.5 sec ● OFF: Non-operation
P/W DOWN DELAY	Unlock button's pressing time on Intelligent Key button can be selected from the following with this mode. The operation mode will be changed when “CHANGE SETT” on CONSULT-II screen is touched. ● 3 sec ● 5 sec ● OFF: Non-operation
ENGINE START BY I-KEY	Engine start function mode can be changed to operate (ON) or not operate (OFF) with this mode. The operation mode will be changed when “CHANGE SETT” on CONSULT-II screen is touched.
LOCK/UNLOCK BY I-KEY	Door lock/unlock function by door request switch (driver side, passenger side and trunk) mode can be changed to operate (ON) or not operate (OFF) with this mode. The operation mode will be changed when “CHANGE SETT” on CONSULT-II screen is touched.

ACTIVE TEST

Test item	Description
DOOR LOCK/UNLOCK	This test is able to check door lock/unlock operation. ● The all door lock actuators are locked when “LOCK” on CONSULT-II screen is touched. ● The all door lock actuators are unlocked when “ALL UNLK” on CONSULT-II screen is touched. ● The door lock actuator (driver side) is unlocked when “DR UNLK” on CONSULT-II screen is touched. ● The door lock actuator (passenger side) is unlocked when “AS UNLK” on CONSULT- II screen is touched. ● The trunk lid opener actuator is open when “TRUNK OPEN” on CONSULT- II screen is touched.
ANTENNA	This test is able to check Intelligent Key antenna operation. When the following conditions are met, hazard warning lamps flash. ● Inside key antenna (Instrument center) detects Intelligent Key, when “ROOM ANT1” on CONSULT-II screen is touched. ● Inside key antenna (Center console) detects Intelligent Key, when “ROOM ANT2” on CONSULT-II screen is touched. ● Inside key antenna (rear seat) detects Intelligent Key, when “ROOM ANT3” on CONSULT-II screen is touched. ● Inside key antenna (Trunk room) detects Intelligent Key, when “LAG ANT1” on CONSULT-II screen is touched. ● Outside key antenna (Driver side) detects Intelligent Key, when “DRIVER ANT” on CONSULT-II screen is touched. ● Outside key antenna (Passenger side) detects Intelligent Key, when “ASSIST ANT” on CONSULT-II screen is touched. ● Outside key antenna (Trunk room) detects Intelligent Key, when “BD/TR ANT” on CONSULT-II screen is touched.

Test item	Description
OUTSIDE BUZZER	This test is able to check Intelligent Key warning buzzer operation. Intelligent Key warning buzzer sounds when “ON” on CONSULT-II screen is touched.
INSIDE BUZZER	This test is able to check warning chime into combination meter operation. ● Take away warning chime sounds when “TAKE OUT” on CONSULT-II screen is touched. ● Key warning chime sounds when “KEY WARN” on CONSULT-II screen is touched. ● P position warning chime sounds when “P RNG WARN” on CONSULT-II screen is touched. ● ACC warning chime sounds when “ACC WARN” on CONSULT-II screen is touched.
INDICATOR	This test is able to check warning lamp operation. ● “KEY” Warning lamp illuminates when “KEY IND ON” on CONSULT-II screen is touched. ● “KEY” Warning lamp flashes when “KEY IND FSH” on CONSULT-II screen is touched.
LCD	This test is able to check meter display information ● Engine start information displays when “BRAKE/P” on CONSULT-II screen is touched. ● Engine start information displays when “BRAKE/P/ON” on CONSULT-II screen is touched. ● Key ID warning displays when “KEY ID NG” on CONSULT-II screen is touched. ● Steering lock information displays when “STLCK RELES” on CONSULT-II screen is touched. ● P position warning displays when “P RNG IND” on CONSULT-II screen is touched. ● Intelligent Key insert information displays when “INSERT KEY” on CONSULT-II screen is touched. ● Intelligent Key low battery warning displays when “KEY BAT LOW” on CONSULT-II screen is touched. ● Take away through window warning displays when “TK AWAY WDW” on CONSULT-II screen is touched. ● Take away warning display when “TAKE AWAY” on CONSULT-II screen is touched. ● OFF position warning display when “IGN OFF WARN” on CONSULT-II screen is touched.
P RANGE	This test is able to check A/T device power supply A/T device power is supplied when “ON” on CONSULT-II screen is touched.
ENGINE SW ILLUMI	This test is able to check push-ignition switch illumination operation. Push-ignition switch illumination illuminates when “ON” on CONSULT-II screen is touched.
LOCK INDCATOR	This test is able to check LOCK indicator in push-ignition switch operation. LOCK indicator in push-ignition switch illuminates when “ON” on CONSULT-II screen is touched.
ACC INDCATOR	This test is able to check ACC indicator in push-ignition switch operation. LOCK indicator in push-ignition switch illuminates when “ON” on CONSULT-II screen is touched.
IGNITION ON IND	This test is able to check INGITION ON indicator in push-ignition switch operation. LOCK indicator in push-ignition switch illuminates when “ON” on CONSULT-II screen is touched.
KEY SLOT ILLUMI	This test is able to check key slot illumination operation. Key slot illumination flash when “ON” on CONSULT-II screen is touched.

Trouble Diagnosis Symptom Chart

NIS001XK

ALL FUNCTIONS OF INTELLIGENT KEY SYSTEM DOES NOT OPERATE

NOTE:

- Before performing the diagnosis in the following table, check “Trouble Diagnosis Procedure”. Refer to BL-78, "Trouble Diagnosis Procedure" .
- Make sure that vehicle is under the condition shown in “Conditions of vehicle” before starting diagnosis, and check each symptom.
- If the following “symptoms” are detected, check systems shown in the “Diagnosis/service procedure” column in this order.

Conditions of Vehicle (Operating Conditions)

- “ENGINE START BY I-KEY” and “LOCK/UNLOCK BY I-KEY” are ON when setting on CONSULT-II.
- All doors are closed.

Symptom	Diagnosis/service procedure		Reference page
All function of Intelligent Key system dose not operate.	1.	Check Intelligent Key unit power supply and ground circuit.	BL-93
	2.	Check Intelligent Key battery inspection.	BL-126
	3.	Check remote keyless entry receiver.	BL-117
	4.	Replace Intelligent Key unit.	BL-125

DOOR LOCK/UNLOCK FUNCTION MALFUNCTION

NOTE:

- Before performing the diagnosis in the following table, check “Trouble Diagnosis Procedure”. Refer to BL-78, "Trouble Diagnosis Procedure" .
- Make sure that vehicle is under the condition shown in “Conditions of vehicle” before starting diagnosis, and check each symptom.
- If the following “symptoms” are detected, check systems shown in the “Diagnosis/service procedure” column in this order.

Conditions of Vehicle (Operating Conditions)

- “LOCK/UNLOCK BY I-KEY” is ON when setting on CONSULT-II.
- Intelligent Key is out of key slot.
- All doors are closed.

Symptom	Diagnosis/service procedure		Reference page
Door lock/unlock do not operate by door request switch.	1.	Check Intelligent Key unit power supply and ground circuit.	BL-93
	2.	Check door switch.	BL-96
	3.	Check key slot.	BL-94
	4.	Replace Intelligent Key unit.	BL-125
Door lock/unlock does not operate by request switch (driver side).	1.	Check door request switch (driver side).	BL-101
	2.	Check outside key antenna (driver side).	BL-108
	3.	Replace Intelligent Key unit.	BL-125
Door lock/unlock does not operate by request switch (passenger side).	1.	Check door request switch (passenger side).	BL-101
	2.	Check outside key antenna (passenger side).	BL-108
	3.	Replace Intelligent Key unit.	BL-125
Selective unlock function does not operate by door request switch (driver side) (other door lock function operate).	1.	Check “SELECT UNLOCK FUNCTION” setting in “WORK SUPPORT”.	BL-83
	2.	Check selective unlock function with a remote controller or door key cylinder.	BL-26
	3.	Replace BCM.	BCS-17

Symptom	Diagnosis/service procedure	Reference page
Selective unlock function does not operate by door request switch (passenger side) (other door lock function operate).	1. Check “SELECT UNLOCK FUNCTION” setting in “WORK SUPPORT”.	BL-83
	2. Replace Intelligent Key unit.	BL-125
Auto lock function does not operate.	1. Check “AUTO RELOCK TIMER” setting in “WORK SUPPORT”.	BL-83
	2. Check door switch.	BL-96
	3. Check key slot.	BL-94
	4. Replace BCM.	BCS-17
Key reminder function does not operate.	1. Check “ANTI KEY LOCK IN FUNCTION” setting in “WORK SUPPORT”.	BL-83
	2. Check door switch.	BL-96
	3. Check inside key antenna.	BL-112
	4. Check unlock sensor.	BL-105
	5. Check Intelligent Key battery inspection.	BL-126
	6. Replace Intelligent Key unit.	BL-125

REMOTE KEYLESS ENTRY FUNCTION MALFUNCTION

NOTE:

- Before performing the diagnosis in the following table, check “Trouble Diagnosis Procedure”. Refer to BL-78, "Trouble Diagnosis Procedure" .
- Make sure that vehicle is under the condition shown in “Conditions of vehicle” before starting diagnosis, and check each symptom.
- If the following “symptoms” are detected, check systems shown in the “Diagnosis/service procedure” column in this order.

Conditions of Vehicle (Operating Conditions)

- Intelligent Key is out of key slot.
- Ignition switch is not ON position.
- All doors are closed.

Symptom	Diagnosis/service procedure	Reference page
All of the remote keyless entry functions do not operate.	1. Check Intelligent Key battery inspection.	BL-126
	2. Replace Intelligent Key unit.	BL-125
Selective unlock function does not operate by Intelligent Key.	1. Check “SELECT UNLOCK FUNCTION” setting in “WORK SUPPORT”.	BL-83
	2. Check Intelligent Key battery inspection.	BL-126
	3. Replace Intelligent Key unit.	BL-125
Auto lock function does not operate properly.	1. Check “AUTO RELOCK TIMER” setting in “WORK SUPPORT”.	BL-83
	2. Check door switch.	BL-96
	3. Check key slot.	BL-94
	4. Replace BCM.	BCS-17
Key reminder function does not operate.	1. Check “ANTI KEY LOCK IN FUNCTION” setting in “WORK SUPPORT”.	BL-83
	2. Check door switch.	BL-96
	3. Check inside key antenna.	BL-112
	4. Check unlock sensor.	BL-105
	5. Check Intelligent Key battery inspection.	BL-126
	6. Replace Intelligent Key unit.	BL-125

Symptom	Diagnosis/service procedure	Reference page
Panic alarm function does not operate.	1. Check “PANIC ALARM DELAY” setting in “WORK SUPPORT”.	BL-83
	2. Check theft warning operation.	BL-220
	3. Check Intelligent Key battery inspection.	BL-126
	4. Check key slot.	BL-94
	5. Replace Intelligent Key unit.	BL-125

TRUNK OPEN FUNCTION MALFUNCTION

NOTE:

- Before performing the diagnosis in the following table, check “Trouble Diagnosis Procedure”. Refer to BL-78, "Trouble Diagnosis Procedure" .
- Make sure that vehicle is under the condition shown in “Conditions of vehicle” before starting diagnosis, and check each symptom.
- If the following “symptoms” are detected, check systems shown in the “Diagnosis/service procedure” column in this order.

Conditions of Vehicle (Operating Conditions)

- Intelligent Key is out of key slot.
- All doors are closed.

Symptom	Diagnosis/service procedure	Reference page
Trunk open function does not operate by trunk opener request switch.	1. Check trunk opener request switch.	BL-103
	2. Check trunk lid opener cancel switch.	BL-121
	3. Check outside key antenna (trunk room).	BL-110
	4. Replace Intelligent Key unit.	BL-125
Trunk open function does not operate by Intelligent Key.	1. Check “TRUNK OPEN DELAY” setting in “WORK SUPPORT”.	BL-83
	2. Check trunk lid opener system.	BL-209
	3. Check trunk room lamp switch.	BL-99
	4. Check Intelligent Key battery inspection.	BL-126
	5. Replace Intelligent Key unit.	BL-125
Key reminder function does not operate.	1. Check door switch.	BL-96
	2. Check trunk room lamp switch.	BL-99
	3. Check inside key antenna (trunk room).	BL-112
	4. Check trunk lid opener system.	BL-209
	5. Replace Intelligent Key unit.	BL-125

HAZARD AND BUZZER REMINDER FUNCTION MALFUNCTION

NOTE:

- Before performing the diagnosis in the following table, check “Trouble Diagnosis Procedure”. Refer to BL-78, "Trouble Diagnosis Procedure" .
- If the following “symptoms” are detected, check systems shown in the “Diagnosis/service procedure” column in this order.

Conditions of Vehicle (Operating Conditions)

- “LOCK/UNLOCK BY I-KEY” is ON when setting on CONSULT-II.
- “ANSWER BACK FUNCTION” is ON when setting on CONSULT-II.
- Ignition switch is in OFF position.
- All doors are closed.
- Intelligent Key is out of key slot.

Symptom	Diagnosis/service procedure	Reference page
Hazard reminder does not operate by request switch. (Horn reminder operate.)	1. Check “HAZARD ANSWER BACK” setting in “WORK SUPPORT”.	BL-83
	2. Check hazard function with hazard switch.	LT-211
	3. Replace Intelligent Key unit.	BL-125
Buzzer reminder does not operate by request switch. (Hazard reminder operate.)	1. Check “ANSWER BACK WITH I-KEY LOCK” or “ANSWER BACK WITH I-KEY UNLOCK” setting in “WORK SUPPORT”.	BL-83
	2. Check Intelligent Key warning buzzer.	BL-107
	3. Replace Intelligent Key unit.	BL-125
Buzzer reminder does not operate by trunk opener request switch.	1. Check “TRUNK/GLASS HATCH OPEN” setting in “WORK SUPPORT”.	BL-83
	2. Check Intelligent Key warning buzzer.	BL-107
	3. Check trunk opener lid system.	BL-209
	4. Replace Intelligent Key unit	BL-125

HAZARD AND HORN REMINDER FUNCTION MALFUNCTION

NOTE:

- Before performing the diagnosis in the following table, check “Trouble Diagnosis Procedure”. Refer to BL-78, "Trouble Diagnosis Procedure" .
- Make sure that vehicle is under the condition shown in “Conditions of vehicle” before starting diagnosis, and check each symptom.
- If the following “symptoms” are detected, check systems shown in the “Diagnosis/service procedure” column in this order.

Conditions of Vehicle (Operating Conditions)

- “ANSWER BACK FUNCTION” is ON when setting on CONSULT-II.
- Ignition switch is in OFF position.
- All doors are closed.

Symptom	Diagnosis/service procedure	Reference page
Hazard reminder does not operate by Intelligent Key button. (Horn reminder operate.)	1. Check “HAZARD ANSWER BACK” setting in “WORK SUPPORT”.	BL-83
	2. Check hazard function with hazard switch.	LT-211
	3. Replace Intelligent Key	BL-125
Horn reminder does not operate by Intelligent Key button (door lock/unlock button). (Hazard reminder operate.)	1. Check “HORN WITH KEYLESS LOCK” setting in “WORK SUPPORT”.	BL-83
	2. Check horn function.	BL-124
	3. Replace Intelligent Key unit	BL-125

POWER WINDOW DOWN FUNCTION MALFUNCTION

NOTE:

- Before performing the diagnosis in the following table, check “Trouble Diagnosis Procedure”. Refer to BL-78, "Trouble Diagnosis Procedure" .
- If the following “symptoms” are detected, check systems shown in the “Diagnoses/service procedure” column in this order.

Conditions of Vehicle (Operating Conditions)

- Ignition switch is in OFF or ACC position.
- Retaind power operation does not operate. Refer to GW-16, "RETAINED POWER OPERATION" .

Symptom	Diagnosis/service procedure	Reference page
Power window down function does not operate.	1. Check “P/W DOWN DELAY” setting in “WORK SUPPORT”.	BL-83
	2. Check Intelligent Key battery inspection.	BL-126

WARNING FUNCTION MALFUNCTION

NOTE:

- Before performing the diagnosis in the following table, check “Trouble Diagnosis Procedure”. Refer to BL-78, "Trouble Diagnosis Procedure" .
- Make sure that vehicle is under the condition shown in “Conditions of vehicle” before starting diagnosis, and check each symptom.
- If the following “symptoms” are detected, check systems shown in the “Diagnosis/service procedure” column in this order.

Conditions of Vehicle (Operating Conditions)

Warning chime functions operating condition is extremely complicated, during operating confirmations, reconfirm the list above twice in order to ensure proper operation.

Symptom		Diagnosis/service procedure	Reference page
OFF position warning does not operate.	For internal	1. Check ignition switch position.	BL-117
		2. Check door switch.	BL-96
		3. Check warning chime function.	BL-125
		4. Replace Intelligent Key unit.	BL-125
	For external	1. Check ignition switch position.	BL-117
		2. Check door switch.	BL-96
		3. Check Intelligent Key warning buzzer.	BL-107
		4. Replace Intelligent Key unit.	BL-125
P position warning does not operate.		1. Check Park position switch.	BL-115
		2. Check door switch.	BL-96
		3. Check Intelligent Key warning buzzer.	BL-107
		4. Check warning chime function.	BL-125
		5. Check combination meter display.	BL-124
		6. Replace Intelligent Key unit.	BL-125
ACC warning does not operate		1. Check ignition switch position.	BL-117
		2. Check warning chime function.	BL-125
		3. Check combination meter display.	BL-124
		4. Replace Intelligent Key unit.	BL-125

Symptom		Diagnosis/service procedure	Reference page
Take away warning does not operate.	Door open to close	1. Check door switch.	BL-96
		2. Check inside key antenna.	BL-112
		3. Check Intelligent Key warning buzzer.	BL-107
		4. Check warning chime function.	BL-125
		5. Check key slot illumination.	BL-123
		6. Check combination meter display.	BL-124
		7. Replace Intelligent Key unit.	BL-125
	Push-button ignition switch operation	1. Check ignition switch position.	BL-117
		2. Check inside key antenna.	BL-112
		3. Check warning chime function.	BL-125
		4. Check key slot illumination.	BL-123
		5. Check combination meter display.	BL-124
		6. Replace Intelligent Key unit.	BL-125
	Door is open	1. Check ignition switch position.	BL-117
		2. Check inside key antenna.	BL-112
		3. Check combination meter display.	BL-124
		4. Replace Intelligent Key unit.	BL-125
	Take away through window	1. Check “TAKE OUT FROM WINDOW WARN” setting in “WORK SUPPORT”.	BL-83
		2. Check inside key antenna.	BL-112
		3. Check warning chime function.	BL-125
		4. Check key slot illumination.	BL-123
		5. Check combination meter display.	BL-124
		6. Replace Intelligent Key unit.	BL-125
Key warning chime does not operate.		1. Check key slot.	BL-94
		2. Check door switch.	BL-96
		3. Check warning chime function.	BL-125
		4. Check key slot illumination.	BL-123
		5. Check combination meter display.	BL-124
		6. Replace Intelligent Key unit.	BL-125
Door lock operation warning chime does not operate.		1. Check door switch.	BL-96
		2. Check key slot illumination.	BL-123
		3. Check Intelligent Key warning buzzer.	BL-107
		4. Check inside key antenna.	BL-112
		5. Replace Intelligent Key unit.	BL-125

Check CAN Communication System

NIS001XL

1. CHECK SELF-DIAGNOSTIC RESULTS

CAUTION:
If CONSULT-II is used with no connection of CONSULT-II CONVERTER, malfunctions might be detected in self-diagnosis depending on control unit which performs CAN communication.

With CONSULT-II

- Connect CONSULT-II, and turn ignition switch ON.
- Touch “INTELLIGENT KEY” on “SELECT SYSTEM” screen.
- Touch “SELF-DIAG RESULTS” on “SELECT DIAG MODE” screen.
- Check display content in self-diagnostic results.

CONSULT-II display item	DTC code
NO DTC IS DETECTED	—
CAN COMM	U1000
CAN COMM2	U1010

OK or NG

NO DTC IS DETECTED>> INSPECTION END
CAN COMM [U1000]>> After printing “SELF-DIAGNOSIS RESULTS”, go to “CAN SYSTEM”, Refer to LAN-7, "Precautions When Using CONSULT-II" .
CAN COMM2 [U1010]>> Replace Intelligent Key unit.

Check Power Supply and Ground Circuit

NIS001XM

1. CHECK POWER SUPPLY CIRCUIT

1. Turn ignition switch OFF.
2. Disconnect Intelligent Key unit connector.
3. Check voltage between Intelligent Key unit harness connector and ground.

Terminals			Voltage (V) (Approx.)
(+)		(–)	
Intelligent Key unit connector	Terminal		
M32	1	Ground	Battery voltage
M33	41		
	57		

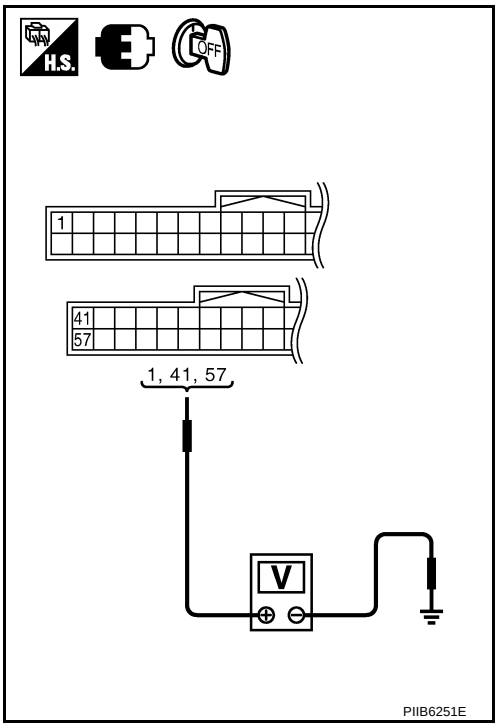

OK or NG

OK >> GO TO 2.
NG >> Repair or replace Intelligent Key power supply circuit.

2. CHECK GROUND CIRCUIT

Check continuity between Intelligent Key unit harness connector and ground.

Intelligent Key unit connector	Terminal		Continuity
M32	20	Ground	Yes
	40		
M33	56		
	72		

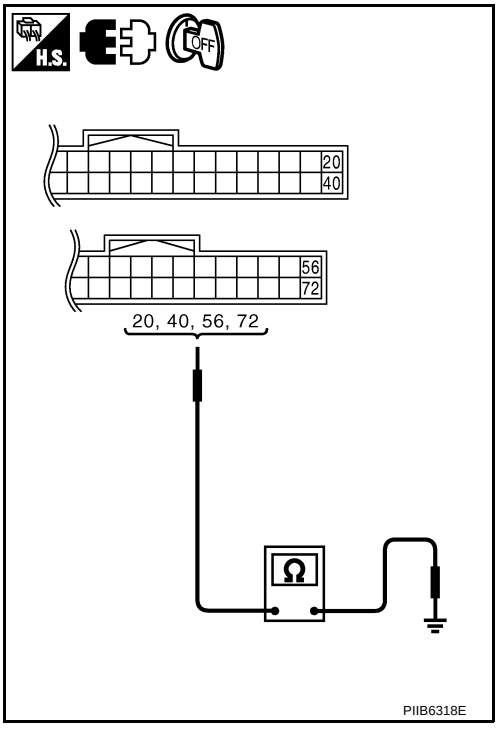

OK or NG

OK >> Power supply and ground circuits are OK.
NG >> Repair or replace the Intelligent Key unit ground circuit.

Check Key Slot

NIS001XN

1. CHECK KEY SLOT INPUT SIGNAL

Check voltage between Intelligent Key unit harness connector and ground.

Terminals			Condition	Voltage (V) (Approx.)
(+)		(–)		
Intelligent Key unit connector	Terminal			
M32	19	Ground	Intelligent Key inserted	Battery voltage
			Intelligent Key removed	0

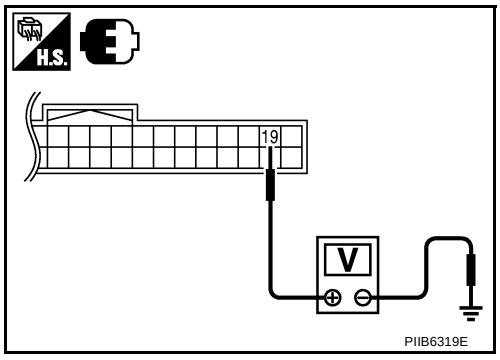

OK or NG

OK >> Key slot is OK.
NG >> GO TO 2.

2. CHECK KEY SLOT POWER SUPPLY CIRCUIT

1. Turn ignition switch OFF.
2. Disconnect key slot connector.
3. Check voltage between slot connector and ground.

Terminals			Voltage (V) (Approx.)
(+)		(–)	
Key slot connector	Terminal		
M14	1	Ground	Battery voltage

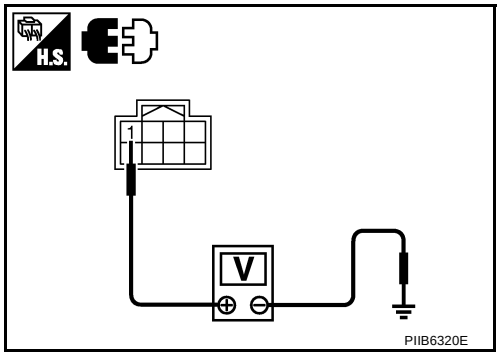

OK or NG

OK >> GO TO 3.
NG >> Repair or replace key slot power supply circuit.

3. CHECK KEY SLOT

Check key slot.

Terminal		Condition	Continuity
Key slot			
1	3	Intelligent Key inserted	Yes
		Intelligent Key removed	No

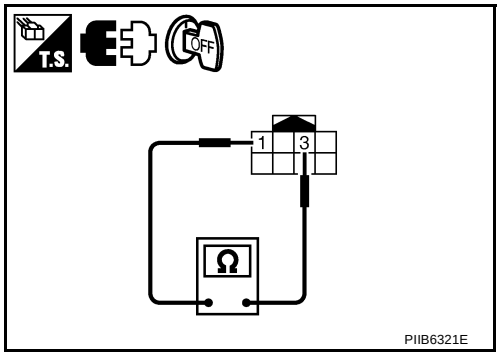

OK or NG

OK >> GO TO 4.
NG >> Replace key slot.

4. CHECK KEY SLOT GROUND CIRCUIT

Check continuity between key slot connector and ground.

Key slot connector	Terminal	Ground	Continuity
M14	8		Yes

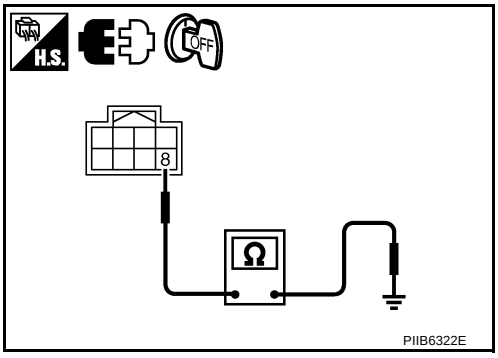

OK or NG

OK >> GO TO 5.
NG >> Repair or replace key slot ground circuit.

5. CHECK KEY SWITCH CIRCUIT

1. Disconnect Intelligent Key unit connector.
2. Check continuity between Intelligent Key unit connector 7 and key slot connector.

A		B		Continuity
Intelligent Key unit connector	Terminal	Key slot connector	Terminal	
M32	19	M14	2	Yes

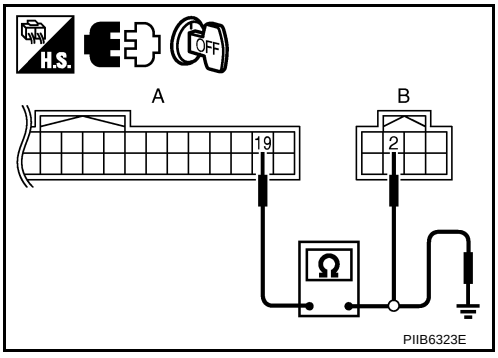

3. Check continuity between Intelligent Key unit connector and ground.

A		Ground	Continuity
Intelligent Key unit connector	Terminal		
M32	19		No

OK or NG

OK >> Check the condition of harness and harness connector.
NG >> Repair or replace harness between Intelligent Key unit and key slot.

Check Door Switch

NIS001XO

1. CHECK DOOR SWITCH INPUT SIGNAL

With CONSULT-II

Check door switches (“DOOR SW-DR”, “DOOR SW-AS”, “DOOR SW-RL” and “DOOR SW-RR”) in “DATA MONITOR” mode with CONSULT-II.

Monitor item	Condition
DOOR SW-DR	CLOSE → OPEN: OFF → ON
DOOR SW-AS	
DOOR SW-RL	
DOOR SW-RR	

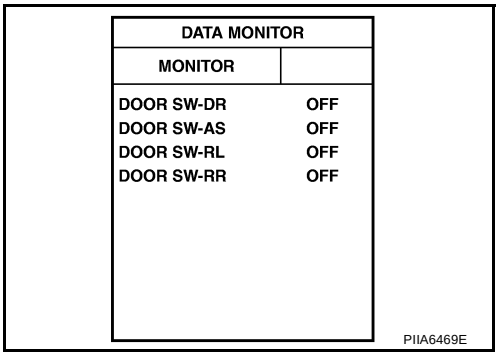

Without CONSULT-II

1. Turn ignition switch OFF.
2. Check voltage between BCM connector and ground.

Terminals (+) BCM connector	Terminals (+) Terminal	Terminals (–)	Door condition		Voltage (V) (Approx.)
M1	12	Ground	Front passenger side	OPEN	0
				CLOSE	Battery voltage
	13		Rear RH side	OPEN	0
				CLOSE	Battery voltage
M3	62		Driver side	OPEN	0
				CLOSE	Battery voltage
	63		Rear LH side	OPEN	0
				CLOSE	Battery voltage

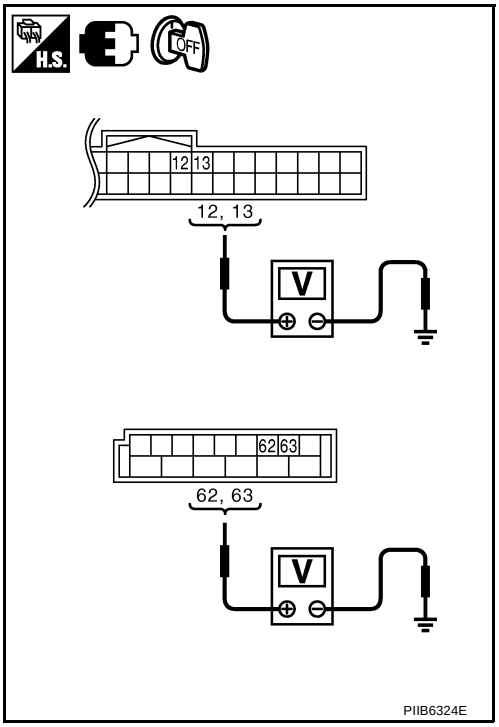

OK or NG

OK >> Door switch circuit is OK.
NG >> GO TO 2.

2. CHECK DOOR SWITCH

1. Turn ignition switch OFF.
2. Disconnect door switch connector.
3. Check door switch.

Terminal		Door switch	Continuity
Door switch			
2	Ground part of door switch	Pushed	No
		Released	Yes

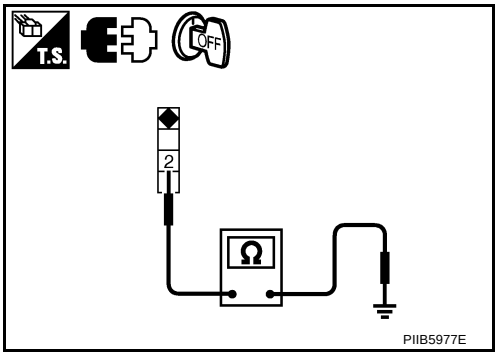

OK or NG

OK >> GO TO 3.
NG >> Replace malfunction door switch.

3. CHECK DOOR SWITCH CIRCUIT

1. Disconnect BCM connector.
2. Check continuity between BCM connector and door switch connector.

A		B		Continuity
BCM connector	Terminal	Door switch connector	Terminal	
M1	12	B35	2	Yes
	13	B403		
M3	62	B11		
	63	B53		

3. Check continuity between BCM connector and ground.

A			Continuity
BCM connector	Terminal		
M1	12	Ground	No
	13		
M3	62		
	63		

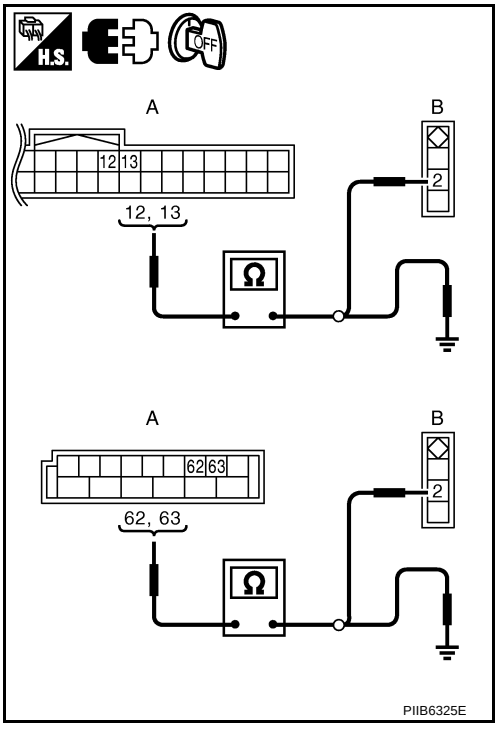

OK or NG

OK >> GO TO 4.
NG >> Repair or replace harness between BCM and door switch.

4. CHECK BCM OUTPUT SIGNAL

1. Connect BCM connector.
2. Check voltage between BCM connector and ground.

Terminals			Voltage (V) (Approx.)
(+)		(–)	
BCM connector	Terminal		
M1	12	Ground	Battery voltage
	13		
M3	62		
	63		

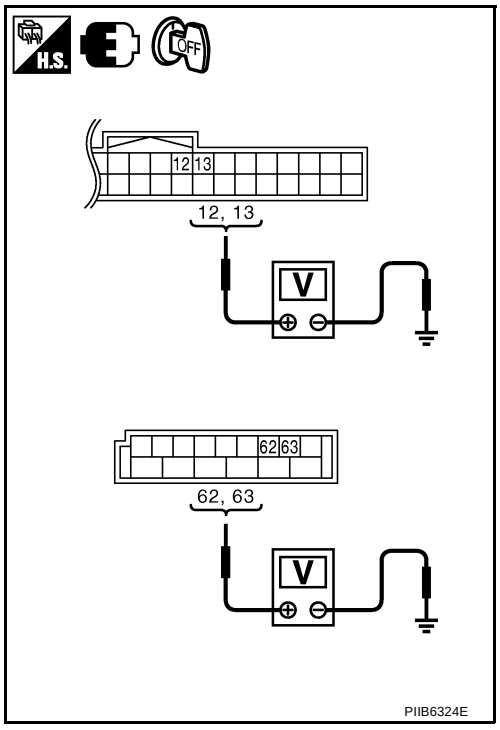

OK or NG

OK >> Check the condition of harness and connector.
NG >> Replace BCM.

Check Trunk Room Lamp Switch

NIS001XP

1. CHECK TRUNK ROOM LAMP SWITCH INPUT SIGNAL

With CONSULT-II

Check (“TRUNK SW”) in “DATA MONITOR” mode with CONSULT-II.

Monitor item	Condition	
TRUNK SW	OPEN	: ON
	CLOSE	: OFF

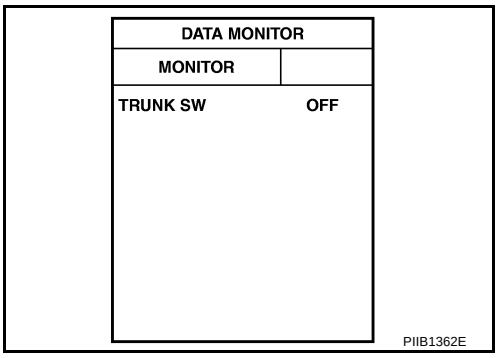

Without CONSULT-II

1. Turn ignition switch OFF.
2. Check voltage between BCM connector and ground.

Terminals			Trunk condition	Voltage (V) (Approx.)
(+)		(–)		
BCM connector	Terminal			
M3	57	Ground	OPEN	0
			CLOSE	Battery voltage

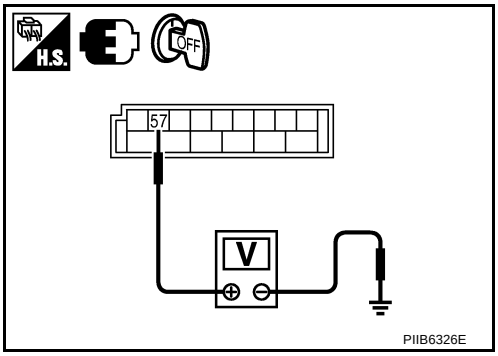

OK or NG

OK >> Trunk room lamp switch circuit is OK.
NG >> GO TO 2.

2. CHECK TRUNK ROOM LAMP SWITCH

1. Turn ignition switch OFF.
2. Disconnect trunk lid lock assembly connector.
3. Check trunk room lamp switch.

Terminal		Trunk condition	Continuity
Trunk room lamp switch			
1	2	OPEN	Yes
		CLOSE	No

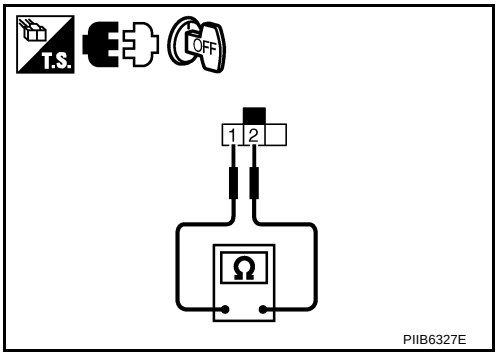

OK or NG

OK >> GO TO 3.
NG >> Replace trunk room lamp switch.

3. CHECK TRUNK ROOM LAMP SWITCH CIRCUIT

1. Disconnect BCM connector.
2. Check continuity between BCM connector and trunk lid lock assembly connector.

A		B		Continuity
BCM connector	Terminal	Trunk lid lock assembly connector	Terminal	
M3	57	T106	1	Yes

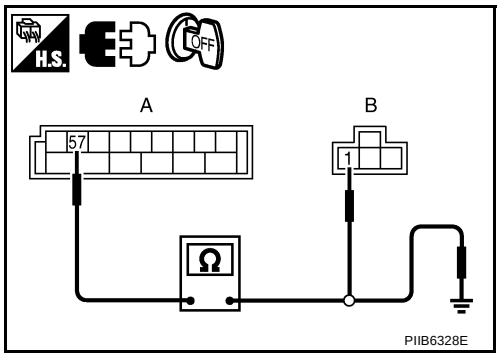

3. Check continuity between BCM connector and ground.

A		Ground	Continuity
BCM connector	Terminal		
M3	57		No

OK or NG

OK >> GO TO 4.
NG >> Repair or replace harness between BCM and trunk room lamp switch.

4. CHECK TRUNK ROOM LAMP SWITCH GROUND CIRCUIT

Check continuity between trunk lid lock assembly connector and ground.

Trunk lid lock assembly connector	Terminal	Ground	Continuity
T106	2		Yes

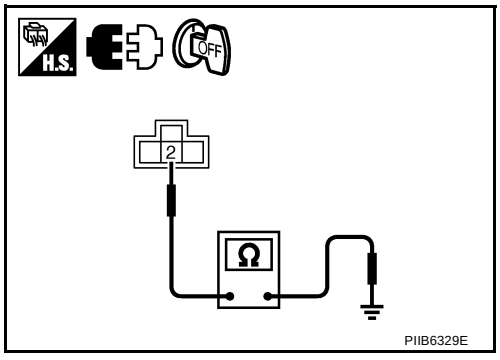

OK or NG

OK >> GO TO 5.
NG >> Repair or replace trunk room lamp switch ground circuit.

5. CHECK BCM OUTPUT SIGNAL

1. Connect BCM connector.
2. Check voltage between BCM connector and ground.

Terminals			Voltage (V) (Approx.)
(+)		(–)	
BCM connector	Terminal		
M3	57	Ground	Battery voltage

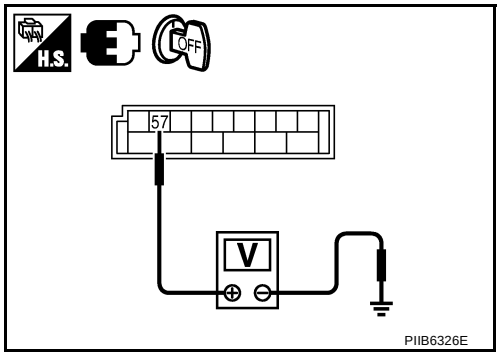

OK or NG

OK >> Check the condition of harness and connector.
NG >> Replace BCM.

Check Door Request Switch

NIS001XQ

1. CHECK DOOR REQUEST SWITCH

With CONSULT-II

Check door request switch (“DR REQ SW” or “AS REQ SW”) in “DATA MONITOR” mode.

Monitor item	Condition
DR REQ SW AS REQ SW	Door request switch is pressed : ON
	Door request switch is released : OFF

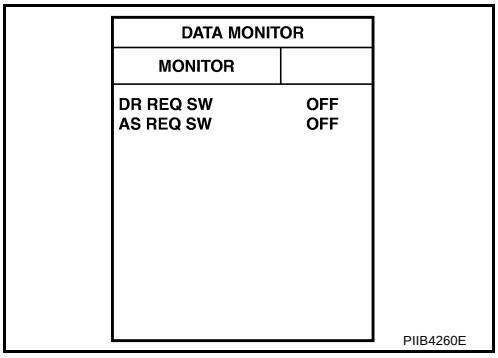

Without CONSULT-II

1. Turn ignition switch OFF.
2. Check voltage between Intelligent Key unit harness connector and ground.

Terminals				Door request switch Condition	Voltage (V) (Approx.)
(+)			(–)		
Intelligent Key unit connector		Terminal			
M32	Door request switch (driver side)	2	Ground	Pressed	0
				Released	5
	Door request switch (passenger side)	22		Pressed	0
				Released	5

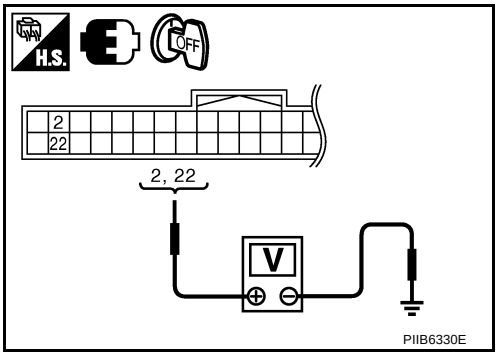

OK or NG

OK >> Door request switch is OK.
NG >> GO TO 2.

2. CHECK DOOR REQUEST SWITCH CIRCUIT

1. Disconnect Intelligent Key unit and front outside handle connector.
2. Check continuity between Intelligent Key unit connector and front outside handle connector.

A		B		Continuity
Intelligent Key unit connector	Terminal	Front outside handle connector	Terminal	
M32	2	D15 (LH)	3	Yes
	22	D45 (RH)		

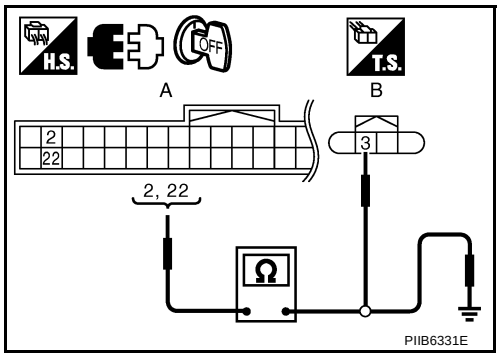

3. Check continuity between Intelligent Key unit connector and ground.

A		Ground	Continuity
Intelligent Key unit connector	Terminal		
M32	2		No
	22		

OK or NG

OK >> GO TO 3.
NG >> Repair or replace harness between Intelligent Key unit and front outside handle.

3. CHECK DOOR REQUEST SWITCH OPERATION

Check front outside handle.

Terminal		Door request switch condition	Continuity
Front outside handle			
3	4	Pressed	Yes
		Released	No

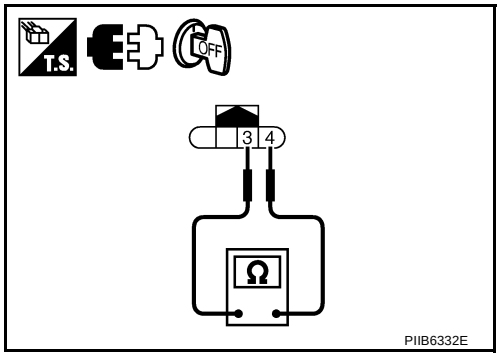

OK or NG

OK >> GO TO 4.
NG >> Replace malfunction front outside handle.

4. CHECK DOOR REQUEST SWITCH GROUND CIRCUIT

Check continuity between front outside handle connector and ground.

Front outside handle connector	Terminal	Ground	Continuity
D15 (LH)	4		Yes
D45 (RH)			

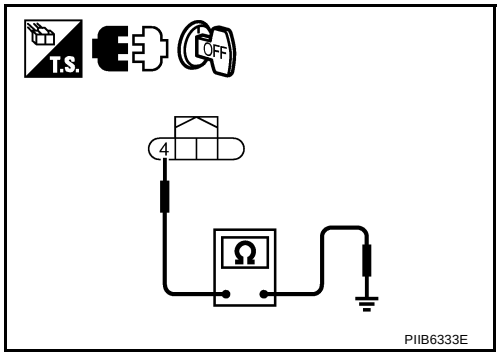

OK or NG

OK >> GO TO 5.
NG >> Repair or replace front outside handle ground circuit.

5. CHECK INTELLIGENT KEY UNIT OUTPUT SIGNAL

1. Connect Intelligent Key unit connector.
2. Check voltage between Intelligent Key unit connector and ground.

Terminals			Voltage (V) (Approx.)
(+)		(–)	
Intelligent Key unit connector	Terminal		
M32	2	Ground	5
	22		

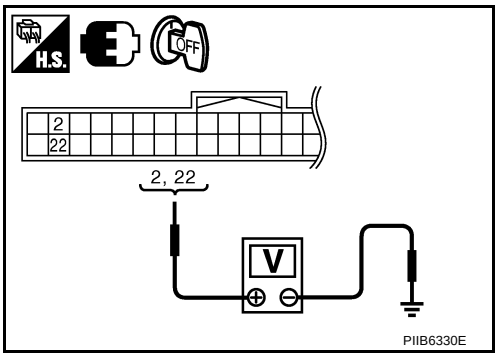

OK or NG

OK >> Check the condition of harness and connector.
NG >> Replace Intelligent Key unit.

Check Trunk Opener Request Switch

NIS001XR

1. CHECK TRUNK OPENER REQUEST SWITCH

With CONSULT-II

Check trunk opener request switch (“BD/TR REQ SW”) in “DATA MONITOR” mode.

Monitor item	Condition
BD/TR REQ SW	Trunk opener request switch is pressed : ON
	Trunk opener request switch is released : OFF

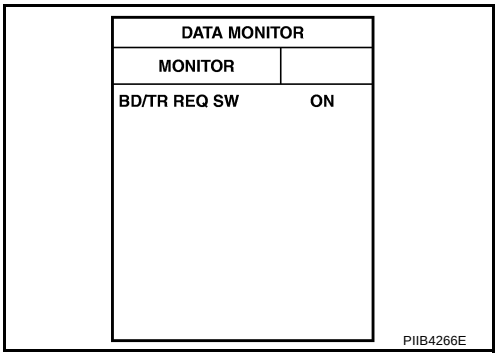

Without CONSULT-II

1. Turn ignition switch OFF.
2. Check voltage between Intelligent Key unit connector and ground.

Terminals			Trunk lid opener request switch condition	Voltage (V) (Approx.)
(+)		(–)		
Intelligent Key unit connector	Terminal			
M32	25	Ground	Pressed	0
			Released	5

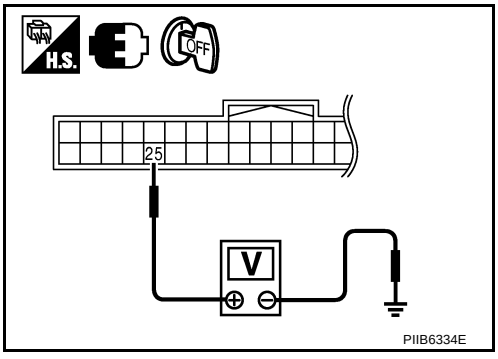

OK or NG

OK >> Trunk opener request switch is OK.
NG >> GO TO 2.

2. CHECK TRUNK OPENER REQUEST SWITCH CIRCUIT

1. Disconnect Intelligent Key unit and trunk opener request switch connector.
2. Check continuity between Intelligent Key unit connector and trunk opener request switch connector.

A		B		Continuity
Intelligent Key unit connector	Terminal	Trunk request switch connector	Terminal	
M32	25	T107	1	Yes

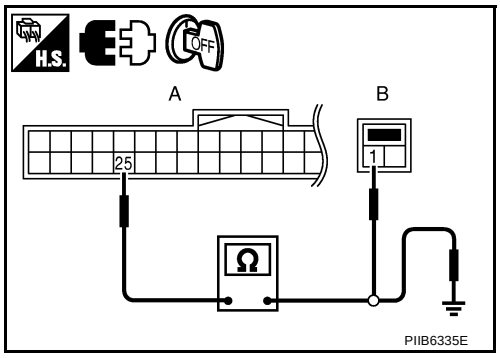

3. Check continuity between Intelligent Key unit connector and ground.

A		Ground	Continuity
Intelligent Key unit connector	Terminal		
M32	25		No

OK or NG

OK >> GO TO 3.
NG >> Repair or replace harness between Intelligent Key unit and trunk opener request switch.

3. CHECK TRUNK OPENER REQUEST SWITCH OPERATION

Check trunk opener request switch.

Terminal		Trunk opener request switch condition	Continuity
Trunk opener request switch			
1	2	Pressed	Yes
		Released	No

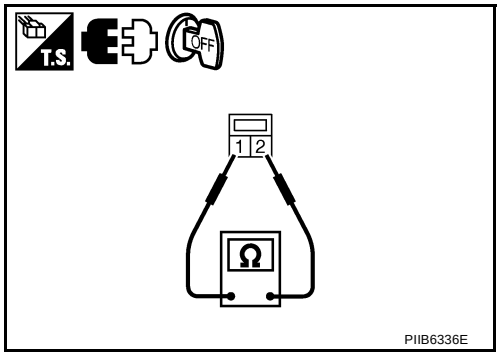

OK or NG

OK >> GO TO 4.
NG >> Replace trunk opener request switch.

4. CHECK TRUNK OPENER REQUEST SWITCH GROUND CIRCUIT

Check continuity between trunk opener request switch connector and ground.

Trunk opener request switch connector	Terminal	Ground	Continuity
T107	2		Yes

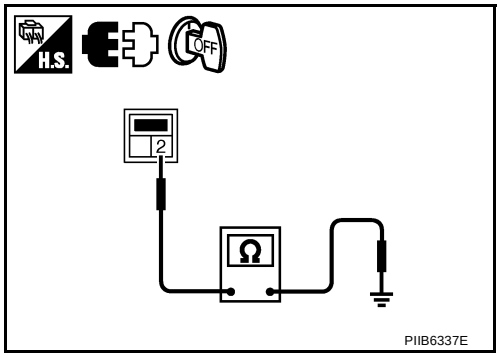

OK or NG

OK >> GO TO 5.
NG >> Repair or replace trunk opener request switch ground circuit.

5. CHECK INTELLIGENT KEY UNIT OUTPUT SIGNAL

1. Connect Intelligent Key unit connector.
2. Check voltage between Intelligent Key unit connector and ground.

Terminals			Voltage (V) (Approx.)
(+)		(–)	
Intelligent Key unit connector	Terminal		
M32	25	Ground	5

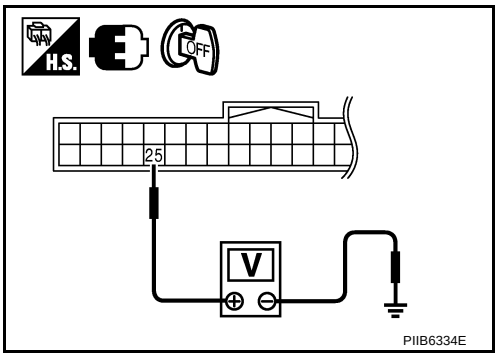

OK or NG

OK >> Check the condition of harness and connector.
NG >> Replace Intelligent Key unit.

Check Unlock Sensor

NIS001XS

1. CHECK UNLOCK SENSOR POWER SUPPLY

With CONSULT-II

Check unlock sensor (“DOOR STAT SW”) in “DATA MONITOR” mode.

Monitor item	Condition
DOOR STAT SW	Front door lock (driver side) LOCK : ON
	Front door lock (driver side) UNLOCK : OFF

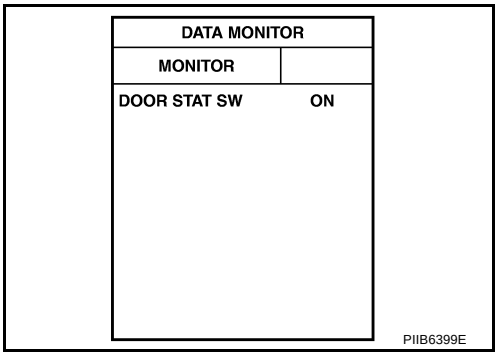

Without CONSULT-II

Check voltage between Intelligent Key unit connector and ground.

Terminals			Front door lock (driver side) condition	Voltage (V) (Approx.)
(+)		(–)		
Intelligent Key unit connector	Terminal			
M32	26	Ground	Locked	Battery voltage
			Unlocked	0

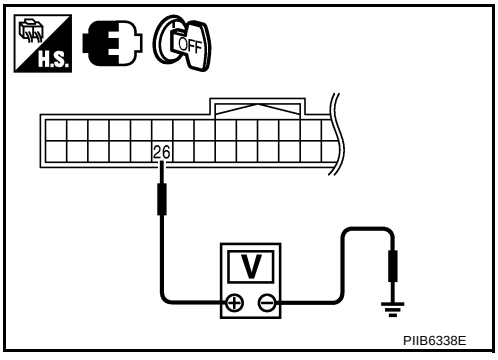

OK or NG

OK >> Unlock sensor is OK.
NG >> GO TO 2.

2. CHECK UNLOCK SENSOR CIRCUIT

1. Turn ignition switch OFF.
2. Disconnect Intelligent Key unit and front door lock assembly (driver side) connector.
3. Check continuity between Intelligent Key unit connector and front door lock assembly (driver side) connector.

A		B		Continuity
Intelligent Key unit connector	Terminal	Front door lock assembly (driver side) connector	Terminal	
M32	26	D14	3	Yes

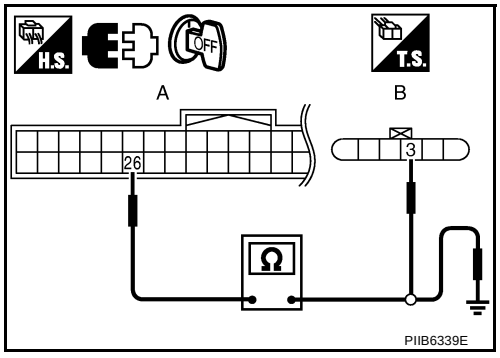

4. Check continuity between Intelligent Key unit connector and ground.

A		Ground	Continuity
Intelligent Key unit connector	Terminal		
M32	26		No

OK or NG

OK >> GO TO 3.
NG >> Repair or replace harness between Intelligent Key unit and front door lock assembly (driver side).

3. CHECK UNLOCK SENSOR GROUND CIRCUIT

Check continuity between front door lock assembly (driver side) connector and ground.

Front door lock assembly (driver side) connector	Terminal	Ground	Continuity
D14	4		Yes

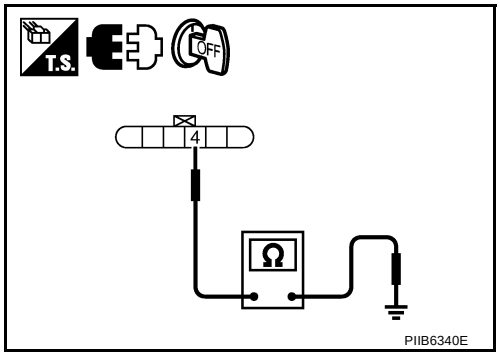

OK or NG

OK >> GO TO 4.
NG >> Repair or replace harness.

4. CHECK INTELLIGENT KEY UNIT OUTPUT SIGNAL

1. Connect Intelligent Key unit harness connector.
2. Check voltage between Intelligent Key unit connector and ground.

Terminals			Voltage (V) (Approx.)
(+)		(–)	
Intelligent Key unit connector	Terminal		
M32	26	Ground	Battery voltage

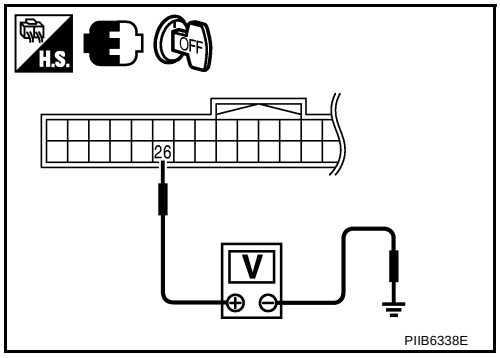

OK or NG

OK >> Replace front door lock assembly (driver side).
NG >> Replace Intelligent Key unit.

Check Intelligent Key Warning Buzzer

NIS001XT

1. CHECK INTELLIGENT KEY WARNING BUZZER

Check voltage between Intelligent Key unit connector and ground.

Terminals			Warning buzzer operation condition	Voltage (V) (Approx.)
(+)		(–)		
Intelligent Key unit connector	Terminal			
M33	55	Ground	Yes	0
			No	Battery voltage

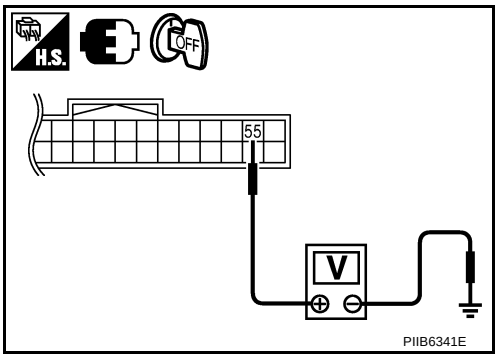

OK or NG

OK >> Intelligent Key warning buzzer is OK.
NG >> GO TO 2.

2. CHECK INTELLIGENT KEY WARNING BUZZER POWER SUPPLY CIRCUIT

1. Turn ignition switch OFF.
2. Disconnect Intelligent Key warning buzzer connector.
3. Check voltage between Intelligent Key warning buzzer connector and ground.

Terminals			Voltage (V) (Approx.)
(+)		(–)	
Intelligent Key warning buzzer connector	Terminal		
E37	3	Ground	Battery voltage

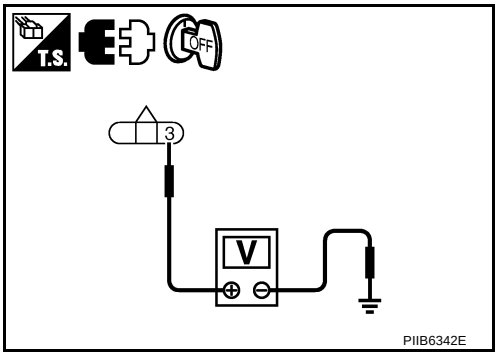

OK or NG

OK >> GO TO 3.
NG >> Repair or replace Intelligent Key warning buzzer power supply circuit.

3. CHECK INTELLIGENT KEY WARNING BUZZER CIRCUIT

1. Disconnect Intelligent Key unit connector.
2. Check continuity between Intelligent Key unit connector and Intelligent Key warning buzzer connector.

A		B		Continuity
Intelligent Key unit connector	Terminal	Intelligent Key warning buzzer connector	Terminal	
M33	55	E37	1	Yes

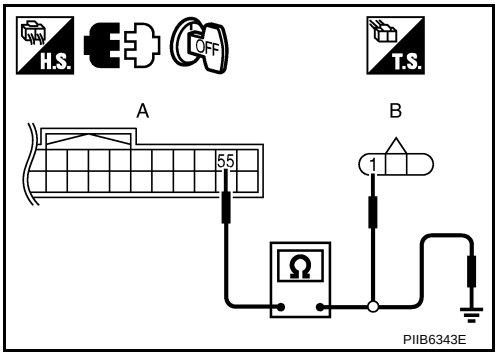

3. Check continuity between Intelligent Key unit connector and ground.

A		Ground	Continuity
Intelligent Key unit connector	Terminal		
M33	55		No

OK or NG

OK >> GO TO 4.
NG >> Repair or replace harness between Intelligent Key unit and Intelligent Key warning buzzer.

4. CHECK INTELLIGENT KEY WARNING BUZZER OPERATION

Connect battery power supply to Intelligent Key warning buzzer terminals 1 and 3, and check the operation.

1 (BAT-) - 3 (BAT+) : the buzzer sounds

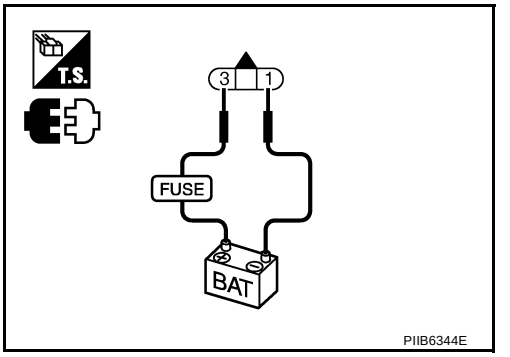

OK or NG

OK >> Intelligent Key warning buzzer is OK.
NG >> Replace Intelligent Key warning buzzer.

Check Outside Key Antenna (Driver Side and Passenger Side)

NIS001XU

1. CHECK OUTSIDE KEY ANTENNA FUNCTION

With CONSULT-II

1. Check the operation with (“ANTENNA”) in the ACTIVE TEST.
2. Touch “DRIVER ANT” and “ASSIST ANT” on screen.
3. Carry the Intelligent Key into the antenna detection area.

Test item	Corresponding antenna
DRIVER ANT	Outside key antenna driver side
ASSIST ANT	Outside key antenna passenger side

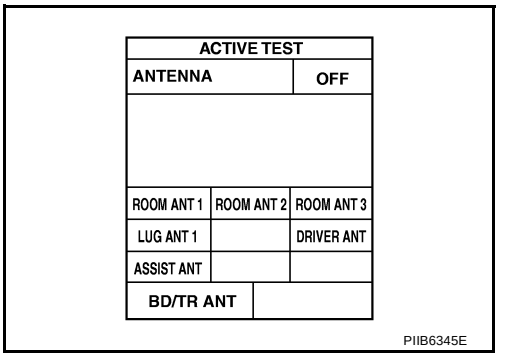

Does the hazard lamps flash?

Yes >> Outside key antenna (driver side or passenger side) is OK.
No >> GO TO 2.

2. CHECK OUTSIDE KEY ANTENNA INPUT SIGNAL 1

1. Turn ignition switch OFF.
2. Check signal between Intelligent Key unit connector and ground with oscilloscope.

Terminals (+) Intelligent Key unit connector		Terminal	Terminals (–)	Condition	Signal (Reference value.)
M33	Driver side	61	Ground	Door request switch is pushed	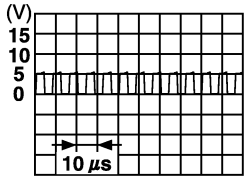
	Passenger side	63			

SIIA1910J

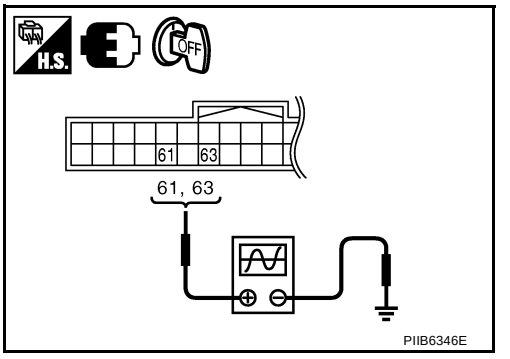

OK or NG

OK >> Check the condition of harness and connector.
NG >> GO TO 3.

3. CHECK OUTSIDE KEY ANTENNA CIRCUIT

1. Disconnect Intelligent Key unit and front outside handle connector.
2. Check continuity between Intelligent Key unit connector and front outside handle connector.

A		B		Continuity
Intelligent Key unit connector	Terminal	Front outside handle connector	Terminal	
M33	61	D15	1	Yes
	62		2	
	63	D45	1	
	64		2	

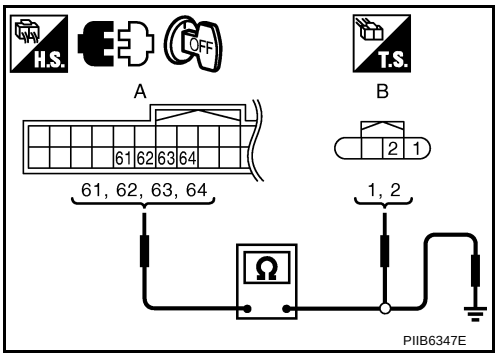

3. Check continuity between Intelligent Key unit connector and ground.

A			Continuity
Intelligent Key unit connector	Terminal		
M33	61	Ground	No
	62		
	63		
	64		

OK or NG

OK >> GO TO 4.
NG >> Repair or replace harness between Intelligent Key unit and front outside handle.

4. CHECK OUTSIDE KEY ANTENNA INPUT SIGNAL 2

1. Replace outside key antenna. (New antenna or other antenna)
2. Connect Intelligent Key unit and front outside handle connector.
3. Check signal between Intelligent Key unit connector and ground with oscilloscope.

Terminals				Condition	Signal (Reference value.)
(+)			(–)		
Intelligent Key unit connector		Terminal			
M33	Driver side	61	Ground	Door request switch is pushed	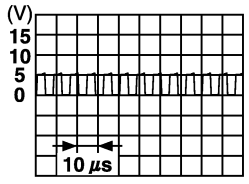 SIIA1910J
	Passenger side	63			

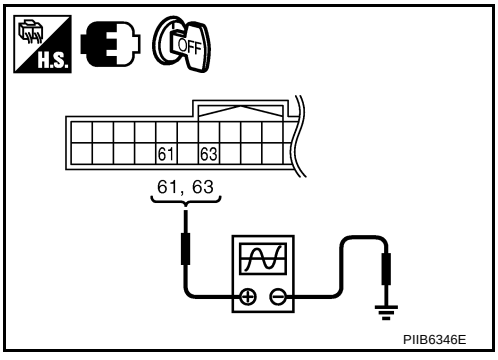

OK or NG

OK >> Replace malfunction front outside handle.
NG >> Replace Intelligent Key unit.

Check Outside Key Antenna (Trunk Room)

NIS001XV

1. CHECK OUTSIDE KEY ANTENNA FUNCTION

With CONSULT-II

1. Check the operation with (“ANTENNA”) in the ACTIVE TEST.
2. Touch “BD/TR ANT” on screen.
3. Carry the Intelligent Key into the antenna detection area.

Test item	Corresponding antenna
BD/TR ANT	Outside key antenna trunk room

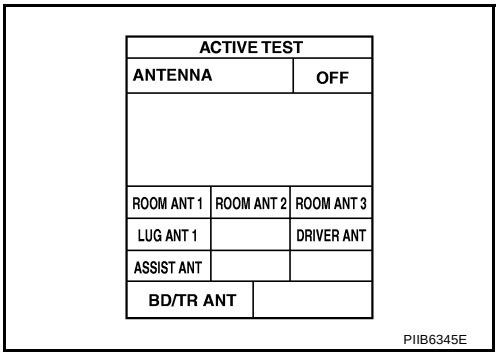

Do the hazard lamps flash?

Yes >> Outside key antenna (trunk room) is OK.
No >> GO TO 2.

2. CHECK OUTSIDE KEY ANTENNA INPUT SIGNAL 1

1. Turn ignition switch OFF.
2. Check signal between Intelligent Key unit connector and ground with oscilloscope.

Terminals (+) Intelligent Key unit connector	Terminals (+) Terminal	Terminals (–)	Condition	Signal (Reference value.)
M33	69	Ground	Trunk request switch is pushed	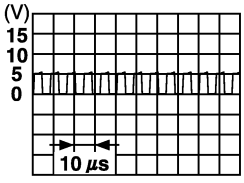 SIIA1910J

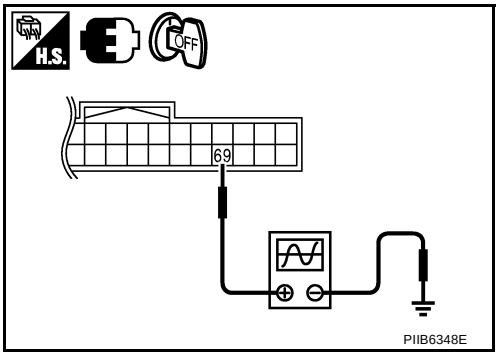

OK or NG

OK >> Check the condition of harness and connector.
NG >> GO TO 3.

3. CHECK OUTSIDE KEY ANTENNA CIRCUIT

1. Disconnect Intelligent Key unit and outside key antenna (trunk room) connector.
2. Check continuity between Intelligent Key unit connector and outside key antenna (trunk room) connector.

A		B		Continuity
Intelligent Key unit connector	Terminal	Outside key antenna (trunk room) connector	Terminal	
M33	69	B121	1	Yes
	70		2	

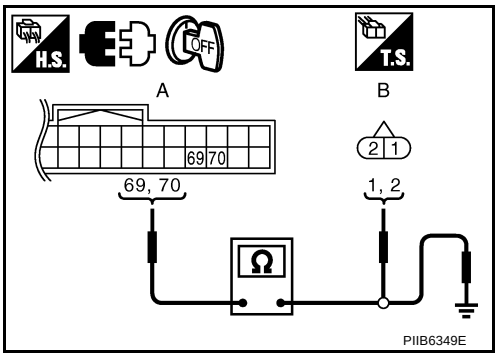

3. Check continuity between Intelligent Key unit connector and ground.

A		Ground	Continuity
Intelligent Key unit connector	Terminal		
M33	69		No
	70		

OK or NG

OK >> GO TO 4.
NG >> Repair or replace harness between Intelligent Key unit and outside key antenna (trunk room).

4. CHECK OUTSIDE KEY ANTENNA INPUT SIGNAL 2

1. Replace outside key antenna. (New antenna or other antenna)
2. Connect Intelligent Key unit and outside key antenna (trunk room) connector.
3. Check signal between Intelligent Key unit connector and ground with oscilloscope.

Terminals			Condition	Signal (Reference value.)
(+)		(–)		
Intelligent Key unit connector	Terminal			
M33	69	Ground	Trunk request switch is pushed	(V) 15 10 5 0 10 μs SIIA1910J

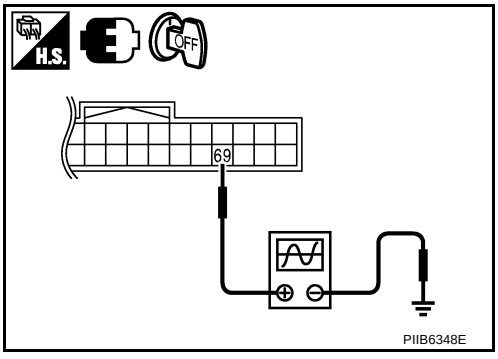

OK or NG

OK >> Replace malfunction front outside handle.
NG >> Replace Intelligent Key unit.

Check Inside Key Antenna

NIS001XW

1. CHECK INSIDE KEY ANTENNA FUNCTION

With CONSULT-II

1. Check the operation with (“ANTENNA”) in the ACTIVE TEST.
2. Touch “ROOM ANT1” “ROOM ANT2” “ROOM ANT3” “LUG ANT” on screen.
3. Carry the Intelligent Key into the antenna detection area.

Test item	Corresponding antenna
ROOM ANT1	Inside key antenna instrument center
ROOM ANT2	Inside key antenna console
ROOM ANT3	Inside key antenna rear seat
LUG ANT1	Inside key antenna trunk room

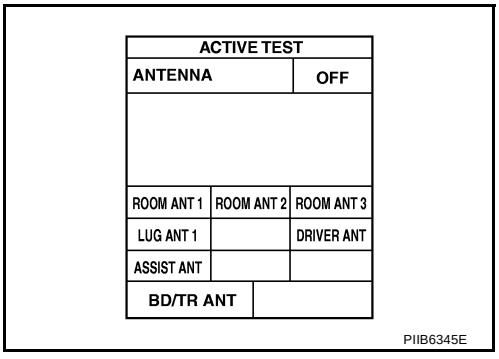

Do the hazard lamps flash?

Yes >> Inside key antenna is OK.
No >> GO TO 2.

2. CHECK INSIDE KEY ANTENNA INPUT SIGNAL 1

1. Turn ignition switch OFF.
2. Check signal between Intelligent Key unit connector and ground with oscilloscope.

Terminals (+) Intelligent Key unit connector		Terminals (+) Terminal	Terminals (–)	Condition	Signal (Reference value.)
M33	Instrument center	47	Ground	Any door is open → close	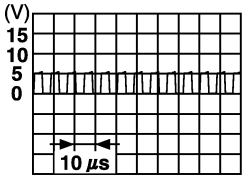
	Console	49			
	Rear seat	51			
	Trunk room	53			

SIIA1910J

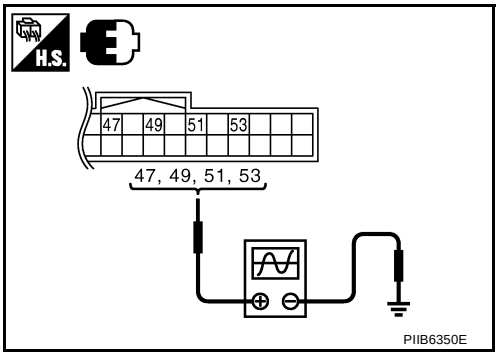

OK or NG

OK >> Check the condition of harness and connector.
NG >> GO TO 3.

3. CHECK INSIDE KEY ANTENNA CIRCUIT

1. Disconnect Intelligent Key unit and inside key antenna connector.
2. Check continuity between Intelligent Key unit connector and inside key antenna connector.

A		B			Continuity
Intelligent Key unit connector	Terminal	Inside key antenna connector		Terminal	
M33	47	M83	Instrument center	1	Yes
	48			2	
	49	M142	Console	1	
	50			2	
	51	B45	Rear seat	1	
	52			2	
	53	B132	Trunk room	1	
	54			2	

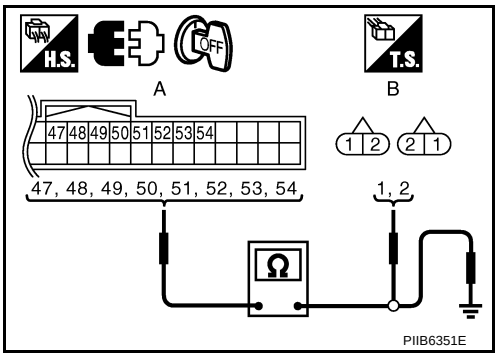

3. Check continuity between Intelligent Key unit connector and ground.

A				Continuity
Intelligent Key unit connector		Terminal		
M33	Instrument center	47	Ground	No
		48		
	Console	49		
		50		
	Rear seat	51		
		52		
	Trunk room	53		
		54		

OK or NG

OK >> GO TO 4.
NG >> Repair or replace harness between Intelligent Key unit and inside key antenna.

4. CHECK INDE KEY ANTENNA INPUT SIGNAL 2

1. Replace inside key antenna. (New antenna or other antenna)
2. Connect Intelligent Key unit and inside key antenna connector.
3. Check signal between Intelligent Key unit connector and ground with oscilloscope.

Terminals				Condition	Signal (Reference value.)
(+)			(–)		
Intelligent Key unit connector		Terminal			
M33	Instrument center	47	Ground	Any door is open → close	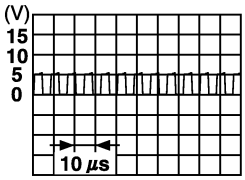 SIIA1910J
	Console	49			
	Rear seat	51			
	Trunk room	53			

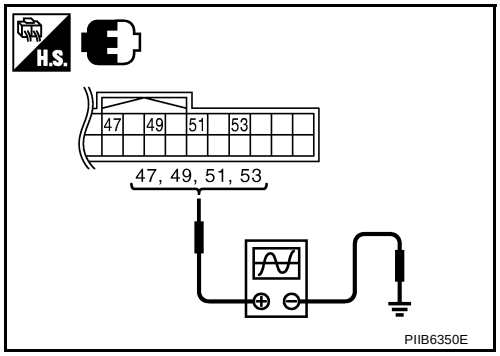

OK or NG

OK >> Replace malfunction inside key antenna.
NG >> Replace Intelligent Key unit.

Check Park Position Switch

NIS001XX

1. CHECK PARK POSITION SWITCH INPUT SIGNAL

With CONSULT-II

Check ("P RANGE SW") in "DATA MONITOR" mode.

Monitor item	Condition
P RANGE SW	A/T device P position : ON
	Other than above : OFF

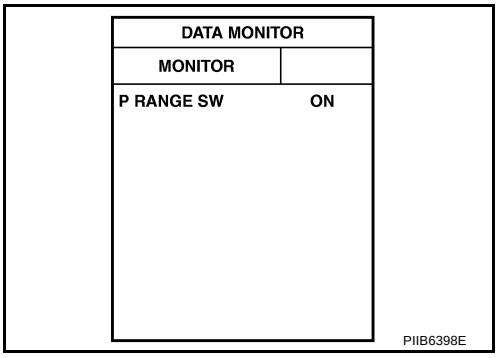

Without CONSULT-II

1. Turn ignition switch OFF.
2. Check voltage between Intelligent Key unit connector and ground.

Terminals (+) Intelligent Key unit connector	Terminals (+) Terminal	Terminals (–)	A/T device position	Voltage (V) (Approx.)
M32	27	Ground	P	0
			Other than above	Battery voltage

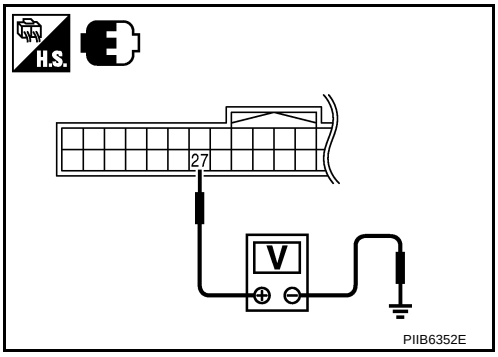

OK or NG

OK >> Park position switch circuit is OK.
NG >> GO TO 2.

2. CHECK INTELLIGENT KEY UNIT OUTPUT SIGNAL

Check voltage between Intelligent Key unit connector and ground.

Terminals (+) Intelligent Key unit connector	Terminals (+) Terminal	Terminals (–)	Condition	Voltage (V) (Approx.)
M33	58	Ground	Wake-up state (Open drive side door)	Battery voltage
			Sleep state (After 30 seconds or more since all doors are closed under the condition that the ignition switch is in the LOCK position)	0

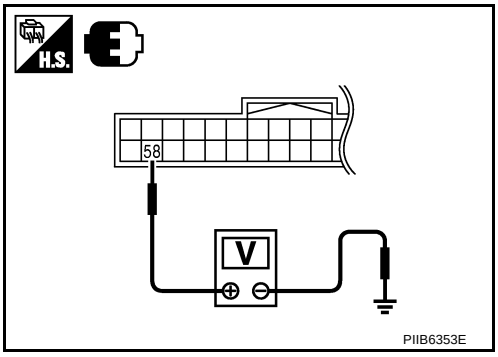

OK or NG

OK >> GO TO 3.
NG >> Check the condition of harness and connector.

3. CHECK PARK POSITION SWITCH

1. Disconnect A/T device connector.
2. Check A/T device.

Terminal		A/T device position	Continuity
A/T device			
9	10	P	Yes
		Other than above	No

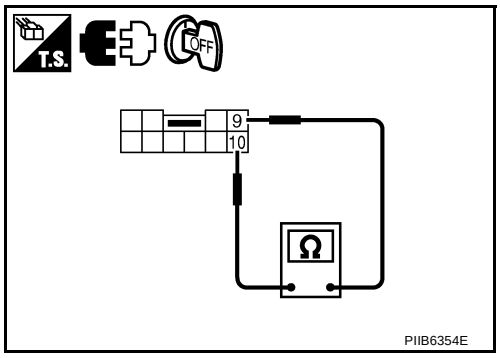

OK or NG

OK >> GO TO 4.
NG >> Check A/T shift lock system. Refer to AT-229, "A/T SHIFT LOCK SYSTEM" .

4. CHECK HARNESS CONTINUITY 1

1. Disconnect A/T device connector.
2. Check continuity between Intelligent Key unit connector and A/T device connector.

A		B		Continuity
Intelligent Key unit connector	Terminal	A/T device connector	Terminal	
M32	27	M133	10	Yes

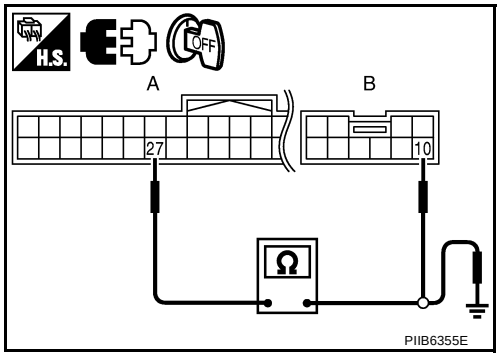

3. Check continuity between Intelligent Key unit connector and ground.

A		Ground	Continuity
Intelligent Key unit connector	Terminal		
M32	27		No

OK or NG

OK >> GO TO 5.
NG >> Repair or replace harness between Intelligent Key and A/T device.

5. CHECK HARNESS CONTINUITY 2

1. Check continuity between Intelligent Key unit connector and A/T device connector.

A		B		Continuity
Intelligent Key unit connector	Terminal	A/T device connector	Terminal	
M33	58	M133	9	Yes

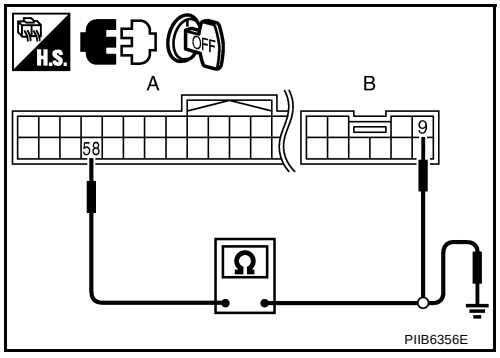

2. Check continuity between Intelligent Key unit connector and ground.

A		Ground	Continuity
Intelligent Key unit connector	Terminal		
M33	58		No

OK or NG

OK >> Check the condition of harness and connector.
NG >> Repair or replace harness between Intelligent Key and A/T device.

Check Ignition Switch Position

NIS001XY

1. CHECK IGNITION POWER SUPPLY

Check voltage between Intelligent Key unit connector and ground.

Terminals			Ignition switch position		
(+)		(–)			
Intelligent Key unit connector	Terminal		OFF	ACC	ON
M32	30	Ground	0	Battery voltage	Battery voltage
	31		0	0	Battery voltage

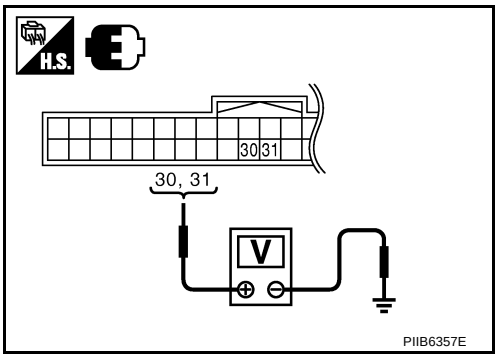

OK or NG

OK >> Ignition power supply is OK.
NG >> Check the following.

- Repair or replace Intelligent Key unit power supply circuit.
- Check 10A fuse [No. 6, located in the fuse block (J/B)]
- Check 10A fuse [No. 12, located in the fuse block (J/B)]

Check Remote Keyless Entry Receiver

NIS001XZ

1. CHECK REMOTE KEYLESS ENTRY RECEIVER OUTPUT SIGNAL

1. Turn ignition switch OFF.
2. Check signal between remote keyless entry receiver connector and ground with oscilloscope.

Terminals			Keyfob condition	Signal (Reference value)
(+)		(–)		
Remote keyless entry receiver connector	Terminal			
M89	2	Ground	No function	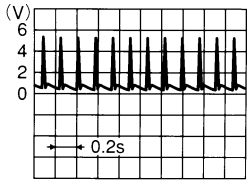 OCC3879D
			Any button is pressed	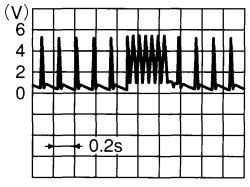 OCC3880D

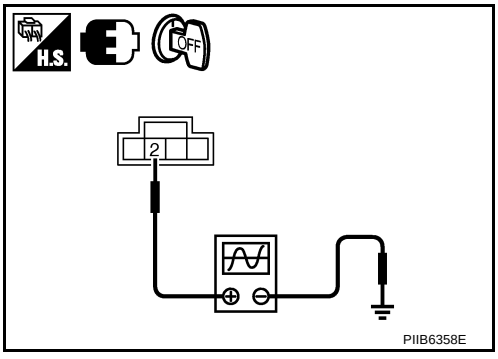

OK or NG

OK >> Remote keyless entry receiver is OK.
NG >> GO TO 2.

2. CHECK REMOTE KEYLESS ENTRY RECEIVER POWER SUPPLY

1. Disconnect remote keyless entry receiver connector.
2. Check signal between remote keyless entry receiver connector and ground with oscilloscope.

Terminals			Signal (Reference value)
(+)		(–)	
Remote keyless entry receiver connector	Terminal		
M89	4	Ground	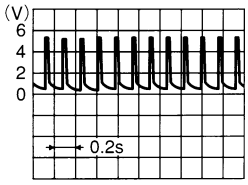

OCC3881D

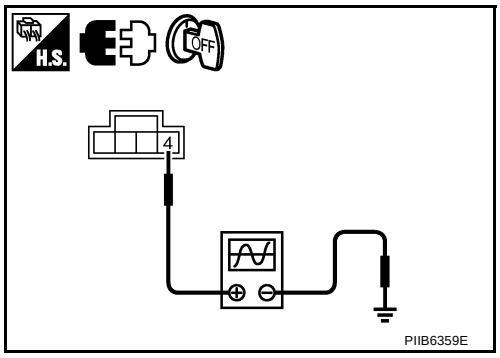

PIIB6359E

OK or NG

OK >> GO TO 4.
NG >> GO TO 3.

3. CHECK HARNESS CONTINUITY 1

1. Disconnect Intelligent Key unit connector.
2. Check continuity between Intelligent Key unit connector and remote keyless entry receiver connector.

A		B		Continuity
Intelligent Key unit connector	Terminal	Remote keyless entry receiver connector	Terminal	
M32	7	M89	4	Yes

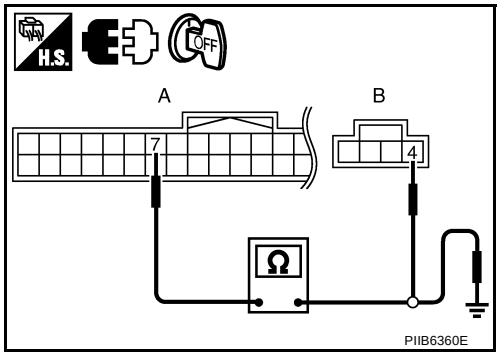

PIIB6360E

3. Check continuity between Intelligent Key unit connector and ground.

A		Ground	Continuity
Intelligent Key unit connector	Terminal		
M32	7		No

OK or NG

OK >> Check the condition of harness and connector.
NG >> Repair or replace harness between Intelligent Key unit and remote keyless entry receiver.

4. CHECK REMOTE KEYLESS ENTRY RECEIVER GROUND CIRCUIT

Check continuity between remote keyless entry receiver connector and ground.

Remote keyless entry receiver connector	Terminal	Ground	Continuity
M89	1		Yes

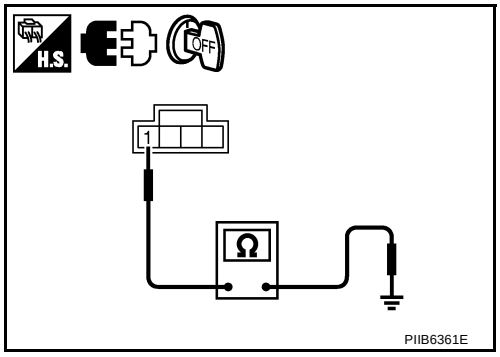

PIIB6361E

OK or NG

OK >> GO TO 6.
NG >> GO TO 5.

5. CHECK HARNESS CONTINUITY 2

Check continuity between Intelligent Key unit connector and remote keyless entry receiver connector.

A		B		Continuity
Intelligent Key unit connector	Terminal	Remote keyless entry receiver connector	Terminal	
M32	6	M89	1	Yes

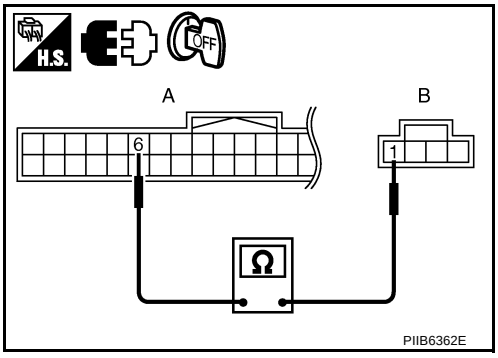

OK or NG

OK >> Check the condition of harness and connector.
NG >> Repair or replace harness between Intelligent Key unit and remote keyless entry.

6. CHECK HARNESS CONTINUITY 3

1. Check continuity between Intelligent Key unit connector and remote keyless entry receiver connector.

A		B		Continuity
Intelligent Key unit connector	Terminal	Remote keyless entry receiver connector	Terminal	
M32	5	M89	2	Yes

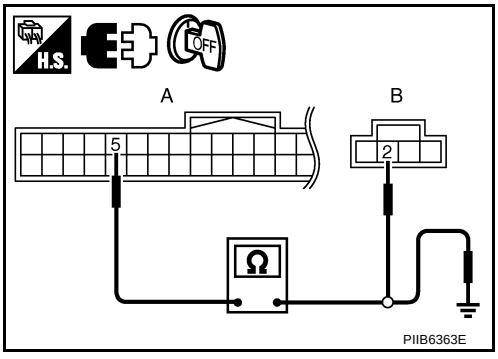

2. Check continuity between Intelligent Key unit connector and ground.

A		Ground	Continuity
Intelligent Key unit connector	Terminal		
M32	5		No

OK or NG

OK >> GO TO 7.
NG >> Repair or replace harness between Intelligent Key unit and remote keyless entry.

7. INTELLIGENT KEY UNIT OUTPUT SIGNAL

1. Connect Intelligent Key unit and remote keyless entry receiver connector.
2. Check voltage between Intelligent Key unit connector and ground.

Terminals (+) Intelligent Key unit connector	Terminals (+) Terminal	Terminals (–)	Condition	Voltage (V) (Approx.)
M32	4	Ground	When Intelligent Key is in vehicle, press push-button ignition switch	0
M32	4	Ground	Other than above	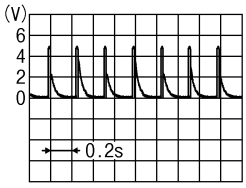

PIIB5657J

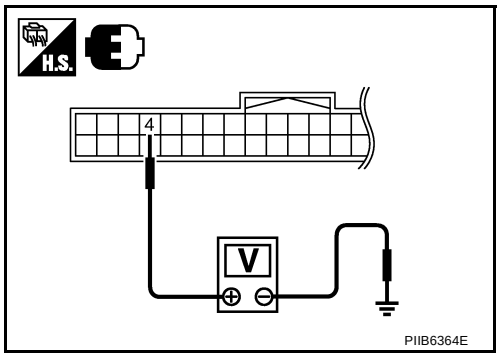

PIIB6364E

OK or NG

OK >> Check the condition of harness and connector.
NG >> GO TO 8.

8. CHECK HARNESS CONTINUITY 4

1. Disconnect Intelligent Key unit and remote keyless entry receiver connector.
2. Check continuity between Intelligent Key unit connector and remote keyless entry receiver connector.

A: Intelligent Key unit connector	A: Terminal	B: Remote keyless entry receiver connector	B: Terminal	Continuity
M32	4	M89	3	Yes

3. Check continuity between Intelligent Key unit connector and ground.

A: Intelligent Key unit connector	A: Terminal	Ground	Continuity
M32	4		No

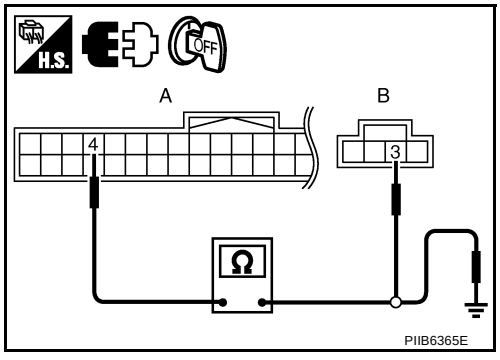

PIIB6365E

OK or NG

OK >> Check the condition of harness and connector.
NG >> Repair or replace harness between Intelligent Key unit and remote keyless entry receiver.

Check Trunk Lid Opener Cancel Switch

NIS001Y0

1. CHECK TRUNK LID OPENER CANCEL SWITCH

With CONSULT-II

Check trunk lid opener cancel sensor (“TR CANCEL SW”) in “DATA MONITOR” mode.

Monitor item	Condition
TR CANCEL SW	Trunk lid opener cancel switch ON : ON
	Trunk lid opener cancel switch OFF : OFF

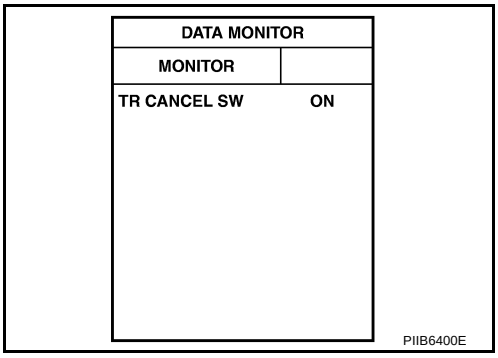

Without CONSULT-II

1. Turn ignition switch OFF.
2. Check voltage between Intelligent Key unit connector and ground.

Terminals			Trunk lid opener cancel switch condition	Voltage (V) (Approx.)
(+)		(–)		
Intelligent Key unit connector	Terminal			
M32	23	Ground	ON	0
			OFF (Cancel)	5

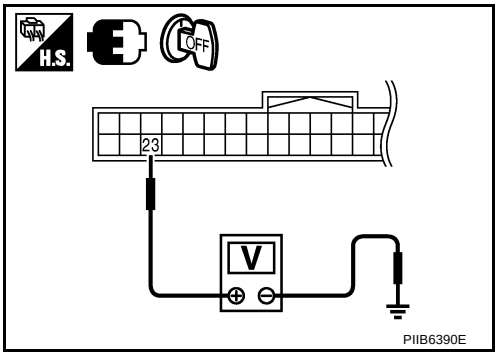

OK or NG

OK >> Trunk lid opener cancel switch is OK.
NG >> GO TO 2.

2. CHECK TRUNK LID OPENER CANCEL SWITCH CIRCUIT

1. Disconnect Intelligent Key unit and trunk lid opener cancel switch connector.
2. Check continuity between Intelligent Key unit connector and trunk lid opener cancel switch connector.

A		B		Continuity
Intelligent Key unit connector	Terminal	Trunk lid opener cancel switch connector	Terminal	
M32	23	M99	1	Yes

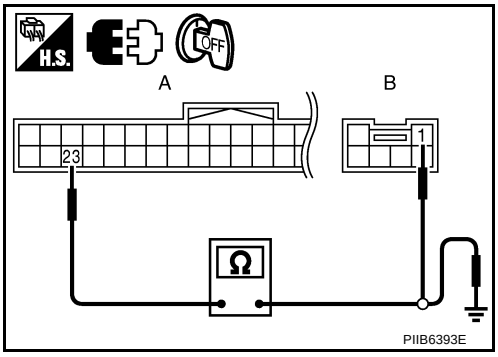

3. Check continuity between Intelligent Key unit connector and ground.

A		Ground	Continuity
Intelligent Key unit connector	Terminal		
M32	23		No

OK or NG

OK >> GO TO 3.
NG >> Repair or replace harness between Intelligent Key unit and trunk lid opener cancel switch.

3. CHECK TRUNK LID OPENER CANCEL SWITCH OPERATION

Check trunk lid opener cancel switch.

Terminal		Trunk lid opener cancel switch condition	Continuity
Trunk lid opener cancel switch			
1	3	ON	Yes
		OFF (Cancel)	No

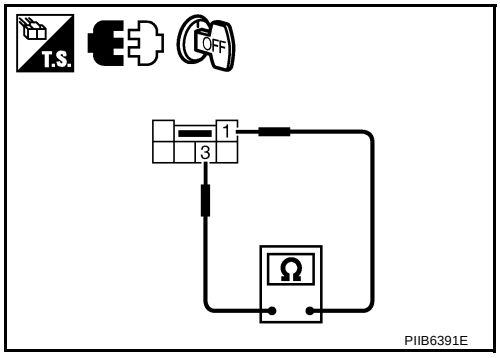

OK or NG

OK >> GO TO 4.
NG >> Replace trunk lid opener cancel switch.

4. CHECK TRUNK LID OPENER CANCEL SWITCH GROUND CIRCUIT

Check continuity between trunk lid opener cancel switch connector and ground.

Trunk lid opener cancel switch connector	Terminal	Ground	Continuity
M99	3		Yes

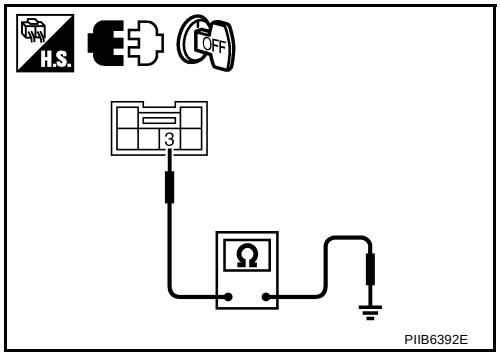

OK or NG

OK >> GO TO 5.
NG >> Repair or replace trunk lid opener cancel switch ground circuit.

5. CHECK INTELLIGENT KEY UNIT OUTPUT SIGNAL

1. Connect Intelligent Key unit connector.
2. Check voltage between Intelligent Key unit connector and ground.

Terminals			Voltage (V) (Approx.)
(+)		(–)	
Intelligent Key unit connector	Terminal		
M32	23	Ground	5

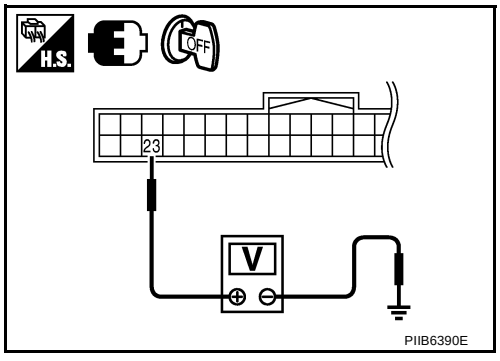

OK or NG

OK >> Check the condition of harness and connector.
NG >> Replace Intelligent Key unit.

Check Key Slot Illumination

NIS001Y1

1. CHECK KEY SLOT ILLUMINATION OUTPUT SIGNAL

Check voltage between key slot connector and ground.

Terminals			Condition	Key slot illumination	Voltage (V) (Approx.)
(+)		(–)			
Key slot connector	Terminal				
M14	3	Ground	Intelligent Key inserted	ON	Battery voltage
			Intelligent Key inserted	OFF	0

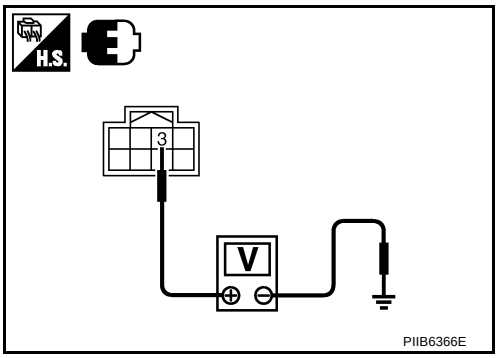

OK or NG

OK >> Key slot illumination is OK.
NG >> GO TO 2.

2. CHECK HARNESS CONTINUITY

1. Turn ignition switch OFF.
2. Disconnect Intelligent Key unit and key slot connector.
3. Check continuity between Intelligent Key unit connector and key slot connector.

A		B		Continuity
Intelligent Key unit connector	Terminal	Key slot connector	Terminal	
M32	13	M14	3	Yes

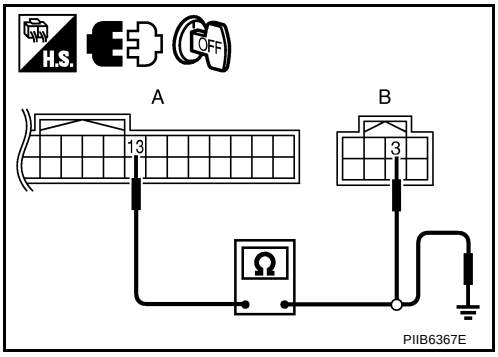

4. Check continuity between Intelligent Key unit connector and ground.

A		Ground	Continuity
Intelligent Key unit connector	Terminal		
M32	13		No

OK or NG

OK >> GO TO 3.
NG >> Repair or replace harness between Intelligent Key unit and key slot.

3. CHECK KEY SLOT GROUND CIRCUIT

Check continuity between key slot connector and ground.

Key slot connector	Terminal	Ground	Continuity
M14	8		Yes

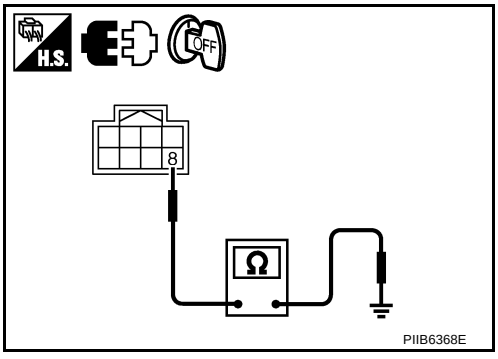

OK or NG

OK >> Replace key slot.
NG >> Repair or replace key slot ground circuit.

Check Horn Function

NIS001Y2

First perform the "SELF-DIAG RESULTS" of "BCM" with CONSULT-II, then perform the trouble diagnosis of malfunction system indicated in "SELF-DIAG RESULTS" of "BCM". Refer to BCS-15, "CAN Communication Inspection Using CONSULT-II (Self-Diagnosis)".

1. CHECK HORN OPERATION

Check if horn sounds with horn switch.

Does horn operate?

Yes >> GO TO 2.
No >> Check horn circuit. Refer to WW-53, "HORN" .

2. CHECK IPDM E/R INPUT SIGNAL

Check voltage between IPDM E/R connector and ground.

Terminals			Voltage (V) (Approx.)
(+)		(–)	
IPDM E/R connector	Terminal		
E9	48	Ground	Battery voltage

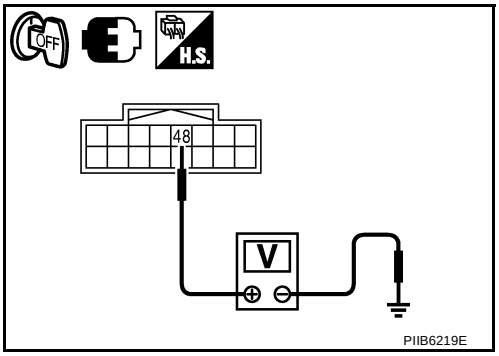

OK or NG

OK >> Replace IPDM E/R.
NG >> GO TO 3.

3. CHECK HORN RELAY CIRCUIT

1. Turn ignition switch OFF.
2. Disconnect IPDM E/R and horn relay connector.
3. Check continuity between IPDM E/R connector and horn relay connector.

A		B		Continuity
IPDM E/R connector	Terminal	Horn relay connector	Terminal	
E9	48	E20	1	Yes

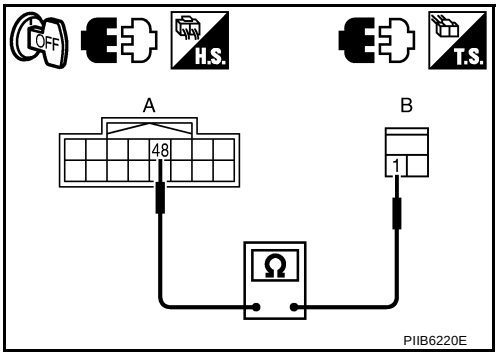

OK or NG

OK >> Check harness connection.
NG >> Repair or replace harness.

Check Combination Meter Display Function

NIS001Y3

1. CHECK METER DISPLAY

With CONSULT-II

Check the operation with ("LCD") in the ACTIVE TEST.

Is each warning displayed on meter display?

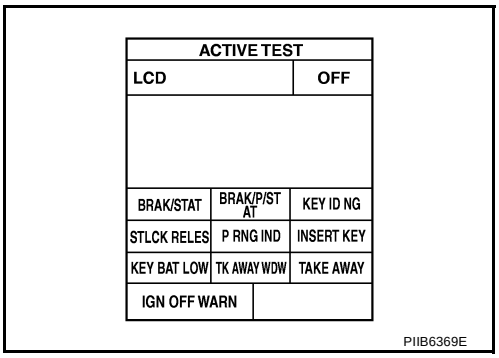

OK or NG

OK >> Meter display is OK.
NG >> Check combination meter. Refer to DI-17, "Self-Diagnosis Mode of Combination Meter" .

Check Warning Chime Function

NIS001Y4

1. CHECK WARNING CHIME INTO COMBINATION METER OPERATION

With CONSULT-II

1. Check the operation with “INSIDE BUZZER” in the “ACTIVE TEST”.
2. Touch “TAKE OUT”, “KEY WARN”, “P RNG WARN” or “ACC WARN” on screen.

Does warning buzzer sound?

Yes >> Warning buzzer into combination meter is OK.
No >> GO TO 2.

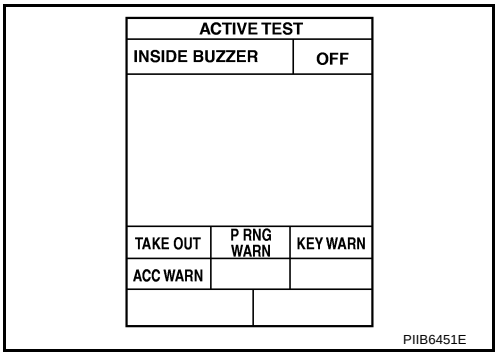

2. CHECK OTHER WARNING CHIME OPERATION

Confirm other warning chime function. Refer to DI-61, "LIGHT WARNING CHIME" .

Does other warning chime operate?

Yes >> Warning buzzer into combination meter is OK
No >> Check warning chime. Refer to DI-71, "Trouble Diagnosis" .

Removal and Installation of Intelligent Key Unit

NIS001Y5

REMOVAL

1. Remove dash side finisher. Refer to EI-37, "Removal and Installation" .
2. Disconnect intelligent key unit connector.
3. Remove intelligent key unit mounting nuts, and then remove intelligent key unit.

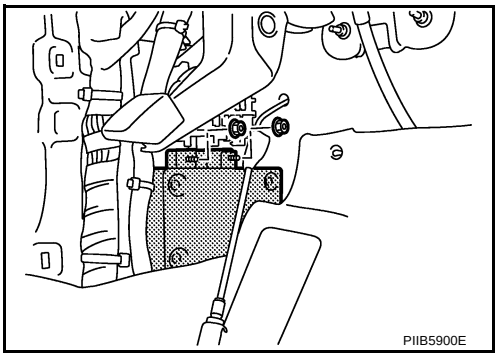

INSTALLATION

Installation is in the reverse order of removal.

Intelligent Key Battery Replacement

NIS001Y6

DISASSEMBLY AND ASSEMBLY OF INTELLIGENT KEY

1. Release the lock knob at the back of the Intelligent Key and remove the machanical key.
2. Insert a flat-blade screwdriver (A) wrapped with a close into the slit of the corner and twist it to separate the upper part from the lower part.

   CAUTION:
   - **Be careful not to touch the circuit board or battery terminal.**
   - **The key fob is water-resistant. However, if it does get wet, immediately wipe it dry.**

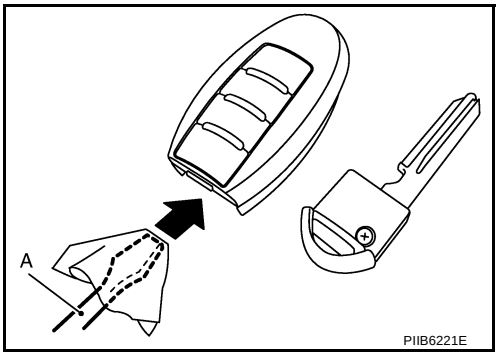

3. Replace the battery with new one.
4. Align the tips of the upper and lower parts, and then push them together until it is securely closed.

   CAUTION:
   - **When replacing battery, be sure to keep dirt, grease, and other foreign materials off the electrode contact area.**
   - **After replacing the battery, check to make sure all Intelligent Key functions work normally.**

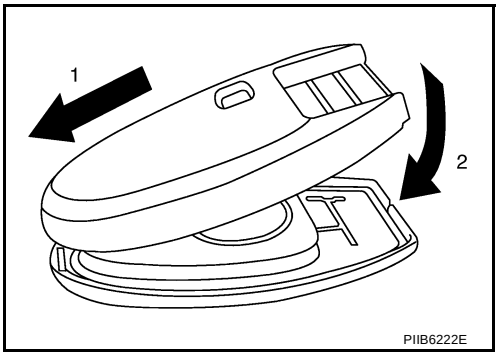

INTELLIGENT KEY BATTERY INSPECTION

Check by connecting a resistance (approximately 300Ω) so that the current value becomes about 10 mA.

Standard : Approx. 2.5 - 3.0V

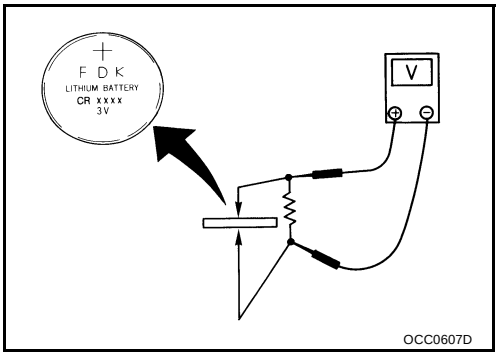

INTELLIGENT KEY SYSTEM/ENGINE START FUNCTION

PFP:285F1

Component Parts and Harness Connector Location

NIS001Y7

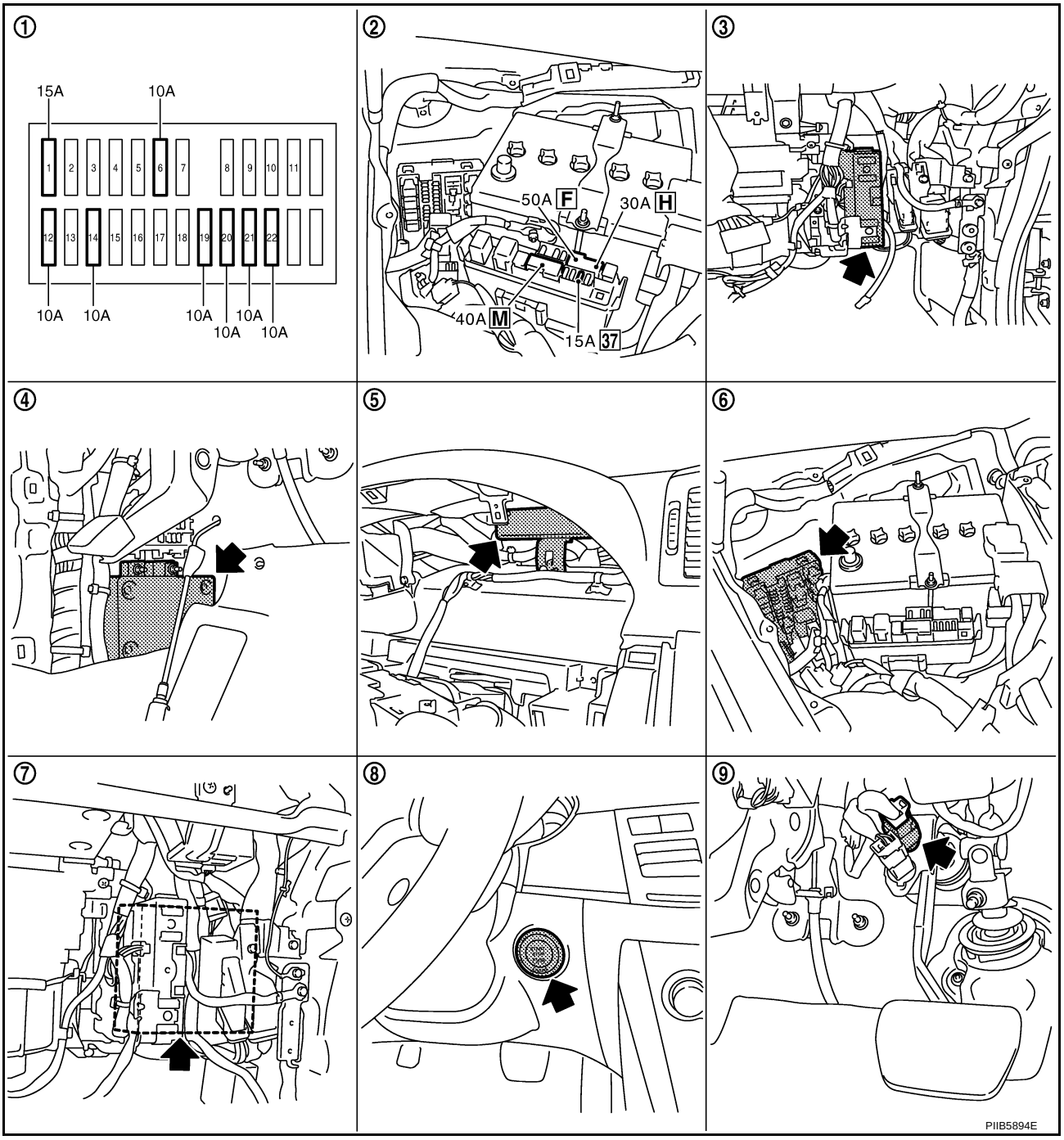

1.	Fuse block (J / B) fuse layout	2.	Fuse and fusible link box	3.	BCM (View with instrument lower panel RH removed) M1, M2
4.	Intelligent key unit (View with dash side finisher LH removed) M32, M33	5.	PDU (View with combination meter removed) M30, M31	6.	IPDM E/R (Engine room) E4, E9
7.	ECM (View with instrument lower cover RH removed) M71	8.	Push-button ignition switch M27	9.	Stop lamp switch E124

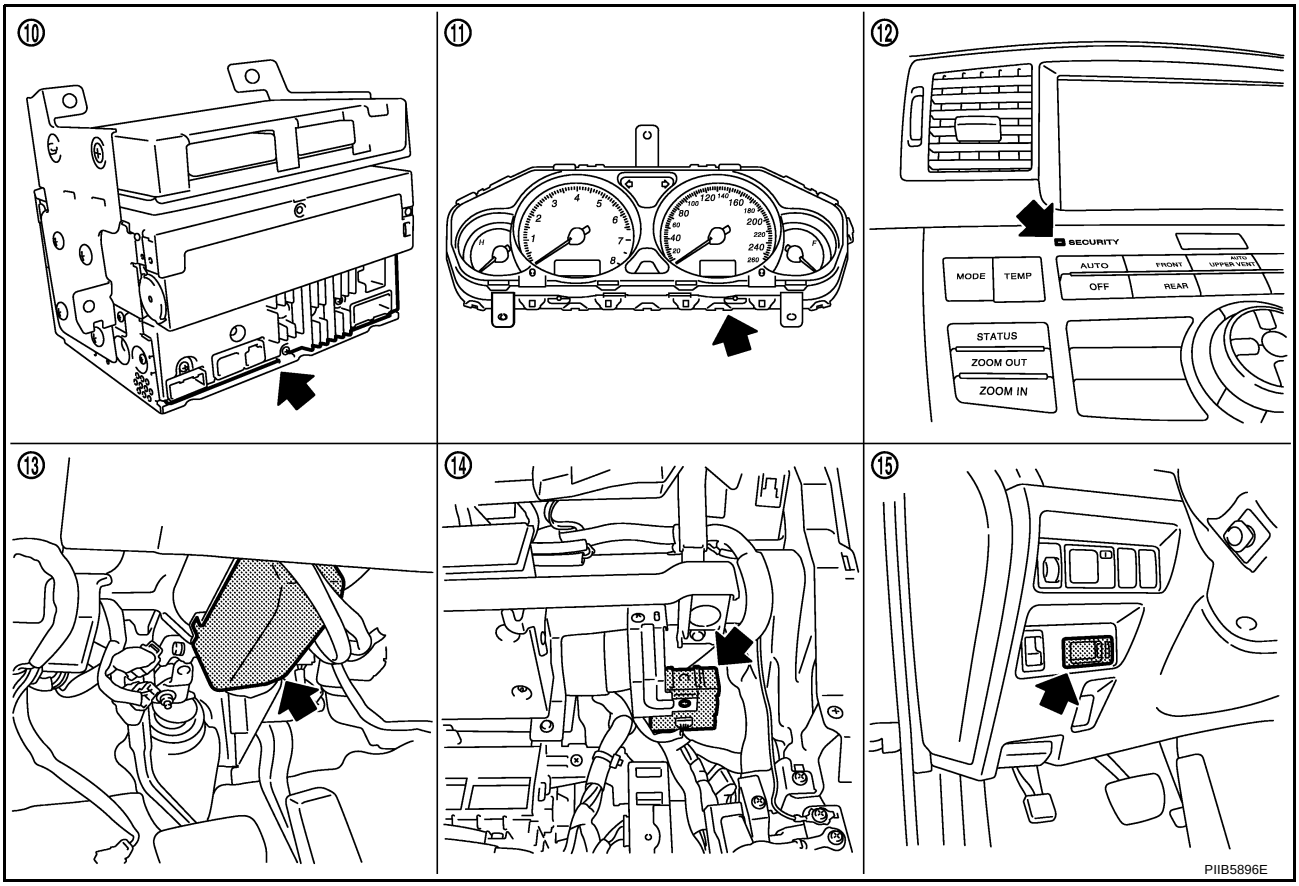

10. Unified meter and A/C amp M64, M65
11. Combination meter M52
12. Security indicator (Multifunction switch) M69
13. Steering lock unit M35 (Steering column)
14. Remote keyless entry receiver (View with instrument lower panel RH removed) M89
15. Key slot M14

System Description

NIS001Y8

- The engine start function of Intelligent Key system is a system that makes it possible to start and stop the engine without removing the key. It verifies the electronic ID using two-way communications when pressing the push-button ignition switch while carrying the Intelligent Key, which operates based on the results of electronic ID verification for Intelligent Key using two-way communications between the Intelligent Key and the vehicle (Intelligent Key unit).

  NOTE:
  The driver should always carry the intelligent key at all times.
- Intelligent Key has 2 IDs (for Intelligent Key and for immobilizer). It can perform the door lock/unlock operation and the push-button ignition switch operation when carrying the registered Intelligent Key.
- When the Intelligent Key battery is discharged, it can be used as emergency by inserting the Intelligent Key to the key slot. At that time, perform the immobilizer ID verification. If it is used when carrying the Intelligent Key, perform the Intelligent Key ID verification.
- If the ID is successfully verified, and when push-button ignition switch is pressed, steering lock will be released and initiating the engine will be possible.
- If the door lock/unlock operation is performed when the Intelligent Key battery is discharged, all doors lock/unlock can be performed by operating the driver door key cylinder using the mechanical key set into the Intelligent Key.
- Intelligent Key can be registered up to 4 keys (Including the standard Intelligent Key) on request from the owner.

  NOTE:
  - Refer to BL-44, "INTELLIGENT KEY SYSTEM" for any functions other than engine start function of Intelligent Key system.

PRECAUTIONS FOR INTELLIGENT KEY SYSTEM

- **In the Intelligent Key system of model Y50, the transponder (the chip for immobilizer ID verification) is integrated into the Intelligent Key. (For the conventional models, it is integrated into the mechanical key.) Therefore, the mechanical key cannot perform the ID verification, and thus it cannot start the engine. Instead of it, the immobilizer ID verification can be performed by inserting the Intelligent Key into the key slot, and then it can start the engine.**
- **When registering the Intelligent Key, 2 registration procedures (immobilizer ID registration and Intelligent Key ID registration) should be performed. The immobilizer ID registration is the procedure that registers the ID stored into the transponder (integrated into Intelligent Key) to the BCM. The Intelligent Key ID registration is the procedure that registers the ID to the Intelligent Key unit. Each registration is a different procedure.**
- **When performing the Intelligent Key ID registration only, the engine cannot be started by inserting the key into the key slot. When performing the engine immobilizer ID registration only, the engine cannot be started by the operation when carrying the key. The registrations of both systems should be performed.**

Operation Description

NIS001Y9

SYSTEM DIAGRAM

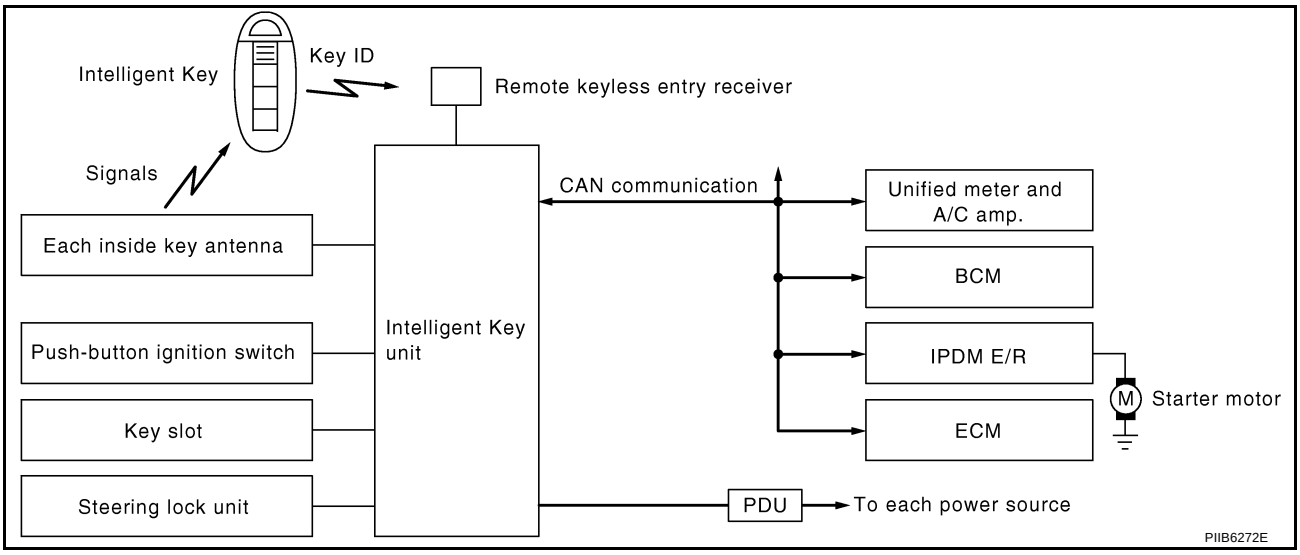

OPERATION WHEN INTELLIGENT KEY IS CARRIED

Description

1. When the push-button switch is pressed, the Intelligent Key unit signals the inside key antenna and sends the request signal to the Intelligent Key.
2. The Intelligent Key receives the request signal and sends the Intelligent Key ID signal to the Intelligent Key unit via the remote keyless entry receiver.
3. The Intelligent Key receives the Intelligent Key ID signal and verifies it with the registered ID.
4. If the ID is successfully verified, the Intelligent Key unit sends the steering unlock signal to the steering lock unit. Then, it sends each power supply request signal to PDU (Power Distribution Unit) after unlocking the steering lock.
5. If the Intelligent Key unit judges that the engine start condition is satisfied, it sends the starter request signal via CAN communication to IPDM E/R and turns the starter motor relay ON.
6. The steering lock unit unlocks the steering lock when receiving the signal. PDU starts the power supply distribution according to the push-button ignition switch operation when receiving the signal. If it enters the engine start permission mode, the power supply is supplied from PDU to the starter motor relay and the cranking is started.

   CAUTION:
   If a malfunction is detected in the Intelligent Key system, the “KEY” warning lamp in the combination meter illuminates for 15 seconds. At that time, the engine cannot be started.
7. When Intelligent Key unit received feedback signal from ECM acknowledging the engine has been initiated, the Intelligent Key unit sends a stop signal to IPDM E/R and stops the cranking by turning OFF the

starter motor relay. (If the engine initiating has failed, the cranking will stop automatically within 5 seconds.)

CAUTION:

When the Intelligent Key is carried outside of the vehicle (inside key antenna detection area) with the power supply in ACC or ON position, even if the engine start condition* is satisfied, the engine cannot be started.

*: For the engine start condition, refer to BL-130, "PUSH-BUTTON IGNITION SWITCH OPERATION PROCEDURE" .

Operation Range

Engine can be started when Intelligent Key is inside the vehicle. However, sometimes engine might not start when Intelligent Key is on instrument panel or in glove box.

OPERATION WHEN KEY SLOT IS USED

When the Intelligent Key battery is discharged, it performs the immobilizer ID verification between the integrated transponder and BCM by inserting the Intelligent Key into the key slot, and then the engine can be started.

For details relating to starting the engine using key slot, refer to BL-248, "IVIS (INFINITI VEHICLE IMMOBILIZER SYSTEM-NATS)" .

PUSH-BUTTON IGNITION SWITCH OPERATION PROCEDURE

The power supply position changing operation can be performed with the following operation.

NOTE:

- When an Intelligent Key is within the detection area of inside key antenna and when it is inserted to the key slot, it is equivalent to the operations below.
- When starting the engine, the Intelligent Key unit monitors the engine start conditions (brake pedal operating condition, A/T selector lever position, and vehicle speed).
- Unless each start condition is fulfilled, the engine will not respond regardless of how many times the engine switch is pushed. At that time, illumination repeats the position in the order of LOCK→ACC→ON→LOCK.

Power supply position	Engine start/stop condition		Push-button ignition switch operation frequency
	Brake pedal	A/T selector lever position	
LOCK → ACC	Not depressed (When A/T selector lever is in any position other than P or N, there will be no effect even if it is depressed.)	Any position other than P or N (When the brake pedal is not depressed, there will be no effect even if the A/T selector lever is in P or N position.)	1
LOCK → ACC → ON	Not depressed (When A/T selector lever is in any position other than P or N, there will be no effect even if it is depressed.)	Any position other than P or N (When the brake pedal is not depressed, there will be no effect even if the A/T selector lever is in P or N position.)	2
LOCK → ACC → ON → LOCK	Not depressed (When A/T selector lever is in any position other than P or N, there will be no effect even if it is depressed.)	Any position other than P or N (When the brake pedal is not depressed, there will be no effect even if the A/T selector lever is in P or N position.)	3
LOCK → START ACC → START ON → START (Engine start)	Depressed	P or N position (*1)	1 [If the switch is pushed once, the engine starts from any power supply position (LOCK, ACC, and ON)]
Engine is running → LOCK (Engine stop)	—	P position	1

Power supply position	Engine start/stop condition		Push-button ignition switch operation frequency
	Brake pedal	A/T selector lever position	
Engine is running → ACC (Engine stop)	—	Any position other than P (*2)	1
Engine stall return operation while driving	—	N position	1

*1: When the A/T selector lever position is N position, the engine start condition is different according to the vehicle speed.

- At vehicle speed of 5 km/h or less, the engine can start only when the brake pedal is depressed.
- At vehicle speed of 5 km/h or more, the engine can start even if the brake pedal is not depressed. (It is the same as “Engine stall return operation while driving”.)

*2: When the A/T selector lever position is in any position other than P position and when the vehicle speed is 5 km/h or more, the engine stop condition is different.

- Press and hold the push-button ignition switch for 2 seconds or more. (When the push-button ignition switch is pressed for too short a time, the operation may be invalid, so properly press and hold to prevent the incorrect operation.)
- Press the push-button ignition switch 3 times or more within 1.5 seconds. (Emergency stop operation)

CAN Communication System Description

NIS001YA

CAN (Controller Area Network) is a serial communication line for real time application. It is an on-vehicle multiplex communication line with high data communication speed and excellent error detection ability. Many electronic control units are equipped onto a vehicle, and each control unit shares information and links with other control units during operation (not independent). In CAN communication, control units are connected with 2 communication lines (CAN H line, CAN L line) allowing a high rate of information transmission with less wiring. Each control unit transmits/receives data but selectively reads required data only.

CAN Communication Unit

NIS001YB

Refer to LAN-34, "CAN COMMUNICATION" .

Schematic

NIS001YC

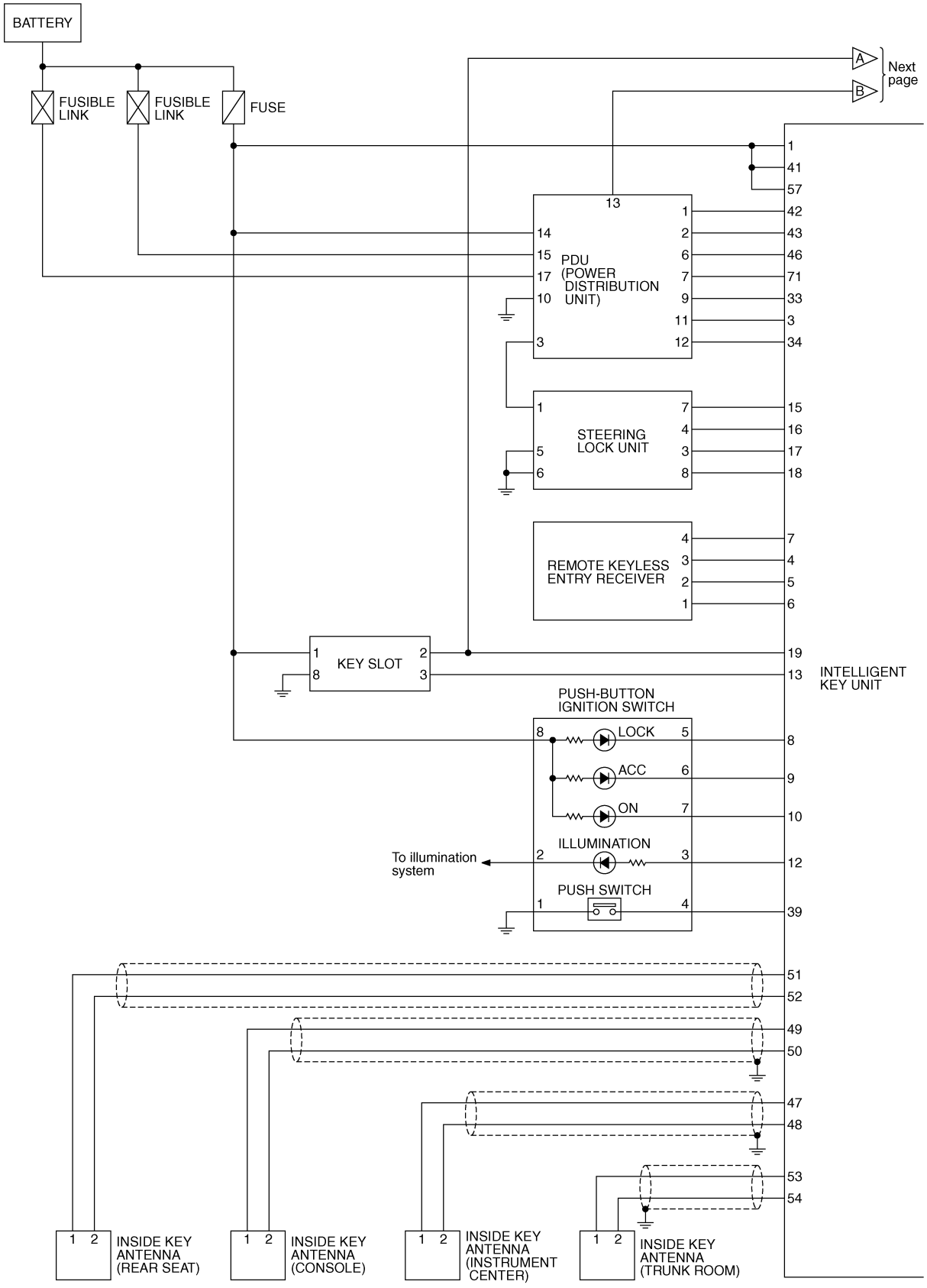

TIWT1310E

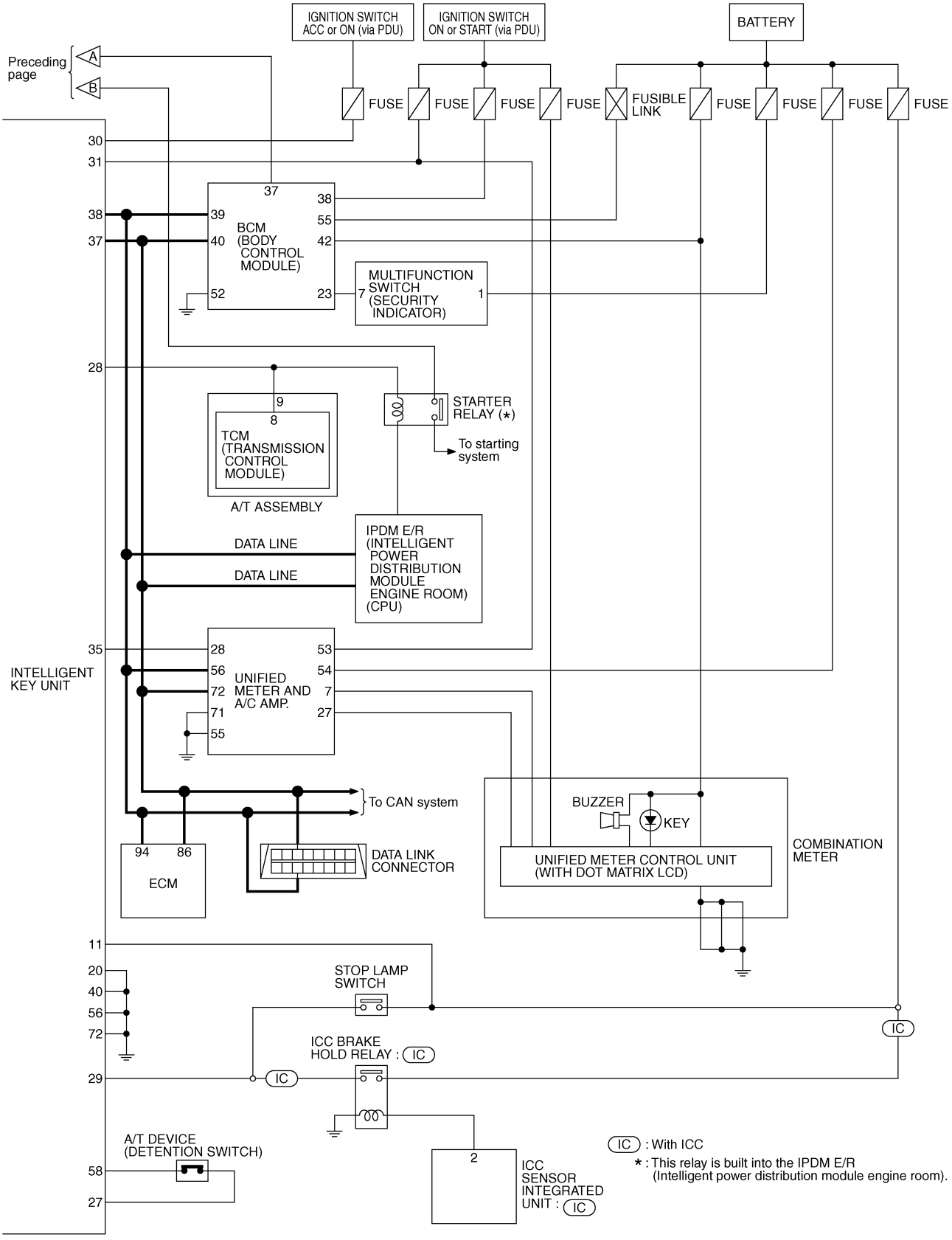
IGNITION SWITCH ACC or ON (via PDU)
IGNITION SWITCH ON or START (via PDU)
BATTERY
Preceding page
A
B
FUSE
FUSE
FUSE
FUSE
FUSIBLE LINK
FUSE
FUSE
FUSE
FUSE
30
31
38
37
BCM (BODY CONTROL MODULE)
37
38
39
40
52
55
42
23
MULTIFUNCTION SWITCH (SECURITY INDICATOR)
7
1
28
9
8
TCM (TRANSMISSION CONTROL MODULE)
A/T ASSEMBLY
STARTER RELAY (*)
To starting system
IPDM E/R (INTELLIGENT POWER DISTRIBUTION MODULE ENGINE ROOM) (CPU)
DATA LINE
DATA LINE
35
INTELLIGENT KEY UNIT
28
56
72
71
55
UNIFIED METER AND A/C AMP.
53
54
7
27
To CAN system
94
86
ECM
DATA LINK CONNECTOR
BUZZER
KEY
UNIFIED METER CONTROL UNIT (WITH DOT MATRIX LCD)
COMBINATION METER
11
20
40
56
72
STOP LAMP SWITCH
IC
ICC BRAKE HOLD RELAY : IC
29
IC
A/T DEVICE (DETENTION SWITCH)
58
27
2
ICC SENSOR INTEGRATED UNIT : IC
IC : With ICC
* : This relay is built into the IPDM E/R (Intelligent power distribution module engine room).
TIWT1311E

Wiring Diagram —ENG/ST—

NIS001YD

BL-ENG/ST-01

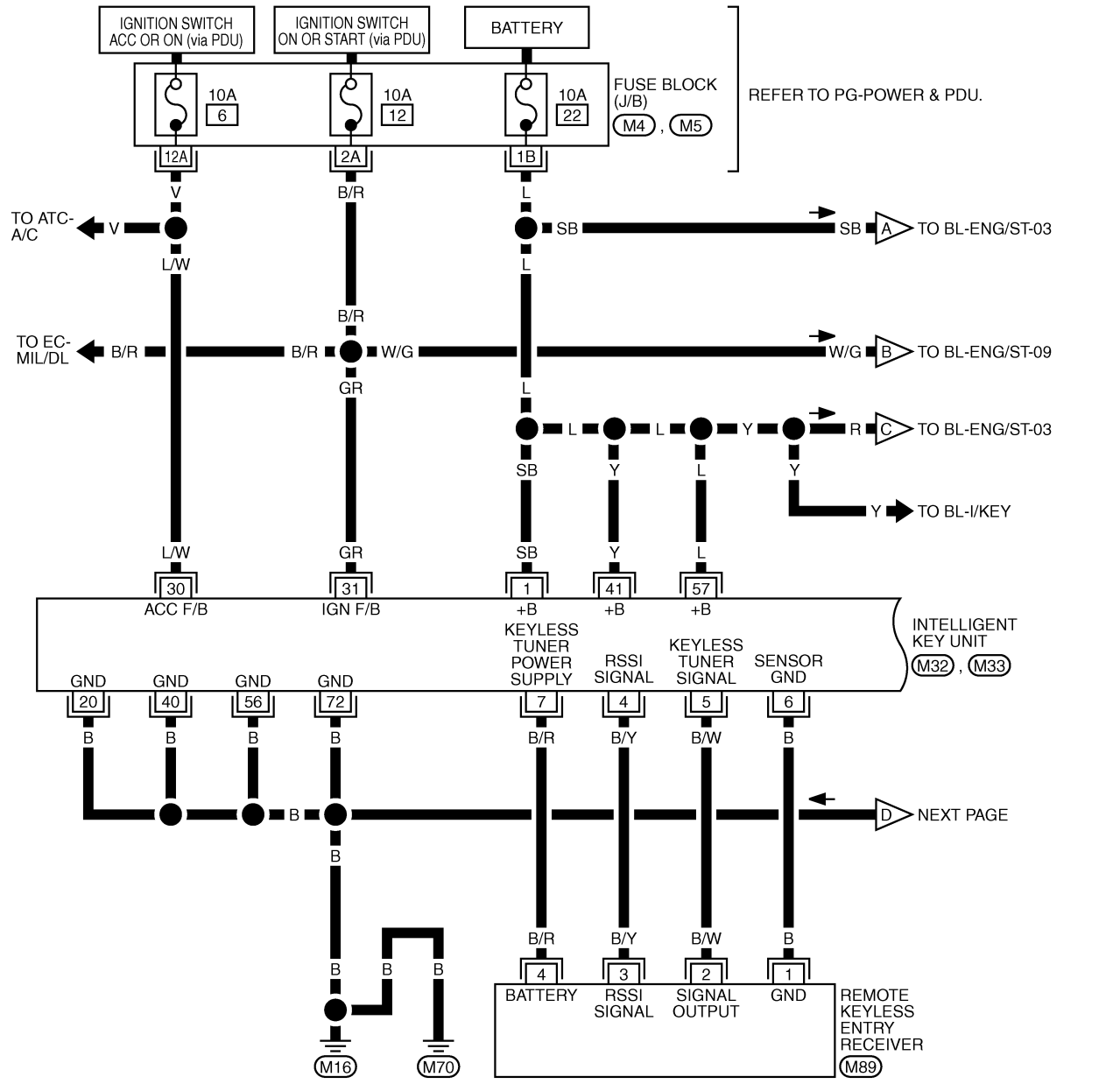

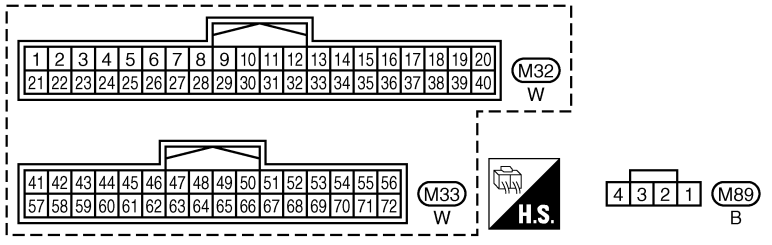

REFER TO THE FOLLOWING.
M4 , M5 -FUSE BLOCK-JUNCTION BOX (J/B)

TIWT1312E

BL-ENG/ST-02

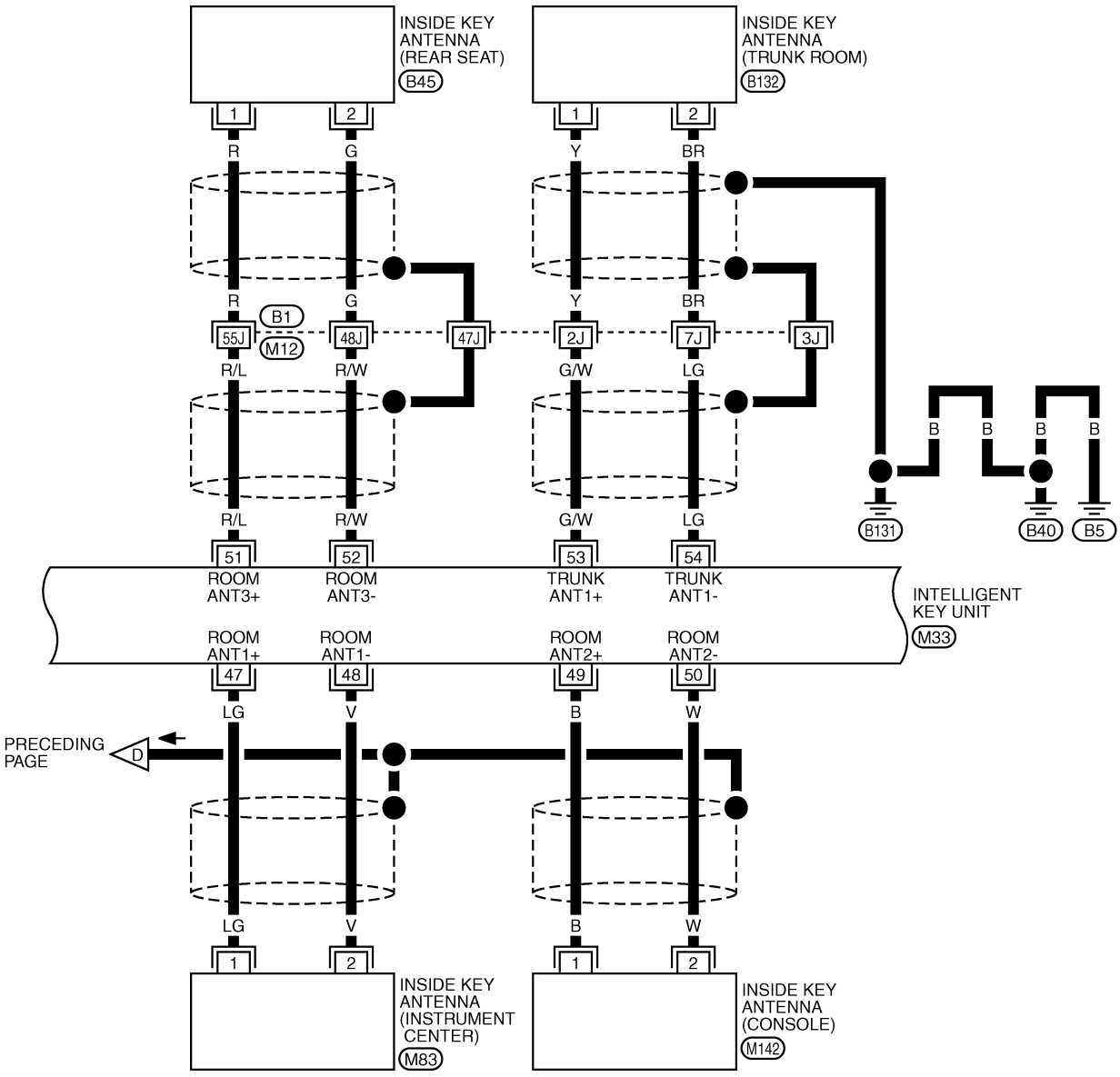

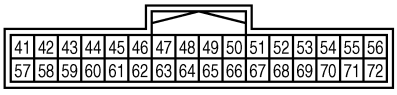

M33
W

2 1 M83 , M142 , B132
GR GR GR

1 2 B45
GR

REFER TO THE FOLLOWING.
B1 -SUPER MULTIPLE JUNCTION (SMJ)

TIWT1313E

BL-ENG/ST-03

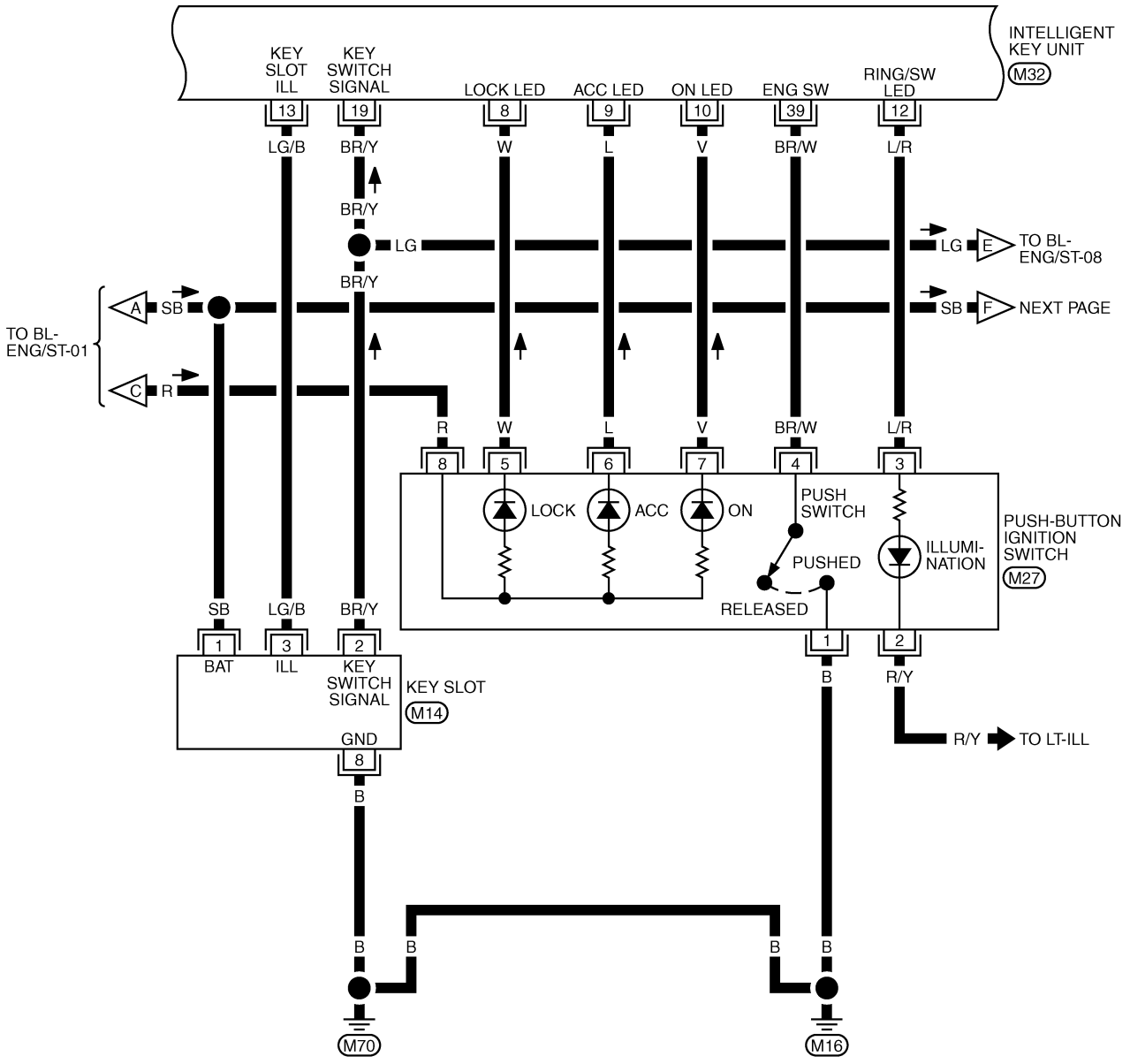

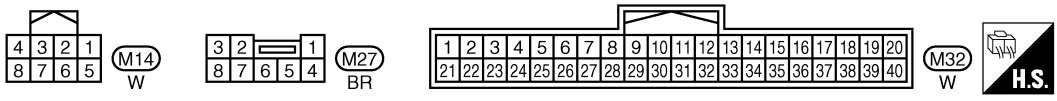

TIWT1314E

BL-ENG/ST-04

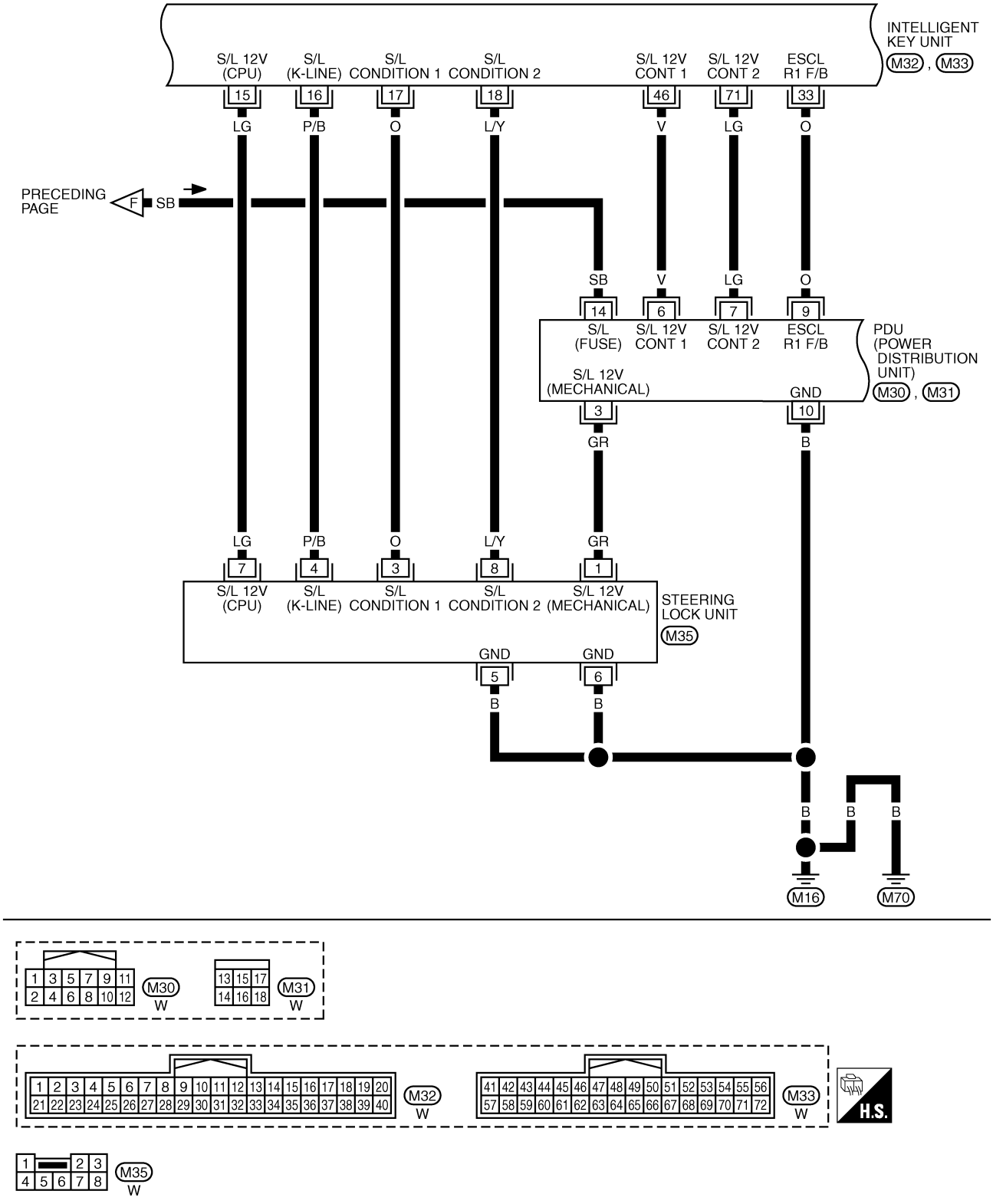

TIWT1315E

BL-ENG/ST-05

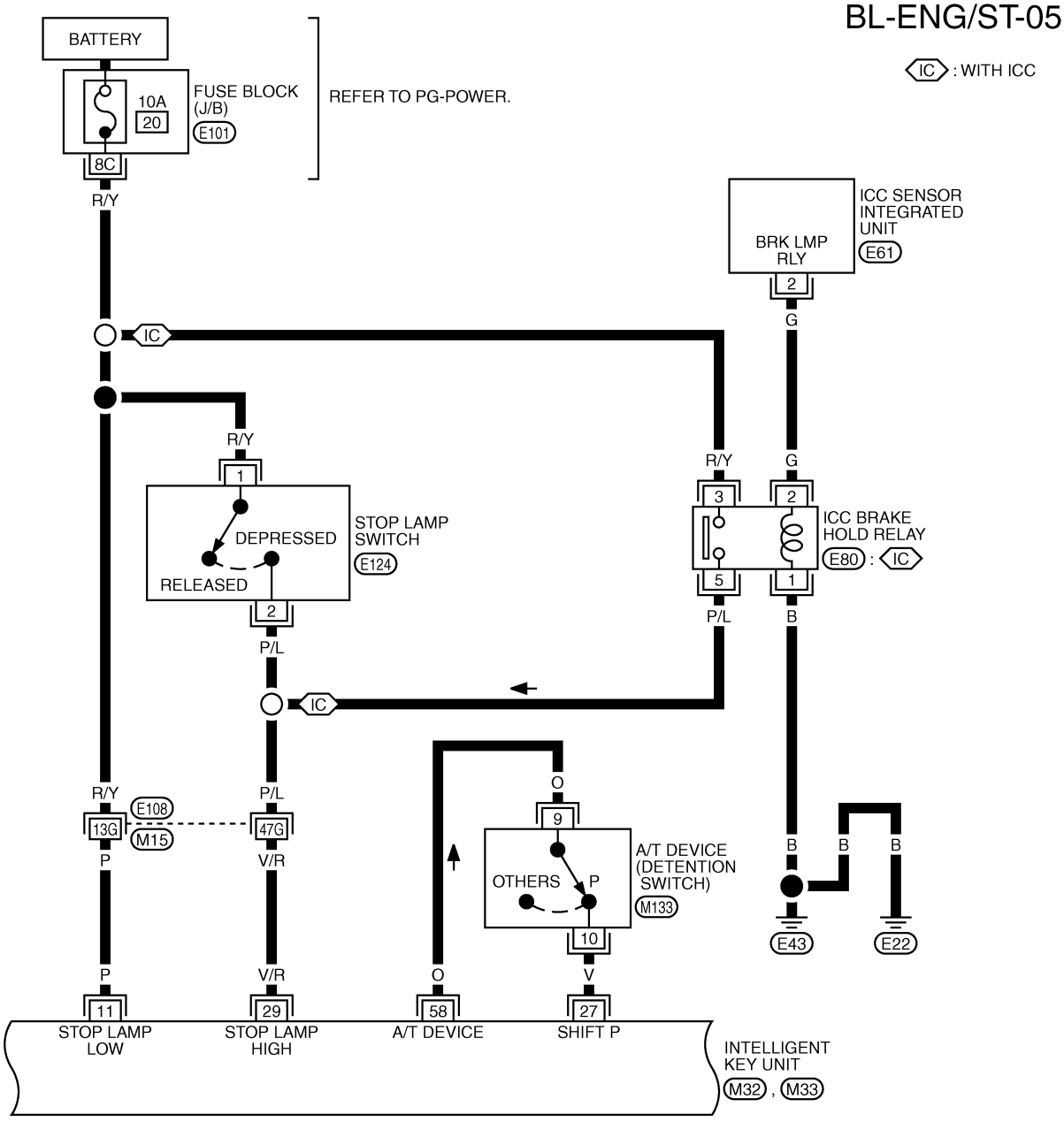

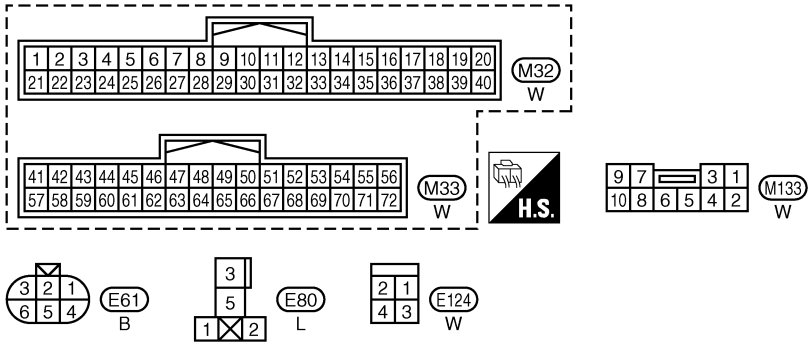

REFER TO THE FOLLOWING.

E108 -SUPER MULTIPLE JUNCTION (SMJ)

E101 -FUSE BLOCK-JUNCTION BOX (J/B)

TIWT1316E

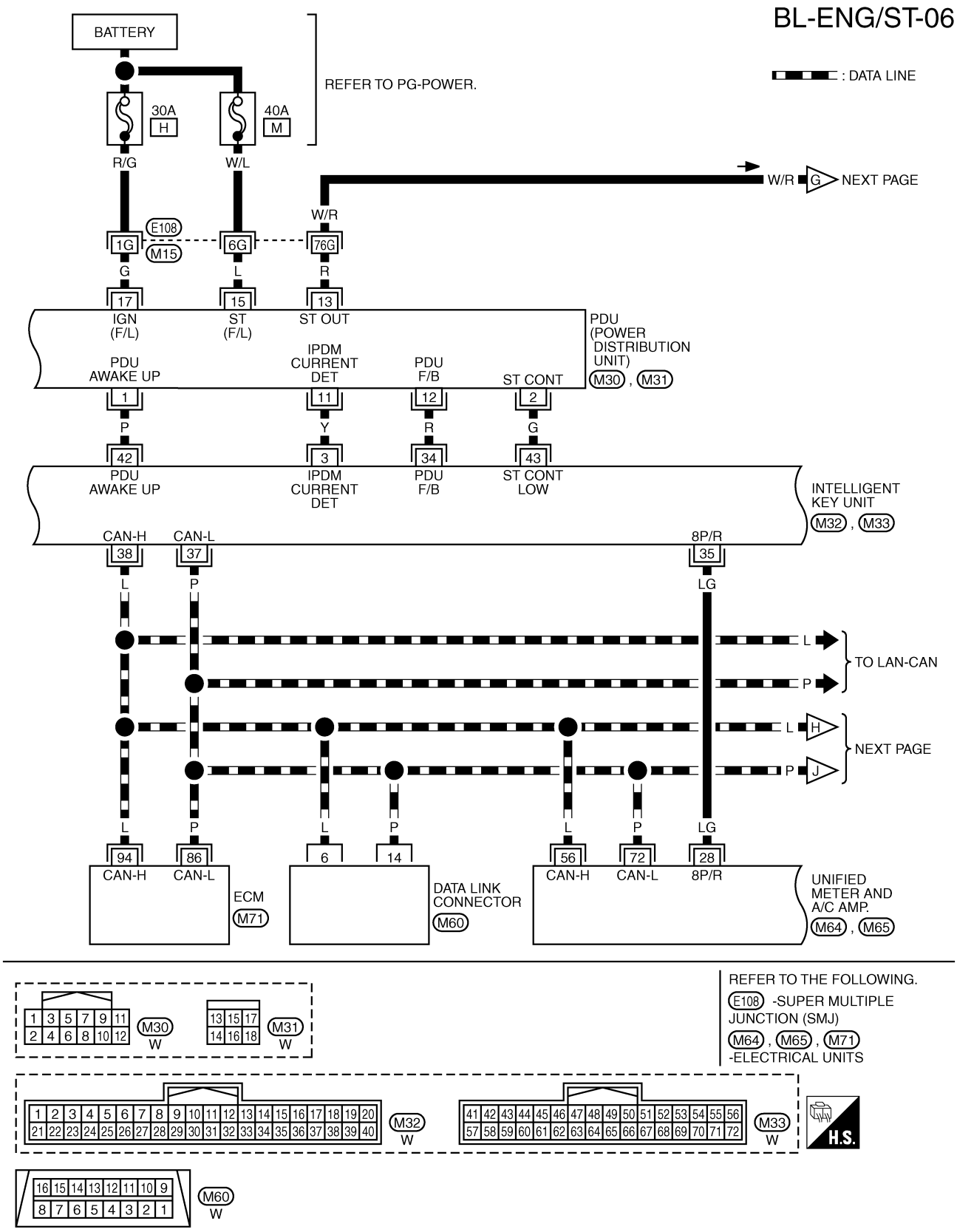
BL-ENG/ST-06
BATTERY
REFER TO PG-POWER.
: DATA LINE
30A
H
40A
M
R/G
W/L
W/R
G
NEXT PAGE
E108
1G
M15
6G
76G
G
L
R
17
15
13
IGN
(F/L)
ST
(F/L)
ST OUT
PDU
(POWER
DISTRIBUTION
UNIT)
M30 , M31
PDU
AWAKE UP
IPDM
CURRENT
DET
PDU
F/B
ST CONT
1
11
12
2
P
Y
R
G
42
3
34
43
PDU
AWAKE UP
IPDM
CURRENT
DET
PDU
F/B
ST CONT
LOW
INTELLIGENT
KEY UNIT
M32 , M33
CAN-H
CAN-L
8P/R
38
37
35
L
P
LG
TO LAN-CAN
NEXT PAGE
H
J
94
86
6
14
56
72
28
CAN-H
CAN-L
ECM
M71
DATA LINK
CONNECTOR
M60
CAN-H
CAN-L
8P/R
UNIFIED
METER AND
A/C AMP.
M64 , M65
M30
W
M31
W
REFER TO THE FOLLOWING.
E108 -SUPER MULTIPLE
JUNCTION (SMJ)
M64 , M65 , M71
-ELECTRICAL UNITS
M32
W
M33
W
H.S.
M60
W
TIWT1317E

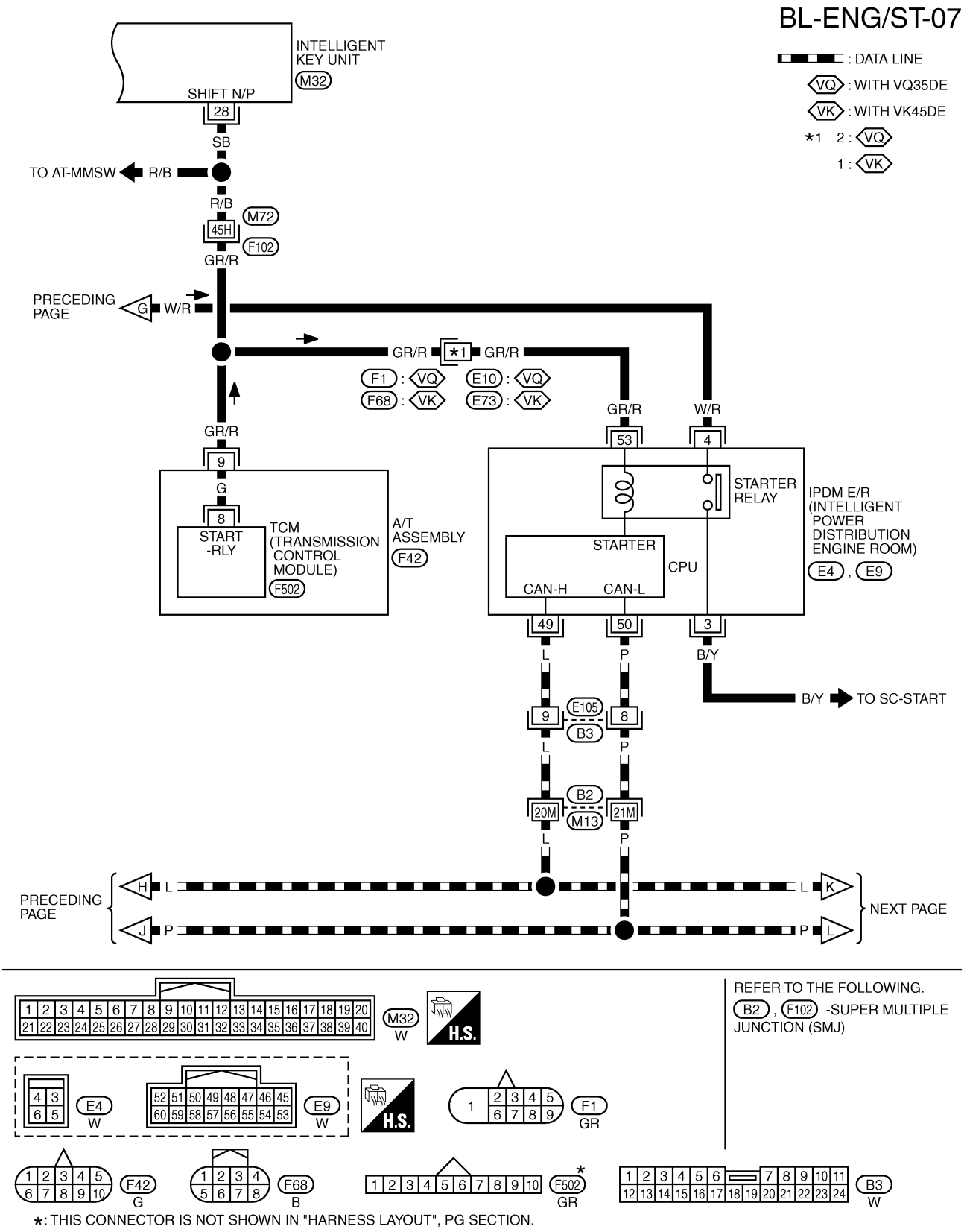
BL-ENG/ST-07
: DATA LINE
VQ : WITH VQ35DE
VK : WITH VK45DE
*1 2 : VQ
1 : VK
INTELLIGENT KEY UNIT
M32
SHIFT N/P
28
SB
TO AT-MMSW
R/B
R/B
M72
45H
F102
GR/R
PRECEDING PAGE
G
W/R
GR/R
*1
GR/R
F1 : VQ
F68 : VK
E10 : VQ
E73 : VK
GR/R
W/R
53
4
GR/R
9
G
8
START -RLY
TCM (TRANSMISSION CONTROL MODULE)
F502
A/T ASSEMBLY
F42
STARTER RELAY
STARTER
CPU
CAN-H
CAN-L
IPDM E/R (INTELLIGENT POWER DISTRIBUTION ENGINE ROOM)
E4 , E9
49
50
3
L
P
B/Y
B/Y
TO SC-START
9
E105
B3
8
L
P
B2
20M
M13
21M
L
P
PRECEDING PAGE
H
L
J
P
L
K
P
L
NEXT PAGE
M32
W
H.S.
E4
W
E9
W
H.S.
F1
GR
F42
G
F68
B
F502
GR
*
B3
W
*: THIS CONNECTOR IS NOT SHOWN IN "HARNESS LAYOUT", PG SECTION.
REFER TO THE FOLLOWING.
B2 , F102 -SUPER MULTIPLE JUNCTION (SMJ)
TIWT1318E

BL-ENG/ST-08

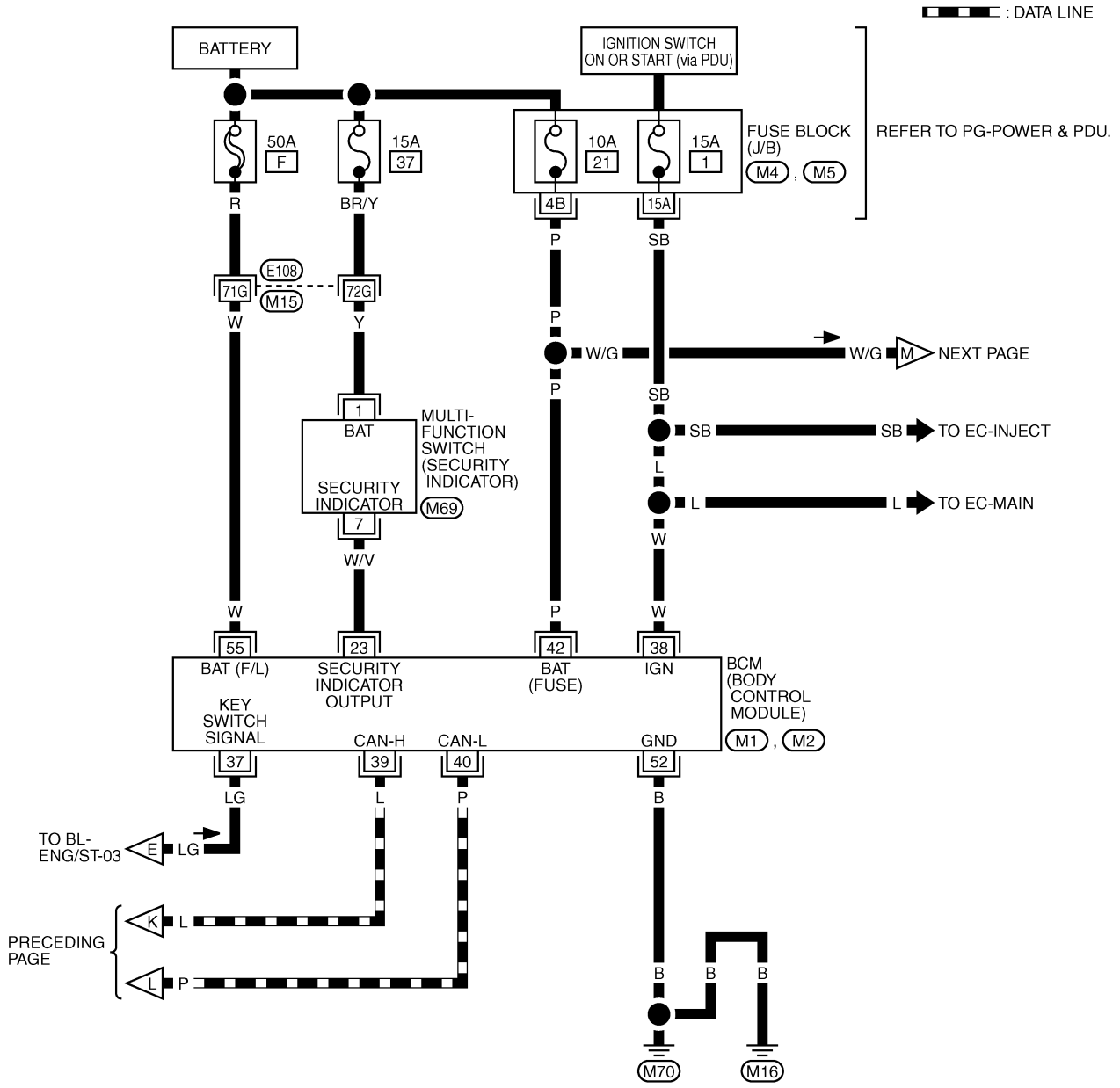

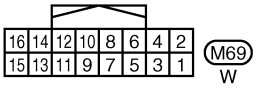

REFER TO THE FOLLOWING.

E108 -SUPER MULTIPLE JUNCTION (SMJ)

M4 , M5 -FUSE BLOCK-JUNCTION BOX (J/B)

M1 , M2 -ELECTRICAL UNITS

TIWT1319E

BL-ENG/ST-09

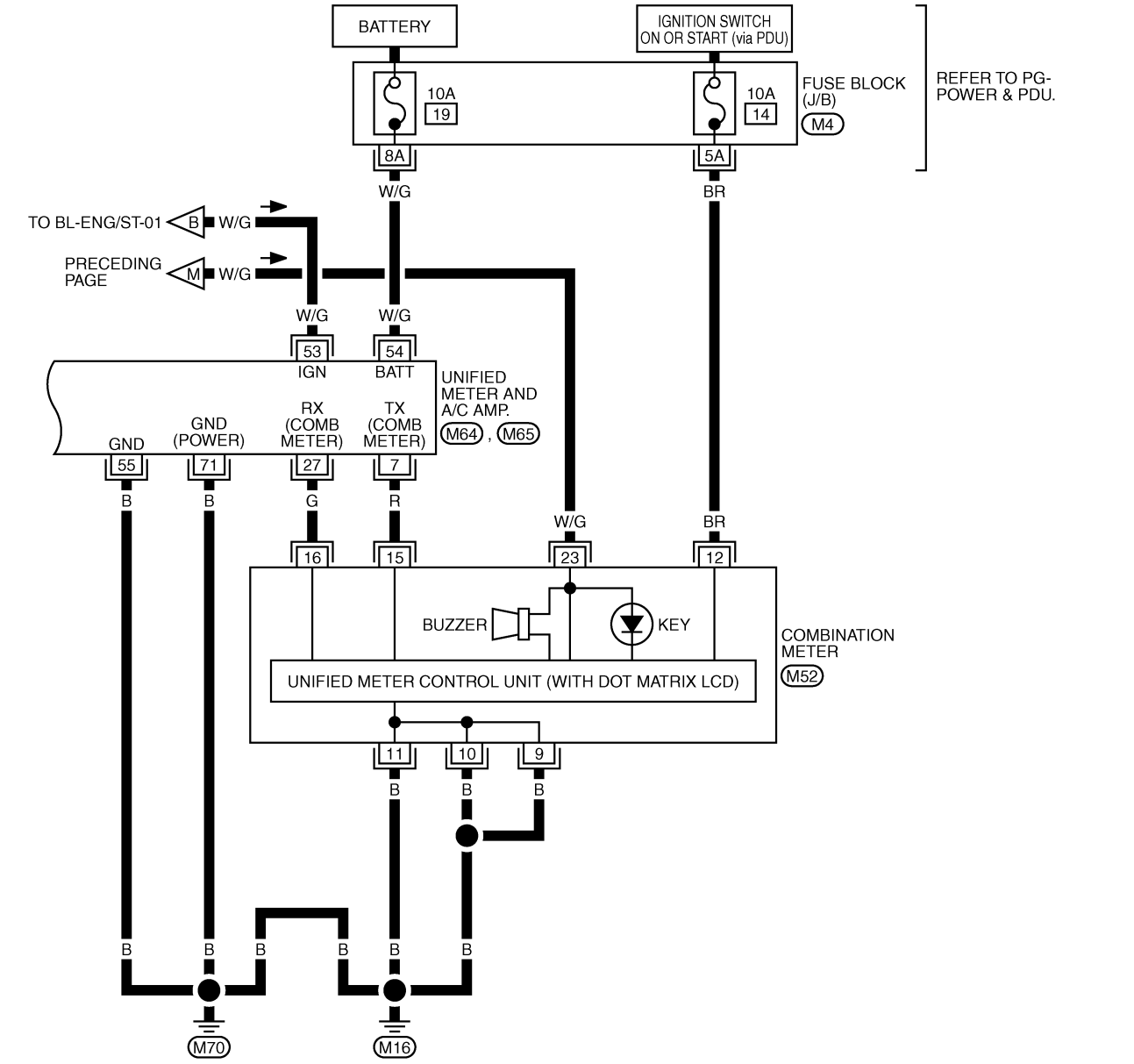

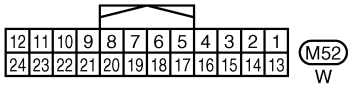

REFER TO THE FOLLOWING.
M4 -FUSE BLOCK-JUNCTION BOX (J/B)

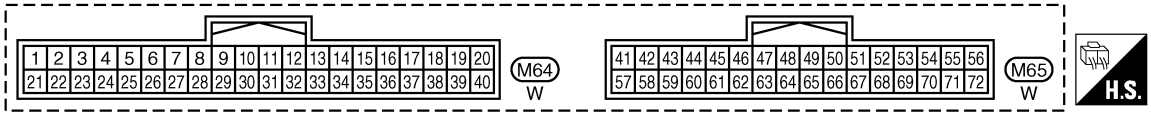

TIWT1320E

Terminals and Reference Value for Intelligent Key Unit

NIS001YE

Terminal No.	Wire color	Item	Condition: Push-button ignition switch position	Condition: Operation or conditions	Voltage (V) (Approx.)
1	SB	Power source (fuse)	—	—	Battery voltage
3	Y	IPDM E/R status signal	START	Engine starting (During cranking)	5
			LOCK	Other than above	2
4	B/Y	RSSI signal	LOCK	Carry the Intelligent Key within the inside key antenna detection area, and then push the push-button ignition switch.	0
				Other than above	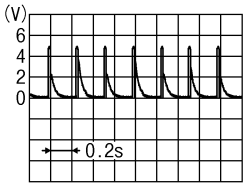 PIIB5657J
5	B/W	Remote key less entry receiver signal	LOCK	Carry the Intelligent Key within the inside key antenna detection area, and then push the push-button ignition switch. (When receiving the signal from Intelligent Key)	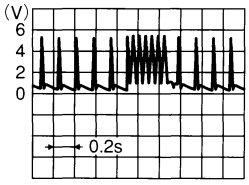 OCC3880D
				Other than above (Signal receiving wait mode)	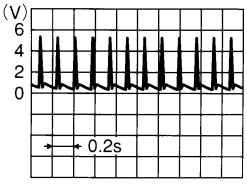 OCC3879D
6	B	Remote key less entry receiver ground	—	—	0
7	B/R	Remote keyless entry receiver power supply	—	—	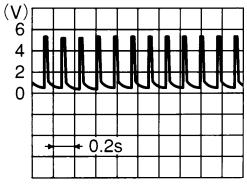 OCC3881D
8	W	Push-button ignition switch LOCK indicator	LOCK	Push-button ignition switch is in LOCK position	0
			—	Push-button ignition switch is in any position (Except LOCK position)	1.2
9	L	Push-button ignition switch ACC indicator	ACC	Push-button ignition switch is in ACC position	0
			—	Push-button ignition switch is in any position (Except ACC position)	1.2

Terminal No.	Wire color	Item	Condition		Voltage (V) (Approx.)
			Push-button ignition switch position	Operation or conditions	
10	V	Push-button ignition switch ON indicator	ON	Push-button ignition switch is in ON position	0
			—	Push-button ignition switch is in any position (Except ON position)	1.2
11	P	Stop lamp switch	—	Brake pedal depressed	Battery voltage
				Brake pedal released	Battery voltage
12	L/R	Push-button ignition switch illumination	—	Push-button ignition switch illumination is turned on	2.6
				Push-button ignition switch illumination is turned off (15 seconds or more after the driver door is closed)	0
13	LG/B	Key slot illumination	LOCK	Insert Intelligent Key into key slot and driver side door is open.	Battery voltage
				Remove Intelligent Key from key slot.	0
15	LG	Steering lock unit power source	LOCK	—	Battery voltage
16	P/B	Steering lock unit signal	LOCK	Steering lock: Lock	Battery voltage
			ACC	Steering lock: Unlock (Unlocked moment)	0
			NO		0
17	O	Steering lock unit condition signal-1	LOCK	Steering lock: Lock	0
			ACC	Steering lock: Unlock	Battery voltage
			ON		Battery voltage
18	L/Y	Steering lock unit condition signal-2	LOCK	Steering lock: Lock	Battery voltage
			ACC	Steering lock: Unlock	0
			ON		0
19	BR/Y	Key switch signal	LOCK	Insert Intelligent Key into key slot.	0
				Remove Intelligent Key from key slot	Battery voltage
20	B	Ground	—	—	0
27	V	A/T device (Detention switch)	LOCK	A/T selector lever is in P position	0
			ON	Other than above	Battery voltage
28	SB	Starter relay	ON	A/T selector lever is in N or P position	Battery voltage
			—	Ignition switch position is in LOCK position or A/T selector lever is in any position other than N or P position	0
29	V/R	Stop lamp switch	—	Brake pedal depressed	Battery voltage
				Brake pedal released	0
30	L/W	Ignition power supply (ACC)	ACC	Ignition switch position is in ACC or ON position	Battery voltage
31	GR	Ignition power supply (ON)	ON	Ignition switch position is in ON or START position	Battery voltage
33	O	PDU signal	LOCK	Steering lock: Lock	0
			ACC	Steering lock: Unlock	8

Terminal No.	Wire color	Item	Condition: Push-button ignition switch position	Condition: Operation or conditions	Voltage (V) (Approx.)
34	R	PDU feed back signal	LOCK	Sleep condition (30 seconds or more after all doors are closed under the condition that the ignition switch position is in the LOCK position)	1
			—	Wake-up condition (any condition other than above)	0
35	LG	Vehicle speed signal	ON	At speedometer operation (vehicle speed approx. 40 km/h)	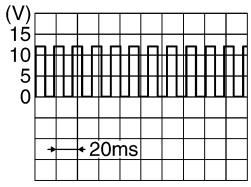 PKIA1935E
37	P	CAN-L	—	—	—
38	L	CAN-H	—	—	—
39	BR/W	Push-button ignition switch	—	Push-button ignition switch is pressed	0
				Push-button ignition switch is released	Battery voltage
40	B	Ground	—	—	0
41	Y	Power source (fuse)	—	—	Battery voltage
42	P	PDU wake up signal	LOCK	Sleep condition (30 seconds or more after all doors are closed under the condition that the ignition switch position is in the LOCK position)	Battery voltage
			—	Wake-up condition (Open driver door)	0
43	G	Starter signal	ON	At starter motor cranking	0
			—	Any condition other than above	Battery voltage
46	V	Steering lock control signal-1	—	Push-button ignition switch is pressed under the condition that Intelligent Key is in the vehicle or Intelligent Key is inserted	Battery voltage
			LOCK	Ignition switch position is in LOCK position (Steering lock activated)	Battery voltage → 0 → Battery voltage (Battery voltage is detected when activating the steering lock)
47	LG	Inside key antenna (+) signal (Instrument center)	LOCK	Any door open → closed (Door switch: ON → OFF)	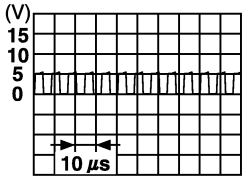 SIIA1910J
48	V	Inside key antenna (–) signal (Instrument center)			
49	B	Inside key antenna (+) signal (console)	LOCK	Any door open → closed (Door switch: ON → OFF)	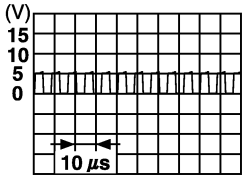 SIIA1910J
50	W	Inside key antenna (–) signal (console)			

Terminal No.	Wire color	Item	Condition: Push-button ignition switch position	Condition: Operation or conditions	Voltage (V) (Approx.)
51	F/L	Inside key antenna (+) signal (Rear seat)	LOCK	Any door open → closed (Door switch: ON → OFF)	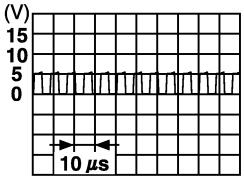 SIIA1910J
52	R/W	Inside key antenna (–) signal (Rear seat)			
53	G/W	Inside key antenna (+) signal (Trunk room)	LOCK	Any door open → closed (Door switch: ON → OFF)	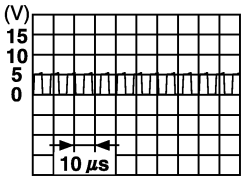 SIIA1910J
54	LG	Inside key antenna (–) signal (Trunk room)			
56	B	Ground	—	—	0
57	L	Power source (fuse)	—	—	Battery voltage
58	O	A/T device (Detention switch)	LOCK	At sleep (30 seconds or more after all doors are closed under the condition that the ignition switch position is in the LOCK position)	0
				At wake-up (Open driver door)	Battery voltage
71	LG	Steering lock control signal-2	LOCK	Push-button ignition switch is pressed under the condition that Intelligent Key is in the vehicle or Intelligent Key is inserted	Battery voltage
			ACC	Ignition switch position is in LOCK position (Steering lock activated)	Battery voltage → 0 → Battery voltage (Battery voltage is detected when activating the steering lock)
72	B	Ground	—	—	0

Terminals and Reference Value for Steering Lock Unit

NIS001YF

Terminal No.	Wire color	Item	Condition: Push-button ignition switch position	Condition: Operation or conditions	Voltage (V) (Approx.)
1	GR	PDU signal	LOCK	Press push-button ignition switch with Intelligent Key inside vehicle	0 → Battery voltage → 0 (Battery voltage is detected when pressing the push-button ignition switch)
3	O	Condition signal-1	LOCK	Steering lock: Lock	0
			ACC	Steering lock: Unlock	Battery voltage
			ON		Battery voltage
4	P/B	Intelligent Key unit signal	LOCK	Steering lock: Lock	Battery voltage
			ACC	Steering lock: Unlock	0
			ON		0
5	B	Ground	—	—	0

Terminal No.	Wire color	Item	Condition		Voltage (V) (Approx.)
			Push-button ignition switch position	Operation or conditions	
6	B	Ground	—	—	0
7	LG	Power source	LOCK	—	Battery voltage
8	L/Y	Condition signal-2	LOCK	Steering lock: Lock	Battery voltage
			ACC	Steering lock: Unlock	0
			ON		0

Terminals and Reference Value for BCM

NIS001YG

Terminal No.	Wire color	Item	Condition		Voltage (V) (Approx.)
			Push-button ignition switch position	Operation or conditions	
23	W/V	Security indicator	LOCK	Intelligent Key is removed from key slot and power supply position is in LOCK position	Battery voltage → 0 (Every 2.4 seconds)
37	LG	Key slot (Key switch signal)	LOCK	Intelligent Key is removed from key slot	0
				Intelligent Key is inserted into key slot	Battery voltage
38	W	Ignition power supply (ON or START)	ON	Power supply position is in ON position	Battery voltage
39	L	CAN-H	—	—	—
40	P	CAN-L	—	—	—
42	P	Power source (fuse)	—	—	Battery voltage
52	B	Ground	—	—	0
55	W	Power source (Fusillade link)	—	—	Battery voltage

Terminals and Reference Value for IPDM E/R

NIS001YH

Terminal No.	Wire Color	Item	Condition		Voltage (V) (Approx.)
			Push-button ignition switch position	Operation or conditions	
4	W/R	Starter motor power supply	LOCK	—	0
			START	Starter motor is activating	Battery voltage
49	L	CAN H	—	—	—
50	P	CAN L	—	—	—
53	GR/R	Shift position signal	ON	A/T selector lever is in N or P position	Battery voltage
			LOCK	A/T selector lever is in any position other than P and N position	0

Terminals and Reference Value for PDU

NIS001YI

Terminal No.	Wire color	Item	Condition: Push-button ignition switch position	Condition: Operation or conditions	Voltage (V) (Approx.)
1	P	Wake up signal	LOCK	Sleep condition (30 seconds or more after all doors are closed under the condition that the power supply position is in the LOCK position)	Battery voltage
			—	Wake-up condition (Open driver door)	0
2	G	Starter control signal	ON	At starter motor cranking	0
			—	Any condition other than above	Battery voltage
3	GR	Steering lock unit power source	LOCK	Push-button ignition switch is pressed under the condition that Intelligent Key is in the vehicle or Intelligent Key is inserted	0 → Battery voltage → 0
			—	Any condition other than above	0
6	V	Steering lock control signal-1	—	Push-button ignition switch is pressed under the condition that Intelligent Key is in the vehicle or Intelligent Key is inserted	Battery voltage
			LOCK	Power supply position is in LOCK position (Steering lock activated)	Battery voltage → 0 → Battery voltage (Battery voltage is detected when activating the steering lock)
7	LG	Steering lock control signal-2	—	Push-button ignition switch is pressed under the condition that Intelligent Key is in the vehicle or Intelligent Key is inserted	Battery voltage
			LOCK	Power supply position is in LOCK position (Steering lock activated)	Battery voltage → 0 → Battery voltage (Battery voltage is detected when activating the steering lock)
9	O	Steering lock feed back signal	—	Steering lock: Lock	0
			LOCK	Steering lock: Unlock	8
10	B	Ground	—	—	0
11	Y	IPDM E/R current signal	START	At starter motor cranking	5
			LOCK	Any condition other than above	2
12	R	Feed back signal	LOCK	Sleep condition (30 seconds or more after all doors are closed under the condition that the power supply position is in the LOCK position)	1
			—	Wake-up condition (any condition other than above)	0
13	R	Starter relay	START	At starter motor cranking	Battery voltage
			—	Any condition other than above	4
14	SB	Power source (fuse)	—	—	Battery voltage
15	L	Power source (fusible link)	—	—	Battery voltage
17	G	Power source (fusible link)	—	—	Battery voltage

Work Flow

NIS001YJ

1. LISTEN TO CUSTOMER COMPLAINT OR REQUEST

Get symptoms or listen to customer complaints or request.

NOTE:
In case of request for Intelligent Key or IVIS (NATS) system repair, the key ID re-registration might be necessary. Keep all the Intelligent Keys before work for the re-registration.

Key ID registration request>>Resister Intelligent Key by referring to Technical Bulletin.
Request for malfunction repair.>>GO TO 2.

2. CHECK DOOR LOCK AND REMOTE KEYLESS ENTRY FUNCTION

Check that Door Lock and remote control function of Intelligent Key operate normally.

Door Lock or remote keyless entry function is malfunctioning.>>Malfunction of Door Lock and remote control function, Refer to BL-44, "INTELLIGENT KEY SYSTEM" .
Door Lock and remote keyless entry function are normal.>>GO TO 3.

3. CONFIRMATION BEFORE DIAGNOSIS

Before performing diagnostic procedure, grasp the operating systems with referring to the items below.

- “System operation with carrying Intelligent Key”. Refer to BL-129, "OPERATION WHEN INTELLIGENT KEY IS CARRIED" .
- “System operation by using Key slot”. Refer to BL-130, "OPERATION WHEN KEY SLOT IS USED" .

>> GO TO 4.

4. CONFIRM SELF DIAGNOSIS 1

Start CONSULT-II with Push-button ignition switch in lock position and confirm SELF DIAG RESULT “Intelligent Key”. Refer to BL-151, "CONSULT-II Inspection Procedure" .

No malfunction>>GO TO 5.
Malfunction exist>>Repair the items displayed in “SELF DIAG RESULTS”. Refer to BL-152, "SELF-DIAGNOSTIC RESULTS" .

5. CONFIRM SELF DIAGNOSIS 2

Start CONSULT-II with Push-button ignition switch in lock position and confirm SELF DIAG RESULTS “NATS BCM or S/ENT” and “NATS I-KEY”. Refer to BL-268, "CONSULT-II INSPECTION PROCEDURE" .

NOTE:
NATS program card is necessary to display “SELF DIAG RESULTS”.

No malfunction>>GO TO 6.
Malfunction exist>>Repair the items displayed in “SELF DIAG RESULTS”. Refer to BL-271, ""NATS BCM OR S/ENT” SELF-DIAGNOSTIC RESULTS ITEM CHART" and BL-272, ""NATS I-KEY” SELF-DIAGNOSTIC RESULTS ITEM CHART" .

6. CHECK INTELLIGENT KEY FUNCTION

Operate Push-button ignition switch with carrying Intelligent Key to check the power source position can be turned with all of the Intelligent Keys.

CAUTION:
Operate Push-button ignition switch without depressing the brake pedal.

Can be operated with all of the Intelligent Keys>>GO TO 7.
Can not be operated with particular Intelligent Key>>Check the malfunctioning Intelligent Key. Refer to BL-126, "INTELLIGENT KEY BATTERY INSPECTION" .
Can not be operated with any of the Intelligent Keys>>Perform Diagnostic Procedure. Refer to BL-179, "Trouble Diagnosis Symptom Chart 1" .

7. CHECK TURNING TIMING OF POWER SOURCE POSITION 1

Check the power source turning delay time after Push-button ignition switch is pushed. (Approx. 3 sec)

CAUTION:
Operate Push-button ignition switch without depressing the brake pedal.

No delay time exists>>GO TO 8.
Delay time exists>>Perform Diagnostic Procedure. Refer to BL-180, "Trouble Diagnosis Symptom Chart 2" .

8. CHECK TURNING TIMING OF POWER SOURCE POSITION 2

Check all the Intelligent Keys for power source turning delay time after Push-button ignition switch is pushed with Intelligent Key inserted into key slot. (Approx. 3 sec)

CAUTION:
Operate Push-button ignition switch without depressing the brake pedal.

No delay time exists>>GO TO 9.
Delay time exists when operated with particular Intelligent Key.>>Perform “C/U INITIALIZATION” referring to CONSULT-II operation manual IVIS/NVIS NATS. In case that delay time still exists after the initialization, replace the Intelligent Key.
Delay time exists when operated with any of the Intelligent Keys.>>Perform Diagnostic Procedure. Refer to BL-180, "Trouble Diagnosis Symptom Chart 3" .

9. CHECK ENGINE START FUNCTION

Check that engine can be started with Intelligent Key carried and inserted into the key slot respectively.

Engine can be started.>>GO TO 10.
Engine cannot be started.>>Inspect Trouble Diagnosis Flow Chart for IVIS (NATS). Refer to BL-275, "Trouble Diagnoses Flow Chart for IVIS (NATS)" .

10. CHECK SECURITY INDICATOR FUNCTION

Check Security Indicator for lighting up under the two conditions below.

- Security Indicator lights off when Push-button ignition switch is pushed with Intelligent Key inserted into or pulled out of the key slot.
- Security Indicator blinks when Intelligent Key is pulled out and Push-button ignition switch is in lock position.

Lighting up condition is normal.>>Inspection END.
Lighting up condition is malfunctioning.>>Perform Security Indicator Inspection. Refer to BL-277, "Check Security Indicator Harness" .

CONSULT-II Functions (INTELLIGENT KEY)

NIS001YK

CONSULT-II can display each diagnostic item using the diagnostic test modes as shown below.

Part to be diagnosed	Test item, Diagnosis mode	Description
Intelligent Key	WORK SUPPORT	Changes settings for each function.
	SELF-DIAG RESULTS	Intelligent Key unit performs CAN communication diagnosis.
	DATA MONITOR	Displays Intelligent Key unit input data in real time.
	CAN DIAGNOSTIC SUPPORT MONITOR	The results of transmit/receive diagnosis of CAN Communication can be read.
	ACTIVE TEST	Operation of electrical loads can be checked by sending driving signal to then.
	ECU PART NUMBER	Displays Intelligent Key unit part No.

CONSULT-II Inspection Procedure

NIS001YL

CAUTION:

If CONSULT-II is used with no connection CONSULT-II CONVERTER, malfunctions might be detected in self-diagnosis depending on control unit which performs CAN Communication.

BASIC OPERATION

1. Turn ignition switch OFF.
2. Connect CONSULT-II CONVERTER and CONSULT-II to data link connector (1).

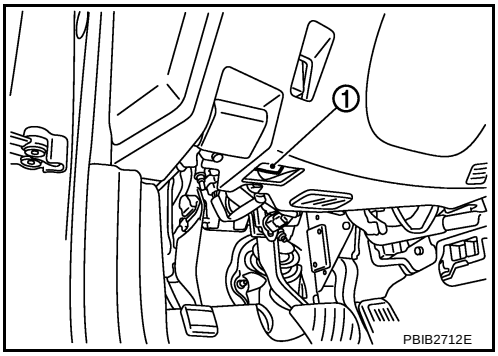

3. Use mechanical key to turn ignition switch to ON.
4. Touch “START (NISSAN BASED VHCL)”.

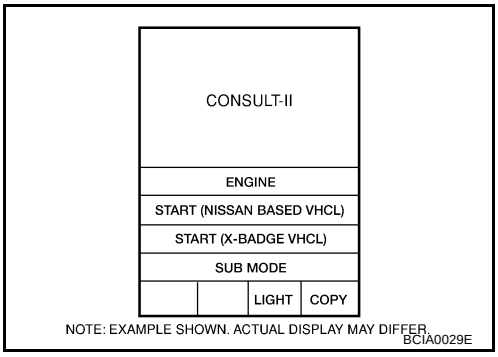

5. Touch “INTELLIGENT KEY” on “SELECT SYSTEM” screen.
   If “INTELLIGENT KEY” is not indicated, go to GI-40, "CONSULT-II Data Link Connector (DLC) Circuit" .

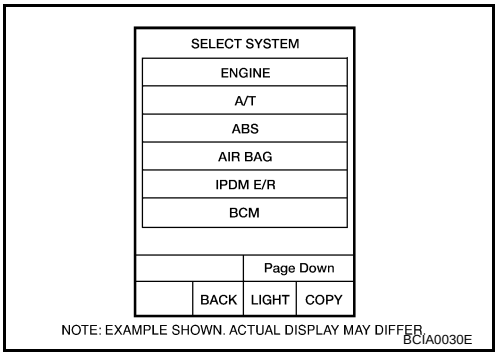

6. Select diagnosis mode. “WORK SUPPORT”, “SELF-DIAG RESULTS”, “CAN DIAG SUPPORT MNTR”, “DATA MONITOR”, “ACTIVE TEST” and “ECU PART NUMBER” are available.

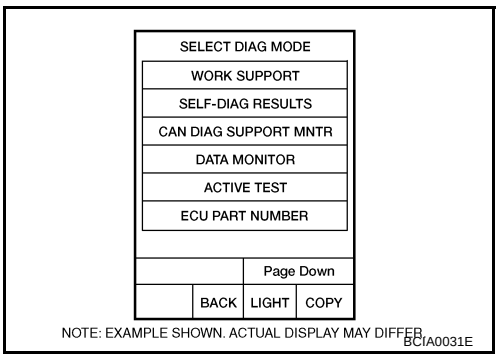

CONSULT-II Application Items

NIS001YM

SELF-DIAGNOSTIC RESULTS

How to Read SELF-DIAGNOSTIC RESULTS

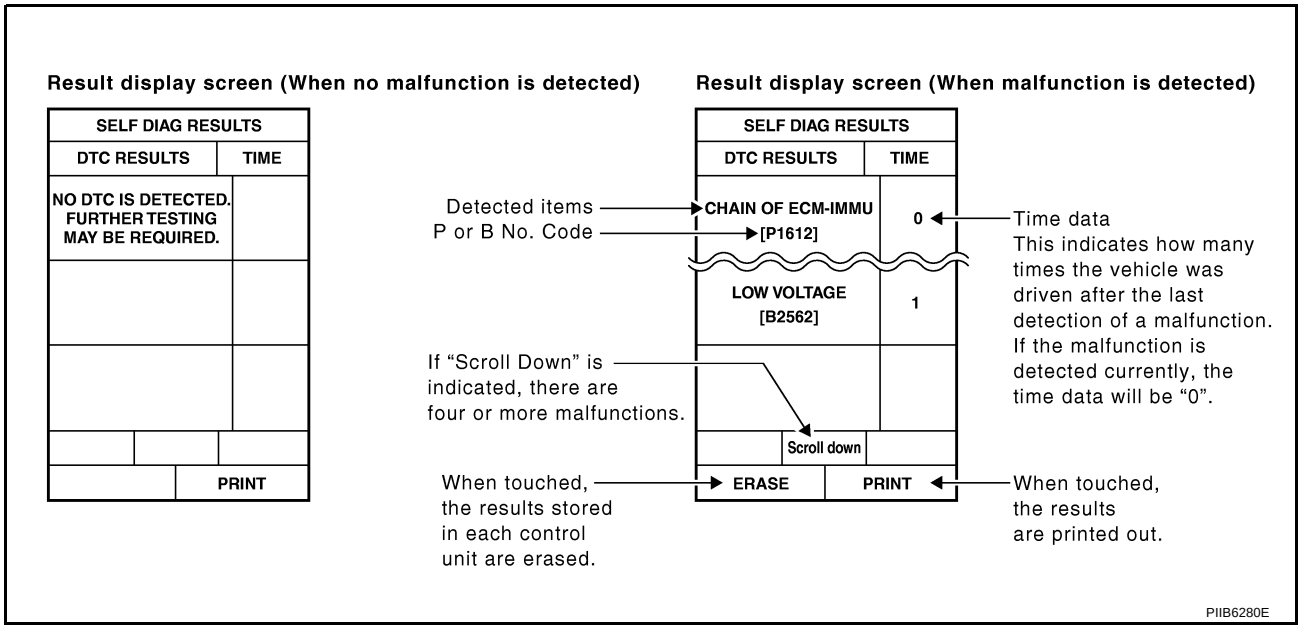

Suspect Systems [DTC]	Diagnostic item is detected when...	Repair work	Reference page
CAN COMM 1 [U1000]	Malfunction is detected in CAN communication	Perform CAN communication system inspection	BL-181
CAN COMM 2 [U1010]	Malfunction is detected in CAN communication caused by Intelligent Key unit internal malfunction	Replace Intelligent Key unit.	BL-181
STRG COMM 1 [B2013]	Communication malfunction with steering lock unit is detected	Check steering lock unit	BL-157
STEERING LOCK UNIT [B2551]	Even if the communication with steering lock unit is normally performed, the steering lock is malfunctioning	Replace steering lock unit	BL-159
INTELLIGENT KEY [B2552]	Internal malfunction is detected in Intelligent Key unit	Replace Intelligent Key unit.	BL-163
IGN POWER CIRCUIT [B2553]	It continues for 2 seconds or more that ON power supply input to Intelligent Key unit is excessively low when the power supply position is in ON position	Check Intelligent Key unit ON power supply input	BL-163
ACC POWER CIRCUIT [B2554]	It continues for 2 seconds or more that ACC power supply input to Intelligent Key unit is excessively low when the power supply position is in ACC or ON position	Check Intelligent Key unit ACC power supply input	BL-164
STOP LAMP CIRCUIT [B2555]	5V or less is detected at both the stop lamp switch signal input circuit that is input to Intelligent Key unit and the monitor input before stop lamp switch	Check stop lamp switch	BL-167

Suspect Systems [DTC]	Diagnostic item is detected when...	Repair work	Reference page
ENG START SW [B2556]	Condition that push-button ignition switch is pushed is detected continuously for 100 seconds or more	Check push-button ignition switch	BL-168
VEHICLE SPEED [B2557]	Some differences occur on one or more vehicle speed inputs of Intelligent Key unit	Check vehicle speed signal	BL-169
SHIFT POSITION [B2558]	● There is a difference between the shift position input via CAN communication and the P position input by detent switch ● Vehicle speed (5 km/h or more) is detected continuously for 10 seconds or more even if the shift position is detected in P position when the power supply position is in ON position	Check shift position input	BL-172
PDU [B2559]	Internal malfunction is detected in PDU	Replace PDU	BL-174
START POW SUP CIRC [B2560]	Though the engine start operation is not performed, starter relay in IPDM E/R is ON	Check starter power supply	BL-174
LOW VOLTAGE [B2562]	Battery power supply input to Intelligent Key unit (8.8V or less) is detected continuously for 1.5 seconds or more	Check battery low voltage	BL-177
HI VOLTAGE [B2563]	Battery power supply input to Intelligent Key unit (18V or more) is detected continuously for 90 seconds or more	Check for battery high voltage	BL-178
NATS MALFUNCTION [B2590]	Malfunction is detected in immobilizer system	Check (IVIS) NATS trouble diagnosis procedure	BL-268

CAUTION:
When CAN COMM 1 [U1000] and CAN COMM 2 [U1010] are displayed, give priority to performing trouble diagnosis.

DATA MONITOR

Monitor item	Content
DR REQ SW	Indicates [ON/OFF] condition of door request switch (driver side).
AS REQ SW	Indicates [ON/OFF] condition of door request switch (passenger side).
BD/TR REQ SW	Indicates [ON/OFF] condition of trunk opener request switch.
ON POS	Indicates [ON/OFF] condition of ignition switch in ON position.
ACC POS	Indicates [ON/OFF] condition of ignition switch in ACC position.
DOOR STAT SW	Indicates [ON/OFF] condition of door unlock sensor.
STOP LAMP SW	Indicates [ON/OFF] condition of stop lamp switch.
P RANGE SW	Indicates [ON/OFF] condition of park position switch.
TR CANCEL SW*	Indicates [ON/OFF] condition of trunk cancel switch.
DOOR LOCK SIG*	Indicates [ON/OFF] condition of door lock signal from Intelligent Key remote controller button.
DOOR UNLOCK SIG*	Indicates [ON/OFF] condition of door unlock signal from Intelligent Key remote controller button.
KEYLESS TRUNK*	Indicates [ON/OFF] condition of trunk open signal from Intelligent Key remote controller button.
KEYLESS PANIC*	Indicates [ON/OFF] condition of panic alarm signal from Intelligent Key remote controller button.
DOOR SW DR*	Indicates [OPEN/CLOSE] condition of front door switch driver side from BCM via CAN communication line.
DOOR SW AS*	Indicates [OPEN/CLOSE] condition of front door switch passenger side from BCM via CAN communication line.
DOOR SW RR*	Indicates [OPEN/CLOSE] condition of rear door switch LH from BCM via CAN communication line.
DOOR SW RL*	Indicates [OPEN/CLOSE] condition of rear door switch RH from BCM via CAN communication line.
DOOR BK SW*	Indicates [OPEN/CLOSE] condition of back door switch from BCM via CAN communication line.

Monitor item	Content
TRUNK SW*	Indicates [OPEN/CLOSE] condition of trunk room lamp switch from BCM via CAN communication line.
VEHICLE SPEED*	Indicates [km/h] condition of vehicle speed.

*: Select “SELECTION FROM MENU”.

WORK SUPPORT

Monitor item	Description
CONFIRM KEY FOB ID	It can be checked whether Intelligent Key ID code is registered or not in this mode.
TAKE OUT FROM WINDOW WARN	Take away warning chime (from window) mode can be changed to operate (ON) or not operate (OFF) with this mode. The operation mode will be changed when “CHANGE SETT” on CONSULT-II screen is touched.
LOW BAT OF KEY FOB WARN	Intelligent Key low battery warning mode can be changed to operate (ON) or not operate (OFF) with this mode. The operation mode will be changed when “CHANGE SETT” on CONSULT-II screen is touched.
ANSWER BACK FUNCTION	Hazard and buzzer reminder function mode can be changed to operate (ON) or not operate (OFF) with this mode. The operation mode will be changed when “CHANGE SETT” on CONSULT-II screen is touched.
SELECTIVE UNLOCK FUNCTION	Selective unlock function mode can be changed to operate (ON) or not operate (OFF) with this mode. The operation mode will be changed when “CHANGE SETT” on CONSULT-II screen is touched.
ANTI KEY LOCK IN FUNCTION	Key reminder function mode can be changed to operate (ON) or not operate (OFF) with this mode. The operation mode will be changed when “CHANGE SETT” on CONSULT-II screen is touched.
HORN WITH KEYLESS LOCK	Horn reminder function mode by Intelligent Key button can be changed to operate (ON) or not operate (OFF) with this mode. The operation mode will be changed when “CHANGE SETT” on CONSULT-II screen is touched.
HAZARD ANSWER BACK	Hazard reminder function mode can be selected from the following with this mode. The operation mode will be changed when “CHANGE SETT” on CONSULT-II screen is touched. ● LOCK ONLY: Door lock operation only ● UNLOCK ONLY: Door unlock operation only ● LOCK/UNLOCK: Lock/Unlock operation ● OFF: Non-operation
ANSWER BACK WITH I-KEY LOCK	Buzzer reminder function (lock operation) mode by door request switch (driver side and passenger side) can be selected from the following with this mode. The operation mode will be changed when “CHANGE SETT” on CONSULT-II screen is touched. ● HORN CHIRP: Sound horn ● BUZZER: Sound Intelligent Key warning buzzer ● OFF: Non-operation
ANSWER BACK WITH I-KEY UNLOCK	Buzzer reminder function (unlock operation) mode by door request switch can be changed to operate (ON) or not operate (OFF) with this mode.
AUTO RELOCK TIMER	Auto door lock timer mode can select the following with this mode. ● 1 min ● 5 min ● OFF: Non-operation
PANIC ALARM DELAY	Panic alarm button's pressing time on Intelligent Key remote control button can be selected from the following with this mode. The operation mode will be changed when “CHANGE SETT” on CONSULT-II screen is touched. ● 0.5 sec ● 1.5 sec ● OFF: Non-operation
TRUNK/GLASS HATCH OPEN	Buzzer reminder function mode by trunk opener request switch can be changed to operate (ON) or not operate (OFF) with this mode. The operation mode will be changed when “CHANGE SETT” on CONSULT-II screen is touched.

Monitor item	Description
TRUNK OPEN DELAY	Trunk button's pressing time on Intelligent Key button can be selected from the following with this mode. The operation mode will be changed when “CHANGE SETT” on CONSULT-II screen is touched. ● 0.5 sec ● 1.5 sec ● OFF: Non-operation
P/W DOWN DELAY	Unlock button's pressing time on Intelligent Key button can be selected from the following with this mode. The operation mode will be changed when “CHANGE SETT” on CONSULT-II screen is touched. ● 3 sec ● 5 sec ● OFF: Non-operation
ENGINE START BY I-KEY	Engine start function mode can be changed to operate (ON) or not operate (OFF) with this mode. The operation mode will be changed when “CHANGE SETT” on CONSULT-II screen is touched.
LOCK/UNLOCK BY I-KEY	Door lock/unlock function by door request switch (driver side, passenger side and trunk) mode can be changed to operate (ON) or not operate (OFF) with this mode. The operation mode will be changed when “CHANGE SETT” on CONSULT-II screen is touched.

ACTIVE TEST

Test item	Description
DOOR LOCK/UNLOCK	This test is able to check door lock/unlock operation. ● The all door lock actuators are locked when “LOCK” on CONSULT-II screen is touched. ● The all door lock actuators are unlocked when “ALL UNLK” on CONSULT-II screen is touched. ● The door lock actuator (driver side) is unlocked when “DR UNLK” on CONSULT-II screen is touched. ● The door lock actuator (passenger side) is unlocked when “AS UNLK” on CONSULT- II screen is touched. ● The trunk lid opener actuator is open when “TRUNK OPEN” on CONSULT- II screen is touched.
ANTENNA	This test is able to check Intelligent Key antenna operation. When the following conditions are met, hazard warning lamps flash. ● Inside key antenna (Instrument center) detects Intelligent Key, when “ROOM ANT1” on CONSULT-II screen is touched. ● Inside key antenna (Center console) detects Intelligent Key, when “ROOM ANT2” on CONSULT-II screen is touched. ● Inside key antenna (rear seat) detects Intelligent Key, when “ROOM ANT3” on CONSULT-II screen is touched. ● Inside key antenna (Trunk room) detects Intelligent Key, when “LAG ANT1” on CONSULT-II screen is touched. ● Outside key antenna (Driver side) detects Intelligent Key, when “DRIVER ANT” on CONSULT-II screen is touched. ● Outside key antenna (Passenger side) detects Intelligent Key, when “ASSIST ANT” on CONSULT-II screen is touched. ● Outside key antenna (Trunk room) detects Intelligent Key, when “BD/TR ANT” on CONSULT-II screen is touched.
OUTSIDE BUZZER	This test is able to check Intelligent Key warning buzzer operation. Intelligent Key warning buzzer sounds when “ON” on CONSULT-II screen is touched.
INSIDE BUZZER	This test is able to check warning chime into combination meter operation. ● Take away warning chime sounds when “TAKE OUT” on CONSULT-II screen is touched. ● Key warning chime sounds when “KEY WARN” on CONSULT-II screen is touched. ● P position warning chime sounds when “P RNG WARN” on CONSULT-II screen is touched. ● ACC warning chime sounds when “ACC WARN” on CONSULT-II screen is touched.

Test item	Description
INDICATOR	This test is able to check warning lamp operation. ● “KEY” Warning lamp illuminates when “KEY IND ON” on CONSULT-II screen is touched. ● “KEY” Warning lamp flashes when “KEY IND FSH” on CONSULT-II screen is touched.
LCD	This test is able to check meter display information ● Engine start information displays when “BRAKE/P” on CONSULT-II screen is touched. ● Engine start information displays when “BRAKE/P/ON” on CONSULT-II screen is touched. ● Key ID warning displays when “KEY ID NG” on CONSULT-II screen is touched. ● Steering lock information displays when “STLCK RELES” on CONSULT-II screen is touched. ● P position warning displays when “P RNG IND” on CONSULT-II screen is touched. ● Intelligent Key insert information displays when “INSERT KEY” on CONSULT-II screen is touched. ● Intelligent Key low battery warning displays when “KEY BAT LOW” on CONSULT-II screen is touched. ● Take away from window warning displays when “TK AWAY WDW” on CONSULT-II screen is touched. ● Take away warning display when “TAKE AWAY” on CONSULT-II screen is touched. ● OFF position warning display when “IGN OFF WARN” on CONSULT-II screen is touched.
P RANGE	This test is able to check A/T device power supply A/T device power is supplied when “ON” on CONSULT-II screen is touched.
ENGINE SW ILLUMI	This test is able to check push-ignition switch illumination operation. Push-ignition switch illumination illuminates when “ON” on CONSULT-II screen is touched.
LOCK INDCATOR	This test is able to check LOCK indicator in push-ignition switch operation. LOCK indicator in push-ignition switch illuminates when “ON” on CONSULT-II screen is touched.
ACC INDCATOR	This test is able to check ACC indicator in push-ignition switch operation. LOCK indicator in push-ignition switch illuminates when “ON” on CONSULT-II screen is touched.
IGNITION ON IND	This test is able to check INGITION ON indicator in push-ignition switch operation. LOCK indicator in push-ignition switch illuminates when “ON” on CONSULT-II screen is touched.
KEY SLOT ILLUMI	This test is able to check key slot illumination operation. Key slot illumination flash when “ON” on CONSULT-II screen is touched.

DTC B2013 STRG COMM 1

NIS001YN

DIAGNOSIS DESCRIPTION

B2013 steering lock communication malfunction monitors the communication condition between Intelligent Key unit and steering lock unit. If the reply from the steering lock unit against the communication from Intelligent Key unit does not come twice continuously, Intelligent Key unit judges that it is the malfunction and displays the DTC (Diagnostic Trouble Code).

TERMINALS AND REFERENCE VALUE FOR INTELLIGENT KEY UNIT

Terminal No.	Wire color	Item	Condition		Voltage (V) (Approx.)
			Push-button ignition switch position	Operation or conditions	
15	LG	Steering lock unit power source	LOCK	—	Battery voltage
16	P/B	Steering lock unit signal	LOCK	Steering lock: Lock	Battery voltage
			ACC	Steering lock: Unlock (Unlocked moment)	0

SELF-DIAGNOSTIC LOGIC

DTC	Self-diagnosis name	DTC detecting condition	Possible causes
B2013	STRG COMM 1	There is no replay from the steering lock unit against the communication from Intelligent Key unit.	● Harness and connector (Open or shorted in the circuit between Intelligent Key unit and steering lock unit) ● Steering lock unit power supply circuit ● Steering lock unit

DIAGNOSTIC PROCEDURE

1. CHECK STEERING LOCK UNIT POWER SUPPLY

1. Turn ignition switch OFF.
2. Disconnect steering lock unit connector.
3. Check voltage between steering lock unit connector and ground.

Terminals			Voltage (V) (Approx.)
(+)		(–)	
Steering lock unit connector	Terminal		
M35	7	Ground	Battery voltage

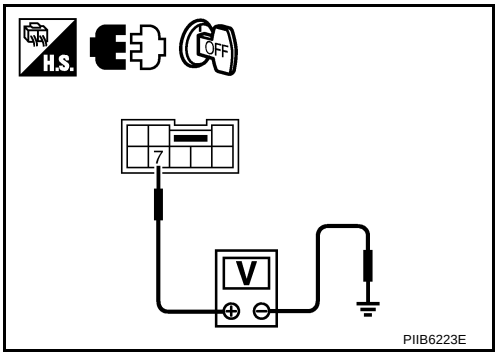

OK or NG

OK >> GO TO 3.
NG >> GO TO 2.

2. CHECK HARNESS CONTINUITY 1

1. Disconnect Intelligent Key unit connector.
2. Check continuity between Intelligent Key unit connector and steering lock unit connector.

A		B		Continuity
Intelligent Key unit connector	Terminal	Steering lock unit connector	Terminal	
M32	15	M35	7	Yes

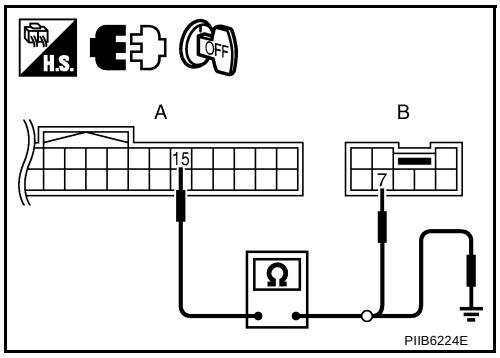

3. Check continuity between Intelligent Key unit connector and ground.

A		Ground	Continuity
Intelligent Key unit connector	Terminal		
M32	15		No

OK or NG

OK >> Check the condition of harness and connector.
NG >> Repair or replace harness.

3. CHECK STEERING LOCK UNIT SIGNAL

1. Connect steering lock unit connector.
2. Check voltage between steering lock unit connector and ground.

Terminals			Condition	Voltage (V) (Approx.)
(+)		(–)		
Steering lock unit connector	Terminal			
M35	4	Ground	When turn ignition switch to START with Intelligent Key in the car	Battery voltage ↓ 0 ↓ Battery voltage

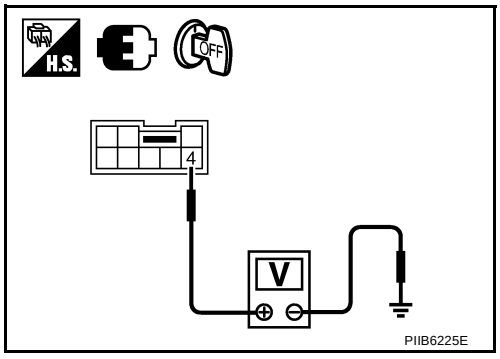

OK or NG

OK >> Replace steering lock unit.
NG >> GO TO 4.

4. CHECK HARNESS CONTINUITY 2

1. Turn ignition switch OFF.
2. Disconnect Intelligent Key unit and steering lock unit connector.
3. Check continuity between Intelligent Key unit connector and steering lock unit connector.

A		B		Continuity
Intelligent Key unit connector	Terminal	Steering lock unit connector	Terminal	
M32	16	M35	4	Yes

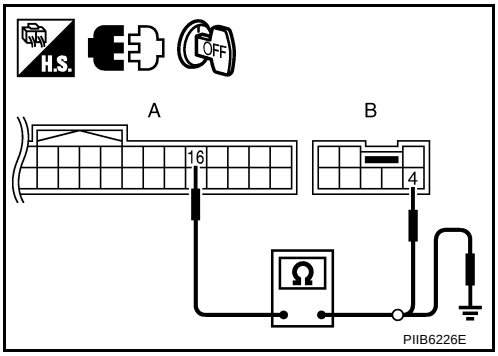

4. Check continuity between Intelligent Key unit connector and ground.

A		Ground	Continuity
Intelligent Key unit connector	Terminal		
M32	16		No

OK or NG

OK >> Check the condition of harness and connector. If it is OK, check the self-diagnosis results using CONSULT-II again.

NG >> Repair or replace harness.

DTC B2551 STEERING LOCK UNIT

NIS001YO

DIAGNOSIS DESCRIPTION

Though the communication between the Intelligent Key unit and the steering lock unit is normal, when the steering lock/unlock is not normal, B2551 steering lock unit malfunction judges that it is the malfunction and displays the DTC (Diagnostic Trouble Code)

TERMINALS AND REFERENCE VALUE

Intelligent Key Unit

Terminal No.	Wire color	Item	Condition		Voltage (V) (Approx.)
			Push-button ignition switch position	Operation or conditions	
17	O	Steering lock unit condition signal-1	LOCK	Steering lock: Lock	0
			ACC	Steering lock: Unlock	Battery voltage
			ON		Battery voltage
18	L/Y	Steering lock unit condition signal-2	LOCK	Steering lock: Lock	Battery voltage
			ACC	Steering lock: Unlock	0
			ON		0
71	LG	PDU signal	LOCK	Steering lock: Lock	Battery voltage
			ACC	Steering lock: Unlocked moment	0

PDU (Power Distribution Unit)

Terminal No.	Wire color	Item	Condition: Push-button ignition switch position	Condition: Operation or conditions	Voltage (V) (Approx.)
3	GR	Steering lock unit power source	LOCK	Push-button ignition switch is pressed under the condition that Intelligent Key is in the vehicle or Intelligent Key is inserted	0 → Battery voltage → 0
			—	Any condition other than above	0
7	LG	Steering lock control signal-2	—	Push-button ignition switch is pressed under the condition that Intelligent Key is in the vehicle or Intelligent Key is inserted	Battery voltage
			LOCK	Power supply position is in LOCK position (Steering lock activated)	Battery voltage → 0 → Battery voltage (Battery voltage is detected when activating the steering lock)

SELF-DIAGNOSTIC LOGIC

DTC	Self-diagnosis name	DTC detecting condition	Possible causes
B2551	STEERING LOCK UNIT	Though the communication between the Intelligent Key and the steering lock unit is normal, the steering lock unit condition signal is NG	● Harness and connector (Open or shorted in the circuit between the units) ● Steering lock unit

DIAGNOSTIC PROCEDURE

1. CHECK STEERING LOCK SIGNAL

Check voltage between power distribution unit connector and ground.

Terminals (+): Power distribution unit connector	Terminals (+): Terminal	Terminals (–)	Condition	Voltage (V) (Approx.)
M30	6	Ground	When turn ignition switch to START with Intelligent Key in the car	Battery voltage
	7			
	6		When turn ignition switch to OFF (steering lock operates)	Battery voltage ↓ 0 ↓ Battery voltage
	7			

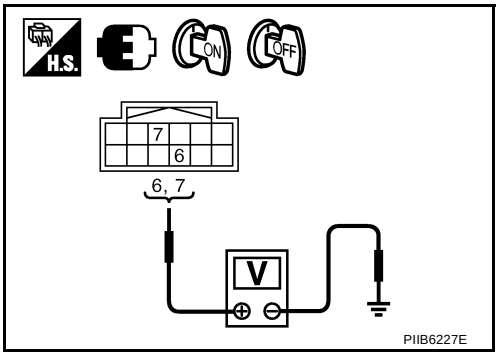

OK or NG

OK >> GO TO 2.
NG >> GO TO 4.

2. CHECK POWER DISTRIBUTION UNIT POWER SUPPLY

Check voltage between power distribution unit connector and ground.

Terminals			Condition	Voltage (V) (Approx.)
(+)		(–)		
Power distribution unit connector	Terminal			
M30	3	Ground	When turn ignition switch to OFF (steering lock operates)	Battery voltage ↓ 0 ↓ Battery voltage
			Ignition switch OFF	0

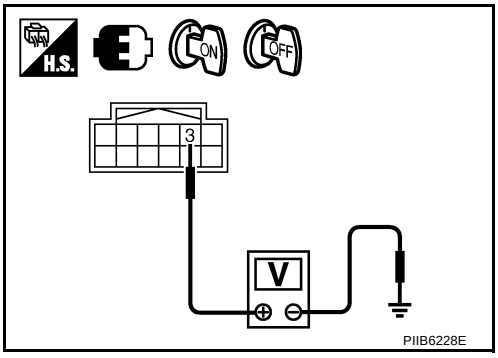

OK or NG

OK >> GO TO 3.

NG >> Check if "B2558 PDU" is displayed on self-diagnosis results. If it is displayed, first perform the diagnosis.

3. CHECK POWER SUPPLY CIRCUIT

1. Turn ignition switch OFF.
2. Disconnect power distribution unit and steering lock unit connector.
3. Check continuity between power distribution unit connector and steering lock unit connector.

A		B		Continuity
Power distribution unit connector	Terminal	Steering lock unit connector	Terminal	
M30	3	M35	1	Yes

4. Check continuity between power distribution unit connector and ground.

A		Ground	Continuity
Power distribution unit connector	Terminal		
M30	3		No

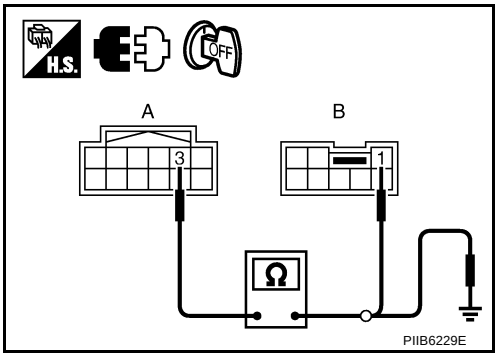

OK or NG

OK >> GO TO 5.

NG >> Repair or replace harness.

4. CHECK COMMUNICATION CIRCUIT 1

1. Turn ignition switch OFF.
2. Disconnect Intelligent Key unit and power distribution unit connector.
3. Check continuity between Intelligent Key unit connector and power distribution unit connector.

A		B		Continuity
Intelligent Key unit connector	Terminal	Power distribution unit connector	Terminal	
M33	46	M30	6	Yes
	71		7	

4. Check continuity between Intelligent Key unit connector and ground.

A		Ground	Continuity
Intelligent Key unit connector	Terminal		
M33	46		No
	71		

OK or NG

OK >> Check the condition of harness and connector.
NG >> Repair or replace harness.

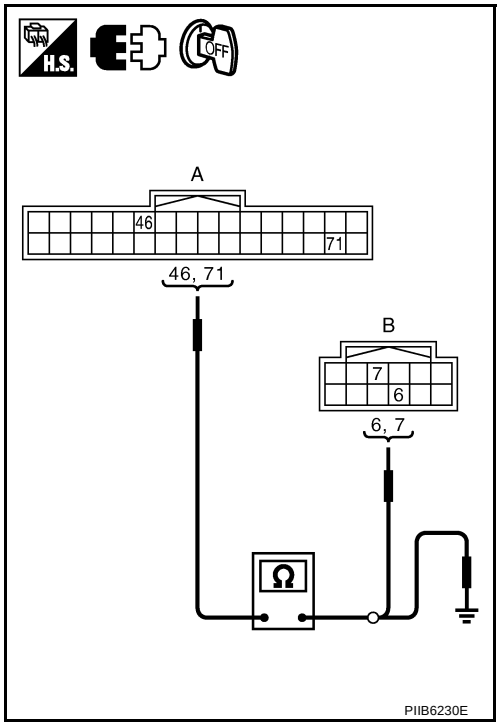

5. CHECK SIGNAL CIRCUIT

1. Connect steering lock unit and power distribution unit connector.
2. Check continuity between steering lock unit connector and ground.

Terminals			Condition	Voltage (V) (Approx.)
(+)		(–)		
Steering lock unit connector	Terminal			
M35	3	Ground	When turn ignition switch to START with Intelligent Key in the car	Battery voltage
	8			0
	3		Ignition switch: OFF	0
	8			Battery voltage

OK or NG

OK >> Replace steering lock unit.
NG >> GO TO 6.

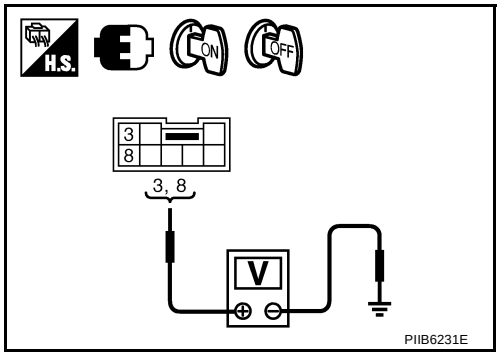

6. CHECK COMMUNICATION CIRCUIT 2

1. Turn ignition switch OFF.
2. Disconnect Intelligent Key unit and steering lock unit connector.
3. Check continuity between Intelligent Key unit connector and steering lock unit connector.

A		B		Continuity
Intelligent Key unit connector	Terminal	Steering lock unit connector	Terminal	
M32	17	M35	3	Yes
	18		8	

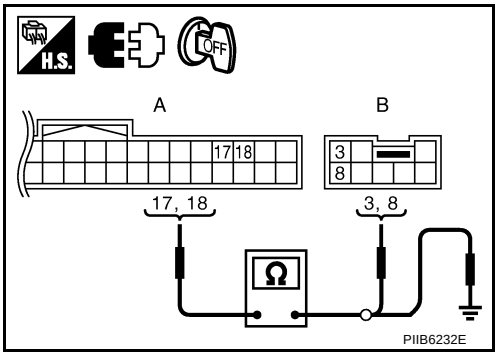

4. Check continuity between Intelligent Key unit connector and ground.

A		Ground	Continuity
Intelligent Key unit connector	Terminal		
M32	17		No
	18		

OK or NG

OK >> Check the condition of harness and connector. If it is OK, check the self-diagnosis results using CONSULT-II again.

NG >> Repair or replace harness.

DTC B2552 INTELLIGENT KEY

NIS001YP

DIAGNOSIS DESCRIPTION

B2552 Intelligent Key unit internal malfunction judges NG by self-detecting the Intelligent Key unit internal malfunction.

If this DTC (Diagnostic Trouble Code) is displayed, replace the Intelligent Key unit and perform the specified registration procedure. Refer to the Technical Bulletin.

DTC B2553 IGN POWER CIRCUIT

NIS001YQ

DIAGNOSIS DESCRIPTION

Though the power supply switching control to ON position by push-button ignition switch operation is performed normally, if there is no ON power supply input to the Intelligent Key unit, B2553 ignition power supply system judges it is the malfunction and displays the DTC (Diagnostic Trouble Code)

TERMINAL AND REFERENCE VALUE FOR INTELLIGENT KEY UNIT

Terminal No.	Wire color	Item	Condition		Voltage (V) (Approx.)
			Push-button ignition switch position	Operation or conditions	
31	GR	Ignition power supply (ON)	ON	Power supply position is in ON or START position	Battery voltage

CONSULT-II DATA MONITOR STANDARD VALUE

Monitor item	Measuring condition	Reference value
ON POS	Power supply position is in ON position	ON
	Power supply position is in any position other than ON	OFF

SELF-DIAGNOSTIC LOGIC

DTC	Self-diagnosis name	DTC detecting condition	Possible causes
B2553	IGN POWER CIRCUIT	Though the changing control to ON position by push-button ignition switch operation is performed normally, ON position power supply to the Intelligent Key unit is not supplied	● 10A fuse ● Harness and connector (Open or shorted in the circuit)

DIAGNOSTIC PROCEDURE

1. CHECK POWER SUPPLY CIRCUIT

With CONSULT-II

Check (“IGN ON SW”) in DATA MONITOR mode with CONSULT-II.

When ignition switch is turned to ON

IGN ON SW : ON

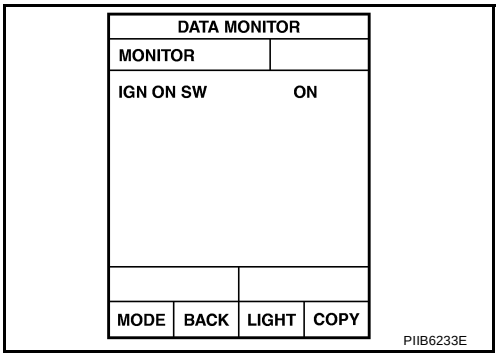

Without CONSULT-II

Check voltage between Intelligent Key unit connector and ground.

Terminals			Ignition switch condition	Voltage (V) (Approx.)
(+)		(–)		
Intelligent Key unit connector	Terminal			
M32	31	Ground	ON	Battery voltage
			OFF	0

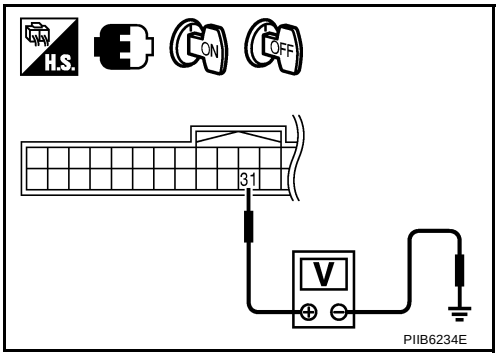

OK or NG

OK >> Check the condition of harness and connector. If it is OK, check the self-diagnosis results using CONSULT-II again.

NG >> Check Intelligent Key unit power supply circuit for open or short.

DTC B2554 ACC POWER CIRCUIT

NIS001YR

DIAGNOSIS DESCRIPTION

B2554 ACC power supply circuit monitors the following 2 signals.

- Though the power supply switching control to ACC position by push-button ignition switch operation is performed normally, if there is no ACC power supply input to the Intelligent Key unit, it judges that it is the malfunction and displays the DTC (Diagnostic Trouble Code)
- When performing the power supply switching control to ACC position by push-button ignition switch operation, if the power supply position switching cannot be performed because the wake-up signal is not entered into PDU (Power Distribution Unit), it judges that it is the malfunction and displays the DTC (Diagnostic Trouble Code)

TERMINALS AND REFERENCE VALUE FOR INTELLIGENT KEY UNIT

Terminal No.	Wire color	Item	Condition		Voltage (V) (Approx.)
			Push-button ignition switch position	Operation or conditions	
30	L/W	Ignition power supply (ACC)	ACC	Power supply position is in ACC position	Battery voltage
42	P	PDU wake up signal	LOCK	At sleep (30 seconds or more after all doors are closed under the condition that the power supply position is in the LOCK position)	Battery voltage
			—	At wake-up (Open driver door)	0

CONSULT-II DATA MONITOR STANDARD VALUE

Monitor item	Measuring condition	Reference value
ACC POS	Power supply position is in ACC position	ON
	Power supply position is in any position other than ACC	OFF

SELF-DIAGNOSTIC LOGIC

DTC	Self-diagnosis name	DTC detecting condition	Possible causes
B2554	ACC POWER CIRCUIT	● Though the changing control to ACC position by push-button ignition switch operation is performed normally, ACC position power supply to the Intelligent Key unit is not supplied ● The power supply position switching cannot be performed because the wake-up signal is not entered into PDU (Power Distribution Unit) during position changing control to ACC position by push-button ignition switch operation	● Fuse ● Harness and connector (Open or shorted in the circuit)

DIAGNOSTIC PROCEDURE

1. CHECK POWER SUPPLY CIRCUIT 1

With CONSULT-II

Check (“IGN ACC SW”) in DATA MONITOR mode with CONSULT-II.

When ignition switch is turned to ACC

ACC ON SW : ON

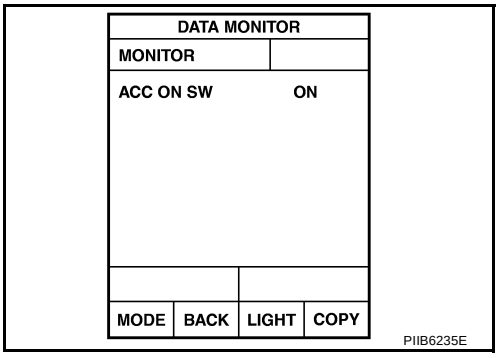

Without CONSULT-II

Check voltage between Intelligent Key unit connector and ground.

Terminals			Ignition switch condition	Voltage (V) (Approx.)
(+)		(–)		
Intelligent Key unit connector	Terminal			
M32	30	Ground	ACC	Battery voltage
			OFF	0

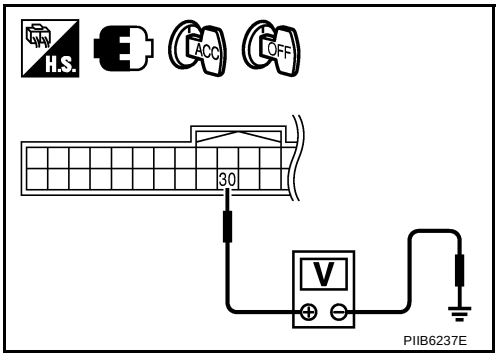

OK or NG

OK >> ACC power circuit is OK. Check the self-diagnosis results using CONSULT-II again.

NG >> GO TO 2.

2. CHECK COMMUNICATION CIRCUIT

1. Turn ignition switch OFF.
2. Disconnect Intelligent Key unit and power distribution unit connector.
3. Check continuity between Intelligent Key unit connector and power distribution unit connector.

A		B		Continuity
Intelligent Key unit connector	Terminal	Power distribution unit connector	Terminal	
M33	42	M30	1	Yes

4. Check continuity between Intelligent Key unit connector and ground.

A		Ground	Continuity
Intelligent Key unit connector	Terminal		
M33	42		No

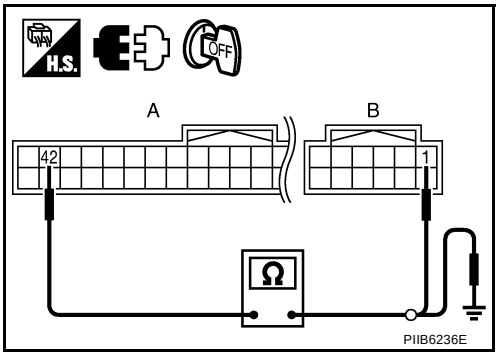

OK or NG

OK >> GO TO 3.

NG >> Repair or replace harness.

3. CHECK POWER SUPPLY CIRCUIT 2

1. Connect Intelligent Key unit and power distribution unit connector.
2. Check voltage between Intelligent Key unit connector and ground.

Terminals			Ignition switch condition	Voltage (V) (Approx.)
(+)		(–)		
Intelligent Key unit connector	Terminal			
M32	30	Ground	ACC	Battery voltage
			OFF	0

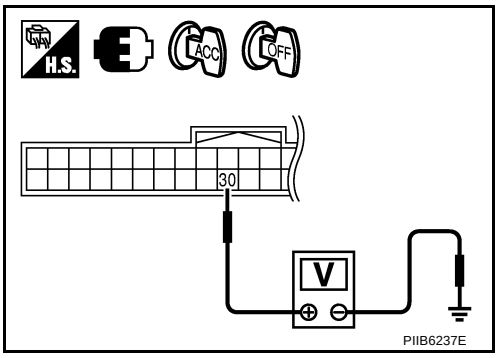

OK or NG

OK >> Check the condition of harness and conenctor. If it is OK, check the self-diagnosis results using CONSULT-II again.

NG >> Check the following.

- 10A fuse [No.6, located in the fuse block (J/B)]
- Harness for open or short between fuse and Intelligent Key unit.

DTC B2555 STOP LAMP CIRCUIT

NIS001YS

DIAGNOSIS DESCRIPTION

B2555 stop lamp system monitors the open circuit before the stop lamp switch (models without ICC system), which detects the brake pedal operation input to the Intelligent Key unit, or ICC brake relay (models with ICC system). If it detects the open circuit, it judges that it is the malfunction and displays the DTC (Diagnostic Trouble Code)

TERMINALS AND REFERENCE VALUE FOR INTELLIGENT KEY UNIT INPUT

Terminal No.	Wire color	Item	Condition		Voltage (V) (Approx.)
			Push-button ignition switch position	Operation or conditions	
11	P	Stop lamp switch	—	Brake pedal depressed	Battery voltage
				Brake pedal released	Battery voltage
29	V/R	Stop lamp switch	—	Brake pedal depressed	Battery voltage
				Brake pedal released	0

CONSULT-II DATA MONITOR STANDARD VALUE

Monitor item	Measuring condition	Reference value
STOP LAMP	Brake pedal is depressed	ON
	Brake pedal is released	OFF

SELF-DIAGNOSTIC LOGIC

DTC	Self-diagnosis name	DTC detecting condition	Possible causes
B2555	STOP LAMP CIRCUIT	5V or less is detected at both the stop lamp switch signal input circuit that is input to Intelligent Key unit and the monitor input before stop lamp switch	• 10A fuse • Harness and connector (Open in the circuit between the units)

DIAGNOSTIC PROCEDURE

1. CHECK STOP LAMP SIGNAL

With CONSULT-II

Check ("STOP LAMP SW") in DATA MONITOR mode with CONSULT-II.

When depressing the break pedal

STOP LAMP SW : ON

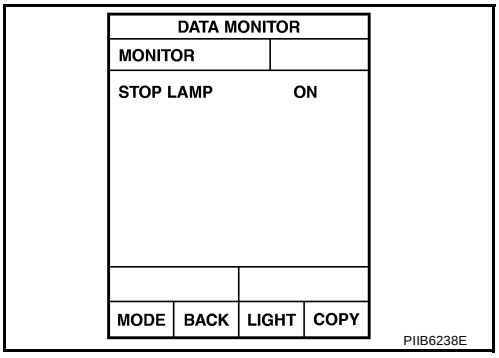

Without CONSULT-II

Check voltage between Intelligent Key unit connector and ground.

Terminals			Voltage (V) (Approx.)
(+)		(–)	
Intelligent Key unit connector	Terminal		
M32	11	Ground	Battery voltage

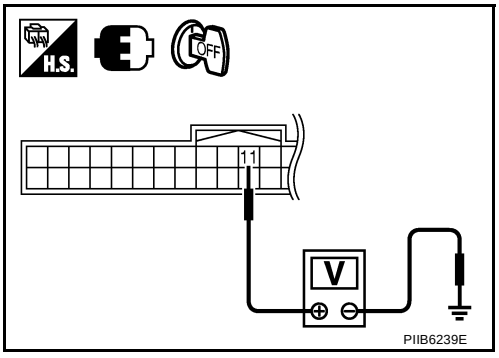

OK or NG

OK >> XXX

NG >> Check the following.

- 10A fuse [No.20, located in the fuse block (J/B)]
- Harness for open or short between fuse block and Intelligent Key unit.

DTC B2556 ENG START SW

NIS001YT

DIAGNOSIS DESCRIPTION

When the push-button ignition switch input, which inputs to the Intelligent Key unit, continues for 100 seconds or more, B2556 push-button ignition switch judges that it is the malfunction and displays the DTC (Diagnostic Trouble Code)

TERMINALS AND REFERENCE VALUE FOR INTELLIGENT KEY UNIT

Terminal No.	Wire color	Item	Condition		Voltage (V) (Approx.)
			Push-button ignition switch position	Operation or conditions	
39	BR/W	Push-button ignition switch	—	Push-button ignition switch is pressed	0
				Push-button ignition switch is released	Battery voltage

SELF-DIAGNOSTIC LOGIC

DTC	Self-diagnosis name	DTC detecting condition	Possible causes
B2556	ENG START SW	Input signal from push-button ignition switch to Intelligent Key unit continues for 100 seconds or more	• Harness and connector (Open in the circuit between the units) • Push-button ignition switch

DIAGNOSTIC PROCEDURE

1. CHECK HARNESS CONTINUITY

1. Turn ignition switch OFF.
2. Disconnect Intelligent Key unit and push-button ignition switch connector.
3. Check continuity between Intelligent Key unit connector and push-button ignition switch connector.

A		B		Continuity
Intelligent Key unit connector	Terminal	Push-button ignition switch connector	Terminal	
M32	39	M27	4	Yes

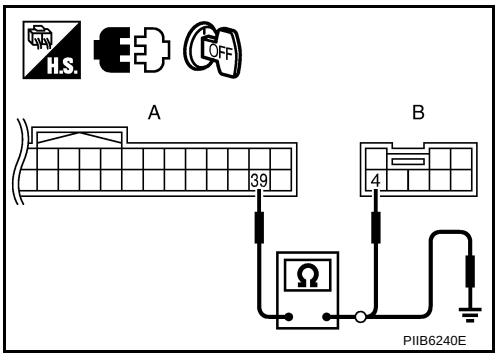

4. Check continuity between Intelligent Key unit connector and ground.

A		Ground	Continuity
Intelligent Key unit connector	Terminal		
M32	39		No

OK or NG

OK >> GO TO 2.
NG >> Repair or replace harness.

2. CHECK PUSH-BUTTON IGNITION SWITCH

Check push-button ignition switch.

Terminal		Push-button ignition switch condition	Continuity
Push-button ignition switch			
1	4	Pushed	Yes
		Released	No

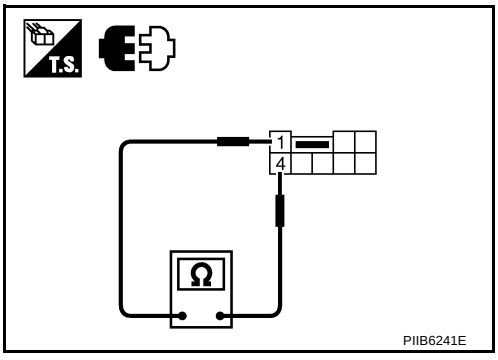

OK or NG

OK >> Check the condition of harness and conenctor. If it is OK, check the self-diagnosis results using CONSULT-II again.
NG >> Replace push-button ignition switch.

DTC B2557 VEHICLE SPEED

NIS001YU

DIAGNOSIS DESCRIPTION

B2557 vehicle speed signal compares the vehicle speed input from the unified meter and A/C amp. and ABS via CAN communication and the vehicle signal (8 pulses) from the unified meter and A/C amp. If there is the difference between each vehicle speed input, it judges that it is the malfunction and displays the DTC (Diagnostic Trouble Code).

TERMINALS AND REFERENCE VALUE FOR INTELLIGENT KEY UNIT

Terminal No.	Wire color	Item	Condition: Push-button ignition switch position	Condition: Operation or conditions	Voltage (V) (Approx.)
35	LG	Vehicle speed signal	ON	At speedometer operation (vehicle speed approx. 40 km/h)	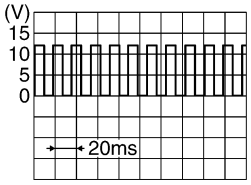 PKIA1935E

SELF-DIAGNOSTIC LOGIC

DTC	Self-diagnosis name	DTC detecting condition	Possible causes
B2557	VEHICLE SPEED	When comparing the vehicle speed signal, that is input to the Intelligent Key unit with power supply position ON and when one signal displays 10 km/h or more, the condition that another signal displays less than 5 km/h continues for 10 seconds or more	● Harness and connector (Open in the circuit between the units) ● Unified meter and A/C amp.

DIAGNOSTIC PROCEDURE

1. CHECK VEHICLE SPEED SIGNAL

Check the signal between Intelligent Key unit connector and ground.

Terminals (+): Intelligent Key unit connector	Terminals (+): Terminal	Terminals (–)	Condition	Signal (Reference value)
M32	35	Ground	Speedometer operated [When vehicle speed is Approx. 40 km/h (25MPH)]	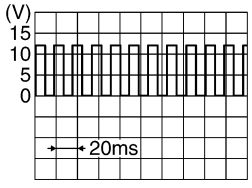 PKIA1935E

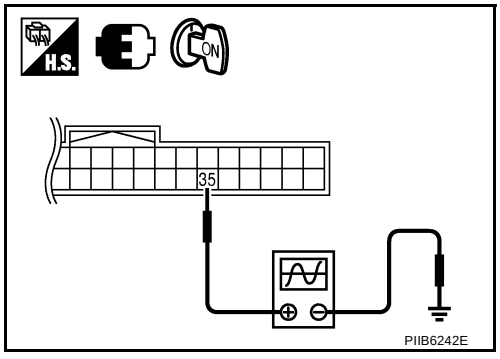

PIIB6242E

OK or NG

OK >> Check the condition of harness and connector. If it is OK, check the self-diagnosis results using CONSULT-II again.

NG >> GO TO 2.

2. CHECK HARNESS CONTINUITY

1. Turn ignition switch OFF.
2. Disconnect Intelligent Key unit and unified meter and A/C amp. Connector.
3. Check continuity between Intelligent Key unit connector and unified meter and A/C amp. Connector.

A		B		Continuity
Intelligent Key unit connector	Terminal	Unified meter and A/C amp. connector	Terminal	
M32	35	M64	28	Yes

4. Check continuity between Intelligent Key unit connector and ground.

A		Ground	Continuity
Intelligent Key unit connector	Terminal		
M32	35		No

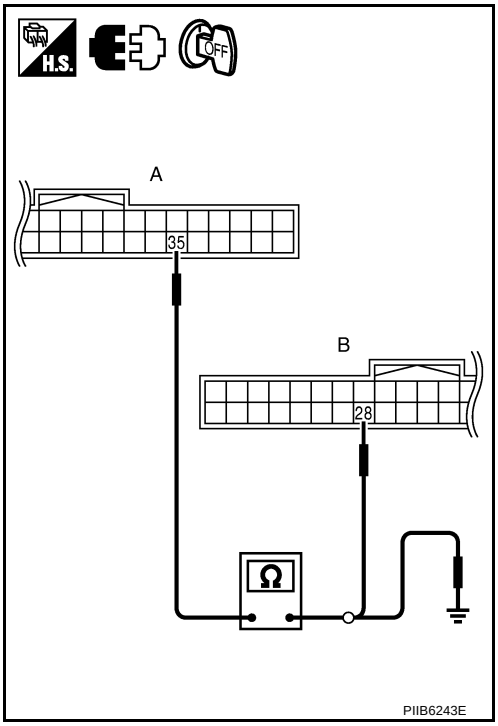

OK or NG

OK >> ● If the measured value is not waveform but 0V constant, the harness or connector between the using receiving the vehicle speed signal from unified meter and A/C amp. may be malfunctioning. Check these wirings.

● If the measured value is not waveform but 5V or 12V constant, replace unified meter and A/C amp.

NG >> Repair or replace harness.

DTC B2558 SHIFT POSITION

NIS001YV

DIAGNOSIS DESCRIPTION

B2558 shift position input system monitors the A/T selector lever position. If there is the difference between the input from A/T device, the input from A/T assembly, and CAN communication input from A/T control unit, it judges that it is the malfunction and displays the DTC (Diagnostic Trouble Code)

TERMINALS AND REFERENCE VALUE FOR INTELLIGENT KEY UNIT

Terminal No.	Wire color	Item	Condition		Voltage (V) (Approx.)
			Push-button ignition switch position	Operation or conditions	
27	V	A/T device (Detention switch)	LOCK	A/T selector lever is in P position	0
			ON	A/T selector lever is in any position other than P	Battery voltage
28	SB	Starter relay	ON	A/T selector lever is in N or P position	Battery voltage
			—	Power supply position is in LOCK position or A/T selector lever is in any position other than N or P position	0
58	O	A/T device (Detention switch)	LOCK	At sleep (30 seconds or more after all doors are closed under the condition that the power supply position is in the LOCK position)	0
			—	At wake-up (Open driver door)	Battery voltage

SELF-DIAGNOSTIC LOGIC

DTC	Self-diagnosis name	DTC detecting condition	Possible causes
B2558	SHIFT POSITION	There is an input difference of A/T selector lever position input to Intelligent Key unit for 2 seconds or more	● Harness and connector (Open in the circuit between the units) ● A/T device (detent switch) ● A/T assembly (control valve assembly)

DIAGNOSTIC PROCEDURE

1. CHECK A/T DEVICE SIGNAL

1. Turn ignition switch ON.
2. Check voltage between Intelligent Key unit connector and ground.

Terminals			A/T control device position	Voltage (V) (Approx.)
(+)		(–)		
Intelligent Key unit connector	Terminal			
M32	27	Ground	P	0
			Other than above	Battery voltage

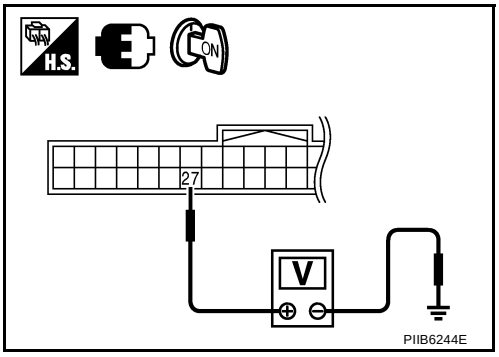

OK or NG

OK >> GO TO 4.
NG >> GO TO 2.

2. CHECK HARNESS CONTINUITY 1

1. Turn ignition switch OFF.
2. Disconnect Intelligent Key unit and A/T device connector.
3. Check continuity between Intelligent Key unit connector and A/T device connector.

A		B		Continuity
Intelligent Key unit connector	Terminal	A/T device connector	Terminal	
M32	27	M133	10	Yes
M33	58		9	

4. Check continuity between Intelligent Key unit connector and ground.

A		Ground	Continuity
Intelligent Key unit connector	Terminal		
M32	27		No
M33	58		

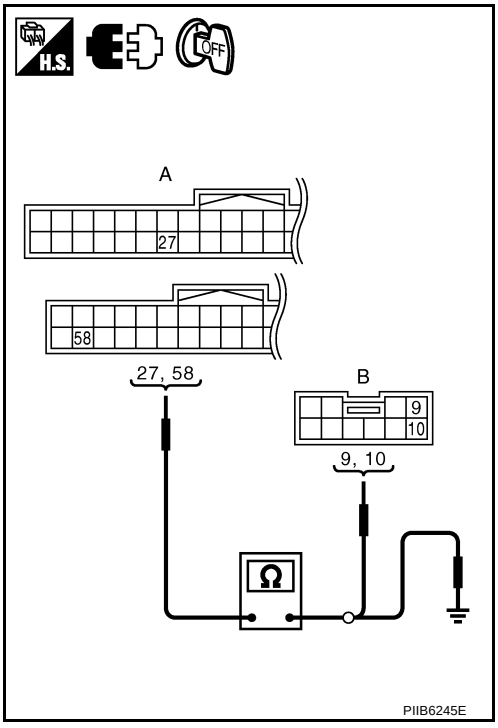

OK or NG

OK >> GO TO 3.
NG >> Repair or replace harness.

3. CHECK A/T DEVICE

Check A/T device.

Terminal		A/T control device position	Continuity
A/T device			
9	10	P	Yes
		Other than above	No

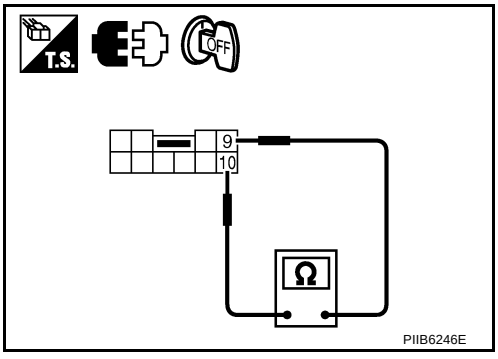

OK or NG

OK >> Check the condition of harness and connector. If it is OK, check the self-diagnosis results using CONSULT-II again.
NG >> Replace A/T device.

4. CHECK TCM SIGNAL

Check Intelligent Key unit connector and ground.

Terminals			A/T control device position	Voltage (V) (Approx.)
(+)		(–)		
Intelligent Key unit connector	Terminal			
M32	28	Ground	N or P	Battery voltage
			Other than above	0

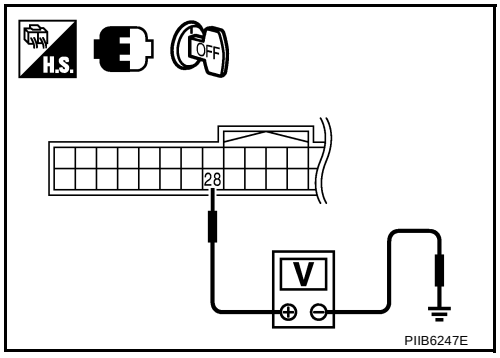

OK or NG

OK >> Check the condition of harness and connector. If it is OK, check the self-diagnosis results using CONSULT-II again.

NG >> GO TO 5.

5. CHECK HARNESS CONTINUITY 2

1. Turn ignition switch OFF.
2. Disconnect Intelligent Key unit and TCM connector.
3. Check continuity between Intelligent Key unit connector and TCM connector.

A		B		Continuity
Intelligent Key unit connector	Terminal	TCM connector	Terminal	
M32	28	F502	8	Yes

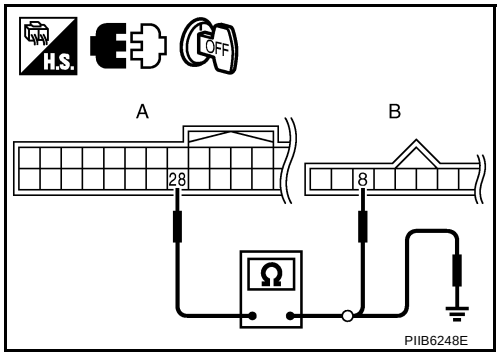

4. Check continuity between Intelligent Key unit connector and ground.

A		Ground	Continuity
Intelligent Key unit connector	Terminal		
M32	28		No

OK or NG

OK >> Replace TCM.

NG >> Repair or replace harness.

DTC B2559 PDU

NIS001YW

DIAGNOSIS DESCRIPTION

B2559 PDU system that is Intelligent Key unit judges NG by self-detecting the PDU (Power Distribution Unit) internal malfunction.

If this DTC (Diagnostic Trouble Code) is displayed, replace the PDU.

DTC B2560 START POW SUP CIRC

NIS001YX

DIAGNOSIS DESCRIPTION

B2560 starter power supply system monitors the power supply condition to the starter motor relay and the starter motor relay condition in IPDM E/R. If it detects the starter motor relay ON condition in IPDM E/R without the “Engine start” request from the Intelligent Key unit, it judges that it is the malfunction and displays the DTC (Diagnostic Trouble Diagnosis).

TERMINALS AND REFERENCE VALUE

Intelligent Key Unit

Terminal No.	Wire color	Item	Condition: Push-button ignition switch position	Condition: Operation or conditions	Voltage (V) (Approx.)
3	Y	IPDM E/R current signal	START	At starter motor cranking	5
			LOCK	Any condition other than above	2

PDU (Power Distribution Unit)

Terminal No.	Wire color	Item	Condition: Push-button ignition switch position	Condition: Operation or conditions	Voltage (V) (Approx.)
13	R	Starter relay	START	At starter motor cranking	Battery voltage
			—	Any condition other than above	4

SELF-DIAGNOSTIC LOGIC

DTC	Self-diagnosis name	DTC detecting condition	Possible causes
B2560	START POW SUP CIRC	It is detected that the power is supplied to the starter motor without the engine start request from the Intelligent Key unit	● Harness and connector (Open in the circuit between the units) ● PDU ● IPDM E/R

DIAGNOSTIC PROCEDURE

1. CHECK HARNESS CONTINUITY 1

1. Turn ignition switch OFF.
2. Disconnect Intelligent Key unit and power distribution unit connector.
3. Check continuity between Intelligent Key unit connector and power distribution unit connector.

A		B		Continuity
Intelligent Key unit connector	Terminal	Power distribution unit connector	Terminal	
M32	3	M30	11	Yes

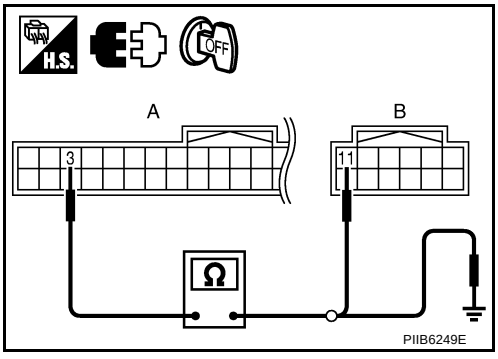

4. Check continuity between Intelligent Key unit connector and ground.

A		Ground	Continuity
Intelligent Key unit connector	Terminal		
M32	3		No

OK or NG

OK >> GO TO 2.
NG >> Repair or replace harness.

2. CHECK HARNESS CONTINUITY 2

1. Disconnect IPDM E/R connector.
2. Check continuity between power distribution unit connector and IPDM E/R connector.

A		B		Continuity
Power distribution unit connector	Terminal	IPDM E/R connector	Terminal	
M31	13	E4	4	Yes

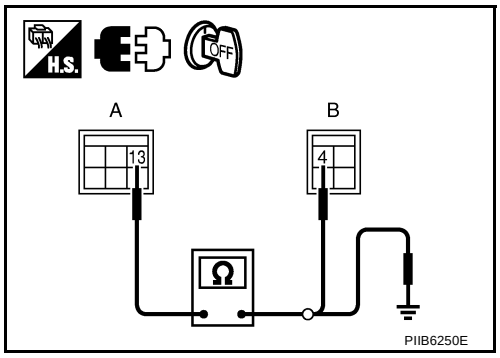

3. Check continuity between power distribution unit connector and ground.

A		Ground	Continuity
Power distribution unit connector	Terminal		
M31	13		No

OK or NG

OK >> Replace IPDM E/R.
NG >> Repair or replace harness.

DTC B2562 LOW VOLTAGE

NIS001YY

DIAGNOSIS DESCRIPTION

B2562 battery low voltage monitors the battery voltage input to Intelligent Key unit. When the condition that the voltage is 8.8V or less is detected for 1.5 seconds or more, it judges that it is the malfunction and displays the DTC (Diagnostic Trouble Code)

TERMINALS AND REFERENCE VALUE FOR INTELLIGENT KEY UNIT

Standard is the measured voltage between each terminal and ground

Terminal No.	Wire color	Item	Condition		Voltage (V) (Approx.)
			Push-button ignition switch position	Operation or conditions	
1	SB	Power source (fuse)	—	—	Battery voltage
41	Y	Power source (fuse)	—	—	Battery voltage
57	L	Power source (fuse)	—	—	Battery voltage

SELF-DIAGNOSTIC LOGIC

DTC	Self-diagnosis name	DTC detecting condition	Possible causes
B2562	LOW VOLTAGE	It is detected for 1.5 seconds or more that the battery voltage that is input to the Intelligent Key unit is 8.8V or less	● Fuse ● Harness and connector (Open in the circuit)

DIAGNOSTIC PROCEDURE

1. CHECK BATTERY

Measure the battery output voltage. Make sure that it is 9V or more.

OK or NG

OK >> GO TO 2.
NG >> Charge or replace the battery.

2. CHECK POWER SUPPLY CIRCUIT

1. Turn ignition switch OFF.
2. Check voltage between Intelligent Key unit connector and ground.

Terminals			Voltage (V) (Approx.)
(+)		(–)	
Intelligent Key unit connector	Terminal		
M32	1	Ground	Battery voltage
M33	41		
	57		

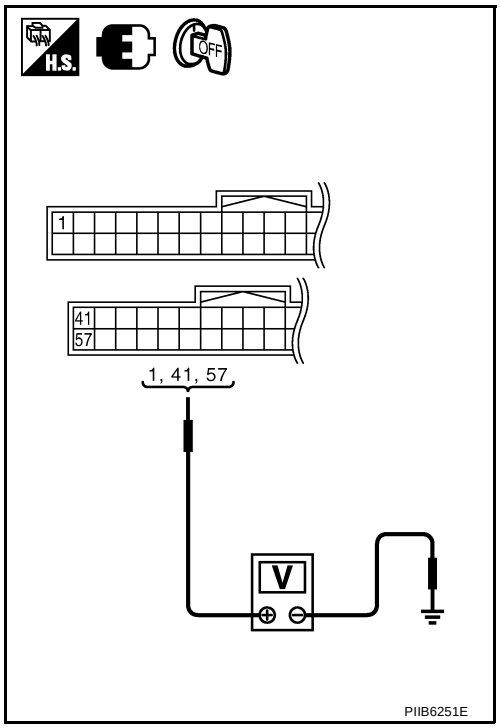

OK or NG

OK >> Check the condition of harness and connector. If it is OK, check the self-diagnosis results using CONSULT-II again.

NG >> Check the following.

- 10A fuse [No.22, located in the fuse block (J/B)]
- Harness for open or short between fuse block and Intelligent Key unit.

DTC B2563 HI VOLTAGE

NIS001YZ

DIAGNOSIS DESCRIPTION

B2563 battery high voltage monitors the battery voltage input to Intelligent Key unit. When the condition that the voltage is 18V or more is detected for 90 seconds or more, it judges that it is the malfunction and displays the DTC (Diagnostic Trouble Code)

TERMINAL AND REFERENCE VALUE FOR INTELLIGENT KEY UNIT

Standard is the measured voltage between each terminal and ground

Terminal No.	Wire color	Item	Condition		Voltage (V) (Approx.)
			Push-button ignition switch position	Operation or conditions	
1	SB	Power source (fuse)	—	—	Battery voltage
41	Y	Power source (fuse)	—	—	Battery voltage
57	L	Power source (fuse)	—	—	Battery voltage

SELF-DIAGNOSTIC LOGIC

DTC	Self-diagnosis name	DTC detecting condition	Possible causes
B2563	HI VOLTAGE	It is detected for 90 seconds or more that the battery voltage that is input to the Intelligent Key unit is 18V or more	Alternator

DIAGNOSTIC PROCEDURE

1. CHECK POWER SUPPLY CIRCUIT

1. Start engine.
2. Check voltage between Intelligent Key unit connector and ground.

Terminals			Voltage (V) (Approx.)
(+)		(–)	
Intelligent Key unit connector	Terminal		
M32	1	Ground	Battery voltage
M33	41		
	57		

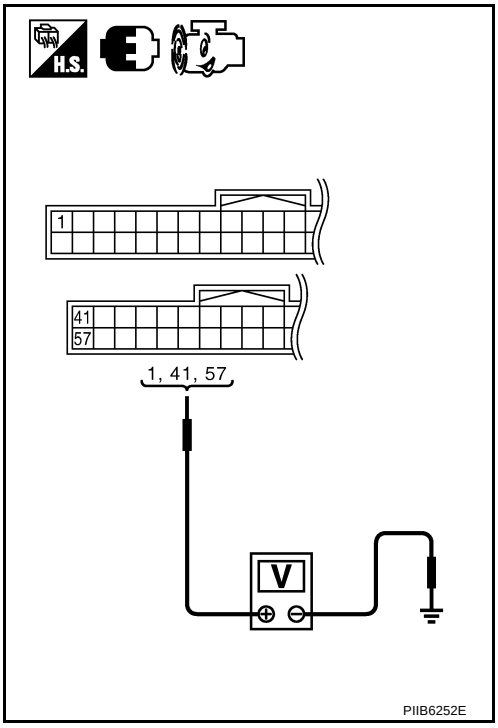

OK or NG

OK >> Check the condition of harness and connector. If it is OK, check the self-diagnosis results using CONSULT-II again.

NG >> Check alternator. Refer to

Trouble Diagnosis Symptom Chart 1

NIS001Z0

Power supply switching operation cannot be operated with all Intelligent Keys.

CAUTION:

- **Follow Trouble Diagnosis Flowchart referring to “Diagnosis Procedure”. Determine malfunctioning condition before performing this diagnosis.**
- **Make sure that vehicle is under the condition shown in “Conditions of vehicle” before starting diagnosis.**
- **Check systems shown in the “Diagnosis/service procedure” column in this order.**

CONDITIONS OF VEHICLE (OPERATING CONDITIONS)

- Engine start function is ON when setting on CONSULT-II.
- Use Intelligent Key with registered Intelligent Key ID.
- One or more of Intelligent Keys with registered Intelligent Key ID is in the passenger room.

Diagnosis/service procedure	Reference page
1. Check push button ignition switch	BL-181
2. Check inside key antenna	BL-183
3. Check remote keyless entry receiver	BL-185
4. Replace Intelligent Key unit.	BL-125

Trouble Diagnosis Symptom Chart 2

NIS001Z1

When performing the push-button ignition switch operation when the Intelligent Key is carried, there is a time difference in the power supply position switching (the power supply changes in approximately 3 seconds)

CAUTION:

- **Follow Trouble Diagnosis Flowchart referring to "Diagnosis Procedure". Determine malfunctioning condition before performing this diagnosis.**
- **Make sure that vehicle is under the condition shown in "Conditions of vehicle" before starting diagnosis.**
- **Check systems shown in the "Diagnosis/service procedure" column in this order.**

CONDITIONS OF VEHICLE (OPERATING CONDITIONS)

- Another Intelligent Key or foreign materials are not inserted in the key slot.

NOTE:

If another Intelligent Key or foreign materials are inserted at push-button ignition switch operation, perform the immobilizer ID verification first. When the immobilizer ID verification cannot be performed, the system switches to the Intelligent Key ID verification. Therefore, there is the time difference in the push-button ignition switch operation.

Diagnosis/service procedure	Reference page
1. Check key switch built in key slot	BL-186
2. Replace Intelligent Key unit.	BL-125

Trouble Diagnosis Symptom Chart 3

NIS001Z2

When performing the push-button ignition switch operation when the Intelligent Key is inserted into the key slot, there is the time difference in the power supply position switching (the power supply changes in approximately 3 seconds)

CAUTION:

- **Follow Trouble Diagnosis Flowchart referring to "Diagnosis Procedure". Determine malfunctioning condition before performing this diagnosis.**
- **Make sure that vehicle is under the condition shown in "Conditions of vehicle" before starting diagnosis.**
- **Check systems shown in the "Diagnosis/service procedure" column in this order.**

CONDITIONS OF VEHICLE (OPERATING CONDITIONS)

- A device emitting electromagnetic signals such as a portable telephone or a radio is not used around the key slot.
- The Intelligent Key is inserted into the key slot until it clicks.

NOTE:

If another Intelligent Key is inserted at push-button ignition switch operation, perform the immobilizer ID verification first. When the immobilizer ID verification cannot be performed, the system switches to the Intelligent Key ID verification. Therefore, there is the time difference in the push-button ignition switch operation.

Diagnosis/service procedure	Reference page
1. Check NATS antenna amp. built in key slot	BL-188
2. Replace Intelligent Key unit.	BL-125

Check CAN Communication System

NIS001Z3

1. CHECK SELF-DIAGNOSTIC RESULTS

CAUTION:
If CONSULT-II is used with no connection of CONSULT-II CONVERTER, malfunctions might be detected in self-diagnosis depending on control unit which performs CAN communication.

With CONSULT-II

- Connect CONSULT-II, and turn ignition switch ON.
- Touch “INTELLIGENT KEY” on “SELECT SYSTEM” screen.
- Touch “SELF-DIAG RESULTS” on “SELECT DIAG MODE” screen.
- Check display content in self-diagnostic results.

CONSULT-II display item	DTC code
NO DTC IS DETECTED	—
CAN COMM 1	U1000
CAN COMM 2	U1010

OK or NG

NO DTC IS DETECTED>> INSPECTION END
CAN COMM [U1000]>> After printing “SELF-DIAGNOSIS RESULTS”, go to “CAN SYSTEM”, Refer to LAN-7, "Precautions When Using CONSULT-II" .
CAN COMM2 [U1010]>> Replace Intelligent Key unit.

Check Push-Button Ignition Switch

NIS001Z4

1. CHECK POWER SUPPYL CIRCUIT

1. Turn ignition switch OFF.
2. Disconnect push-button ignition switch connector.
3. Check voltage between push-button ignition switch connector and ground.

Terminals			Voltage (V) (Approx.)
(+)		(–)	
push-button ignition switch connector	Terminal		
M27	4	Ground	Battery voltage

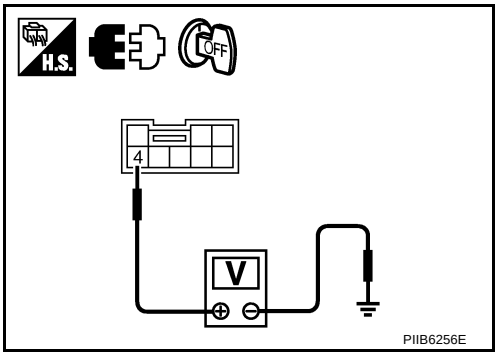

OK or NG

OK >> GO TO 3.
NG >> GO TO 2.

2. CHECK HARNESS CONTINUITY

1. Disconnect Intelligent Key unit connector.
2. Check continuity between Intelligent Key unit connector and push-button ignition switch connector.

A		B		Continuity
Intelligent Key unit connector	Terminal	push-button ignition switch connector	Terminal	
M32	39	M27	4	Yes

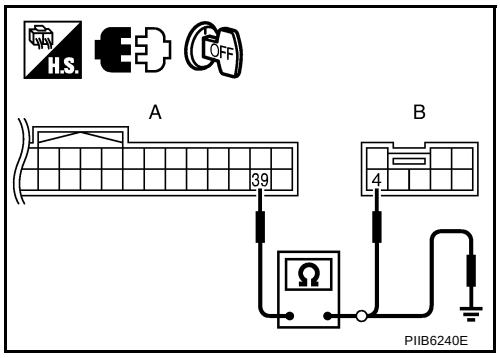

3. Check continuity between Intelligent Key unit connector and ground.

A		Ground	Continuity
Intelligent Key unit connector	Terminal		
M32	39		No

OK or NG

OK >> GO TO 3.
NG >> Repair or replace harness.

3. CHECK PUSH-BUTTON IGNITION SWITCH

Check push-button ignition switch.

Terminal		Push-button ignition switch condition	Continuity
Push-button ignition switch			
1	4	Pushed	Yes
		Released	No

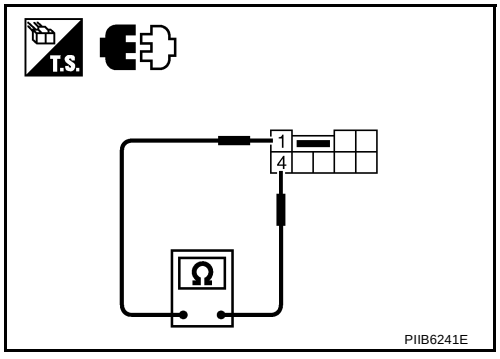

OK or NG

OK >> GO TO 4.
NG >> Replace push-button ignition switch.

4. CHECK GROUND CIRCUIT

Check push-button ignition switch connector.

Push-button ignition switch connector	Terminal	Ground	Continuity
M27	1		Yes

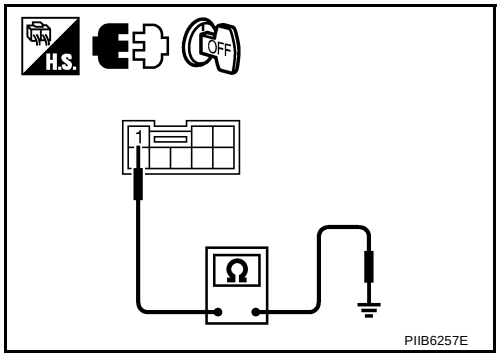

OK or NG

OK >> Check the condition of harness and connector.
NG >> Repair or replace harness.

Check Inside Key Antenna

NIS001Z5

1. CHECK INSIDE KEY ANTENNA FUNCTION

With CONSULT-II

1. Check the operation with (“ANTENNA”) in the ACTIVE TEST.
2. Touch “ROOM ANT1” “ROOM ANT2” “ROOM ANT3” “LUG ANT” on screen.
3. Carry the Intelligent Key into the antenna detection area.

Test item	Corresponding antenna
ROOM ANT1	Inside key antenna instrument center
ROOM ANT2	Inside key antenna console
ROOM ANT3	Inside key antenna rear seat
LUG ANT1	Inside key antenna trunk room

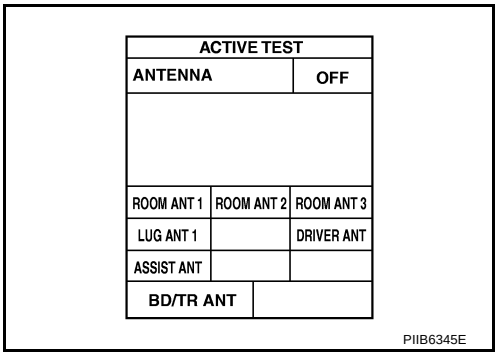

Do the hazard lamps flash?

Yes >> Inside key antenna is OK.
No >> GO TO 2.

2. CHECK INSIDE KEY ANTENNA INPUT SIGNAL 1

1. Turn ignition switch OFF.
2. Check signal between Intelligent Key unit connector and ground with oscilloscope.

Terminals (+) Intelligent Key unit connector		Terminal	(–)	Condition	Signal (Reference value.)
M33	Instrument center	47	Ground	Any door is open → close	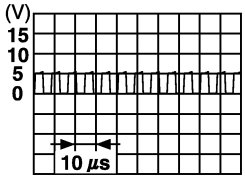
	Console	49			
	Rear seat	51			
	Trunk room	53			

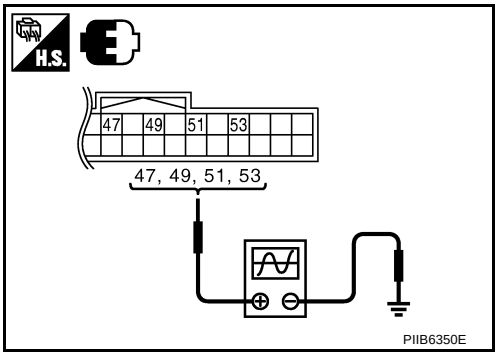

OK or NG

OK >> Check the condition of harness and connector.
NG >> GO TO 3.

3. CHECK INSIDE KEY ANTENNA CIRCUIT

1. Disconnect Intelligent Key unit and inside key antenna connector.
2. Check continuity between Intelligent Key unit connector and inside key antenna connector.

A		B			Continuity
Intelligent Key unit connector	Terminal	Inside key antenna connector		Terminal	
M33	47	M83	Instrument center	1	Yes
	48			2	
	49	M142	Console	1	
	50			2	
	51	B45	Rear seat	1	
	52			2	
	53	B132	Trunk room	1	
	54			2	

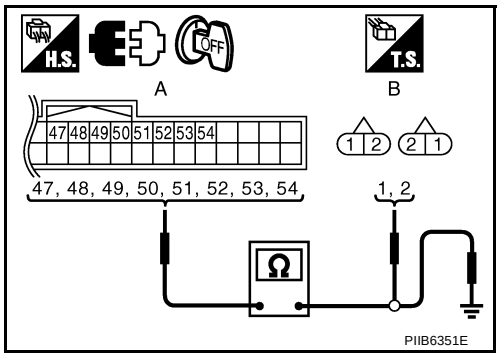

3. Check continuity between Intelligent Key unit connector and ground.

A				Continuity
Intelligent Key unit connector		Terminal	Ground	
M33	Instrument center	47		No
		48		
	Console	49		
		50		
	Rear seat	51		
		52		
	Trunk room	53		
		54		

OK or NG

OK >> GO TO 4.
NG >> Repair or replace harness between Intelligent Key unit and inside key antenna.

4. CHECK INDE KEY ANTENNA INPUT SIGNAL 2

1. Replace inside key antenna. (New antenna or other antenna)
2. Connect Intelligent Key unit and inside key antenna connector.
3. Check signal between Intelligent Key unit connector and ground with oscilloscope.

Terminals (+) Intelligent Key unit connector		Terminal	(–)	Condition	Signal (Reference value.)
M33	Instrument center	47	Ground	Any door is open → close	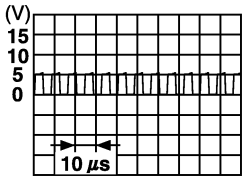 SIIA1910J
	Console	49			
	Rear seat	51			
	Trunk room	53			

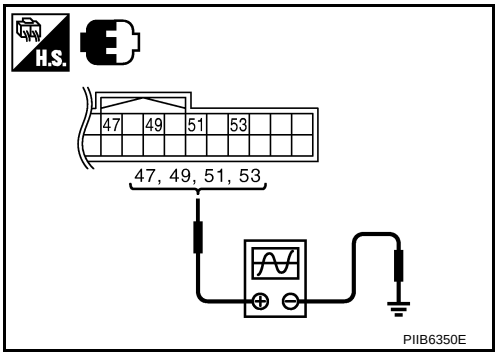

PIIB6350E

OK or NG

OK >> Replace malfunction inside key antenna.
NG >> Replace Intelligent Key unit.

Check Remote Keyless Entry Receiver

NIS001Z6

1. CHECK POWER SUPPLY CIRCUIT

1. Turn ignition switch OFF.
2. Disconnect remote keyless entry receiver connector.
3. Check voltage between Intelligent Key unit connector and ground.

Terminals (+) Intelligent Key unit connector	Terminal	(–)	Condition	Voltage (V) (Approx.)
M32	4	Ground	Carry the Intelligent Key within the inside key antenna detection area, and then push the push-button ignition switch.	0
			Other than the above.	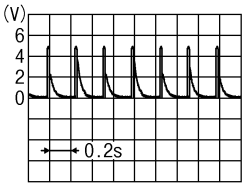 PIIB5657J

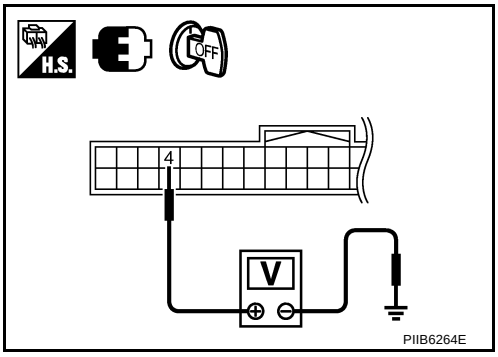

PIIB6264E

OK or NG

OK >> GO TO 2.
NG >> Replace Intelligent Key unit.

2. CHECK HARNESS CONITNUITY

1. Disconnect Intelligent Key unit connector.
2. Check continuity between Intelligent Key unit connector and remote keyless entry receiver connector.

A		B		Continuity
Intelligent Key unit connector	Terminal	Remote keyless entry receiver connector	Terminal	
M32	4	M89	3	Yes

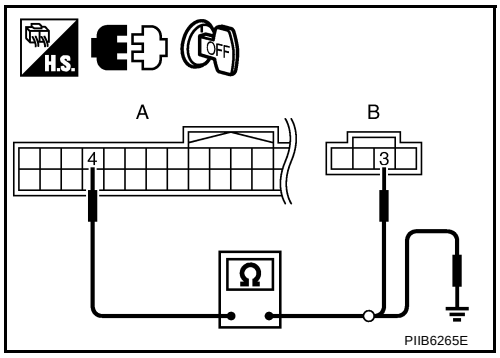

3. Check continuity between Intelligent Key unit connector and ground.

A		Ground	Continuity
Intelligent Key unit connector	Terminal		
M32	4		No

OK or NG

OK >> GO TO 3.
NG >> Repair or replace harness between Intelligent Key unit and remote keyless entry receiver.

3. CHECK REMOTE KEYLESS ENTRY RECEIVER

1. Replace remote keyless entry receiver.
2. Connect Intelligent Key unit and remote keyless entry receiver connector. Check function the Intelligent Key is carried into the inside key antenna detection area and the ignition switch is turned to START.

OK or NG

OK >> Remote keyless entry receiver is malfunction.
NG >> Remote keyless entry receiver is OK. If its malfunction is the same malfunction that occurred before performing the Remote Keyless Entry Receiver Circuit Inspection", it is not a malfunction in the remote keyless entry receiver circuit.

Check Key Switch Built In Key Slot

NIS001Z7

1. CHECK FUNCTION

When the driver door is opened while inserting the Intelligent Key into the key slot, make sure that key reminder warning functions properly.

Key inserted : Sound
Key removed : No sound

OK or NG

OK >> GO TO 5.
NG >> GO TO 2.

2. CHECK POWER SUPPLY

1. Turn ignition switch OFF.
2. Disconnect key slot connector.
3. Check voltage between key slot connector and ground.

Terminals			Voltage (V) (Approx.)
(+)		(–)	
Key slot connector	Terminal		
M14	1	Ground	Battery voltage

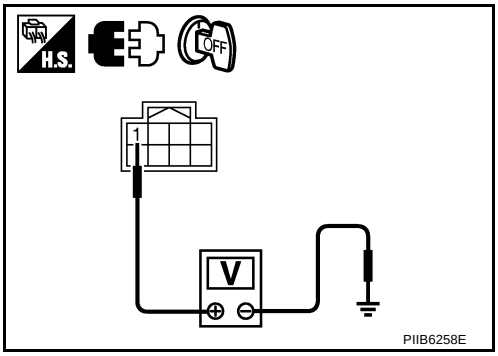

OK or NG

OK >> GO TO 3.
NG >> Check key slot power supply circuit for open or short.

3. CHECK HARNESS CONTINUITY 1

1. Disconnect Intelligent Key unit connector.
2. Check continuity between Intelligent Key unit connector and key slot connector.

A		B		Continuity
Intelligent Key unit connector	Terminal	Key slot connector	Terminal	
M32	19	M14	2	Yes

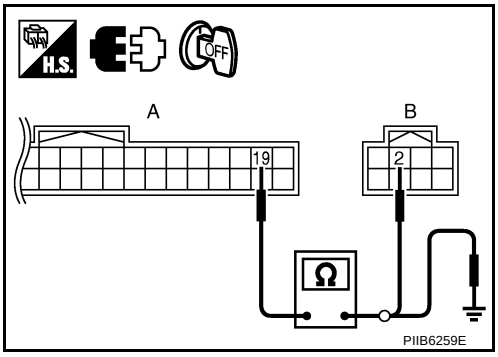

3. Check continuity between Intelligent Key unit connector and ground.

A		Ground	Continuity
Intelligent Key unit connector	Terminal		
M32	19		No

OK or NG

OK >> GO TO 4.
NG >> Repair or replace harness.

4. CHECK KEY SLOT

Check key slot.

Terminal		Condition	Continuity
Key slot			
1	2	Keyslot inserted	Yes
		Keyslot removed	No

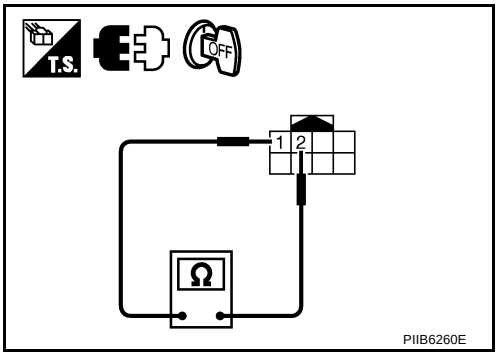

OK or NG

OK >> Check the condition of harness and connector.
NG >> Replace key slot.

5. CHECK HARNESS CONTINUITY 2

1. Disconnect BCM connector.
2. Check continuity between BCM connector and key slot connector.

A		B		Continuity
BCM connector	Terminal	Key slot connector	Terminal	
M1	37	M14	2	Yes

3. Check continuity between BCM connector and ground.

A		Ground	Continuity
BCM connector	Terminal		
M1	37		No

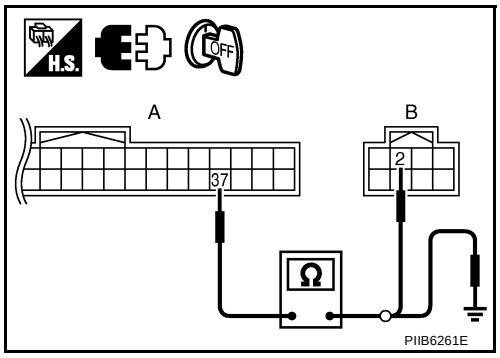

OK or NG

OK >> Replace BCM. Refer to "C/U INITIALIZATION", and then perform the registration again after replacing BCM.

NG >> Repair or replace harness.

Check NATS Antenna Amp. Built In Key Slot

NIS001Z8

For the circuit information of this diagnosis, refer to Engine Immobilizer System Circuit Diagram.

1. CHECK POWER SUPPLY CIRCUIT

1. Turn ignition switch OFF.
2. Disconnect key slot connector.
3. Check voltage between key slot connector and ground.

Terminals			Voltage (V) (Approx.)
(+)		(–)	
Key slot connector	Terminal		
M14	1	Ground	Battery voltage

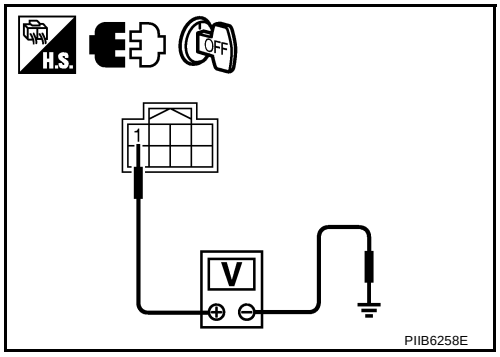

OK or NG

OK >> GO TO 2.

NG >> Check key slot power supply circuit for open or short.

2. CHECK GROUND CIRCUIT

Check continuity between key slot connector and ground.

Key slot connector	Terminal	Ground	Continuity
M14	8		Yes

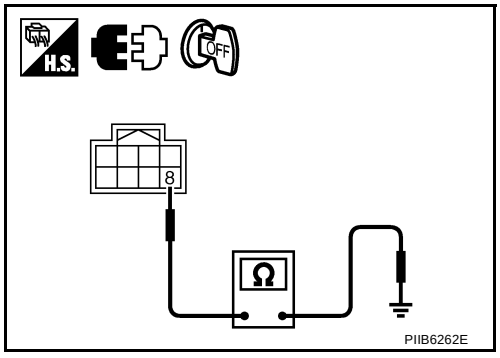

OK or NG

OK >> GO TO 3.

NG >> Repair or replace harness.

3. CHECK KEY SLOT SIGNAL

1. Connect key slot connector.
2. Check voltage between key slot connector and ground.

Terminals			Condition	Voltage (V) (Approx.)
(+)		(–)		
Key slot connector	Terminal			
M14	6	Ground	Check the voltage just after the Intelligent Key is inserted into the key slot and the ignition switch is turned to START.	The pointer of the analog tester fluctu-ates.
	7			

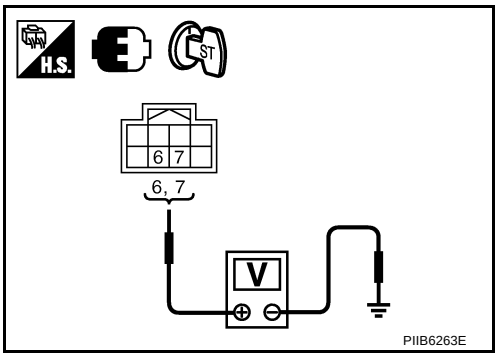

OK or NG

OK >> Check the condition of harness and connector.
NG >> Repair or replace harness between BCM and key slot.

DOOR

PFP:80100

Fitting Adjustment

NIS001Z9

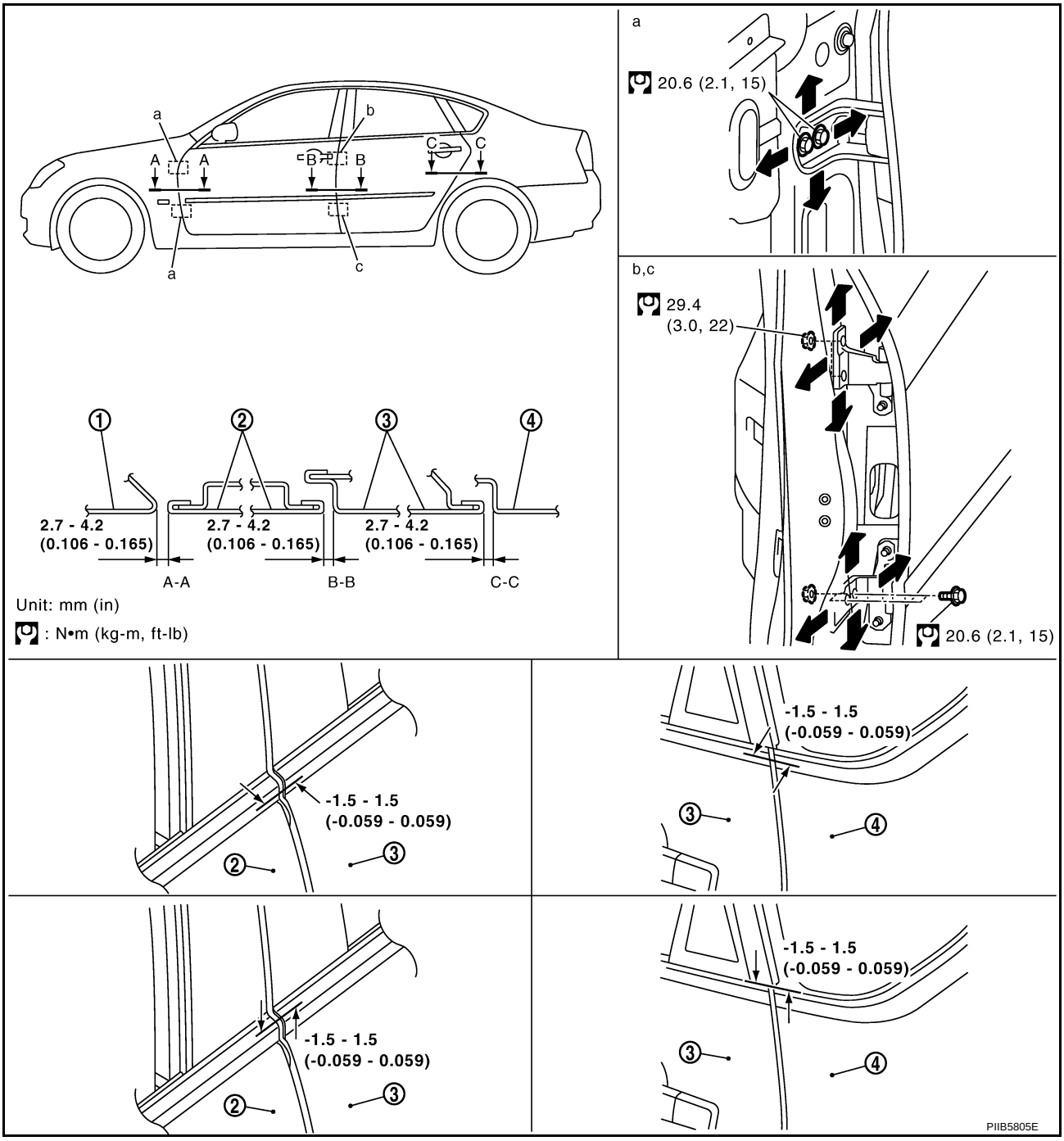

1. Front fender
2. Front door outer
3. Rear door outer
4. Rear fender

FRONT DOOR

Longitudinal Clearance and Surface Height Adjustment At Front End

Loosen the hinge mounting bolts. Raise the front door at rear end to adjust.

REAR DOOR

Longitudinal Clearance and Surface Height Adjustment At Front End

1. Remove the center pillar upper garnish and center pillar lower garnish. Refer to EI-37, "Removal and Installation" .

2. Accessing from inside the vehicle, loosen the mounting nuts. Open the rear door, and raise the rear door at rear end to adjust.

STRIKER ADJUSTMENT

1. Adjust the striker so that it becomes parallel with the lock insertion direction.

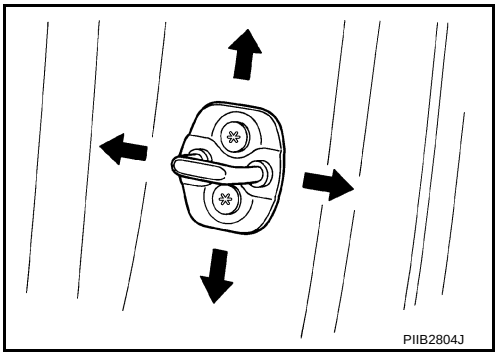

Removal and Installation of Front Door

NIS001ZA

CAUTION:

- **When removing and installing the front door assembly, support the door with a jack and cloth to protect the door and body.**
- **When removing and installing front door assembly, be sure to carry out the fitting adjustment. Refer to BL-190, "Fitting Adjustment" .**
- **After installing, apply touch-up paint (the body color) onto the head of the hinge mounting nuts.**
- **Check the hinge rotating part for poor lubrication. If necessary, apply “body grease”.**
- **Operate with two workers, because of its heavy weight.**
- **Check rear door open/close operation after installation.**

REMOVAL

1. Pull the lever and disconnect the door harness connector while removing tabs of door harness connector.

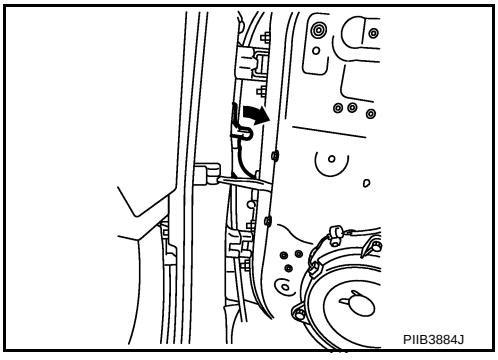

2. Remove the mounting bolts of the check link on the vehicle.

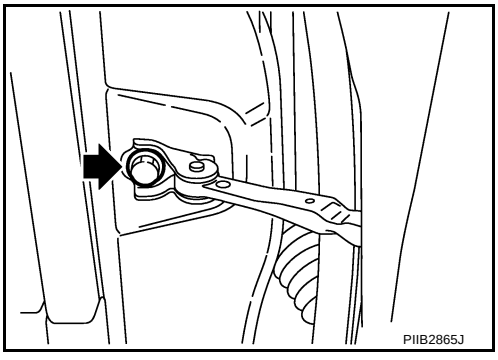

3. Remove the door-side hinge mounting nuts, then remove the door assembly.

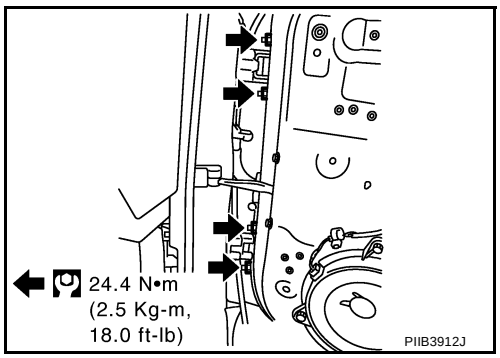

INSTALLATION

Install in the reverse order of removal.

Removal and Installation of Rear Door

NIS001ZB

CAUTION:

- **When removing and installing the rear door assembly, support the door with a jack and cloth to protect the door and body.**
- **When removing and installing rear door assembly, be sure to carry out the fitting adjustment. Refer to BL-190, "Fitting Adjustment" .**
- **Check the hinge rotating part for poor lubrication. If necessary, apply “body grease”.**
- **After installing, apply touch-up paint (the body color) onto the head of the hinge mounting nuts.**
- **Operate with two workers, because of its heavy weight.**
- **Check rear door open/close operation after installation.**

REMOVAL

1. Pull out grommet and disconnect rear door harness connector.

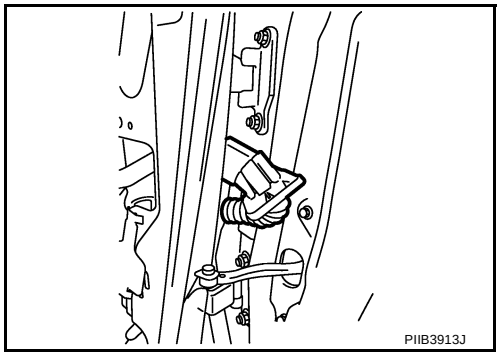

2. Remove the mounting bolts of the check link on the vehicle.

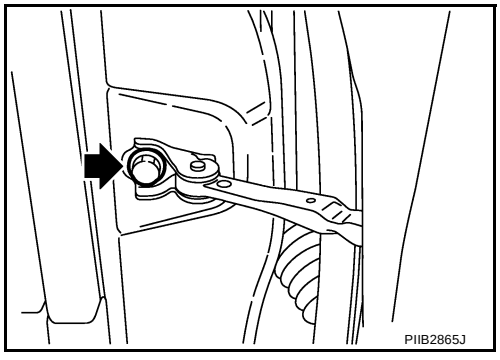

3. Remove the door-side hinge mounting nuts, and remove the door assembly.

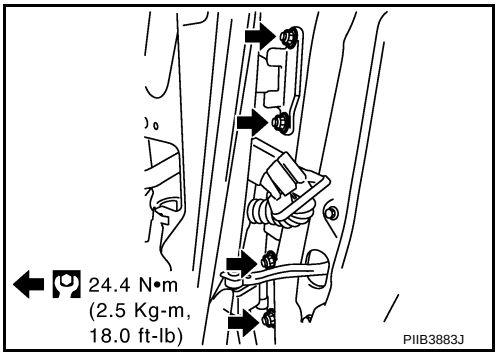

INSTALLATION

Install in the reverse order of removal.

Door Weatherstrip

NIS001ZC

FRONT DOOR

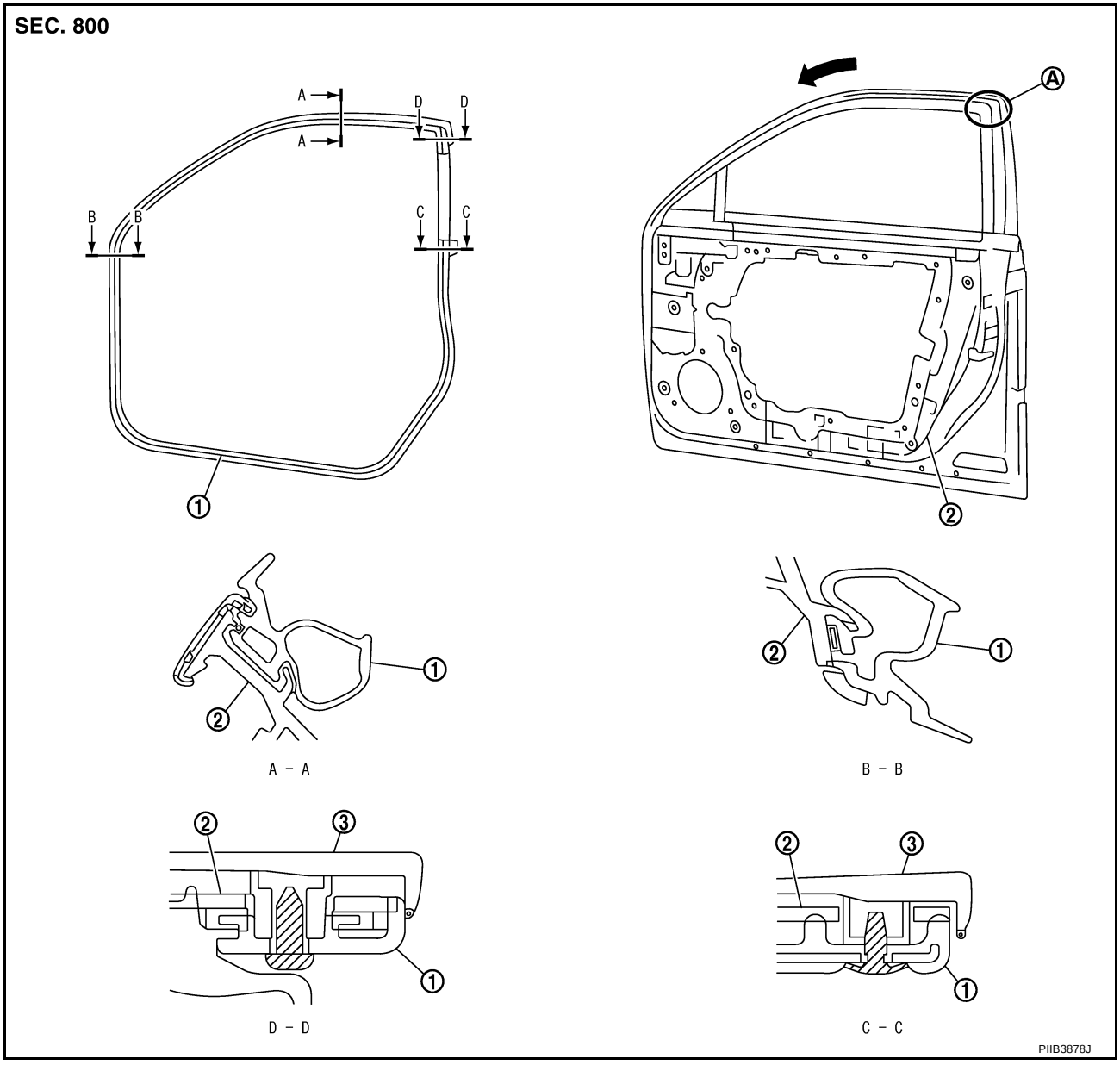

1. Door weatherstrip
2. Front door
3. Door sash molding

REMOVAL

1. Remove the mounting bolts of the check link on the vehicle. Refer to BL-191, "Removal and Installation of Front Door" or BL-192, "Removal and Installation of Rear Door" .
2. Remove the weatherstrip clips and remove weatherstrip.

   CAUTION:
   After removal, do not pull strongly on the weatherstrip.

INSTALLATION

Install in the reverse order of removal.

- Install the door weatherstrip (A) and along the arrow direction.

REAR DOOR

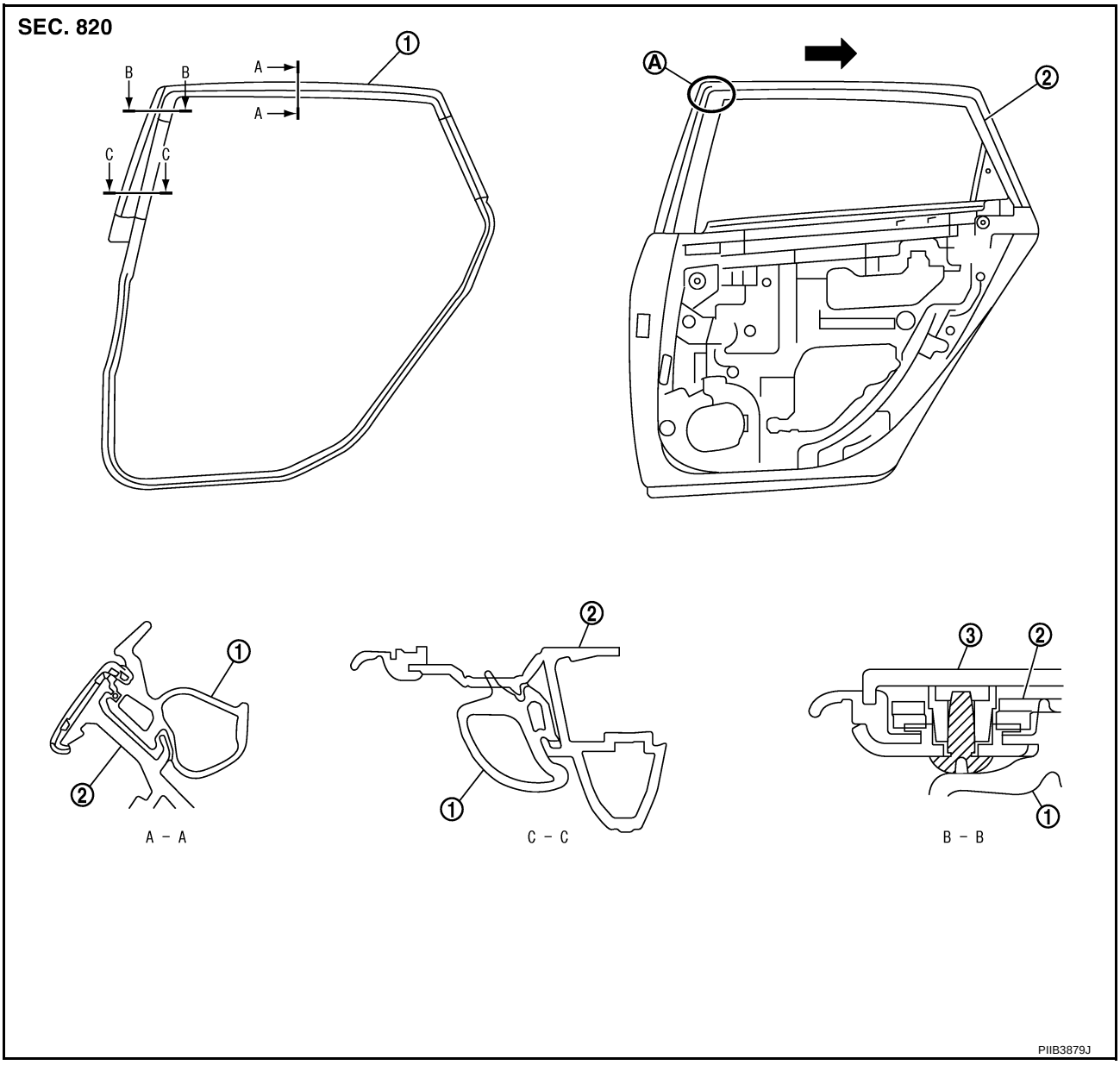

1. Door weatherstrip
2. Rear door
3. Door sash molding

REMOVAL

1. Remove the mounting bolts of the check link on the vehicle. Refer to BL-191, "Removal and Installation of Front Door" or BL-192, "Removal and Installation of Rear Door" .
2. Remove the weatherstrip clips and remove weatherstrip.

   CAUTION:
   After removal, do not pull strongly on the weatherstrip.

INSTALLATION

Install in the reverse order of removal.

- Install the door weatherstrip (A) and along the arrow direction.

FRONT DOOR LOCK

PFP:80502

Component Structure

NIS001ZD

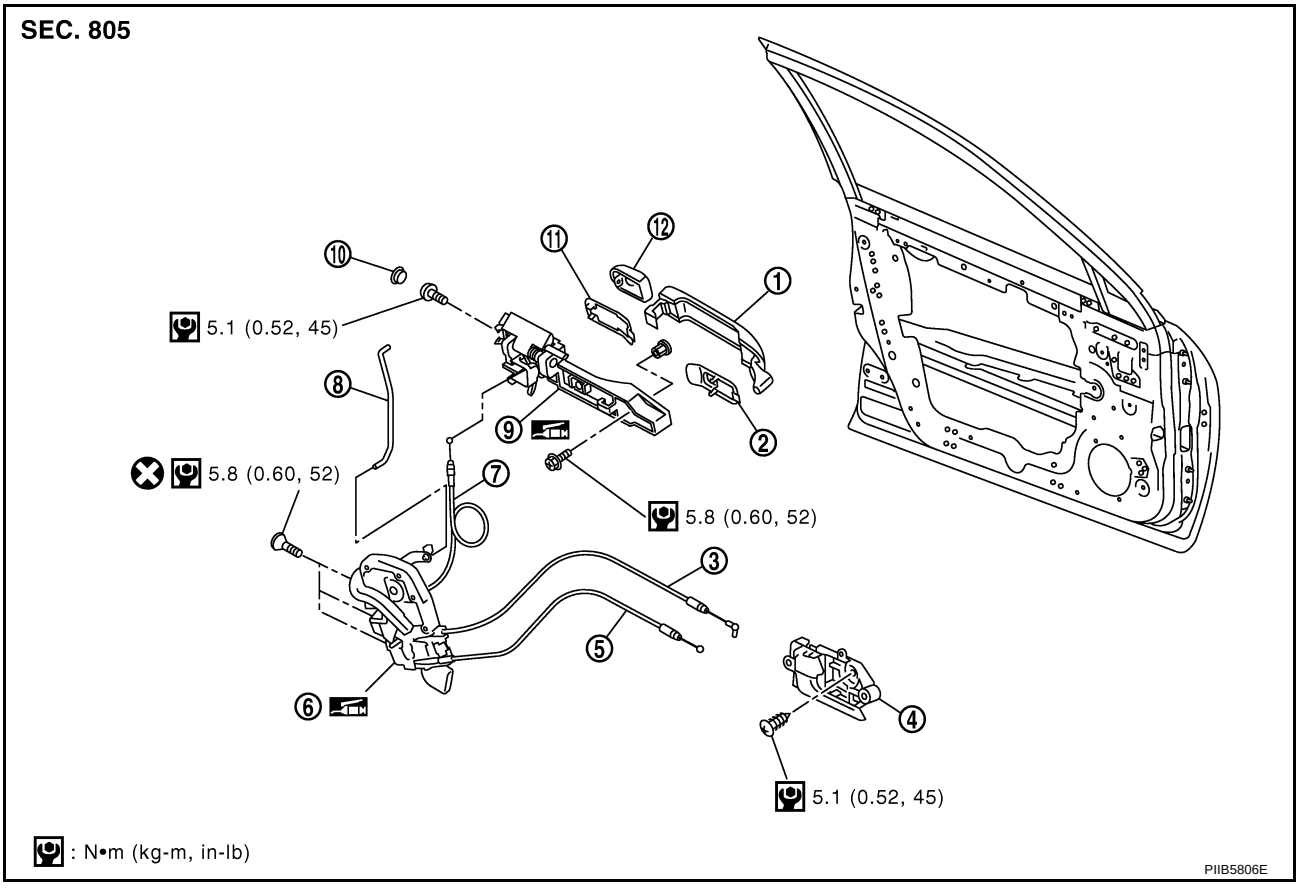

1. Outside handle	2. Front gasket	3. Lock knob cable
4. Inside handle	5. Inside handle knob cable	6. Door lock assembly
7. Outside handle cable	8. Key cylinder rod (Driver side only)	9. Outside handle bracket
10. Grommet	11. Rear gasket	12. Door key cylinder assembly (Driver side) Outside handle escutcheon (Passenger side)

Removal and Installation

NIS001ZE

REMOVAL

1. Remove the front door finisher. Refer toEI-34, "Removal and Installation" .
2. Disconnect the inside handle knob cable and lock knob cable from the back side of the front door finisher.

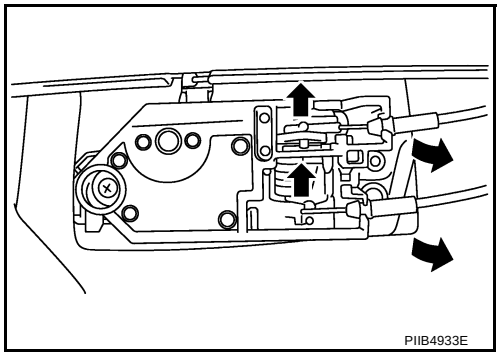

3. Remove the front door window and front door module assembly. Refer toGW-63, "FRONT DOOR GLASS AND REGULATOR" .
4. Remove door side grommet, and remove door key cylinder assembly (driver side) and outside handle escutcheon (passenger side) bolts (TORX T30) from grommet hole.

CAUTION:
Do not forcibly remove the TORX bolts (T30).

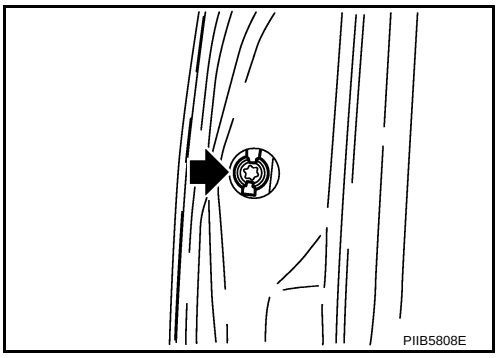

5. Disconnect door antenna and door request switch connector and remove harness clamp. (Models with intelligent Key system)

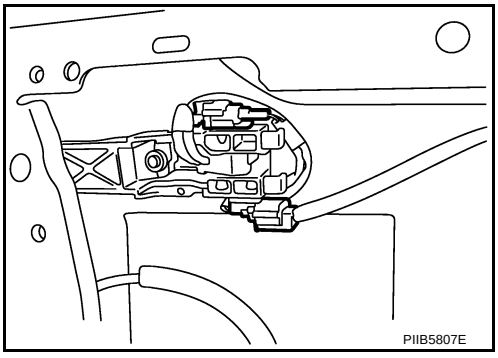

6. Reach to separate the key cylinder rod connection (on the handle).
7. Disconnect door key cylinder switch harness connector.
8. While pulling the outside handle, remove door key cylinder assembly.

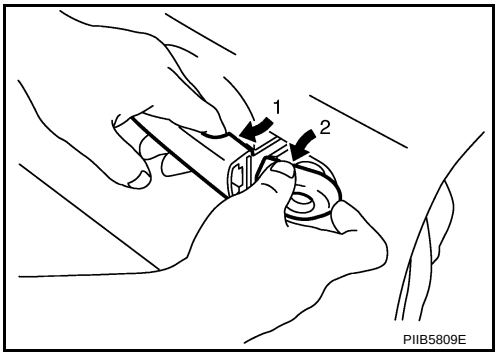

9. Disconnect front door request switch harness connector (with Intelligent Key system).
10. While pulling outside handle, slide toward rear of vehicle to remove outside handle.

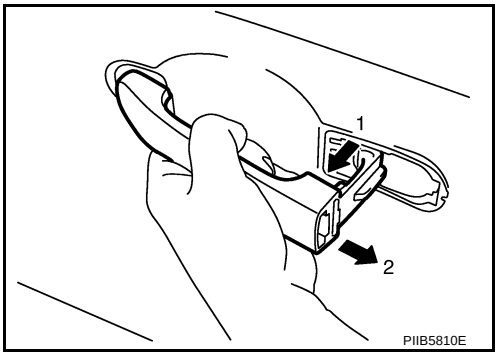

11. Remove the front gasket and rear gasket.

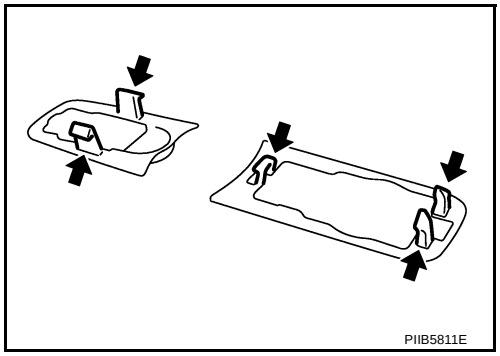

12. Remove the TORX bolts (T30), remove the door lock assembly.

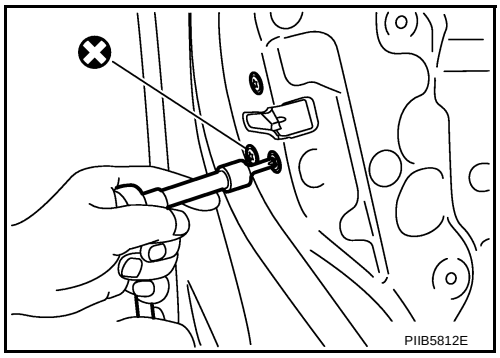

13. Remove the TORX bolt (T30) of the outside handle bracket.

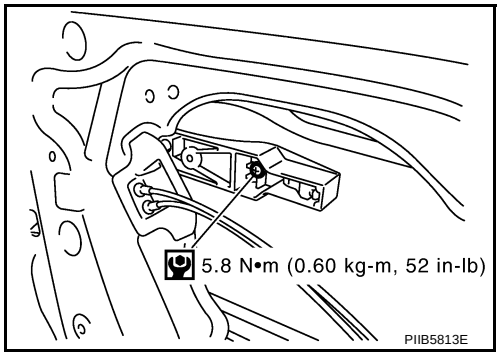

14. While pulling outside handle bracket, slide toward rear of vehicle to remove outside handle bracket.

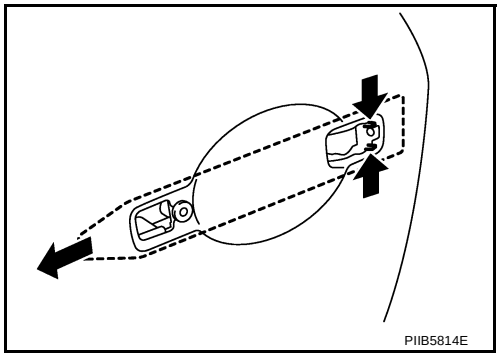

15. Disconnect the door lock actuator connector and remove the door lock assembly.

16. Reach to separate the outside handle cable connection.

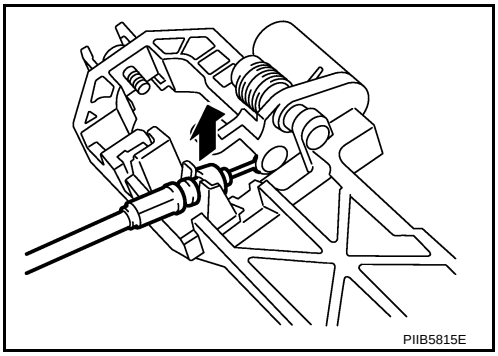

INSTALLATION

Install in the reverse order of removal.

CAUTION:

To install each rod, be sure to rotate the rod holder until a click is felt.

REAR DOOR LOCK

PFP:82502

Component Structure

NIS001ZF

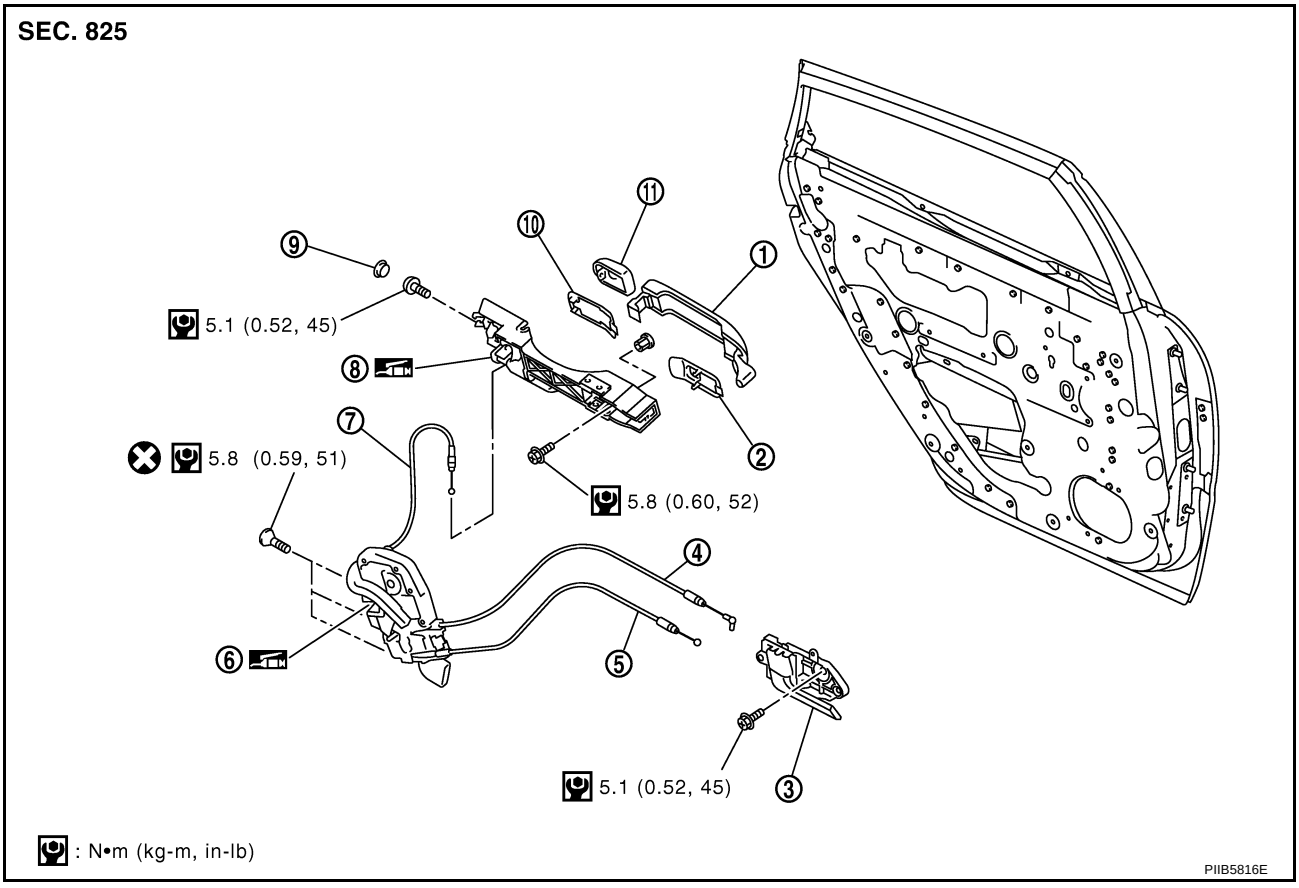

1.	Outside handle	2.	Front gasket	3.	Inside handle
4.	Lock knob cable	5.	Inside handle knob cable	6.	Door lock assembly
7.	Outside handle cable	8.	Outside handle bracket	9.	Grommet
10.	Rear gasket	11.	Outside handle escutcheon		

Removal and Installation

NIS001ZG

REMOVAL

1. Remove the rear door finisher. Refer toEI-34, "Removal and Installation" .
2. Disconnect the inside handle knob cable and lock knob cable from the back side of the rear door finisher.

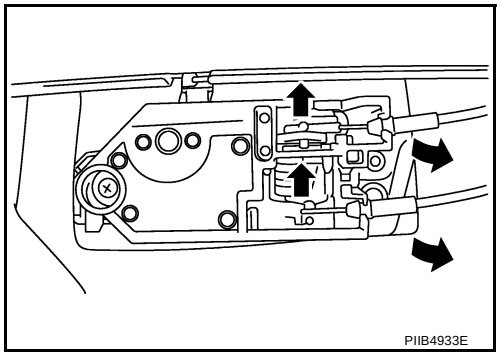

3. Remove the rear door sash. Refer toGW-67, "REAR DOOR GLASS AND REGULATOR" .
4. Remove the rear door window and rear door screen assembly. Refer toGW-67, "REAR DOOR GLASS AND REGULATOR" .
5. Remove door side grommet, and remove outside handle escutcheon bolt (TORX T30) from grommet hole.

CAUTION:
Do not forcibly remove the TORX bolts (T30).

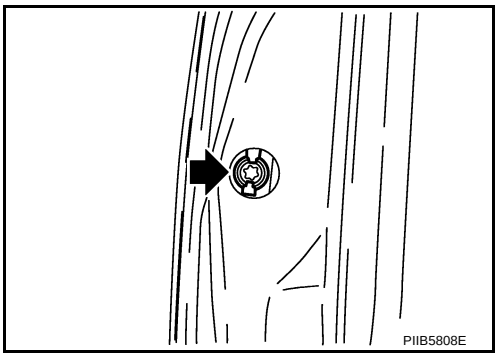

6. While pulling the outside handle, remove outside handle escutcheon.

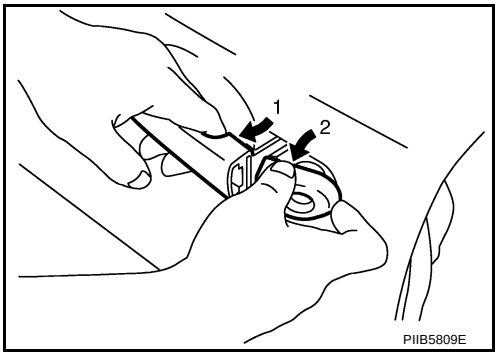

7. While pulling outside handle, slide toward rear of vehicle to remove outside handle.

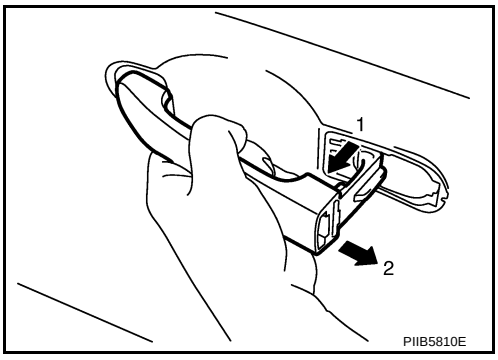

8. Remove the front gasket and rear gasket.

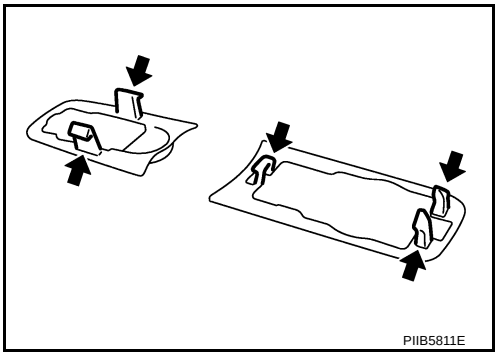

9. Remove the TORX bolts (T30), remove the door lock assembly.

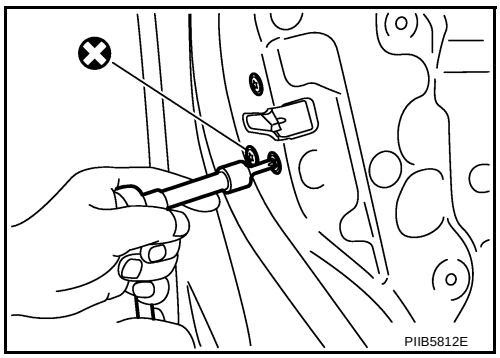

10. Remove the TORX bolt (T30), and remove the outside handle bracket.

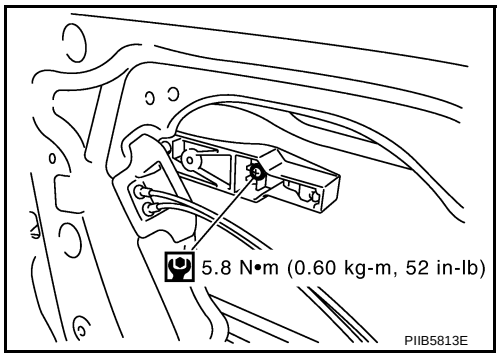

11. While pulling outside handle, slide toward rear of vehicle to remove outside handle.

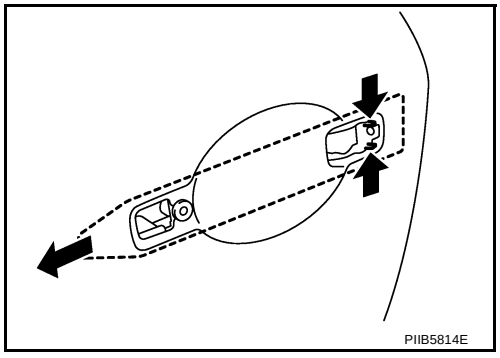

12. Disconnect the door lock actuator connector and remove the door lock assembly.
13. Reach to separate outside handle cable connection.

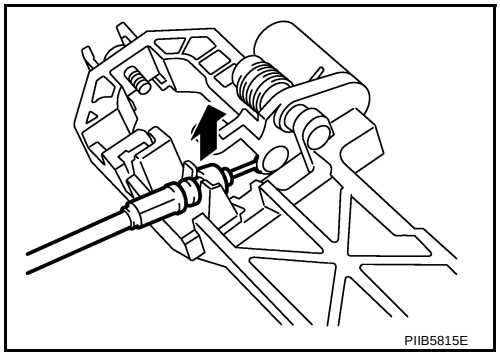

INSTALLATION

Install in the reverse order of removal.

CAUTION:

To install each rod, be sure to rotate the rod holder until a click is felt.

TRUNK LID

PFP:H4300

Fitting Adjustment

NIS001ZH

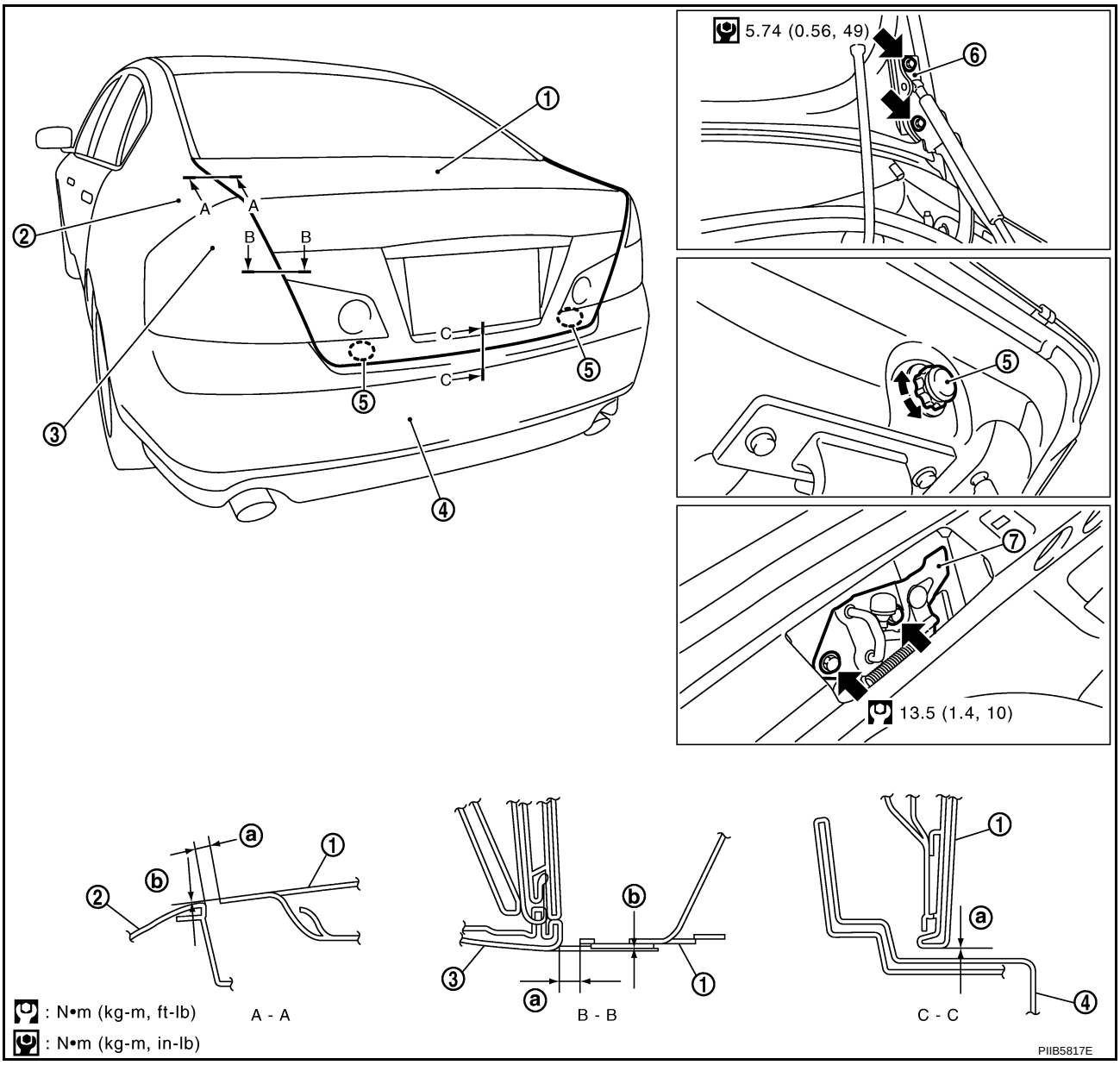

1. Trunk lid assembly
2. Rear fender
3. Rear combination lamp
4. Rear bumper fascia
5. Bumper rubber
6. Trunk lid hinge
7. Trunk lid striker

1. Check the clearance and the evenness between the trunk lid and eack part by visual and tactile feeling. (Fitting standard dimension in the table below should be satisfied.)

Parts		Standard	Parallelism (MAX)	Right/left clearance (MAX)
A – A	a	2.5 - 4.5 (01.0 - 0.18)	1.5 (0.06)	1.5 (0.06)
	b	-1.0 - 1.0 (-0.04 - 0.04)	1.5 (0.06)	1.5 (0.06)
B – B	a	2.5 - 5.5 (0.10 - 0.22)	—	2.0 (0.08)
	b	-1.5 - 1.5 (-0.06 - 0.06)	—	2.0 (0.08)
C – C	a	2.4 - 6.6 (0.09 - 0.26)	2.5 (0.10)	—

* Unit: mm (in)

2. In case out of specification, adjust them according to the procedures shown below.
   - Loosen the bumper rubber.

- Loosen the striker mounting bolts.
- Lift up the trunk lid approx. 100 - 150 mm (3.94 - 5.91 in) height then close it lightly and make sure it engaged firmly with the trunk lid closed.
- Check the clearance and evenness.
- Finally tighten the trunk lid striker.

Removal and Installation of Trunk Lid Assembly

NIS001ZI

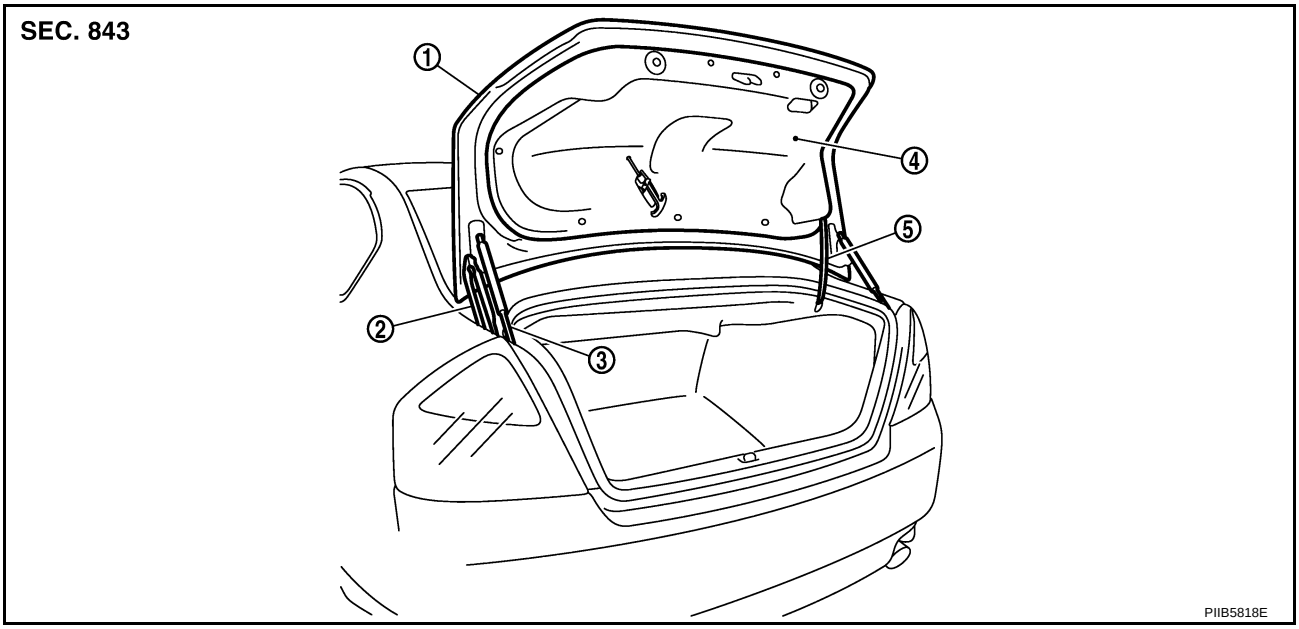

1. Trunk lid assembly
2. Trunk lid hinge
3. Trunk lid stay
4. Trunk lid finisher
5. Trunk lid harness

CAUTION:

- **After installing, apply touch-up paint (the body color) onto the head of the hinge mounting bolts.**
- **After installing, check operation.**
- **After installing, perform fitting adjustment. Refer to BL-203, "Fitting Adjustment" .**

REMOVAL

1. Remove trunk lid finisher. Refer to EI-56, "Removal and Installation for Trunk Room Trim" .
2. Disconnect the connectors in the trunk lid, and remove the harness clamps to pull the harness out of the trunk lid.
3. Insert flat-bladed screwdriver into the gap and remove holder.

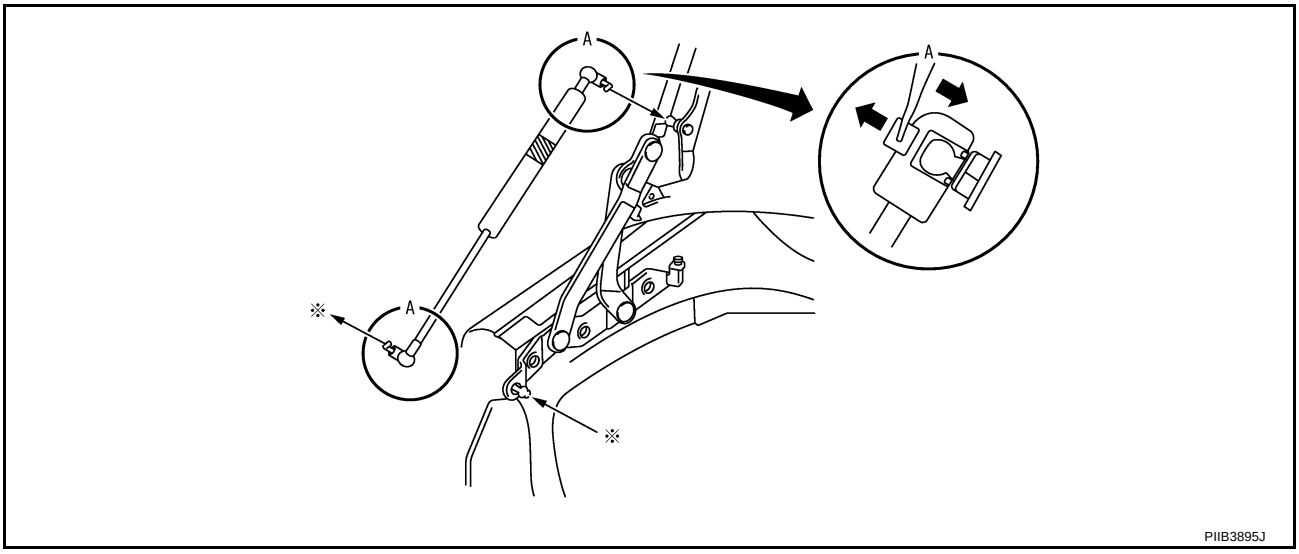

4. Remove trunk lid stay (gas stay).

   WARNING:
   Body injury may occur if no supporting rod is holding the trunk lid open when removing the damper stay.

5. Remove the mounting bolts, and remove the trunk lid assembly.

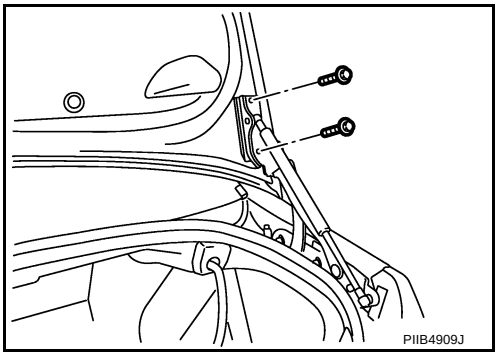

INSTALLATION

Install in the reverse order of removal.

Removal and Installation of Trunk Lid Stay

NIS001ZJ

REMOVAL

1. Insert flat-bladed screwdriver into the gap and remove holder.

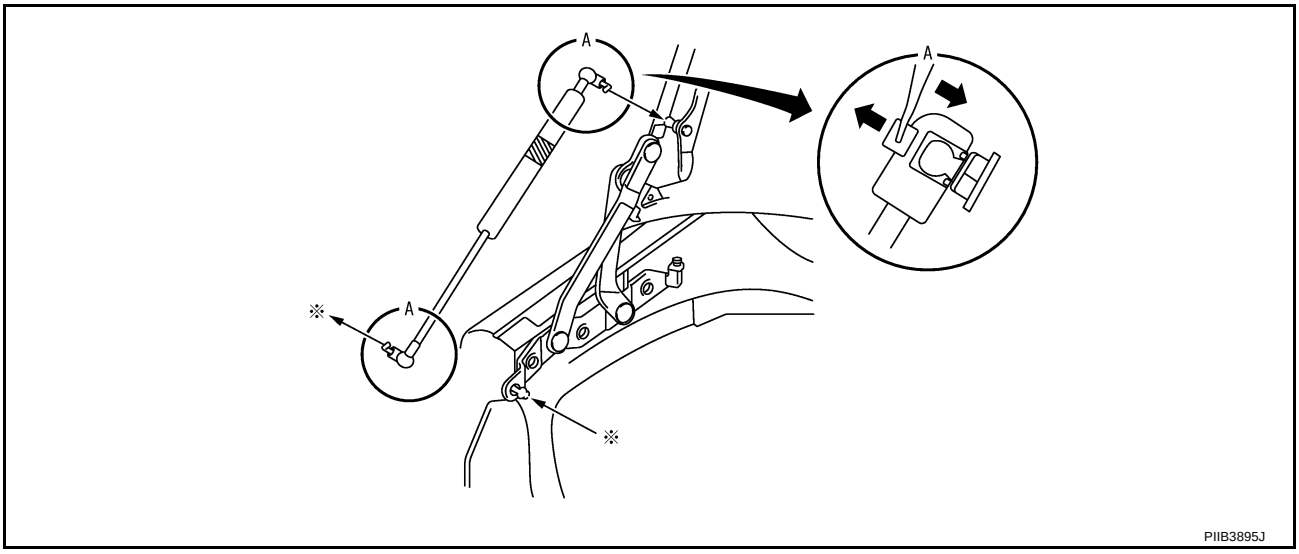

2. Remove trunk lid stay on the trunk lid.
3. Remove the stud balls, and trunk lid stay.

INSTALLATION

1. Install in the reverse order of removal.
2. After installing, check the operation.

Removal and Installation of Trunk Lid Lock

NIS001ZK

REMOVAL

SEC. 843

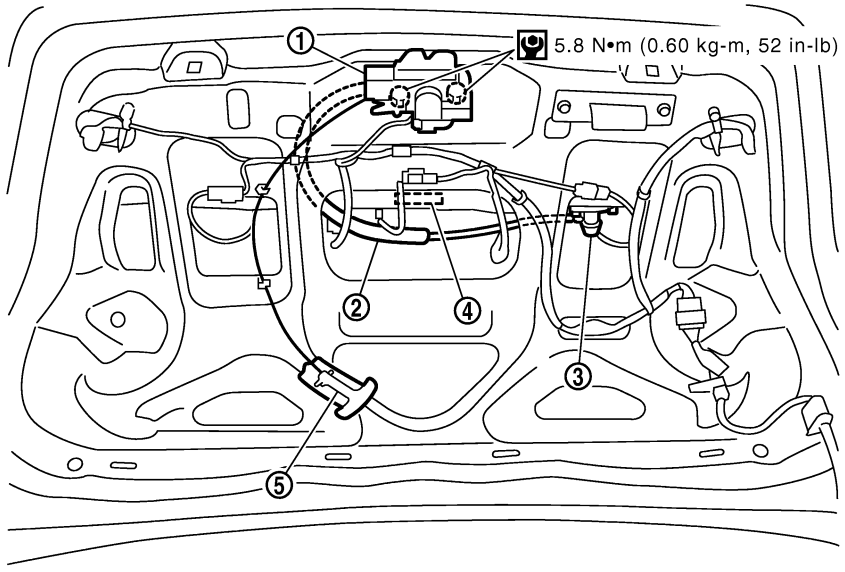

1. Trunk lid lock
2. Trunk lid opener cable
3. Trunk lid key cylinder
4. Trunk lid opener switch
5. Trunk lid emergency opener lever

1. Remove the trunk lid finisher. Refer to EI-56, "Removal and Installation for Trunk Room Trim" .
2. Remove the trunk lid emergency opener lever.
3. Disconnect the trunk lid opener cable.
4. Disconnect the trunk lid.
5. Remove the mounting bolts, and remove the trunk lid lock.

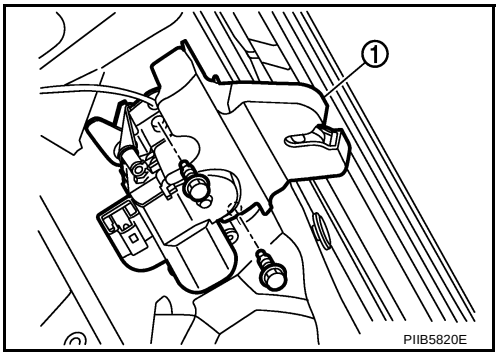

INSTALLATION

1. Install in the reverse order of removal.
2. After installing, close the trunk lid height. Perform the lock and surface height adjustment. Refer to BL-203, "Fitting Adjustment" .
3. After installing, check the operation.

Removal and Installation of Trunk Lid Striker

NIS001ZL

REMOVAL

1. Remove the trunk rear plate and trunk rear finisher. Refer to EI-56, "Removal and Installation for Trunk Room Trim" .
2. Remove the mounting bolts, and remove the striker from the trunk lock support.

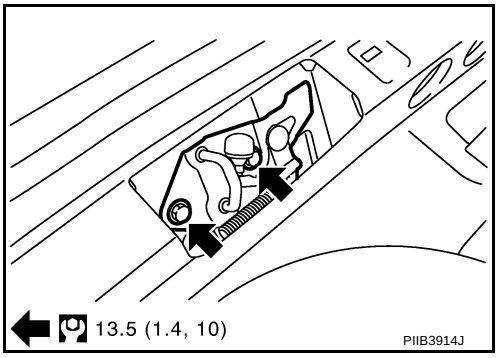

INSTALLATION

1. Install in the reverse order of removal.
2. After installing, close the trunk lid height. Perform the lock and surface height adjustment. Refer to BL-203, "Fitting Adjustment" .
3. After installing, check the operation.

Removal and Installation of Trunk Lid Weatherstrip

NIS001ZM

SEC. 843

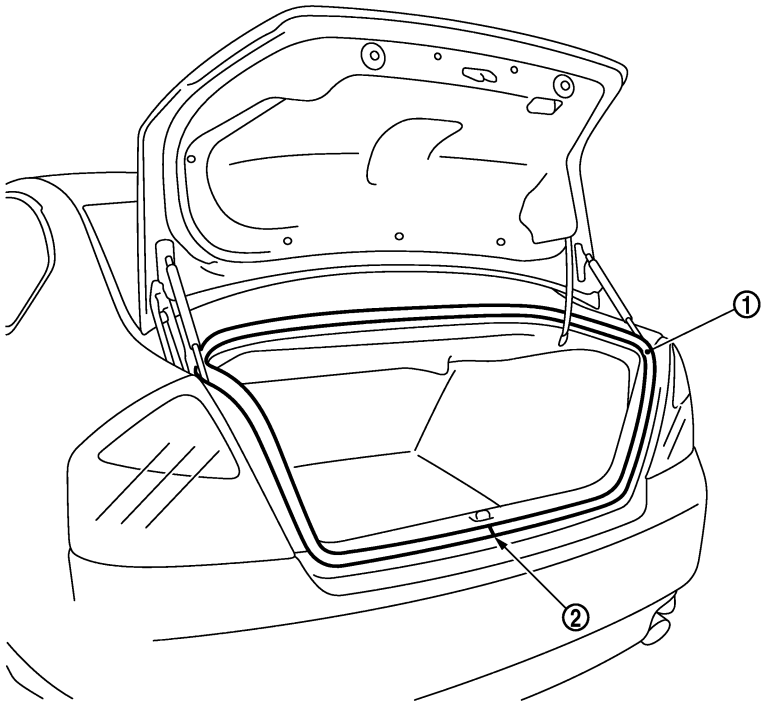

PIIB3898J

1. Weatherstrip
2. Seam

REMOVAL

Pull up and remove engagement with body from weatherstrip joint.

CAUTION:

After removal, do not pull strongly on the weatherstrip.

INSTALLATION

1. Working from the lower section, align the weatherstrip seam with center of the striker and weatherstrip onto the vehicle.
2. After installation, pull the weatherstrip gently to ensure that there is no loose section.

   NOTE:
   Make sure the weatherstrip is fit tightly at each corner and back door rear plate.

TRUNK LID OPENER

PFP:84640

Component Parts and Harness Connector Location

NIS001ZN

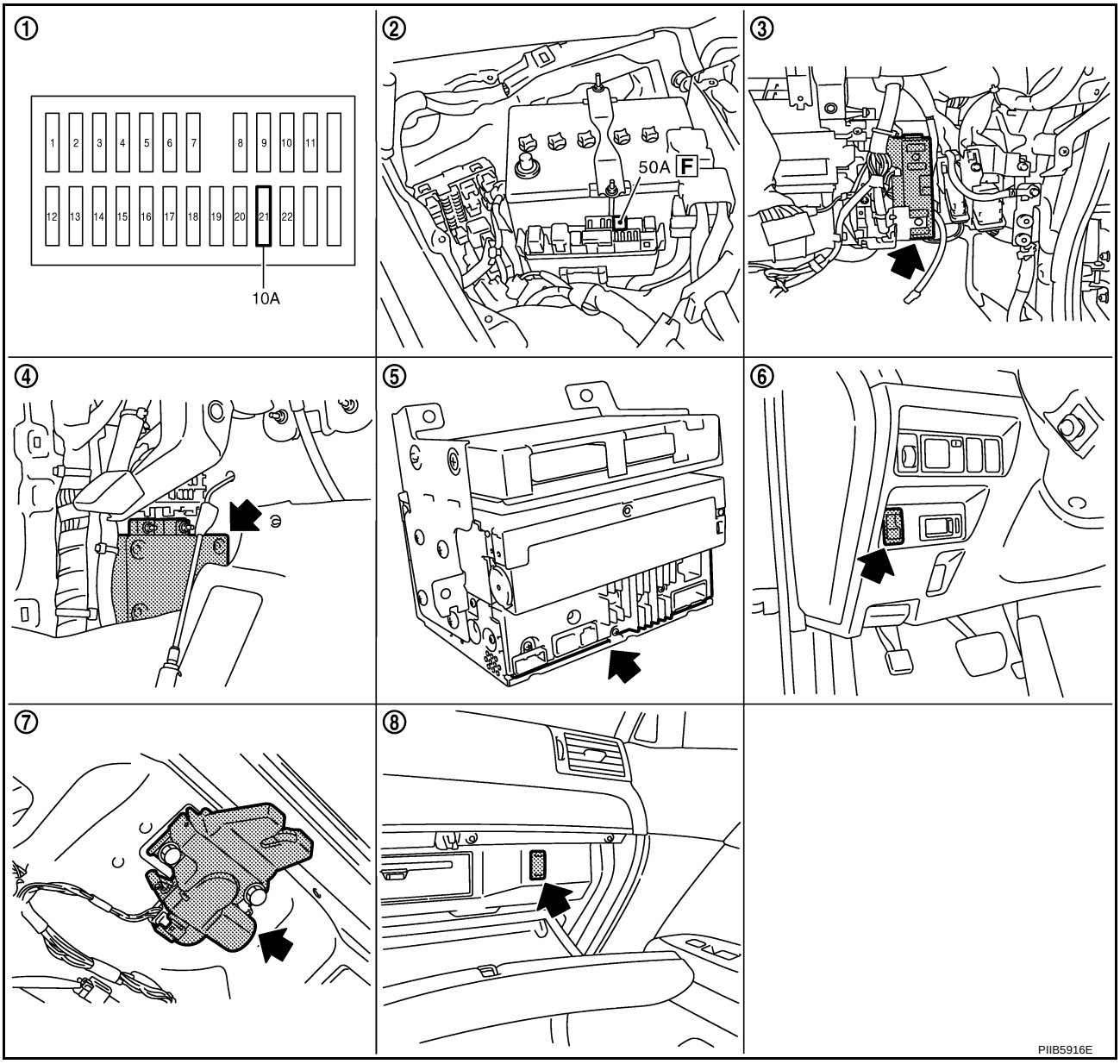

1. Fuse block (J / B) fuse layout
2. Fuse and fusible link box
3. BCM M1, M2, M3 (View with instrument lower panel RH removed)
4. Intelligent key unit M32 (View with dash side finisher LH removed)
5. Unified meter and A / C AMP M65
6. Trunk lid opener switch M25
7. Trunk lid lock assembly T106 (Trunk lid opener actuator)
8. Trunk lid opener cancel switch M99 (Glove box inside)

System Description

NIS001ZO

Power is supplied at all times

- through 50A fusible link (letter **F,** located in the fuse and fusible link box)
- to BCM terminal 55,
- through 10A fuse [No.21, located in the fuse block (J/B)]
- to BCM terminal 42.

Ground is supplied

- to BCM terminal 52
- through body grounds M16 and M70.

When trunk lid opener cancel switch is ON and trunk lid opener switch is ON (pushed)
Ground is supplied

- to BCM terminal 30
- through trunk lid opener switch terminals 1and 2
- through trunk lid opener cancel switch terminals 1and 3 and
- through body grounds M16 and M70.

And power is supplied

- through BCM terminal 68
- to trunk lid opener actuator terminal 3.

Ground is supplied

- to trunk lid opener actuator terminal 2
- through body grounds B5, B40 and B131.

Then BCM open trunk lid opener actuator.

TRUNK LID OPENER OPERATION

When trunk lid opener switch or trunk button of Intelligent Key is ON, BCM opens trunk opener actuator.
BCM can open trunk lid opener actuator when

- vehicle speed is less than 5 km/h (3MPH)
- vehicle security system is disarmed or pre-armed phase

BCM does not open trunk lid opener actuator when

- trunk lid opener cancel switch is OFF (CANSEL)
- vehicle speed is more than 5 km/h (3MPH)
- vehicle security system is armed or alarm phase
- Intelligent Key is inserted in key slot

Wiring Diagram —TLID—

NIS001ZP

BL-TLID-01

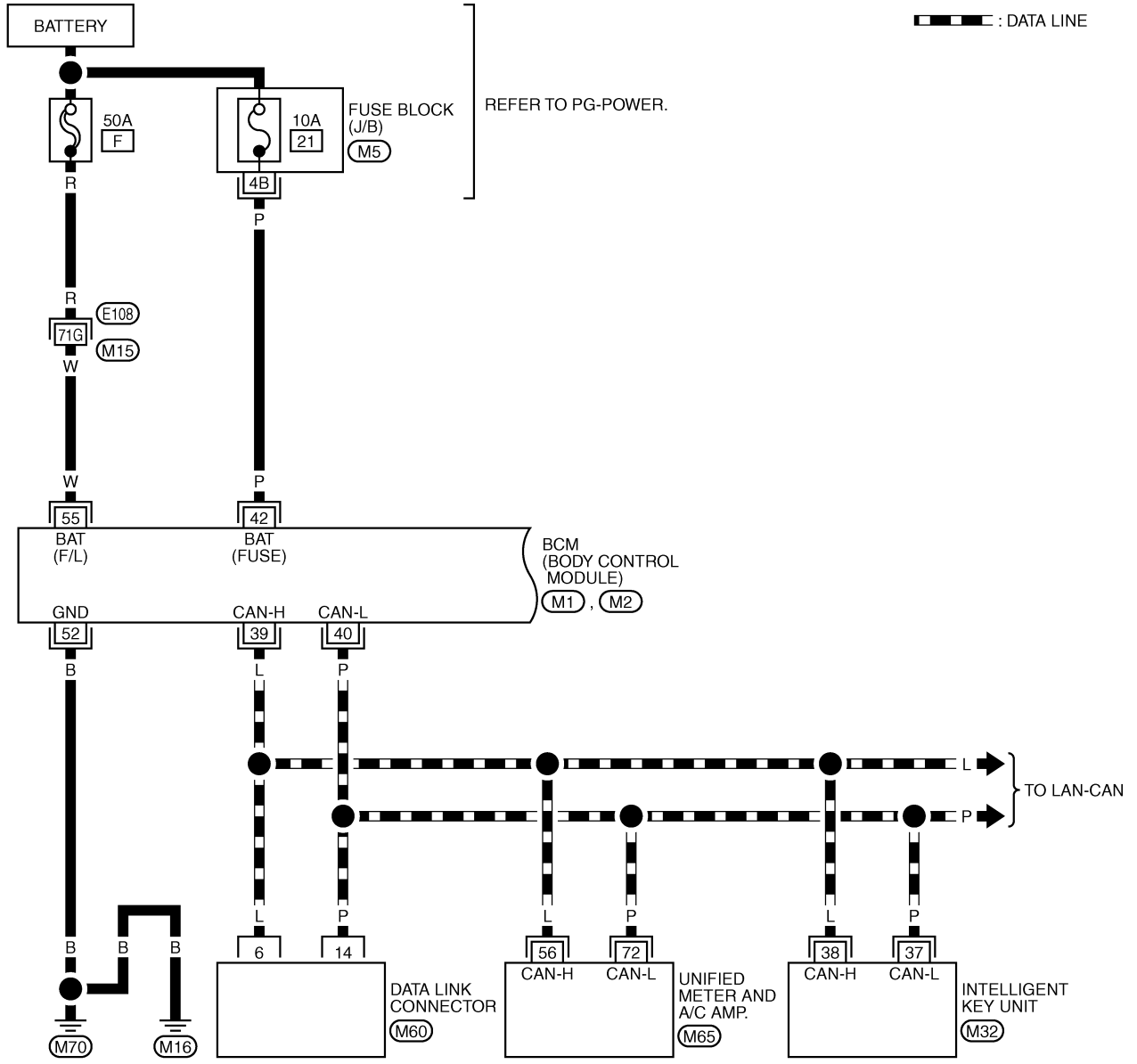

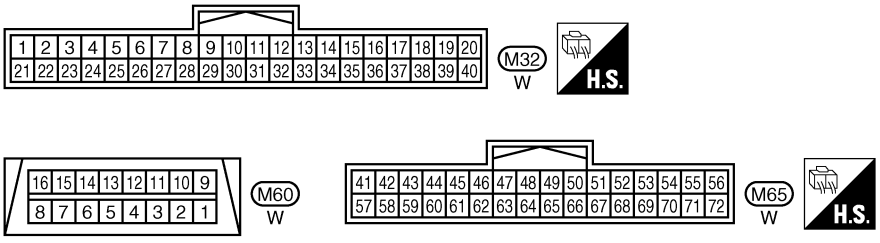

REFER TO THE FOLLOWING.

E108 -SUPER MULTIPLE JUNCTION (SMJ)

M5 -FUSE BLOCK-JUNCTION BOX (J/B)

M1 , M2 -ELECTRICAL UNITS

TIWT1301E

BL-TLID-02

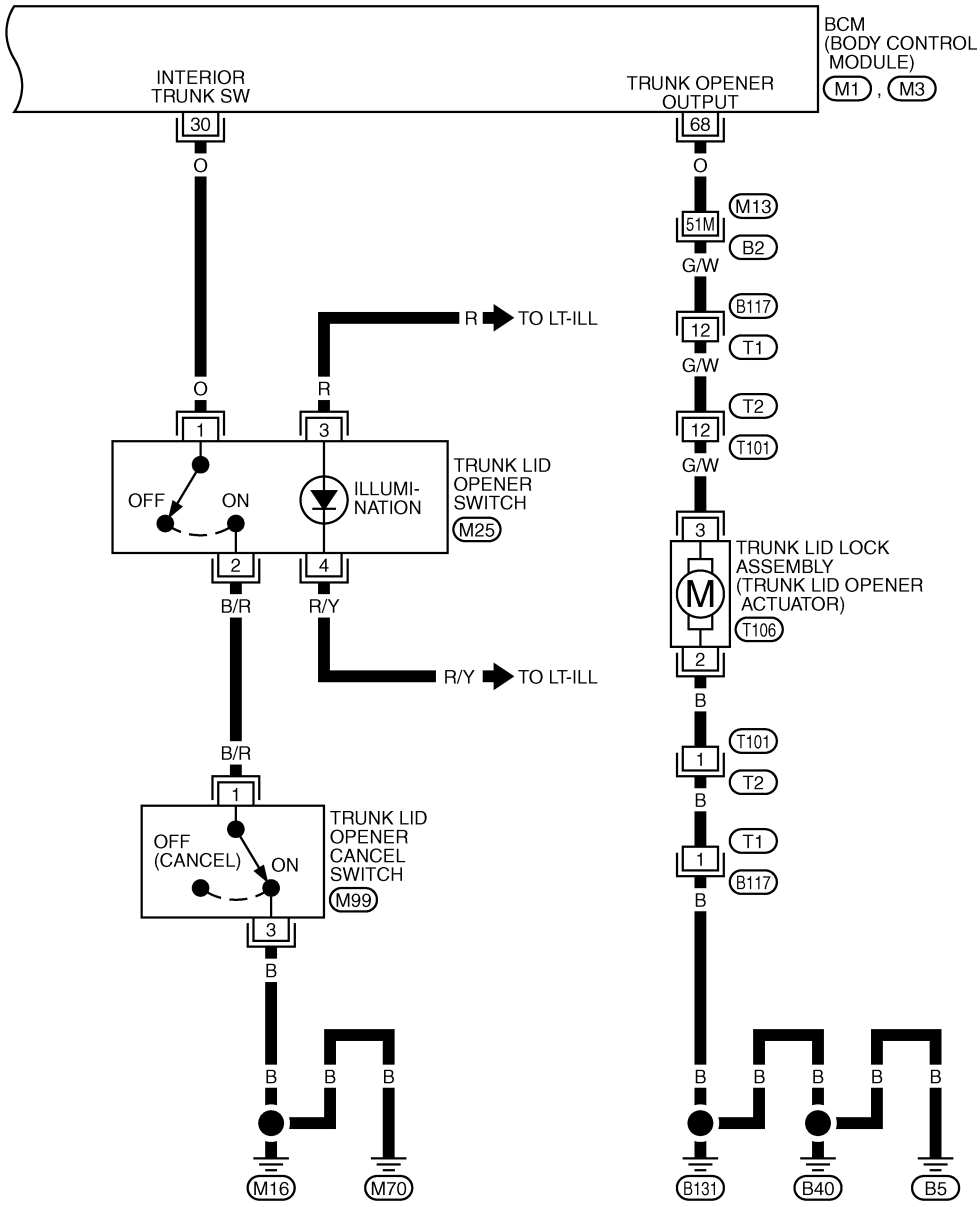

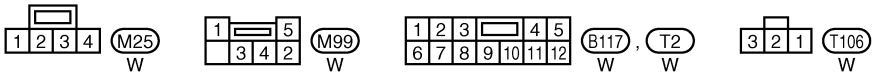

REFER TO THE FOLLOWING.

B2 -SUPER MULTIPLE JUNCTION (SMJ)

M1 , M3 -ELECTRICAL UNITS

TIWT1302E

Terminals and Reference Value for BCM

NIS001ZQ

TERMI-NAL	WIRE COLOR	ITEM	CONDITION		VOLTAGE (V) (Approx.)
30	O	Trunk lid opener switch	Trunk lid opener cancel switch is ON position	Trunk lid opener switch is ON	0
				Trunk lid opener switch is OFF	Battery voltage
			Trunk lid opener cancel switch is OFF position		Battery voltage
39	L	CAN-H	—		—
40	P	CAN-L	—		—
42	P	Power source (Fuse)	—		Battery voltage
52	B	Ground	—		0
55	W	Power source (Fusible link)	—		Battery voltage
68	O	Trunk lid opener output signal	When trunk lid opener cancel switch is ON position, trunk lid opener switch is ON.		0 → Battery voltage → 0

CONSULT-II Function (BCM)

NIS001ZR

CONSULT-II can display each diagnostic item using the diagnostic test modes shown following.

BCM diagnosis part	Inspection item, self-diagnosis mode	Content
TRUNK	DATA MONITOR	Displays the input data of BCM in real time basis.
	ACTIVE TEST	Give a drive signals to load to check the operation check.

CONSULT-II INSPECTION PROCEDURE

CAUTION:

If CONSULT-II is used with no connection of CONSULT-II CONVERTER, malfunctions might be detected in self-diagnosis depending on control unit which carry out CAN communication.

1. Turn ignition switch “OFF”.
2. Connect “CONSULT-II” and CONSULT-II CONVERTER to data link connector (1).

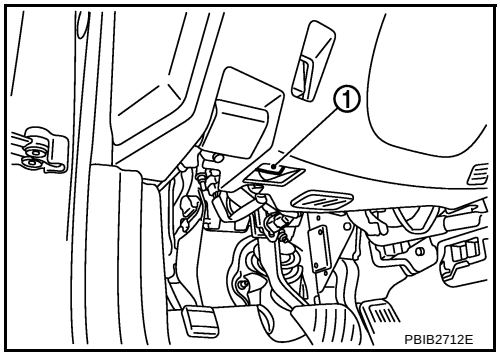

3. Turn ignition switch “ON”.
4. Touch “START(NISSAN BASED VHCL)”.

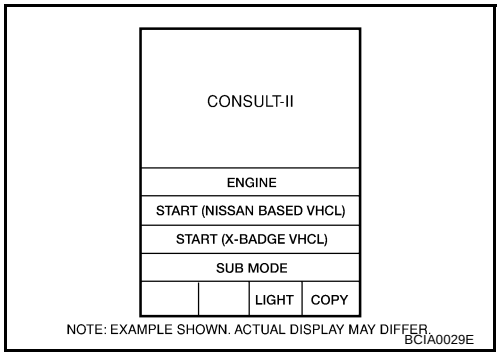

5. Touch “BCM”.
   If “BCM” is not indicated, go to GI-40, "CONSULT-II Data Link Connector (DLC) Circuit" .

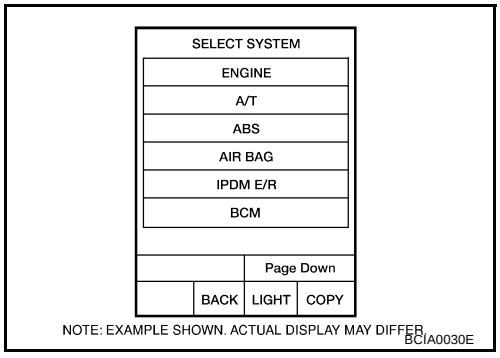

6. Touch “TRUNK”.

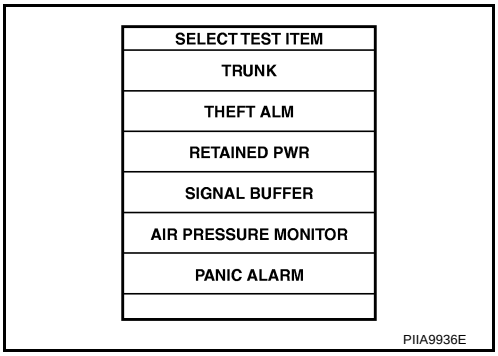

7. Select diagnosis mode.
“DATA MONITOR” and “ACTIVE TEST” are available

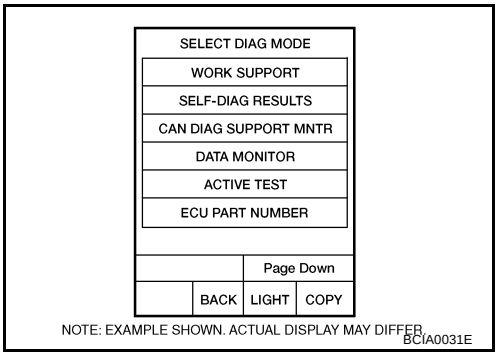

DATA MONITOR

Monitored Item	Description
IGN ON SW	Indicates [ON/OFF] condition of ignition switch in ON position.
KEY ON SW	Indicates [ON/OFF] condition of Intelligent Key inserted in key slot.
I KEY TRUNK/HAT	Indicates [ON/OFF] condition of trunk lid open signal from Intelligent Key.
TRUNK OPNR SW	Indicates [ON/OFF] condition of trunk lid opener switch.
VEHICLE SPEED	This item displays vehicle speed.

ACTIVE TEST

Test item	Content
TRUNK/GLASS HATCH	This test is able to check trunk lid opener actuator open operation. This actuator openes when “ON” on CONSULT-II screen is touched.

Trouble Diagnosis

NIS001ZS

TRUNK DOSE NOT OPEN WITH TRUNK LID OPENER SWITCH / WITH INTELLIGENT KEY

1. CHECK TRUNK LID OPENER CANCEL SWITCH

Check trunk lid opener cancel switch position.

Does trunk lid opener cancel switch turn OFF (CANCEL)?

Yes >> Turn on trunk lid opener cancel switch.
No >> GO TO 2.

2. CHECK TRUNK LID OPEN INPUT SIGNAL

With CONSULT-II

Check trunk lid opener switch (“TRNK OPNR SW”) in “DATA MONITOR” mode with CONSULT-II.

- When trunk lid opener switch is turned to “ON”.

TRNK OPNR SW : ON

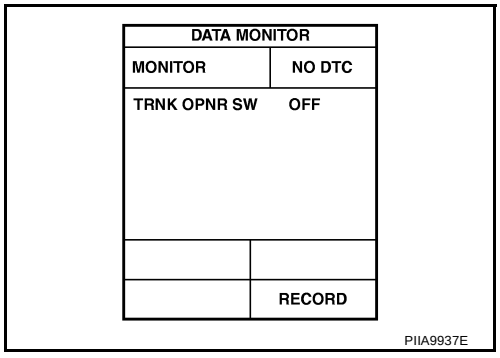

Without CONSULT-II

1. Remove Intelligent Key from key slot.
2. Turn on trunk lid opener cancel switch.
3. Check voltage between BCM connector and ground.

Terminals			Condition of trunk lid opener switch	Voltage (V) (Approx.)
(+)		(–)		
BCM connector	Terminal			
M1	30	Ground	ON (push and hold)	0
			OFF (release)	Battery voltage

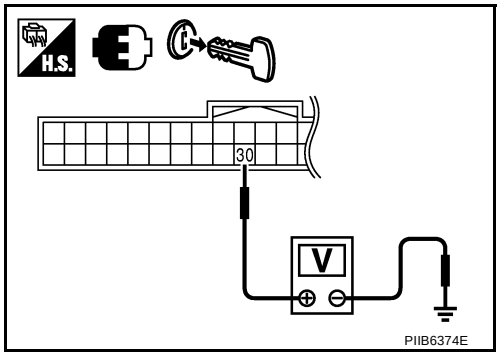

OK or NG

OK >> GO TO 3.
NG >> GO TO 6.

3. CHECK TRUNK LID OPEN OUTPUT SIGNAL

Check voltage between BCM connector and ground.

Terminals			Condition of trunk lid opener switch	Voltage (V) (Approx.)
(+)		(–)		
BCM connector	Terminal			
M3	68	Ground	OFF → ON	0 → Battery voltage → 0

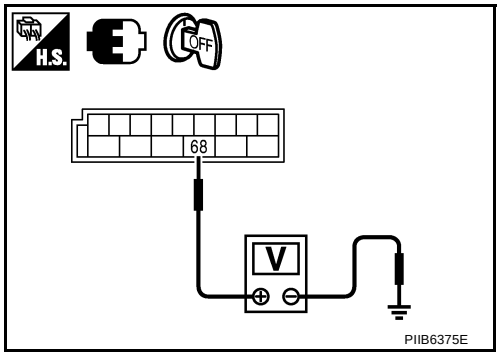

OK or NG

OK >> GO TO 4.
NG >> Replace BCM. Refer to BCS-17, "Removal and Installation of BCM" .

4. CHECK TRUNK LID OPENER ACTUATOR CIRCUIT

1. Disconnect BCM connector and trunk lid opener actuator connector.
2. Check continuity between BCM connector and trunk lid opener actuator connector.

A		B		Continuity
BCM connector	Terminal	Trunk lid opener actuator connector	Terminal	
M3	68	T106	3	Yes

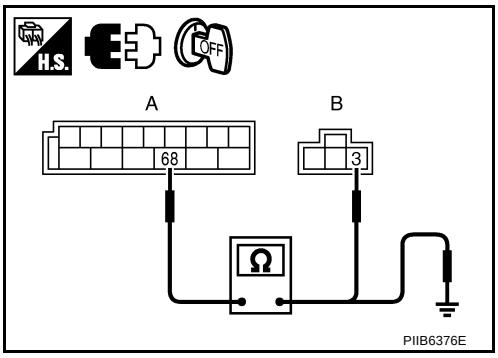

3. Check continuity between BCM connector and ground.

A		Ground	Continuity
BCM connector	Terminal		
M3	68		No

OK or NG

OK >> GO TO 5.
NG >> Repair harness or connector.

5. CHECK TRUNK LID OPENER ACTUATOR GROUND CIRCUIT

Check continuity between trunk lid opener actuator connector and ground.

Trunk lid opener actuator connector	Terminal		Continuity
T106	2	Ground	Yes

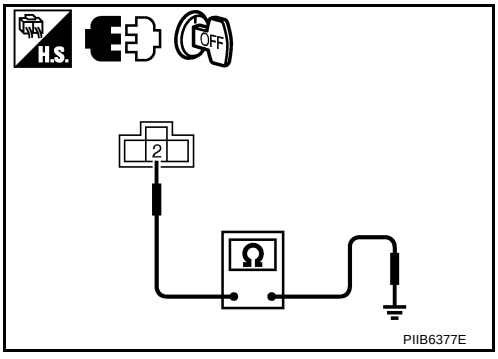

OK or NG

OK >> Replace trunk lid opener actuator.
NG >> Repair harness or connector.

6. CHECK TRUNK LID OPENER SWITCH

1. Turn ignition switch OFF.
2. Disconnect trunk lid opener switch connector.
3. Check continuity between trunk lid opener switch connector.

Terminal		Condition	Continuity
Trunk lid opener switch			
1	2	ON (push and hold)	Yes
		OFF (release)	No

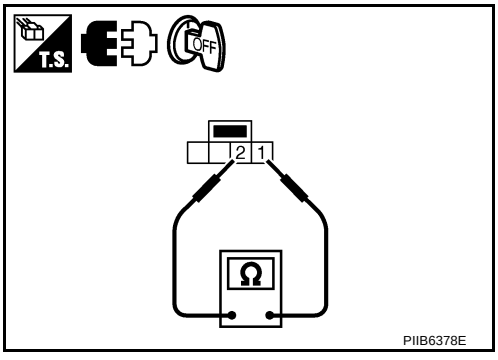

OK or NG

OK >> GO TO 7.
NG >> Replace trunk lid opener switch.

7. CHECK TRUNK LID OPENER CANCEL SWITCH

1. Disconnect trunk lid opener cancel switch connector.
2. Check continuity between trunk lid opener cancel switch connector.

Terminal		Condition	Continuity
Trunk lid opener cancel switch			
1	3	ON	Yes
		OFF (cancel)	No

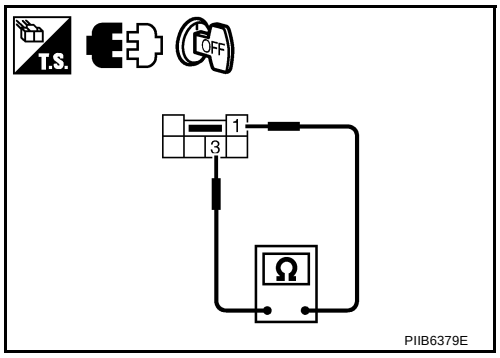

OK or NG

OK >> GO TO 8.
NG >> Replace trunk lid opener cancel switch.

8. CHECK TRUNK LID OPENER SWITCH CIRCUIT

1. Disconnect BCM connector.
2. Check continuity between BCM connector and trunk lid opener switch connector.

A		B		Continuity
BCM connector	Terminal	Trunk lid opener switch connector	Terminal	
M1	30	M25	1	Yes

3. Check continuity between BCM connector and ground.

A		Ground	Continuity
BCM connector	Terminal		
M1	30		No

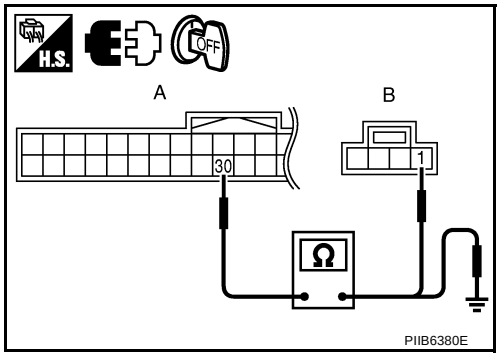

OK or NG

OK >> GO TO 9.
NG >> Repair harness or connector.

9. CHECK TRUNK LID OPENER CANCEL SWITCH CIRCUIT

1. Check continuity between trunk lid opener switch connector and trunk lid opener cancel switch connector.

A		B		Continuity
Trunk lid opener actuator connector	Terminal	Trunk lid opener cancel switch	Terminal	
M25	2	M99	1	Yes

2. Check continuity between trunk lid opener switch connector and ground.

A		Ground	Continuity
Trunk lid opener actuator connector	Terminal		
M25	2		No

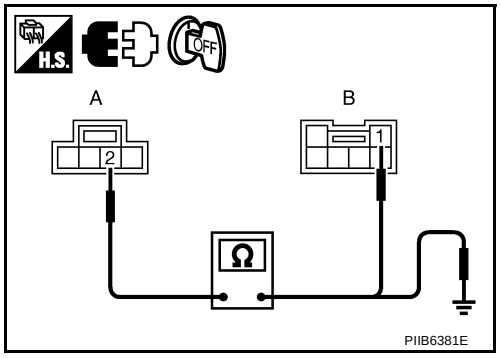

OK or NG

OK >> GO TO 10.
NG >> Repair harness or connector.

10. CHECK TRUNK LID OPENER SWITCH GROUND CIRCUIT

Check continuity between trunk lid opener switch connector and ground.

A		Ground	Continuity
Trunk lid opener cancel switch	Terminal		
M99	3		Yes

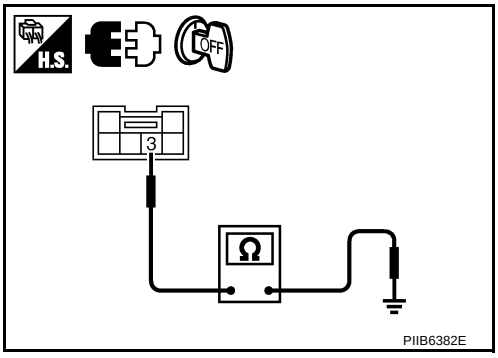

OK or NG

OK >> Check condition of harness and connector.
NG >> Repair or replace harness.

VEHICLE SECURITY (THEFT WARNING) SYSTEM

PFP:28491

Component Parts and Harness Connector Location

NIS001ZT

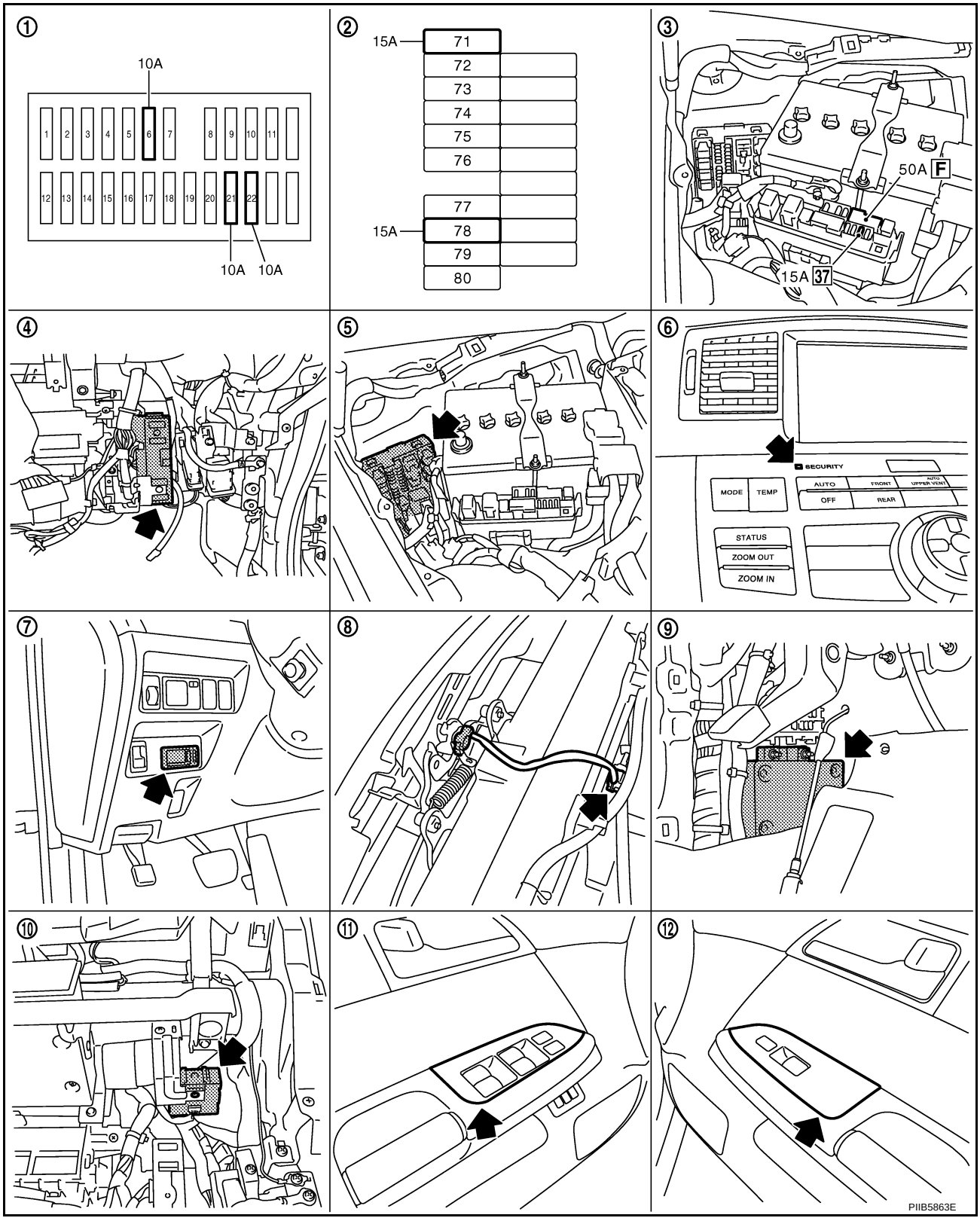

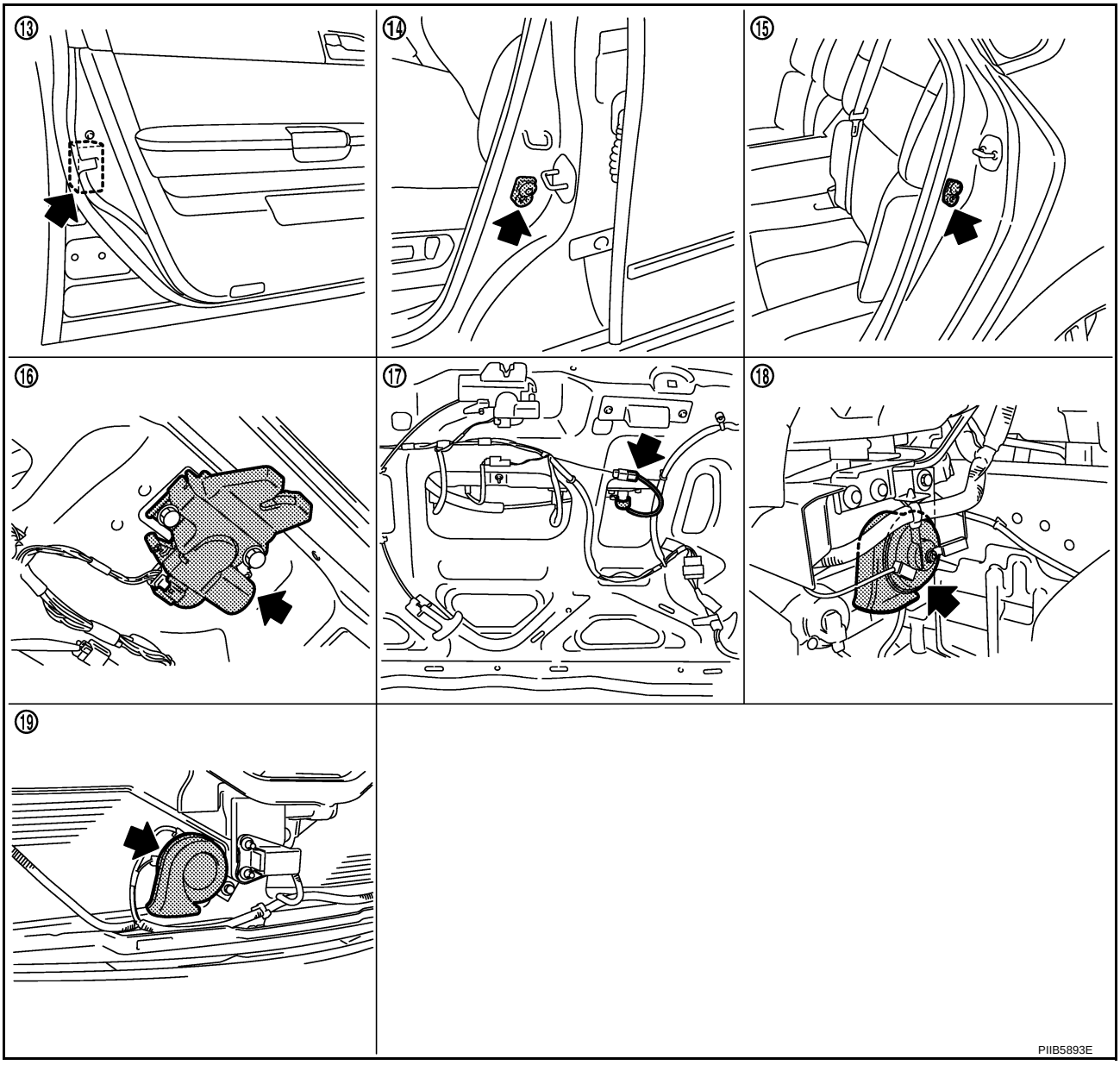

1. Fuse block (J / B) fuse layout
2. IPDM E / R fuse layout
3. Fuse and fusible link box
4. BCM M1, M2 (View with instrument lower panel RH removed)
5. IPDM E / R E8, E9 (Engine room)
6. Security indicator M69 (Multifunction switch)
7. Key slot M14
8. Hood switch E44 (Hood lock assembly)
9. Intelligent key unit M32 (View with dash side finisher LH removed)
10. Remote keyless entry receiver M89 (View with instrument lower panel RH removed)
11. Power window main switch D10, D11 (Driver side)
12. Power window sub switch D46 (Passenger side)
13. Front door lock assembly LH D14 (Key cylinder switch)
14. Front door switch B11 (Driver side)
15. Rear door switch LH B53
16. trunk lid lock assembly T106 (Trunk room lamp switch)
17. Trunk lid key cylinder switch T104
18. Horn (low) E56, E57 (View with front fender protector LH removed)
19. Horn (high) E64, E65 (View with front grille removed)

System Description

NIS001ZU

DESCRIPTION

Operation Flow

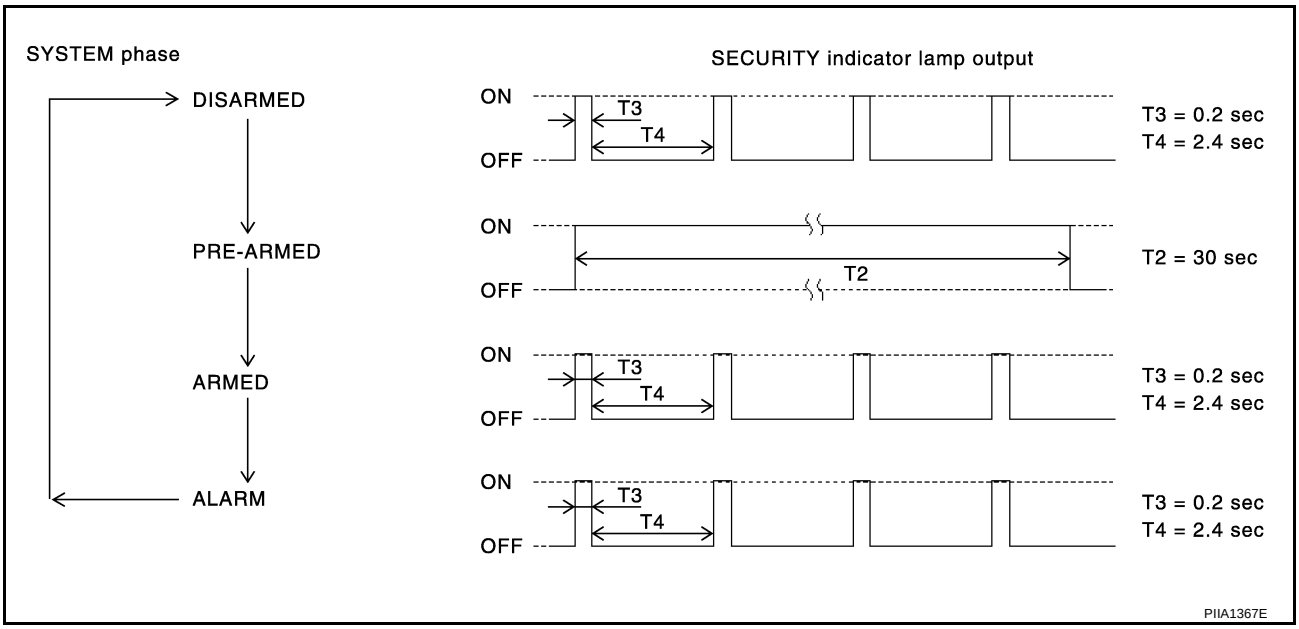

Setting the Vehicle Security System

Initial condition

- Ignition switch is in OFF position.

Disarmed phase

- When hood, doors or trunk is open, the vehicle security system is set in the disarmed phase on the assumption that the owner is inside or near the vehicle.
- When the vehicle security system is in the disarmed phase, the security indicator lamp blinks every 2.4 seconds.

Pre-armed phase and armed phase

When the following operation 1 or 2 is performed, the vehicle security system turns into the “pre-armed” phase. (The security indicator lamp illuminates.)

1. BCM receives LOCK signal from front door key cylinder switch or Intelligent Key, after hood, trunk and all doors are closed.
2. Hood, trunk and all doors are closed after front doors are locked by key or door lock and unlock switch. The security indicator lamp illuminates for 30 seconds. Then, the system automatically shifts into the “armed” phase.

Canceling the Set Vehicle Security System

When one of the following operations is performed, the armed phase is canceled.

1. Unlock the doors with the key or Intelligent Key.
2. Turn ignition switch “ON” or “ACC” position.

Canceling the Alarm Operation of the Vehicle Security System

When unlock the door with the key or Intelligent Key the alarm operation is canceled.

Activating the Alarm Operation of the Vehicle Security System

Make sure the system is in the armed phase. (The security indicator lamp brinks every 2.4 seconds.)
When the following operation 1 or 2 is performed, the system sounds the horns and flashes the headlamps for about 50 seconds.

1. Hood, trunk or any door is opened during armed phase.
2. Disconnecting and connecting the battery connector before canceling armed phase.

POWER SUPPLY AND GROUND CIRCUIT

Power is supplied at all times

- through 50A fusible link (letter **F** , located in the fuse and fusible link box)
- to BCM terminal 55,
- through 10A fuse [No. 21, located in the fuse block (J/B)]
- to BCM terminal 42,
- through 10A fuse [No. 71, located in the IPDM E/R]
- to IPDM E/R internal CPU,
- through 15A fuse [No. 78, located in the IPDM E/R]
- to IPDM E/R internal CPU,
- through 15A fuse [No. 37, located in the fuse block (J/B)]
- to multi-function switch (security indicator) terminal 1.

With the ignition switch in the ACC or ON position, power is supplied

- through 10A fuse [No. 6, located in the fuse block (J/B)]
- to BCM terminal 11.

Ground is supplied

- to BCM terminal 52
- through body grounds M16 and M70.

INITIAL CONDITION TO ACTIVATE THE SYSTEM

The operation of the vehicle security system is controlled by the doors, hood and trunk.
To activate the vehicle security system, BCM must receive signals indicating the doors, hood and trunk are closed and the doors are locked by key fob.
When a door is open, terminal 12 (passenger side door), 13 (rear RH door), 62 (driver side door), 63 (rear LH door) receives a ground signal from each door switch.
When front door LH is unlocked by power window main switch (door lock and unlock switch), BCM terminal 22 receives an unlock signal from terminal 14 of power window main switch with power window serial link.
When front door RH is unlocked by power window sub-switch (passenger side) (door lock and unlock switch), BCM terminal 22 receives an unlock signal from terminal 16 of power window sub-switch (passenger side) with power window serial link.
When front door key cylinder switch is in LOCK position, ground is supplied

- to power window main switch terminal 4
- through front door key cylinder switch terminals 6 and 4
- through body grounds M16 and M70.

When the hood is open, IPDM E/R receives a ground signal

- to IPDM E/R terminal 60
- through hood switch terminal 2
- through hood switch terminal 1
- through body grounds E22, and E43.

The IPDM E/R then sends a signal to BCM via CAN communication line.
When the trunk is open, ground is supplied

- to BCM terminal 57
- through trunk room lamp switch terminal 1
- through trunk room lamp switch terminal 2
- through body grounds B5, B40 and B131.

VEHICLE SECURITY SYSTEM ALARM OPERATION

The vehicle security system is triggered by

- opening a door
- opening the trunk
- opening the hood
- detection of battery disconnect and connect.

The vehicle security system will be triggered once the system is in armed phase,
when BCM receives a ground signal at terminals 12 (passenger side door), 13 (rear RH door), 57 (trunk), 62 (driver side door), 63 (rear LH door), or receives a signal from the IPDM E/R (hood switch).
When the vehicle security system is triggered,
ground is supplied intermittently to both headlamp relay and horn relay.
When headlamp relay and horn relay are energized, then power is supplied to headlamps (LH and RH) and horns (HIGH and LOW).
The headlamps flash and the horn sounds intermittently.
The alarm automatically turns off after 50 seconds, but will reactivate if the vehicle is tampered with again.

VEHICLE SECURITY SYSTEM DEACTIVATION

To deactivate the vehicle security system, a door or the trunk must be unlocked with the key, Intelligent Key.
When the key is used to unlock a door, BCM terminal 22 receives signal

- from the power window main switch (door lock and unlock switch) terminal 14.

When the BCM receives either one of these signals or unlock signal from key cylinder switch or Intelligent Key, the vehicle security system is deactivated. (Disarmed phase)

PANIC ALARM OPERATION

Intelligent Key system may or may not operate vehicle security system (horn and headlamps) as required.
When the Intelligent Key system is triggered, ground is supplied intermittently to both headlamp relay and horn relay.
When headlamp relay and horn relay are energized, then power is supplied to headlamps (LH and RH) and horns (HIGH and LOW).
The headlamp flashes and the horn sounds intermittently.
The alarm automatically turns off after 25 seconds or when BCM receives any signal from Intelligent Key.

CAN Communication System Description

NIS001ZV

CAN (Controller Area Network) is a serial communication line for real time application. It is an on-vehicle multiplex communication line with high data communication speed and excellent error detection ability. Many electronic control units are equipped onto a vehicle, and each control unit shares information and links with other control units during operation (not independent). In CAN communication, control units are connected with 2 communication lines (CAN H line, CAN L line) allowing a high rate of information transmission with less wiring. Each control unit transmits/receives data but selectively reads required data only.

CAN Communication Unit

NIS001ZW

Refer to LAN-34, "CAN COMMUNICATION" .

Schematic

NIS001ZX

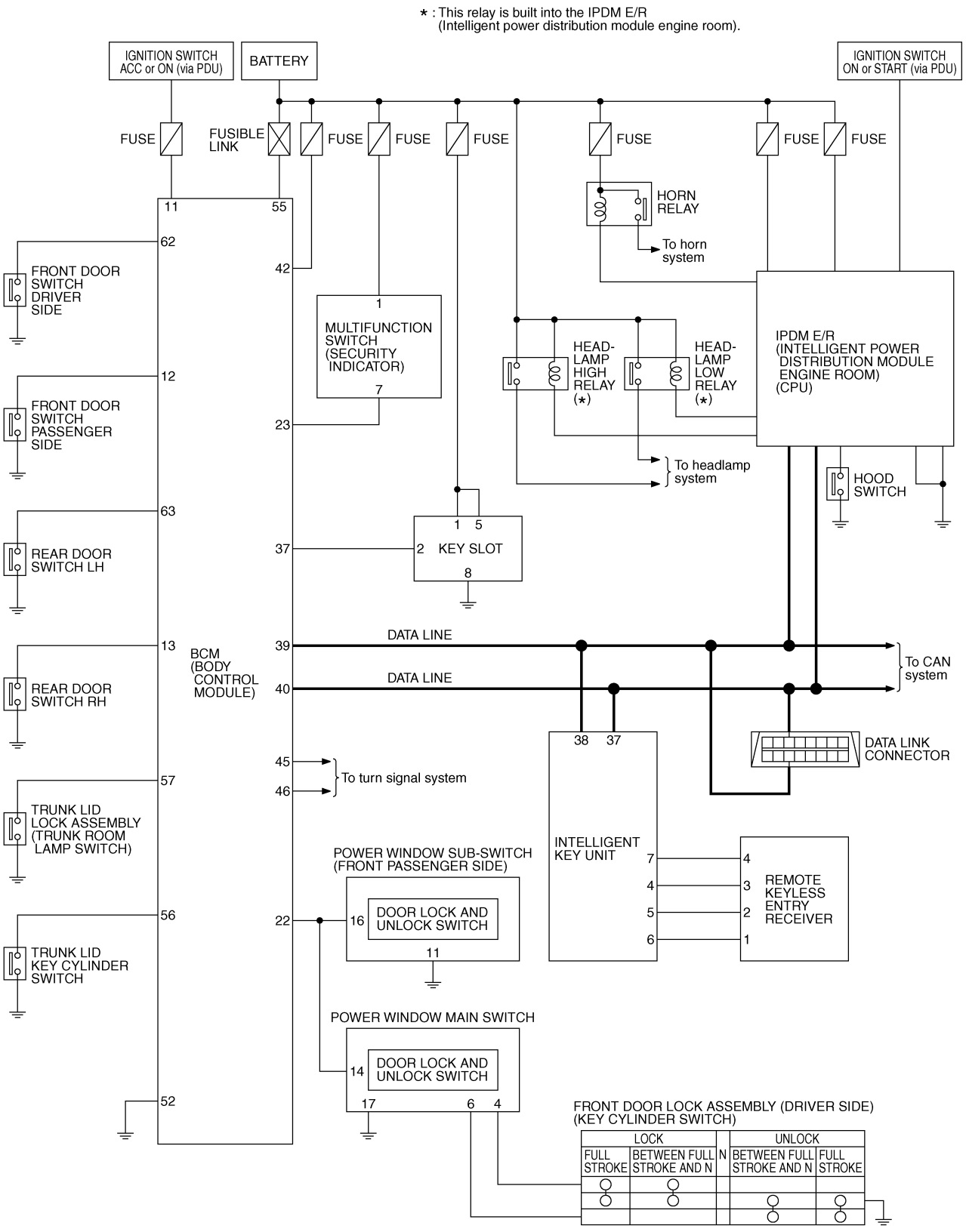

Wiring Diagram —VEHSEC—

NIS001ZY

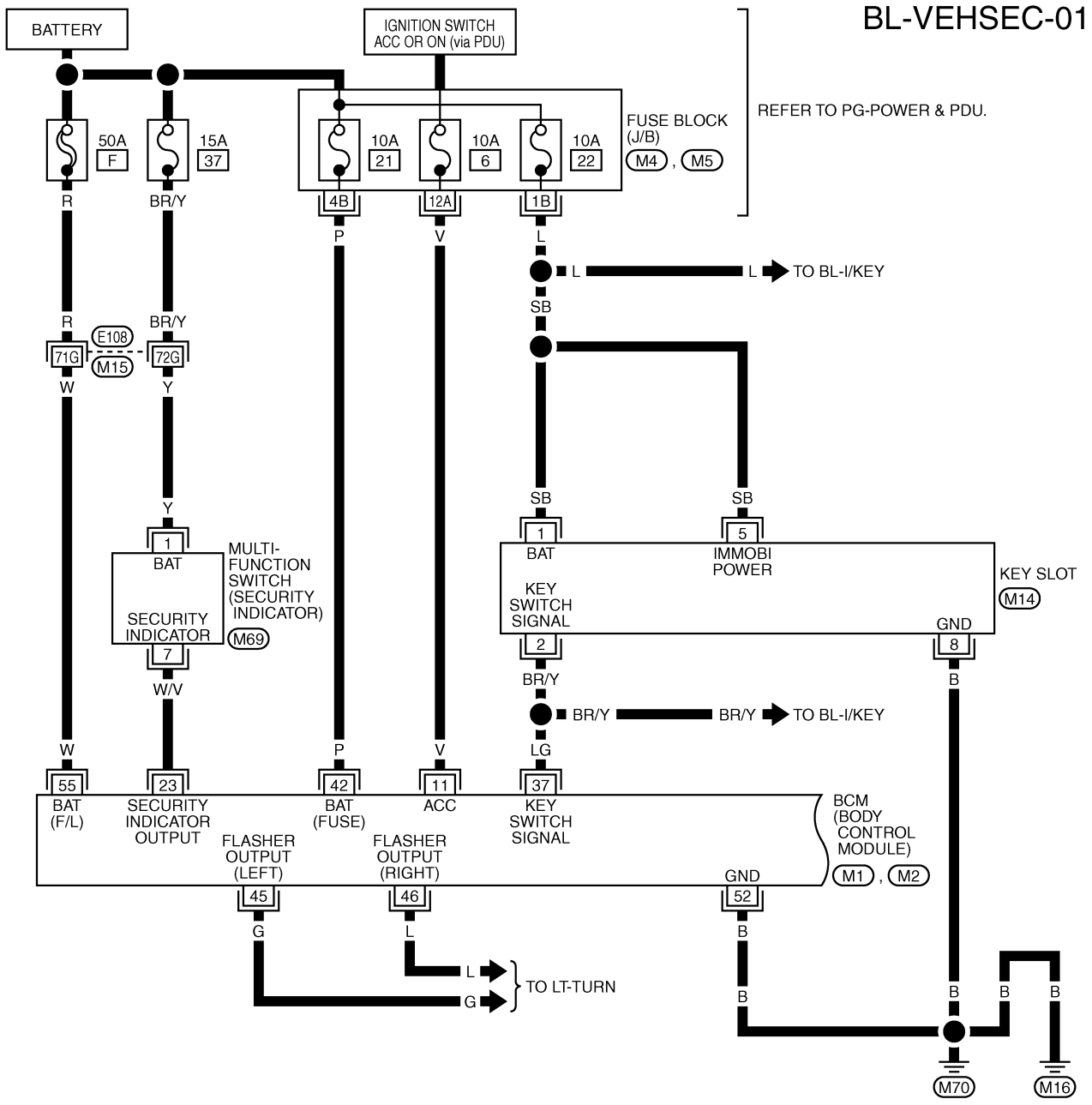

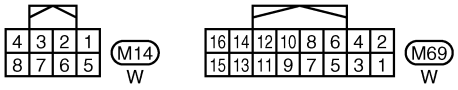

REFER TO THE FOLLOWING.

E108 -SUPER MULTIPLE JUNCTION (SMJ)

M4 , M5 -FUSE BLOCK-JUNCTION BOX (J/B)

M1 , M2 -ELECTRICAL UNITS

TIWT1305E

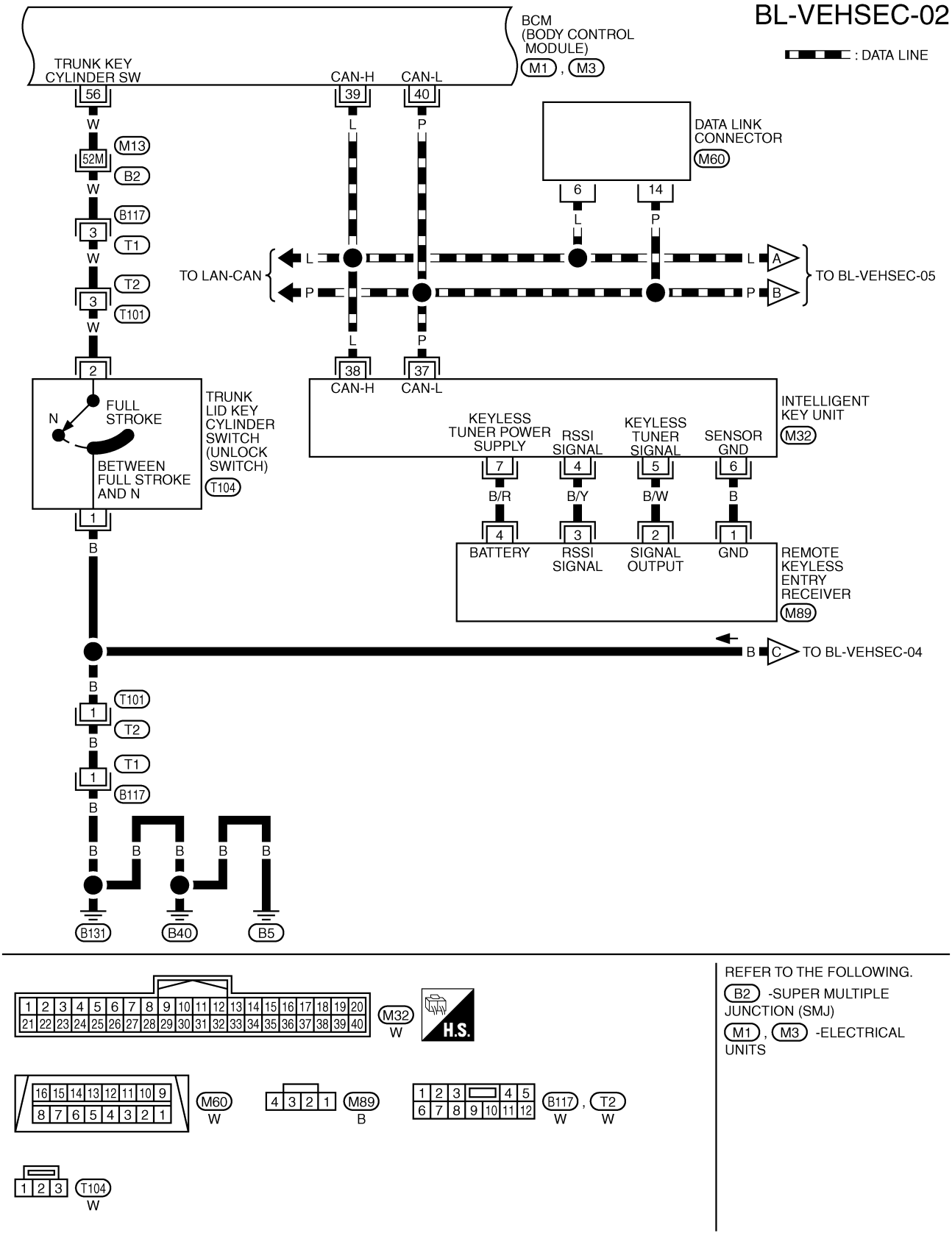
BL-VEHSEC-02
: DATA LINE
BCM (BODY CONTROL MODULE)
M1 , M3
TRUNK KEY CYLINDER SW
CAN-H
CAN-L
DATA LINK CONNECTOR
M60
TO LAN-CAN
TO BL-VEHSEC-05
TRUNK LID KEY CYLINDER SWITCH (UNLOCK SWITCH)
T104
FULL STROKE
BETWEEN FULL STROKE AND N
INTELLIGENT KEY UNIT
M32
KEYLESS TUNER POWER SUPPLY
RSSI SIGNAL
KEYLESS TUNER SIGNAL
SENSOR GND
BATTERY
RSSI SIGNAL
SIGNAL OUTPUT
GND
REMOTE KEYLESS ENTRY RECEIVER
M89
TO BL-VEHSEC-04
B131
B40
B5
REFER TO THE FOLLOWING.
B2 -SUPER MULTIPLE JUNCTION (SMJ)
M1 , M3 -ELECTRICAL UNITS
TIWT1306E

BL-VEHSEC-03

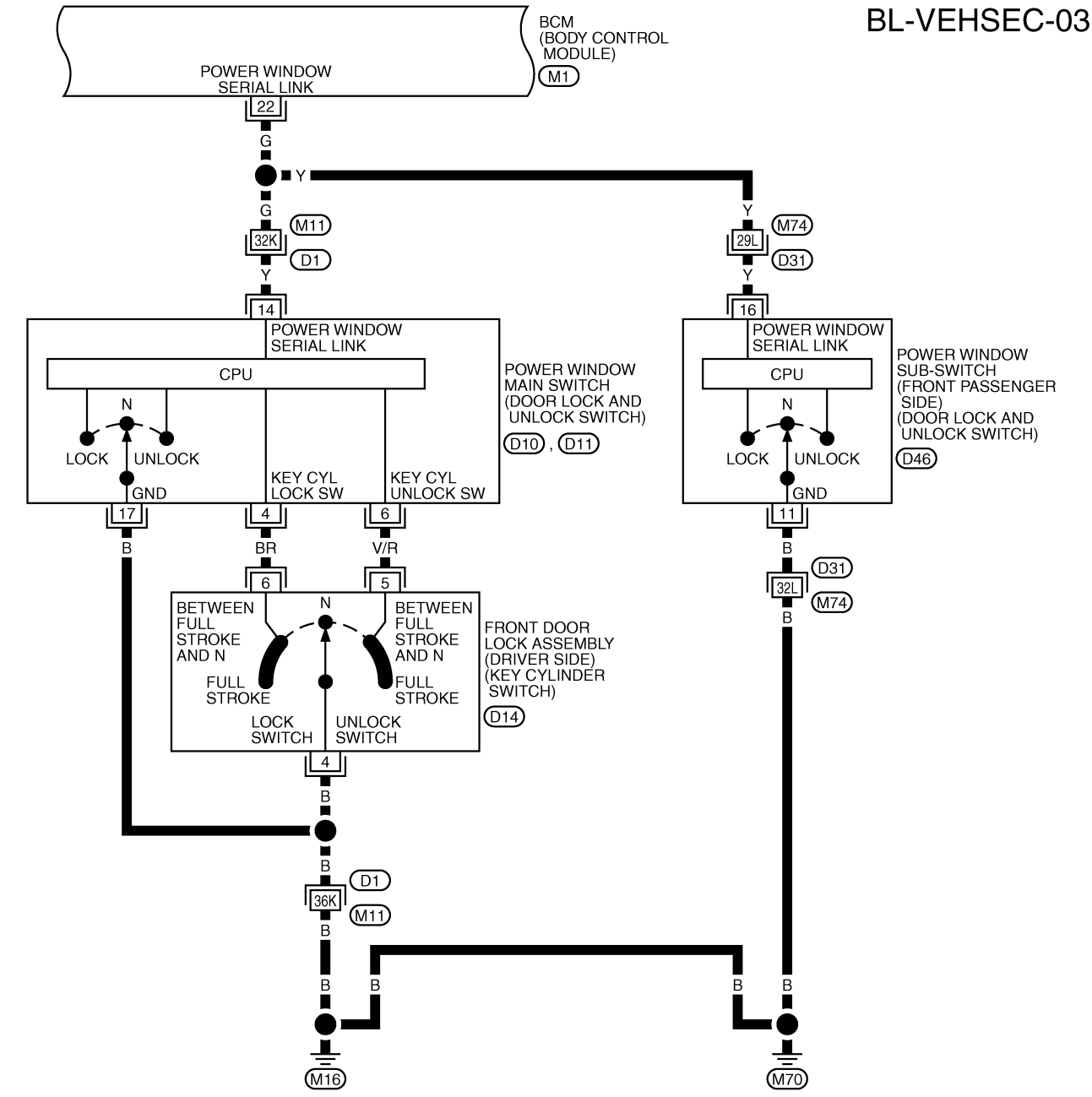

REFER TO THE FOLLOWING.

D1 , D31 -SUPER MULTIPLE JUNCTION (SMJ)

M1 -ELECTRICAL UNITS

TIWT1307E

BL-VEHSEC-04

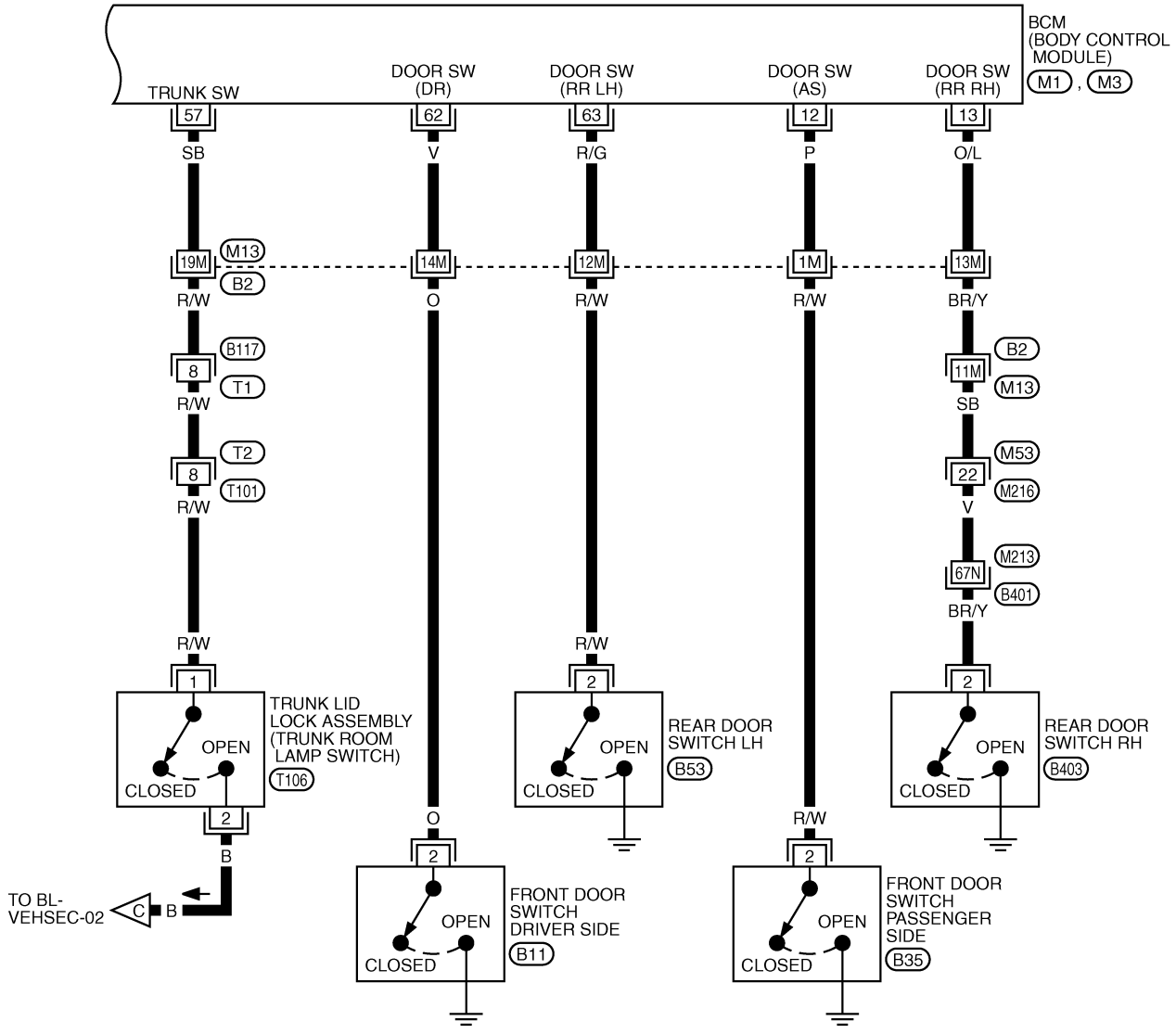

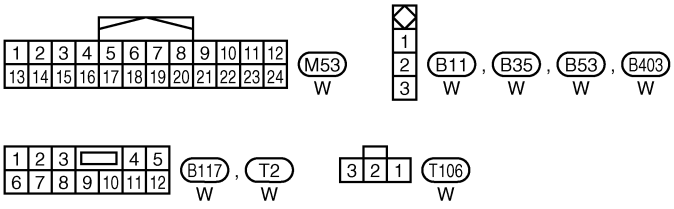

REFER TO THE FOLLOWING.

B2 , B401 -SUPER MULTIPLE JUNCTION (SMJ)

M1 , M3 -ELECTRICAL UNITS

TIWT1308E

BL-VEHSEC-05

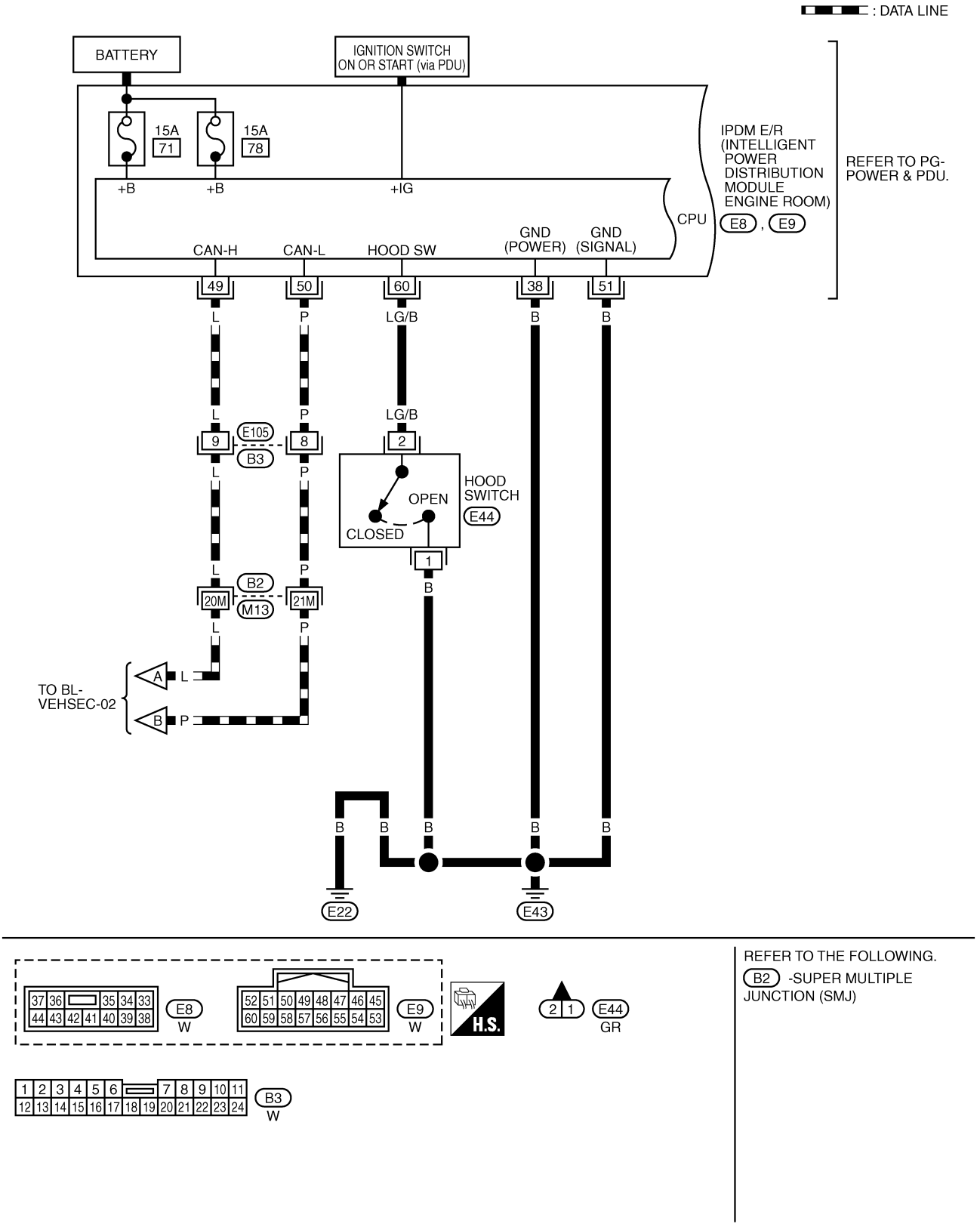
: DATA LINE
BATTERY
IGNITION SWITCH ON OR START (via PDU)
15A 71
15A 78
+B
+B
+IG
IPDM E/R (INTELLIGENT POWER DISTRIBUTION MODULE ENGINE ROOM)
E8 , E9
REFER TO PG-POWER & PDU.
CPU
CAN-H
CAN-L
HOOD SW
GND (POWER)
GND (SIGNAL)
49
50
60
38
51
L
P
LG/B
B
B
E105
B3
9
8
2
HOOD SWITCH
E44
OPEN
CLOSED
1
B2
M13
20M
21M
TO BL-VEHSEC-02
A
B
E22
E43
37 36 35 34 33
44 43 42 41 40 39 38
E8
W
52 51 50 49 48 47 46 45
60 59 58 57 56 55 54 53
E9
W
H.S.
2 1
E44
GR
1 2 3 4 5 6 7 8 9 10 11
12 13 14 15 16 17 18 19 20 21 22 23 24
B3
W
REFER TO THE FOLLOWING.
B2 -SUPER MULTIPLE JUNCTION (SMJ)
TIWT1309E

BL-VEHSEC-06

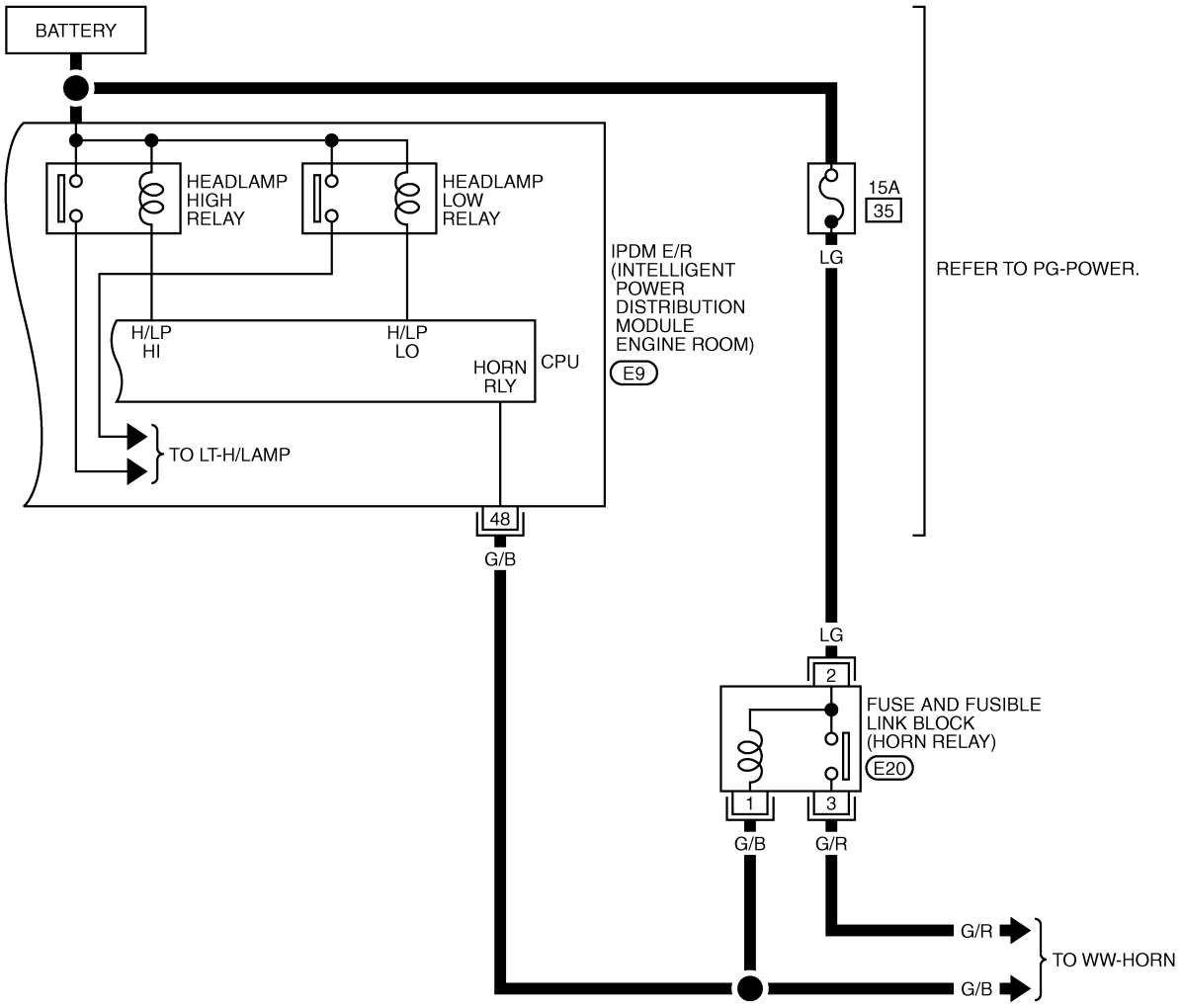

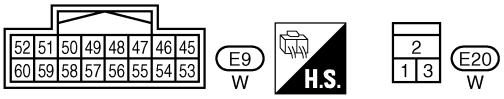

TIWT1406E

Terminals and Reference Value of BCM

NIS001ZZ

Terminal	Wire color	Item	Condition	Voltage [V] (Approx.)
11	V	Power supply (ACC)	Ignition switch (ACC or ON position)	Battery voltage
12	P	Front door switch passenger side signal	ON (Open) → OFF (Closed)	0 → Battery voltage
13	O/L	Rear door switch RH signal	ON (Open) → OFF (Closed)	0 → Battery voltage
22	G	Power window serial link	Ignition switch ON or power window timer operating	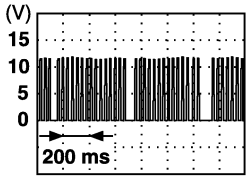 PIIA2344J
23	W/V	Security indicator lamp	Goes off → Illuminates	Battery voltage → 0
37	LG	Key switch signal	Key inserted in key slot → key removed from key slot	Battery voltage → 0
39	L	CAN-H	—	—
40	P	CAN-L	—	—
42	P	Power source (fuse)	—	Battery voltage
52	B	Ground	—	0
55	W	Battery power supply (fusible link)	—	Battery voltage
56	W	Trunk lid key cylinder switch	Neutral → Unlock	Battery voltage → 0
57	SB	Trunk room lamp switch signal	ON (Open) → OFF (Closed)	0 → Battery voltage
62	V	Front door switch driver side signal	ON (Open) → OFF (Closed)	0 → Battery voltage
63	R/G	Rear door switch LH signal	ON (Open) → OFF (Closed)	0 → Battery voltage

Terminals and Reference Value of IPDM E/R

NIS00200

Terminal	Wire color	Item	Condition	Voltage [V] (Approx.)
38	B	Ground (power)	—	0
48	G/B	Horn relay control signal	Panic alarm is operating	0
			Other than above	Battery voltage
49	L	CAN-H	—	—
50	P	CAN-L	—	—
51	B	Ground (signal)	—	0
60	LG/B	Hood switch signal	ON (Open) → OFF (closed)	0 → Battery voltage

CONSULT-II Function (BCM)

NIS00201

CONSULT-II can display each diagnostic item using the diagnostic test modes shown following.

BCM diagnosis position	Inspection items and diagnosis mode	Description
THEFT ALM	DATA MONITOR	Displays the input data to BCM in real time basis.
	ACTIVE TEST	Gives a drive signal to a load to check the operation.
	WORK SUPPORT	Changes setting of each function.

CAUTION:

CONSULT-II is used with no connection of CONSULT-II CONVERTER, malfunction might be detected in self-diagnosis depending on control units with carry out CAN communication.

1. Turn ignition switch OFF.
2. Connect CONSULT-II and CONSULT-II CONVERTER to data link connector (1).

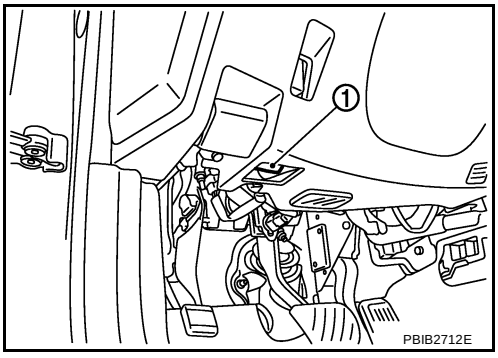

3. Turn ignition switch ON.
4. Touch “START” (NISSAN BASED VHCL).

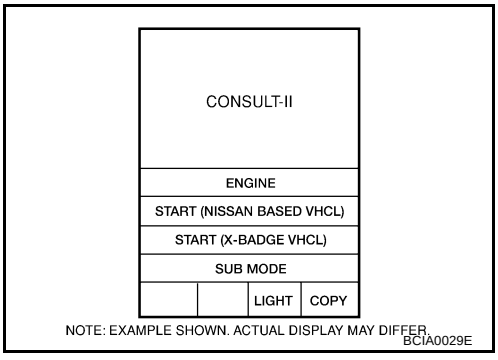

5. Touch “BCM”.
   If “BCM” is not indicated, go to GI-40, "CONSULT-II Data Link Connector (DLC) Circuit" .

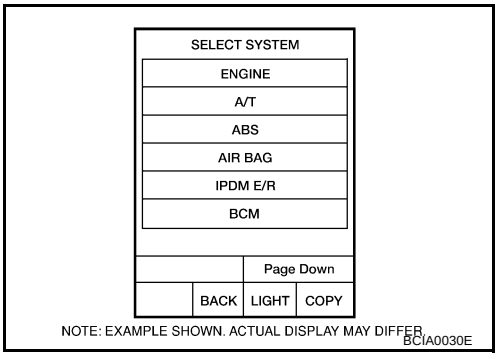

6. Touch “THEFT ALM”.

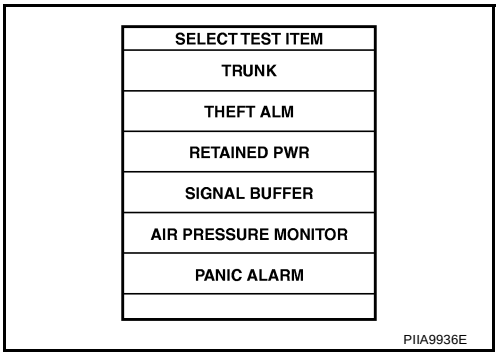

7. Select diagnosis mode.
“WORK SUPPORT”, “DATA MONITOR” and “ACTIVE TEST”

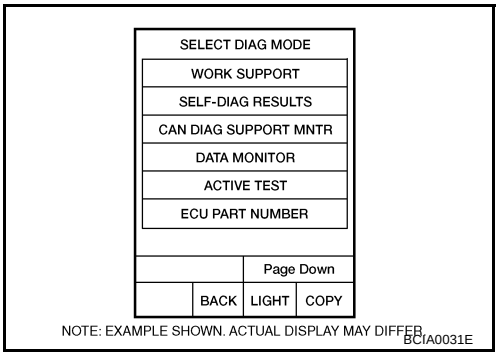

CONSULT-II APPLICATION ITEM

Work Support

Test Item	Description
SECURITY ALARM SET	This mode is able to confirm and change security alarm ON-OFF setting.
THEFT ALM TRG	The switch which triggered vehicle security alarm is recorded. This mode is able to confirm and erase the record of vehicle security alarm. The trigger data can be erased by touching “CLEAR” on CONSULT-II screen.

Data Monitor

Monitored Item	Description
IGN ON SW	Indicates [ON/OFF] condition of ignition switch.
ACC ON SW	Indicates [ON/OFF] condition of ignition switch in ACC position.
KEY ON SW	Indicates [ON/OFF] condition of key switch.
I-KEY DR UNLK	Indicates [ON/OFF] condition of unlock signal from driver side door request switch.
I-KEY AS UNLK	Indicates [ON/OFF] condition of unlock signal from passenger side door request switch.
I-KEY LOCK	Indicates [ON/OFF] condition of lock signal from Intelligent Key.
I-KEY UNLOCK	Indicates [ON/OFF] condition of unlock signal from Intelligent Key.
I-KEY TRNK/HAT	Indicates [ON/OFF] condition of trunk opener signal from Intelligent Key.
TRUNK OPNR SW	This is displayed even when it is not equipped.
TRUNK CYL SW	This is displayed even when it is not equipped.
TRUNK OPN MNTR	Indicates [ON/OFF] condition of trunk room lamp switch.
HOOD SW	Indicates [ON/OFF] condition of hood switch.
DOOR SW-DR	Indicates [ON/OFF] condition of front door switch LH.
DOOR SW-AS	Indicates [ON/OFF] condition of front door switch RH.
DOOR SW-RR	Indicates [ON/OFF] condition of rear door switch RH.
DOOR SW-RL	Indicates [ON/OFF] condition of rear door switch LH.
BACK DOOR SW	This is displayed even when it is not equipped.
KEY CYL LK-SW	Indicates [ON/OFF] condition of lock signal from front door key cylinder switch.
KEY CYL UN-SW	Indicates [ON/OFF] condition of unlock signal from front door key cylinder switch.

Monitored Item	Description
CDL LOCK SW	Indicates [ON/OFF] condition of lock signal from door lock/unlock switch LH and RH.
CDL UNLOCK SW	Indicates [ON/OFF] condition of unlock signal from door lock/unlock switch LH and RH.

Active Test

Test Item	Description
THEFT IND	This test is able to check security indicator lamp operation. The lamp will be turned on when “ON” on CONSULT-II screen is touched.
VEHICLE SECURITY HORN	This test is able to check vehicle security horn operation. The horns will be activated for 0.5 seconds after “ON” on CONSULT-II screen is touched.
HEADLAMP(HI)	This test is able to check vehicle security lamp operation. The headlamps will be activated for 0.5 seconds after “ON” on CONSULT-II screen is touched.
FLASHER	This test is able to check vehicle security hazard lamp operation. The hazard lamps will be activated after “ON” on CONSULT-II screen is touched.

Trouble Diagnosis Work Flow

NIS00202

1. CHECK IN

Listen to customer complaint.

>> GO TO 2.

2. CHECK FUNCTION

Do “Power door lock system” and “Intelligent Key system” work properly?

YES >> GO TO 3.
NO >> Preform diagnosis and repair. Refer to .

3. PERFORM DIAGNOSTIC PROCEDURE

Perform diagnostic procedure according to the symptom chart. Refer to BL-237, "Trouble Diagnosis Symptom Chart" .

>> GO TO 4.

4. FINAL CHECK

Confirm that the malfunction is completely fixed by operating the system.

OK >> INSPECTION END
NG >> GO TO 3.

Preliminary Check

NIS00203

1. INSPECTION START

Turn ignition switch "OFF" and pull out Intelligent Key from key slot.

NOTE:
Before starting operation check, open front windows.

>> GO TO 2.

2. CHECK SECURITY INDICATOR LAMP

1. Lock doors using Intelligent Key or mechanical key.
2. Make sure security indicator lamp illuminate for 30 seconds.

Security indicator lamp should illuminate.

OK >> GO TO 3.
NG >> Perform diagnosis and repair. Refer to BL-238, "Diagnostic Procedure 1" .

3. CHECK ALARM FUNCTION

1. After 30 seconds, security indicator lamp will start blink.
2. Open any door or hood before unlocking with Intelligent Key or mechanical key, or open trunk lid without Intelligent Key or mechanical key.

Do alarm function properly.

OK >> GO TO 4.
NG >> Check the following.

- The vehicle security system does not phase in alarm mode. Refer to BL-245, "Diagnostic Procedure 2" .
- Alarm (horn, headlamp and hazard lamp) do not operate. Refer to BL-246, "Diagnostic Procedure 3" .

4. CHECK ALARM CANCEL OPERATION

Unlock any door or open trunk lid useing Intelligent Key or mechanical key.

Alarm (horn, headlamp and hazard lamp) should stop.

OK >> INSPECTION END.
NG >> Perform diagnosis and repair. Refer to BL-246, "Diagnostic Procedure 4" .

Trouble Diagnosis Symptom Chart

NIS00204

Procedure / Symptom			Diagnostic procedure	Refer to page
1	Vehicle security system cannot be set by ····	Door switch	Diagnostic Procedure 1 (Check door, hood and trunk switch)	BL-238
		Lock / unlock switch	Diagnostic Procedure 6 (Check door lock / unlock switch)	BL-247
		Door outside key	Diagnostic Procedure 3 (Check door key cylinder switch)	BL-246
		Intelligent Key	Check Intelligent Key.	BL-126
		—	If the above systems are “OK”, replace BCM.	BCS-17
	Security indicator does not turn “ON”.		Diagnostic Procedure 2 (Check security indicator lamp)	BL-245
			If the above systems are “OK”, replace BCM.	BCS-17
2	* Vehicle security system does not alarm when ····	Any door is opened.	Diagnostic Procedure 1 (Check door, hood and trunk switch)	BL-238
			If the above systems are “OK”, replace BCM.	BCS-17
3	Vehicle security alarm does not activate.	Horn alarm	Diagnostic Procedure 4 (Check vehicle security horn alarm)	BL-246
			If the above systems are “OK”, replace BCM.	BCS-17
		Head lamp alarm	Diagnostic Procedure 5 (Check head lamp alarm)	BL-247
			If the above systems are “OK”, replace BCM.	BCS-17
		Hazard lamp	Diagnostic Procedure 7 (Check hazard lamp alarm)	BL-247
			If the above systems are “OK”, replace BCM.	BCS-17
4	Vehicle security system cannot be canceled by ····	Door outside key	Diagnostic Procedure 3 (Check door key cylinder switch)	BL-246
			If the above systems are “OK”, replace power window main switch.	EI-34
		Intelligent Key	Check remote keyless entry function.	BL-44
			If the above systems are “OK”, replace BCM.	BCS-17

*: Make sure the system is in the armed phase.

Diagnostic Procedure 1

NIS00205

DOOR SWITCH CHECK

1. CHECK DOOR SWITCH INPUT SIGNAL

With CONSULT-II

Check door switches (“DOOR SW-DR”, “DOOR SW-AS”, “DOOR SW-RL” and “DOOR SW-RR”) in “DATA MONITOR” mode with CONSULT-II.

Monitor item	Condition
DOOR SW-DR	CLOSE → OPEN: OFF → ON
DOOR SW-AS	
DOOR SW-RL	
DOOR SW-RR	

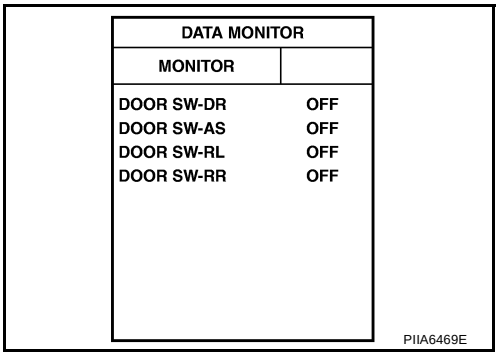

Without CONSULT-II

1. Turn ignition switch OFF.
2. Check voltage between BCM connector and ground.

Terminals (+) BCM connector	Terminals (+) Terminal	Terminals (–)	Door condition		Voltage (V) (Approx.)
M1	12	Ground	Front passenger side	OPEN	0
				CLOSE	Battery voltage
	13		Rear RH side	OPEN	0
				CLOSE	Battery voltage
M3	62		Driver side	OPEN	0
				CLOSE	Battery voltage
	63		Rear LH side	OPEN	0
				CLOSE	Battery voltage

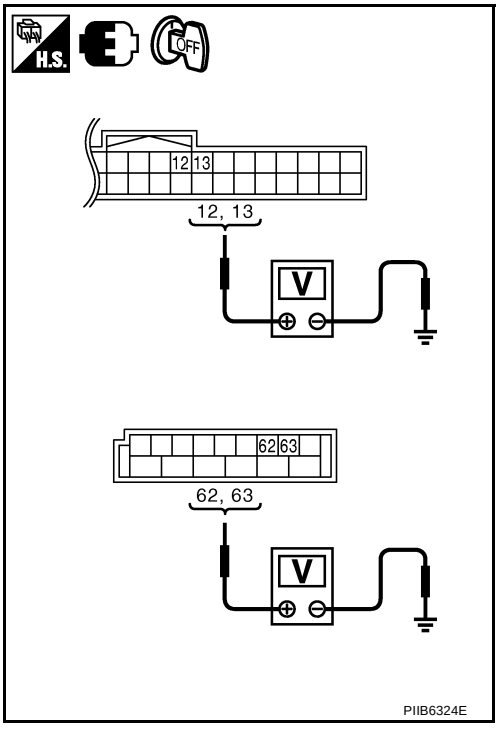

OK or NG

OK >> Door switch circuit is OK.
NG >> GO TO 2.

2. CHECK DOOR SWITCH

1. Turn ignition switch OFF.
2. Disconnect door switch connector.
3. Check door switch.

Terminal		Door switch	Continuity
Door switch			
2	Ground part of door switch	Pushed	No
		Released	Yes

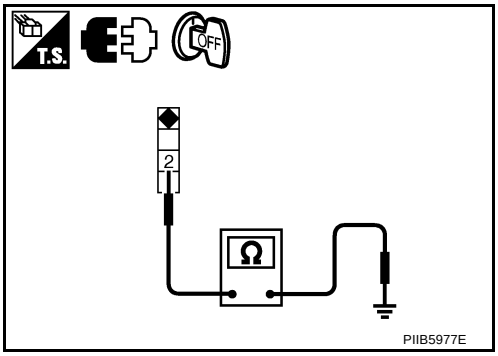

OK or NG

OK >> GO TO 3.
NG >> Replace malfunction door switch.

3. CHECK DOOR SWITCH CIRCUIT

1. Disconnect BCM connector.
2. Check continuity between BCM connector and door switch connector.

A		B		Continuity
BCM connector	Terminal	Door switch connector	Terminal	
M1	12	B35	2	Yes
	13	B403		
M3	62	B11		
	63	B53		

3. Check continuity between BCM connector and ground.

A			Continuity
BCM connector	Terminal		
M1	12	Ground	No
	13		
M3	62		
	63		

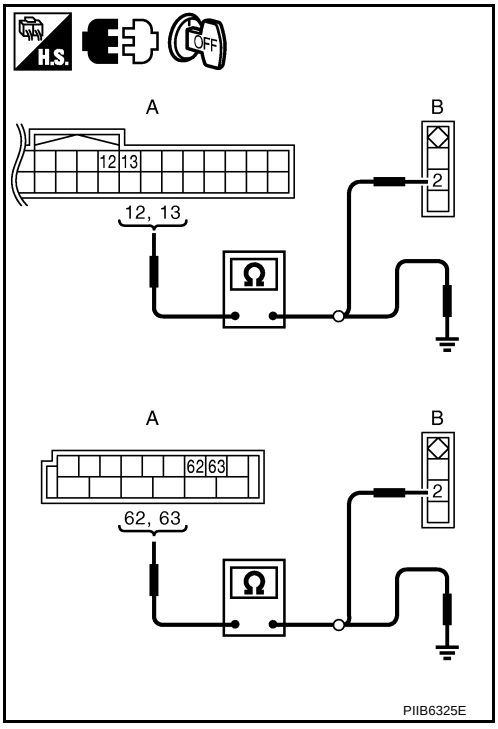

OK or NG

OK >> GO TO 4.
NG >> Repair or replace harness between BCM and door switch.

4. CHECK BCM OUTPUT SIGNAL

1. Connect BCM connector.
2. Check voltage between BCM connector and ground.

Terminals			Voltage (V) (Approx.)
(+)		(–)	
BCM connector	Terminal		
M1	12	Ground	Battery voltage
	13		
M3	62		
	63		

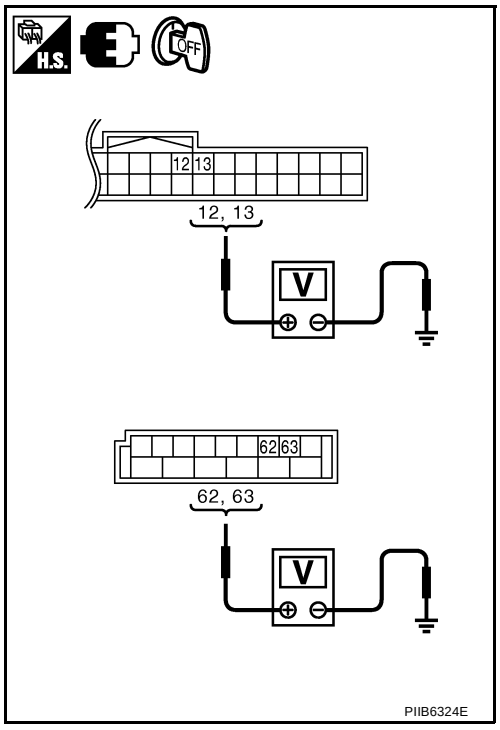

OK or NG

OK >> Check the condition of harness and connector.
NG >> Replace BCM.

HOOD SWITCH CHECK

1. CHECK HOOD SWITCH

Check hood switch and hood fitting condition.

OK or NG

OK >> GO TO 2.
NG >> Adjust installation of hood switch.

2. CHECK HOOD SWITCH INPUT SIGNAL

With CONSULT-II

Check ("HOOD SW") in "DATA MONITOR" mode with CONSULT-II.

- When hood is opened:

  HOOD SW : ON

- When hood is closed:

  HOOD SW : OFF

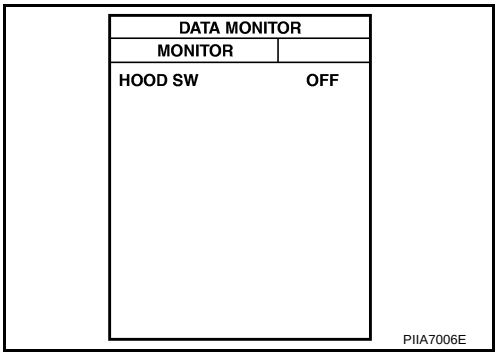

Without CONSULT-II

Check voltage between IPDM E/R connector and ground.

IPDM E/R connector	Terminals (+)	Terminals (-)	Condition of hood	Voltage [V] (Approx.)
E9	60	Ground	OPEN	0
			CLOSE	Battery voltage

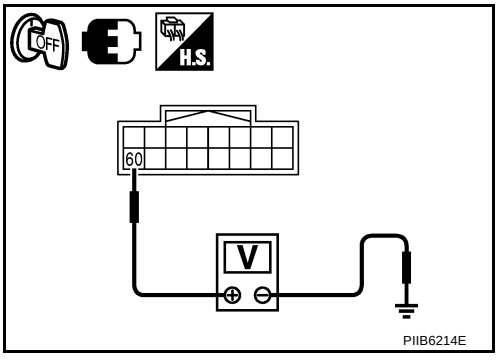

OK or NG

OK >> Hood switch is OK, and go to BL-243, "TRUNK ROOM LAMP SWITCH CHECK" .
NG >> GO TO 3.

3. CHECK HOOD SWITCH

1. Turn ignition switch OFF.
2. Disconnect hood switch connector.
3. Check continuity between hood switch terminals 1 and 2.

Hood switch	Terminals		Condition of hood switch	Continuity
E44	1	2	Pressed	No
			Released	Yes

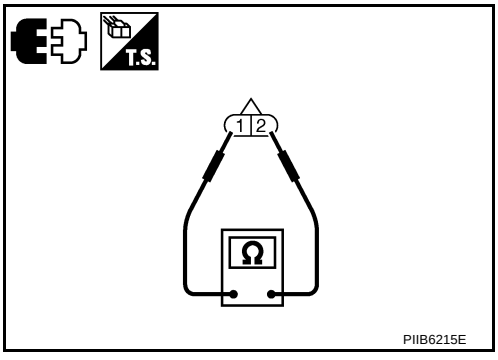

OK or NG

OK >> GO TO 4.
NG >> Replace hood switch.

4. CHECK HOOD SWITCH CIRCUIT

1. Disconnect IPDM E/R connector.
2. Check continuity between hood switch connector and IPDM E/R connector.

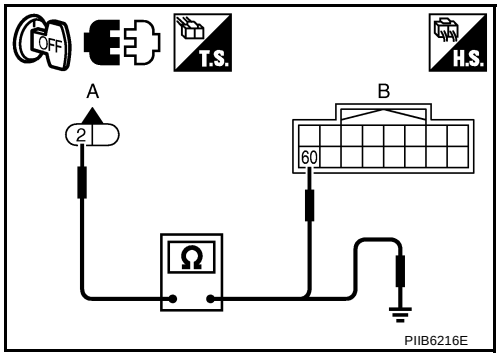

A		B		Continuity
Hood switch connector	Terminal	IPDM E/R connector	Terminal	
E44	2	E9	60	Yes

3. Check continuity between hood switch connector and ground.

A		Ground	Continuity
Hood switch connector	Terminal		
E44	2		No

OK or NG

OK >> GO TO 5.
NG >> Repair or replace hood switch harness.

5. CHECK HOOD SWITCH GROUND CIRCUIT

Check continuity between hood switch connector and ground.

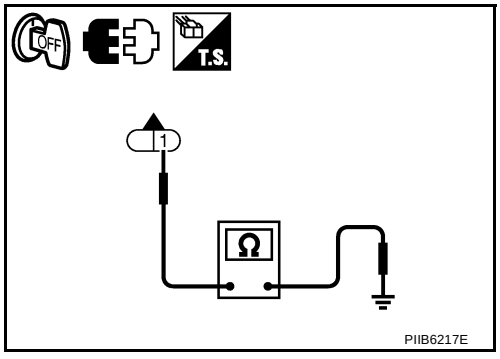

Hood switch	Terminal	Ground	Continuity
E44	1		Yes

OK or NG

OK >> Check condition of harness and connector.
NG >> Repair or replace hood switch harness.

TRUNK ROOM LAMP SWITCH CHECK

1. CHECK TRUNK ROOM LAMP SWITCH INPUT SIGNAL

With CONSULT-II

Check (“TRUNK SW”) in “DATA MONITOR” mode with CONSULT-II.

Monitor item	Condition	
TRUNK SW	OPEN	: ON
	CLOSE	: OFF

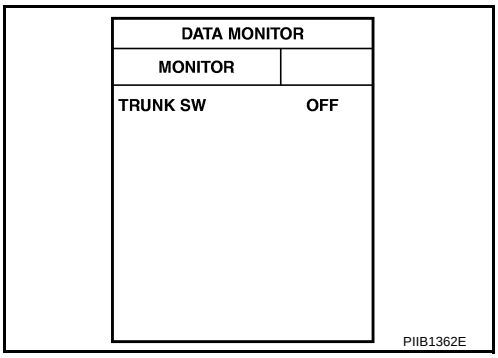

Without CONSULT-II

1. Turn ignition switch OFF.
2. Check voltage between BCM connector and ground.

Terminals			Trunk condition	Voltage (V) (Approx.)
(+)		(–)		
BCM connector	Terminal			
M3	57	Ground	OPEN	0
			CLOSE	Battery voltage

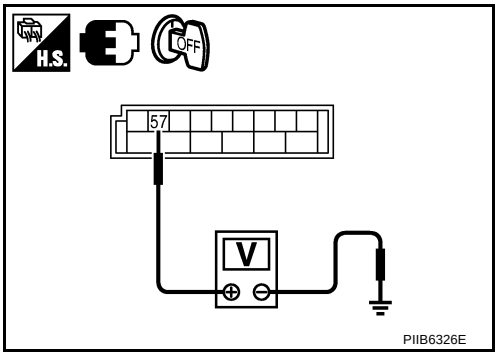

OK or NG

OK >> Trunk room lamp switch circuit is OK.
NG >> GO TO 2.

2. CHECK TRUNK ROOM LAMP SWITCH

1. Turn ignition switch OFF.
2. Disconnect trunk lid lock assembly connector.
3. Check trunk room lamp switch.

Terminal		Trunk condition	Continuity
Trunk room lamp switch			
1	2	OPEN	Yes
		CLOSE	No

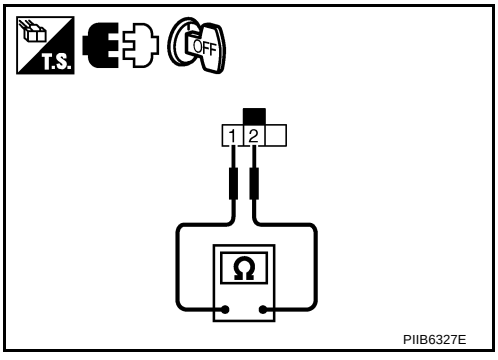

OK or NG

OK >> GO TO 3.
NG >> Replace trunk room lamp switch.

3. CHECK TRUNK ROOM LAMP SWITCH CIRCUIT

1. Disconnect BCM connector.
2. Check continuity between BCM connector and trunk lid lock assembly connector.

A		B		Continuity
BCM connector	Terminal	Trunk lid lock assembly connector	Terminal	
M3	57	T106	1	Yes

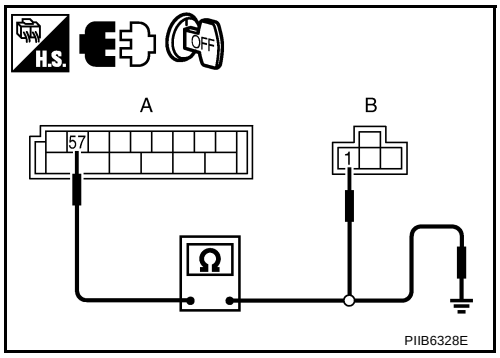

3. Check continuity between BCM connector and ground.

A		Ground	Continuity
BCM connector	Terminal		
M3	57		No

OK or NG

OK >> GO TO 4.
NG >> Repair or replace harness between BCM and trunk room lamp switch.

4. CHECK TRUNK ROOM LAMP SWITCH GROUND CIRCUIT

Check continuity between trunk lid lock assembly connector and ground.

Trunk lid lock assembly connector	Terminal	Ground	Continuity
T106	2		Yes

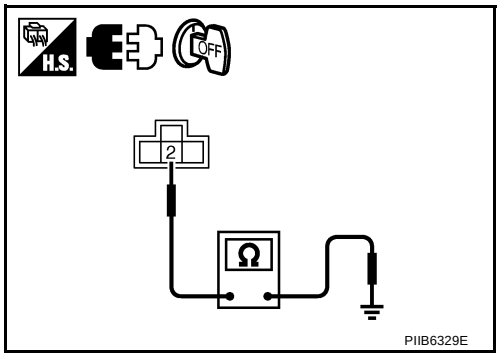

OK or NG

OK >> GO TO 5.
NG >> Repair or replace trunk room lamp switch ground circuit.

5. CHECK BCM OUTPUT SIGNAL

1. Connect BCM connector.
2. Check voltage between BCM connector and ground.

Terminals			Voltage (V) (Approx.)
(+)		(–)	
BCM connector	Terminal		
M3	57	Ground	Battery voltage

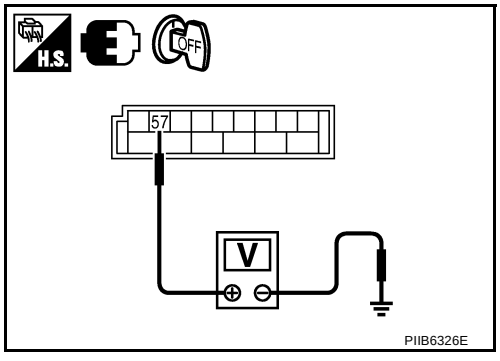

OK or NG

OK >> Check the condition of harness and connector.
NG >> Replace BCM.

Diagnostic Procedure 2
SECURITY INDICATOR LAMP CHECK

NIS00206

1. SECURITY INDICATOR LAMP ACTIVE TEST

With CONSULT-II

Check (“THEFT IND”) in “ACTIVE TEST” mode with CONSULT-II.

Perform operation shown on display indicator lamp should illuminate.

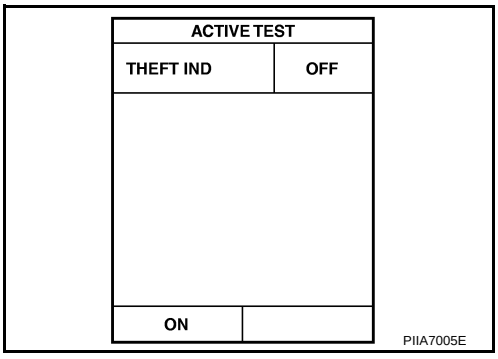

OK or NG

OK >> Security indicator lamp is OK.
NG >> GO TO 2.

2. CHECK HARNESS CONTINUITY

1. Turn ignition switch OFF.
2. Disconnect security indicator lamp connector.
3. Check voltage between multi-function switch (security indicator lamp) connector and ground.

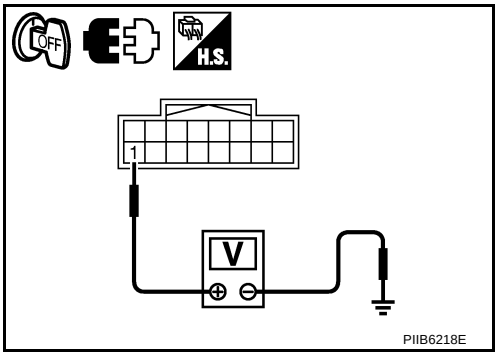

Terminals			Voltage (V) (Approx.)
(+)		(–)	
Security indicator lamp connector	Terminal		
M69	1	Ground	Battery voltage

OK or NG

OK >> Check the following.
- Harness for open or short between BCM and multi-function switch (security indicator lamp)
- Security indicator lamp condition

NG >> Check the following.
- 15A fuse [No.37, located in fuse block (J/B)]
- Harness for open or short between multi-function switch (security indicator lamp) and fuse

Diagnostic Procedure 3

NIS00207

FRONT DOOR KEY CYLINDER SWITCH CHECK

1. CHECK KEY CYLINDER SWITCH OPERATION

Check if door key cylinder switch using mechanical key.

Do doors lock / unlock when using the mechanical key?

YES >> Front door key cylinder switch operation is OK.
NO >> Check door key cylinder switch circuit. Refer to BL-42, "Door Key Cylinder Switch Check" .

Diagnostic Procedure 4

NIS00208

VEHICLE SECURITY HORN ALARM CHECK

First perform the "SELF-DIAG RESULTS" of "BCM" with CONSULT-II, then perform the trouble diagnosis of malfunction system indicated in "SELF-DIAG RESULTS" of "BCM". Refer to BCS-15, "CAN Communication Inspection Using CONSULT-II (Self-Diagnosis)".

1. CHECK HORN OPERATION

Check if horn sounds with horn switch.

Does horn operate?

Yes >> GO TO 2.
No >> Check horn circuit. Refer to WW-53, "HORN" .

2. CHECK IPDM E/R INPUT SIGNAL

Check voltage between IPDM E/R connector and ground.

Terminals			Voltage (V) (Approx.)
(+)		(–)	
IPDM E/R connector	Terminal		
E9	48	Ground	Battery voltage

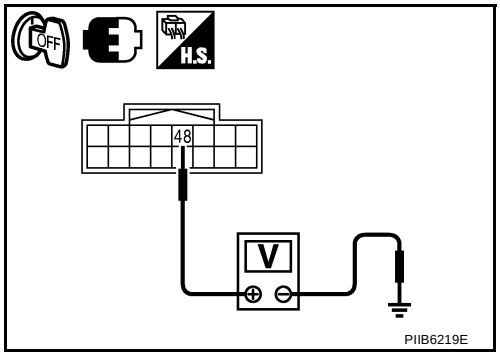

OK or NG

OK >> Replace IPDM E/R.
NG >> GO TO 3.

3. CHECK HORN RELAY CIRCUIT

1. Turn ignition switch OFF.
2. Disconnect IPDM E/R and horn relay connector.
3. Check continuity between IPDM E/R connector and horn relay connector.

A		B		Continuity
IPDM E/R connector	Terminal	Horn relay connector	Terminal	
E9	48	E20	1	Yes

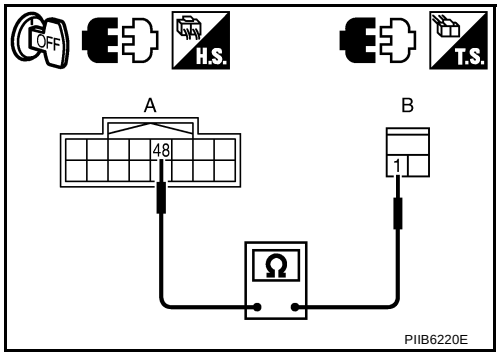

OK or NG

OK >> Check harness connection.
NG >> Repair or replace harness.

Diagnostic Procedure 5

NIS00209

VEHICLE SECURITY HEADLAMP ALARM CHECK

1. CHECK HEADLAMP OPERATION

Check if headlamp operate by lighting switch.

Does headlamp come on when turning switch “ON”?

YES >> Headlamp circuit is OK.

NO >> Check headlamp system. Refer to LT-43, "HEADLAMP (FOR USA) - XENON TYPE -" , LT-8, "HEADLAMP (FOR USA) - CONVENTIONAL TYPE -" or LT-79, "HEADLAMP (FOR CANADA) - DAYTIME LIGHT SYSTEM -" .

Diagnostic Procedure 6

NIS0020A

DOOR LOCK AND UNLOCK SWITCH CHECK

1. CHECK DOOR LOCK AND UNLOCK SWITCH INPUT SIGNAL

Check if power door lock operated by door lock and unlock switch.

Do doors lock / unlock when using each door lock and unlock switches?

YES >> Door lock and unlock switch is OK.

NO >> Check door lock and unlock switch. Refer to BL-36, "Check Door Lock and Unlock Switch"

Diagnostic Procedure 7

NIS0020B

VEHCLE SECURITY HAZARD LAMP ALARM CHECK

1. CHECK HAZARD WARNING LAMP

Does hazard warning lamp flash with hazard switch?

YES or NO

YES >> Hazard warning lamp circuit is OK.

NO >> Check hazard circuit. Refer to LT-211, "TURN SIGNAL AND HAZARD WARNING LAMPS" .

IVIS (INFINITI VEHICLE IMMOBILIZER SYSTEM-NATS)

PFP:28591

Component Parts and Harness Connector Location

NIS0020C

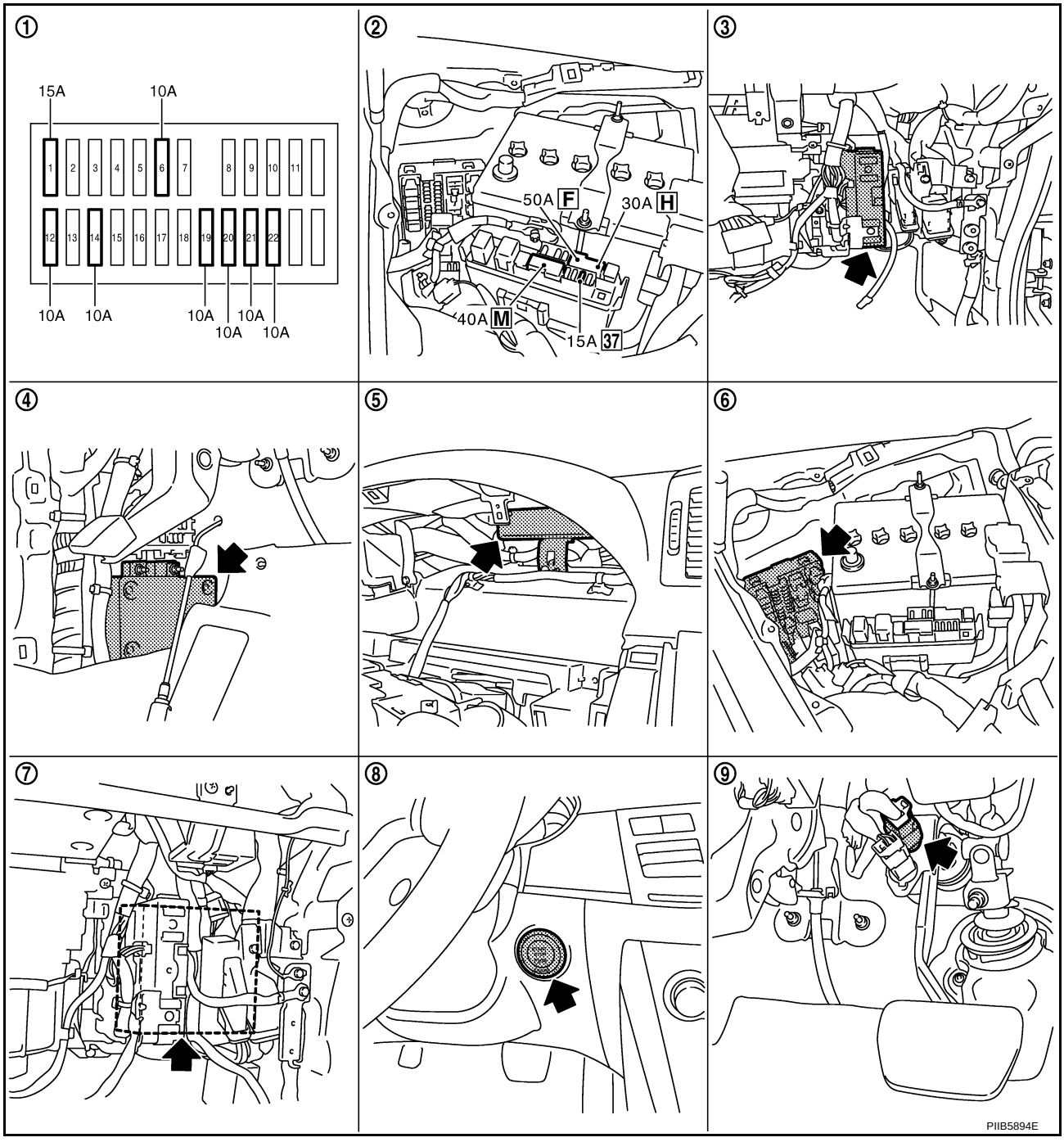

1. Fuse block (J/B) fuse layout
2. Fuse and fusible link box
3. BCM M1, M2, M3 (View with instrument lower panel RH removed)
4. Intelligent key unit M32, M33 (View with dash side finisher LH removed)
5. PDU M30, M31 (View with combination meter removed)
6. IPDM E/R E4, E9 (Engine room)
7. ECM M71 (View with instrument lower panel RH removed)
8. Push-button ignition switch M27
9. Stop lamp switch E124

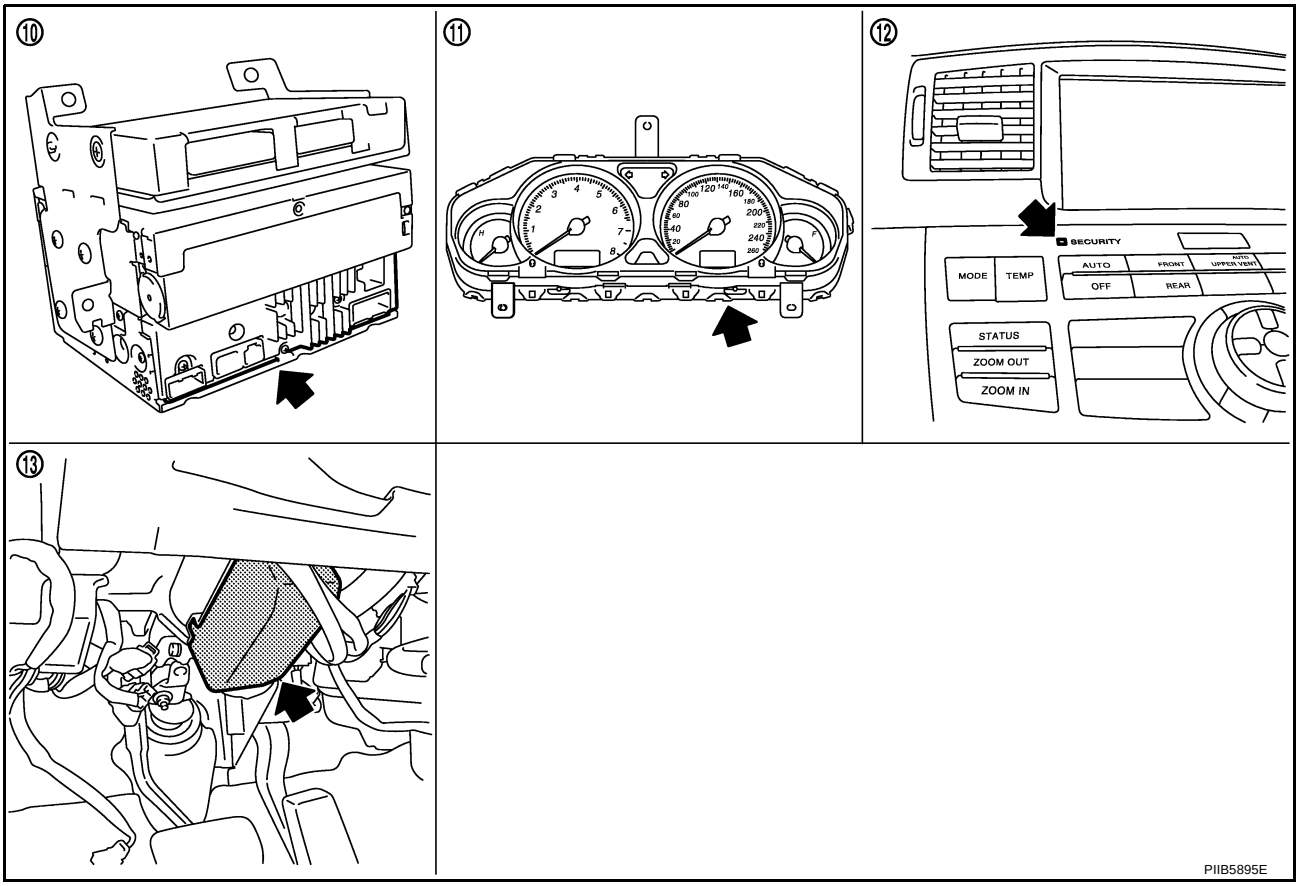

10. Unified meter and A / C amp M64, M65
11. Combination meter M52
12. Multifunction switch M69 (Security indicator)
13. Steering lock unit M35 (Steering column)

NOTE:
If customer reports a “No start” condition, request ALL KEYS to be brought to an INFINITI dealer to check for an IVIS (NATS) malfunction.

System Description

NIS0020D

DESCRIPTION

- The IVIS (NATS) is an anti-theft system by registering an Intelligent Key ID in to the vehicle and prevents the engine being started by an unregistered Intelligent Key. It has a higher protection against auto thefts that duplicates mechanical key.
- It performs the ID verification when starting the engine in the same way as the Intelligent Key system. But, it performs the IVIS (NATS) ID verification when inserting the Intelligent Key and performs the Intelligent Key ID verification when carrying the Intelligent Key.
- The Intelligent Key system of FUGA (Y50) is not the same as the conventional models. The mechanical key integrated in the Intelligent Key cannot start the engine. When the Intelligent Key battery is discharged, the IVIS (NATS) ID verification memorized to the transponder integrated with Intelligent Key is performed by inserting the Intelligent Key into the key slot. If the verification results are OK, the engine start operation can be performed by the push-button ignition switch operation.
- Locate the security indicator and apply the anti-theft system equipment sticker, forewarn that the IVIS (NATS) is onboard with the model.
- The security indicator always blinks when the Intelligent Key is removed from the key slot and when the power supply position is in LOCK position.
- Intelligent Key can be registered up to 4 keys (Including the standard ignition key) on request from the owner.
- The specified registration is required when replacing ECM, BCM or Intelligent Key. The registrations procedure for IVIS (NATS) and registration procedure for Intelligent Key when installing the Intelligent Key unit, refer to CONSULT-II Operation Manual NATS-IVIS/NVIS.
- Possible symptom of IVIS (NATS) malfunction is “Engine cannot start”. In FUGA (Y50), the engine can be started with the Intelligent Key system and IVIS (NATS). Identify the possible causes according to “Work Flow”, Refer to BL-272, "Work Flow" .
- If ECM other than Genuine NISSAN is installed, the engine cannot be started. For ECM replacement procedure, refer to BL-252, "ECM Re-Communicating Function" .

PRECAUTIONS FOR KEY REGISTRATION

- The key registration is a procedure that erases the current IVIS (NATS) ID once, and then re register a new ID operation. Therefore the registered Intelligent Key is necessary for this procedure. Before starting the registration operation collect all registered Intelligent Key from the customer
- When registering the Intelligent Key, 2 registration procedures [IVIS (NATS) ID registration and Intelligent Key ID registration] should be performed. The IVIS (NATS) ID registration is the procedure that registers the ID stored into the transponder (integrated into Intelligent Key) to the BCM. The Intelligent Key ID registration is the procedure that registers the ID to the Intelligent Key unit. Each registration procedure should be done separated.
- When performing the Intelligent Key system registration only, the engine cannot be started by inserting the key into the key slot. When performing the IVIS (NATS) registration only, the engine cannot be started by the operation when carrying the key. The registrations of both systems should be performed.

SECURITY INDICATOR

- Warn the outside that the vehicle is the model with IVIS (NATS).
- The security indicator always blinks when the Intelligent Key is removed from the key slot and when the ignition switch is in LOCK position.

NOTE:
Because security indicator is highly efficient, the battery is barely affected.

Operation Description

NIS0020E

SYSTEM DIAGRAM

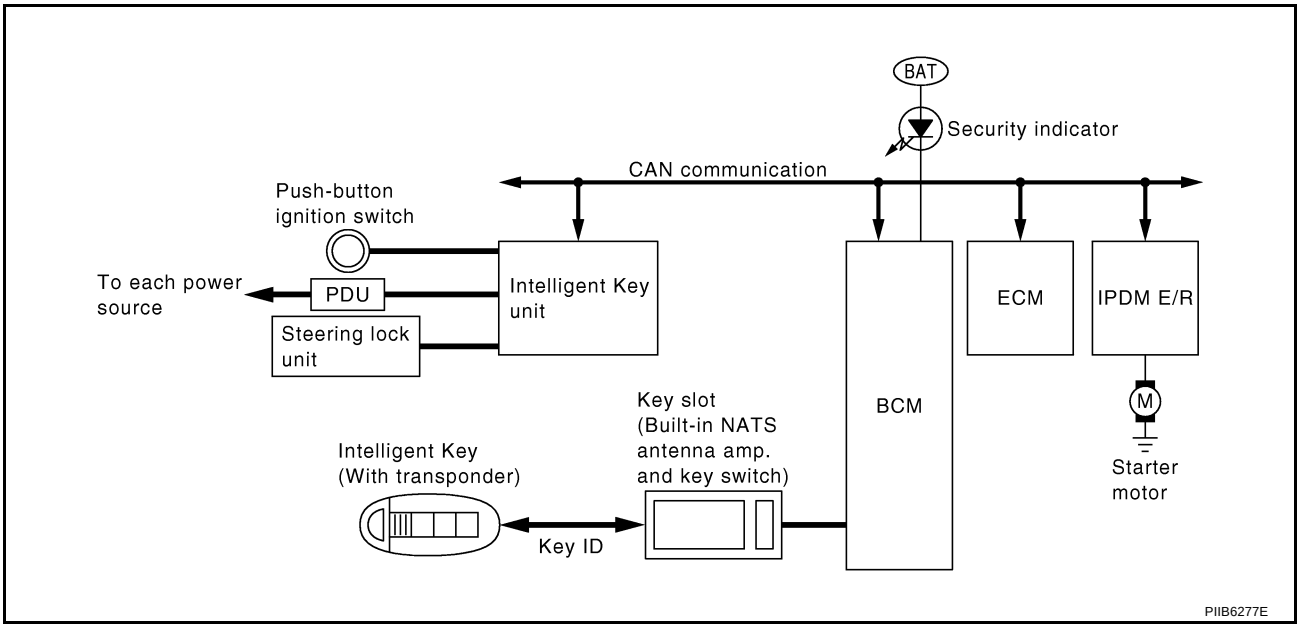

OPERATION WHEN INSERTING TO KEY SLOT

1. When inserting the Intelligent Key (with transponder) into the key slot, the key switch in the key slot turns ON, and then it is detected that the Intelligent Key is inserted.
2. When pressing the push-button ignition switch at that time, BCM starts the IVIS (NATS) antenna amplifier integrated with the key slot and starts the IVIS (NATS) ID communication with the transponder integrated with the Intelligent Key.
3. BCM sends the IVIS (NATS) ID verification result to ECM via CAN communication and performs the ID verification.
4. If the IVIS (NATS) ID verification result is OK, BCM sends the key ID verification OK signal to Intelligent Key unit via CAN communication line.
5. The Intelligent Key unit sends the steering unlock signal to the steering lock unit when receiving the signal. Then, it sends each power supply request signal to PDU (Power Distribution Unit) after unlocking the steering lock.
6. If the Intelligent Key unit judges that the engine start condition is satisfied, it sends the starter request signal via CAN communication to IPDM E/R and turns the starter motor relay ON.
7. The steering lock unit unlocks the latch when receiving the signal. PDU starts the power distribution according to the power supply position when receiving the signal.

NOTE:
If it is not in the engine start condition*, the starter motor relay is turned OFF. Therefore, the engine cannot be started and the power distributions of ACC, ON, and LOCK are performed only according to the push-button ignition switch operation.
*: For the engine start condition, refer to BL-251, "PUSH-BUTTON IGNITION SWITCH OPERATION PROCEDURE" .

OPERATION WHEN INTELLIGENT KEY IS CARRIED

By carrying the Intelligent Key, the engine start/stop operation can be performed only when pushing the push-button ignition switch.
For the details of the function, refer to BL-127, "INTELLIGENT KEY SYSTEM/ENGINE START FUNCTION" .

PUSH-BUTTON IGNITION SWITCH OPERATION PROCEDURE

The power supply position changing operation can be performed with the following operation.

NOTE:
- When an Intelligent Key is carried and when it is inserted to the key slot, the following operation is the same.
- When starting the engine, the Intelligent Key unit monitors the engine start conditions (brake pedal operation, A/T selector lever position, vehicle speed, and steering lock condition).

- Unless each start condition is fulfilled, the engine will not response regardless of how many times the push-button ignition switch is pushed. At that time, illumination repeats the position in the order of LOCK → ACC → ON → LOCK.

Power supply position	Engine start/stop condition		Engine switch operation frequency
	Brake pedal	A/T selector lever position	
LOCK → ACC	Not depressed (When A/T selector lever is in any position other than P or N, there will be no effect even if it is depressed.)	Any position other than P or N (When the brake pedal is not depressed, there will be no effect even if the A/T selector lever is in P or N position.)	1
LOCK → ACC → ON	Not depressed (When A/T selector lever is in any position other than P or N, there will be no effect even if it is depressed.)	Any position other than P or N (When the brake pedal is not depressed, there will be no effect even if the A/T selector lever is in P or N position.)	2
LOCK → ACC → ON → LOCK	Not depressed (When A/T selector lever is in any position other than P or N, there will be no effect even if it is depressed.)	Any position other than P or N (When the brake pedal is not depressed, there will be no effect even if the A/T selector lever is in P or N position.)	3
LOCK → START ACC → START ON → START (Engine start)	Depressed	P or N position (*1)	1 [If the switch is pushed once, the engine starts from any power supply position (LOCK, ACC, and ON)]
Engine start condition → LOCK (Engine stop)	—	P position	1
Engine start condition → ACC (Engine stop)	—	Any position other than P (*2)	1
Engine stall return operation while driving	—	N position	1

*1: When the A/T selector lever position is N position, the engine start condition is different according to the vehicle speed.

- At vehicle speed of 5 km/h or less, the engine can start only when the brake pedal is depressed.
- At vehicle speed of 5 km/h or more, the engine can start even if the brake pedal is not depressed. (It is the same as “Engine stall return operation while driving”.)

*2: When the A/T selector lever position is in any position other than P position and when the vehicle speed is 5 km/h or more, the engine stop condition is different.

- Press and hold the push-button ignition switch for 2 seconds or more. (When the push-button ignition switch is pressed for too short a time, the operation may be invalid, so properly press and hold to prevent the incorrect operation.)
- Press the push-button ignition switch 3 times within 1.5 seconds. (Emergency stop operation)

ECM Re-Communicating Function

NIS0020F

Performing following procedure can automatically perform re-communication of ECM and BCM or Intelligent Key unit, but only when the ECM has been replaced with a new one (*1).
*1: New one means a virgin ECM which has never been energized on-board.
(In this step, initialization procedure by CONSULT-II is not necessary)

NOTE:

- **When registering new Key IDs or replacing the ECM other than brand new, refer to CONSULT-II Operation Manual NATS-IVIS/NVIS.**
- **If multiple keys are attached to the key holder, separate them before work.**
- **Distinguish keys with unregistered key ID from those with registered ID.**

1. Install ECM.
2. Insert the registered Intelligent Key (*2), turn ignition switch to “ON”.
   *2: To perform this step, use the key that has been used before performing ECM replacement.
3. Maintain ignition switch in “ON” position for at least 5 seconds.
4. Turn ignition switch to “OFF”.

5. Start engine.
   If engine can be started, procedure is completed.
   If engine cannot be started, refer to CONSULT-II Operation Manual NATS-IVIS/NVIS and initialize control unit.

Schematic

NIS0020G

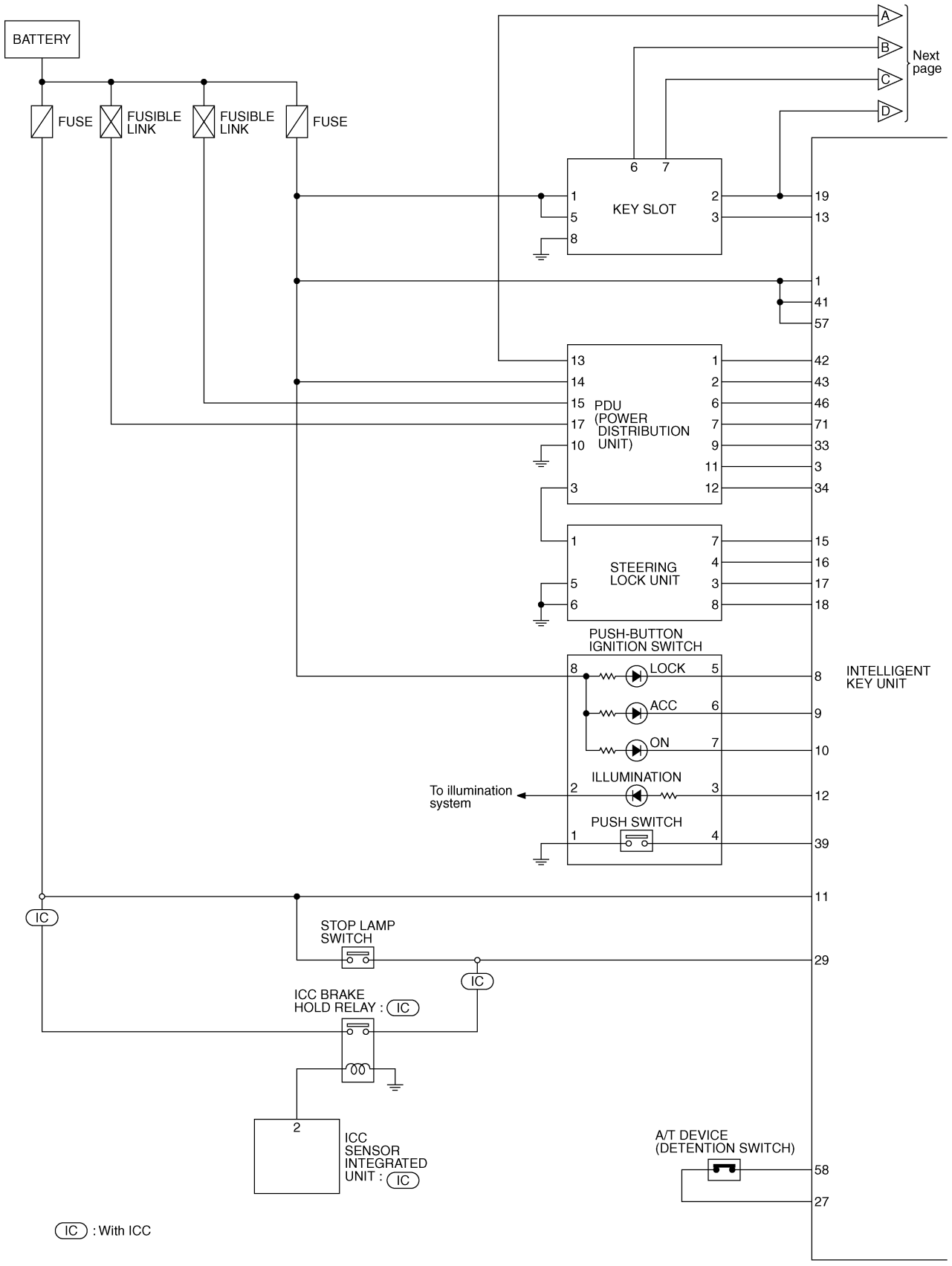

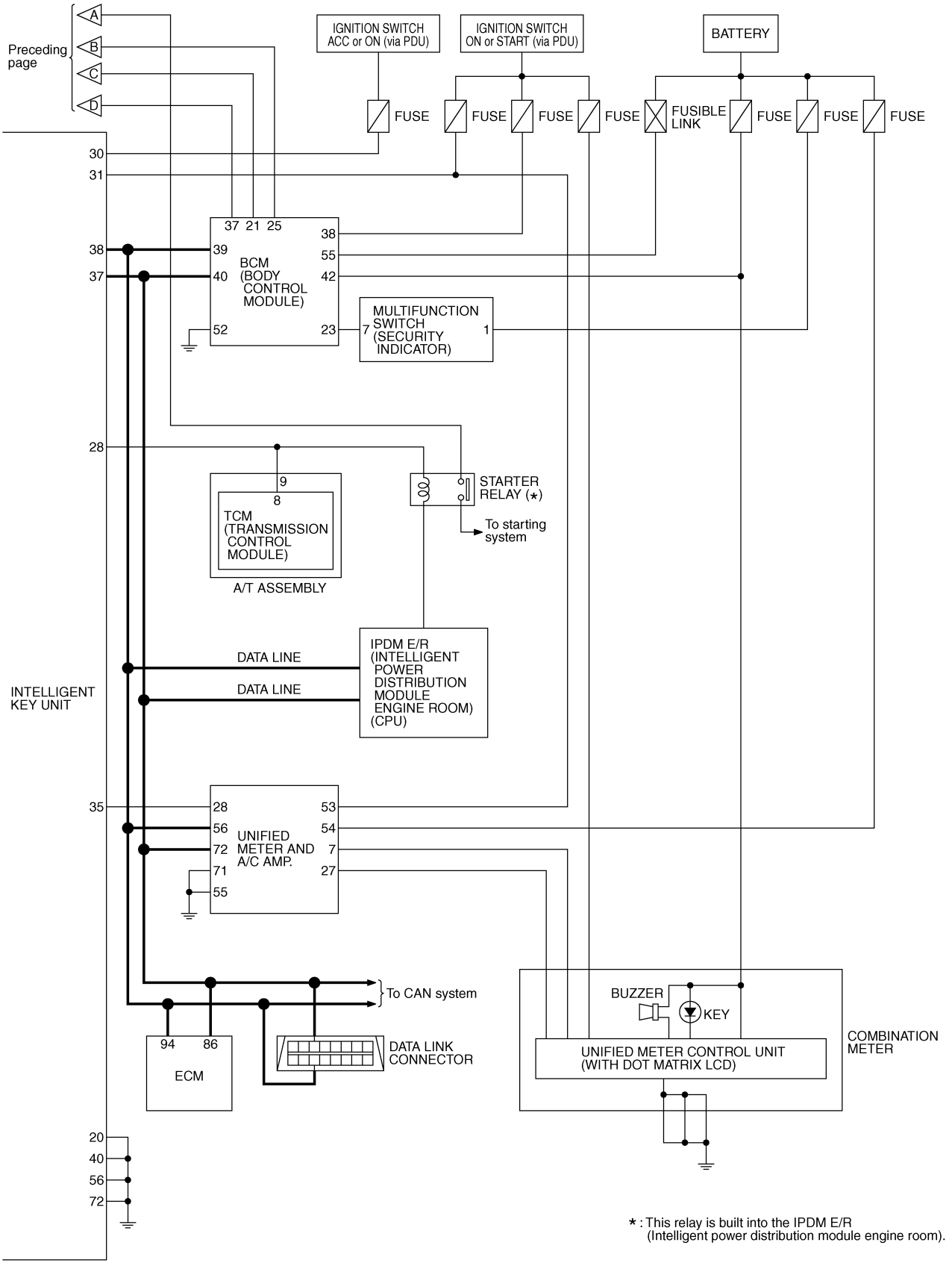
Preceding page
A
B
C
D
IGNITION SWITCH ACC or ON (via PDU)
IGNITION SWITCH ON or START (via PDU)
BATTERY
FUSE
FUSE
FUSE
FUSE
FUSIBLE LINK
FUSE
FUSE
FUSE
30
31
37 21 25
38
39
40
52
38
55
42
23
BCM (BODY CONTROL MODULE)
38
37
MULTIFUNCTION SWITCH (SECURITY INDICATOR)
7
1
28
9
8
TCM (TRANSMISSION CONTROL MODULE)
A/T ASSEMBLY
STARTER RELAY (*)
To starting system
DATA LINE
DATA LINE
IPDM E/R (INTELLIGENT POWER DISTRIBUTION MODULE ENGINE ROOM) (CPU)
INTELLIGENT KEY UNIT
35
28
56
72
71
55
53
54
7
27
UNIFIED METER AND A/C AMP.
To CAN system
94
86
ECM
DATA LINK CONNECTOR
BUZZER
KEY
UNIFIED METER CONTROL UNIT (WITH DOT MATRIX LCD)
COMBINATION METER
20
40
56
72
* : This relay is built into the IPDM E/R (Intelligent power distribution module engine room).

TIWT1323E

Wiring Diagram — NATS —

NIS0020H

BL-NATS-01

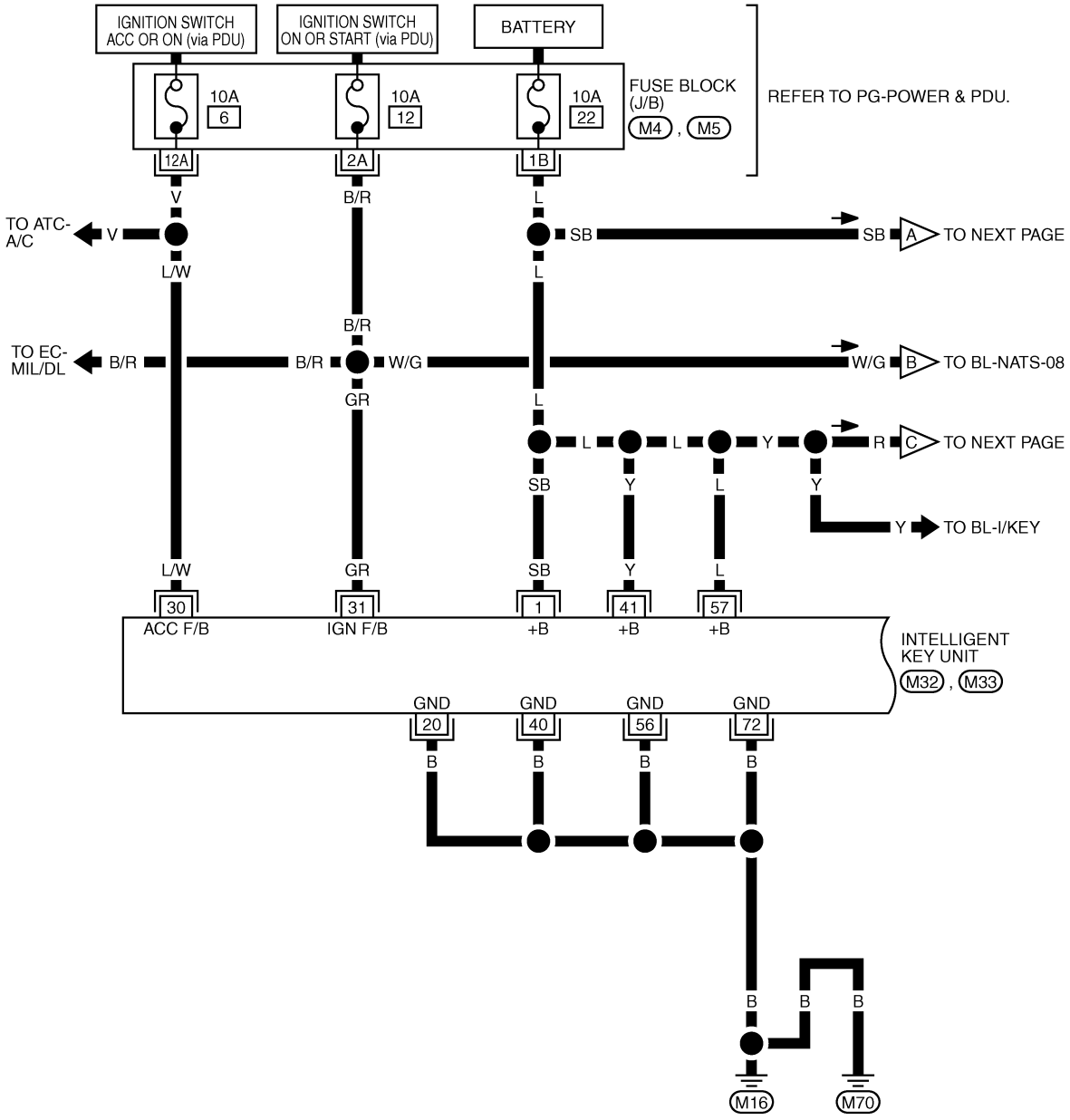

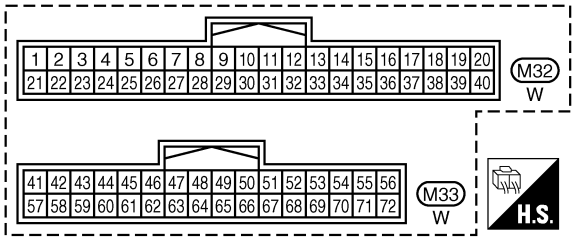

REFER TO THE FOLLOWING.
M4 , M5 -FUSE BLOCK-JUNCTION BOX (J/B)

TIWT1324E

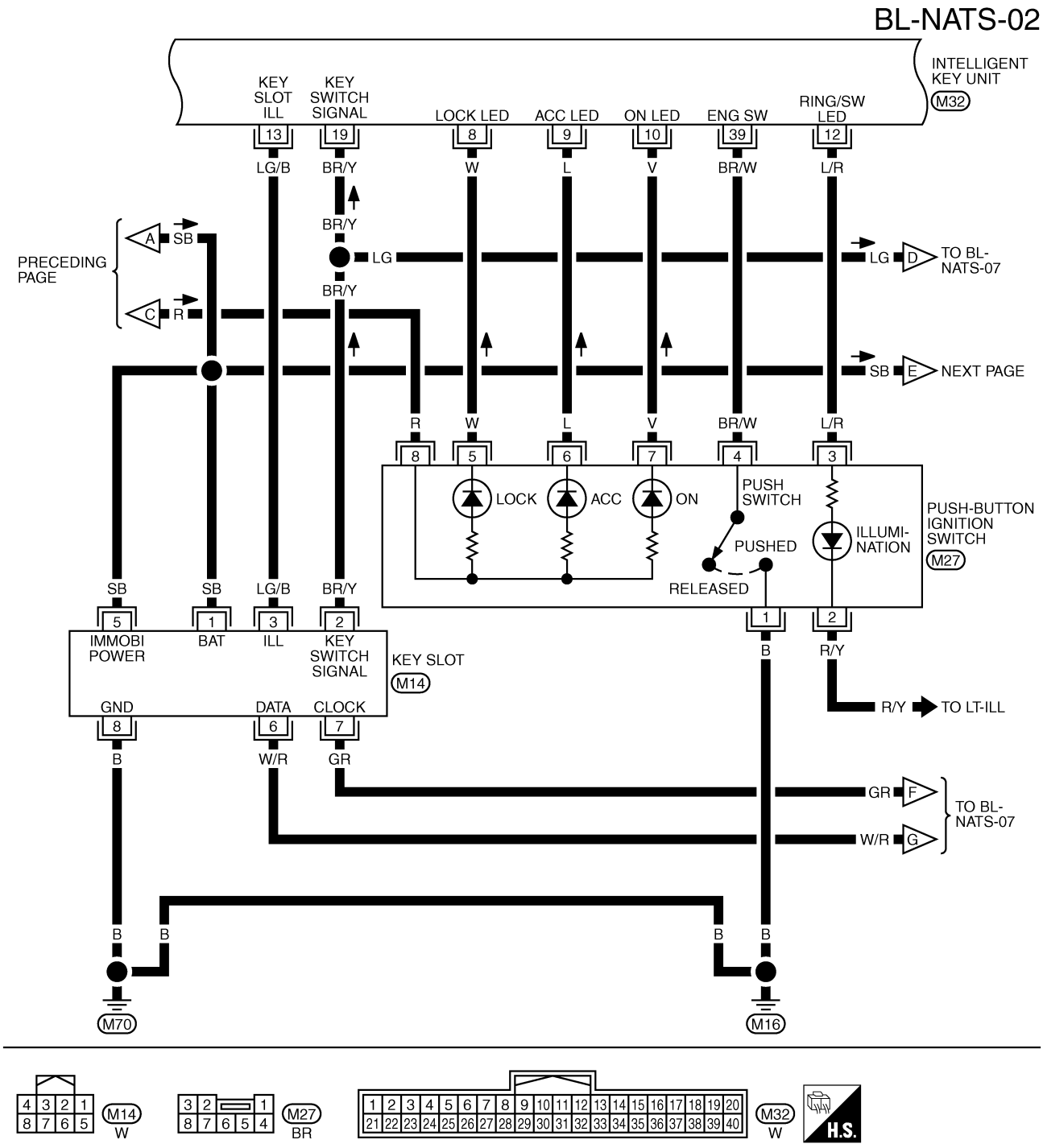
BL-NATS-02
INTELLIGENT KEY UNIT
M32
KEY SLOT ILL
KEY SWITCH SIGNAL
LOCK LED
ACC LED
ON LED
ENG SW
RING/SW LED
13
19
8
9
10
39
12
LG/B
BR/Y
W
L
V
BR/W
L/R
PRECEDING PAGE
A
SB
C
R
LG
D
TO BL-NATS-07
E
NEXT PAGE
LOCK
ACC
ON
PUSH SWITCH
PUSHED
RELEASED
ILLUMI-NATION
PUSH-BUTTON IGNITION SWITCH
M27
IMMOBI POWER
BAT
ILL
KEY SWITCH SIGNAL
KEY SLOT
M14
GND
DATA
CLOCK
B
W/R
GR
R/Y
TO LT-ILL
F
G
TO BL-NATS-07
M70
M16

M14
W
M27
BR
M32
W
H.S.

TIWT1325E

BL-NATS-03

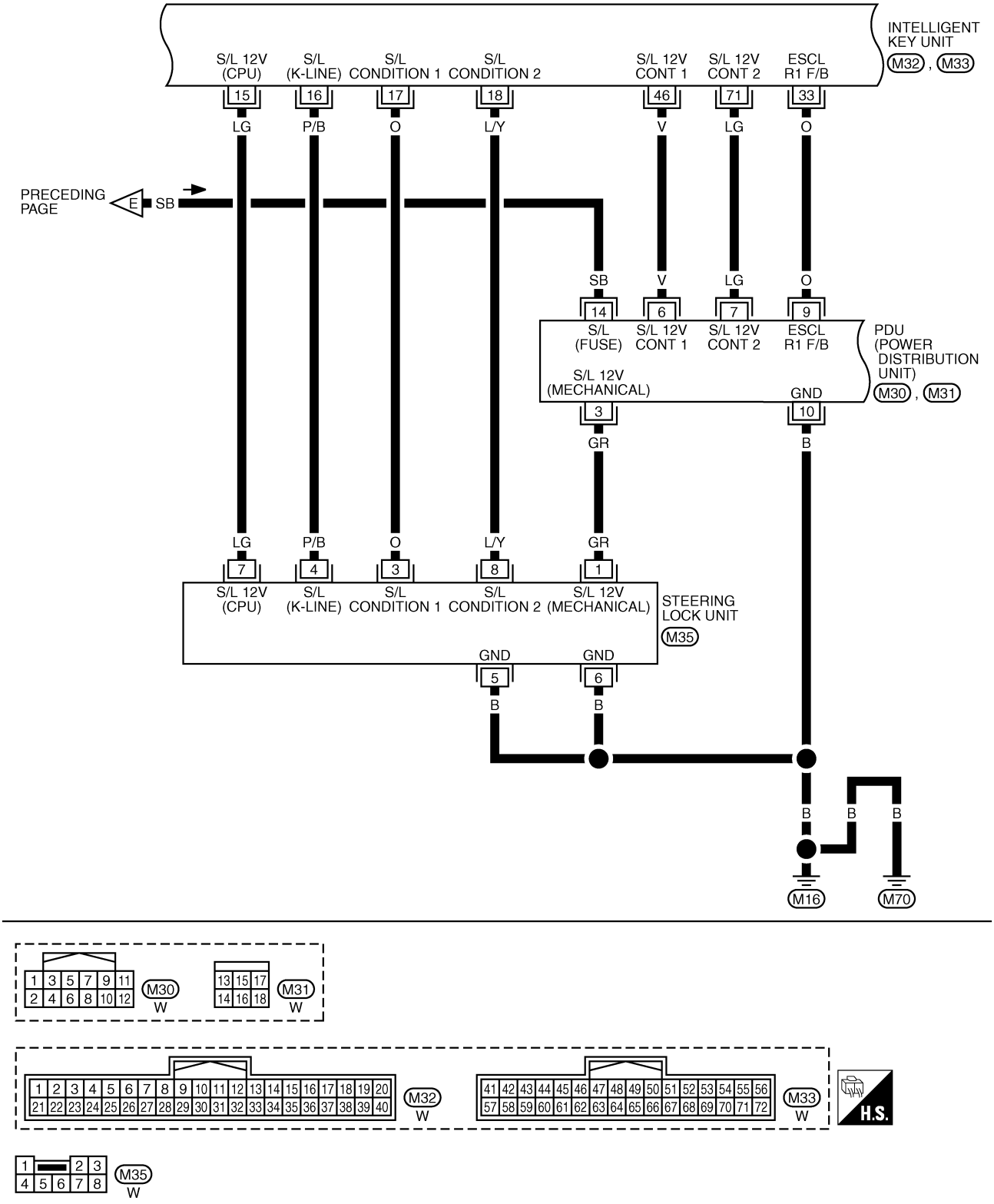
INTELLIGENT KEY UNIT
M32, M33
S/L 12V (CPU)
S/L (K-LINE)
S/L CONDITION 1
S/L CONDITION 2
S/L 12V CONT 1
S/L 12V CONT 2
ESCL R1 F/B
15
16
17
18
46
71
33
LG
P/B
O
L/Y
V
LG
O
PRECEDING PAGE
E
SB
SB
V
LG
O
14
6
7
9
S/L (FUSE)
S/L 12V CONT 1
S/L 12V CONT 2
ESCL R1 F/B
PDU (POWER DISTRIBUTION UNIT)
M30, M31
S/L 12V (MECHANICAL)
GND
3
10
GR
B
LG
P/B
O
L/Y
GR
7
4
3
8
1
S/L 12V (CPU)
S/L (K-LINE)
S/L CONDITION 1
S/L CONDITION 2
S/L 12V (MECHANICAL)
STEERING LOCK UNIT
M35
GND
GND
5
6
B
B
B
B
B
M16
M70
M30
W
M31
W
M32
W
M33
W
H.S.
M35
W
TIWT1326E

BL-NATS-04

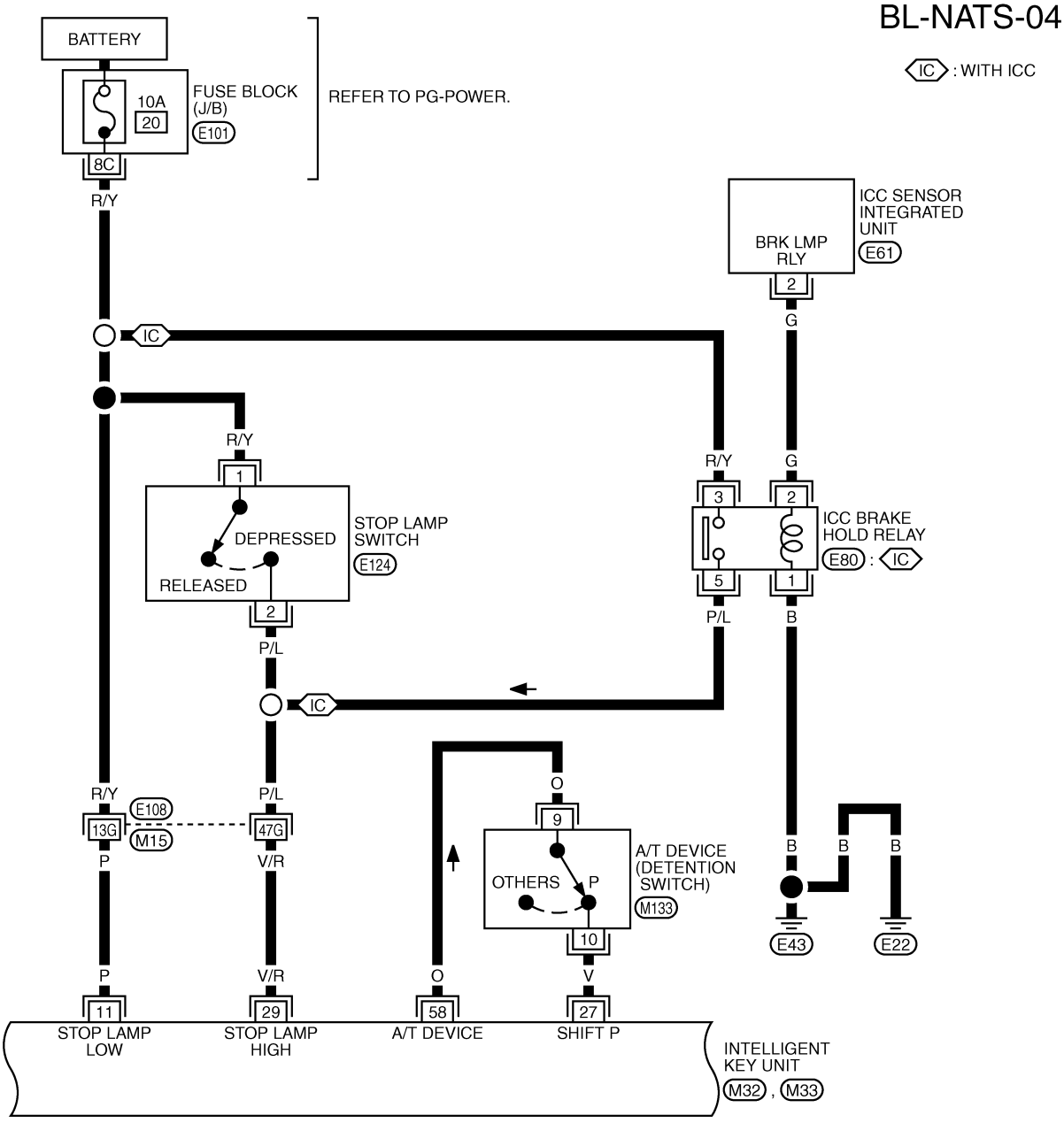

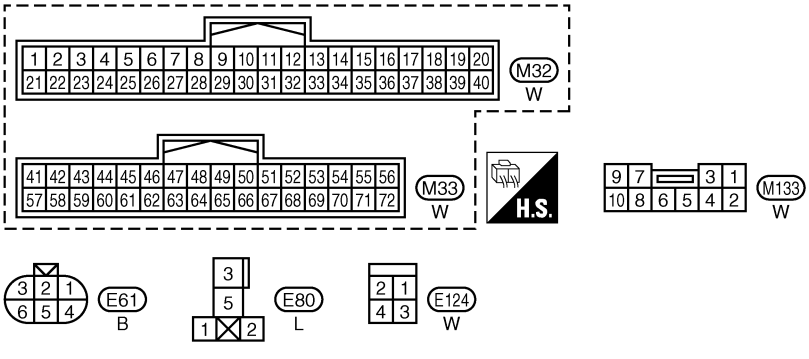

REFER TO THE FOLLOWING.

E108 -SUPER MULTIPLE JUNCTION (SMJ)

E101 -FUSE BLOCK-JUNCTION BOX (J/B)

TIWT1327E

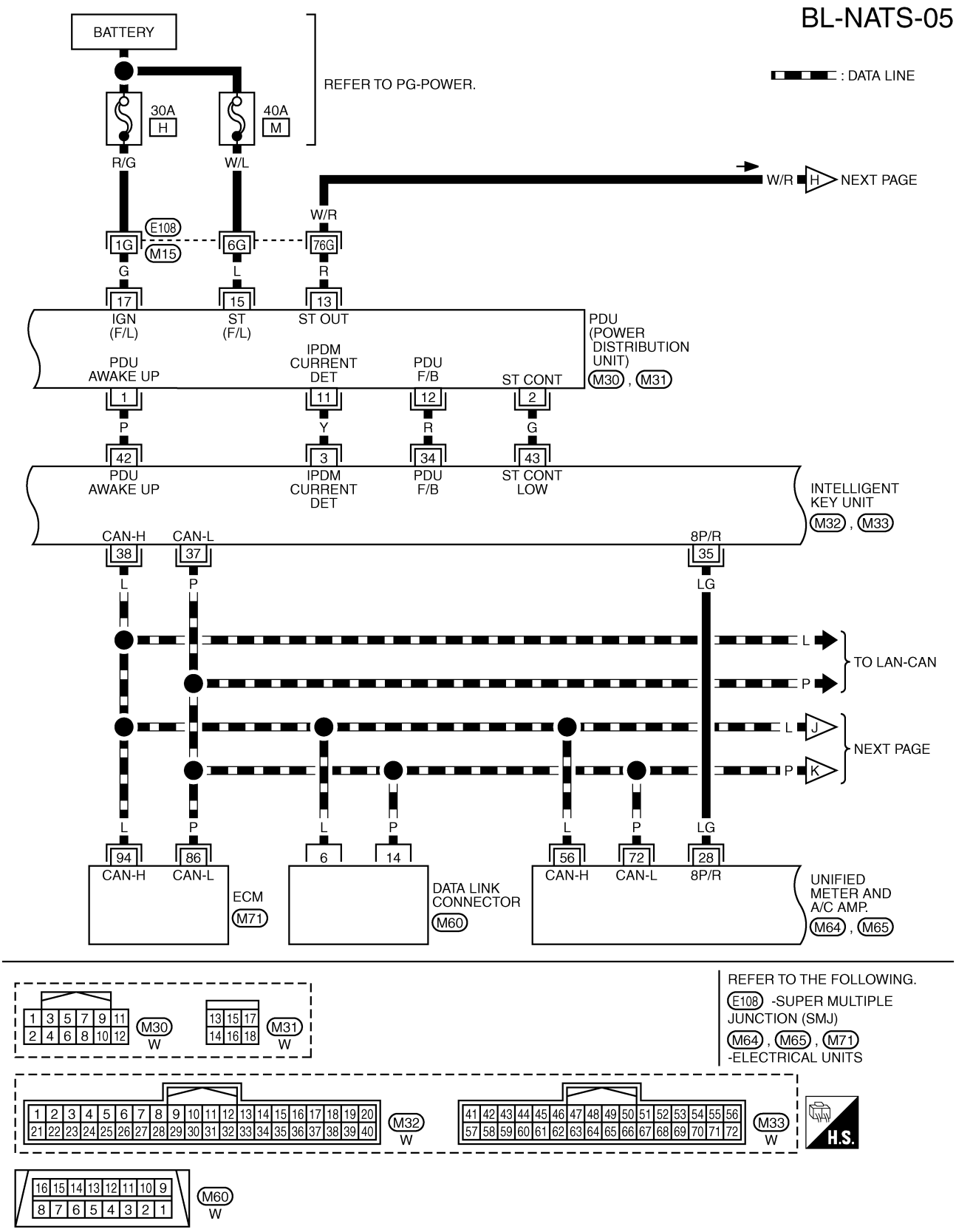
BL-NATS-05
BATTERY
REFER TO PG-POWER.
: DATA LINE
30A
H
40A
M
R/G
W/L
W/R
H
NEXT PAGE
E108
1G
M15
6G
76G
W/R
G
L
R
17
15
13
IGN
(F/L)
ST
(F/L)
ST OUT
PDU
(POWER
DISTRIBUTION
UNIT)
M30 , M31
PDU
AWAKE UP
IPDM
CURRENT
DET
PDU
F/B
ST CONT
1
11
12
2
P
Y
R
G
42
3
34
43
PDU
AWAKE UP
IPDM
CURRENT
DET
PDU
F/B
ST CONT
LOW
INTELLIGENT
KEY UNIT
M32 , M33
CAN-H
CAN-L
8P/R
38
37
35
L
P
LG
L
P
TO LAN-CAN
L
J
P
K
NEXT PAGE
L
P
L
P
L
P
LG
94
86
6
14
56
72
28
CAN-H
CAN-L
ECM
M71
DATA LINK
CONNECTOR
M60
CAN-H
CAN-L
8P/R
UNIFIED
METER AND
A/C AMP.
M64 , M65
M30
W
M31
W
REFER TO THE FOLLOWING.
E108 -SUPER MULTIPLE
JUNCTION (SMJ)
M64 , M65 , M71
-ELECTRICAL UNITS
M32
W
M33
W
H.S.
M60
W
TIWT1328E

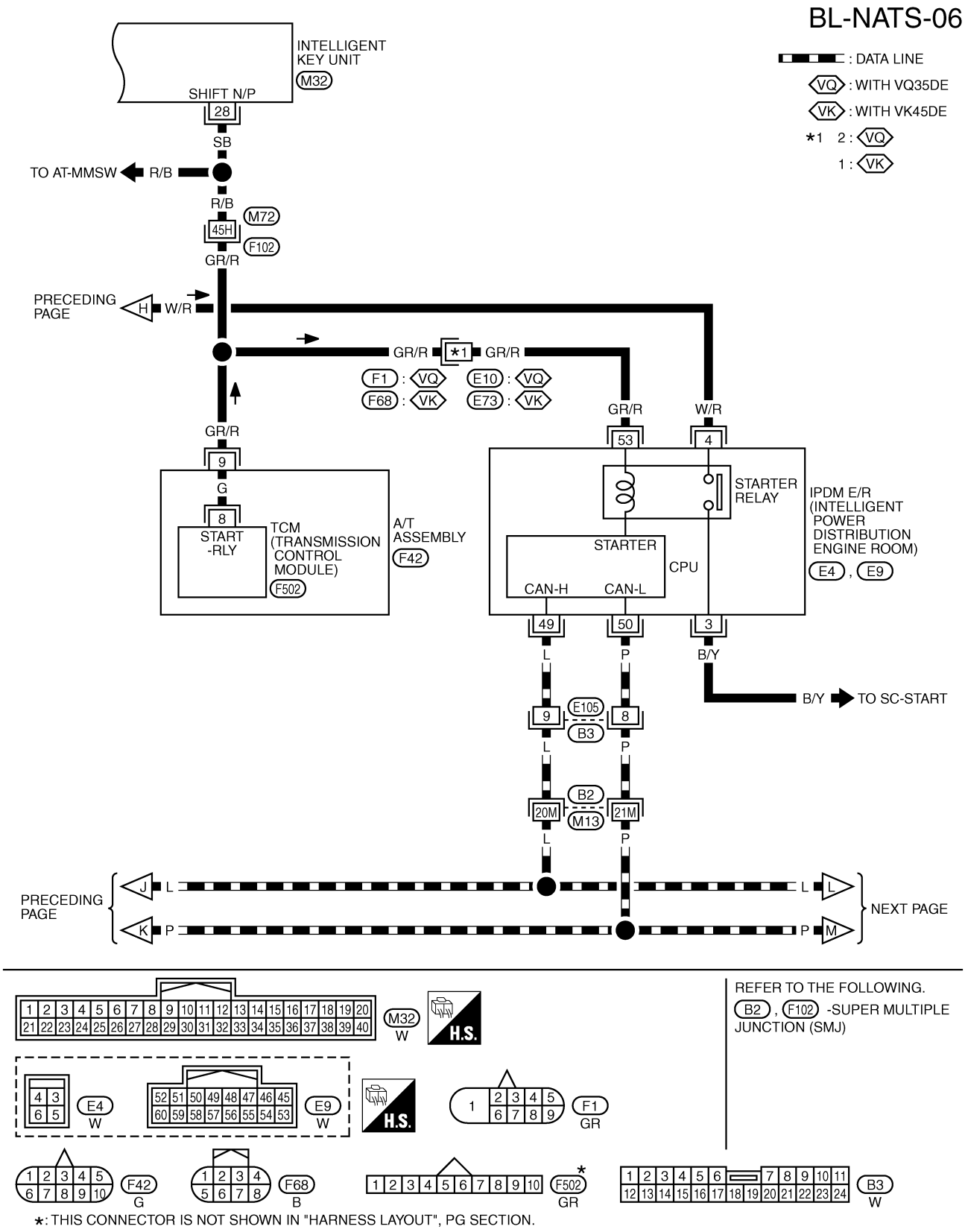
BL-NATS-06
: DATA LINE
VQ : WITH VQ35DE
VK : WITH VK45DE
*1 2 : VQ
1 : VK
INTELLIGENT KEY UNIT
M32
SHIFT N/P
28
SB
TO AT-MMSW
R/B
R/B
M72
45H
F102
GR/R
PRECEDING PAGE
H
W/R
GR/R
*1
GR/R
F1 : VQ
F68 : VK
E10 : VQ
E73 : VK
GR/R
W/R
53
4
GR/R
9
G
8
START -RLY
TCM (TRANSMISSION CONTROL MODULE)
F502
A/T ASSEMBLY
F42
STARTER RELAY
IPDM E/R (INTELLIGENT POWER DISTRIBUTION ENGINE ROOM)
E4 , E9
STARTER
CPU
CAN-H
CAN-L
49
50
3
L
P
B/Y
B/Y
TO SC-START
9
E105
B3
8
L
P
B2
M13
20M
21M
L
P
PRECEDING PAGE
J
L
K
P
L
L
P
M
NEXT PAGE
REFER TO THE FOLLOWING.
B2 , F102 -SUPER MULTIPLE JUNCTION (SMJ)
M32
W
H.S.
E4
W
E9
W
H.S.
F1
GR
F42
G
F68
B
F502
GR
B3
W
*: THIS CONNECTOR IS NOT SHOWN IN "HARNESS LAYOUT", PG SECTION.
TIWT1329E

BL-NATS-07

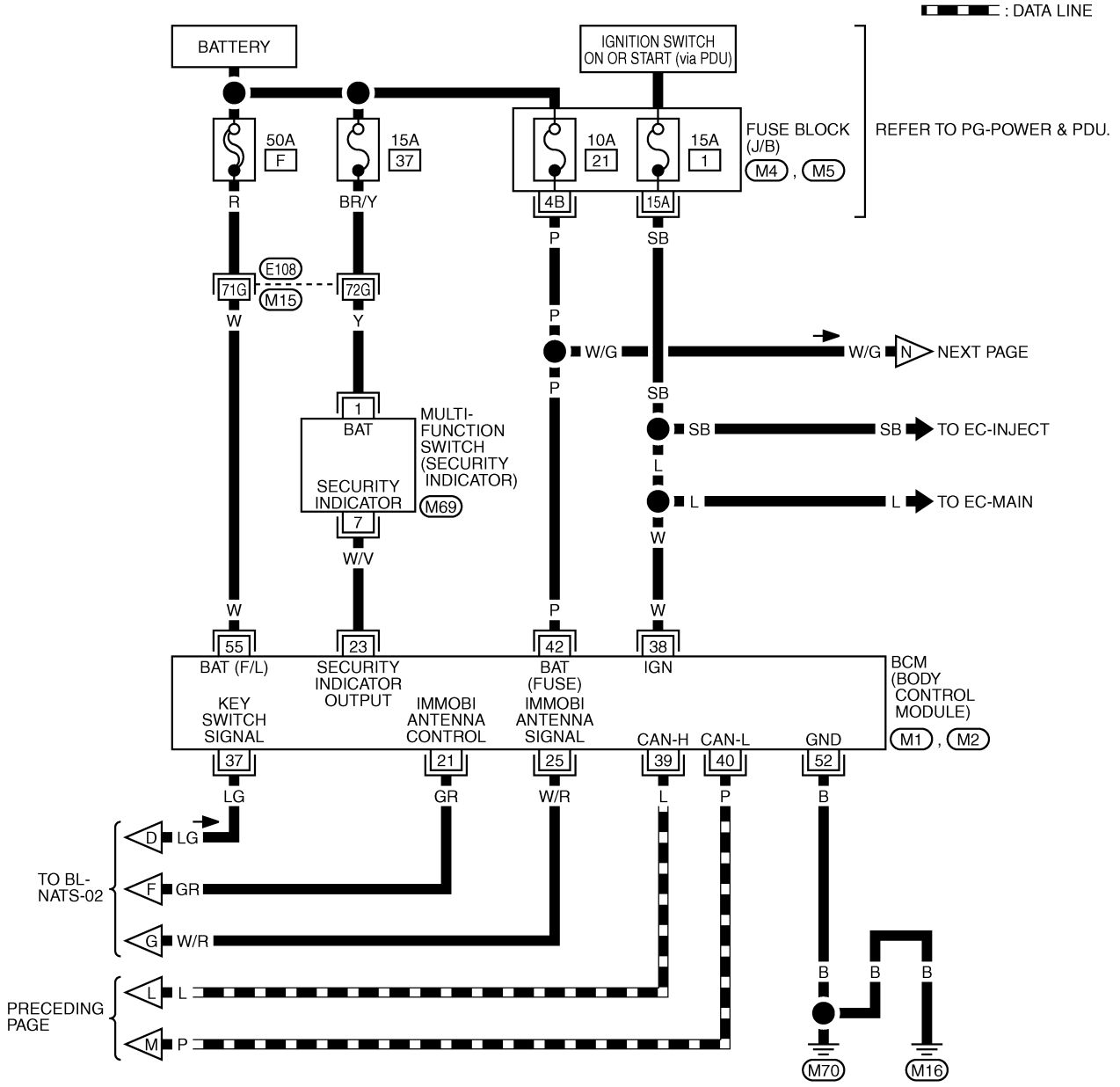

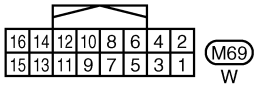

REFER TO THE FOLLOWING.

E108 -SUPER MULTIPLE JUNCTION (SMJ)

M4 , M5 -FUSE BLOCK-JUNCTION BOX (J/B)

M1 , M2 -ELECTRICAL UNITS

TIWT1330E

BL-NATS-08

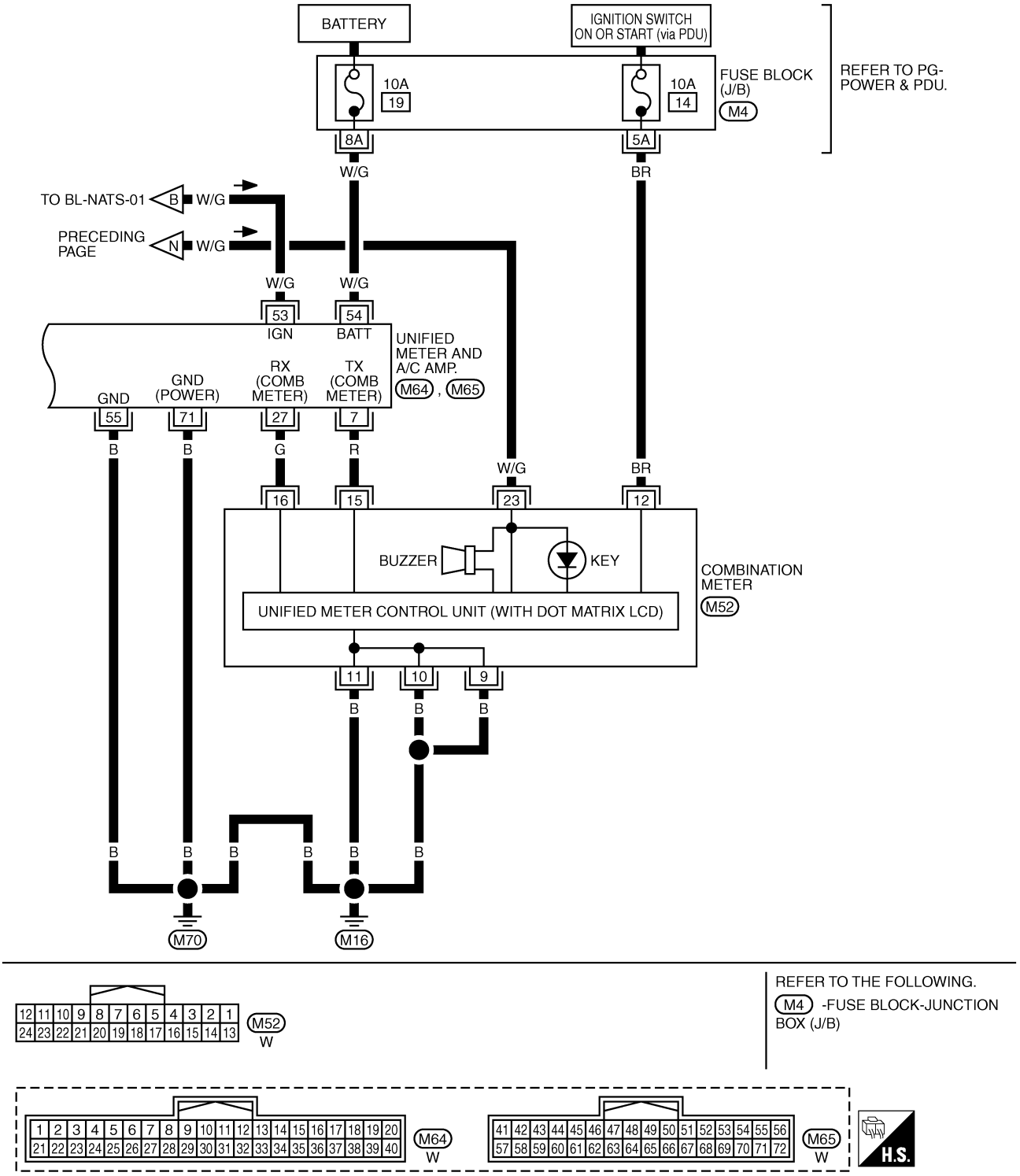

TIWT1331E

Terminals and Reference Value for Intelligent Key Unit

NIS0020I

Terminal No.	Wire color	Item	Condition: Push-button ignition switch position	Condition: Operation or conditions	Voltage (V) (Approx.)
1	SB	Power source (fuse)	—	—	Battery voltage
3	Y	IPDM E/R current signal	START	At starter motor cranking	5
			LOCK	Any condition other than above	2
8	W	Push-button ignition switch LOCK indicator	LOCK	Power supply position is in LOCK position	0
			—	Power supply position is in any position other than LOCK	1.2
9	L	Push-button ignition switch ACC indicator	ACC	Power supply position is in ACC position	0
			—	Power supply position is in any position other than ACC	1.2
10	V	Push-button ignition switch ON indicator	ON	Power supply position is in ON position	0
			—	Power supply position is in any position other than ON	1.2
11	P	Stop lamp switch	—	Brake pedal depressed	Battery voltage
				Brake pedal released	Battery voltage
12	L/R	Push-button ignition switch illumination	—	Push-button ignition switch illumination is turned on	2.6
				Push-button ignition switch illumination is turned off (15 seconds or more after the driver door is closed)	0
13	LG/B	Key slot illumination	LOCK	Driver door is opened under the condition that the Intelligent Key is inserted into the key slot	0 → Battery voltage → 0
				Intelligent Key is removed from key slot (when key slot illumination is turned off)	0
15	LG	Steering lock unit power source	LOCK	—	Battery voltage
16	P/B	Steering lock unit signal	LOCK	Steering lock: Lock	Battery voltage
			ACC	Steering lock: Unlock (Unlocked moment)	0
17	O	Steering lock unit condition signal-1	LOCK	Steering lock: Lock	0
			ACC	Steering lock: Unlock	Battery voltage
			ON		Battery voltage
18	L/Y	Steering lock unit condition signal-2	LOCK	Steering lock: Lock	Battery voltage
			ACC	Steering lock: Unlock	0
			ON		0
19	BR/Y	Key switch	LOCK	Intelligent Key is inserted into key slot	Battery voltage
				Intelligent Key is removed from key slot	0
20	B	Ground	—	—	0

Terminal No.	Wire color	Item	Condition: Push-button ignition switch position	Condition: Operation or conditions	Voltage (V) (Approx.)
27	V	A/T device (Detention switch)	LOCK	A/T selector lever is in P position	0
			ON	A/T selector lever is in any position other than P	Battery voltage
28	SB	Starter relay	ON	A/T selector lever is in N or P position	Battery voltage
			—	Power supply position is in LOCK position or A/T selector lever is in any position other than N or P position	0
29	V/R	Stop lamp switch	—	Brake pedal depressed	Battery voltage
				Brake pedal released	0
30	L/W	Ignition power supply (ACC)	ACC	Power supply position is in ACC position	Battery voltage
31	GR	Ignition power supply (ON)	ON	Power supply position is in ON position	Battery voltage
33	O	PDU signal	LOCK	Steering lock: Lock	0
			ACC	Steering lock: Unlock	8
34	R	PDU feed back signal	LOCK	At wake-up (Open driver door)	0
35	LG	Vehicle speed signal	ON	At speedometer operation (vehicle speed approx. 40 km/h)	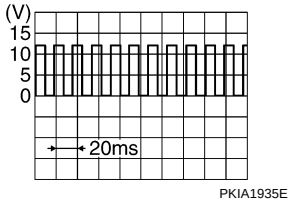
37	P	CAN L	—	—	—
38	L	CAN H	—	—	—
39	BR/W	Push-button ignition switch	—	Push-button ignition switch is pressed	0
				Push-button ignition switch is released	Battery voltage
40	B	Ground	—	—	0
41	Y	Power source (fuse)	—	—	Battery voltage
42	P	PDU wake up signal	LOCK	At sleep (30 seconds or more after all doors are closed under the condition that the power supply position is in the LOCK position)	Battery voltage
			—	At wake-up (Open driver door)	0
43	G	Starter signal	ON	At starter motor cranking	0
			—	Other than above	Battery voltage
46	V	PDU signal	—	Steering lock: Lock	Battery voltage
			LOCK	Steering lock: Unlocked moment	0
56	B	Ground	—	—	0
57	L	Power source (fuse)	—	—	Battery voltage
58	O	A/T device (Detention switch)	LOCK	At sleep (30 seconds or more after all doors are closed under the condition that the power supply position is in the LOCK position)	0
			—	At wake-up (Open driver door)	Battery voltage

Terminal No.	Wire color	Item	Condition		Voltage (V) (Approx.)
			Push-button ignition switch position	Operation or conditions	
71	LG	PDU signal	LOCK	Steering lock: Lock	Battery voltage
			ACC	Steering lock: Unlocked moment	0
72	B	Ground	—	—	0

Terminals and Reference Value for Steering Lock Unit

NIS0020J

Terminal No.	Wire color	Item	Condition		Voltage (V) (Approx.)
			Push-button ignition switch position	Operation or conditions	
1	GR	PDU signal	LOCK	Press push-button ignition switch with Intelligent Key inside vehicle	0 → Battery voltage → 0 (Battery voltage is detected when pressing the push-button ignition switch)
3	O	Condition signal-1	LOCK	Steering lock: Lock	0
			ACC	Steering lock: Unlock	Battery voltage
			ON		Battery voltage
4	P/B	Intelligent Key unit signal	LOCK	Steering lock: Lock	Battery voltage
			ACC	Steering lock: Unlock	0
			ON		0
5	B	Ground	—	—	0
6	B	Ground	—	—	0
7	LG	Power source	—	—	Battery voltage
8	L/Y	Condition signal-2	LOCK	Steering lock: Lock	Battery voltage
			ACC	Steering lock: Unlock	0
			ON		0

Terminals and Reference Value for BCM

NIS0020K

Terminal No.	Wire color	Item	Condition		Voltage (V) (Approx.)
			Push-button ignition switch position	Operation or conditions	
21	GR	NATS antenna amp. (Built-in key slot)	LOCK	Ignition switch is pressed while inserting the Intelligent Key into the key slot	Just after pressing ignition switch. Pointer of tester should move
23	W/V	Security indicator	LOCK	Intelligent Key is removed from key slot and power supply position is in LOCK position	Battery voltage → 0 (Every 2.4 seconds)
25	W/R	NATS antenna amp. (Built-in key slot)	LOCK	Ignition switch is pressed while inserting the Intelligent Key into the key slot	Just after pressing ignition switch. Pointer of tester should move
37	LG	Key slot (Key switch signal)	LOCK	Intelligent Key is removed from key slot	0
				Intelligent Key is inserted into key slot	Battery voltage

Terminal No.	Wire color	Item	Condition		Voltage (V) (Approx.)
			Push-button ignition switch position	Operation or conditions	
38	W	Ignition power supply (ON or START)	ON	Power supply position is in ON position	Battery voltage
39	L	CAN H	—	—	—
40	P	CAN L	—	—	—
42	P	Power source (fuse)	—	—	Battery voltage
52	B	Ground	—	—	0
55	W	Power source (Fusible link)	—	—	Battery voltage

Terminals and Reference Value for IPDM E/R

NIS0020L

Terminal No.	Wire Color	Item	Condition		Voltage (V) (Approx.)
			Push-button ignition switch position	Operation or conditions	
4	W/R	Starter motor power supply	LOCK	—	0
			START	Starter motor is activating	Battery voltage
49	L	CAN H	—	—	—
50	P	CAN L	—	—	—
53	GR/R	A/T Shift position signal	ON	A/T shift position is P/ N position	Battery voltage
			LOCK	Other than above	0

Terminals and Reference Value for PDU

NIS0020M

Terminal No.	Wire color	Item	Condition		Voltage (V) (Approx.)
			Push-button ignition switch position	Operation or conditions	
1	P	Wake up signal	LOCK	Sleep condition (30 seconds or more after all doors are closed under the condition that the power supply position is in the LOCK position)	Battery voltage
			—	Wake-up condition (Open driver door)	0
2	G	Starter control signal	ON	At starter motor cranking	0
			—	Any condition other than above	Battery voltage
3	GR	Steering lock unit power source	LOCK	Push-button ignition switch is pressed under the condition that Intelligent Key is in the vehicle or Intelligent Key is inserted	0 → Battery voltage → 0
			—	Any condition other than above	0

Terminal No.	Wire color	Item	Condition		Voltage (V) (Approx.)
			Push-button ignition switch position	Operation or conditions	
6	V	Steering lock control signal-1	—	Push-button ignition switch is pressed under the condition that Intelligent Key is in the vehicle or Intelligent Key is inserted	Battery voltage
			LOCK	Power supply position is in LOCK position (Steering lock activated)	Battery voltage → 0 → Battery voltage (Battery voltage is detected when activating the steering lock)
7	LG	Steering lock control signal-2	—	Push-button ignition switch is pressed under the condition that Intelligent Key is in the vehicle or Intelligent Key is inserted	Battery voltage
			LOCK	Power supply position is in LOCK position (Steering lock activated)	Battery voltage → 0 → Battery voltage (Battery voltage is detected when activating the steering lock)
9	O	Steering lock feed back signal	—	Power supply position is in ACC or ON position	0
			LOCK	Power supply position is in LOCK position	0 → 8 → 0 (0V is detected when activating the steering lock)
10	B	Ground	—	—	0
11	Y	IPDM E/R current signal	START	At starter motor cranking	5
			LOCK	Any condition other than above	2
12	R	Feed back signal	LOCK	Sleep condition (30 seconds or more after all doors are closed under the condition that the power supply position is in the LOCK position)	1
			—	Wake-up condition (any condition other than above)	0
13	R	Starter relay	START	At starter motor cranking	Battery voltage
			—	Any condition other than above	4
14	SB	Power source (fuse)	—	—	Battery voltage
15	L	Power source (fusible link)	—	—	Battery voltage
17	G	Power source (fusible link)	—	—	Battery voltage

CONSULT-II

NIS0020N

CONSULT-II INSPECTION PROCEDURE

1. Turn ignition switch OFF.
2. Insert IVIS (NATS) program card into CONSULT-II.

   Program card : NATS (AEN04D)

3. Connect CONSULT-II and CONSULT-II CONVERTER to data link connector (1).

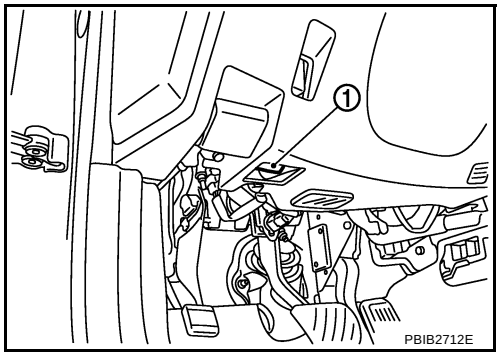

4. Turn ignition switch ON.
5. Touch “START”.

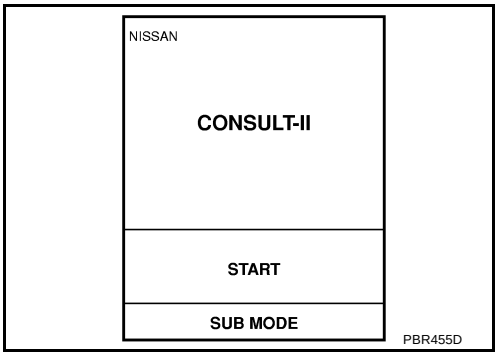

6. Touch “OTHER”.

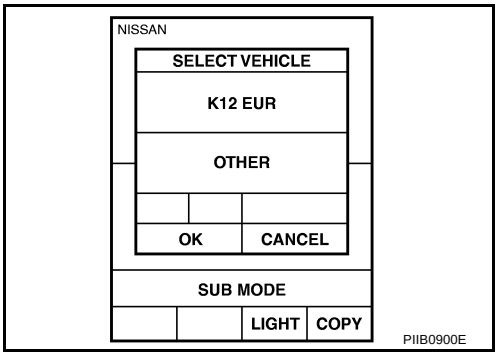

7. Select “NATS V.5.0”.
   If “NATS V5.0” is not indicated, go to GI-40, "CONSULT-II Data Link Connector (DLC) Circuit" .

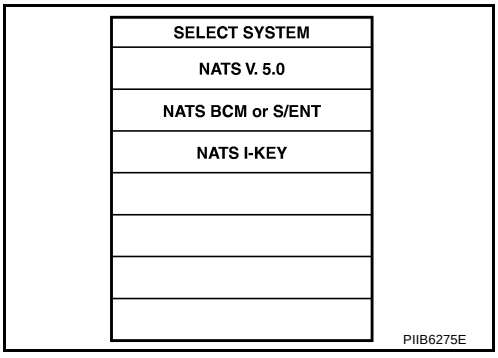

8. Perform each diagnostic test mode according to each service procedure.

For further information, see the CONSULT-II Operation Manual NATS-IVIS/NVIS.

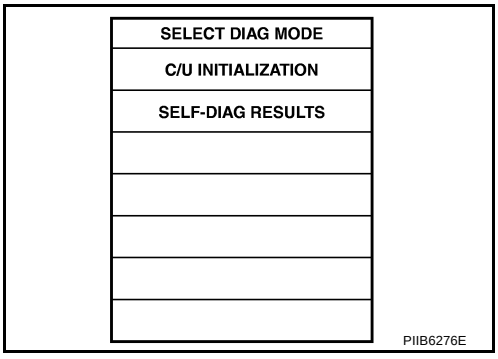

CONSULT-II DIAGNOSTIC TEST MODE FUNCTION

System	Diagnosis mode	Description	Reference page
NATS V5.0	C/U INTIALIZATION	Perform registration again after repair, part replacement, and additional key ID registration. **CAUTION:** **"Control Unit Initialization" is activated only after performing "Release steering lock".**	Refer to the Technical Bulletin.
	SELF-DIAG RESULTS	● Malfunctioning system stored in the ECM is displayed. ● Printing the contents ● Erasing the error record	BL-271
NATS BCM or S/ENT	PIN READ	The specified numbers of each control unit for acquisition of password for control unit initialization are displayed	Refer to the Technical Bulletin.
	STEERING LOCK RELEASE	If the engine switch cannot be operated (the steering lock cannot be released), release the steering lock forcibly and make the engine switch operation possible. **CAUTION:** **Always perform "Control Unit Initialization" and "Immobilizer ID Registration" after performing "Release Steering Lock".**	Refer to the Technical Bulletin.
	SELF-DIAG RESULTS	● Malfunctioning system stored in the BCM is displayed. ● Printing the contents ● Erasing the error record	BL-271
NATS I-KEY	SELF-DIAG RESULTS	● Malfunctioning system stored in the Intelligent Key unit is displayed. ● Printing the contents ● Erasing the error record	BL-272

NOTE:

- When any initialization is performed, all ID previously registered will be erased and all NATS ignition keys must be registered again.
- The engine cannot be started with an unregistered key. In this case, the system will show "DIFFERENCE OF KEY" or "LOCK MODE" as a self-diagnostic result on the CONSULT-II screen.
- In rare case, "CHAIN OF ECM-IMMU" might be stored as a self-diagnostic result during key registration procedure, even if the system is not malfunctioning.

HOW TO READ SELF-DIAGNOSTIC RESULTS

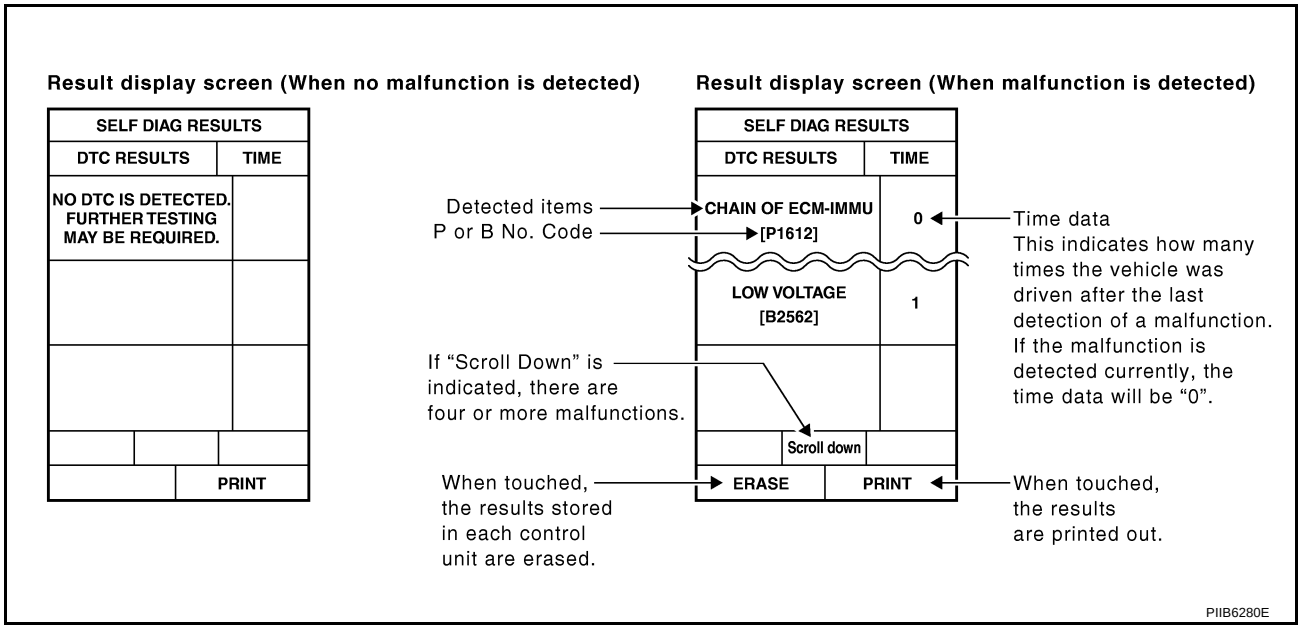

"NATS V5.0" SELF-DIAGNOSTIC RESULTS ITEM CHART

Suspect Systems	Description	Possible malfunction	Action to take/Reference page
NO DTC	NO DTC	—	—
DON'T ERASE BEFORE CHECKING ENG DIAG	There is the engine trouble diagnosis information in ECM (ECM trouble diagnosis is necessary separately)	Engine control system malfunction	There is the engine trouble diagnosis information in ECM. Check the trouble diagnostic results of "ENGINE" before that.
LOCK MODE [P1610]	The immobilizer switches to the mode that prevents the engine from being started. If the ID verification between BCM and ECM is NG, the ID verification malfunction between remote control starter and BCM may be detected 5 times or more.	—	When "LOCK MODE" is displayed, check for any other displayed malfunction, and then erase the self-diagnostic results after replacement.
ID DISCORD, IMM-ECM [P1611]	The ID verification results between BCM and ECM are NG. The registration is necessary.	Registration of ECM is not completed	BL-280
		ECM malfunction	Replace ECM.
CHAIN OF ECM-IMMU [P1612]	Inactive communication between ECM and BCM	Open circuit in battery power supply line of BCM	BL-278
		Open circuit in ignition power supply line of BCM	
		Open circuit in ground of BCM	
		Short circuit in communication line between BCM and ECM to power supply line	
		Open circuit in communication line between BCM and ECM	
		Short circuit in communication line between BCM and ECM to ground	
		ECM malfunction	
		BCM malfunction	
CHAIN OF IMMU-KEY [P1614]	BCM malfunction	BCM malfunction	BCS-17

"NATS BCM OR S/ENT" SELF-DIAGNOSTIC RESULTS ITEM CHART

Suspect Systems	Description	Possible malfunction	Action to take/Reference page
NO DTC	NO DTC	—	—
ID DISCORD BCM-ECM [B2192]	The ID verification results between BCM and ECM are NG. The registration is necessary.	Registration of ECM is not completed	Perform "Control Unit Initialization", and then perform the ID registration. Refer to the Technical Bulletin.
		ECM malfunction	Replace ECM.
CHAIN OF BCM-ECM [B2193]	Inactive communication between ECM and BCM	Short circuit in communication line between BCM and ECM to power supply line	Malfunction have occurred in CAN communication Check "Self-diagnostic Results" of "Intelligent Key" using CONSULT-II. Refer to BL-152, "SELF-DIAGNOSTIC RESULTS" .
		Open circuit in communication line between BCM and ECM	
		Short circuit in communication line between BCM and ECM to ground	
		ECM malfunction	Replace ECM.

Suspect Systems	Description	Possible malfunction	Action to take/Reference page
DISCORD BCM-I-KEY [B2194]	The ID verification results between BCM and Intelligent Key unit are NG.	Short circuit in communication line between BCM and Intelligent Key unit to power supply line	Malfunction have occurred in CAN communication Check “Self-diagnostic Results” of “Intelligent Key” using CONSULT-II. Refer to BL-152, "SELF-DIAGNOSTIC RESULTS" .
		Short circuit in communication line between BCM and ECM to ground	
		Intelligent Key unit malfunction	BL-125
ANTI-SCANNING [B2195]	A remote control starter that is not Genuine NISSAN is installed	If a remote control starter that is not Genuine NISSAN is installed, the anti-theft system is activated and the engine may not be started. In this case, remove the parts after the customer understands the situation.	—

“NATS I-KEY” SELF-DIAGNOSTIC RESULTS ITEM CHART

Suspect Systems	Description	Possible malfunction	Action to take/Reference page
NO DTC	NO DTC	—	—
DISCORD BCM-I-KEY [B2590]	The ID verification results between Intelligent Key unit and BCM are NG.	Short circuit in communication line between BCM and Intelligent Key unit to power supply line	Malfunction have occurred in CAN communication Check “Self-diagnostic Results” of “Intelligent Key” using CONSULT-II. Refer to BL-152, "SELF-DIAGNOSTIC RESULTS" .
		Short circuit in communication line between BCM and ECM to ground	
		BCM malfunction	BCS-17

Work Flow

NIS0020O

1. LISTEN TO CUSTOMER COMPLAINT OR REQUEST

Get symptoms or listen to customer complaints or request.

NOTE:
In case of request for Intelligent Key or IVIS (NATS) system repair, the key ID re-registration might be necessary. Keep all the Intelligent Keys before work for the re-registration.

Key ID registration request>>Register Intelligent Key by referring to CONSULT-II operation manual IVIS/NVIS NATS.
Request for malfunction repair.>>GO TO 2.

2. CHECK DOOR LOCK AND REMOTE CONTROL FUNCTION

Check that Door Lock and remote control function of Intelligent Key operate normally.

Door Lock or remote control function is malfunctioning.>>Malfunction of Door Lock and remote control function, Refer to
Door Lock and remote control function are normal.>>GO TO 3.

3. CONFIRMATION BEFORE DIAGNOSIS

Before performing diagnostic procedure, grasp the operating systems with referring to the items below.

- “System operation with carrying Intelligent Key”. Refer to BL-251, "OPERATION WHEN INTELLIGENT KEY IS CARRIED" .
- “System operation by using Key slot”. Refer to BL-251, "OPERATION WHEN INSERTING TO KEY SLOT" .

>> GO TO 4.

4. CONFIRM SELF DIAGNOSIS 1

Start CONSULT-II with Push-button ignition switch in lock position and confirm SELF DIAG RESULT “Intelligent Key”. Refer to BL-151, "CONSULT-II Inspection Procedure" .

No malfunction>>GO TO 5.
Malfunction exist>>Repair the items displayed in “SELF DIAG RESULTS”. Refer to BL-152, "SELF-DIAGNOSTIC RESULTS" .

5. CONFIRM SELF DIAGNOSIS 2

Start CONSULT-II with Push-button ignition switch in lock position and confirm SELF DIAG RESULTS “NATS BCM or S/ENT” and “NATS I-KEY”. Refer toBL-268, "CONSULT-II INSPECTION PROCEDURE" .

NOTE:
NATS program card is necessary to display “SELF DIAG RESULTS”.

No malfunction>>GO TO 6.
Malfunction exist>>Repair the items displayed in “SELF DIAG RESULTS”. Refer to BL-271, ""NATS BCM OR S/ENT” SELF-DIAGNOSTIC RESULTS ITEM CHART" and BL-272, ""NATS I-KEY” SELF-DIAGNOSTIC RESULTS ITEM CHART" .

6. CHECK INTELLIGENT KEY FUNCTION

Operate Push-button ignition switch with carrying Intelligent Key to check the power source position can be turned with all of the Intelligent Keys.

CAUTION:
Operate Push-button ignition switch without depressing the brake pedal.

Can be operated with all of the Intelligent Keys>>GO TO 7.
Can not be operated with particular Intelligent Key>>Check the malfunctioning Intelligent Key. Refer to BL-126, "INTELLIGENT KEY BATTERY INSPECTION" .
Can not be operated with any of the Intelligent Keys>>Perform Trouble diagnosis symptom chart 1. Refer to BL-179, "Trouble Diagnosis Symptom Chart 1" .

7. CHECK TURNING TIMING OF POWER SOURCE POSITION 1

Check the power source turning delay time after Push-button ignition switch is pushed. (Approx. 3 sec)

CAUTION:
Operate Push-button ignition switch without depressing the brake pedal.

No delay time exists>>GO TO 8.
Delay time exists>>Perform Trouble diagnosis symptom chart 2. Refer to BL-180, "Trouble Diagnosis Symptom Chart 2" .

8. CHECK TURNING TIMING OF POWER SOURCE POSITION 2

Check all the Intelligent Keys for power source turning delay time after Push-button ignition switch is pushed with Intelligent Key inserted into key slot. (Approx. 3 sec)

CAUTION:
Operate Push-button ignition switch without depressing the brake pedal.

No delay time exists>>GO TO 9.
Delay time exists when operated with particular Intelligent Key.>>Perform “C/U INITIALIZATION” referring to CONSULT-II operation manual IVIS/NVIS NATS. In case that delay time still exists after the initialization, replace the Intelligent Key.
Delay time exists when operated with any of the Intelligent Keys.>>Perform Trouble diagnosis symptom chart 3. Refer to BL-180, "Trouble Diagnosis Symptom Chart 3" .

9. CHECK ENGINE START FUNCTION

Check that engine can be started with Intelligent Key carried and inserted into the key slot respectively.

Engine can be started.>>GO TO 10.
Engine cannot be started.>>Inspect Trouble Diagnosis Flow Chart for IVIS (NATS). Refer to BL-275, "Trouble Diagnoses Flow Chart for IVIS (NATS)" .

10. CHECK SECURITY INDICATOR FUNCTION

Check Security Indicator for lighting up under the two conditions below.

- Security Indicator lights off when Push-button ignition switch is pushed with Intelligent Key inserted into or pulled out of the key slot.
- Security Indicator blinks when Intelligent Key is pulled out and Push-button ignition switch is in lock position.

Lighting up condition is normal.>>Inspection END.
Lighting up condition is malfunctioning.>>Perform Security Indicator Inspection. Refer to BL-277, "Symptom Chart for Security Indicator" .

Trouble Diagnoses Flow Chart for IVIS (NATS)

NIS0020P

NOTE:
This procedure is used to resolve the engine start malfunction when the Intelligent Key inserted into the key slot is used.

1. CHECK ENGINE FOR START

Check that the engine can be started when Push-button ignition switch is operated with Intelligent Key inserted into the key slot.

NG >> GO TO 2.
OK >> System is normal.

2. CONFIRM SELF DIAGNOSIS

Confirm SELF DIAGNOSIS “NATS V5.0” using CONSULT-II.

NOTE:
NATS program card is necessary to display the “SELF DIAGNOSIS”.

No malfunction>>Re-check the engine for start according to “Work Flow”. Refer to BL-272, "Work Flow" .
Malfunction related to IVIS (NATS) is displayed.>>GO TO 3.
Malfunctions related to “DON'T ERASE BEFORE CHECKING ENG DIAG” and IVIS (NATS) are displayed>> GO TO 6.

3. TROUBLE DIAGNOSIS

Repair IVIS (NATS) according to “SELF DIAGNOSIS”.

>> GO TO 4.

4. ERASE SELF DIAGNOSIS

Erase the record of “SELF DIAGNOSIS” using CONSULT-II.

>> GO TO 5.

5. CHECK ENGINE FOR START

Check that the engine can be started when Push-button ignition switch is operated with Intelligent Key inserted into the key slot.

NG >> GO TO 2.
OK >> Inspection END.

6. CONFIRM SELF DIAGNOSIS DISPLAY

IVIS (NATS) malfunction information and “DON'T ERASE BEFORE CHECKING ENG DIAG” are displayed on the CONSULT-II screen.

NOTE:
This indication means that malfunctions have been detected in IVIS (NATS) and engine control system.

>> GO TO 7.

7. TROUBLE DIAGNOSIS

Repair IVIS (NATS) according to “SELF DIAGNOSIS”.

NOTE:
Do not erase “SELF DIAGNOSIS” using CONSULT-II.

>> GO TO 8.

8. CONFIRM SELF DIAGNOSIS

Confirm SELF DIAGNOSIS “ECM” using CONSULT-II.

>> GO TO 9.

9. CONFIRM SELF DIAGNOSIS DISPLAY

In case that malfunction of engine control system is displayed other than “NATS MALFUNCTION” in “SELF DIAGNOSIS”, repair engine control system.

NOTE:
In case that only “NATS MALFUNCTION” is displayed, erase record of “SELF DIAGNOSIS”.

>> GO TO 10.

10. CHECK ENGINE FOR START

Check that the engine can be started when Push-button ignition switch is operated with Intelligent Key inserted into the key slot.

NG >> GO TO 2.
OK >> GO TO 11.

11. CONFIRM SELF DIAGNOSIS

Confirm SELF DIAGNOSIS “ECM” using CONSULT-II.

“NO DTC” is displayed.>>Inspection END.
Malfunction information is displayed.>>GO TO 2.

Symptom Chart for Security Indicator

NIS0020Q

Security indicator does not turn ON or flash.

CAUTION:

- **Follow Trouble Diagnosis Flowchart referring to "Diagnosis Procedure". Determine malfunctioning condition before performing this diagnosis.**
- **Make sure that vehicle is under the condition shown in "Conditions of vehicle" before starting diagnosis.**
- **Check systems shown in the "Action" column in this order.**

CONDITIONS OF VEHICLE (OPERATING CONDITIONS)

- Intelligent Key is not inserted into key slot.
- Engine switch is not depressed.

Action	Reference page
1. Check security indicator harness	BL-277
2. Replace BCM	BCS-17

Check Security Indicator Harness

NIS0020R

1. SECURITY INDICATOR LAMP ACTIVE TEST

With CONSULT-II

Check ("THEFT IND") in "ACTIVE TEST" mode with CONSULT-II.

Perform operation shown on display indicator lamp should illuminate.

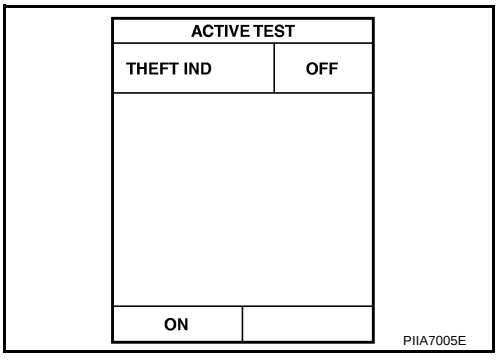

OK or NG

OK >> Security indicator lamp is OK.
NG >> GO TO 2.

2. CHECK HARNESS CONTINUITY

1. Turn ignition switch OFF.
2. Disconnect multifunction switch (security indicator) connector.
3. Check voltage between multifunction switch (security indicator) connector and ground.

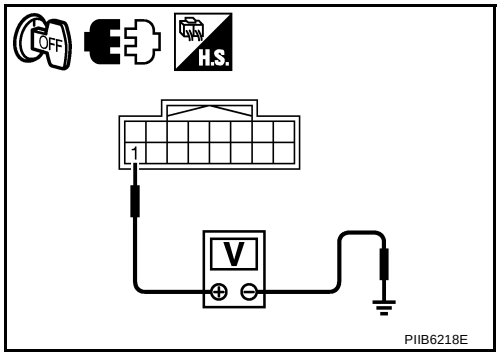

Terminals			Voltage (V) (Approx.)
(+)		(–)	
multifunction switch (security indicator) connector	Terminal		
M69	1	Ground	Battery voltage

OK or NG

OK >> Check the following.
- Harness for open or short between BCM and multifunction switch (security indicator)
- Security indicator lamp condition

NG >> Check the following.
- 15A fuse [No.37, located in fuse block (J/B)]
- Harness for open or short between multifunction switch (security indicator) and fuse

DTC P1612 CHAIN of ECM-IMMU

NIS0020S

Self-diagnostic results:
"CHAIN OF ECM-IMMU" displayed on CONSULT-II screen
First perform the "SELF-DIAG RESULTS" in "BCM" with CONSULT-II, then perform the trouble diagnosis of malfunction system indicated "SELF-DIAG RESULTS" of "BCM". Refer to BCS-15, "CAN Communication Inspection Using CONSULT-II (Self-Diagnosis)" .

1. CONFIRM SELF-DIAGNOSTIC RESULTS

Confirm SELF-DIAGNOSTIC RESULTS "CHAIN OF ECM-IMMU" displayed on CONSULT-II screen.

NOTE:
In rare case, "CHAIN OF ECM-IMMU" might be stored during key registration procedure, even if the system is not malfunctioning.

Is CONSULT-II screen displayed as shown in figure?

Yes >> GO TO 2.
No >> GO TO BL-271, ""NATS V5.0" SELF-DIAGNOSTIC RESULTS ITEM CHART" .

SELF DIAGNOSIS	
DTC RESULTS	TIME
CHAIN OF ECM-IMMU [P1612]	0

PIIA1260E

2. CHECK POWER SUPPLY CIRCUIT FOR BCM

Check voltage between BCM and ground with CONSULT-II or tester.

Terminals			Condition of ignition switch	Voltage (V) (Approx.)
(+)		(–)		
BCM connector	Terminal			
M1	38	Ground	ON	Battery voltage
M2	42		OFF	
	55			

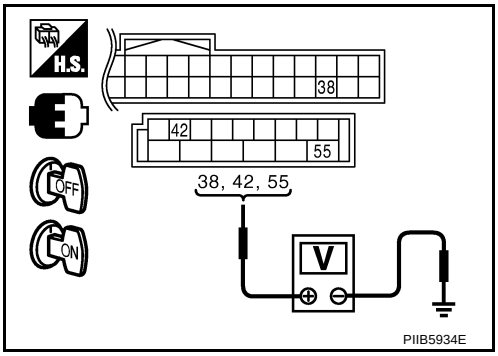

OK or NG

OK >> GO TO 3.

NG >> Check the following.

- 50A fusible link (letter **F** , located in the fuse and fusible link box)
- 10A fuse [No.21, located in the fuse block (J/B)]
- 15A fuse [No. 1, located in the fuse block (J/B)]
- Harness for open or short between fusible link and BCM
- Harness for open or short between fuse and BCM

3. CHECK GROUND CIRCUIT FOR BCM

1. Turn ignition switch OFF.
2. Disconnect BCM connector.
3. Check continuity between BCM connector and ground.

BCM connector	Terminal	Ground	Continuity
M2	52		Yes

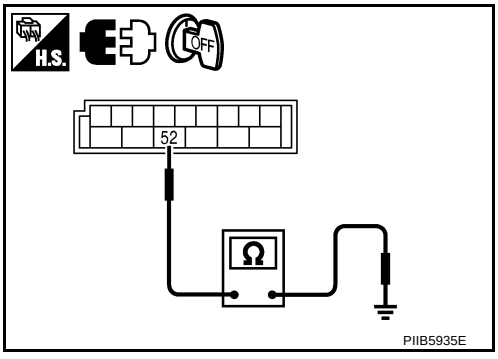

OK or NG

OK >> GO TO 4.

NG >> Repair or replace harness.

4. REPLACE BCM

1. Replace BCM
2. Perform initialization with CONSULT-II.
   For initialization, refer to “CONSULT-II Operation Manual NATS-IVIS/NVIS”.

Does the engine start?

Yes >> BCM is malfunctioning.

- Replace BCM.
- Perform initialization with CONSULT-II
- For initialization, refer to “CONSULT-II Operation Manual NATS-IVIS/NVIS”

No >> ECM is malfunctioning.

- Replace ECM.
- Perform initialization or re-communicating function
- For initialization, refer to “CONSULT-II Operation Manual NATS-IVIS/NVIS”
- For re-communicating function, refer to BL-252, "ECM Re-Communicating Function"

DTC P1611 ID DISCORD, IMM-ECM

NIS0020T

Self-diagnostic results:
“ID DISCORD, IMM-ECM” displayed on CONSULT-II screen

1. CONFIRM SELF-DIAGNOSTIC RESULTS

Confirm SELF-DIAGNOSTIC RESULTS “ID DISCORD, IMM-ECM” displayed on CONSULT-II screen.

NOTE:
“ID DISCORD IMM-ECM”:
Registered ID of BCM is in discord with that of ECM.

Is CONSULT-II screen displayed as shown in figure?

Yes >> GO TO 2.
No >> GO TO BL-271, ""NATS V5.0" SELF-DIAGNOSTIC RESULTS ITEM CHART" .

SELF DIAG RESULTS	
DTC RESULTS	TIME
ID DISCORD, IMM-ECM [P1611]	0

PIIA1262E

2. PERFORM INITIALIZATION WITH CONSULT-II

Perform initialization with CONSULT-II. Re-register all NATS ignition key IDs.
For initialization, refer to “CONSULT-II Operation Manual NATS-IVIS/NVIS”.

NOTE:
If the initialization is not completed or malfunctions, CONSULT-II shows message on the screen.

IMMU INITIALIZATION
INITIALIZATION FAIL
THEN IGN KEY SW ‘OFF’ AND ‘ON’, AFTER CONFIRMING SELF-DIAG AND PASSWORD, PERFORM C/U INITIALIZATION AGAIN.

SEL297W

Can the system be initialized?

Yes >>
- Start engine. (END)
- (System initialization had not been completed.)

No >> ECM is malfunctioning.
- Replace ECM.
- Perform initialization with CONSULT-II
  For initialization, refer to “CONSULT-II Operation Manual NATS-IVIS/NVIS”

Removal and Installation of Key Slot

NIS0020U

REMOVAL

1. Remove instrument driver lower panel. Refer to IP-10, "INSTRUMENT PANEL ASSEMBLY" .
2. Disconnect key slot connector.
3. Remove key slot mounting screw, and then remove key slot.

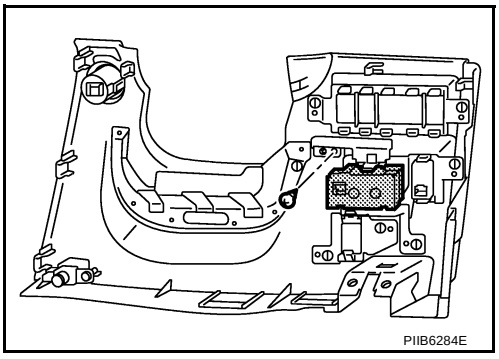

PIIB6284E

INSTALLATION

Installation is in the reverse order of removal.

INTEGRATED HOMELINK TRANSMITTER

PFP:96401

Wiring Diagram —TRNSCV—

NIS0020V

BL-TRNSCV-01

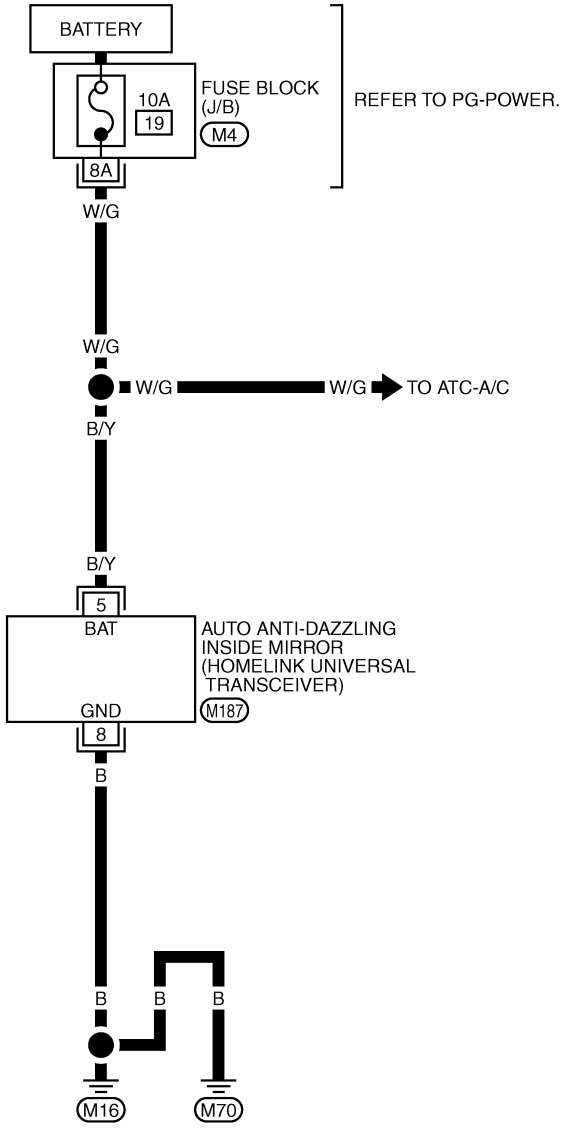

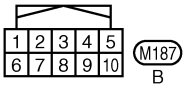

REFER TO THE FOLLOWING.
M4 -FUSE BLOCK-JUNCTION BOX (J/B)

TIWT1303E

Trouble Diagnoses

NIS0020W

DIAGNOSTIC PROCEDURE

SYMPTOM: Transmitter does not activate receiver.

Before conducting the procedure given below, make sure that system receiver (garage door opener, etc.) operates with original, hand-held transmitter. If NG, receiver or hand-held transmitter is malfunctioning, not vehicle related.

1. ILLUMINATE CHECK

1. Turn ignition switch “OFF”.
2. Does red light (1) of transmitter illuminate when any transmitter button (2) is pressed?

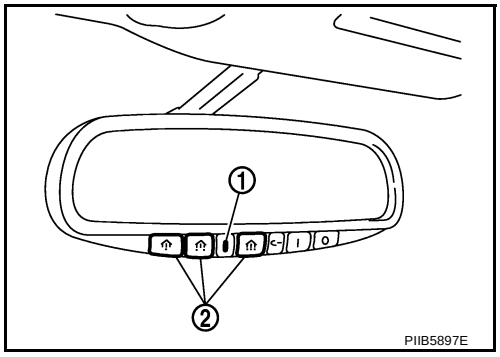

YES or NO

YES >> GO TO 2.
NO >> GO TO 3.

2. TRANSMITTER CHECK

Check transmitter with Tool*.
*:For details, refer to Technical Service Bulletin.

OK or NG

OK >> Receiver or hand-held transmitter malfunction, not vehicle related.
NG >> Replace auto anti-dazzling inside mirror (homelink universal transceiver).

3. CHECK POWER SUPPLY

1. Disconnect auto anti-dazzling inside mirror (homelink universal transceiver) connector.
2. Check voltage between auto anti-dazzling inside mirror (home link universal transceiver) harness connector and ground.

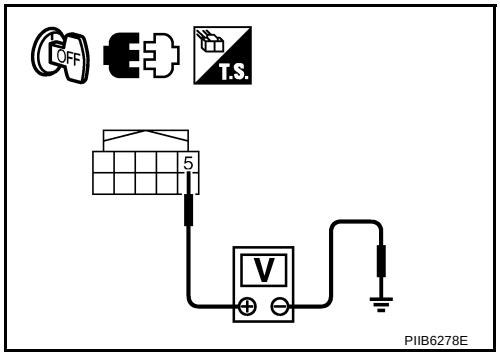

Terminal			Voltage (V) (Approx.)
(+)		(–)	
Auto anti-dazzling inside mirror (Homelink universal transceiver) connector	Terminal		
M187	5	Ground	Battery voltage

OK or NG

OK >> GO TO 4.
NG >> Check the following.

- 10A fuse [No. 19 located in the fuse block (J/B)]
- Harness for open or short between fuse and auto anti-dazzling inside mirror (homelink universal transceiver).

4. GROUND CIRCUIT CHECK

Check continuity between auto anti-dazzling inside mirror (homelink universal transceiver) harness connector and ground.

Terminal			Continuity
Auto anti-dazzling inside mirror (Homelink universal transceiver) connector	Terminal	Ground	
M187	8		Yes

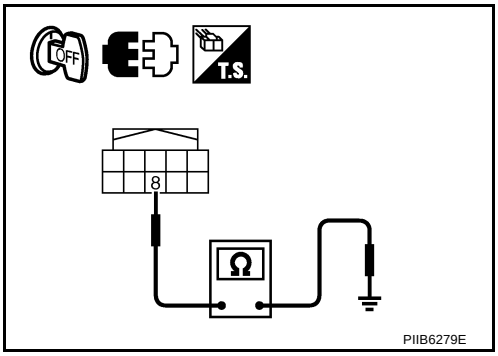

OK or NG

OK >> Replace auto anti-dazzling inside mirror (homelink universal transceiver).

NG >> Repair harness.

BODY REPAIR

PFP:60100

Body Exterior Paint Color

NIS0020X

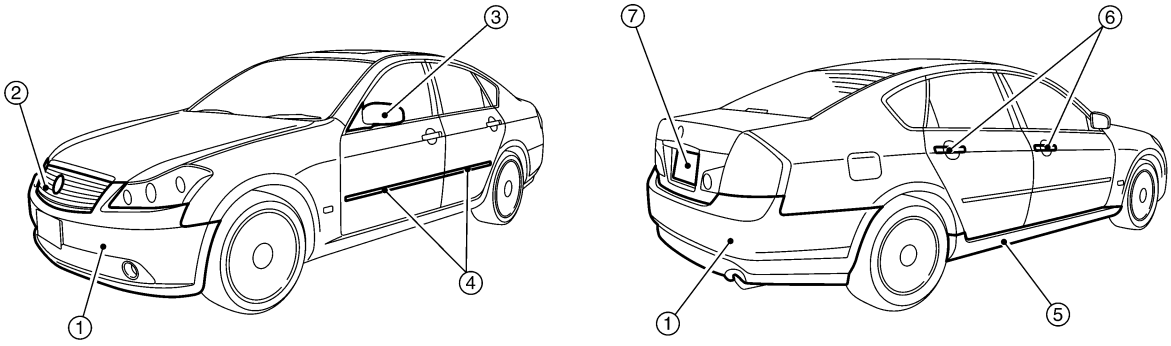

SIIA2451E

Component											
			Color code	BA33	BBW5	BC31	BK23	BK32	BKH3	BQX1	BWV2
			Description	Red	Dark Blue	Grayish Brown	Silver	Yellow-ish Silver	Black	White	Silver
			Paint type	2P	2P	M	M	TM	2S	3P	M
			Hard clear coat	×	×	×	×	×	×	×	×
1	Bumper fascia		Body color	BA33	BBW5	BC31	BK23	BK32	BKH3	BQX1	BWV2
2	Front grille		Chromium plate	Cr2P	Cr2P	Cr2P	Cr2P	Cr2P	Cr2P	Cr2P	Cr2P
3	Door outside mirror	Cover	Body color	BA33	BBW5	BC31	BK23	BK32	BKH3	BQX1	BWV2
4	Side guard molding		Body color	BA33	BBW5	BC31	BK23	BK32	BKH3	BQX1	BWV2
5	Center mudguard		Body color	BA33	BBW5	BC31	BK23	BK32	BKH3	BQX1	BWV2
6	Door outside handle		Chromium plate	Cr2P	Cr2P	Cr2P	Cr2P	Cr2P	Cr2P	Cr2P	Cr2P
			Body color	BA33	BBW5	BC31	BK23	BK32	BKH3	BQX1	BWV2
7	Trunk lid finisher	Molding	Chromium plate	Cr2P	Cr2P	Cr2P	Cr2P	Cr2P	Cr2P	Cr2P	Cr2P
		Finisher	Body color	BA33	BBW5	BC31	BK23	BK32	BKH3	BQX1	BWV2

2S: Solid + Clear, M: Metallic, 2P: 2-Coat pearl, 3P: 3-Coat pearl, FPM: Iron oxide pearl, RPM: Multi flex color
TM: Micro titanium metallic, PM: Pearl metallic

Body Component Parts

UNDERBODY COMPONENT PARTS

NIS0020Y

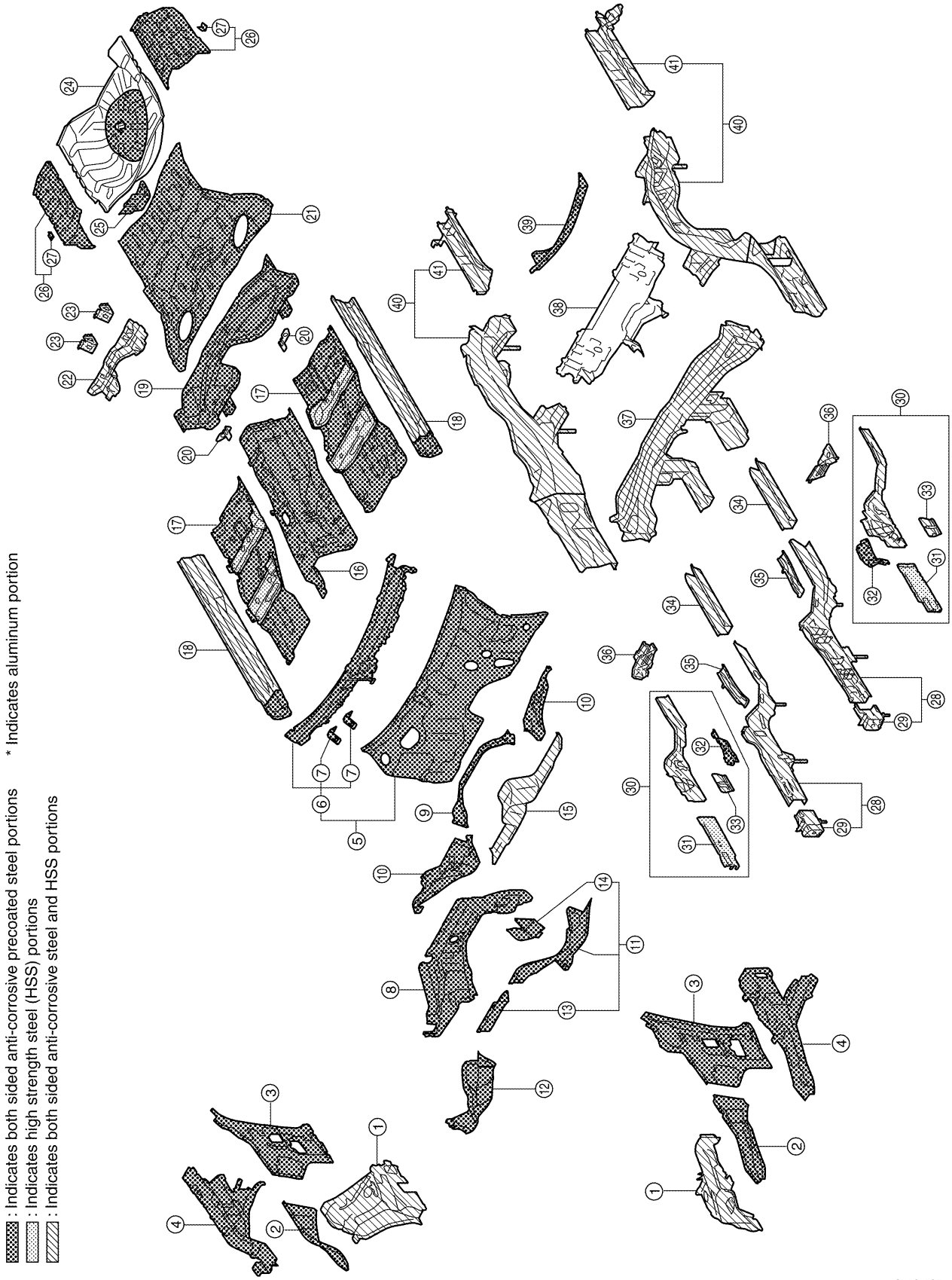

SIIA2452E

1. Front strut housing
2. Upper front hoodledge
3. Upper rear hoodledge
4. Hoodledge reinforcement
5. Upper dash assembly
6. Upper dash crossmember assembly
7. Harness clamp bracket
8. Cowl top
9. Lower center dash crossmember reinforcement
10. Lower dash crossmember reinforcement
11. Lower dash crossmember assembly (LH)
12. Lower dash crossmember (RH)
13. Front crossmember center
14. Steering column mounting reinforcement
15. Lower dash
16. Front floor center
17. Front floor
18. Inner sill
19. Rear seat crossmember reinforcement assembly
20. Front carpet bracket
21. Rear floor front
22. Rear floor seat belt anchor reinforcement
23. Rear seat reclining device bracket
24. Rear floor rear
25. Differential mounting bracket assembly
26. Rear floor side assembly
27. Rear bumper side stay
28. Front side member assembly
29. Front side member front extension
30. Front side member closing plate assembly
31. Front side member front closing plate
32. Front side member center closing plate
33. Front suspension mounting bracket
34. Front side member rear extension
35. Front side member rear reinforcement
36. Front side member outrigger assembly
37. Rear seat crossmember
38. 2ND rear crossmember
39. Rear crossmember
40. Rear side member assembly
41. Rear side member extension

BODY COMPONENT PARTS

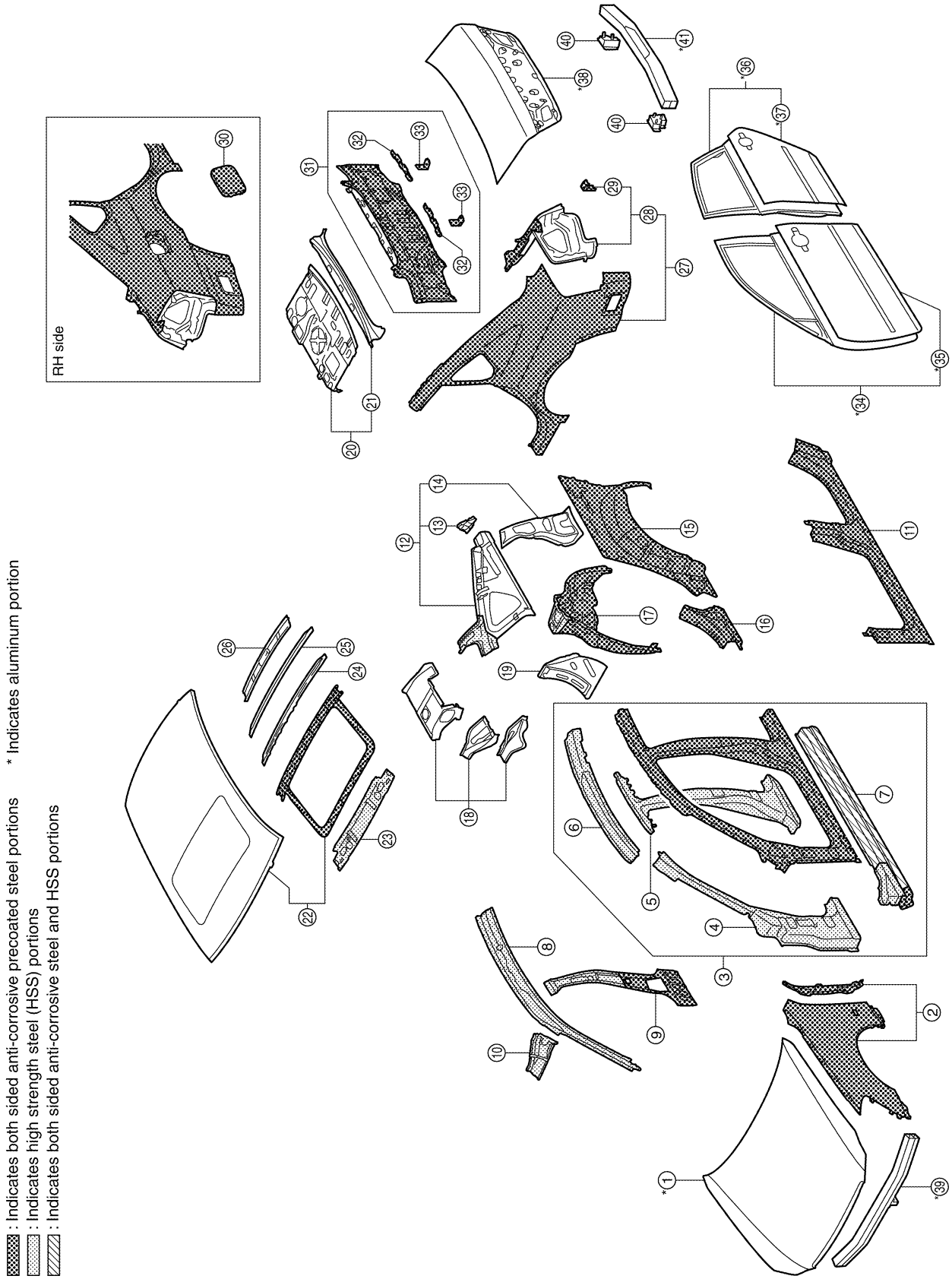

1. Hood
2. Front fender (RH&LH)
3. Side body assembly (RH&LH)
4. Outer front pillar reinforcement (RH&LH)
5. Center pillar reinforcement (RH&LH)
6. Outer roof side rail reinforcement (RH&LH)
7. Outer sill reinforcement (RH&LH)
8. Inner roof side rail (RH&LH)
9. Inner center pillar (RH&LH)
10. Front roof rail brace (RH&LH)
11. Outer sill (RH&LH)
12. Inner rear pillar assembly (RH&LH)
13. Inner rear pillar rear (RH&LH)
14. Inner rear pillar reinforcement (RH&LH)
15. Outer rear wheelhouse (RH&LH)
16. Outer rear wheelhouse extension (RH&LH)
17. Inner rear wheelhouse (RH&LH)
18. Side parcel shelf assembly (RH&LH)
19. Seat back support (RH&LH)
20. Parcel shelf assembly
21. Rear waist
22. Roof assembly
23. Front roof rail
24. Front roof bow
25. Rear roof bow
26. Rear roof rail
27. Rear fender assembly (RH&LH)
28. Rear fender extension (RH&LH)
29. Rear bumper side bracket
30. Fuel filler lid (RH)
31. Rear panel assembly
32. Upper rear bumper retainer
33. Lower rear bumper retainer
34. Front door assembly (RH&LH)
35. Outer front door panel (RH&LH)
36. Rear door assembly (RH&LH)
37. Outer rear door panel (RH&LH)
38. Trunk lid
39. Front bumper reinforcement
40. Rear bumper stay
41. Rear bumper reinforcement

Corrosion Protection

NIS0020Z

DESCRIPTION

To provide improved corrosion prevention, the following anti-corrosive measures have been implemented in NISSAN production plants. When repairing or replacing body panels, it is necessary to use the same anti-corrosive measures.

Anti-corrosive Precoated Steel (Galvannealed Steel)

To improve repairability and corrosion resistance, a new type of anti-corrosive precoated steel sheet has been adopted replacing conventional zinc-coated steel sheet.
Galvannealed steel is electroplated and heated to form Zinc-iron alloy, which provides excellent and long term corrosion resistance with cationic electrodeposition primer.

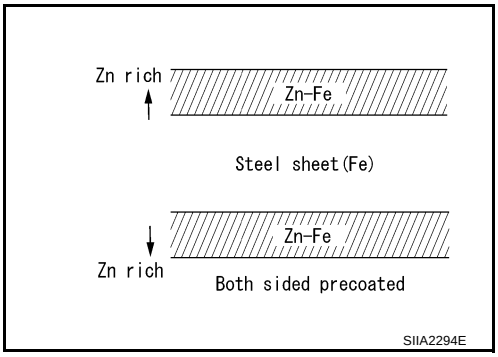

Nissan Genuine Service Parts are fabricated from galvannealed steel. Therefore, it is recommended that GENUINE NISSAN PARTS or equivalent be used for panel replacement to maintain the anti-corrosive performance built into the vehicle at the factory.

Phosphate Coating Treatment and Cationic Electrodeposition Primer

A phosphate coating treatment and a cationic electrodeposition primer, which provide excellent corrosion protection, are employed on all body components.

CAUTION:

Confine paint removal during welding operations to an absolute minimum.

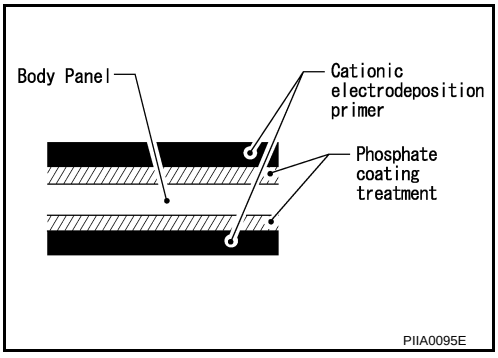

Nissan Genuine Service Parts are also treated in the same manner. Therefore, it is recommended that GENUINE NISSAN PARTS or equivalent be used for panel replacement to maintain anti-corrosive performance built into the vehicle at the factory.

UNDERCOATING

The underside of the floor and wheelhouse are undercoated to prevent rust, vibration, noise and stone chipping. Therefore, when such a panel is replaced or repaired, apply undercoating to that part. Use an undercoating which is rust preventive, soundproof, vibration-proof, shock-resistant, adhesive, and durable.

Precautions in Undercoating

1. Do not apply undercoating to any place unless specified (such as the areas above the muffler and three way catalyst which are subjected to heat).
2. Do not undercoat the exhaust pipe or other parts which become hot.
3. Do not undercoat rotating parts.
4. Apply bitumen wax after applying undercoating.
5. After putting seal on the vehicle, put undercoating on it.

: Indicates undercoated portions.

: Indicates sealed portions.

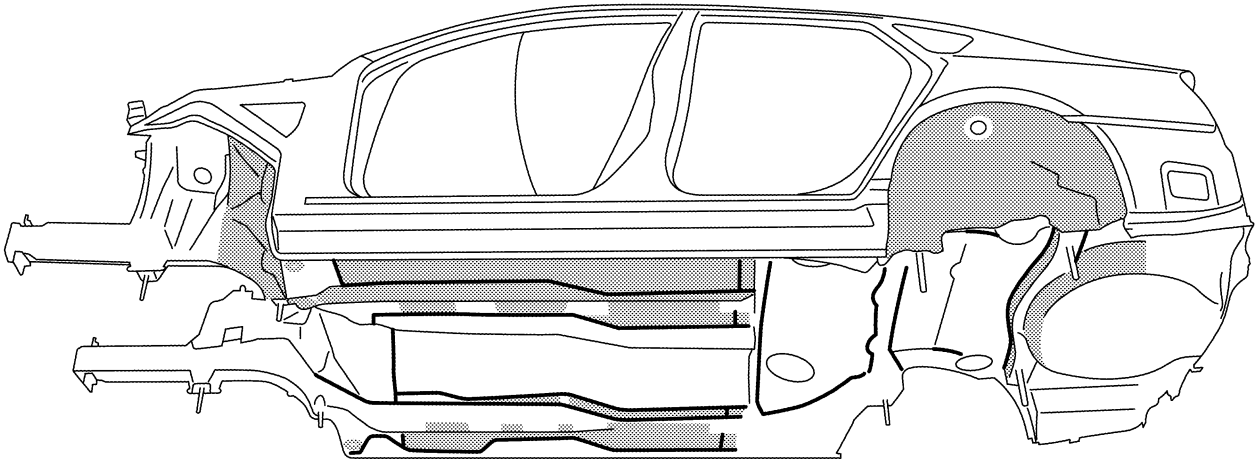

SIIA2454E

Body Sealing

NIS00210

DESCRIPTION

The following figure shows the areas which are sealed at the factory. Sealant which has been applied to these areas should be smooth and free from cuts or gaps. Care should be taken not to apply an excess amount of sealant and not to allow other unaffected parts to come into contact with the sealant.

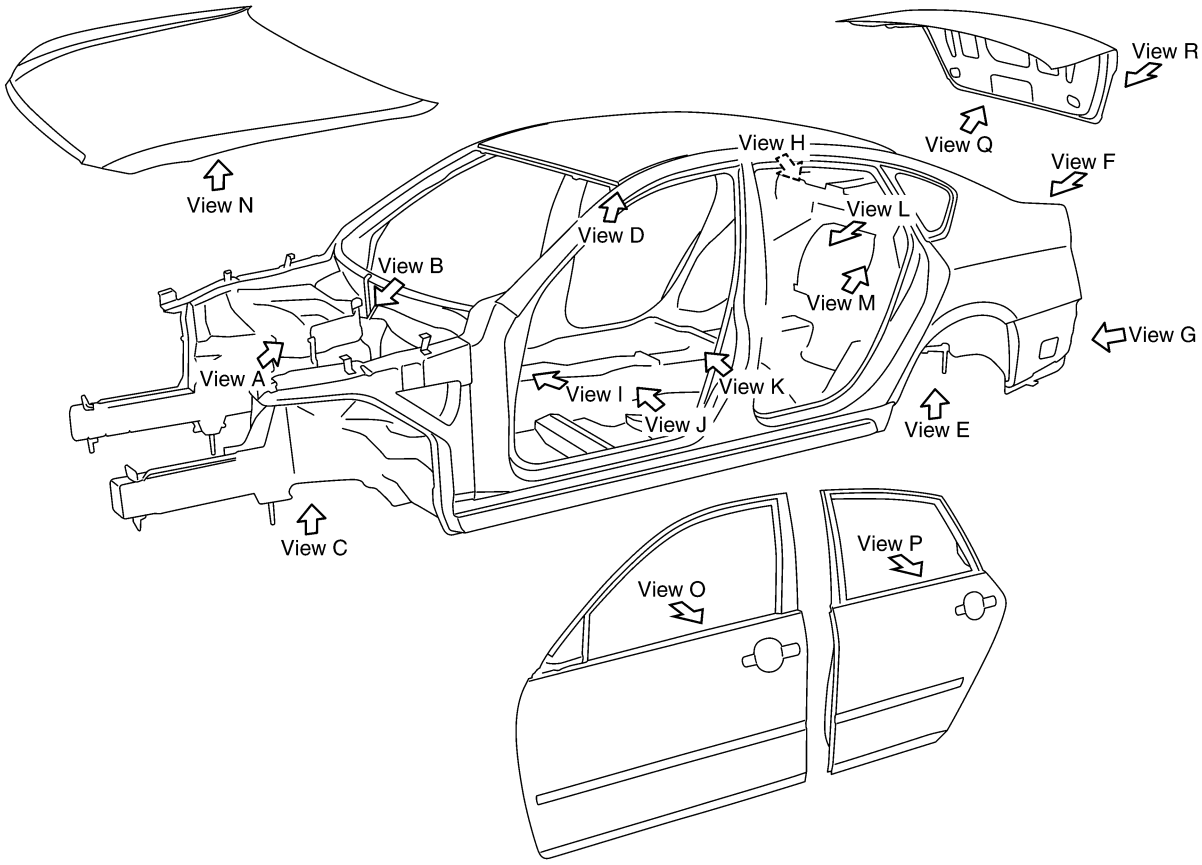

View A	View B
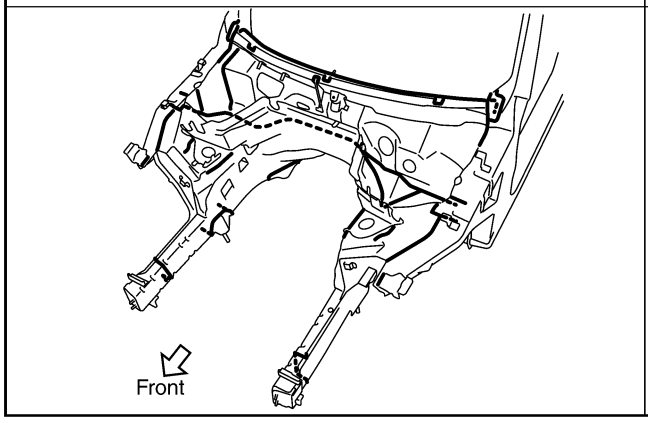	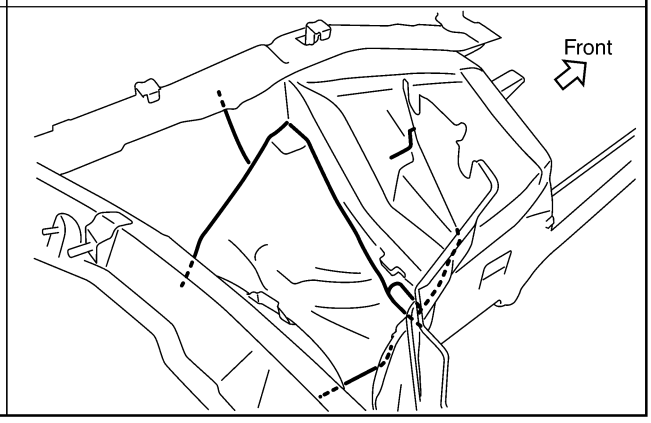

SIIA2455E

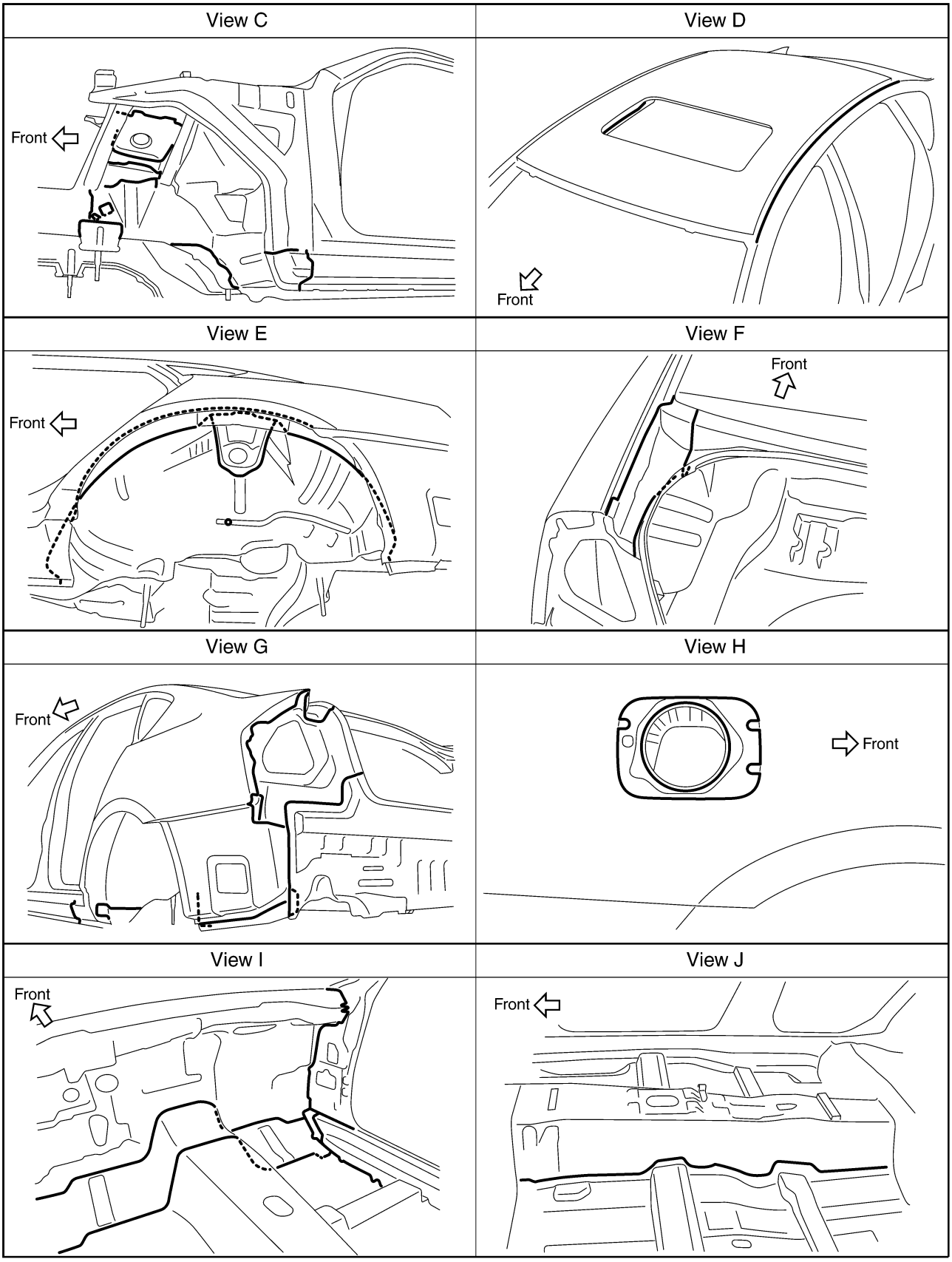
View C
Front
View D
Front
View E
Front
View F
Front
View G
Front
View H
Front
View I
Front
View J
Front

SIIA2456E

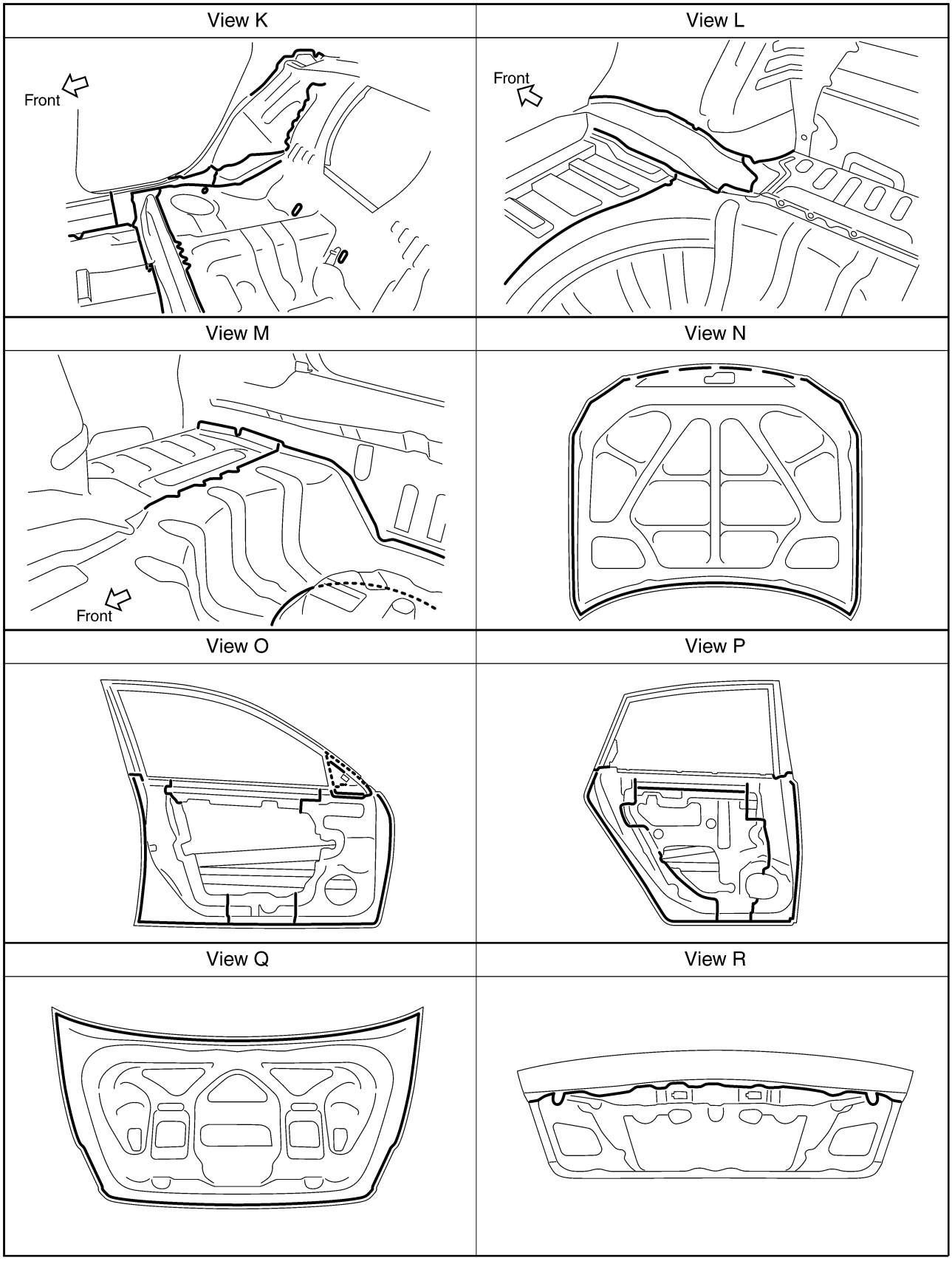
View K
Front
View L
Front
View M
Front
View N
View O
View P
View Q
View R

SIIA2457E

Body Construction

NIS00211

BODY CONSTRUCTION

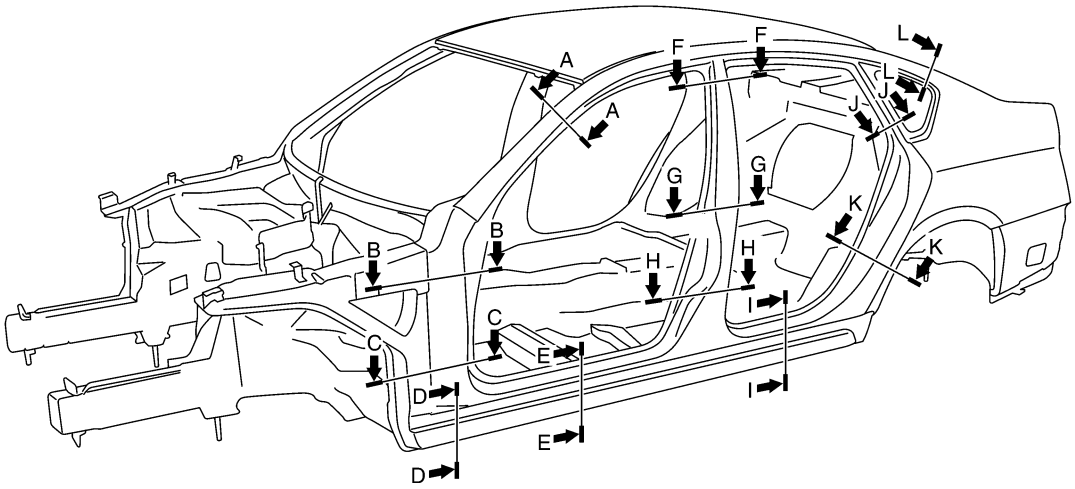

Section A-A	Section B-B	Section C-C	Section D-D
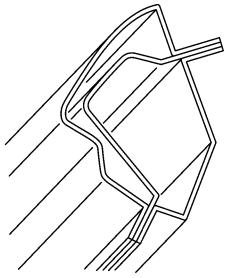	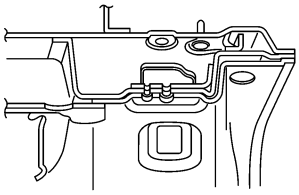	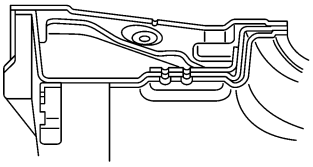	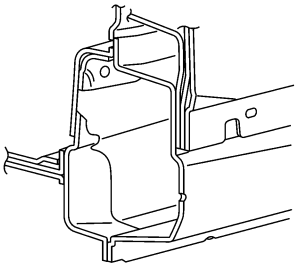
Section E-E	**Section F-F**	**Section G-G**	**Section H-H**
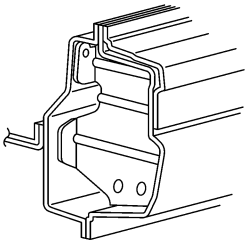	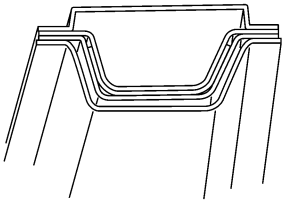	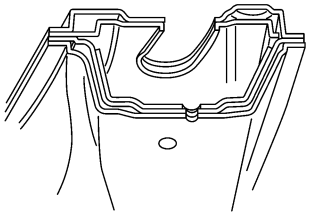	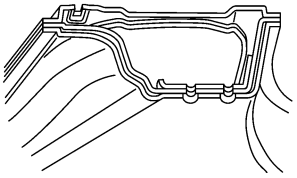
Section I-I	**Section J-J**	**Section K-K**	**Section L-L**
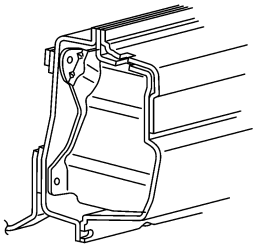	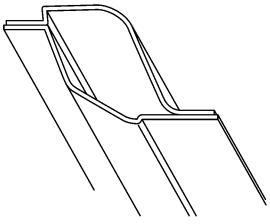	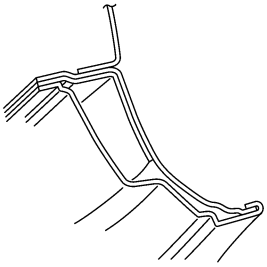	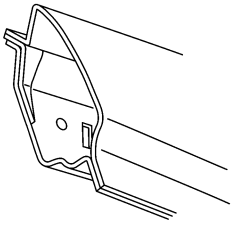

SIIA2458E

Body Alignment

NIS00212

BODY CENTER MARKS

A mark has been placed on each part of the body to indicate the vehicle center. When repairing parts damaged by an accident which might affect the vehicle frame (members, pillars, etc.), more accurate and effective repair will be possible by using these marks together with body alignment specifications.

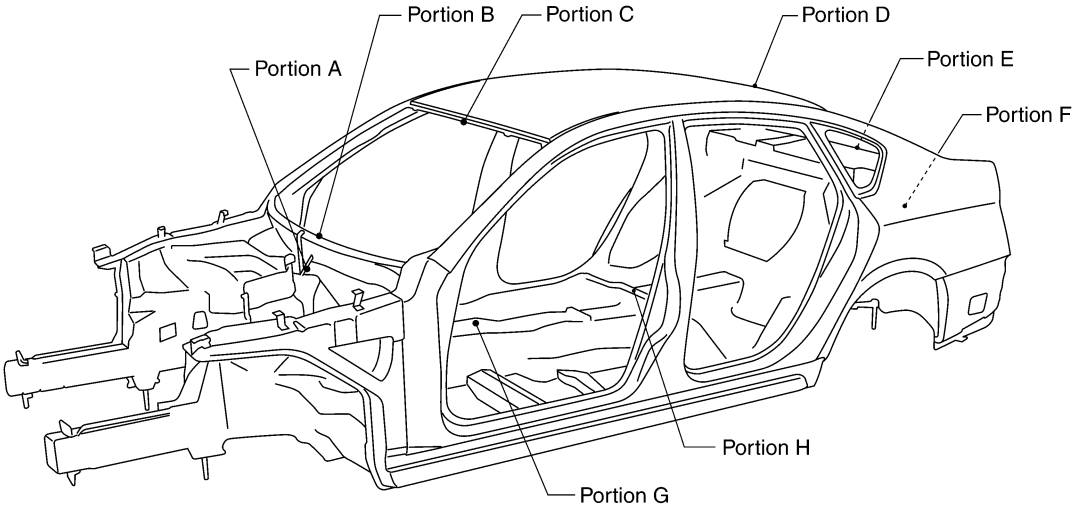

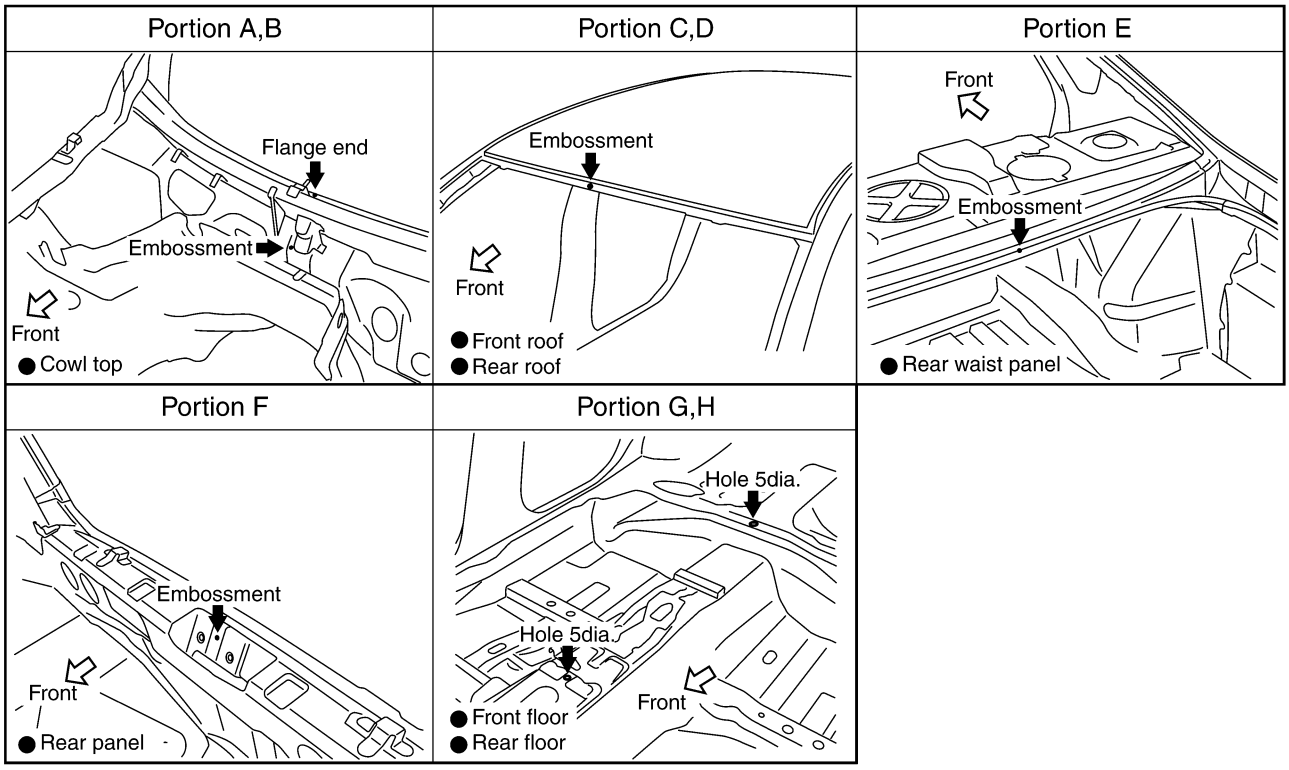

SIIA2459E

PANEL PARTS MATCHING MARKS

A mark has been placed on each body panel to indicate the parts matching positions. When repairing parts damaged by an accident which might affect the vehicle structure (members, pillars, etc.), more accurate and effective repair will be possible by using these marks together with body alignment specifications.

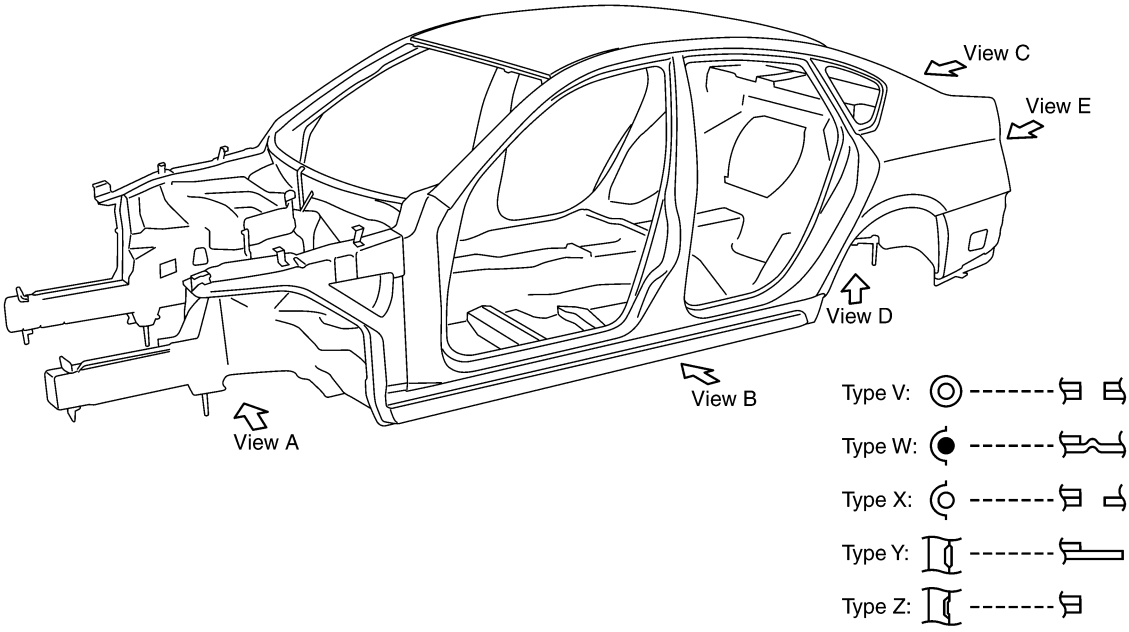

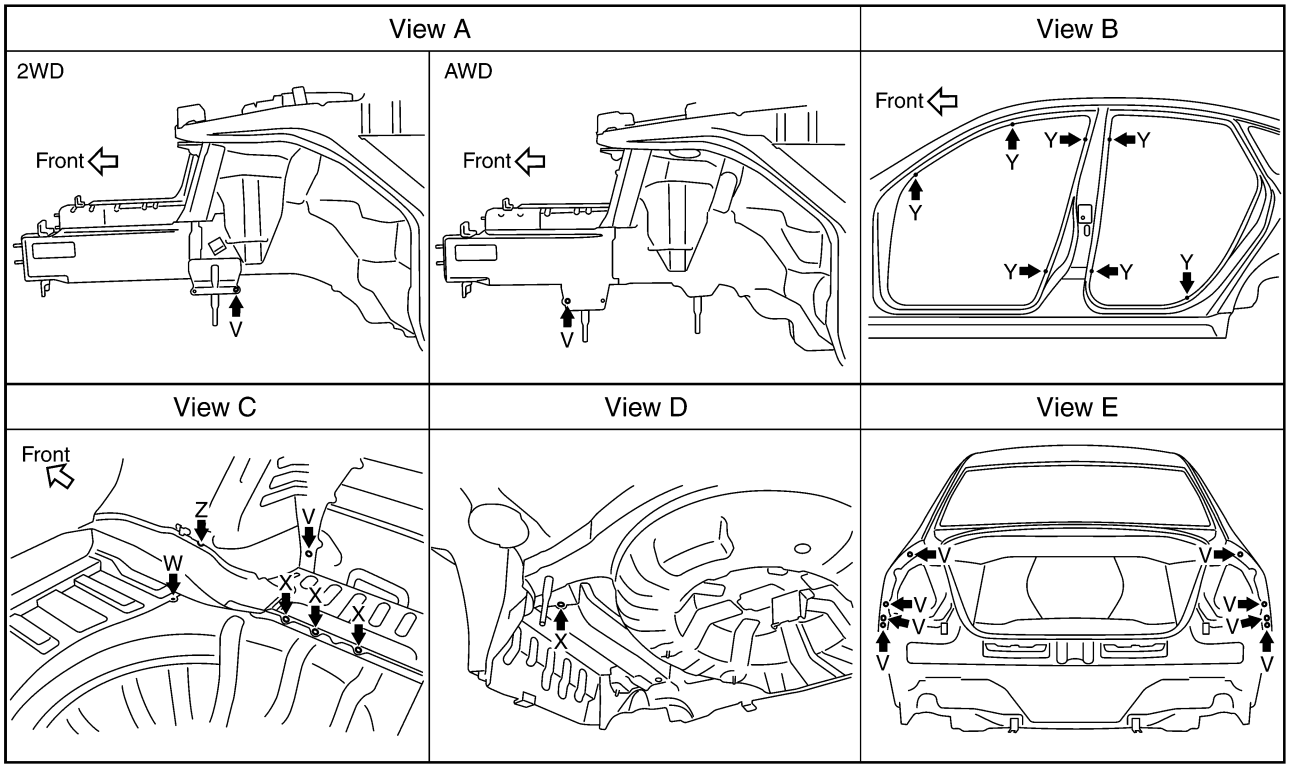

SIIA2460E

DESCRIPTION

- All dimensions indicated in the figures are actual.
- When using a tracking gauge, adjust both pointers to equal length. Then check the pointers and gauge itself to make sure there is no free play.
- When a measuring tape is used, check to be sure there is no elongation, twisting or bending.
- Measurements should be taken at the center of the mounting holes.
- An asterisk (*) following the value at the measuring point indicates that the measuring point on the other side is symmetrically the same value.
- The coordinates of the measurement points are the distances measured from the standard line of ″X″, ″Y″ and ″Z″.

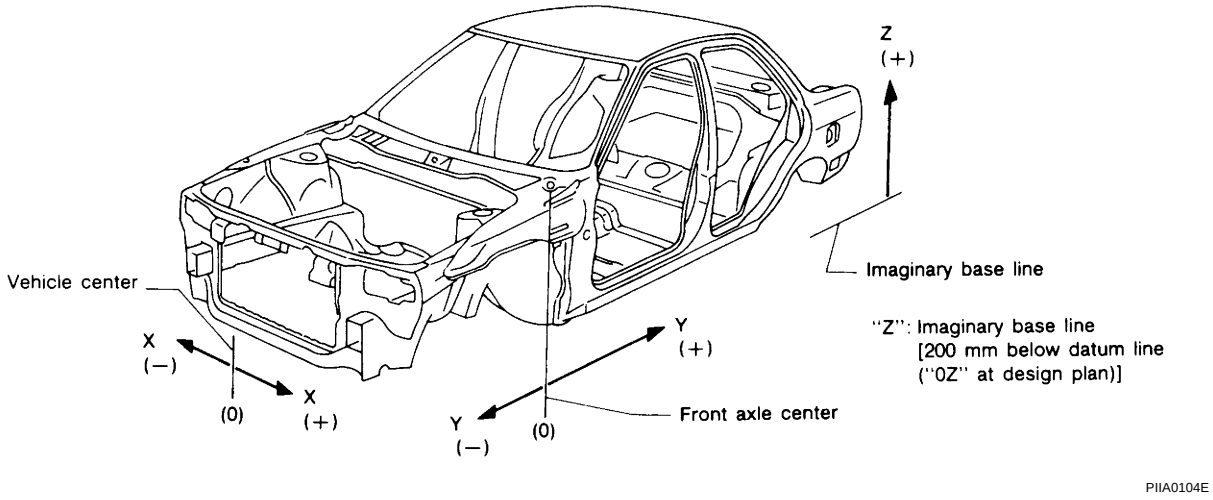

ENGINE COMPARTMENT
Measurement

Figures marked with a (*) indicate symmetrically identical dimensions on both right and left hand sides of the vehicle.

Unit : mm

②: 2WD ④: AWD

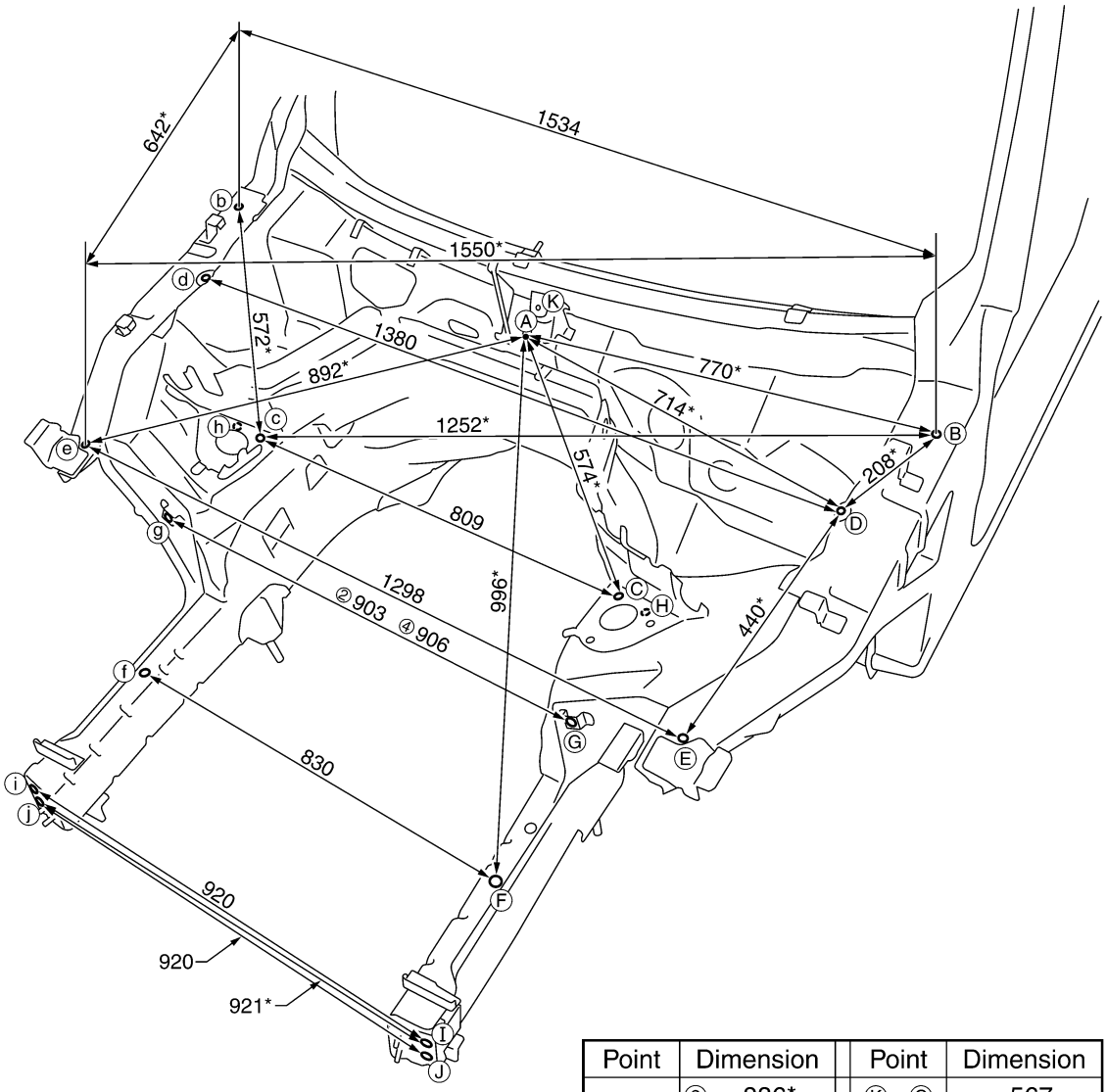

Point	Dimension		Point	Dimension
Ⓒ~ⓖ	② 886*		Ⓚ~Ⓒ	567
	④ 888*		Ⓚ~ⓒ	607
Ⓗ~ⓗ	② 903		Ⓚ~Ⓔ	869
	④ 906		Ⓚ~ⓔ	911
Ⓚ~Ⓑ	738		Ⓚ~Ⓕ	1,005
Ⓚ~ⓑ	796		Ⓚ~ⓕ	1,028

SIIA2461E

Measurement Points

Ⓐ : Upper dash positioning mark center of center positioning mark
Ⓚ : Wiper installing hole center (7dia.)

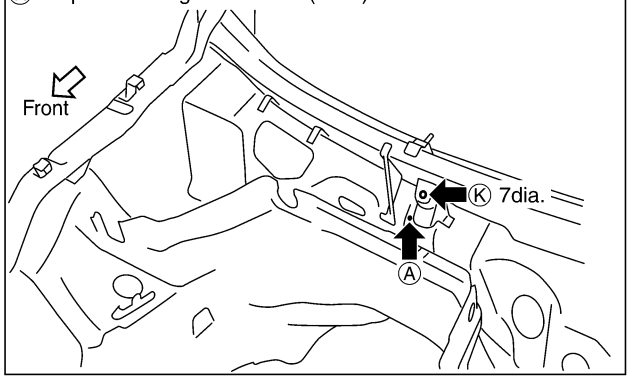

Ⓑ,ⓑ : Hood hinge installing hole center (12dia.)
Ⓒ,ⓒ : Front strut installing hole center (9dia.)
Ⓓ,ⓓ : Cowl top cover installing hole center (8dia.)
Ⓔ,ⓔ : Hoodledge reinforcement hole center (8dia.)
Ⓖ,ⓖ : Nut holder hole center (16dia.)

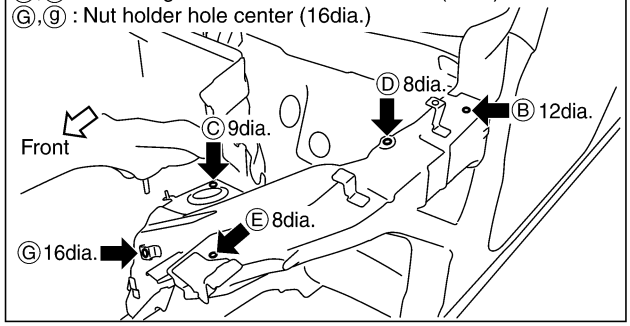

Ⓕ: Front side member hole center (20dia.)

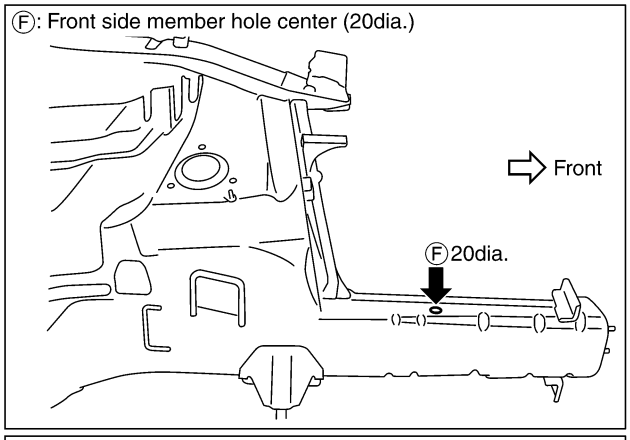

ⓕ: Front side member hole center (20dia.)

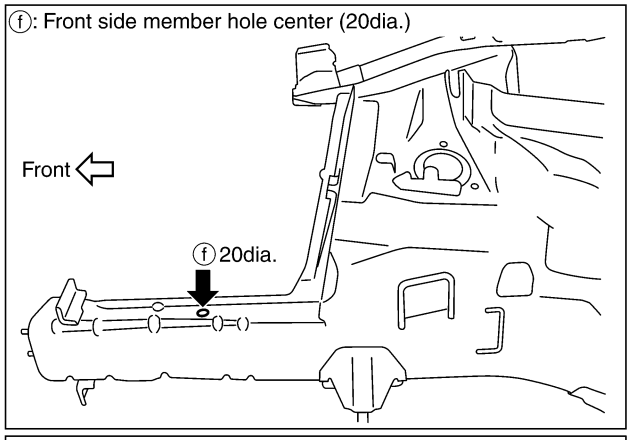

Ⓗ,ⓗ: Nut holder hole center (16dia.)

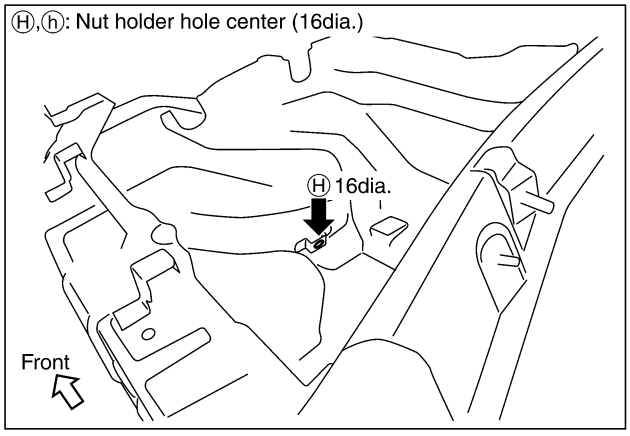

Ⓘ,ⓘ,Ⓙ,ⓙ : Front bumper stay installing hole center (12dia.)

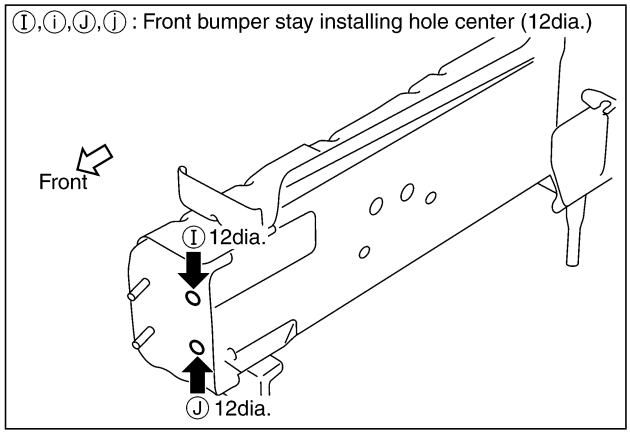

SIIA2462E

UNDERBODY
Measurement

Unit : mm

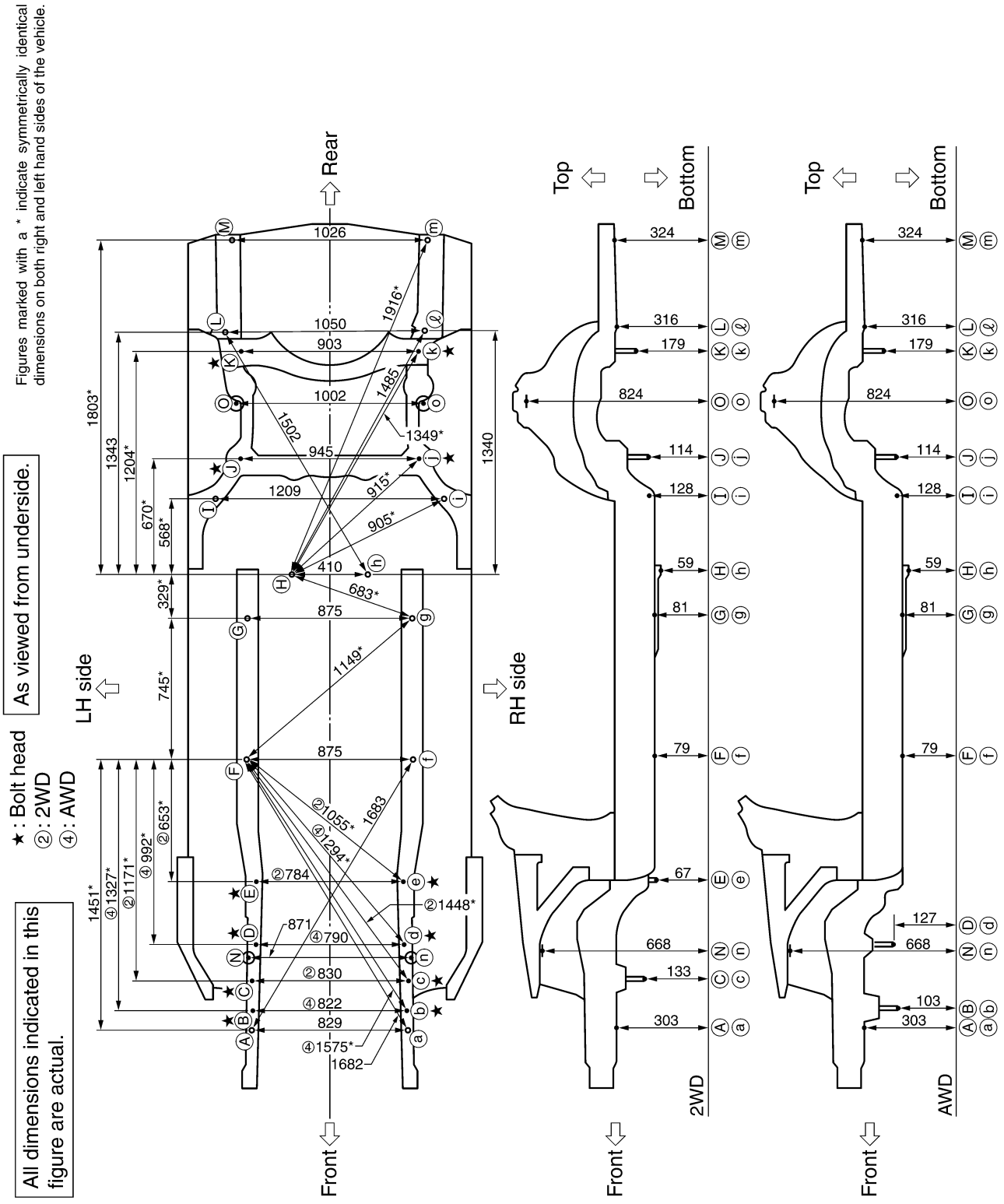

Measurement Points

Unit : mm

As viewed from underside.

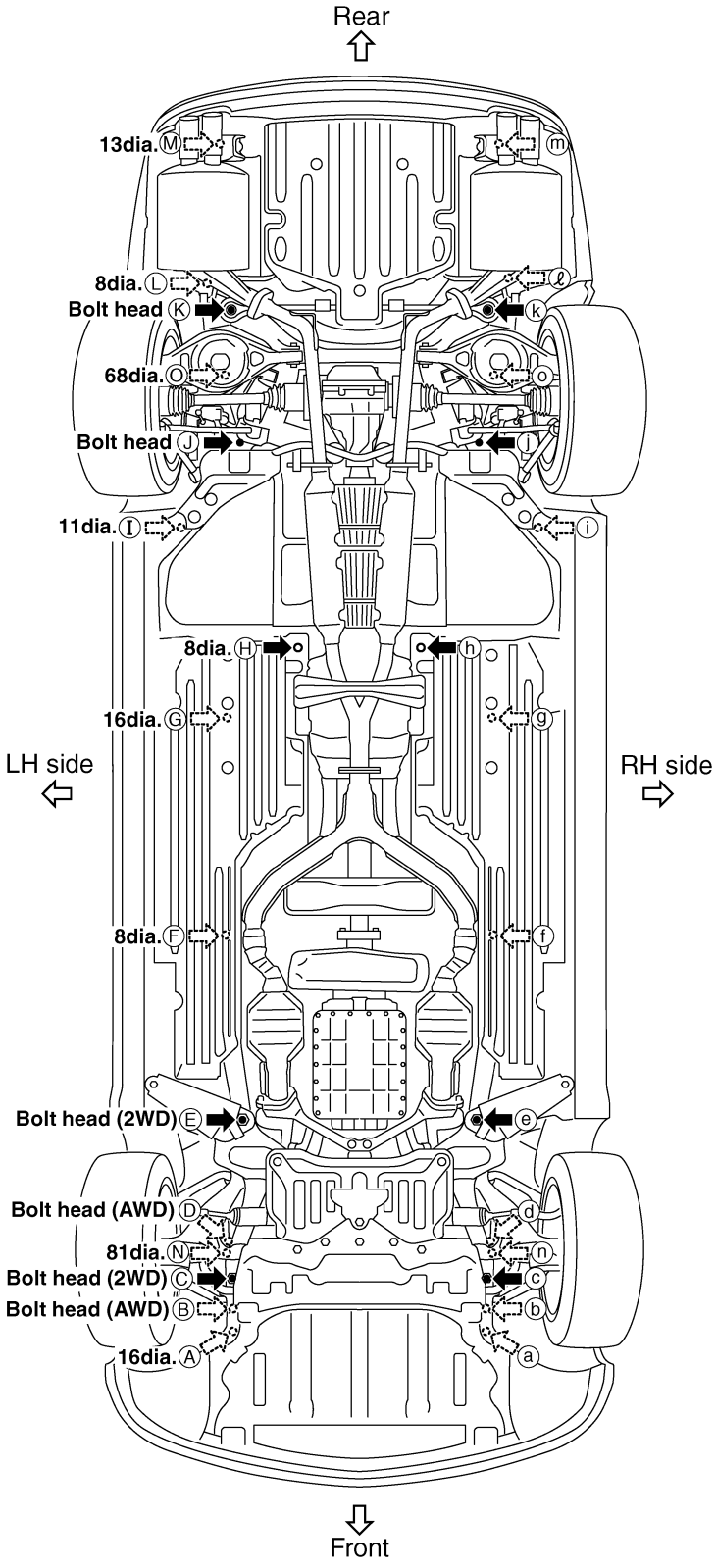

Coordinates:

Ⓐ	Ⓗ,ⓗ
X:416	**X:±205**
Y:-368	**Y:2042**
Z:303	**Z:59**
ⓐ	Ⓘ,ⓘ
X:-413	**X:±605**
Y:-368	**Y:2440**
Z:303	**Z:128**
Ⓑ,ⓑ	Ⓙ,ⓙ
X:±411	**X:±473**
Y:-261	**Y:2654**
Z:103	**Z:114**
Ⓒ,ⓒ	Ⓚ,ⓚ
X:±415	**X:±452**
Y:-104	**Y:3214**
Z:133	**Z:179**
Ⓓ,ⓓ	Ⓛ
X:±395	**X:550**
Y:76	**Y:3315**
Z:127	**Z:316**
Ⓔ,ⓔ	ⓛ
X:±392	**X:-500**
Y:414	**Y:3323**
Z:67	**Z:316**
Ⓕ,ⓕ	Ⓜ,ⓜ
X:±438	**X:±513**
Y:1066	**Y:3798**
Z:79	**Z:324**
Ⓖ,ⓖ	
X:±438	
Y:1810	
Z:81	

Front and rear strut tower centers

Coordinates:

Ⓝ,ⓝ
X:±436
Y:37
Z:668

Ⓞ,ⓞ
X:±501
Y:2942
Z:824

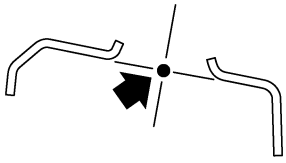

Front: Ⓝ,ⓝ **81dia.**
Rear: Ⓞ,ⓞ **68dia.**

SIIA2464E

PASSENGER COMPARTMENT
Measurement

Unit : mm

Figures marked with a (*) indicate symmetrically identical dimensions on both right and left hand sides of the vehicle.

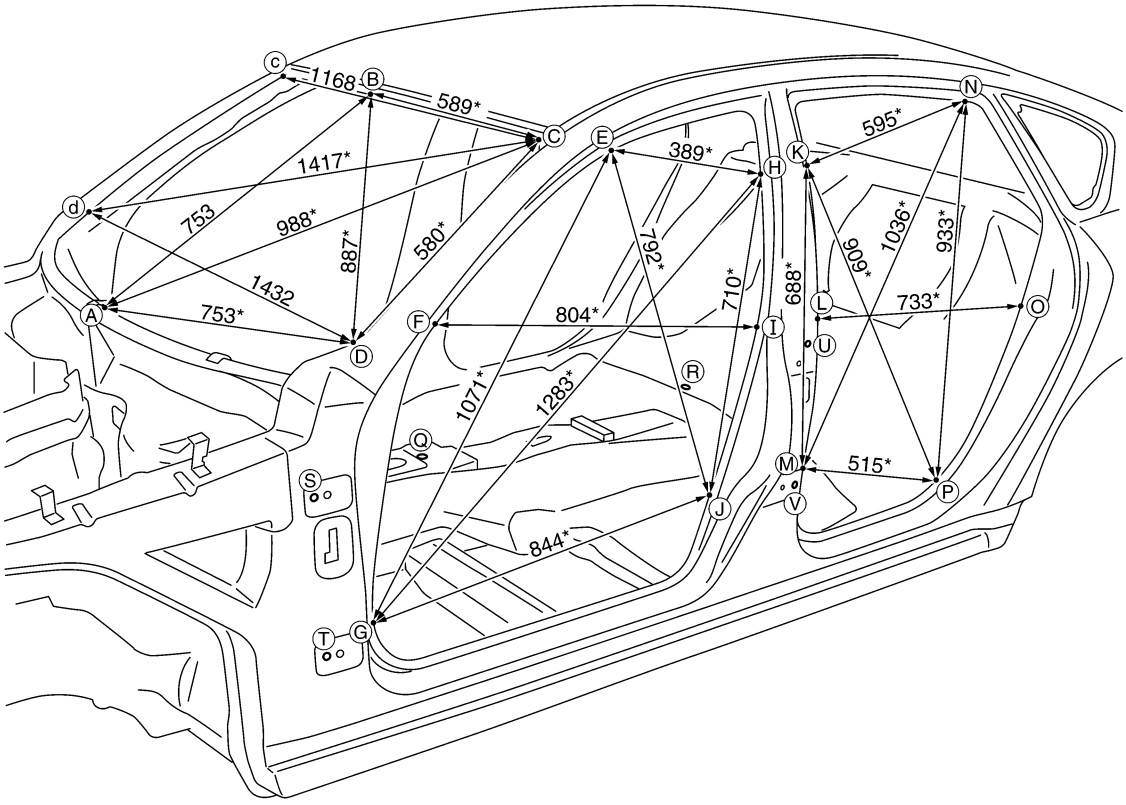

Point	Dimension	Point	Dimension	Point	Dimension
Ⓔ~ⓔ	1,221	Ⓚ~ⓜ	1,551*	Ⓠ~Ⓖ	923*
Ⓔ~ⓖ	1,722*	Ⓚ~ⓝ	1,376*	Ⓠ~Ⓗ	1,114*
Ⓔ~ⓗ	1,322*	Ⓚ~ⓟ	1,667*	Ⓠ~Ⓘ	959*
Ⓔ~ⓙ	1,566*	Ⓛ~ℓ	1,490	Ⓠ~Ⓙ	808*
Ⓕ~ⓕ	1,446	Ⓛ~ⓞ	1,642*	Ⓡ~Ⓚ	1,004*
Ⓕ~ⓘ	1,673*	Ⓜ~ⓜ	1,482	Ⓡ~Ⓛ	880*
Ⓖ~ⓖ	1,491	Ⓜ~ⓝ	1,680*	Ⓡ~Ⓜ	797*
Ⓖ~ⓗ	1,896*	Ⓜ~ⓟ	1,576*	Ⓡ~Ⓝ	1,092*
Ⓖ~ⓙ	1,715*	Ⓝ~ⓝ	1,181	Ⓡ~Ⓞ	937*
Ⓗ~ⓗ	1,307	Ⓝ~ⓟ	1,624*	Ⓡ~Ⓟ	780*
Ⓗ~ⓙ	1,568*	Ⓞ~ⓞ	1,448	Ⓢ~Ⓤ	1,193*
Ⓘ~ⓘ	1,488	Ⓟ~ⓟ	1,496	Ⓢ~Ⓥ	1,186*
Ⓙ~ⓙ	1,495	Ⓠ~Ⓔ	1,043*	Ⓣ~Ⓤ	1,254*
Ⓚ~ⓚ	1,304	Ⓠ~Ⓕ	1,001*	Ⓣ~Ⓥ	1,164*

SIIA2465E

Measurement Points

Ⓐ : Upper dash crossmember flange end of center positioning mark

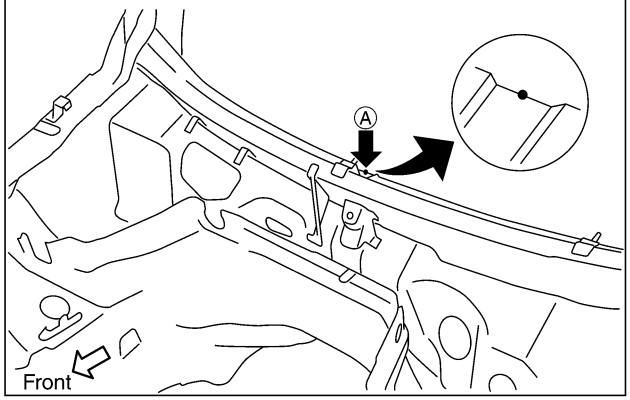

Ⓑ : Roof flange end of center positioning mark
Ⓒ,ⓒ : Front pillar joggle

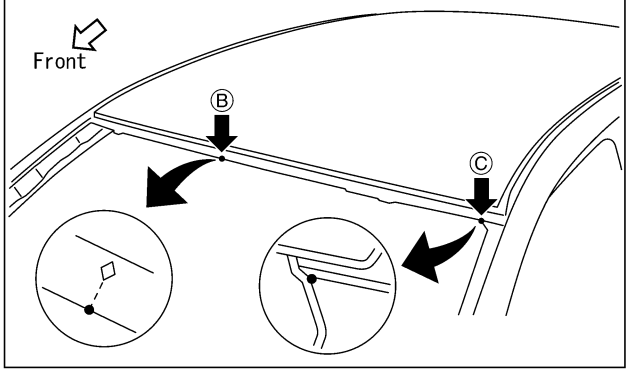

Ⓓ ,ⓓ : Front pillar flange end

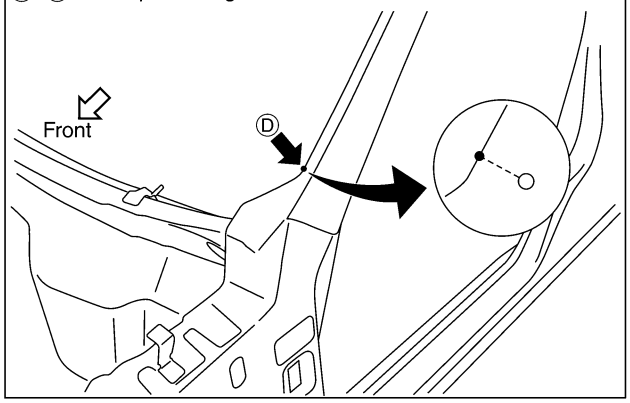

Ⓔ ,ⓔ ,Ⓕ, ⓕ, Ⓖ, ⓖ: Front pillar indent
Ⓢ ,ⓢ ,Ⓣ, ⓣ: Door hinge installing hole center (12dia.)

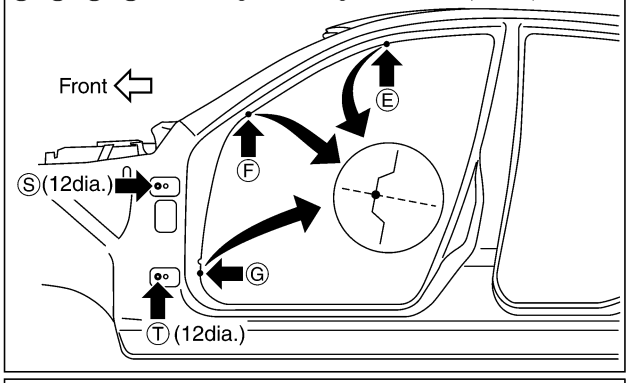

Ⓗ ,ⓗ ,Ⓘ, ⓘ, Ⓙ, ⓙ, Ⓚ, ⓚ, Ⓛ, ⓛ, Ⓜ, ⓜ : Center pillar indent
Ⓤ ,ⓤ ,Ⓥ, ⓥ: Door hinge installing hole center
(Ⓤ, ⓤ: 9dia., Ⓥ, ⓥ: 12dia.)

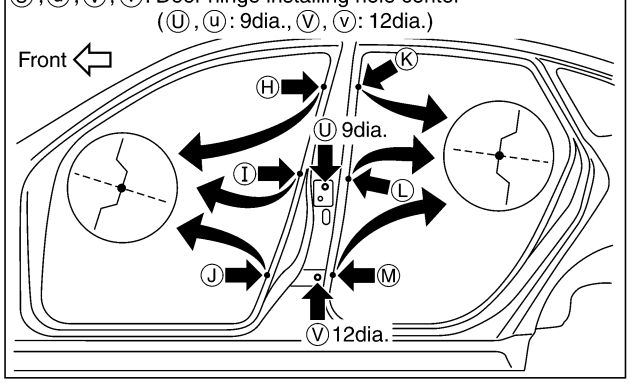

Ⓝ ,ⓝ ,Ⓞ, ⓞ, Ⓟ, ⓟ : Rear fender indent

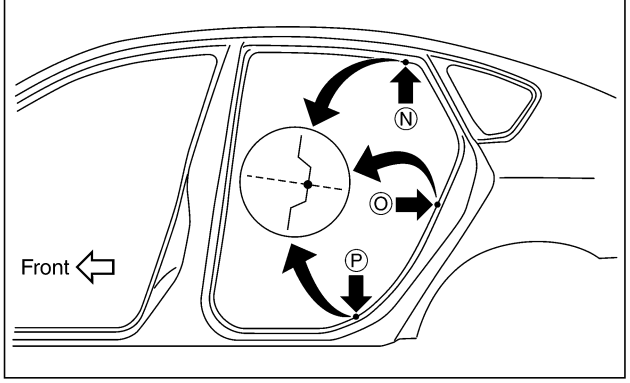

Ⓠ : Trans control reinforcement hole center of center positioning mark (5dia.)
Ⓡ : Rear seat crossmember reinforcement hole center of center positioning mark (5dia.)

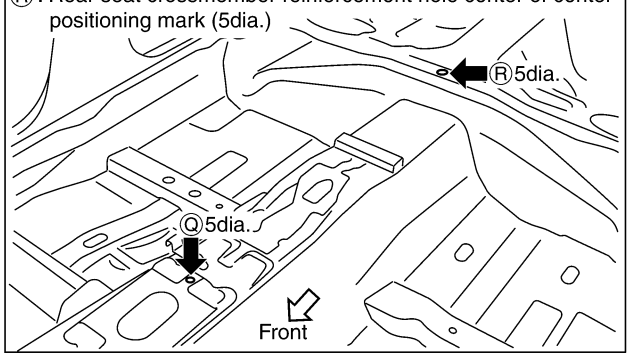

SIIA2466E

REAR BODY
Measurement

Figures marked with a (*) indicate symmetrically identical dimensions on both right and left hand sides of the vehicle.

Unit : mm

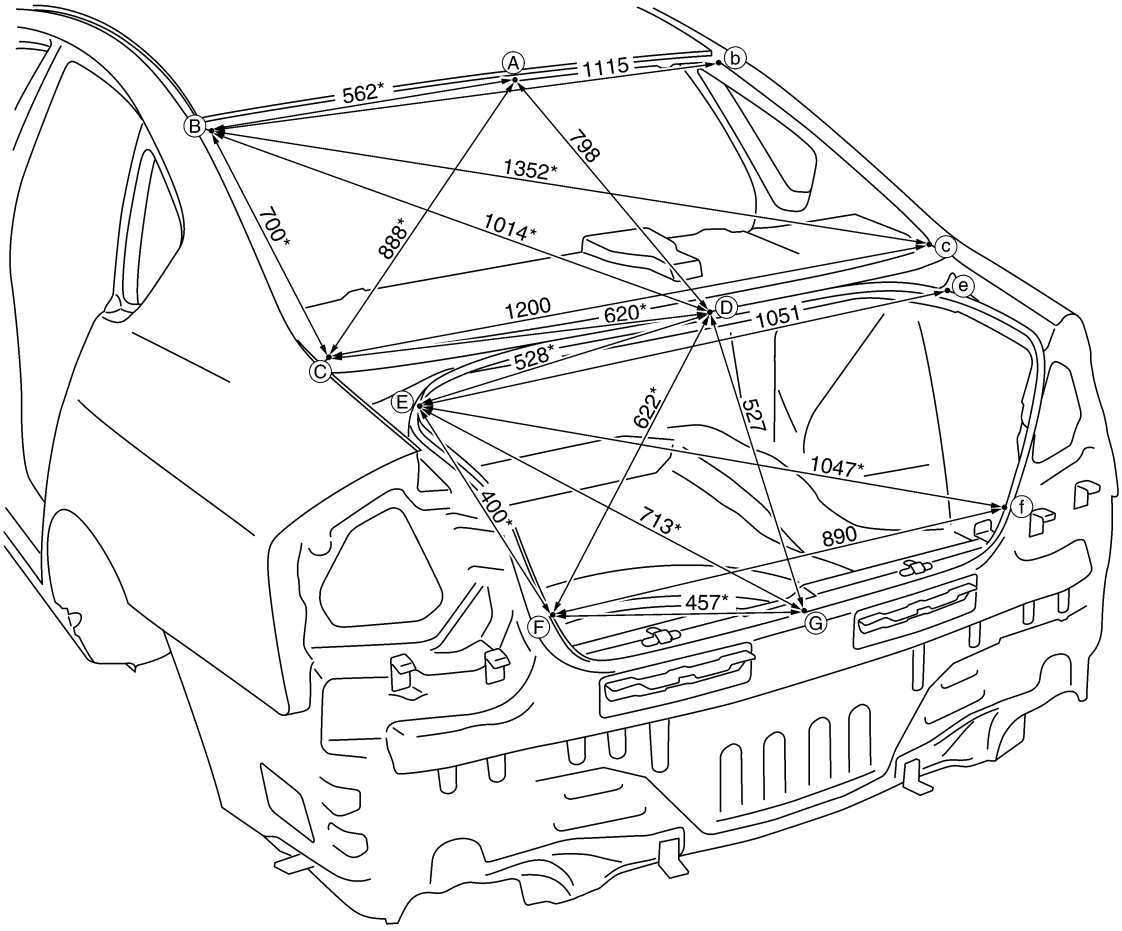

SIIA2467E

Measurement Points

Ⓐ : Roof flange end of center positioning mark
Ⓑ , ⓑ: Rear fender joggle

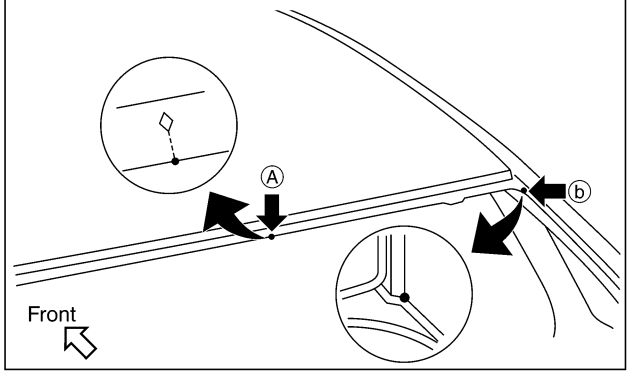

Ⓒ , ⓒ : Rear fender extension joggle
Ⓔ , ⓔ : Rear fender corner extension joggle

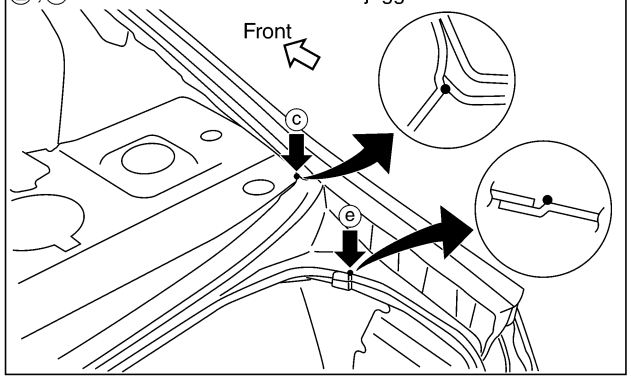

Ⓓ : Rear waist flange end of center positioning mark

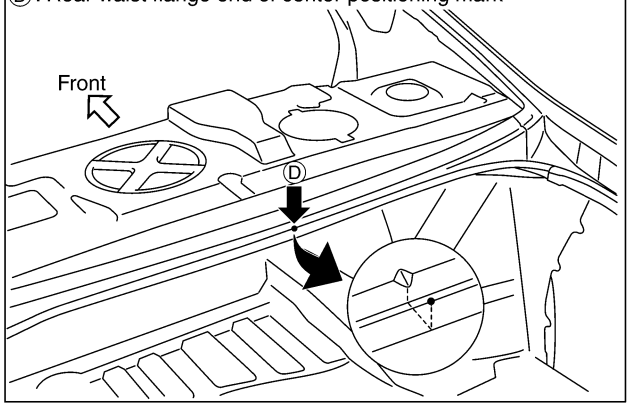

Ⓕ , ⓕ : Rear combination lamp base joggle

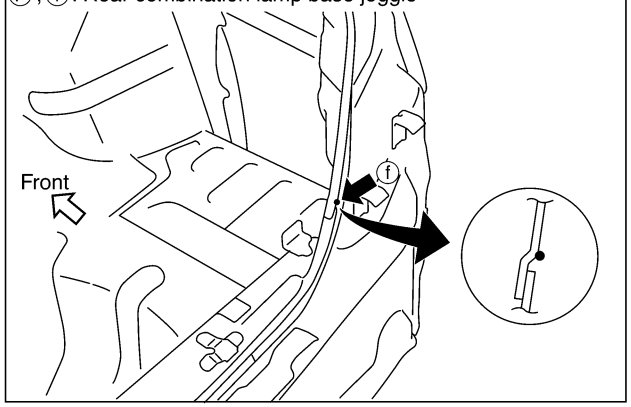

Ⓖ : Rear panel flange end of center positioning mark

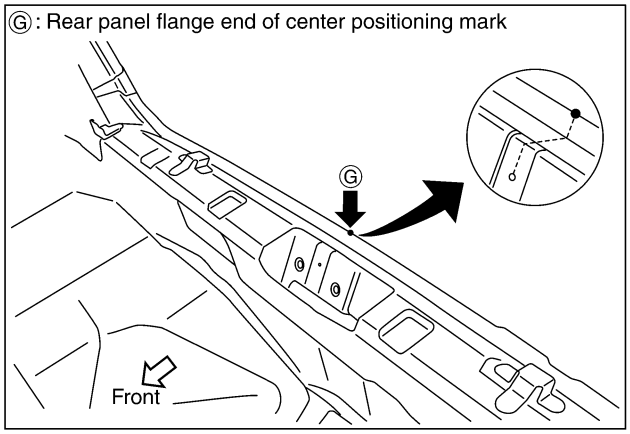

SIIA2468E

Handling Precautions for Plastics

NIS00213

HANDLING PRECAUTIONS FOR PLASTICS

Abbre-viation	Material name	Heat resisting temperature °C(°F)	Resistance to gasoline and solvents	Other cautions
PE	Polyethylene	60(140)	Gasoline and most solvents are harmless if applied for a very short time (wipe up quickly).	Flammable
PVC	Poly Vinyl Chloride	80(176)	Same as above.	Poison gas is emitted when burned.
EPM/ EPDM	Ethylene Propylene (Diene) copolymer	80(176)	Same as above.	Flammable
TPO	Thermoplastic Olefine	80(176)	Same as above.	Flammable
PP	Polypropylene	90(194)	Same as above.	Flammable, avoid battery acid.
UP	Unsaturated Polyester	90(194)	Same as above.	Flammable
PS	Polystyrene	80(176)	Avoid solvents.	Flammable
ABS	Acrylonitrile Butadiene Styrene	80(176)	Avoid gasoline and solvents.	
AES	Acrylonitrile Ethylene Styrene	80(176)	Same as above.	
PMMA	Poly Methyl Methacrylate	85(185)	Same as above.	
EVAC	Ethylene Vinyl Acetate	90(194)	Same as above.	
ASA	Acrylonitrile Styrene Acrylate	100(222)	Same as above.	Flammable
PPE	Poly Phenylene Ether	110(230)	Same as above.	
PC	Polycarbonate	120(248)	Same as above.	
PAR	Polyarylate	180(356)	Same as above.	
PUR	Polyurethane	90(194)	Same as above.	
POM	Poly Oxymethylene	120(248)	Same as above.	Avoid battery acid.
PBT+ PC	Poly Butylene Terephthalate + Polycarbonate	120(248)	Same as above.	Flammable
PA	Polyamide	140(284)	Same as above.	Avoid immersing in water.
PBT	Poly Butylene Terephthalate	140(284)	Same as above.	
PET	Polyester	180(356)	Same as above.	
PEI	Polyetherimide	200(392)	Same as above.	

1. When repairing and painting a portion of the body adjacent to plastic parts, consider their characteristics (influence of heat and solvent) and remove them if necessary or take suitable measures to protect them.
2. Plastic parts should be repaired and painted using methods suiting the materials′ characteristics.

LOCATION OF PLASTIC PARTS

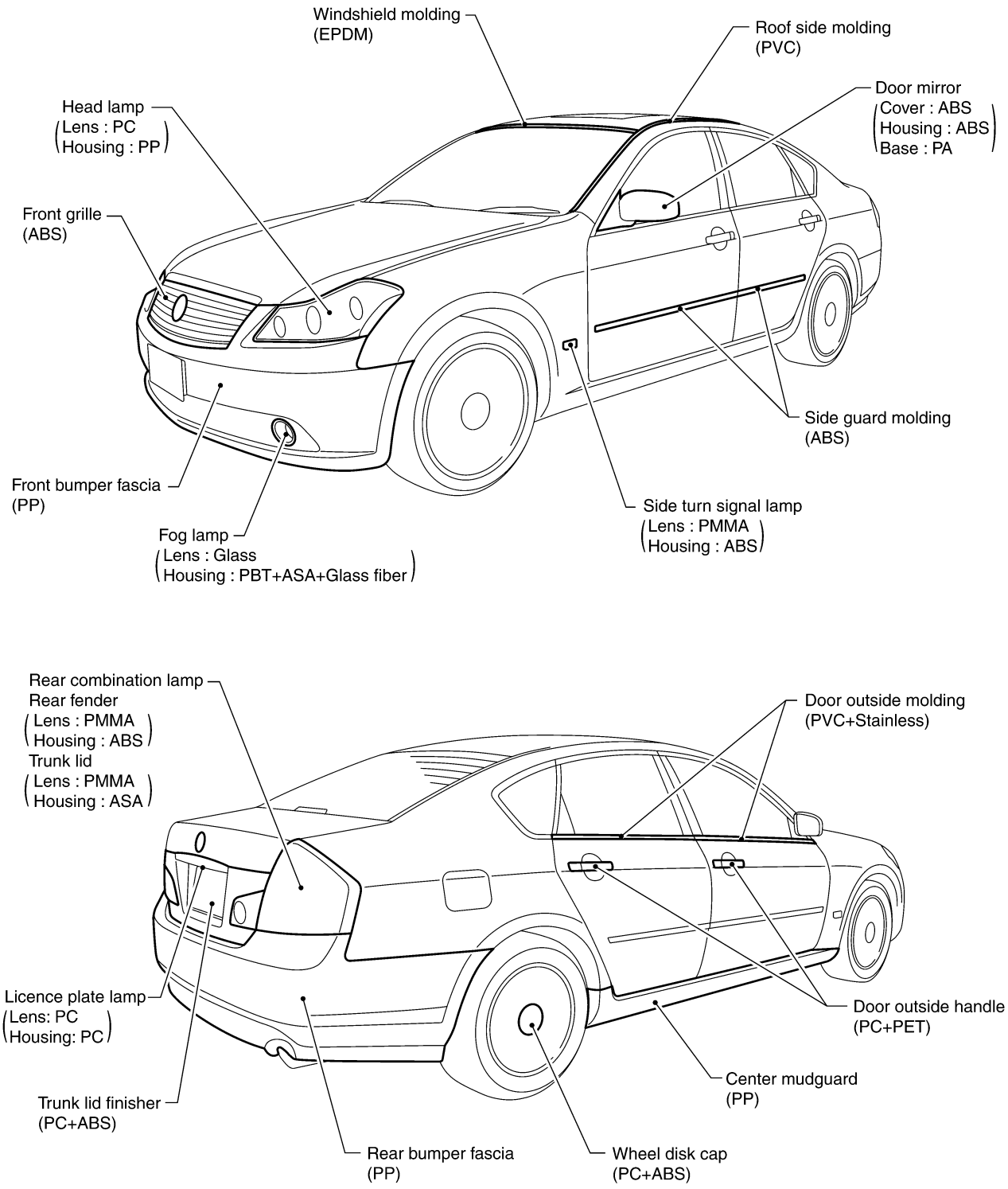

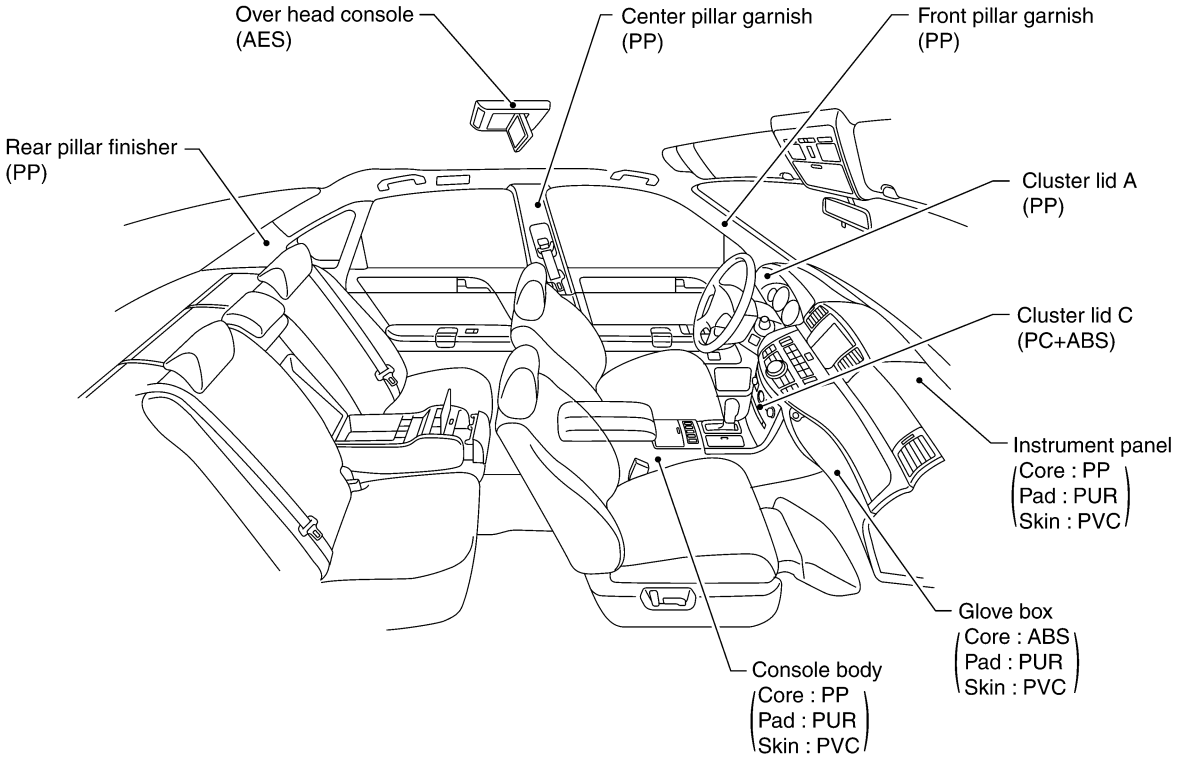
Over head console
(AES)
Center pillar garnish
(PP)
Front pillar garnish
(PP)
Rear pillar finisher
(PP)
Cluster lid A
(PP)
Cluster lid C
(PC+ABS)
Instrument panel
Core : PP
Pad : PUR
Skin : PVC
Glove box
Core : ABS
Pad : PUR
Skin : PVC
Console body
Core : PP
Pad : PUR
Skin : PVC

SIIA2470E

Precautions in Repairing High Strength Steel

NIS00214

High strength steel is used for body panels in order to reduce vehicle weight.
Accordingly, precautions in repairing automotive bodies made of high strength steel are described below:

HIGH STRENGTH STEEL (HSS) USED IN NISSAN VEHICLES

Tensile strength	Nissan/Infiniti designation	Major applicable parts
373 N/mm^2 (38kg/mm^2 ,54klb/sq in)	SP130	● Front & rear side member assembly ● Front side member closing plate assembly ● Front strut housing ● Lower dash ● Rear seat crossmember ● Other reinforcements
785-1350 N/mm^2 (80-138kg/mm^2 , 114-196klb/sq in)	SP150	● Center pillar reinforcement (Component part) ● Outer roof side rail reinforcement (Component part)

SP130 is the most commonly used HSS.
SP150 HSS is used only on parts that require much more strength.

Read the Following Precautions When Repairing HSS:

1. Additional points to consider

- The repair of reinforcements (such as side members) by heating is not recommended since it may weaken the component. When heating is unavoidable, do not heat HSS parts above 550°C (1,022°F).
  Verify heating temperature with a thermometer.
  (Crayon-type and other similar type thermometer are appropriate.)

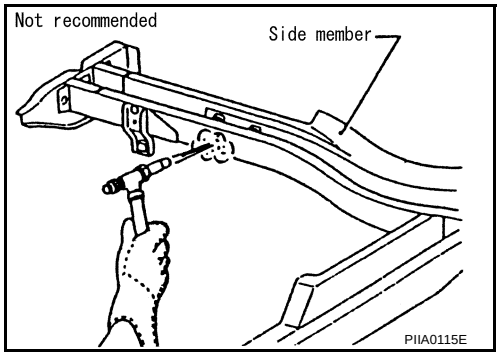

- When straightening body panels, use caution in pulling any HSS panel. Because HSS is very strong, pulling may cause deformation in adjacent portions of the body. In this case, increase the number of measuring points, and carefully pull the HSS panel.

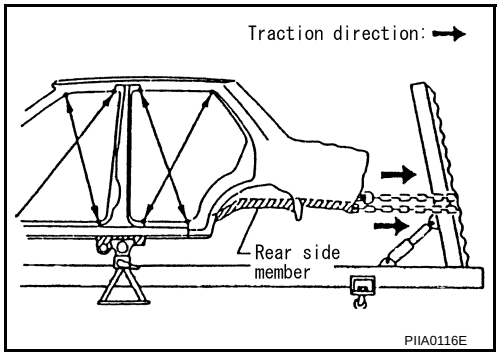

- When cutting HSS panels, avoid gas (torch) cutting if possible. Instead, use a saw to avoid weakening surrounding areas due to heat. If gas (torch) cutting is unavoidable, allow a minimum margin of 50 mm (1.97in).

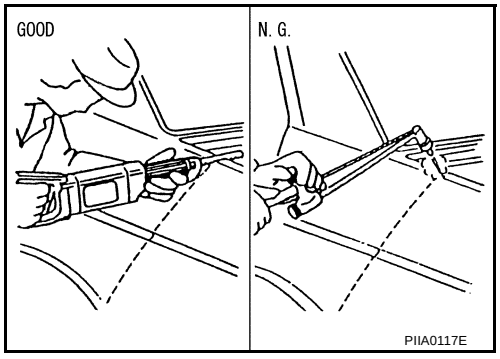

- When welding HSS panels, use spot welding whenever possible in order to minimize weakening surrounding areas due to heat.
  If spot welding is impossible, use M.I.G. welding. Do not use gas (torch) welding because it is inferior in welding strength.

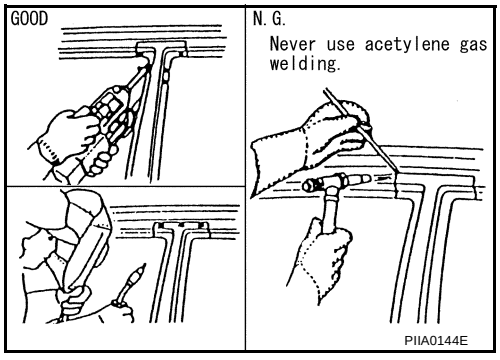

- The spot weld on HSS panels is harder than that of an ordinary steel panel.
  Therefore, when cutting spot welds on a HSS panel, use a low speed high torque drill (1,000 to 1,200 rpm) to increase drill bit durability and facilitate the operation.

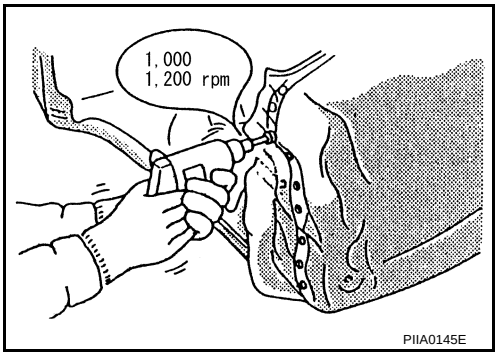

2. Precautions in spot welding HSS
   This work should be performed under standard working conditions. Always note the following when spot welding HSS:
   - The electrode tip diameter must be sized properly according to the metal thickness.

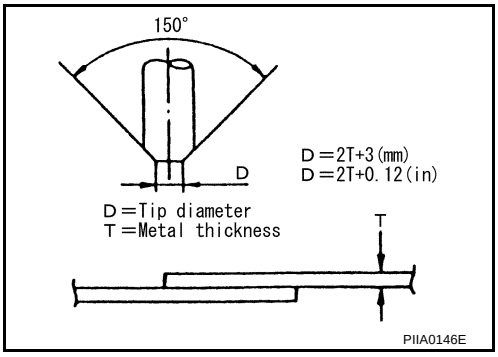

- The panel surfaces must fit flush to each other, leaving no gaps.

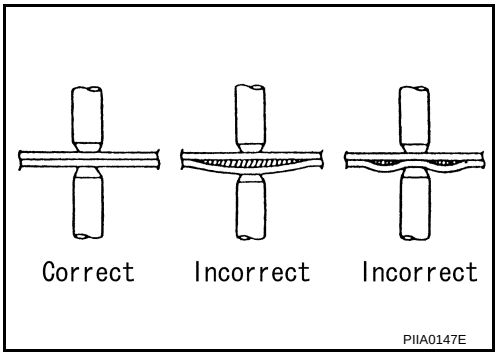

- Follow the specifications for the proper welding pitch.

Unit: mm

Thickness (t)	Minimum pitch (l)
0.6 (0.024)	10 (0.39) or over
0.8 (0.031)	12 (0.47) or over
1.0 (0.039)	18 (0.71) or over
1.2 (0.047)	20 (0.79) or over
1.6 (0.063)	27 (1.06) or over
1.8 (0.071)	31 (1.22) or over

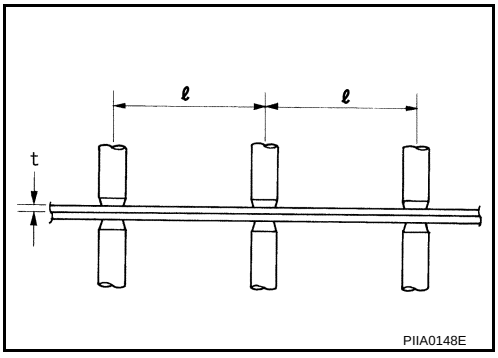

Rear fender hemming process

1. A wheel arch is to be installed and hemmed over left and right outer wheel house.
2. In order to hem the wheel arch, it is necessary to repair any damaged or defaced parts around outer wheel house.

   CAUTION:
   Ensure that the area that is to be glued around outer wheelhouse is undamaged or defaced.

Procedure of the hemming process

- Peel off old bonding material on the surface of outer wheelhouse and clean thoroughly.
- Peel off a primer coat in the specified area where new adhesive is to be applied on rear fender (the replacing part).
- Apply new adhesive to both specified areas of outer wheelhouse and rear fender.

  <Adhesive> 3M automix panel bond 8115, or any equivalents

- Attach rear fender to the body of the car, and weld the required part except the hemming part.

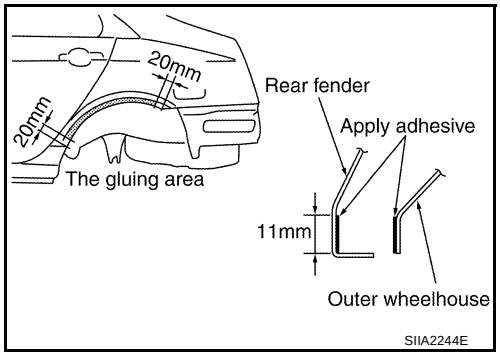

- Bend the welded part starting from the center of the wheel arch gradually with a hammer and a dolly. (Also hem the end of the flange.)
- Hemming with a hammer is conducted to an approximate angle of 80 degrees.

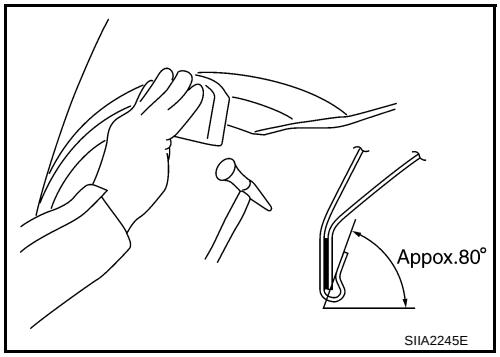

- Starting from the center, hem the wheel arch gradually, using slight back and forth motion with a hemming tool.

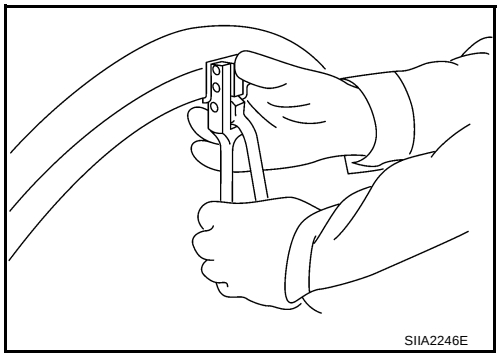

- Seal up the area around the hemmed end of the flange.

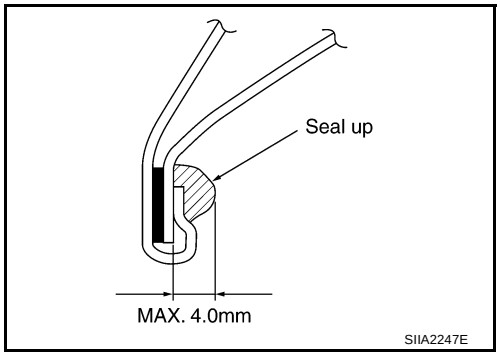

Replacement Operations

NIS00215

DESCRIPTION

This section is prepared for technicians who have attained a high level of skill and experience in repairing collision-damaged vehicles and also use modern service tools and equipment. Persons unfamiliar with body repair techniques should not attempt to repair collision-damaged vehicles by using this section.

Technicians are also encouraged to read Body Repair Manual (Fundamentals) in order to ensure that the original functions and quality of the vehicle can be maintained. The Body Repair Manual (Fundamentals) contains additional information, including cautions and warning, that are not including in this manual. Technicians should refer to both manuals to ensure proper repairs.

Please note that these information are prepared for worldwide usage, and as such, certain procedures might not apply in some regions or countries.

The symbols used in this section for cutting and welding / brazing operations are shown below.

Saw cut or air chisel cut		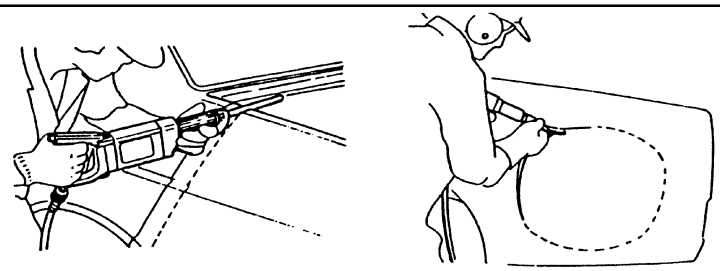
Spot weld	2-spot welds	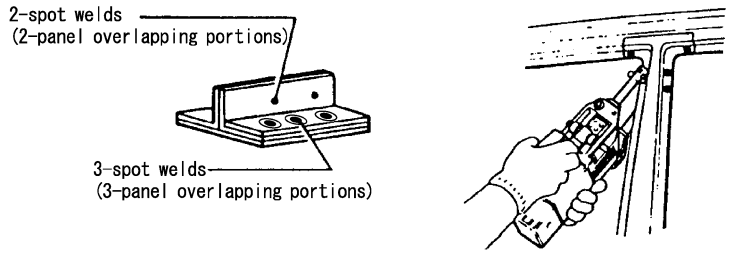
	3-spot welds	
MIG plug weld		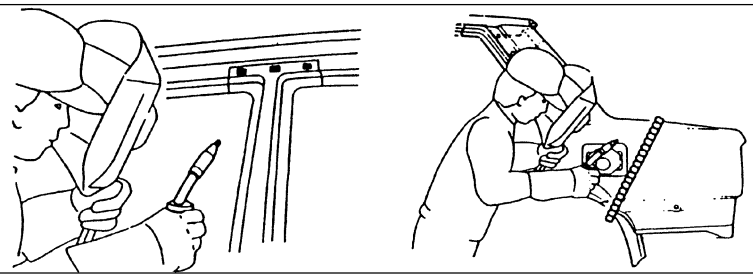
MIG seam weld/ Point weld		
Brazing		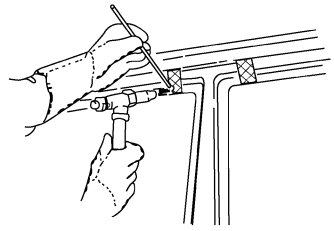
Soldering		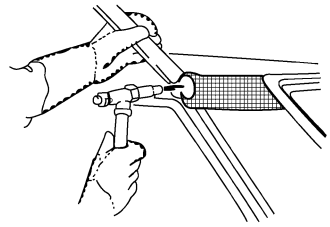
Sealing		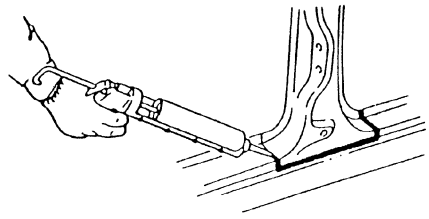

PIIA0149E

CAUTION:
A steel plate using ultra high strength steel plate is below welding with strength falling by adding heat, and not doing a limit patch.

- Front pillar butt joint can be determined anywhere within shaded area as shown in the figure. The best location for the butt joint is at position A due to the construction of the vehicle. Refer to the front pillar section.

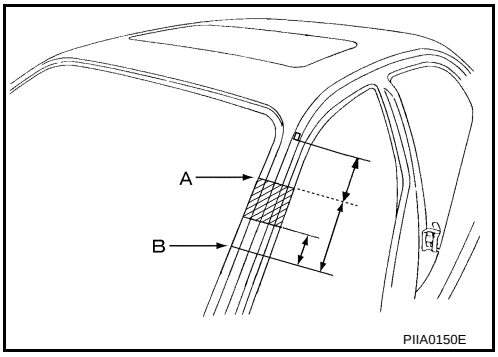

- Determine cutting position and record distance from the locating indent. Use this distance when cutting the service part. Cut outer front pillar over 60 mm above inner front pillar cut position.

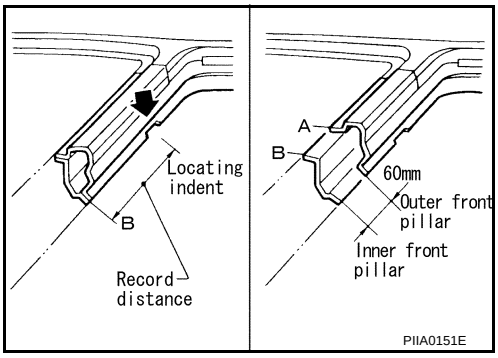

- Prepare a cutting jig to make outer pillar easier to cut. Also, this will permit service part to be accurately cut at joint position.

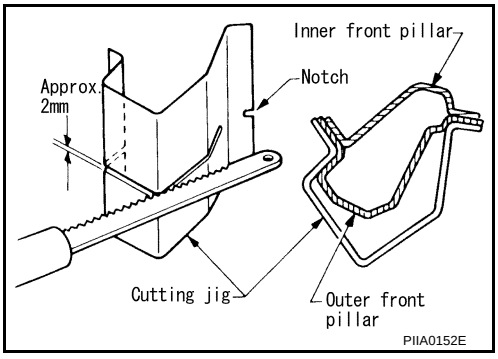

- An example of cutting operation using a cutting jig is as follows.

1. Mark cutting lines.
   A: Cut position of outer pillar
   B: Cut position of inner pillar
2. Align cutting line with notch on jig. Clamp jig to pillar.
3. Cut outer pillar along groove of jig. (At position A)
4. Remove jig and cut remaining portions.
5. Cut inner pillar at position B in same manner.

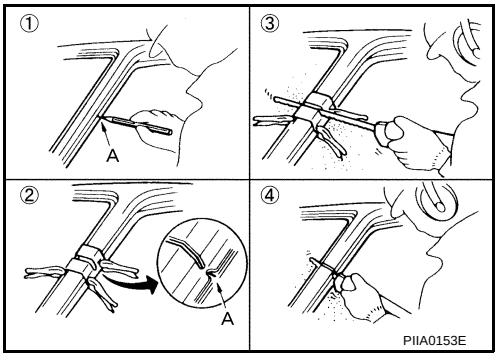

HOODLEDGE

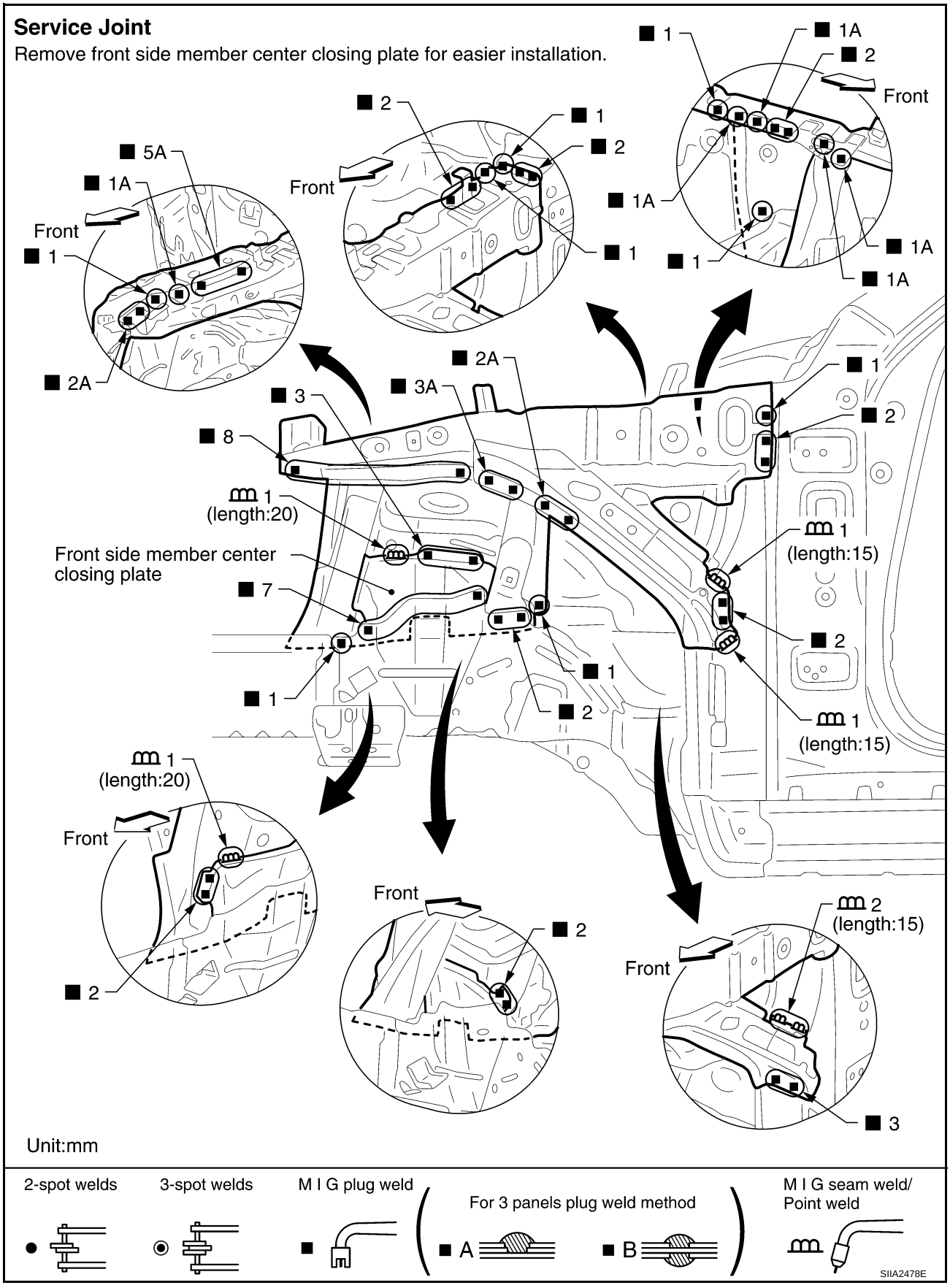

Change parts

- Front strut housing (LH)
- Upper front hoodledge (LH)
- Hoodledge reinforcement (LH)

Service Joint

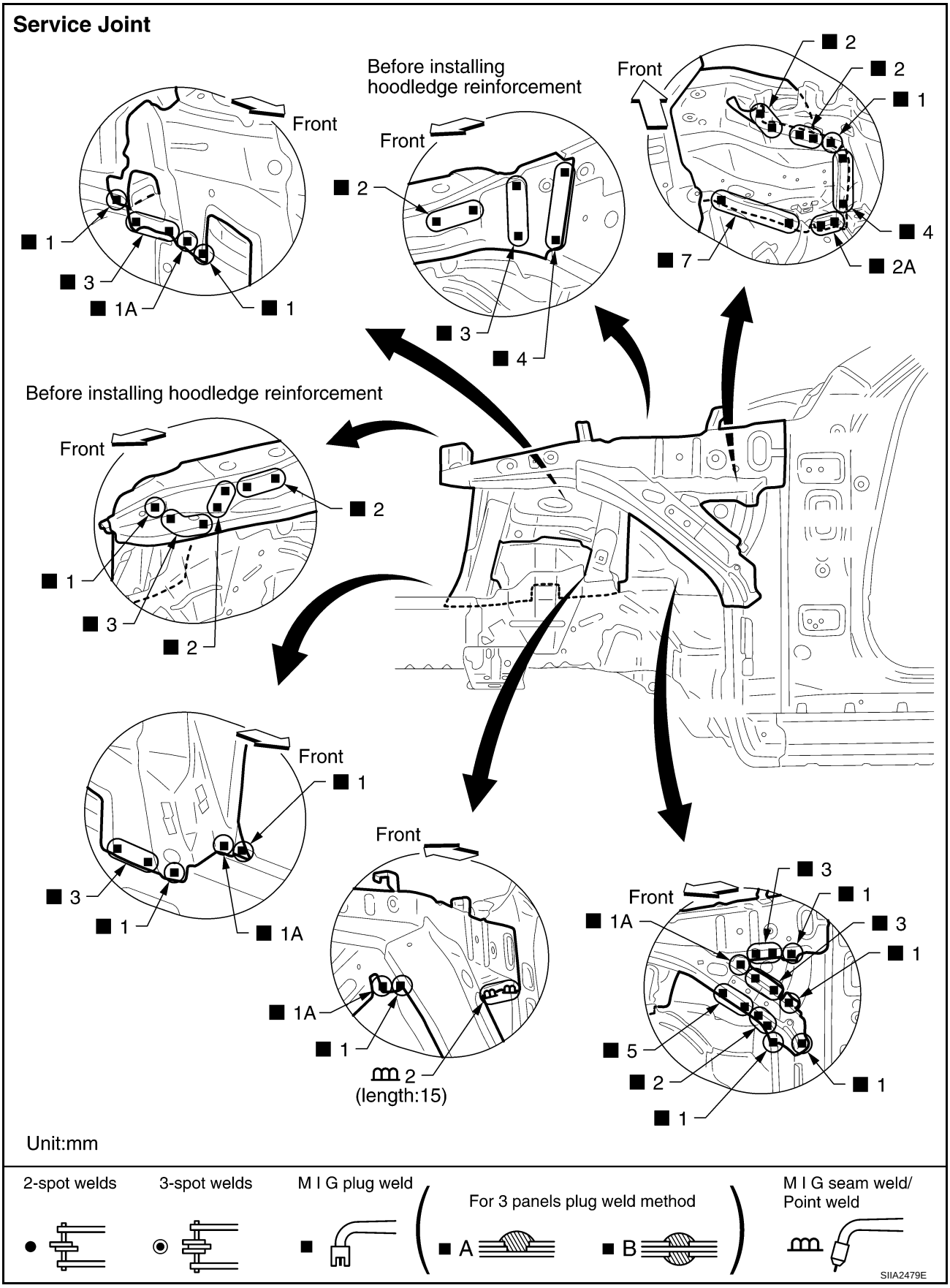

FRONT SIDE MEMBER (2WD)

- Work after hoodledge has been removed.

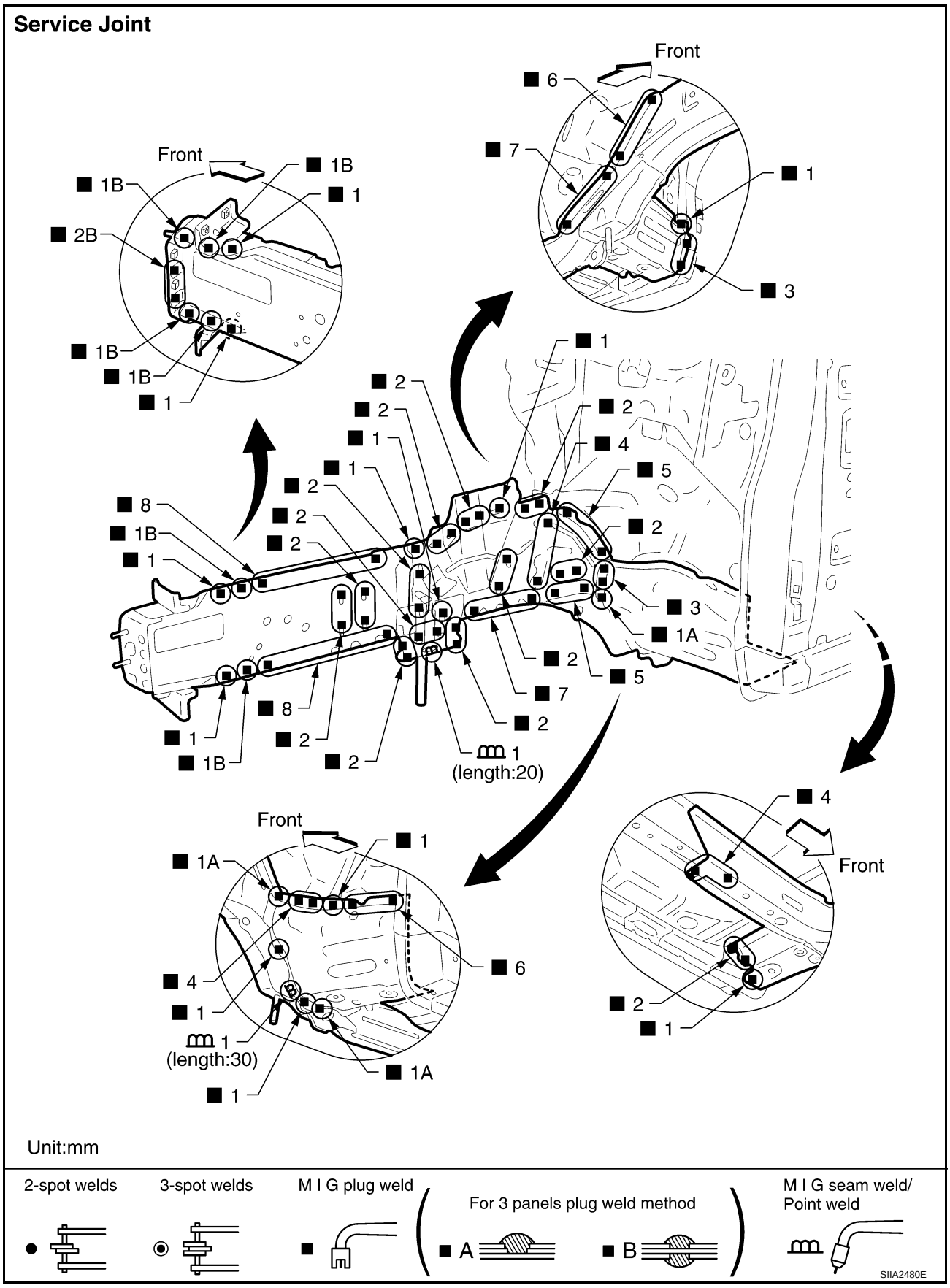

Change parts

- Front side member assembly (LH)
- Front side member outrigger assembly (LH)
- Front side member closing plate assembly (LH)
- Front side member rear reinforcement (LH)

Service Joint

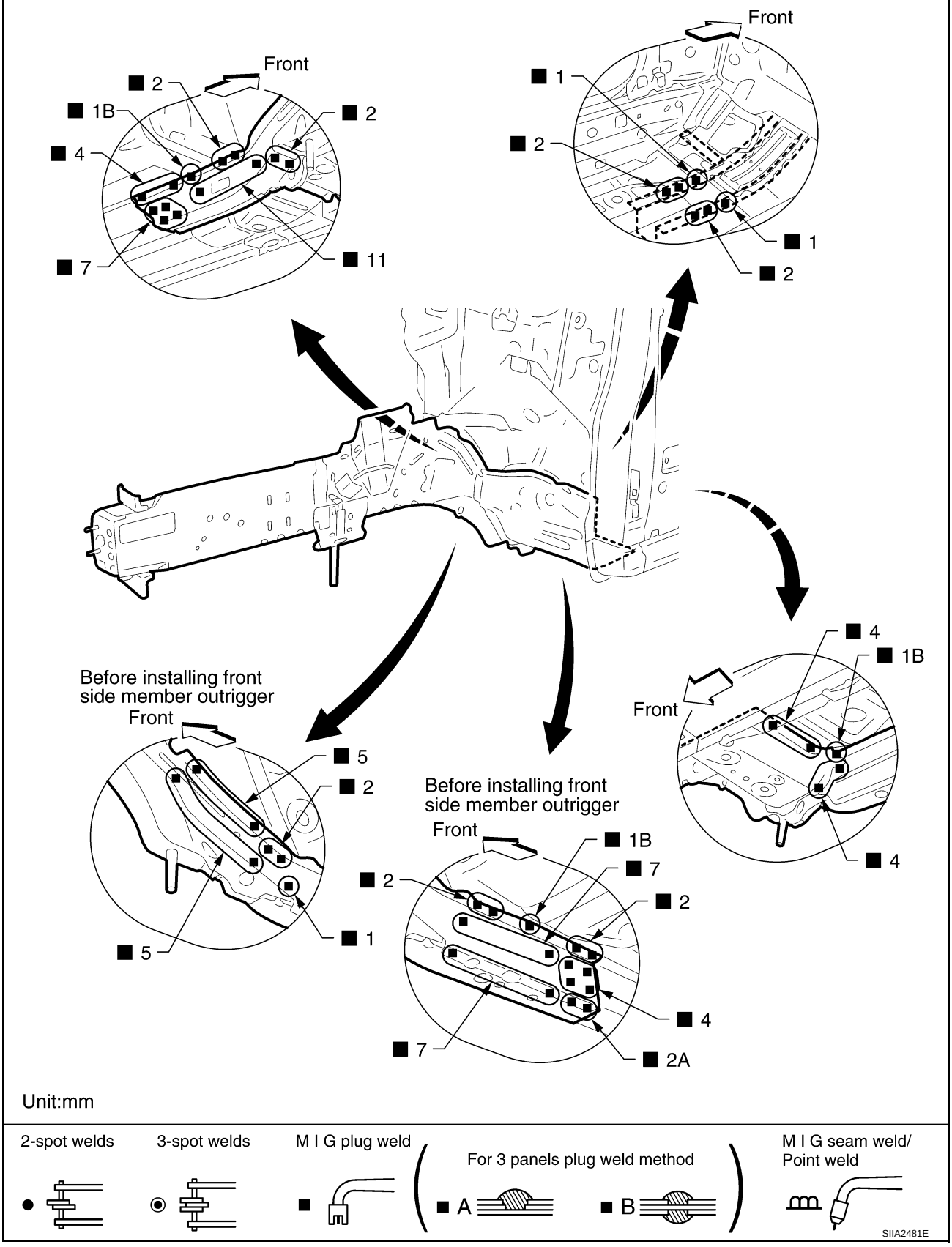

FRONT SIDE MEMBER (AWD)

- Work after hoodledge has been removed.

Service Joint

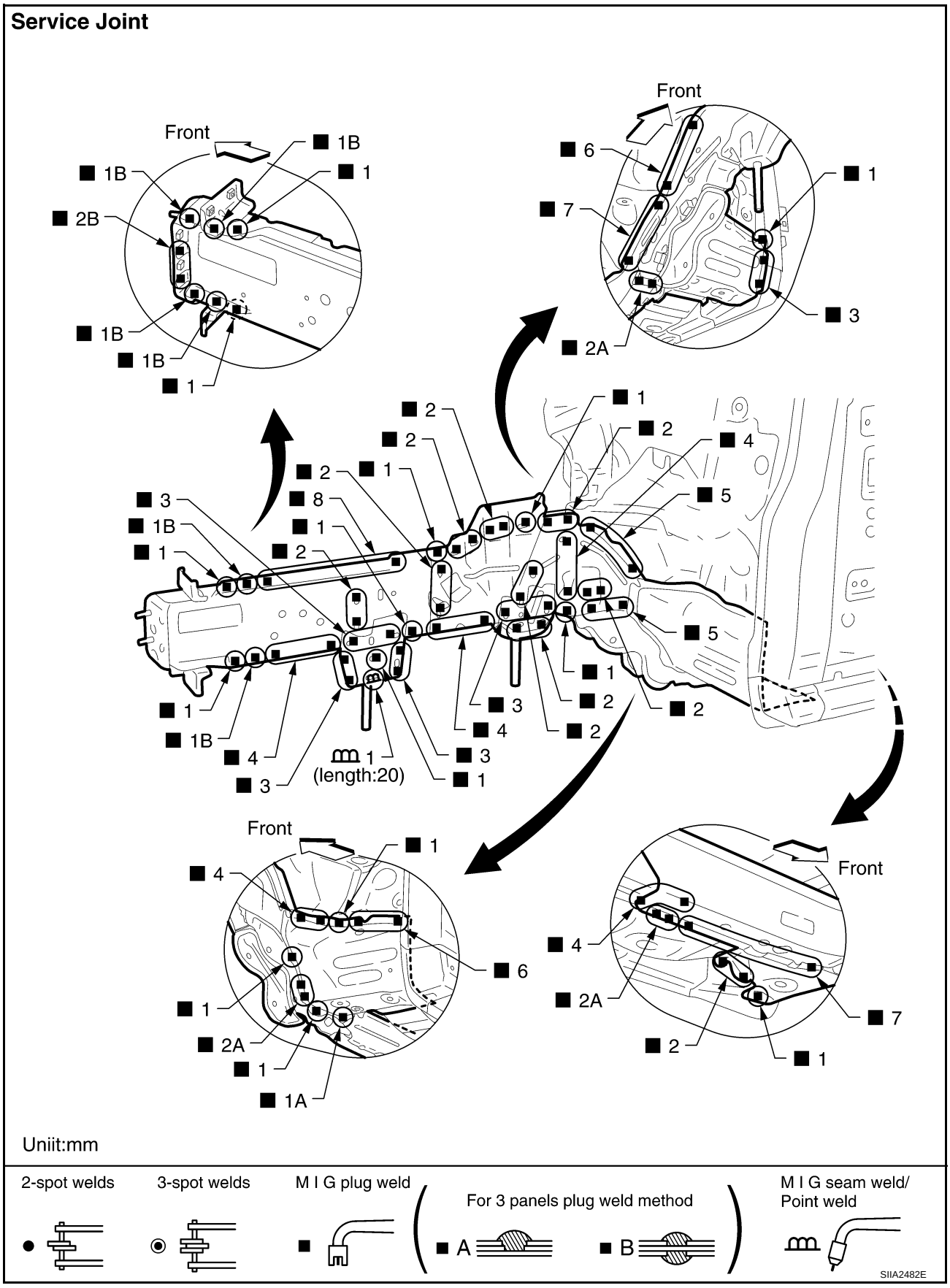

Change parts

- Front side member assembly (LH)
- Front side member outrigger assembly (LH)
- Front side member closing plate assembly (LH)
- Front side member rear reinforcement (LH)

Service Joint

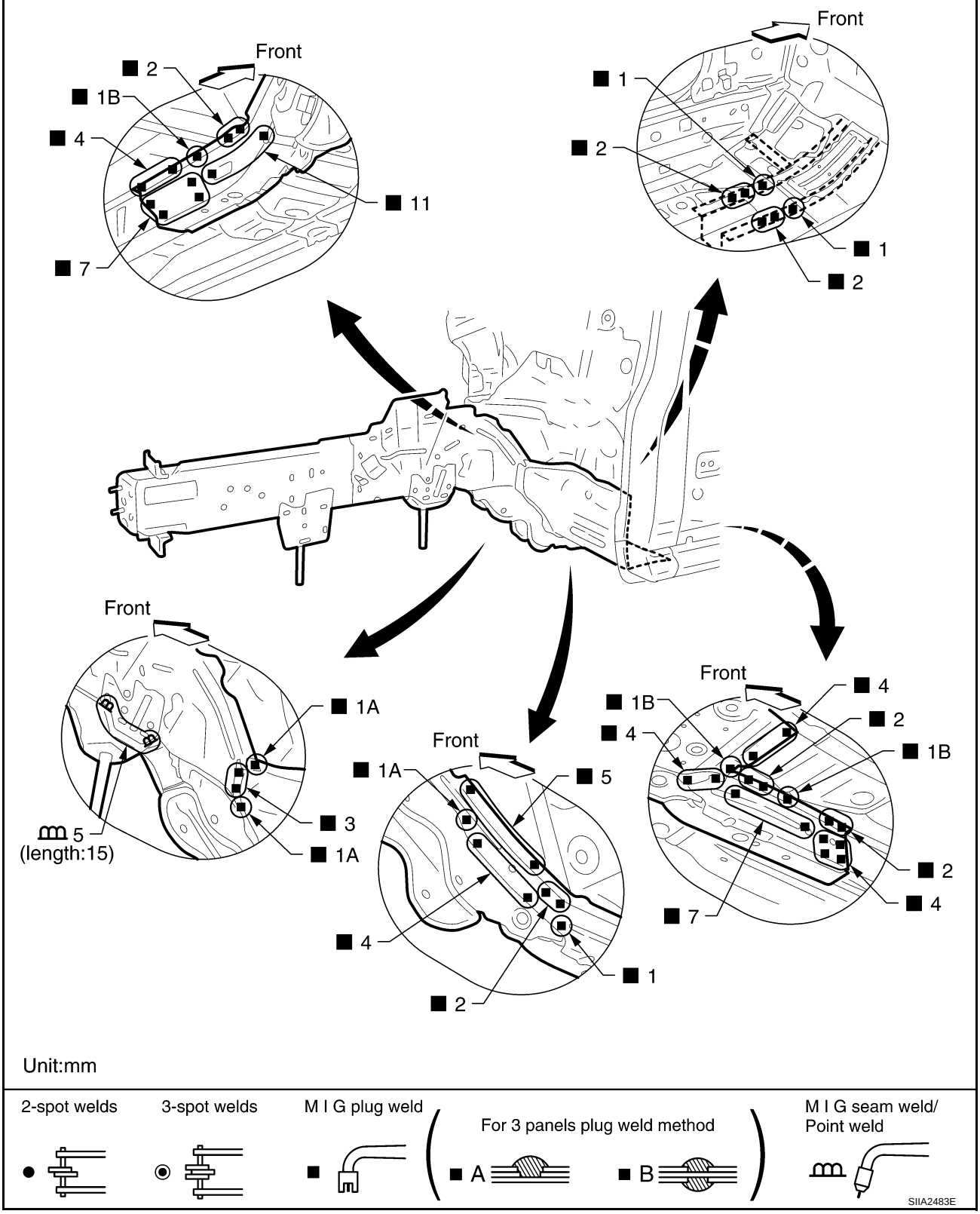

FRONT SIDE MEMBER (2WD) (PARTIAL REPLACEMENT)

Service Joint

(This figure shows the right side, and the left side is also similar.)

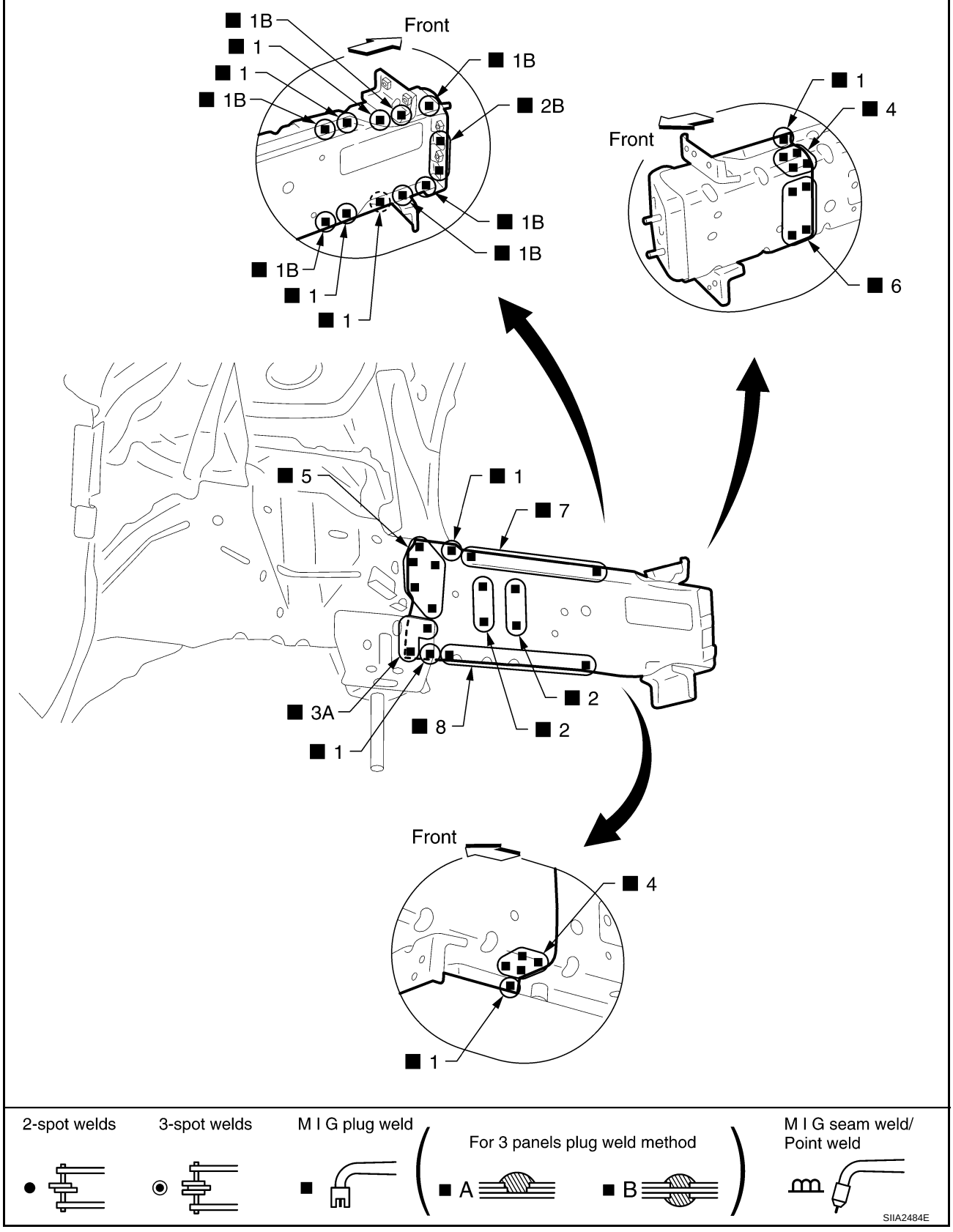

Change parts

- Front side member front extension (RH)
- Front side member front closing plate (RH)

FRONT SIDE MEMBER (AWD) (PARTIAL REPLACEMENT)

Service Joint

(This figure shows the right side, and the left side is also similar.)

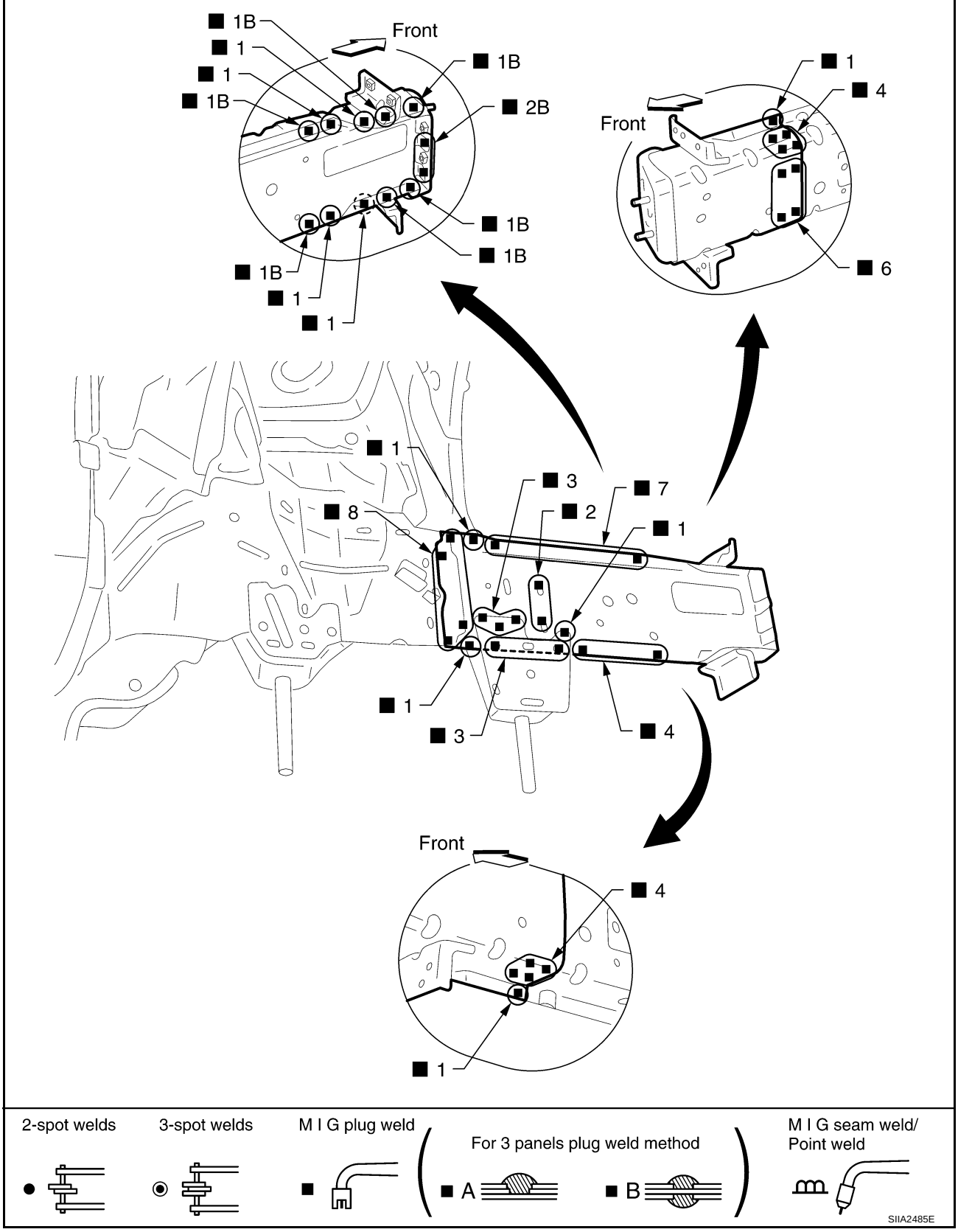

Change parts

- Front side member front extension (RH)
- Front side member front closing plate (RH)

FRONT PILLAR

- Work after hoodledge reinforcement has been removed.

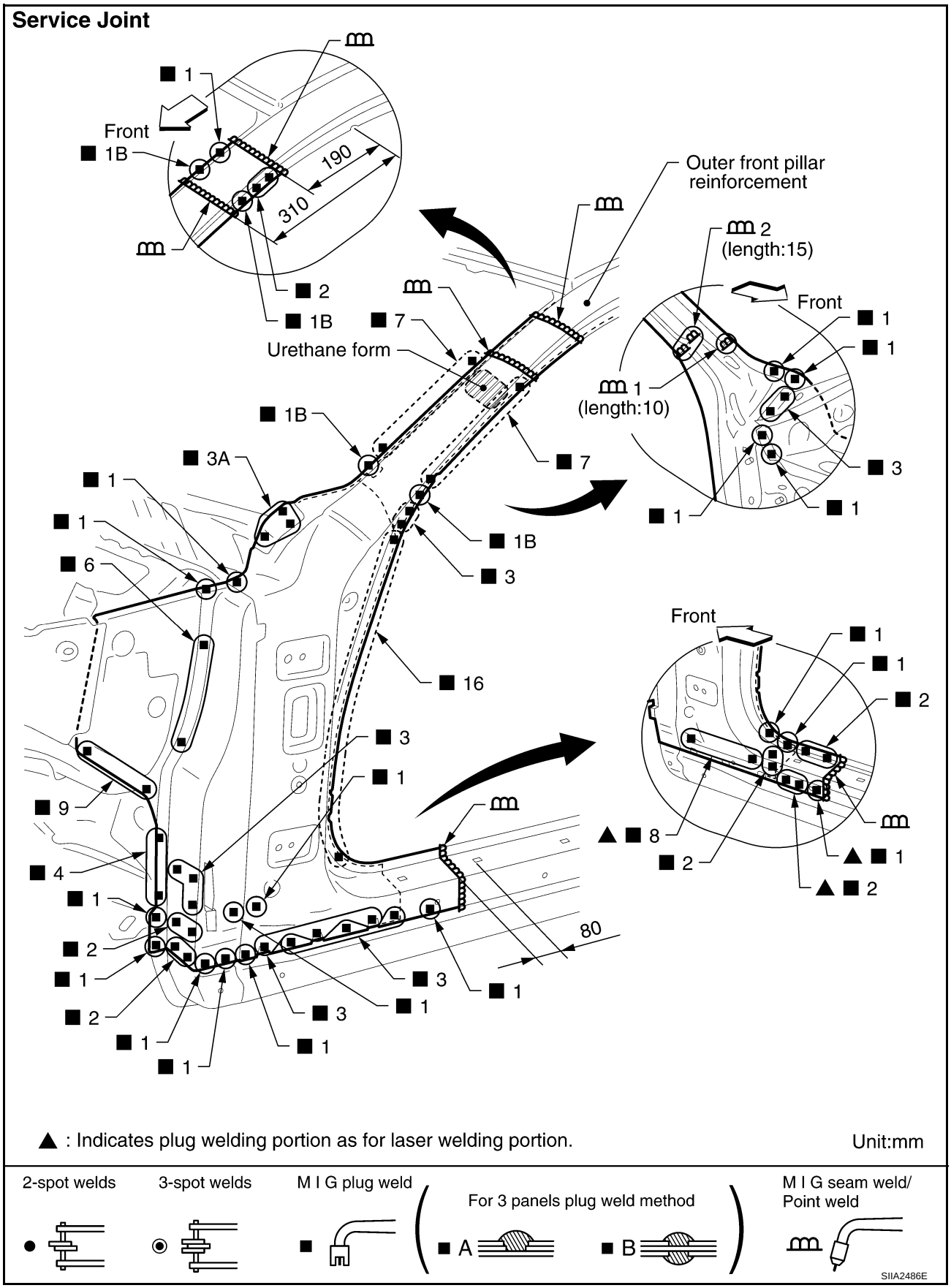

Change parts

- Side body assembly (LH)
- Inner roof side rail (LH)
- Upper rear hoodledge (LH)

Service Joint

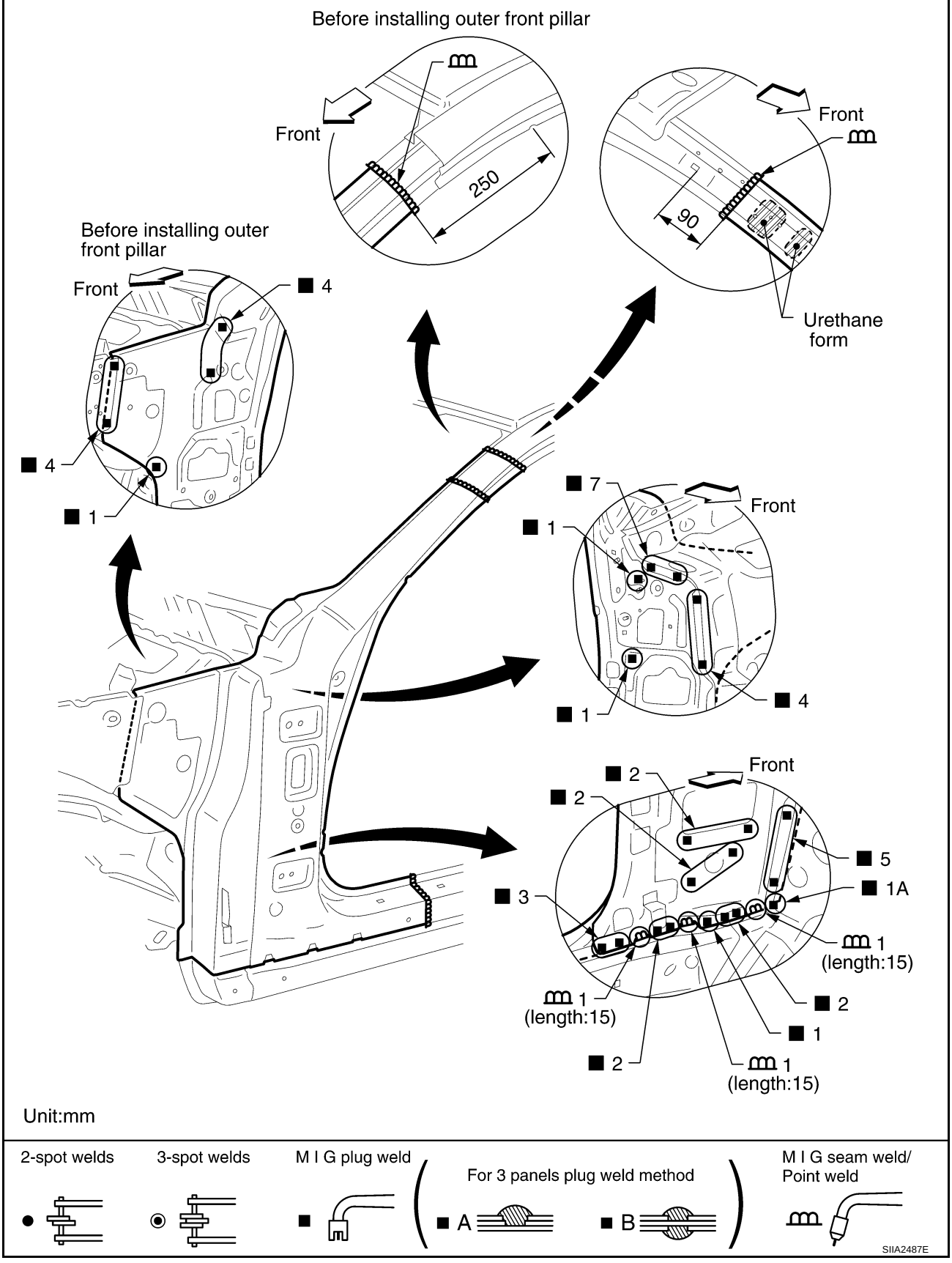

CENTER PILLAR

Service Joint

Note: Center pillar seat belt reinforcement and outer roof side rail reinforcement are using ultra high strength steel plate.
Therefore, cut the spot welding portions from center roof rail brace.

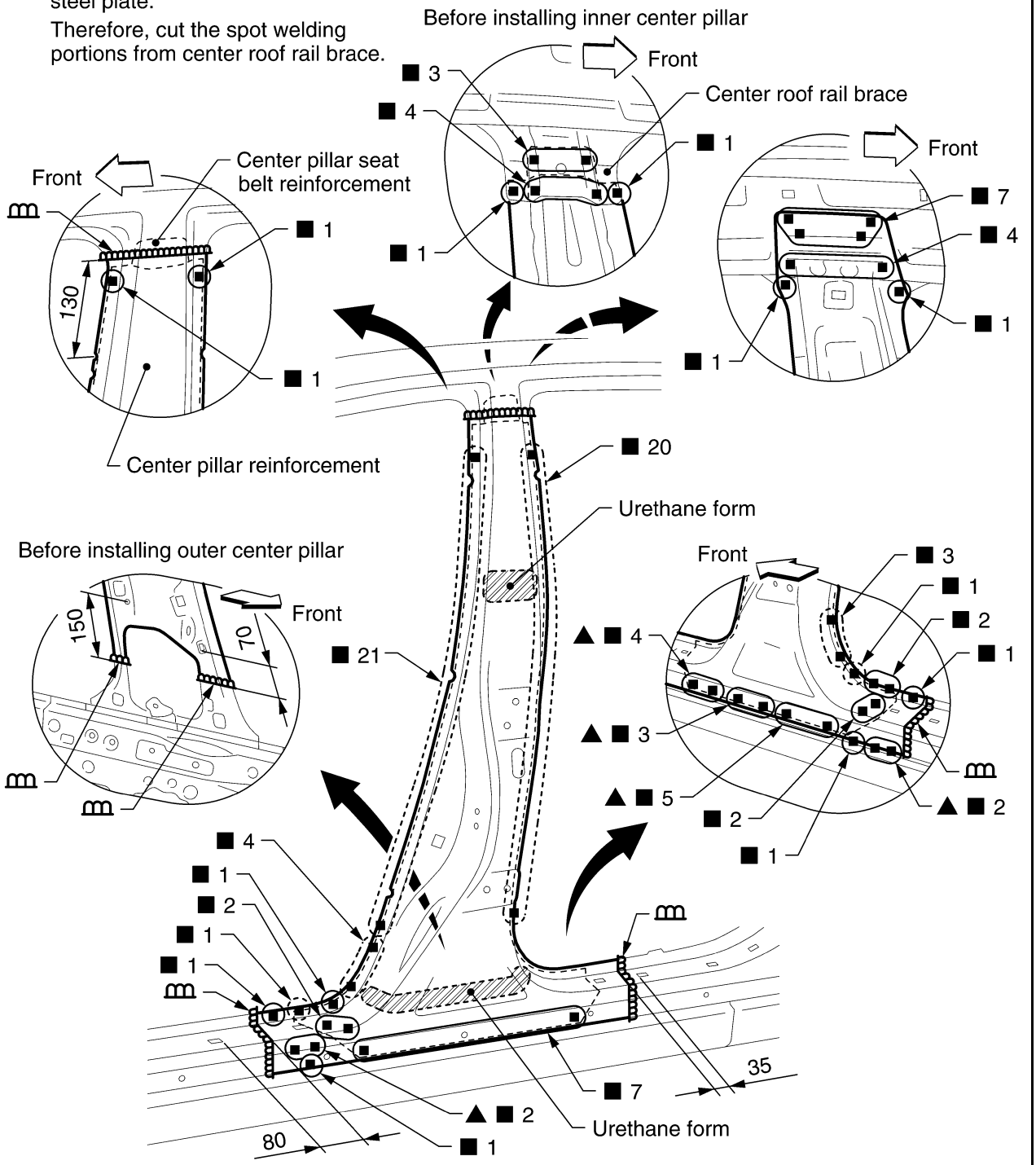

▲ : Indicates plug welding portion as for laser welding portion. Unit:mm

2-spot welds | 3-spot welds | M I G plug weld | For 3 panels plug weld method (■ A, ■ B) | M I G seam weld/ Point weld

SIIA2488E

Change parts

- Side body assembly (LH)
- Inner center pillar (LH)

OUTER SILL

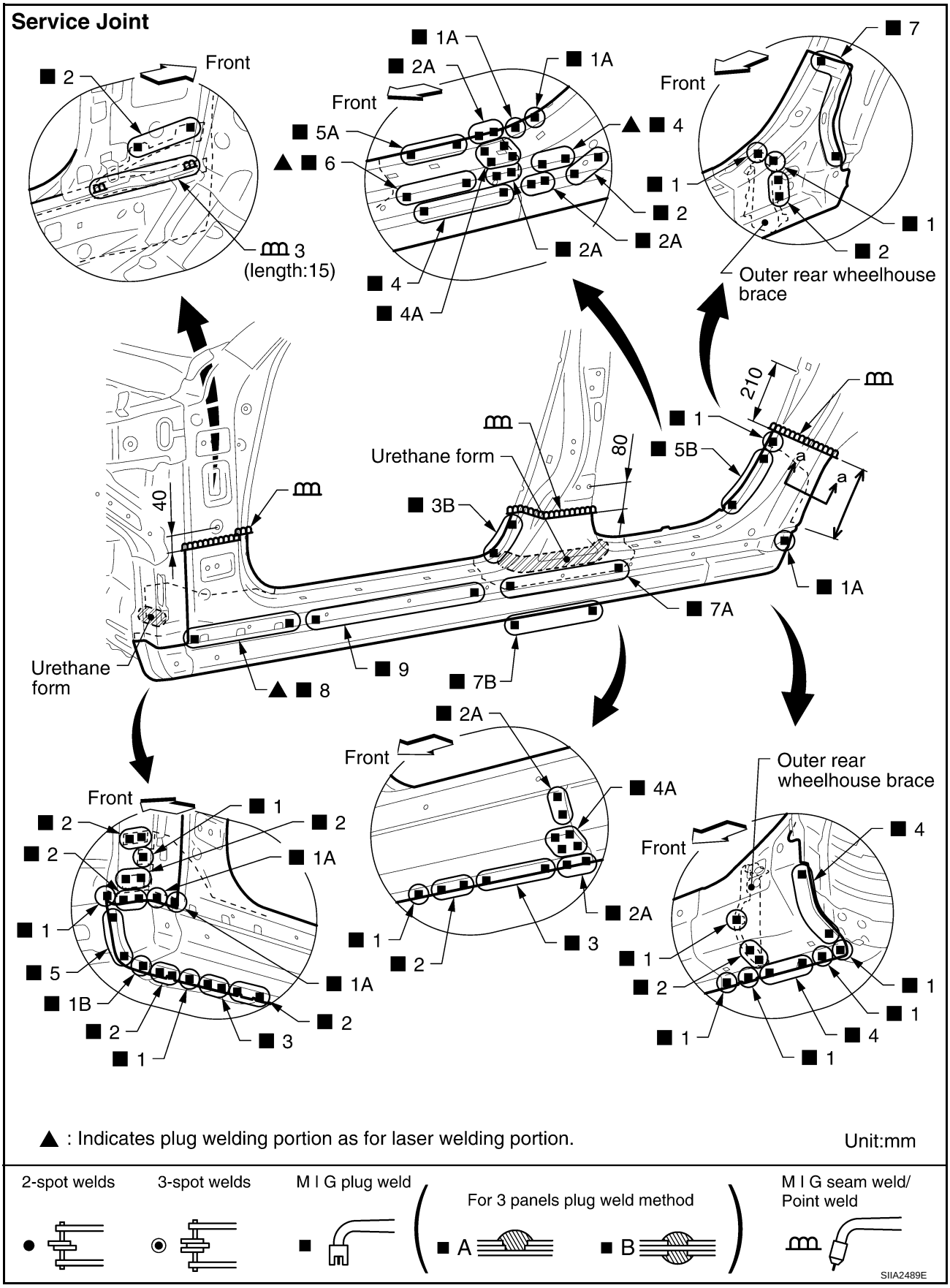

Change parts

- Outer sill (LH)
- Outer sill reinforcement (LH)
- Outer rear wheelhouse extension (LH)

Service Joint

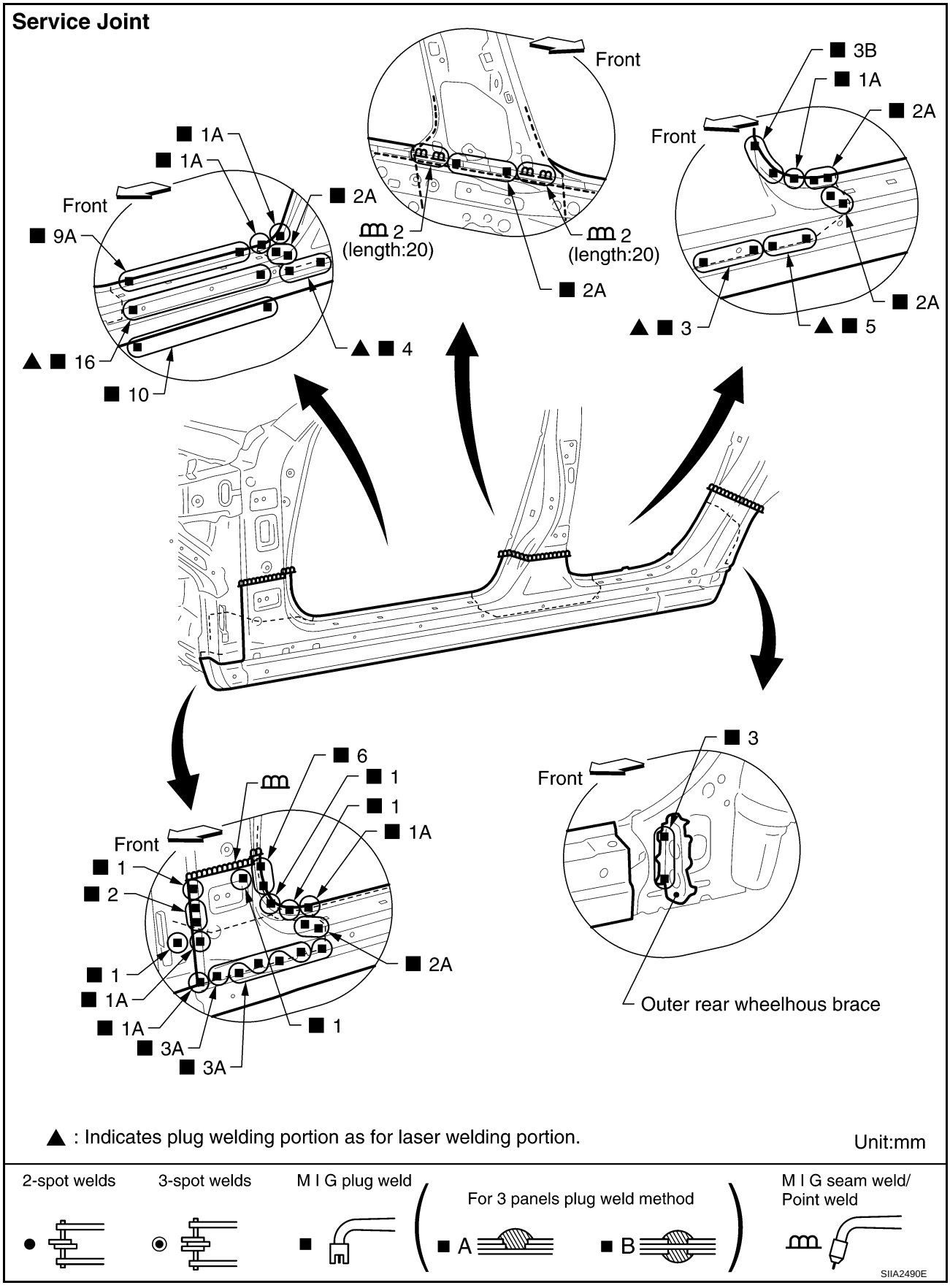

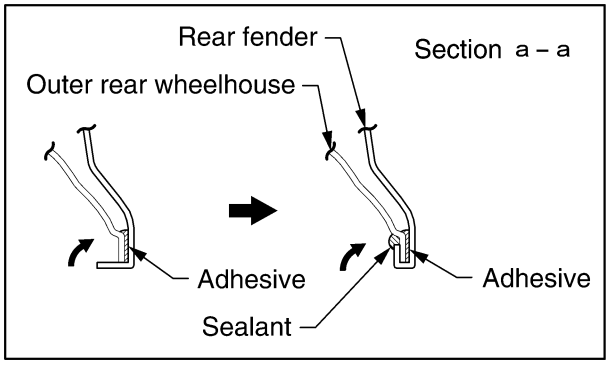

INSTALLATION NOTES

- Flange of a wheel arch department hem after having apply adhesive.
- Seal up the area around the hemmed end of the flange.
- Refer to "Rear fender hemming process".

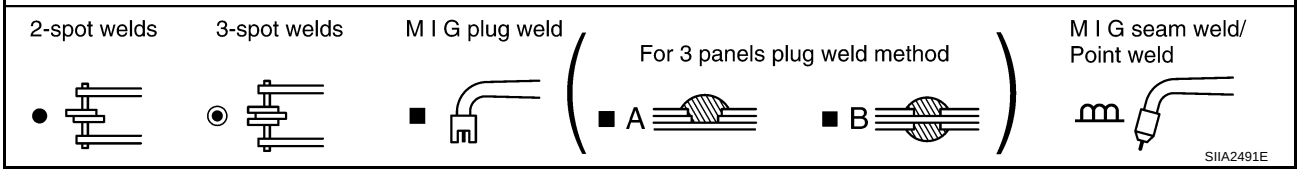

REAR FENDER

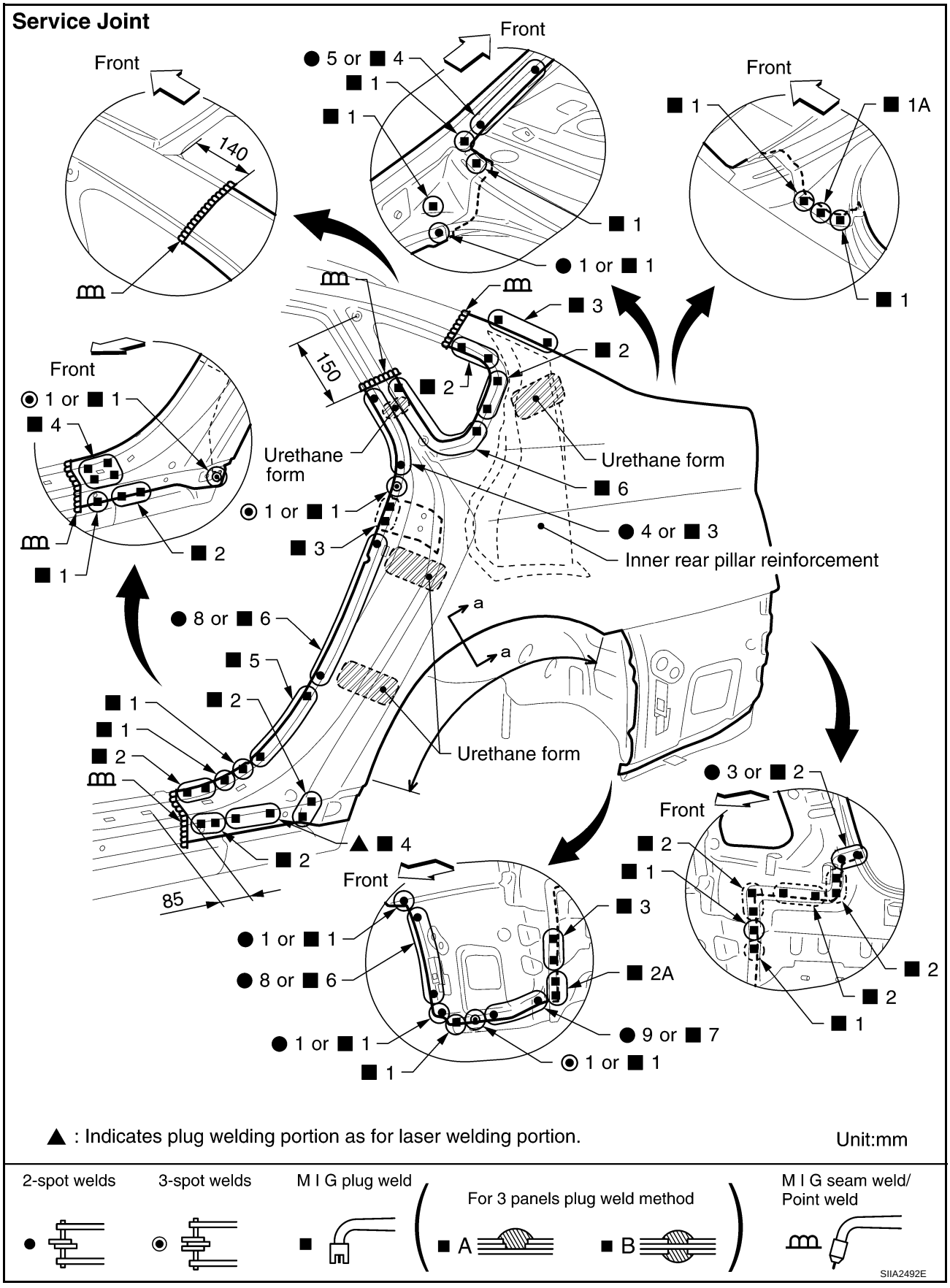

Change parts

- ● Rear fender assembly (LH)

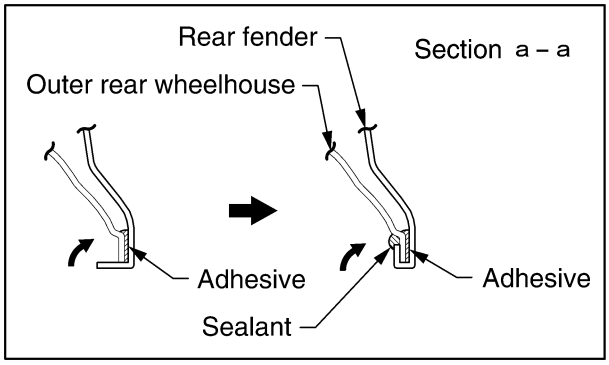

INSTALLATION NOTES

- Flange of a wheel arch department hem after having apply adhesive.
- Seal up the area around the hemmed end of the flange.
- Refer to "Rear fender hemming process".

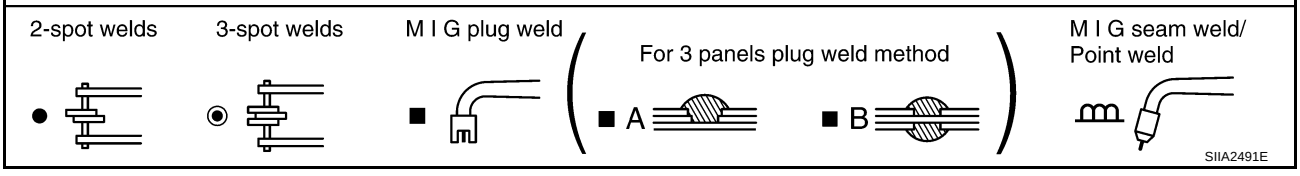

REAR PANEL

Service Joint

★ indicates that there is an equivalent welding portion with the same dimensions on the opposite side.

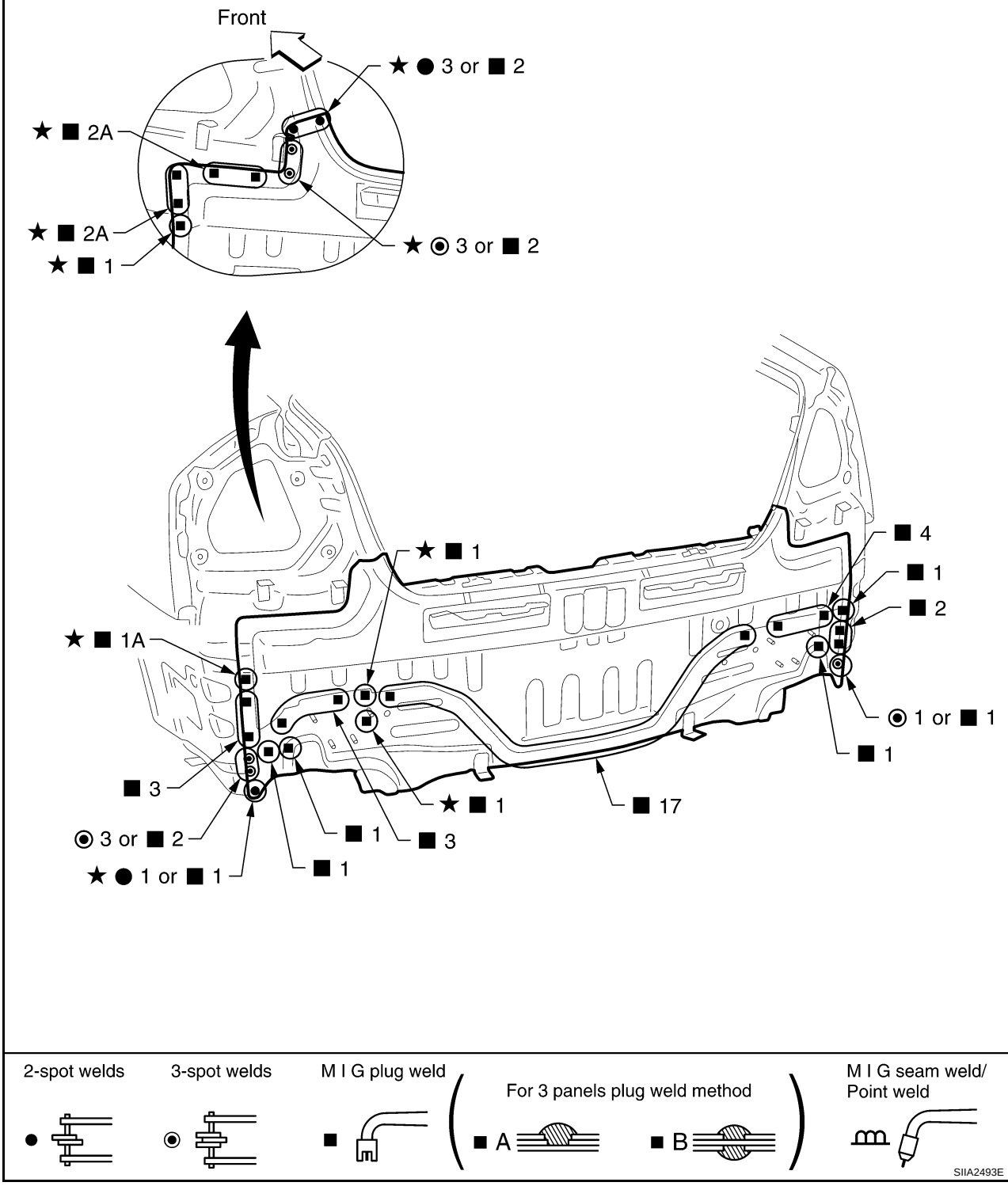

Change parts

- ● Rear panel assembly

REAR FLOOR REAR

- Work after rear panel has been removed.

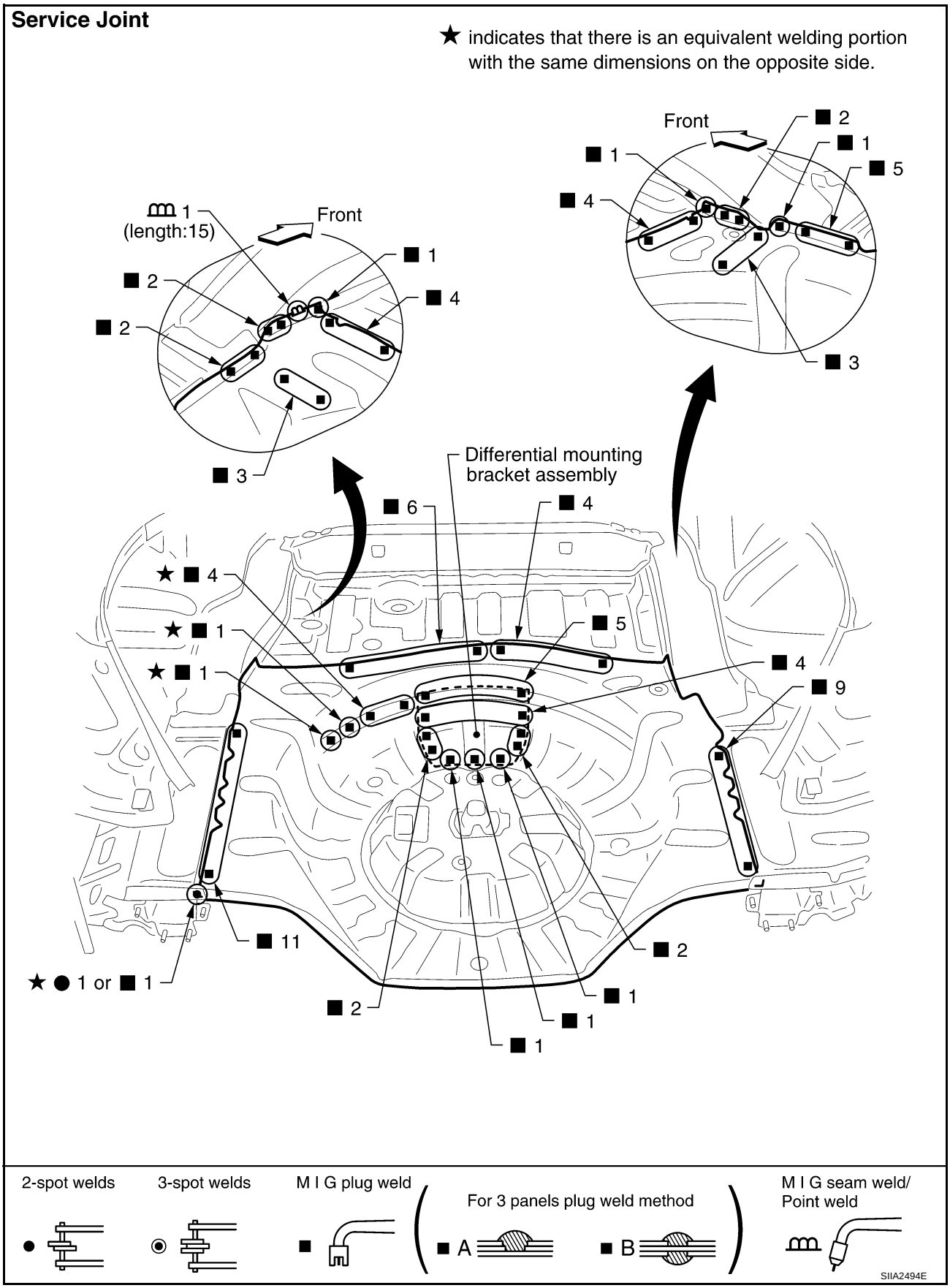

Change parts

- Rear floor rear
- Differential mounting bracket assembly

REAR SIDE MEMBER EXTENSION

- Work after rear panel has been removed.

Service Joint

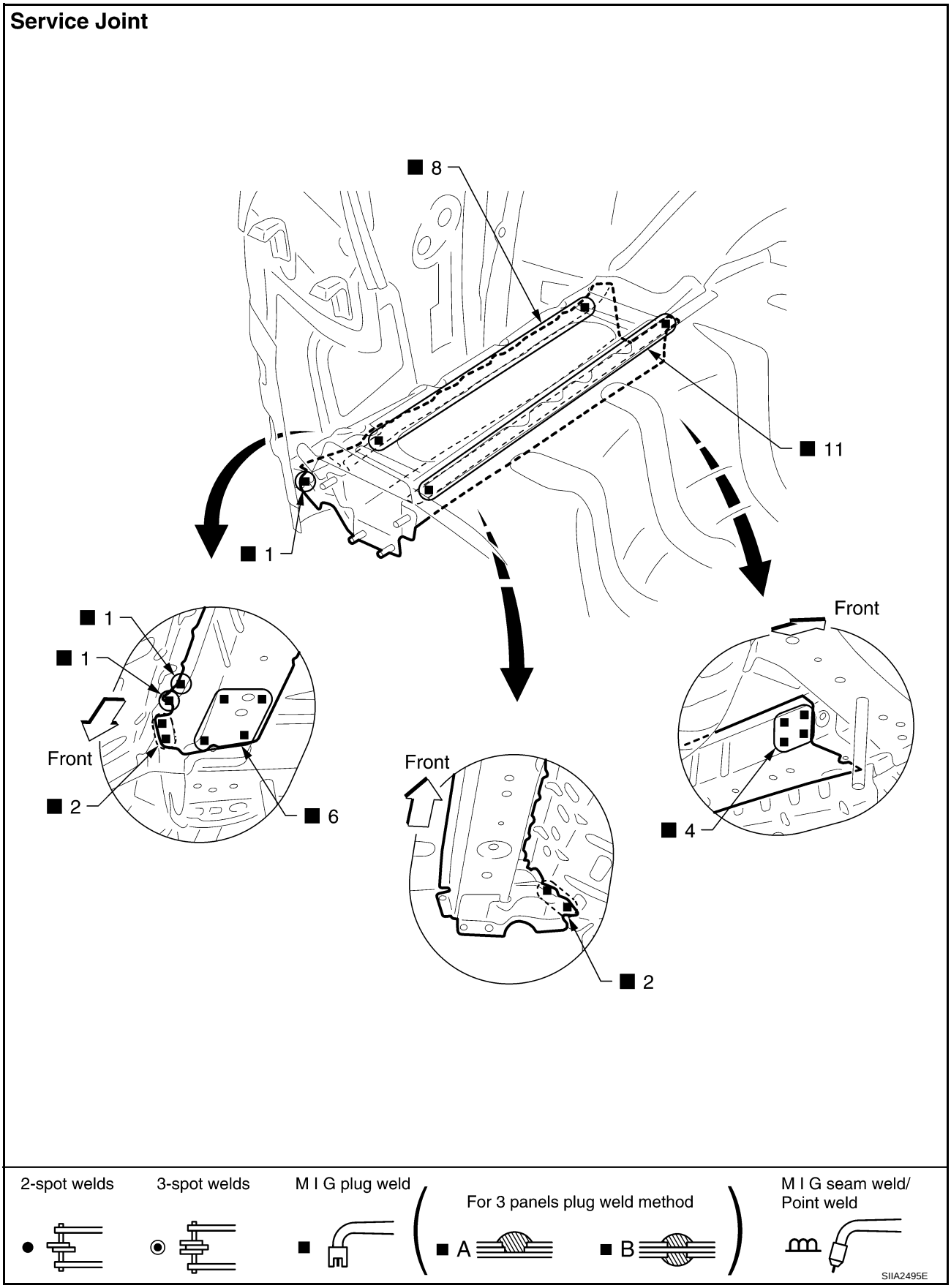

Change parts

- Rear side member extension (LH)