# SECTION EX
# EXHAUST SYSTEM



## CONTENTS

# PREPARATION

PFP:00002

## Special Service Tools

NBS005RH

The actual shapes of Kent-Moore tools may differ from those of special service tools illustrated here.

| Tool number<br>(Kent-Moore No.)<br>Tool name | | Description |
|---|---|---|
| KV10117100<br>(J3647-A)<br>Heated oxygen sensor wrench | 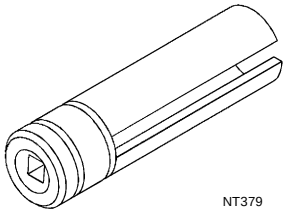 | Loosening or tightening heated oxygen sensor 2 (VQ35DE)<br>**For 22 mm (0.87 in) width hexagon nut** |
| KV10114400<br>(J38365)<br>Heated oxygen sensor wrench | 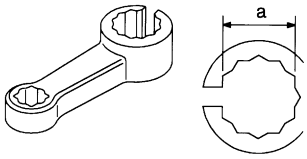 | Loosening or tightening heated oxygen sensor 2 (VK45DE)<br>**For 22 mm (0.87 in) width hexagon nut** |

## Commercial Service Tools

NBS005RI

| (Kent-Moore No.)<br>Tool name | | Description |
|---|---|---|
| a: (J-43897-18)<br>b: (J-43897-12)<br>Heated oxygen sensor thread cleaner | 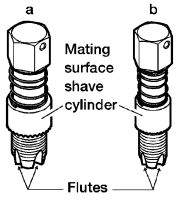 | Reconditioning the exhaust system threads before installing a new heated oxygen sensor (Use with anti-seize lubricant shown below.)<br>**a: J-43897-18 (18 mm dia.) for zirconia heated oxygen sensor**<br>**b: J-43897-12 (12 mm dia.) for titania heated oxygen sensor** |
| ( — )<br>Anti-seize lubricant (Permatex 133AR or equivalent meeting MIL specification MIL-A-907) | 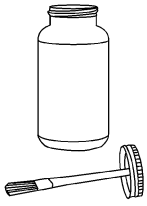 | Lubricating heated oxygen sensor thread cleaner when reconditioning exhaust system threads |
| ( — )<br>Power tool | 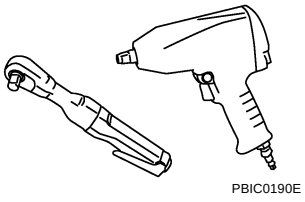 | Loosening bolts and nuts |

# EXHAUST SYSTEM

PFP:20100

## Checking Exhaust System

NBS005RJ

Check exhaust pipes, muffler and mounting for improper attachment, leaks, cracks, damage or deterioration.

- If anything is found, repair or replace damaged parts.

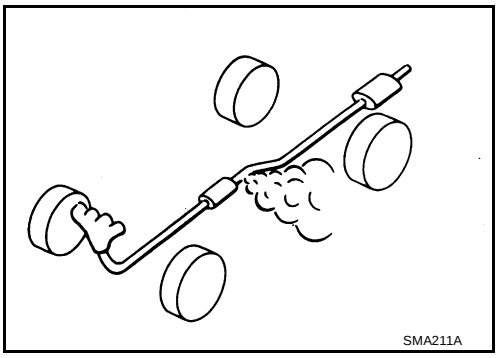

## Components

NBS005RK

**VQ35DE**

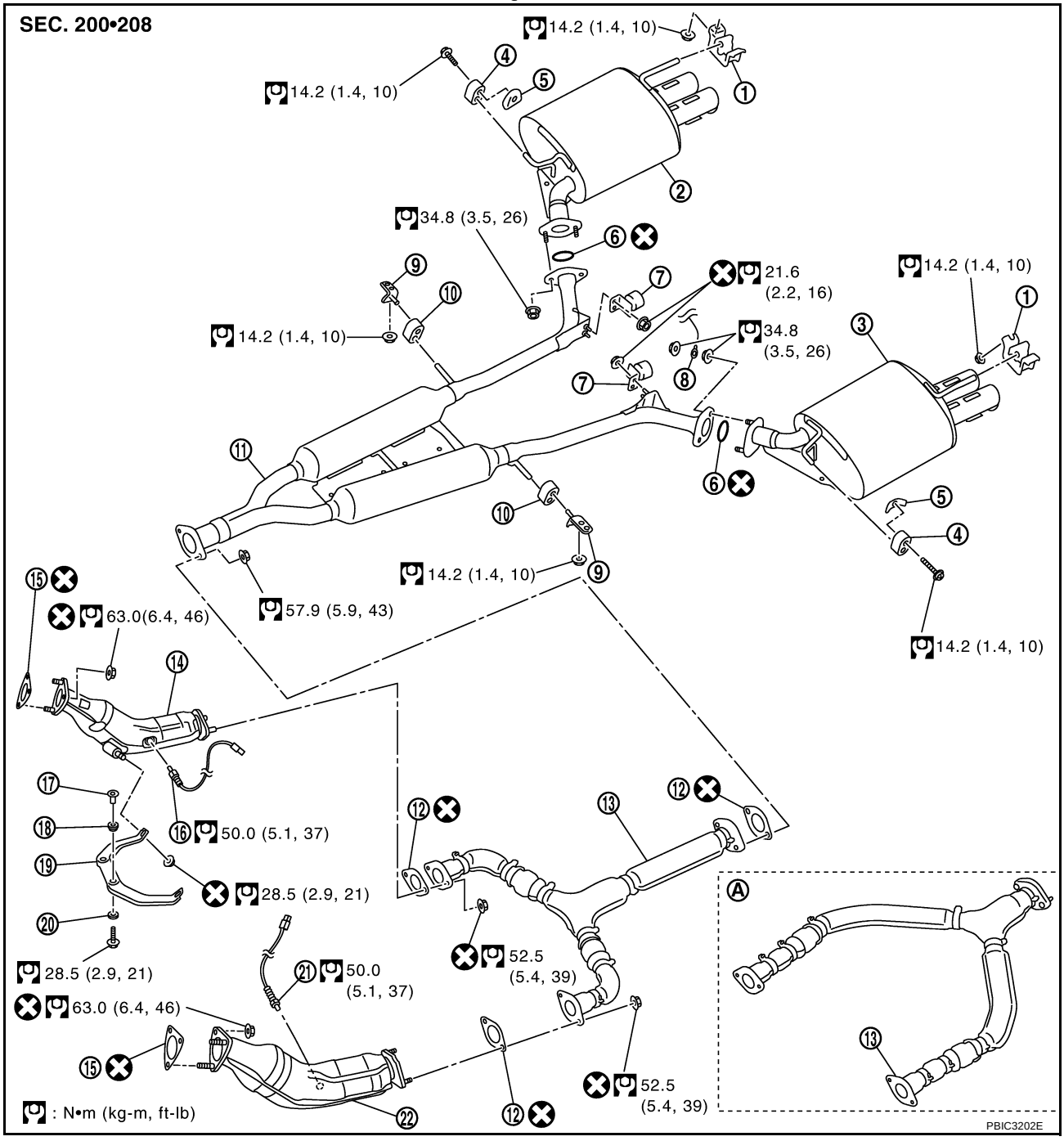


| | | | | | |
|---|---|---|---|---|---|
| 1. | Mounting bracket | 2. | Main muffler (RH) | 3. | Main muffler (LH) |
| 4. | Mounting rubber | 5. | Collar | 6. | Ring gasket |
| 7. | Dynamic damper | 8. | Wire bonding | 9. | Mounting bracket |
| 10. | Mounting rubber | 11. | Center muffler | 12. | Gasket |
| 13. | Exhaust front tube | 14. | Three way catalyst (right bank) | 15. | Gasket |
| 16. | Heated oxygen sensor 2 (bank 1) | 17. | Collar | 18. | Grommet |
| 19. | Exhaust mounting bracket | 20. | Grommet | 21. | Heated oxygen sensor 2 (bank 2) |
| 22. | Three way catalyst (left bank) | | | | |
| A. | AWD | | | | |

- Refer to GI-11, "Components" for symbols in the figure.

## Removal and Installation

NBS005RL

**CAUTION:**

- **Be sure to use genuine exhaust system parts or equivalents which are specially designed for heat resistance, corrosion resistance, and shape.**
- **Perform the operation with the exhaust system fully cooled down because the system will be hot just after engine stops.**
- **Be careful not to cut your hand on the heat insulator edge.**

### REMOVAL

- Disconnect each joint and mounting using power tool.
- Remove heated oxygen sensor 2 as follows:
  - Using heated oxygen sensor wrench (SST), removal heated oxygen sensor 2.

    **CAUTION:**
    **Be careful not to damage heated oxygen sensor 2.**

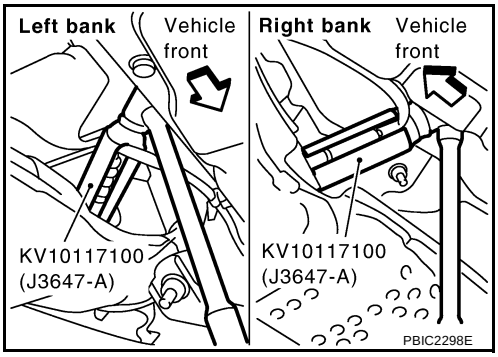


### INSTALLATION

Note the following, and install in the reverse order of removal.

- Check for deformation of the grommets (18 and 20 of Components).
- Insert the collar (17 of Components) vertically.
- Install the collar (5 of Components) with its lower surface horizontal.
- Temporarily tighten nuts and bolts when installing exhaust pipe assembly. Tighten them to the specified torque when connecting the vehicle rear to the vehicle front.

**CAUTION:**

- **Always replace exhaust tube gaskets with new ones when reassembling.**
- **Discard any heated oxygen sensor which has been dropped onto a hard surface such as a concrete floor. Use a new one.**
- **Before installing a new heated oxygen sensor, clean exhaust system threads using the heated oxygen sensor thread cleaner [commercial service tool: J-43897-18 or J-43897-12], and apply the anti-seize lubricant (commercial service tool).**
- **Do not over torque heated oxygen sensor. Doing so may cause damage to heated oxygen sensor, resulting in the “MIL” coming on.**
- **If heat insulator is badly deformed, repair or replace it. If deposits such as mud pile up on the heat insulator, remove them.**
- **When installing heat insulator avoid large gaps or interference between heat insulator and each exhaust pipe.**
- **Remove deposits from the sealing surface of each connection. Connect them securely to avoid gases leakage.**
- **Temporarily tighten mounting nuts on the exhaust manifold side and mounting bolts on the vehicle side. Check each part for unusual interference, and then tighten them to the specified torque.**
- **When installing each mounting rubber, avoid twisting or unusual extension in up/down and right/left directions.**

### INSPECTION AFTER INSTALLATION

- Make sure clearance between tail tube and rear bumper is even.
- With engine running, check exhaust tube joints for gas leakage and unusual noises.
- Check to ensure that mounting brackets and mounting rubbers are installed properly and free from undue stress. Improper installation could result in excessive noise and vibration.

## Components

NBS005RM

**VK45DE**

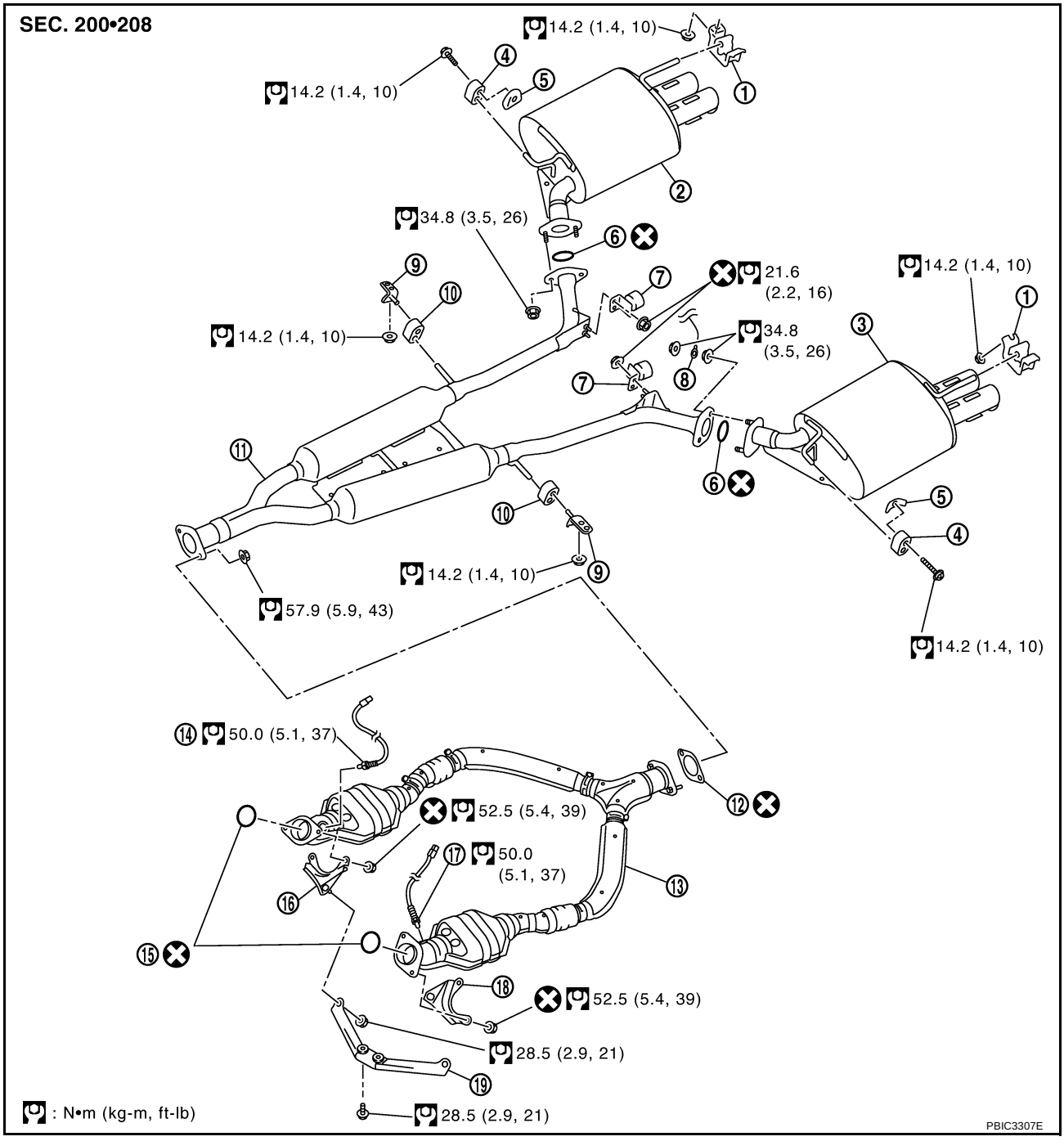


| | | | | | |
|---|---|---|---|---|---|
| 1. | Mounting bracket | 2. | Main muffler (RH) | 3. | Main muffler (LH) |
| 4. | Mounting rubber | 5. | Collar | 6. | Ring gasket |
| 7. | Dynamic damper | 8. | Wire bonding | 9. | Mounting bracket |
| 10. | Mounting rubber | 11. | Center muffler | 12. | Gasket |
| 13. | Exhaust front tube | 14. | Heated oxygen sensor 2 (bank 2) | 15. | Ring gasket |
| 16. | Mounting bracket | 17. | Heated oxygen sensor 2 (bank 1) | 18. | Mounting bracket |
| 19. | Exhaust mounting bracket | | | | |

- Refer to GI-11, "Components" for symbols in the figure.

## Removal and installation

NBS005RN

**CAUTION:**

- **Be sure to use genuine exhaust system parts or equivalents which are specially designed for heat resistance, corrosion resistance, and shape.**
- **Perform the operation with the exhaust system fully cooled down because the system will be hot just after engine stops.**
- **Be careful not to cut your hand on the heat insulator edge.**

### REMOVAL

- Disconnect each joint and mounting using power tool.
- Remove heated oxygen sensor 2 as follows:
  - Using heated oxygen sensor wrench (SST), removal heated oxygen sensor 2.

    **CAUTION:**
    **Be careful not to damage heated oxygen sensor 2.**

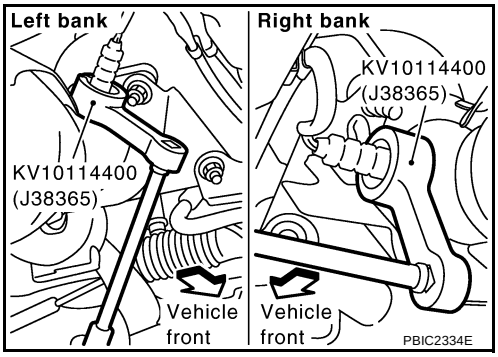


### INSTALLATION

Note the following, and install in the reverse order of removal.

- Install the collar (5 of Components) with its lower surface horizontal.
- Temporarily tighten nuts and bolts when installing exhaust pipe assembly. Tighten them to the specified torque when connecting the vehicle rear to the vehicle front.

**CAUTION:**

- **Always replace exhaust tube gaskets with new ones when reassembling.**
- **Discard any heated oxygen sensor which has been dropped onto a hard surface such as a concrete floor. Use a new one.**
- **Before installing a new heated oxygen sensor, clean exhaust system threads using the heated oxygen sensor thread cleaner [commercial service tool: J-43897-18 or J-43897-12], and apply the anti-seize lubricant (commercial service tool).**
- **Do not over torque heated oxygen sensor. Doing so may cause damage to heated oxygen sensor, resulting in the “MIL” coming on.**
- **If heat insulator is badly deformed, repair or replace it. If deposits such as mud pile up on the heat insulator, remove them.**
- **When installing heat insulator avoid large gaps or interference between heat insulator and each exhaust pipe.**
- **Remove deposits from the sealing surface of each connection. Connect them securely to avoid gases leakage.**
- **Check each part for unusual interference, and then tighten them to the specified torque.**
- **When installing each mounting rubber, avoid twisting or unusual extension in up/down and right/left directions.**

### INSPECTION AFTER INSTALLATION

- Make sure clearance between tail tube and rear bumper is even.
- With engine running, check exhaust tube joints for gas leakage and unusual noises.
- Check to ensure that mounting brackets and mounting rubbers are installed properly and free from undue stress. Improper installation could result in excessive noise and vibration.