STEERING SYSTEM

SECTION ST

CONTENTS

Refer to section MA for:

CHECKING WHEEL ALIGNMENT

- Toe-in
- Front wheel turning angle

BASIC MECHANICAL SYSTEM

- Checking drive belts

- Fully turn steering wheel to the right and disconnect whole hydraulic line to steering gear ASSY, then remove steering gear
- Whenever disconnecitng hydraulic lines, cover openings to prevent foreign material from entering
- Be careful not to damage hydraulic line connection
- Do not reuse O-ring in hydraulic system.
- When conecting hydraulic line, apply a coat of oil (Automatic transmission fluid "Dexron Type") to O-rings
- If disconnecting hydraulic line, always perform leak test and bleed air from line after filling it with oil
- After properly installing steering gear and linkage, check wheel alignment Refer to section MA

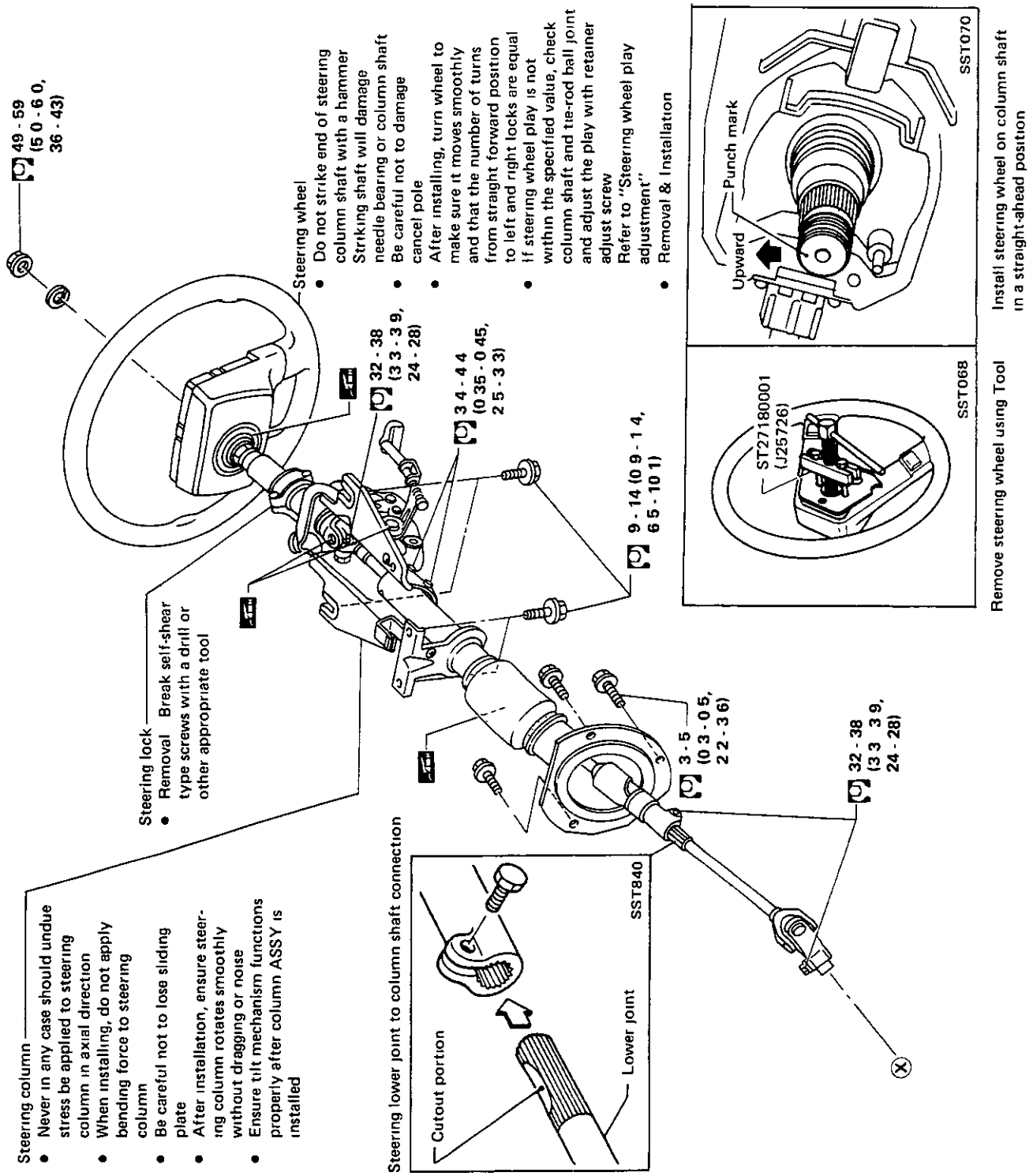

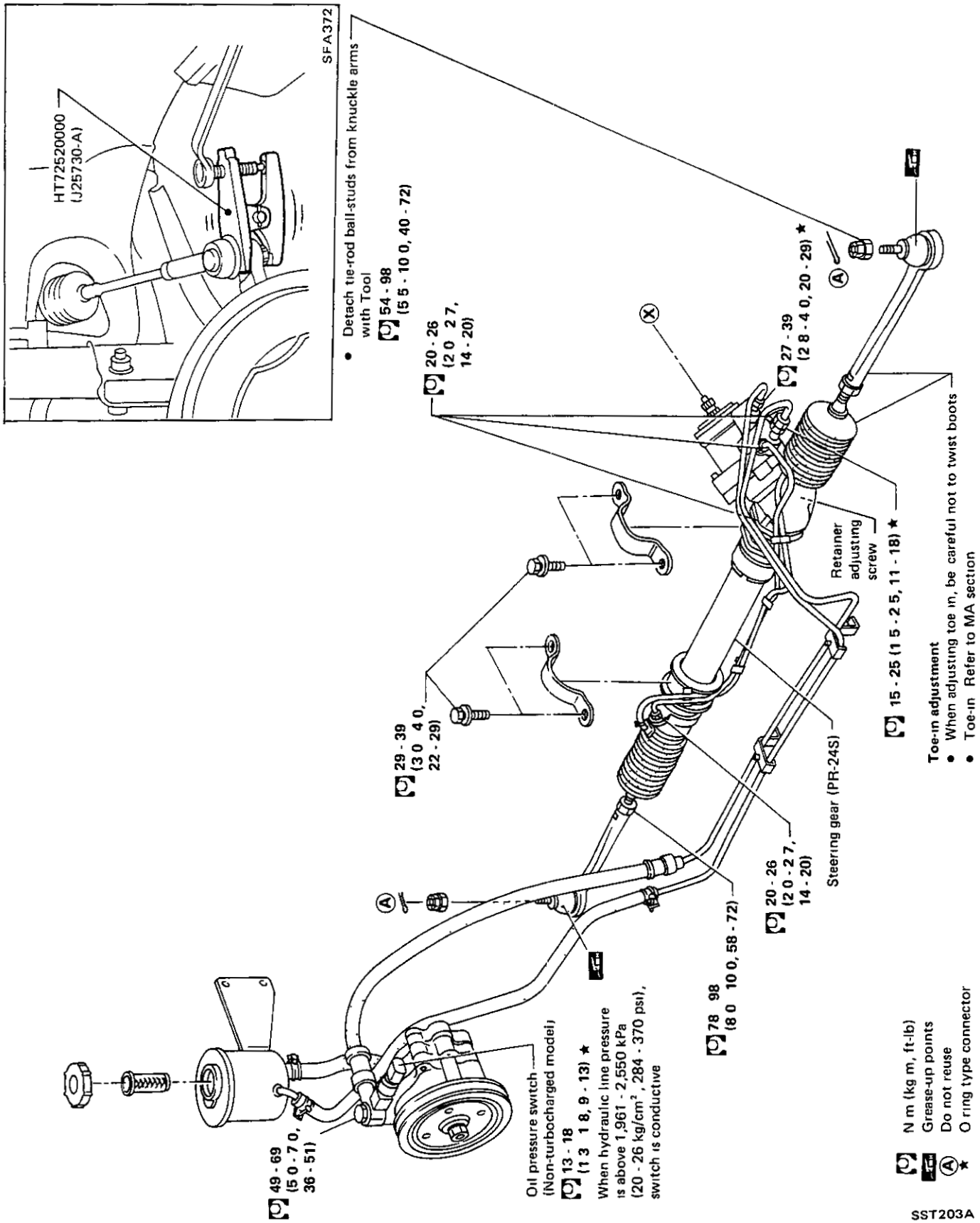
SFA372
HT72520000
(J25730-A)
• Detach tie-rod ball-studs from knuckle arms with Tool
54 - 98
(5 5 - 10 0, 40 - 72)
20 - 26
(2 0 2 7,
14 - 20)
27 - 39
(2 8 - 4 0, 20 - 29) ★
Retainer adjusting screw
15 - 25 (1 5 - 2 5, 11 - 18) ★
Toe-in adjustment
• When adjusting toe in, be careful not to twist boots
• Toe-in Refer to MA section
29 - 39
(3 0 4 0,
22 - 29)
Steering gear (PR-24S)
20 - 26
(2 0 - 2 7,
14 - 20)
78 98
(8 0 10 0, 58 - 72)
49 - 69
(5 0 - 7 0,
36 - 51)
Oil pressure switch
(Non-turbocharged model)
13 - 18
(1 3 1 8, 9 - 13) ★
When hydraulic line pressure is above 1,961 - 2,550 kPa
(20 - 26 kg/cm², 284 - 370 psi),
switch is conductive
N m (kg m, ft-lb)
Grease-up points
Do not reuse
O ring type connector
SST203A

- Never in any case should undue stress be applied to steering column in axial direction
- When installing, do not apply bending force to steering column.
- Be careful not to lose sliding plate
- When the vehicle comes into light collision, check dimension "L", between steering column upper end and jacket tube crashable area.

  Column length "L" = 478.7 mm - 480.3 mm (18.85 - 18.91 in)
  (Measure "L" at neutral position of steering column if equipped with tilt mechanism)
- Check steering column for smooth rotation without binding and noise If it does not rotate smoothly, check as follows·

Non-tilt Type Column

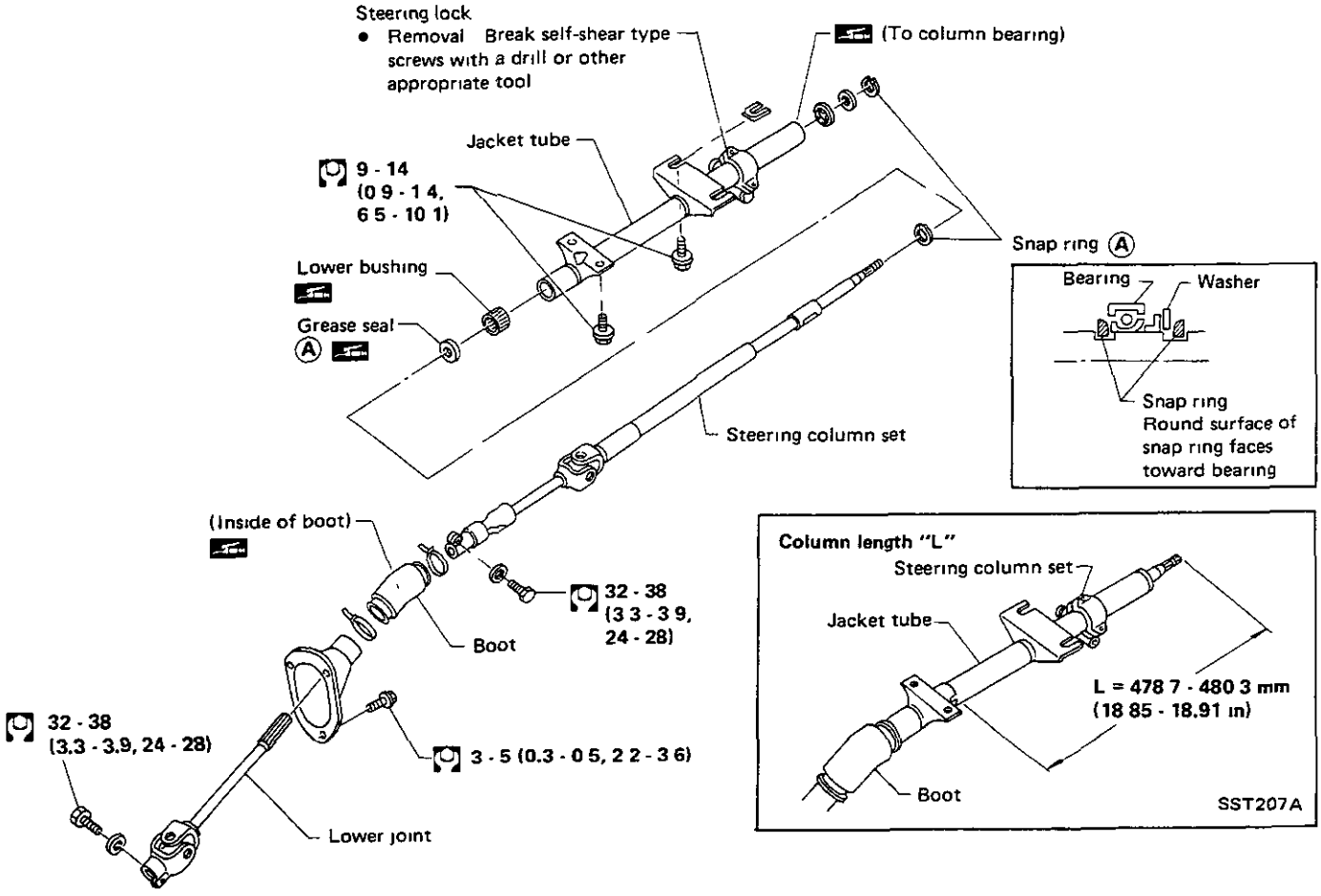

N m (kg-m, ft-lb)
Grease-up points
Ⓐ Do not reuse

SST205A

STEERING COLUMN

Tilt Type Column

32 - 38 (3 3 - 3 9, 24 - 28)
Steering column upper set
Steering column clamp
Steering lock
- Removal Break self-shear type screws with a drill or other appropriate tool

(To column bearing)
Tilt mechanism
- Do not disassemble it
- After installing steering column, check tilt mechanism operation

Jacket upper tube
(To column bearing)
Boots
(Inside of boots)
Grease seal Ⓐ
Bushing
9 - 14 (0 9 - 1 4, 6 5 - 10 1)
Snap ring Ⓐ
Bearing
Washer
Snap ring
Rounded surface of snap ring faces toward bearing
32 - 38 (3 3 - 3 9 24 28)
Steering column lower set
Jacket lower tube
32 - 38 (3 3 3 9, 24 - 28)
3 4 - 4 4 (0 35 - 0 45, 2 5 - 3 3)
9 - 14 (0 9 - 1 4, 6 5 - 10 1)
Lower joint
3 - 5 (0 3 - 0 5, 2 2 - 3 6)
N m (kg-m, ft-lb)
Grease up points
Ⓐ Do not reuse
SST206A

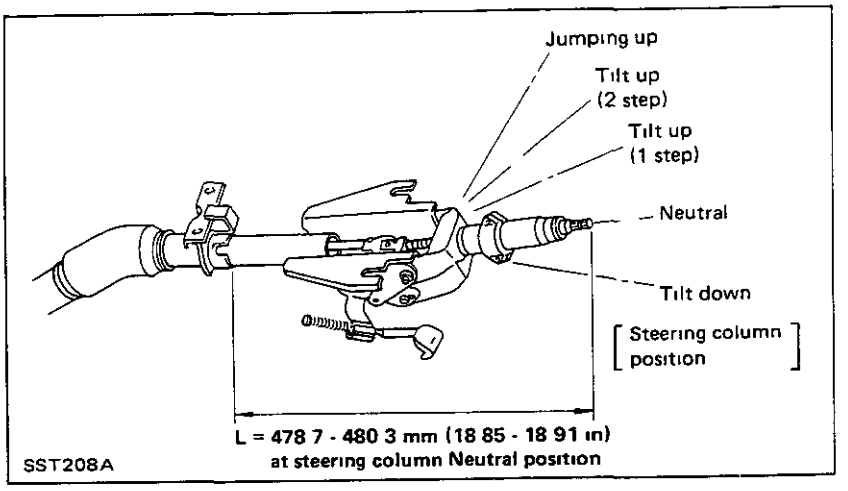

POWER STEERING SYSTEM —Checking

Fluid Level Check

Check the fluid level when the fluid is cold.
Refer to MA section

Power Steering Pump Belt Tension

Refer to MA section

Fluid Leakage Check

1 Run engine at idle speed or 1,000 rpm

Make sure temperature of fluid in tank rises to 60 to 80°C (140 to 176°F).

2 Turn steering wheel to right-to-left several times

3 Hold steering wheel at each "lock" position for five seconds and carefully check for fluid leakage

CAUTION:

- **Do not hold steering wheel at "lock" position for more than 15 seconds at a time.**
- **If fluid leaks at connectors, replace O-ring (if equipped) Do not overtighten connector as this can damage O-ring and connector.**

Bleeding Hydraulic System

1. Raise front end of vehicle until wheels clear ground
2. While adding fluid, quickly turn steering wheel fully to right and left and lightly touch steering stoppers.
   Repeat steering wheel operation until fluid level no longer decreases
3. Start engine.
   Repeat step 2 above

Hydraulic System Check

Before starting, check belt tension, driving pulley and tire pressure. (Refer to MA section)

1 Set Tool Open shut off valve Then bleed air (See "Bleeding Hydraulic System")

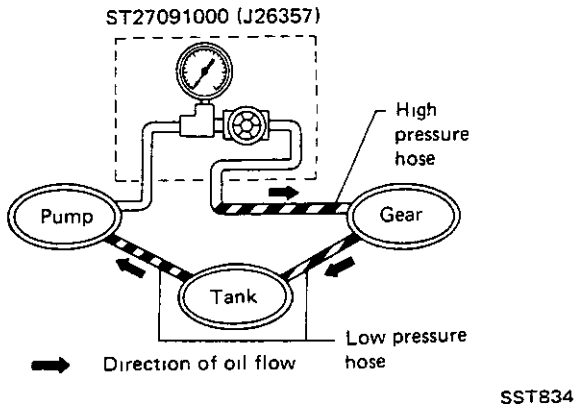

2 Run engine.

Make sure temperature of fluid in tank rises to 60 to 80°C (140 to 176°F).

3 Check pressure with steering wheel fully turned in left and right

CAUTION:

Do not hold steering wheel at lock position for more than fifteen seconds.

Standard pressure:
6,669 - 7,257 kPa
(68 - 74 kg/cm², 967 - 1,052 psi at idling)

4 If oil pressure is below the standard, slowly close shut-off valve and check pressure

- If pressure raises to standard, gear is damaged
- If pressure remains below standard, pump is damaged.
  Gear may be damaged

5 If oil pressure is above the standard, pump may be damaged

CAUTION:

Do not close shut-off valve for more than fifteen seconds.

6 After checking hydraulic system, remove Tool and add fluid as necessary, then completely bleed air out of system

Turning Force Check

1. Park vehicle on a level, dry surface and set parking brake
2. Bring power steering fluid up to adequate operating temperature. [Make sure temperature of fluid is approximately 60 to 80°C (140 to 176°F)]

- **Tires must be inflated to normal pressure.**

3. Check steering wheel turning force when steering wheel has been turned 360° from neutral position

Steering wheel turning force:
Less than 39 N (4 kg, 9 lb)

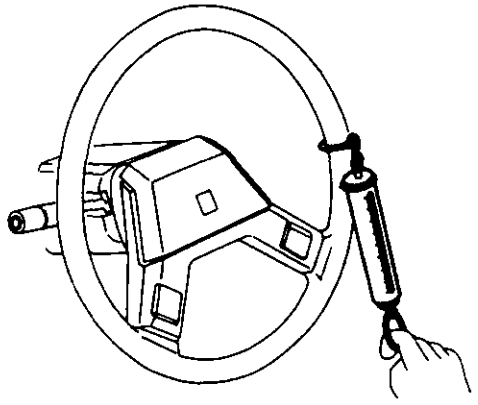

SST474

Steering Wheel Play Adjustment

Steering wheel axial play:
0 mm (0 in)
Steering wheel play.
Less than 35 mm (1.38 in)

If steering wheel play is not within specifications, check condition of column shaft and tie-rod ball points If they are in good order, adjust rack retainer

Rack retainer adjustment:

a) Adjust only when steering wheel play is outside specifications
b) Prior to adjustment, completely loosen adjustment screw, clean old locking sealer and apply new locking sealer.
Tighten the screw to approximately 3 N·m (0.3 kg-m, 2 2 ft-lb) and back off by 20 to 25° Measure steering wheel play to make sure it is within specifications. Then tighten lock nut

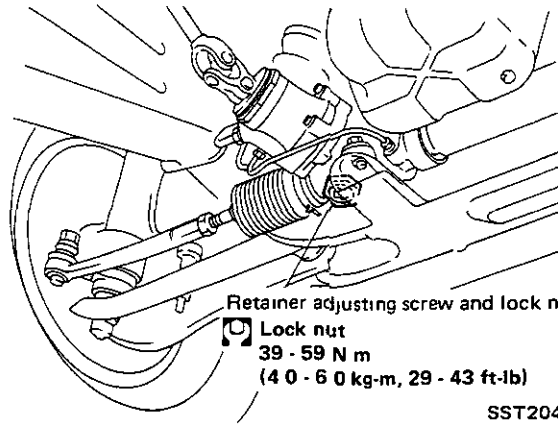

SST204A

c) After adjustment, drive vehicle at low speeds to check for proper operation of steering system

POWER STEERING GEAR AND LINKAGE

Disassembly and Assembly

- Do not disassemble unless repairing to stop oil leak, replacing tie-rod and tie-rod inner socket ball joint, or for various adjustments.
- Do not reuse O-rings or oil seals.
- When assembling, apply a coat of oil to mating surfaces of O-rings and oil seals
- When assembling, be careful not to damage oil seals
- Before starting work, thoroughly clean all parts in cleaning solvent or automatic transmission fluid "Dexron Type" and blow dry with compressed air, if available.
- After assembling tie-rod inner socket to rack & housing ASSY, check rack stroke (refer to "Rack stroke")

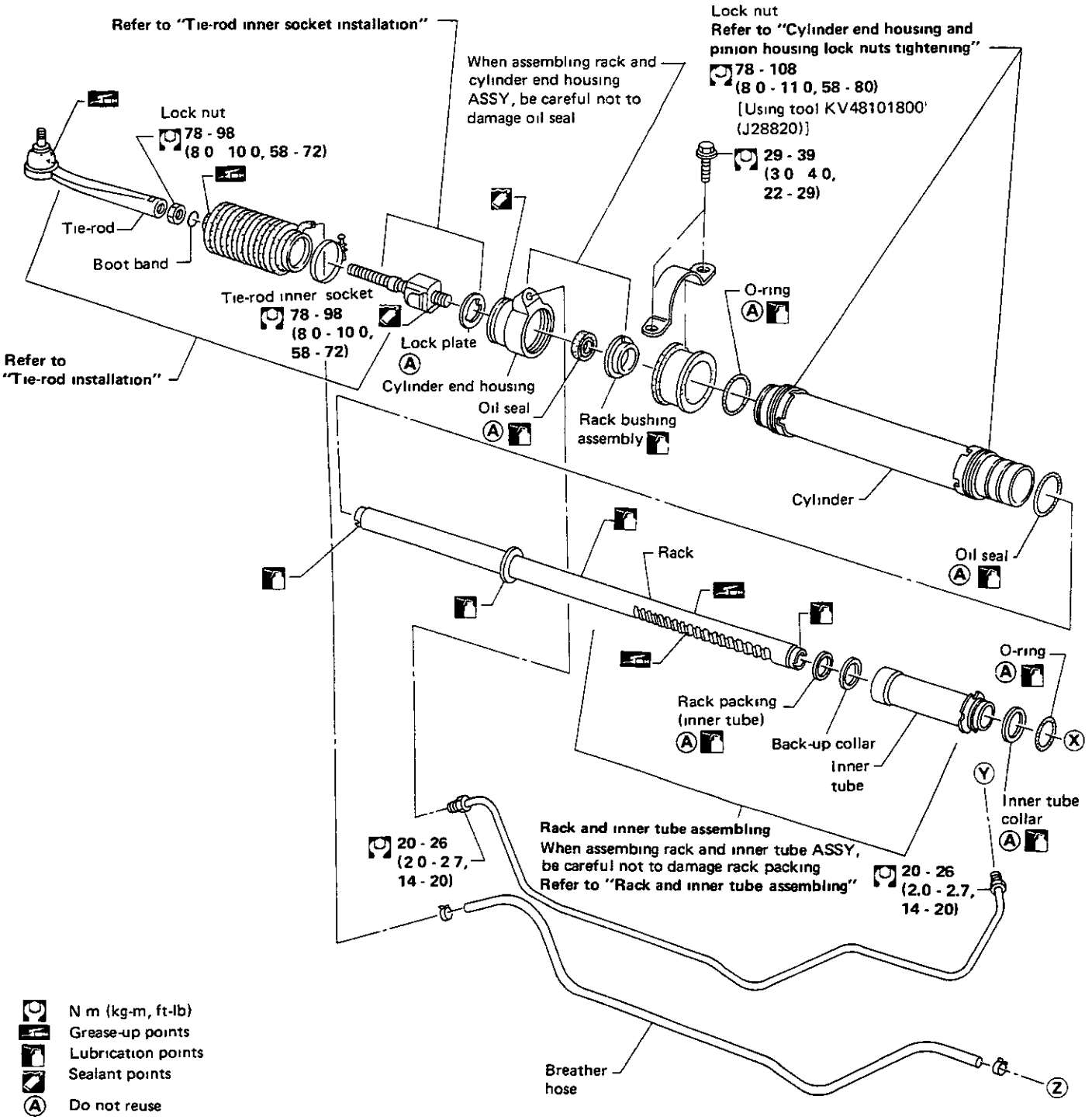

Disassembly and Assembly (Cont'd)

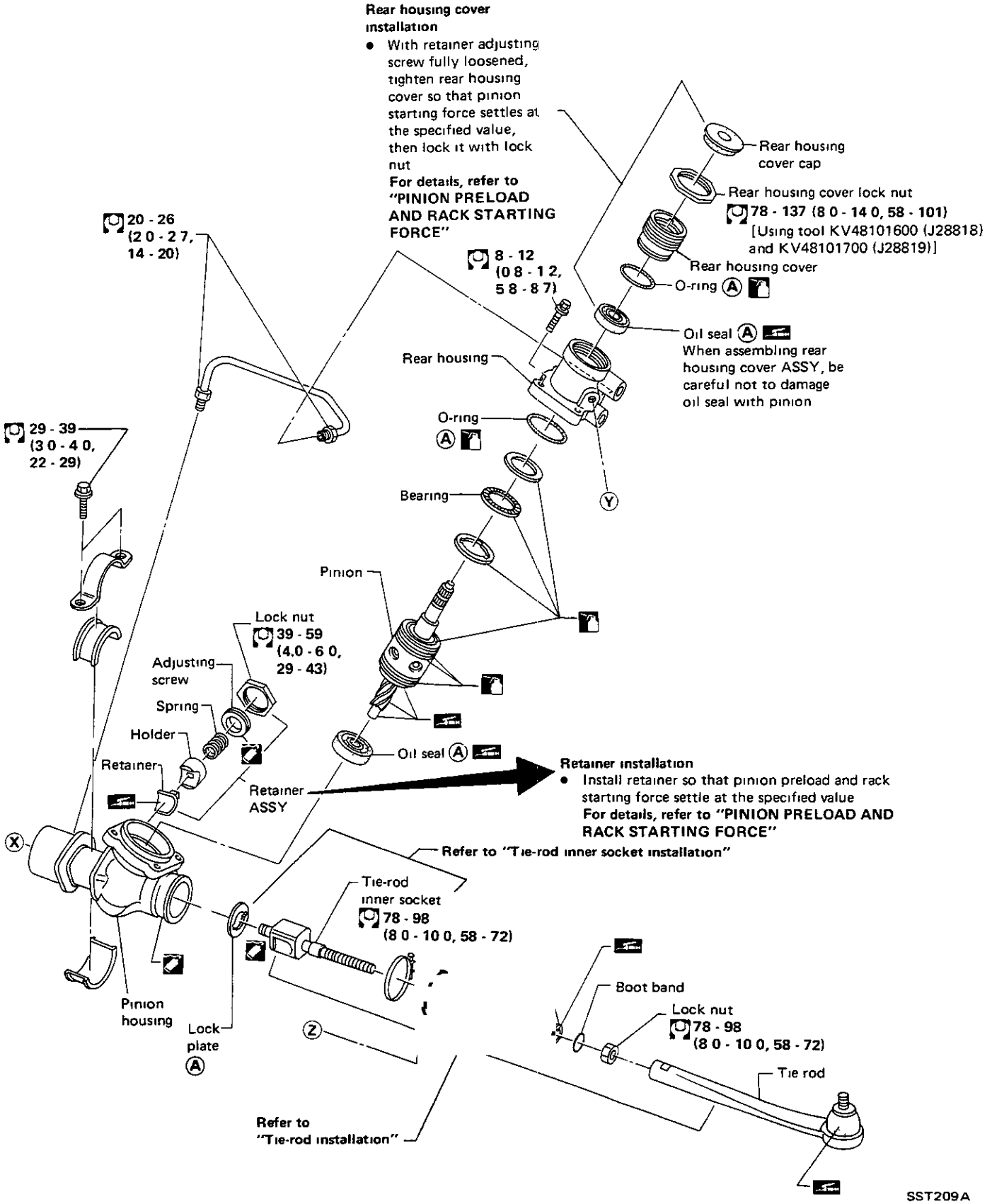

Disassembly and Assembly (Cont'd)

ASSEMBLY

- Before starting work, thoroughly clean all parts in cleaning solvent or automatic transmission fluid "Dexron Type" and blow dry with compressed air, if available
- Do not reuse old oil seal, packing and O-ring Always install new ones
- When installing oil seals, use suitable tool

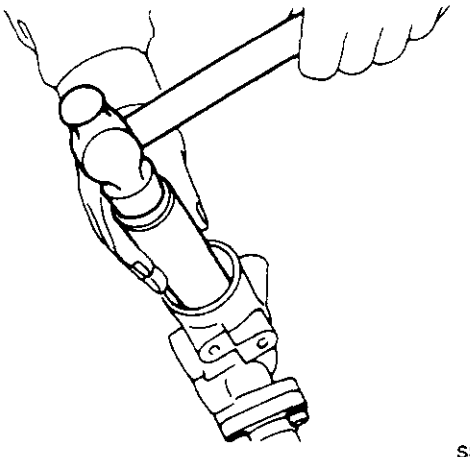

SST548

- When installing cylinder end housing or rear housing cover, wrap cellophane tape around rack end or pinion serrations to prevent oil seal from being damaged

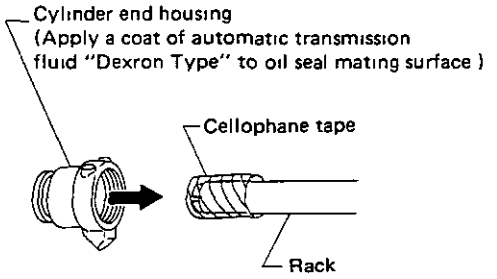

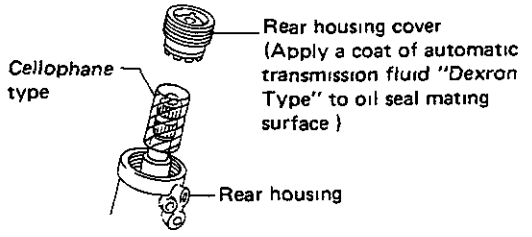

SST210A

- Apply oil to O-rings as well as frictional surfaces of oil seals and packings

1. Assemble inner tube assembly to rack

- Be careful not to scratch rack packing
  Refer to "Rack and inner tube assembling"

2. Assemble rack & inner tube assembly, cylinder, cylinder end housing and pinion housing.

- Be careful not to damage oil seal
- Pay attention to direction for the cylinder end housing and pinion housing to prevent undue stress from being applied to hydraulic pipes
- Cylinder end housing and pinion housing lock nut

  78 - 108 N m
  (8 0 - 11.0 kg-m, 58 - 80 ft-lb)

  Refer to "Cylinder end housing and pinion housing lock nut tightening"

3. Install tie-rod inner socket, boot and tie-rod to rack & housing assembly, and then check rack stroke

- Refer to "Tie-rod inner socket installation", "Tie-rod installation", and "Rack stroke"

4. Install pinion complete and rear housing complete.

- Be careful not to damage oil seal
- After adjusting pinion preload, tighten rear housing cover lock nut

  Rear housing cover lock nut.
  78 - 137 N·m
  (8 - 14 kg-m, 58 - 101 ft-lb)

  Refer to "Pinion preload adjustment"

5. Install retainer assembly.

- Make sure pinion preload and rack steering force adjusted to specifications
  Refer to "Retainer adjustment"

6. Check rack for smooth movement over its entire stroke, without binding and noise.

7. Install hydraulic piping and breather hose.

Disassembly and Assembly (Cont'd)

Rack and inner tube assembling

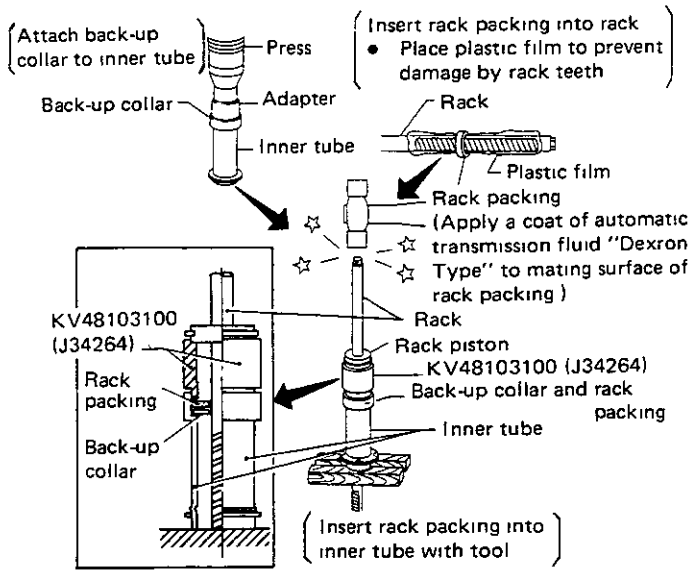

SST211A

Tie-rod inner socket installation

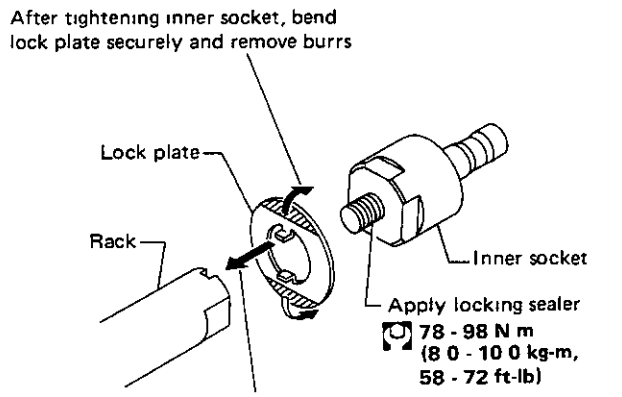

SST213A

Cylinder end housing and pinion housing lock nut tightening

: Lock nut:
78 - 108 N m
(8.0 - 11.0 kg-m, 58 - 80 ft-lb)

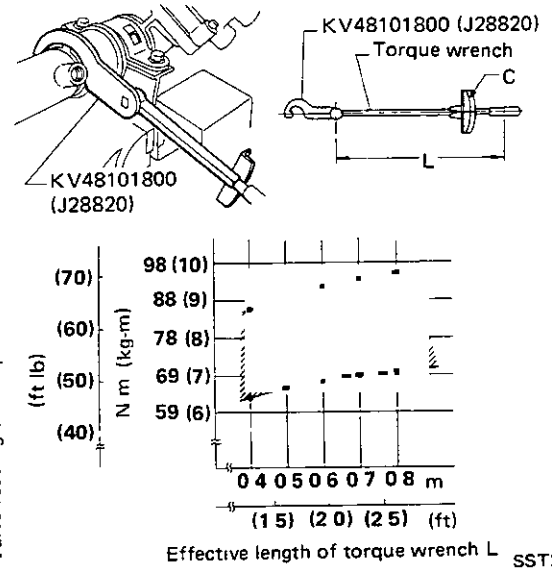

SST212A

Tie-rod installation

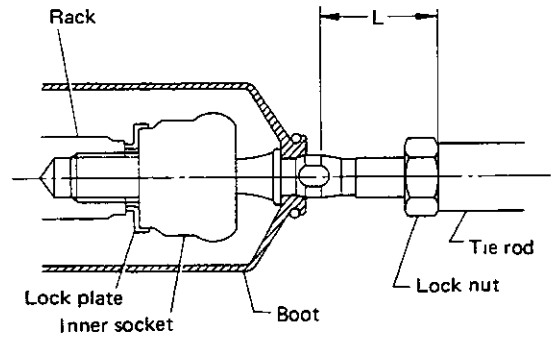

- Standard dimension L = 37 5 mm (1 476 in)
- When installing tie-rod or adjusting toe-in, be careful not to twist boots
- Toe-in Refer to MA section

SST214A

Rack stroke

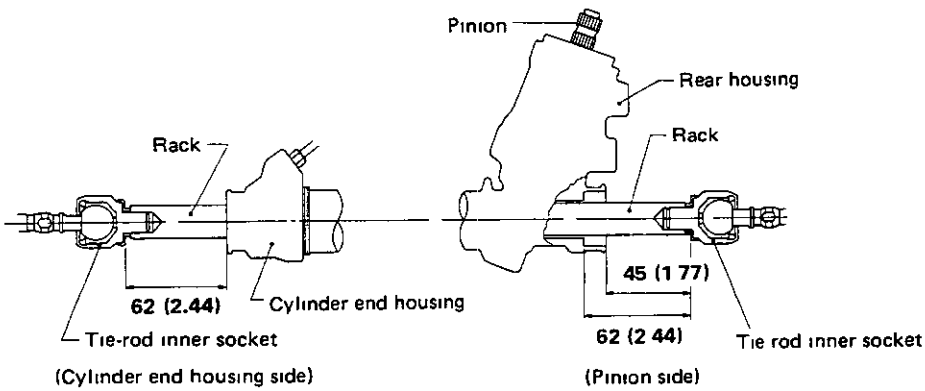

Unit mm (in)

SST215A

PINION PRELOAD AND RACK STARTING FORCE

- After disconnecting hydraulic line and draining fluid, measure them

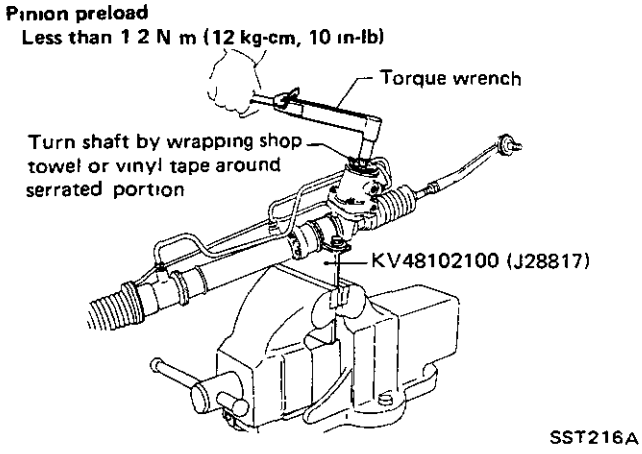

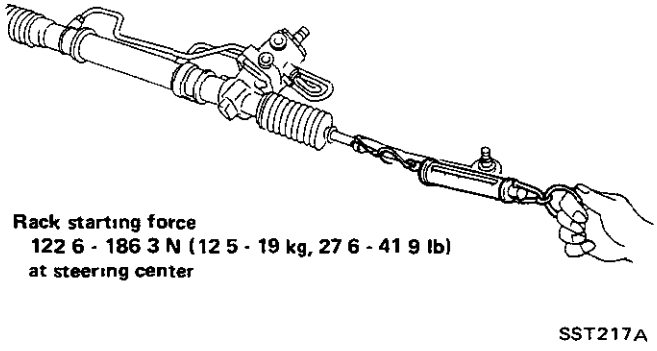

- If they are not within specifications, adjust retainer adjusting screw
- If retainer adjustment cannot be made properly, fully loosen retainer adjusting screw, and then adjust pinion preload
  Then readjust retainer adjusting screw
- If pinion preload adjustment cannot be made properly, replace steering gear assembly

Retainer adjustment

1 Remove retainer adjusting screw and clean old locking sealer off the threads
2 Apply new locking sealer to the threads Tighten the screw to approximately 3 N m (0.3 kg-m, 2 2 ft-lb) and back it off by 20 to 25°
3 If preload and starting force are within specified ranges, tighten lock nut securely (Check rack for smooth movement over its entire stroke.)

Pinion preload:
Less than 1.2 N·m (12 kg-cm, 10 in-lb)

Rack starting force:
122.6 - 186.3 N
(12.5 - 19 kg, 27 6 - 41.9 lb)

- **Retainer adjusting screw lock nut**
  39 - 59 N·m
  (4.0 - 6.0 kg-m, 29 - 43 ft-lb)

Pinion preload adjustment

Before making pinion preload adjustment, make sure retainer adjusting screw is loosened completely

1 Screw in rear housing cover completely and back it off by 180 to 360°. Then turn pinion a few rotations and then measure pinion starting torque

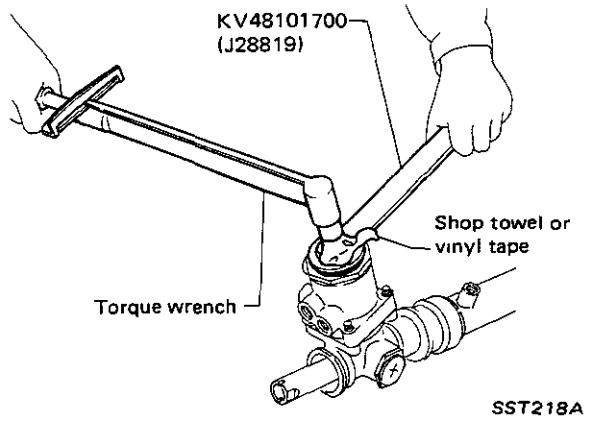

Pinion starting torque T_1 :
Less than 0.7 N·m (7 kg-cm, 6.1 in-lb)

Free play should not be allowed for pinion

Inspection and Adjustment (Cont'd)

2 Screw in rear housing cover until pinion starting torque equals "T_2", then tighten lock nut

$T_2 = T_1 + T_3$ [T_3 = approx. 0 5 N·m (5 kg-cm, 4.3 in-lb)]

- **Lock nut:**
  78 - 137 N·m
  (8.0 - 14.0 kg-m, 58 - 101 ft-lb)

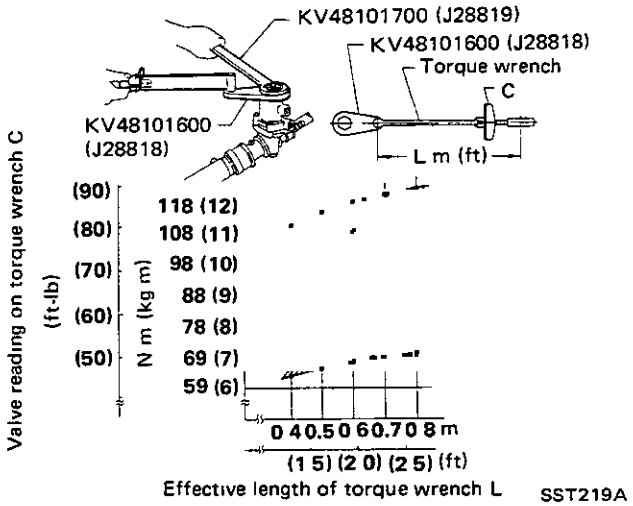

SST219A

3 Measure pinion starting torque T_4 to make sure it is within specified range

T_4:
Less than 0.8 N·m (8 kg-cm, 6.9 in-lb)
and
T_1 + [0.10 - 0.25 N·m (1.0 - 2.5 kg-cm, 0.87 - 2 17 in-lb)]

4. If T_4 does not meet the above two values, repeat step 2 and re-adjust pinion preload using T_3.

TIE-ROD OUTER SOCKET

1 Check ball joint for swinging torque.

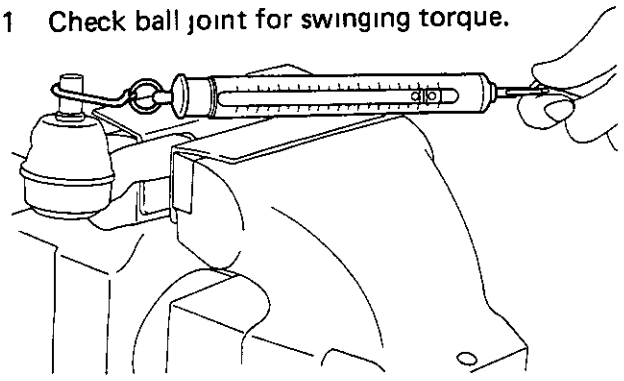
SST130A

Tie-rod outer socket:
Swinging torque
0.29 - 2.94 N·m
(3 0 - 30 kg-cm, 2.6 - 26.0 in-lb)

2 Check condition of dust cover If it is cracked excessively, replace.

TIE-ROD INNER SOCKET

Check inner socket for swinging torque and play If ball stud is worn and play in axial direction is excessive or joint is hard to swing, replace as a complete unit.

Tie-rod inner socket:
Swinging torque
1.0 - 7.8 N m
(10 - 80 kg-cm, 8.7 - 69.4 in-lb)
Axial play
0 mm (0 in)

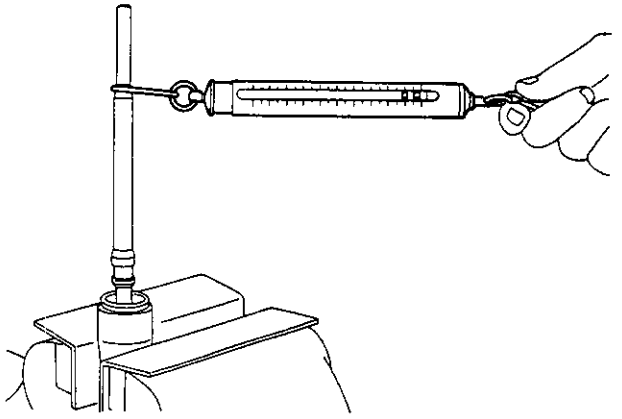
SST106A

BOOT

Check condition of boot If it is cracked excessively, replace boot

CYLINDER TUBES AND BREATHER HOSE

Check cylinder tubes and breather hose for scratches or other damage
Replace if necessary

STEERING GEAR COMPONENT PARTS

Thoroughly examine those component parts. If those parts are damaged, cracked or worn, replace as steering gear assembly

POWER STEERING OIL PUMP

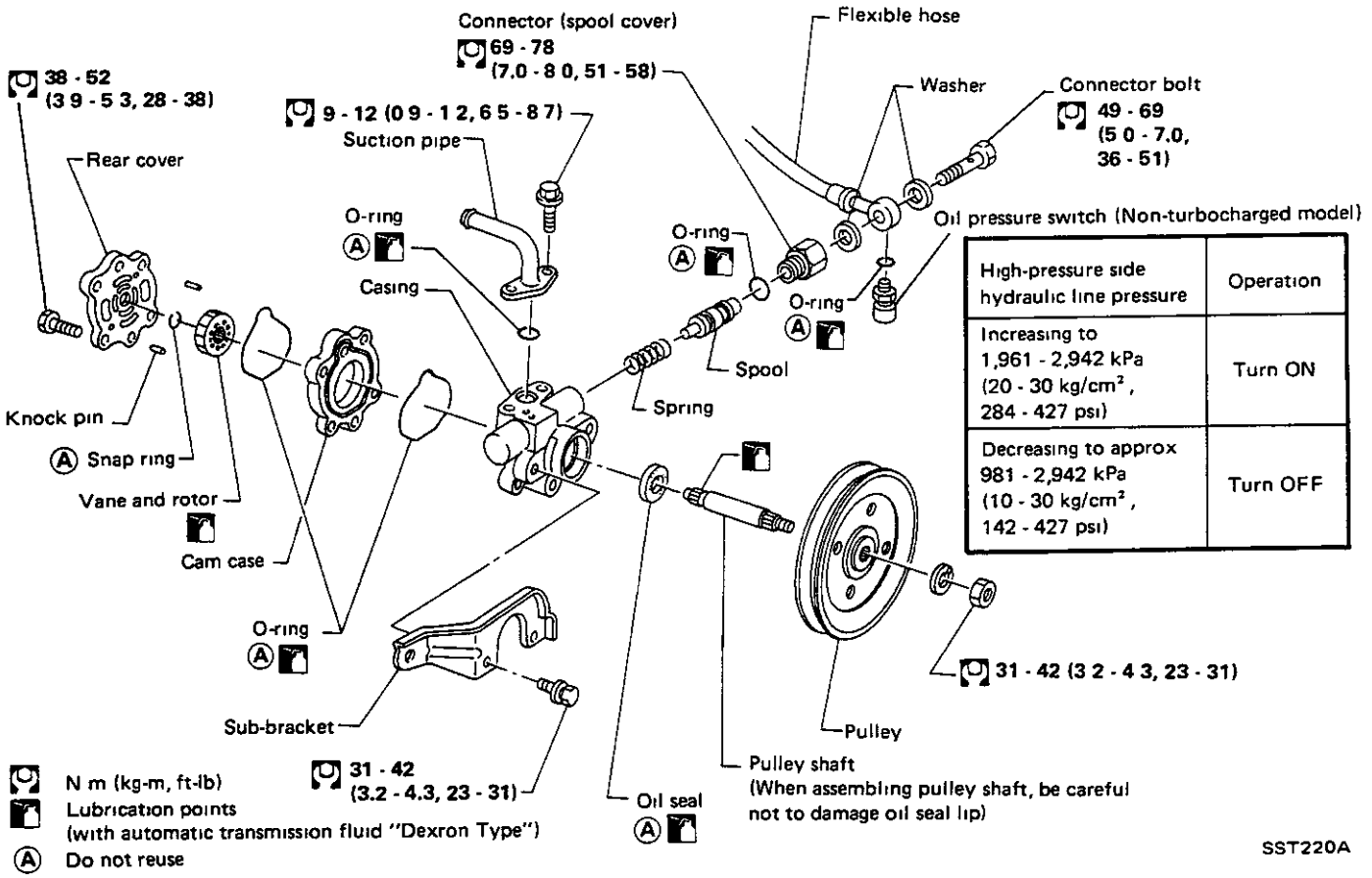

High-pressure side hydraulic line pressure	Operation
Increasing to 1,961 - 2,942 kPa (20 - 30 kg/cm², 284 - 427 psi)	Turn ON
Decreasing to approx 981 - 2,942 kPa (10 - 30 kg/cm², 142 - 427 psi)	Turn OFF

Pre-disassembly Inspection

The power steering oil pump should be disassembled only if any of the following conditions are observed.

- **Oil leak at the following points**

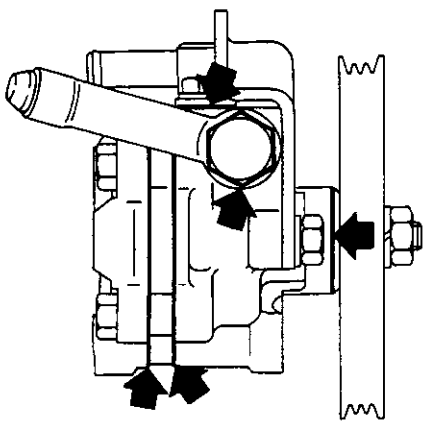

SST126A

- **Deformed or damaged pulley**

Oil Pump Installation

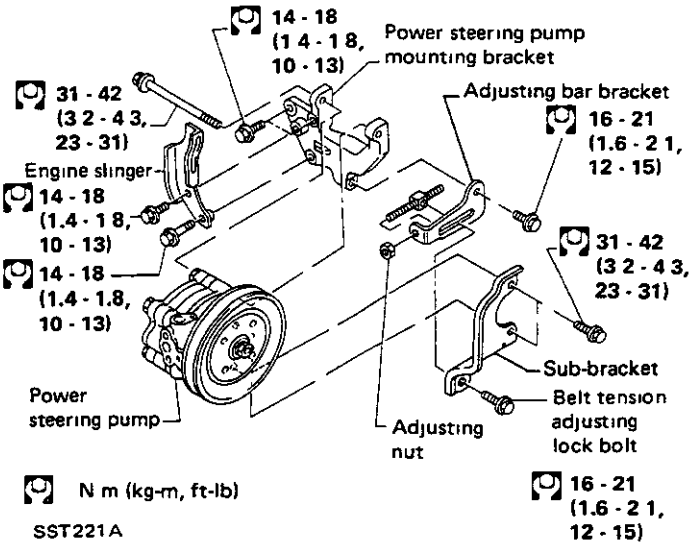

- **After installing oil pump, adjust belt tension. Refer to MA section.**

Diassembly

CAUTION:

- The parts which can be disassembled are strictly limited, and never disassemble other parts than the specified ones.
- Disassembly should be performed in a place as clean as possible.
- Do not use a rag. Be sure to use nylon or paper cloth.
- When disassembling and reassembling, do not allow any foreign material to enter or contact any parts.

1 Make matching marks.

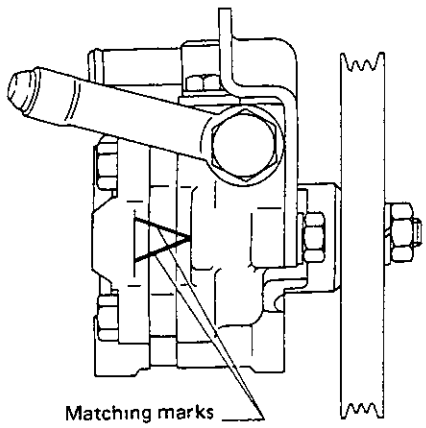

SST127A

2 Remove rear cover

3 Remove O-rings from cam case.

CAUTION:

When removing cam case, be sure that the vane does not come off the rotor.

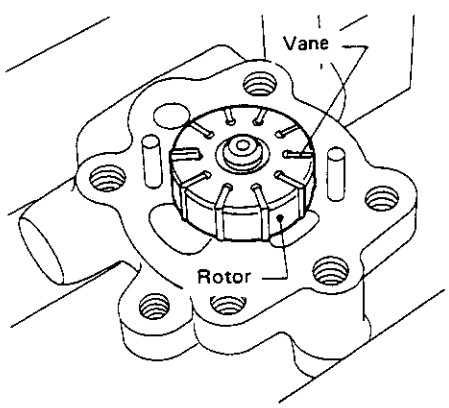

SST032A

4 Remove snap ring, then draw pulley shaft out

- **Be careful not to drop pulley shaft.**

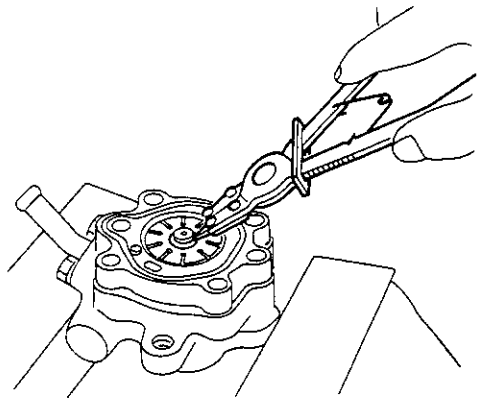

SST033A

5. Install cam case and rear cover, then remove oil seal.

- **Be careful not to damage casing.**

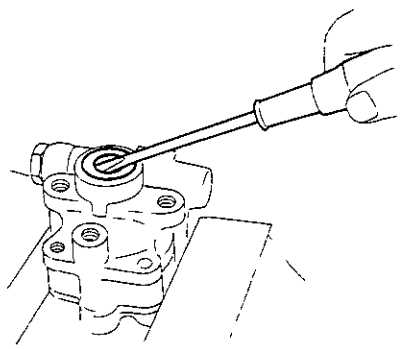

SST034A

6. Remove joint.

- **Be careful not to drop spool.**

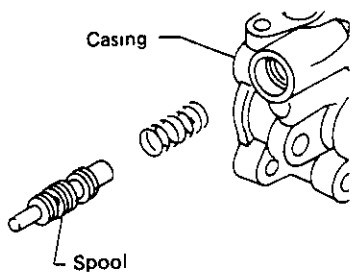

SST036A

7. Remove suction pipe, then remove O-ring

POWER STEERING OIL PUMP

Inspection

Wash clean all disassembled parts (inside pump) in suitable cleaning solvent.

PULLEY AND PULLEY SHAFT

- **If pulley is cracked or deformed, replace it.**
- **If an oil leak is observed around pulley shaft oil seal, replace it.**
- **If serration of pulley or pulley shaft is deformed or worn, replace it.**

OIL PRESSURE SWITCH
(Non-turbocharged model)

High-pressure side hydraulic line pressure kPa (kg/cm^2, psi)	Operation
Increasing to 1,961 - 2,942 (20- 30, 284 - 427)	Turn ON
Decreasing to Approx 981 - 2,942 (10 - 30, 142 - 427)	Turn OFF

Refer to "Hydraulic System Check" in "POWER STEERING SYSTEM – Checking"

Assembly

Assemble oil pump in the reverse order of disassembly, noting the following instructions

- Before installing O-rings and oil seal, apply a thin coat of power steering fluid to them.
- Make certain that O-rings and oil seal are installed properly.
- Discard old O-ring and oil seal and install new ones
- Be careful of oil seal direction.

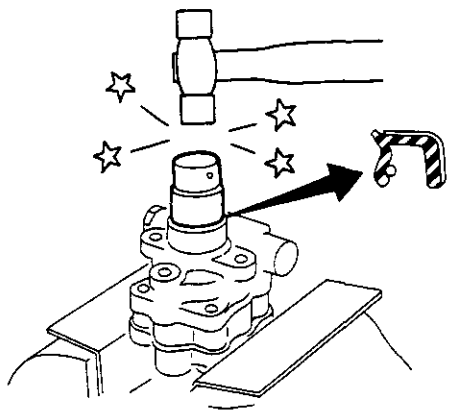

SST038A

Wiring Diagram —Oil Pressure Switch

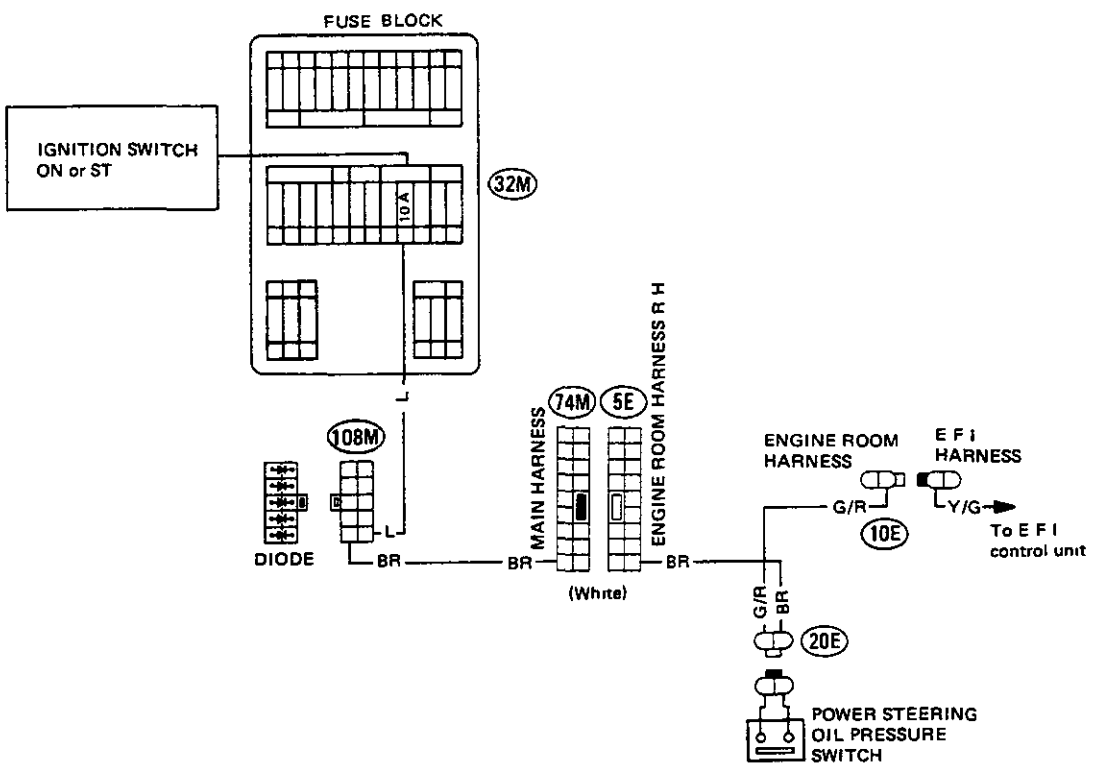

SST222A

SERVICE DATA AND SPECIFICATIONS (S.D.S.)

General Specifications

Steering gear type	PR24S [Power steering]
Steering column Type	Collapsible

Column length L mm (in)

Non-tilt type

Column length "L"

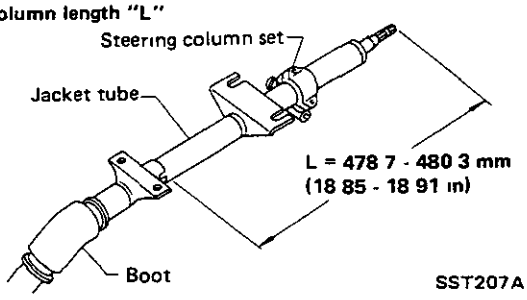

Tilt type

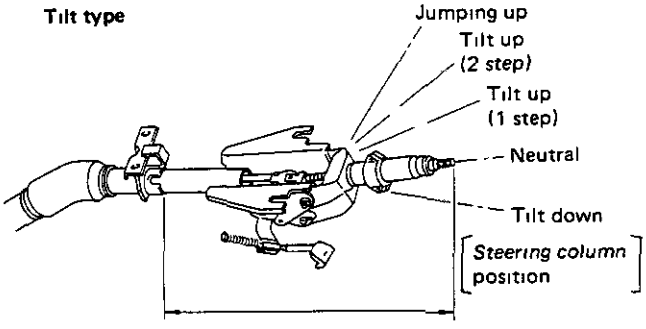

SST208A

L = 478 7 - 480 3 mm (18 85 18 91 in) at steering column Neutral position

Turn of steering wheel (Lock to lock)	2 8
Steering overall gear ratio	17 1
Power steering fluid Type	Automatic transmission fluid "DEXRON type"
Capacity ℓ (US pt, Imp pt)	Approx 0 9 (1-7/8, 1-5/8)
Normal operating temperature °C (°F)	60 - 80 (140 - 176)

Inspection and Adjustment

GENERAL

Steering wheel axial play mm (in)	0 (0)
Steering wheel play mm (in)	Less than 35 (1 38)
Power steering system Steering wheel turning force at 360° position from Neutral N (kg, lb)	Less than 39 2 (4 0, 8 8)
Oil pump belt deflection (Measured when engine is cold) mm (in)/98 N (10 kg, 22 lb)	New 10 - 13 (0 39 - 0 51) *Used* 13 - 16 (0 51 - 0 63) Limit 21 (0 83) – Replace belt to new one
Oil pump maximum pressure kPa (kg/cm², psi)	6,669 - 7,257 (68 - 74, 967 - 1,052)

Oil pressure switch operation

Hydraulic line pressure kPa (kg/cm², psi)	Operation
Increasing to 1,961 - 2,942 (20 - 30, 284 - 427)	Turn ON
Decreasing to 981 - 2,942 (10 - 30, 142 - 427)	Turn OFF

Inspection and Adjustment (Cont'd)

STEERING GEAR AND LINKAGE (PR24S)

Tie-rod outer ball joint Swinging torque N m (kg-cm, in-lb)	0 29 - 2 94 (3 0 - 30, 2 6 - 26 0)
Tie-rod inner ball joint Swinging torque N m (kg-cm, in-lb)	1 0 - 7 8 (10 - 80, 8 7 - 69 4)
Axial play mm (in)	0 (0)

Rack stroke

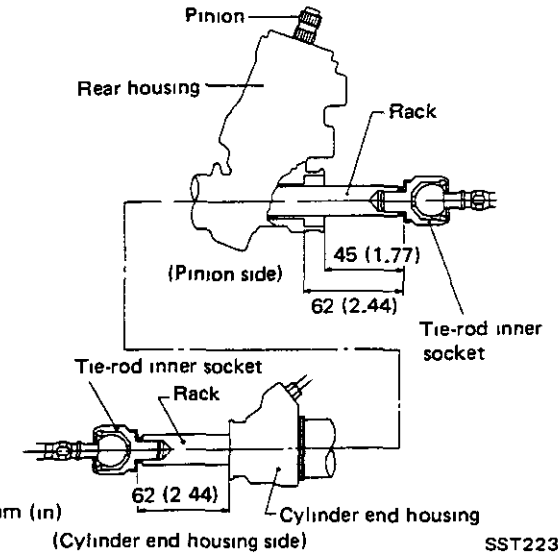

Unit mm (in)

SST223A

Tie-rod standard length mm (in)

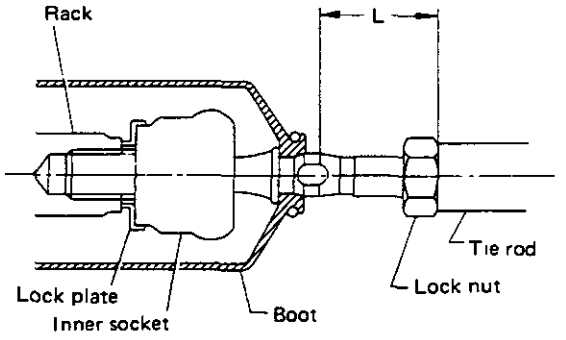

- *Standard dimension L = 37 5 mm (1 476 in)*
- When installing tie-rod or adjusting toe-in, be careful not to twist boots
- Toe-in Refer to MA section

SST214A

Pinion gear preload (Pinion and rack gear assembly without fluid) N m (kg-cm, in-lb)	Less than 1 2 (12, 10)
Rack starting force at steering center (Pinion and rack gear assembly without fluid) N (kg, lb)	122 6 - 186 3 (12 5 - 19, 27 6 - 41.9)

Tightening Torque

STEERING COLUMN

Unit	N m	kg-m	ft-lb
Steering wheel nut	*49 - 59*	*5 0 - 6 0*	*36 - 43*
Steering column to body	9 - 14	0 9 - 1 4	6 5 - 10 1
Hole cover to dash panel	3 - 5	0 3 - 0 5	2 2 - 3 6
Column joint fixing bolt (Lower joint, column set)	32 - 38	3 3 - 3 9	24 - 28
Jacket lower tube to steering column clamp	3 4 - 4 4	0 35 - 0 45	2 5 - 3 3

STEERING GEAR & LINKAGE (PR-24S)

Unit	N m	kg-m	ft-lb
Tie-rod lock nut	78 - 98	8 0 - 10 0	58 - 72
Tie-rod inner socket to rack (With sealant)	78 - 98	8 0 - 10 0	58 - 72
Cylinder end housing & pinion housing lock nut	78 - 108	8 0 - 11 0	58 - 80
Rear housing to pinion housing	8 - 12	0 8 - 1 2	5 8 - 8 7
Rear housing cover lock nut	78 - 137	8 0 - 14 0	58 - 101
Retainer lock nut	39 - 59	4 0 - 6 0	29 - 43
Cylinder tube flare nut	20 - 26	2 0 - 2 7	14 - 20
Gear & linkage mounting	29 - 39	3 0 - 4 0	22 - 29
Tie-rod to knuckle arm	54 - 98	5 5 - 10 0	40 - 72

OIL PUMP

Unit	N m	kg-m	ft-lb
Mounting bracket to engine	14 - 18	1 4 - 1 8	10 - 13
Engine slinger mounting bolt	14 - 18	1 4 - 1 8	10 - 13
Oil pump to mounting bracket (Through bolt)	31 - 42	3.2 - 4 3	23 - 31
Oil pump casing to sub bracket	31 - 42	3 2 - 4 3	23 - 31
Adjusting bar bracket to mounting bracket	16 - 21	1 6 - 2 1	12 - 15
Sub bracket to adjusting bar	16 - 21	1 6 - 2 1	12 - 15
Pulley lock nut	31 - 42	3 2 - 4 3	23 - 31
Rear cover fixing bolt	38 - 52	3 9 - 5 3	28 - 38
Connector (Spool cover)	69 - 78	7 0 - 8 0	51 - 58
Suction pipe to casing	9 - 12	0 9 - 1.2	6 5 - 8 7

Tightening Torque (Cont'd)

HYDRAULIC LINE AND OIL PRESSURE SWITCH

Unit	N·m	kg-m	ft-lb
Low-pressure pipe to steering gear	27 - 39	2.8 - 4.0	20 - 29
High-pressure pipe to steering gear	15 - 25	1.5 - 2.5	11 - 18
High-pressure pipe connector bolt (At oil pump)	49 - 69	5.0 - 7.0	36 - 51
Oil pressure switch	13 - 18	1.3 - 1.8	9 - 13

SPECIAL SERVICE TOOLS

Tool number (Kent-Moore No.)	Tool name	Unit application
		PR-24S
ST27180001 (J25726)	Steering wheel puller	X
HT72520000 (J25730-A)	Ball joint remover	X
ST27091000 (J26357)	Pressure gauge	X
KV48101600 (J28818)	Rear housing lock nut wrench	X
KV48101700 (J28819)	Rear cover wrench	X
KV48101800 (J28820)	Cylinder lock nut wrench	X
KV48102100 (J28817)	Power steering stand	X
KV48103100 (J34264)	Rack packing installer	X