SECTION DI
DRIVER INFORMATION SYSTEM

CONTENTS

PRECAUTIONS

PFP:00011

Precautions for Supplemental Restraint System (SRS) “AIR BAG” and “SEAT BELT PRE-TENSIONER”

AKS003V4

The Supplemental Restraint System such as “AIR BAG” and “SEAT BELT PRE-TENSIONER”, used along with a front seat belt, helps to reduce the risk or severity of injury to the driver and front passenger for certain types of collision. This system includes seat belt switch inputs and dual stage front air bag modules. The SRS system uses the seat belt switches to determine the front air bag deployment, and may only deploy one front air bag, depending on the severity of a collision and whether the front occupants are belted or unbelted.
Information necessary to service the system safely is included in the SRS and SB section of this Service Manual.

WARNING:

- **To avoid rendering the SRS inoperative, which could increase the risk of personal injury or death in the event of a collision which would result in air bag inflation, all maintenance must be performed by an authorized NISSAN/INFINITI dealer.**
- **Improper maintenance, including incorrect removal and installation of the SRS, can lead to personal injury caused by unintentional activation of the system. For removal of Spiral Cable and Air Bag Module, see the SRS section.**
- **Do not use electrical test equipment on any circuit related to the SRS unless instructed to in this Service Manual. SRS wiring harnesses can be identified by yellow and/or orange harnesses or harness connectors.**

Precautions for Battery Service

AKS00AVA

Before disconnecting the battery, lower both the driver and passenger windows. This will prevent any interference between the window edge and the vehicle when the door is opened/closed. During normal operation, the window slightly raises and lowers automatically to prevent any window to vehicle interference. The automatic window function will not work with the battery disconnected.

Wiring Diagrams and Trouble Diagnosis

AKS000WM

When you read wiring diagrams, refer to the following:

- Refer to GI-15, "How to Read Wiring Diagrams" .
- Refer to PG-4, "POWER SUPPLY ROUTING CIRCUIT" for power distribution circuit.

When you perform trouble diagnosis, refer to the following:

- Refer to GI-11, "HOW TO FOLLOW TEST GROUPS IN TROUBLE DIAGNOSES" .
- Refer to GI-27, "How to Perform Efficient Diagnosis for an Electrical Incident" .

COMBINATION METERS

PFP:24814

System Description

AKS0093R

UNIFIED METER CONTROL UNIT

- Speedometer, odo/trip meter, tachometer, fuel gauge and water temperature gauge are controlled by the unified meter control unit, which is built into the combination meter. Unified meter control unit receives signals from unified meter and A/C amp.
- Warning lamp and indicator lamp of combination meter are controlled by signals drawn from the unified meter and A/C amp.
- For trip meter, adopted twin trip meter which can integrate two modes.*
  *The record of the odo meter is kept even if the battery cable is disconnected. The record of the trip meter is erased when the battery cable is disconnected.
- Odo/trip meter and A/T indicator segments can be checked in diagnosis mode.
- Meters/gauges can be checked in diagnosis mode.

Illumination Control

The unified meter control unit outputs the combination meter and triple meter dial lighting when the ignition switch is turned on. When the lighting switch is turned on, light on for the trip computer switch, illumination control switch and external lighting are output. In addition, when the lighting switch is turned on, the illumination control switch on the left side of the combination meter can be used to adjust the brightness of each light. Pressing the illumination control switch will brighten or darken the lights. When the key switch is in the START position, the combination meter and triple meter dial lighting and the trip computer switch and illumination control switch lighting are turned off.

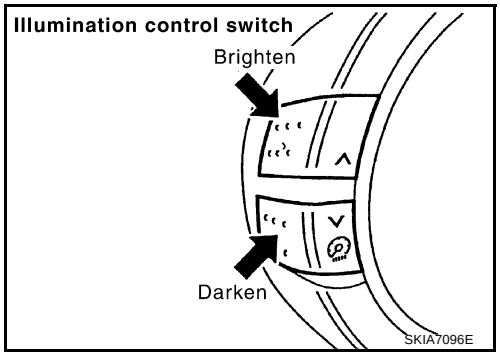

UNIFIED METER AND A/C AMP.

Refer to DI-54, "System Description" in “UNIFIED METER AND A/C AMP”.

HOW TO CHANGE THE DISPLAY FOR ODO/TRIP METER

- The vehicle speed signal and the memory signals from the meter memory circuit are processed by the combination meter and the mileage is displayed.
- Depressing the odo/trip meter switch toggles the mode in the following order.

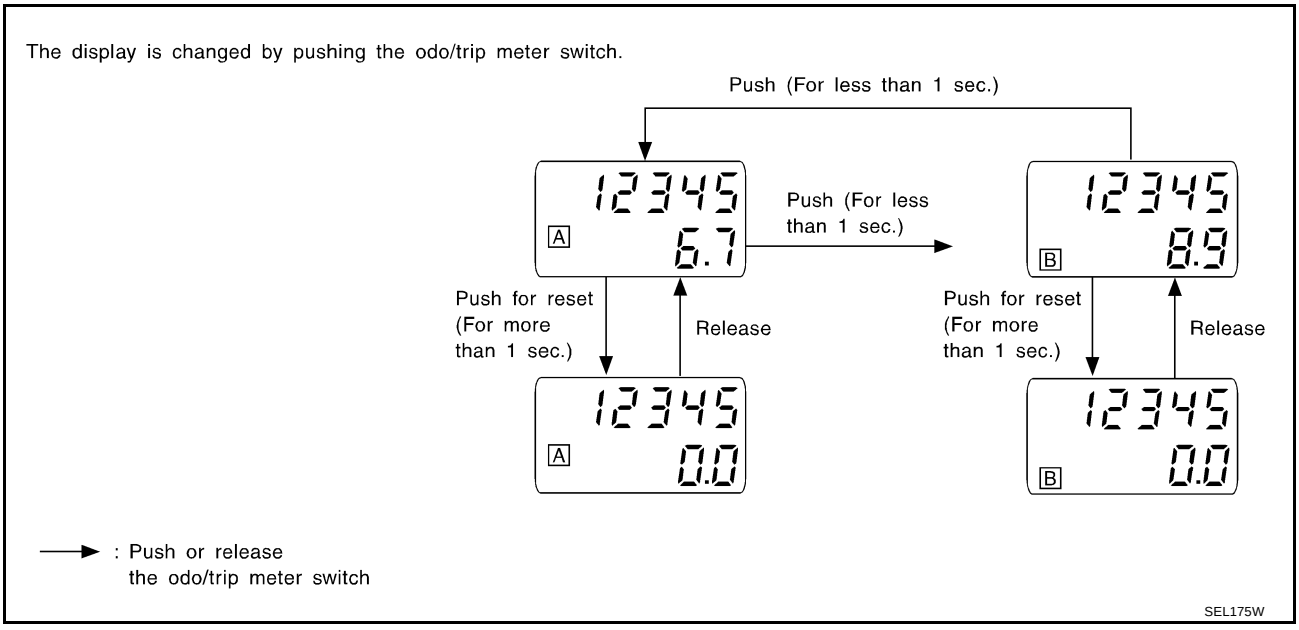

- The odo/trip meter display mode toggling and trip display resetting can be identified by the amount of time that elapses from pressing the odo/trip meter switch to releasing it.
- When resetting with trip A displayed, only trip A display is reset (The same way for trip B).

POWER SUPPLY AND GROUND CIRCUIT

Power is supplied at all times

- through 10A fuse [No. 19, located in the fuse block (J/B)]
- to combination meter terminal 24, and
- to unified meter and A/C amp. terminal 21.

With the ignition switch in the ON or START position, power is supplied

- through 10A fuse [No. 14, located in the fuse block (J/B)]
- to combination meter terminal 23
- through 10A fuse [No. 12, located in the fuse block (J/B)]
- to unified meter and A/C amp. terminal 22.

With the ignition switch in the ACC or ON position, power is supplied

- through 10A fuse [No. 6, located in the fuse block (J/B)]
- to combination meter terminal 14
- through 15A fuse [No. 10, located in the fuse block (J/B)], and
- through 15A fuse [No. 11, located in the fuse block (J/B)]
- to unified meter and A/C amp. terminal 46.

Ground is supplied

- to combination meter terminals 10, 11 and 12
- through body grounds M30 and M66
- to unified meter and A/C amp. terminals 29 and 30
- through body grounds M30 and M66.

WATER TEMPERATURE GAUGE

The water temperature gauge indicates the engine coolant temperature.
ECM provides an engine coolant temperature signal to unified meter and A/C amp. with CAN communication line. Unified meter and A/C amp. provides an engine coolant temperature signal to combination meter for water temperature gauge with communication line between unified meter and A/C amp. and combination meter.

TACHOMETER

The tachometer indicates engine speed in revolutions per minute (rpm).
ECM provides an engine speed signal to unified meter and A/C amp. CAN communication line. Unified meter and A/C amp. provides an engine speed signal to combination meter for tachometer with communication line between unified meter and A/C amp. and combination meter.

FUEL GAUGE

The fuel gauge indicates the approximate fuel level in the fuel tank.
The fuel gauge is regulated by a variable ground signal supplied

- from unified meter and A/C amp. terminal 36
- through terminals 5 and 2 of the fuel level sensor unit and fuel pump (main), and
- through terminals 2 and 1 of the fuel level sensor unit (sub)
- to unified meter and A/C amp. terminal 28 for the fuel gauge.

Unified meter and A/C amp. provides an fuel level signal to combination meter for fuel gauge with communication line between unified meter and A/C amp. and combination meter.

SPEEDOMETER

VDC/TCS/ABS control unit [with VDC system] or ABS actuator and electric unit (control unit) [without VDC system] provides a vehicle speed signal to the unified meter and A/C amp. with CAN communication line. After unified meter and A/C amp. received the vehicle speed signal, it changes the signal to 8 pulse signal to the combination meter for speedometer.

Component Parts and Harness Connector Location

AKS0093S

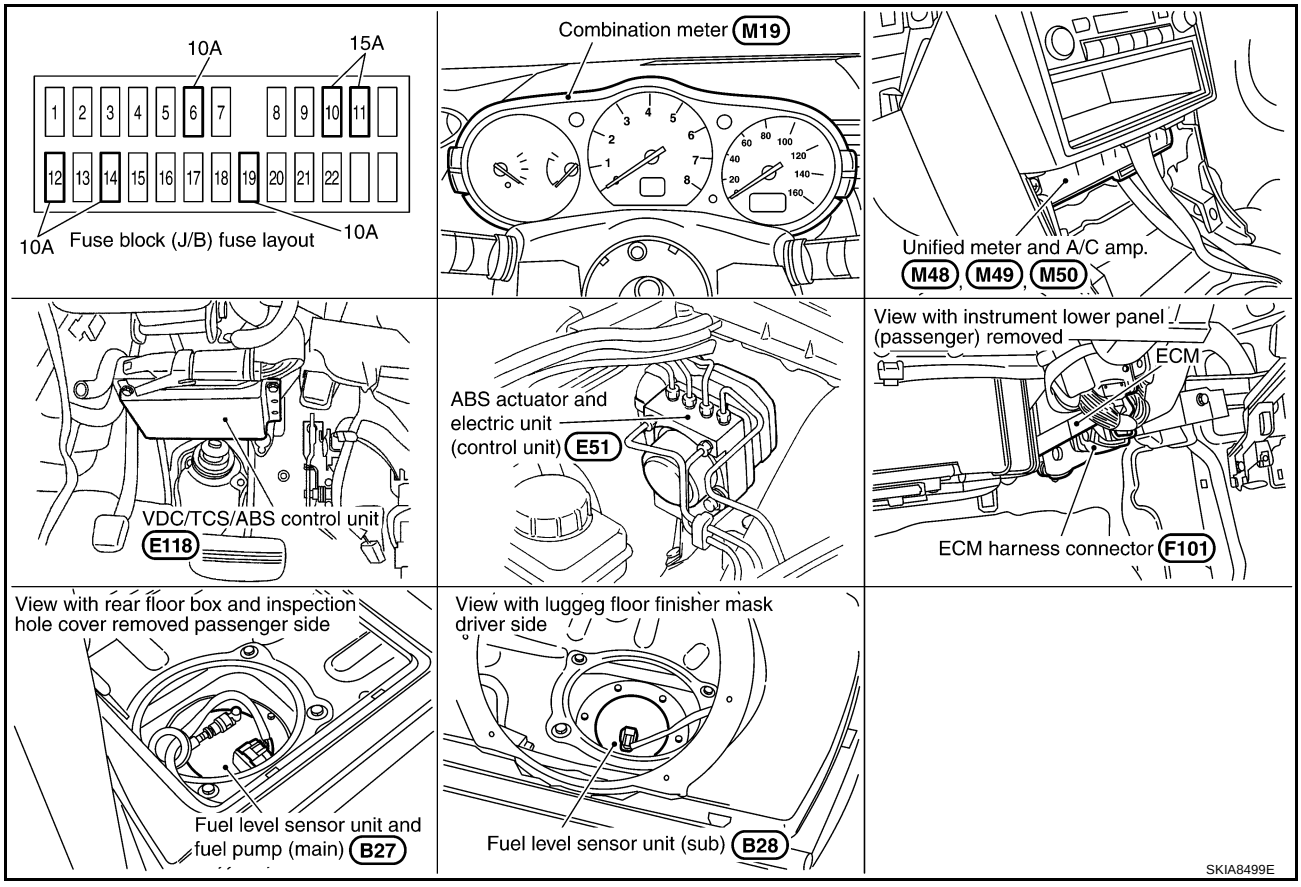

Combination Meter

AKS0093T

CHECK

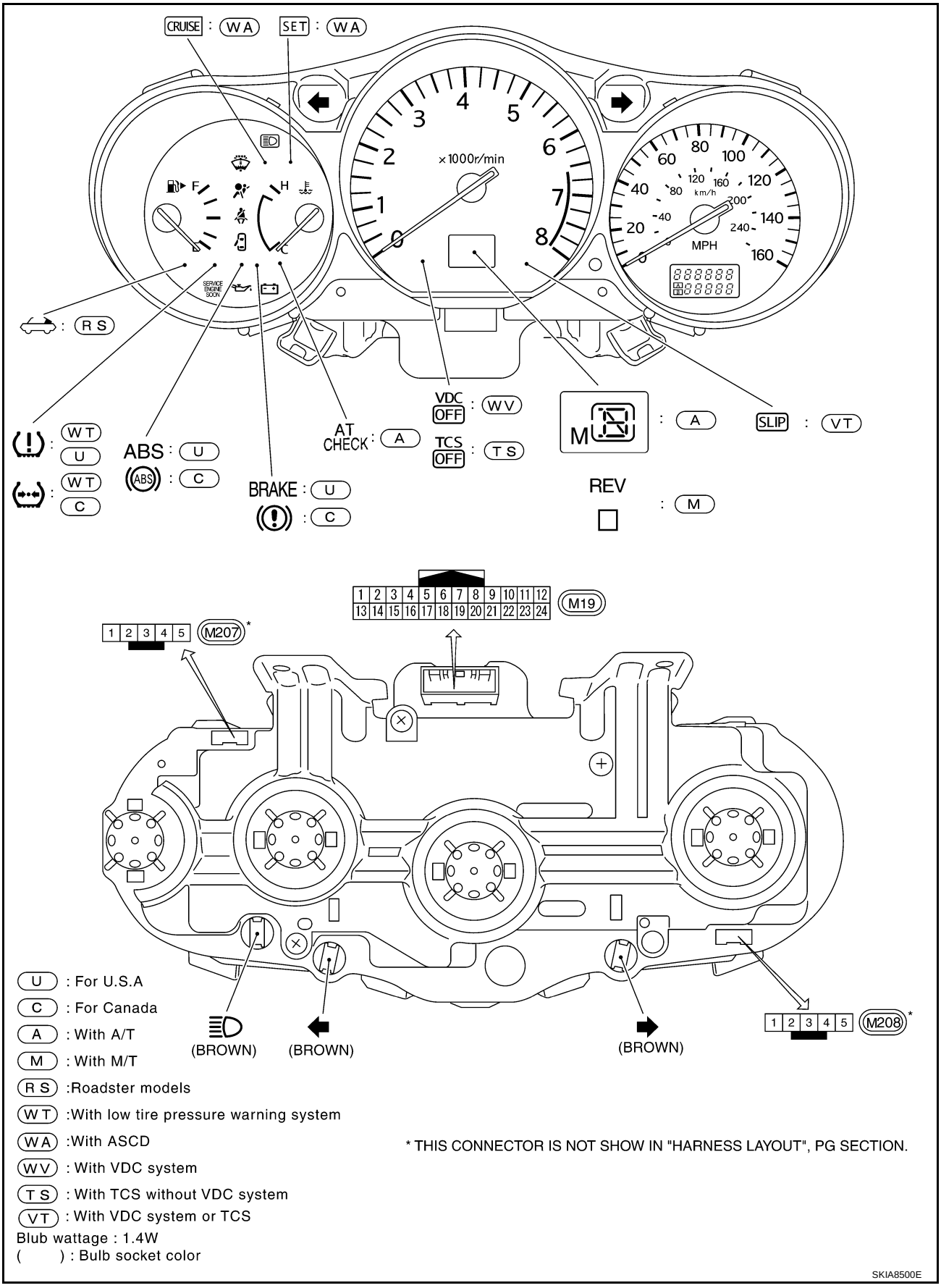

Circuit Diagram

AKS0093U

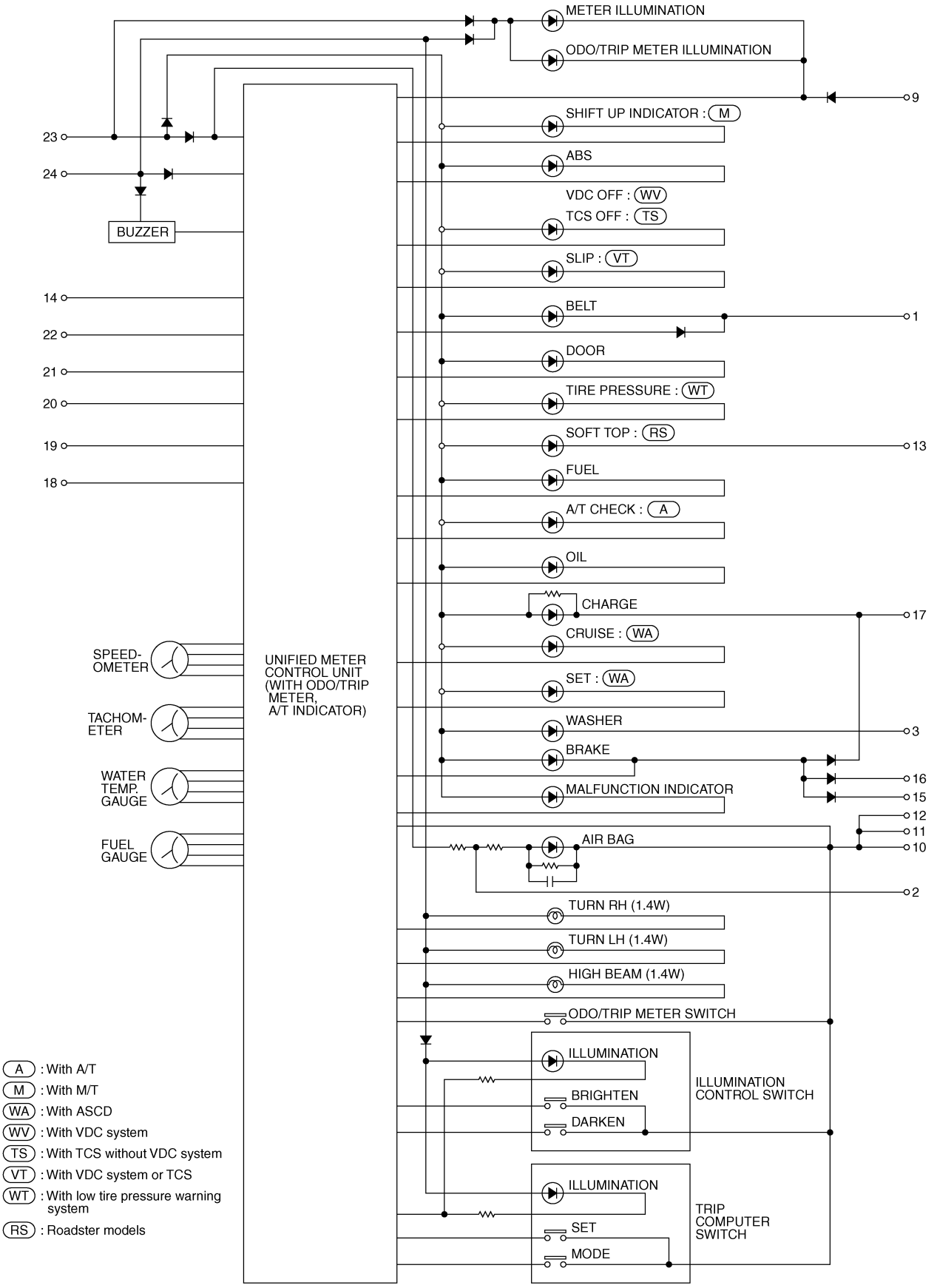

Wiring Diagram — METER —

AKS0093V

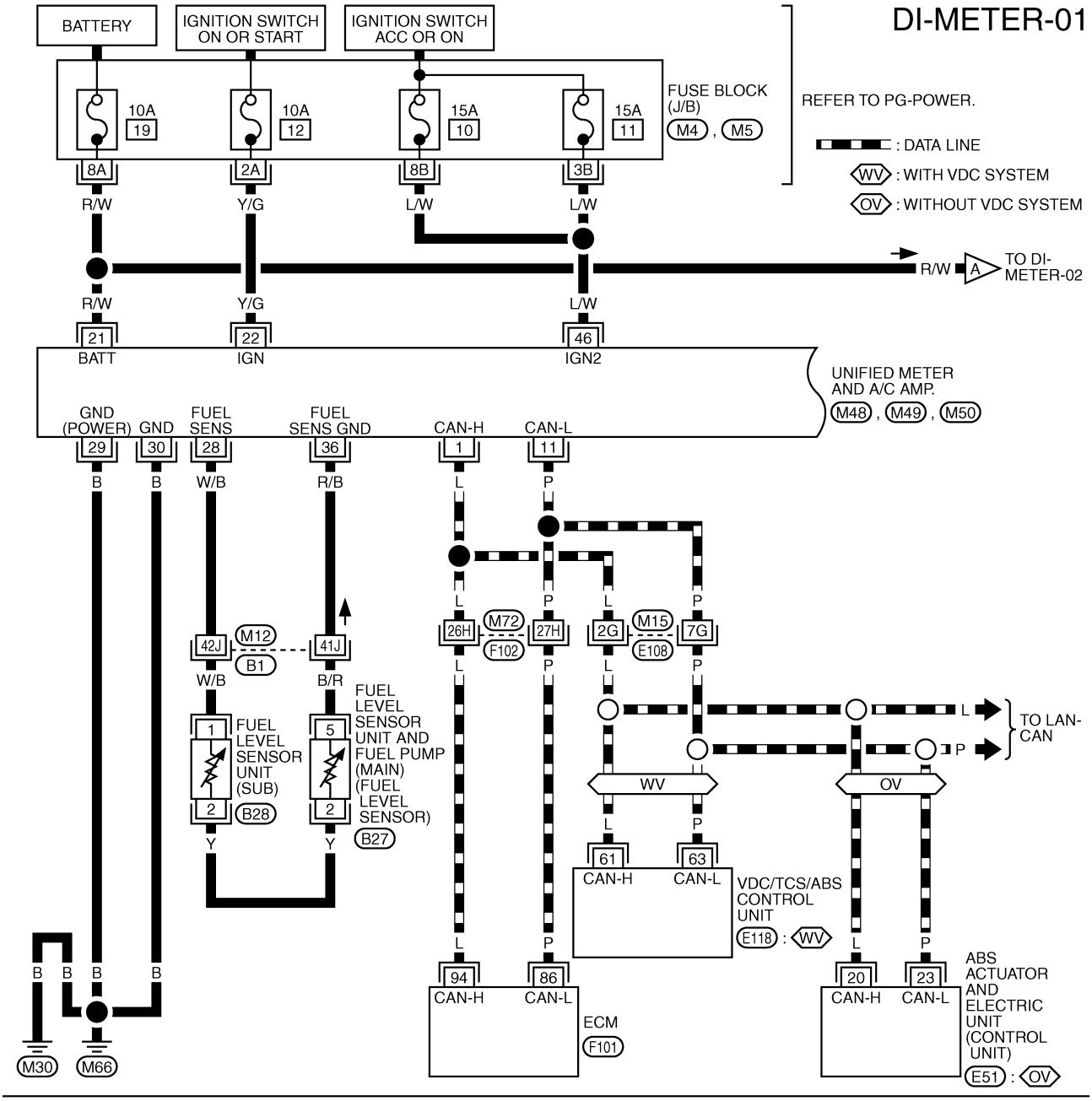

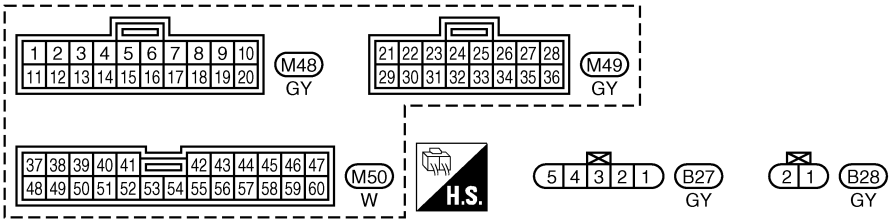

REFER TO THE FOLLOWING.
E108 , F102 , B1 -SUPER MULTIPLE JUNCTION (SMJ)
M4 , M5 -FUSE BLOCK-JUNCTION BOX (J/B)
E51 , E118 , F101 -ELECTRICAL UNITS

TKWT1752E

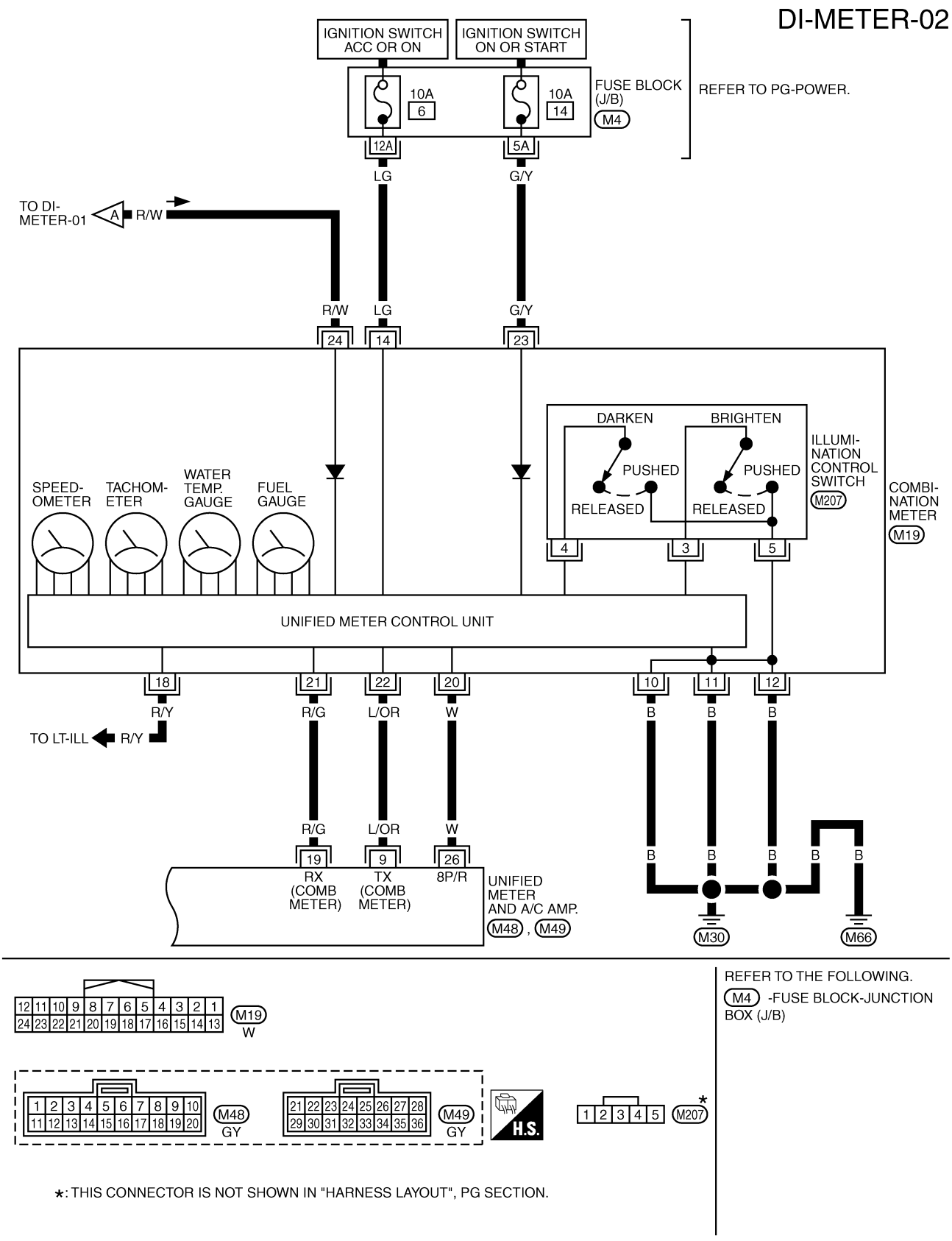
DI-METER-02
IGNITION SWITCH ACC OR ON
IGNITION SWITCH ON OR START
10A 6
10A 14
FUSE BLOCK (J/B) M4
REFER TO PG-POWER.
12A
5A
LG
G/Y
TO DI-METER-01
A
R/W
R/W
LG
G/Y
24
14
23
DARKEN
BRIGHTEN
PUSHED
PUSHED
RELEASED
RELEASED
ILLUMI-NATION CONTROL SWITCH M207
COMBI-NATION METER M19
SPEED-OMETER
TACHOM-ETER
WATER TEMP. GAUGE
FUEL GAUGE
4
3
5
UNIFIED METER CONTROL UNIT
18
21
22
20
10
11
12
R/Y
R/G
L/OR
W
B
B
B
TO LT-ILL
R/Y
R/G
L/OR
W
19
9
26
RX (COMB METER)
TX (COMB METER)
8P/R
UNIFIED METER AND A/C AMP. M48 , M49
B
B
B
B
B
M30
M66
M19
W
M48
GY
M49
GY
H.S.
M207
REFER TO THE FOLLOWING.
M4 -FUSE BLOCK-JUNCTION BOX (J/B)
*: THIS CONNECTOR IS NOT SHOWN IN "HARNESS LAYOUT", PG SECTION.
TKWT0482E

Terminals and Reference Value for Combination Meter

AKS00962

Terminal No.	Wire color	Item	Measuring condition		Reference value (V)
			Ignition switch	Operation or condition	
10	B	Ground	ON	—	Approx. 0
11					
12					
14	LG	Ignition switch ACC or ON	ACC	—	Battery voltage
18	R/Y	Illumination signal	ON	Lighting switch ON, then operate the illumination control switch.	<e.g.>When brightness level is midway 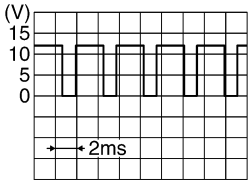 PKIA3771E
				Lighting switch OFF	Approx. 0
20	W	Vehicle speed signal (8-pulse)	ON	Speedometer operated. [When vehicle speed is approx. 40km/h (25MPH)]	**NOTE:** Maximum voltage may be 5V due to specifications (connected units). 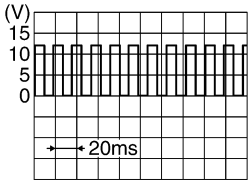 PKIA1935E
21	R/G	TX communication line (To unified meter and A/C amp.)	ON	—	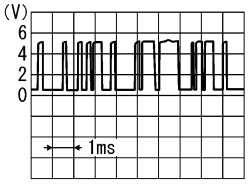 SKIA3361E
22	L/OR	RX communication line (From unified meter and A/C amp.)	ON	—	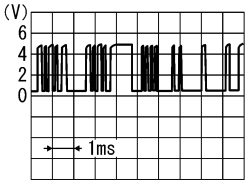 SKIA3362E
23	G/Y	Ignition switch ON or START	ON	—	Battery voltage
24	R/W	Battery power supply	OFF	—	Battery voltage

Terminals and Reference Value for Unified Meter and A/C Amp.

AKS0093X

Terminal No.	Wire color	Item	Measuring condition		Reference value (V)
			Ignition switch	Operation or condition	
1	L	CAN H	—	—	—
9	L/OR	TX communication line (To combination meter)	ON	—	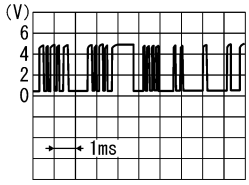 SKIA3362E
11	P	CAN L	—	—	—
19	R/G	RX communication line (From combination meter)	ON	—	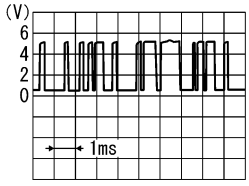 SKIA3361E
21	R/W	Battery power supply	OFF	—	Battery voltage
22	Y/G	Ignition switch ON or START	ON	—	Battery voltage
26	W	Vehicle speed signal (8-pulse)	ON	Speedometer operated. [When vehicle speed is approx. 40km/h (25MPH)]	**NOTE:** Maximum voltage may be 5V due to specifications (connected units). 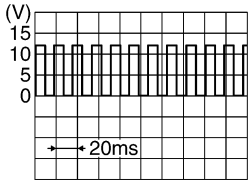 PKIA1935E
28	W/B	Fuel level sensor signal	—	—	Refer to DI-27, "FUEL LEVEL SENSOR UNIT CHECK" .
29	B	Ground (For power)	ON	—	Approx. 0
30	B	Ground	ON	—	Approx. 0
36	R/B	Fuel level sensor ground	ON	—	Approx. 0
46	L/W	Ignition switch ACC or ON	ACC	—	Battery voltage

Meter/Gauges Operation and Odo/Trip Meter

AKS0093Y

SELF-DIAGNOSIS FUNCTION

- Odo/trip meter segment and A/T indicator segment operation can be checked in self-diagnosis mode.
- Meters/gauges can be checked in self-diagnosis mode.

HOW TO ALTERNATE DIAGNOSIS MODE

1. Turn ignition switch ON, and switch the odo/trip meter to “trip A” or “trip B”.

   NOTE:
   If the diagnosis function is activated with the trip meter A displayed, the mileage on the trip meter A will indicate 0000.0, but the actual trip mileage will be retained. (The same way for trip B.)
2. Turn ignition switch OFF.
3. While pushing the odo/trip meter switch, turn ignition switch ON again.
4. Confirm that the trip meter displays “0000.0”.
5. Push the odo/trip meter switch at least 3 times. (Within 7 seconds after the ignition switch is turned ON.)
6. All the segments on the odo/trip meter and A/T indicator illuminate, and simultaneously the fuel warning lamp indicator illuminates. At this time, the unified meter control unit is turned to diagnosis mode.

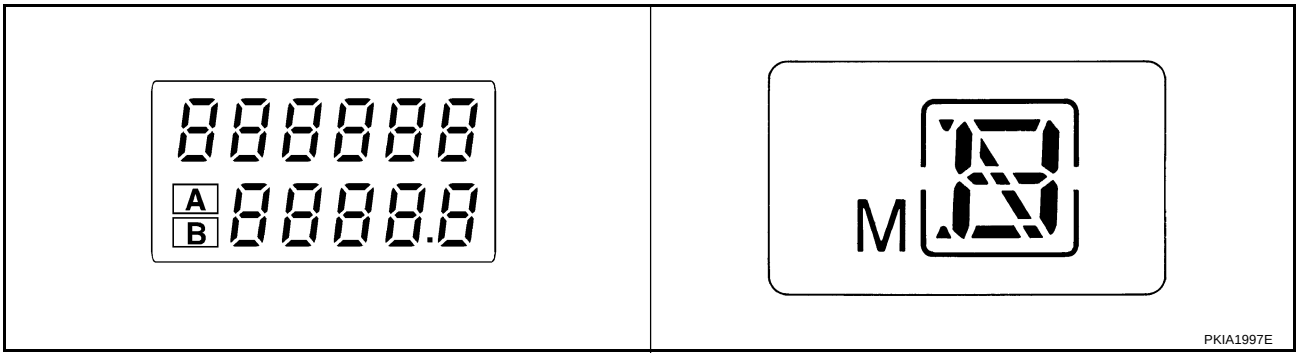

7. Push the odo/trip meter switch. Each meter/gauge should indicate as shown in the figure while pushing odo/trip meter switch. (At this time, the low-fuel warning lamp goes off).

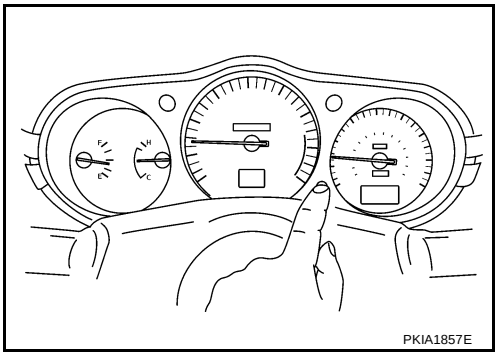

CONSULT-II Function

AKS0093Z

Refer to DI-58, "CONSULT-II Function" in “UNIFIED METER AND A/C AMP”.

How to Proceed with Trouble Diagnosis

AKS00940

1. Confirm the symptom or customer complaint.
2. Perform diagnosis according to diagnosis flow. Refer to DI-14, "Diagnosis Flow" .
3. According to the symptom chart, repair or replace the cause of the symptom.
4. Does the meter operate normally? If so, go to 5. If not, go to 2.
5. INSPECTION END

Diagnosis Flow

AKS00941

1. CHECK SELF-DIAGNOSTIC RESULTS OF UNIFIED METER AND A/C AMP.

Select “METER A/C AMP” on CONSULT-II, and then perform self-diagnosis of unified meter and A/C amp. Refer to DI-58, "CONSULT-II Function" .

Self-diagnostic results content

No malfunction detected>>GO TO 2.
Malfunction detected>> Go to DI-17, "Symptom Chart 2" .

2. CHECK WARNING LAMP ILLUMINATION

Turn ignition switch ON.

Do warning lamps (such as malfunction indicator lamp and oil pressure warning lamp) illuminate?

YES >> GO TO 3.
NO >> Check power supply circuit of combination meter when ignition switch is ON. Refer to DI-15, "Power Supply and Ground Circuit Inspection" .

3. CHECK SELF-DIAGNOSIS OPERATION OF COMBINATION METER

Perform combination meter self-diagnosis. Refer to DI-13, "HOW TO ALTERNATE DIAGNOSIS MODE" .

Does self-diagnosis function operate?

YES >> GO TO 4.
NO >> Check battery power supply circuit and ground circuit of combination meter. Refer to DI-15, "Power Supply and Ground Circuit Inspection" .

4. CHECK ODO/TRIP METER OPERATION

Check segment display status of odo/trip meter.

Is the display normal?

YES >> GO TO 5.
NO >> Replace combination meter.

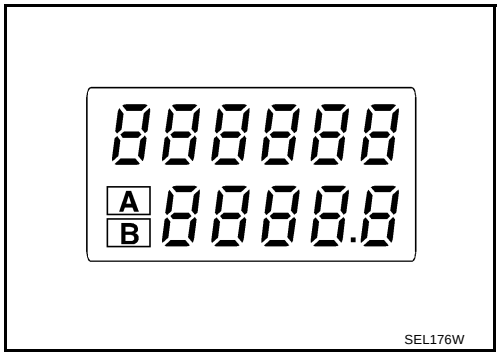

5. CHECK FUEL WARNING LAMP ILLUMINATION

While checking fuel warning lamp, confirm illumination of fuel warning lamp.

Condition of odo/trip meter switch	Fuel warning lamp
Pushed	Does not illuminate.
Released	Illuminates.

OK or NG

OK >> GO TO 6.
NG >> Replace combination meter.

6. CHECK COMBINATION METER CIRCUIT

Check indication of each meter/gauge in self-diagnosis mode.

OK or NG

OK >> Go to DI-17, "Symptom Chart 1" .
NG >> Replace combination meter.

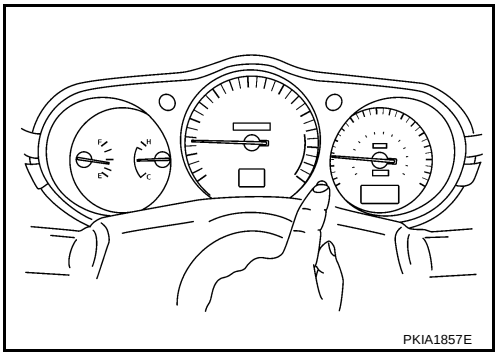

Power Supply and Ground Circuit Inspection

AKS00942

1. CHECK FUSE

Check for blown combination meter and unified meter and A/C amp. fuses.

Unit	Power source	Fuse No.
Combination meter	Battery	19
Unified meter and A/C amp.		
Combination meter	Ignition switch ACC or ON	6
	Ignition switch ON or START	14
Unified meter and A/C amp.	Ignition switch ACC or ON	10, 11
	Ignition switch ON or START	12

OK or NG

OK >> GO TO 2.
NG >> If fuse is blown, be sure to eliminate cause of malfunction before installing new fuse. Refer to PG-4, "POWER SUPPLY ROUTING CIRCUIT" .

2. CHECK POWER SUPPLY CIRCUIT

1. Disconnect combination meter connector and unified meter and A/C amp. connector.
2. Check voltage between combination meter harness connector terminals and ground.

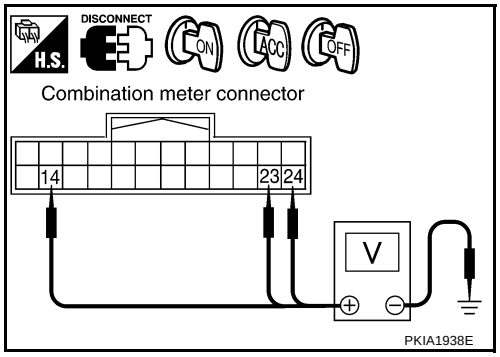

Terminals			Ignition switch position		
(+)		(–)	OFF	ACC	ON
Connector	Terminal (Wire color)				
M19	24 (R/W)	Ground	Battery voltage	Battery voltage	Battery voltage
	23 (G/Y)		0V	0V	Battery voltage
	14 (LG)		0V	Battery voltage	Battery voltage

3. Check voltage between unified meter and A/C amp. harness connector terminals and ground.

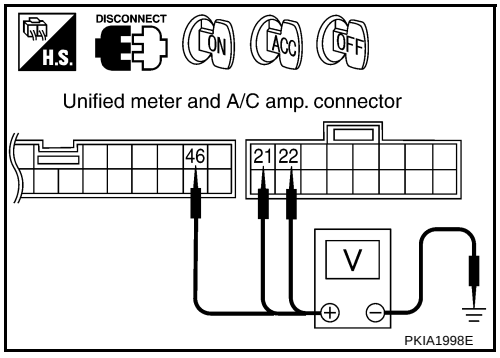

Terminals			Ignition switch position		
(+)		(–)	OFF	ACC	ON
Connector	Terminal (Wire color)				
M49	21 (R/W)	Ground	Battery voltage	Battery voltage	Battery voltage
	22 (Y/G)		0V	0V	Battery voltage
M50	46 (L/W)		0V	Battery voltage	Battery voltage

OK or NG

OK >> GO TO 3.
NG >> Check the following.

- Harness for open between combination meter and fuse
- Harness for open between unified meter and A/C amp. and fuse

3. CHECK GROUND CIRCUIT

1. Turn ignition switch OFF.
2. Check continuity between combination meter harness connector M19 terminals 10 (B), 11 (B), 12 (B) and ground.

   Continuity should exist.

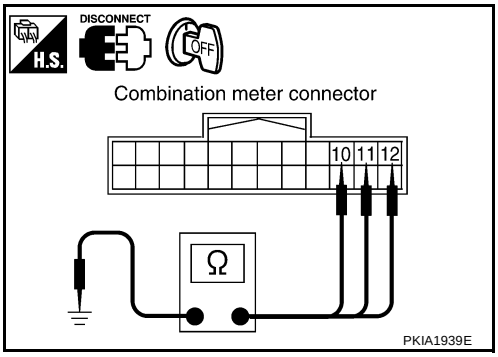

3. Check continuity between unified meter and A/C amp. harness connector M49 terminals 29 (B), 30 (B) and ground.

   Continuity should exist.

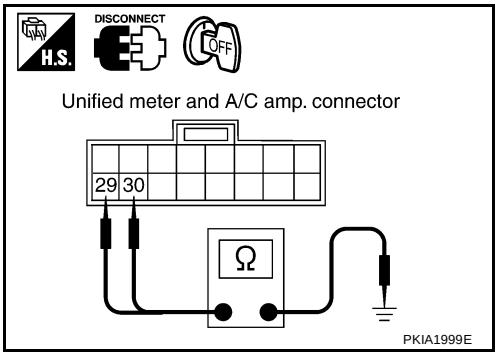

OK or NG

OK >> INSPECTION END
NG >> Repair harness or connector.

Symptom Chart 1

AKS00943

Trouble phenomenon	Possible cause
Indication is irregular for the speedometer and odo/trip meter.	Refer to DI-18, "Vehicle Speed Signal Inspection" .
Tachometer indication is malfunction.	Refer to DI-19, "Engine Speed Signal Inspection" .
Water temperature gauge indication is malfunction.	Refer to DI-20, "Engine Coolant Temperature Signal Inspection" .
Fuel gauge indication is malfunction.	Refer to DI-21, "Fuel Level Sensor Signal Inspection" .
Low-fuel warning lamp indication is irregular.	
Indications are irregular for more than one gauge.	Replace combination meter.
A/T position indicator is malfunction.	Refer to DI-76, "A/T Indicator Is Malfunction" .
Illumination control does not operate.	Refer to DI-25, "Illumination Control Switch Inspection" .

Symptom Chart 2

AKS00944

Displayed item [Code]	Inspection contents	Possible cause
CAN COMM CIRC [U1000]	Inspect the CAN communication.	Refer to DI-22, "CAN Communication System Inspection" . **CAUTION:** **Even when there is no malfunction on CAN communication system, malfunction may be misinterpreted when battery has low voltage (when maintaining 7-8V for about 2 seconds) or 10A fuse [No. 19, located in the fuse block (J/B)] fuse is disconnected.**
T/METER COMM CIRC [B2201]	Inspect the communication line between triple meter and unified meter and A/C amp.	Refer to DI-50, "Communication Line Inspection" in "TRIPLE METERS".

Displayed item [Code]	Inspection contents	Possible cause
METER COMM CIRC [B2202]	Inspect the communication line between combination meter and unified meter and A/C amp.	Refer to DI-23, "Communication Line Inspection" .
VEHICLE SPEED CIRC [B2205]	Inspect the vehicle speed input signal.	Perform the following self-diagnosis. ● VDC/TCS/ABS control unit [with VDS system]; refer to BRC-108, "CONSULT-II Functions" . ● ABS actuator and electric unit (control unit) [without VDC system]; refer to BRC-61, "CONSULT- II Functions" (with TCS) or BRC-19, "CONSULT- II Functions" (without TCS). Replace unified meter and A/C amp. if the above system is normal. **CAUTION:** **Even when there is no malfunction on speed signal system, malfunction may be misinterpreted when battery has low voltage (when maintaining 7-8V for about 2 seconds).**

Vehicle Speed Signal Inspection

AKS00945

1. CHECK VDC/TCS/ABS CONTROL UNIT OR ABS ACTUATOR AND ELECTRIC UNIT (CONTROL UNIT)

Perform the following self-diagnosis.

- VDC/TCS/ABS control unit [with VDC system]; refer to BRC-108, "CONSULT-II Functions" .
- ABS actuator and electric unit (control unit) [without VDC system]; refer to BRC-61, "CONSULT- II Functions" (with TCS) or BRC-19, "CONSULT- II Functions" (without TCS).

Self-diagnostic results content

No malfunction detected>>GO TO 2.
Malfunction detected>>Check applicable parts, and repair or replace corresponding parts.

2. CHECK UNIFIED METER AND A/C AMP. OUTPUT SIGNAL

1. Start engine and drive vehicle at approximately 40km/h (25MPH).
2. Check voltage signal between unified meter and A/C amp. harness connector M49 terminal 26 (W) and ground with simple oscilloscope of CONSULT-II.

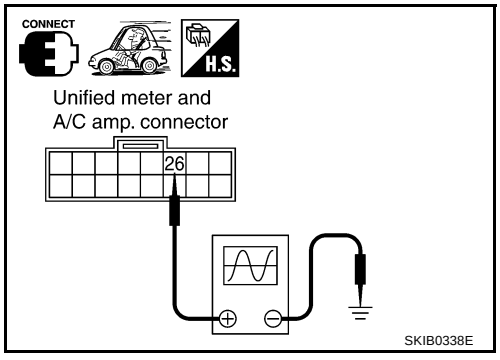

NOTE:
Maximum voltage may be 5V due to specifications (connected units).

26 (W) - Ground:

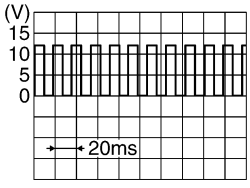

PKIA1935E

OK or NG

OK >> GO TO 3.
NG-1 >> If monitor indicates “0V” constantly, repair harness or connector.
NG-2 >> If monitor indicates “5V” or “12V” constantly, replace unified meter and A/C amp. Refer to DI-61, "Removal and Installation of Unified Meter and A/C Amp." .

3. CHECK CONTINUITY BETWEEN COMBINATION METER AND UNIFIED METER AND A/C AMP.

1. Turn ignition switch OFF.
2. Disconnect combination meter connector and unified meter and A/C amp. connector.
3. Check continuity between combination meter harness connector M19 terminal 20 (W) and unified meter and A/C amp. harness connector M49 terminal 26 (W).

Continuity should exist.

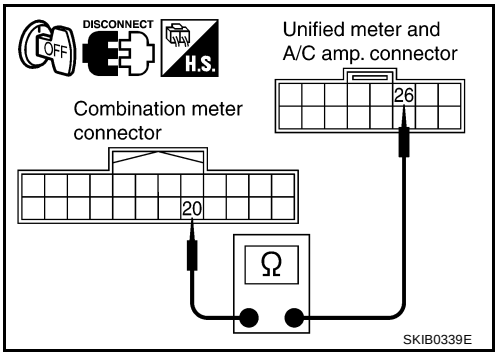

OK or NG

OK >> Replace combination meter.
NG >> Repair harness or connector.

Engine Speed Signal Inspection

AKS00946

1. CHECK UNIFIED METER AND A/C AMP. OUTPUT SIGNAL

1. Start engine and select “METER A/C AMP” on CONSULT-II.
2. Using “TACHO METER” on “DATA MONITOR”, compare the value of “DATA MONITOR” with tachometer pointer of combination meter.

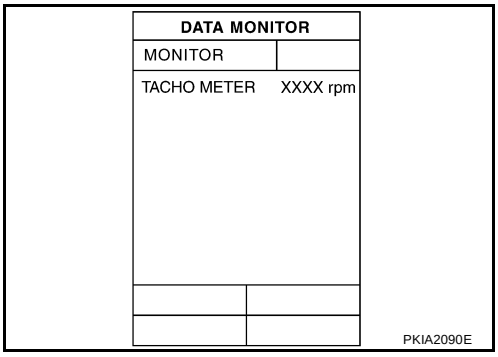

OK or NG

OK >> GO TO 2.
NG >> Replace combination meter.

2. CHECK UNIFIED METER AND A/C AMP. INPUT SIGNAL

1. Select “ENGINE” on CONSULT-II.
2. Using “ENG SPEED” on “DATA MONITOR”, print out the CONSULT-II screen when the engine is idling.
3. Select “METER A/C AMP” on CONSULT-II.
4. Using “TACHO METER” on “DATA MONITOR”, compare the value of “DATA MONITOR” of the idling speed with that of the “ENG SPEED”.

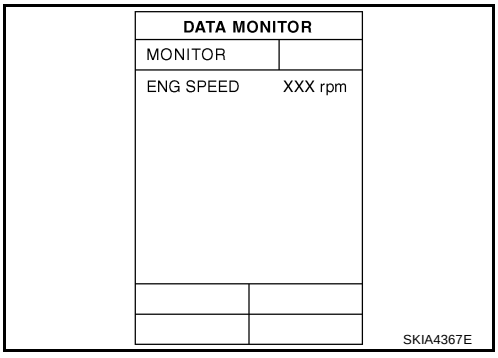

OK or NG

OK >> Perform ECM self-diagnosis. Refer to EC-104, "CONSULT-II Function" .
NG >> Replace unified meter and A/C amp. Refer to DI-61, "Removal and Installation of Unified Meter and A/C Amp." .

Engine Coolant Temperature Signal Inspection

AKS00947

1. CHECK UNIFIED METER AND A/C AMP. OUTPUT SIGNAL

1. Start engine and select “METER A/C AMP” on CONSULT-II.
2. Using “W TEMP METER” on the “DATA MONITOR”, compare the value of “DATA MONITOR” with water temperature gauge pointer of combination meter.

Water temperature gauge pointer	Reference value of data monitor [°C (°F)]
Hot	Approx. 130 (266)
Middle	Approx. 70-105 (158 - 221)
Cold	Approx. 50 (122)

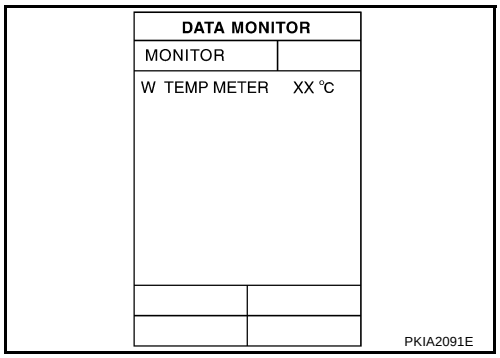

OK or NG

OK >> GO TO 2.
NG >> Replace combination meter.

2. CHECK UNIFIED METER AND A/C AMP. INPUT SIGNAL

1. Select “ENGINE” on CONSULT-II.
2. Using “COOLAN TEMP/S” on “DATA MONITOR”, print out the CONSULT-II screen.
3. Select “METER A/C AMP” on CONSULT-II.
4. Using “W TEMP METER” on, compare the value of “DATA MONITOR” with that of the “COOLAN TEMP/S”.

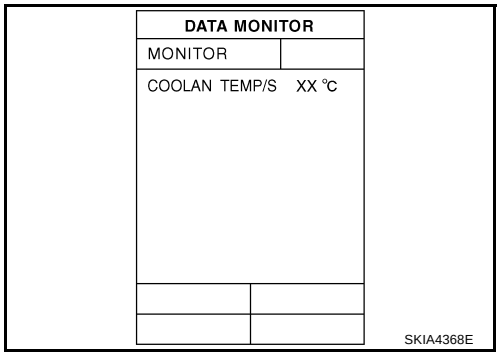

OK or NG

OK >> Perform ECM self-diagnosis. Refer to EC-104, "CONSULT-II Function" .
NG >> Replace unified meter and A/C amp. Refer to DI-61, "Removal and Installation of Unified Meter and A/C Amp." .

Fuel Level Sensor Signal Inspection

AKS00948

The following symptoms do not indicate a malfunction.

FUEL GAUGE

- Depending on vehicle position or driving circumstance, the fuel in the tank flows and the pointer may fluctuate.
- If the vehicle is fueled with the ignition switch ON, the pointer will move slowly.

LOW-FUEL WARNING LAMP

- Depending on vehicle position or driving circumstance, the fuel in the tank flows and the warning lamp ON timing may change.

1. CHECK UNIFIED METER AND A/C AMP. INPUT SIGNAL

1. Select “METER A/C AMP” on CONSULT-II.
2. Using “FUEL METER” on “DATA MONITOR”, compare the value of “DATA MONITOR” with fuel gauge pointer of combination meter.

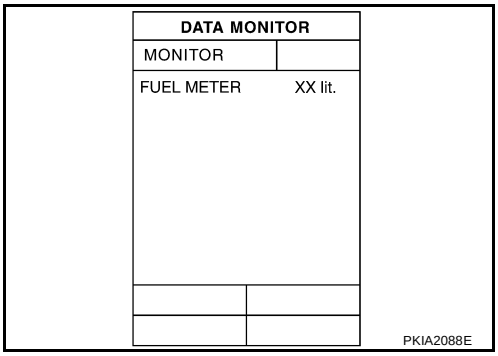

Fuel gauge indication	Value on monitor [lit.]
Full	Approx. 74
Three quarters	Approx. 61
Half	Approx. 42
A quarter	Approx. 22
Empty	Approx. 8

OK or NG

OK >> GO TO 2.
NG >> Replace combination meter.

2. CHECK FUEL LEVEL SENSOR

1. Turn ignition switch OFF.
2. Check components. Refer to DI-27, "FUEL LEVEL SENSOR UNIT CHECK" .

OK or NG

OK >> GO TO 3.
NG >> Replace fuel level sensor unit.

3. CHECK FUEL LEVEL SENSOR (SUB) CIRCUIT

1. Disconnect unified meter and A/C amp. connector and fuel level sensor unit (sub) connector.
2. Check continuity between unified meter and A/C amp. harness connector M49 terminal 28 (W/B) and fuel level sensor unit (sub) harness connector B28 terminal 1 (W/B).

   Continuity should exist.

3. Check continuity between unified meter and A/C amp. harness connector M49 terminal 28 (W/B) and ground.

   Continuity should not exist.

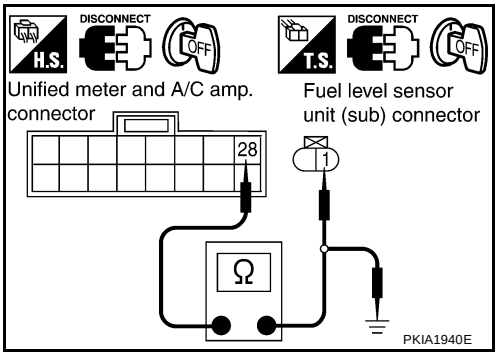

OK or NG

OK >> GO TO 4.
NG >> Repair harness or connector.

4. CHECK FUEL LEVEL SENSOR (MAIN·SUB) CIRCUIT

1. Disconnect fuel level sensor unit and fuel pump (main) connector.
2. Check continuity between fuel level sensor unit (sub) harness connector B28 terminal 2 (Y) and fuel level sensor unit and fuel pump (main) harness connector B27 terminal 2 (Y).

   Continuity should exist.

3. Check continuity between fuel level sensor unit (sub) harness connector B28 terminal 2 (Y) and ground.

   Continuity should not exist.

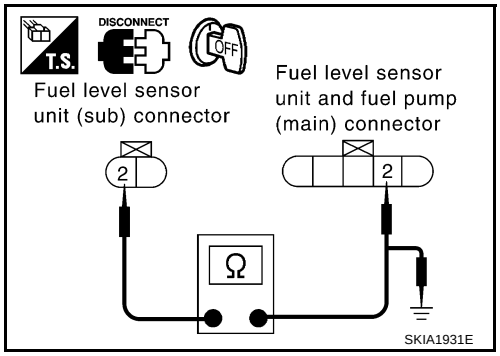

OK or NG

OK >> GO TO 5.
NG >> Repair harness or connector.

5. CHECK FUEL LEVEL SENSOR (MAIN) CIRCUIT

1. Check continuity between fuel level sensor unit and fuel pump (main) harness connector B27 terminal 5 (B/R) and unified meter and A/C amp. harness connector M49 terminal 36 (R/B).

   Continuity should exist.

2. Check continuity between fuel level sensor unit and fuel pump (main) harness connector B27 terminal 5 (B/R) and ground.

   Continuity should not exist.

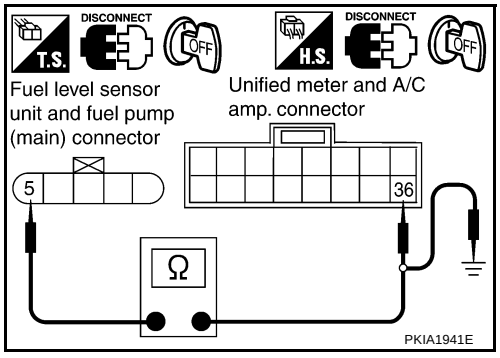

OK or NG

OK >> GO TO 6.
NG >> Repair harness or connector.

6. CHECK INSTALLATION CONDITION

Check fuel level sensor unit installation, and check whether the float arm interferes or binds with any of the internal components in the fuel tank.

OK or NG

OK >> Replace unified meter and A/C amp. Refer to DI-61, "Removal and Installation of Unified Meter and A/C Amp." .
NG >> Install the fuel level sensor unit properly.

CAN Communication System Inspection

AKS00BRC

1. CHECK CAN COMMUNICATION

1. Select “SELF-DIAG RESULTS” mode for “METER A/C AMP” with CONSULT-II.
2. Print out CONSULT-II screen.

>> Go to “CAN system”. Refer to LAN-3, "Precautions When Using CONSULT-II" .

Communication Line Inspection

AKS0094C

1. CHECK CONNECTOR

Check combination meter, unified meter and A/C amp. and terminals (combination meter-side, unified meter and A/C amp.-side, and harness-side) for looseness or bent terminals.

OK or NG

OK >> GO TO 2.
NG >> Repair terminal or connector.

2. CHECK METER/GAUGES VISUALLY

Does the pointer on the meter/gauges fluctuate at the engine start?

Is the fluctuation acceptable?

YES >> GO TO 3.
NO >> GO TO 6.

3. CHECK CONTINUITY COMMUNICATION CIRCUIT (TX: COMBINATION METER)

1. Turn ignition switch OFF.
2. Disconnect combination meter connector and unified meter and A/C amp. connector.
3. Check continuity between combination meter harness connector M19 terminal 21 (R/G) and unified meter and A/C amp. harness connector M48 terminal 19 (R/G).

   Continuity should exist.

4. Check continuity between combination meter harness connector M19 terminal 21 (R/G) and ground.

   Continuity should not exist.

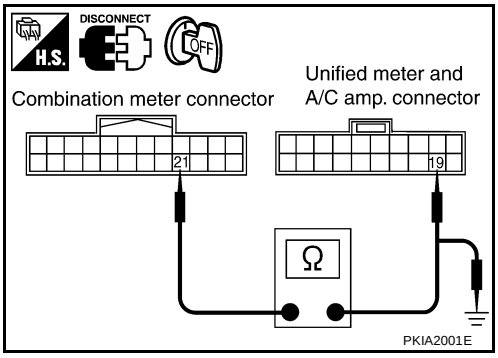

OK or NG

OK >> GO TO 4.
NG >> Repair harness or connector.

4. CHECK VOLTAGE OF UNIFIED METER AND A/C AMP.

1. Connect unified meter and A/C amp. connector.
2. Turn ignition switch ON.
3. Check voltage between combination meter harness connector M19 terminal 21 (R/G) and ground.

   Approx. 5V

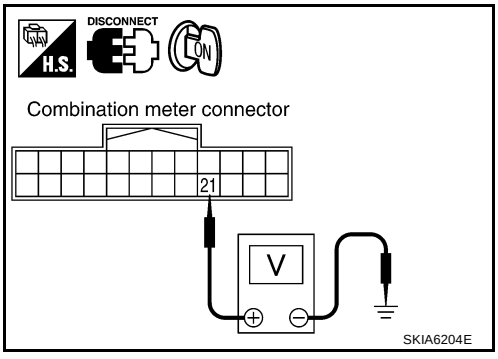

OK or NG

OK >> GO TO 5.
NG >> Replace unified meter and A/C amp. Refer to DI-61, "Removal and Installation of Unified Meter and A/C Amp." .

5. CHECK VOLTAGE SIGNAL OF COMBINATION METER

1. Turn ignition switch OFF and connect combination meter connector.
2. Turn ignition switch ON.
3. Check voltage signal between combination meter harness connector M19 terminal 21 (R/G) and ground with simple oscilloscope of CONSULT-II.

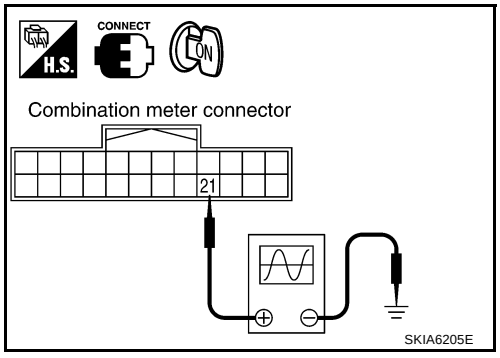

21 (R/G) - Ground:

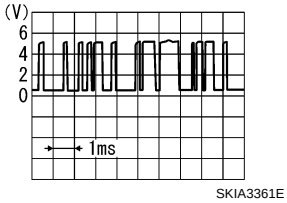

OK or NG

OK >> Replace unified meter and A/C amp. Refer to DI-61, "Removal and Installation of Unified Meter and A/C Amp." .

NG >> Replace combination meter.

6. CHECK CONTINUITY COMMUNICATION CIRCUIT (RX: COMBINATION METER)

1. Turn ignition switch OFF.
2. Disconnect combination meter connector and unified meter and A/C amp. connector.
3. Check continuity between combination meter harness connector M19 terminal 22 (L/OR) and unified meter and A/C amp. harness connector M48 terminal 9 (L/OR).

   Continuity should exist.

4. Check continuity between combination meter harness connector M19 terminal 22 (L/OR) and ground.

   Continuity should not exist.

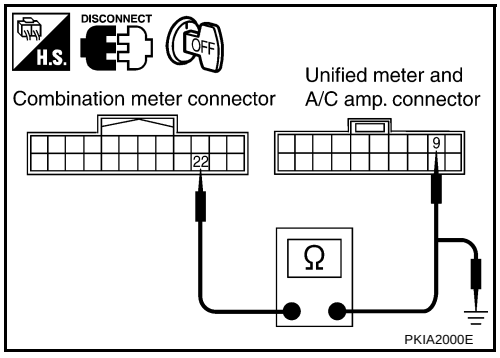

OK or NG

OK >> GO TO 7.

NG >> Repair harness or connector.

7. CHECK VOLTAGE OF COMBINATION METER

1. Connect combination meter connector.
2. Turn ignition switch ON.
3. Check voltage between unified meter and A/C amp. harness connector M48 terminal 9 (L/OR) and ground.

   Approx. 5V

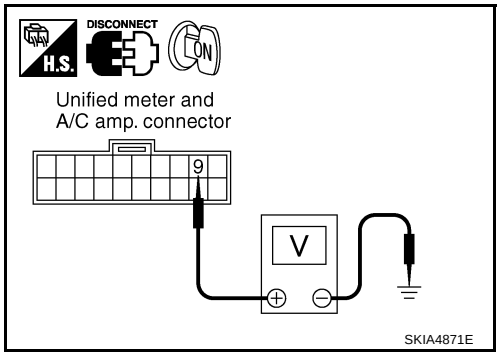

OK or NG

OK >> GO TO 8.

NG >> Replace combination meter.

8. CHECK VOLTAGE SIGNAL OF UNIFIED METER AND A/C AMP.

1. Turn ignition switch OFF and connect unified meter and A/C amp. connector.
2. Turn ignition switch ON.
3. Check voltage signal between combination meter harness connector M19 terminal 22 (L/OR) and ground with simple oscilloscope of CONSULT-II.

22 (L/OR) - Ground:

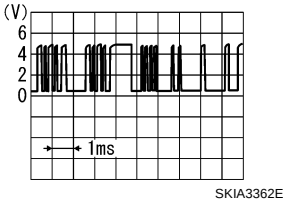

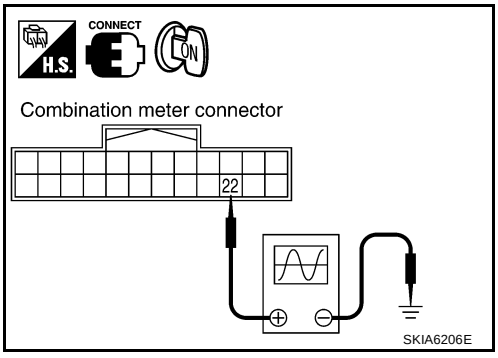

OK or NG

OK >> Replace combination meter.
NG >> Replace unified meter and A/C amp. Refer to DI-61, "Removal and Installation of Unified Meter and A/C Amp." .

Illumination Control Switch Inspection

AKS0094E

1. CHECK CONNECTOR

1. Remove combination meter. Refer to DI-28, "Removal and Installation for Combination Meter" .
2. Remove rear finisher to combination meter. Refer to DI-28, "Disassembly and Assembly for Combination Meter" .
3. Check illumination control switch connector for looseness.

OK or NG

OK >> GO TO 2.
NG >> Repair illumination control switch connector.

2. CHECK ILLUMINATION CONTROL SWITCH

1. Disconnect illumination control switch connector.
2. Check continuity between illumination control switch harness connector M207 terminals 3 or 4 and 5.

Terminal		Condition	Continuity
3	5	Illumination control switch upper side (BRIGHTEN) is pushed.	Yes
		Illumination control switch upper side (BRIGHTEN) is released.	No
4	5	Illumination control switch lower side (DARKEN) is pushed.	Yes
		Illumination control switch lower side (DARKEN) is released.	No

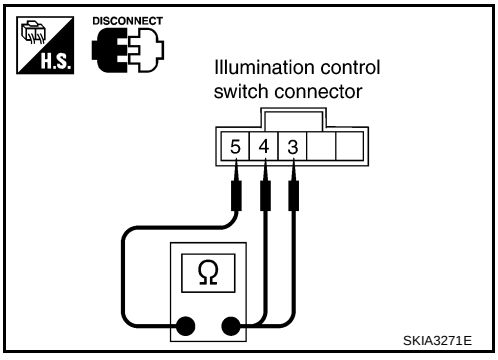

OK or NG

OK >> Replace combination meter.
NG >> Replace illumination control switch.

Fuel Gauge Pointer Fluctuates, Indicator Wrong Value or Varies

AKS0094F

1. CHECK FUEL GAUGE FLUCTUATION

Test drive vehicle to see if gauge fluctuates only during driving or at the instant of stopping.

Does the indication value vary only during driving or at the instant of stopping?

YES >> The pointer fluctuation may be caused by fuel level change in the fuel tank. Condition is normal.
NO >> Ask the customer about the situation when the symptom occurs in detail, and perform the trouble diagnosis. Refer to DI-14, "How to Proceed with Trouble Diagnosis" .

Fuel Gauge Does Not Move to FULL Position

AKS0094G

1. QUESTION 1

Does it take a long time for the pointer to move to FULL position?

YES >> GO TO 2.
NO >> GO TO 3.

2. QUESTION 2

Was the vehicle fueled with the ignition switch ON?

YES >> Be sure to fuel the vehicle with the ignition switch OFF. Otherwise, it will take a long time to move to FULL position because of the characteristic of the fuel gauge.
NO >> GO TO 3.

3. QUESTION 3

Is the vehicle parked on an incline?

YES >> Check the fuel level indication with vehicle on a level surface.
NO >> GO TO 4.

4. QUESTION 4

During driving, does the fuel gauge pointer move gradually toward EMPTY position?

YES >> Check the fuel level sensor unit. Refer to DI-27, "FUEL LEVEL SENSOR UNIT CHECK" .
NO >> The float arm may interfere or bind with any of the components in the fuel tank.

Electrical Components Inspection

AKS0094H

FUEL LEVEL SENSOR UNIT CHECK

For removal, refer to FL-4, "FUEL LEVEL SENSOR UNIT, FUEL FILTER AND FUEL PUMP ASSEMBLY" .

Check Fuel Level Sensor Unit and Fuel Pump (Main)

1. Check the resistance between terminals 2 and 5.

Terminal		Float position	mm (in)		Resistance value Ω
2	5	*1	Empty	30 (1.18)	Approx. 80
		*2	Full	210 (8.27)	Approx. 3

*1 and *2: When float rod is in contact with stopper.

2. If the results of check is NG, perform check the fuel level sensor unit and fuel pump (main) harness. Refer to DI-27, "Check Fuel Level Sensor Unit and Pump (Main) Harness" .

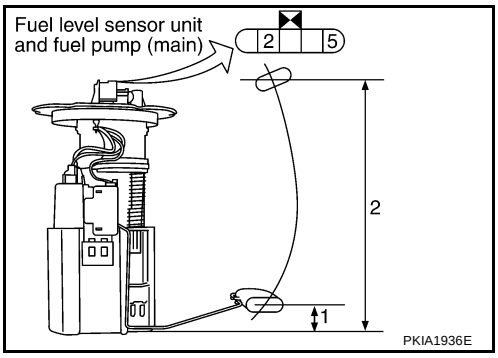

Check Fuel Level Sensor Unit and Pump (Main) Harness

1. Check the continuity following terminals.

Terminal	Continuity
2 - Signal terminal	Yes
5 - Ground terminal	

2. If the results of check is NG, replace fuel pump assembly. If the results of check is OK, replace fuel level sensor unit.

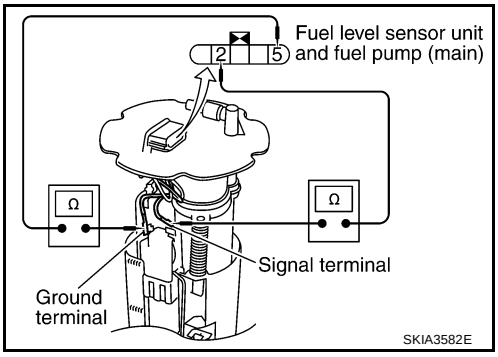

Check Fuel Level Sensor Unit (Sub)

Check the resistance between terminals 1 and 2.

Terminal		Float position	mm (in)		Resistance value Ω
1	2	*1	Full	8 (0.31)	Approx. 3
		*2	Empty	175 (6.89)	Approx. 43

*1 and *2: When float rod is in contact with stopper.

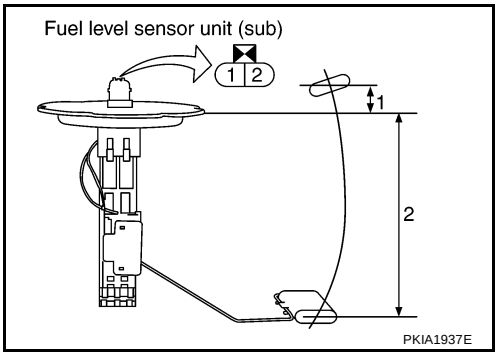

Removal and Installation for Combination Meter

AKS0094I

REMOVAL

1. Remove instrument driver panel lower. Refer to IP-10, "INSTRUMENT PANEL ASSEMBLY" .
2. Remove steering column lower cover. Refer to IP-10, "INSTRUMENT PANEL ASSEMBLY"
3. Remove bolts (4) and remove column upper cover and combination meter assembly. Refer to IP-10, "INSTRUMENT PANEL ASSEMBLY" .
4. Remove screws (6) and remove combination meter.

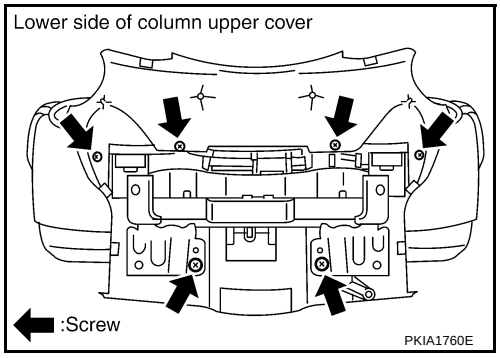

INSTALLATION

Install in the reverse order of removal.

Disassembly and Assembly for Combination Meter

AKS0094J

DISASSEMBLY

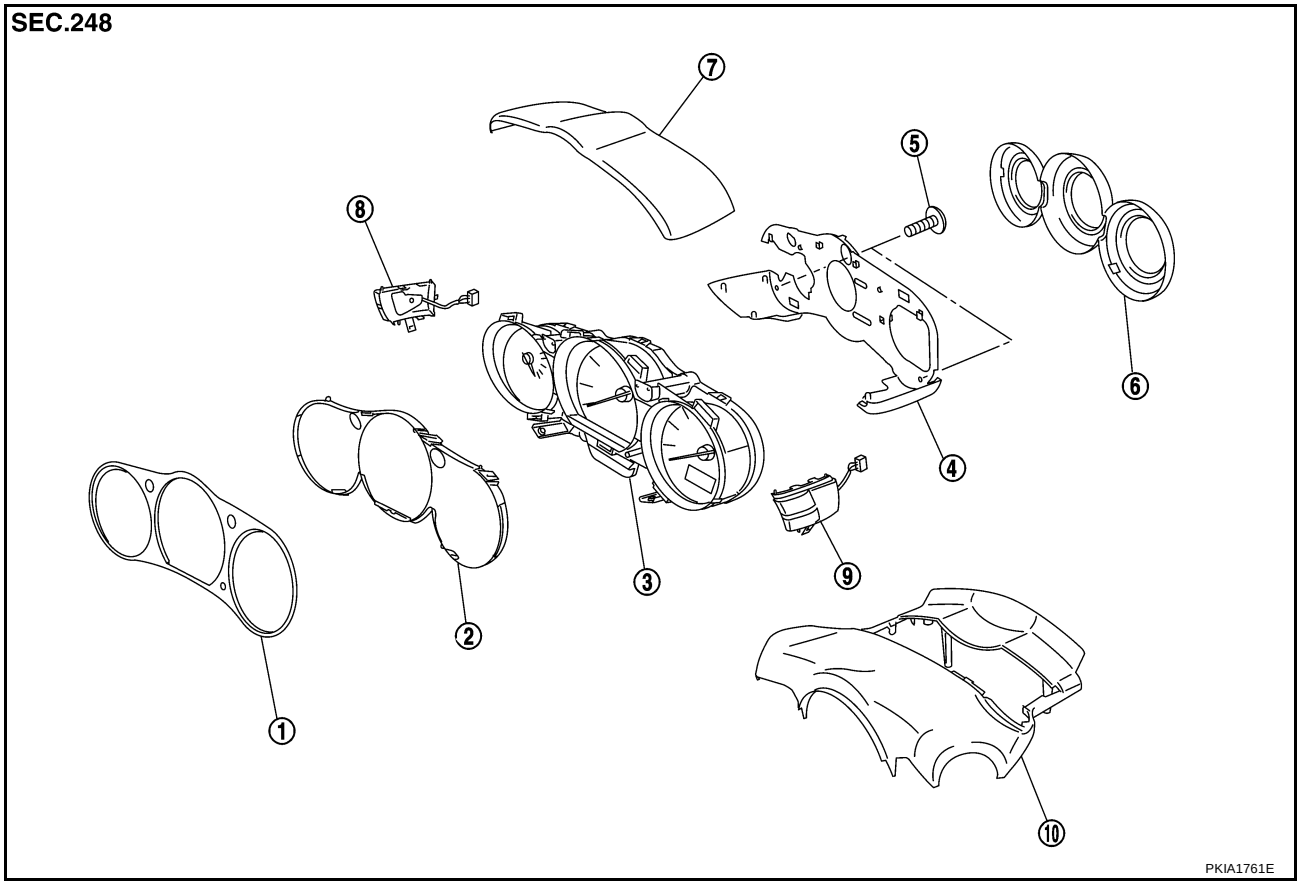

1. Front finisher	2. Front cover	3. Unified meter control unit
4. Rear cover	5. Screws	6. Rear finisher
7. Upper cover	8. Illumination control switch	9. Trip computer switch
10. Steering column upper cover		

1. Remove screws (6) to separate steering column upper cover.
2. Disengage tabs (2) to separate front finisher.
3. Disengage tabs (8) to separate rear finisher.

4. Disconnect illumination control switch connector and trip computer switch connector.

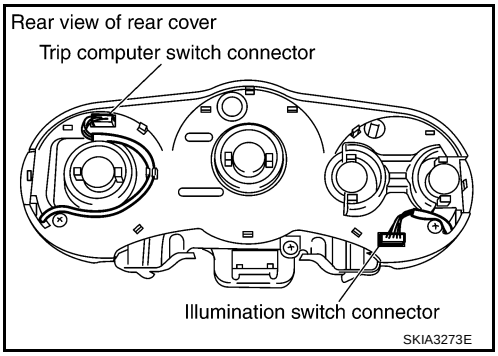

5. Remove screws (2) and remove rear cover.

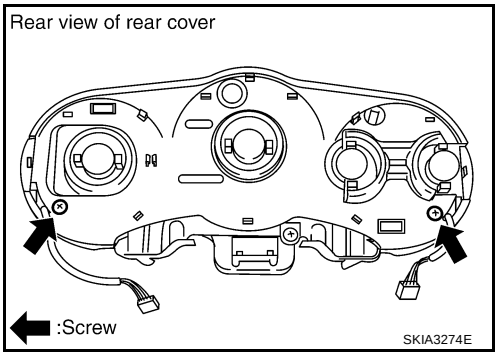

6. Disengage tabs (4) to separate upper cover from rear cover.
7. Remove illumination control switch.
8. Remove trip computer switch.
9. Disengage tabs (7) to separate front cover.

ASSEMBLY

Assemble in reverse order of disassembly.

TRIPLE METERS

PFP:24845

System Description

AKS0094K

TRIPLE METER

- Oil pressure gauge and voltmeter are controlled by the triple meter.
- Trip computer are controlled by signals from the unified meter and A/C amp.
- Trip computer segment can be checked in self-diagnosis mode of combination meter.
- Meters/gauges can be checked in self-diagnosis mode of combination meter.

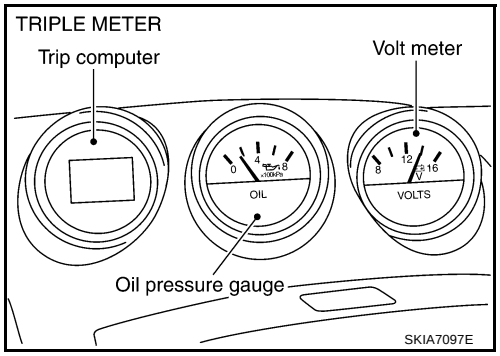

POWER SUPPLY AND GROUND CIRCUIT

Power is supplied at all times

- through 10A fuse [No. 19, located in the fuse block (J/B)]
- to triple meter terminal 2,
- to combination meter terminal 24, and
- to unified meter and A/C amp. terminal 21.

With the ignition switch in the ON or START position, power is supplied

- through 10A fuse [No. 14, located in the fuse block (J/B)]
- to triple meter terminal 3, and
- to combination meter terminal 23
- through 10A fuse [No. 12, located in the fuse block (J/B)]
- to unified meter and A/C amp. terminal 22.

With the ignition switch in the ACC or ON position, power is supplied

- through 15A fuse [No. 10, located in the fuse block (J/B)], and
- through 15A fuse [No. 11, located in the fuse block (J/B)]
- to unified meter and A/C amp. terminal 46.

Ground is supplied

- to triple meter terminal 1
- through body grounds M30 and M66
- to combination meter terminals 10,11 and 12
- through body grounds M30 and M66
- to unified meter and A/C amp. terminals 29 and 30
- through body grounds M30 and M66.

TRIP COMPUTER

Function

The display of the trip computer is situated in the triple meter. When the ignition switch is turned to ON, the display scrolls all the modes of the trip computer and then shows the mode chosen before the ignition switch is turned OFF.

The trip computer can indicate the following items.

- Vehicle speed
- Outside air temperature
- DTE (distance to empty)
- Average fuel consumption
- Average vehicle speed
- Trip time
- Trip distance

- Stopwatch
- Tire pressure
- Shift-up indicator setting

Vehicle Speed Indication

With ignition switch ON or START position, trip computer displays vehicle speed according to vehicle speed signal from unified meter and A/C amp. Unified meter and A/C amp. received this signal from the combination meter.
The vehicle speed indication is displayed in km/h (MPH) while driving.

Outside Air Temperature Indication

With ignition switch ON position, trip computer displays outside air temperature according to signal of outside air temperature from unified meter and A/C amp. Unified meter and A/C amp. receives these signals from outside air temperature sensor.
The outside air temperature is displayed while the ignition switch is in the ON position.
Signal is supplied

- through ambient sensor terminal 1
- to unified meter and A/C amp. terminal 39
- through unified meter and A/C amp. terminal 10
- to triple meter terminal 5.

Indication range is between -30 and 55°C (-22 and 131°F). When outside air temperature is less than -30°C (-22°F) or more than 55°C (131°F), display shows “--”. When outside temperature is less than 3°C (37°F) continuously, display will “ICY” indicator illuminate as warning. In this case, the display will change to the outside air temperature mode even though the display is showing a different mode. The “ICY” indicator will continue illuminate as long as the temperature remains below 4°C (39°F).

DTE (Distance to Empty) Indication

With ignition switch ON position, trip computer displays DTE according to signal to DTE from unified meter and A/C amp.
The DTE indication provides the driver with an estimation of the distance that can be driven before refueling. The DTE is calculated by signals from the fuel level sensor unit (fuel remaining), ECM (fuel consumption) and VDC/TCS/ABS control unit or ABS actuator and electric unit (control unit) [vehicle speed].
The indication will be refreshed every 30 seconds. When fuel remaining is less than approximately 10 ℓ (10-5/8 US qt, 8-3/4 Imp qt), the indication will “dte” indicator blink as a warning. If the fuel remaining is less than approximately 8 ℓ (8-1/2 US qt, 7 Imp qt), the indication will show “----”. In this case, the display will change to the DTE mode even though the display is showing a different mode. Press trip computer mode switch if you wish to return to the mode that was selected before the warning occurred. The “dte” indicator will remain blinking until the vehicle is refueled. When the battery is disconnected and reconnected, DTE mode will display “----” for 30 seconds.

Average Fuel Consumption Indication

With ignition switch ON position, trip computer displays average fuel consumption according to signal of average fuel consumption from unified meter and A/C amp. Average fuel consumption is calculated by signals from the VDC/TCS/ABS control unit or ABS actuator and electric unit (control unit) [vehicle speed] and the ECM (fuel consumption). The indication will be refreshed every 30 seconds. If average fuel consumption is reset, average vehicle speed will be reset at the same time. At about 1/3 miles (500 m) or for 80 seconds after resetting, the display shows “----”.

Average Vehicle Speed Indication

With ignition switch ON position, trip computer displays average vehicle speed according to signal of average vehicle speed from unified meter and A/C amp.
Average vehicle speed indication is calculated by running distance and running time. The indication will be refreshed every 30 seconds. If average vehicle speed is reset, average fuel consumption will be reset at the same time. After resetting, the display will show “----” for 30 seconds.

Trip Time Indication

With ignition switch ON position, trip computer displays trip time according to trip time signal from unified meter and A/C amp.
Trip time displays accumulate ignition switch ON time. If trip time is reset, trip distance will be reset at the same time.

Trip Distance Indication

With ignition switch ON position, trip computer displays trip distance according to trip distance signal from unified meter and A/C amp.
Trip distance is calculated by vehicle speed signal from the VDC/TCS/ABS control unit or ABS actuator and electric unit (control unit) [vehicle speed] with CAN communication line. If trip distance is reset, trip time will be reset at the same time.

Stopwatch Indication

With ignition switch ON position, trip computer displays stopwatch according to trip computer setting switch signal from unified meter and A/C amp.
Stopwatch can be changed in START, STOP or RESET by pressing trip computer setting switch. After 100 hours, the time will start from the reset display again. Even if the display is switched to the other mode while the time is starting, the stopwatch continues to advance until you stop the time in the stopwatch mode. When the ignition switch is turned OFF, the time is reset.

Tire Pressure Indication

With ignition switch ON position, trip computer displays tire pressure according to signals of each tire pressure indication, tire pressure warning and tire pressure irregular from unified meter and A/C amp. Unified meter and A/C amp. receives these signals from tire pressure warning control unit with CAN communication line.

The tire pressure indicator shows tire pressure 0 - 51 psi (0 - 353kPa, 0 - 3.6kg/cm^2) of all wheels (except the spare tire) by sending a signal from a tire pressure sensor that is installed in each wheel. If the tire pressure signal cannot be received correctly, the display shows “----”. If the vehicle is being driven with very low tire pressure or a flat tire, the tire pressure indicator mode is automatically selected and “PSI” indicator will blink as warning. When pressing the trip computer mode switch, return to the mode that was selected before the warning occurred. The “PSI” indicator will continue blinking until the tire pressure of each tire is properly adjusted.

Shift-up Indicator Setting Indication

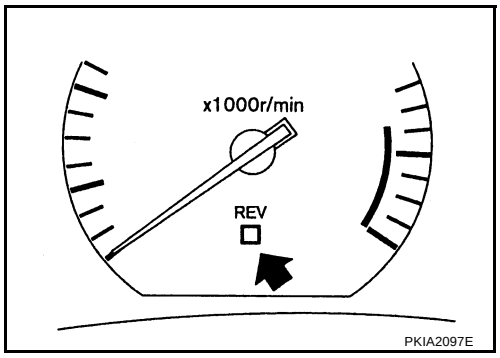

With ignition switch ON position, trip computer displays shift-up indicator setting according to trip computer setting switch signal from unified meter and A/C amp. Shift-up indicator in combination meter is setting according to trip computer setting switch signal from unified meter and A/C amp.
The shift-up indicator setting indication is used to set the desired engine speed (rpm) for the shift-up indicator (situated in the tachometer) to illuminate. When the engine speed approaches or reaches the set figure, the shift-up indicator will flash or illuminate to show the driver the timing for shifting into a higher gear. The shift-up indicator will start flashing when the engine speed is within 500 rpm of the set figure while driving, and then illuminate after the engine speed reaches the set figure. The figure of engine speed can changed between 2,000 and 8,000 rpm by pressing trip computer setting switch. Pressing the trip computer setting switch for less than approximately 1 second will add the figure by 100 rpm. If pressing for more than approximately 1 second, the figure will increase by 500 rpm.

For example, you can use the shift-up indicator when driving as follows:

- If the maximum engine speed is desired, set the figure at 6,600 rpm. (The indicator starts flashing from about 6,100 rpm and comes on steady at 6,600 rpm.)
- If the maximum acceleration performance is desired, set the figure at 4,800 rpm. (The indicator starts flashing from about 4,300 rpm and comes on steady at 4,800 rpm.)

NOTE:

- **There may be a lag between the timing of the shift-up indicator illumination and the tachometer indication.**
- **If the battery cable is disconnected, the set engine speed will be returned to the initial figure (6,600 rpm).**
- **This is also available for the purpose of breaking in to the vehicle.**

How to Change/ Reset Indication

When the ignition switch is turned to ON, modes of the trip computer can be selected by pressing trip computer mode switch. The switches for the trip computer are located on the right side of the combination meter. Indication can be changed in the following order by momentarily depressing the trip computer mode switch. Vehicle speed → Outside air temperature → DTE → Average fuel consumption and average vehicle speed → Trip time and trip distance → Stopwatch → Tire pressure → Shift-up indicator setting.
Holding the trip computer setting switch for more than 0.8 second will reset the indication of the currently displayed mode (Average fuel consumption, average vehicle speed, trip time, trip distance or stopwatch).

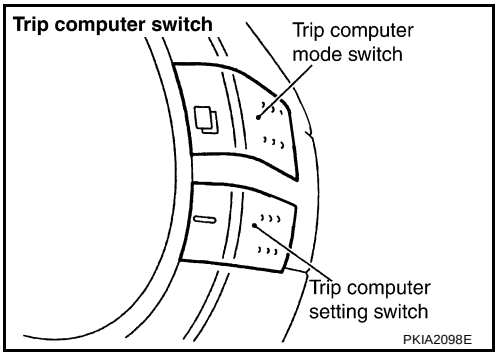

NOTE:
When the OUTSIDE AIR TEMPERATURE warning, TIRE PRESSURE warning and the DTE warning match warning conditions at the same time, the display automatically indicates the OUTSIDE AIR TEMPERATURE.

OIL PRESSURE GAUGE

The oil pressure gauge indicates engine oil pressure drawn from oil pressure sensor.
With the ignition switch in the ON or START position, power is supplied

- through triple meter terminal 9
- to oil pressure sensor terminal 1.

Ground is supplied

- to triple meter terminal 7
- through oil pressure sensor terminal 3.

And triple meter receives oil pressure signal from oil pressure sensor

- through oil pressure sensor terminal 2
- to triple meter terminal 8.

NOTE:
This gauge is not designed to indicate low oil level. Use the oil level gauge to check the oil level.

VOLTMETER

When the ignition switch is turned to the ON position, the voltmeter indicates the battery voltage drawn from battery, while the engine is running, it indicates the alternator voltage of about 13 to 15 volts.
With the ignition switch in the ON or START position, power is supplied

- through 10A fuse [No. 14, located in the fuse block (J/B)]
- to triple meter terminal 3.

Ground is supplied

- to triple meter terminal 1
- through body grounds M30 and M66.

Schematic

AKS0094L

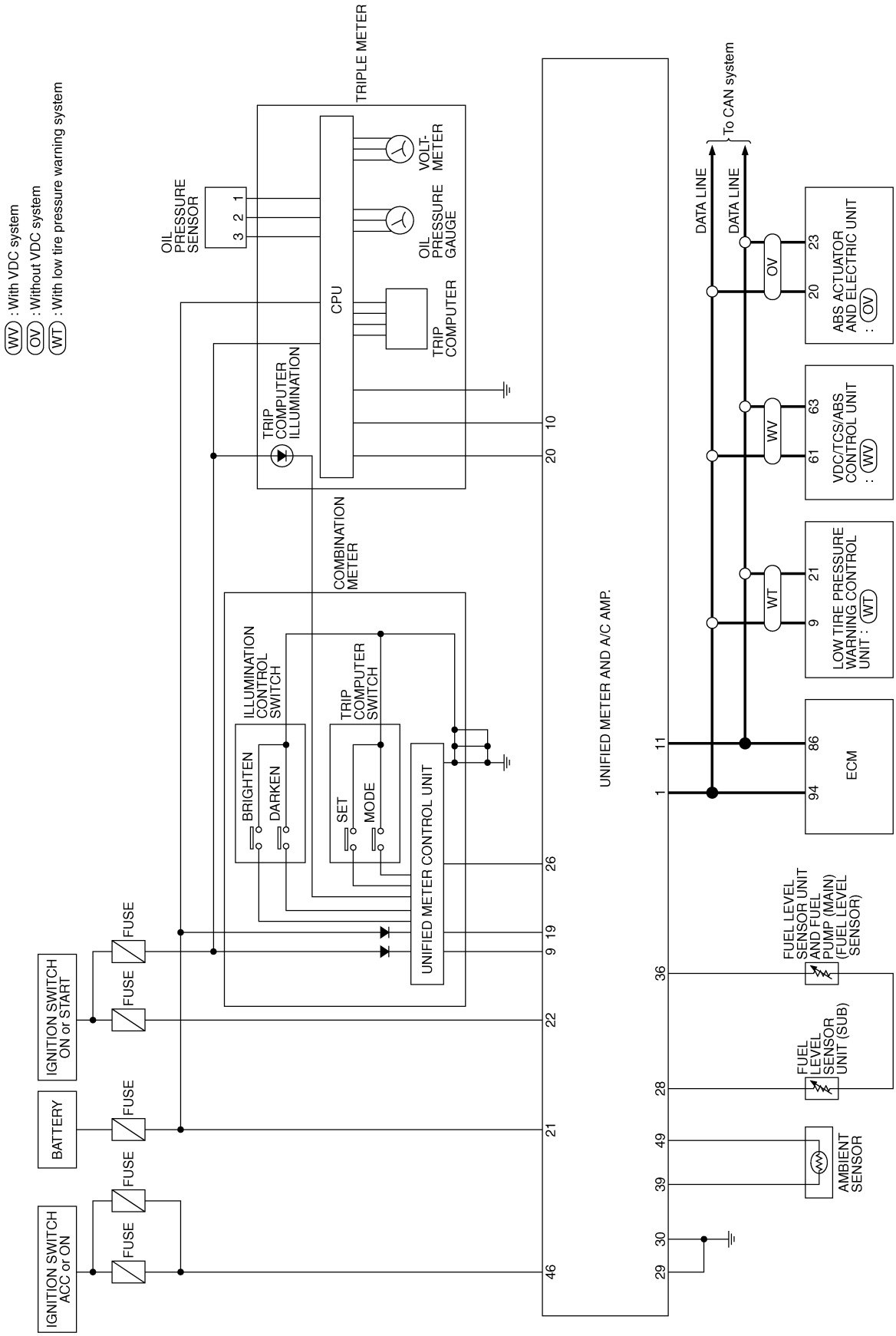

TKWT1625E

Wiring Diagram — 3METER —

AKS0094M

DI-3METER-01

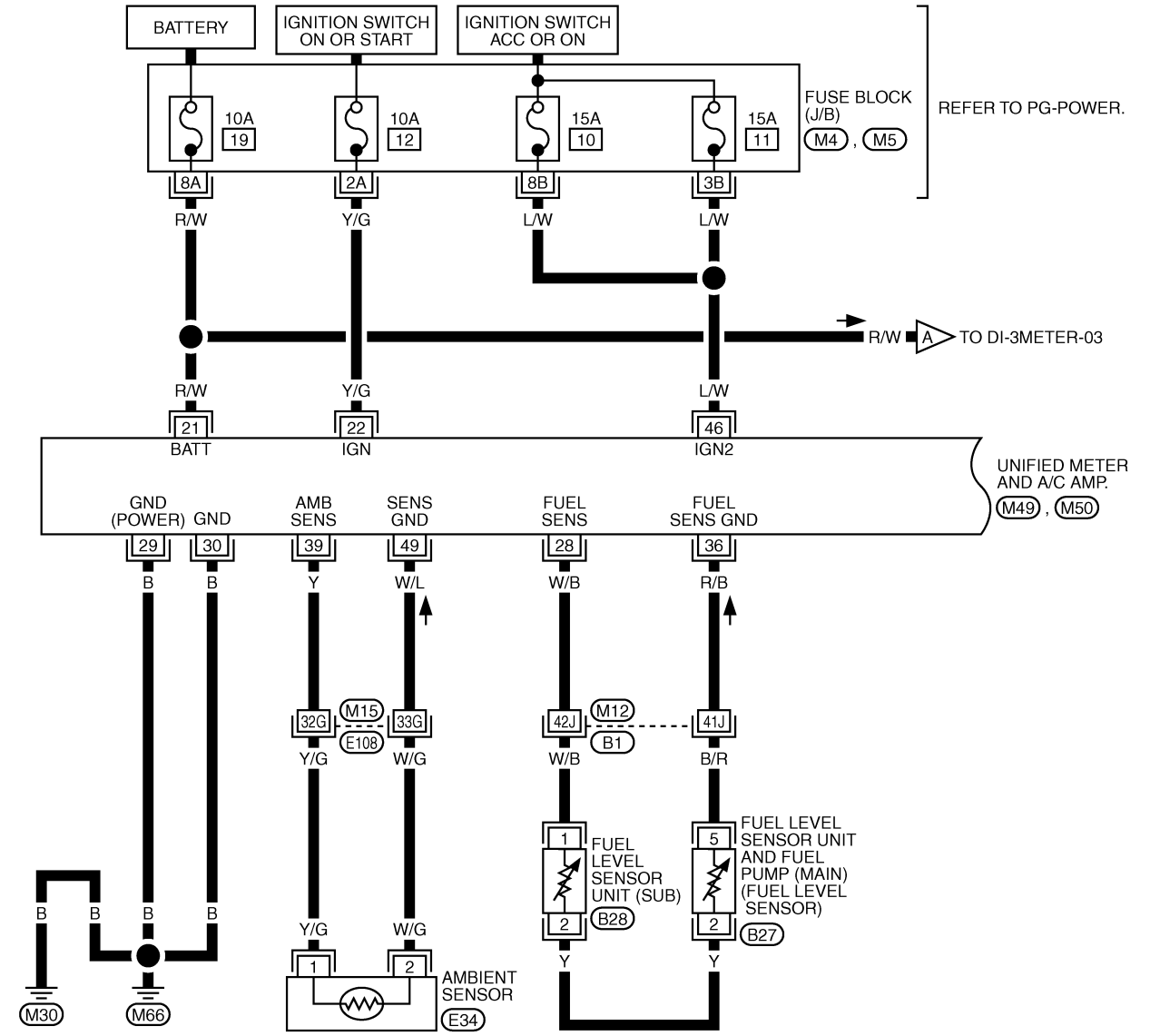

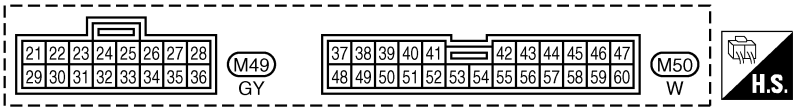

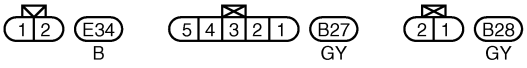

REFER TO THE FOLLOWING.

E108 , B1 -SUPER MULTIPLE JUNCTION (SMJ)

M4 , M5 -FUSE BLOCK-JUNCTION BOX (J/B)

TKWT0497E

DI-3METER-02

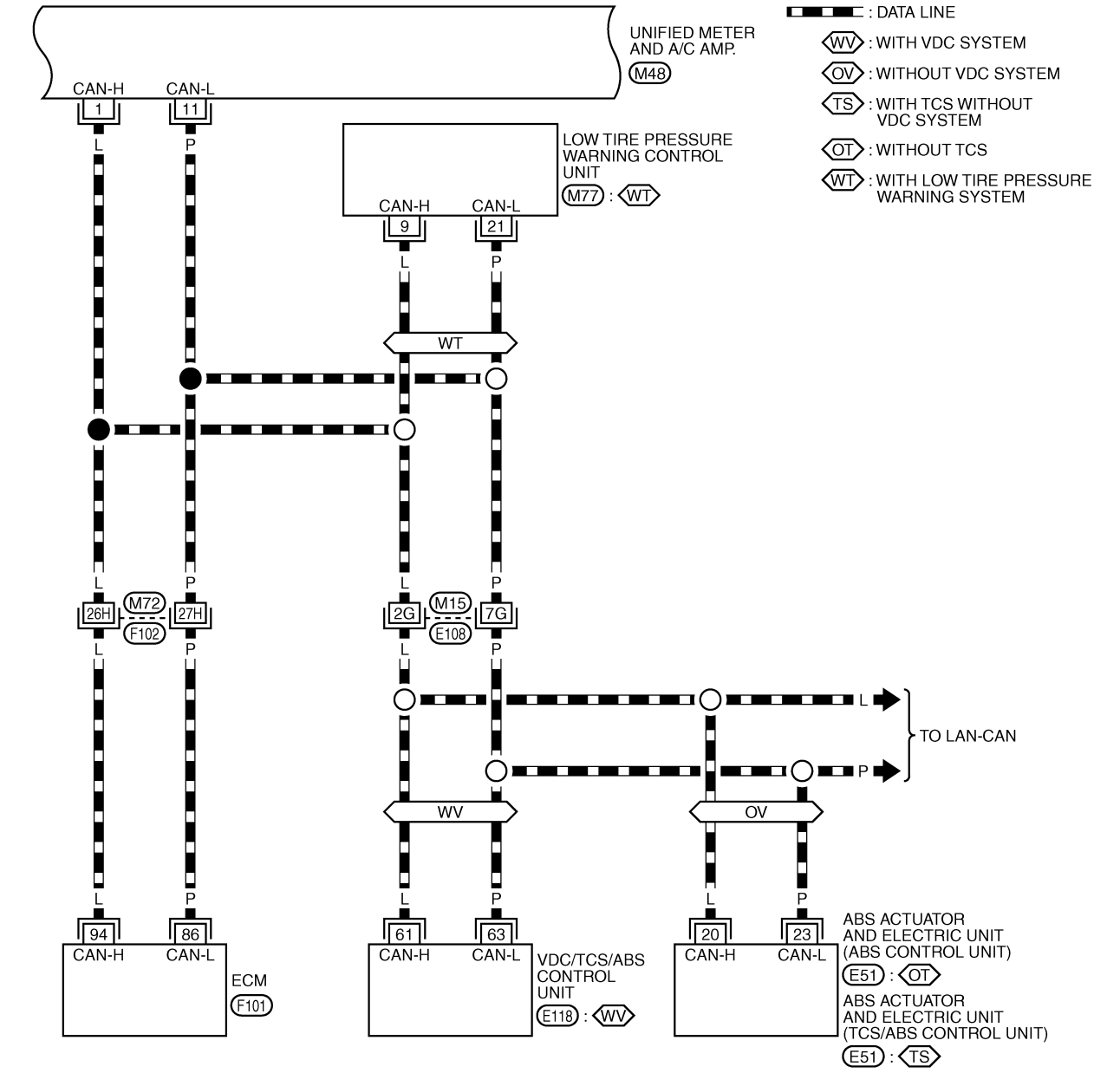

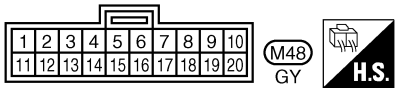

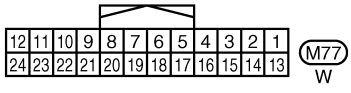

REFER TO THE FOLLOWING.
E108 , F102 -SUPER MULTIPLE JUNCTION (SMJ)
E51 , E118 , F101 -ELECTRICAL UNITS

TKWT1626E

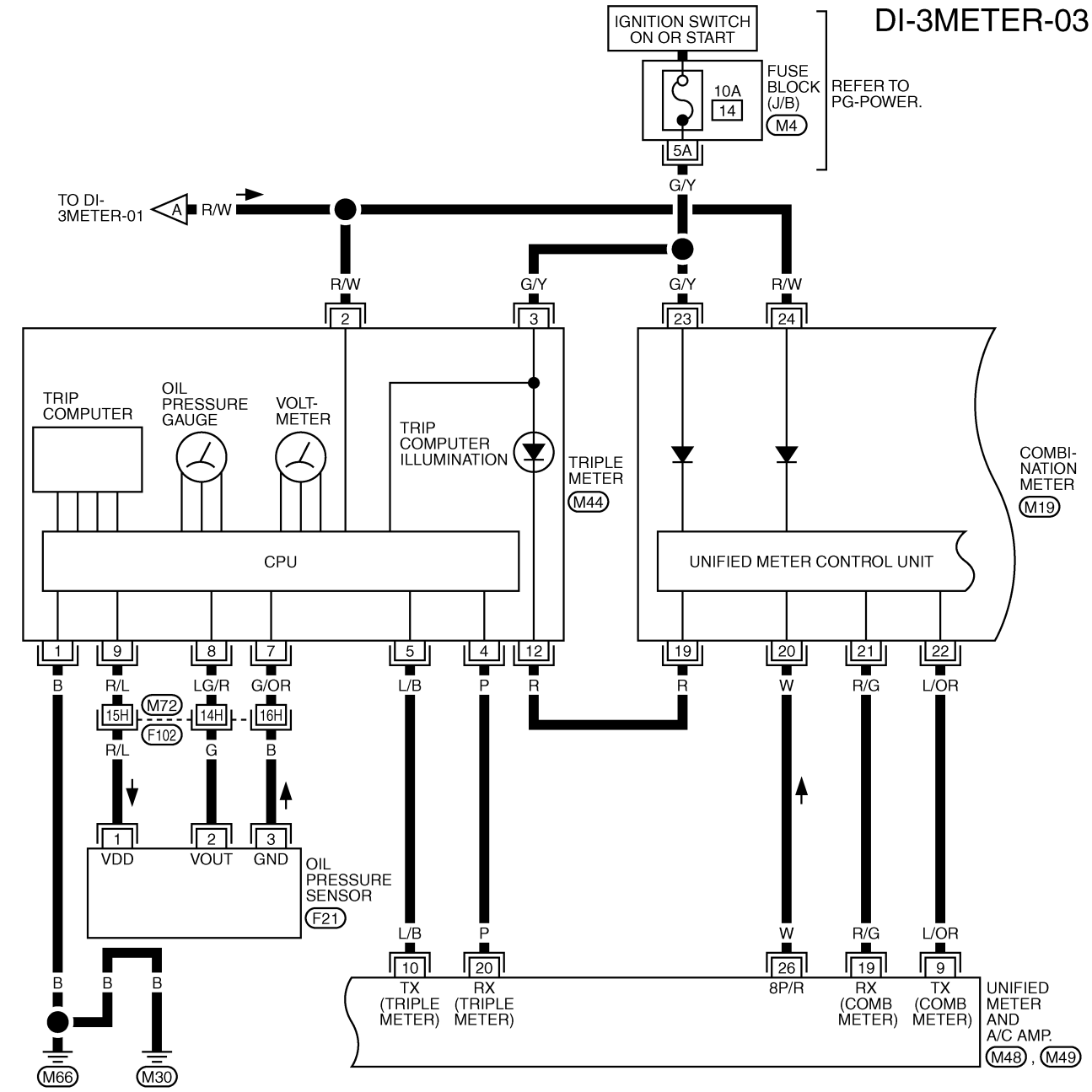

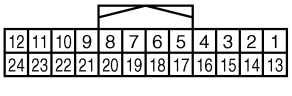

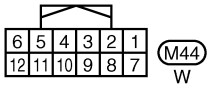

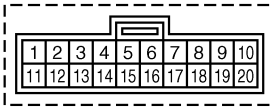

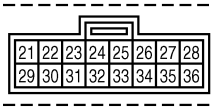

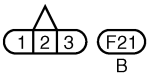

REFER TO THE FOLLOWING.

F102 -SUPER MULTIPLE JUNCTION (SMJ)

M4 -FUSE BLOCK-JUNCTION BOX (J/B)

TKWT0499E

DI-3METER-04

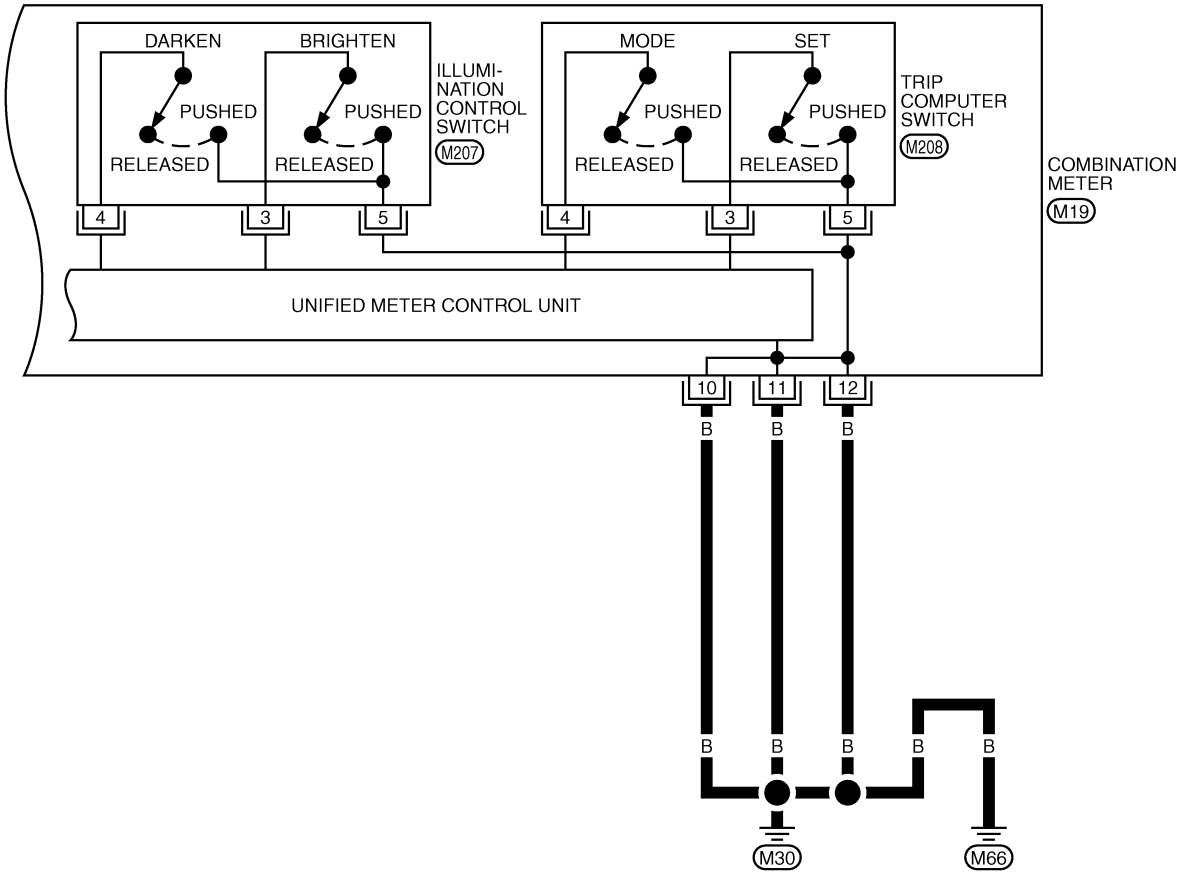

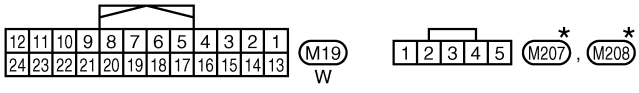

*: THIS CONNECTOR IS NOT SHOWN IN "HARNESS LAYOUT", PG SECTION.

TKWT0522E

Terminals and Reference Value for Triple Meter

AKS0094O

Terminal No.	Wire color	Item	Measuring condition		Reference value (V)
			Ignition switch	Operation or condition	
1	B	Ground	ON	—	Approx. 0
2	R/W	Battery power supply	OFF	—	Battery voltage
3	G/Y	Ignition switch ON or START	ON	—	Battery voltage
4	P	TX communication line (To unified meter and A/C amp.)	ON	—	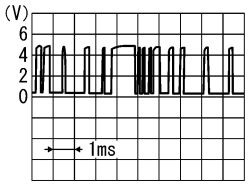 SKIA3364E
5	L/B	RX communication line (From unified meter and A/C amp.)	ON	—	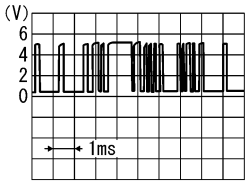 SKIA3363E
7	G/OR	Oil pressure sensor ground	ON	—	Approx. 0
8	LG/R	Oil pressure sensor signal	ON	When ignition switch is in ON position (Engine stopped.)	Approx. 1
				Engine running [When the oil pressure is 80psi (500kPa)]	Approx. 3
9	R/L	Oil pressure sensor power supply	ON	—	Approx. 5
12	R	Illumination signal	ON	Lighting switch ON, then operate the illumination control switch.	<e.g.> When brightness level is midway 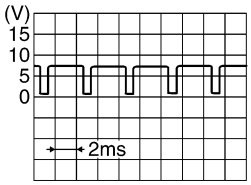 SKIA7256E
				Lighting switch OFF	Approx. 0

Terminals and Reference Value for Combination Meter

AKS0094P

Terminal No.	Wire color	Item	Measuring condition		Reference value (V)
			Ignition switch	Operation or condition	
10 11 12	B	Ground	ON	—	Approx. 0
19	R	Illumination signal	ON	Lighting switch ON, then operate the illumination control switch.	<e.g.> When brightness level is midway 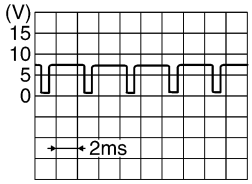 SKIA7256E
				Lighting switch OFF	Approx. 0
20	W	Vehicle speed signal (8-pulse)	ON	Speedometer operated. [When vehicle speed is approx. 40km/h (25MPH)]	**NOTE:** Maximum voltage may be 5V due to specifications (connected units). 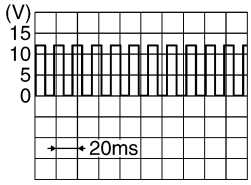 PKIA1935E
21	R/G	TX communication line (To unified meter and A/C amp.)	ON	—	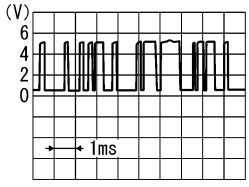 SKIA3361E
22	L/OR	RX communication line (From unified meter and A/C amp.)	ON	—	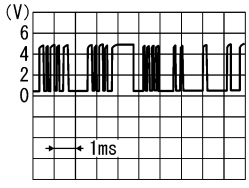 SKIA3362E
23	G/Y	Ignition switch ON or START	ON	—	Battery voltage
24	R/W	Battery power supply	OFF	—	Battery voltage

Terminals and Reference Value for Unified Meter and A/C Amp.

AKS0094Q

Terminal No.	Wire color	Item	Measuring condition		Reference value (V)
			Ignition switch	Operation or condition	
1	L	CAN H	—	—	—
9	L/OR	TX communication line (To combination meter)	ON	—	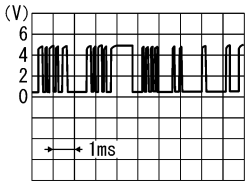 SKIA3362E
10	L/B	TX communication line (To triple meter)	ON	—	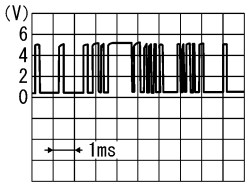 SKIA3363E
11	P	CAN L	—	—	—
19	R/G	RX communication line (From combination meter)	ON	—	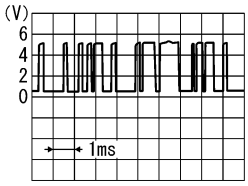 SKIA3361E
20	P	RX communication line (From triple meter)	ON	—	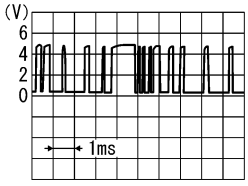 SKIA3364E
21	R/W	Battery power supply	OFF	—	Battery voltage
22	Y/G	Ignition switch ON or START	ON	—	Battery voltage
26	W	Vehicle speed signal (8-pulse)	ON	Speedometer operated. [When vehicle speed is approx. 40km/h (25MPH)]	**NOTE:** Maximum voltage may be 5V due to specifications (connected units). 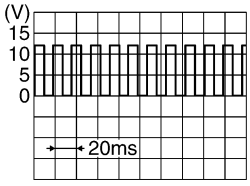 PKIA1935E
28	W/B	Fuel level sensor signal	—	—	Refer to DI-27, "FUEL LEVEL SENSOR UNIT CHECK" .
29	B	Ground (For power)	ON	—	Approx. 0
30	B	Ground	ON	—	Approx. 0
36	R/B	Fuel level sensor ground	ON	—	Approx. 0
39	Y	Ambient sensor signal	—	—	Refer to ATC-98, "Ambient Sensor Circuit" .

Terminal No.	Wire color	Item	Measuring condition		Reference value (V)
			Ignition switch	Operation or condition	
46	L/W	Ignition switch ACC or ON	ACC	—	Battery voltage
49	W/L	Ambient sensor ground	ON	—	Approx. 0

Meter/Gauges Operation and Trip Computer

AKS0094R

SELF-DIAGNOSIS FUNCTION

- Trip computer segment operation can be checked in self-diagnosis mode of combination meter.
- Meters/gauges can be checked in self-diagnosis mode of combination meter.

HOW TO ALTERNATE DIAGNOSIS MODE

1. While pushing the odo/trip meter switch, turn ignition switch ON.
2. Confirm that the trip meter displays “0000.0”.
3. Push the odo/trip meter switch at least 3 times. (Within 7 seconds after the ignition switch is turned ON.)
4. All the segments on the trip computer illuminate. At this time, the unified meter control unit is turned to diagnosis mode.

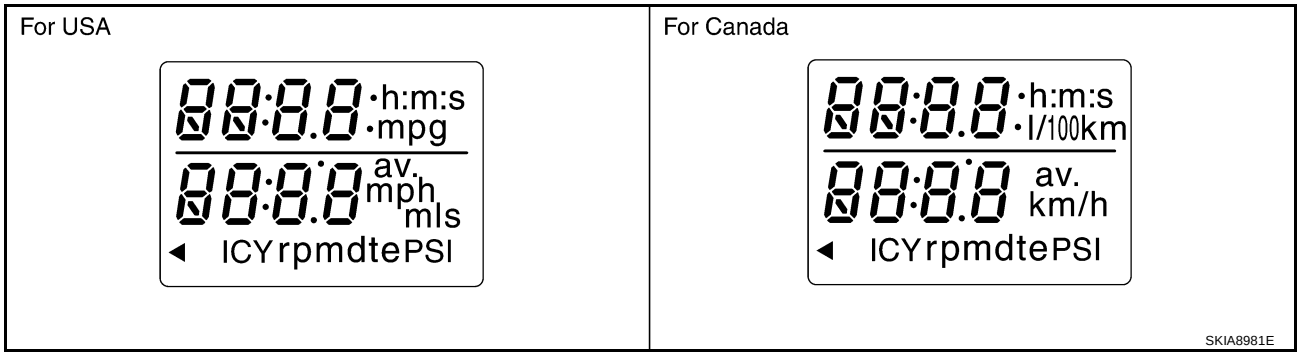

5. Push the odo/trip meter switch. Each meter/gauge should indicate as shown in the figure while pushing odo/trip meter switch.

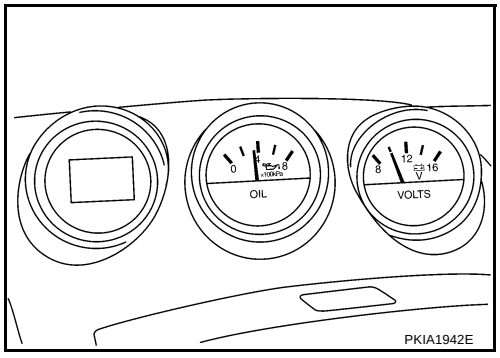

CONSULT-II Function

AKS0094S

Refer to DI-58, "CONSULT-II Function" in “UNIFIED METER AND A/C AMP”.

How to Proceed With Trouble Diagnosis

AKS0094T

1. Confirm the symptom or customer complaint.
2. Perform diagnosis according to diagnosis flow. Refer to DI-43, "Diagnosis Flow" .
3. According to the symptom chart, repair or replace the cause of the symptom.
4. Does the meter operate normally? If so, go to 5. If not, go to 2.
5. INSPECTION END

Diagnosis Flow

AKS0094U

1. CHECK SELF-DIAGNOSTIC RESULTS OF UNIFIED METER AND A/C AMP.

Select “METER A/C AMP” on CONSULT-II, and then perform self-diagnosis of unified meter and A/C amp. Refer to DI-58, "CONSULT-II Function" .

Self-diagnostic results content

No malfunction detected>>GO TO 2.
Malfunction detected>> Go to DI-47, "Symptom Chart 2" .

2. CHECK TRIP COMPUTER ILLUMINATION

Turn ignition switch ON.

Do trip computer display illuminate?

YES >> GO TO 3.
NO >> Check power supply circuit of triple meter when ignition switch is ON. Refer to DI-44, "Power Supply and Ground Circuit Inspection" .

3. CHECK SELF-DIAGNOSIS OPERATION OF COMBINATION METER

Perform combination meter self-diagnosis. Refer to DI-13, "HOW TO ALTERNATE DIAGNOSIS MODE" .

Does self-diagnosis function operate?

YES >> GO TO 4.
NO >> Check battery power supply circuit and ground circuit of triple meter. Refer to DI-44, "Power Supply and Ground Circuit Inspection" .

4. CHECK TRIP COMPUTER OPERATION

Check segment display status of trip computer.

For USA	For Canada
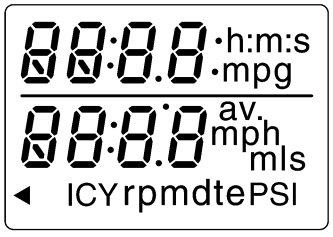	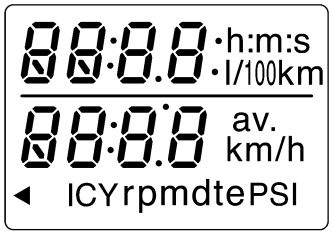

SKIA8981E

Is the display normal?

YES >> GO TO 5.
NO >> Replace triple meter.

5. CHECK METER CIRCUIT

Check indication of each meter/gauge in self-diagnosis mode.

OK or NG

OK >> Go to DI-46, "Symptom Chart 1" .
NG >> Replace triple meter.

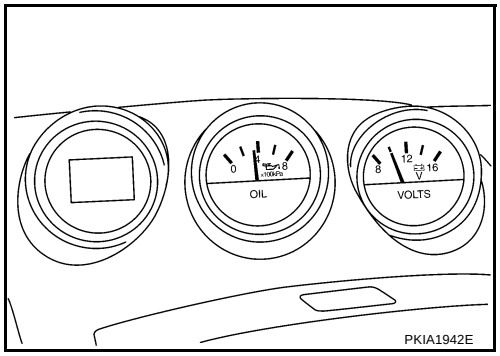

AKS0094V

Power Supply and Ground Circuit Inspection

1. CHECK FUSE

Check for blown triple meter fuses.

Unit	Power source	Fuse No.
Triple meter	Battery	19
Unified meter and A/C amp.		
Unified meter and A/C amp.	Ignition switch ACC or ON	10, 11
Triple meter	Ignition switch ON or START	14
Unified meter and A/C amp.		12

OK or NG

OK >> GO TO 2.
NG >> If fuse is blown, be sure to eliminate cause of malfunction before installing new fuse. Refer to PG-4, "POWER SUPPLY ROUTING CIRCUIT" .

2. CHECK POWER SUPPLY CIRCUIT

1. Disconnect the triple meter connector.
2. Check voltage between triple meter harness connector terminals and ground.

Terminals			Ignition switch position	
(+)		(–)	OFF	ON
Connector	Terminal (Wire color)			
M44	2 (R/W)	Ground	Battery voltage	Battery voltage
	3 (G/Y)		0V	Battery voltage

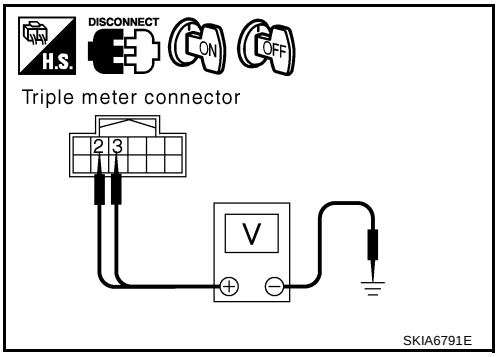

3. Check voltage between unified meter and A/C amp. harness connector terminals and ground.

Terminals			Ignition switch position		
(+)		(–)	OFF	ACC	ON
Connector	Terminal (Wire color)				
M49	21 (R/W)	Ground	Battery voltage	Battery voltage	Battery voltage
	22 (Y/G)		0V	0V	Battery voltage
M50	46 (L/W)		0V	Battery voltage	Battery voltage

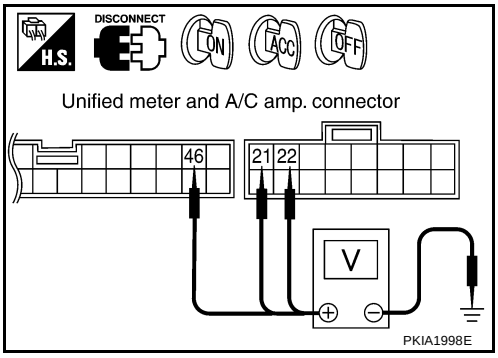

OK or NG

OK >> GO TO 3.

NG >> Check the following.

- Harness for open between triple meter and fuse
- Harness for open between unified meter and A/C amp. and fuse

3. CHECK GROUND CIRCUIT

1. Turn ignition switch OFF.
2. Check continuity between triple meter harness connector M44 terminal 1 (B) and ground.

   Continuity should exist.

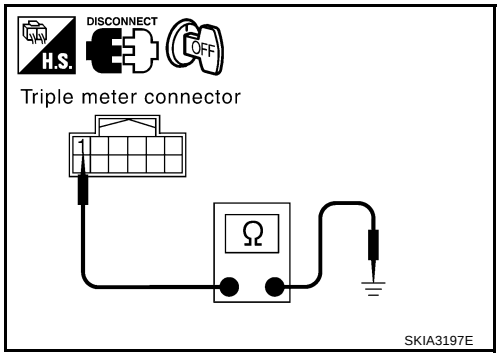

3. Check continuity between unified meter and A/C amp. harness connector M49 terminals 29 (B), 30 (B) and ground.

   Continuity should exist.

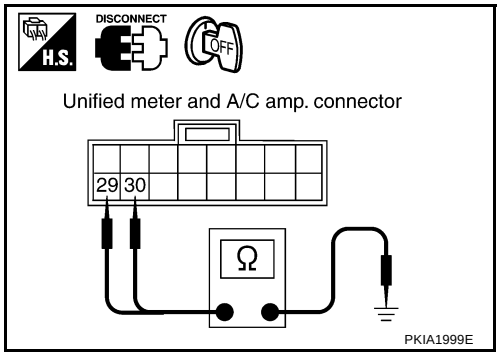

OK or NG

OK >> INSPECTION END
NG >> Check harness or connector.

Symptom Chart 1

AKS0094W

Trouble phenomenon	Possible cause
Speed indication is not displayed properly.	Refer to DI-47, "Vehicle Speed Signal Inspection" .
Outside air temperature indication is not displayed properly. (It may take a short time to steady the indication after ignition switch is turned ON.) **NOTE:** If the meter is powered up with the ambient sensor disconnected, outside air temperature display will show "---" even if the sensor is reconnected. In this case, with the sensor connected, disconnect and reconnect the battery, then the correct temperature will be displayed.	Refer to ATC-98, "AMBIENT TEMPERATURE INPUT PROCESS" in "ATC".
DTE (distance to empty) indication is not displayed properly.	Refer to DI-47, "Fuel Consumption Monitor Signal Inspection" .
Average fuel consumption indication is not displayed properly.	
Shift-up indicator setting indication is not displayed properly or shift-up indicator does not operate properly.	Refer to DI-52, "Trip Computer Switch Inspection" .
Average vehicle speed indication is not indicated properly.	Replace triple meter.
Trip distance indication is not indicated properly.	
Trip time indication is not indicated properly.	
Stopwatch indication is not displayed properly.	
Indication is malfunction of voltmeter.	
Indication is malfunction of oil pressure gauge.	Refer to DI-48, "Oil Pressure Sensor Inspection" .
Trip computer switch is not operate.	Refer to DI-52, "Trip Computer Switch Inspection" .

Symptom Chart 2

AKS0094X

Displayed item [Code]	Inspection contents	Possible cause
CAN COMM CIRC [U1000]	Inspect the CAN communication circuit.	Refer to DI-22, "CAN Communication System Inspection" in “COMBINATION METERS”. **CAUTION:** **Even when there is no malfunction on CAN communication system, malfunction may be misinterpreted when battery has low voltage (when maintaining 7-8V for about 2 seconds) or 10A fuse [No. 19, located in the fuse block (J/B)] fuse is disconnected.**
T/METER COMM CIRC [B2201]	Inspect the communication line of between triple meter and unified meter and A/C amp.	Refer to DI-50, "Communication Line Inspection" .
METER COMM CIRC [B2202]	Inspect the communication line of between combination meter and unified meter and A/C amp.	Refer to DI-23, "Communication Line Inspection" in “COMBINATION METERS”.
VEHICLE SPEED CIRC [B2205]	Inspect the vehicle speed input signal.	Perform the following self-diagnosis. ● VDC/TCS/ABS control unit [with VDS system]; refer to BRC-108, "CONSULT-II Functions" . ● ABS actuator and electric unit (control unit) [without VDC system]; refer to BRC-61, "CONSULT- II Functions" (with TCS) or BRC-19, "CONSULT- II Functions" (without TCS). Replace unified meter and A/C amp. if the above system is normal. **CAUTION:** **Even when there is no malfunction on speed signal system, malfunction may be misinterpreted when battery has low voltage (when maintaining 7-8V for about 2 seconds).**

Vehicle Speed Signal Inspection

AKS0094Y

1. CHECK UNIFIED METER AND A/C AMP. INPUT SIGNAL

1. Start engine and select “METER A/C AMP” on CONSULT-II.
2. Using “SPEED METER” on the “DATA MONITOR”, Compare the value of data monitor with speed indication of trip computer.

OK or NG

OK >> Refer to DI-18, "Vehicle Speed Signal Inspection" of “COMBINATION METERS”.

NG >> Replace triple meter.

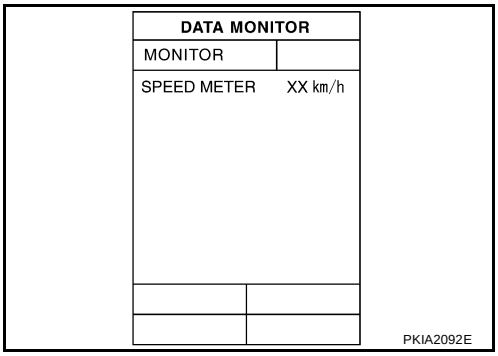

Fuel Consumption Monitor Signal Inspection

AKS0094Z

1. CHECK ECM SELF-DIAGNOSIS

Perform the ECM self-diagnosis. Refer to EC-104, "CONSULT-II Function" .

Self-diagnostic results content

No malfunction detected>>Replace the unified meter and A/C amp. Refer to DI-61, "Removal and Installation of Unified Meter and A/C Amp." .

Malfunction detected>>Check applicable parts, and repair or replace corresponding parts.

Oil Pressure Sensor Inspection

AKS00950

1. CHECK OIL PRESSURE SENSOR SIGNAL

1. Turn ignition switch ON.
2. Check voltage between triple meter harness connector M44 terminal 8 (LG/R) and ground.

Terminals			Condition	Voltage (V)
(+)		(–)		
Connector	Terminal (Wire color)			
M44	8 (LG/R)	Ground	When ignition switch is in ON position (Engine stopped.)	Approx. 1
			Engine running [When the oil pressure is 80psi (500kPa)]	Approx. 3

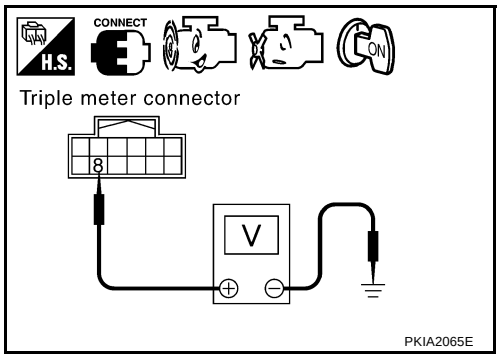

OK or NG

OK >> Replace triple meter.
NG >> GO TO 2.

2. CHECK OIL PRESSURE SENSOR POWER SUPPLY

Check voltage between triple meter harness connector M44 terminal 9 (R/L) and ground.

Approx. 5V

OK or NG

OK >> GO TO 3.
NG >> Replace triple meter.

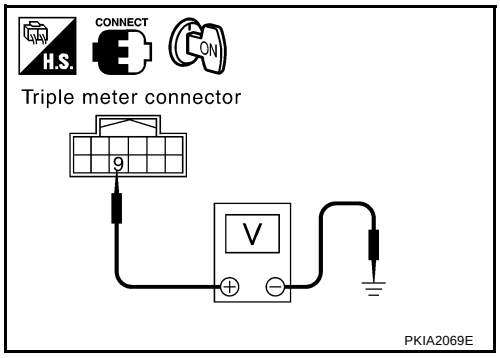

3. CHECK OIL PRESSURE SENSOR POWER SUPPLY CIRCUIT

1. Turn ignition switch OFF.
2. Disconnect triple meter and oil pressure switch connector.
3. Check continuity between triple meter harness connector M44 terminal 9 (R/L) and oil pressure sensor harness connector F21 terminal 1 (R/L).

   Continuity should exist.

4. Check continuity between triple meter harness connector M44 terminal 9 (R/L) and ground.

   Continuity should not exist.

OK or NG

OK >> GO TO 4.
NG >> Repair harness or connector between triple meter and oil pressure sensor.

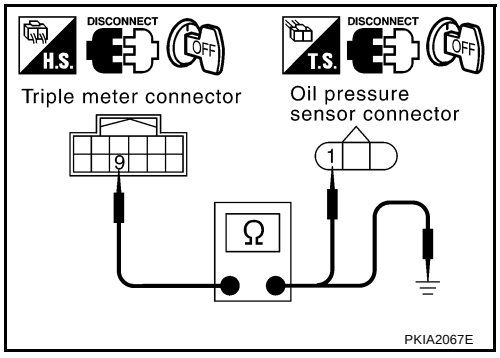

4. CHECK OIL PRESSURE SENSOR SIGNAL CIRCUIT

1. Check continuity between triple meter harness connector M44 terminal 8 (LG/R) and oil pressure sensor harness connector F21 terminal 2 (G).

   Continuity should exist.

2. Check continuity between triple meter harness connector M44 terminal 8 (LG/R) and ground.

   Continuity should not exist.

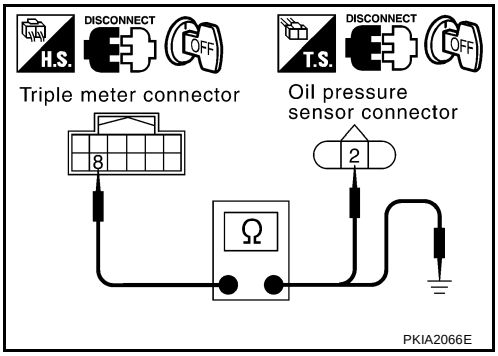

OK or NG

OK >> GO TO 5.
NG >> Repair harness or connector between triple meter and oil pressure sensor.

5. CHECK OIL PRESSURE SENSOR GROUND CIRCUIT

Check continuity between triple meter harness connector M44 terminal 7 (G/OR) and oil pressure sensor harness connector F21 terminal 3 (B).

Continuity should exist.

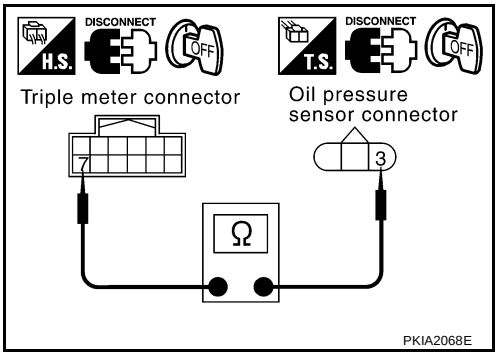

OK or NG

OK >> Replace oil pressure sensor.
NG >> Repair harness or connector between triple meter and oil pressure sensor.

Communication Line Inspection

AKS00951

1. CHECK CONNECTOR

Check triple meter, unified meter and A/C amp. and terminals (triple meter-side, unified meter and A/C amp.-side, and harness-side) for looseness or bent terminals.

OK or NG

OK >> GO TO 2.
NG >> Repair terminal or connector.

2. CHECK METER/GAUGES VISUALLY

Does the pointer on the meter/gauges fluctuate at the engine start?

Is the fluctuation acceptable?

YES >> GO TO 3.
NO >> GO TO 6.

3. CHECK CONTINUITY COMMUNICATION CIRCUIT (TX: TRIPLE METER)

1. Turn ignition switch OFF.
2. Disconnect triple meter connector and unified meter and A/C amp. connector.
3. Check continuity between triple meter harness connector M44 terminal 4 (P) and unified meter and A/C amp. harness connector M48 terminal 20 (P).

   Continuity should exist.

4. Check continuity between triple meter harness connector M44 terminal 4 (P) and ground.

   Continuity should not exist.

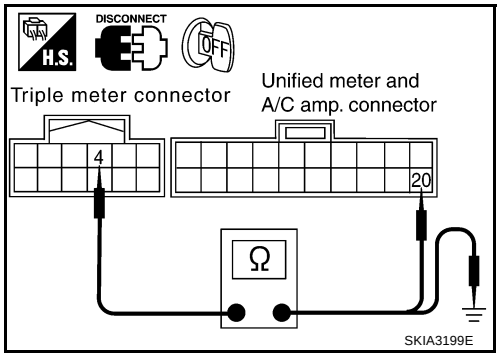

OK or NG

OK >> GO TO 4.
NG >> Repair harness or connector.

4. CHECK VOLTAGE OF UNIFIED METER AND A/C AMP.

1. Connect unified meter and A/C amp. connector.
2. Turn ignition switch ON.
3. Check voltage between triple meter harness connector M44 terminal 4 (P) and ground.

   Approx. 5V

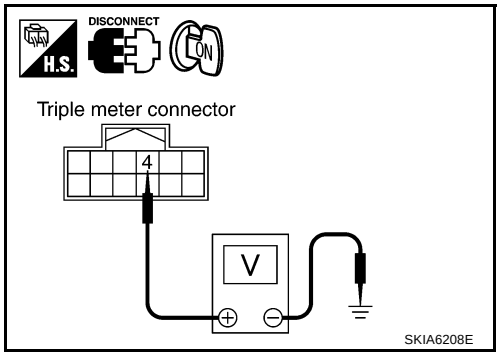

OK or NG

OK >> GO TO 5.
NG >> Replace unified meter and A/C amp. Refer to DI-61, "Removal and Installation of Unified Meter and A/C Amp." .

5. CHECK VOLTAGE SIGNAL OF COMBINATION METER

1. Turn ignition switch OFF and connect triple meter connector.
2. Turn ignition switch ON.
3. Check voltage signal between triple meter harness connector M44 terminal 4 (P) and ground with simple oscilloscope of CONSULT-II.

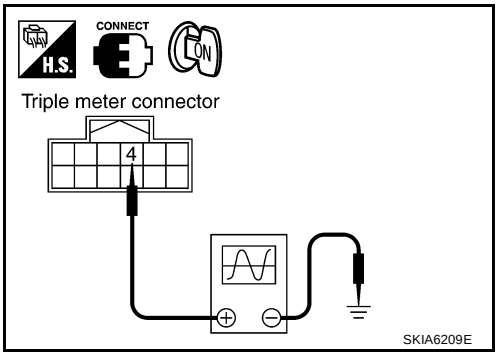

4 (P) - Ground:

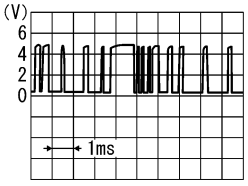

SKIA3364E

OK or NG

OK >> Replace unified meter and A/C amp. Refer to DI-61, "Removal and Installation of Unified Meter and A/C Amp." .

NG >> Replace triple meter.

6. CHECK CONTINUITY COMMUNICATION CIRCUIT (RX: TRIPLE METER)

1. Turn ignition switch OFF.
2. Disconnect triple meter connector and unified meter and A/C amp. connector.
3. Check continuity between triple meter harness connector M44 terminal 5 (L/B) and unified meter and A/C amp. harness connector M48 terminal 10 (L/B).

   Continuity should exist.

4. Check continuity between triple meter harness connector M44 terminal 5 (L/B) and ground.

   Continuity should not exist.

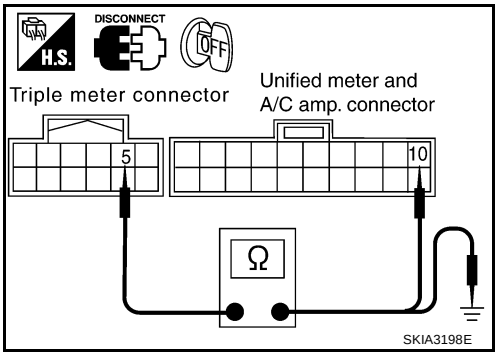

OK or NG

OK >> GO TO 7.

NG >> Repair harness or connector.

7. CHECK VOLTAGE OF COMBINATION METER

1. Connect triple meter connector.
2. Turn ignition switch ON.
3. Check voltage between unified meter and A/C amp. harness connector M48 terminal 10 (L/B) and ground.

   Approx. 5V

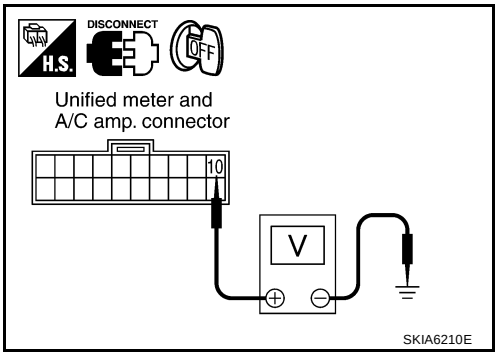

OK or NG

OK >> GO TO 8.

NG >> Replace triple meter.

8. CHECK VOLTAGE SIGNAL OF UNIFIED METER AND A/C AMP.

1. Connect triple meter connector and unified meter and A/C amp. connector.
2. Ignition switch turn ON.
3. Check voltage signal between triple meter harness connector M44 terminal 5 (L/B) and ground with simple oscilloscope of CONSULT-II.

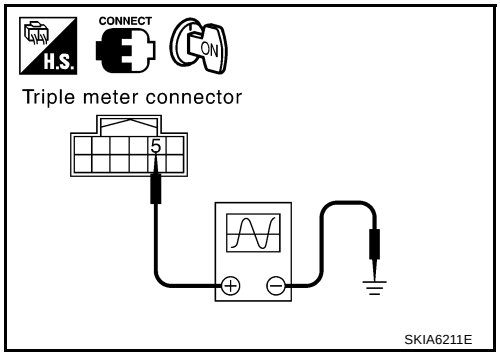

5 (L/B) - Ground :

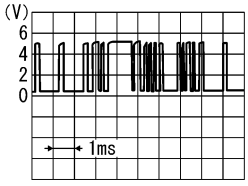

SKIA3363E

OK or NG

OK >> Replace triple meter.
NG >> Replace unified meter and A/C amp. Refer to DI-61, "Removal and Installation of Unified Meter and A/C Amp." .

Trip Computer Switch Inspection

AKS00952

1. CHECK CONNECTOR

1. Remove combination meter. Refer to DI-28, "Removal and Installation for Combination Meter" .
2. Remove rear finisher to combination meter. Refer to DI-28, "Disassembly and Assembly for Combination Meter" .
3. Check trip computer switch connector for looseness.

OK or NG

OK >> GO TO 2.
NG >> Repair trip computer switch connector.

2. CHECK CIRCUIT

1. Disconnect trip computer switch connector.
2. Check continuity between trip computer switch harness connector M208 terminals 3, 4 and 5.

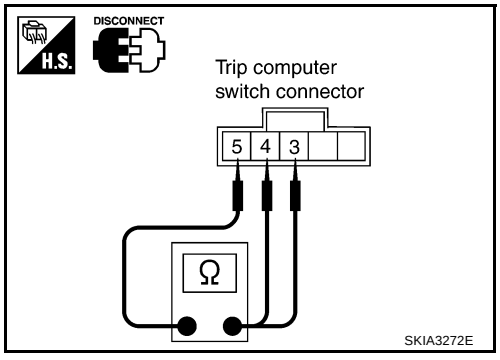

Terminal		Condition	Continuity
3	5	Setting switch is pushed.	Yes
		Setting switch is released.	No
4		Mode switch is pushed.	Yes
		Mode switch is released.	No

OK or NG

OK >> Replace combination meter.
NG >> Replace trip computer switch.

Removal and Installation of Triple Meters

AKS00953

REMOVAL

1. Remove cluster lid C. Refer to IP-10, "INSTRUMENT PANEL ASSEMBLY" .
2. Disconnect flexible print circuit for pwer cluster lid amp. (With NAVI)
3. Remove screws (2), and remove triple meters.

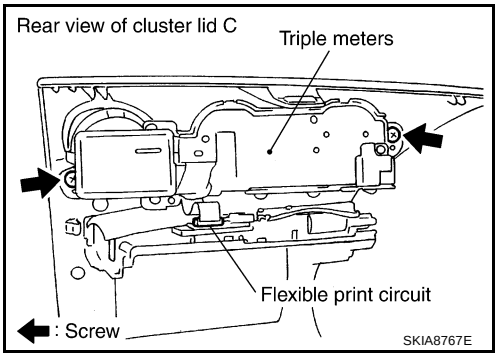

INSTALLATION

Install in the reverse order of removal.

Disassembly and Assembly for Triple Meters

AKS00954

DISASSEMBLY

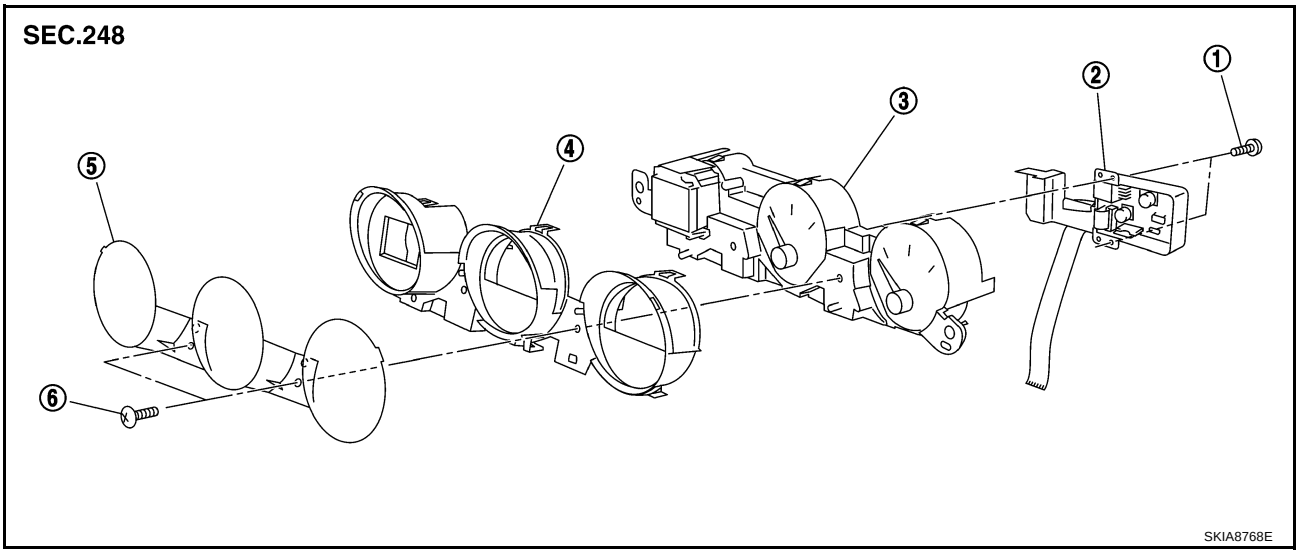

1.	Screw (with NAVI)	2.	Power cluster lid amp. (with NAVI)	3.	Triple meter
4.	Upper housing	5.	Front cover	6.	Screw

1. Remove screws (2), and remove power cluster lid amp. (with NAVI)
2. Remove screws (2), and remove front cover.
3. Disengage tabs (6) to separate upper housing.

ASSEMBLY

Assemble in reverse order of disassembly.

UNIFIED METER AND A/C AMP

PFP:27760

System Description

AKS00955

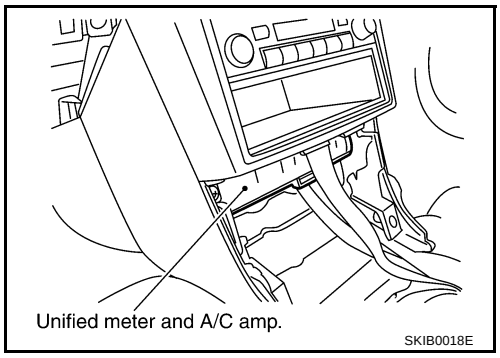

- For the unified meter and A/C amp., the signal required for controlling the combination meter and triple meter are integrated in the A/C auto amp.
- Unified meter and A/C amp. controls each operation for A/C auto amp. For information regarding A/C control, refer to ATC-27, "AIR CONDITIONER CONTROL" in “ATC” section.
- Unified meter and A/C amp. inputs necessary information for combination meter and triple meter from each unit by CAN communication and so on.
- And unified meter and A/C amp. outputs these signals using communication line (TX, RX) between unified meter and A/C amp. and various meters.
- In addition to sending output to the combination meter and triple meter containing the signals input from the various units, it also receives the signals between the combination meter and triple meter.
- Other input signals are also sent to the ECM, TCM, and BCM using CAN communication.
- The signals required for the trip computer display are centralized in the unified meter and A/C amp., converted into data, and sent to the triple meter.
- The unified meter and A/C amp. correspond a CONSULT-II function (self-diagnostic results, CAN diagnostic support monitor, data monitor).

INPUT/OUTPUT SIGNALS

Between Unified Meter and A/C Amp. and Combination Meter

Unit	Input	Output
Unified meter and A/C amp.	● Seat belt buckle switch signal (Driver's side) ● Trip computer mode switch signal ● Trip computer setting switch signal ● Illumination control nighttime required signal ● Refuel status signal ● Vehicle speed signal ● Low-fuel warning lamp condition signal ● Self-diagnosis condition signal ● Odo/trip switch signal ● Delivery destination data signal ● Combination meter receive error signal ● Combination meter specifications signal ● Triple meter specifications signal	● Vehicle speed signal (8-pulse) ● Engine speed signal ● Engine coolant temperature signal ● Fuel level sensor signal (resistance value) ● Malfunction indicator lamp signal ● ABS warning lamp signal ● Tire pressure warning lamp signal ● Brake warning lamp signal ● Oil pressure warning lamp signal ● Turn indicator signal ● High beam request signal ● VDC OFF indicator lamp signal ● TCS OFF indicator lamp signal ● SLIP indicator lamp signal ● CRUISE indicator lamp signal ● SET indicator lamp signal ● A/T CHECK indicator lamp signal ● A/T position indicator signal ● Manual mode indicator signal ● Manual mode gear position signal ● Shift-up indicator setting signal ● CAN communication condition signal of A/T ● Door switch signal ● Position lights request signal ● Buzzer output signal

Between Unified Meter and A/C Amp. and Triple Meter

Unit	Input	Output
Unified meter and A/C amp.	● LCD indication condition signal ● Shift-up indicator setting signal ● Oil pressure warning lamp signal ● Triple meter receive error signal	● Outside air temperature signal ● Outside air temperature warning signal ● Trip distance signal ● Trip time signal ● Average vehicle speed signal ● Average fuel consumption signal ● Vehicle speed signal ● DTE (Distance to empty) signal ● DTE (Distance to empty) warning signal ● Tire pressure signal ● Tire pressure warning signal ● Trip computer mode switch signal ● Trip computer setting switch signal ● Self-diagnosis condition signal ● Odo/trip switch signal ● Triple meter specifications signal

FAIL-SAFE

Solution When Communication Error Between Unified Meter and A/C Amp. and Combination Meter

Function		Specifications
Speedometer		Return to zero when discontinuing communication or receiving irregular data.
Tachometer		Reset to zero by suspending communication.
Fuel gauge		
Water temperature gauge		
Illumination control	Combination meter illumination	When suspending communication, change to nighttime mode.
Odo/trip meter		Integrate in response to 8-pulse input.
A/T indicator		The display turns off by suspending communication.
Warning buzzer		The warning buzzer turns off by suspending communication.
Warning lamp/indicator lamp	ABS warning lamp	The light turns on by suspending communication.
	VDC OFF indicator lamp	
	TCS OFF indicator lamp	
	SLIP indicator lamp	
	Brake warning lamp	
	Tire pressure warning lamp	
	A/T CHECK lamp	The light turns off by suspending communication.
	Oil pressure warning lamp	
	Door warning lamp	
	High beam indicator lamp	
	Turn signal indicator lamp	
	Malfunction indicator lamp	
	CRUISE indicator lamp	
	SET indicator lamp	

Solution When Communication Error Between Unified Meter and A/C Amp. and Triple Meter

Function		Specifications
Trip computer	Vehicle speed indication	● Display “---” by suspending communications. ● Display “---” using erroneous signal input.
	Outside air temperature indication	Display “--” by suspending communications.
	DTE (Distance to empty) indication	Display “----” by suspending communications.
	Average fuel consumption indication	
	Average vehicle speed indication	
	Trip distance indication	
	Tire pressure indication	
	Trip time indication	Display “--:--” by suspending communications.
Illumination control	Triple meter illumination	When suspending communication, change to nighttime mode.

CAN Communication System Description

AKS00956

CAN (Controller Area Network) is a serial communication line for real time application. It is an on-vehicle multiplex communication line with high data communication speed and excellent error detection ability. Many electronic control units are equipped onto a vehicle, and each control unit shares information and links with other control units during operation (not independent). In CAN communication, control units are connected with 2 communication lines (CAN H line, CAN L line) allowing a high rate of information transmission with less wiring. Each control unit transmits/receives data but selectively reads required data only.

CAN Communication Unit

AKS00A2F

Refer to LAN-5, "CAN Communication Unit" in “CAN SYSTEM”.

Schematic

AKS00958

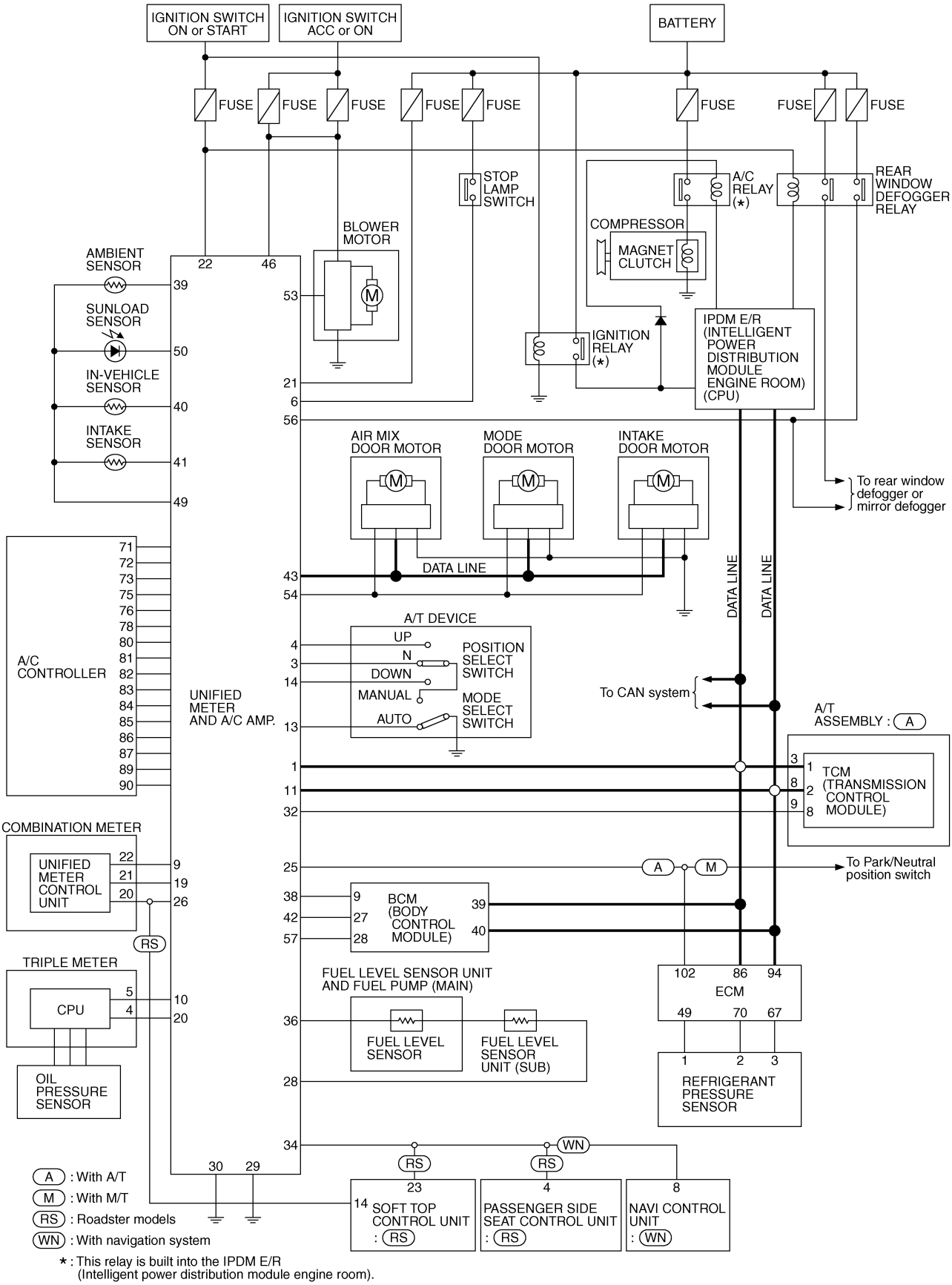

TKWM1375E

CONSULT-II Function

AKS00959

CONSULT-II performs the following functions communicating with the unified meter and A/C amp.

System part	Check item, diagnosis mode	Description
METER A/C AMP	Self-diagnosis results	Unified meter and A/C amp. check the conditions and indicates any error that unified meter and A/C amp. memorized.
	CAN diagnostic support monitor	The results of transmit/receive diagnosis of CAN communication can be read.
	Data monitor	Displays unified meter and A/C amp. input data in real time.

CONSULT-II BASIC OPERATION

CAUTION:

If CONSULT-II is used with no connection of CONSULT-II CONVERTER, malfunctions might be detected in self-diagnosis depending on control unit which carry out CAN communication.

1. With the ignition switch OFF, connect “CONSULT-II” and “CONSULT-II CONVERTER” to the data link connector, then turn ignition switch ON.

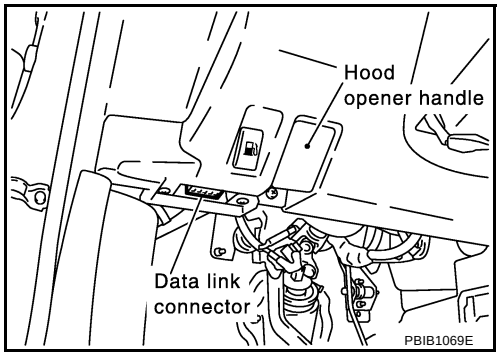

2. Touch “START (NISSAN BASED VHCL)”.

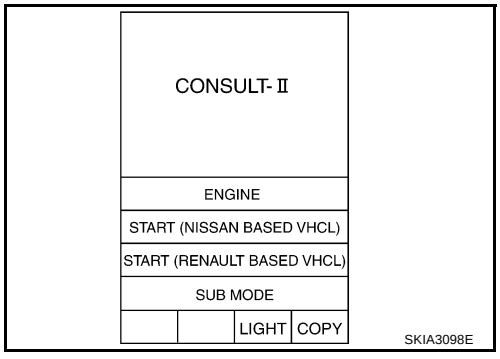

3. Touch “METER A/C AMP” on “SELECT SYSTEM” screen. If “METER A/C AMP” is not indicated, go to GI-39, "CONSULT-II Data Link Connector (DLC) Circuit" .
4. Select “SELF-DIAG RESULTS”, “CAN DIAG SUPPORT MNTR” or “DATA MONITOR”.

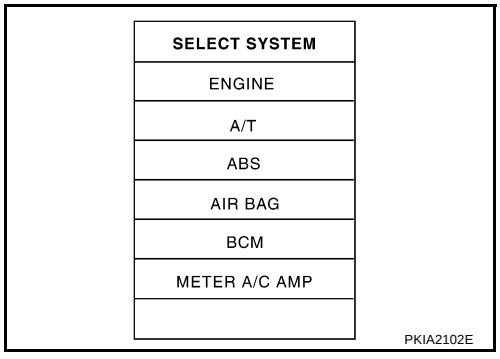

SELF-DIAGNOSIS RESULTS

Operation Procedure

1. Touch “SELF-DIAG RESULTS” on “SELECT DIAG MODE” screen.
2. Self-diagnosis results are displayed.

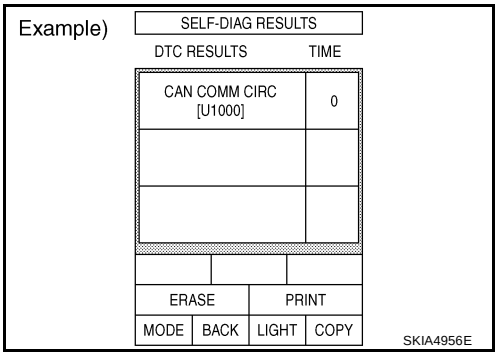

Display Item List

CONSULT-II display	Malfunction is detected when...
CAN COMM CIRC [U1000]	Malfunction is detected in CAN communication. **CAUTION:** **Even when there is no malfunction on CAN communication system, malfunction may be misinterpreted when battery has low voltage (when maintaining 7-8V for about 2 seconds) or 10A fuse [No. 19, located in the fuse block (J/B)] is disconnected.**
T/METER COMM CIRC [B2201]	Malfunction is detected in communication of between triple meter and unified meter and A/C amp.
METER COMM CIRC [B2202]	Malfunction is detected in communication of between combination meter and unified meter and A/C amp.
VEHICLE SPEED CIRC [B2205]	When an erroneous signal is input. **CAUTION:** **Even when there is no malfunction on speed signal system, malfunction may be misinterpreted when battery has low voltage (when maintaining 7-8V for about 2 seconds).**

“TIME” indicates the condition of the self-diagnosis results judged by each signal input.

- Normal: In case of operating properly at the present in spite of having problem in the past, then “TIME” indicates “1-63”.
- Malfunction: Soon after detecting malfunctions by self-diagnoses or current malfunction, “0” is indicated.

After returning to normal condition, every time when ignition switch is turned to “OFF” from “ON”, time will be added like “1”→“2”→“3”…“63”, and when the key operation is performed 64 times, the result of the self-diagnoses will be erased. And if any malfunction is detected again, “0” will be indicated.

DATA MONITOR

Operation Procedure

1. Touch “DATA MONITOR” on “SELECT DIAG MODE” screen.
2. Touch either “MAIN SIGNALS” or “SELECTION FROM MENU” on the “DATA MONITOR” screen.

MAIN SIGNALS	Monitors main signals.
SELECTION FROM MENU	Selects and monitors individual signal.

3. When “SELECTION FROM MENU” is selected, touch individual items to be monitored. When “MAIN SIGNALS” is selected, main items will be monitored.
4. Touch “START”.
5. Touch “RECORD” while monitoring, then the status of the monitored item can be recorded. To stop recording, touch “STOP”.

Example)

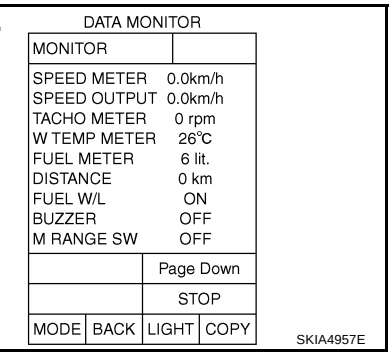

Display Item List

Display item [Unit]	MAIN SIGNALS	SELECTION FROM MENU	Contents
SPEED METER [km/h] or [mph]	X	X	This is the angle correction value after the speed signal from the VDC/TCS/ABS control unit (with VDC system) or ABS actuator and electric unit (without VDC system) is converted into the vehicle speed.
SPEED OUTPUT [km/h] or [mph]	X	X	This is the angle correction value before the speed signal from the VDC/TCS/ABS control unit (with VDC system) or ABS actuator and electric unit (without VDC system) is converted into the vehicle speed.
TACHO METER [rpm]	X	X	This is the converted value for the engine speed signal from the ECM.
W TEMP METER [°C] or [°F]	X	X	This is the converted value for the engine coolant temperature signal from the ECM.
FUEL METER [lit.]	X	X	This is the processed value for the signal (resistance value) from the fuel gauge.
DISTANCE [km] or [mile]	X	X	This is the calculated value for the speed signal from the VDC/TCS/ABS control unit (with VDC system) or ABS actuator and electric unit (without VDC system) and the signal (resistance signal) from the fuel gauge.
FUEL W/L [ON/OFF]	X	X	Indicates [ON/OFF] condition of fuel warning lamp.
MIL [ON/OFF]		X	Indicates [ON/OFF] condition of malfunction indicator lamp.
SEAT BELT W/L [ON/OFF]		X	Indicates [ON/OFF] condition of seat belt warning lamp.
BUZZER [ON/OFF]	X	X	Indicates [ON/OFF] condition of buzzer.
DOOR W/L [ON/OFF]		X	Indicates [ON/OFF] condition of door warning lamp.
HI-BEAM IND [ON/OFF]		X	Indicates [ON/OFF] condition of high beam indicator.
TURN IND [ON/OFF]		X	Indicates [ON/OFF] condition of turn indicator.
OIL W/L [ON/OFF]		X	Indicates [ON/OFF] condition of oil pressure warning lamp.
VDC/TCS IND [ON/OFF]		X	Indicates [ON/OFF] condition of VDC/TCS OFF indicator lamp.
ABS W/L [ON/OFF]		X	Indicates [ON/OFF] condition of ABS warning lamp.
SLIP IND [ON/OFF]		X	Indicates [ON/OFF] condition of SLIP indicator lamp.
BRAKE W/L [ON/OFF]		X	Indicates [ON/OFF] condition of brake warning lamp.*

Display item [Unit]	MAIN SIGNALS	SELECTION FROM MENU	Contents
M RANGE SW [ON/OFF]	X	X	Indicates [ON/OFF] condition of manual mode range switch.
NM RANGE SW [ON/OFF]	X	X	Indicates [ON/OFF] condition of except for manual mode range switch.
AT SFT UP SW [ON/OFF]	X	X	Indicates [ON/OFF] condition of A/T shift up switch.
AT SFT DWN SW [ON/OFF]	X	X	Indicates [ON/OFF] condition of A/T shift down switch.
AT P MODE SW [ON/OFF]		X	Indicates [ON/OFF] condition of A/T power mode switch.
AT S MODE SW [ON/OFF]		X	Indicates [ON/OFF] condition of A/T snow mode switch.
BRAKE SW [ON/OFF]		X	Indicates [ON/OFF] condition of brake switch (stop lamp switch).
AT-M IND [ON/OFF]	X	X	Indicates [ON/OFF] condition of A/T manual mode indicator.
AT-M GEAR [5-1]	X	X	Indicates [5-1] condition of A/T manual mode gear position.
P RANGE IND [ON/OFF]	X	X	Indicates [ON/OFF] condition of A/T shift P range indicator.
R RANGE IND [ON/OFF]	X	X	Indicates [ON/OFF] condition of A/T shift R range indicator.
N RANGE IND [ON/OFF]	X	X	Indicates [ON/OFF] condition of A/T shift N range indicator.
D RANGE IND [ON/OFF]	X	X	Indicates [ON/OFF] condition of A/T shift D range indicator.
AT CHECK W/L [ON/OFF]		X	Indicates [ON/OFF] condition of A/T CHECK warning lamp.
CRUISE IND [ON/OFF]		X	Indicates [ON/OFF] condition of CRUISE indicator.
SET IND [ON/OFF]		X	Indicates [ON/OFF] condition of SET indicator.

NOTE:
Any monitored item that does not match the vehicle being diagnosed is deleted from the display automatically.
*: Monitor keeps indicating “OFF” when brake warning lamp is on by the parking brake operation or low brake fluid level.

Removal and Installation of Unified Meter and A/C Amp.

AKS0095A

REMOVAL

1. Remove the console finisher (A/T) or console boot (M/T). Refer to IP-10, "INSTRUMENT PANEL ASSEMBLY" .
2. Remove the fixing screws, then remove the unified meter and A/C amp.

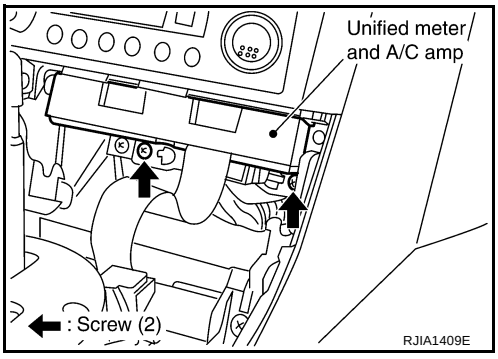

INSTALLATION

Installation is basically the reverse order of removal.

WARNING LAMPS

PFP:24814

Schematic

AKS0095B

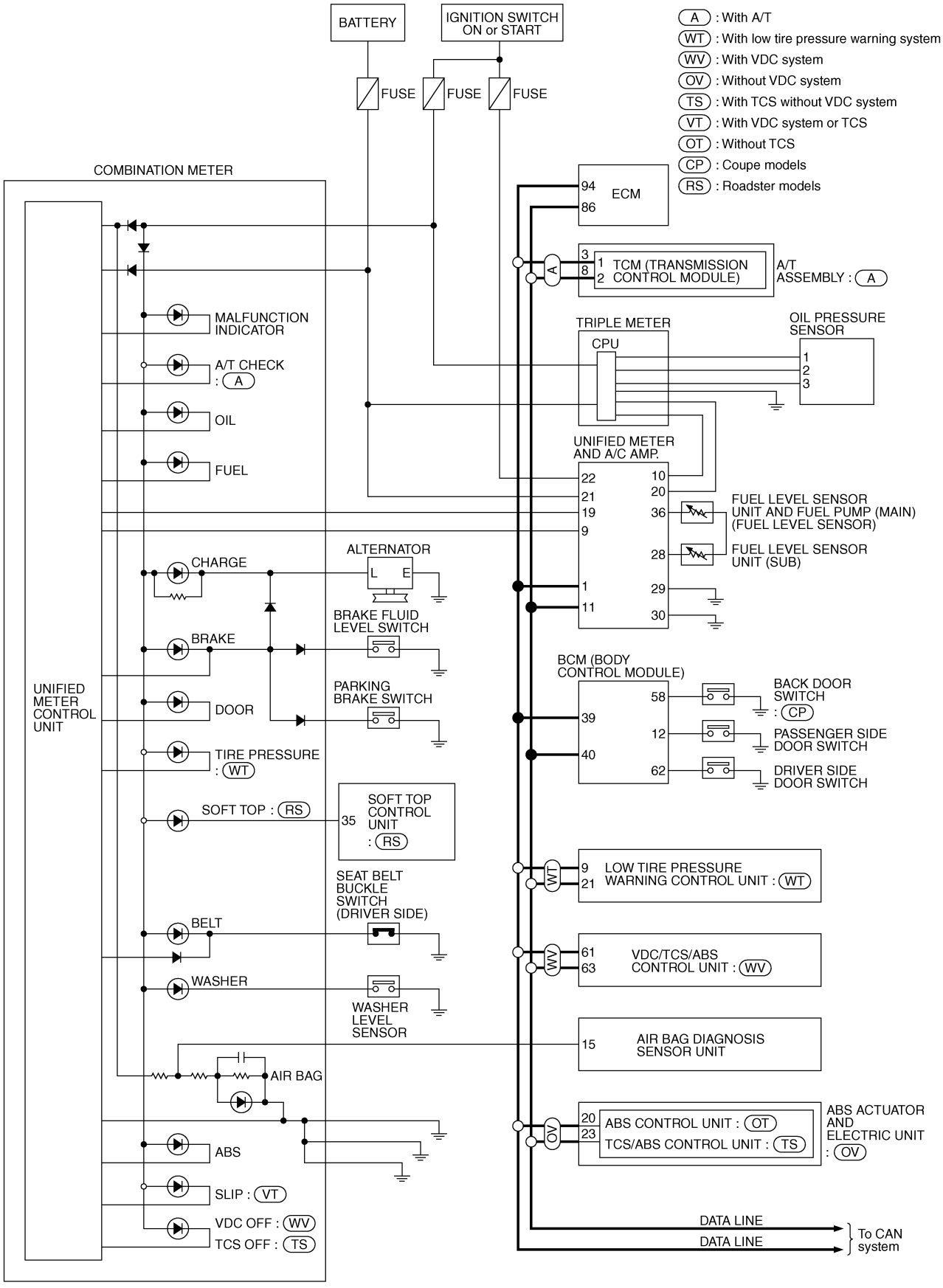

Wiring Diagram — WARN —

AKS0095C

DI-WARN-01

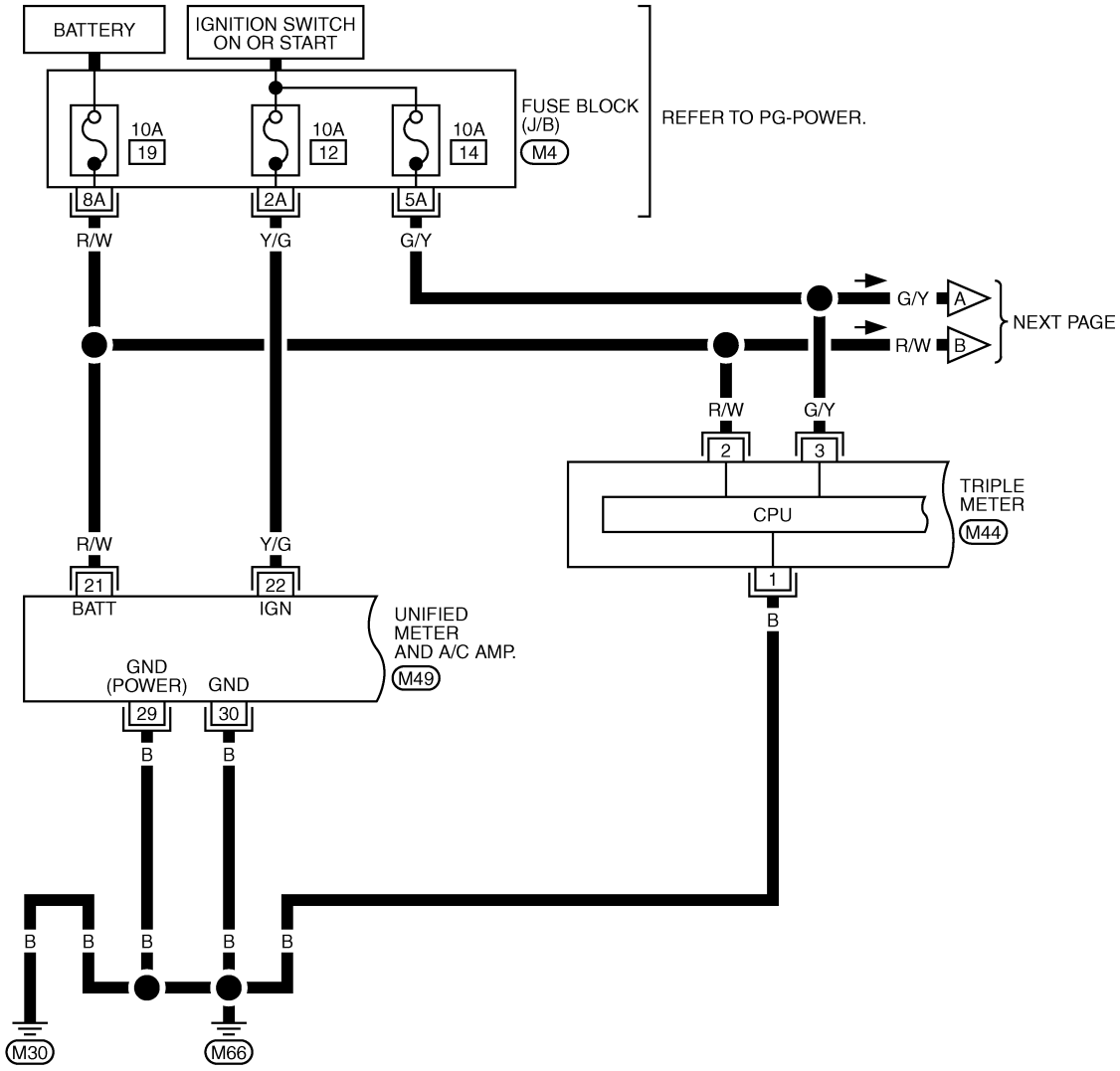

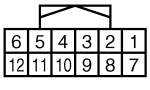

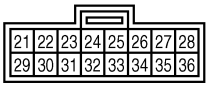

REFER TO THE FOLLOWING.
M4 -FUSE BLOCK-JUNCTION BOX (J/B)

TKWT0485E

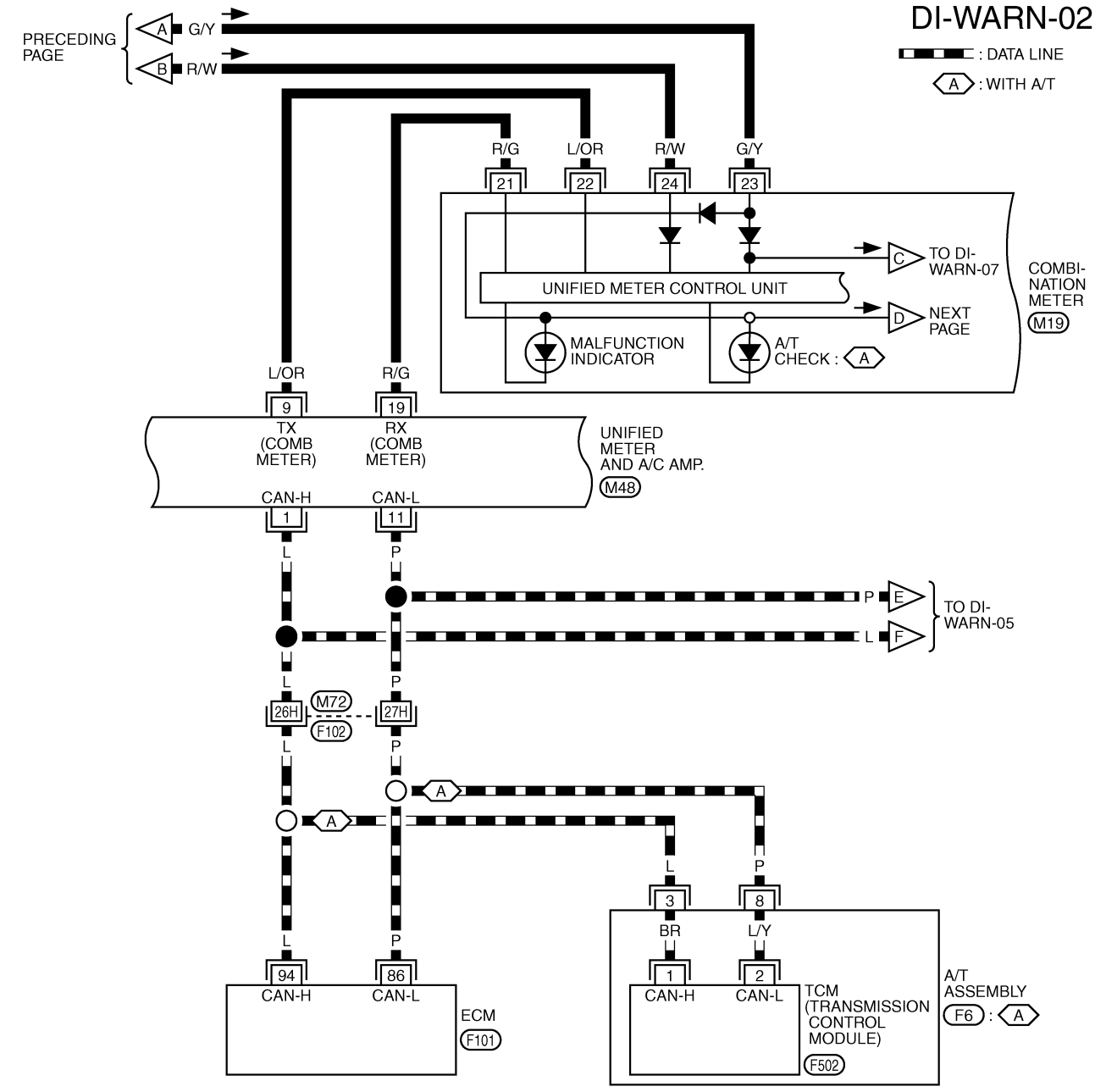

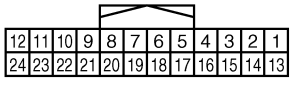

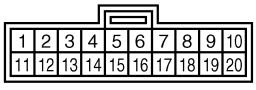

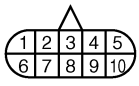

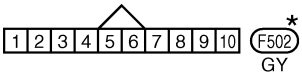

*: THIS CONNECTOR IS NOT SHOWN IN "HARNESS LAYOUT", PG SECTION.

REFER TO THE FOLLOWING.

F102 -SUPER MULTIPLE JUNCTION (SMJ)

F101 -ELECTRICAL UNITS

TKWM1319E

DI-WARN-03

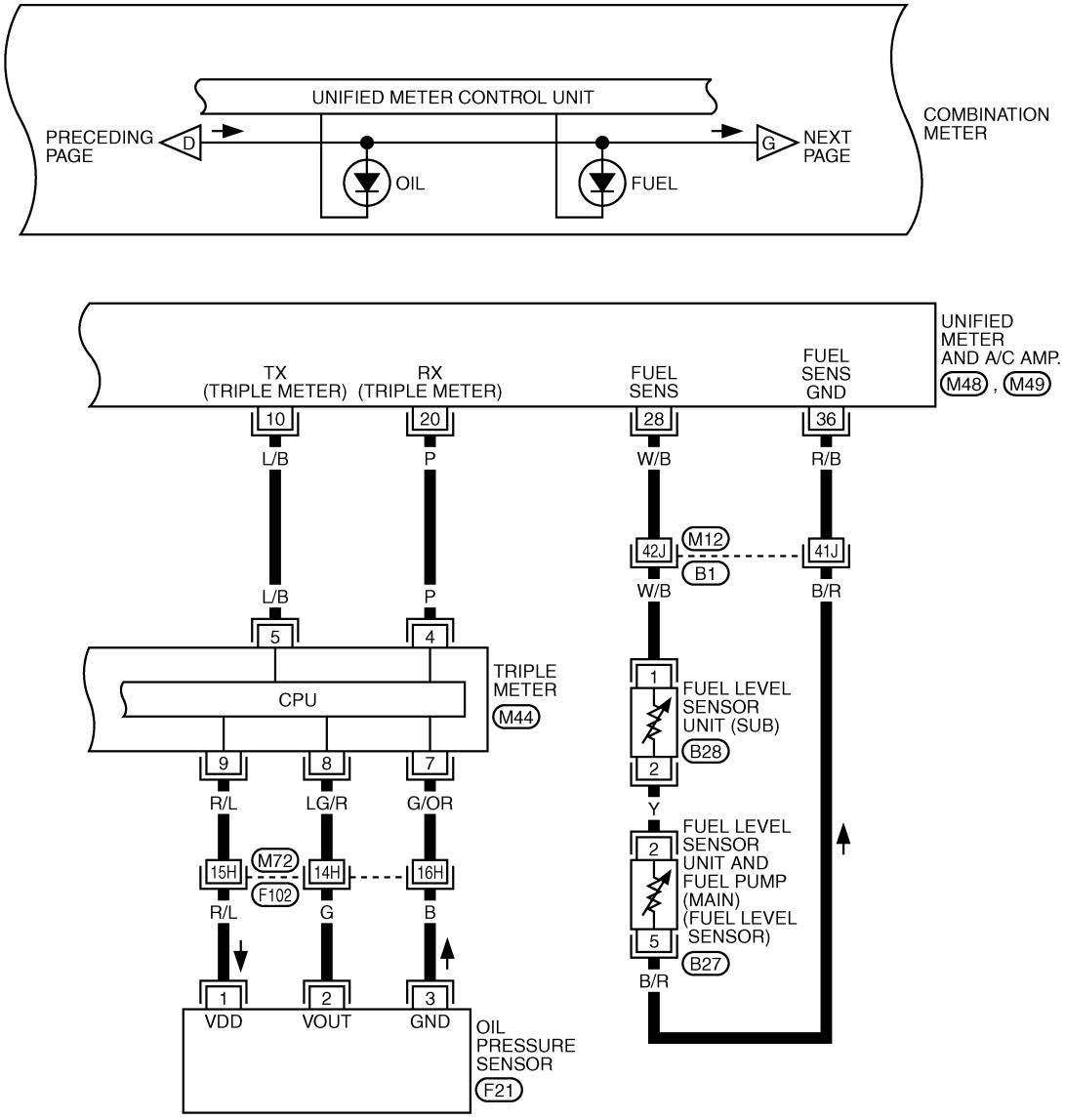

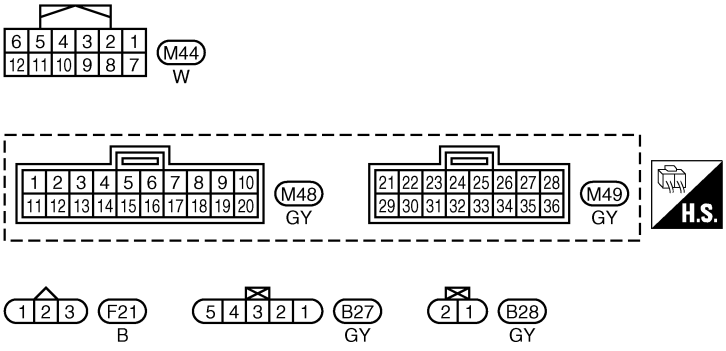

REFER TO THE FOLLOWING.
F102 , B1 -SUPER MULTIPLE JUNCTION (SMJ)

TKWT1630E

DI-WARN-04

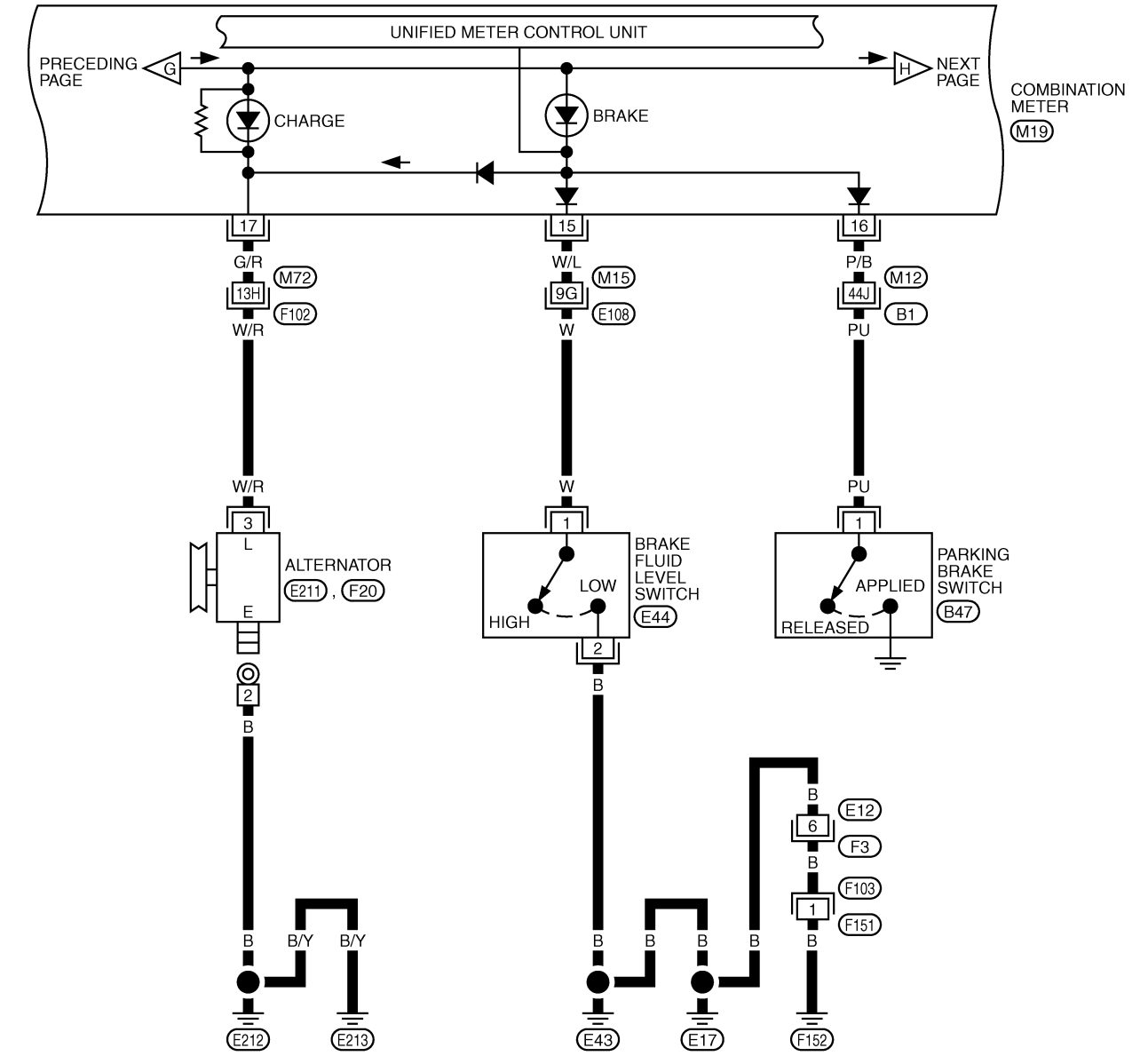

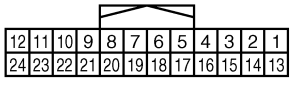

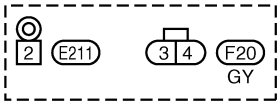

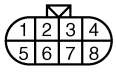

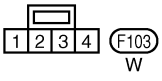

REFER TO THE FOLLOWING.
E108 , F102 , B1 -SUPER MULTIPLE JUNCTION (SMJ)

TKWT1631E

DI-WARN-05

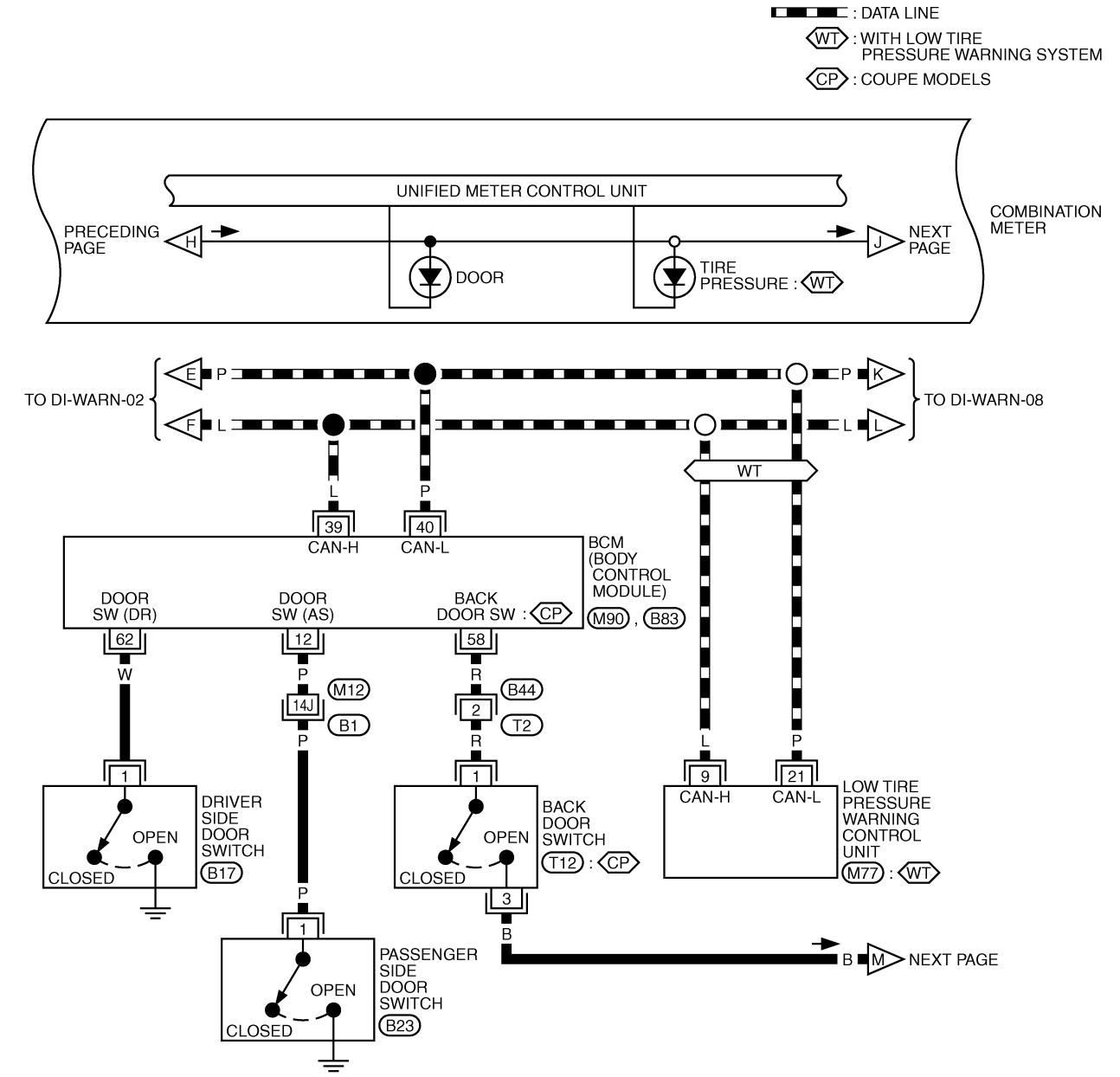

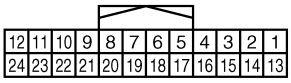

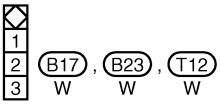

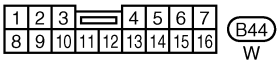

REFER TO THE FOLLOWING.

B1 -SUPER MULTIPLE JUNCTION (SMJ)

M90 , B83 -ELECTRICAL UNITS

TKWT1842E

DI-WARN-06

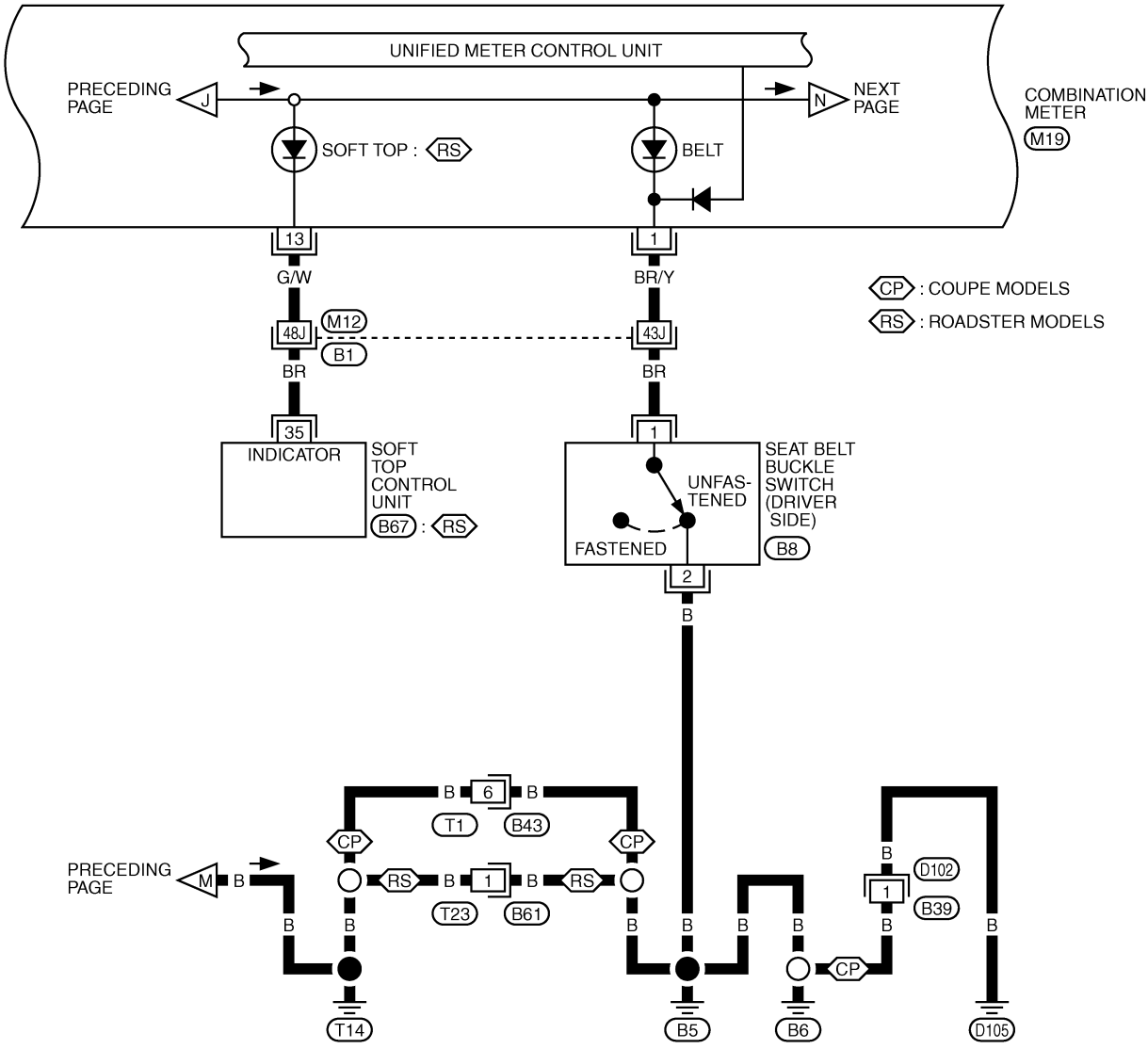

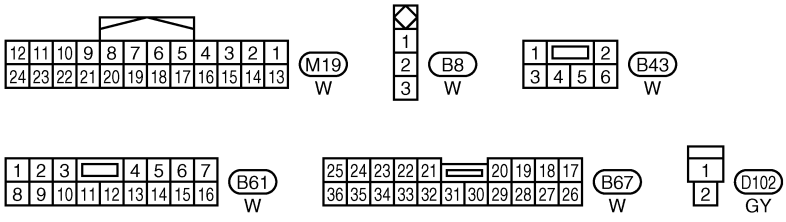

REFER TO THE FOLLOWING.

B1 -SUPER MULTIPLE JUNCTION (SMJ)

TKWT1633E

DI-WARN-07

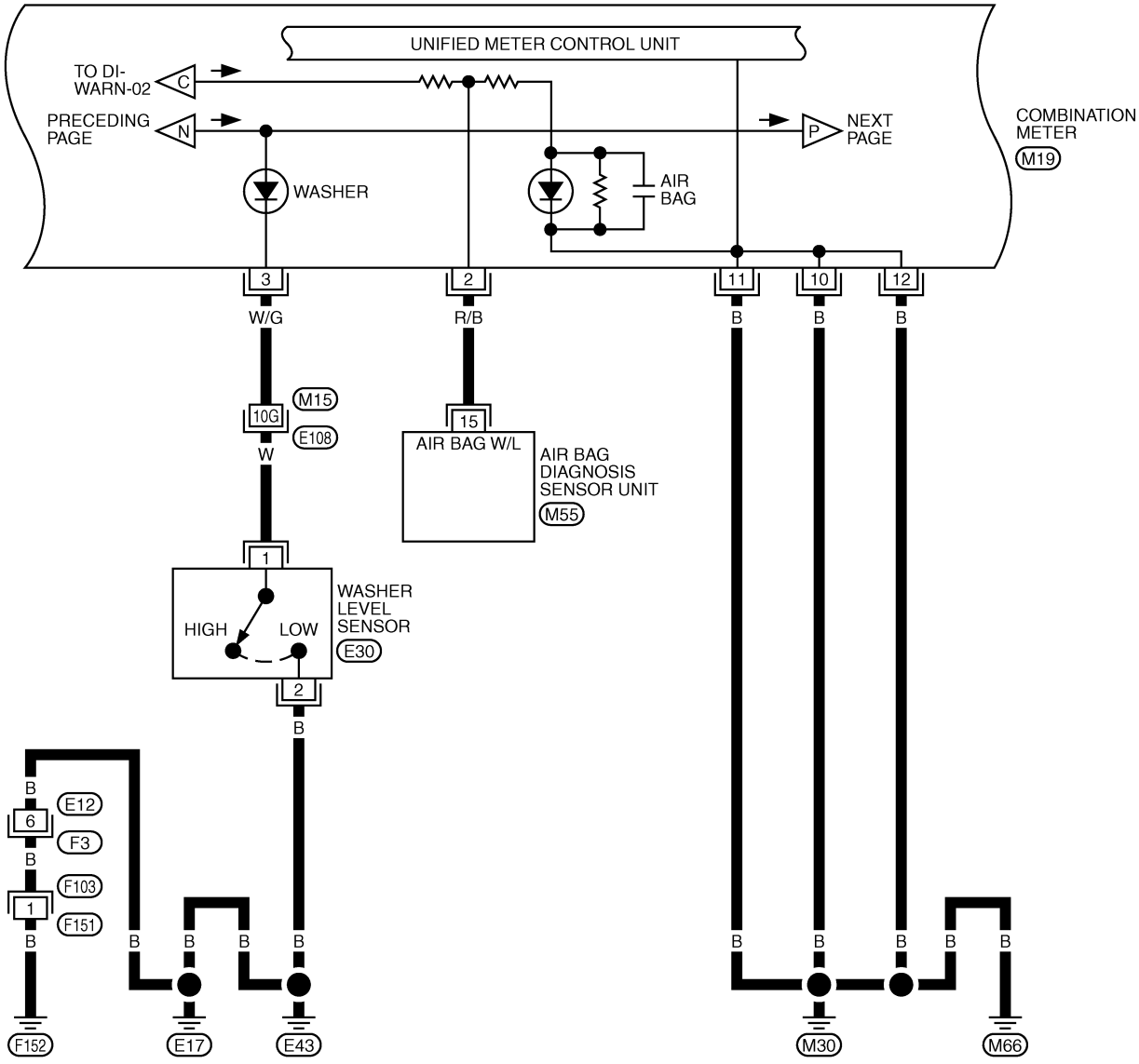

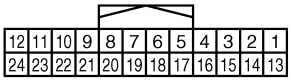

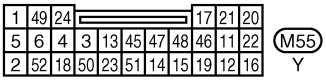

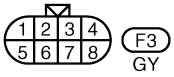

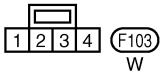

REFER TO THE FOLLOWING.
E108 -SUPER MULTIPLE JUNCTION (SMJ)

TKWT1634E

DI-WARN-08

: DATA LINE
WV : WITH VDC SYSTEM
OV : WITHOUT VDC SYSTEM
TS : WITH TCS WITHOUT VDC SYSTEM
VT : WITH VDC SYSTEM OR TCS

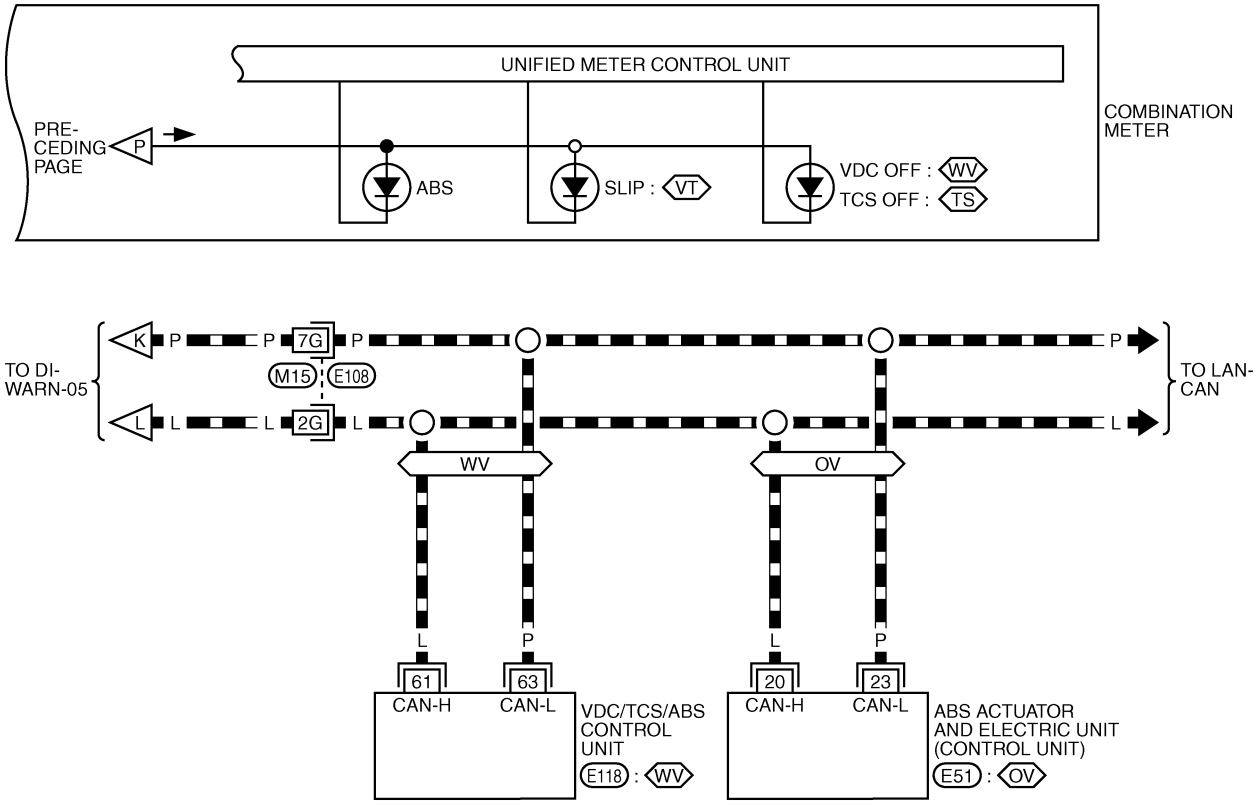

REFER TO THE FOLLOWING.
E108 -SUPER MULTIPLE JUNCTION (SMJ)
E51 , E118 -ELECTRICAL UNITS

TKWT1635E

Oil Pressure Warning Lamp Stays Off (Ignition Switch ON) or Stays On (Oil Pressure Is Normal)

AKS0095E

NOTE:
For oil pressure inspection, refer to LU-7, "OIL PRESSURE CHECK" .

1. CHECK SELF-DIAGNOSTIC RESULTS OF UNIFIED METER AND A/C AMP.

Select “METER A/C AMP” on CONSULT-II, and then perform self-diagnosis of unified meter and A/C amp. Refer to DI-58, "CONSULT-II Function" .

Self-diagnostic results content

No malfunction detected>>GO TO 2.
Malfunction detected>>Go to DI-17, "Symptom Chart 2" in “COMBINATION METER”.

2. CHECK UNIFIED METER AND A/C AMP. INPUT SIGNAL

Select “METER A/C AMP” on CONSULT-II. Operate ignition switch with “OIL W/L” of “DATA MONITOR” and check operation status.

When ignition switch is in ON position (Engine stopped) : OIL W/L ON

When engine running : OIL W/L OFF

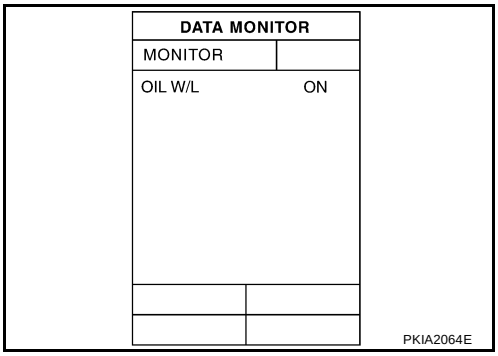

OK or NG

OK >> Replace combination meter.
NG >> GO TO 3.

3. CHECK OIL PRESSURE SENSOR SIGNAL

Check voltage between triple meter harness connector M44 terminal 8 (LG/R) and ground.

Terminals			Condition	Voltage (V)
(+)		(–)		
Connector	Terminal (Wire color)			
M44	8 (LG/R)	Ground	When ignition switch is in ON position (Engine stopped.)	Approx. 1
			Engine running [When the oil pressure is 80psi (500kPa)]	Approx. 3

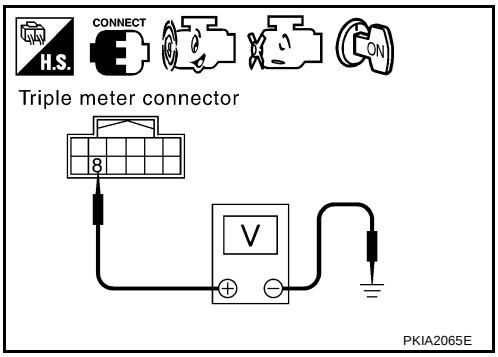

OK or NG

OK >> Replace triple meter.
NG >> GO TO 4.

4. CHECK OIL PRESSURE SENSOR INPUT SIGNAL CIRCUIT

1. Turn ignition switch OFF.
2. Disconnect triple meter and oil pressure sensor connector.
3. Check continuity between triple meter harness connector M44 terminal 8 (LG/R) and oil pressure sensor harness connector F21 terminal 2 (G).

   Continuity should exist.

4. Check continuity between triple meter harness connector M44 terminal 8 (LG/R) and ground.

   Continuity should not exist.

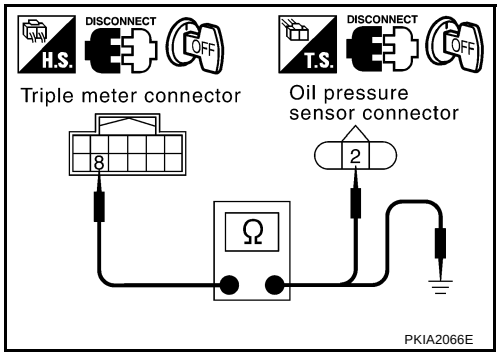

OK or NG

OK >> GO TO 5.
NG >> Repair harness or connector.

5. CHECK OIL PRESSURE SENSOR POWER SUPPLY CIRCUIT

1. Check continuity between triple meter harness connector M44 terminal 9 (R/L) and oil pressure sensor harness connector F21 terminal 1 (R/L).

   Continuity should exist.

2. Check continuity between triple meter harness connector M44 terminal 9 (R/L) and ground.

   Continuity should not exist.

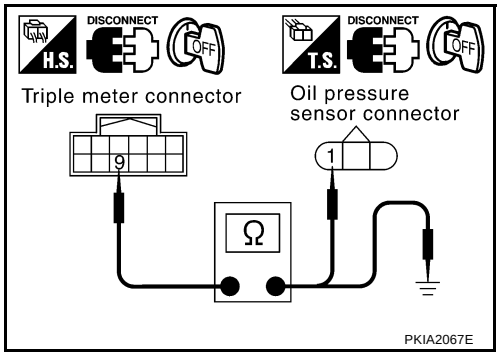

OK or NG

OK >> GO TO 6.
NG >> Repair harness or connector.

6. CHECK OIL PRESSURE SENSOR GROUND CIRCUIT

Check continuity between triple meter harness connector M44 terminal 7 (G/OR) and oil pressure sensor harness connector F21 terminal 3 (B).

Continuity should exist.

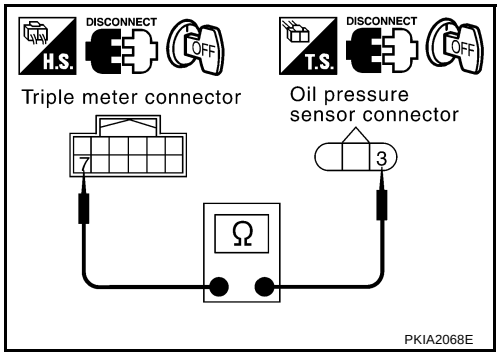

OK or NG

OK >> GO TO 7.
NG >> Repair harness or connector.

7. CHECK OIL PRESSURE SENSOR POWER SUPPLY

1. Connect triple meter connector.
2. Turn ignition switch ON.
3. Check voltage between triple meter harness connector M44 terminal 9 (R/L) and ground.

Approx. 5V

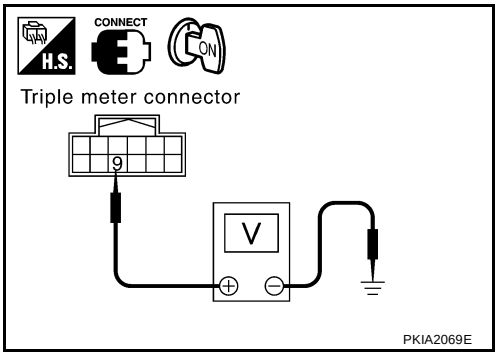

OK or NG

OK >> Replace oil pressure sensor.
NG >> Replace triple meter.

A/T INDICATOR

PFP:24814

Wiring Diagram — AT/IND —

AKS0095F

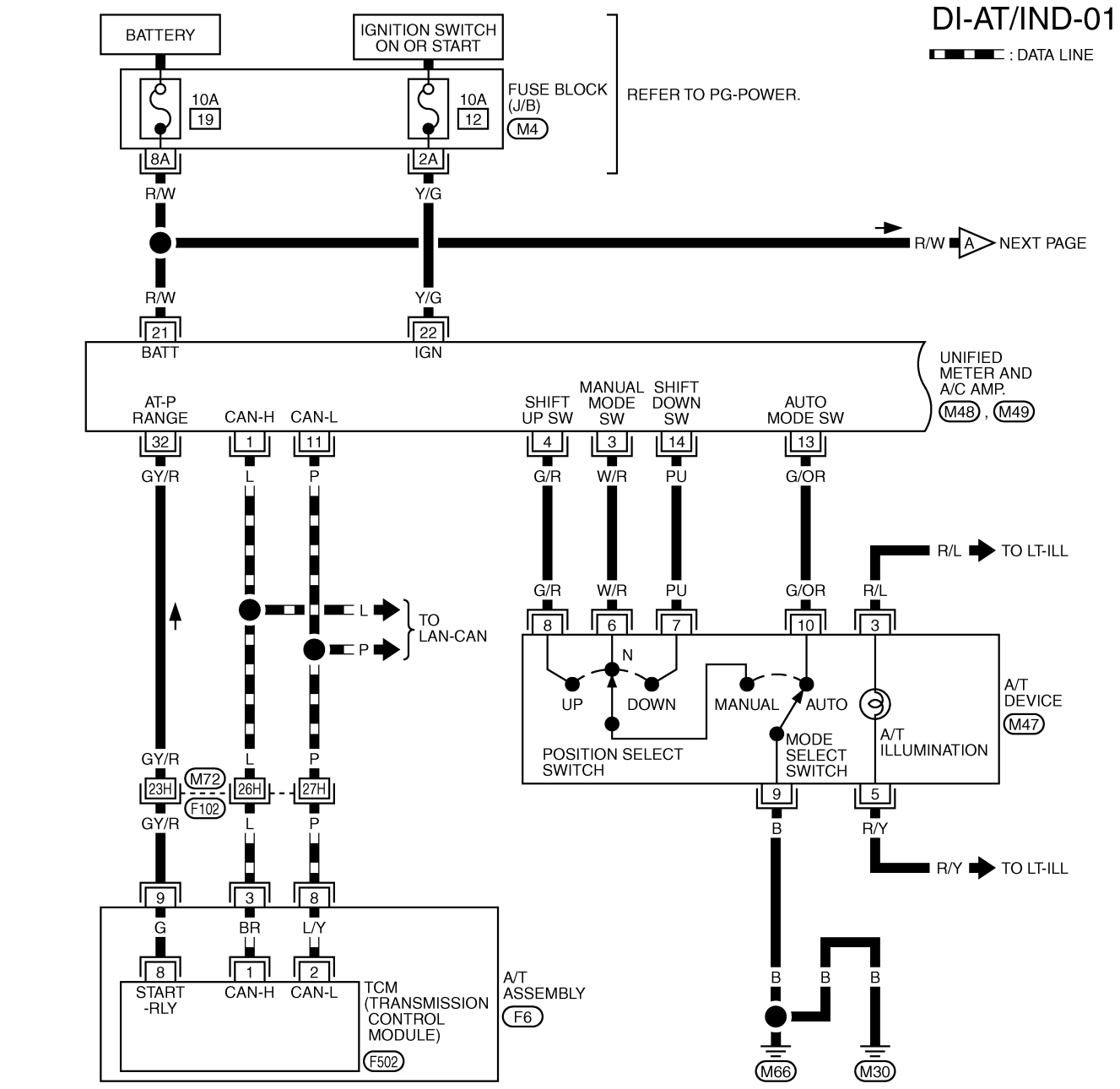

REFER TO THE FOLLOWING.

F102 -SUPER MULTIPLE JUNCTION (SMJ)

M4 -FUSE BLOCK-JUNCTION BOX (J/B)

TKWM1320E

DI-AT/IND-02

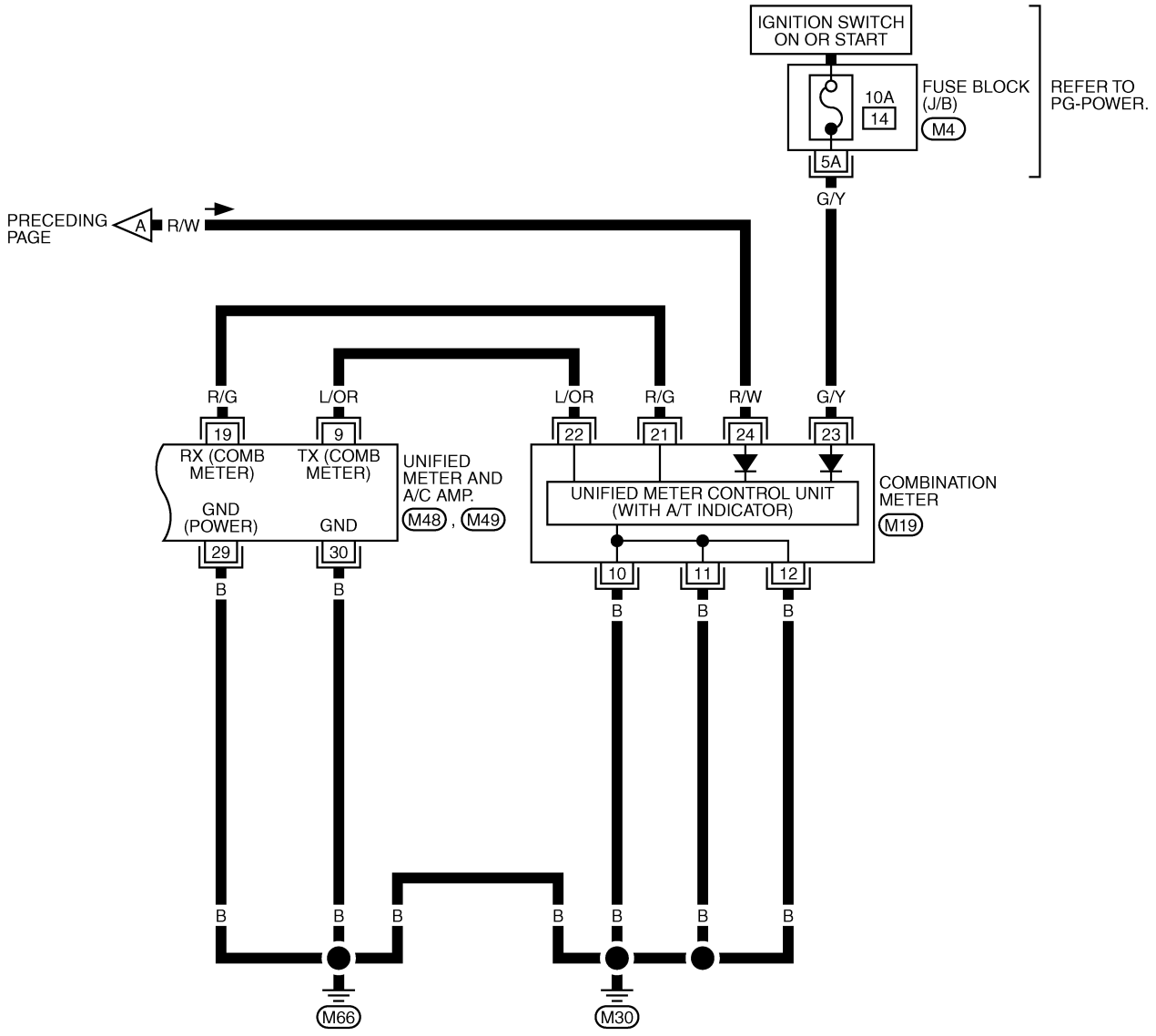

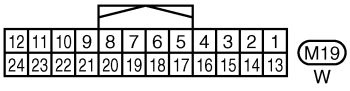

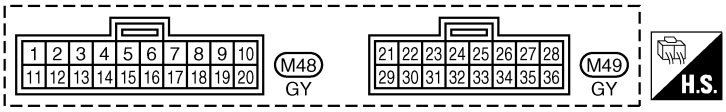

REFER TO THE FOLLOWING.
M4 -FUSE BLOCK-JUNCTION BOX (J/B)

TKWT0493E

A/T Indicator Is Malfunction

AKS0095G

1. CHECK SELF-DIAGNOSIS OF COMBINATION METER

Perform combination meter self-diagnosis. Refer to DI-13, "HOW TO ALTERNATE DIAGNOSIS MODE" .

Are all segments displayed?

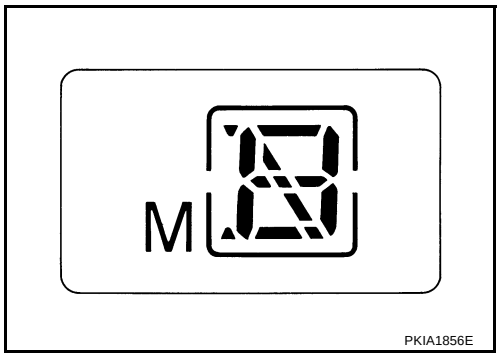

YES or NO

YES >> GO TO 2.
NO >> Replace combination meter.

2. CHECK SELF-DIAGNOSTIC RESULTS OF UNIFIED METER AND A/C AMP.

Select “METER A/C AMP” on CONSULT-II, and then perform self-diagnosis of unified meter and A/C amp. Refer to DI-58, "CONSULT-II Function" .

Self-diagnostic results content

No malfunction detected>>GO TO 3.
Malfunction detected>> Go to DI-17, "Symptom Chart 2" in combination meter.

3. CHECK UNIFIED METER AND A/C AMP. INPUT SIGNAL

1. Connect CONSULT-II and start engine.
2. Use “DATA MONITOR” of “METER A/C AMP” on CONSULT-II. Confirm each indication on the monitor when operating the shift lever.

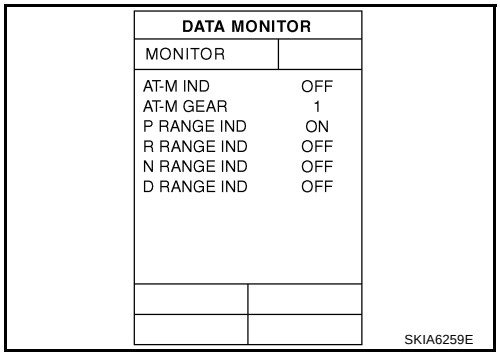

CONSULT-II display	Switch operation	Operation status
AT-M IND	Manual mode range	ON
	Except for manual mode range	OFF
AT-M GEAR	Manual mode range (shift up or down)	5-1
	Except for manual mode range	1
P RANGE IND	P range position	ON
	Except for P range position	OFF
R RANGE IND	R range position	ON
	Except for R range position	OFF
N RANGE IND	N range position	ON
	Except for N range position	OFF
D RANGE IND	D range position	ON
	Except for D range position	OFF

OK or NG

OK >> Replace combination meter.
NG >> GO TO 4.

4. CHECK TCM SELF-DIAGNOSIS

Perform TCM self-diagnosis. Refer to AT-86, "CONSULT-II" .

Self-diagnostic results content

No malfunction detected>>Replace unified meter and A/C amp. Refer to DI-61, "Removal and Installation of Unified Meter and A/C Amp." .
Malfunction detected>>Check applicable parts, and repair or replace corresponding parts.

WARNING CHIME

PFP:24814

Component Parts and Harness Connector Location

AKS0095H

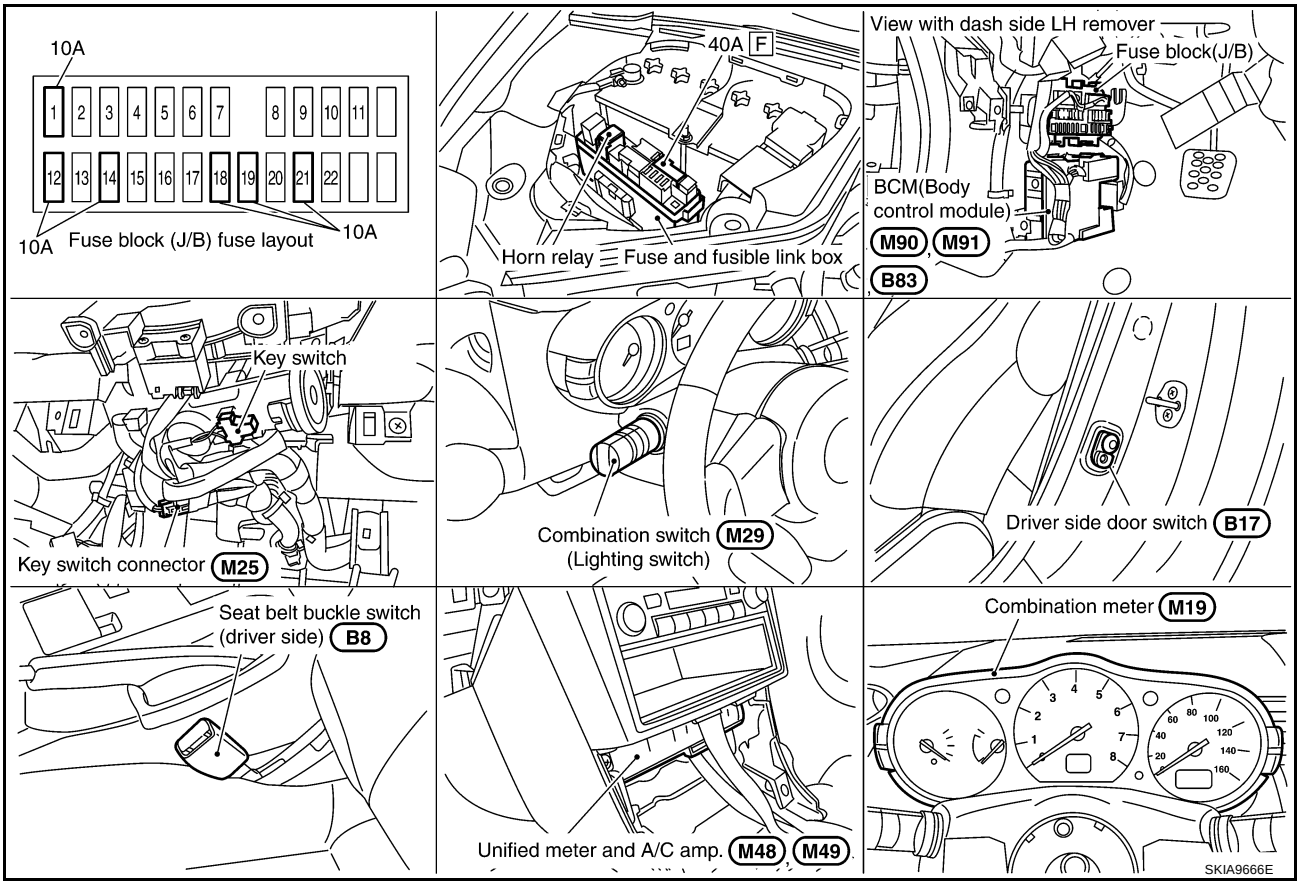

System Description

AKS0095I

FUNCTION

Power is supplied at all times

- through 40A fusible link (letter **F** , located in the fuse and fusible link box)
- to BCM terminal 55
- through 10A fuse [No. 18, located in the fuse block (J/B)]
- to BCM terminal 42
- through 10A fuse [No. 21, located in the fuse block (J/B)]
- to key switch terminal 2
- through 10A fuse [No. 19, located in the fuse block (J/B)]
- to unified meter and A/C amp. terminal 21, and
- to combination meter terminal 24.

When ignition switch ON or START position, power is supplied

- through 10A fuse [No. 1, located in the fuse block (J/B)]
- to BCM terminal 38
- through 10A fuse [No. 12, located in the fuse block (J/B)]
- to unified meter and A/C amp. terminal 22
- through 10A fuse [No. 14, located in the fuse block (J/B)]
- to combination meter terminal 23.

Ground is supplied

- to BCM terminal 52
- through body grounds M30 and M66
- to unified meter and A/C amp. terminals 29 and 30

- through body grounds M30 and M66
- to combination meter terminals 10, 11 and 12
- through body grounds M30 and M66.

IGNITION KEY WARNING CHIME

With the key inserted into the ignition switch, and the driver's door open, the warning chime will sound.
Power is supplied

- through key switch terminal 1
- to BCM terminal 37.

Ground is supplied

- to BCM terminal 62
- through driver side door switch terminal 1.

Driver side door switch is case grounded.
BCM detects key inserted into the ignition switch, and sends key warning signal to unified meter and A/C amp. with CAN communication line. Unified meter and A/C amp. sends key warning signal to combination meter with communication line between unified meter and A/C amp. and combination meter.
When combination meter receives key warning signal, it sounds warning chime.

LIGHT WARNING CHIME

With the key removed from the ignition switch, the driver's door open, and the lighting switch in 1ST or 2ND position, the warning chime will sound. [Except when headlamp battery saver control operates (for 5 minutes after ignition switch is turned to OFF or ACC position) and headlamps do not illuminate.]
Signal is supplied

- from combination switch (lighting switch) terminals 1, 2, 3, 4, 5, 6, 7, 8, 9 and 10
- to BCM terminals 2, 3, 4, 5, 6, 32, 33, 34, 35 and 36.

  NOTE:
  BCM detected lighting switch in 1st or 2nd position, refer to BCS-3, "COMBINATION SWITCH READING FUNCTION" .

Ground is supplied

- to BCM terminal 62
- through driver side door switch terminal 1.

Driver side door switch is case grounded.
BCM detects headlamps are illuminated, and sends light warning signal to unified meter and A/C amp. with CAN communication line. Unified meter and A/C amp. sends light warning signal to combination meter with communication line between unified meter and A/C amp. and combination meter.
When combination meter receives light warning signal, it sounds warning chime.

SEAT BELT WARNING CHIME

With ignition switch turned ON and seat belt unfastened [seat belt buckle switch (driver side) ON], warning chime will sound for approximately 6 seconds.
Ground is supplied

- to combination meter terminal 1
- through seat belt buckle switch (driver side) terminal 1.

Seat belt buckle switch (driver side) terminal 2 is grounded through body grounds B5, B6, D105 (COUPE models only) and T14.
Combination meter sends seat belt unfastened [seat belt buckle switch (driver side) ON] signal to unified meter and A/C amp. with communication line between unified meter and A/C amp. and combination meter.
BCM receives seat belt unfastened [seat belt buckle switch (driver side) ON] signal from unified meter and A/C amp. with CAN communication line, and sends seat belt warning signal to unified meter and A/C amp. with CAN communication line. Unified meter and A/C amp. sends seat belt warning signal to combination meter with communication line between unified meter and A/C amp. and combination meter.
When combination meter receives seat belt warning signal, it sounds warning chime.

CAN Communication System Description

AKS0095J

CAN (Controller Area Network) is a serial communication line for real time application. It is an on-vehicle multiplex communication line with high data communication speed and excellent error detection ability. Many electronic control units are equipped onto a vehicle, and each control unit shares information and links with other control units during operation (not independent). In CAN communication, control units are connected with 2 communication lines (CAN H line, CAN L line) allowing a high rate of information transmission with less wiring. Each control unit transmits/receives data but selectively reads required data only.

CAN Communication Unit

AKS00A2E

Refer to LAN-5, "CAN Communication Unit" in “LAN SYSTEM”.

Schematic

AKS0095L

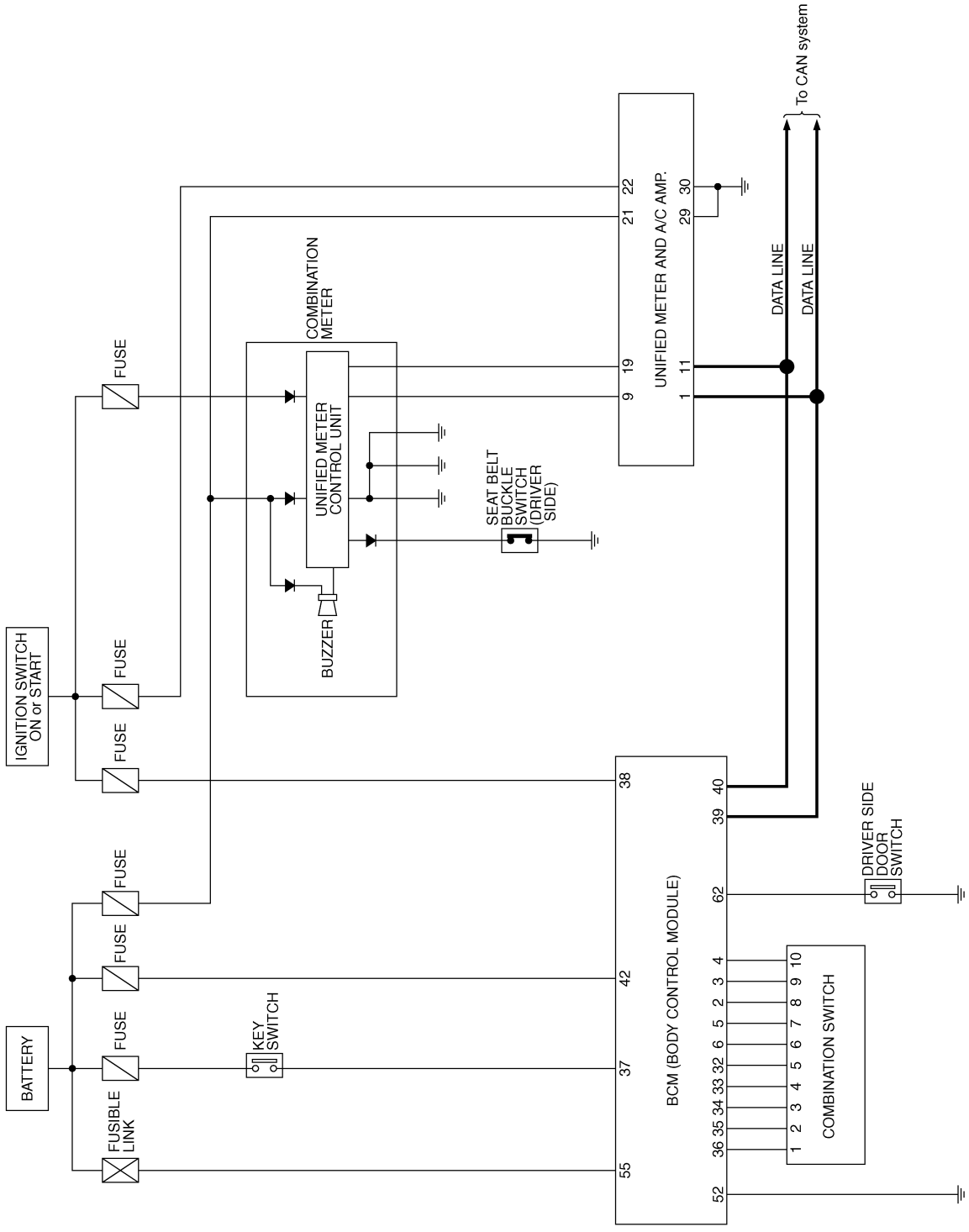

TKWT1846E

Wiring Diagram — CHIME —

AKS0095M

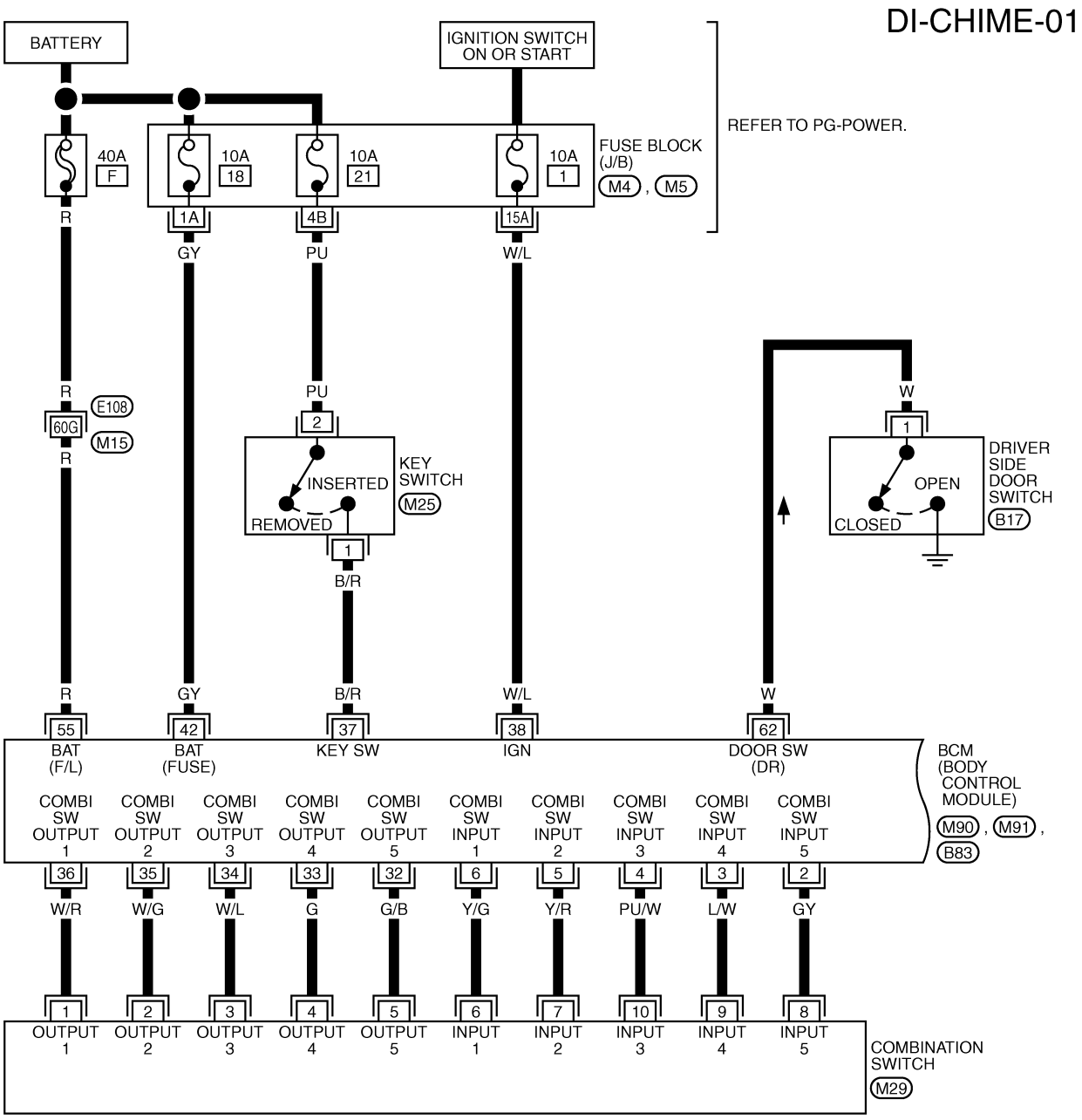

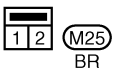

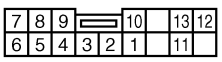

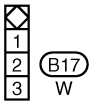

REFER TO THE FOLLOWING.
E108 -SUPER MULTIPLE JUNCTION (SMJ)
M4 , M5 -FUSE BLOCK-JUNCTION BOX (J/B)
M90 , M91 , B83 -ELECTRICAL UNITS

TKWT1847E

DI-CHIME-02

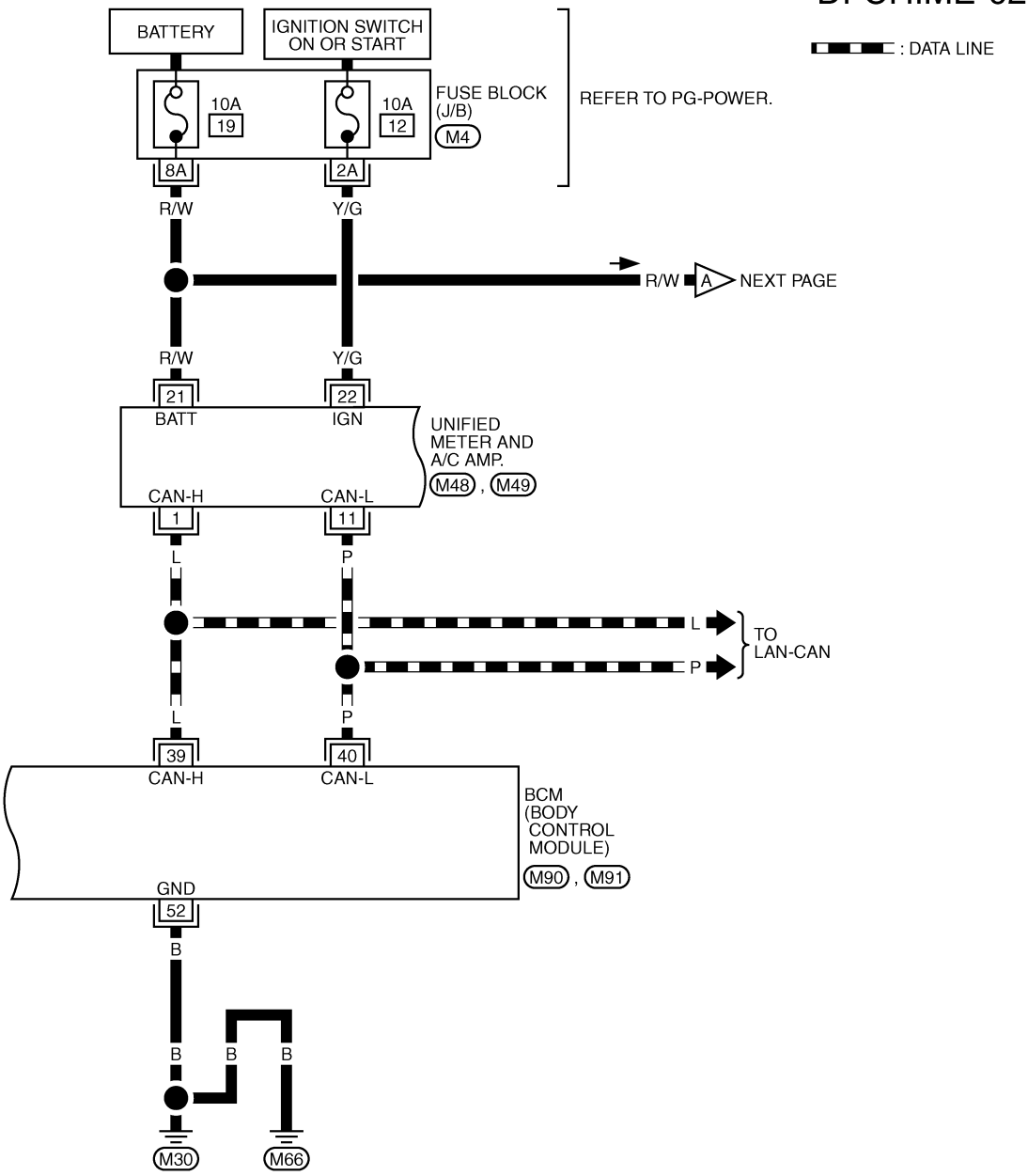

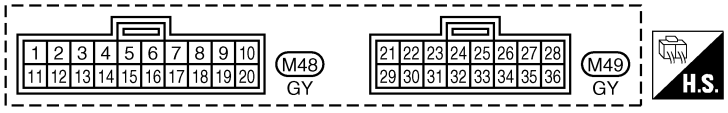

REFER TO THE FOLLOWING.

M4 -FUSE BLOCK-JUNCTION BOX (J/B)

M90 , M91 -ELECTRICAL UNITS

TKWT1848E

DI-CHIME-03

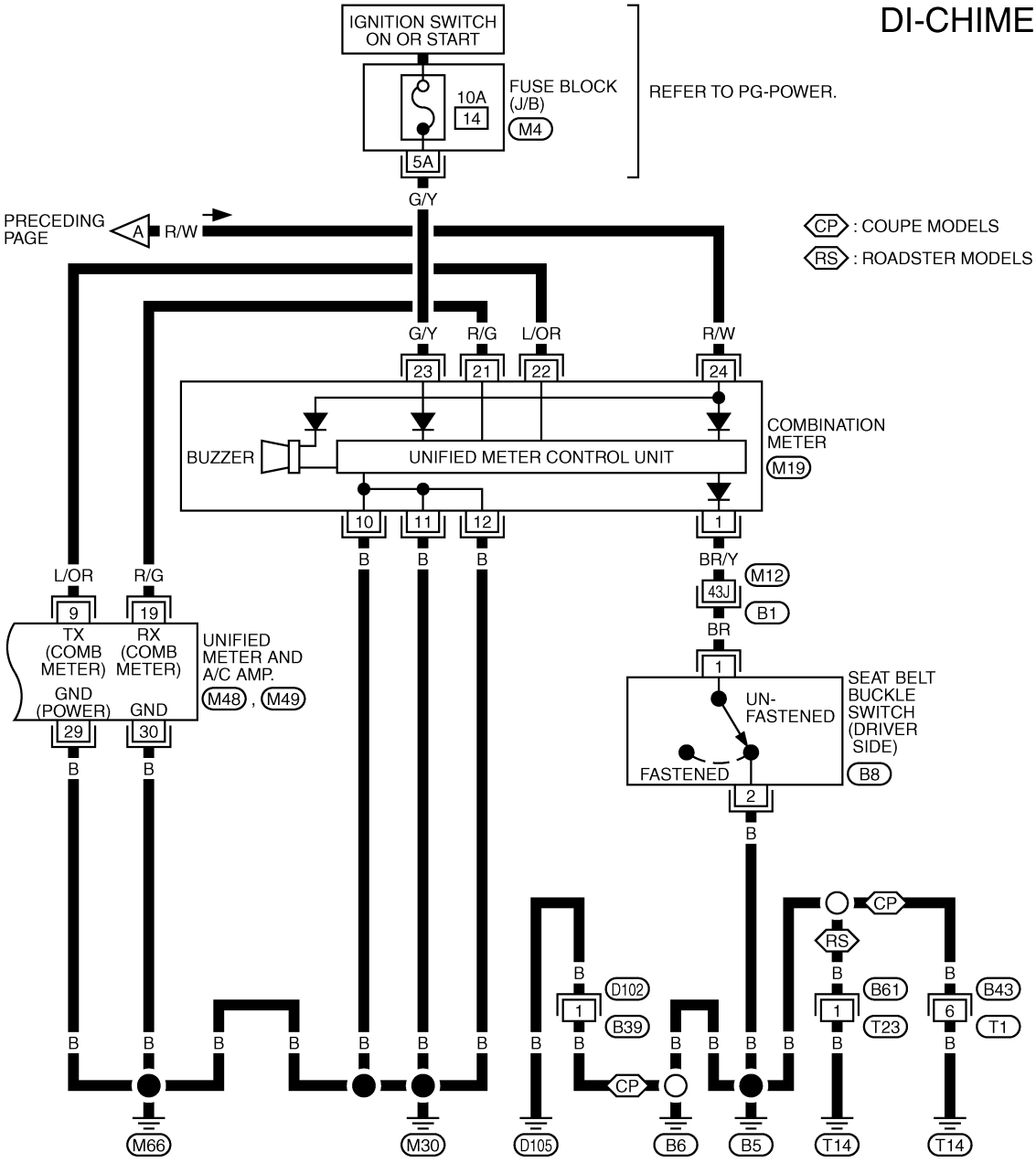

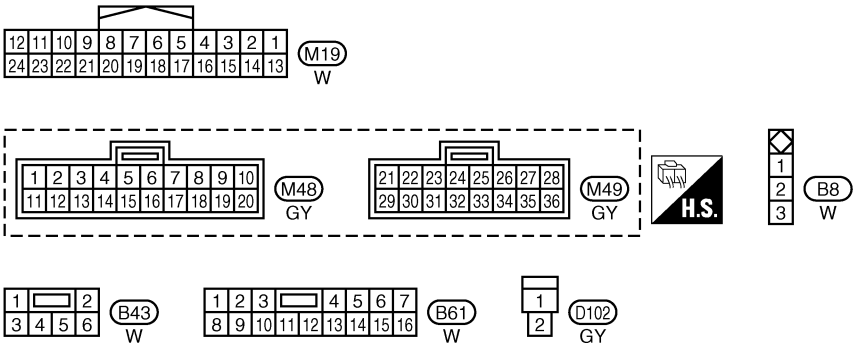

REFER TO THE FOLLOWING.

B1 -SUPER MULTIPLE JUNCTION (SMJ)

M4 -FUSE BLOCK-JUNCTION BOX (J/B)

TKWT1636E

Terminals and Reference Value for BCM

AKS0095O

Terminal No.	Wire color	Signal name	Measuring condition		Reference value
			Ignition switch	Operation or condition	
2	GY	Combination switch input 5	ON	Lighting, turn, wiper OFF Wiper dial position 4	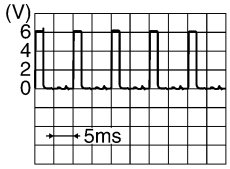 SKIA5291E
3	L/W	Combination switch input 4	ON	Lighting, turn, wiper OFF Wiper dial position 4	 SKIA5292E
4	PU/W	Combination switch input 3	ON	Lighting, turn, wiper OFF Wiper dial position 4	 SKIA5291E
5	Y/R	Combination switch input 2	ON	Lighting, turn, wiper OFF Wiper dial position 4	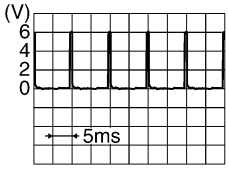 SKIA5292E
6	Y/G	Combination switch input 1			
32	G/B	Combination switch output 5	ON	Lighting, turn, wiper OFF Wiper dial position 4	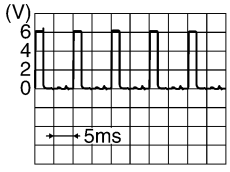 SKIA5291E
33	G	Combination switch output 4	ON	Lighting, turn, wiper OFF Wiper dial position 4	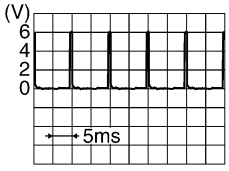 SKIA5292E
34	W/L	Combination switch output 3	ON	Lighting, turn, wiper OFF Wiper dial position 4	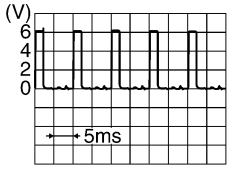 SKIA5291E

Terminal No.	Wire color	Signal name	Measuring condition		Reference value
			Ignition switch	Operation or condition	
35	W/G	Combination switch output 2	ON	Lighting, turn, wiper OFF Wiper dial position 4	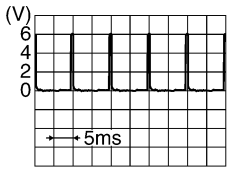 SKIA5292E
36	W/R	Combination switch output 1			
37	B/R	Key switch signal	OFF	Key is removed.	Approx. 0V
				Key is inserted.	Approx. 12V
38	W/L	Ignition switch (ON)	ON	—	Battery voltage
39	L	CAN H	—	—	—
40	P	CAN L	—	—	—
42	GY	Battery power supply (FUSE)	OFF	—	Battery voltage
52	B	Ground	ON	—	Approx. 0V
55	R	Battery power supply (F/L)	OFF	—	Battery voltage
62	W	Driver side door switch signal	OFF	Door switch is released. (Door switch ON)	Approx. 0V
				Door switch is pushed. (Door switch OFF)	Approx. 5V

Terminals and Reference Value for Unified Meter and A/C Amp.

AKS0095P

Terminal No.	Wire color	Item	Measuring condition		Reference value (V)
			Ignition switch	Operation or condition	
1	L	CAN H	OFF	—	—
9	L/OR	TX communication line (To combination meter)	ON	—	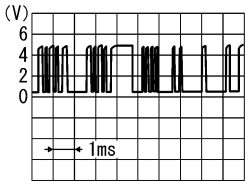 SKIA3362E
11	P	CAN L	OFF	—	—
19	R/G	RX communication line (From combination meter)	ON	—	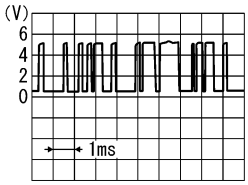 SKIA3361E
21	R/W	Battery power supply	OFF	—	Battery voltage
22	Y/G	Ignition switch ON or START	ON	—	Battery voltage
29	B	Ground (POWER)	ON	—	Approx. 0
30	B	Ground	ON	—	Approx. 0

Terminals and Reference Value for Combination Meter

AKS0095Q

Terminal No.	Wire color	Item	Measuring condition		Reference value (V)
			Ignition switch	Operation or condition	
1	BR/Y	Seat belt buckle switch (Driver side)	ON	Seat belt is unfastened.	Approx. 0
				Seat belt is fastened.	Approx. 5
10	B	Ground	ON	—	Approx. 0
11					
12					
21	R/G	TX communication line (To unified meter and A/C amp.)	ON	—	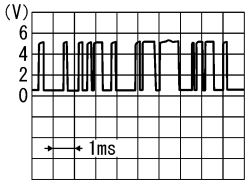 SKIA3361E
22	L/OR	RX communication line (From unified meter and A/C amp.)	ON	—	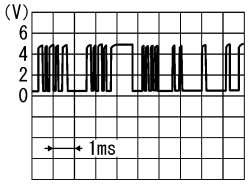 SKIA3362E
23	G/Y	Ignition switch ON or START	ON	—	Battery voltage
24	R/W	Battery power supply	OFF	—	Battery voltage

How to Proceed With Trouble Diagnosis

AKS0095R

1. Confirm the symptom or customer complaint.
2. Understand operation description and function description. Refer to DI-77, "System Description" .
3. Perform the Preliminary Check. Refer to DI-87, "Preliminary Check" .
4. Select “METER A/C AMP” on CONSULT-II, and then perform self-diagnosis of unified meter and A/C amp. Refer to DI-58, "CONSULT-II Function" . When no malfunction detected, go to next step 5. When malfunction detected, go to DI-17, "Symptom Chart 2" in “COMBINATION METER”.
5. Check symptom and repair or replace the cause of malfunction.
6. Does the warning chime operate normally? If so, go to 7. If not, go to 5.
7. INSPECTION END

Preliminary Check

AKS0095S

INSPECTION FOR POWER SUPPLY AND GROUND CIRCUIT

1. CHECK FUSE AND FUSIBLE LINK

Check for blown BCM fuse and fusible link.

Unit	Power source	Fuse and fusible link No.
BCM	Battery	F
		18
	Ignition switch ON or START	1

OK or NG

OK >> GO TO 2.

NG >> If fuse is blown, be sure to eliminate cause of malfunction before installing new fuse. Refer to PG-4, "POWER SUPPLY ROUTING CIRCUIT" .

2. CHECK POWER SUPPLY CIRCUIT

1. Disconnect BCM connector.
2. Check voltage between BCM harness connector and ground.

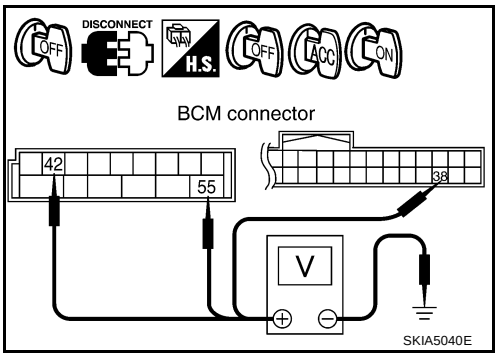

Terminals			Ignition switch position	
(+)		(–)	OFF	ON
Connector	Terminal (Wire color)			
M91	42 (GY)	Ground	Battery voltage	Battery voltage
	55 (R)			
M90	38 (W/L)		0V	Battery voltage

OK or NG

OK >> GO TO 3.

NG >> Check harness for open between BCM and fuse.

3. CHECK GROUND CIRCUIT

1. Turn ignition switch OFF.
2. Check continuity between BCM harness connector M91 terminal 52 (B) and ground.

Continuity should exist.

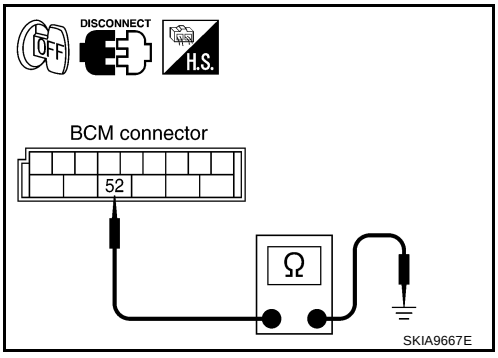

OK or NG

OK >> INSPECTION END

NG >> Repair harness or connector.

CONSULT-II Function

AKS0095T

CONSULT-II performs the following functions communicating with the BCM.

DIAGNOSTIC ITEMS DESCRIPTION

BCM diagnosis position	Diagnosis mode	Description
BUZZER	Data monitor	The input data to the BCM control unit is displayed in real time.
	Active test	Operation of electrical loads can be checked by sending driving signal to them.
BCM	Self-diagnostic	BCM performs self-diagnosis of CAN communication and combination switch.

CONSULT-II BASIC OPERATION PROCEDURE

CAUTION:

If CONSULT-II is used with no connection of CONSULT-II CONVERTER, malfunctions might be detected in self-diagnosis depending on control unit which carry out CAN communication.

1. With the ignition switch OFF, connect “CONSULT-II” and CONSULT-II CONVERTER” to the data link connector, and turn ignition switch ON.

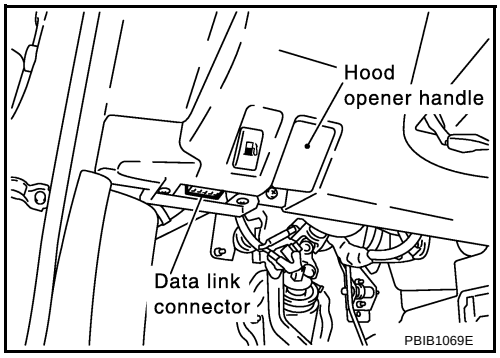

2. Touch “START (NISSAN BASED VHCL)”.

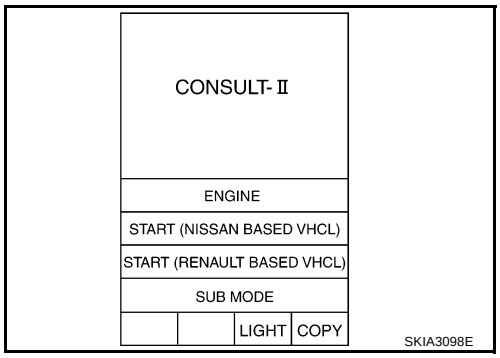

3. Touch “BCM” on “SELECT SYSTEM” screen. If “BCM” is not indicated, go to GI-39, "CONSULT-II Data Link Connector (DLC) Circuit" .

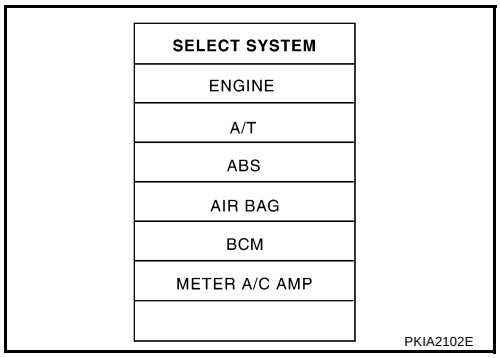

4. Touch “BUZZER” or “BCM”.
5. Select “DATA MONITOR”, “ACTIVE TEST” or “SELF-DIAG RESULTS”.

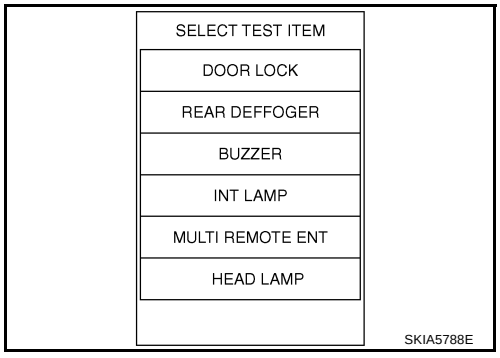

DATA MONITOR

Operation Procedure

1. Touch “BUZZER” on “SELECT TEST ITEM” screen.
2. Touch “DATA MONITOR” on “SELECT DIAG MODE” screen.
3. Touch “ALL SIGNALS” or “SELECTION FROM MENU” on “DATA MONITOR” screen.

ALL SIGNALS	Monitors main items.
SELECTION FROM MENU	Selects and monitors items.

4. If “SELECTION FROM MENU” is selected, touch the desired monitor item. If “ALL SIGNALS” is selected, all items required to control are monitored.
5. Touch “START”.
6. During monitoring, touching “RECORD” can start recording the monitored item status.

Data Monitor Item

Monitored item [Unit]	ALL SIGNALS	SELECTION FROM MENU	Contents
IGN ON SW [ON/OFF]	X	X	Indicates [ON/OFF] condition of ignition switch.
KEY ON SW [ON/OFF]	X	X	Indicates [ON/OFF] condition of key switch.
DOOR SW-DR [ON/OFF]	X	X	Indicates [ON/OFF] condition of driver side door switch.
TAIL LAMP SW [ON/OFF]	X	X	Indicates [ON/OFF] condition of lighting switch.
SEAT BELT SW [ON/OFF]	X	X	Indicates [ON/OFF] condition of seat belt switch.

ACTIVE TEST

Operation Procedure

1. Touch “BUZZER” on “SELECT TEST ITEM” screen.
2. Touch “ACTIVE TEST” on “SELECT DIAG MODE” screen.
3. Touch the item to be tested, and check the operation.
4. During the operation check, touching “OFF” deactivates the operation.

Active Test Item

Test item	Malfunction is detected when…
LIGHT WARN ALM	This test is able to check key warning chime operation. Key warning chime sounds for 2 seconds after touching “ON” on CONSULT-II screen.
IGN KEY WARN ALM	This test is able to check light warning chime operation. Light warning chime sounds for 2 seconds after touching “ON” on CONSULT-II screen.
SEAT BELT WARN ALM	This test is able to check seat belt warning chime operation. Seat belt warning chime sounds for 2 seconds after touching “ON” on CONSULT-II screen.

SELF-DIAGNOSTIC RESULTS

Operation Procedure

1. Touch “BCM” on “SELECT TEST ITEM” screen.
2. Touch “SELF-DIAG RESULTS” on “SELECT DIAG MODE” screen.
3. Self-diagnostic results are displayed.

Display Item List

Items to be displayed	CONSULT-II display	Description
CAN communication	CAN communication [U1000]	Malfunction is detected in CAN communication.

NOTE:
If “CAN communication [U1000]” is indicated, after printing the monitor item, go to “CAN system”. Refer to LAN-3, "Precautions When Using CONSULT-II" .

All Warnings Are Not Operated

AKS0095U

1. CHECK CHIME OPERATION

1. Select “BCM” on CONSULT-II.
2. Select “BUZZER” on CONSULT-II, and then perform “KEY WARN ALM”, “LIGHT WARN ALM” or “SEAT BELT ALM” of “ACTIVE TEST”.

Does chime sound?

YES >> Replace BCM. Refer to BCS-17, "Removal and Installation of BCM" .

NO >> GO TO 2.

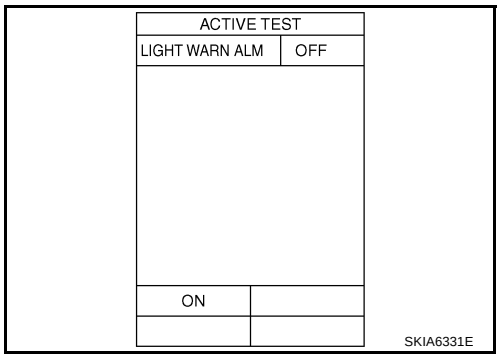

2. CHECK UNIFIED METER AND A/C AMP. INPUT SIGNAL

1. Select “METER A/C AMP” on CONSULT-II.
2. Operate switches meet the requirements to sounds warning chime with “BUZZER” of “DATA MONITOR” and check operation status.

When meet the requirements to sounds warning chime	**: BUZZER ON**
Except above	**: BUZZER OFF**

OK or NG

OK >> Replace combination meter.

NG >> Replace BCM. Refer to BCS-17, "Removal and Installation of BCM" .

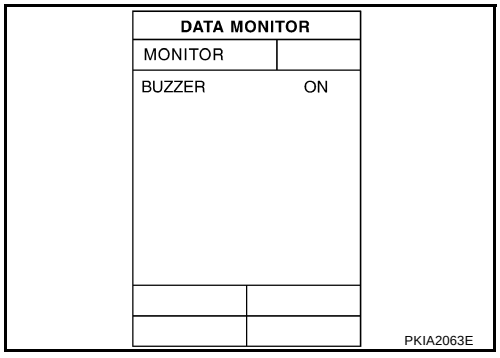

Key Warning Chime and Light Warning Chime Does Not Operate (Seat Belt Warning Chime Does Operate)

AKS0095V

1. CHECK BCM INPUT SIGNAL

With CONSULT-II

With “DATA MONITOR” of “BUZZER”, confirm “DOOR SW-DR” when the driver side door switch is operated.

When driver side door is opened : DOOR SW-DR ON

When driver side door is closed : DOOR SW-DR OFF

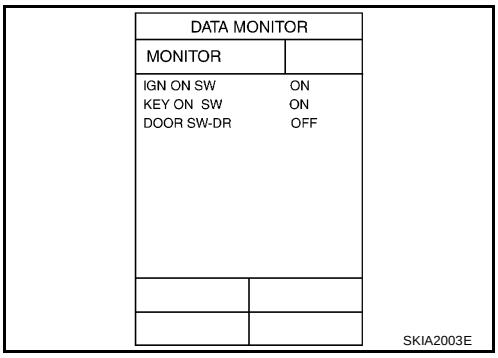

Without CONSULT-II

Check voltage between BCM harness connector B83 terminal 62 (W) and ground.

When driver side door is opened : Approx. 0V

When driver side door is closed : Approx. 5V

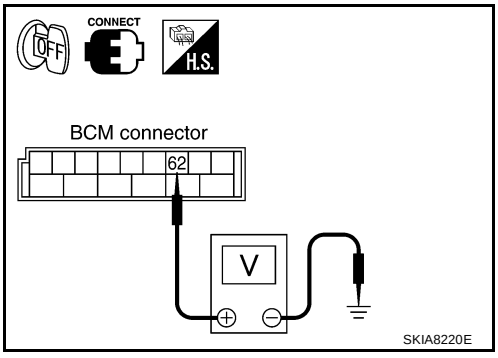

OK or NG

OK >> Replace BCM. Refer to BCS-17, "Removal and Installation of BCM" .

NG >> GO TO 2.

2. CHECK DRIVER SIDE DOOR SWITCH CIRCUIT

1. Turn ignition switch OFF.
2. Disconnect BCM connector and driver side door switch connector.
3. Check continuity between BCM harness connector B83 terminal 62 (W) and driver side door switch harness connector B17 terminal 1 (W).

   Continuity should exist.

4. Check continuity between BCM harness connector B83 terminal 62 (W) and ground.

   Continuity should not exist.

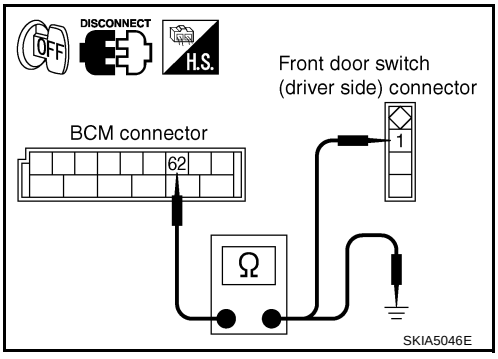

OK or NG

OK >> GO TO 3.

NG >> Repair harness or connector.

3. CHECK DRIVER SIDE DOOR SWITCH

Check driver side door switch.

When driver side door switch is released **: Continuity should exist.**

When driver side door switch is pushed **: Continuity should not exist.**

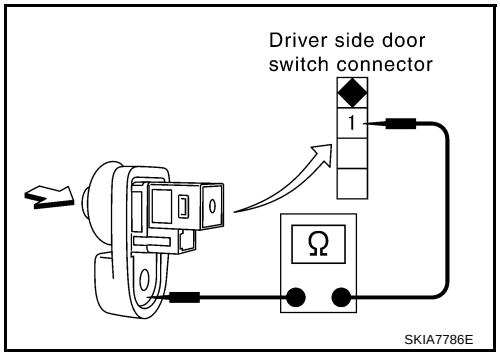

OK or NG

OK >> Replace BCM. Refer to BCS-17, "Removal and Installation of BCM" .

NG >> Replace driver side door switch.

Key Warning Chime Does Not Operate

AKS0095W

1. CHECK FUSE

Check if the key switch 10A fuse [No. 21, located in the fuse block (J/B)] is blown. Refer to DI-81, "Wiring Diagram — CHIME —" .

Is the fuse blown?

YES >> Replace fuse. Be sure to repair the cause of malfunction before installing new fuse.

NO >> GO TO 2.

2. CHECK WARNING CHIME OPERATION

Check the chime under conditions in exception of key warning chime operation.

Does warning chime sound?

YES >> GO TO 3.

NO >> Go to DI-90, "All Warnings Are Not Operated" or DI-91, "Key Warning Chime and Light Warning Chime Does Not Operate (Seat Belt Warning Chime Does Operate)" .

3. CHECK BCM INPUT SIGNAL

With CONSULT-II

1. Select “BCM”.
2. With “DATA MONITOR” of “BUZZER”, confirm “KEY ON SW” when the key is operated.

When key is inserted to ignition key cylinder **: KEY ON SW ON**

When key is removed from ignition key cylinder **: KEY ON SW OFF**

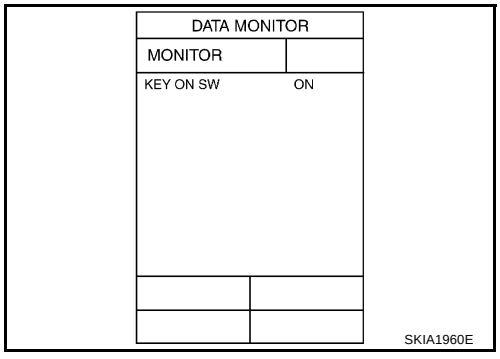

Without CONSULT-II

Check voltage between BCM harness connector M90 terminal 37 (B/R) and ground.

When key is inserted to ignition key cylinder **: Approx. 12V**

When key is removed from ignition key cylinder **: Approx. 0V**

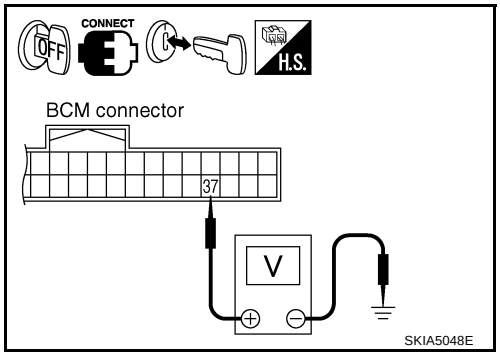

OK or NG

OK >> Replace BCM. Refer to BCS-17, "Removal and Installation of BCM" .

NG >> GO TO 4.

4. CHECK KEY SWITCH (INSERT)

1. Disconnect key switch connector.
2. Check continuity between key switch connector M25 terminals 1 and 2.

When key is inserted to ignition key cylinder : Continuity should exist.

When key is removed from ignition key cylinder : Continuity should not exist.

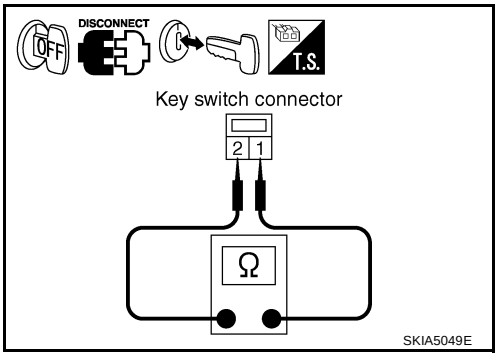

OK or NG

OK >> GO TO 5.
NG >> Replace key cylinder assembly (key switch).

5. CHECK KEY SWITCH CIRCUIT

1. Disconnect BCM connector.
2. Check continuity between BCM harness connector M90 terminal 37 (B/R) and key switch harness connector M25 terminal 1 (B/R).

Continuity should exist.

3. Check continuity between BCM harness connector M90 terminal 37 (B/R) and ground.

Continuity should not exist.

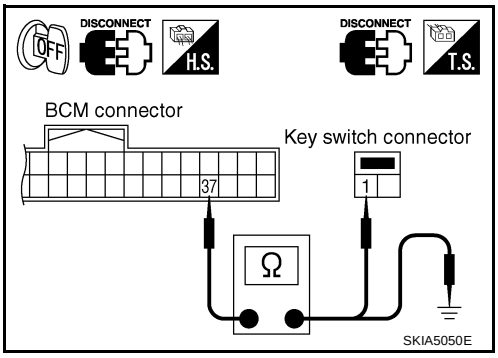

OK or NG

OK >> GO TO 6.
NG >> Repair harness or connector.

6. CHECK KEY SWITCH POWER SUPPLY CIRCUIT

Check voltage between key switch harness connector M25 terminal 2 (PU) and ground.

Battery voltage should exist.

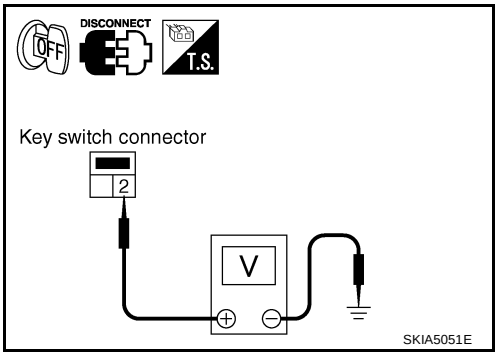

OK or NG

OK >> Replace BCM. Refer to BCS-17, "Removal and Installation of BCM" .
NG >> Check harness for open or short between key switch and fuse.

Light Warning Chime Does Not Operate

AKS0095X

1. CHECK WARNING CHIME OPERATION

Check the chime under conditions in exception of headlamp warning chime operation.

Does warning chime sound?

YES >> GO TO 2.

NO >> Go to DI-90, "All Warnings Are Not Operated" or DI-91, "Key Warning Chime and Light Warning Chime Does Not Operate (Seat Belt Warning Chime Does Operate)" .

2. CHECK BCM INPUT SIGNAL

1. Select “BCM” on CONSULT-II.
2. With “DATA MONITOR” of “BUZZER”, confirm “TAIL LAMP SW” when the lighting switch is operated.

When lighting switch is in 1st position : TAIL LAMP SW ON

When lighting switch is OFF : TAIL LAMP SW OFF

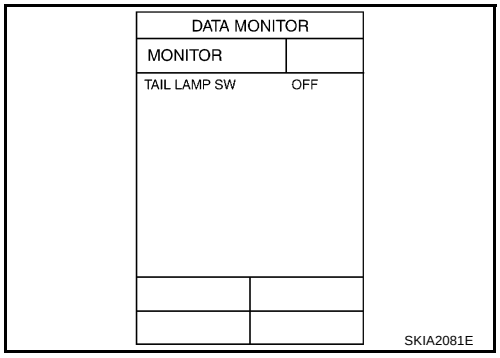

OK or NG

OK >> Replace BCM. Refer to BCS-17, "Removal and Installation of BCM" .

NG >> Replace lighting switch. Refer to LT-165, "LIGHTING AND TURN SIGNAL SWITCH" .

Seat Belt Warning Chime Does Not Operate

AKS0095Y

1. CHECK WARNING CHIME OPERATION

Check the chime under conditions in exception of seat belt warning chime operation.

Does warning chime sound?

YES >> GO TO 2.

NO >> Go to DI-90, "All Warnings Are Not Operated" .

2. CHECK BCM INPUT SIGNAL

1. Select “BCM” on CONSULT-II.
2. With “DATA MONITOR” of “BUZZER”, confirm “SEAT BELT SW” when the seat belt buckle switch is operated.

When seat belt is fastened : SEAT BELT SW OFF

When seat belt is unfastened : SEAT BELT SW ON

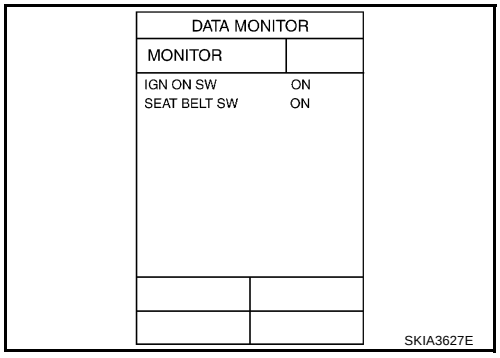

OK or NG

OK >> Replace BCM. Refer to BCS-17, "Removal and Installation of BCM" .

NG >> GO TO 3.

3. CHECK COMBINATION METER INPUT SIGNAL

1. Turn ignition switch ON.
2. Check voltage between combination meter harness connector M19 terminal 1 (BR/Y) and ground.

When seat belt is fastened : Approx. 12V

When seat belt is unfastened : Approx. 0V

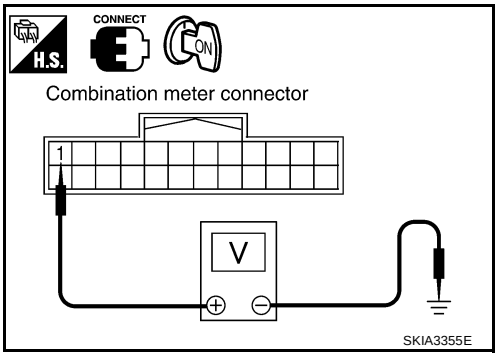

OK or NG

OK >> Replace combination meter.
NG >> GO TO 4.

4. CHECK SEAT BELT BUCKLE SWITCH

1. Turn ignition switch OFF.
2. Disconnect seat belt buckle switch (driver side) connector.
3. Check continuity between seat belt buckle switch (driver side) harness connector B8 terminals 1 and 2.

When seat belt is fastened : Continuity should not exist.

When seat belt is unfastened : Continuity should exist.

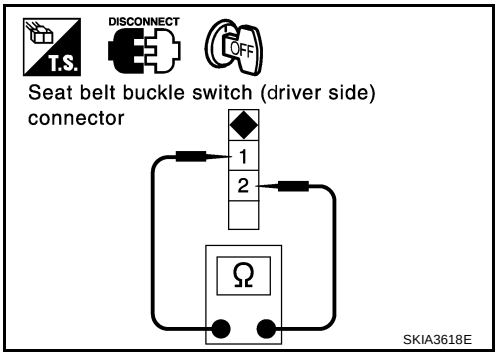

OK or NG

OK >> GO TO 5.
NG >> Replace seat belt buckle switch (driver side).

5. CHECK SEAT BELT BUCKLE SWITCH CIRCUIT

1. Disconnect combination meter connector.
2. Check harness continuity between combination meter harness connector M19 terminal 1 (BR/Y) and seat belt buckle switch (driver side) harness connector B8 terminal 1 (BR).

Continuity should exist.

3. Check harness continuity between combination meter harness connector M19 terminal 1 (BR/Y) and ground.

Continuity should not exist.

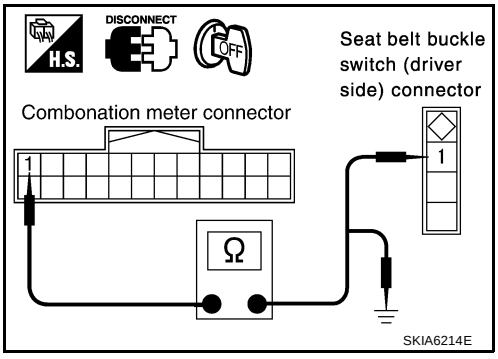

OK or NG

OK >> Check seat belt buckle switch ground circuit.
NG >> Repair harness or connector.

CLOCK

PFP:25820

Wiring Diagram — CLOCK —

AKS0095Z

DI-CLOCK-01

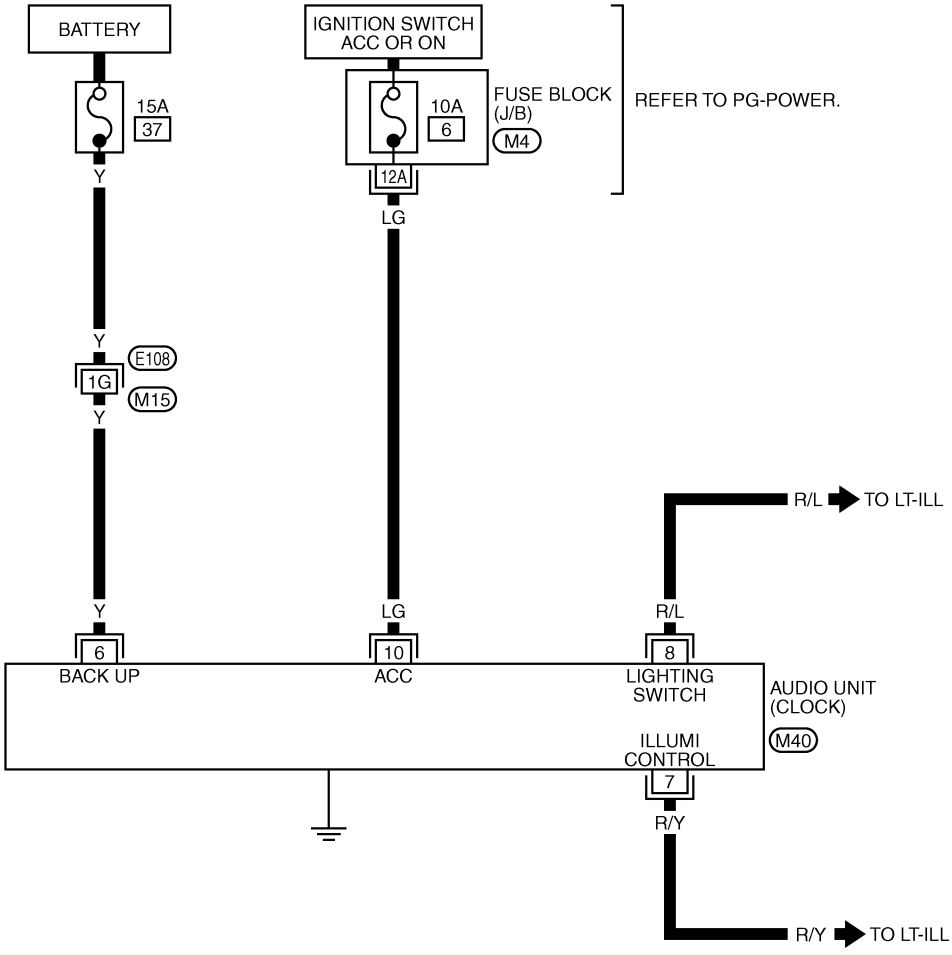

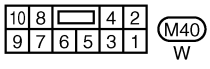

REFER TO THE FOLLOWING.

E108 -SUPER MULTIPLE JUNCTION (SMJ)

M4 -FUSE BLOCK-JUNCTION BOX (J/B)

TKWT0500E

Description

AKS00960

Audio display indication type digital clock has been adopted, and integrated in electronic tuner radio.

Adjusting The Time

AKS00961

Adjust the time in the following steps:

1. Switch the display to the clock adjusting mode.
   - Type A (Audio without cassette player):
     Keep pressing the DISP button until the clock display starts to flash.
   - Type B (Audio with cassette player):
     Press the RPT button until the clock display starts to flash.
2. Press the SEEK/TRACK button to adjust the hour. Press the TUNE button to adjust the minute.
3. Press the DISP button (Type A) or DISP or RPT button (Type B) to finish the adjustment.

RESETTING

- Press the DISP and TUNE buttons to reset the time to a time signal. (Type A)
- Press the RPT and TUNE buttons to reset the time to a time signal. (Type B)

For example, if these buttons are pressed while the time is between 8:00 and 8:29, the display will be reset to 8:00. If pressed while it is between 8:30 and 8:59, the display will be reset to 9:00. At the same time the display will return to the previous audio mode.